HOWARD COUNTY, MARYLAND
LITTLE PATUXENT WATER RECLAMATION PLANT

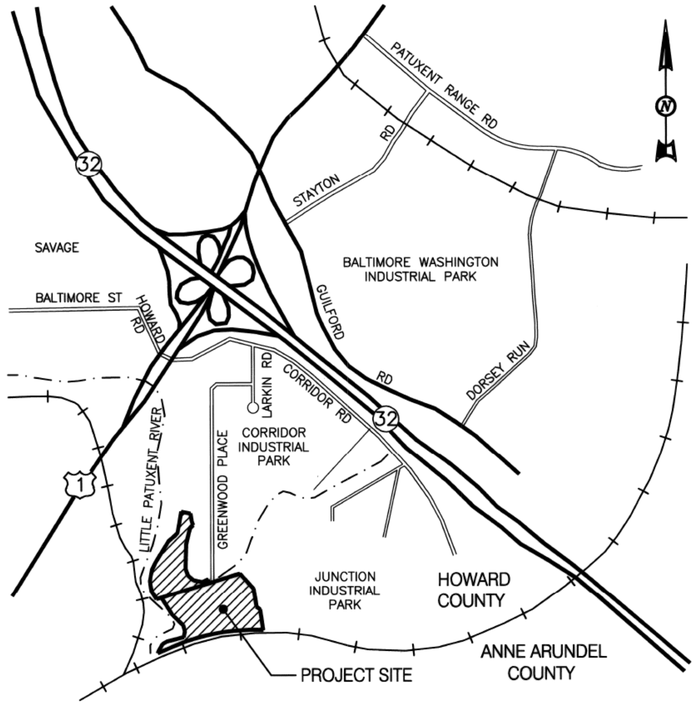

8TH ADDITION - BIOSOLIDS PROCESSING FACILITIES - PHASE I

CAPITAL PROJECT S-6295
CONTRACT NO. 24-4935

VOLUME 1 OF 2

DEPARTMENT OF PUBLIC WORKS
HOWARD COUNTY, MARYLAND

DIRECTOR OF PUBLIC WORKS — DATE

CHIEF, BUREAU OF ENGINEERING — DATE

CHIEF, BUREAU OF UTILITIES — DATE

CHIEF, WATER AND SEWER DIVISION — DATE

THE DRAWINGS IN THIS SET ARE RECORD DRAWINGS. THEY ARE CONSTRUCTION CONTRACT DRAWINGS WHICH HAVE BEEN REVISED BASED ON AVAILABLE FIELD INFORMATION RECORDED BY OTHERS DURING CONSTRUCTION OF THIS CONTRACT. THERE HAS BEEN NO VERIFICATION OF DIMENSIONS SHOWN ON THE CONSTRUCTION DRAWINGS OR THE ACCURACY/COMPLETENESS OF THE FIELD INFORMATION RECEIVED.

SIGNATURE — DATE

ASSOCIATE DESIGN FIRMS

SHAH & ASSOCIATES

DRAWING INDEX

VOLUME 1 OF 2

00 - GENERAL (G)

1	G-1	COVER
2	G-2	DRAWING INDEX - I
3	G-3	DRAWING INDEX - II
4	G-5	ABBREVIATIONS
5	G-6	LEGEND AND SYMBOLS 1
6	G-7	LEGEND AND SYMBOLS 2
7	G-8	EXISTING OVERALL SOLIDS PROCESS FLOW DIAGRAM
8	G-9	OVERALL SOLIDS PROCESS FLOW DIAGRAM I
9	G-10	OVERALL SOLIDS PROCESS FLOW DIAGRAM II
10	G-10A	OVERALL SOLIDS PROCESS FLOW DIAGRAM III
11	G-11	SOLIDS HANDLING MASS BALANCE STARTUP CONDITION
12	G-12	SOLIDS HANDLING MASS BALANCE DESIGN CONDITION
13	G-13	HEAT AND ENERGY SCHEMATIC
14	G-14	DESIGN CRITERIA
15	G-15	OVERALL KEY PLAN
16	G-16	SOLIDS PROCESS HYDRAULIC PROFILE
17	G-18	AREA CLASSIFICATION - OVERALL KEY PLAN
18	G-19	AREA CLASSIFICATION - GBT AREA
19	G-20	AREA CLASSIFICATION - SOLIDS PIPE GALLERY & GRAVITY THICKENERS
20	G-21	AREA CLASSIFICATION - SOLIDS HOLDING TANKS & SCREENING AREA
21	G-22	AREA CLASSIFICATION - DIGESTER BUILDING & DIGESTER NO. 3
22	G-23	AREA CLASSIFICATION - DIGESTER NO. 3
23	G-24	AREA CLASSIFICATION - DIGESTER NO. 1 AND NO. 2
24	G-25	AREA CLASSIFICATION - PHOSPHORUS PRECIPITATION
25	G-26	AREA CLASSIFICATION - DIGESTER BUILDING ROOF & GAS COMPRESSING AND CONDENSING
26	G-30	OVERALL CODE ANALYSIS
27	G-31	DIGESTER BUILDING CODE ANALYSIS
28	G-32	DIGESTER BUILDING FIRST FLOOR LIFE SAFETY PLAN
29	G-33	DIGESTER BUILDING SECOND FLOOR LIFE SAFETY PLAN
30	G-34	MCC/PPB/SS CODE ANALYSIS
31	G-35	MCC/PPB/SS LIFE SAFETY PLANS

01 - DEMOLITION (X)

SERIES 01 - DEMOLITION		
32	X-1	SITE DEMOLTION PLAN - F
33	X-2	SITE DEMOLTION PLAN - G
SERIES 100 - GRAVITY BELT THICKENER AREA		
34	X-100	PLAN - EL 128.00
35	X-101	PLAN - EL 142.00
36	X-102	DEMOLITION SECTIONS
SERIES 120 - CHEMICAL HANDLING AREA		
37	X-120	PLAN - EL 129.20
38	X-121	PLAN - EL 142.00
39	X-122	DETAIL
SERIES 200 - SOLIDS PIPE GALLERY		
40	X-200	LOWER PLAN
41	X-201	UPPER PLAN
SERIES 220 - SOLIDS HOLDING TANKS		
42	X-220	LOWER PARTIAL PLAN 1
43	X-221	LOWER PARTIAL PLAN 2
44	X-222	TOP PARTIAL PLAN 1
45	X-223	TOP PARTIAL PLAN 2
SERIES 230 - GRAVITY THICKENER NO. 1		
46	X-230	LOWER AND UPPER PLANS
47	X-231	DEMOLITION SECTIONS
SERIES 240 - SOLIDS SCREENING AREA		
48	X-240	PLAN - EL 141.20
49	X-241	PLANS - EL 166.20 & EL 155.20
50	X-242	SECTION
51	X-243	PLAN EL. 155.20 AND SECTIONS
52	X-244	ELEVATION
SERIES 260 - DEAMMONIFICATION		
53	X-260	LOWER PARTIAL PLAN 1
54	X-261	LOWER PARTIAL PLAN 2
55	X-262	TOP PARTIAL PLAN 1
56	X-263	TOP PARTIAL PLAN 2
SERIES 640 - FILTER BUILDING		
57	X-640	PLAN AND DETAILS

05 - CIVIL (C)

58	C-1	LEGEND SYMBOLS AND GENERAL NOTES
59	C-2	OVERALL EXISTING CONDITIONS PLAN
60	C-3	OVERALL PROPERTY BOUNDARY PLAN
61	C-4	PLANT SITE PLAN - NORTH
62	C-5	PLANT SITE PLAN - SOUTH
63	C-6	EROSION AND SEDIMENT CONTROL CONCEPT PLAN
64	C-7	EROSION AND SEDIMENT CONTROL CONCEPT PLAN
65	C-8	CIVIL INDEX PLAN
66	C-9	SITE LAYOUT PLAN - F
67	C-10	SITE LAYOUT PLAN - G
68	C-11	DIGESTER DEMOLTION EROSION AND SEDIMENT CONTROL PLAN - G
69	C-12	SOIL IMPROVEMENT PLAN - G
70	C-21	SITE DEVELOPMENT AND EROSION AND SEDIMENT CONTROL PLAN - A
71	C-22	SITE DEVELOPMENT AND EROSION AND SEDIMENT CONTROL PLAN - B
72	C-23	SITE DEVELOPMENT AND EROSION AND SEDIMENT CONTROL PLAN - C
73	C-24	SITE DEVELOPMENT AND EROSION AND SEDIMENT CONTROL PLAN - D
74	C-25	SITE DEVELOPMENT AND EROSION AND SEDIMENT CONTROL PLAN - E
75	C-26	SITE DEVELOPMENT AND EROSION AND SEDIMENT CONTROL PLAN - F

DRAWING INDEX

05 - CIVIL (C)

76	C-27	SITE DEVELOPMENT AND EROSION AND SEDIMENT CONTROL PLAN - G
77	C-30	OVERALL YARD PIPING PLAN
78	C-31	YARD PIPING PLAN - C
79	C-32	YARD PIPING PLAN - D
80	C-33	YARD PIPING PLAN - F
81	C-34	YARD PIPING PLAN - G
82	C-35	12" WATER MAIN PROFILE
83	C-36	PROPOSED NATURAL GAS LINE - PLAN AND PROFILE 1
84	C-37	PROPOSED NATURAL GAS LINE - PLAN AND PROFILE 2
85	C-38	PROPOSED NATURAL GAS LINE - PLAN AND PROFILE 3
86	C-41	EROSION CONTROL NOTES AND DETAILS
87	C-42	EROSION CONTROL NOTES AND DETAILS
88	C-43	EROSION CONTROL NOTES AND DETAILS
89	C-44	EROSION CONTROL NOTES AND DETAILS
90	C-45	CIVIL NOTES AND DETAILS
91	C-46	CIVIL DETAILS
92	C-47	CIVIL DETAILS
93	C-48	CIVIL DETAILS
94	C-49	CIVIL DETAILS
95	C-50	CIVIL DETAILS
96	C-51	CIVIL DETAILS

08 - STRUCTURAL (S)

SERIES 100 - GRAVITY BELT THICKENER AREA		
97	S-100	PLAN - EL 127.20
98	S-101	PLAN - EL 141.20 (UNO)
99	S-102	ROOF PLAN
100	S-103	SECTIONS 1
101	S-104	SECTIONS 2
102	S-105	SECTIONS 3
SERIES 120 - CHEMICAL HANDLING AREA		
103	S-120	PLAN - EL 129.20
SERIES 200 - SOLIDS PIPE GALLERY		
104	S-200	FOUNDATION PLAN
105	S-201	TOP PLAN - EL 145.20
106	S-202	SECTIONS AND DETAILS
SERIES 220 - SOLIDS HOLDING TANKS AND GT-2		
107	S-220	FOUNDATION PLAN
108	S-221	UPPER PLAN
SERIES 240 - SOLIDS SCREENING AREA		
109	S-241	PLATFORM PLAN AT ELEVATION 155.20
110	S-242	SECTIONS AND DETAILS
111	S-243	SECTIONS AND DETAILS
112	S-244	SECTIONS AND DETAILS
SERIES 260 - DEAMMONIFICATION AND GT-1		
113	S-260	FOUNDATION PLAN
114	S-261	UPPER PLAN
115	S-262	COVER PLAN
116	S-263	SECTIONS AND DETAILS
117	S-264	SECTIONS AND DETAILS
SERIES 360 - PHOSPHORUS PRECIPITATION		
118	S-360	FOUNDATION PLAN
119	S-361	SECTIONS
SERIES 700 - BIOFILTER		
120	S-701	FOUNDATION PLAN
SERIES 900 - SCHEDULE AND DETAILS		
121	S-901	GENERAL & MATERIAL NOTES
122	S-902	STRUCTURAL STANDARD DETAILS 1
123	S-903	STRUCTURAL STANDARD DETAILS 2
124	S-904	STRUCTURAL STANDARD DETAILS 3
125	S-905	STRUCTURAL STANDARD DETAILS 4
126	S-906	STRUCTURAL STANDARD DETAILS 5
127	S-907	STRUCTURAL STANDARD DETAILS 6
128	S-908	STRUCTURAL STANDARD DETAILS 7
129	S-909	PIPE SUPPORT DETAILS
130	S-910	CONCRETE REPAIR DETAILS

09 - ARCHITECTURAL (A)

SERIES 200 - MCC BUILDING		
131	A-200	FLOOR PLAN AND ROOF PLAN
132	A-201	ELEVATIONS AND SECTIONS
SERIES 240 - CENTRIFUGE BUILDING		
133	A-240	CENTRIFUGE BUILDING PLAN & ELEVATIONS
134	A-241	CENTRIFUGE BUILDING SCHEDULES & DETAILS
SERIES 320 - DIGESTER BUILDING		
135	A-320	PLAN - EL 143.50
136	A-321	PLAN - EL 161.67
137	A-322	ROOF PLAN - EL 179.17
138	A-326	EXTERIOR ELEVATIONS
139	A-327	EXTERIOR ELEVATIONS
140	A-328	TYPICAL PANEL ELEVATIONS
141	A-329	TYPICAL PANEL & WALL SECTIONS
142	A-330	STAIR PLANS AND SECTIONS
143	A-331	STAIR PLANS AND SECTIONS
SERIES 360 - PHOSPHORUS PRECIPITATION		
144	A-360	FLOOR PLAN & ROOF PLAN
145	A-361	ELEVATIONS, SECTIONS AND DETAILS

DRAWING INDEX

09 - ARCHITECTURAL (A)

146	A-362	DETAILS
SERIES 900 - SCHEDULE AND DETAILS		
147	A-901	SCHEDULES
148	A-902	DETAILS 1
149	A-903	DETAILS 2
150	A-904	DETAILS 3

12 - PROCESS (D)

SERIES 100 - GRAVITY BELT THICKENER AREA		
151	M-100	PLAN - EL 127.20
152	M-101	PLAN - EL 141.20
153	M-102	SECTIONS 1
154	M-103	SECTIONS 2
155	M-104	PLANS AND SECTIONS 1
156	M-105	PLANS AND SECTIONS 2
SERIES 120 - CHEMICAL HANDLING AREA		
157	M-120	PLAN EL 129.20
158	M-121	PLAN EL 141.20
159	M-122	DILUTION WATER PUMPS PLAN AND SECTIONS
160	M-124	POLYMER SYSTEM PLAN - EL 129.20
161	M-125	POLYMER SYSTEM SECTIONS AND DETAILS
162	M-126	POLYMER SYSTEM DETAIL
163	M-127	POLYMER SYSTEM DETAILS
164	M-128	POLYMER SYSTEM DETAILS
SERIES 200 - SOLIDS PIPE GALLERY		
165	M-200	LOWER PLAN
166	M-201	UPPER PLAN
167	M-202	SECTIONS 1
168	M-203	SECTIONS 2
SERIES 220 - SOLIDS HOLDING TANKS		
169	M-220	LOWER PARTIAL PLAN 1
170	M-221	LOWER PARTIAL PLAN 2
171	M-222	TOP PARTIAL PLAN 1
172	M-223	TOP PARTIAL PLAN 2
173	M-224	SECTIONS 1
174	M-225	SECTIONS 2
175	M-226	SECTIONS AND DETAILS 1
SERIES 230 - GRAVITY THICKENER NO. 1		
176	M-230	LOWER / UPPER PLANS
177	M-231	COVER PLAN
178	M-232	SECTIONS AND DETAILS
179	M-233	TRANSFER PUMP PLAN AND SECTIONS
SERIES 235 - GRAVITY THICKENER NO. 2		
180	M-235	LOWER AND UPPER PLANS
181	M-236	TRANSFER PUMP PROCESS PLAN
182	M-237	GRAVITY THICKENER TRANSFER PUMP SECTIONS
SERIES 240 - SOLIDS SCREENING AREA		
183	M-240	PLAN - EL 141.20
184	M-241	PLAN - EL. 155.20
185	M-242	PLAN - EL 166.20
186	M-243	SECTIONS 1
187	M-244	SECTIONS 2
188	M-245	PLAN AT EL 155.20
189	M-246	SECTIONS AND DETAIL
SERIES 260 - DEAMMONIFICATION		
190	M-260	OVERALL PLAN
191	M-261	LOWER PLAN
192	M-262	UPPER PLAN
193	M-263	TOP PLAN
194	M-264	LOWER PLAN
195	M-265	UPPER PLAN
196	M-266	TOP PLAN
197	M-267	PARTIAL PLANS
198	M-268	SECTIONS 1
199	M-269	SECTIONS 2
200	M-270	SECTIONS 3
201	M-271	SECTIONS 4
202	M-272	SECTIONS 5
203	M-273	DETAILS
SERIES 300 - ANAEROBIC DIGESTERS		
204	M-300	DIGESTER NO. 1 PLAN 1
205	M-301	DIGESTER NO. 1 PLAN 2
206	M-302	DIGESTER NO. 1 PLAN 3
207	M-303	DIGESTER NO. 3 PLAN 1
208	M-304	DIGESTER NO. 2 PLAN 1
209	M-305	DIGESTER NO. 2 PLAN 2
210	M-306	DIGESTER NO. 2 PLAN 3
211	M-307	SECTIONS 1
212	M-308	SECTIONS 2
213	M-309	SECTIONS 3
SERIES 320 - DIGESTER BUILDING		
214	M-320	PUMP ROOM PLAN AT EL 143.50
215	M-321	PUMP ROOM PLAN AT EL 154.50
216	M-322	BOILER ROOM PLAN AT EL 161.50
217	M-323	BOILER ROOM PLAN AT EL 170.75
218	M-324	SECTIONS 1
219	M-325	SECTIONS 2
220	M-326	SECTIONS 3
221	M-327	SECTIONS 4
222	M-328	SECTIONS 5
223	M-329	DETAILS AND SECTIONS 1

DRAWING INDEX

12 - PROCESS (D)

224	M-330	DETAILS AND SECTIONS 2
225	M-331	DETAILS AND SECTIONS 3
226	M-332	DETAILS AND SECTIONS 4
227	M-333	PIPE SUPPORTS AND SECTIONS
SERIES 340 - WASTE GAS FLARE AND DIGESTER GAS FACILITIES		
228	M-340	ROOF PLAN 1
229	M-341	ROOF PLAN 2
230	M-342	ROOF PLAN 3
231	M-343	PLANS AND SECTIONS
232	M-344	DETAILS AND SECTIONS 1
233	M-345	DETAILS AND SECTIONS 2
SERIES 360 - PHOSPHORUS PRECIPITATION BUILDING		
234	M-360	OVERALL PLAN
235	M-361	SECTIONS
236	M-362	SECTIONS AND DETAILS
SERIES 640 - FILTER BUILDING		
237	M-640	PLAN AND SECTIONS
SERIES 700 - BIOFILTER		
238	M-700	OVERALL FOUL AIR DUCTWORK PLAN
239	M-701	PLANS AND SECTIONS 1
240	M-702	PLANS AND SECTIONS 1
241	M-703	DUCTWORK SCHEMATIC
SERIES 900 - SCHEDULE AND DETAILS		
242	M-900	MISCELLANEOUS DETAILS 1
243	M-901	MISCELLANEOUS DETAILS 2
244	M-902	MISCELLANEOUS DETAILS 3
245	M-903	MISCELLANEOUS DETAILS 4
246	M-904	MISCELLANEOUS DETAILS 5
247	M-905	PIPE SUPPORT DETAILS 1
248	M-906	PIPE SUPPORT DETAILS 2
249	M-908	PIPE INSULATION AND HEAT TRACING SCHEDULE
250	M-910	NATURAL GAS PIPE ROUTE DRYER/DIGESTER BUILDING
251	M-911	NATURAL GAS PIPE ROUTE DRYER/DIGESTER BUILDING
252	M-912	NATURAL GAS METER RUN DRYER/DIGESTER BUILDING BILL OF MATERIALS

VOLUME 2 OF 2

13 - HVAC (H)

SERIES 100 - GRAVITY BELT THICKENER AREA		
253	H-100	PLAN - EL 127.20
254	H-101	PLAN - EL 141.20
SERIES 200 - SOLIDS PIPE GALLERY		
255	H-200	PLAN - EL 127.20
256	H-201	PLAN - EL 145.20
SERIES 320 - DIGESTER BUILDING		
257	H-320	PLAN - EL 143.50
258	H-321	PLAN - EL 161.67
259	H-322	ROOF PLAN
260	H-323	SECTIONS
SERIES 360 - PHOSPHORUS PRECIPITATION		
261	H-360	PLAN AND SECTION
SERIES 900 - SCHEDULES AND DETAILS		
262	H-901	HVAC NOTES, LEGEND AND ABBREVIATIONS
263	H-902	HVAC DETAILS
264	H-903	HVAC SCHEDULES
265	H-904	HVAC AIRFLOW DIAGRAMS

14 - PLUMBING (P)

SERIES 100 - GRAVITY BELT THICKENER AREA		
266	P-100	PLAN - EL 127.20
267	P-101	PLAN - EL 127.20
268	P-102	PLAN - EL 141.20
SERIES 120 - CHEMICAL HANDLING AREA		
269	P-120	PLAN EL 129.20
SERIES 200 - SOLIDS PIPE GALLERY		
270	P-200	PLAN - EL 127.20
SERIES 240 - SOLIDS SCREENING AREA		
271	P-241	PLAN - EL 141.20
272	P-242	PLAN - EL 166.20
SERIES 320 - DIGESTER BUILDING		
273	P-320	SUPPLY PLAN - EL 143.50
274	P-321	WASTE PLAN - EL 143.50
275	P-322	SUPPLY PLAN - EL 161.67
276	P-323	WASTE PLAN - EL 161.67
277	P-324	ROOF PLAN
SERIES 360 - PHOSPHORUS PRECIPITATION		
278	P-360	PLAN AND RISER
SERIES 640 - FILTER BUILDING		
279	P-640	PARTIAL PLAN
SERIES 900 - SCHEDULES AND DETAILS		
280	P-901	PLUMBING DETAILS 1
281	P-902	PLUMBING DETAILS 2
282	P-903	PLUMBING RISERS 1
283	P-904	PLUMBING RISERS 2

THE DRAWINGS IN THIS SET ARE RECORD DRAWINGS. THEY ARE CONSTRUCTION CONTRACT DRAWINGS WHICH HAVE BEEN REVISED BASED ON AVAILABLE FIELD INFORMATION RECORDED BY OTHERS DURING CONSTRUCTION OF THIS CONTRACT. THERE HAS BEEN NO VERIFICATION OF DIMENSIONS SHOWN ON THE CONSTRUCTION DRAWINGS OR THE ACCURACY/COMPLETENESS OF THE FIELD INFORMATION RECEIVED.

SIGNATURE _____ DATE 2/7/2023

AS-BUILT REPLACEMENT SHEET

PROFESSIONAL CERTIFICATION

THIS DRAWING WAS ORIGINALLY APPROVED FOR CONSTRUCTION AND SEALED BY BRIAN M. BACLCHUNAS, A REGISTERED PROFESSIONAL ENGINEER IN THE STATE OF MARYLAND, NO. 200406

NOTICE TO CONTRACTORS

- PROJECT ELEVATIONS ARE BASED ON NAVD88 AND HOWARD COUNTY'S BENCHMARK SYSTEM
- PREVIOUS PROJECTS USED OTHER DATUMS
- APPLY THE FOLLOWING CONVERSIONS WHEN USING PREVIOUS CONTRACT DRAWINGS:
  - ADDITION NO. 6: SUBTRACT 0.80 FT
  - PRIOR ADDITIONS: SUBTRACT 1.04 FT

DEPARTMENT OF PUBLIC WORKS
HOWARD COUNTY, MARYLAND

CHIEF, BUREAU OF UTILITIES DATE

DES: BMB
DRN: JCS
CHK: JRK
DATE: 12/2016

DATE	REV	DESCRIPTION
07/2019		RECORD DRAWING

GENERAL

DRAWING INDEX - I

LITTLE PATUXENT WATER RECLAMATION PLANT
8TH ADDITION
BIOSOLIDS PROCESSING FACILITIES - PHASE I

CAPITAL PROJECT S-6295
CONTRACT NO. 24-4935

ELECTION DISTRICT NO. 6
HOWARD COUNTY, MARYLAND

SCALE AS SHOWN

SHEET 2 OF 463

G-2

BIM 360://10054364 – Little Patuxent WRP 8th Addition/LPWRP Campus Model.rvt
1/10/2022 12:40:42 PM

DRAWING INDEX

VOLUME 2 OF 2

15 - FIRE PROTECTION (F)

SERIES 320 - DIGESTER BUILDING

284	F-320	FIRST FLOOR FIRE SUPPRESSION AND FIRE ALARM PLAN
285	F-321	SECOND FLOOR FIRE SUPPRESSION AND FIRE ALARM PLAN

SERIES 900 - SCHEDULE AND DETAILS

286	F-900	FIRE SUPPRESION DETAILS

16 - ELECTRICAL (EX) - DEMOLITION

287	EX-3	CHEMICAL HANDLING AREA - EXISTING SWITCHBOARD PC-01 - ONE LINE DIAGRAM & ELEVATION - DEMOLITION
288	EX-4	EXISTING MCC-ADI BUILDING - ONE LINE AND ELEVATION - DEMOLITION
289	EX-5	CHEMICAL HANDLING AREA - EXISTING MCC-09 - ONE LINE DIAGRAM - DEMOLITION I
290	EX-6	CHEMICAL HANDLING AREA - EXISTING MCC-09 - ONE LINE DIAGRAM - DEMOLITION II
291	EX-7	CHEMICAL HANDLING AREA - EXISTING MCC-10 - ONE LINE DIAGRAM - DEMOLITION I
292	EX-8	CHEMICAL HANDLING AREA - EXISTING MCC-10 - ONE LINE DIAGRAM - DEMOLITION II
293	EX-9	CHEMICAL HANDLING AREA - EXISTING MCC-15 - ONE LINE DIAGRAM - DEMOLITION I
294	EX-10	CHEMICAL HANDLING AREA - EXISTING MCC-15 - ONE LINE DIAGRAM - DEMOLITION II
295	EX-11	CHEMICAL HANDLING AREA - EXISTING MCC-23 - ONE LINE DIAGRAM - DEMOLITION I
296	EX-12	CHEMICAL HANDLING AREA - EXISTING MCC-23 - ONE LINE DIAGRAM - DEMOLITION II
297	EX-13	CHEMICAL HANDLING AREA - EXISTING MCC-09 - ELEVATION - DEMOLITION
298	EX-14	CHEMICAL HANDLING AREA - EXISTING MCC-10 - ELEVATION - DEMOLITION
299	EX-15	CHEMICAL HANDLING AREA - EXISTING MCC-15 - ELEVATION - DEMOLITION
300	EX-16	CHEMICAL HANDLING AREA - EXISTING MCC-23 - ELEVATION - DEMOLITION
301	EX-19	CHEMICAL HANDLING AREA - ELECTRICAL ROOM - EXISTING AND DEMOLITION

16 - ELECTRICAL (E)

302	E-1	SYMBOLS AND ABBREVIATIONS
303	E-2	CONSTRUCTION SEQUENCE
304	E-3	OVERALL ELECTRICAL SITE PLAN - EXISTING AND NEW WORK
305	E-3A	AREA CLASSIFICATION - OVERALL KEY PLAN
306	E-4	ELECTRICAL SITE PLAN I - EXISTING AND NEW WORK
307	E-5	ELECTRICAL SITE PLAN II - EXISTING AND NEW WORK
308	E-7A	NEW SUBSTATION PS-8 - ONE LINE DIAGRAM
309	E-8	DIGESTER BUILDING NEW 8-MCC-3100-MCC ONE LINE DIAGRAM I
310	E-9	DIGESTER BUILDING NEW 8-MCC-3100-MCC ONE LINE DIAGRAM II
311	E-10	DIGESTER BUILDING NEW 8-MCC-3100-MCC ONE LINE DIAGRAM III
312	E-12	CHEMICAL HANDLING AREA - EXISTING SWITCHBOARD PC-1 AND PC-2 ONE LINE DIAGRAM - EXISTING AND MODIFICATION
313	E-15	CHEMICAL HANDLING AREA - EXISTING 8-MCC-1500-MCC - ONE LINE DIAGRAM - EXISTING AND MODIFICATION I
314	E-16	CHEMICAL HANDLING AREA - EXISTING 8-MCC-1500-MCC - ONE LINE DIAGRAM - EXISTING AND MODIFICATION II
315	E-17	CHEMICAL HANDLING AREA - EXISTING 8-MCC-2300-MCC - ONE LINE DIAGRAM - EXISTING AND MODIFICATION I
316	E-18	CHEMICAL HANDLING AREA - EXISTING 8-MCC-2300-MCC - ONE LINE DIAGRAM - EXISTING AND MODIFICATION II
317	E-19	CHEMICAL HANDLING AREA - EXISTING 8-MCC-1500-MCC - ELEVATION - EXISTING AND MODIFICATION
318	E-20	CHEMICAL HANDLING AREA - EXISTING 8-MCC-2300-MCC - ELEVATION - EXISTING AND MODIFICATION
319	E-21	DIGESTER BUILDING - NEW 8-MCC-3100-MCC ELEVATION
320	E-21A	DIGESTER BUILDING - NEW 8-MCC-3100-MCC ELEVATION
321	E-21B	FILTER BUILDING - EXISTING MCC-11 ONE LINE DIAGRAM I - (FRONT) MODIFICATION
322	E-21C	FILTER BUILDING - EXISTING MCC-11 ONE LINE DIAGRAM II - (REAR) MODIFICATION
323	E-21D	FILTER BUILDING - EXISTING MCC-11 ONE LINE DIAGRAM I - (FRONT) MODIFICATION
324	E-21E	FILTER BUILDING - EXISTING MCC-11 ONE LINE DIAGRAM II - (REAR) MODIFICATION
325	E-21F	FILTER BUILDING MCC-11 FRONT ELEVATION MODIFICATION
326	E-21G	FILTER BUILDING MCC-11 REAR ELEVATION MODIFICATION
327	E-22	DIGESTER BUILDING - NEW 8-MCC-3100-MCC SCHEDULE I
328	E-22A	DIGESTER BUILDING - NEW 8-MCC-3100-MCC SCHEDULE II
329	E-23	DIGESTER BUILDING ELECTRICAL ROOM LAYOUT
330	E-24	DIGESTER BUILIDNG - NEW 8-MCC-3100-MCC ROOM AND PS-8 GROUNDING PLAN
331	E-25	DIGESTER BUILDING - NEW 8-MCC-3100-MCC ROOM LIGHTING PLAN
332	E-26A	NEW SUBSTATION PS-8 - PLAN
333	E-30	CHEMICAL HANDLING AREA - ELECTRICAL ROOM - EXISTING AND MODIFICATION
334	E-31	8-MCC-3100-MCC FEEDER ROUTING PLAN
335	E-101	GRAVITY BELT THICKENING AREA - AT EL 128.00 - ELECTRICAL AND I&C PLAN
336	E-102	GRAVITY BELT THICKENER AREA - AT EL 142.00 - ELECTRICAL AND I&C PLAN
337	E-120	CHEMICAL HANDLING AREA - AT EL 130.00 - ELECTRICAL AND I&C OVERALL PLAN
338	E-122	POLYMER SYSTEM - EL 129.20 ELECTRICAL AND I&C OVERALL PLAN
339	E-130	TWAS SYSTEM INSTRUMENT ONE-LINE DIAGRAM
340	E-131	POLYMER INSTRUMENT ONE LINE DIAGRAM
341	E-132	WAS AND SCUM PUMP SCHEMATIC DIAGRAM
342	E-133	TWAS AND WASHWATER PUMP SCHEMATIC DIAGRAMS
343	E-201	SOLIDS PIPE GALLERY - LOWER LEVEL - ELECTRICAL AND I&C PLAN
344	E-202	SOLIDS PIPE GALLERY - UPPER LEVEL - ELECTRICAL AND I&C PLAN
345	E-222	SOLIDS HOLDING TANKS - TOP PARTIAL PLAN 1 AT EL 146 - ELECTRICAL AND I&C PLAN
346	E-223	SOLIDS HOLDING TANKS - TOP PARTIAL PLAN 2 AT EL 146 - ELECTRICAL AND I&C PLAN
347	E-231	GRAVITIY THICKENER NO. 1 - ELECTRICAL AND I&C PLAN
348	E-235	GRAVITIY THICKENER NO. 2 - ELECTRICAL AND I&C PLAN
349	E-240	CENTRIFUGE BUILDING AT EL 142.00 - ELECTRICAL AND I&C PLAN
350	E-242	CENTRIFUGE BUILDING AT EL 167.00 - ELECTRICAL AND I&C PLAN
351	E-243	DEWATERING AND DRYING AREA ELECTRICAL AND I&C PLAN

DRAWING INDEX

16 - ELECTRICAL (E)

352	E-244	DEWATERING AND DRYING AREA ELECTRICAL AND I&C SECTION
353	E-244A	DEWATERING AND DRYING AREA CONDUIT REROUTING PLAN
354	E-244B	CENTRIFUGE BUILDING CONDUIT REROUTING PLAN
355	E-244C	CENTRIFUGE BUILDING SECTION
356	E-260	DEAMMONIFICATION REACTORS - UPPER LEVEL - ELECTRICAL AND I&C PLAN
357	E-261	CENTRATE EQUALIZATION TANKS - EL 128 - ELECTRICAL AND I&C PLAN
358	E-263	CENTRATE EQUALIZATION TANKS - EL 146 - ELECTRICAL AND I&C PLAN
359	E-264	GRAVITY THICKENERS INSTRUMENT ONE-LINE
360	E-266	DEAMMONIFICATION REACTORS - EL 146 - ELECTRICAL AND I&C PLAN
361	E-267	DEAMMONIFICATION REACTORS - PARTIAL PLANS - ELECTRICAL AND I&C PLAN
362	E-268	THICKENED SLUDGE STORAGE INSTRUMENT ONE-LINE DIAGRAM
363	E-269	GRAVITY THICKENER SCHEMATIC DIAGRAMS
364	E-270	DILUTION WATER AND DIGESTER FEED SCHEMATIC DIAGRAMS
365	E-301	ANAEROBIC DIGESTER - TANK PLAN UPPER - ELECTRICAL AND I&C PLAN
366	E-303	ANAEROBIC DIGESTER - TANK PLAN UPPER - ELECTRICAL AND I&C PLAN
367	E-305	ANAEROBIC DIGESTER - TANK PLAN UPPER - ELECTRICAL AND I&C PLAN
368	E-320	DIGESTER BUILDING - AT EL 143.50 - ELECTRICAL AND I&C PLAN
369	E-321	DIGESTER BUILDING - AT EL 161.50 - ELECTRICAL AND I&C PLAN
370	E-322	DIGESTER BUILDING - BOILER ROOM PLAN AT EL 170.00 - ELECTRICAL AND I&C PLAN
371	E-323	DIGESTER GAS FACILITIES - ROOF - ELECTRICAL AND I&C PLAN
372	E-330	DIGESTER BUILDING - AT EL 143.50 - LIGHTING PLAN
373	E-331	DIGESTER BUILDING - AT EL 161.50 - LIGHTING PLAN
374	E-332	DIGESTER BUILDING - ROOF - LIGHTINGPLAN
375	E-333	DIGESTER BUILDING STAIR #1 - LIGHTING PLAN
376	E-334	DIGESTER BUILDING STAIR #2 - LIGHTING PLAN
377	E-335	DIGESTER BUILDING AND PHOSPHORUS PRECIPITATION BUILDING- GROUNDING AND LIGHTNING PROTECTION PLAN
378	E-342	DIGESTER GAS FLARE - ELECTRICAL AND I&C PLAN
379	E-361	PHOSPHORUS PRECIPITATION BUILDING - OVERALL - ELECTRICAL AND I&C PLAN
380	E-362	PHOSPHORUS PRECIPITATION BUILDING - LOWER AND UPPER LEVEL - LIGHTING PLAN
381	E-379	DIGESTER HEATING SYSTEM INSTRUMENT ONE-LINE DIAGRAM
382	E-380	DIGESTER BUILDING INSTRUMENT ONELINE DIAGRAM
383	E-381	PRIMARY SCREENS AND DIGESTED SLUDGE STORAGE INSTRUMENT ONE LINE DIAGRAM
384	E-382	PHOSHORUS INSTRUMENT ONE-LINE DIAGRAM
385	E-383	DIGESTER MIXING AND RECIRCULATION SCHEMATIC DIAGRAM
386	E-384	DIGESTER TRANSFER AND HOT WATER SUPPLY PUMP SCHEMATIC DIAGRAM
387	E-385	RECIRCULATION PUMP 3 SCHEMATIC
388	E-431	DIGESTER GAS INSTRUMENT ONE LINE DIAGRAM
389	E-631	DEAMMONIFICATION SYSTEM INSTRUMENT ONE LINE DIAGRAMS
390	E-632	PRIMARY SCREENS AND BIOFILTER INSTRUMENT ONELINE DIAGRAM
391	E-633	CENTRIFUGE FEED AND SOLIDS STORAGE MIXING PUMP SCHEMATIC DIAGRAM
392	E-634	CENTRATE FEED PUMP AND LOCAL ALARM STATION SCHEMATIC DIAGRAM
393	E-635	DIGESTED SOLIDS CELL 2 MIXER SCHEMATIC
394	E-640	FILTER BUILDING ELECTRICAL AND I&C PLAN
395	E-641	FILTER BUILDING, SCHEMATIC AND INSTRUMENT ONE LINE DIAGRAM
396	E-701	ODOR CONTROL SYSTEM - ELECTRICAL AND I&C PLAN
397	E-901	PANELBOARDS SCHEDULE - I
398	E-902	PANELBOARDS SCHEDULE - II
399	E-903	PANELBOARDS SCHEDULE - III
400	E-903A	PANELBOARDS SCHEDULE - IV
401	E-904	PANELBOARDS SCHEDULE - V
402	E-905	CABLE AND CONDUIT SCHEDULE - I
403	E-906	CABLE AND CONDUIT SCHEDULE - II
404	E-906A	CABLE AND CONDUIT SCHEDULE II
405	E-907	CABLE AND CONDUIT SCHEDULE - III
406	E-908	CABLE AND CONDUIT SCHEDULE - IV
407	E-909	CABLE AND CONDUIT SCHEDULE - V
408	E-910	CABLE AND CONDUIT SCHEDULE - VI
409	E-911	CABLE AND CONDUIT SCHEDULE - VII
410	E-912	CABLE AND CONDUIT SCHEDULE - VIII
411	E-912A	FILTER BUILDING PANEL BOARD AND CABLE CONDUIT SCHEDULE
412	E-913	CABLE AND CONDUIT SCHEDULE - IX
413	E-917	COMMUNICATIONS NETWORK ONE LINE DIAGRAM
414	E-918	INSTRUMENT CONDUIT SCHEDULE I
415	E-919	INSTRUMENT CONDUIT SCHEDULE II
416	E-920	GROUNDING AND LIGHTING PROTECTION DETAILS
417	E-921	LIGHTING FIXTURES AND DETAILS
418	E-926	TELEPHONE MANHOLES - TMH-32 EXISTING AND NEW WORK
419	E-928	TELEPHONE MANHOLES - TMH-37 AND TMH-39 EXISTING AND NEW WORK
420	E-940	DUCTBANK SECTIONS - EXISTING AND DEMOLITION
421	E-941	DUCTBANK SECTIONS - EXISTING AND MODIFICATION

DRAWING INDEX

18 - INSTRUMENTATION & CONTROLS (Y)

422	I-001	LEGEND AND SYMBOLS 1
423	I-101	SCUM TANK
424	I-102	GRAVITY BELT THICKENING SYSTEM
425	I-103	THICKENING POLYMER FEED SYSTEM
426	I-201	GRAVITY THICKENER NO. 1 SYSTEM
427	I-202	GRAVITY THICKENER NO. 2 SYSTEM
428	I-203	GT TRANSFER PUMP
429	I-204	DILUTION WATER PUMPS
430	I-250	THICKENED SOLIDS STORAGE SYSTEM
431	I-301	ANAEROBIC DIGESTER RECIRCULATION SYSTEMS
432	I-302	ANAEROBIC DIGESTER MIXING SYSTEMS
433	I-303	ANAEROBIC DIGESTER TRANSFER PUMPING SYSTEMS
434	I-341	DIGESTER HEATING SYSTEM
435	I-342	DIGESTER HEAT EXCHANGER
436	I-350	PRIMARY SOLIDS SCREENING SYSTEM
437	I-375	DIGESTED SOLIDS STORAGE
438	I-401	DIGESTER GAS TREATMENT SYSTEM
439	I-402	ANAEROBIC DIGESTER GAS STORAGE SYSTEM
440	I-427	DIGESTER GAS TREATMENT SYSTEM - COMPRESSION AND MOISTURE REMOVAL SYSTEM
441	I-450	WASTE GAS FLARE SYSTEM
442	I-501	CENTRIFUGE DEWATERING SYSTEM
443	I-502	DEWATERED SOLIDS MATERIALS HANDLING SYSTEM
444	I-526	POLYMER DEWATERING P&ID (1 OF 2) UP No. 08.06.03
445	I-527	POLYMER DEWATERING P&ID (2 OF 2) UP No. 08.06.03
446	I-601	DEAMMONIFICATION SYSTEM (1 OF 2)
447	I-602	DEAMMONIFICATION SYSTEM (2 OF 2)
448	I-640	SODIUM HYDROXIDE STORAGE AND TRANSFER PUMP SYSTEM
449	I-650	SODIUM HYDROXIDE STORAGE AND METERING PUMP SYSTEM
450	I-701	ODOR CONTROL - BIOFILTER SYSTEM
451	I-702	ODOR CONTROL-EXISTING BIOFILTER SYSTEM
452	I-801	PHOSPHORUS PRECIPITATION SYSTEM
453	I-903	SWITCHGEAR AND TRANSFORMER POWER SYSTEM MONITORING
454	I-904	PCS PHYSICAL NETWORK DIAGRAM
455	I-904A	PCS PHYSICAL NETWORK TOPOLOGY
456	I-905	PCS NETWORK DIAGRAM - DETAILED
457	I-906	AREA PLC CONTROL PANEL LAYOUT
458	I-907	RIO PLC CONTROL PANEL LAYOUT
459	I-908	NETWORK EQUIPMENT RACK PANEL LAYOUT
460	I-909	INSTRUMENTATION DETAILS 1
461	I-910	INSTRUMENTATION DETAILS 2
462	I-911	MISCELLANEOUS CONTROL PANELS
463	I-912	TYPICAL MOUNTING FOR PANEL OR TRANSMITTER DETAILS

DRAWING INDEX

THE DRAWINGS IN THIS SET ARE RECORD DRAWINGS. THEY ARE CONSTRUCTION CONTRACT DRAWINGS WHICH HAVE BEEN REVISED BASED ON AVAILABLE FIELD INFORMATION RECORDED BY OTHERS DURING CONSTRUCTION OF THIS CONTRACT. THERE HAS BEEN NO VERIFICATION OF DIMENSIONS SHOWN ON THE CONSTRUCTION DRAWINGS OR THE ACCURACY/COMPLETENESS OF THE FIELD INFORMATION RECEIVED.

SIGNATURE _____ DATE 2/7/2023

AS-BUILT REPLACEMENT SHEET

PROFESSIONAL CERTIFICATION

THIS DRAWING WAS ORIGINALLY APPROVED FOR CONSTRUCTION AND SEALED BY BRIAN M. BACLCHUNAS, A REGISTERED PROFESSIONAL ENGINEER IN THE STATE OF MARYLAND, NO. 200406

NOTICE TO CONTRACTORS

- PROJECT ELEVATIONS ARE BASED ON NAVD88 AND HOWARD COUNTY'S BENCHMARK SYSTEM
- PREVIOUS PROJECTS USED OTHER DATUMS
- APPLY THE FOLLOWING CONVERSIONS WHEN USING PREVIOUS CONTRACT DRAWINGS:
  - ADDITION NO. 6: SUBTRACT 0.80 FT
  - PRIOR ADDITIONS: SUBTRACT 1.04 FT

DEPARTMENT OF PUBLIC WORKS
HOWARD COUNTY, MARYLAND

CHIEF, BUREAU OF UTILITIES DATE

DES: BMB
DRN: JCS
CHK: JRK
DATE: 12/2016

DATE	REV	DESCRIPTION
07/2019		RECORD DRAWING

GENERAL

DRAWING INDEX - II

LITTLE PATUXENT WATER RECLAMATION PLANT
8TH ADDITION
BIOSOLIDS PROCESSING FACILITIES - PHASE I

CAPITAL PROJECT S-6295
CONTRACT NO. 24-4935

ELECTION DISTRICT NO. 6
HOWARD COUNTY, MARYLAND

SCALE AS SHOWN

SHEET 3 OF 463

G-3

BIM 360://10054364 – Little Patuxent WRP 8th Addition/LPWRP Campus Model.rvt
1/14/2022 9:21:26 AM

A/C	AIR CONDITIONING
A/E	ARCHITECT/ENGINEER
A	AMPERE
AB	ANCHOR BOLT
ABAN	ABANDON
ABC	AGGREGATE BASE COURSE
ABT	ABOUT
AC	ALTERNATING CURRENT
ACK	ACKNOWLEDGE
ACP	ACOUSTIC CEILING PANEL, ASPHALTIC CONCRETE PAVEMENT
ACST	ACOUSTIC
AD	ADDENDUM, AREA DRAIN
ADDL	ADDITIONAL
ADH	ADHESIVE
ADJ	ADJUSTABLE, ADJACENT
AF	AMP FRAME, AMP FUSE
AFF	ABOVE FINISH FLOOR
AFG	ABOVE FINISH GRADE
AGGR	AGGREGATE
AI	AREA INLET, ANALOG INPUT
AIC	AMPS INTERRUPTING CAPACITY
ALIG	ALIGNMENT
ALT	ALTERNATE, ALTITUDE
ALUM	ALUMINUM
AM	ACOUSTICAL MATERIAL
AMB	AMBIENT
ANC	ANCHOR
AO	ANALOG OUTPUT
AP	ACCESS PANEL
APRX	APPROXIMATE
APVD	APPROVED
ARCH	ARCHITECTURAL
ASSY	ASSEMBLY
AT	ACOUSTICAL TILE, AMP TRIP
ATC	ACOUSTICAL TILE CEILING
ATM	ATMOSPHERE
AUTO	AUTOMATIC
AUX	AUXILIARY
AVE	AVENUE
AVG	AVERAGE
AWG	AMERICAN WIRE GAGE
AWT	ACOUSTICAL WALL TILE
B TO B	BACK TO BACK
BAL	BALANCE
BBD	BULLETIN BOARD
BC	BASE CABINET, BOTTOM CHORD, BOLT CENTER, BOLT CIRCLE
BD	BOARD
BE	BOTH ENDS, BELL END
BF	BOTH FACES, BOTTOM FACE, BLIND FLANGE, BOARD FEET
BITUM	BITUMINOUS
BKG	BACKING
BL	BASE LINE
BLDG	BUILDING
BLK	BLOCK
BLKG	BLOCKING
BM	BENCHMARK, BEAM
BOC	BACK OF CURB
BOD	BOTTOM OF DUCT
BOG	BOTTOM OF GRILLE
BOL	BOTTOM OF LOUVER, BOLLARD
BOP	BOTTOM OF PIPE
BOR	BOTTOM OF REGISTER
BOT	BOTTOM
BOU	BOTTOM OF UNIT
BP	BASE PLATE
BRG	BEARING
BRGP	BEARING PLATE
BRKT	BRACKET
BS	BOTH SIDES
BTU	BRITISH THERMAL UNIT
BTW	BETWEEN
BTWLD	BUTT WELD
BU	BELL UP, BUILT-UP
BUR	BUILT-UP ROOFING
BW	BOTH WAYS
BYP	BYPASS
CTOC	CENTER TO CENTER
C&G	CURB AND GUTTER
C	CHANNEL SHAPE, CENTIGRADE, CONDUIT
CAB	CABINET
CAP	CAPACITY
CAT	CATALOG, CATALOGIORY
CAV	CAVITY
CB	CATCH BASIN
CCB	CONCRETE BLOCK
CCW	COUNTER CLOCKWISE
CDF	CONTROLLED-DENSITY FILL
CE	CONCRETE EDGE
CER	CERAMIC
CF	CUBIC FEET (FOOT)
CFL	COUNTER FLASHING
CHBD	CHALKBOARD
CHD	CHORD
CHFR	CHAMFER
CHH	COMMUNICATION HANDHOLE
CI	CURB INLET
CIP	CAST-IN-PLACE
CIPB	CONCRETE INTERLOCKING PAVER BALLAST
CIRC	CIRCULATION, CIRCULAR
CJ	CONSTRUCTION JOINT
CKT	CIRCUIT
CL	CENTERLINE, CLASS, CLOSE
CLG	CEILING

CLKG	CAULKING
CLR	CLEAR
CMH	COMMUNICATION MANHOLE
CMP	CORRUGATED METAL PIPE
CMU	CONCRETE MASONRY UNIT
CO	CLEANOUT, CONCRETE OPENING
COL	COLUMN
COM	COMMON
COMB	COMBINATION
COMM	COMMUNICATION
COMP	COMPOSITION, COMPRESSIBLE, COMPOSITE
CON	CONCENTRIC
CONC	CONCRETE
CONN	CONNECTION
CONST	CONSTRUCTION
CONT	CONTINUOUS
COOR	COORDINATE
CORR	CORROSIVE, CORRUGATED
CP	CHECKER PLATE, CONTROL POINT
CPLG	COUPLING
CRL	CORROSION-RESISTANT LINING
CSC	COMPRESSION SLEEVE COUPLING
CSK	COUNTERSINK
CSS	CLINIC SERVICE SINK
CT	CERAMIC TILE
CTJ	CONTRACTION JOINT
CTR	CENTER
CTRL	CONTROL
CVT	CULVERT
CU	COPPER, CUBIC
CW	CLOCKWISE
CY	CUBIC YARD
d	PENNY (NAIL MEASURE)
D	DEEP, DIFFUSER, DRAIN
DB	DUCT BANK, DECIBEL, DRY BULB
DBA	DEFORMED BAR ANCHOR
DBL	DOUBLE
DC	DIRECT CURRENT
DEG	DEGREE
DEG C	DEGREE CENTIGRADE
DEG F	DEGREE FAHRENHEIT
DEMO	DEMOLITION
DEP	DEPRESSED
DEPT	DEPARTMENT
DET	DETAIL
DI	DROP INLET, DUCTILE IRON, DIGITAL INPUT
DIA	DIAMETER
DIAG	DIAGONAL, DIAGRAM
DIFF	DIFFERENTIAL, DIFFERENCE
DIM	DIMENSION
DISCH	DISCHARGE
DIST	DISTANCE, DISTRIBUTION
DIV	DIVISION
DL	DEAD LOAD
DMJ	DOUBLE MECHANICAL JOINT
DMPF	DAMP PROOFING
DN	DOWN
DO	DISSOLVED OXYGEN, DIGITAL OUTPUT, DITTO
DP	DEPTH
DPDT	DOUBLE POLE, DOUBLE THROW
DPST	DOUBLE POLE, SINGLE THROW
DS	DOWN SPOUT
DT	DOUBLE TEE, DRIP TRAP ASSEMBLY
DUP	DUPLICATE
DWG	DRAWING
DWL	DOWEL
DWR	DRAWER
E	EAST
EA	EACH, EXHAUST AIR
EC	ELECTRICAL CONTRACTOR
ECC	ECCENTRIC
ED	EQUIPMENT DRAIN
EDB	ELECTRICAL DUCT BANK
EE	EACH END
EF	EACH FACE
EFF	EFFLUENT, EFFICIENCY
EHH	ELECTRICAL HANDHOLE
EIFS	EXTERIOR INSULATION & FINISH SYSTEM
EJ	EXPANSION JOINT
EL	ELBOW, ELEVATION
ELEC	ELECTRICAL
EMBD	EMBEDDED
EMER	EMERGENCY
EMH	ELECTRICAL MANHOLE
ENCL	ENCLOSURE
ENGR	ENGINEER
ENTR	ENTRANCE
EOP	EDGE OF PAVEMENT
EQ	EQUAL
EQUIP	EQUIPMENT
EQUIV	EQUIVALENT
ES	EACH SIDE, EQUAL SPACE, EMERGENCY SHOWER
ESEW	EMERGENCY SHOWER AND EYE WASH
EST	ESTIMATE
EW	EACH WAY, EMERGENCY EYE/FACE WASH
EWC	ELECTRIC WATER COOLER
EWEF	EACH WAY, EACH FACE
EWTB	EACH WAY, TOP AND BOTTOM
EXC	EXCAVATION
EXH	EXHAUST
EXP	EXPANSION, EXPOSED
EXST	EXISTING
EXT	EXTERIOR, EXTERNAL, EXTENSION

F TO F	FACE TO FACE
F&B	FACE AND BYPASS
FAB	FABRICATE
FB	FLOOR BEAM
FBD	FIBERBOARD
FBG	FIBERGLASS
FBM	BOARD FOOT MEASURE
FBO	FURNISHED BY OWNER
FC	FLUSHING CONNECTION
FCA	FLANGED COUPLING ADAPTER
FD	FLOOR DRAIN
FDC	FLEXIBLE DUCT CONNECTION
FDR	FEEDER
FDTN	FOUNDATION
FE	FLANGED END
FEC	FIRE EXTINGUISHER CABINET
FES	FLARED END SECTION
FEXT	FIRE EXTINGUISHER
FF	FAR FACE, FACTORY FINISH, FLAT FACE
FG	FINISHED GRADE
FH	FIRE HYDRANT
FIG	FIGURE
FIN	FINISH
FJT	FLUSH JOINT
FL	FLOW, FLOW LINE
FLEX	FLEXIBLE
FLG	FLANGE
FLOR	FLUORESCENT
FLR	FLOOR
FLS	FLASHING, FLUSH
FN	FENCE
FO	FINISHED OPENING
FOB	FLAT ON BOTTOM
FOC	FACE OF CONCRETE, FACE OF CURB
FOF	FACE OF FINISH
FOM	FACE OF MASONRY
FOS	FACE OF STUDS
FOT	FLAT ON TOP
FPT	FEMALE PIPE THREAD
FR	FRAME
FRP	FIBERGLASS REINFORCED PLASTIC
FRTM	FIRE RETARDANT TREATED MATERIAL
FS	FLOOR SINK, FAR SIDE
FT	FEET, FOOT
FTG	FOOTING, FITTING
FUR	FURRED, FURRING
FURN	FURNITURE, FURNISH
FUT	FUTURE
FV	FACE VELOCITY
FW	FIELD WELD, FIRE WALL
FWD	FORWARD
FWE	FURNISHED WITH EQUIPMENT
FXTR	FIXTURE
G	GRILLE, GROUND
GA	GAGE (METAL THICKNESS)
GAL	GALLON
GALV	GALVANIZED
GB	GRAB BAR, GRADE BREAK
GC	GROOVED COUPLING
GD	GUARD
GEN	GENERAL
GFCI	GROUND FAULT CIRCUIT INTERRUPTER
GFMU	GROUND FACE MASONRY UNIT
GG	GUTTER GRADE
GJ	GROOVED JOINT
GL	GLASS
GLB	GLASS BLOCK, GLULAM BEAM
GND	GROUND
GP	GUY POLE
GR	GRADE
GRTG	GRATING
GSB	GYPSUM SHEATHING BOARD
GT	GREASE TRAP
GVL	GRAVEL
GW	GUY WIRE
GWB	GYPSUM WALLBOARD
GYP	GYPSUM HARDBOARD
H	HIGH
HB	HOSE BIBB
HBD	HARDBOARD
HC	HANDICAPPED, HOLLOW CORE, HORIZONTAL CURVE, HORIZONTAL CENTERLINE
HD	HEAD, HOT DIP
HDR	HEADER
HDW	HARDWARE
HEX	HEXAGONAL
HGR	HANGER
HH	HANDHOLE
HID	HIGH-INTENSITY DISCHARGE
HM	HOLLOW METAL
HORIZ	HORIZONTAL
HP	HIGH POINT, HORSEPOWER
HPC	HORIZONTAL POINT OF CURVATURE
HPS	HIGH-PRESSURE SODIUM
HPT	HORIZONTAL POINT OF TANGENCY
HR	HOSE REEL, HOUR
HS	HEADED STUD, HIGH STRENGTH
HSS	HOLLOW STRUCTURAL SHAPE
HT	HEIGHT
HTG	HEATING
HV	HIGH VOLTAGE
HVAC	HEATING, VENTILATING AND AIR CONDITIONING
HWD	HARDWOOD
HWL	HIGH WATER LEVEL
HYD	HYDRAULIC
HZ	HERTZ, CYCLES PER SECOND

ID	INSIDE DIAMETER, INTERIOR DIMENSION
IE	INVERT ELEVATION, FOR EXAMPLE
IF	INSIDE FACE
IH	INTAKE HOOD
IMP	IMPACT
IN	INCH
INC	INCLUDE, INCANDESCENT
INF	INFLUENT
INSTR	INSTRUMENTATION
INSUL	INSULATION
INT	INTERIOR, INTERSECTION
INTR	INTERMEDIATE, INTERIOR
INV	INVERT
IPS	IRON PIPE SIZE
IPT	INTENAL PIPE THREAD
IR	INSIDE RADIUS, IRON ROD
IRR	IRRIGATION
ISO	ISOMETRIC
JB	JUNCTION BOX
JCT	JUNCTION
JF	JOINT FILLER
JST	JOIST
JT	JOINT
K	KIP
KB	KNEE BRACE
KCMIL	THOUSAND CIRCULAR MILS
KD	KNOCK DOWN
KO	KNOCK OUT
KSI	KIPS PER SQUARE INCH
KW	KILOWATT
L	ANGLE, LENGTH, LAVATORY, LINTEL
LAD	LADDER
LAM	LAMINATE
LATL	LATERAL
LB	LAG BOLT, POUND
LCTB	LIQUID CHALK AND TACK BOARD
LDG	LANDING
LDR	LEADER
LE	LIFTING EYE
LF	LINEAR FOOT
LG	LONG
LH	LEFT HAND
LIN	LINEAR
LIQ	LIQUID
LLH	LONG LEG HORIZONTAL
LLV	LONG LEG VERTICAL
LMLU	LIQUID MARKER LECTURE UNIT
LNG	LONGITUDINAL
LOC	LOCATION
LP	LOW POINT
LPS	LOW-PRESSURE SODIUM
LR	LONG RADIUS
LT	LEFT
LTD	LIMITED
LTG	LIGHTING
LTL	LINTEL
LTNG	LIGHTNING
LV	LOW VOLTAGE
LVL	LAMINATED VENEER LUMBER
LVR	LOUVER
LW	LIGHTWEIGHT
LWC	LIGHTWEIGHT CONCRETE
LWL	LOW WATER LEVEL
MA	MIXED AIR
MACH	MACHINED
MAINT	MAINTENANCE
MAN	MANUAL
MATL	MATERIAL
MAX	MAXIMUM
MB	MACHINE BOLT
MBR	MEMBER
MC	MECHANICAL CONTRACTOR, MECHANICAL COUPLING, MOMENT CONNECTION
MCB	METAL CORNER BEAD
MCJ	MASONRY CONTROL JOINT
MDMJ	MODIFIED DOUBLE MECHANICAL JOINT
MECH	MECHANICAL
MED	MEDIUM
MFR	MANUFACTURER
MH	MANHOLE, METAL HALIDE
MIN	MINIMUM
MIR	MIRROR
MISC	MISCELLANEOUS
MJ	MECHANICAL JOINT
ML	MASONRY LINTEL
MLO	MAIN LUGS ONLY
MMB	MEMBRANE
MO	MASONRY OPENING
MOD	MODULAR, MODIFY
MON	MONUMENT
MPII	MANUFACTURERS PRINTED INSTALLATION INSTRUCTIONS
MPT	MALE PIPE THREAD
MRGWB	MOISTURE-RESISTANT GYPSUM WALLBOARD
MS	MOP SINK
MSL	MEAN SEA LEVEL
MT	MOUNT
MU	MASONRY UNIT
MULL	MULLION
MV	MEDIUM VOLTAGE
MW	MONITORING WELL

N	NORTH, NEUTRAL
NA	NOT APPLICABLE
NAT	NATURAL, NATIONAL
NC	NORMALLY CLOSED
NEG	NEGATIVE
NF	NEAR FACE, NON-FUSED
NIC	NOT IN CONTRACT
NO	NORMALLY OPEN, NUMBER
NOM	NOMINAL
NPS	NOMINAL PIPE SIZE
NPT	NATIONAL PIPE THREAD
NS	NEAR SIDE
NTS	NOT TO SCALE
NWL	NORMAL WATER LEVEL
O TO O	OUT TO OUT
OA	OUTSIDE AIR, OVERALL
OC	ON CENTER
OCPD	OVER CURRENT PROTECTION DEVICE
OD	OUTSIDE DIAMETER
OED	OPEN END DUCT
OF	OUTSIDE FACE, OFFICE FURNISHING
OFCI	OWNER FURNISHED CONTRACTOR INSTALLED
OFOI	OWNER FURNISHED OWNER INSTALLED
OG	ORIGINAL GROUND
OH	OVERHEAD
OPNG	OPENING
OPP	OPPOSITE
OPT	OPTIONAL
OR	OUTSIDE RADIUS
ORD	OVERFLOW ROOF DRAIN
ORIG	ORIGINAL
OVFL	OVERFLOW
OVHG	OVERHANG
OZ	OUNCE
P	PAINT
PA	PUBLIC ADDRESS
PAR	PARALLEL, PARAPET
PB	PANIC BAR, PULL BOX
PBD	PARTICLE BOARD
PC	POINT OF CURVE, PIECE, PRECAST
PCC	POINT OF COMPOUND CURVATURE
PCF	POUNDS PER CUBIC FOOT
PCT	PERCENT
PE	PLAIN END
PED	PEDESTAL
PEN	PENETRATION
PERF	PERFORATED
PERM	PERMANENT
PERP	PERPENDICULAR
PF	POWER FACTOR
PFMU	PREFACED MASONRY UNIT
PH	PHASE
PI	POINT OF INTERSECTION
PKG	PACKAGE
PL	PLATE, PROPERTY LINE, PRECAST LINTEL
PLAS	PLASTER
PLAT	PLATFORM
PLBG	PLUMBING
PLF	POUNDS PER LINEAR FOOT
PNEU	PNEUMATIC
POL	POLISH
POS	POSITIVE, POSITION
PP	POLYPROPYLENE, POWER POLE
PRC	POINT OF REVERSE CURVATURE
PREF	PREFINISHED
PREFAB	PREFABRICATED
PRELIM	PRELIMINARY
PREP	PREPARE
PRES	PRESSURE
PRI	PRIMARY
PROP	PROPERTY, PROPOSED
PROT	PROTECTION
PS	PIPE SUPPORT
PSF	POUNDS PER SQUARE FOOT
PSI	POUNDS PER SQUARE INCH
PSIA	POUNDS PER SQUARE INCH ABSOLUTE
PSIG	POUNDS PER SQUARE INCH GAGE
PST	PRESTRESSED
PT	POINT, POINT OF TANGENCY
PTN	PARTITION
PVC	POLYVINYL CHLORIDE, POINT OF VERTICAL CURVE
PVMT	PAVEMENT
PWD	PLYWOOD
PWJ	PLYWOOD WEB JOIST
PZ	PIEZOMETER
Q	RATE OF FLOW
QT	QUARRY TILE
QTR	QUARTER
QTY	QUANTITY
QUAL	QUALITY

THE DRAWINGS IN THIS SET ARE RECORD DRAWINGS. THEY ARE CONSTRUCTION CONTRACT DRAWINGS WHICH HAVE BEEN REVISED BASED ON AVAILABLE FIELD INFORMATION RECORDED BY OTHERS DURING CONSTRUCTION OF THIS CONTRACT. THERE HAS BEEN NO VERIFICATION OF DIMENSIONS SHOWN ON THE CONSTRUCTION DRAWINGS OR THE ACCURACY/COMPLETENESS OF THE FIELD INFORMATION RECEIVED.

SIGNATURE — DATE 2/7/2023

R&R	REMOVE AND REPLACE
R&S	REMOVE AND SALVAGE
R	RADIUS, REGISTER, RISER
RA	RETURN AIR
RB	RESILIENT BASE, ROCK BERM
RCPT	RECEPTACLE
RD	ROOF DRAIN
REC	RECESS
RECD	RECEIVED
RECT	RECTANGULAR
RED	REDUCER
REF	REFERENCE
REINF	REINFORCING
REM	REMOVE
REQD	REQUIRED
RESIL	RESILIENT
RET	RETAINING, RETURN
REV	REVISION, REVERSE
RF	RESILIENT FLOORING
RFG	ROOFING
RFL	REFLECTED, REFLECTOR
RGH	ROUGH
RGS	RIGID GALVANIZED STEEL
RGS-PVC	PVC COATED RGS
RH	RELIEF HOOD, RIGHT HAND, RELATIVE HUMIDITY
RL	REQUIRED LAP
RLFA	RELIEF AIR
RND	ROUND
RNG	RUNNING
RO	ROUGH OPENING
ROW	RIGHT-OF-WAY
RPM	REVOLUTIONS PER MINUTE
RR	RAILROAD
RSP	ROCK SLOPE PROTECTION
RT	RIGHT
RVT	RESILIENT VINYL TILE
RY	READY
S	SOUTH, SINK
SA	SUPPLY AIR
SAMU	SOUND-ABSORBING MASONRY UNIT
SAN	SANITARY
SB	SPLASH BLOCK
SC	SOLID CORE
SCH	SCHEDULE
SCHEM	SCHEMATIC
SCN	SCREEN
SE	STEEL/ALUMINUM EDGE
SEC	SECONDARY, SECONDS
SECT	SECTION
SEP	SEPARATE
SF	SQUARE FOOT, SILT FENCE
SG	SHEET GLASS, SEALANT GROOVE
SH	SHOWER
SHT	SHEET
SHTG	SHEATHING
SIL	SILENCE
SIM	SIMILAR
SJ	SLAB JOINT
SL	SLOPE, STEEL LINTEL
SLTD	SLOTTED
SLV	SLEEVE
SMLS	SEAMLESS
SOG	SLAB ON GRADE
SP	SOUNDPROOF, STANDPIPE
SPA	SPACING
SPEC	SPECIFICATION
SPLY	SUPPLY
SPST	SINGLE POLE SINGLE THROW
SPT	SET POINT
SQ	SQUARE
SR	SHORT RADIUS
SS	SERVICE SINK
SST	STAINLESS STEEL
ST	STREET
STA	STATION
STD	STANDARD
STIF	STIFFENER
STIR	STIRRUP
STL	STEEL
STOR	STORAGE
STR	STRUCTURAL, STRAIGHT
SUB	SUBSTITUTE
SUC	SUCTION
SUSP	SUSPENDED
SY	SQUARE YARD
SYM	SYMBOL
SYMM	SYMMETRICAL
SYN	SYNTHETIC
SYS	SYSTEM
T&B	TOP AND BOTTOM
T&G	TONGUE AND GROOVE
T	TILE, TREAD
TA	TOILET ACCESSORY, TEMPERED AIR
TAN	TANGENT
TBM	TEMPORARY BENCHMARK
TCE	TEMPORARY CONSTRUCTION EASEMENT
TEF	TROWELED EPOXY FLOORING
TEMP	TEMPORARY, TEMPERATURE
THD	THREAD
THK	THICK
THRESH	THRESHOLD
TKBD	TACK BOARD

TOB	TOP OF BOLT, TOP OF BANK, TOP OF BEAM, TOP OF BERM
TOC	TOP OF CURB, TOP OF CONCRETE
TOD	TOP OF DUCT
TOF	TOP OF FOOTING
TOG	TOP OF GRATING
TOL	TOLERANCE, TOP OF LEDGER
TOM	TOP OF MASONRY
TOP	TOP OF PLATE
TOPO	TOPOGRAPHY
TOS	TOP OF SLAB, TOP OF STEEL, TOE OF SLOPE
TOW	TOP OF WALL
TP	TOILET PARTITION, TELEPHONE POLE, TOE PLATE, TRAP PRIMER
TPD	TOILET PAPER DISPENSER
TPG	TOPPING, THROUGH PLATE GIRDER
TR	TRANSOM
TRANS	TRANSITION
TRD	TRENCH DRAIN
TYP	TYPICAL
U	URINAL
UG	UNDERGROUND
ULT	ULTIMATE
UNFN	UNFINISHED
UNO	UNLESS NOTED OTHERWISE
UTIL	UTILITY
V	VENT, VELOCITY, VOLT
VA	VOLT AMPERE
VAC	VACUUM
VAR	VARNISH, VARIABLE, VOLT AMPERES REACTIVE
VB	VAPOR BARRIER, VINYL BASE, VALVE BOX
VC	VERTICAL CURVE
VCP	VITRIFIED CLAY PIPE
VCT	VINYL COMPOSITION TILE, VERTICAL CENTERLINE
VEL	VELOCITY
VENT	VENTILATION
VERT	VERTICAL
VERTS	VERTICAL REINFORCING
VG	VERTICAL GRAIN
VIF	VERIFY IN FIELD
VIN	VINYL
VOL	VOLUME
VPC	VERTICAL POINT OF CURVATURE
VPI	VERTICAL POINT OF INTERSECTION
VPT	VERTICAL POINT OF TANGENCY
VS	VERSUS, VAPOR SEAL
VTR	VENT THROUGH ROOF
VWC	VINYL WALL COVERING
W/	WITH
W/O	WITHOUT
W	WATT, WEST, WIDE, WINDOW, WIRE, WIDE FLANGE BEAM
WB	WOOD BASE
WC	WATER CLOSET, WATER COLUMN
WD	WOOD, WIDTH
WF	WIDE FLANGE, WASH FOUNTAIN
WG	WIRE GLASS, WATER GAGE
WH	WALL HYDRANT, WEEP HOLE
WI	WROUGHT IRON
WL	WATER LEVEL
WLD	WELDED
WM	WIRE MESH
WP	WEATHERPROOF
WS	WATERSTOP, WATER SURFACE
WSCT	WAINSCOT
WT	WEIGHT, WATER TIGHT
WTHP	WATERPROOF, WORKING POINT
WWF	WELDED WIRE FABRIC
XP	EXPLOSION-PROOF
XS	EXTRA STRONG
XSECT	CROSS SECTION
XXS	DOUBLE EXTRA STRONG
YH	YARD HYDRANT
YS	YIELD STRENGTH

GENERAL NOTES:

1. SEE DRAWING G-6 FOR PROJECT SPECIFIC ABBREVIATIONS FOR PIPE SERVICES, PLANT AREAS, AND EQUIPMENT.
2. LISTING OF ABBREVIATIONS DOES NOT IMPLY THAT ALL ABBREVIATIONS ARE USED IN THE CONTRACT DRAWINGS.
3. ABBREVIATIONS SHOWN ON THIS SHEET INCLUDE VARIATIONS OF A WORD. FOR EXAMPLE, "MOD" MAY MEAN MODIFY OR MODIFICATION, "INC" MAY MEAN INCLUDED OR INCLUDING, AND "REINF" MAY MEAN REINFORCE OR REINFORCING.
4. SEE INSTRUMENTATION LEGEND SHEET FOR PROJECT-SPECIFIC EQUIPMENT AND PIPING SYSTEM ABBREVIATIONS.

AS-BUILT REPLACEMENT SHEET

PROFESSIONAL CERTIFICATION

THIS DRAWING WAS ORIGINALLY APPROVED FOR CONSTRUCTION AND SEALED BY BRIAN M. BACLCHUNAS, A REGISTERED PROFESSIONAL ENGINEER IN THE STATE OF MARYLAND, NO. 200406

NOTICE TO CONTRACTORS

- PROJECT ELEVATIONS ARE BASED ON NAVD88 AND HOWARD COUNTY'S BENCHMARK SYSTEM
- PREVIOUS PROJECTS USED OTHER DATUMS
- APPLY THE FOLLOWING CONVERSIONS WHEN USING PREVIOUS CONTRACT DRAWINGS:
  - ADDITION NO. 6: SUBTRACT 0.80 FT
  - PRIOR ADDITIONS: SUBTRACT 1.04 FT

DEPARTMENT OF PUBLIC WORKS
HOWARD COUNTY, MARYLAND

CHIEF, BUREAU OF UTILITIES — DATE

DES: CJM
DRN: REE
CHK: JRK
DATE: 07/2019

DATE	REV	DESCRIPTION
07/2019		RECORD DRAWING

GENERAL

ABBREVIATIONS

LITTLE PATUXENT WATER RECLAMATION PLANT
8TH ADDITION
BIOSOLIDS PROCESSING FACILITIES - PHASE I

CAPITAL PROJECT S-6295
CONTRACT NO. 24-4935

ELECTION DISTRICT NO. 6
HOWARD COUNTY, MARYLAND

SCALE AS SHOWN

SHEET 4 OF 463

G-5

BIM 360://10054364 – Little Patuxent WRP 8th Addition/264591_G_V18.rvt
1/10/2022 12:57:43 PM

MATERIALS IN PLAN/SECTION

- ACOUSTICAL CEILING TILE (SECTION)
- ASPHALT (PLAN OR SMALL-SCALE SECTION)
- ASPHALT (LARGE-SCALE SECTION)
- BATT INSULATION (SECTION)
- BRICK MASONRY (PLAN AND/OR SECTION)
- CHECKERED PLATE (PLAN)
- CONCRETE (PLAN AND/OR SECTION)
- CONCRETE MASONRY (PLAN AND/OR SECTION)
- DEMOLITION (PLAN AND/OR SECTION)
- EARTH (SECTION)
- FILTER POINT MAT (PLAN)
- FINISHED WOOD (SECTION)
- GLULAM LUMBER (SECTION)
- GRANULAR FILL (SECTION)
- GRATING (SECTION)
- GRATING (PLAN)
- GROUT (SECTION)
- GYPSUM BOARD (SECTION)
- METAL (SECTION)
- ORIENTED STRAND BOARD (SECTION)
- PARTICLE BOARD (SECTION)
- PLYWOOD (LARGE-SCALE SECTION)
- PLYWOOD (SMALL-SCALE SECTION)
- PRECAST CONCRETE (PLAN AND/OR SECTION)
- RIGID INSULATION (SECTION)
- RIPRAP (PLAN AND/OR SECTION)
- SAND (SECTION)
- SOD (SECTION)
- WEEP JOINT MORTAR PROTECTION SYSTEM (SECTION)
- WOOD - CONTINUOUS (SECTION)
- WOOD - BLOCKING (SECTION)

GENERAL SYMBOLOGY

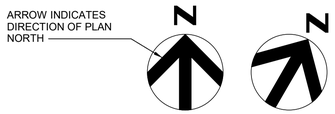

NORTH ARROW

PLAN
1/4" = 1'-0"

PLAN TITLE

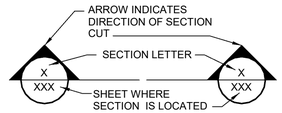

FULL BUILDING SECTION CUT MARKER

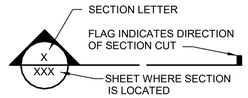

SECTION CUT MARKER

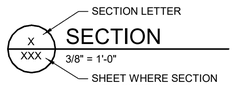

SECTION TITLE

DETAIL MARKER

FOR REFERENCING DETAILS INCLUDED IN DRAWING SET.

DETAIL MARKER

FOR REFERENCING DETAILS BOUND IN SPECIFICATIONS OR SEPARATE VOLUME.

DETAIL TITLE

* EXCEPTIONS WHERE THE SHEET NUMBER IS REPLACED BY A DASH (-).
1) FOR COMMON DETAILS, SECTIONS, ELEVATIONS OR DETAILS THAT ARE CUT OR CALLED OUT ON MULTIPLE SHEETS.
2) SECTIONS, ELEVATIONS OR DETAILS THAT ARE LOCATED ON THE SAME SHEET THEY ARE CUT OR CALLED OUT ON.

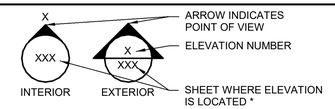

SINGLE ELEVATION OR PHOTO MARKER

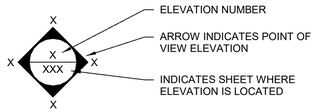

MULTIPLE ELEVATION OR PHOTO MARKER

ELEVATION TITLE

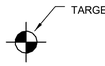

ARCHITECTURAL

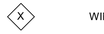

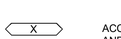

KEY NOTE DESIGNATION

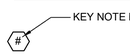

IDENTIFICATION SYMBOLOGY

PIPING IDENTIFICAITON

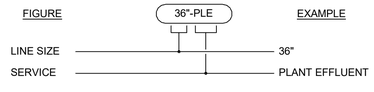

PIPE SERVICE ABBREVIATIONS

ALP	AIR, LOW PRESSURE
ADE	ANAEROBIC DIGESTER EFFLUENT (EXISTING)
ADF	ANAEROBIC DIGESTER FEED
ADMR	ANAEROBIC DIGESTER MIXING RETURN
ADMS	ANAEROBIC DIGESTER MIXING SUPPLY
ADRR	ANAEROBIC DIGESTER RECYCLE RETURN
ADRS	ANAEROBIC DIGESTER RECYCLE SUPPLY
ADS	ANAEROBIC DIGESTER SLUDGE
ADT	ANAEROBIC DIGESTER TRANSFER
BBD	BOILER BLOW DOWN
BCT	BOILER CHEMICAL TREATMENT
CA	COMPRESSED AIR
CF	CENTRIFUGE FEED
CNT	CENTRATE
CTF	CENTRATE FEED
CW	COLD WATER
DAA	DEAMMONIFICATION AIR
DAE	DEAMMONIFICATION EFFLUENT
DG	DIGESTER GAS
DGR	DIGESTER GAS RAW
DGS	DIGESTER GAS SCRUBBED
DSM	DIGESTED SOLIDS MIXING
DR	DRAIN
DW	DILUTION WATER
EXH	BOILER EXHAUST
FA	FOUL AIR
FOAM	FOAM CONTROL CHEMICAL
HWR	HOT WATER RETURN
HWS	HOT WATER SUPPLY
HYPO	SODIUM HYPOCHLORITE
MAP	STRUVITE PRECIPITATE (MAGNESIUM AMMONIUM PHOSPHATE)
MGCL	MAGNESIUM CHLORIDE
MN	MICRONUTRIENT
NAOH	SODIUM HYDROXIDE (CAUSTIC)
NG	NATURAL GAS
OVF	OVERFLOW
PD	PLANT DRAIN
POLY	POLYMER
POLYS	PLYMER SOLUTION
PPRI	PRETREATMENT PROCESS REACTOR INFLUENT
PPRAS	PRETREATMENT PROCESS RETURN ACTIVATED SLUDGE
PS	PRIMARY SLUDGE
PW	PROCESS WATER (NONPOTABLE)
RAS	RETURN ACTIVATED SLUDGE
SMP	SAMPLE
S	SANITARY SEWER
SBD	SCRUBBER BLOWDOWN
SC	SCUM
SD	STORM DRAIN
TPS	THICKENED PRIMARY SOLIDS
TW	TEMPERED WATER
TWAS	THICKENED WASTE ACTIVATED SLUDGE
W	WATER (POTABLE)
WADS	WASTE ANAEROBIC DIGESTER SLUDGE
WAS	WASTE ACTIVATED SLUDGE

THE DRAWINGS IN THIS SET ARE RECORD DRAWINGS. THEY ARE CONSTRUCTION CONTRACT DRAWINGS WHICH HAVE BEEN REVISED BASED ON AVAILABLE FIELD INFORMATION RECORDED BY OTHERS DURING CONSTRUCTION OF THIS CONTRACT. THERE HAS BEEN NO VERIFICATION OF DIMENSIONS SHOWN ON THE CONSTRUCTION DRAWINGS OR THE ACCURACY/COMPLETENESS OF THE FIELD INFORMATION RECEIVED.

SIGNATURE _____ DATE 2/7/2023

EQUIPMENT IDENTIFICATION

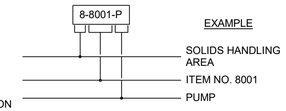

PLANT AREA DESIGNATION

1	HEADWORKS
2	FEBs AND GRIT FACILITIES
3	PCs, N&S PUMP STATIONS, FCs 2-5, W GALLERY
4	E&W PRs, E GALLERY, PS 3
5	N PRs, FC 10-12, N GALLERY AND BLOWER BLDG
6	FC 6-10, E GALLERY
7	FILTRATION & DISINFECTION
8	DEWATERING AND SOLIDS HANDLING
8-GBT	GRAVITY BELT THICKENING/SCUM STORAGE/ THICKENING POLYMER
8-PST	GRAVITY THICKENING/ PRIMARY SLUDGE SCREENING
8-TSS	THICKENED SLUDGE STORAGE
8-DIG	ANAEROBIC DIGESTION/DIGESTER CONTROLS BLDG/ DIGESTED SOLIDS STROAGE/BOILER
8-DGT	DIGESTER GAS TREATMENT/DIGESTER GAS FLARE
8-DEW	DEWATERING
8-CTR	CENTRATE TREATMENT
8-OC	ODOR CONTROL
8-CHE	PHOSPHORUS PRECIPITATION/CHEMICAL FEED FACILITIES
9	ADMINISTRATION BLDG
10	MAINTENANCE BLDG
11	DRYING

EQUIPMENT ABBREVIATIONS

GENERAL:

AD	AIR DRYER
AE	DO SENSOR
AIT	DO INDICATOR/TRANSMITTER
AN	DO ANALYZER - INSTRUMENT PAN
AR	AIR RECEIVER
AS	ALARM SYSTEM
B	BLOWER
C	AIR COMPRESSOR
CP	CHEMICAL FEED PUMP
DFA	DETONATION FLAME ARRESTOR
EL	EMERGENCY LIGHTING
F	FAN
FE	FLOW ELEMENT/SENSOR
FIT	FLOW INDICATOR/TRANSMITTER
FOPP	FIBER OPTIC PATCH PANEL
FP	FOAM PUMP
FS	FLOAT SWITCH
FSH	FLOW SWITCH - HIGH FLOW
FSL	FLOW SWITCH - LOW FLOW
FT	FUEL TANK
FTR	FILTER; BLOWER INTAKE AIR
FX	FIRE EXTINGUISHER
G	BUILDINGS, FLOORS, ETC - GENERAL
GAS	GAS METER
GB	GANG BOX
GBT	GRAVITY BELT THICKENER
GC	GAS STORAGE COVER
GD	SYNROGEAR REDUCER
GEN	GENERATOR
GLC	GLYCOL CHILLER
GMU	GAS MONITORING CONTROL UNIT
GMS	GAS MONITORING SENSOR
GS	GENERAL SUPPLY
GT	GRAVITY THICKENER
H	HOIST
HT	HEATER
HY	HYDRANT
HW	HOT WATER HEATER
HWB	HOT WATER BOILER
HX	HEAT EXCHANGER
L	LEVEL (GENERAL)
LCP	LOCAL CONTROL PANEL
LCS	LOCAL CONTROL STATION
LE	LEVEL ELEMENT/SENSOR
LIT	LEVEL INDICATOR/TRANSMITTER
LSH	LEVEL SWITCH - HIGH LEVEL
LSHH	LEVEL SWITCH - HIGH-HIGH LEVEL
LSLL	LEVEL SWITCH - LOW LEVEL
LT	LIGHTING
LTS	GENERATOR TRANSFER SWITCH
IFD	INFRARED FLAME DETECTOR
M	METER - GENERAL
MAU	MAKEUP AIR UNIT
MCC	MOTOR CONTROL CENTER
ME	MECHANICAL EQUIPMENT
MO	MOTOR
MX	MIXER
OC	ODOR CONTROL
OIT	OPERATOR INTERFACE TERMINAL
OPS	OPERATIONS GENERAL SUPPLY
OSH	TORQUE SWITCH - HIGH TORQUE
OSHH	TORQUE SWITCH - HIGH-HIGH TORQUE
P	PUMP
PC	COMPUTER, PERSONAL
PG	POWER GRID
PI	PRESSURE INDICATOR
PE	PRESSURE ELEMENT/SENSOR
PIT	PRESSURE INDICATOR/TRANSMITTER
PDE	PRESSURE DIFFERENTIAL ELEMENT
PDT	PRESSURE DIFFERENTIAL TRANSMITTER
PSH	PRESSURE SWITCH - HIGH PRESSURE

EQUIPMENT ABBREVIATIONS (CON'T)

GENERAL:

PSL	PRESSURE SWITCH - LOW PRESSURE
PVV	PRESSURE/VACUUM VENT
PR	PROCESS REACTOR
PS	PRIMARY SUBSTATION
R	RECORDER
RO	ROTOMETER
RTU	REMOTE TERMINAL
RW	ROTATING WEIR
SR	SURGE RELIEF
ST	STORAGE TANK
SW	SWITCH - GENERALT TANK
TCV	TEMPERATURE CONTROL VALVE
TE	TEMPERATURE ELEMENT/SENSOR
TIT	TEMPERATURE INDICATOR/TRANSMITTER
TSH	TEMPERATURE SWITCH - HIGH TEMPERATURE
TSL	TEMPERATURE SWITCH - LOW TEMPERATURE
TX	TRANSMITTER - GENERAL
TS	TRANSFER SWITCH
UPS	UNINTERRUPTIBLE POWER SUPPLY
UV	UTILITY VEHICLE
VFD	VARIABLE FREQUENCY DRIVE
VP	VACUUM PUMP
WT	WATER TANK

VALVES/GATES:

ARV	AIR RELEASE VALVE
BP	BACKFLOW PREVENTER
BLV	BALL VALVE
BLVM	BALL VALVE WITH MOTOR OPERATOR
BV	BUTTERFLY VALVE (AIR & LIQUID)
CV	CHECK VALVE
DPV	DIAPHRAGM VALVE
EZV	ELECTRIC ZONE VALVE
FV	FLOW CONTROL VALVE (ALL TYPES)
GV	GATE VALVE
GLV	GLOBE VALVE
KV	KNIFE VALVE
MV	MUD VALVE
PNV	PINCH VALVE
PV	PLUG VALVE
PRV	PRESSURE REDUCING VALVE
RV	PRESSURE REGULATING VALVE
PVVFA	PRESSURE/VACUUM VALVE W/ FLAME ARRESTOR
SL	SLIDE GATE
SG	SLUICE GATE
SV	SOLENOID VALVE
TV	TELESCOPING VALVE
UV	UNLOADING VALVE
V	VALVE
WG	WEIR GATE

SHEET NAMING CONVENTION

DISCIPLINE DESIGNATOR & DISCIPLINE ORDER

G	GENERAL
X	DEMOLITION
C	CIVIL
S	STRUCTURAL
A	ARCHITECTURAL
M	PROCESS MECHANICAL
H	HVAC
P	PLUMBING
F	FIRE PROTECTION
E	ELECTRICAL
I	INSTRUMENTATION

GENERAL NOTES:

1. THIS IS A STANDARD SHEET SHOWING COMMON SYMBOLOGY. ALL SYMBOLS ARE NOT NECESSARILYUSED ON THIS PROJECT.
2. SCREENING OR SHADING OF WORK IS USED TO INDICATE EXISTING COMPONENTS OR TO DE-EMPHASIZE PROPOSED IMPROVEMENTS TO HIGHLIGHT SELECTED TRADE WORK. REFER TO CONTEXT OF EACH SHEET FOR USAGE.

AS-BUILT REPLACEMENT SHEET

PROFESSIONAL CERTIFICATION

THIS DRAWING WAS ORIGINALLY APPROVED FOR CONSTRUCTION AND SEALED BY BRIAN M. BACLCHUNAS, A REGISTERED PROFESSIONAL ENGINEER IN THE STATE OF MARYLAND, NO. 200406

NOTICE TO CONTRACTORS

- PROJECT ELEVATIONS ARE BASED ON NAVD88 AND HOWARD COUNTY'S BENCHMARK SYSTEM
- PREVIOUS PROJECTS USED OTHER DATUMS
- APPLY THE FOLLOWING CONVERSIONS WHEN USING PREVIOUS CONTRACT DRAWINGS:
  - ADDITION NO. 6: SUBTRACT 0.80 FT
  - PRIOR ADDITIONS: SUBTRACT 1.04 FT

DEPARTMENT OF PUBLIC WORKS
HOWARD COUNTY, MARYLAND

CHIEF, BUREAU OF UTILITIES DATE

DES: CJM
DRN: REE
CHK: JRK
DATE: 07/2019

DATE	REV	DESCRIPTION
07/2019		RECORD DRAWING

GENERAL

LEGEND AND SYMBOLS 1

LITTLE PATUXENT WATER RECLAMATION PLANT
8TH ADDITION
BIOSOLIDS PROCESSING FACILITIES - PHASE I

CAPITAL PROJECT S-6295
CONTRACT NO. 24-4935

ELECTION DISTRICT NO. 6
HOWARD COUNTY, MARYLAND

SCALE AS SHOWN

SHEET 5 OF 463

G-6

BIM 360://10054364 – Little Patuxent WRP 8th Addition/284591_G_V18.rvt
1/10/2022 12:57:45 PM

DEMOLITION

DEMOLITION

ABANDON IN PLACE

EQUIPMENT SYMBOLOGY

CENTRIFUGAL PUMP

CHEMICAL FEED PUMP

COMPRESSOR

HEAT EXCHANGER

MIXER - PROPELLER TYPE

MOTOR

PROGRESSING CAVITY PUMP

PROGRESSING CAVITY CAKE PUMP

SUMP PUMP

LOBE PUMP

CENTRIFUGE

DOUBLE DISC PUMP

PIPING AND VALVE SYMBOLOGY (GENERAL DRAWINGS)

BALL VALVE

BUTTERFLY VALVE

DIAPHRAGM VALVE

GATE VALVE

GLOBE VALVE

KNIFE GATE VALVE

NEEDLE VALVE

PINCH VALVE

PLUG VALVE

PLUG VALVE (NORMALLY CLOSED)

THREE WAY BALL VALVE

THREE WAY PLUG VALVE

BALL CHECK VALVE

CHECK VALVE

DOUBLE DISK CHECK VALVE

CONE VALVE

PRESSURE RELIEF VALVE

PRESSURE REDUCING VALVE

AIR RELEASE VACUUM VALVE
A = AIR RELEASE
V = VACUUM

AIR RELEASE VALVE

PRESSURE REGULATING VALVE

BACK PRESSURE VALVE

SOLENOID VALVE

36"-RWI
TYPICAL PIPE LINE CALLOUT

OA DAMPER

BACKFLOW PREVENTER

DENSITY METER

FLOW METER

NATURAL GAS METER

UNION

WYE-STRAINER

FLEXIBLE HOSE OR TUBING

FLEXIBLE PIPING CONNECTION

LINE SIZE CHANGE

LINE TURNING DOWN

LINE TURNING UP

BLIND FLANGE

PIPE BREAK

V-PORT BALL VALVE

THREE-WAY CONTROL VALVE

3-WAY VALVE

4-WAY VALVE

CALIBRATION POT

BASKET STRAINER

QUICK CONNECT

SUCTION DIFFUSER-STRAINER

PUMP DISCHARGE (TRIPLE DUTY) VALVE

THERMOSTATIC MIXING VALVE

INJECTION RING

COMPRESSION SLEEVE TYPE COUPLING

FLANGED COUPLING ADAPTER (FCA)

FLEXIBLE CONNECTION

HARNESSED MECHANICAL COUPLING

EXPANSION COUPLING/JOINT

PRESSURE GAUGE (WITH COCK)

TRAP

QUICK DISCONNECT CAM & GROOVE COUPLING

CAP OR PLUG

INTERIOR CLEANOUT

HOSE BIBB -1

HOSE BIBB -2

HOSE REEL

FLOOR DRAIN

X = TYPE DESIGNATED IN SPECIFICATIONS

PIPE IN SECTION

BELL UP (PLAN)

BELL UP (SECTION OR SCHEMATIC)

DRAIN (SECTION OR SCHEMATIC)

DEMOLITION GENERAL NOTES

1. COORDINATE THE EXACT EXTENTS OF DEMOLITION WITH THE CONNECTION TO NEW WORK.
2. SEE SECTION 01 73 29 FOR LIST OF ITEMS TO BE SALVAGED.
3. EXISTING PIPE MATERIALS MAY BE DIFFERENT THAN NEW PIPE MATERIALS SCHEDULED IN SECTION 40 05 00. PIPE IDENTIFIERS ON EXISTING PIPING ARE ONLY INTENDED TO DENOTE THE SERVICE. MATERIAL FOR EXISTING PIPING SYSTEM INDICATED FOR PARTIAL REMOVAL SHALL BE FIELD VERIFIED AND APPROPRIATE RECONNECTIONS MADE SUITABLE FOR PIPING MATERIAL TRANSITIONS.
4. WHERE DEMOLITION OF AN ITEM IS INDICATED, THE ASSOCIATED ELECTRICAL AND INSTRUMENTATION CONDUIT AND WIRING SHALL ALSO BE REMOVED.
5. IN GENERAL PIPE SUPPORTS ARE NOT SHOWN FOR EXISTING PIPING. SUPPORTS SHALL BE REMOVED WITH THE ASSOCIATED PIPING OR EQUIPMENT. REPAIR CONCRETE SURFACES AFTER REMOVAL OF ANCHORAGE BY GROUTING PENETRATION FLUSH WITH THE WALL.
6. COMPLY WITH DETAIL 10S-905 FOR DEMOLITION OF EQUIPMENT PADS.
7. WHERE PIPING IS INDICATED FOR DEMOLITION THROUGH A WALL, FLOOR, OR STRUCTURE, REPAIR OPENINGS TO MATCH THE EXISTING SURFACE. SEE STRUCTURAL DETAILS.
8. CONNECTIONS TO EXISTING PIPING SHALL BE MADE AT EXISTING FLANGED OR GROOVED PIPE JOINTS ONLY. FIELD CUTTING OF EXISTING PIPING FOR CONNECTIONS NOT ALLOWED. DEMOLISH PIPING BACK TO NEAREST PIPE JOINT AS REQUIRED.

GENERAL NOTES

1. DRAWINGS ARE INTENDED TO DEPICT DESIGN INTENT; CONTRACTOR TO REFER TO SPECIFICATOIONS, P&IDS AND STANDARD DETAILS FOR FURTHER INSTALLATION REQUIREMENTS.
2. VALVES, INLINE APPURTENANCES AND EQUIPMENT ARE SHOWN GRAPHICALLY AS THE DEVICE BODY; REFER TO P&IDS FOR DEVICE TYPE, SIZE AND DETAILS. INSTALL DEVICES IN ACCORDANCE WITH SPECIFICATIONS AND MANUFACTURERS REQUIREMENTS. ENSURE ADEQUATE ACCESS FOR OPERATION OF DEVICES - NOTIFY ENGINEER PRIOR TO INSTALLATION IF INADEQUATE CLEARANCE IS ANTICIPATED.
3. IF SPECIFIC DIMENSIONS OF PIPIING ARE NOT SHOWN, CONTRACTOR MAY PROPOSE ALTERNATIVE PIPE ROUTING, SUBJECT TO APPROVAL OF THE ENGINEER.
4. PROVIDE MANUAL AIR RELEASE VALVES PER DETAIL 5/M-902 FOR ALL HIGH POINTS IN PROCESS PIPING. COORDINATE LCATION OF VENT PIPE SITH ENGINEER.
5. PROVIDE FLUSHING AND DRAIN CONNECTIONS ON SUCTION AND DISCHARGE SIDE OF ALL PUMPS PER DETAIL 1/M-902 (OR SIMILAR).
6. PROVIDE FLOW SENSING AND PRESSURE MONITORING DEVICES FOR ALL PUMPS AS SHOWN ON THE P&IDS. ISOLATE PRESSURE GAUGES AND PRESSURE SWITCHES PER DETAILS ON DRAWING I-910.
7. EXISTING PIPE LOCATION BASED ON LiDAR SURVEY COMPLETED BY HDR, INC. IN OCTOBER 2015.
8. LIDAR DATA WILL BE AVAILABLE TO CONTRACTOR AFTER AWWARD FOR INFOMATION ONLY.
9. CONTRACTOR SHALL FIELD VERIFY ALL PIPE LOCATIONS.
10. REFER TO SPECIFICATION 40 05 00 FOR ALLOWABLE PIPE JOINTS (FLANGED OR GROOVED) FOR EACH PIPE SYSTEM. PIPE JOINTS SHALL BE AS SCHEDULED IN SECTION 40 05 00 UNLESS SPECIFICALLY CALLED OUT ON THE DRAWINGS.
11. PROVIDE A DISMANLING JOINT OR RESTRAINED COMPRESSION SLEEVE COUPLING AT ALL FLOW METERS AND AT ALL CONNECTIONS TO PUMPS OR OTHER EQUIPMENT.

THE DRAWINGS IN THIS SET ARE RECORD DRAWINGS. THEY ARE CONSTRUCTION CONTRACT DRAWINGS WHICH HAVE BEEN REVISED BASED ON AVAILABLE FIELD INFORMATION RECORDED BY OTHERS DURING CONSTRUCTION OF THIS CONTRACT. THERE HAS BEEN NO VERIFICATION OF DIMENSIONS SHOWN ON THE CONSTRUCTION DRAWINGS OR THE ACCURACY/COMPLETENESS OF THE FIELD INFORMATION RECEIVED.

SIGNATURE — DATE 2/7/2023

AS-BUILT REPLACEMENT SHEET

PROFESSIONAL CERTIFICATION

THIS DRAWING WAS ORIGINALLY APPROVED FOR CONSTRUCTION AND SEALED BY BRIAN M. BACLCHUNAS, A REGISTERED PROFESSIONAL ENGINEER IN THE STATE OF MARYLAND, NO. 200406

NOTICE TO CONTRACTORS

- PROJECT ELEVATIONS ARE BASED ON NAVD88 AND HOWARD COUNTY'S BENCHMARK SYSTEM
- PREVIOUS PROJECTS USED OTHER DATUMS
- APPLY THE FOLLOWING CONVERSIONS WHEN USING PREVIOUS CONTRACT DRAWINGS:
  - ADDITION NO. 6: SUBTRACT 0.80 FT
  - PRIOR ADDITIONS: SUBTRACT 1.04 FT

DEPARTMENT OF PUBLIC WORKS
HOWARD COUNTY, MARYLAND

CHIEF, BUREAU OF UTILITIES — DATE

DES: CJM
DRN: REE
CHK: JRK
DATE: 07/2019

DATE	REV	DESCRIPTION
07/2019		RECORD DRAWING

GENERAL

LEGEND AND SYMBOLS 2

LITTLE PATUXENT WATER RECLAMATION PLANT
8TH ADDITION
BIOSOLIDS PROCESSING FACILITIES - PHASE I

CAPITAL PROJECT S-6295
CONTRACT NO. 24-4935

ELECTION DISTRICT NO. 6
HOWARD COUNTY, MARYLAND

SCALE AS SHOWN

SHEET 6 OF 463

G-7

BIM 360://10054364 – Little Patuxent WRP 8th Addition/264591_G_V18.rvt
1/10/2022 12:57:46 PM

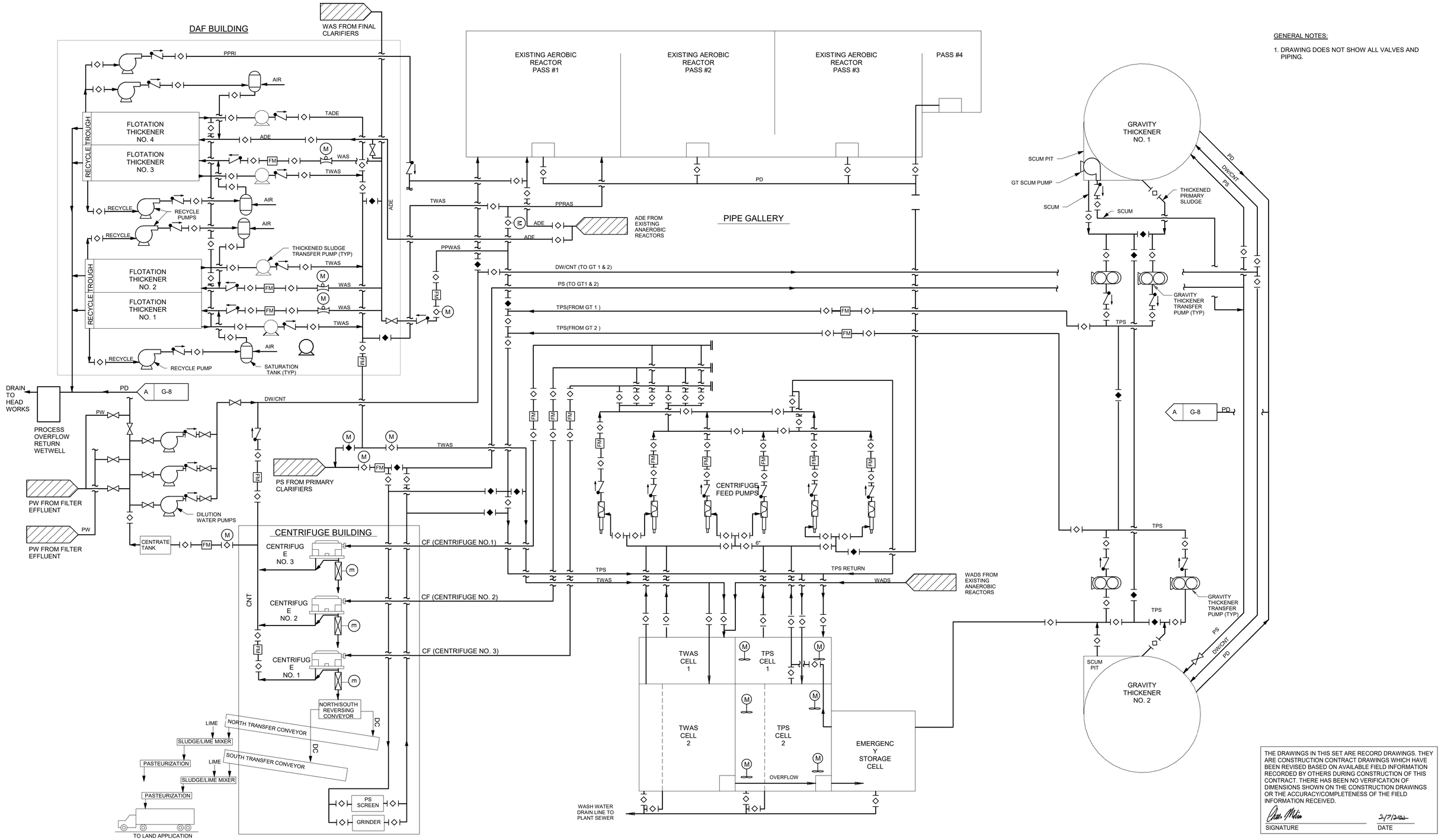

GENERAL NOTES:

1. DRAWING DOES NOT SHOW ALL VALVES AND PIPING.

THE DRAWINGS IN THIS SET ARE RECORD DRAWINGS. THEY ARE CONSTRUCTION CONTRACT DRAWINGS WHICH HAVE BEEN REVISED BASED ON AVAILABLE FIELD INFORMATION RECORDED BY OTHERS DURING CONSTRUCTION OF THIS CONTRACT. THERE HAS BEEN NO VERIFICATION OF DIMENSIONS SHOWN ON THE CONSTRUCTION DRAWINGS OR THE ACCURACY/COMPLETENESS OF THE FIELD INFORMATION RECEIVED.

SIGNATURE — DATE 2/7/2023

AS-BUILT REPLACEMENT SHEET

PROFESSIONAL CERTIFICATION

THIS DRAWING WAS ORIGINALLY APPROVED FOR CONSTRUCTION AND SEALED BY BRIAN M. BACLCHUNAS, A REGISTERED PROFESSIONAL ENGINEER IN THE STATE OF MARYLAND, NO. 200406

NOTICE TO CONTRACTORS

- PROJECT ELEVATIONS ARE BASED ON NAVD88 AND HOWARD COUNTY'S BENCHMARK SYSTEM
- PREVIOUS PROJECTS USED OTHER DATUMS
- APPLY THE FOLLOWING CONVERSIONS WHEN USING PREVIOUS CONTRACT DRAWINGS:
  - ADDITION NO. 6: SUBTRACT 0.80 FT
  - PRIOR ADDITIONS: SUBTRACT 1.04 FT

DEPARTMENT OF PUBLIC WORKS
HOWARD COUNTY, MARYLAND

CHIEF, BUREAU OF UTILITIES — DATE

DES: CJM
DRN: REE
CHK: JRK
DATE: 07/2019

DATE	REV	DESCRIPTION
07/2019		RECORD DRAWING

GENERAL

EXISTING OVERALL SOLIDS PROCESS FLOW DIAGRAM

LITTLE PATUXENT WATER RECLAMATION PLANT
8TH ADDITION
BIOSOLIDS PROCESSING FACILITIES - PHASE I

CAPITAL PROJECT S-6295
CONTRACT NO. 24-4935

ELECTION DISTRICT NO. 6
HOWARD COUNTY, MARYLAND

SCALE AS SHOWN

SHEET 7 OF 463

G-8

BIM 360://10054364 – Little Patuxent WRP 8th Addition/264591_G_V18.rvt
1/10/2022 12:57:48 PM

GENERAL NOTES:

1. DRAWING DOES NOT SHOW ALL VALVES AND PIPING. AIR AND GAS PIPING NOT SHOWN.

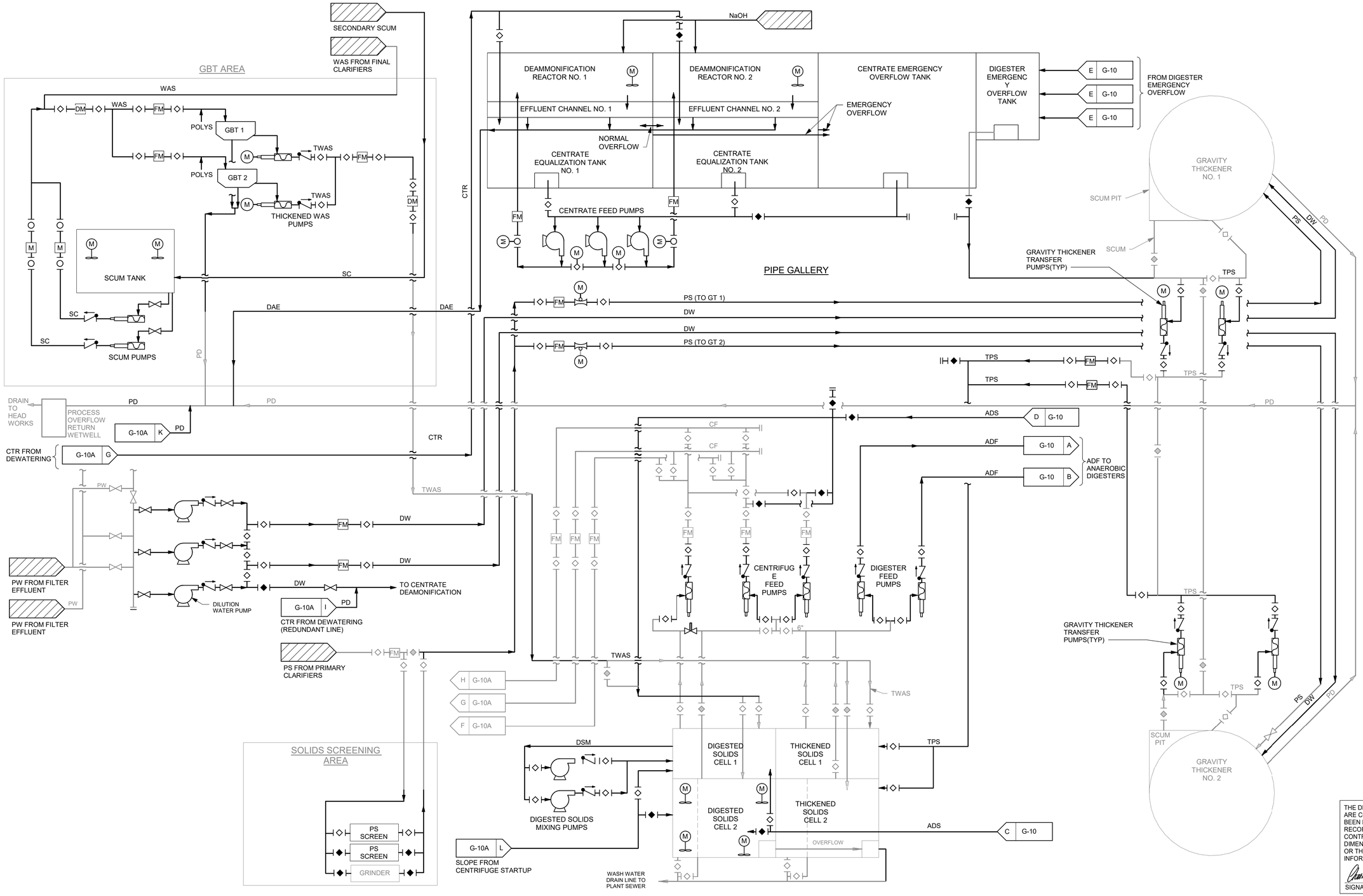

THE DRAWINGS IN THIS SET ARE RECORD DRAWINGS. THEY ARE CONSTRUCTION CONTRACT DRAWINGS WHICH HAVE BEEN REVISED BASED ON AVAILABLE FIELD INFORMATION RECORDED BY OTHERS DURING CONSTRUCTION OF THIS CONTRACT. THERE HAS BEEN NO VERIFICATION OF DIMENSIONS SHOWN ON THE CONSTRUCTION DRAWINGS OR THE ACCURACY/COMPLETENESS OF THE FIELD INFORMATION RECEIVED.

SIGNATURE _____ DATE 2/7/2023

AS-BUILT REPLACEMENT SHEET

PROFESSIONAL CERTIFICATION

THIS DRAWING WAS ORIGINALLY APPROVED FOR CONSTRUCTION AND SEALED BY BRIAN M. BACLCHUNAS, A REGISTERED PROFESSIONAL ENGINEER IN THE STATE OF MARYLAND, NO. 200406

NOTICE TO CONTRACTORS

- PROJECT ELEVATIONS ARE BASED ON NAVD88 AND HOWARD COUNTY'S BENCHMARK SYSTEM
- PREVIOUS PROJECTS USED OTHER DATUMS
- APPLY THE FOLLOWING CONVERSIONS WHEN USING PREVIOUS CONTRACT DRAWINGS:
  - ADDITION NO. 6: SUBTRACT 0.80 FT
  - PRIOR ADDITIONS: SUBTRACT 1.04 FT

DEPARTMENT OF PUBLIC WORKS
HOWARD COUNTY, MARYLAND

CHIEF, BUREAU OF UTILITIES DATE

DES: CJM
DRN: REE
CHK: JRK
DATE: 07/2019

DATE	REV	DESCRIPTION
07/2019		RECORD DRAWING

GENERAL

OVERALL SOLIDS PROCESS FLOW DIAGRAM I

LITTLE PATUXENT WATER RECLAMATION PLANT
8TH ADDITION
BIOSOLIDS PROCESSING FACILITIES - PHASE I

CAPITAL PROJECT S-6295
CONTRACT NO. 24-4935

ELECTION DISTRICT NO. 6
HOWARD COUNTY, MARYLAND

SCALE AS SHOWN

SHEET 8 OF 463

G-9

BIM 360://10054364 – Little Patuxent WRP 8th Addition/264591_G_V18.rvt
1/10/2022 12:57:50 PM

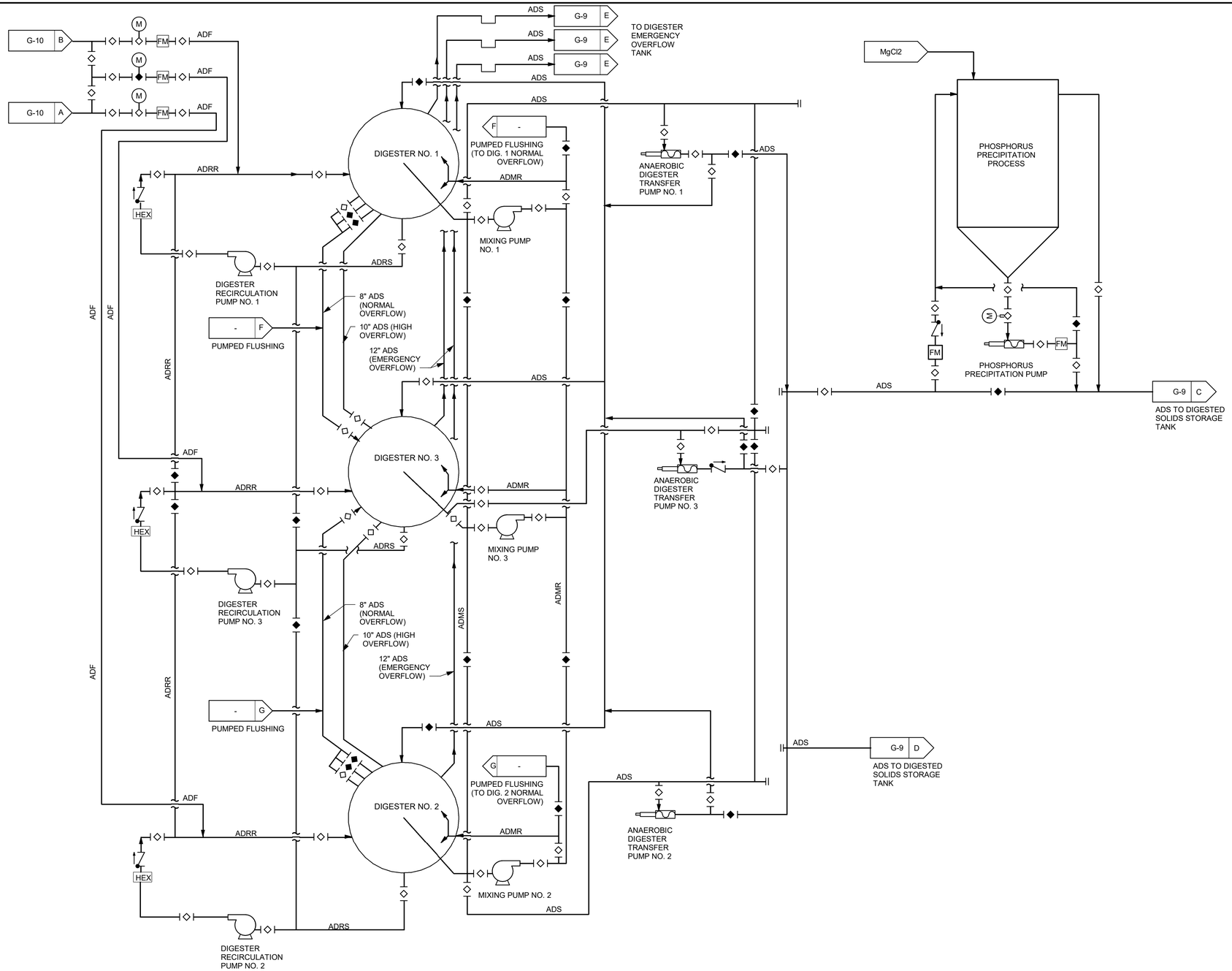

ANAEROBIC DIGESTION

GENERAL NOTES:

1. DRAWING DOES NOT SHOW ALL VALVES AND PIPING. AIR AND GAS PIPING IS NOT SHOWN.
2. DIGESTER OVERFLOW ELEVATIONS:
   DIGESTERS 1 & 2
   8" ADS (NORMAL OVERFLOW) - EL 183.50
   8" ADS (NORMALLY CLOSED) - EL 176.87 AND 156.48
   10" ADS (HIGH OVERFLOW) - EL 185.00
   ALL DIGESTERS
   12" ADS (EMERGENCY OVERFLOW) - 185.50
3. DIGESTER SUCTION ELEVATIONS:
   DIGESTERS NOS. 1 & 2
   6" ADRS - CL EL 153.50
   DIGESTER NO. 3
   6" ADRS - CL EL 147.00
4. DIGESTER RETURN/FEED PIPING ELEVATIONS:
   DIGESTERS NOS. 1 & 2
   6" ADRR - CL EL 175.50
   DIGESTER 3
   6" ADRR - CL EL 173.67

THE DRAWINGS IN THIS SET ARE RECORD DRAWINGS. THEY ARE CONSTRUCTION CONTRACT DRAWINGS WHICH HAVE BEEN REVISED BASED ON AVAILABLE FIELD INFORMATION RECORDED BY OTHERS DURING CONSTRUCTION OF THIS CONTRACT. THERE HAS BEEN NO VERIFICATION OF DIMENSIONS SHOWN ON THE CONSTRUCTION DRAWINGS OR THE ACCURACY/COMPLETENESS OF THE FIELD INFORMATION RECEIVED.

SIGNATURE 2/7/2023 DATE

AS-BUILT REPLACEMENT SHEET

PROFESSIONAL CERTIFICATION

THIS DRAWING WAS ORIGINALLY APPROVED FOR CONSTRUCTION AND SEALED BY BRIAN M. BACLCHUNAS, A REGISTERED PROFESSIONAL ENGINEER IN THE STATE OF MARYLAND, NO. 200406

NOTICE TO CONTRACTORS

- PROJECT ELEVATIONS ARE BASED ON NAVD88 AND HOWARD COUNTY'S BENCHMARK SYSTEM
- PREVIOUS PROJECTS USED OTHER DATUMS
- APPLY THE FOLLOWING CONVERSIONS WHEN USING PREVIOUS CONTRACT DRAWINGS:
  - ADDITION NO. 6: SUBTRACT 0.80 FT
  - PRIOR ADDITIONS: SUBTRACT 1.04 FT

DEPARTMENT OF PUBLIC WORKS
HOWARD COUNTY, MARYLAND

CHIEF, BUREAU OF UTILITIES DATE

DES: CJM
DRN: REE
CHK: JRK
DATE: 07/2019

DATE	REV	DESCRIPTION
07/2019		RECORD DRAWING

GENERAL

OVERALL SOLIDS PROCESS FLOW DIAGRAM II

LITTLE PATUXENT WATER RECLAMATION PLANT
8TH ADDITION
BIOSOLIDS PROCESSING FACILITIES - PHASE I

CAPITAL PROJECT S-6295
CONTRACT NO. 24-4935

ELECTION DISTRICT NO. 6
HOWARD COUNTY, MARYLAND

SCALE AS SHOWN

SHEET 9 OF 463

G-10

BIM 360://10054364 – Little Patuxent WRP 8th Addition/264591_G_V18.rvt
1/10/2022 12:57:52 PM

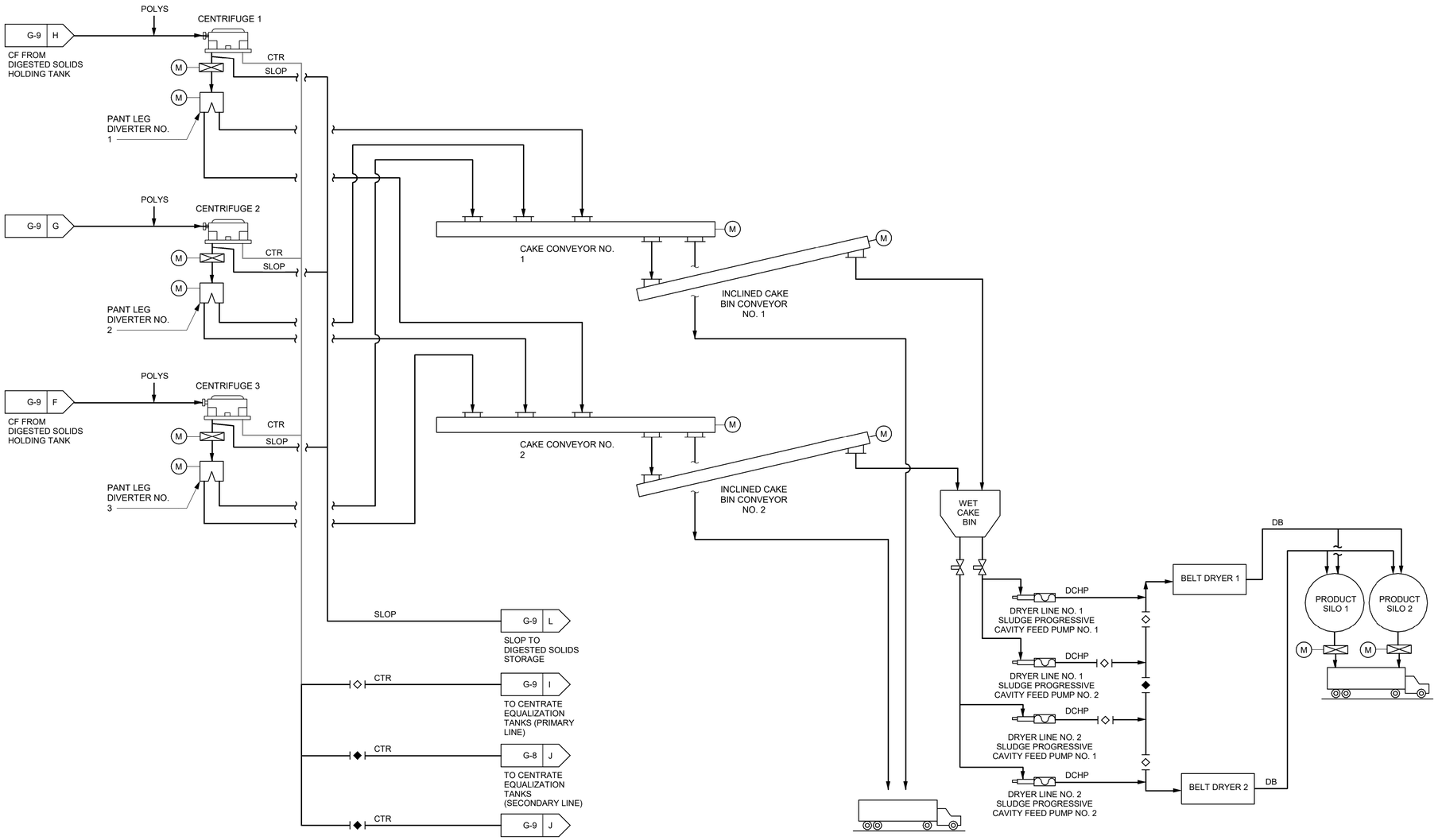

DEWATERING AND DRYING

THE DRAWINGS IN THIS SET ARE RECORD DRAWINGS. THEY ARE CONSTRUCTION CONTRACT DRAWINGS WHICH HAVE BEEN REVISED BASED ON AVAILABLE FIELD INFORMATION RECORDED BY OTHERS DURING CONSTRUCTION OF THIS CONTRACT. THERE HAS BEEN NO VERIFICATION OF DIMENSIONS SHOWN ON THE CONSTRUCTION DRAWINGS OR THE ACCURACY/COMPLETENESS OF THE FIELD INFORMATION RECEIVED.

SIGNATURE

2/7/2023
DATE

AS-BUILT REPLACEMENT SHEET

PROFESSIONAL CERTIFICATION

THIS DRAWING WAS ORIGINALLY APPROVED FOR CONSTRUCTION AND SEALED BY BRIAN M. BACLCHUNAS, A REGISTERED PROFESSIONAL ENGINEER IN THE STATE OF MARYLAND, NO. 200406

NOTICE TO CONTRACTORS

- PROJECT ELEVATIONS ARE BASED ON NAVD88 AND HOWARD COUNTY'S BENCHMARK SYSTEM
- PREVIOUS PROJECTS USED OTHER DATUMS
- APPLY THE FOLLOWING CONVERSIONS WHEN USING PREVIOUS CONTRACT DRAWINGS:
  - ADDITION NO. 6: SUBTRACT 0.80 FT
  - PRIOR ADDITIONS: SUBTRACT 1.04 FT

DEPARTMENT OF PUBLIC WORKS
HOWARD COUNTY, MARYLAND

CHIEF, BUREAU OF UTILITIES DATE

DES: Designer
DRN: Author
CHK: Checker
DATE: 07/2019

DATE	REV	DESCRIPTION
07/2019		RECORD DRAWING

GENERAL

OVERALL SOLIDS PROCESS FLOW DIAGRAM III

LITTLE PATUXENT WATER RECLAMATION PLANT
8TH ADDITION
BIOSOLIDS PROCESSING FACILITIES - PHASE I

CAPITAL PROJECT S-6295
CONTRACT NO. 24-4935

ELECTION DISTRICT NO. 6
HOWARD COUNTY, MARYLAND

SCALE AS SHOWN

SHEET 10 OF 463

G-10A

BIM 360://10054364 – Little Patuxent WRP 8th Addition/264591_G_V18.rvt
1/10/2022 12:57:53 PM

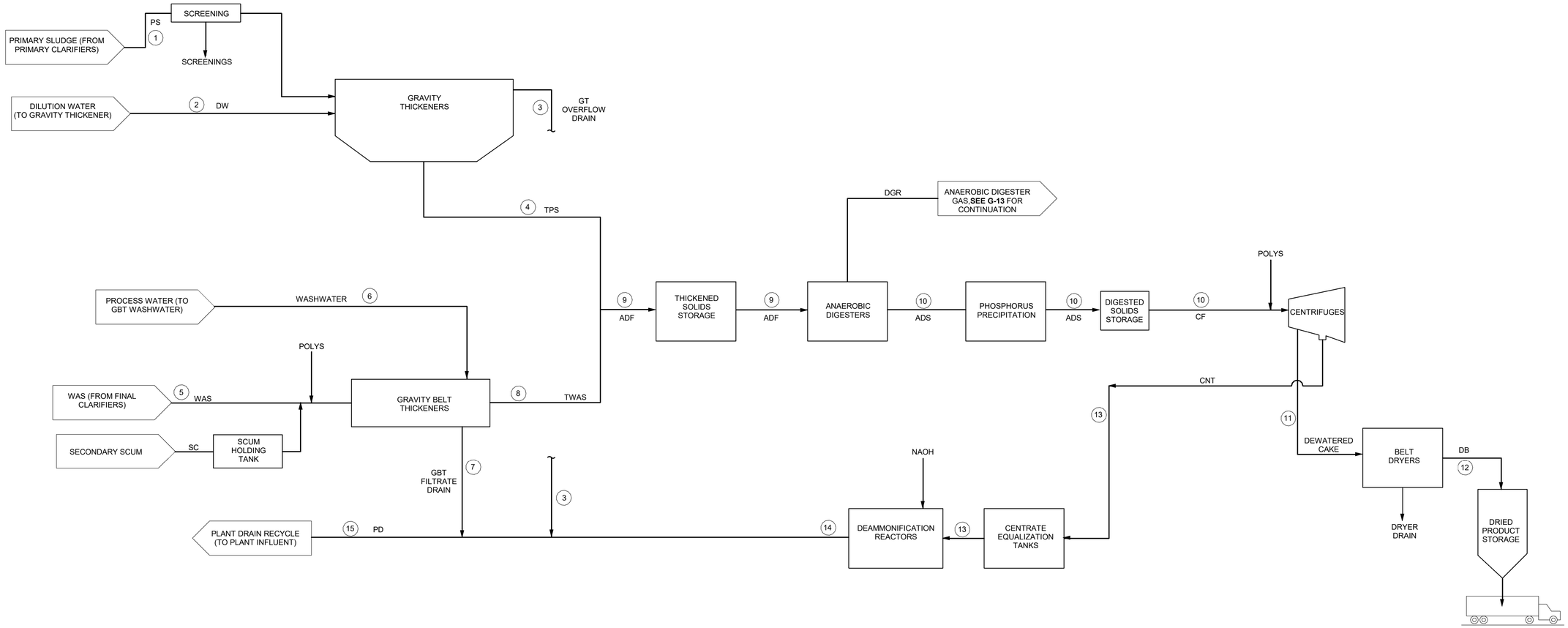

GENERAL NOTES

1. MASS BALANCE VALUES ARE BASED ON THICKENED WASTE ACTIVATED SOLIDS AT 5.0% TS AND THICKENED PRIMARY SOLIDS AT 3.8% TS. ACTUAL THICKENING PERFORMANCE MAY VARY.
2. STARTUP CONDITION MASS BALANCE IS BASED ON 20 MGD PLANT INFLUENT FLOW.
3. LIQUID TREATMENT PROCESS IS NOT SHOWN. PLANT EFFLUENT LIMITS FOR TOTAL NITROGEN AND TOTAL PHOSPHORUS ARE 4.0 AND 0.3 MILLIGRAMS PER LITER, RESPECTIVELY.

		STARTUP CONDITION - ANNUAL AVERAGE										STARTUP CONDITION - MAXIMUM MONTH										STARTUP CONDITION - PEAK WEEK									
		Flow	Mass	TSS		VSS		TN		TP		Flow	Mass	TSS		VSS		TN		TP		Flow	Mass	TSS		VSS		TN		TP	
Label	Description	gpd	wet lb/day	mg/l	lb/day	mg/l	lb/day	mg/l	lb/day	mg/l	lb/day	gpd	wet lb/day	mg/l	lb/day	mg/l	lb/day	mg/l	lb/day	mg/l	lb/day	gpd	wet lb/day	mg/l	lb/day	mg/l	lb/day	mg/l	lb/day	mg/l	lb/day
1	Primary Solids	178,684		20,000	29,805	17,400	25,930	700	1,043	100	149	203,700		20,000	33,977	17,400	29,560	700	1,189	100	170	239,437		20,000	39,938	17,400	34,746	700	1,398	100	200
2	Process Water to GTs	178,684										203,700										239,437									
3	Gravity Thickener Overflow	270,378		991	2,235	862	1,945	35	78	5	11	308,231		991	2,548	862	2,217	35	89	5	13	362,306		991	2,995	862	2,606	35	105	5	15
4	Thickened Primary Solids	86,991		38,000	27,569	33,060	23,985	1,330	965	190	138	99,170		38,000	31,429	33,060	27,343	1,330	1,100	190	157	116,568		38,000	36,943	33,060	32,140	1,330	1,293	190	185
5	Waste Activated Solids	341,751		8,000	22,802	6,640	18,925	716	2,042	513	1,461	389,596		8,000	25,994	6,640	21,575	716	2,328	513	1,666	457,946		8,000	30,554	6,640	25,360	716	2,736	513	1,958
6	Washwater to GBTs	57,637										57,637										57,637									
7	GBT Filtrate Drain	347,442		393	1,140	327	946	35	102	25	73	388,014		402	1,300	333	1,079	36	116	26	83	445,975		411	1,528	341	1,268	37	137	26	98
8	Thickened WAS (from GBT)	51,946		50,000	21,662	41,500	17,979	4,477	1,940	3,205	1,388	59,219		50,000	24,694	41,500	20,496	4,477	2,211	3,205	1,583	69,608		50,000	29,026	41,500	24,092	4,477	2,599	3,205	1,860
9	Digester Feed Solids	138,937		42,487	49,231	36,216	41,964	2,507	2,905	1,317	1,526	158,388		42,487	56,123	36,216	47,839	2,507	3,311	1,317	1,740	186,176		42,487	65,969	36,216	56,232	2,507	3,892	1,317	2,045
10	Digested Solids to Dewatering	138,937		24,379	28,249	18,108	20,982	2,389	2,768	1,317	1,526	158,388		24,379	32,203	18,108	23,920	2,389	3,156	1,317	1,740	186,176		24,379	37,853	18,108	28,116	2,389	3,709	1,317	2,045
11	Dewatered Cake	16,512	137,712	200,000	27,542	148,554	20,458	11,968	1,648	7,544	1,039	18,824	156,992	200,000	31,398	148,554	23,322	11,968	1,879	7,544	1,184	22,126	184,534	200,000	36,907	148,554	27,413	11,968	2,209	7,544	1,392
12	Dried Solids		29,937	920,000	27,542	683,346	20,458	50,180	1,502	34,702	1,039		34,129	920,000	31,398	683,346	23,322	50,180	1,713	34,702	1,184		40,116	920,000	36,907	683,346	27,413	50,180	2,013	34,702	1,392
13	Centrate to Anammox Treatment	122,425		692	706	514	525	1,097	1,120	477	487	139,565		692	805	514	598	1,097	1,277	477	555	164,050		692	946	514	703	1,097	1,501	477	653
14	Centrate Reactor Effluent	122,425		692	706	514	525	329	336	477	487	139,565		692	805	514	598	329	383	477	555	164,050		692	946	514	703	329	450	477	653
15	Plant Drain Recycle	740,245		661	4,082	553	3,416	84	516	93	571	835,810		668	4,653	559	3,894	84	589	93	652	972,331		674	5,469	564	4,577	85	692	94	766

THE DRAWINGS IN THIS SET ARE RECORD DRAWINGS. THEY ARE CONSTRUCTION CONTRACT DRAWINGS WHICH HAVE BEEN REVISED BASED ON AVAILABLE FIELD INFORMATION RECORDED BY OTHERS DURING CONSTRUCTION OF THIS CONTRACT. THERE HAS BEEN NO VERIFICATION OF DIMENSIONS SHOWN ON THE CONSTRUCTION DRAWINGS OR THE ACCURACY/COMPLETENESS OF THE FIELD INFORMATION RECEIVED.

SIGNATURE — DATE 2/7/2023

AS-BUILT REPLACEMENT SHEET

PROFESSIONAL CERTIFICATION

THIS DRAWING WAS ORIGINALLY APPROVED FOR CONSTRUCTION AND SEALED BY BRIAN M. BACLCHUNAS, A REGISTERED PROFESSIONAL ENGINEER IN THE STATE OF MARYLAND, NO. 200406

NOTICE TO CONTRACTORS

- PROJECT ELEVATIONS ARE BASED ON NAVD88 AND HOWARD COUNTY'S BENCHMARK SYSTEM
- PREVIOUS PROJECTS USED OTHER DATUMS
- APPLY THE FOLLOWING CONVERSIONS WHEN USING PREVIOUS CONTRACT DRAWINGS:
  - ADDITION NO. 6: SUBTRACT 0.80 FT
  - PRIOR ADDITIONS: SUBTRACT 1.04 FT

DEPARTMENT OF PUBLIC WORKS
HOWARD COUNTY, MARYLAND

CHIEF, BUREAU OF UTILITIES — DATE

DES: CJM
DRN: REE
CHK: JRK
DATE: 07/2019

DATE	REV	DESCRIPTION
07/2019		RECORD DRAWING

GENERAL

SOLIDS HANDLING MASS BALANCE STARTUP CONDITION

LITTLE PATUXENT WATER RECLAMATION PLANT
8TH ADDITION
BIOSOLIDS PROCESSING FACILITIES - PHASE I

CAPITAL PROJECT S-6295
CONTRACT NO. 24-4935

ELECTION DISTRICT NO. 6
HOWARD COUNTY, MARYLAND

SCALE AS SHOWN

SHEET 11 OF 463

G-11

BIM 360://10054364 – Little Patuxent WRP 8th Addition/264591_G_V18.rvt
1/10/2022 12:57:57 PM

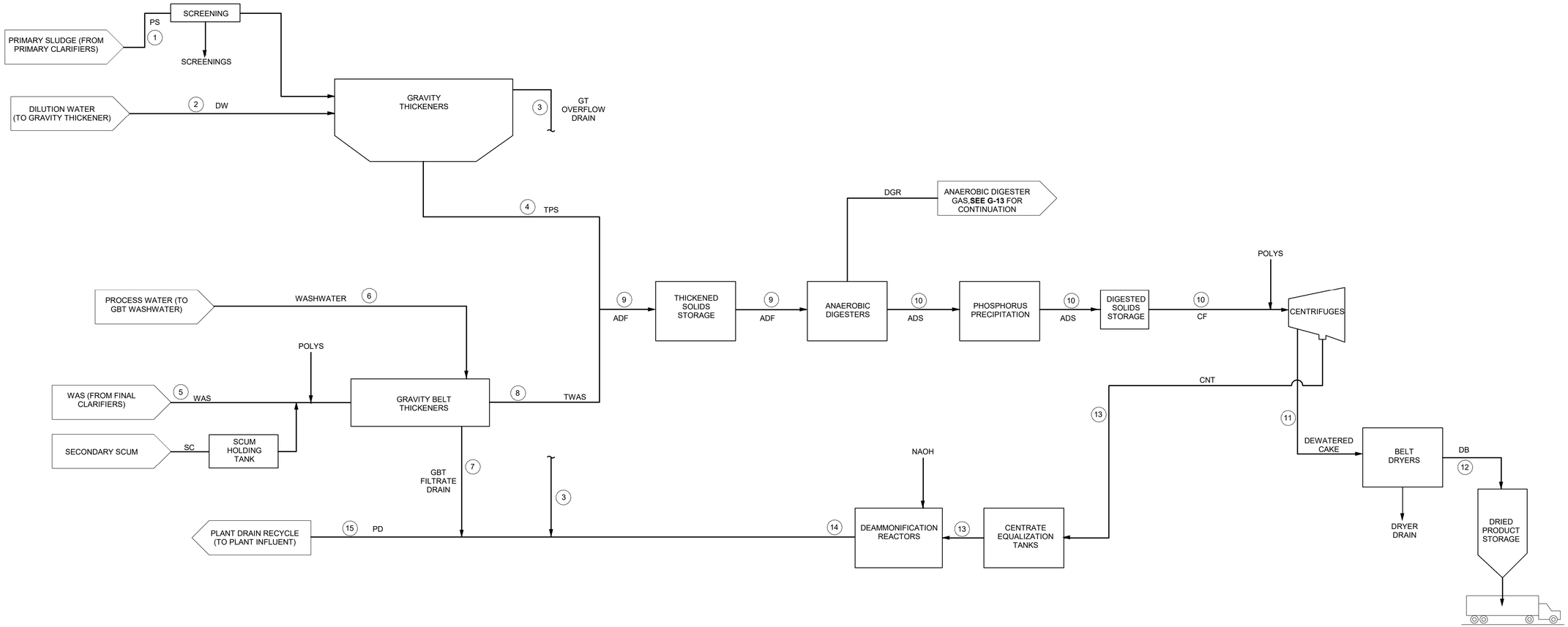

GENERAL NOTES

1. MASS BALANCE VALUES ARE BASED ON THICKENED WASTE ACTIVATED SOLIDS AT 5.0% TS AND THICKENED PRIMARY SOLIDS AT 3.8% TS. ACTUAL THICKENING PERFORMANCE MAY VARY.
2. DESIGN CONDITION MASS BALANCE IS BASED ON 25.2 MGD PLANT INFLUENT FLOW.
3. LIQUID TREATMENT PROCESS IS NOT SHOWN. PLANT EFFLUENT LIMITS FOR TOTAL NITROGEN AND TOTAL PHOSPHORUS ARE 4.0 AND 0.3 MILLIGRAMS PER LITER, RESPECTIVELY.

		DESIGN CONDITION - ANNUAL AVERAGE										DESIGN CONDITION - MAXIMUM MONTH										DESIGN CONDITION - PEAK WEEK									
		Flow	Mass	TSS		VSS		TN		TP		Flow	Mass	TSS		VSS		TN		TP		Flow	Mass	TSS		VSS		TN		TP	
Label	Description	gpd	wet lb/day	mg/l	lb/day	mg/l	lb/day	mg/l	lb/day	mg/l	lb/day	gpd	wet lb/day	mg/l	lb/day	mg/l	lb/day	mg/l	lb/day	mg/l	lb/day	gpd	wet lb/day	mg/l	lb/day	mg/l	lb/day	mg/l	lb/day	mg/l	lb/day
1	Primary Solids	225,142		20,000	37,554	17,400	32,672	700	1,314	100	188	256,662		20,000	42,811	17,400	37,246	700	1,498	100	214	301,691		20,000	50,322	17,400	43,780	700	1,761	100	252
2	Process Water to GTs	225,142		-	-	-	-	-	-	-	-	256,662		-	-	-	-	-	-	-	-	301,691									
3	Gravity Thickener Overflow	340,676		991	2,817	862	2,450	35	99	5	14	388,371		991	3,211	862	2,793	35	112	5	16	456,506		991	3,774	862	3,284	35	132	5	19
4	Thickened Primary Solids	109,609		38,000	34,737	33,060	30,221	1,330	1,216	190	174	124,954		38,000	39,600	33,060	34,452	1,330	1,386	190	198	146,876		38,000	46,548	33,060	40,497	1,330	1,629	190	233
5	Waste Activated Solids	430,606		8,000	28,730	6,640	23,846	716	2,573	513	1,841	490,891		8,000	32,752	6,640	27,184	716	2,933	513	2,099	577,012		8,000	38,498	6,640	31,954	716	3,447	513	2,467
6	Washwater to GBTs	57,637		-	-	-	-	-	-	-	-	57,637		-	-	-	-	-	-	-	-	57,637									
7	GBT Filtrate Drain	422,791		407	1,437	338	1,192	36	129	26	92	473,912		414	1,638	344	1,359	37	147	27	105	546,943		422	1,925	350	1,598	38	172	27	123
8	Thickened WAS (from GBT)	65,452		50,000	27,294	41,500	22,654	4,477	2,444	3,205	1,749	74,615		50,000	31,115	41,500	25,825	4,477	2,786	3,205	1,994	87,706		50,000	36,573	41,500	30,356	4,477	3,275	3,205	2,344
9	Digester Feed Solids	175,061		42,487	62,031	36,216	52,875	2,507	3,660	1,317	1,923	199,569		42,487	70,715	36,216	60,278	2,507	4,172	1,317	2,192	234,582		42,487	83,121	36,216	70,853	2,507	4,904	1,317	2,577
10	Digested Solids to Dewatering	175,061		24,379	35,593	18,108	26,438	2,389	3,488	1,317	1,923	199,569		24,379	40,576	18,108	30,139	2,389	3,976	1,317	2,192	234,582		24,379	47,695	18,108	35,426	2,389	4,674	1,317	2,577
11	Dewatered Cake	20,805	173,517	200,000	34,703	148,554	25,777	11,968	2,077	7,544	1,309	23,718	197,810	200,000	39,562	148,554	29,385	11,968	2,367	7,544	1,492	27,879	232,513	200,000	46,503	148,554	34,541	11,968	2,783	7,544	1,754
12	Dried Solids		37,721	920,000	34,703	683,346	25,777	50,180	1,893	34,702	1,309		43,002	920,000	39,562	683,346	29,385	50,180	2,158	34,702	1,492		50,546	920,000	46,503	683,346	34,541	50,180	2,536	34,702	1,754
13	Centrate to Anammox Treatment	154,256		692	890	514	661	1,097	1,411	477	614	175,851		692	1,014	514	753	1,097	1,609	477	700	206,702		692	1,192	514	886	1,097	1,891	477	823
14	Centrate Reactor Effluent	154,256		692	890	514	661	329	423	477	614	175,851		692	1,014	514	753	329	483	477	700	206,702		692	1,192	514	886	329	567	477	823
15	Plant Drain Recycle	917,723		672	5,143	562	4,304	85	651	94	720	1,038,135		677	5,863	567	4,906	86	742	95	821	1,210,152		683	6,891	571	5,767	86	872	96	965

THE DRAWINGS IN THIS SET ARE RECORD DRAWINGS. THEY ARE CONSTRUCTION CONTRACT DRAWINGS WHICH HAVE BEEN REVISED BASED ON AVAILABLE FIELD INFORMATION RECORDED BY OTHERS DURING CONSTRUCTION OF THIS CONTRACT. THERE HAS BEEN NO VERIFICATION OF DIMENSIONS SHOWN ON THE CONSTRUCTION DRAWINGS OR THE ACCURACY/COMPLETENESS OF THE FIELD INFORMATION RECEIVED.

SIGNATURE — DATE 2/7/2023

AS-BUILT REPLACEMENT SHEET

PROFESSIONAL CERTIFICATION

THIS DRAWING WAS ORIGINALLY APPROVED FOR CONSTRUCTION AND SEALED BY BRIAN M. BACLCHUNAS, A REGISTERED PROFESSIONAL ENGINEER IN THE STATE OF MARYLAND, NO. 200406

NOTICE TO CONTRACTORS

- PROJECT ELEVATIONS ARE BASED ON NAVD88 AND HOWARD COUNTY'S BENCHMARK SYSTEM
- PREVIOUS PROJECTS USED OTHER DATUMS
- APPLY THE FOLLOWING CONVERSIONS WHEN USING PREVIOUS CONTRACT DRAWINGS:
  - ADDITION NO. 6: SUBTRACT 0.80 FT
  - PRIOR ADDITIONS: SUBTRACT 1.04 FT

DEPARTMENT OF PUBLIC WORKS
HOWARD COUNTY, MARYLAND

CHIEF, BUREAU OF UTILITIES — DATE

DES: CJM
DRN: REE
CHK: JRK
DATE: 07/2019

DATE	REV	DESCRIPTION
07/2019		RECORD DRAWING

GENERAL

SOLIDS HANDLING MASS BALANCE DESIGN CONDITION

LITTLE PATUXENT WATER RECLAMATION PLANT
8TH ADDITION
BIOSOLIDS PROCESSING FACILITIES - PHASE I

CAPITAL PROJECT S-6295
CONTRACT NO. 24-4935

ELECTION DISTRICT NO. 6
HOWARD COUNTY, MARYLAND

SCALE AS SHOWN

SHEET 12 OF 463

G-12

BIM 360://10054364 – Little Patuxent WRP 8th Addition/264591_G_V18.rvt
1/10/2022 12:58:00 PM

HOT WATER BOILERS

NUMBER OF UNITS	2
OUTPUT CAPACITY EACH	5 MMBTU/HR
NOMINAL EFFICIENCY	80%
MAX FUEL DEMAND AT FULL CAPACITY	12.5 MMBTU/HR 350 SCFM AS DIGESTER GAS 210 SCFM AS NATURAL GAS

TYPICAL BOILER FUEL DEMANDS

FLOW CONDITION	SEASON	TOTAL BOILER FUEL DEMAND (MMBTU/HR) / (SCFM DIGESTER GAS)
STARTUP AVERAGE	SUMMER	2.2 / 61
STARTUP AVERAGE	AVERAGE	3.1 / 86
DESIGN AVERAGE	AVERAGE	3.7 / 102
DESIGN AVERAGE	WINTER	5.4 / 150
DESIGN PEAK WEEK	WINTER	6.2 / 172

DIGESTER HEAT EXCHANGERS

NUMBER OF UNITS	3 (1 PER DIGESTER)
CAPACITY EACH	2.8 MMBTU/HR

FLARE

TYPE	ENCLOSED
CAPACITY	400 SCFM

ANAEROBIC DIGESTER GAS

ANAEROBIC DIGESTER GAS	
DESIGN AVERAGE	275 SCFM / 9.9 MMBTU/HR
DESIGN MAX MONTH	315 SCFM / 11.3 MMBTU/HR
DESIGN PEAK WEEK	370 SCFM / 13.3 MMBTU/HR
TYPICAL GAS PROPERTIES	
HEATING VALUE	600 BTU/CF
% METHANE	65%
% HYDROGEN SULFIDE	0.10 TO 0.15%

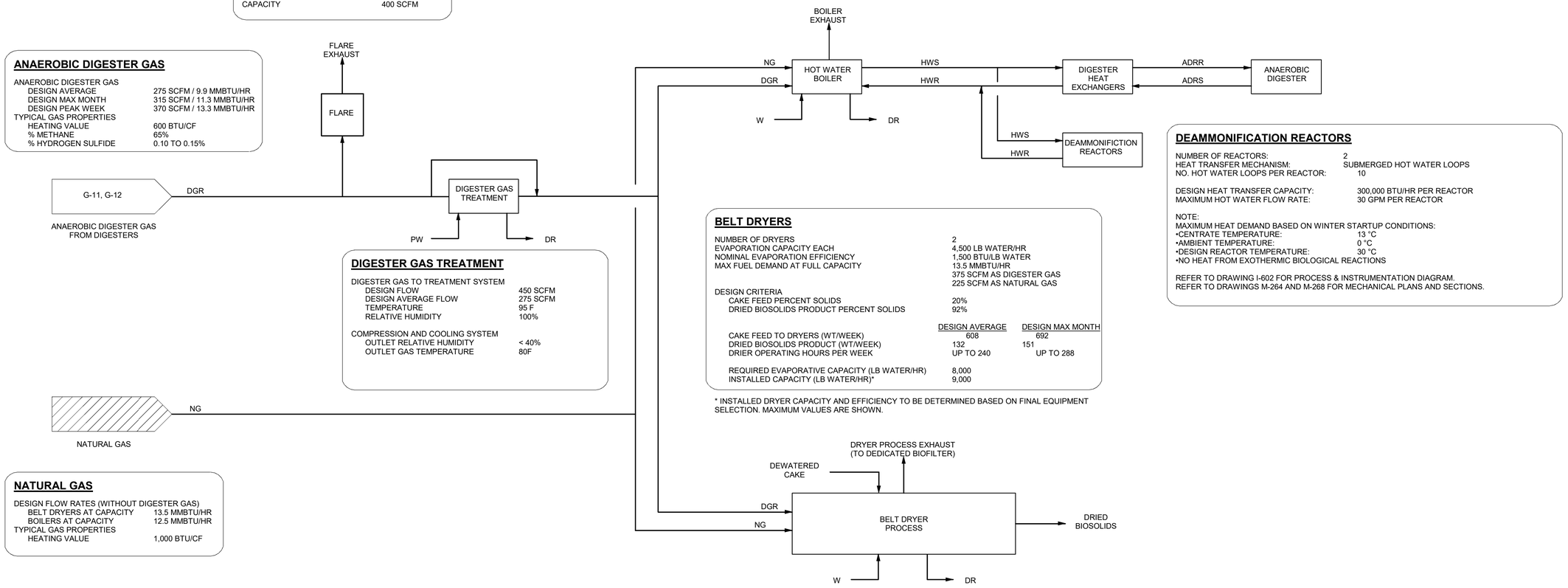

DEAMMONIFICATION REACTORS

NUMBER OF REACTORS:	2
HEAT TRANSFER MECHANISM:	SUBMERGED HOT WATER LOOPS
NO. HOT WATER LOOPS PER REACTOR:	10
DESIGN HEAT TRANSFER CAPACITY:	300,000 BTU/HR PER REACTOR
MAXIMUM HOT WATER FLOW RATE:	30 GPM PER REACTOR

NOTE:
MAXIMUM HEAT DEMAND BASED ON WINTER STARTUP CONDITIONS:
- •CENTRATE TEMPERATURE: 13 °C
- •AMBIENT TEMPERATURE: 0 °C
- •DESIGN REACTOR TEMPERATURE: 30 °C
- •NO HEAT FROM EXOTHERMIC BIOLOGICAL REACTIONS

REFER TO DRAWING I-602 FOR PROCESS & INSTRUMENTATION DIAGRAM.
REFER TO DRAWINGS M-264 AND M-268 FOR MECHANICAL PLANS AND SECTIONS.

DIGESTER GAS TREATMENT

DIGESTER GAS TO TREATMENT SYSTEM	
DESIGN FLOW	450 SCFM
DESIGN AVERAGE FLOW	275 SCFM
TEMPERATURE	95 F
RELATIVE HUMIDITY	100%
COMPRESSION AND COOLING SYSTEM	
OUTLET RELATIVE HUMIDITY	< 40%
OUTLET GAS TEMPERATURE	80F

BELT DRYERS

NUMBER OF DRYERS	2
EVAPORATION CAPACITY EACH	4,500 LB WATER/HR
NOMINAL EVAPORATION EFFICIENCY	1,500 BTU/LB WATER
MAX FUEL DEMAND AT FULL CAPACITY	13.5 MMBTU/HR 375 SCFM AS DIGESTER GAS 225 SCFM AS NATURAL GAS
DESIGN CRITERIA	
CAKE FEED PERCENT SOLIDS	20%
DRIED BIOSOLIDS PRODUCT PERCENT SOLIDS	92%

	DESIGN AVERAGE	DESIGN MAX MONTH
CAKE FEED TO DRYERS (WT/WEEK)	608	692
DRIED BIOSOLIDS PRODUCT (WT/WEEK)	132	151
DRIER OPERATING HOURS PER WEEK	UP TO 240	UP TO 288
REQUIRED EVAPORATIVE CAPACITY (LB WATER/HR)	8,000	
INSTALLED CAPACITY (LB WATER/HR)*	9,000	

* INSTALLED DRYER CAPACITY AND EFFICIENCY TO BE DETERMINED BASED ON FINAL EQUIPMENT SELECTION. MAXIMUM VALUES ARE SHOWN.

NATURAL GAS

DESIGN FLOW RATES (WITHOUT DIGESTER GAS)	
BELT DRYERS AT CAPACITY	13.5 MMBTU/HR
BOILERS AT CAPACITY	12.5 MMBTU/HR
TYPICAL GAS PROPERTIES	
HEATING VALUE	1,000 BTU/CF

THE DRAWINGS IN THIS SET ARE RECORD DRAWINGS. THEY ARE CONSTRUCTION CONTRACT DRAWINGS WHICH HAVE BEEN REVISED BASED ON AVAILABLE FIELD INFORMATION RECORDED BY OTHERS DURING CONSTRUCTION OF THIS CONTRACT. THERE HAS BEEN NO VERIFICATION OF DIMENSIONS SHOWN ON THE CONSTRUCTION DRAWINGS OR THE ACCURACY/COMPLETENESS OF THE FIELD INFORMATION RECEIVED.

SIGNATURE _____ DATE 2/7/2023

AS-BUILT REPLACEMENT SHEET

PROFESSIONAL CERTIFICATION
THIS DRAWING WAS ORIGINALLY APPROVED FOR CONSTRUCTION AND SEALED BY BRIAN M. BACLCHUNAS, A REGISTERED PROFESSIONAL ENGINEER IN THE STATE OF MARYLAND, NO. 20406

NOTICE TO CONTRACTORS
- PROJECT ELEVATIONS ARE BASED ON NAVD88 AND HOWARD COUNTY'S BENCHMARK SYSTEM
- PREVIOUS PROJECTS USED OTHER DATUMS
- APPLY THE FOLLOWING CONVERSIONS WHEN USING PREVIOUS CONTRACT DRAWINGS:
  - ADDITION NO. 6: SUBTRACT 0.80 FT
  - PRIOR ADDITIONS: SUBTRACT 1.04 FT

DEPARTMENT OF PUBLIC WORKS
HOWARD COUNTY, MARYLAND

CHIEF, BUREAU OF UTILITIES DATE

DES: CJM
DRN: REE
CHK: JRK
DATE: 07/2019

DATE	REV	DESCRIPTION
07/2019		RECORD DRAWING

GENERAL

HEAT AND ENERGY SCHEMATIC

LITTLE PATUXENT WATER RECLAMATION PLANT
8TH ADDITION
BIOSOLIDS PROCESSING FACILITIES - PHASE I

CAPITAL PROJECT S-6295
CONTRACT NO. 24-4935

ELECTION DISTRICT NO. 6
HOWARD COUNTY, MARYLAND

SCALE AS SHOWN

SHEET 13 OF 463

G-13

BIM 360://10054364 – Little Patuxent WRP 8th Addition/264591_G_V18.rvt
1/10/2022 12:58:01 PM

PRIMARY SLUDGE SCREENING AND THICKENING

PRIMARY SLUDGE SCREENS

NUMBER OF UNITS INSTALLED	2 (1 DUTY + 1 STANDBY)
OPERATING SCHEDULE	CONTINUOUS
STRAINER CAPACITY EACH	300 GPM
FEED SOURCE	PRIMARY CLARIFIER SLUDGE PUMPS
FEED CONCENTRATION (%TS)	1% TO 4%

GRAVITY THICKENERS

NUMBER OF UNITS INSTALLED	2
OPERATING SCHEDULE	CONTINUOUS
THICKENER DIAMETER	40 FT
DRIVE HP	0.75
THICKENED PS CONCENTRATION*	3.8% TO 6.0%
DESIGN SOLIDS LOADING RATE (PPD/SF)	16 TO 30

OPERATING CONDITIONS	ANNUAL AVERAGE	MAX MONTH
NUMBER OF UNITS OPERATING	1	2
PRIMARY SLUDGE FEED (PPD)	37600	42800
PRIMARY SLUDGE FEED (GPD @ 2% TS)	225100	256600
SOLIDS LOADING RATE (PPD/SF)	30	17

GRAVITY THICKENER TRANSFER PUMPS

NUMBER OF UNITS INSTALLED	2 PER GT (4 TOTAL)
NUMBER OF UNITS OPERATING.	1 PER GT
OPERATING SCHEDULE	CONTINUOUS
PUMP TYPE	PROGRESSING CAVITY
MOTOR HP	5
DRIVE TYPE	VFD
DESIGN POINT	25 TO 70 GPM @ 20 PSIG

DILUTION WATER PUMPS

NUMBER OF UNITS INSTALLED	3
NUMBER OF UNITS OPERATING	1-2 (1 PER GRAVITY THICKENER)
OPERATING SCHEDULE	CONTINUOUS
PUMP TYPE	END SUCTION CENTRIFUGAL
MOTOR HP	3
DRIVE TYPE	VFD
MAXIMUM DESIGN POINT	350 GPM @ 17 FT TDH
MINIMUM DESIGN POINT	100 GPM @ 6 FT TDH

WASTE ACTIVATED SOLIDS THICKENING

SCUM TANKS

NUMBER OF TANKS	1 (EXISTING DAF TANK)
VOLUME EACH (GAL)	39,500
MIXING	TOP ENTRY MECHANICAL
NUMBER OF MIXERS	2 @ 1 HP

SCUM PUMPS (TO GBT)

NUMBER OF UNITS INSTALLED	2 (1 PER GBT)
OPERATING SCHEDULE	CONTINUOUS
PUMP TYPE	PROGRESSIVE CAVITY
MOTOR HP	5
DRIVE TYPE	VFD
DESIGN FLOW	20 - 40 GPM

GRAVITY BELT THICKENERS

NUMBER OF UNITS INSTALLED	2
NUMBER OF UNITS OPERATING	1
OPERATING SCHEDULE	CONTINUOUS
BELT WIDTH	2 METERS
SOLIDS CAPTURE EFFICIENCY	95%
THICKENED WAS CONCENTRATION	5%
DESIGN SOLIDS LOADING RATE (LB/M/HR)	600 TO 800
DESIGN HYDRAULIC LOADING RATE (GPM/M)	150 TO 200

OPERATING CONDITIONS	ANNUAL AVERAGE	MAX MONTH
NUMBER OF UNITS OPERATING	1	1
SECONDARY SOLIDS TO GBT (PPD)	28700	32800
SECONDARY SOLIDS TO GBT (GPD)	437000	491000
SOLIDS LOADING RATE (LB/M/HR)	600	680
HYDRAULIC LOADING RATE (GPM/M)	150	170

GBT WASHWATER PUMPS

NUMBER OF UNITS INSTALLED	2 (1 PER GBT)
OPERATING SCHEDULE	CONTINUOUS
PUMP TYPE	CENTRIFUGAL
MOTOR HP	5
DRIVE TYPE	CONSTANT SPEED
DESIGN FLOW AND TDH	40 GPM @ 90 PSIG

THICKENED WAS PUMPS

NUMBER OF UNITS INSTALLED	2 (1 PER GBT)
OPERATING SCHEDULE	CONTINUOUS
PUMP TYPE	PROGRESSING CAVITY
MOTOR HP	5
DRIVE TYPE	VFD
DESIGN FLOW AND TDH	65 GPM @ 25 PSIG

GBT POLYMER FEED

NUMBER OF FEED PUMPS	2
PUMP TYPE	PROGRESSING CAVITY
DESIGN POLYMER DOSE (LB/DRY TON)	10 TO 12
NEAT POLYMER FLOW, 40% SOLUTION	UP TO 5 GPH
BLENDED POLYMER FLOW, 0.5% SOLUTION	UP TO 10 GPM

ANAEROBIC DIGESTER FEED

HOLDING TANKS - THICKENED SLUDGE CELLS

MIXER TYPE	LARGE BUBBLE COMPRESSED AIR
NUMBER OF COMPRESSORS	2 @ 25 HP (1 DUTY + 1 STANDBY)
OPERATING LEVEL RANGE	EL 132.2 TO EL 142.2
OPERATING VOLUME RANGE, CELL 1 (GAL)	14,000 TO 60,000
OPERATING VOLUME RANGE, CELL 2 (GAL)	47,000 TO 198,000

DIGESTER FEED PUMPS

NUMBER OF UNITS INSTALLED	2
NUMBER OF UNITS OPERATING	1
OPERATING SCHEDULE	CONTINUOUS
PUMP TYPE	PROGRESSING CAVITY
MOTOR HP	15
DRIVE TYPE	VFD
DESIGN FLOW AND TDH	200 GPM @ 32 PSIG

ANAEROBIC DIGESTION, MIXING, AND TRANSFER

ANAEROBIC DIGESTERS

NUMBER OF UNITS INSTALLED	3
DIMENSIONS	80 FT DIA X 45 FT (40 FT SWD)
OPERATING VOLUME EACH	1.55 MG
TEMPERATURE	95 TO 98 F
DESIGN HRT (DAYS)	15 AT MAX MONTH WITH 2 DIGESTERS IN SERVICE
DESIGN SOLIDS LOADING (LB VS/DAY/CF)	0.09 TO 0.17

OPERATING CONDITIONS	ANNUAL AVERAGE	MAX MONTH
HRT WITH 2 DIGESTERS (DAYS)	17.6	15.5
HRT WITH 3 DIGESTERS (DAYS)	26.5	23.2
SOLIDS LOADING WITH 2 DIGESTERS (LBS VS/DAY/CF)	0.13	0.15
SOLIDS LOADING WITH 3 DIGESTERS (LBS VS/DAY/CF)	0.09	0.1

DIGESTER MIXING PUMPS

NUMBER OF UNITS INSTALLED	3 (1 PER DIGESTER)
NUMBER OF UNITS OPERATING	3
PUMP TYPE	CHOPPER
MOTOR HORSEPOWER	75
DRIVE TYPE	VFD
DESIGN FLOW AND TDH	6,200 GPM @ 40 FT

DIGESTER TRANSFER PUMPS

NUMBER OF PUMPS INSTALLED	3
PUMP TYPE	PROGRESSING CAVITY
MOTOR HP	15
DRIVE TYPE	VFD
DESIGN FLOW AND TDH	200 GPM @ 28 PSIG

ANAEROBIC DIGESTER HEATING AND BIOGAS

DIGESTER RECIRCULATION PUMPS

NUMBER OF UNITS INSTALLED	3
NUMBER OF UNITS OPERATING	3
PUMP TYPE	CENTRIFUGAL
MOTOR HP	7.5
DRIVE TYPE	CONSTANT SPEED
DESIGN CONDITION	500 GPM @ 10 PSIG

DIGESTER HEAT EXCHANGERS

NUMBER OF UNITS INSTALLED	3 (1 PER DIGESTER)
TYPE	TUBE-IN-TUBE
DESIGN HEAT TRANSFER CAPACITY EACH	2.8 MMBTU/HR
HEAT TRANSFER AREA EACH (SF)	300
HOT WATER SUPPLY TEMPERATURE	155 F
HOT WATER FLOW RATE (GPM)	400 GPM (200 GPM PER PASS)
PRESSURE DROP, MAX	13 FT

HOT WATER BOILERS

NUMBER OF UNITS INSTALLED	2 (1 RELOCATED, 1 NEW)
TYPE	TUBE-FIRED HOT WATER
FUEL SYSTEM	DUAL DIGESTER/NATURAL GAS
RATED OUTPUT EACH (MMBTU/HR)	5

HOT WATER SUPPLY PUMPS

NUMBER OF PUMPS INSTALLED	3
NUMBER OF PUMPS OPERATING	3
PUMP TYPE	CENTRIFUGAL
MOTOR HORSEPOWER	5
DRIVE TYPE	VFD
DESIGN FLOW AND TDH	251 GPM @ 40 PSIG

DIGESTER COVERS

TYPE	FIXED
NUMBER OF UNITS INSTALLED	2
OPERATING PRESSURE (INCHES WC)	8
DESIGN PRESSURE (INCHES WC)	16

DIGESTER GAS STORAGE

TYPE OF STORAGE	MEMBRANE GASHOLDER COVER
NUMBER OF UNITS INSTALLED	1 (DIGESTER NO. 3)
MAXIMUM VOLUME EACH (CF)	130,000
OPERATING PRESSURE (INCHES WC)	8

DIGESTER GAS FLARE

NUMBER OF UNITS INSTALLED	1
CAPACITY (SCFM)	400

DIGESTER GAS TREATMENT

SEE DWG G-13

PHOSPHORUS PRECIPITATION

PHOSPHORUS PRECIPITATION REACTOR AND PUMP

REACTOR VOLUME (GAL)	40,000
PUMP TYPE	PROGRESSING CAVITY
PUMP OPERATING SCHEDULE	PERIODIC (5 MIN PER HOUR)
MOTOR HP AND DRIVE TYPE	3 HP, VFD
PUMP FLOW RATE	5 TO 22 GPM @ 65 PSIG

MAGNESIUM CHLORIDE STORAGE AND FEED

TANK VOLUME (GAL)	8,000
CHEMICAL STORED	30-35% MAG CHLORIDE
TYPE OF TANK	DUAL WALL XLPE, INSULATED/HEAT TRACED
NUMBER OF METERING PUMPS	2 (1 DUTY + 1 STANDBY)
TYPE OF PUMP	DIAPHRAGM METERING PUMP
PUMP CAPACITY	55 GPH @ 60 PSIG

DEWATERING AND DRYING

HOLDING TANKS - DIGESTED SOLIDS CELLS

CELL 1	
MIXER TYPE	CHOPPER PUMP/JET
NUMBER OF UNITS INSTALLED	2 (1 DUTY + 1 STANDBY)
MOTOR HORSEPOWER	20
DRIVE TYPE	VFD
OPERATING LEVEL RANGE	EL 132.2 TO EL 142.2
OPERATING VOLUME RANGE (GAL)	14,000 TO 60,000
CELL 2	
MIXER TYPE	SUBMERSIBLE
NUMBER OF UNITS INSTALLED	4 @ 7.5 HP (EXISTING, RELOCATED)
OPERATING LEVEL RANGE	EL 132.2 TO EL 142.2
OPERATING VOLUME RANGE (GAL)	47,000 TO 198,000

CENTRIFUGE FEED PUMPS

NUMBER OF UNITS INSTALLED	3
NUMBER OF UNITS OPERATING	1
PUMP TYPE	PROGRESSING CAVITY
MOTOR HP	25
DRIVE TYPE	VFD
DESIGN FLOW AND TDH	200 GPM @ 75 PSIG

CENTRIFUGE POLYMER FEED (PHASE 2)

NUMBER OF BLEND UNITS	2 (1 DUTY + 1 STANDBY)
DESIGN POLYMER DOSE (LB/DRY TON)	20 TO 30
NEAT POLYMER FLOW, 40% SOLUTION	540 TO 750 GALLONS PER WEEK

CENTRIFUGES

NUMBER OF UNITS INSTALLED	3 (EXISTING, RELOCATED)
NUMBER OF UNITS OPERATING	1
SOLIDS CAPTURE EFFICIENCY*	97.5%
CAKE SOLIDS*	20%
SOLIDS LOADING CAPACITY (LBS/HR)	2,250 (NO. 1 & 3), 3,000 (NO. 2)
HYDRAULIC CAPACITY (GPM @ 2% SOLIDS)	150-225 (NO. 1 & 3), 105-300 GPM (NO. 2)

OPERATING CONDITIONS	ANNUAL AVERAGE	MAX MONTH
NUMBER OF UNITS OPERATING	1	1
CENTRIFUGE OPERATING HOURS/WEEK	120	144
SOLIDS LOADING RATE (DRY TONS/HR)	2020	1920
HYDRAULIC LOADING RATE (GPM)	170	162

BELT DRYERS (PHASE 2)

NUMBER OF UNITS INSTALLED	2
DRIED PRODUCT PERCENT SOLIDS	92%

OPERATING CONDITIONS	ANNUAL AVERAGE	MAX MONTH
NUMBER OF UNITS OPERATING	2	2
DRYER OPERATING HOURS/WEEK	240 (5 DAYS EA.)	288 (6 DAYS EA.)
WATER EVAPORATION RATE (LB WATER/HR)	7920	7530
DRIED BIOSOLIDS PRODUCT (TON/WEEK)	131	151

DRIED BIOSOLIDS STORAGE (PHASE 2)

TYPE	ELEVATED SILO
NUMBER OF UNITS INSTALLED	2
WORKING CAPACITY EACH (CF)	10500

CENTRATE DEAMMONIFICATION

CENTRATE EQUALIZATION TANKS

NUMBER OF EQUALIZATION TANKS	2 (+1 EMERGENCY OVERFLOW TANK)
EQ TANK VOLUME, EACH	200,000 GAL
EMERGENCY OVERFLOW TANK VOLUME	360,000 GAL

CENTRATE FEED PUMPS

NUMBER OF PUMPS INSTALLED	3 (2 DUTY + 1 STANDBY)
OPERATING SCHEDULE	CONTINUOUS
PUMP TYPE	END SUCTION CENTRIFUGAL
MOTOR HP	1.5
DRIVE TYPE	VFD
PRIMARY DESIGN POINT	70 GPM @ 21.2 FT TDH
SECONDARY DESIGN POINT	42 GPM @ 4.9 FT TDH

DEAMMONIFICATION REACTORS

VOLUME EACH (GAL)	140600
TIN REMOVAL*	70%
NH4-N REMOVAL*	80%
BLOWERS	
NUMBER OF BLOWERS	3 (2 DUTY + 1 STANDBY)
BLOWER TYPE	POSITIVE DISPLACEMENT
MOTOR HP	50
DRIVE TYPE	VFD
BLOWER DESIGN POINT EACH	850 SCFM @ 7 PSIG
DIFFUSER SYSTEM TYPE	MEDIUM BUBBLE
MIXERS	
NUMBER OF MIXERS	2
TYPE OF MIXERS	VERTICAL, TOP-MOUNTED
MOTOR HP	15
DRIVE TYPE	VFD

CAUSTIC STORAGE AND FEED

STORAGE TANKS	
NUMBER OF TANKS	1 @ 6,000 GALLONS (EXISTING)
CHEMICAL STORED	25% SODIUM HYDROXIDE
TYPE OF TANK	STEEL
DAY TANK	1 @ 450 GALLONS
SODIUM HYDROXIDE TRANSFER PUMPS	
NUMBER OF TRANSFER PUMPS	2 (1 DUTY + 1 STANDBY)
TYPE OF PUMP	GEAR PUMP, CONSTANT SPEED
PUMP CAPACITY	7 TO 14 GPM @ 60 PSI
SODIUM HYDROXIDE METERING PUMPS	
NUMBER OF FEED PUMPS	3 (2 DUTY + 1 STANDBY)
TYPE OF PUMP	PERISTALTIC, VARIABLE SPEED
PUMP CAPACITY	9 GPH @ 30 PSIG

GENERAL NOTES:
1. DRAWING IS FOR INFORMATIONAL PURPOSE ONLY. SEE SPECIFICATIONS FOR EQUIPMENT REQUIREMENTS.

THE DRAWINGS IN THIS SET ARE RECORD DRAWINGS. THEY ARE CONSTRUCTION CONTRACT DRAWINGS WHICH HAVE BEEN REVISED BASED ON AVAILABLE FIELD INFORMATION RECORDED BY OTHERS DURING CONSTRUCTION OF THIS CONTRACT. THERE HAS BEEN NO VERIFICATION OF DIMENSIONS SHOWN ON THE CONSTRUCTION DRAWINGS OR THE ACCURACY/COMPLETENESS OF THE FIELD INFORMATION RECEIVED.

SIGNATURE _____ DATE 2/7/2023

AS-BUILT REPLACEMENT SHEET

PROFESSIONAL CERTIFICATION

THIS DRAWING WAS ORIGINALLY APPROVED FOR CONSTRUCTION AND SEALED BY BRIAN M. BACLCHUNAS, A REGISTERED PROFESSIONAL ENGINEER IN THE STATE OF MARYLAND, NO. 200406

NOTICE TO CONTRACTORS
- PROJECT ELEVATIONS ARE BASED ON NAVD88 AND HOWARD COUNTY'S BENCHMARK SYSTEM
- PREVIOUS PROJECTS USED OTHER DATUMS
- APPLY THE FOLLOWING CONVERSIONS WHEN USING PREVIOUS CONTRACT DRAWINGS:
  - ADDITION NO. 6: SUBTRACT 0.80 FT
  - PRIOR ADDITIONS: SUBTRACT 1.04 FT

DEPARTMENT OF PUBLIC WORKS
HOWARD COUNTY, MARYLAND

CHIEF, BUREAU OF UTILITIES DATE

DES: CJM
DRN: REE
CHK: JRK
DATE: 07/2019

DATE	REV	DESCRIPTION
07/2019		RECORD DRAWING

GENERAL

DESIGN CRITERIA

LITTLE PATUXENT WATER RECLAMATION PLANT
8TH ADDITION
BIOSOLIDS PROCESSING FACILITIES - PHASE I

CAPITAL PROJECT S-6295
CONTRACT NO. 24-4935

ELECTION DISTRICT NO. 6
HOWARD COUNTY, MARYLAND

SCALE AS SHOWN

SHEET 14 OF 463

G-14

BIM 360://10054364 – Little Patuxent WRP 8th Addition/264591_G_V18.rvt
1/10/2022 12:58:07 PM

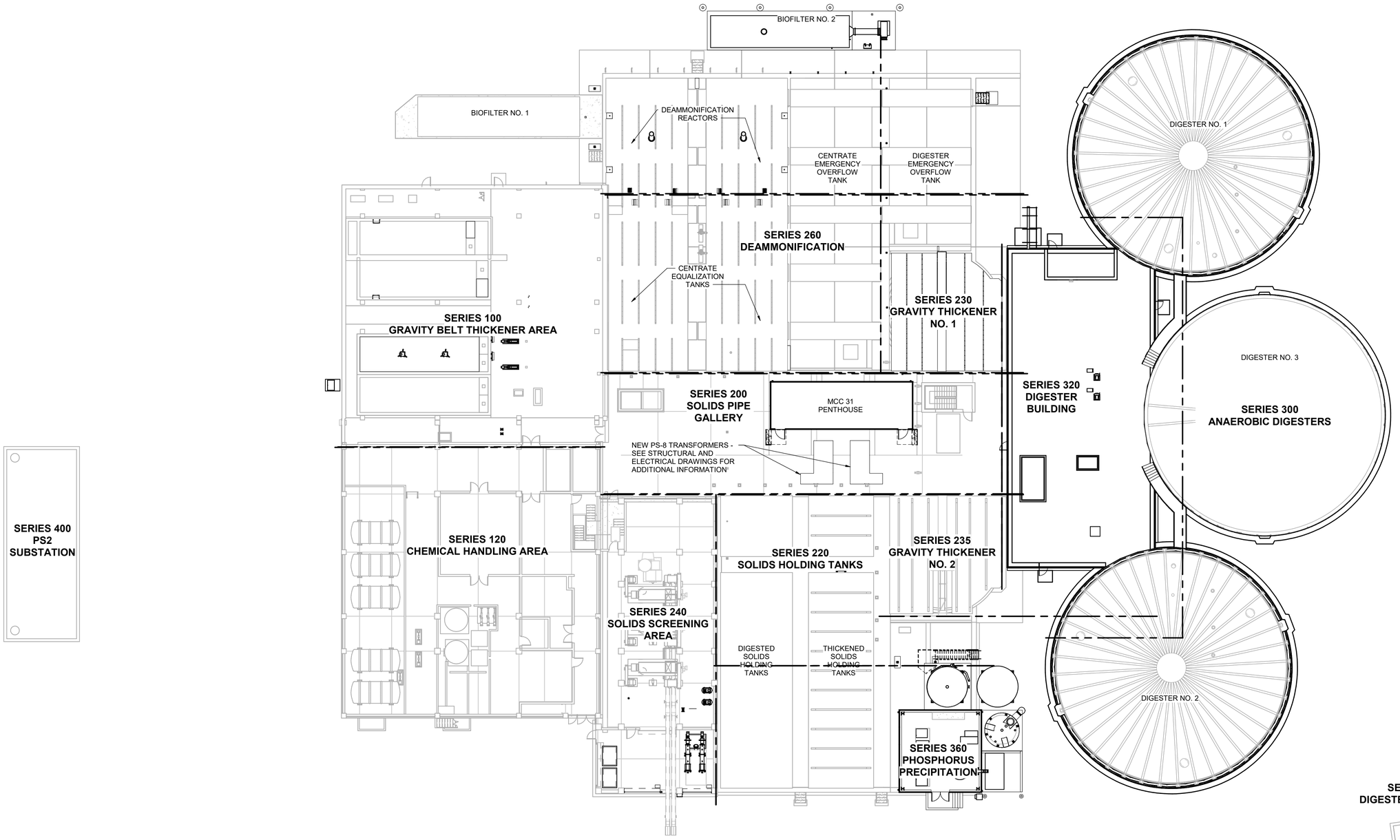

THE DRAWINGS IN THIS SET ARE RECORD DRAWINGS. THEY ARE CONSTRUCTION CONTRACT DRAWINGS WHICH HAVE BEEN REVISED BASED ON AVAILABLE FIELD INFORMATION RECORDED BY OTHERS DURING CONSTRUCTION OF THIS CONTRACT. THERE HAS BEEN NO VERIFICATION OF DIMENSIONS SHOWN ON THE CONSTRUCTION DRAWINGS OR THE ACCURACY/COMPLETENESS OF THE FIELD INFORMATION RECEIVED.

SIGNATURE — DATE 2/7/2023

AS-BUILT REPLACEMENT SHEET

PROFESSIONAL CERTIFICATION

THIS DRAWING WAS ORIGINALLY APPROVED FOR CONSTRUCTION AND SEALED BY BRIAN M. BACLCHUNAS, A REGISTERED PROFESSIONAL ENGINEER IN THE STATE OF MARYLAND, NO. 200406

NOTICE TO CONTRACTORS

- PROJECT ELEVATIONS ARE BASED ON NAVD88 AND HOWARD COUNTY'S BENCHMARK SYSTEM
- PREVIOUS PROJECTS USED OTHER DATUMS
- APPLY THE FOLLOWING CONVERSIONS WHEN USING PREVIOUS CONTRACT DRAWINGS:
  - ADDITION NO. 6: SUBTRACT 0.80 FT
  - PRIOR ADDITIONS: SUBTRACT 1.04 FT

DEPARTMENT OF PUBLIC WORKS
HOWARD COUNTY, MARYLAND

CHIEF, BUREAU OF UTILITIES — DATE

DES: CJM
DRN: REE
CHK: JRK
DATE: 12/2016

DATE	REV	DESCRIPTION
07/2019		RECORD DRAWING

GENERAL

OVERALL KEY PLAN

LITTLE PATUXENT WATER RECLAMATION PLANT
8TH ADDITION
BIOSOLIDS PROCESSING FACILITIES - PHASE I

CAPITAL PROJECT S-6295
CONTRACT NO. 24-4935

ELECTION DISTRICT NO. 6
HOWARD COUNTY, MARYLAND

SCALE AS SHOWN

SHEET 15 OF 463

G-15

BIM 360://10054364 – Little Patuxent WRP 8th Addition/264591_100_D_V18.rvt
1/11/2022 10:14:48 AM

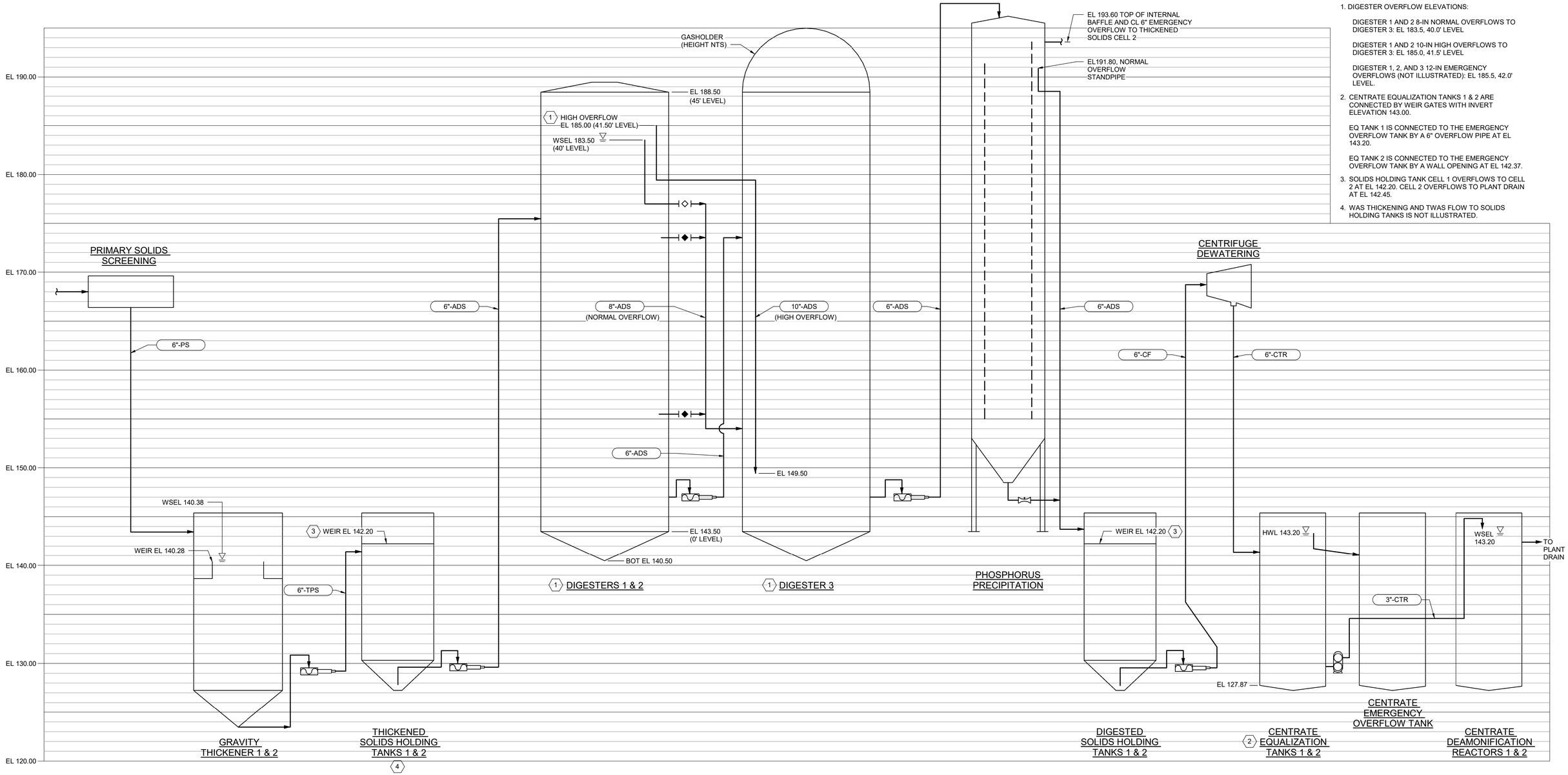

KEY NOTES (X)

1. DIGESTER OVERFLOW ELEVATIONS:

   DIGESTER 1 AND 2 8-IN NORMAL OVERFLOWS TO DIGESTER 3: EL 183.5, 40.0' LEVEL

   DIGESTER 1 AND 2 10-IN HIGH OVERFLOWS TO DIGESTER 3: EL 185.0, 41.5' LEVEL

   DIGESTER 1, 2, AND 3 12-IN EMERGENCY OVERFLOWS (NOT ILLUSTRATED): EL 185.5, 42.0' LEVEL.

2. CENTRATE EQUALIZATION TANKS 1 & 2 ARE CONNECTED BY WEIR GATES WITH INVERT ELEVATION 143.00.

   EQ TANK 1 IS CONNECTED TO THE EMERGENCY OVERFLOW TANK BY A 6" OVERFLOW PIPE AT EL 143.20.

   EQ TANK 2 IS CONNECTED TO THE EMERGENCY OVERFLOW TANK BY A WALL OPENING AT EL 142.37.

3. SOLIDS HOLDING TANK CELL 1 OVERFLOWS TO CELL 2 AT EL 142.20. CELL 2 OVERFLOWS TO PLANT DRAIN AT EL 142.45.

4. WAS THICKENING AND TWAS FLOW TO SOLIDS HOLDING TANKS IS NOT ILLUSTRATED.

SOLIDS PROCESS HYDRAULIC PROFILE

12" = 1'-0" (VERTICAL)

THE DRAWINGS IN THIS SET ARE RECORD DRAWINGS. THEY ARE CONSTRUCTION CONTRACT DRAWINGS WHICH HAVE BEEN REVISED BASED ON AVAILABLE FIELD INFORMATION RECORDED BY OTHERS DURING CONSTRUCTION OF THIS CONTRACT. THERE HAS BEEN NO VERIFICATION OF DIMENSIONS SHOWN ON THE CONSTRUCTION DRAWINGS OR THE ACCURACY/COMPLETENESS OF THE FIELD INFORMATION RECEIVED.

SIGNATURE — DATE 2/7/2023

AS-BUILT REPLACEMENT SHEET

PROFESSIONAL CERTIFICATION

THIS DRAWING WAS ORIGINALLY APPROVED FOR CONSTRUCTION AND SEALED BY BRIAN M. BACLCHUNAS, A REGISTERED PROFESSIONAL ENGINEER IN THE STATE OF MARYLAND, NO. 200406

NOTICE TO CONTRACTORS

- PROJECT ELEVATIONS ARE BASED ON NAVD88 AND HOWARD COUNTY'S BENCHMARK SYSTEM
- PREVIOUS PROJECTS USED OTHER DATUMS
- APPLY THE FOLLOWING CONVERSIONS WHEN USING PREVIOUS CONTRACT DRAWINGS:
  - ADDITION NO. 6: SUBTRACT 0.80 FT
  - PRIOR ADDITIONS: SUBTRACT 1.04 FT

DEPARTMENT OF PUBLIC WORKS
HOWARD COUNTY, MARYLAND

CHIEF, BUREAU OF UTILITIES — DATE

DES: CJM
DRN: SLB
CHK: BMB
DATE: 07/2019

DATE	REV	DESCRIPTION
07/2019		RECORD DRAWING

GENERAL

SOLIDS PROCESS HYDRAULIC PROFILE

LITTLE PATUXENT WATER RECLAMATION PLANT
8TH ADDITION
BIOSOLIDS PROCESSING FACILITIES - PHASE I

CAPITAL PROJECT S-6295
CONTRACT NO. 24-4935

ELECTION DISTRICT NO. 6
HOWARD COUNTY, MARYLAND

SCALE AS SHOWN

SHEET 16 OF 463

G-16

BIM 360://10054364 – Little Patuxent WRP 8th Addition/264591_G_V18.rvt
1/10/2022 12:58:08 PM

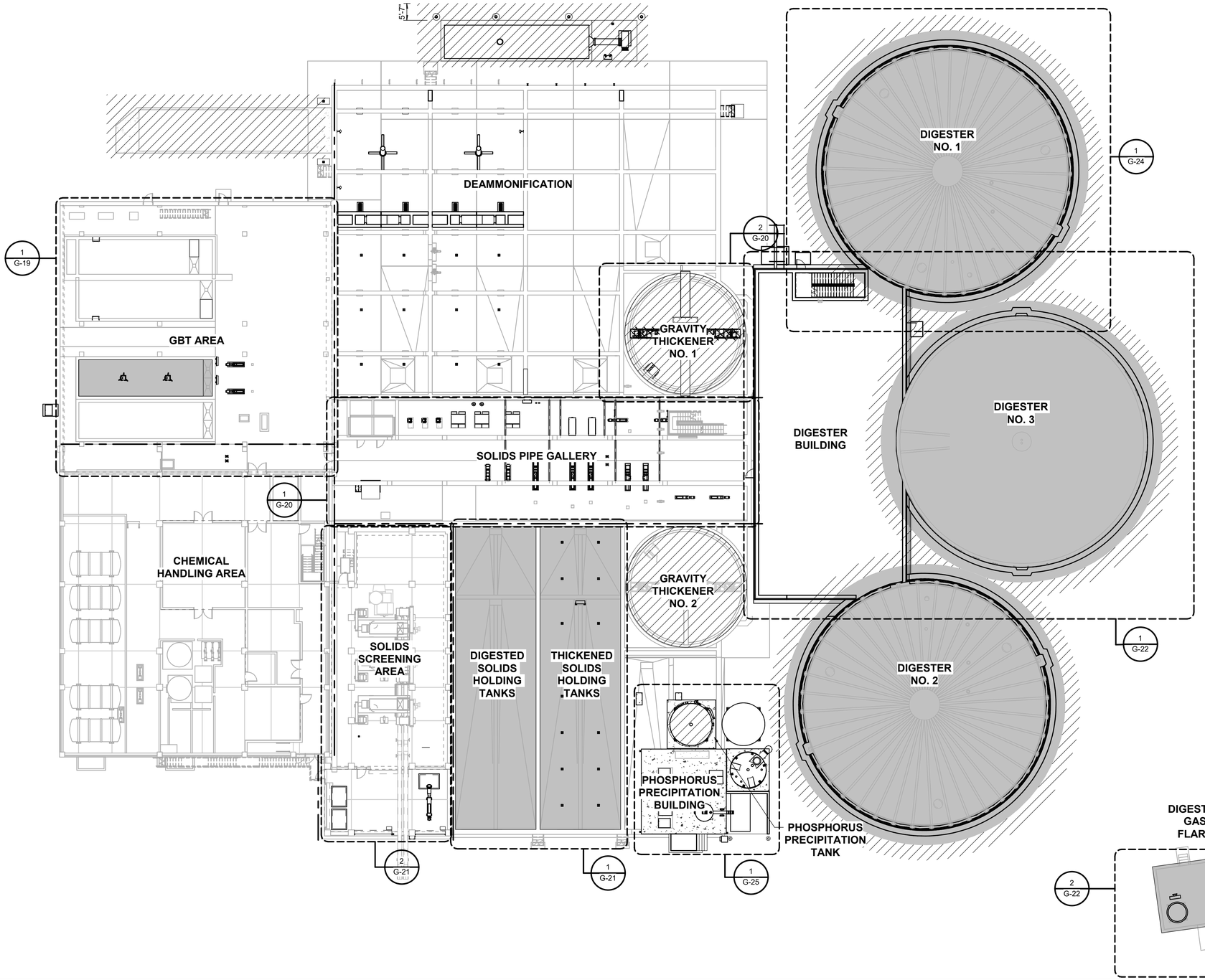

NOTE:
1. AREA CLASSIFICATIONS PER NFPA-820 (2016)
2. ALL ODOR CONTROL EQUIPMENT AND PIPING IS CLASS I, DIVISION 2, GROUP D WITHIN 3 FT IN ALL DIRECTIONS PER NFPA 820 TABLE 4.2.2, ROW 20, LINE D AND FIGURE A.4.2(G).

LEGEND

- CLASS I, DIVISION 1, GROUP D
- CLASS I, DIVISION 2, GROUP D
- UNCLASSIFIED

THE DRAWINGS IN THIS SET ARE RECORD DRAWINGS. THEY ARE CONSTRUCTION CONTRACT DRAWINGS WHICH HAVE BEEN REVISED BASED ON AVAILABLE FIELD INFORMATION RECORDED BY OTHERS DURING CONSTRUCTION OF THIS CONTRACT. THERE HAS BEEN NO VERIFICATION OF DIMENSIONS SHOWN ON THE CONSTRUCTION DRAWINGS OR THE ACCURACY/COMPLETENESS OF THE FIELD INFORMATION RECEIVED.

SIGNATURE _____ DATE 2/7/2022

AS-BUILT REPLACEMENT SHEET

PROFESSIONAL CERTIFICATION
THIS DRAWING WAS ORIGINALLY APPROVED FOR CONSTRUCTION AND SEALED BY BRIAN M. BACLCHUNAS, A REGISTERED PROFESSIONAL ENGINEER IN THE STATE OF MARYLAND, NO. 200406

NOTICE TO CONTRACTORS
- PROJECT ELEVATIONS ARE BASED ON NAVD88 AND HOWARD COUNTY'S BENCHMARK SYSTEM
- PREVIOUS PROJECTS USED OTHER DATUMS
- APPLY THE FOLLOWING CONVERSIONS WHEN USING PREVIOUS CONTRACT DRAWINGS:
  - ADDITION NO. 6: SUBTRACT 0.80 FT
  - PRIOR ADDITIONS: SUBTRACT 1.04 FT

DEPARTMENT OF PUBLIC WORKS
HOWARD COUNTY, MARYLAND

CHIEF, BUREAU OF UTILITIES DATE

DES: MJW
DRN: JCS
CHK: MJS
DATE: 12/2016

DATE	REV	DESCRIPTION
07/2019		RECORD DRAWING

GENERAL

AREA CLASSIFICATION - OVERALL KEY PLAN

LITTLE PATUXENT WATER RECLAMATION PLANT
8TH ADDITION
BIOSOLIDS PROCESSING FACILITIES - PHASE I

CAPITAL PROJECT S-6295
CONTRACT NO. 24-4935

ELECTION DISTRICT NO. 6
HOWARD COUNTY, MARYLAND

SCALE AS SHOWN

SHEET 17 OF 463

G-18

BIM 360://100543364 – Little Patuxent WRP 8th Addition/264591_100_D_V18.rvt
1/11/2022 10:15:14 AM

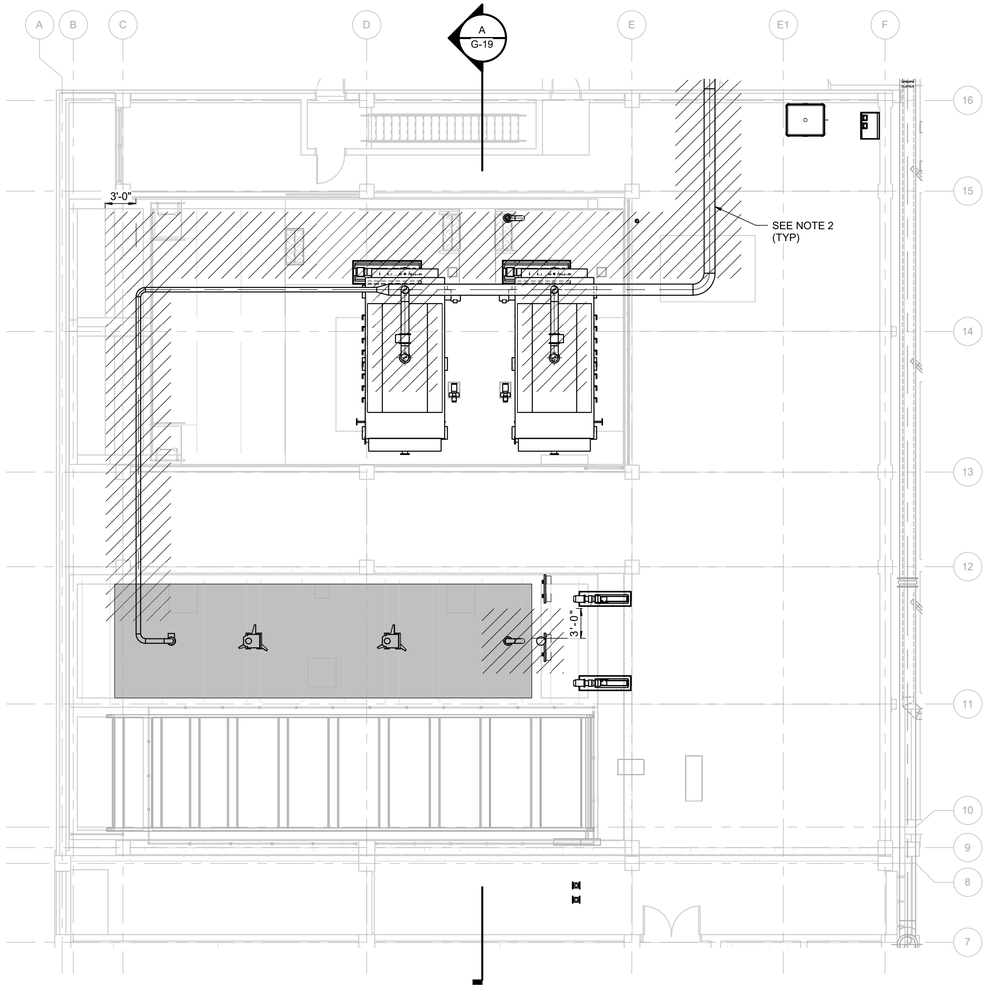

AREA CLASSIFICATION - GBT AREA PLAN

1/8" = 1'-0"

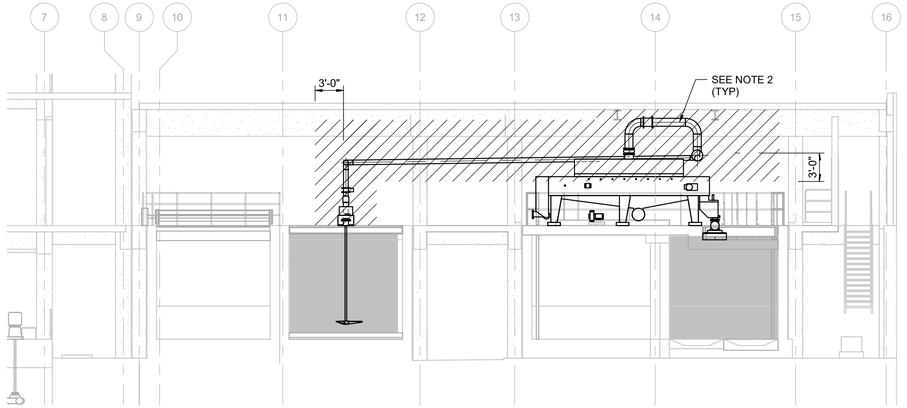

A
-
SECTION

1/8" = 1'-0"

NOTE:

1. GBT AREA IS UNCLASSIFIED WITH 6 ACH (PER NFPA 820, TABLE 6.2.2 ROW 12, LINE A)
2. ALL ODOR CONTROL EQUIPMENT AND PIPING IS CLASS I, DIVISION 2, GROUP D WITHIN 3 FT IN ALL DIRECTIONS PER NFPA 820 TABLE 4.2.2, ROW 20, LINE D AND FIGURE A.4.2(G).

LEGEND

- CLASS I, DIVISION 1, GROUP D
- CLASS I, DIVISION 2, GROUP D
- UNCLASSIFIED

THE DRAWINGS IN THIS SET ARE RECORD DRAWINGS. THEY ARE CONSTRUCTION CONTRACT DRAWINGS WHICH HAVE BEEN REVISED BASED ON AVAILABLE FIELD INFORMATION RECORDED BY OTHERS DURING CONSTRUCTION OF THIS CONTRACT. THERE HAS BEEN NO VERIFICATION OF DIMENSIONS SHOWN ON THE CONSTRUCTION DRAWINGS OR THE ACCURACY/COMPLETENESS OF THE FIELD INFORMATION RECEIVED.

SIGNATURE — DATE 2/7/2023

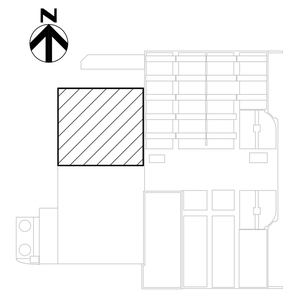

KEY PLAN

AS-BUILT REPLACEMENT SHEET

PROFESSIONAL CERTIFICATION

THIS DRAWING WAS ORIGINALLY APPROVED FOR CONSTRUCTION AND SEALED BY BRIAN M. BACLCHUNAS, A REGISTERED PROFESSIONAL ENGINEER IN THE STATE OF MARYLAND, NO. 200406

NOTICE TO CONTRACTORS

- PROJECT ELEVATIONS ARE BASED ON NAVD88 AND HOWARD COUNTY'S BENCHMARK SYSTEM
- PREVIOUS PROJECTS USED OTHER DATUMS
- APPLY THE FOLLOWING CONVERSIONS WHEN USING PREVIOUS CONTRACT DRAWINGS:
  - ADDITION NO. 6: SUBTRACT 0.80 FT
  - PRIOR ADDITIONS: SUBTRACT 1.04 FT

DEPARTMENT OF PUBLIC WORKS
HOWARD COUNTY, MARYLAND

CHIEF, BUREAU OF UTILITIES — DATE

DES: MJW
DRN: JCS
CHK: MJS
DATE: 12/2016

DATE	REV	DESCRIPTION
07/2019		RECORD DRAWING

GENERAL

AREA CLASSIFICATION - GBT AREA

LITTLE PATUXENT WATER RECLAMATION PLANT
8TH ADDITION
BIOSOLIDS PROCESSING FACILITIES - PHASE I

CAPITAL PROJECT S-6295
CONTRACT NO. 24-4935

ELECTION DISTRICT NO. 6
HOWARD COUNTY, MARYLAND

SCALE AS SHOWN

SHEET 18 OF 463

G-19

BIM 360://10054364 – Little Patuxent WRP 8th Addition/264591_100_D_Y18.rvt
1/11/2022 10:15:18 AM

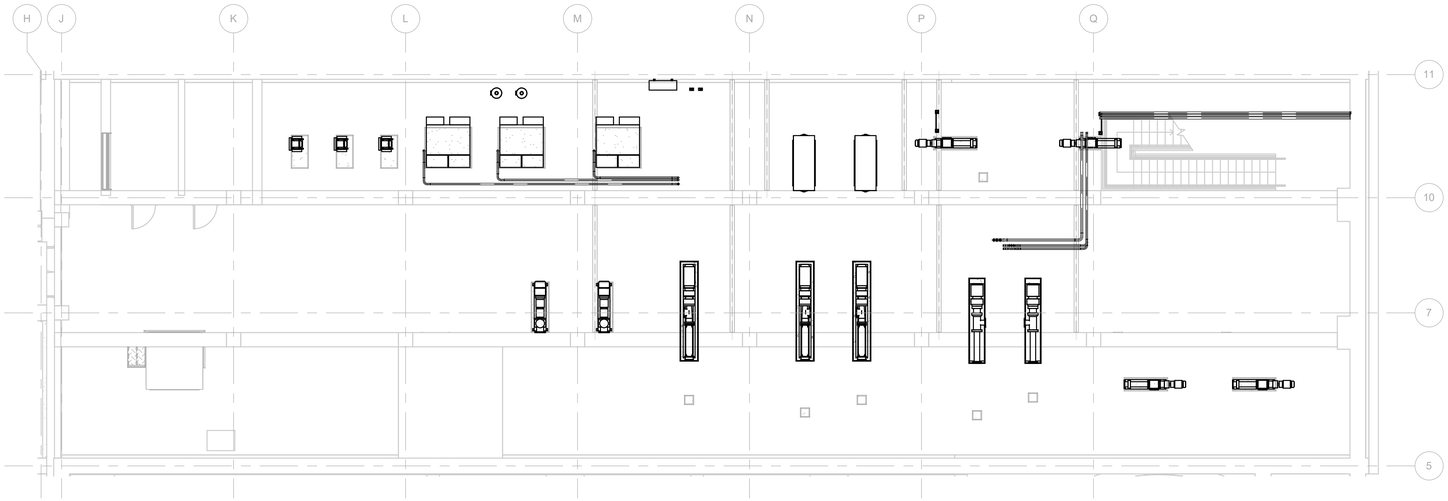

1 G-18 AREA CLASSIFICATION - SOLIDS PIPE GALLERY
1/8" = 1'-0"

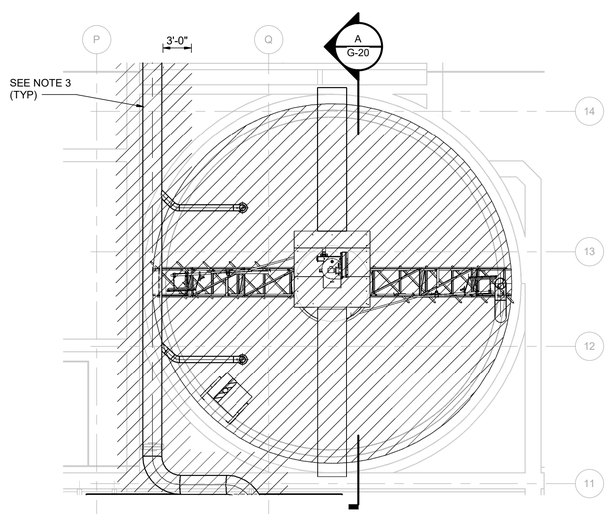

2 G-18 AREA CLASSIFICATION - GRAVITY THICKENER NO. 1 & 2 (BELOW COVER)
1/8" = 1'-0"

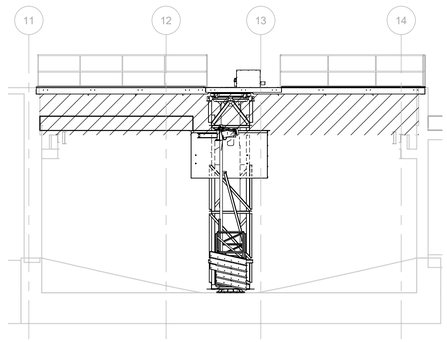

A - SECTION
1/8" = 1'-0"

NOTE:
1. PIPE GALLERY IS UNCLASSIFIED WITH 6 ACH PER NFPA 820 TABLE 6.2.2(A), ROW 9, LINE B.
2. GRAVITY THICKENER IS CLASS I, DIVISION 2 WITH 12 ACH PER NFPA 820 TABLE 6.2.2(A), ROW 8, LINE B.
3. ALL ODOR CONTROL EQUIPMENT AND PIPING IS CLASS I, DIVISION 2, GROUP D WITHIN 3 FT IN ALL DIRECTIONS PER NFPA 820 TABLE 4.2.2, ROW 20, LINE D AND FIGURE A.4.2(G).

LEGEND

- CLASS I, DIVISION 1, GROUP D
- CLASS I, DIVISION 2, GROUP D
- UNCLASSIFIED

THE DRAWINGS IN THIS SET ARE RECORD DRAWINGS. THEY ARE CONSTRUCTION CONTRACT DRAWINGS WHICH HAVE BEEN REVISED BASED ON AVAILABLE FIELD INFORMATION RECORDED BY OTHERS DURING CONSTRUCTION OF THIS CONTRACT. THERE HAS BEEN NO VERIFICATION OF DIMENSIONS SHOWN ON THE CONSTRUCTION DRAWINGS OR THE ACCURACY/COMPLETENESS OF THE FIELD INFORMATION RECEIVED.

SIGNATURE — DATE 2/7/2023

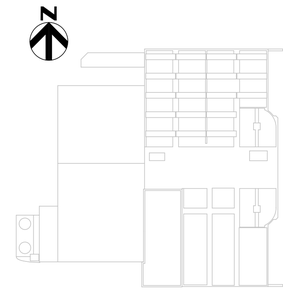

KEY PLAN

AS-BUILT REPLACEMENT SHEET

PROFESSIONAL CERTIFICATION
THIS DRAWING WAS ORIGINALLY APPROVED FOR CONSTRUCTION AND SEALED BY BRIAN M. BACLCHUNAS, A REGISTERED PROFESSIONAL ENGINEER IN THE STATE OF MARYLAND, NO. 200406

NOTICE TO CONTRACTORS
- PROJECT ELEVATIONS ARE BASED ON NAVD88 AND HOWARD COUNTY'S BENCHMARK SYSTEM
- PREVIOUS PROJECTS USED OTHER DATUMS
- APPLY THE FOLLOWING CONVERSIONS WHEN USING PREVIOUS CONTRACT DRAWINGS:
  - ADDITION NO. 6: SUBTRACT 0.80 FT
  - PRIOR ADDITIONS: SUBTRACT 1.04 FT

DEPARTMENT OF PUBLIC WORKS
HOWARD COUNTY, MARYLAND

CHIEF, BUREAU OF UTILITIES — DATE

DES: MJW
DRN: JCS
CHK: MJS
DATE: 12/2016

DATE	REV	DESCRIPTION
07/2019		RECORD DRAWING

GENERAL

AREA CLASSIFICATION - SOLIDS PIPE GALLERY & GRAVITY THICKENERS

LITTLE PATUXENT WATER RECLAMATION PLANT
8TH ADDITION
BIOSOLIDS PROCESSING FACILITIES - PHASE I

CAPITAL PROJECT S-6295
CONTRACT NO. 24-4935

ELECTION DISTRICT NO. 6
HOWARD COUNTY, MARYLAND

SCALE AS SHOWN

SHEET 19 OF 463

G-20

BIM 360://10054364 – Little Patuxent WRP 8th Addition/264591_100_D_Y18.rvt
1/11/2022 10:15:27 AM

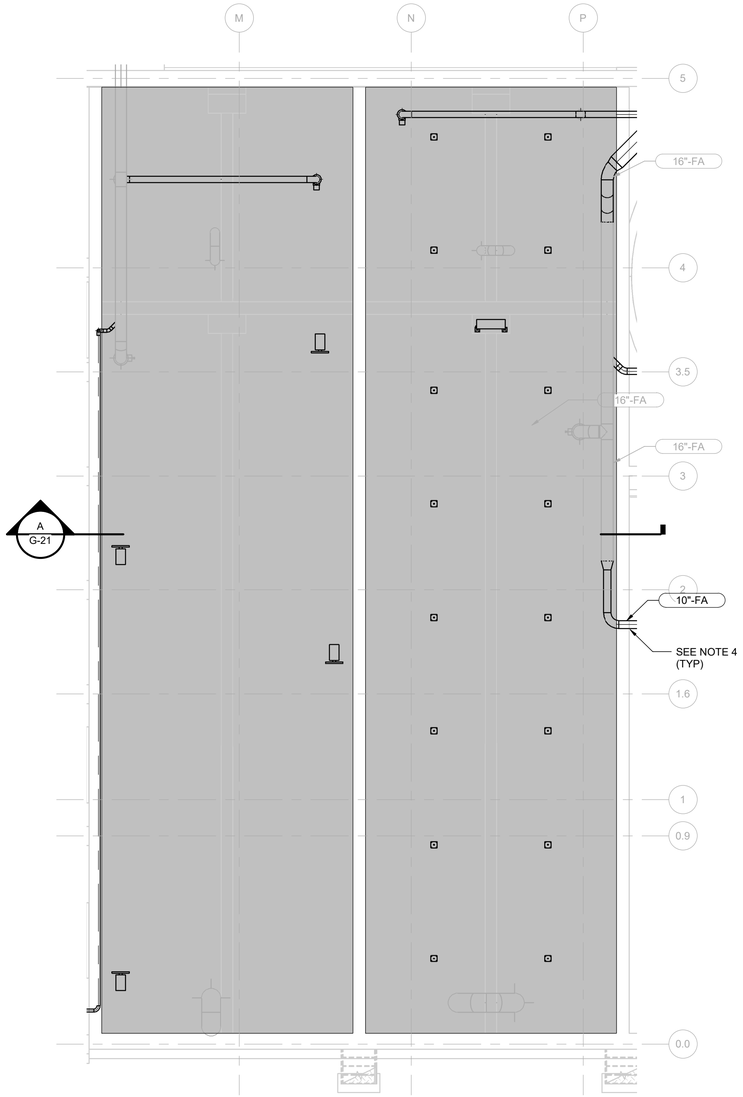

1 / G-18 AREA CLASSIFICATION - SOLIDS HOLDING TANKS
1/8" = 1'-0"

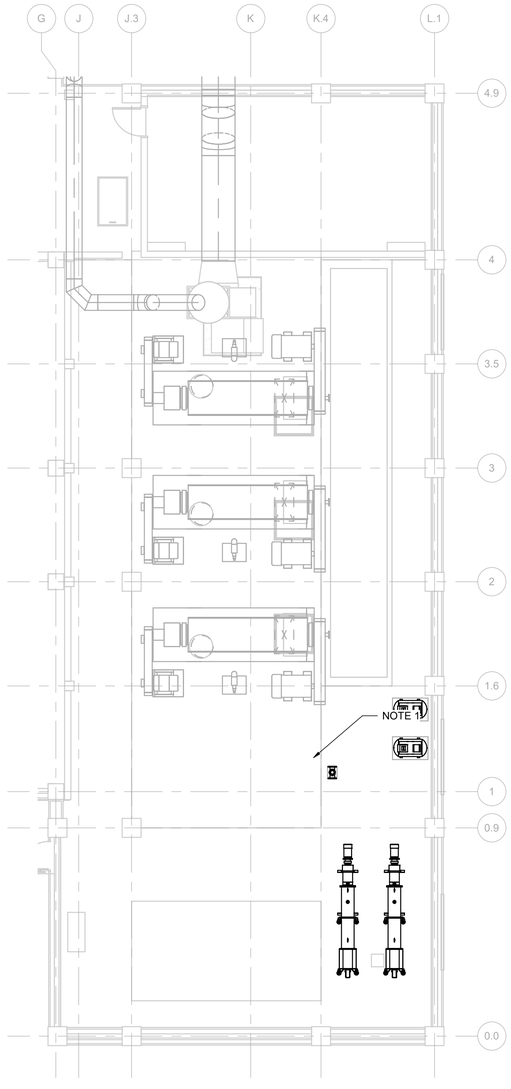

2 / G-18 AREA CLASSIFICATION - SOLIDS SCREENING AREA
1/8" = 1'-0"

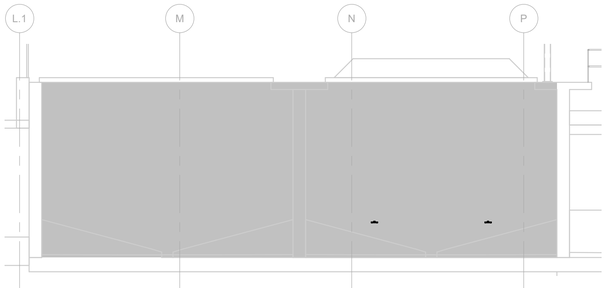

A / - SECTION
1/8" = 1'-0"

N

NOTE:
1. CENTRIFUGES ARE EXISTING AND 1 SOLIDS SCREEN IS ALREADY PRESENT IN THIS LOCATION.
2. SCREENING & CENTRIFUGE AREA IS UNCLASSIFIED WITH AT LEAST 6 ACH.
3. SOLIDS SCREENING AREA HAS NO EXPOSED WASTEWATER/SOLIDS FLOW. SCREENINGS DROP INTO A HOPPER, WHICH IS UNCLASSIFIED (REFERENCE NFPA 820, TABLE 6.2.2, ROW 1).
4. ALL ODOR CONTROL EQUIPMENT AND PIPING IS CLASS I, DIVISION 2, GROUP D WITHIN 3 FT IN ALL DIRECTIONS PER NFPA 820 TABLE 4.2.2, ROW 20, LINE D AND FIGURE A.4.2(G).

LEGEND

- CLASS I, DIVISION 1, GROUP D
- CLASS I, DIVISION 2, GROUP D
- UNCLASSIFIED

THE DRAWINGS IN THIS SET ARE RECORD DRAWINGS. THEY ARE CONSTRUCTION CONTRACT DRAWINGS WHICH HAVE BEEN REVISED BASED ON AVAILABLE FIELD INFORMATION RECORDED BY OTHERS DURING CONSTRUCTION OF THIS CONTRACT. THERE HAS BEEN NO VERIFICATION OF DIMENSIONS SHOWN ON THE CONSTRUCTION DRAWINGS OR THE ACCURACY/COMPLETENESS OF THE FIELD INFORMATION RECEIVED.

SIGNATURE — DATE 2/7/2022

N

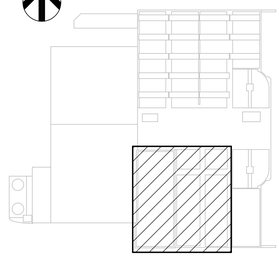

KEY PLAN

AS-BUILT REPLACEMENT SHEET

PROFESSIONAL CERTIFICATION
THIS DRAWING WAS ORIGINALLY APPROVED FOR CONSTRUCTION AND SEALED BY BRIAN M. BACLCHUNAS, A REGISTERED PROFESSIONAL ENGINEER IN THE STATE OF MARYLAND, NO. 200406

NOTICE TO CONTRACTORS
- PROJECT ELEVATIONS ARE BASED ON NAVD88 AND HOWARD COUNTY'S BENCHMARK SYSTEM
- PREVIOUS PROJECTS USED OTHER DATUMS
- APPLY THE FOLLOWING CONVERSIONS WHEN USING PREVIOUS CONTRACT DRAWINGS:
  - ADDITION NO. 6: SUBTRACT 0.80 FT
  - PRIOR ADDITIONS: SUBTRACT 1.04 FT

DEPARTMENT OF PUBLIC WORKS
HOWARD COUNTY, MARYLAND

CHIEF, BUREAU OF UTILITIES — DATE

DES: MJW
DRN: JCS
CHK: MJS
DATE: 12/2016

DATE	REV	DESCRIPTION
07/2019		RECORD DRAWING

GENERAL

AREA CLASSIFICATION - SOLIDS HOLDING TANKS & SCREENING AREA

LITTLE PATUXENT WATER RECLAMATION PLANT
8TH ADDITION
BIOSOLIDS PROCESSING FACILITIES - PHASE I

CAPITAL PROJECT S-6295
CONTRACT NO. 24-4935

ELECTION DISTRICT NO. 6
HOWARD COUNTY, MARYLAND

SCALE AS SHOWN

SHEET 20 OF 463

G-21

BIM 360://10054364 – Little Patuxent WRP 8th Addition/264591_100_D_V18.rvt
1/11/2022 10:15:31 AM

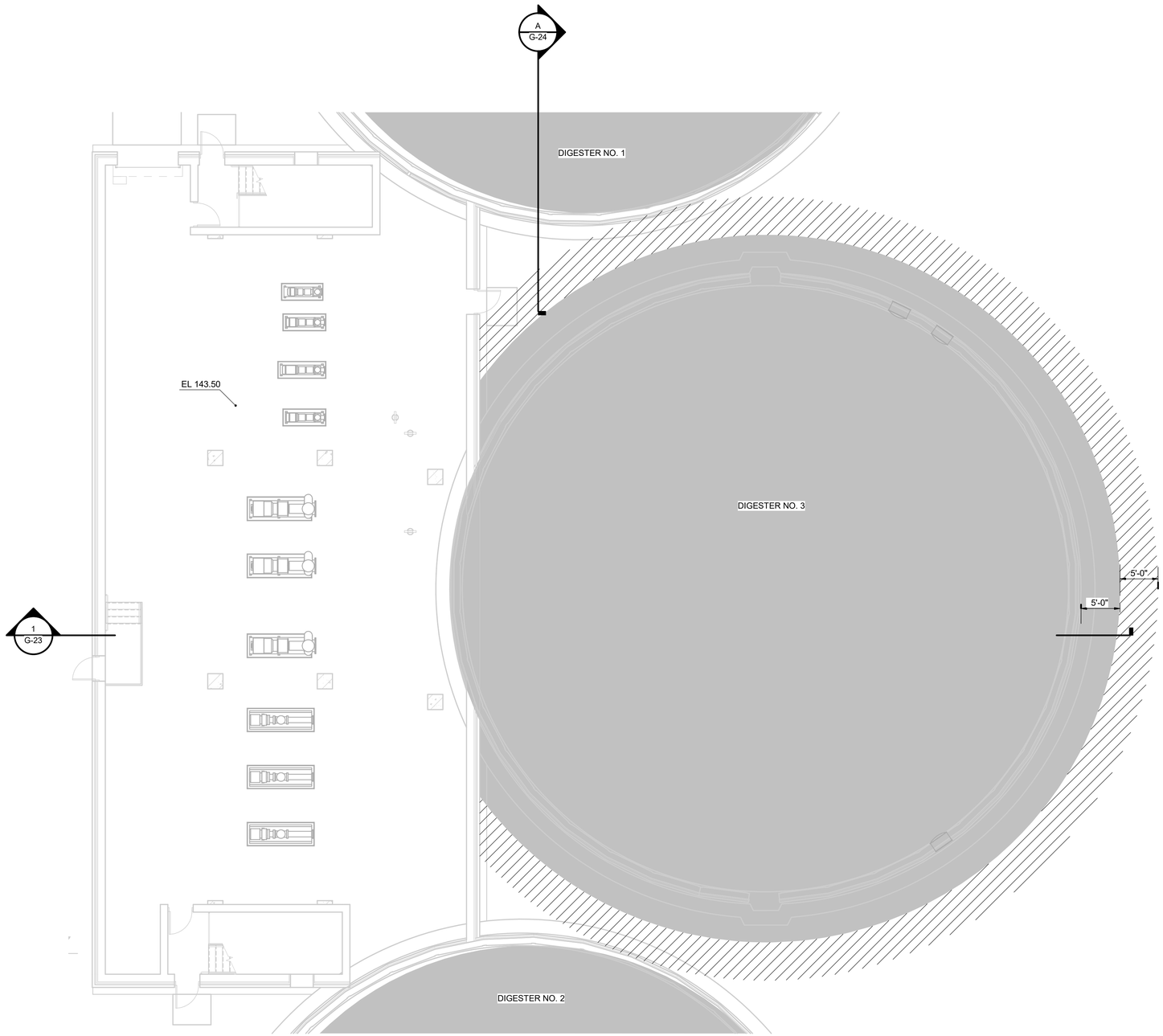

1 G-18 AREA CLASSIFICATION - DIGESTER BUILDING & DIGESTER NO. 3
1/8" = 1'-0"

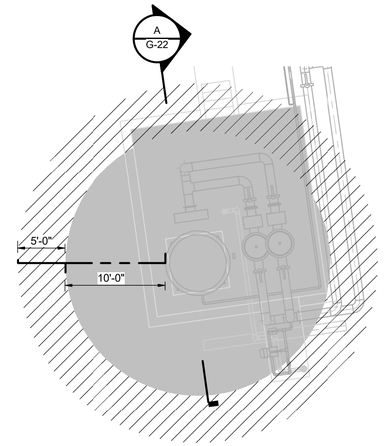

2 G-18 AREA CLASSIFICATION - DIGESTER GAS FLARE
1/8" = 1'-0"

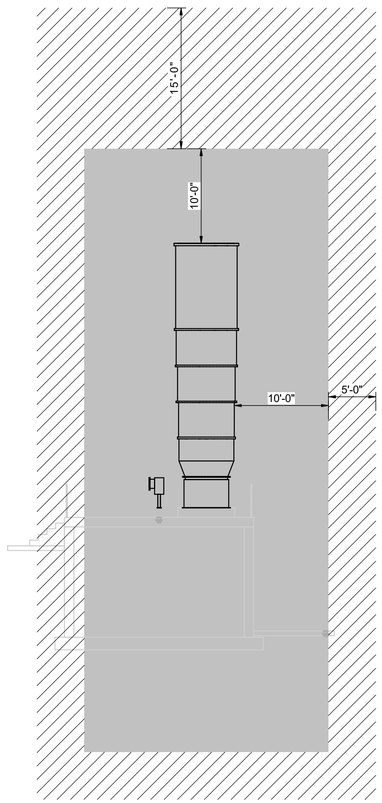

A - SECTION
1/8" = 1'-0"

N

NOTE:
1. BUILDING IS PHYSICALLY SEPARATED (PER DEFINITION IN NFPA 820) FROM DIGESTERS AND IS UNCLASSIFIED WITH 6 ACH PER TABLE 6.2.2(A), ROW 17, LINE C.

LEGEND

- CLASS I, DIVISION 1, GROUP D
- CLASS I, DIVISION 2, GROUP D
- UNCLASSIFIED

THE DRAWINGS IN THIS SET ARE RECORD DRAWINGS. THEY ARE CONSTRUCTION CONTRACT DRAWINGS WHICH HAVE BEEN REVISED BASED ON AVAILABLE FIELD INFORMATION RECORDED BY OTHERS DURING CONSTRUCTION OF THIS CONTRACT. THERE HAS BEEN NO VERIFICATION OF DIMENSIONS SHOWN ON THE CONSTRUCTION DRAWINGS OR THE ACCURACY/COMPLETENESS OF THE FIELD INFORMATION RECEIVED.

SIGNATURE _____ DATE 2/7/2023

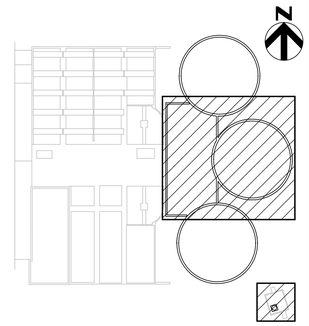

KEY PLAN

AS-BUILT REPLACEMENT SHEET

PROFESSIONAL CERTIFICATION
THIS DRAWING WAS ORIGINALLY APPROVED FOR CONSTRUCTION AND SEALED BY BRIAN M. BACLCHUNAS, A REGISTERED PROFESSIONAL ENGINEER IN THE STATE OF MARYLAND, NO. 200406

NOTICE TO CONTRACTORS
- PROJECT ELEVATIONS ARE BASED ON NAVD88 AND HOWARD COUNTY'S BENCHMARK SYSTEM
- PREVIOUS PROJECTS USED OTHER DATUMS
- APPLY THE FOLLOWING CONVERSIONS WHEN USING PREVIOUS CONTRACT DRAWINGS:
  - ADDITION NO. 6: SUBTRACT 0.80 FT
  - PRIOR ADDITIONS: SUBTRACT 1.04 FT

DEPARTMENT OF PUBLIC WORKS
HOWARD COUNTY, MARYLAND

CHIEF, BUREAU OF UTILITIES DATE

DES: MJW
DRN: JCS
CHK: MJS
DATE: 12/2016

DATE	REV	DESCRIPTION
07/2019		RECORD DRAWING

GENERAL

AREA CLASSIFICATION - DIGESTER BUILDING & DIGESTER NO. 3

LITTLE PATUXENT WATER RECLAMATION PLANT
8TH ADDITION
BIOSOLIDS PROCESSING FACILITIES - PHASE I

CAPITAL PROJECT S-6295
CONTRACT NO. 24-4935

ELECTION DISTRICT NO. 6
HOWARD COUNTY, MARYLAND

SCALE AS SHOWN

SHEET 21 OF 463

G-22

BIM 360://10054364 - Little Patuxent WRP 8th Addition/264591_100_D_V18.rvt
1/11/2022 10:15:37 AM

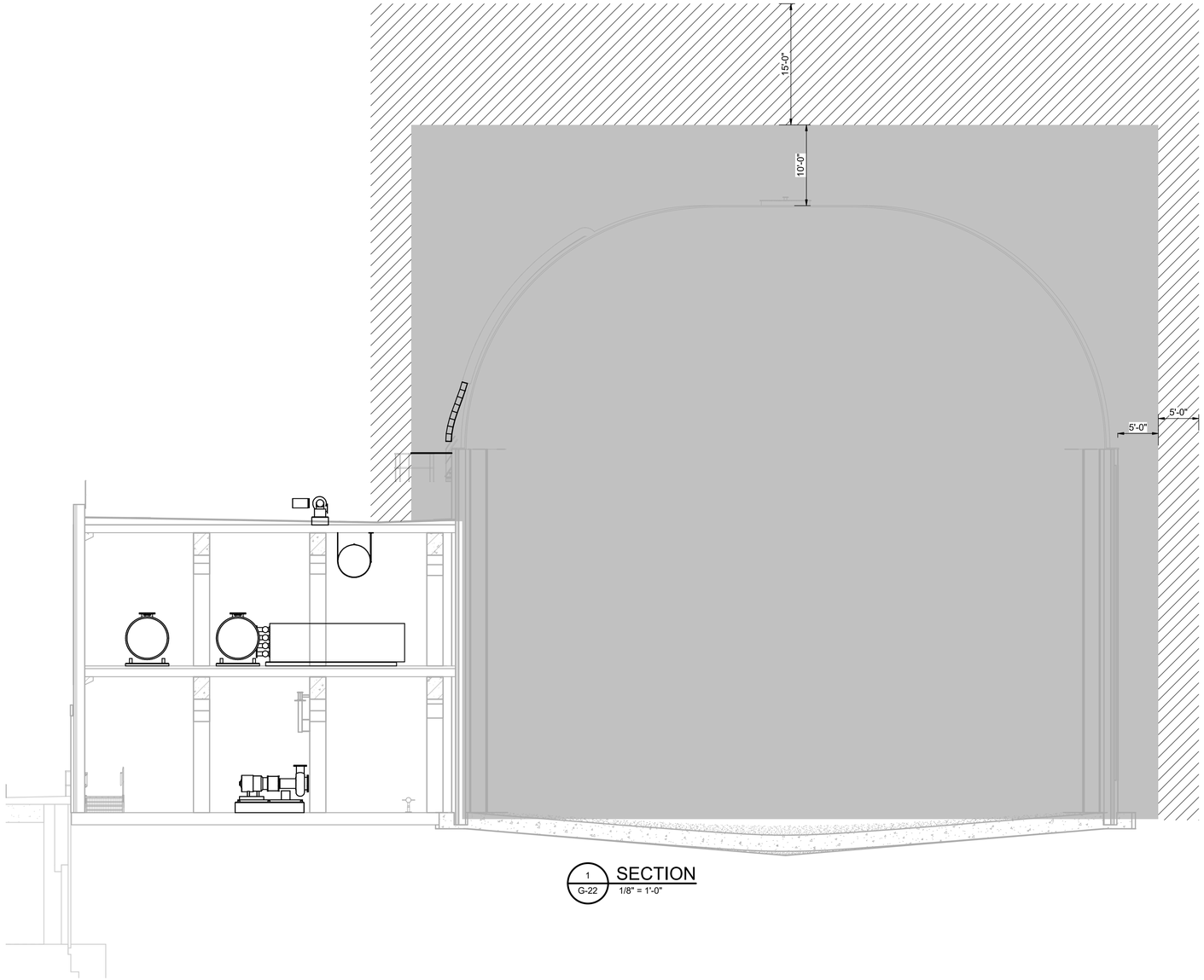

1 G-22 SECTION
1/8" = 1'-0"

LEGEND

- CLASS I, DIVISION 1, GROUP D
- CLASS I, DIVISION 2, GROUP D
- UNCLASSIFIED

THE DRAWINGS IN THIS SET ARE RECORD DRAWINGS. THEY ARE CONSTRUCTION CONTRACT DRAWINGS WHICH HAVE BEEN REVISED BASED ON AVAILABLE FIELD INFORMATION RECORDED BY OTHERS DURING CONSTRUCTION OF THIS CONTRACT. THERE HAS BEEN NO VERIFICATION OF DIMENSIONS SHOWN ON THE CONSTRUCTION DRAWINGS OR THE ACCURACY/COMPLETENESS OF THE FIELD INFORMATION RECEIVED.

SIGNATURE — DATE 2/7/2023

AS-BUILT REPLACEMENT SHEET

PROFESSIONAL CERTIFICATION

THIS DRAWING WAS ORIGINALLY APPROVED FOR CONSTRUCTION AND SEALED BY BRIAN M. BACLCHUNAS, A REGISTERED PROFESSIONAL ENGINEER IN THE STATE OF MARYLAND, NO. 200406

NOTICE TO CONTRACTORS

- PROJECT ELEVATIONS ARE BASED ON NAVD88 AND HOWARD COUNTY'S BENCHMARK SYSTEM
- PREVIOUS PROJECTS USED OTHER DATUMS
- APPLY THE FOLLOWING CONVERSIONS WHEN USING PREVIOUS CONTRACT DRAWINGS:
  - ADDITION NO. 6: SUBTRACT 0.80 FT
  - PRIOR ADDITIONS: SUBTRACT 1.04 FT

DEPARTMENT OF PUBLIC WORKS
HOWARD COUNTY, MARYLAND

CHIEF, BUREAU OF UTILITIES — DATE

DES: MJW
DRN: JCS
CHK: MJS
DATE: 12/2016

DATE	REV	DESCRIPTION
07/2019		RECORD DRAWING

GENERAL

AREA CLASSIFICATION - DIGESTER NO. 3

LITTLE PATUXENT WATER RECLAMATION PLANT
8TH ADDITION
BIOSOLIDS PROCESSING FACILITIES - PHASE I

CAPITAL PROJECT S-6295
CONTRACT NO. 24-4935

ELECTION DISTRICT NO. 6
HOWARD COUNTY, MARYLAND

SCALE AS SHOWN

SHEET 22 OF 463

G-23

BIM 360://10054364 – Little Patuxent WRP 8th Addition/264591_100_D_V18.rvt
1/11/2022 10:15:39 AM

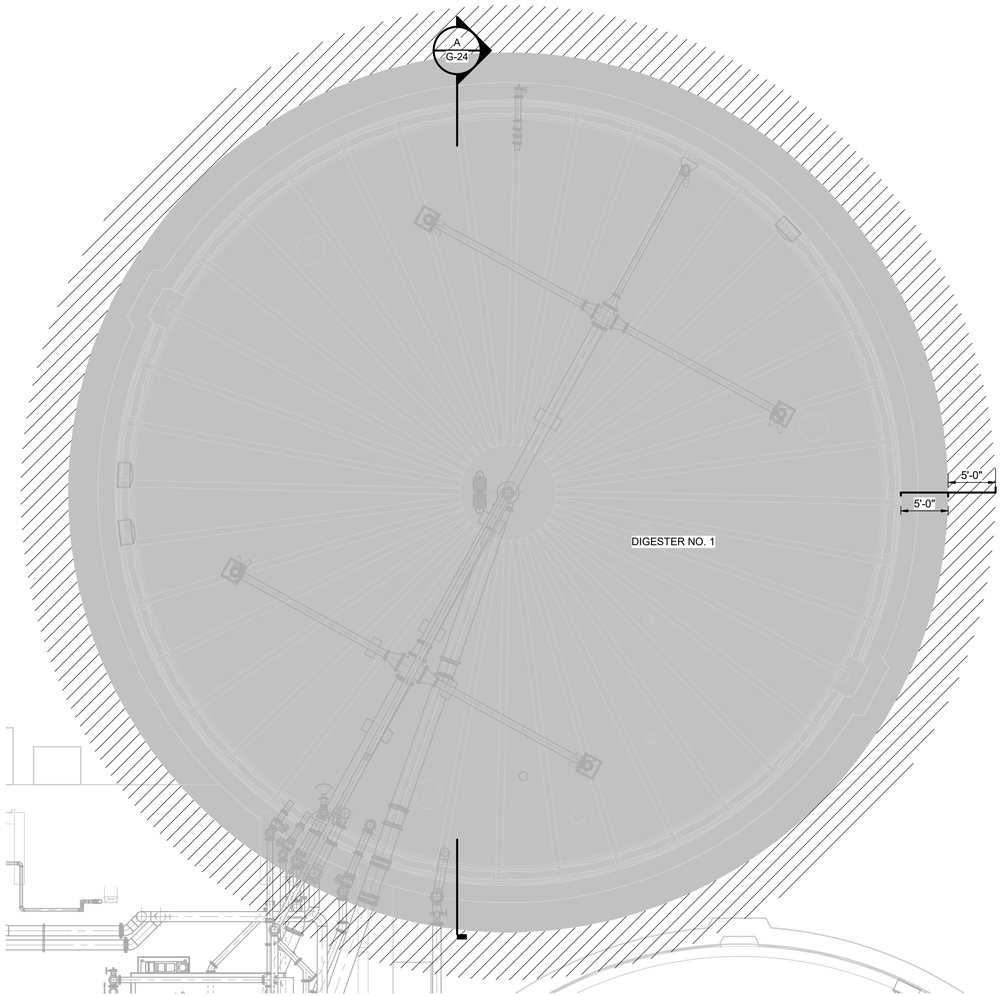

1 / G-18 AREA CLASSIFICATION - DIGESTER NO. 1 (NO. 2 SIMILAR)
1/8" = 1'-0"

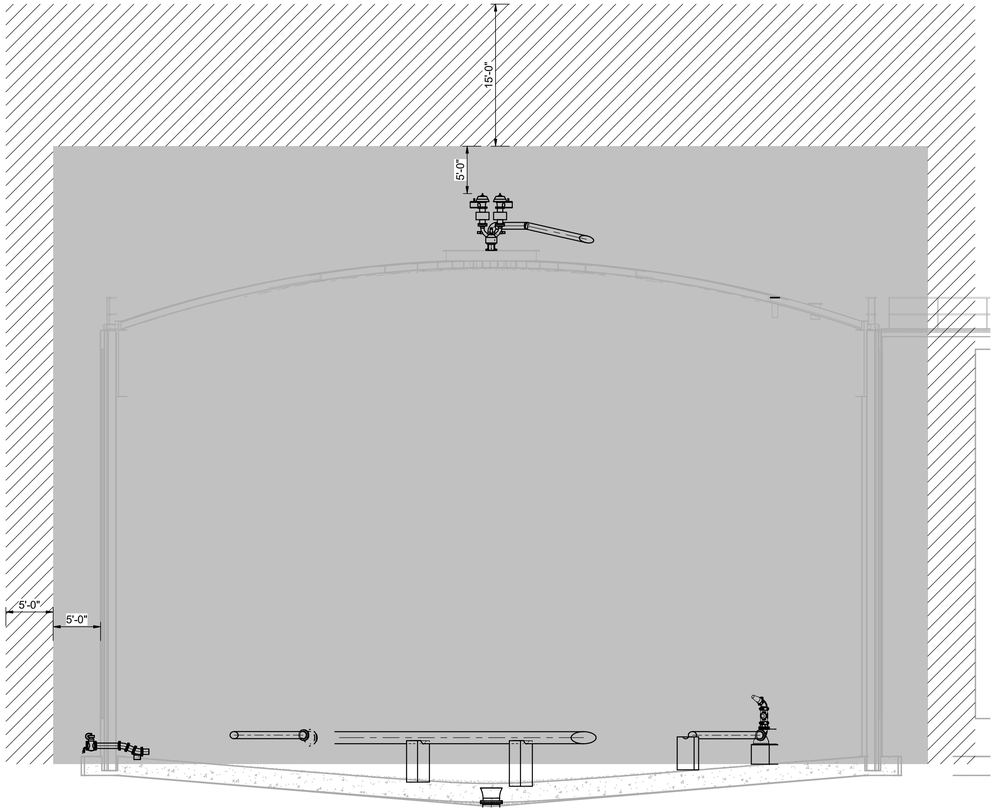

A / - SECTION
1/8" = 1'-0"

LEGEND

- CLASS I, DIVISION 1, GROUP D
- CLASS I, DIVISION 2, GROUP D
- UNCLASSIFIED

THE DRAWINGS IN THIS SET ARE RECORD DRAWINGS. THEY ARE CONSTRUCTION CONTRACT DRAWINGS WHICH HAVE BEEN REVISED BASED ON AVAILABLE FIELD INFORMATION RECORDED BY OTHERS DURING CONSTRUCTION OF THIS CONTRACT. THERE HAS BEEN NO VERIFICATION OF DIMENSIONS SHOWN ON THE CONSTRUCTION DRAWINGS OR THE ACCURACY/COMPLETENESS OF THE FIELD INFORMATION RECEIVED.

SIGNATURE — DATE 2/7/2022

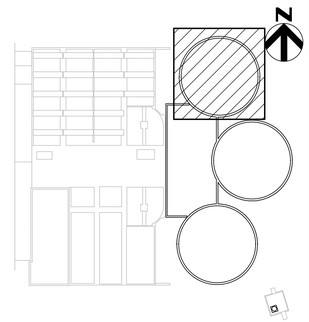

KEY PLAN

AS-BUILT REPLACEMENT SHEET

PROFESSIONAL CERTIFICATION

THIS DRAWING WAS ORIGINALLY APPROVED FOR CONSTRUCTION AND SEALED BY BRIAN M. BACLCHUNAS, A REGISTERED PROFESSIONAL ENGINEER IN THE STATE OF MARYLAND, NO. 200406

NOTICE TO CONTRACTORS

- PROJECT ELEVATIONS ARE BASED ON NAVD88 AND HOWARD COUNTY'S BENCHMARK SYSTEM
- PREVIOUS PROJECTS USED OTHER DATUMS
- APPLY THE FOLLOWING CONVERSIONS WHEN USING PREVIOUS CONTRACT DRAWINGS:
  - ADDITION NO. 6: SUBTRACT 0.80 FT
  - PRIOR ADDITIONS: SUBTRACT 1.04 FT

DEPARTMENT OF PUBLIC WORKS
HOWARD COUNTY, MARYLAND

CHIEF, BUREAU OF UTILITIES — DATE

DES: MJW
DRN: JCS
CHK: MJS
DATE: 12/2016

DATE	REV	DESCRIPTION
07/2019		RECORD DRAWING

GENERAL

AREA CLASSIFICATION - DIGESTER NO. 1 AND NO. 2

LITTLE PATUXENT WATER RECLAMATION PLANT
8TH ADDITION
BIOSOLIDS PROCESSING FACILITIES - PHASE I

CAPITAL PROJECT S-6295
CONTRACT NO. 24-4935

ELECTION DISTRICT NO. 6
HOWARD COUNTY, MARYLAND

SCALE AS SHOWN

SHEET 23 OF 463

G-24

BIM 360://10054364 – Little Patuxent WRP 8th Addition/264591_100_D_V18.rvt
1/11/2022 10:16:14 AM

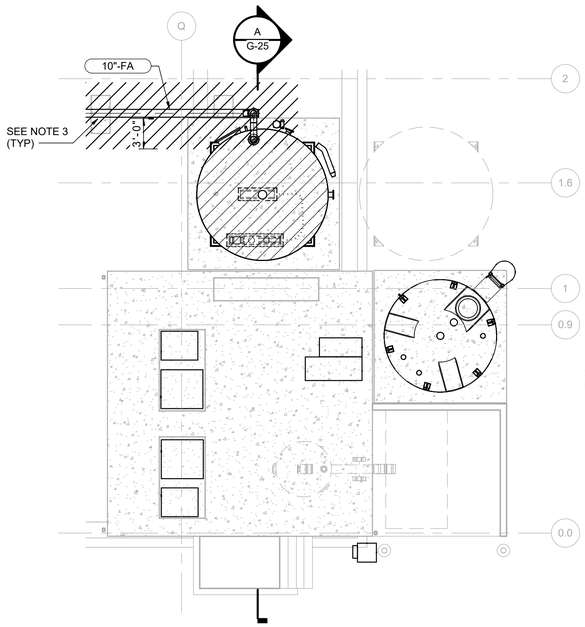

AREA CLASSIFICAITION - PHOSPHORUS PRECIPITATION BUILDING

1 / G-18 — 1/8" = 1'-0"

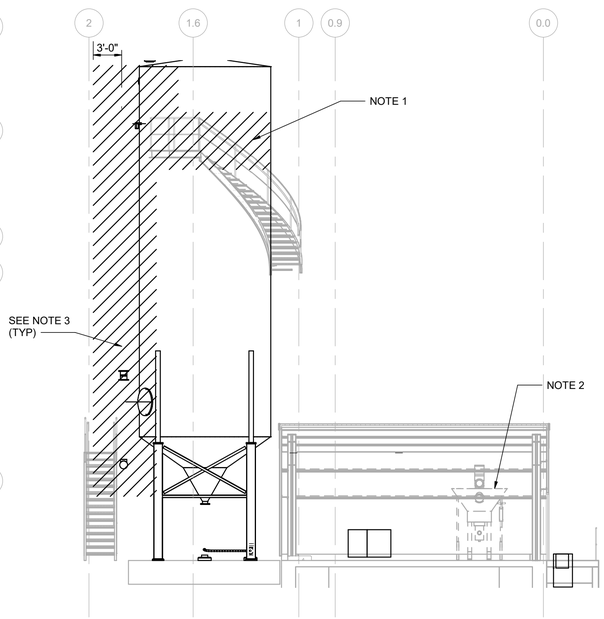

SECTION

A / - — 1/8" = 1'-0"

NOTE:
1. HEADSPACE OF PHOSPHORUS PRECIPITATION REACTOR IS CLASS I, DIVISION 2 WITH 12 ACH PER NFPA 820 TABLE 6.2.2(A), ROW 11, LINE B.
2. PHOSPHORUS PRECIPITATION BUILDING IS UNCLASSIFIED AS IT HAS NO WASTEWATER FLOWING THROUGH IT. FUTURE BUILDOUT MAY INCLUDE GRIT WASHING BUT THIS PROCESS WOULD NOT CLASSIFY THE AREA PER NFPA 820 TABLE 6.2.2(A), ROW 2.
3. ALL ODOR CONTROL EQUIPMENT AND PIPING IS CLASS I, DIVISION 2, GROUP D WITHIN 3 FT IN ALL DIRECTIONS PER NFPA 820 TABLE 4.2.2, ROW 20, LINE D AND FIGURE A.4.2(G).

LEGEND

- CLASS I, DIVISION 1, GROUP D
- CLASS I, DIVISION 2, GROUP D
- UNCLASSIFIED

THE DRAWINGS IN THIS SET ARE RECORD DRAWINGS. THEY ARE CONSTRUCTION CONTRACT DRAWINGS WHICH HAVE BEEN REVISED BASED ON AVAILABLE FIELD INFORMATION RECORDED BY OTHERS DURING CONSTRUCTION OF THIS CONTRACT. THERE HAS BEEN NO VERIFICATION OF DIMENSIONS SHOWN ON THE CONSTRUCTION DRAWINGS OR THE ACCURACY/COMPLETENESS OF THE FIELD INFORMATION RECEIVED.

SIGNATURE — DATE 2/7/2023

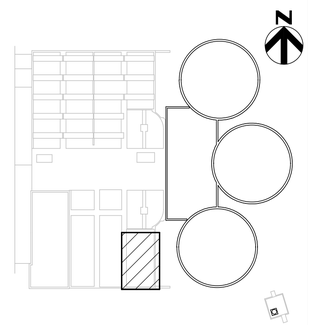

KEY PLAN

AS-BUILT REPLACEMENT SHEET

PROFESSIONAL CERTIFICATION

THIS DRAWING WAS ORIGINALLY APPROVED FOR CONSTRUCTION AND SEALED BY BRIAN M. BACLCHUNAS, A REGISTERED PROFESSIONAL ENGINEER IN THE STATE OF MARYLAND, NO. 200406

NOTICE TO CONTRACTORS

- PROJECT ELEVATIONS ARE BASED ON NAVD88 AND HOWARD COUNTY'S BENCHMARK SYSTEM
- PREVIOUS PROJECTS USED OTHER DATUMS
- APPLY THE FOLLOWING CONVERSIONS WHEN USING PREVIOUS CONTRACT DRAWINGS:
  - ADDITION NO. 6: SUBTRACT 0.80 FT
  - PRIOR ADDITIONS: SUBTRACT 1.04 FT

DEPARTMENT OF PUBLIC WORKS
HOWARD COUNTY, MARYLAND

CHIEF, BUREAU OF UTILITIES — DATE

DES: MJW
DRN: JCS
CHK: MJS
DATE: 12/2016

DATE	REV	DESCRIPTION
09/28/2017	3	PERMIT REVISION
07/2019		RECORD DRAWING

GENERAL

AREA CLASSIFICATION - PHOSPHORUS PRECIPITATION

LITTLE PATUXENT WATER RECLAMATION PLANT
8TH ADDITION
BIOSOLIDS PROCESSING FACILITIES - PHASE I

CAPITAL PROJECT S-6295
CONTRACT NO. 24-4935

ELECTION DISTRICT NO. 6
HOWARD COUNTY, MARYLAND

SCALE AS SHOWN

SHEET 24 OF 463

G-25

BIM 360://10054364 – Little Patuxent WRP 8th Addition/264591_100_D_V18.rvt
1/11/2022 10:16:16 AM

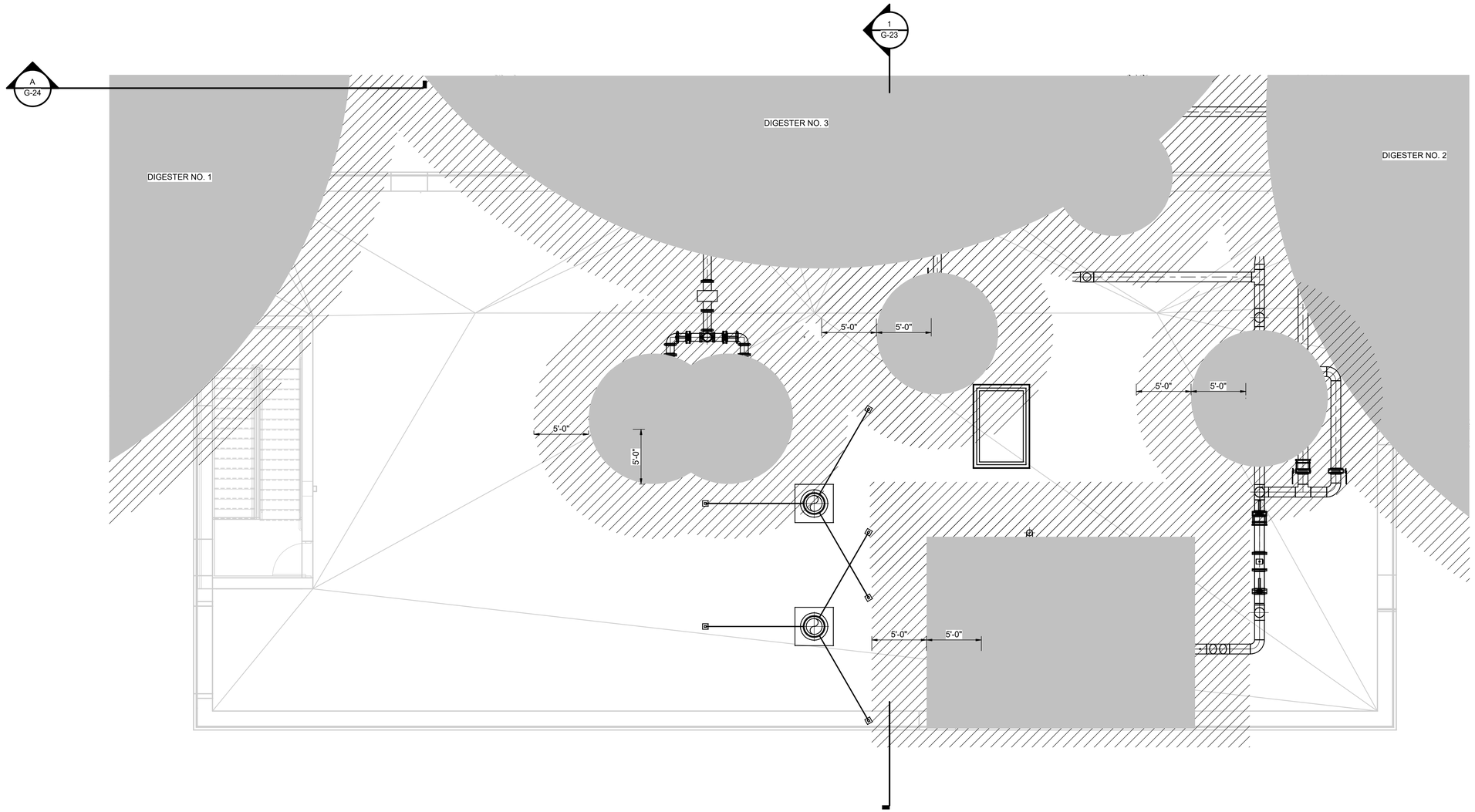

AREA CLASSIFICATION - DIGESTER BUILDING ROOF

3/16" = 1'-0"

NOTE:
1. GAS HANDLING EQUIPMENT CLASS I, DIVISION 1, GROUP D WITHIN 5 FT ON ALL SIDES AND DIVISION 2 WITHIN 5 FT BEYOND DIVISION 1 BOUNDARY PER NFPA 820, TABLE 6.2.2., ROW 18 AND FIGURE A.6.2(B).

LEGEND

- CLASS I, DIVISION 1, GROUP D
- CLASS I, DIVISION 2, GROUP D
- UNCLASSIFIED

THE DRAWINGS IN THIS SET ARE RECORD DRAWINGS. THEY ARE CONSTRUCTION CONTRACT DRAWINGS WHICH HAVE BEEN REVISED BASED ON AVAILABLE FIELD INFORMATION RECORDED BY OTHERS DURING CONSTRUCTION OF THIS CONTRACT. THERE HAS BEEN NO VERIFICATION OF DIMENSIONS SHOWN ON THE CONSTRUCTION DRAWINGS OR THE ACCURACY/COMPLETENESS OF THE FIELD INFORMATION RECEIVED.

SIGNATURE — DATE 2/7/2023

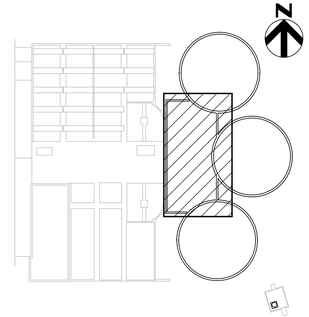

KEY PLAN

AS-BUILT REPLACEMENT SHEET

PROFESSIONAL CERTIFICATION

THIS DRAWING WAS ORIGINALLY APPROVED FOR CONSTRUCTION AND SEALED BY BRIAN M. BACLCHUNAS, A REGISTERED PROFESSIONAL ENGINEER IN THE STATE OF MARYLAND, NO. 200406

NOTICE TO CONTRACTORS

- PROJECT ELEVATIONS ARE BASED ON NAVD88 AND HOWARD COUNTY'S BENCHMARK SYSTEM
- PREVIOUS PROJECTS USED OTHER DATUMS
- APPLY THE FOLLOWING CONVERSIONS WHEN USING PREVIOUS CONTRACT DRAWINGS:
  - ADDITION NO. 6: SUBTRACT 0.80 FT
  - PRIOR ADDITIONS: SUBTRACT 1.04 FT

DEPARTMENT OF PUBLIC WORKS
HOWARD COUNTY, MARYLAND

CHIEF, BUREAU OF UTILITIES — DATE

DES: MJW
DRN: JCS
CHK: MJS
DATE: 12/2016

DATE	REV	DESCRIPTION
07/2019		RECORD DRAWING

GENERAL

AREA CLASSIFICATION - DIGESTER BUILDING ROOF & GAS COMPRESSING AND CONDENSING

LITTLE PATUXENT WATER RECLAMATION PLANT
8TH ADDITION
BIOSOLIDS PROCESSING FACILITIES - PHASE I

CAPITAL PROJECT S-6295
CONTRACT NO. 24-4935

ELECTION DISTRICT NO. 6
HOWARD COUNTY, MARYLAND

SCALE AS SHOWN

SHEET 25 OF 463

G-26

BIM 360://10054364 – Little Patuxent WRP 8th Addition/264591_100_D_V18.rvt
1/11/2022 10:16:17 AM

CODE ANALYSIS:

1. PROJECT LOCATION:
   A. HOWARD COUNTY, MARYLAND

2. PROJECT DESCRIPTION
   A. THIS PROJECT CONSISTS OF VARIOUS IMPROVEMENTS TO THE EXISTING HOWARD COUNTY LITTLE PATUXENT WATER RECLAMATION PLANT (HCLPWRP) BIOSOLIDS PROCESSING FACILITIES. INCLUDED UNDER THIS OVERALL CODE ANALYSIS IS THE ALTERATION WORK BEING DONE IN THE EXISTING BUILDING SUCH AS THE REPLACEMENT, ADDITION, AND RECONFIGURATION OF EQUIPMENT IN THE SOLIDS PIPE GALLERY, CHEMICAL HANDLING AREA, SOLIDS SCREENING AREA, AND GRAVITY BELT THICKENER AREA. THE NEW OCCUPIABLE STRUCTURES - INCLUDING THE DIGESTER BUILDING, MCC ADDITION, PS2 SUBSTATION & PHOSPHOROUS PRECIPITATION BUILDING – ARE COVERED IN SEPARATE ANALYSES.

   THE PS2 SUBSTATION EQUIPMENT PLATFORM AND PHOSPHOROUS PRECIPITATION BUILDING ARE BOTH LOCATED SEPARATELY FROM THE REST OF THE STRUCTURES MENTIONED ABOVE, TO THE WEST AND SOUTH RESPECTIVELY. PLEASE REFER TO SHEET G15 FOR THE OVERALL KEY PLAN (ATTACHED) FOR THE LAYOUT OF THESE NEW STRUCTURES AND THE DIFFERENT AREAS OF THE EXISTING BUILDING.

3. REGULATORY ENFORCEMENT:
   A. AUTHORITY HAVING JURISDICTION (AHJ):
      I. HOWARD COUNTY FIRE AND RESCUE (FIRE AND LIFE SAFETY)
         6751 COLUMBIA GATEWAY DR
         COLUMBIA, MD 21046
      II. HOWARD COUNTY INSPECTIONS, LICENSES AND PERMITS DEPARTMENT (BUILDING CODE)
         3430 COURT HOUSE DR
         ELLICOTT CITY, MD 21043
   B. APPLICABLE DESIGN STANDARDS/CODES
      I. LOCALLY ADOPTED GOVERNING CODES:
         1. INTERNATIONAL BUILDING CODE, 2015 EDITION, WITH AMENDMENTS
         2. INTERNATIONAL MECHANICAL CODE, 2015 EDITION, WITH AMENDMENTS
         3. INTERNATIONAL ENERGY CONSERVATION CODE, 2015 EDITION, WITH AMENDMENTS
         4. NFPA 1 UNIFORM FIRE CODE, 2015 EDITION, WITH AMENDMENTS
         5. NFPA 101 LIFE SAFETY CODE (LSC), 2015 EDITION
         6. HOWARD COUNTY ELECTRICAL CODE ADOPTED PURSUANT TO TITLE 3, SUBTITLE 2 OF THE HOWARD COUNTY CODE, BASED UPON THE NATIONAL ELECTRICAL CODE (NFPA 70), 2014 EDITION, WITH AMENDMENTS
         7. HOWARD COUNTY PLUMBING AND GASFITTING CODE ADOPTED PURSUANT TO TITLE 3, SUBTITLE 3 OF THE HOWARD COUNTY CODE, BASED UPON THE NATIONAL STANDARD PLUMBING CODE, 2009 EDITION
         8. NFPA 70 NATIONAL ELECTRIC CODE, 2014 EDITION, WITH AMENDMENTS
         9. MARYLAND STATE ACCESSIBILITY CODE
         10. INTERNATIONAL EXISTING BUILDING CODE, 2015 EDITION, BY WAY OF MARYLAND BUILDING REHABILITATION CODE
      II. REFERENCED STANDARDS:
         1. INTERNATIONAL BUILDING CODE, 2015 EDITION
         2. NFPA 72 NATIONAL FIRE ALARM CODE, 2013 EDITION
      III. OTHER CODES USED FOR DESIGN:
         1. NFPA 820 STANDARD FOR FIRE PROTECTION IN WASTEWATER TREATMENT AND COLLECTION FACILITIES, 2016 EDITION

4. OCCUPANCY CLASSIFICATION
   A. IBC CHAPTER 3 - LOW HAZARD FACTORY INDUSTRIAL GROUP F-2
   B. NFPA 101 CHAPTER 40 – SPECIAL PURPOSE INDUSTRIAL, LOW HAZARD

5. CONSTRUCTION TYPE
   A. IBC CHAPTER 6 – TYPE II-B CONSTRUCTION CLASSIFICATION

6. EXISTING BUILDING AREA AND HEIGHTS LIMITATIONS
   A. IBC CHAPTER 5, TABLE 503 - ALLOWABLE PER IBC §503 FOR NON-SPRINKLERED TYPE IIB CONSTRUCTION CLASSIFICATION:
      I. HEIGHT: 55 FEET
      II. STORIES: 3
      III. AREA: 28,850 SQUARE FEET
      IV. A 26% AREA INCREASE IS INCLUDED FOR AVAILABLE FRONTAGE.
         FRONTAGE INCREASE CALCULATED USING EQUATION 5-5 FROM 2015 IBC;
         IF = [F/P - 0.25]W/30 = [448/878 – 0.25]30/30 = [0.51 – 0.25]1 = 0.26
   B. ACTUAL - TYPE IIB CONSTRUCTION CLASSIFICATION:
      I. HEIGHT: APPROXIMATELY 50 FEET
      II. STORIES: 3
      III. AREA: APPROXIMATELY 26,800 SQUARE FEET
   C. A 3-HOUR FIRE WALL IS BEING PROVIDED TO FULLY SEPARATE THE EXISTING BUILDING AREAS FROM THE NEW DIGESTER BUILDING.

7. INTERNATIONAL EXISTING BUILDING CODE (IEBC) - CLASSIFICATION OF WORK
   A. SOLIDS PIPE GALLERY = ALTERATION LEVEL 2
      I. APPROXIMATELY 390/5,051 SQUARE FEET = 7.7% OF BUILDING AREA*
   B. CHEMICAL HANDLING AREA = ALTERATION LEVEL 1
      I. APPROXIMATELY 231/13,083 SQUARE FEET = 0.018% OF BUILDING AREA*
   C. SOLIDS SCREENING AREA = ALTERATION LEVEL 2
      I. APPROXIMATELY 105/3,111 SQUARE FEET = 3.4% OF BUILDING AREA*
   D. GRAVITY BELT THICKENER AREA = ALTERATION LEVEL 2
      I. APPROXIMATELY 3,002/12,446 SQUARE FEET = 24.1% OF BUILDING AREA*
   E. NOTES:
      I. TOTAL WORK AREA, INCLUDING THE APPROXIMATLEY 809 SQUARE FOOT MCC PENTHOUSE ADDITION, EQUALS 4,537 SQUARE FEET, WHICH IS LESS THAN THE 5,000 SQUARE FEET LOCAL ORDINANCE REQUIRING THE ADDITION OF SPRINKLERS.
      II. WORK AREAS IN EACH BUILDING ARE LESS THAN 50% OF THE RESPECITVE BUILDING AREA
      III. THE TOTAL WORK AREA IS APPROXIMATELY 11% OF THE TOTAL BUILDING. SO NONE OF THE ALTERATION LEVEL 2 WORK CAN BE CONSIDERED AN ALTERATION LEVEL 3.
      IV. AREAS MEASURED INCLUDE ALL EQUIPMENT BEING REPLACED, MODIFIED OR UPGRADED.

8. IEBC CHAPTER 7 - ALTERATIONS LEVEL 1 REQUIREMENTS
   A. GENERAL, §701
      I. §701.2 CONFORMANCE - AN EXISTING BUILDING OR PORTION THEREOF SHALL NOT BE ALTERED SUCH THAT THE BUILDING BECOMES LESS SAFE THAN ITS EXISTING CONDITION.
   B. FIRE PROTECTION, §703 – ALTERATIONS SHALL BE DONE IN A MANNER THAT MAINTAINES THE LEVEL OF FIRE PROTECTION PROVIDED
   C. MEANS OF EGRESS, §704 - ALTERATIONS SHALL BE DONE IN A MANNER THAT MAINTAINES THE LEVEL OF PROTECTION PROVIDED FOR THE MEANS OF EGRESS

9. IEBC CHAPTER 8 - ALTERATIONS LEVEL 2 REQUIREMENTS
   A. GENERAL, §801
      I. §801.2 ALTERATION LEVEL 1 COMPLIANCE - IN ADDITION TO THE REQUIREMENTS OF CHAPTER 8, ALL WORK FOR AN ALTERATION LEVEL 2 SHALL COMPLY WITH THE REQUIREMENTS OF CHAPTER 7
      II. §801.3 CONFORMANCE – ALL NEW CONSTRUCTION ELEMENTS, COMPONENTS, SYSTEMS, AND SPACES SHALL COMPLY WITH THE REQUIREMENTS OF THE INTERNATIONAL BUILDING CODE.
   B. FIRE PROTECTION, §803
      I. §804.2 AUTOMATIC SPRINKLER SYSTEMS – NOT REQUIRED FOR EXISTING SINGLE-TENANT GROUP F-2 OCCUPANCIES THAT ARE NOT HIGH-RISE BUILDINGS, ARE WITHOUT WINDOWLESS STORIES, AND OTHERWISE DO NOT FALL UNDER THE 'OTHER REQUIRED AUTOMATIC SPRINKLER SYSTEMS' DESCRIBED IN §804.2.4
   C. MEANS OF EGRESS, §804
      II. §805.3.1 MINIMUM NUMBER OF EXITS - EVERY STORY UTILIZED FOR HUMAN OCCUPANCY ON WHICH THERE IS A WORK AREA THAT INCLUDES EXITS OR CORRIDORS SHARED BY MORE THAN ONE TENANT WITHIN THE WORK AREA SHALL BE PROVIDED WITH THE MINIMUM NUMBER OF EXITS BASED ON THE OCCUPANCY AND THE OCCUPANT LOAD IN ACCORDANCE WITH THE INTERNATIONAL BUILDING CODE. IN ADDITION, THE EXITS SHALL COMPLY WITH SECTIONS 805.3.1.1 AND 805.3.1.2.
         1. TWO EXITS ARE PROVIDED PER IBC §1006
      III. §805.4 EGRESS DOORWAYS - EGRESS DOORWAYS IN ANY WORK AREA SHALL COMPLY WITH SECTIONS 805.4.1 THROUGH 805.4.5.
      IV. §805.5 OPENINGS IN CORRIDOR WALLS - OPENINGS IN CORRIDOR WALLS IN ANY WORK AREA SHALL COMPLY WITH SECTIONS 805.5.1 THROUGH 805.5.4.
      V. §805.7.1 ARTIFICIAL LIGHTING REQUIRED - MEANS OF EGRESS IN ALL WORK AREAS SHALL BE PROVIDED WITH ARTIFICIAL LIGHTING IN ACCORDANCE WITH THE REQUIREMENTS OF THE INTERNATIONAL BUILDING CODE.
      VI. §805.8.1 EXIT SIGNS IN WORK AREAS - MEANS OF EGRESS IN ALL WORK AREAS SHALL BE PROVIDED WITH EXIT SIGNS IN ACCORDANCE WITH THE REQUIREMENTS OF THE INTERNATIONAL BUILDING CODE.

10. FIRE PROTECTION SYSTEMS – LOCAL IBC AMENDMENTS REGARDING ALTERATIONS AND EXPANSIONS
   A. AUTOMATIC SPRINKLER PROTECTION IS NOT REQUIRED FOR THIS EXISTING BUILDING PER THE HOWARD COUNTY AMENDMENTS TO 2015 IBC §903.2.13.3(IV) DUE TO THE AREA OF ALL ALTERATIONS AND ADDITIONS BEING 4,428 SQUARE FEET, WHICH IS UNDER 5,000 GROSS SQUARE FEET IN FLOOR AREA AND NOT OTHERWISE REQUIRED TO BE SPRINKLERED PER IBC §903.

THE DRAWINGS IN THIS SET ARE RECORD DRAWINGS. THEY ARE CONSTRUCTION CONTRACT DRAWINGS WHICH HAVE BEEN REVISED BASED ON AVAILABLE FIELD INFORMATION RECORDED BY OTHERS DURING CONSTRUCTION OF THIS CONTRACT. THERE HAS BEEN NO VERIFICATION OF DIMENSIONS SHOWN ON THE CONSTRUCTION DRAWINGS OR THE ACCURACY/COMPLETENESS OF THE FIELD INFORMATION RECEIVED.

SIGNATURE _____ DATE 2/7/2023

AS-BUILT REPLACEMENT SHEET

PROFESSIONAL CERTIFICATION
THIS DRAWING WAS ORIGINALLY APPROVED FOR CONSTRUCTION AND SEALED BY ZACHARY J. SACHSENMAIER, A REGISTERED PROFESSIONAL ENGINEER IN THE STATE OF MARYLAND, NO. 42646.

NOTICE TO CONTRACTORS
- PROJECT ELEVATIONS ARE BASED ON NAVD88 AND HOWARD COUNTY'S BENCHMARK SYSTEM
- PREVIOUS PROJECTS USED OTHER DATUMS
- APPLY THE FOLLOWING CONVERSIONS WHEN USING PREVIOUS CONTRACT DRAWINGS:
  - ADDITION NO. 6: SUBTRACT 0.80 FT
  - PRIOR ADDITIONS: SUBTRACT 1.04 FT

DEPARTMENT OF PUBLIC WORKS
HOWARD COUNTY, MARYLAND

CHIEF, BUREAU OF UTILITIES DATE

DES: MS
DRN: TF
CHK: ZS
DATE: 12/2016

DATE	REV	DESCRIPTION
07/2019		RECORD DRAWING

GENERAL

OVERALL CODE ANALYSIS

LITTLE PATUXENT WATER RECLAMATION PLANT
8TH ADDITION
BIOSOLIDS PROCESSING FACILITIES - PHASE I

CAPITAL PROJECT S-6295
CONTRACT NO. 24-4935

ELECTION DISTRICT NO. 6
HOWARD COUNTY, MARYLAND

SCALE AS SHOWN

SHEET 26 OF 463

G-30

BIM 360://10054364 – Little Patuxent WRP 8th Addition/264591_100_A_V18.rvt
1/11/2022 9:24:16 AM

CODE ANALYSIS:

1. **PROJECT LOCATION**
   A. HOWARD COUNTY, MARYLAND

2. **BUILDING DESCRIPTION**
   A. THIS IS A NEW, TWO STORY DIGESTER BUILDING, MEASURING APPROXIMATELY 5,600 SQUARE FEET IN AREA, THAT WILL BE SEPARATED FROM EXISTING BUILDINGS BY FIRE-RATED CONSTRUCTION.

3. **REGULATORY ENFORCEMENT**
   A. AUTHORITY HAVING JURISDICTION (AHJ):
      I. HOWARD COUNTY FIRE AND RESCUE (FIRE AND LIFE SAFETY)
         6751 COLUMBIA GATEWAY DR
         COLUMBIA, MD 21046
      II. HOWARD COUNTY INSPECTIONS, LICENSES AND PERMITS DEPARTMENT (BUILDING CODE)
         3430 COURT HOUSE DR
         ELLICOTT CITY, MD 21043
   B. APPLICABLE DESIGN STANDARDS/CODES
      I. LOCALLY ADOPTED GOVERNING CODES:
         1. INTERNATIONAL BUILDING CODE, 2015 EDITION, WITH AMENDMENTS
         2. INTERNATIONAL MECHANICAL CODE, 2015 EDITION, WITH AMENDMENTS
         3. INTERNATIONAL ENERGY CONSERVATION CODE, 2015 EDITION, WITH AMENDMENTS
         4. NFPA 1 UNIFORM FIRE CODE, 2015 EDITION, WITH AMENDMENTS
         5. NFPA 101 LIFE SAFETY CODE (LSC), 2015 EDITION
         6. HOWARD COUNTY ELECTRICAL CODE ADOPTED PURSUANT TO TITLE 3, SUBTITLE 2 OF THE HOWARD COUNTY CODE, BASED UPON THE NATIONAL ELECTRICAL CODE (NFPA 70), 2014 EDITION, WITH AMENDMENTS
         7. HOWARD COUNTY PLUMBING AND GASFITTING CODE ADOPTED PURSUANT TO TITLE 3, SUBTITLE 3 OF THE HOWARD COUNTY CODE, BASED UPON THE NATIONAL STANDARD PLUMBING CODE, 2009 EDITION
         8. NFPA 70 NATIONAL ELECTRIC CODE, 2014 EDITION, WITH AMENDMENTS
         9. MARYLAND STATE ACCESSIBILITY CODE
         10. INTERNATIONAL EXISTING BUILDING CODE BY WAY OF MARYLAND BUILDING REHABILITATION CODE
      II. REFERENCED STANDARDS:
         1. NFPA 72 NATIONAL FIRE ALARM CODE, 2013 EDITION
      III. OTHER CODES USED FOR DESIGN:
         1. NFPA 820 STANDARD FOR FIRE PROTECTION IN WASTEWATER TREATMENT AND COLLECTION FACILITIES, 2016 EDITION

4. **OCCUPANCY CLASSIFICATION**
   A. IBC CHAPTER 3 - MODERATE HAZARD FACTORY INDUSTRIAL GROUP F-1
      I. NOTE: HAZARDOUS MATERIALS STORED WITHIN THIS BUILDING WILL NOT EXCEED THE MAXIMUM ALLOWABLE QUANTITIES FROM IBC §307.
   B. NFPA 101 CHAPTER 40 – SPECIAL PURPOSE INDUSTRIAL, ORDINARY HAZARD

5. **CONSTRUCTION TYPE**
   A. IBC CHAPTER 6 – TYPE II-B CONSTRUCTION CLASSIFICATION

6. **BUILDING AREA AND HEIGHTS LIMITATIONS**
   A. IBC CHAPTER 5, TABLE 503 - ALLOWABLE PER IBC §503 FOR SPRINKLERED TYPE IIB CONSTRUCTION CLASSIFICATION:
      I. HEIGHT: 75 FEET
      II. STORIES: 3
      III. AREA: 75,000 SQUARE FEET
      V. NO AREA MODIFICATIONS DUE TO FRONTAGE ARE AVAILABLE.
   B. ACTUAL - TYPE IIB CONSTRUCTION CLASSIFICATION:
      I. HEIGHT: APPROXIMATELY 36 FEET
      II. STORIES: 2
      III. AREA: APPROXIMATELY 5,600 SQUARE FEET

7. **FIRE RESISTANCE REQUIREMENTS**
   A. TYPE IIB CONSTRUCTION CLASSIFICATION SHALL BE LIMITED TO THE COMBUSTIBLE MATERIALS INDICATED IN SECTIONS 601 & 602, AS FOLLOWS:
      EXTERIOR BEARING WALLS - (0) HOUR RATING (SEE BELOW)
      EXTERIOR NON BEARING WALLS (0) HOUR RATING (SEE BELOW)
      INTERIOR BEARING WALLS - (0) HOUR RATING
      STRUCTURAL FRAME- (0) HOUR RATING
      PERMANENT PARTITIONS- (0) HOUR RATING
      SHAFT ENCLOSURES- N/A
      FLOORS & FLOOR-CEILINGS - (0) HOUR RATING
      ROOFS AND ROOF CEILINGS - (0) HOUR RATING
      EXIT STAIR ENCLOSURES – (1) HOUR RATING

A 3-HOUR FIRE WALL IS BEING PROVIDED TO FULLY SEPARATE THIS NEW BUILDING FROM THE EXISTING BUILDING (WHICH INCLUDES THE EXISTING PIPE GALLERY, DAF, SOLIDS, & CENTRIFUGE AREAS).

THIS BUILDING IS NOT OTHERWISE REQUIRED TO HAVE FIRE-RESISTANCE RATED EXTERIOR WALLS DUE TO HAVING SUFFICIENT FIRE SEPARATION DISTANCE FOR TYPE IIB CONSTRUCTION IN ACCORDANCE WITH §602 (10' OR MORE).

NO INTERNAL FIRE-RATED BARRIERS/ASSEMBLIES ARE REQUIRED FOR THIS SINGLE OCCUPANCY BUILDING.

8. **FIRE PROTECTION SYSTEMS**
   A. AN AUTOMATIC SPRINKLER PROTECTION IS REQUIRED FOR THIS GROUP F-1 OCCUPANCY IN ACCORDANCE WITH THE LOCAL AMENDMENTS TO 2015 IBC §903.2.13, ADDITIONAL SUPPRESSION REQUIREMENTS, DUE TO IT BEING OVER 5,000 GROSS SQUARE FEET IN FLOOR AREA
   B. PORTABLE FIRE EXTINGUISHERS ARE REQUIRED TO BE SELECTED AND INSTALLED IN ACCORDANCE WITH IBC §906 AND NFPA 10
      I. FIRE EXTINGUISHER LOCATIONS ARE TO BE LOCATED WITHIN 75 FEET TRAVEL DISTANCE.
      II. PORTABLE FIRE EXTINGUISHERS ARE TO BE A MINIMUM 2A:20B:C RATING.
   C. A FIRE ALARM SYSTEM SHALL BE PROVIDED FOR THIS GROUP F-1 OCCUPANCY IN ACCORDANCE WITH IBC §907.2.4 AND NFPA 101 §40.3.4, THE AUTOMATIC SPRINKLER SYSTEM SHALL BE MONITORED BY A FIRE ALARM CONTROL UNIT (FACU) THAT IS CAPABLE OF SUPERVISORY SERVICE FOR EMERGENCY SERVICES NOTIFICATION. THIS FACU IS REQUIRED PER §903.4, WHICH SAYS "ALARM, SUPERVISORY AND TROUBLE SIGNALS SHALL BE DISTINCTLY DIFFERENT AND SHALL BE AUTOMATICALLY TRANSMITTED TO AN APPROVED SUPERVISING STATION OR, WHERE APPROVED BY THE FIRE CODE OFFICIAL, SHALL SOUND AN AUDIBLE SIGNAL AT A CONSTANTLY ATTENDED LOCATION." ADDITIONALLY, PER §903.4.1, THE ALARM, SUPERVISORY AND TROUBLE SIGNALS SHALL BE DISTINCTLY DIFFERENT AND SHALL BE AUTOMATICALLY TRANSMITTED TO AN APPROVED SUPERVISING STATION OR, WHERE APPROVED BY THE FIRE CODE OFFICIAL, SHALL SOUND AN AUDIBLE SIGNAL AT A CONSTANTLY ATTENDED LOCATION." FINALLY, IAW §903.4.2 "AN APPROVED AUDIBLE DEVICE, LOCATED ON THE EXTERIOR OF THE BUILDING IN AN APPROVED LOCATION, SHALL BE CONNECTED TO EACH AUTOMATIC SPRINKLER SYSTEM. SUCH SPRINKLER WATERFLOW ALARM DEVICES SHALL BE ACTIVATED BY WATER FLOW EQUIVALENT TO THE FLOW OF A SINGLE SPRINKLER OF THE SMALLEST ORIFICE SIZE INSTALLED IN THE SYSTEM. WHERE A FIRE ALARM SYSTEM IS INSTALLED, ACTUATION OF THE AUTOMATIC SPRINKLER SYSTEM SHALL ACTUATE THE BUILDING FIRE ALARM SYSTEM."
      SEE FIRE PROTECTION DRAWING F-320 FOR ADDITIONAL INFORMATION.

9. **MEANS OF EGRESS**
   A. BUILDING OCCUPANT LOAD:
      I. IBC CHAPTER 10 - OCCUPANT LOAD FACTOR FROM TABLE 1004.1.1:
         1. ELECTRICAL/MECHANICAL EQUIPMENT ROOMS; 300 SQ. FT. / PERSON (GROSS)
         2. OCCUPANT LOAD: 19 OCCUPANTS (5,700 SQ. FT. / 300 SQ. FT / PERSON)
      II. NFPA 101 – PER TABLE 7.3.1.2, FOR SPECIAL PURPOSE INDUSTRIAL OCCUPANCY, "THE OCCUPANT LOAD IS THE MAXIMUM PROBABLE NUMBER OF OCCUPANTS PRESENT AT ANY TIME." IT IS EXPECTED THAT ONLY ONE OR TWO OCCUPANTS AT MOST WILL BE PRESENT IN THIS FACILITY AT A GIVEN TIME AND THAT THE BUILDING WILL NOT NORMALLY BE OCCUPIED BUT WILL BE FREQUENTED ONLY BY PERSONNEL AS REQUIRED FOR MAINTENANCE, REPAIR OR MONITORING OF EQUIPMENT.
   B. EGRESS ILLUMINATION OF 1 FOOTCANDLE SHALL BE PROVIDED PER IBC §1008.2 AND NFPA 101 §7.8.1.3
   C. EMERGENCY POWER SUPPLIES SHALL BE PROVIDED FOR EGRESS ILLUMINATION PER IBC §1008.3 AND NFPA 101 §7.9
   D. DOORS SHALL PROVIDE MINIMUM CLEAR WIDTH OF 32 INCHES PER IBC §1010.1.1 AND NFPA 101 § 7.2.1.2.3 - SEE FLOOR PLANS FOR EXIT WIDTHS BEING PROVIDED.
   E. ILLUMINATED EXIT SIGNS SHALL BE PROVIDED FOR EGRESS DOORS PER IBC §1013 AND NFPA 101 §7.10.
   F. EXIT ACCESS – SPRINKLERED BUILDING
      I. IBC (F-1):
         1. 100 FT. MAX COMMON PATH ALLOWED IBC §1006.2
         2. 400 FT. MAX TRAVEL DISTANCE ALLOWED IBC §1017.2
      II. NFPA 101 (SPECIAL INDUSTRIAL OCCUPANCY):
         1. 100 FT. MAX COMMON PATH ALLOWED NFPA 101 TABLE 40.2.5.1
         2. 400 FT. MAX TRAVEL DISTANCE ALLOWED NFPA 101 TABLE 40.2.6.1
   G. ACCESSIBILITY IS NOT REQUIRED FOR EGRESS OF THE BUILDING PER IBC §1103.2.9, WHICH STATES "SPACES FREQUENTED ONLY BY SERVICE PERSONNEL FOR MAINTENANCE, REPAIR OR OCCASIONAL MONITORING OF EQUIPMENT ARE NOT REQUIRED TO COMPLY WITH THIS CHAPTER".

10. **NFPA 820 REQUIREMENTS**
   A. ANAEROBIC DIGESTER CONTROL BUILDING, PHYSICALLY SEPARATED FROM GAS-HANDLING EQUIPMENT
      NFPA 820, TABLE 6.2.2(A), ROW 17, LINE C
      1. HAZARDOUS CLASSIFICATION: UNCLASSIFIED
      2. VENTILATED AT 6 CONTINUOUS AIR CHANGES PER HOUR (REQUIRED)
      3. FIRE EXTINGUISHER AND FIRE HYDRANT (REQUIRED)
      4. FIRE SUPPRESSION, FIRE ALARM/DETECTION, AND EMERGENCY ALARM SYSTEMS (NOT REQUIRED)
      5. GAS DETECTION SYSTEM (REQUIRED)

THE DRAWINGS IN THIS SET ARE RECORD DRAWINGS. THEY ARE CONSTRUCTION CONTRACT DRAWINGS WHICH HAVE BEEN REVISED BASED ON AVAILABLE FIELD INFORMATION RECORDED BY OTHERS DURING CONSTRUCTION OF THIS CONTRACT. THERE HAS BEEN NO VERIFICATION OF DIMENSIONS SHOWN ON THE CONSTRUCTION DRAWINGS OR THE ACCURACY/COMPLETENESS OF THE FIELD INFORMATION RECEIVED.

SIGNATURE 2/7/2023 DATE

HDR

AS-BUILT REPLACEMENT SHEET

PROFESSIONAL CERTIFICATION
THIS DRAWING WAS ORIGINALLY APPROVED FOR CONSTRUCTION AND SEALED BY ZACHARY J. SACHSENMAIER, A REGISTERED PROFESSIONAL ENGINEER IN THE STATE OF MARYLAND, NO. 42646.

NOTICE TO CONTRACTORS
- PROJECT ELEVATIONS ARE BASED ON NAVD88 AND HOWARD COUNTY'S BENCHMARK SYSTEM
- PREVIOUS PROJECTS USED OTHER DATUMS
- APPLY THE FOLLOWING CONVERSIONS WHEN USING PREVIOUS CONTRACT DRAWINGS:
  - ADDITION NO. 6: SUBTRACT 0.80 FT
  - PRIOR ADDITIONS: SUBTRACT 1.04 FT

DEPARTMENT OF PUBLIC WORKS
HOWARD COUNTY, MARYLAND

CHIEF, BUREAU OF UTILITIES DATE

DES: MS
DRN: TF
CHK: ZS
DATE: 12/2016

DATE	REV	DESCRIPTION
07/2019		RECORD DRAWING

GENERAL

DIGESTER BUILDING CODE ANALYSIS

LITTLE PATUXENT WATER RECLAMATION PLANT
8TH ADDITION
BIOSOLIDS PROCESSING FACILITIES - PHASE I

CAPITAL PROJECT S-6295
CONTRACT NO. 24-4935

ELECTION DISTRICT NO. 6
HOWARD COUNTY, MARYLAND

SCALE AS SHOWN

SHEET 27 OF 463

G-31

BIM 360://10054364 – Little Patuxent WRP 8th Addition/264581_100_A_V18.rvt
1/11/2022 9:24:16 AM

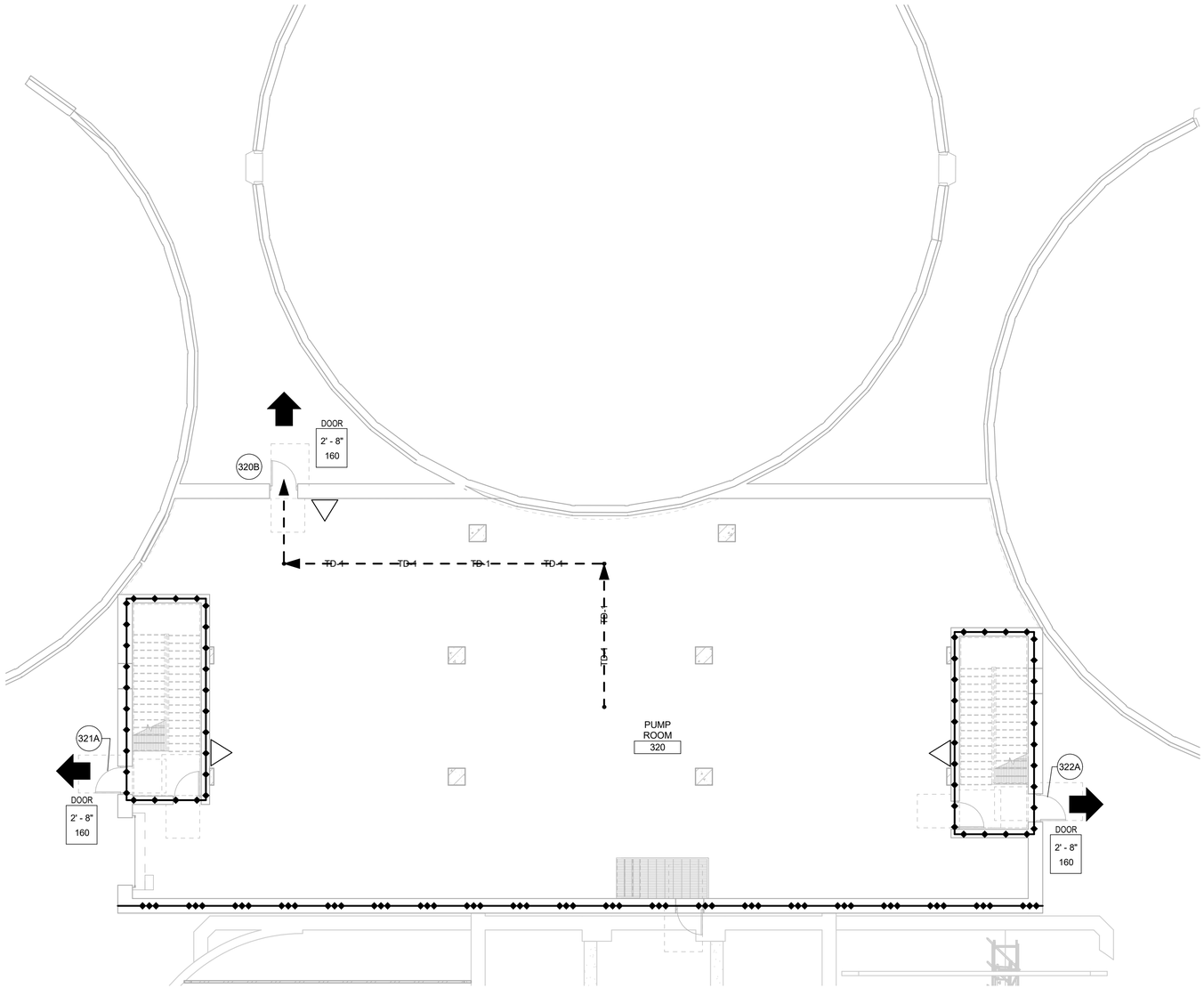

FIRST FLOOR LIFE SAFETY PLAN

1/8" = 1'-0"

LIFE SAFETY NOTES:

1. FOR EXIT LIGHTS AND EMERGENCY LIGHTING, SEE ELECTRICAL DRAWINGS.

LIFE SAFETY SYMBOLS:

EXIT DOOR TAG

A — CLEAR DOOR WIDTH [FEET - INCHES]
B — OCCUPANT LOAD CAPACITY [NO.OF PEOPLE]

OTHERS

FIRE EXTINGUSHER

LINE TYPES FOR MEANS OF EGRESS:

COMPONENT	SYMBOL
TRAVEL DISTANCE	TD
COMMON PATH	CP

EXIT DISCHARGE

EXIT DISCHARGE ARROW

WALL RATING LEGEND

1 HOUR FIRE BARRIER

3 HOUR FIRE WALL

MEANS OF EGRESS ARRANGEMENT DISTANCE SCHEDULE - BUILDING SUMMARY		
EGRESS PATH ID	EGRESS DISTANCE	
	PROVIDED	MAXIMUM PERMITTED
TD-1		
TD-1	65' - 0"	400' - 0"

MEANS OF EGRESS WIDTH CAPACITY			
	PROVIDED EGRESS CAPACITY - LEVEL COMPONENTS & RAMPS		
EXIT ID	EGRESS CAPACITY FACTOR	CLEAR WIDTH	OCCUPANT LOAD CAPACITY
320B	0.2	2' - 8"	160
321A	0.2	2' - 8"	160
322A	0.2	2' - 8"	160

THE DRAWINGS IN THIS SET ARE RECORD DRAWINGS. THEY ARE CONSTRUCTION CONTRACT DRAWINGS WHICH HAVE BEEN REVISED BASED ON AVAILABLE FIELD INFORMATION RECORDED BY OTHERS DURING CONSTRUCTION OF THIS CONTRACT. THERE HAS BEEN NO VERIFICATION OF DIMENSIONS SHOWN ON THE CONSTRUCTION DRAWINGS OR THE ACCURACY/COMPLETENESS OF THE FIELD INFORMATION RECEIVED.

SIGNATURE — DATE 2/7/2025

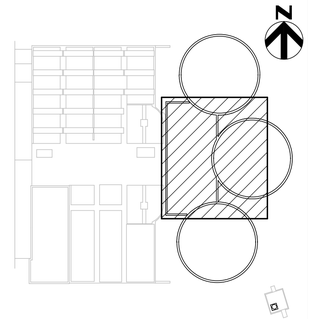

KEY PLAN

AS-BUILT REPLACEMENT SHEET

PROFESSIONAL CERTIFICATION

THIS DRAWING WAS ORIGINALLY APPROVED FOR CONSTRUCTION AND SEALED BY ZACHARY J. SACHSENMAIER, A REGISTERED PROFESSIONAL ENGINEER IN THE STATE OF MARYLAND, NO. 42646.

NOTICE TO CONTRACTORS

- PROJECT ELEVATIONS ARE BASED ON NAVD88 AND HOWARD COUNTY'S BENCHMARK SYSTEM
- PREVIOUS PROJECTS USED OTHER DATUMS
- APPLY THE FOLLOWING CONVERSIONS WHEN USING PREVIOUS CONTRACT DRAWINGS:
  - ADDITION NO. 6: SUBTRACT 0.80 FT
  - PRIOR ADDITIONS: SUBTRACT 1.04 FT

DEPARTMENT OF PUBLIC WORKS
HOWARD COUNTY, MARYLAND

CHIEF, BUREAU OF UTILITIES — DATE

DES: MS
DRN: TF
CHK: ZS
DATE: 12/2016

DATE	REV	DESCRIPTION
07/2019		RECORD DRAWING

GENERAL

DIGESTER BUILDING FIRST FLOOR LIFE SAFETY PLAN

LITTLE PATUXENT WATER RECLAMATION PLANT
8TH ADDITION
BIOSOLIDS PROCESSING FACILITIES - PHASE I

CAPITAL PROJECT S-6295
CONTRACT NO. 24-4935

ELECTION DISTRICT NO. 6
HOWARD COUNTY, MARYLAND

SCALE AS SHOWN

SHEET 28 OF 463

G-32

BIM 360://10054364 – Little Patuxent WRP 8th Addition/264591_100_A_V18.rvt
1/11/2022 9:24:20 AM

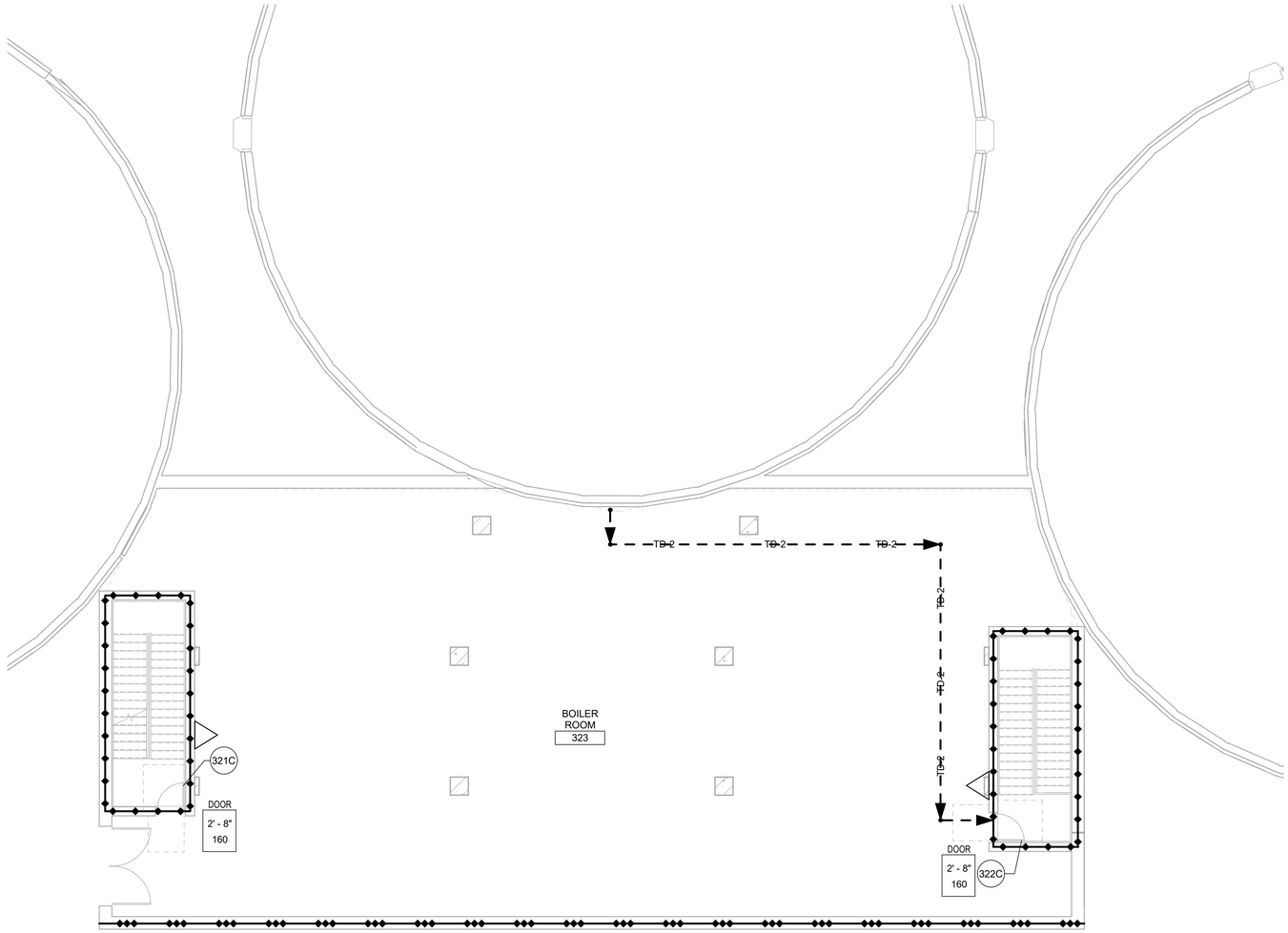

SECOND FLOOR LIFE SAFETY PLAN

1/8" = 1'-0"

LIFE SAFETY NOTES:

1. FOR EXIT LIGHTS AND EMERGENCY LIGHTING, SEE ELECTRICAL DRAWINGS.

LIFE SAFETY SYMBOLS:

EXIT DOOR TAG

A
INCHES
B

CLEAR DOOR WIDTH [FEET - INCHES]
OCCUPANT LOAD CAPACITY [NO.OF PEOPLE]

OTHERS

FIRE EXTINGUSHER

LINE TYPES FOR MEANS OF EGRESS:

COMPONENT	SYMBOL
TRAVEL DISTANCE	TD
COMMON PATH	CP

EXIT DISCHARGE

EXIT DISCHARGE ARROW

WALL RATING LEGEND

1 HOUR FIRE BARRIER

3 HOUR FIRE WALL

MEANS OF EGRESS ARRANGEMENT DISTANCE SCHEDULE - BUILDING SUMMARY		
EGRESS PATH ID	EGRESS DISTANCE	
	PROVIDED	MAXIMUM PERMITTED
TD-2	77' - 0"	400' - 0"

MEANS OF EGRESS WIDTH CAPACITY			
	PROVIDED EGRESS CAPACITY - LEVEL COMPONENTS & RAMPS		
EXIT ID	EGRESS CAPACITY FACTOR	CLEAR WIDTH	OCCUPANT LOAD CAPACITY
321C	0.2	2' - 8"	160
322C	0.2	2' - 8"	160

THE DRAWINGS IN THIS SET ARE RECORD DRAWINGS. THEY ARE CONSTRUCTION CONTRACT DRAWINGS WHICH HAVE BEEN REVISED BASED ON AVAILABLE FIELD INFORMATION RECORDED BY OTHERS DURING CONSTRUCTION OF THIS CONTRACT. THERE HAS BEEN NO VERIFICATION OF DIMENSIONS SHOWN ON THE CONSTRUCTION DRAWINGS OR THE ACCURACY/COMPLETENESS OF THE FIELD INFORMATION RECEIVED.

SIGNATURE — DATE 2/7/2022

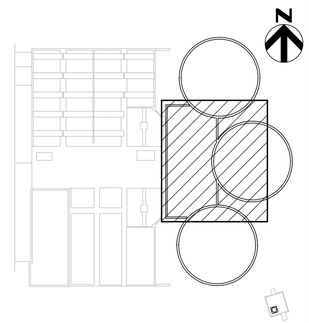

KEY PLAN

AS-BUILT REPLACEMENT SHEET

PROFESSIONAL CERTIFICATION

THIS DRAWING WAS ORIGINALLY APPROVED FOR CONSTRUCTION AND SEALED BY ZACHARY J. SACHSENMAIER, A REGISTERED PROFESSIONAL ENGINEER IN THE STATE OF MARYLAND, NO. 42646.

NOTICE TO CONTRACTORS

- PROJECT ELEVATIONS ARE BASED ON NAVD88 AND HOWARD COUNTY'S BENCHMARK SYSTEM
- PREVIOUS PROJECTS USED OTHER DATUMS
- APPLY THE FOLLOWING CONVERSIONS WHEN USING PREVIOUS CONTRACT DRAWINGS:
  - ADDITION NO. 6: SUBTRACT 0.80 FT
  - PRIOR ADDITIONS: SUBTRACT 1.04 FT

DEPARTMENT OF PUBLIC WORKS
HOWARD COUNTY, MARYLAND

CHIEF, BUREAU OF UTILITIES — DATE

DES: MS
DRN: TF
CHK: ZS
DATE: 12/2016

DATE	REV	DESCRIPTION
07/2019		RECORD DRAWING

GENERAL

DIGESTER BUILDING SECOND FLOOR LIFE SAFETY PLAN

LITTLE PATUXENT WATER RECLAMATION PLANT
8TH ADDITION
BIOSOLIDS PROCESSING FACILITIES - PHASE I

CAPITAL PROJECT S-6295
CONTRACT NO. 24-4935

ELECTION DISTRICT NO. 6
HOWARD COUNTY, MARYLAND

SCALE AS SHOWN

SHEET 29 OF 463

G-33

BIM 360://10054364 – Little Patuxent WRP 8th Addition/264591_100_A_V18.rvt
1/11/2022 9:24:21 AM

CODE ANALYSIS:

1. PROJECT LOCATION:
A. HOWARD COUNTY, MARYLAND

2. BUILDING DESCRIPTIONS
A. MCC - THIS IS A NEW PENTHOUSE ADDITION TO THE PIPE GALLERY THAT WILL HOUSE ELECTRICAL EQUIPMENT, MEASURING APPROXIMATELY 700 SQUARE FEET IN AREA.
B. SUBSTATION – THIS IS A NEW ENCLOSURE ON AN EQUIPMENT PLATFORM THAT WILL HOUSE ELECTRICAL EQUIPMENT, MEASURING APPROXIMATELY 350 SQUARE FEET IN AREA.
C. PHOSPHOROUS PRECIPITATION BUILDING (PPB) - THIS IS A NEW ENCLOSURE THAT WILL HOUSE PROCESS EQUIPMENT, MEASURING APPROXIMATELY 750 SQUARE FEET IN AREA.

3. REGULATORY ENFORCEMENT:
A. AUTHORITY HAVING JURISDICTION (AHJ):
I. HOWARD COUNTY FIRE AND RESCUE (FIRE AND LIFE SAFETY)
6751 COLUMBIA GATEWAY DR
COLUMBIA, MD 21046
II. HOWARD COUNTY INSPECTIONS, LICENSES AND PERMITS DEPARTMENT (BUILDING CODE)
3430 COURT HOUSE DR
ELLICOTT CITY, MD 21043
B. APPLICABLE DESIGN STANDARDS/CODES
I. LOCALLY ADOPTED GOVERNING CODES:
1. INTERNATIONAL BUILDING CODE, 2015 EDITION, WITH AMENDMENTS
2. INTERNATIONAL MECHANICAL CODE, 2015 EDITION, WITH AMENDMENTS
3. INTERNATIONAL ENERGY CONSERVATION CODE, 2015 EDITION, WITH AMENDMENTS
4. NFPA 1 UNIFORM FIRE CODE, 2015 EDITION, WITH AMENDMENTS
5. NFPA 101 LIFE SAFETY CODE (LSC), 2015 EDITION
6. HOWARD COUNTY ELECTRICAL CODE ADOPTED PURSUANT TO TITLE 3, SUBTITLE 2 OF THE HOWARD COUNTY CODE, BASED UPON THE NATIONAL ELECTRICAL CODE (NFPA 70), 2014 EDITION, WITH AMENDMENTS
7. HOWARD COUNTY PLUMBING AND GASFITTING CODE ADOPTED PURSUANT TO TITLE 3, SUBTITLE 3 OF THE HOWARD COUNTY CODE, BASED UPON THE NATIONAL STANDARD PLUMBING CODE, 2009 EDITION
8. NFPA 70 NATIONAL ELECTRIC CODE, 2014 EDITION, WITH AMENDMENTS
9. MARYLAND STATE ACCESSIBILITY CODE
10. INTERNATIONAL EXISTING BUILDING CODE, 2015 EDITION, BY WAY OF MARYLAND BUILDING REHABILITATION CODE
II. REFERENCED STANDARDS:
1. NFPA 72 NATIONAL FIRE ALARM CODE, 2013 EDITION
III. OTHER CODES USED FOR DESIGN:
1. NFPA 820 STANDARD FOR FIRE PROTECTION IN WASTEWATER TREATMENT AND COLLECTION FACILITIES, 2016 EDITION

4. OCCUPANCY CLASSIFICATION
A. IBC CHAPTER 3
I. MCC - LOW HAZARD FACTORY INDUSTRIAL GROUP F-2
II. SUBSTATION – MODERATE HAZARD FACTORY INDUSTRIAL GROUP F-1
III. PPB - LOW HAZARD FACTORY INDUSTRIAL GROUP F-2
IV. NOTE: HAZARDOUS MATERIALS STORED WITHIN THESE BUILDINGS WILL NOT EXCEED THE MAXIMUM ALLOWABLE QUANTITIES FROM IBC §307.
B. NFPA 101 CHAPTER 40
I. MCC - SPECIAL PURPOSE INDUSTRIAL, LOW HAZARD
II. SUBSTATION - SPECIAL PURPOSE INDUSTRIAL, ORDINARY HAZARD
III. PHOSPHOROUS PRECIPITATION BUILDING - SPECIAL PURPOSE INDUSTRIAL, LOW HAZARD

5. CONSTRUCTION TYPE
A. IBC CHAPTER 6
1. MCC – TYPE II-B CONSTRUCTION CLASSIFICATION
2. SUBSTATION – TYPE II-B CONSTRUCTION CLASSIFICATION
3. PBB – TYPE II-B CONSTRUCTION CLASSIFICATION

6. BUILDING AREA AND HEIGHTS LIMITATIONS
A. IBC CHAPTER 5, TABLE 503 - ALLOWABLE PER IBC §503 FOR NON-SPRINKLERED TYPE IIB CONSTRUCTION CLASSIFICATION
I. MCC (F-2):
1. PER IBC §1510.2.2, THE AGGREGATE AREA OF PENTHOUSES AND OTHER ENCLOSED ROOFTOP STRUCTURES SHALL NOT EXCEED ONE-THIRD THE AREA OF THE SUPPORTING ROOF DECK. SUCH PENTHOUSES AND OTHER ENCLOSED ROOFTOP STRUCTURES SHALL NOT BE REQUIRED TO BE INCLUDED IN DETERMINING THE BUILDING AREA OR NUMBER OF STORIES AS REGULATED BY SECTION 503.1. THE AREA OF SUCH PENTHOUSES SHALL NOT BE INCLUDED IN DETERMINING THE FIRE AREA SPECIFIED IN SECTION 901.7.
II. SUBSTATION (F-1):
1. HEIGHT: 55 FEET
2. STORIES: 2
3. AREA: 23,000 SQUARE FEET
4. NO AREA MODIFICATIONS REQUIRED OR TAKEN.
III. PBB (F-2):
1. HEIGHT: 55 FEET
2. STORIES: 3
3. AREA: 15,500 SQUARE FEET
4. NO AREA MODIFICATIONS REQUIRED OR TAKEN.

B. ACTUAL - TYPE IIB CONSTRUCTION CLASSIFICATION:
I. MCC (F-2):
1. HEIGHT: APPROXIMATELY 14 FEET
2. STORIES: PENTHOUSE AS DEFINED IN IBC §1510
3. AREA: APPROXIMATELY 700 SQUARE FEET
II. SUBSTATION (F-1):
1. HEIGHT: APPROXIMATELY 25 FEET
2. STORIES: 2
3. AREA: APPROXIMATELY 350 SQUARE FEET
III. PPB (F-2):
1. HEIGHT: APPROXIMATELY 15 FEET
2. STORIES: 1
3. AREA: APPROXIMATELY 750 SQUARE FEET

7. FIRE RESISTANCE REQUIREMENTS – MCC, SS & PPB
A. TYPE IIB CONSTRUCTION CLASSIFICATION SHALL BE LIMITED TO THE COMBUSTIBLE MATERIALS INDICATED IN SECTIONS 601 & 602, AS FOLLOWS:
EXTERIOR BEARING WALLS - (0) HOUR RATING (SEE BELOW)
EXTERIOR NON BEARING WALLS (0) HOUR RATING (SEE BELOW)
INTERIOR BEARING WALLS - (0) HOUR RATING
STRUCTURAL FRAME- (0) HOUR RATING
PERMANENT PARTITIONS- (0) HOUR RATING
SHAFT ENCLOSURES - N/A
FLOORS & FLOOR-CEILINGS - (0) HOUR RATING
ROOFS AND ROOF CEILINGS - (0) HOUR RATING
EXIT STAIR ENCLOSURES - N/A

A 3-HOUR FIRE WALL IS BEING PROVIDED TO FULLY SEPARATE THE EXISTING BUILDING - WHICH INCLUDES THE EXISTING PIPE GALLERY (THE ROOF OF WHICH IS WHERE THE MCC IS BEING ADDED), DAF, SOLIDS, & CENTRIFUGE AREAS – FROM THE NEW DIGESTER BUILDING.

THE MCC, SUBSTATION, AND PPB ARE NOT REQUIRED TO HAVE FIRE-RESISTANCE RATED EXTERIOR WALLS DUE TO HAVING SUFFICIENT FIRE SEPARATION DISTANCE FOR TYPE IIB CONSTRUCTION IN ACCORDANCE WITH §602 (10' OR MORE).

NO INTERNAL FIRE-RATED BARRIERS/ASSEMBLIES ARE REQUIRED FOR THESE SINGLE OCCUPANCY STRUCTURES.

8. FIRE PROTECTION SYSTEMS
A. AUTOMATIC SPRINKLER PROTECTION IS NOT REQUIRED FOR THESE STRUCTURES PER THE LOCAL AMENDMENTS TO 2015 IBC §903.2.13, *ADDITIONAL SUPPRESSION REQUIREMENTS*, DUE TO THEM BEING UNDER 5,000 GROSS SQUARE FEET IN FLOOR AREA AND NOT OTHERWISE REQUIRED TO BE SPRINKLERED PER IBC §903.
B. PORTABLE FIRE EXTINGUISHERS ARE REQUIRED TO BE SELECTED AND INSTALLED IN ACCORDANCE WITH IBC § 906 AND NFPA 10
I. FIRE EXTINGUISHER LOCATIONS ARE TO BE LOCATED WITHIN 75 FEET TRAVEL DISTANCE.
II. PORTABLE FIRE EXTINGUISHERS ARE TO BE A MINIMUM 2A:20B:C RATING.
C. FIRE ALARM SYSTEMS ARE NOT REQUIRED FOR THESE STRUCTURES IN ACCORDANCE WITH IBC §907 AND NFPA 101 §40.3.4

9. MEANS OF EGRESS
A. BUILDING OCCUPANT LOAD:
I. IBC CHAPTER 10 - OCCUPANT LOAD FACTOR FROM TABLE 1004.1.1:
1. ELECTRICAL/MECHANICAL EQUIPMENT ROOMS; 300 SQ. FT. / PERSON (GROSS)
2. OCCUPANT LOAD:
A. MCC - 3 OCCUPANTS (700 SQ. FT. / 300 SQ. FT./ PERSON)
B. SUBSTATION - 2 OCCUPANTS (350 SQ. FT. / 300 SQ. FT./ PERSON)
C. PBB - 3 OCCUPANTS (750 SQ. FT. / 300 SQ. FT./ PERSON)
II. NFPA 101 – PER TABLE 7.3.1.2, FOR SPECIAL PURPOSE INDUSTRIAL OCCUPANCY, "THE OCCUPANT LOAD IS THE MAXIMUM PROBABLE NUMBER OF OCCUPANTS PRESENT AT ANY TIME." IT IS EXPECTED THAT EITHER NO OCCUPANTS OR ONLY ONE OCCUPANT AT MOST WILL BE PRESENT IN THIS FACILITY AT A GIVEN TIME AND THAT THE BUILDING WILL NOT NORMALLY BE OCCUPIED EXCEPT TO BE FREQUENTED BY PERSONNEL ONLY AS REQUIRED FOR MAINTENANCE, REPAIR OR MONITORING OF EQUIPMENT.
B. EGRESS ILLUMINATION OF 1 FOOTCANDLE SHALL BE PROVIDED PER IBC §1008.2 AND NFPA 101 §7.8.1.3
C. EMERGENCY POWER SUPPLIES SHALL BE PROVIDED FOR EGRESS ILLUMINATION PER IBC §1008.3 AND NFPA 101 §7.9
D. DOORS SHALL PROVIDE MINIMUM CLEAR WIDTH OF 32 INCHES PER IBC §1010.1.1 AND NFPA 101 § 7.2.1.2.3 - SEE FLOOR PLANS FOR EXIT WIDTHS BEING PROVIDED.
E. ILLUMINATED EXIT SIGNS SHALL BE PROVIDED FOR EGRESS DOORS PER IBC §1013 AND NFPA 101 §7.10.
F. EXIT ACCESS – SPRINKLERED BUILDING
I. IBC
1. 75 FT. MAX COMMON PATH ALLOWED IBC §1006.2 (F-2 AND F-1)
2. 200 FT. MAX TRAVEL DISTANCE ALLOWED IBC §1017.2 (F-1)
3. 300 FT. MAX TRAVEL DISTANCE ALLOWED IBC §10172 (F-2)
II. NFPA 101 (SPECIAL INDUSTRIAL OCCUPANCY):
1. 50 FT. MAX COMMON PATH ALLOWED NFPA 101 TABLE 40.2.5.1
2. 300 FT. MAX TRAVEL DISTANCE ALLOWED NFPA 101 TABLE 40.2.6.1
G. NUMBER OF EXITS
1. PBB - A SINGLE EXIT IS PERMISSIBLE FROM A LOW HAZARD FACTORY INDUSTRIAL GROUP F-2 OCCUPANCY PER IBC §1006.2 AND NFPA 101 §40.2.4.1.2.
H. ACCESSIBILITY IS NOT REQUIRED FOR EGRESS OF THE BUILDING PER IBC §1103.2.9, WHICH STATES "SPACES FREQUENTED ONLY BY SERVICE PERSONNEL FOR MAINTENANCE, REPAIR OR OCCASIONAL MONITORING OF EQUIPMENT ARE NOT REQUIRED TO COMPLY WITH THIS CHAPTER".

10. NFPA 820 REQUIREMENTS
A. MCC OR SUBSTATION - DOES NOT APPLY
B. PHOSPHOROUS PRECIPITATION BUILDING, PHYSICALLY SEPARATED FROM WET WELL / PROCESS SLUDGE NFPA 820, TABLE 6.2.2(A), ROW 9, LINE B
1. HAZARDOUS CLASSIFICATION: UNCLASSIFIED
2. VENTILATED AT 6 CONTINUOUS AIR CHANGES PER HOUR (REQUIRED)
3. FIRE EXTINGUISHER AND FIRE HYDRANT (REQUIRED)
4. FIRE SUPPRESSION, FIRE ALARM/DETECTION, AND EMERGENCY ALARM SYSTEMS (NOT REQUIRED)
5. NO GAS DETECTION SYSTEM (NOT REQUIRED)

THE DRAWINGS IN THIS SET ARE RECORD DRAWINGS. THEY ARE CONSTRUCTION CONTRACT DRAWINGS WHICH HAVE BEEN REVISED BASED ON AVAILABLE FIELD INFORMATION RECORDED BY OTHERS DURING CONSTRUCTION OF THIS CONTRACT. THERE HAS BEEN NO VERIFICATION OF DIMENSIONS SHOWN ON THE CONSTRUCTION DRAWINGS OR THE ACCURACY/COMPLETENESS OF THE FIELD INFORMATION RECEIVED.

SIGNATURE 2/7/2022 DATE

AS-BUILT REPLACEMENT SHEET

PROFESSIONAL CERTIFICATION
THIS DRAWING WAS ORIGINALLY APPROVED FOR CONSTRUCTION AND SEALED BY ZACHARY J. SACHSENMAIER, A REGISTERED PROFESSIONAL ENGINEER IN THE STATE OF MARYLAND, NO. 42646.

NOTICE TO CONTRACTORS
- PROJECT ELEVATIONS ARE BASED ON NAVD88 AND HOWARD COUNTY'S BENCHMARK SYSTEM
- PREVIOUS PROJECTS USED OTHER DATUMS
- APPLY THE FOLLOWING CONVERSIONS WHEN USING PREVIOUS CONTRACT DRAWINGS:
- ADDITION NO. 6: SUBTRACT 0.80 FT
- PRIOR ADDITIONS: SUBTRACT 1.04 FT

DEPARTMENT OF PUBLIC WORKS
HOWARD COUNTY, MARYLAND

CHIEF, BUREAU OF UTILITIES DATE

DES: MS
DRN: TF
CHK: ZS
DATE: 12/2016

DATE	REV	DESCRIPTION
07/2019		RECORD DRAWING

GENERAL

MCC/PPB/SS CODE ANALYSIS

LITTLE PATUXENT WATER RECLAMATION PLANT
8TH ADDITION
BIOSOLIDS PROCESSING FACILITIES - PHASE I

CAPITAL PROJECT S-6295
CONTRACT NO. 24-4935

ELECTION DISTRICT NO. 6
HOWARD COUNTY, MARYLAND

SCALE AS SHOWN

SHEET 30 OF 463

G-34

BIM 360://10054364 – Little Patuxent WRP 8th Addition/264591_100_A_V18.rvt
1/11/2022 9:24:22 AM

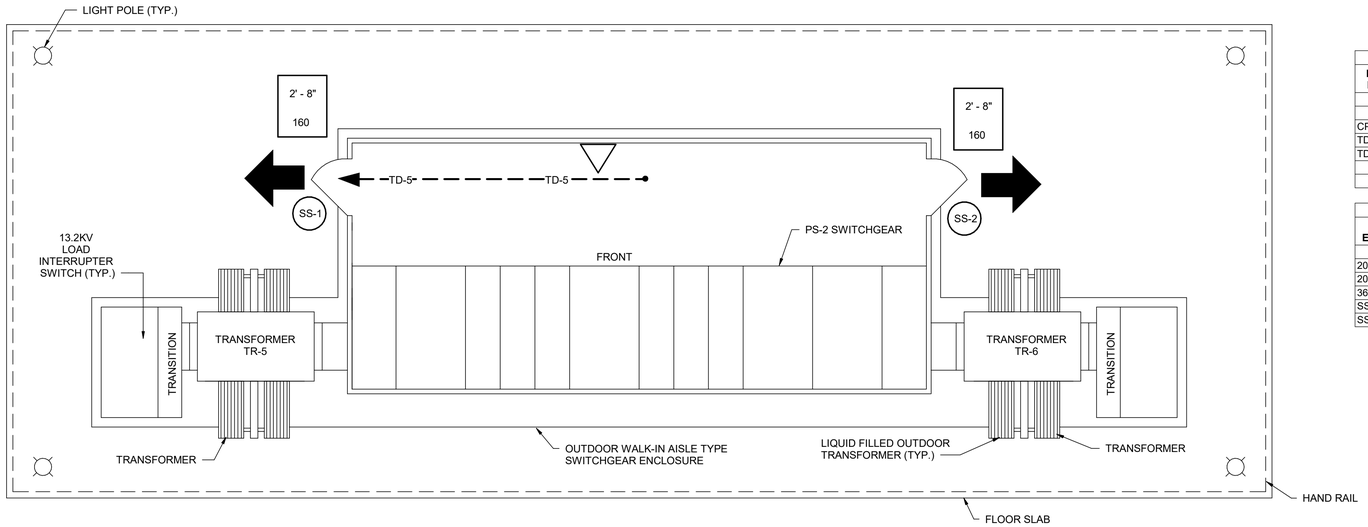

1 G-35 PS-2 SUBSTATION EQUPIMENT PLATFORM LIFE SAFETY FLOOR PLAN

1/4" = 1'-0"

MEANS OF EGRESS ARRANGEMENT DISTANCE SCHEDULE - BUILDING SUMMARY		
EGRESS PATH ID	EGRESS DISTANCE	
	PROVIDED	MAXIMUM PERMITTED
	0' - 0"	
CP-1	38' - 6"	50' - 0"
TD-4	31' - 6"	400' - 0"
TD-5	14' - 0"	400' - 0"
	0' - 0"	

MEANS OF EGRESS WIDTH CAPACITY			
	PROVIDED EGRESS CAPACITY - LEVEL COMPONENTS & RAMPS		
EXIT ID	EGRESS CAPACITY FACTOR	CLEAR WIDTH	OCCUPANT LOAD CAPACITY
200A	0.2	2' - 8"	160
200B	0.2	2' - 8"	160
360A	0.2	5' - 4"	320
SS-1	0.2	2' - 8"	160
SS-2	0.2	2' - 8"	160

LIFE SAFETY NOTES:

1. FOR EXIT LIGHTS AND EMERGENCY LIGHTING, SEE ELECTRICAL DRAWINGS.

LIFE SAFETY SYMBOLS:

EXIT DOOR TAG

A / INCHES / B — CLEAR DOOR WIDTH [FEET - INCHES]
OCCUPANT LOAD CAPACITY [NO.OF PEOPLE]

OTHERS

FIRE EXTINGUSHER

LINE TYPES FOR MEANS OF EGRESS:

COMPONENT	SYMBOL
TRAVEL DISTANCE	TD
COMMON PATH	CP

EXIT DISCHARGE

EXIT DISCHARGE ARROW

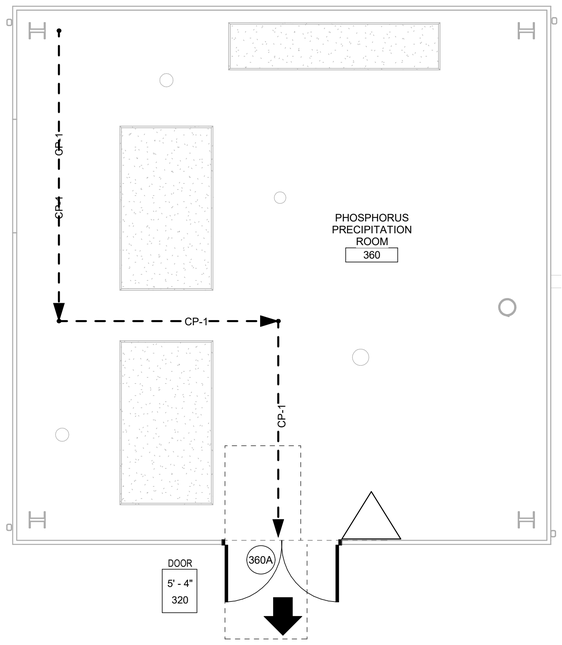

2 G-35 PHOSPHORUS BUILDING LIFE SAFETY FLOOR PLAN - EL 143.00

1/4" = 1'-0"

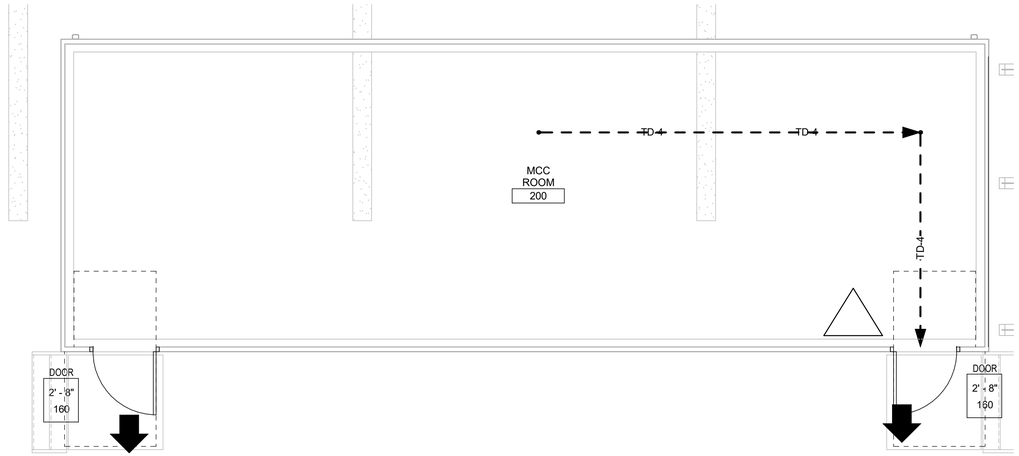

3 G-35 MCC PENTHOUSE LIFE SAFETY FLOOR PLAN - EL 146.00

1/4" = 1'-0"

THE DRAWINGS IN THIS SET ARE RECORD DRAWINGS. THEY ARE CONSTRUCTION CONTRACT DRAWINGS WHICH HAVE BEEN REVISED BASED ON AVAILABLE FIELD INFORMATION RECORDED BY OTHERS DURING CONSTRUCTION OF THIS CONTRACT. THERE HAS BEEN NO VERIFICATION OF DIMENSIONS SHOWN ON THE CONSTRUCTION DRAWINGS OR THE ACCURACY/COMPLETENESS OF THE FIELD INFORMATION RECEIVED.

SIGNATURE — DATE 2/7/2023

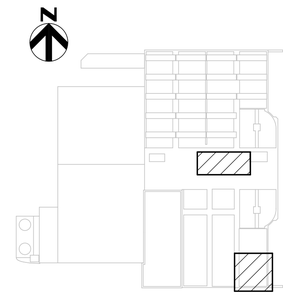

KEY PLAN

AS-BUILT REPLACEMENT SHEET

PROFESSIONAL CERTIFICATION

THIS DRAWING WAS ORIGINALLY APPROVED FOR CONSTRUCTION AND SEALED BY ZACHARY J. SACHSENMAIER, A REGISTERED PROFESSIONAL ENGINEER IN THE STATE OF MARYLAND, NO. 42646.

NOTICE TO CONTRACTORS

- PROJECT ELEVATIONS ARE BASED ON NAVD88 AND HOWARD COUNTY'S BENCHMARK SYSTEM
- PREVIOUS PROJECTS USED OTHER DATUMS
- APPLY THE FOLLOWING CONVERSIONS WHEN USING PREVIOUS CONTRACT DRAWINGS:
  - ADDITION NO. 6: SUBTRACT 0.80 FT
  - PRIOR ADDITIONS: SUBTRACT 1.04 FT

DEPARTMENT OF PUBLIC WORKS
HOWARD COUNTY, MARYLAND

CHIEF, BUREAU OF UTILITIES — DATE

DES: MS
DRN: TF
CHK: ZS
DATE: 12/2016

DATE	REV	DESCRIPTION
07/2019		RECORD DRAWING

GENERAL

MCC/PPB/SS LIFE SAFETY PLANS

LITTLE PATUXENT WATER RECLAMATION PLANT
8TH ADDITION
BIOSOLIDS PROCESSING FACILITIES - PHASE I

CAPITAL PROJECT S-6295
CONTRACT NO. 24-4935

ELECTION DISTRICT NO. 6
HOWARD COUNTY, MARYLAND

SCALE AS SHOWN

SHEET 31 OF 463

G-35

BIM 360://10054364 – Little Patuxent WRP 8th Addition/264591_100_A_V18.rvt
1/11/2022 9:24:23 AM

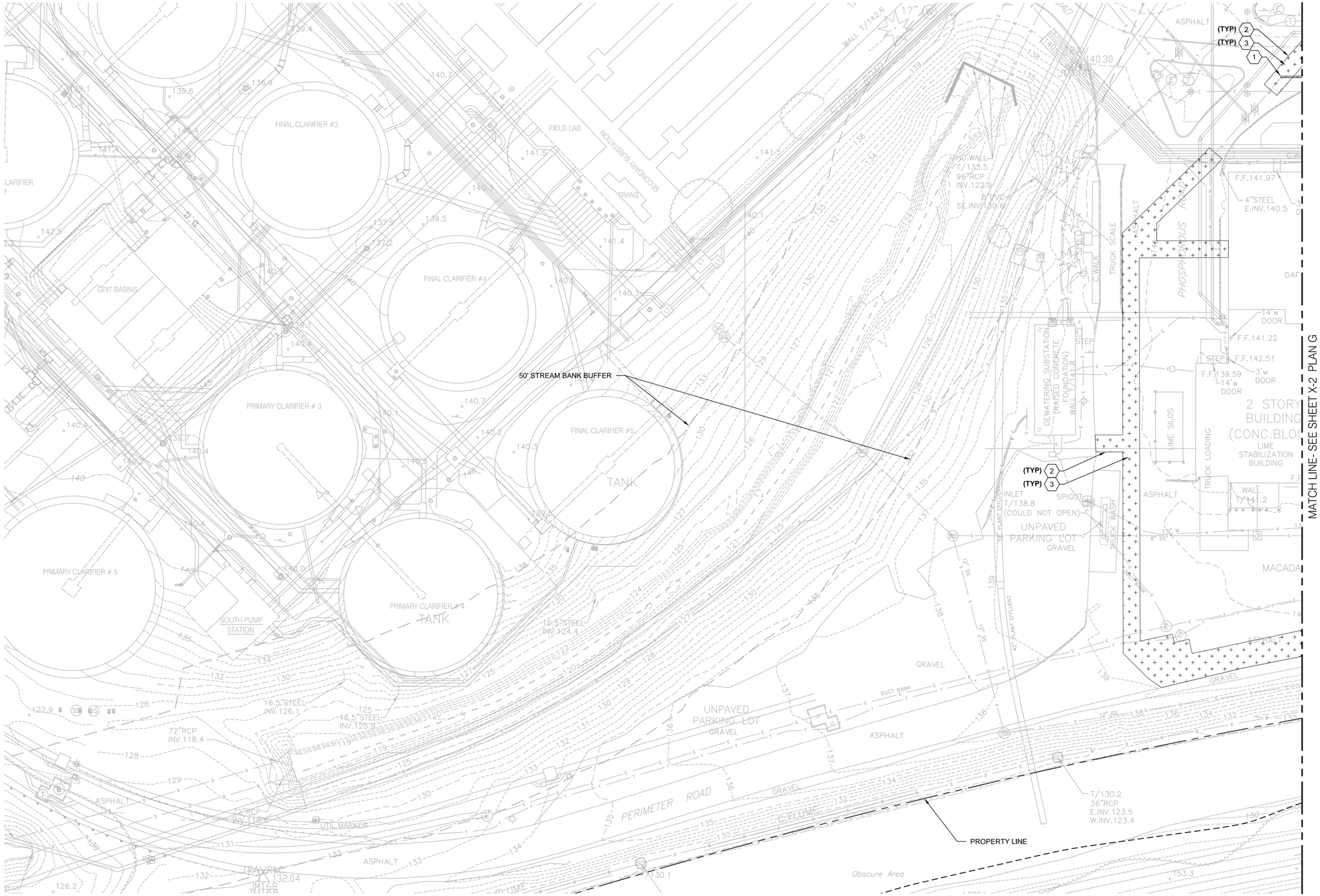

N

GENERAL NOTES:

1. SEE SHEET C-33 FOR PROPOSED UTILITIES AND YARD PIPING.
2. SEE SHEET C-11 FOR DIGESTER DEMOLITION EROSION CONTROL PLAN.
3. SEE SHEETS C-21 - C-27 FOR SITE DEVELOPMENT AND EROSION CONTROL.
4. ALL DEMOLITION ITEMS WITHIN WORK AREA SHALL BE COMPLETELY REMOVED UNLESS NOTED OTHERWISE.
5. SEE STRUCTURAL DEMOLITION SHEETS FOR ADDITIONAL DEMOLITION INFORMATION.
6. SEE ELECTRICAL SHEETS FOR DEMOLITION INFORMATION ASSOCIATED WITH THE SUBSTATION.
7. SEE SHEET C-1 FOR LEGEND AND GENERAL NOTES.
8. SAW CUT FOR CLEAN LINES WHERE EXISTING PAVED AREAS MEET DEMOLISHED PAVED AREA.

KEY NOTES:

1. DISCONNECT AND CAP 12" WATER LINE. ABANDON IN PLACE.
2. SAW CUT FOR CLEAN LINE
3. DEMOLISH ASPHALT

THE DRAWINGS IN THIS SET ARE RECORD DRAWINGS. THEY ARE CONSTRUCTION CONTRACT DRAWINGS WHICH HAVE BEEN REVISED BASED ON AVAILABLE FIELD INFORMATION RECORDED BY OTHERS DURING CONSTRUCTION OF THIS CONTRACT. THERE HAS BEEN NO VERIFICATION OF DIMENSIONS SHOWN ON THE CONSTRUCTION DRAWINGS OR THE ACCURACY/COMPLETENESS OF THE FIELD INFORMATION RECEIVED.

SIGNATURE _____ DATE 2/7/2023

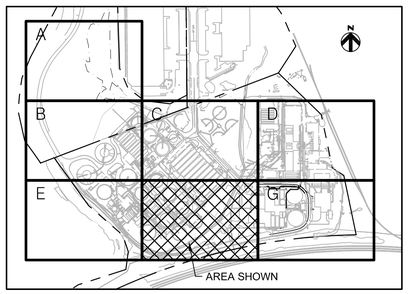

KEY MAP

0 30 60 90

SCALE: 1" = 30'

C:\pwworking\pitt\d1901214\ X-001.dwg 01/11/22 9:52

AS-BUILT REPLACEMENT SHEET

PROFESSIONAL CERTIFICATION
THIS DRAWING WAS ORIGINALLY APPROVED FOR CONSTRUCTION AND SEALED BY ROBERT BAYSDEN, A REGISTERED PROFESSIONAL ENGINEER IN THE STATE OF MARYLAND, NO. 49972.

NOTICE TO CONTRACTORS
- PROJECT ELEVATIONS ARE BASED ON NAVD88 AND HOWARD COUNTY'S BENCHMARK SYSTEM
- PREVIOUS PROJECTS USED OTHER DATUMS
- APPLY THE FOLLOWING CONVERSIONS WHEN USING PREVIOUS CONTRACT DRAWINGS:
  - ADDITION NO. 6: SUBTRACT 0.80 FT
  - PRIOR ADDITIONS: SUBTRACT 1.04 FT

DEPARTMENT OF PUBLIC WORKS
HOWARD COUNTY, MARYLAND

CHIEF, BUREAU OF UTILITIES DATE

DES: xr
DRN: S.W.
CHK: R.B.
DATE: 03/16

DATE	REV	DESCRIPTION
07/2019		RECORD DRAWINGS

CIVIL

SITE DEMOLITION PLAN - F

LITTLE PATUXENT WATER RECLAMATION PLANT
8TH ADDITION
BIOSOLIDS PROCESSING FACILITIES – PHASE I

CAPITAL PROJECT S-6295
CONTRACT NO. 24-4935

ELECTION DISTRICT NO. 6
HOWARD COUNTY, MARYLAND

SCALE AS SHOWN

SHEET 32 OF 463

X-1

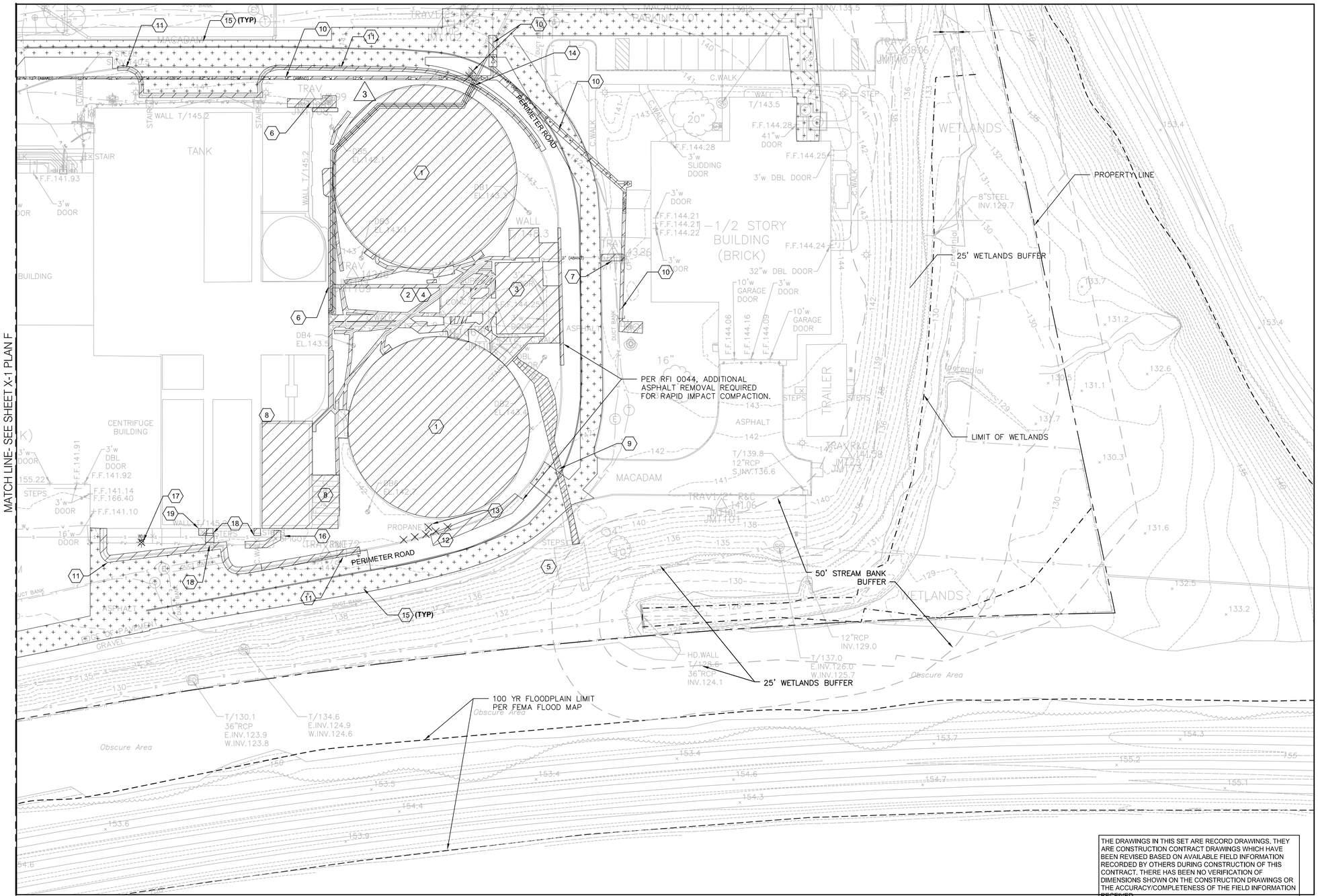

GENERAL NOTES:

1. SEE SHEET C-34 FOR PROPOSED UTILITIES AND YARD PIPING.
2. SEE SHEET C-11 FOR DIGESTER DEMOLITION EROSION CONTROL PLAN.
3. SEE SHEETS C-21 - C-27 FOR SITE DEVELOPMENT AND EROSION CONTROL.
4. ALL DEMOLITION ITEMS WITHIN WORK AREA SHALL BE COMPLETELY REMOVED UNLESS NOTED OTHERWISE.
5. SEE STRUCTURAL DEMOLITION SHEETS FOR ADDITIONAL DEMOLITION INFORMATION.
6. UNLESS OTHERWISE NOTED, BACKFILL EXCAVATED AREAS CREATED DURING DEMOLITION WITH STRUCTURAL FILL.
7. SEE SHEET C-1 FOR LEGEND AND GENERAL NOTES.
8. SAW CUT FOR CLEAN LINES WHERE EXISTING PAVED AREAS MEET DEMOLISHED PAVED AREA.

KEY NOTES:

1. DEMOLISH DIGESTERS NO. 1 & NO. 2 SEE NOTE 5
2. DEMOLISH SIDEWALK & DESIGNATED BUILDINGS BETWEEN DIGESTERS
3. DEMOLISH DIGESTERS BUILDING
4. DEMOLISH ASSOCIATED UTILITIES
5. DEMOLISH AND REMOVE EXISTING FLARE, ASSOCIATED PIPING AND EQUIPMENT FROM CONCRETE PAD. CONCRETE PAD SHALL REMAIN.
6. DEMOLISH SPIGOT AND VALVE.
7. CUT WATER LINE 1 FOOT WEST OF TEE, AND INSTALL 2-INCH VALVE AND CAP, ABANDON WATER LINE TO DISGESTER BUILDING.
8. SEE STRUCTURAL DEMOLITION SHEETS FOR EXTENTS OF STRUCTURAL DEMOLITION OF TANKS AND WALLS
9. DEMOLISH UTILITIES
10. CAP 12" WATER LINE AND ABANDON IN PLACE. DEMOLISH HYDRANT AND CAP BELOW GRADE.
11. DEMOLISH CURB
12. DEMOLISH BOLLARDS
13. DEMOLISH PROPANE
14. 1-1/2" NAOH AND 1-1/2" HYPO CHEMICAL CONTAINMENT PIPING. COORDINATE EXTENT OF DEMOLITION WITH NEW PIPING SHOWN ON DWG C-34. PER RFI 0073, CUT AND CAP ENDS OF PIPING IN YARD, AND IN GALLERY REMOVE PIPING FROM WALL AND REPAIR WALL. UNUSED PIPING SHALL BE ABANDONED IN PLACE.
15. DEMOLISH ASPHALT.
16. PROTECT EXISTING DRAIN CLEANOUT
17. REMOVE YARD HYDRANT AND VALVE. REPAIR PROCESS WATER LINE FOR CONTINUED USE PER RFI 219, INSTALL A 4" YARD VALVE FOR ISOLATION WITH BLIND FLANGE OR RESTRAINED PLUG TO PREVENT DEGRADATION.
18. REMOVE STEPS AND CONCRETE LANDING PAD. STEPS WILL BE REPLACED IN PHASE 2.
19. REMOVE JIB CRANE AND STORE FOR LATER REINSTALLATION. DEMOLISH CONCRETE PAD.

A NOT USED		
B NOT USED	C	D
E NOT USED	F	G AREA SHOWN

KEYMAP

0 30 60 90

SCALE: 1" = 30'

THE DRAWINGS IN THIS SET ARE RECORD DRAWINGS. THEY ARE CONSTRUCTION CONTRACT DRAWINGS WHICH HAVE BEEN REVISED BASED ON AVAILABLE FIELD INFORMATION RECORDED BY OTHERS DURING CONSTRUCTION OF THIS CONTRACT. THERE HAS BEEN NO VERIFICATION OF DIMENSIONS SHOWN ON THE CONSTRUCTION DRAWINGS OR THE ACCURACY/COMPLETENESS OF THE FIELD INFORMATION RECEIVED.

SIGNATURE 2/7/2020 DATE

AS-BUILT REPLACEMENT SHEET

PROFESSIONAL CERTIFICATION
THIS DRAWING WAS ORIGINALLY APPROVED FOR CONSTRUCTION AND SEALED BY ROBERT BAYSDEN, A REGISTERED PROFESSIONAL ENGINEER IN THE STATE OF MARYLAND, NO. 49972.

NOTICE TO CONTRACTORS
- PROJECT ELEVATIONS ARE BASED ON NAVD88 AND HOWARD COUNTY'S BENCHMARK SYSTEM
- PREVIOUS PROJECTS USED OTHER DATUMS
- APPLY THE FOLLOWING CONVERSIONS WHEN USING PREVIOUS CONTRACT DRAWINGS:
  - ADDITION NO. 6: SUBTRACT 0.80 FT
  - PRIOR ADDITIONS: SUBTRACT 1.04 FT

DEPARTMENT OF PUBLIC WORKS
HOWARD COUNTY, MARYLAND

CHIEF, BUREAU OF UTILITIES DATE

DES: M.L.
DRN: S.W.
CHK: R.B.
DATE: 03/16

DATE	REV	DESCRIPTION
07/2019		RECORD DRAWINGS

CIVIL

SITE DEMOLITION PLAN - G

LITTLE PATUXENT WATER RECLAMATION PLANT
8TH ADDITION
BIOSOLIDS PROCESSING FACILITIES – PHASE I

CAPITAL PROJECT S-6295
CONTRACT NO. 24-4935

ELECTION DISTRICT NO. 6
HOWARD COUNTY, MARYLAND

SCALE AS SHOWN

SHEET 33 OF 463

X-2

C:\pwworking\pitt\d1901214_x-002.dwg 01/11/22_9:52

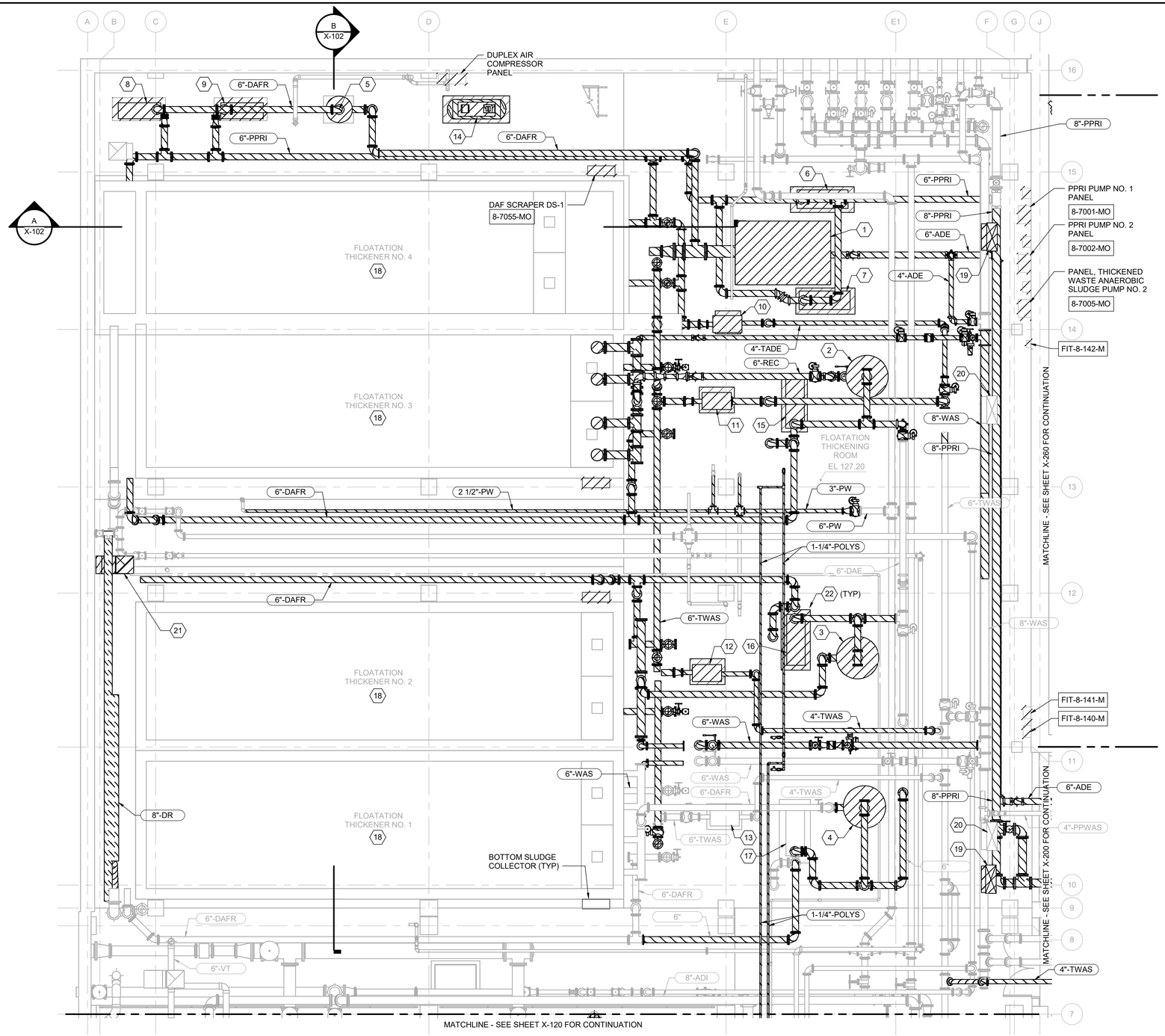

PLAN AT EL 128.00

3/16" = 1'-0"

N

GENERAL NOTES

1. REPAIR CONCRETE FLOOR AFTER EQUIPMENT PAD DEMOLITION. SEE DETAIL 10/S-905.
2. AFTER DEMOLITION, REPAIR UNUSED PENETRATIONS IN CONCRETE PER DETAIL 9/S-903.

KEY NOTES (X)

1 FLOATATION THICKENER NO. 4 MIXING CHAMBER
2 DAFT RECYCLE TANK NO. 1
3 DAFT RECYCLE TANK NO. 2
4 DAFT RECYCLE TANK NO. 3. SALVAGE AND DELIVER TO THE COUNTY.
5 DAFT RECYCLE TANK NO. 4
6 PPRI PUMP NO. 1 8-7001-MO
7 PPRI PUMP NO. 2 8-7002-MO
8 DAFT RECYCLE PUMP NO. 4A.
9 DAFT RECYCLE PUMP NO. 4B.
10 TADE PUMP 8-7005-MO
11 TWAS PUMP NO. 3.
12 TWAS PUMP NO. 2.
13 TWAS PUMP NO. 1.
14 DAF DUPLEX AIR COMPRESSORS
15 DAFT RECYCLE PUMP NO. 3.
16 DAFT RECYCLE PUMP NO. 2.
17 DAFT RECYCLE PUMP NO. 1.
18 DEMOLISH FLOATATION THICKENER LOWER SLUDGE COLLECTOR MECHANISMS (NOT SHOWN). CONTRACTOR TO CLEAN TANKS BY PRESSURE WASH AND DRY FOLLOWING REMOVAL OF MECHANISMS.
19 DEMOLISH VERTICAL SUPPLY DUCT. EXISTING OPENING THROUGH FLOOR ABOVE TO BE CLOSED, SEE 3/S-908.
20 EXISTING VERTICAL SUPPLY DUCT TO REMAIN.
21 DEMOLISH EXHAUST DUCTWORK. EXISTING OPENING THROUGH FLOOR ABOVE TO BE CLOSED, SEE 3/S-908.
22 REPAIR CONCRETE FLOOR AFTER EQUIPMENT PAD DEMOLITION. SEE DETAIL 10/S-905.

THE DRAWINGS IN THIS SET ARE RECORD DRAWINGS. THEY ARE CONSTRUCTION CONTRACT DRAWINGS WHICH HAVE BEEN REVISED BASED ON AVAILABLE FIELD INFORMATION RECORDED BY OTHERS DURING CONSTRUCTION OF THIS CONTRACT. THERE HAS BEEN NO VERIFICATION OF DIMENSIONS SHOWN ON THE CONSTRUCTION DRAWINGS OR THE ACCURACY/COMPLETENESS OF THE FIELD INFORMATION RECEIVED.

SIGNATURE — DATE 2/7/2023

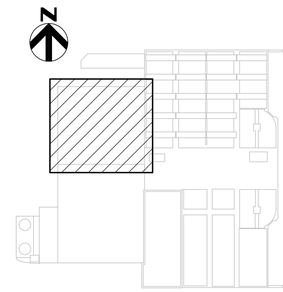

KEY PLAN

BIM 360://10054364 – Little Patuxent WRP 8th Addition/264591_100_D_V18.rvt
1/11/2022 10:02:55 AM

AS-BUILT REPLACEMENT SHEET

PROFESSIONAL CERTIFICATION

THIS DRAWING WAS ORIGINALLY APPROVED FOR CONSTRUCTION AND SEALED BY BRIAN M. BACLCHUNAS, A REGISTERED PROFESSIONAL ENGINEER IN THE STATE OF MARYLAND, NO. 200406

NOTICE TO CONTRACTORS

- PROJECT ELEVATIONS ARE BASED ON NAVD88 AND HOWARD COUNTY'S BENCHMARK SYSTEM
- PREVIOUS PROJECTS USED OTHER DATUMS
- APPLY THE FOLLOWING CONVERSIONS WHEN USING PREVIOUS CONTRACT DRAWINGS:
  - ADDITION NO. 6: SUBTRACT 0.80 FT
  - PRIOR ADDITIONS: SUBTRACT 1.04 FT

DEPARTMENT OF PUBLIC WORKS
HOWARD COUNTY, MARYLAND

CHIEF, BUREAU OF UTILITIES — DATE

DES: MJW
DRN: REE
CHK: JRK
DATE: 12/2016

DATE	REV	DESCRIPTION
07/2019		RECORD DRAWING

DEMOLITION

DAF BUILDING PLAN - EL 128.00

LITTLE PATUXENT WATER RECLAMATION PLANT
8TH ADDITION
BIOSOLIDS PROCESSING FACILITIES - PHASE I

CAPITAL PROJECT S-6295
CONTRACT NO. 24-4935

ELECTION DISTRICT NO. 6
HOWARD COUNTY, MARYLAND

SCALE AS SHOWN

SHEET 34 OF 463

X-100

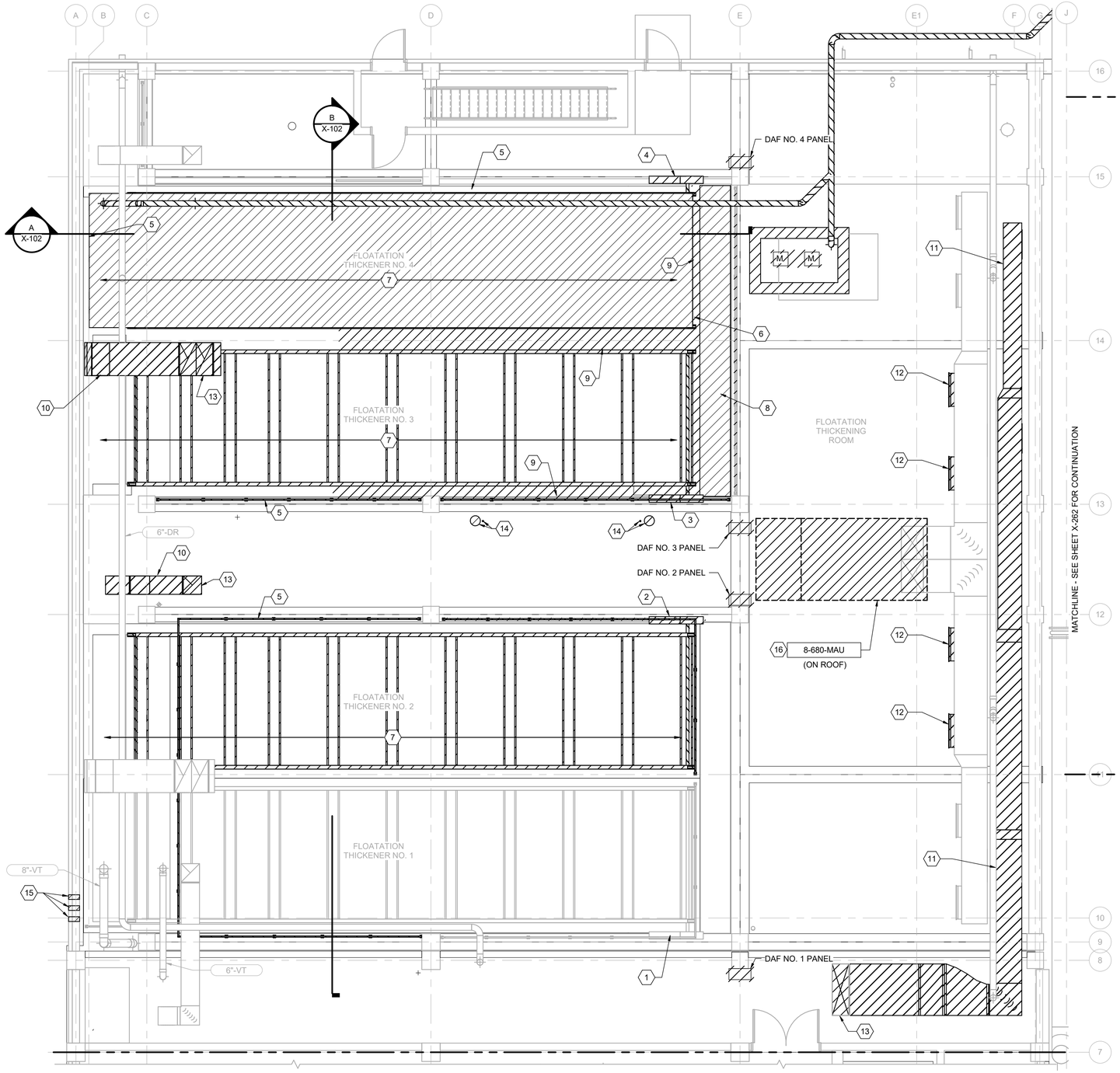

PLAN AT EL 142.00

3/16" = 1'-0"

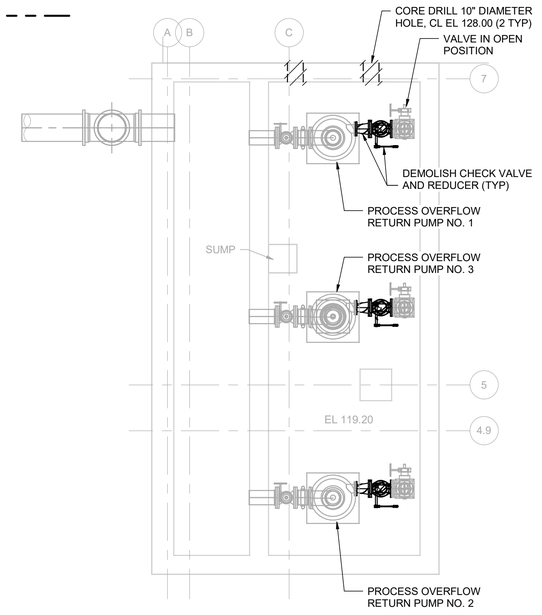

1 / X-120 PROCESS OVERFLOW PUMPING PLAN

1/4" = 1'-0"

N

GENERAL NOTES

1. AFTER DEMOLITION, REPAIR UNUSED PENETRATIONS IN CONCRETE PER DETAIL 9/S-903.

KEY NOTES (X)

1 SLUDGE COLLECTOR DRIVE ASSEMBLY NO. 1
2 SLUDGE COLLECTOR DRIVE ASSEMBLY NO. 2
3 SLUDGE COLLECTOR DRIVE ASSEMBLY NO. 3
4 SLUDGE COLLECTOR DRIVE ASSEMBLY NO. 4
5 REMOVE AND SALVAGE GUARDRAILING FULL PERIMETER. USE RAILING TO ENCLOSE DAF NO. 1.
6 REMOVE AND SALVAGE LADDER. INSTALL IN DAF NO. 4 ON NORTHERN WALL WHERE SHOWN ON STRUCTURAL DRAWING S-101.
7 REMOVE ALL EQUIPMENT WITHIN TANKAGE.
8 REMOVE EXISTING GRATING AND SUPPORTING MEMBERS.
9 DEMOLISH TOP OF EXISTING CONCRETE TANKS AS REQUIRED TO INSTALL CONCRETE SLAB.
10 DEMOLISH EXHAUST DUCTWORK, EXHAUST FAN ON ROOF, AND ALL ASSOCIATED CONTROLS.
11 DEMOLISH EXISTING SUPPLY AIR DUCTWORK, ASSOCIATED MAKE-UP AIR UNIT 8-681-MAU ON ROOF, AND ALL ASSOCIATED CONTROLS.
12 DEMOLISH SUPPLY AIR REGISTERS AND PATCH DUCTWORK AT MAIN.
13 PROVIDE PRE-FABRICATED, PRE-FINISHED ALUMINUM INSULATED CURB CAP.
14 DRILL FLOOR PENETRATIONS FOR 2" FILL PIPE. ROUGHEN CONCRETE. USE EPOXY/POURABLE GROUT TO FILL AROUND OPENING.
15 WALL PENETRATION, SEE DETAIL 9/S-903.
16 DEMOLISH EXISTING MAKE-UP AIR UNIT, AND ALL ASSOCIATED CONTROLS. REUSE EXISTING ASSOCIATED CONTROL PANEL IN SPACE.

THE DRAWINGS IN THIS SET ARE RECORD DRAWINGS. THEY ARE CONSTRUCTION CONTRACT DRAWINGS WHICH HAVE BEEN REVISED BASED ON AVAILABLE FIELD INFORMATION RECORDED BY OTHERS DURING CONSTRUCTION OF THIS CONTRACT. THERE HAS BEEN NO VERIFICATION OF DIMENSIONS SHOWN ON THE CONSTRUCTION DRAWINGS OR THE ACCURACY/COMPLETENESS OF THE FIELD INFORMATION RECEIVED.

SIGNATURE — DATE 2/7/2023

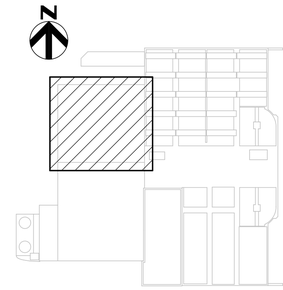

KEY PLAN

AS-BUILT REPLACEMENT SHEET

PROFESSIONAL CERTIFICATION

THIS DRAWING WAS ORIGINALLY APPROVED FOR CONSTRUCTION AND SEALED BY BRIAN M. BACLCHUNAS, A REGISTERED PROFESSIONAL ENGINEER IN THE STATE OF MARYLAND, NO. 200406

NOTICE TO CONTRACTORS

- PROJECT ELEVATIONS ARE BASED ON NAVD88 AND HOWARD COUNTY'S BENCHMARK SYSTEM
- PREVIOUS PROJECTS USED OTHER DATUMS
- APPLY THE FOLLOWING CONVERSIONS WHEN USING PREVIOUS CONTRACT DRAWINGS:
  - ADDITION NO. 6: SUBTRACT 0.80 FT
  - PRIOR ADDITIONS: SUBTRACT 1.04 FT

DEPARTMENT OF PUBLIC WORKS
HOWARD COUNTY, MARYLAND

CHIEF, BUREAU OF UTILITIES — DATE

DES: MJW
DRN: REE
CHK: JRK
DATE: 12/2016

DATE	REV	DESCRIPTION
07/2019		RECORD DRAWING

DEMOLITION

DAF BUILDING PLAN - EL 142.00

LITTLE PATUXENT WATER RECLAMATION PLANT
8TH ADDITION
BIOSOLIDS PROCESSING FACILITIES - PHASE I

CAPITAL PROJECT S-6295
CONTRACT NO. 24-4935

ELECTION DISTRICT NO. 6
HOWARD COUNTY, MARYLAND

SCALE AS SHOWN

SHEET 35 OF 463

X-101

BIM 360://10054364 – Little Patuxent WRP 8th Addition/264591_100_D_V18.rvt
1/11/2022 10:02:59 AM

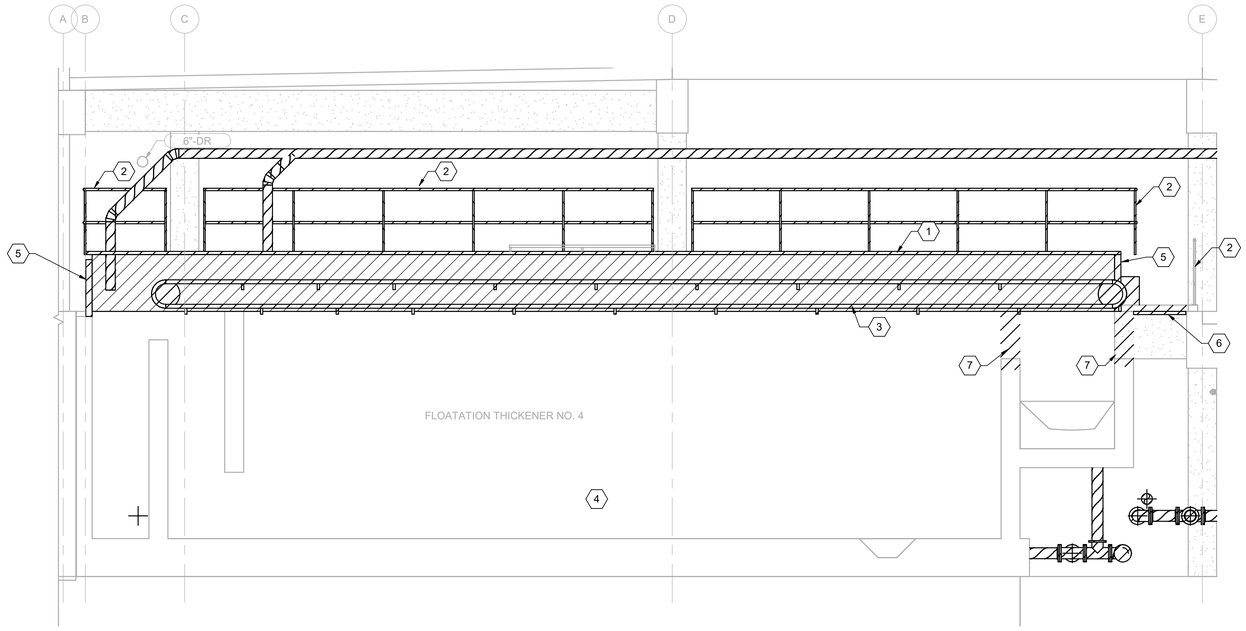

A X-100 DAF DEMOLITION SECTION
1/4" = 1'-0"

KEY NOTES (X)

1 REMOVE AND SALVAGE ALUMINUM COVER SYSTEM.
2 REMOVE AND SALVAGE GUARDRAILING FULL PERIMETER. USE RAILING TO ENCLOSE DAF NO. 1.
3 REMOVE ALL EQUIPMENT WITHIN TANKAGE.
4 DEMOLISH FLOATATION THICKENER LOWER SLUDGE COLLECTOR MECHANISMS (NOT SHOWN). CONTRACTOR TO CLEAN TANKS BY PRESSURE WASH AND DRY FOLLOWING REMOVAL OF MECHANISMS.
5 DEMOLISH CONCRETE WALL EXTENSION ABOVE THICKER WALL SECTION, FULL PERIMETER
6 REMOVE EXISTING GRATING AND SUPPORTING MEMBERS.
7 DEMOLISH TOP OF EXISTING CONCRETE TANKS AS REQUIRED TO INSTALL CONCRETE SLAB.

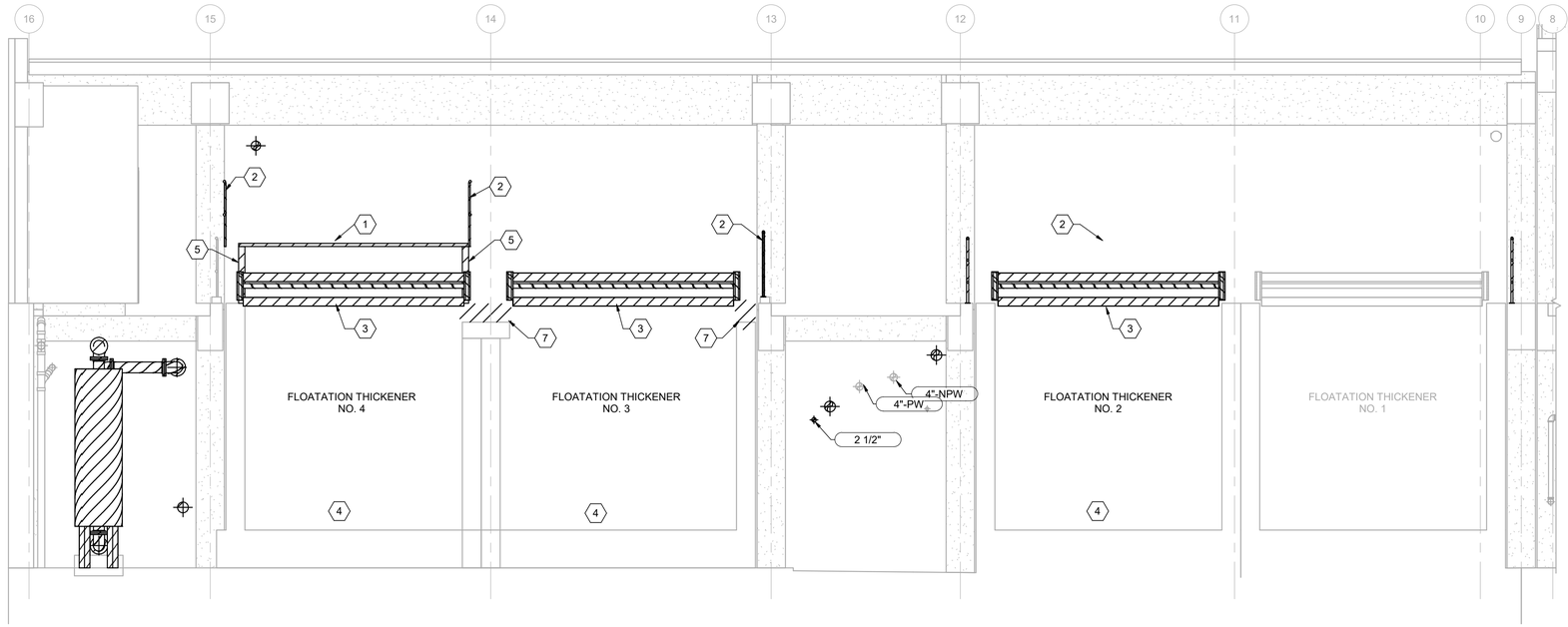

B X-100 DAF DEMOLITION SECTION
1/4" = 1'-0"

THE DRAWINGS IN THIS SET ARE RECORD DRAWINGS. THEY ARE CONSTRUCTION CONTRACT DRAWINGS WHICH HAVE BEEN REVISED BASED ON AVAILABLE FIELD INFORMATION RECORDED BY OTHERS DURING CONSTRUCTION OF THIS CONTRACT. THERE HAS BEEN NO VERIFICATION OF DIMENSIONS SHOWN ON THE CONSTRUCTION DRAWINGS OR THE ACCURACY/COMPLETENESS OF THE FIELD INFORMATION RECEIVED.

SIGNATURE 2/7/2023 DATE

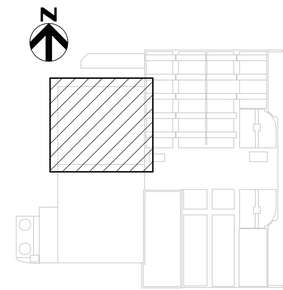

KEY PLAN

AS-BUILT REPLACEMENT SHEET

PROFESSIONAL CERTIFICATION
THIS DRAWING WAS ORIGINALLY APPROVED FOR CONSTRUCTION AND SEALED BY BRIAN M. BACLCHUNAS, A REGISTERED PROFESSIONAL ENGINEER IN THE STATE OF MARYLAND, NO. 200406

NOTICE TO CONTRACTORS
- PROJECT ELEVATIONS ARE BASED ON NAVD88 AND HOWARD COUNTY'S BENCHMARK SYSTEM
- PREVIOUS PROJECTS USED OTHER DATUMS
- APPLY THE FOLLOWING CONVERSIONS WHEN USING PREVIOUS CONTRACT DRAWINGS:
  - ADDITION NO. 6: SUBTRACT 0.80 FT
  - PRIOR ADDITIONS: SUBTRACT 1.04 FT

DEPARTMENT OF PUBLIC WORKS
HOWARD COUNTY, MARYLAND

CHIEF, BUREAU OF UTILITIES DATE

DES: MJW
DRN: REE
CHK: JRK
DATE: 12/2016

DATE	REV	DESCRIPTION
07/2019		RECORD DRAWING

DEMOLITION

DAF BUILDING DEMOLITION SECTIONS

LITTLE PATUXENT WATER RECLAMATION PLANT
8TH ADDITION
BIOSOLIDS PROCESSING FACILITIES - PHASE I

CAPITAL PROJECT S-6295
CONTRACT NO. 24-4935

ELECTION DISTRICT NO. 6
HOWARD COUNTY, MARYLAND

SCALE AS SHOWN

SHEET 36 OF 463

X-102

BIM 360://10054364 – Little Patuxent WRP 8th Addition/264591_100_D_V18.rvt
1/11/2022 10:03:02 AM

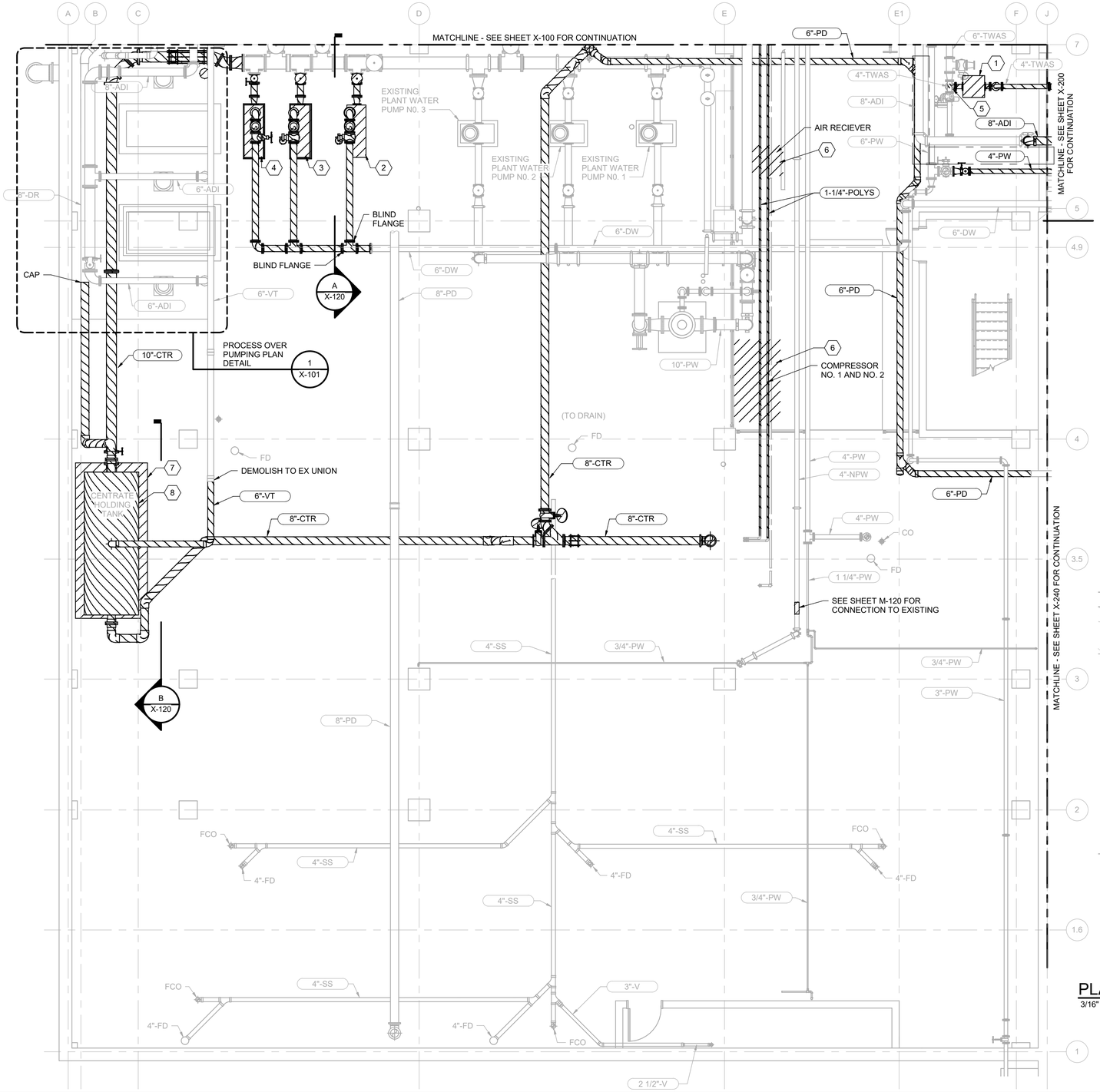

PLAN AT EL 129.20

3/16" = 1'-0"

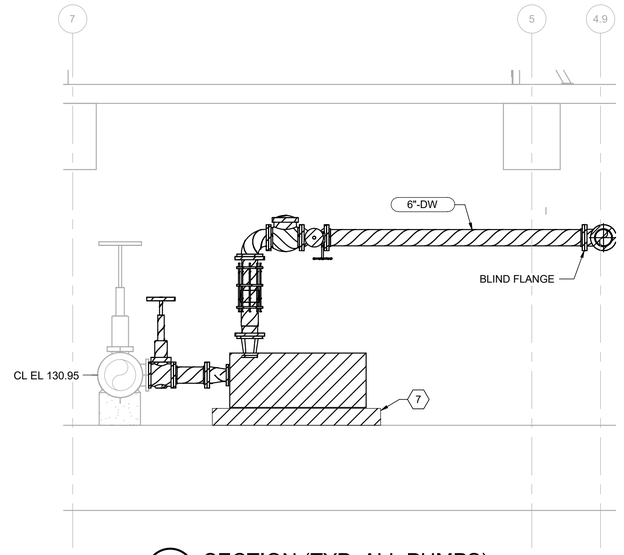

A X-120 SECTION (TYP, ALL PUMPS)

3/8" = 1'-0"

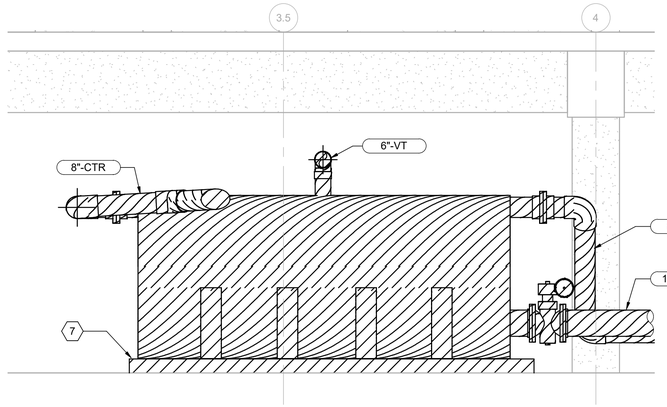

B X-120 SECTION

3/8" = 1'-0"

KEY NOTES (X)

1. DEMOLISH DUPLEX BASKET STRAINER.
2. DILUTION WATER PUMP NO. 1.
3. DILUTION WATER PUMP NO. 2.
4. DILUTION WATER PUMP NO. 3.
5. DEMOLISH PIPING UP TO EXISTING TEE.
6. REMOVE ALL AIR PIPING FROM COMPRESSORS AND AIR RECIEVER.
7. REPAIR CONCRETE FLOOR AFTER EQUIPMENT PAD DEMOLITION. SEE DETAIL 10/S-905.
8. CONTRACTOR TO DRAIN AND CLEAN TANK PRIOR TO RELOCATION. BLIND FLANGE TANK CONNECTIONS THAT WILL NO LONGER HAVE FUTURE USE. RELOCATE TANK PER M-125.

THE DRAWINGS IN THIS SET ARE RECORD DRAWINGS. THEY ARE CONSTRUCTION CONTRACT DRAWINGS WHICH HAVE BEEN REVISED BASED ON AVAILABLE FIELD INFORMATION RECORDED BY OTHERS DURING CONSTRUCTION OF THIS CONTRACT. THERE HAS BEEN NO VERIFICATION OF DIMENSIONS SHOWN ON THE CONSTRUCTION DRAWINGS OR THE ACCURACY/COMPLETENESS OF THE FIELD INFORMATION RECEIVED.

SIGNATURE — DATE 2/7/2023

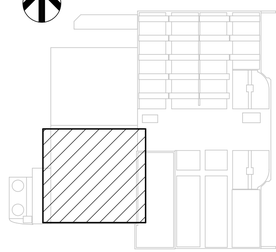

KEY PLAN

AS-BUILT REPLACEMENT SHEET

PROFESSIONAL CERTIFICATION

THIS DRAWING WAS ORIGINALLY APPROVED FOR CONSTRUCTION AND SEALED BY BRIAN M. BACLCHUNAS, A REGISTERED PROFESSIONAL ENGINEER IN THE STATE OF MARYLAND, NO. 200406

NOTICE TO CONTRACTORS

- PROJECT ELEVATIONS ARE BASED ON NAVD88 AND HOWARD COUNTY'S BENCHMARK SYSTEM
- PREVIOUS PROJECTS USED OTHER DATUMS
- APPLY THE FOLLOWING CONVERSIONS WHEN USING PREVIOUS CONTRACT DRAWINGS:
  - ADDITION NO. 6: SUBTRACT 0.80 FT
  - PRIOR ADDITIONS: SUBTRACT 1.04 FT

DEPARTMENT OF PUBLIC WORKS
HOWARD COUNTY, MARYLAND

CHIEF, BUREAU OF UTILITIES — DATE

DES: MJW
DRN: REE
CHK: JRK
DATE: 12/2016

DATE	REV	DESCRIPTION
07/2019		RECORD DRAWING

DEMOLITION

SOLIDS HANDLING BUILDING PLAN - EL 129.20

LITTLE PATUXENT WATER RECLAMATION PLANT
8TH ADDITION
BIOSOLIDS PROCESSING FACILITIES - PHASE I

CAPITAL PROJECT S-6295
CONTRACT NO. 24-4935

ELECTION DISTRICT NO. 6
HOWARD COUNTY, MARYLAND

SCALE AS SHOWN

SHEET 37 OF 463

X-120

BIM 360://10054364 – Little Patuxent WRP 8th Addition/264591_I00_D_V18.rvt
1/11/2022 10:03:08 AM

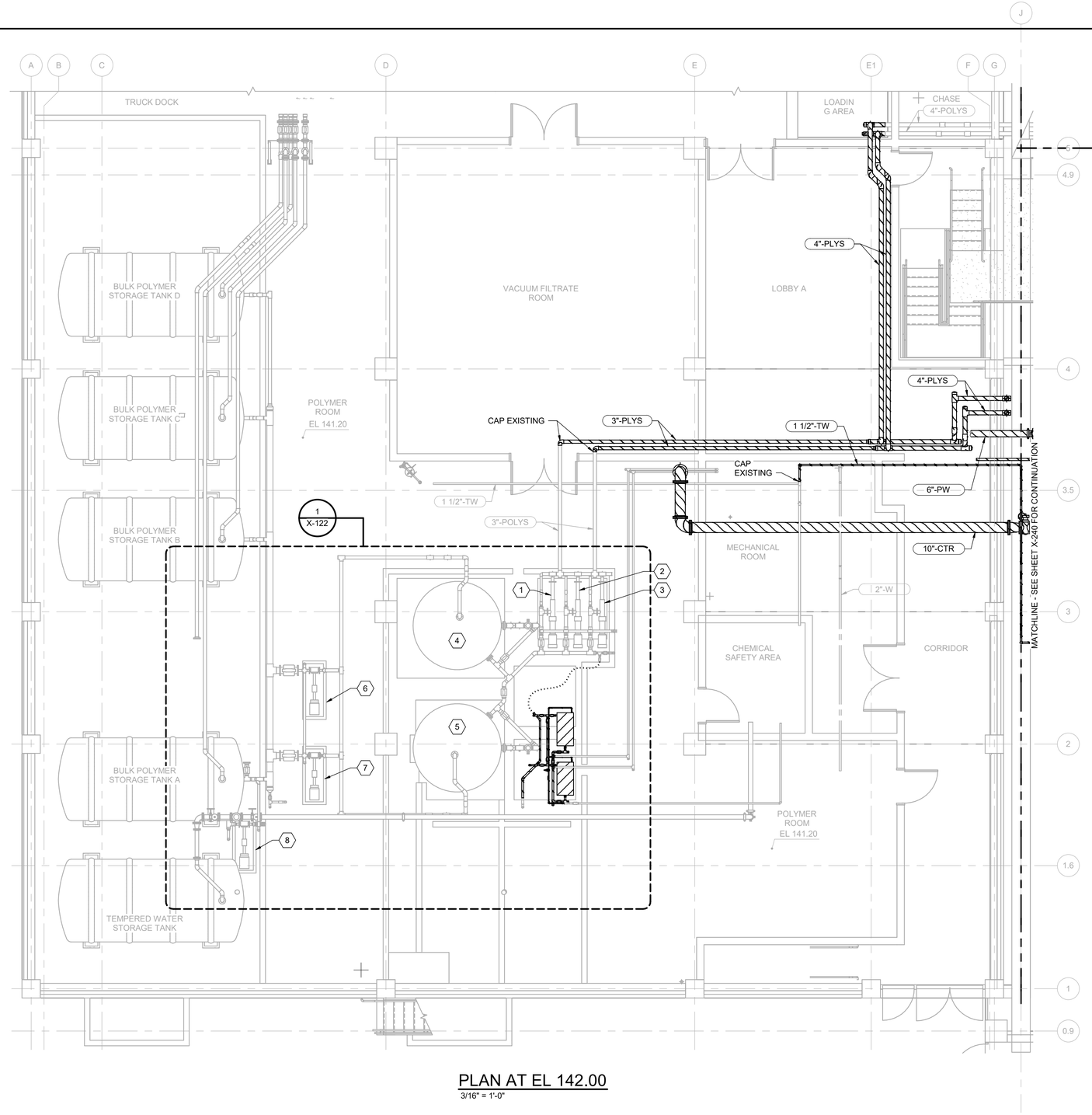

PLAN AT EL 142.00

3/16" = 1'-0"

N

KEY NOTES (X)

1 POLYMER FEED PUMP NO. 1
2 POLYMER FEED PUMP NO. 2
3 POLYMER FEED PUMP NO. 3
4 POLYMER BATCH TANK B
5 POLYMER BATCH TANK A
6 POLYMER TRANSFER PUMP NO. 1
7 POLYMER TRANSFER PUMP NO. 2
8 POLYMER RECIRCULATION PUMP NO. 1

THE DRAWINGS IN THIS SET ARE RECORD DRAWINGS. THEY ARE CONSTRUCTION CONTRACT DRAWINGS WHICH HAVE BEEN REVISED BASED ON AVAILABLE FIELD INFORMATION RECORDED BY OTHERS DURING CONSTRUCTION OF THIS CONTRACT. THERE HAS BEEN NO VERIFICATION OF DIMENSIONS SHOWN ON THE CONSTRUCTION DRAWINGS OR THE ACCURACY/COMPLETENESS OF THE FIELD INFORMATION RECEIVED.

SIGNATURE — DATE 2/7/2023

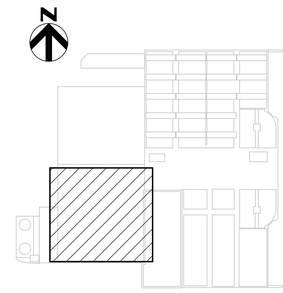

KEY PLAN

AS-BUILT REPLACEMENT SHEET

PROFESSIONAL CERTIFICATION

THIS DRAWING WAS ORIGINALLY APPROVED FOR CONSTRUCTION AND SEALED BY BRIAN M. BACLCHUNAS, A REGISTERED PROFESSIONAL ENGINEER IN THE STATE OF MARYLAND, NO. 200406

NOTICE TO CONTRACTORS

- PROJECT ELEVATIONS ARE BASED ON NAVD88 AND HOWARD COUNTY'S BENCHMARK SYSTEM
- PREVIOUS PROJECTS USED OTHER DATUMS
- APPLY THE FOLLOWING CONVERSIONS WHEN USING PREVIOUS CONTRACT DRAWINGS:
  - ADDITION NO. 6: SUBTRACT 0.80 FT
  - PRIOR ADDITIONS: SUBTRACT 1.04 FT

DEPARTMENT OF PUBLIC WORKS
HOWARD COUNTY, MARYLAND

CHIEF, BUREAU OF UTILITIES — DATE

DES: MJW
DRN: REE
CHK: JRK
DATE: 12/2016

DATE	REV	DESCRIPTION
07/2019		RECORD DRAWING

DEMOLITION

SOLIDS HANDLING BUILDING PLAN - EL 142.00

LITTLE PATUXENT WATER RECLAMATION PLANT
8TH ADDITION
BIOSOLIDS PROCESSING FACILITIES - PHASE I

CAPITAL PROJECT S-6295
CONTRACT NO. 24-4935

ELECTION DISTRICT NO. 6
HOWARD COUNTY, MARYLAND

SCALE AS SHOWN

SHEET 38 OF 463

X-121

BIM 360://10054364 – Little Patuxent WRP 8th Addition/264591_100_D_V18.rvt
1/11/2022 10:03:12 AM

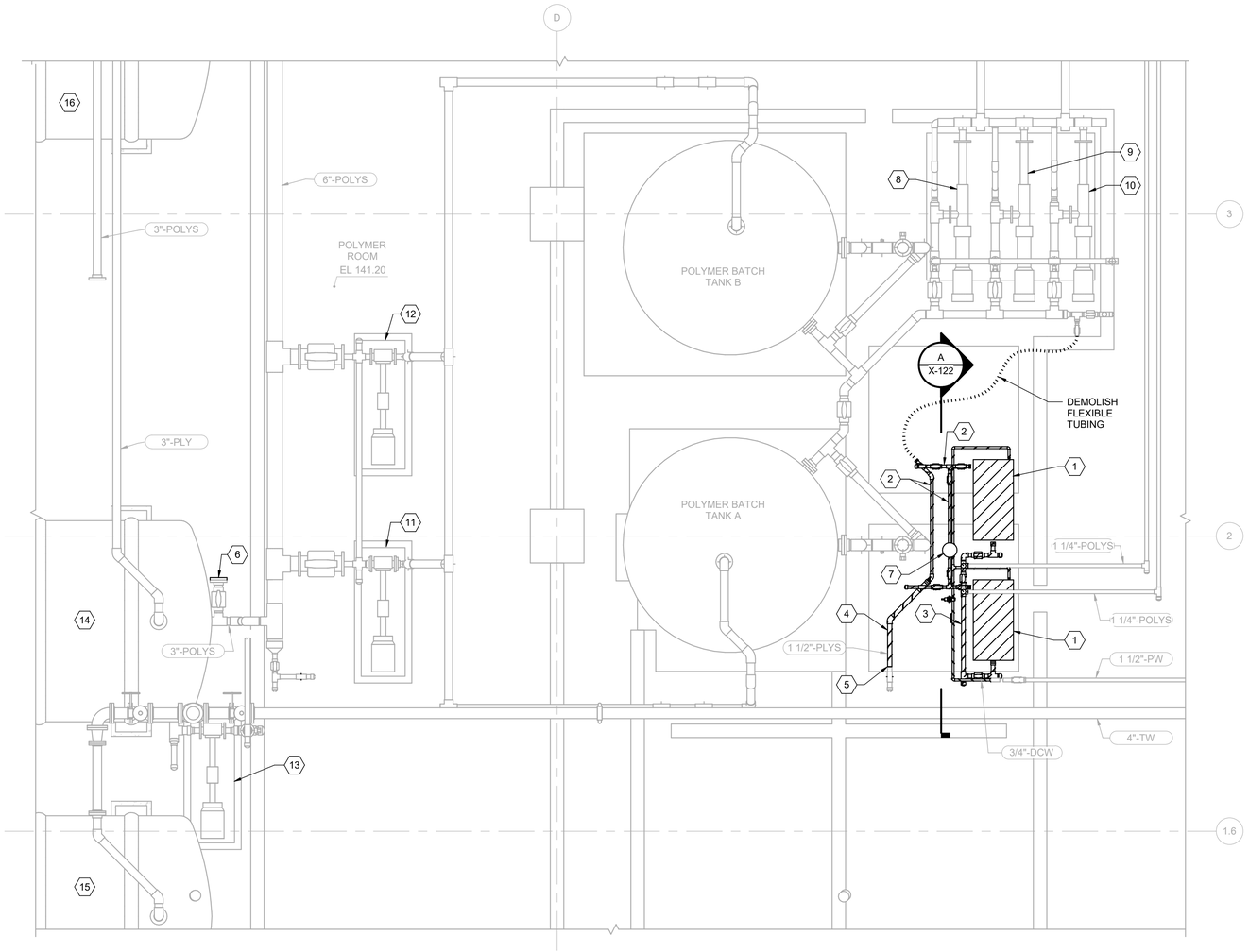

1 X-121 POLYMER DEMOLITION PARTIAL PLAN

3/8" = 1'-0"

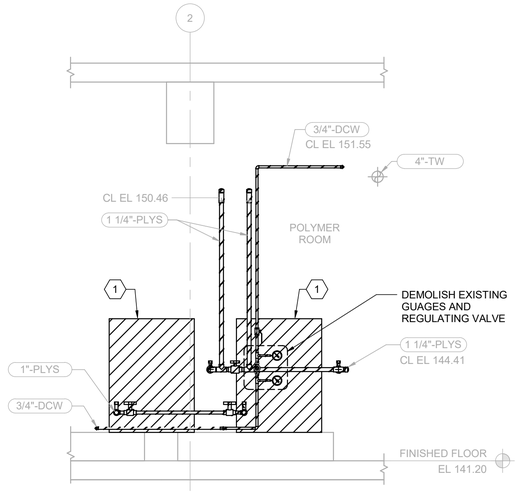

A X-122 SECTION

3/8" = 1'-0"

KEY NOTES (X)

1 DEMOLISH EXISTING POLYBLEND UNITS FOR DAF POLYMER FEED. COORDINATE DEMOLITION WITH NEW WORK.
2 DEMOLISH EXISTING 1"-PLYS PIPING, FITTINGS AND VALVES
3 DEMOLISH EXISTING 1 1/4"-PLYS PIPING, FITTINGS AND VALVES
4 DEMOLISH EXISTING 1 1/2"-PLYS
5 CAP EXISTING 1 1/2"-PLYS
6 REMOVE EXISTING 3" BLIND FLANGE
7 DEMOLISH EXISTING CALIBRATION COLUMN
8 POLYMER FEED PUMP NO. 1
9 POLYMER FEED PUMP NO. 2
10 POLYMER FEED PUMP NO. 3
11 POLYMER TRANSFER PUMP NO. 1
12 POLYMER TRANSFER PUMP NO. 2
13 POLYMER RECIRCULATION PUMP NO. 1
14 BULK POLYMER STORAGE A
15 TEMPERED WATER STORAGE TANK
16 BULK POLYMER STORAGE B

THE DRAWINGS IN THIS SET ARE RECORD DRAWINGS. THEY ARE CONSTRUCTION CONTRACT DRAWINGS WHICH HAVE BEEN REVISED BASED ON AVAILABLE FIELD INFORMATION RECORDED BY OTHERS DURING CONSTRUCTION OF THIS CONTRACT. THERE HAS BEEN NO VERIFICATION OF DIMENSIONS SHOWN ON THE CONSTRUCTION DRAWINGS OR THE ACCURACY/COMPLETENESS OF THE FIELD INFORMATION RECEIVED.

SIGNATURE 2/7/2022 DATE

AS-BUILT REPLACEMENT SHEET

PROFESSIONAL CERTIFICATION

THIS DRAWING WAS ORIGINALLY APPROVED FOR CONSTRUCTION AND SEALED BY BRIAN M. BACLCHUNAS, A REGISTERED PROFESSIONAL ENGINEER IN THE STATE OF MARYLAND, NO. 200406

NOTICE TO CONTRACTORS

- PROJECT ELEVATIONS ARE BASED ON NAVD88 AND HOWARD COUNTY'S BENCHMARK SYSTEM
- PREVIOUS PROJECTS USED OTHER DATUMS
- APPLY THE FOLLOWING CONVERSIONS WHEN USING PREVIOUS CONTRACT DRAWINGS:
  - ADDITION NO. 6: SUBTRACT 0.80 FT
  - PRIOR ADDITIONS: SUBTRACT 1.04 FT

DEPARTMENT OF PUBLIC WORKS
HOWARD COUNTY, MARYLAND

CHIEF, BUREAU OF UTILITIES DATE

DES: MJW
DRN: REE
CHK: JRK
DATE: 12/2016

DATE	REV	DESCRIPTION
07/2019		RECORD DRAWING

DEMOLITION

SOLIDS HANDLING BUILDING DETAIL

LITTLE PATUXENT WATER RECLAMATION PLANT
8TH ADDITION
BIOSOLIDS PROCESSING FACILITIES - PHASE I

CAPITAL PROJECT S-6295
CONTRACT NO. 24-4935

ELECTION DISTRICT NO. 6
HOWARD COUNTY, MARYLAND

SCALE AS SHOWN

SHEET 39 OF 463

X-122

BIM 360://10054364 – Little Patuxent WRP 8th Addition/264591_100_D_V18.rvt
1/11/2022 10:03:17 AM

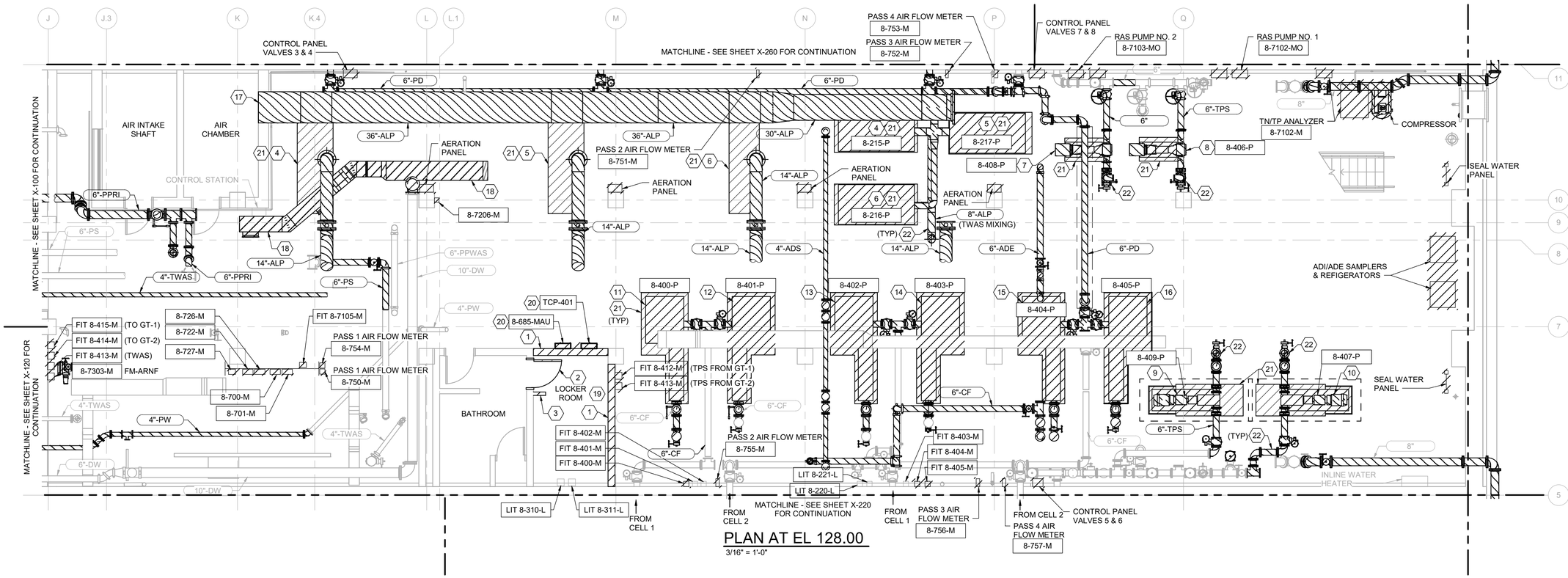

PLAN AT EL 128.00

3/16" = 1'-0"

N

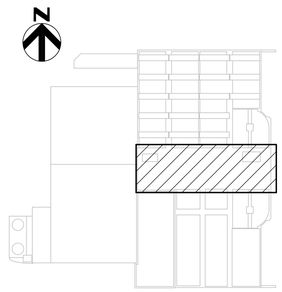

KEY PLAN

GENERAL NOTES

1. REPAIR CONCRETE FLOOR AFTER EQUIPMENT PAD DEMOLITION. SEE DETAIL 10/S-905.
2. AFTER DEMOLITION, REPAIR UNUSED PENETRATIONS IN CONCRETE PER DETAIL 9/S-903.

KEY NOTES (X)

1 DEMOLISH WALL
2 DEMOLISH DOOR
3 DEMOLISH PARTITION
4 AERATION BLOWER NO. 1
5 AERATION BLOWER NO. 2
6 AERATION BLOWER NO. 3
7 GRAVITY THICKENER TRANSFER PUMP NO. 1
8 GRAVITY THICKENER TRANSFER PUMP NO. 2
9 GRAVITY THICKENER TRANSFER PUMP NO. 3
10 GRAVITY THICKENER TRANSFER PUMP NO. 4
11 CENTRIFUGE FEED PUMP NO. 1
12 CENTRIFUGE FEED PUMP NO. 2
13 CENTRIFUGE FEED PUMP NO. 3
14 CENTRIFUGE FEED PUMP NO. 4
15 CENTRIFUGE FEED PUMP NO. 5
16 CENTRIFUGE FEED PUMP NO. 6
17 PATCH WALL OPENING. SEE DETAIL 9/S-903.
18 DEMOLISH ALL EXISTING SUPPLY AIR DUCTWORK FOR RELOCATION OF MAKE-UP AIR UNIT.
19 DEMOLISH ROOF OF LOCKER ROOM (NOT SHOWN).
20 RELOCATE MAKEUP AIR UNIT PANEL AND TEMPERATURE CONTROL PANEL. SEE DWG H-200.
21 DEMOLISH EQUIPMENT PADS. SEE DETAIL 10/S-905.
22 DEMOLISH CONCRETE PIPE SUPPORT. REPAIR FLOOR AS SHOWN IN DETAIL 10/S-905.

THE DRAWINGS IN THIS SET ARE RECORD DRAWINGS. THEY ARE CONSTRUCTION CONTRACT DRAWINGS WHICH HAVE BEEN REVISED BASED ON AVAILABLE FIELD INFORMATION RECORDED BY OTHERS DURING CONSTRUCTION OF THIS CONTRACT. THERE HAS BEEN NO VERIFICATION OF DIMENSIONS SHOWN ON THE CONSTRUCTION DRAWINGS OR THE ACCURACY/COMPLETENESS OF THE FIELD INFORMATION RECEIVED.

SIGNATURE 2/7/2023 DATE

AS-BUILT REPLACEMENT SHEET

PROFESSIONAL CERTIFICATION

THIS DRAWING WAS ORIGINALLY APPROVED FOR CONSTRUCTION AND SEALED BY BRIAN M. BACLCHUNAS, A REGISTERED PROFESSIONAL ENGINEER IN THE STATE OF MARYLAND, NO. 200406

NOTICE TO CONTRACTORS

- PROJECT ELEVATIONS ARE BASED ON NAVD88 AND HOWARD COUNTY'S BENCHMARK SYSTEM
- PREVIOUS PROJECTS USED OTHER DATUMS
- APPLY THE FOLLOWING CONVERSIONS WHEN USING PREVIOUS CONTRACT DRAWINGS:
  - ADDITION NO. 6: SUBTRACT 0.80 FT
  - PRIOR ADDITIONS: SUBTRACT 1.04 FT

DEPARTMENT OF PUBLIC WORKS
HOWARD COUNTY, MARYLAND

CHIEF, BUREAU OF UTILITIES DATE

DES: CJM
DRN: REE
CHK: JRK
DATE: 12/2016

DATE	REV	DESCRIPTION
07/2019		RECORD DRAWING

DEMOLITION

SOLIDS PIPE GALLERY LOWER PLAN

LITTLE PATUXENT WATER RECLAMATION PLANT
8TH ADDITION
BIOSOLIDS PROCESSING FACILITIES - PHASE I

CAPITAL PROJECT S-6295
CONTRACT NO. 24-4935

ELECTION DISTRICT NO. 6
HOWARD COUNTY, MARYLAND

SCALE AS SHOWN

SHEET 40 OF 463

X-200

BIM 360://10054364 – Little Patuxent WRP 8th Addition/264591_100_D_V18.rvt
1/11/2022 10:03:19 AM

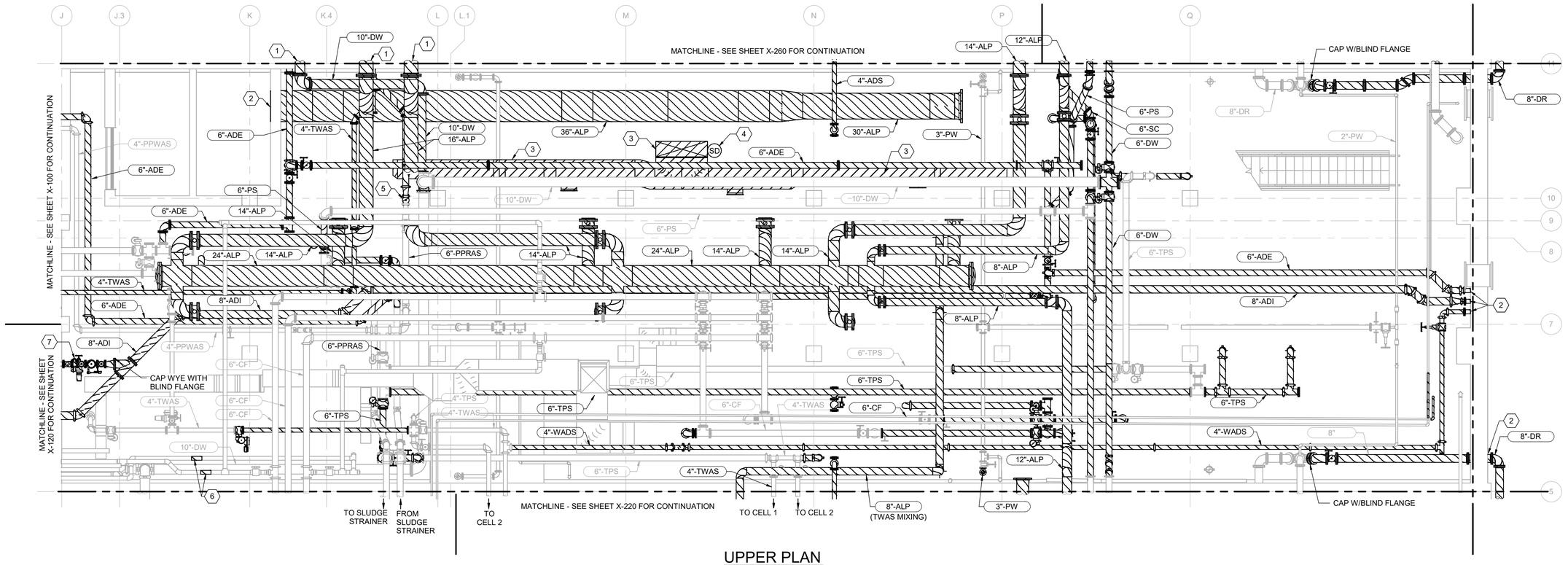

UPPER PLAN

3/16" = 1'-0"

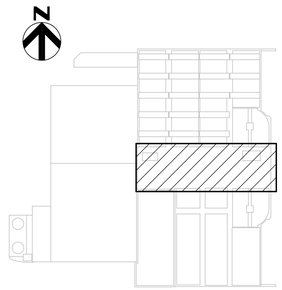

KEY PLAN

GENERAL NOTES

1. AFTER DEMOLITION, REPAIR UNUSED PENETRATIONS IN CONCRETE PER DETAIL 9/S-903.

KEY NOTES (X)

1. FOR ADDITIONAL DEMOLITION NOTES, SEE 3/M-261.
2. PATCH WALL OPENING. SEE DETAIL 9/S-903.
3. DEMOLISH ALL EXISTING SUPPLY AIR DUCTWORK FOR RELOCATION OF MAKE-UP AIR UNIT.
4. SALVAGE AND REUSE EXISTING DUCT SMOKE DETECTOR. DO NOT DEMOLISH.
5. MOTORIZED BALL VALVE REMOVED AND DELIVERED TO THE COUNTY. BLIND FLANGE INSTALLED.
6. DEMOLISH SECTION OF PIPING FOR NEW CONNECTION.
7. MOTORIZED PLUG VALVE REMOVED AND DELIVERED TO THE COUNTY. BLIND FLANGE INSTALLED.

THE DRAWINGS IN THIS SET ARE RECORD DRAWINGS. THEY ARE CONSTRUCTION CONTRACT DRAWINGS WHICH HAVE BEEN REVISED BASED ON AVAILABLE FIELD INFORMATION RECORDED BY OTHERS DURING CONSTRUCTION OF THIS CONTRACT. THERE HAS BEEN NO VERIFICATION OF DIMENSIONS SHOWN ON THE CONSTRUCTION DRAWINGS OR THE ACCURACY/COMPLETENESS OF THE FIELD INFORMATION RECEIVED.

SIGNATURE — DATE 2/7/2023

AS-BUILT REPLACEMENT SHEET

PROFESSIONAL CERTIFICATION

THIS DRAWING WAS ORIGINALLY APPROVED FOR CONSTRUCTION AND SEALED BY BRIAN M. BACLCHUNAS, A REGISTERED PROFESSIONAL ENGINEER IN THE STATE OF MARYLAND, NO. 200406

NOTICE TO CONTRACTORS

- PROJECT ELEVATIONS ARE BASED ON NAVD88 AND HOWARD COUNTY'S BENCHMARK SYSTEM
- PREVIOUS PROJECTS USED OTHER DATUMS
- APPLY THE FOLLOWING CONVERSIONS WHEN USING PREVIOUS CONTRACT DRAWINGS:
  - ADDITION NO. 6: SUBTRACT 0.80 FT
  - PRIOR ADDITIONS: SUBTRACT 1.04 FT

DEPARTMENT OF PUBLIC WORKS
HOWARD COUNTY, MARYLAND

CHIEF, BUREAU OF UTILITIES — DATE

DES: CJM
DRN: REE
CHK: JRK
DATE: 12/2016

DATE	REV	DESCRIPTION
07/2019		RECORD DRAWING

DEMOLITION

SOLIDS PIPE GALLERY UPPER PLAN

LITTLE PATUXENT WATER RECLAMATION PLANT
8TH ADDITION
BIOSOLIDS PROCESSING FACILITIES - PHASE I

CAPITAL PROJECT S-6295
CONTRACT NO. 24-4935

ELECTION DISTRICT NO. 6
HOWARD COUNTY, MARYLAND

SCALE AS SHOWN

SHEET 41 OF 463

X-201

BIM 360://10054364 – Little Patuxent WRP 8th Addition/264591_100_D_V18.rvt
1/11/2022 10:03:26 AM

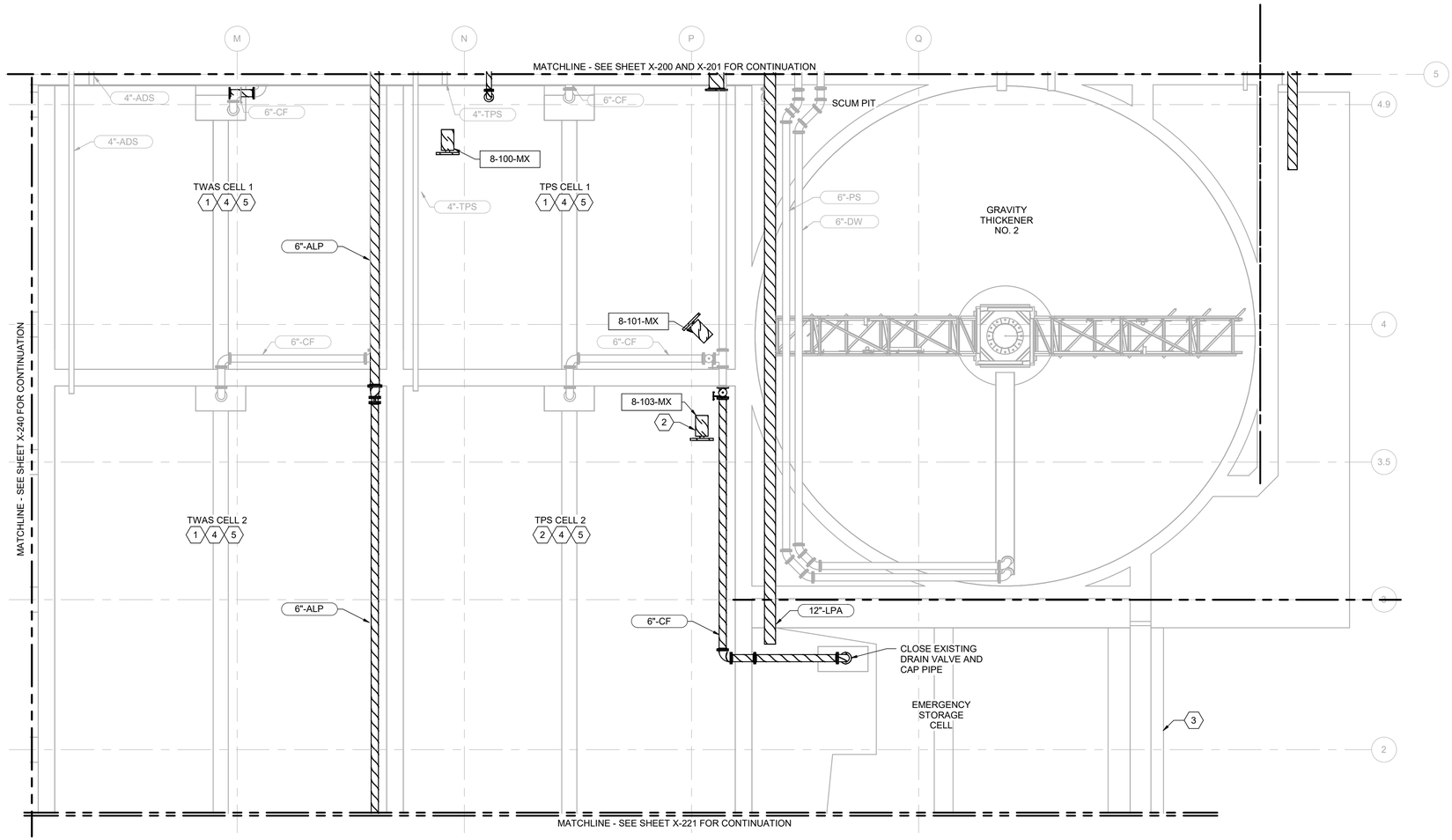

PLAN AT EL 128.00

3/16" = 1'-0"

N

GENERAL NOTES

1. AFTER DEMOLITION, REPAIR UNUSED PENETRATIONS IN CONCRETE PER DETAIL 9/S-903.

KEY NOTES (X)

1 DEMOLISH AIR MIXING SYSTEM IN TWAS CELS NO. 1 AND NO. 2.

2 REMOVE MECHANICAL MIXERS FROM TPS CELL NO. 2 AND RELOCATE TO ADJACENT CELL. SEE MECHANICAL DRAWINGS. REPAIR COVERS PER 9/S-905.

3 EMERGENCY STORAGE CELL TO BE PARTIALLY DEMOLISHED AND FILLED. DEMOLISH EXISTING ALUM COVER. SEE STRUCTURAL DRAWINGS FOR CONCRETE DEMOLITION.

4 AFTER CLEANING TANKS (SIMILAR TO THE PROCESS NOTED ON DRAWING S-260) TANKS WILL BE INSPECTED. SUBSEQUENTLY, SOME REPAIRS MAY BE DEEMED NECESSARY BY THE ENGINEER AND OWNER. SUCH WORK SHALL BE IDENTIFIED AND REPAIRED IN ACCORDANCE WITH THE DETAILS AND NOTES ON DRAWING S-910. SUCH WORK WILL BE PAID ACCORDING TO THE UNIT PRICES LISTED IN THE BID FORM AND ACTUAL QUANTITIES REPAIRED. FINAL PAYMENT SHALL BE BASED ON ACTUAL QUANTITIES REPAIRED, NOT THE BID QUANTITIES.

5 PROTECT EXPANSION JOINTS DURING CLEANING OPERATION FROM FURTHER DAMAGE.

THE DRAWINGS IN THIS SET ARE RECORD DRAWINGS. THEY ARE CONSTRUCTION CONTRACT DRAWINGS WHICH HAVE BEEN REVISED BASED ON AVAILABLE FIELD INFORMATION RECORDED BY OTHERS DURING CONSTRUCTION OF THIS CONTRACT. THERE HAS BEEN NO VERIFICATION OF DIMENSIONS SHOWN ON THE CONSTRUCTION DRAWINGS OR THE ACCURACY/COMPLETENESS OF THE FIELD INFORMATION RECEIVED.

SIGNATURE — DATE 2/7/2023

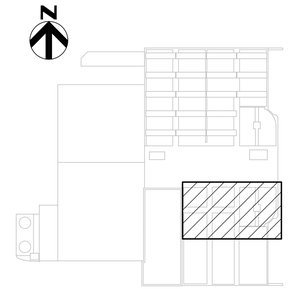

KEY PLAN

AS-BUILT REPLACEMENT SHEET

PROFESSIONAL CERTIFICATION

THIS DRAWING WAS ORIGINALLY APPROVED FOR CONSTRUCTION AND SEALED BY BRIAN M. BACLCHUNAS, A REGISTERED PROFESSIONAL ENGINEER IN THE STATE OF MARYLAND, NO. 200406

NOTICE TO CONTRACTORS

- PROJECT ELEVATIONS ARE BASED ON NAVD88 AND HOWARD COUNTY'S BENCHMARK SYSTEM
- PREVIOUS PROJECTS USED OTHER DATUMS
- APPLY THE FOLLOWING CONVERSIONS WHEN USING PREVIOUS CONTRACT DRAWINGS:
  - ADDITION NO. 6: SUBTRACT 0.80 FT
  - PRIOR ADDITIONS: SUBTRACT 1.04 FT

DEPARTMENT OF PUBLIC WORKS
HOWARD COUNTY, MARYLAND

CHIEF, BUREAU OF UTILITIES — DATE

DES: MJW
DRN: REE
CHK: JRK
DATE: 12/2016

DATE	REV	DESCRIPTION
07/2019		RECORD DRAWING

DEMOLITION

SOLIDS HOLDING TANKS LOWER PARTIAL PLAN 1

LITTLE PATUXENT WATER RECLAMATION PLANT
8TH ADDITION
BIOSOLIDS PROCESSING FACILITIES - PHASE I

CAPITAL PROJECT S-6295
CONTRACT NO. 24-4935

ELECTION DISTRICT NO. 6
HOWARD COUNTY, MARYLAND

SCALE AS SHOWN

SHEET 42 OF 463

X-220

BIM 360://10054364 – Little Patuxent WRP 8th Addition/264591_100_D_V18.rvt
1/11/2022 10:03:29 AM

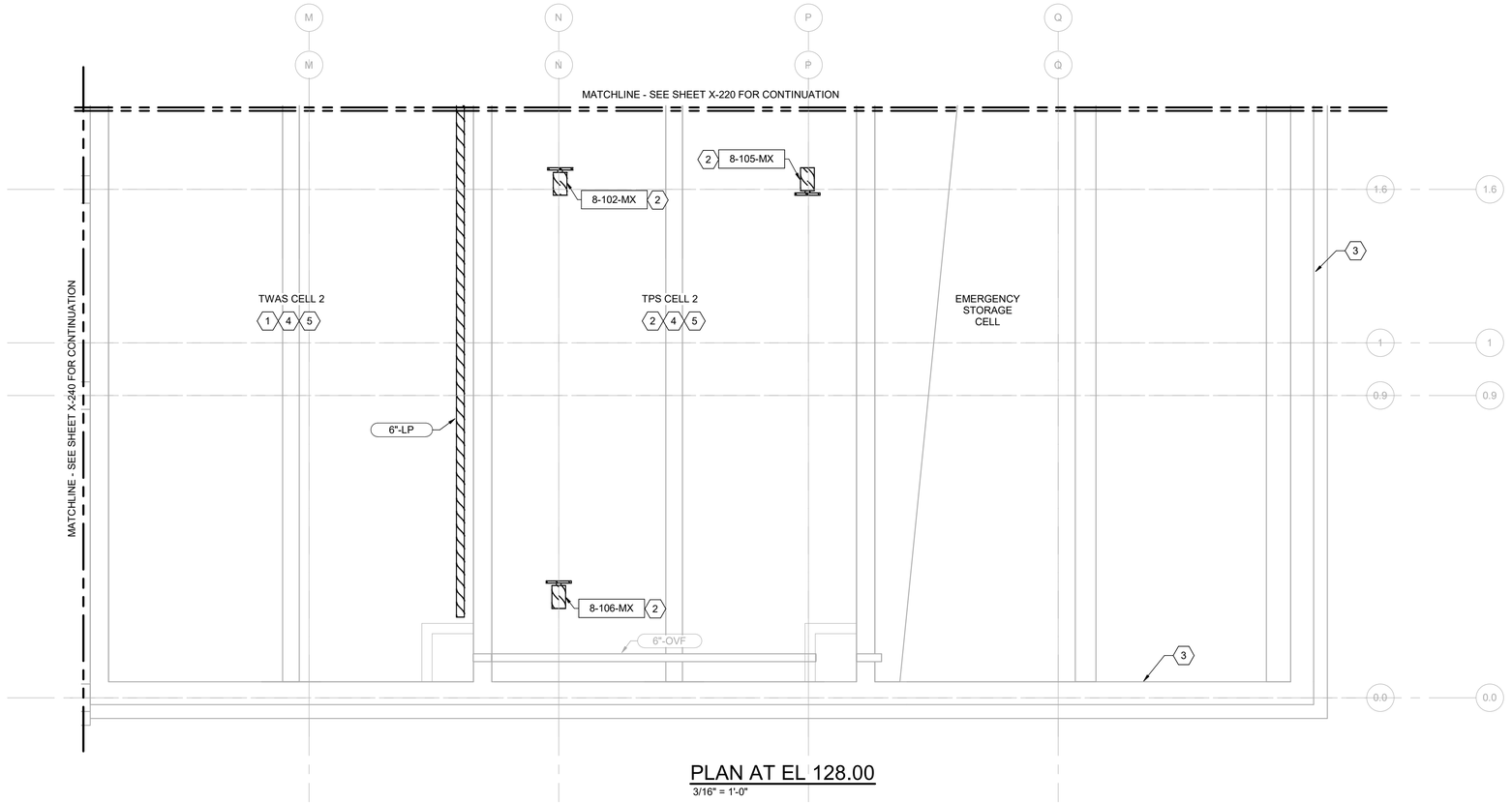

PLAN AT EL 128.00

3/16" = 1'-0"

KEY NOTES (X)

1 DEMOLISH AIR MIXING SYSTEM IN TWAS CELS NO. 1 AND NO. 2.

2 REMOVE MECHANICAL MIXERS FROM TPS CELL NO. 2 AND RELOCATE TO ADJACENT CELL. SEE MECHANICAL DRAWINGS. REPAIR COVERS PER 9/S-905.

3 EMERGENCY STORAGE CELL TO BE PARTIALLY DEMOLISHED AND FILLED. DEMOLISH EXISTING ALUM COVER. SEE STRUCTURAL DRAWINGS FOR CONCRETE DEMOLITION.

4 AFTER CLEANING TANKS (SIMILAR TO THE PROCESS NOTED ON DRAWING S-260) TANKS WILL BE INSPECTED. SUBSEQUENTLY, SOME REPAIRS MAY BE DEEMED NECESSARY BY THE ENGINEER AND OWNER. SUCH WORK SHALL BE IDENTIFIED AND REPAIRED IN ACCORDANCE WITH THE DETAILS AND NOTES ON DRAWING S-910. SUCH WORK WILL BE PAID ACCORDING TO THE UNIT PRICES LISTED IN THE BID FORM AND ACTUAL QUANTITIES REPAIRED. FINAL PAYMENT SHALL BE BASED ON ACTUAL QUANTITIES REPAIRED, NOT THE BID QUANTITIES.

5 PROTECT EXPANSION JOINTS DURING CLEANING OPERATION FROM FURTHER DAMAGE.

THE DRAWINGS IN THIS SET ARE RECORD DRAWINGS. THEY ARE CONSTRUCTION CONTRACT DRAWINGS WHICH HAVE BEEN REVISED BASED ON AVAILABLE FIELD INFORMATION RECORDED BY OTHERS DURING CONSTRUCTION OF THIS CONTRACT. THERE HAS BEEN NO VERIFICATION OF DIMENSIONS SHOWN ON THE CONSTRUCTION DRAWINGS OR THE ACCURACY/COMPLETENESS OF THE FIELD INFORMATION RECEIVED.

SIGNATURE — DATE 2/7/2023

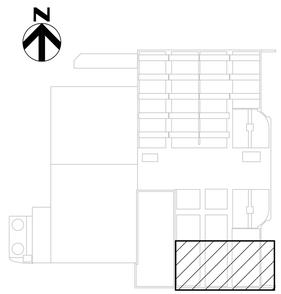

KEY PLAN

AS-BUILT REPLACEMENT SHEET

PROFESSIONAL CERTIFICATION

THIS DRAWING WAS ORIGINALLY APPROVED FOR CONSTRUCTION AND SEALED BY BRIAN M. BACLCHUNAS, A REGISTERED PROFESSIONAL ENGINEER IN THE STATE OF MARYLAND, NO. 200406

NOTICE TO CONTRACTORS

- PROJECT ELEVATIONS ARE BASED ON NAVD88 AND HOWARD COUNTY'S BENCHMARK SYSTEM
- PREVIOUS PROJECTS USED OTHER DATUMS
- APPLY THE FOLLOWING CONVERSIONS WHEN USING PREVIOUS CONTRACT DRAWINGS:
  - ADDITION NO. 6: SUBTRACT 0.80 FT
  - PRIOR ADDITIONS: SUBTRACT 1.04 FT

DEPARTMENT OF PUBLIC WORKS
HOWARD COUNTY, MARYLAND

CHIEF, BUREAU OF UTILITIES — DATE

DES: MJW
DRN: REE
CHK: JRK
DATE: 12/2016

DATE	REV	DESCRIPTION
07/2019		RECORD DRAWING

DEMOLITION

SOLIDS HOLDING TANKS LOWER PARTIAL PLAN 2

LITTLE PATUXENT WATER RECLAMATION PLANT
8TH ADDITION
BIOSOLIDS PROCESSING FACILITIES - PHASE I

CAPITAL PROJECT S-6295
CONTRACT NO. 24-4935

ELECTION DISTRICT NO. 6
HOWARD COUNTY, MARYLAND

SCALE AS SHOWN

SHEET 43 OF 463

X-221

BIM 360://10054364 – Little Patuxent WRP 8th Addition/264591_100_D_V18.rvt
1/11/2022 10:03:31 AM

MATCHLINE - SEE SHEET X-101 FOR CONTINUATION

MATCHLINE - SEE SHEET X-121 FOR CONTINUATION

MATCHLINE - SEE SHEET X-262 FOR CONTINUATION

DEMOLISH EXHAUST FAN AND ALL ASSOCIATED CONTROLS.

EXHAUST FAN TO REMAIN

24"-FA

RELOCATE HOSE BIBB

DEMOLISH DUCT SUPPORT

16"-FA

DEMOLISH DUCT SUPPORT

DEMOLISH DUCT SUPPORT

DEMOLISH DUCT SUPPORT

RELOCATE DUCT SUPPORT

8"-FA

16"-FA

24"-FA (VENT)

TWAS CELL 1

TPS CELL 1

GRAVITY THICKENER NO. 2

EL 145.20

16"-FA

TWAS CELL 2

TPS CELL 2

16"-FA

16"-FA

EMERGENCY STORAGE CELL

FOR DEMOLITION WORK IN THE CENTRIFUGE BUILDING, SEE SHEETS X-240, X-241 AND X-242

MATCHLINE - SEE SHEET X-223 FOR CONTINUATION

J J.3 K K.4 L L.1 M N P Q

7 5 4.9 4 3.5 3 2

PLAN AT EL 145.20

3/16" = 1'-0"

KEY NOTES (X)

1. EMERGENCY STORAGE CELL TO BE PARTIALLY DEMOLISHED AND FILLED. DEMOLISH EXISTING ALUM COVER. SEE STRUCTURAL DRAWINGS FOR CONCRETE DEMOLITION.
2. REMOVE MECHANICAL MIXERS FROM TPS CELL NO. 1 AND PROVIDE EQUIPMENT TO OWNER. REPAIR COVERS PER 9/S-905.
3. REMOVE MECHANICAL MIXERS FROM TPS CELL NO. 2 AND RELOCATE TO ADJACENT CELL. SEE MECHANICAL DRAWINGS. REPAIR COVERS PER 9/S-905.
4. ODOR CONTROL SYSTEM TO REMAIN IN OPERATION DURING CONSTRUCTION. PROVIDE TEMPORARY CAP ON 16" FA DUCT AFTER DEMOLITION.

THE DRAWINGS IN THIS SET ARE RECORD DRAWINGS. THEY ARE CONSTRUCTION CONTRACT DRAWINGS WHICH HAVE BEEN REVISED BASED ON AVAILABLE FIELD INFORMATION RECORDED BY OTHERS DURING CONSTRUCTION OF THIS CONTRACT. THERE HAS BEEN NO VERIFICATION OF DIMENSIONS SHOWN ON THE CONSTRUCTION DRAWINGS OR THE ACCURACY/COMPLETENESS OF THE FIELD INFORMATION RECEIVED.

SIGNATURE — DATE 2/7/2023

KEY PLAN

BIM 360://10054364 – Little Patuxent WRP 8th Addition/264591_100_D_V18.rvt
1/11/2022 10:03:41 AM

AS-BUILT REPLACEMENT SHEET

PROFESSIONAL CERTIFICATION

THIS DRAWING WAS ORIGINALLY APPROVED FOR CONSTRUCTION AND SEALED BY BRIAN M. BACLCHUNAS, A REGISTERED PROFESSIONAL ENGINEER IN THE STATE OF MARYLAND, NO. 200406

NOTICE TO CONTRACTORS

- PROJECT ELEVATIONS ARE BASED ON NAVD88 AND HOWARD COUNTY'S BENCHMARK SYSTEM
- PREVIOUS PROJECTS USED OTHER DATUMS
- APPLY THE FOLLOWING CONVERSIONS WHEN USING PREVIOUS CONTRACT DRAWINGS:
  - ADDITION NO. 6: SUBTRACT 0.80 FT
  - PRIOR ADDITIONS: SUBTRACT 1.04 FT

DEPARTMENT OF PUBLIC WORKS
HOWARD COUNTY, MARYLAND

CHIEF, BUREAU OF UTILITIES — DATE

DES: MJW
DRN: REE
CHK: JRK
DATE: 12/2016

DATE	REV	DESCRIPTION
07/2019		RECORD DRAWING

DEMOLITION

SOLIDS HOLDING TANKS TOP PARTIAL PLAN 1

LITTLE PATUXENT WATER RECLAMATION PLANT
8TH ADDITION
BIOSOLIDS PROCESSING FACILITIES - PHASE I

CAPITAL PROJECT S-6295
CONTRACT NO. 24-4935

ELECTION DISTRICT NO. 6
HOWARD COUNTY, MARYLAND

SCALE AS SHOWN

SHEET 44 OF 463

X-222

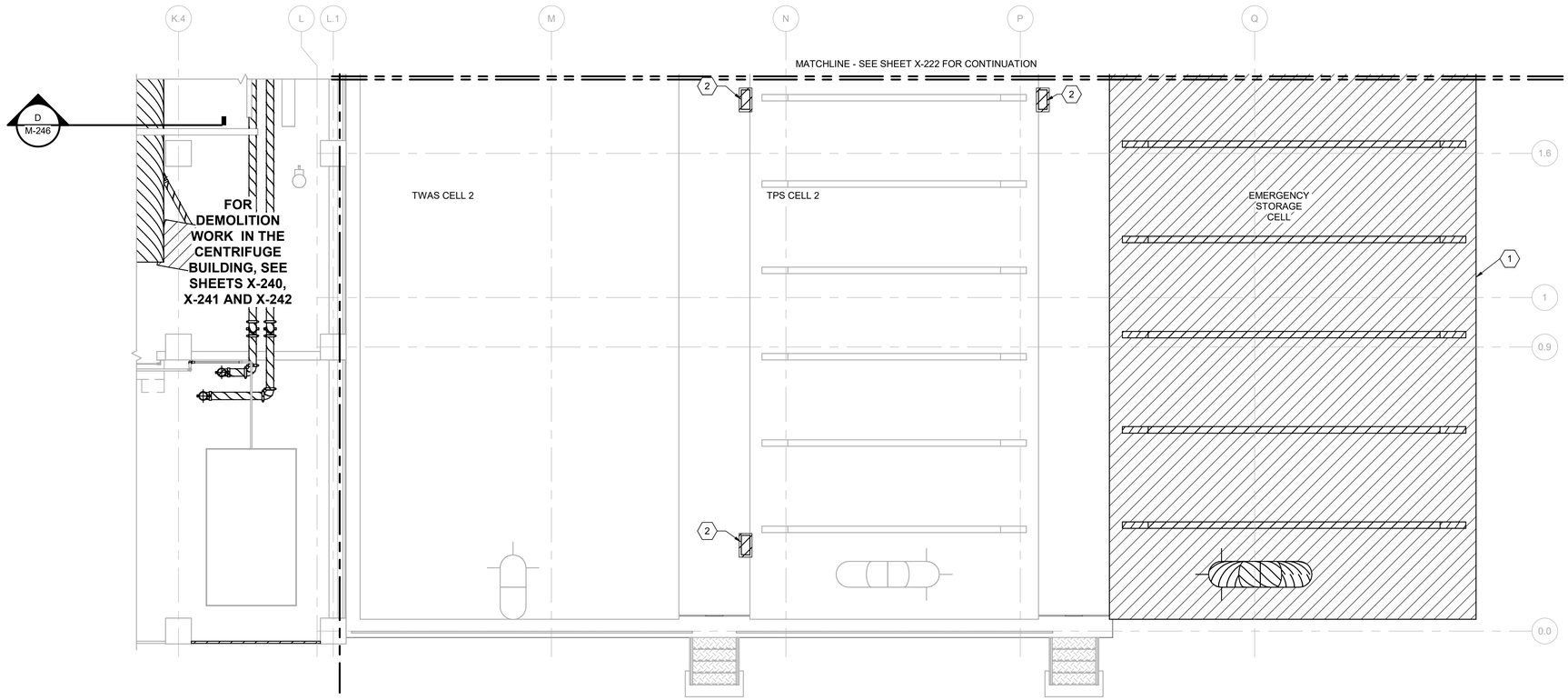

PLAN AT EL 146.00

3/16" = 1'-0"

N

KEY NOTES (X)

1 EMERGENCY STORAGE CELL TO BE PARTIALLY DEMOLISHED AND FILLED. DEMOLISH EXISTING ALUM COVER. SEE STRUCTURAL DRAWINGS FOR CONCRETE DEMOLITION.

2 REMOVE MECHANICAL MIXERS FROM TPS CELL NO. 2 AND RELOCATE TO ADJACENT CELL. SEE MECHANICAL DRAWINGS. REPAIR COVERS PER 9/S-905.

THE DRAWINGS IN THIS SET ARE RECORD DRAWINGS. THEY ARE CONSTRUCTION CONTRACT DRAWINGS WHICH HAVE BEEN REVISED BASED ON AVAILABLE FIELD INFORMATION RECORDED BY OTHERS DURING CONSTRUCTION OF THIS CONTRACT. THERE HAS BEEN NO VERIFICATION OF DIMENSIONS SHOWN ON THE CONSTRUCTION DRAWINGS OR THE ACCURACY/COMPLETENESS OF THE FIELD INFORMATION RECEIVED.

SIGNATURE — DATE 2/7/2022

N

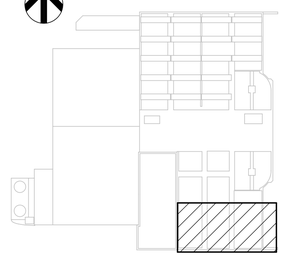

KEY PLAN

AS-BUILT REPLACEMENT SHEET

PROFESSIONAL CERTIFICATION

THIS DRAWING WAS ORIGINALLY APPROVED FOR CONSTRUCTION AND SEALED BY BRIAN M. BACLCHUNAS, A REGISTERED PROFESSIONAL ENGINEER IN THE STATE OF MARYLAND, NO. 200406

NOTICE TO CONTRACTORS

- PROJECT ELEVATIONS ARE BASED ON NAVD88 AND HOWARD COUNTY'S BENCHMARK SYSTEM
- PREVIOUS PROJECTS USED OTHER DATUMS
- APPLY THE FOLLOWING CONVERSIONS WHEN USING PREVIOUS CONTRACT DRAWINGS:
  - ADDITION NO. 6: SUBTRACT 0.80 FT
  - PRIOR ADDITIONS: SUBTRACT 1.04 FT

DEPARTMENT OF PUBLIC WORKS
HOWARD COUNTY, MARYLAND

CHIEF, BUREAU OF UTILITIES — DATE

DES: MJW
DRN: REE
CHK: JRK
DATE: 12/2016

DATE	REV	DESCRIPTION
07/2019		RECORD DRAWING

DEMOLITION

SOLIDS HOLDING TANKS TOP PARTIAL PLAN 2

LITTLE PATUXENT WATER RECLAMATION PLANT
8TH ADDITION
BIOSOLIDS PROCESSING FACILITIES - PHASE I

CAPITAL PROJECT S-6295
CONTRACT NO. 24-4935

ELECTION DISTRICT NO. 6
HOWARD COUNTY, MARYLAND

SCALE AS SHOWN

SHEET 45 OF 463

X-223

BIM 360://10054364 – Little Patuxent WRP 8th Addition/264591_100_D_V18.rvt
1/11/2022 10:03:43 AM

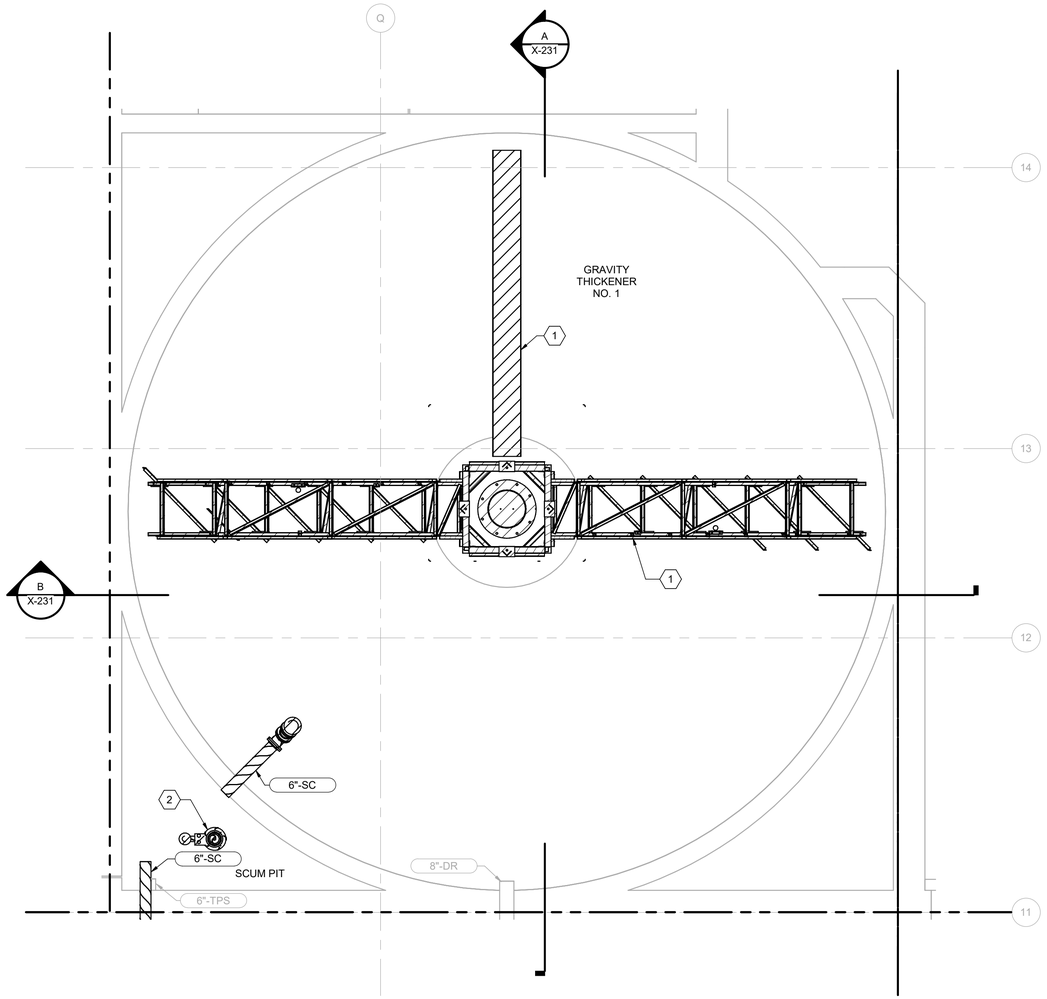

1 X-260 LOWER PLAN AT EL 128.00
1/4" = 1'-0"

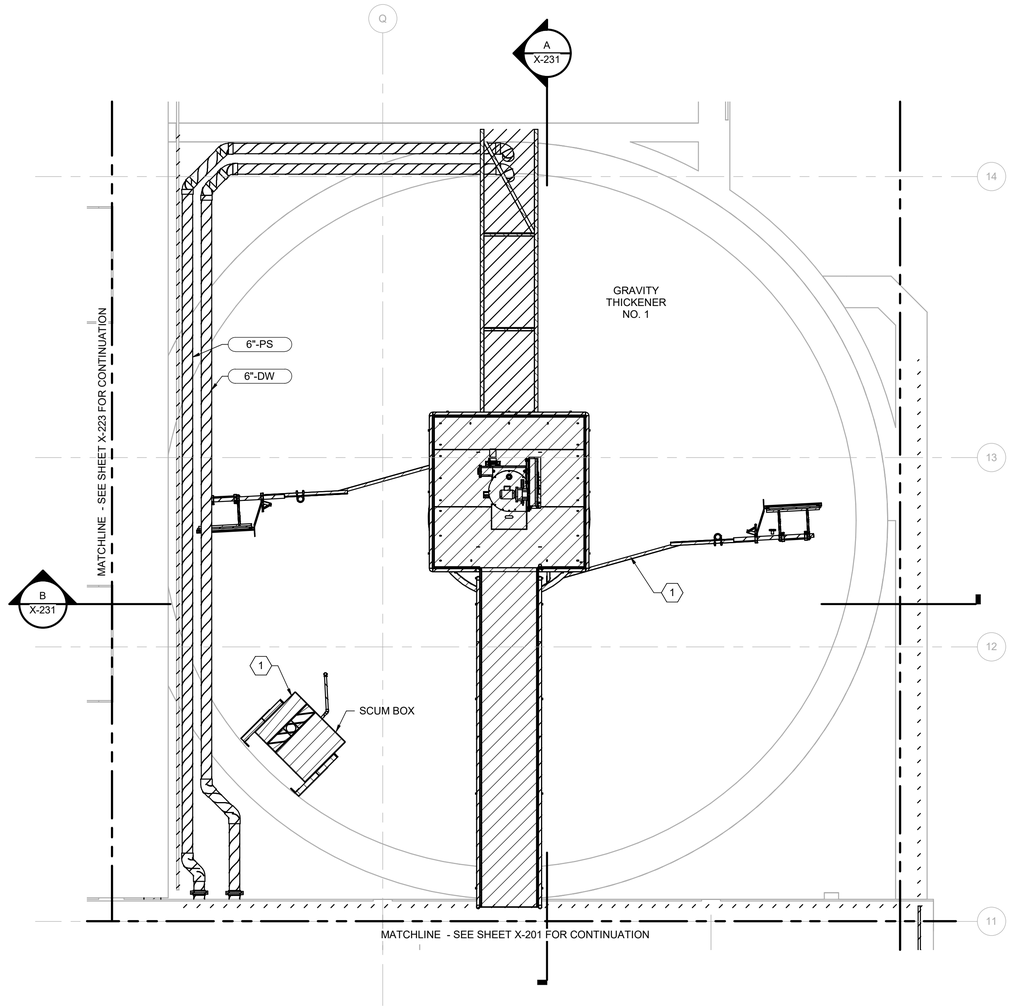

2 X-262 UPPER PLAN AT EL 142.00
1/4" = 1'-0"

N

GENERAL NOTES

1. GRAVITY THICKENER NO. 1 TO BE INSPECTED BY ENGINEER FOR POTENTIAL CONCRETE REPAIRS AFTER REMOVAL FROM SERVICE.

KEY NOTES (X)

1 CONTRACTOR TO REMOVE GRAVITY THICKENER IN ITS ENTIRETY INCLUDING WALKWAY, SCUM BAFFLE, WEIR PLATE, INFLUENT TROUGH, SCUM BOX AND SUPPORT FRAMING.

2 REMOVE SUBMERSIBLE SCUM PUMP, GUIDE RAILS, DAVIT CRANE AND APPURTENANCES.

THE DRAWINGS IN THIS SET ARE RECORD DRAWINGS. THEY ARE CONSTRUCTION CONTRACT DRAWINGS WHICH HAVE BEEN REVISED BASED ON AVAILABLE FIELD INFORMATION RECORDED BY OTHERS DURING CONSTRUCTION OF THIS CONTRACT. THERE HAS BEEN NO VERIFICATION OF DIMENSIONS SHOWN ON THE CONSTRUCTION DRAWINGS OR THE ACCURACY/COMPLETENESS OF THE FIELD INFORMATION RECEIVED.

SIGNATURE 2/7/2023 DATE

N

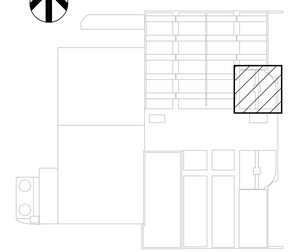

KEY PLAN

AS-BUILT REPLACEMENT SHEET

PROFESSIONAL CERTIFICATION

THIS DRAWING WAS ORIGINALLY APPROVED FOR CONSTRUCTION AND SEALED BY BRIAN M. BACLCHUNAS, A REGISTERED PROFESSIONAL ENGINEER IN THE STATE OF MARYLAND, NO. 200406

NOTICE TO CONTRACTORS

- PROJECT ELEVATIONS ARE BASED ON NAVD88 AND HOWARD COUNTY'S BENCHMARK SYSTEM
- PREVIOUS PROJECTS USED OTHER DATUMS
- APPLY THE FOLLOWING CONVERSIONS WHEN USING PREVIOUS CONTRACT DRAWINGS:
  - ADDITION NO. 6: SUBTRACT 0.80 FT
  - PRIOR ADDITIONS: SUBTRACT 1.04 FT

DEPARTMENT OF PUBLIC WORKS
HOWARD COUNTY, MARYLAND

CHIEF, BUREAU OF UTILITIES DATE

DES: KLP
DRN: REE
CHK: JRK
DATE: 12/2016

DATE	REV	DESCRIPTION
07/2019		RECORD DRAWING

DEMOLITION

GRAVITY THICKENER NO. 1 LOWER AND UPPER PLANS

LITTLE PATUXENT WATER RECLAMATION PLANT
8TH ADDITION
BIOSOLIDS PROCESSING FACILITIES - PHASE I

CAPITAL PROJECT S-6295
CONTRACT NO. 24-4935

ELECTION DISTRICT NO. 6
HOWARD COUNTY, MARYLAND

SCALE AS SHOWN

SHEET 46 OF 463

X-230

BIM 360://10054364 – Little Patuxent WRP 8th Addition/264591_100_D_V18.rvt
1/11/2022 10:03:49 AM

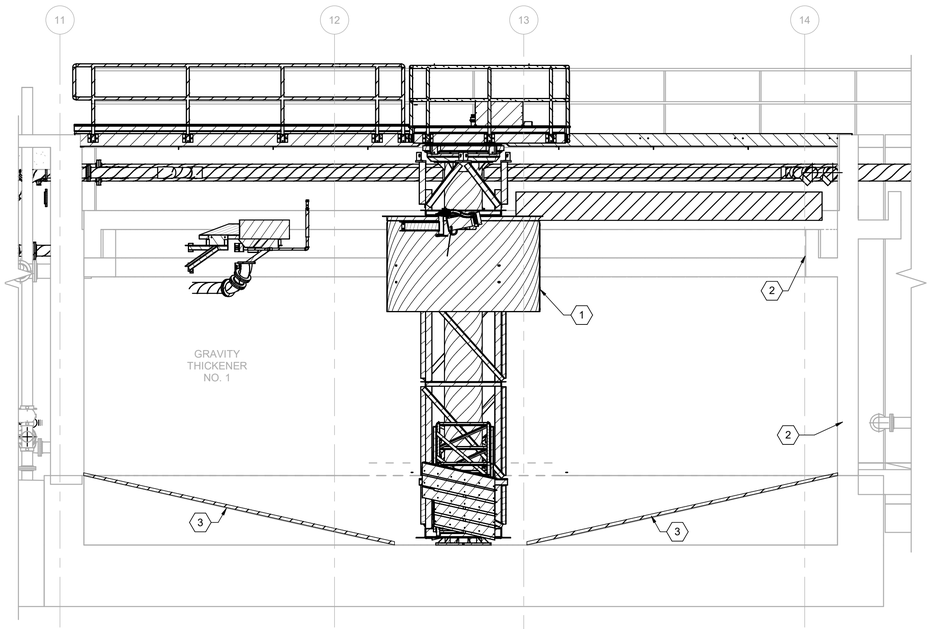

A X-230 SECTION
1/4" = 1'-0"

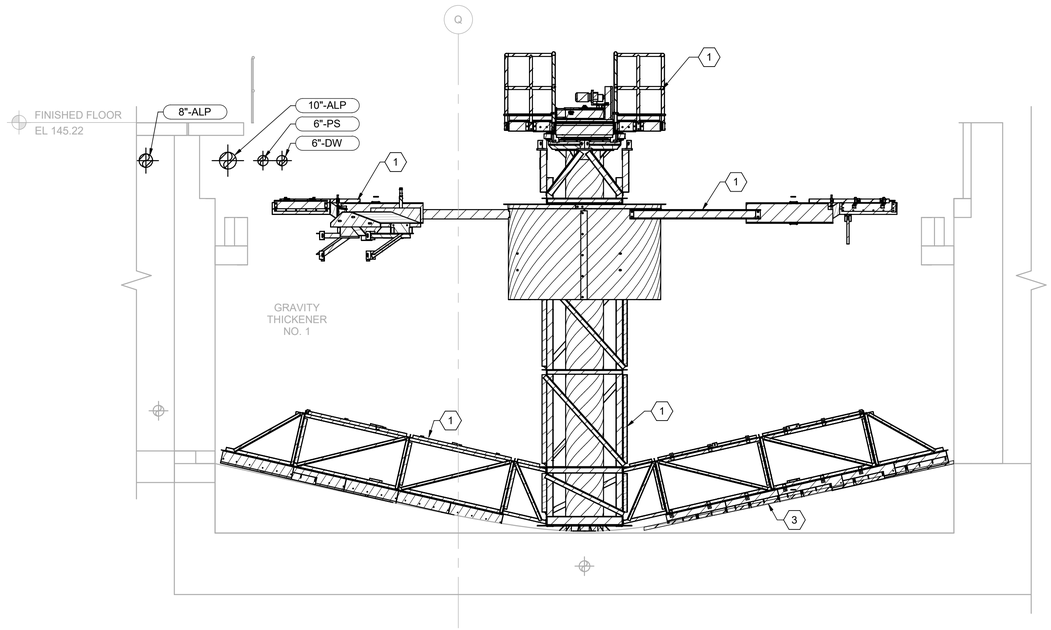

B X-230 SECTION
1/4" = 1'-0"

GENERAL NOTES

1. REHABILITATION SUBSEQUENT REPAIR AND WORK BEYOND SURFACE PREPARATION SHALL BE DETERMINED BY ENGINEER AFTER DEMOLITION, BLASTING, AND SURFACE PREPARATION. AN ALLOWANCE HAS BEEN PROVIDED FOR SUCH WORK.

KEY NOTES (X)

1 CONTRACTOR TO REMOVE GRAVITY THICKENER IN ITS ENTIRETY INCLUDING WALKWAY, SCUM BAFFLE, WEIR PLATE, INFLUENT TROUGH, SCUM BOX AND SUPPORT FRAMING.

2 CONTRACTOR SHALL BLAST CLEAN ALL INTERIOR REMAINING CONCRETE SURFACES OF TANK, INCLUDING LAUNDER. HYDRO OR MECHANICAL CLEANING SHALL NOT DAMAGE SOUND CONCRETE. ALL LOOSE CONCRETE AND EXISTING COATINGS SHALL BE REMOVED AND LEGALLY DISPOSED OFF-SITE. FOLLOW REQUIREMENTS OF NACE/SSPC-SP13. FINAL SURFACE PROFILE SHALL BE NO SMOOTHER THAN ICRI COMPARATOR CSP6. SUBSEQUENT REPAIR STEPS SHALL BE DETERMINED AT CONCLUSION OF THIS PREPARATORY WORK. REPAIR WORK SHALL FOLLOW STANDARD REPAIR DETAILS ON THE S-900 SERIES. BASED UPON TYPE OF DEFECT EXPOSED AND APPORVED FOR REPAIR. THE PROJECT HAS AN ALLOWANCE FOR SUCH REHABILITAION. SEE BID FORM FOR DETAILS.

3 REMOVE GROUT FLOOR TO EXPOSE BASE CONCRETE SURFACE. THICKNESS AS SHOWN ON 1977 RECORD DRAWING SHEET S-12 FROM ADDITION NO. 4 (CONTRACT 501-S): 2"+-.

THE DRAWINGS IN THIS SET ARE RECORD DRAWINGS. THEY ARE CONSTRUCTION CONTRACT DRAWINGS WHICH HAVE BEEN REVISED BASED ON AVAILABLE FIELD INFORMATION RECORDED BY OTHERS DURING CONSTRUCTION OF THIS CONTRACT. THERE HAS BEEN NO VERIFICATION OF DIMENSIONS SHOWN ON THE CONSTRUCTION DRAWINGS OR THE ACCURACY/COMPLETENESS OF THE FIELD INFORMATION RECEIVED.

SIGNATURE 2/7/2023 DATE

AS-BUILT REPLACEMENT SHEET

PROFESSIONAL CERTIFICATION

THIS DRAWING WAS ORIGINALLY APPROVED FOR CONSTRUCTION AND SEALED BY BRIAN M. BACLCHUNAS, A REGISTERED PROFESSIONAL ENGINEER IN THE STATE OF MARYLAND, NO. 200406

NOTICE TO CONTRACTORS

- PROJECT ELEVATIONS ARE BASED ON NAVD88 AND HOWARD COUNTY'S BENCHMARK SYSTEM
- PREVIOUS PROJECTS USED OTHER DATUMS
- APPLY THE FOLLOWING CONVERSIONS WHEN USING PREVIOUS CONTRACT DRAWINGS:
  - ADDITION NO. 6: SUBTRACT 0.80 FT
  - PRIOR ADDITIONS: SUBTRACT 1.04 FT

DEPARTMENT OF PUBLIC WORKS
HOWARD COUNTY, MARYLAND

CHIEF, BUREAU OF UTILITIES DATE

DES: KLP
DRN: REE
CHK: JRK
DATE: 12/2016

DATE	REV	DESCRIPTION
07/2019		RECORD DRAWING

DEMOLITION

GRAVITY THICKENER NO. 1 DEMOLITION SECTIONS

LITTLE PATUXENT WATER RECLAMATION PLANT
8TH ADDITION
BIOSOLIDS PROCESSING FACILITIES - PHASE I

CAPITAL PROJECT S-6295
CONTRACT NO. 24-4935

ELECTION DISTRICT NO. 6
HOWARD COUNTY, MARYLAND

SCALE AS SHOWN

SHEET 47 OF 463

X-231

BIM 360://10054364 – Little Patuxent WRP 8th Addition/264591_100_D_V18.rvt
1/11/2022 10:03:56 AM

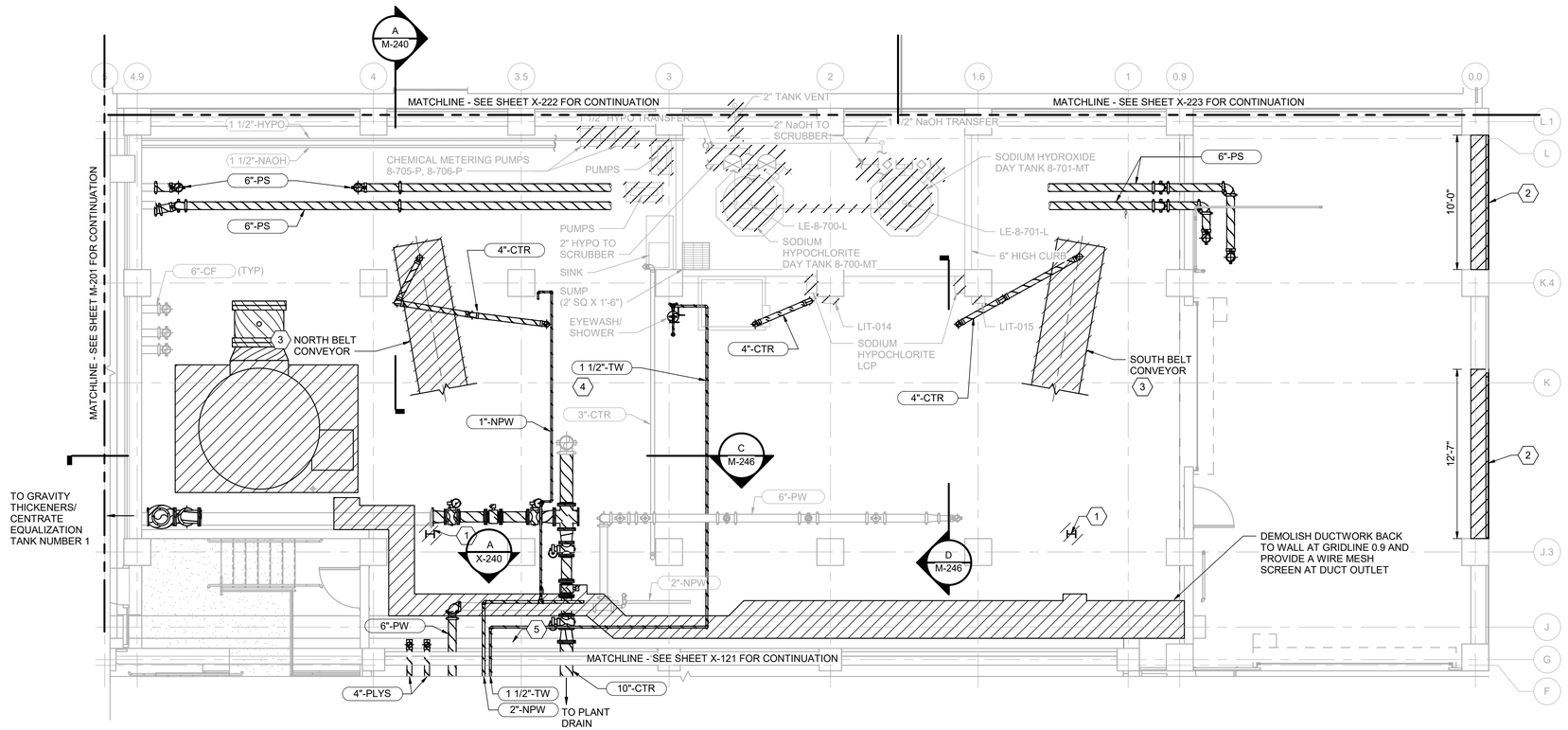

PLAN AT EL 141.20
3/16" = 1'-0"

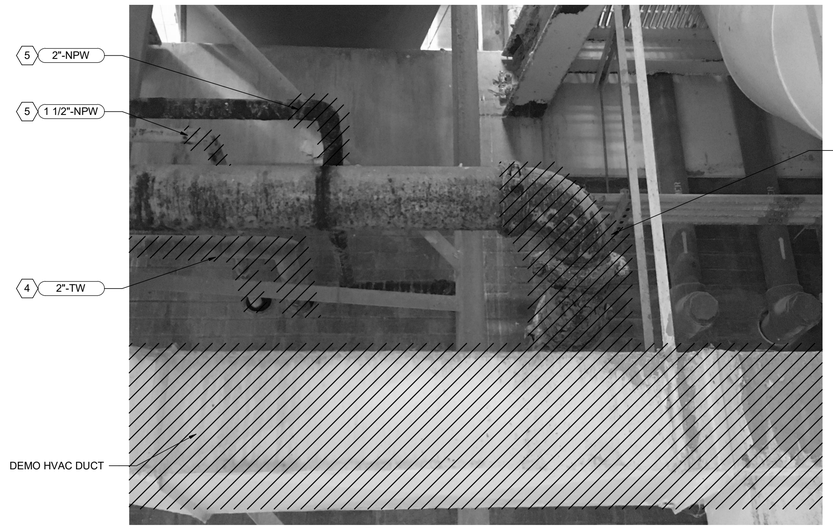

A PIPE DEMO
1/4" = 1'-0"

KEY NOTES (X)

1 DEMOLISH EXITING STEEL COLUMN AFTER CONVEYOR IS REMOVED.
2 DEMOLISH EXISTING CONCRETE CURB AND EXTERIOR WALL PANEL TO INSTALL NEW FRAMING AND ROLL UP DOOR.
3 DEMOLISH EXISTING BELT CONVEYOR AND APPURTENANCES. COORDINATE LIMITS WITH STRUCTURAL AND ARCHITECTURAL. DEMOLISH ALL SUPPORT STEEL AND CONCRETE. SOUTH CONVEYOR IS LAST TO BE REMOVED.
4 DEMOLISH 1-1/2" TW PIPING TO EYEWASH/SHOWER. SEE PLUMBING DRAWINGS FOR NEW WORK.
5 DEMOLISH 6" FLUSHING WATER, (PW) 2" LUBE OIL COOLING WATER (NPW) AND 1-1/2" COOL WATER RETURN PIPING BETWEEN WEST WALL OF CENTRIFUGE BUILDING AND TIE-IN POINTS FOR MODIFIED PIPING. SEE M-240 FOR NEW WORK.

THE DRAWINGS IN THIS SET ARE RECORD DRAWINGS. THEY ARE CONSTRUCTION CONTRACT DRAWINGS WHICH HAVE BEEN REVISED BASED ON AVAILABLE FIELD INFORMATION RECORDED BY OTHERS DURING CONSTRUCTION OF THIS CONTRACT. THERE HAS BEEN NO VERIFICATION OF DIMENSIONS SHOWN ON THE CONSTRUCTION DRAWINGS OR THE ACCURACY/COMPLETENESS OF THE FIELD INFORMATION RECEIVED.

SIGNATURE 2/7/2023 DATE

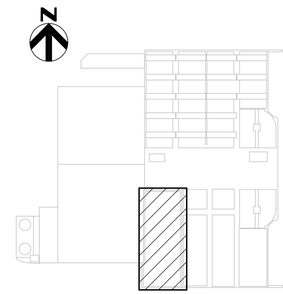

KEY PLAN

AS-BUILT REPLACEMENT SHEET

PROFESSIONAL CERTIFICATION
THIS DRAWING WAS ORIGINALLY APPROVED FOR CONSTRUCTION AND SEALED BY BRIAN M. BACLCHUNAS, A REGISTERED PROFESSIONAL ENGINEER IN THE STATE OF MARYLAND, NO. 200406

NOTICE TO CONTRACTORS
- PROJECT ELEVATIONS ARE BASED ON NAVD88 AND HOWARD COUNTY'S BENCHMARK SYSTEM
- PREVIOUS PROJECTS USED OTHER DATUMS
- APPLY THE FOLLOWING CONVERSIONS WHEN USING PREVIOUS CONTRACT DRAWINGS:
  - ADDITION NO. 6: SUBTRACT 0.80 FT
  - PRIOR ADDITIONS: SUBTRACT 1.04 FT

DEPARTMENT OF PUBLIC WORKS
HOWARD COUNTY, MARYLAND

CHIEF, BUREAU OF UTILITIES DATE

DES: CJM
DRN: REE
CHK: JRK
DATE: 12/2016

DATE	REV	DESCRIPTION
07/2019		RECORD DRAWING

DEMOLITION

SOLIDS SCREENING AREA PLAN - EL 141.20

LITTLE PATUXENT WATER RECLAMATION PLANT
8TH ADDITION
BIOSOLIDS PROCESSING FACILITIES - PHASE I

CAPITAL PROJECT S-6295
CONTRACT NO. 24-4935

ELECTION DISTRICT NO. 6
HOWARD COUNTY, MARYLAND

SCALE AS SHOWN

SHEET 48 OF 463

X-240

BIM 360://10054364 – Little Patuxent WRP 8th Addition/284591_100_D_V18.rvt
1/11/2022 10:04:04 AM

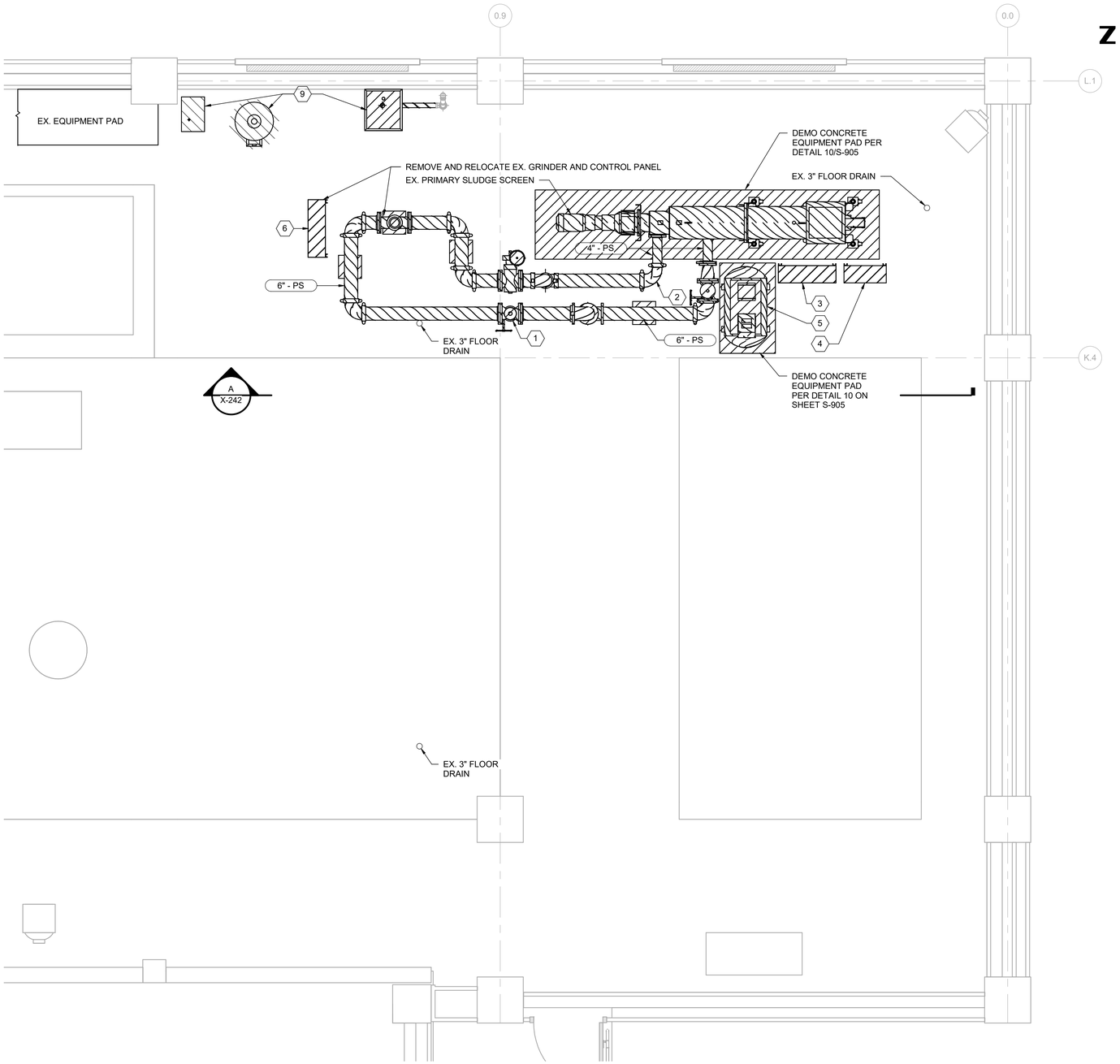

PRIMARY SLUDGE SCREEN DEMOLITION PLAN - PLAN AT EL 166.20

3/8" = 1'-0"

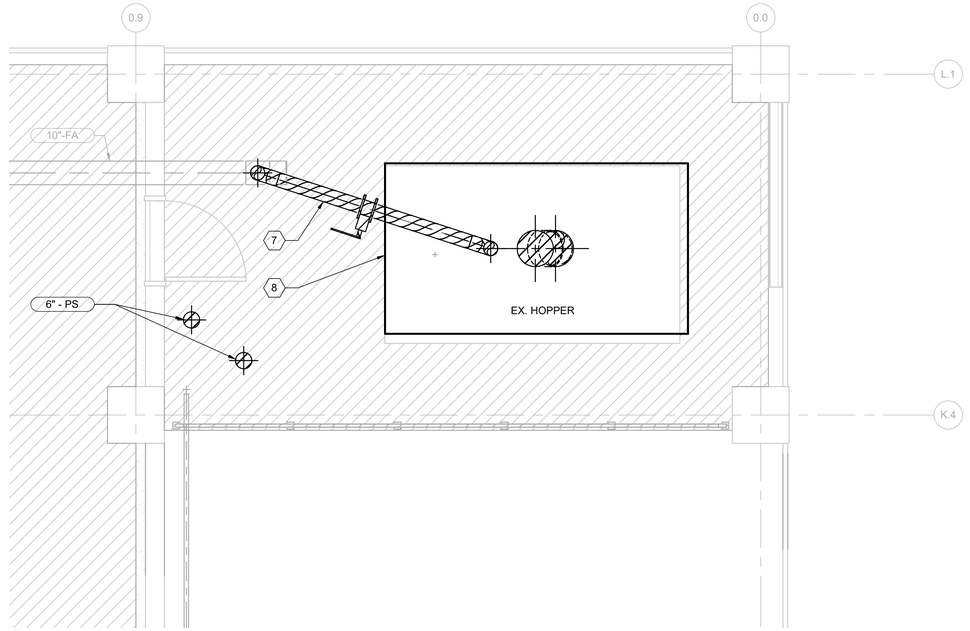

PRIMARY SLUDGE SCREEN DEMOLITION PLAN - PLAN AT EL 155.20

3/8" = 1'-0"

GENERAL NOTES:

1. CONTRACTOR SHALL NOTIFY LPWRF PRIOR TO BEGINNING ANY DEMOLITION ACTIVITIES.
2. EXISTING GRINDER AND GRINDER CONTROL PANEL SHALL BE REMOVED AND REINSTALLED. SEE DRAWING M-242 FOR ADDITIONAL INFORMATION.
3. CONTRACTOR SHALL PROTECT EXISTING FLOOR DRAINS DURING DEMOLITION ACTIVITIES.

KEYNOTES (X)

1. 6" PLUG VALVE (TYP.)
2. 6" x 4" REDUCING 90° BEND
3. PRIMARY SLUDGE SCREEN CONTROL PANEL
4. PRIMARY SLUDGE SCREEN COMPRESSED AIR PANEL
5. AIR COMPRESSOR
6. GRINDER CONTROL PANEL
7. DEMOLISH 6" ODOR CONTROL PIPING
8. DEMOLISH HOPPER COVER
9. RELOCATE SINK, WATER HEATER, AND HOSE BIBB. REFER TO PLUMBING DRAWINGS FOR NEW WORK. DEMOLISH 1" SUPPLY PIPING AND 2" WASTE PIPING BACK TO NEAREST TEE AT LEVEL BELOW AND CAP PIPING AT TEE.

SCALE: 1/8" = 1'-0"

THE DRAWINGS IN THIS SET ARE RECORD DRAWINGS. THEY ARE CONSTRUCTION CONTRACT DRAWINGS WHICH HAVE BEEN REVISED BASED ON AVAILABLE FIELD INFORMATION RECORDED BY OTHERS DURING CONSTRUCTION OF THIS CONTRACT. THERE HAS BEEN NO VERIFICATION OF DIMENSIONS SHOWN ON THE CONSTRUCTION DRAWINGS OR THE ACCURACY/COMPLETENESS OF THE FIELD INFORMATION RECEIVED.

SIGNATURE — DATE 2/7/2022

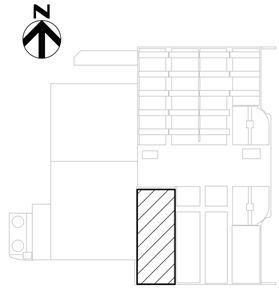

KEY PLAN

JMT HDR

AS-BUILT REPLACEMENT SHEET

PROFESSIONAL CERTIFICATION

THIS DRAWING WAS ORIGINALLY APPROVED FOR CONSTRUCTION AND SEALED BY BRIAN M. BACLCHUNAS, A REGISTERED PROFESSIONAL ENGINEER IN THE STATE OF MARYLAND, NO. 200406

NOTICE TO CONTRACTORS

- PROJECT ELEVATIONS ARE BASED ON NAVD88 AND HOWARD COUNTY'S BENCHMARK SYSTEM
- PREVIOUS PROJECTS USED OTHER DATUMS
- APPLY THE FOLLOWING CONVERSIONS WHEN USING PREVIOUS CONTRACT DRAWINGS:
  - ADDITION NO. 6: SUBTRACT 0.80 FT
  - PRIOR ADDITIONS: SUBTRACT 1.04 FT

DEPARTMENT OF PUBLIC WORKS
HOWARD COUNTY, MARYLAND

CHIEF, BUREAU OF UTILITIES — DATE

DES: KSB
DRN: DPG
CHK: BA
DATE: 2/17/2017

DATE	REV	DESCRIPTION
07/2019		RECORD DRAWING

DEMOLITION

SOLIDS SCREENING AREA PLANS - EL 166.20 & EL 155.20

LITTLE PATUXENT WATER RECLAMATION PLANT
8TH ADDITION
BIOSOLIDS PROCESSING FACILITIES - PHASE I

CAPITAL PROJECT S-6295
CONTRACT NO. 24-4935

ELECTION DISTRICT NO. 6
HOWARD COUNTY, MARYLAND

SCALE AS SHOWN

SHEET 49 OF 463

X-241

BIM 360://10054364 – Little Patuxent WRP 8th Addition/2854591_100_D_V18_JMT.rvt
1/11/2022 2:36:36 PM

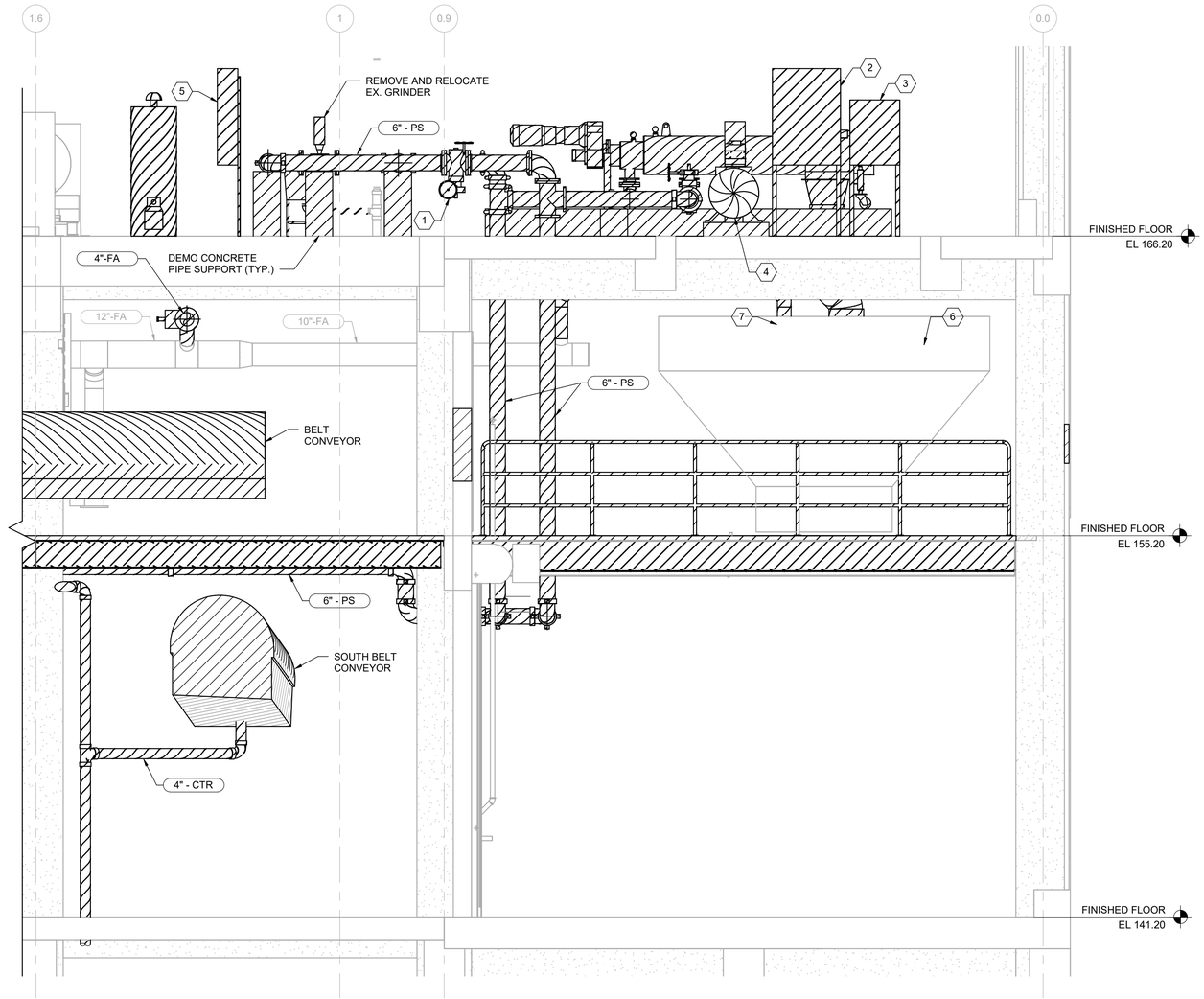

A / X-241 PRIMARY SLUDGE SCREEN DEMOLITION SECTION

3/8" = 1'-0"

GENERAL NOTES:

1. CONTRACTOR SHALL NOTIFY LPWRF PRIOR TO BEGINNING ANY DEMOLITION ACTIVITIES.
2. EXISTING GRINDER AND GRINDER CONTROL PANEL SHALL BE REMOVED AND REINSTALLED. SEE DRAWING M-245 FOR ADDITIONAL INFORMATION.

KEYNOTES (X)

1 6" PLUG VALVE (TYP.)
2 PRIMARY SLUDGE SCREEN CONTROL PANEL
3 PRIMARY SLUDGE SCREEN COMPRESSED AIR PANEL
4 AIR COMPRESSOR
5 GRINDER CONTROL PANEL
6 DEMOLISH EXISTING HOPPER COVER
7 DEMOLISH 6" ODOR CONTROL PIPING

1' 0 1' 2' 3'
SCALE: 3/8" = 1'-0"

THE DRAWINGS IN THIS SET ARE RECORD DRAWINGS. THEY ARE CONSTRUCTION CONTRACT DRAWINGS WHICH HAVE BEEN REVISED BASED ON AVAILABLE FIELD INFORMATION RECORDED BY OTHERS DURING CONSTRUCTION OF THIS CONTRACT. THERE HAS BEEN NO VERIFICATION OF DIMENSIONS SHOWN ON THE CONSTRUCTION DRAWINGS OR THE ACCURACY/COMPLETENESS OF THE FIELD INFORMATION RECEIVED.

SIGNATURE — DATE 2/7/2022

AS-BUILT REPLACEMENT SHEET

PROFESSIONAL CERTIFICATION

THIS DRAWING WAS ORIGINALLY APPROVED FOR CONSTRUCTION AND SEALED BY BRIAN M. BACLCHUNAS, A REGISTERED PROFESSIONAL ENGINEER IN THE STATE OF MARYLAND, NO. 200406

NOTICE TO CONTRACTORS

- PROJECT ELEVATIONS ARE BASED ON NAVD88 AND HOWARD COUNTY'S BENCHMARK SYSTEM
- PREVIOUS PROJECTS USED OTHER DATUMS
- APPLY THE FOLLOWING CONVERSIONS WHEN USING PREVIOUS CONTRACT DRAWINGS:
  - ADDITION NO. 6: SUBTRACT 0.80 FT
  - PRIOR ADDITIONS: SUBTRACT 1.04 FT

DEPARTMENT OF PUBLIC WORKS
HOWARD COUNTY, MARYLAND

CHIEF, BUREAU OF UTILITIES — DATE

DES: KSB
DRN: DPG
CHK: BA
DATE: 2/17/2017

DATE	REV	DESCRIPTION
07/2019		RECORD DRAWING

DEMOLITION

SOLIDS SCREENING AREA SECTION

LITTLE PATUXENT WATER RECLAMATION PLANT
8TH ADDITION
BIOSOLIDS PROCESSING FACILITIES - PHASE I

CAPITAL PROJECT S-6295
CONTRACT NO. 24-4935

ELECTION DISTRICT NO. 6
HOWARD COUNTY, MARYLAND

SCALE AS SHOWN

SHEET 50 OF 463

X-242

BIM 360://10054364 – Little Patuxent WRP 8th Addition/264591_100_D_V18_JMT.rvt
1/11/2022 2:36:37 PM

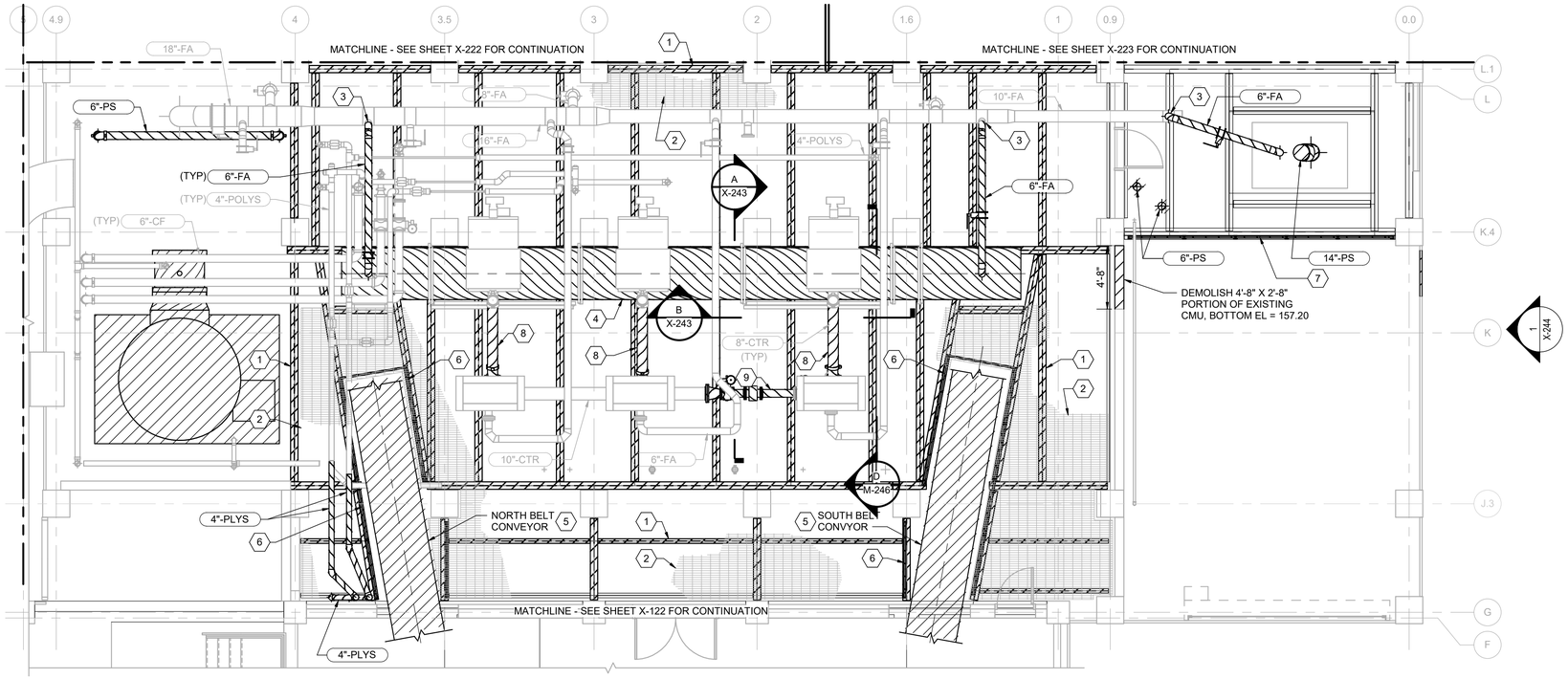

PLAN AT EL 155.20

3/16" = 1'-0"

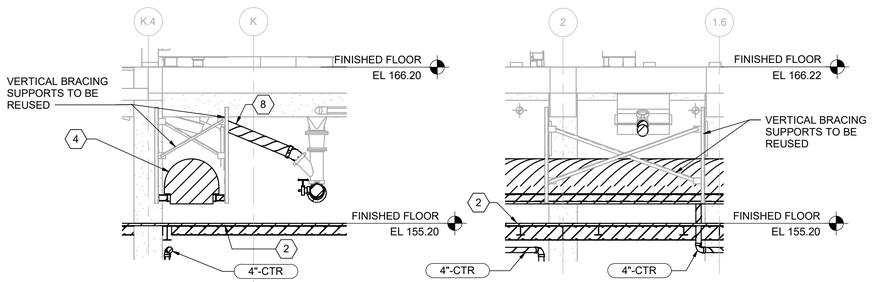

A X-243 SECTION (SIM, 5 PLACES)

3/16" = 1'-0"

B X-243 SECTION (SIM, 2 PLACES)

3/16" = 1'-0"

KEY NOTES (X)

1 DEMOLISH EXISTING STEEL FRAMING
2 REMOVE EXISTING 2" GRATING, SALVAGE FOR USE WITH NEW STEEL. SEE STRUCTURAL DRAWINGS.
3 CAP EXISTING DUCTWORK
4 DEMOLISH EXISTING BELT CONVEYOR AND APPURTUNANCES. VERTICAL BRACING TO BE REUSED.
5 DEMOLISH EXISTING BELT CONVEYOR AND APPURTENANCES. COORDINATE LIMITS WITH STRUCTURAL AND ARCHITECTURAL. DEMOLISH ALL SUPPORT STEEL AND CONCRETE. SOUTH CONVEYOR IS LAST TO BE REMOVED.
6 DEMOLISH EXISTING RAILING
7 REMOVE AND RELOCATE RAILING, SEE STRUCTURAL DRAWINGS.
8 DEMOLISH 8" PIPE FROM SOLIDS DISCHARGE CHUTE. CAP 10" x 8" WYE.
9 DEMOLISH REDUCERS, PIPE, VALVE AND FLOW METER.

THE DRAWINGS IN THIS SET ARE RECORD DRAWINGS. THEY ARE CONSTRUCTION CONTRACT DRAWINGS WHICH HAVE BEEN REVISED BASED ON AVAILABLE FIELD INFORMATION RECORDED BY OTHERS DURING CONSTRUCTION OF THIS CONTRACT. THERE HAS BEEN NO VERIFICATION OF DIMENSIONS SHOWN ON THE CONSTRUCTION DRAWINGS OR THE ACCURACY/COMPLETENESS OF THE FIELD INFORMATION RECEIVED.

SIGNATURE — DATE 2/7/2023

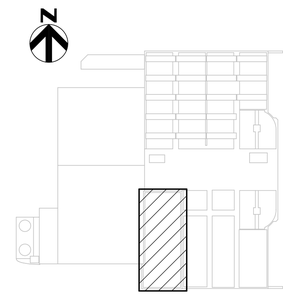

KEY PLAN

AS-BUILT REPLACEMENT SHEET

PROFESSIONAL CERTIFICATION

THIS DRAWING WAS ORIGINALLY APPROVED FOR CONSTRUCTION AND SEALED BY BRIAN M. BACLCHUNAS, A REGISTERED PROFESSIONAL ENGINEER IN THE STATE OF MARYLAND, NO. 200406

NOTICE TO CONTRACTORS

- PROJECT ELEVATIONS ARE BASED ON NAVD88 AND HOWARD COUNTY'S BENCHMARK SYSTEM
- PREVIOUS PROJECTS USED OTHER DATUMS
- APPLY THE FOLLOWING CONVERSIONS WHEN USING PREVIOUS CONTRACT DRAWINGS:
  - ADDITION NO. 6: SUBTRACT 0.80 FT
  - PRIOR ADDITIONS: SUBTRACT 1.04 FT

DEPARTMENT OF PUBLIC WORKS
HOWARD COUNTY, MARYLAND

CHIEF, BUREAU OF UTILITIES — DATE

DES: CJM
DRN: REE
CHK: JRK
DATE: 12/2016

DATE	REV	DESCRIPTION
07/2019		RECORD DRAWING

DEMOLITION

DEWATERING AND DRYING AREA PLAN EL. 155.20 AND SECTIONS

LITTLE PATUXENT WATER RECLAMATION PLANT
8TH ADDITION
BIOSOLIDS PROCESSING FACILITIES - PHASE I

CAPITAL PROJECT S-6295
CONTRACT NO. 24-4935

ELECTION DISTRICT NO. 6
HOWARD COUNTY, MARYLAND

SCALE AS SHOWN

SHEET 51 OF 463

X-243

BIM 360://10054364 – Little Patuxent WRP 8th Addition/264591_100_D_V18.rvt
1/11/2022 10:04:09 AM

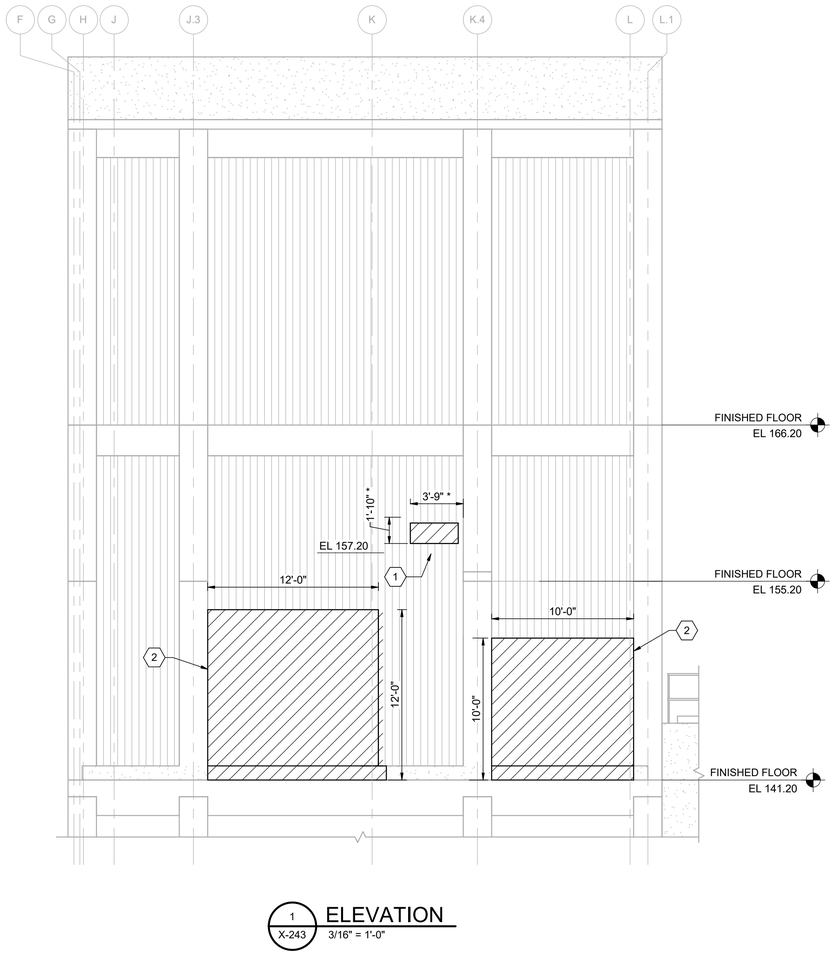

1 / X-243 ELEVATION
3/16" = 1'-0"

KEY NOTES (X)

1 CREATE OPENING FOR CONVEYORS. COORDINATE SIZE AND LOCATION. SEE STRUCTURAL AND ARCHITECHTURAL FOR ADDITIONAL INFORMATION.

2 DEMOLISH EXISTING CONCRETE CURB AND EXTERIOR WALL PANEL TO INSTALL NEW FRAMING AND ROLL UP DOOR.

THE DRAWINGS IN THIS SET ARE RECORD DRAWINGS. THEY ARE CONSTRUCTION CONTRACT DRAWINGS WHICH HAVE BEEN REVISED BASED ON AVAILABLE FIELD INFORMATION RECORDED BY OTHERS DURING CONSTRUCTION OF THIS CONTRACT. THERE HAS BEEN NO VERIFICATION OF DIMENSIONS SHOWN ON THE CONSTRUCTION DRAWINGS OR THE ACCURACY/COMPLETENESS OF THE FIELD INFORMATION RECEIVED.

SIGNATURE 2/7/2022 DATE

AS-BUILT REPLACEMENT SHEET

PROFESSIONAL CERTIFICATION

THIS DRAWING WAS ORIGINALLY APPROVED FOR CONSTRUCTION AND SEALED BY BRIAN M. BACLCHUNAS, A REGISTERED PROFESSIONAL ENGINEER IN THE STATE OF MARYLAND, NO. 200406

NOTICE TO CONTRACTORS

- PROJECT ELEVATIONS ARE BASED ON NAVD88 AND HOWARD COUNTY'S BENCHMARK SYSTEM
- PREVIOUS PROJECTS USED OTHER DATUMS
- APPLY THE FOLLOWING CONVERSIONS WHEN USING PREVIOUS CONTRACT DRAWINGS:
  - ADDITION NO. 6: SUBTRACT 0.80 FT
  - PRIOR ADDITIONS: SUBTRACT 1.04 FT

DEPARTMENT OF PUBLIC WORKS
HOWARD COUNTY, MARYLAND

CHIEF, BUREAU OF UTILITIES DATE

DES: ADP
DRN: SLB
CHK: JRK
DATE: 12/2016

DATE	REV	DESCRIPTION
07/2019		RECORD DRAWING

DEMOLITION

DEWATERING AND DRYING AREA ELEVATION

LITTLE PATUXENT WATER RECLAMATION PLANT
8TH ADDITION
BIOSOLIDS PROCESSING FACILITIES - PHASE I

CAPITAL PROJECT S-6295
CONTRACT NO. 24-4935

ELECTION DISTRICT NO. 6
HOWARD COUNTY, MARYLAND

SCALE AS SHOWN

SHEET 52 OF 463

X-244

BIM 360://10054364 – Little Patuxent WRP 8th Addition/264591_100_D_V18.rvt
1/11/2022 10:04:10 AM

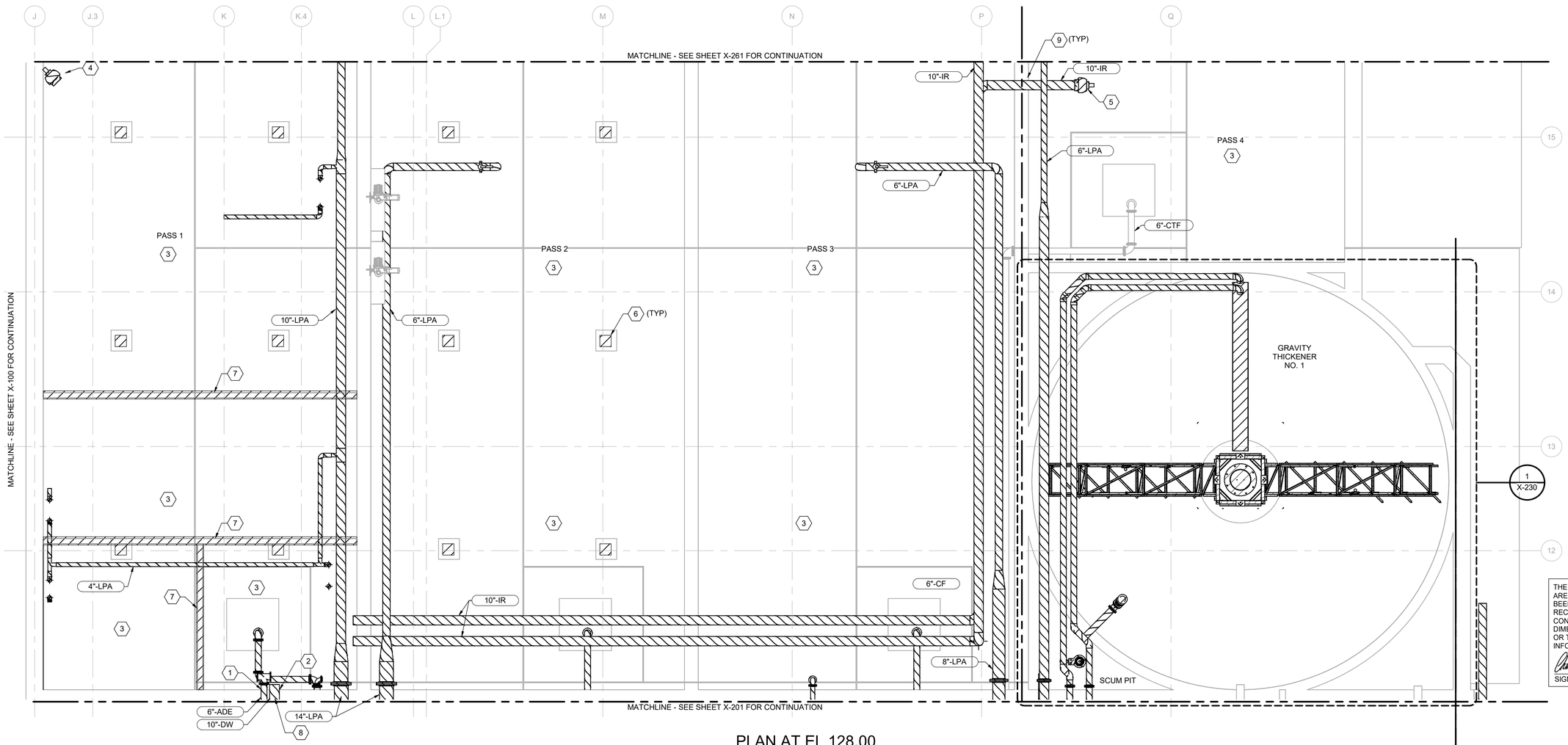

GENERAL NOTES

1. AFTER DEMOLITION, REPAIR UNUSED PENETRATIONS IN CONCRETE PER DETAIL 9/S-903.

KEY NOTES (X)

1 PATCH OPENING THROUGH TANK WALL
2 DEMOLISH PLATE AND PATCH OPENING THROUGH TANK WALL
3 REMOVE ALL DIFFUSER EQUIPMENT IN THIS ZONE. CONTRACTOR TO MAKE ANY CONCRETE REPAIRS AS REQUIRED.
4 REMOVE SUBMERSIBLE MIXER, GUIDE RAILS, DAVIT CRANE AND APPURTENANCES.
5 REMOVE RECIRCULATION PUMP, GUIDE RAILS, DAVIT CRANE AND APPURTENANCES.
6 DEMOLISH STEEL COLUMNS. REFER TO STRUCTURAL DRAWINGS.
7 REMOVE FRP BAFFLE WALLS AND STEEL FRAMING. REPAIR CONCRETE AS REQUIRED.
8 FOR ADDITIONAL DEMOLITION NOTES, SEE 3/M-261.
9 PATCH WALL OPENING. SEE DETAIL 9/S-903.

THE DRAWINGS IN THIS SET ARE RECORD DRAWINGS. THEY ARE CONSTRUCTION CONTRACT DRAWINGS WHICH HAVE BEEN REVISED BASED ON AVAILABLE FIELD INFORMATION RECORDED BY OTHERS DURING CONSTRUCTION OF THIS CONTRACT. THERE HAS BEEN NO VERIFICATION OF DIMENSIONS SHOWN ON THE CONSTRUCTION DRAWINGS OR THE ACCURACY/COMPLETENESS OF THE FIELD INFORMATION RECEIVED.

SIGNATURE — DATE 3/7/2023

PLAN AT EL 128.00

3/16" = 1'-0"

KEY PLAN

AS-BUILT REPLACEMENT SHEET

PROFESSIONAL CERTIFICATION

THIS DRAWING WAS ORIGINALLY APPROVED FOR CONSTRUCTION AND SEALED BY BRIAN M. BACLCHUNAS, A REGISTERED PROFESSIONAL ENGINEER IN THE STATE OF MARYLAND, NO. 200406

NOTICE TO CONTRACTORS

- PROJECT ELEVATIONS ARE BASED ON NAVD88 AND HOWARD COUNTY'S BENCHMARK SYSTEM
- PREVIOUS PROJECTS USED OTHER DATUMS
- APPLY THE FOLLOWING CONVERSIONS WHEN USING PREVIOUS CONTRACT DRAWINGS:
  - ADDITION NO. 6: SUBTRACT 0.80 FT
  - PRIOR ADDITIONS: SUBTRACT 1.04 FT

DEPARTMENT OF PUBLIC WORKS
HOWARD COUNTY, MARYLAND

CHIEF, BUREAU OF UTILITIES — DATE

DES: KLP
DRN: REE
CHK: JRK
DATE: 12/2016

DATE	REV	DESCRIPTION
07/2019		RECORD DRAWING

DEMOLITION

DEAMMONIFICATION LOWER PARTIAL PLAN 1

LITTLE PATUXENT WATER RECLAMATION PLANT
8TH ADDITION
BIOSOLIDS PROCESSING FACILITIES - PHASE I

CAPITAL PROJECT S-6295
CONTRACT NO. 24-4935

ELECTION DISTRICT NO. 6
HOWARD COUNTY, MARYLAND

SCALE AS SHOWN

SHEET 53 OF 463

X-260

BIM 360://10054364 – Little Patuxent WRP 8th Addition/264591_100_D_V18.rvt
1/11/2022 10:04:14 AM

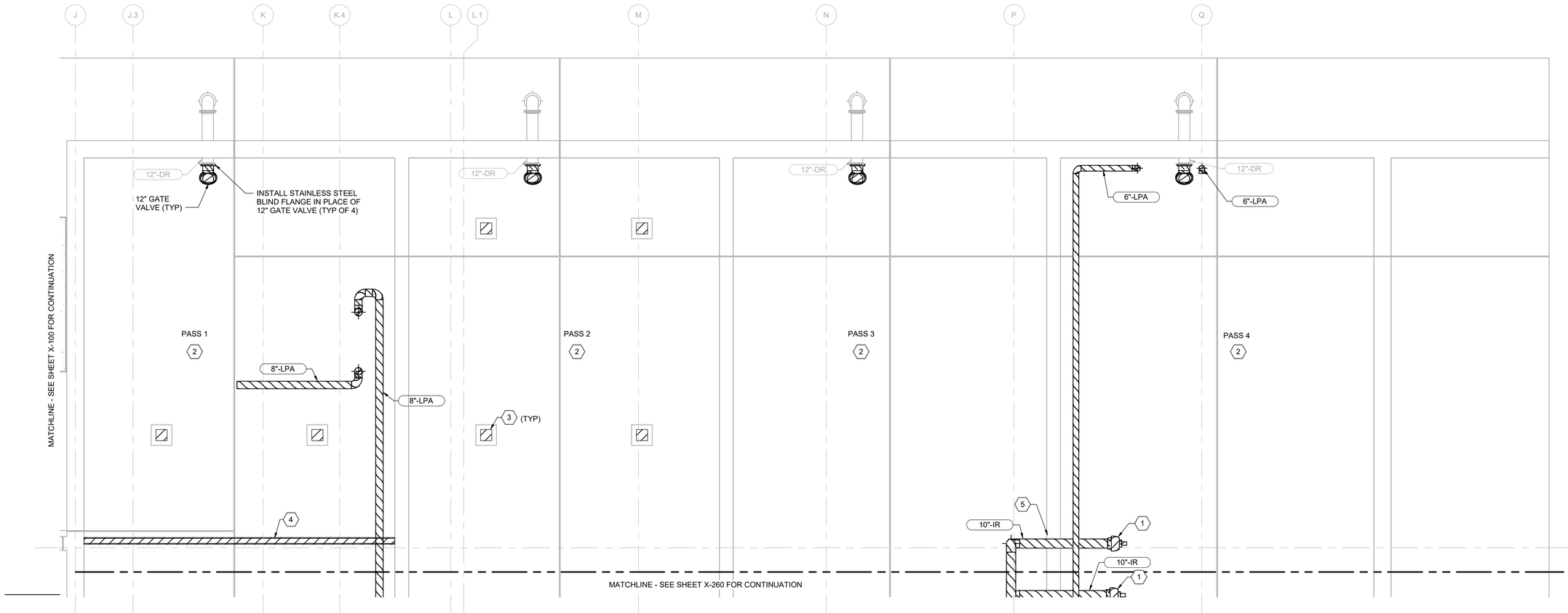

PLAN AT EL 128.00

3/16" = 1'-0"

N

GENERAL NOTES

1. AFTER DEMOLITION, REPAIR UNUSED PENETRATIONS IN CONCRETE PER DETAIL 9/S-903.

KEY NOTES (X)

1 REMOVE RECIRCULATION PUMP, GUIDE RAILS, DAVIT CRANE AND APPURTENANCES.
2 REMOVE ALL DIFFUSER EQUIPMENT IN THIS ZONE. CONTRACTOR TO MAKE ANY CONCRETE REPAIRS AS REQUIRED.
3 DEMOLISH STEEL COLUMNS. REFER TO STRUCTURAL DRAWINGS.
4 REMOVE FRP BAFFLE WALLS AND STEEL FRAMING. REPAIR CONCRETE AS REQUIRED.
5 PATCH WALL OPENING. SEE DETAIL 9/S-903.

THE DRAWINGS IN THIS SET ARE RECORD DRAWINGS. THEY ARE CONSTRUCTION CONTRACT DRAWINGS WHICH HAVE BEEN REVISED BASED ON AVAILABLE FIELD INFORMATION RECORDED BY OTHERS DURING CONSTRUCTION OF THIS CONTRACT. THERE HAS BEEN NO VERIFICATION OF DIMENSIONS SHOWN ON THE CONSTRUCTION DRAWINGS OR THE ACCURACY/COMPLETENESS OF THE FIELD INFORMATION RECEIVED.

SIGNATURE 2/7/2023 DATE

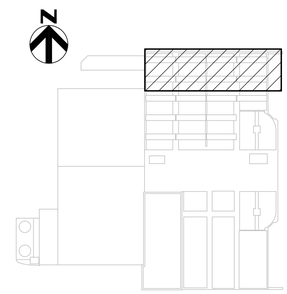

KEY PLAN

AS-BUILT REPLACEMENT SHEET

PROFESSIONAL CERTIFICATION

THIS DRAWING WAS ORIGINALLY APPROVED FOR CONSTRUCTION AND SEALED BY BRIAN M. BACLCHUNAS, A REGISTERED PROFESSIONAL ENGINEER IN THE STATE OF MARYLAND, NO. 200406

NOTICE TO CONTRACTORS

- PROJECT ELEVATIONS ARE BASED ON NAVD88 AND HOWARD COUNTY'S BENCHMARK SYSTEM
- PREVIOUS PROJECTS USED OTHER DATUMS
- APPLY THE FOLLOWING CONVERSIONS WHEN USING PREVIOUS CONTRACT DRAWINGS:
  - ADDITION NO. 6: SUBTRACT 0.80 FT
  - PRIOR ADDITIONS: SUBTRACT 1.04 FT

DEPARTMENT OF PUBLIC WORKS
HOWARD COUNTY, MARYLAND

CHIEF, BUREAU OF UTILITIES DATE

DES: KLP
DRN: REE
CHK: JRK
DATE: 12/2016

DATE	REV	DESCRIPTION
07/2019		RECORD DRAWING

DEMOLITION

DEAMMONIFICATION LOWER PARTIAL PLAN 2

LITTLE PATUXENT WATER RECLAMATION PLANT
8TH ADDITION
BIOSOLIDS PROCESSING FACILITIES - PHASE I

CAPITAL PROJECT S-6295
CONTRACT NO. 24-4935

ELECTION DISTRICT NO. 6
HOWARD COUNTY, MARYLAND

SCALE AS SHOWN

SHEET 54 OF 463

X-261

BIM 360://10054364 – Little Patuxent WRP 8th Addition/264591_100_D_V18.rvt
1/11/2022 10:04:16 AM

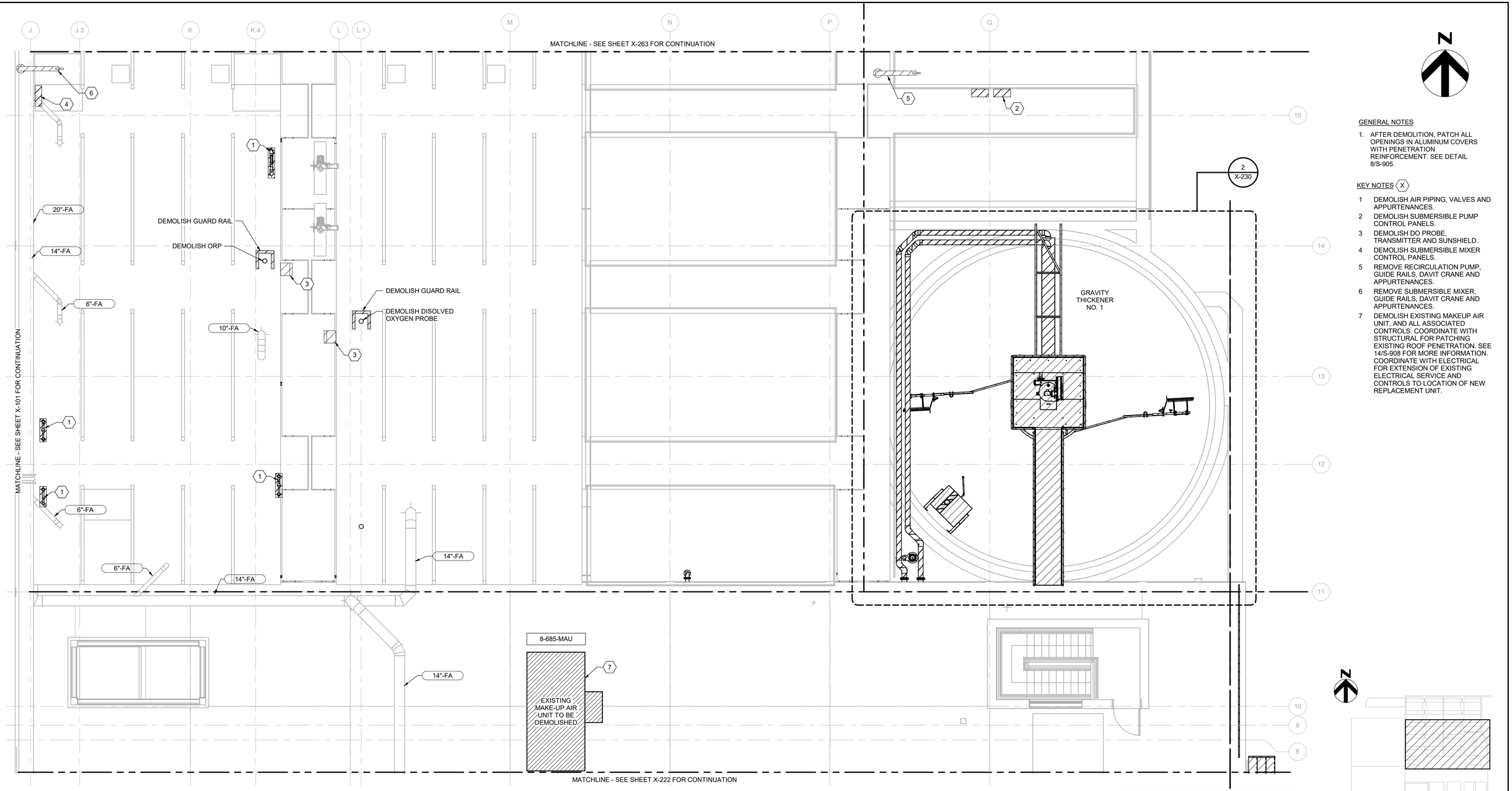

PLAN AT EL 146.00

3/16" = 1'-0"

GENERAL NOTES

1. AFTER DEMOLITION, PATCH ALL OPENINGS IN ALUMINUM COVERS WITH PENETRATION REINFORCEMENT. SEE DETAIL 8/S-905.

KEY NOTES (X)

1 DEMOLISH AIR PIPING, VALVES AND APPURTENANCES.
2 DEMOLISH SUBMERSIBLE PUMP CONTROL PANELS.
3 DEMOLISH DO PROBE, TRANSMITTER AND SUNSHIELD.
4 DEMOLISH SUBMERSIBLE MIXER CONTROL PANELS.
5 REMOVE RECIRCULATION PUMP, GUIDE RAILS, DAVIT CRANE AND APPURTENANCES.
6 REMOVE SUBMERSIBLE MIXER, GUIDE RAILS, DAVIT CRANE AND APPURTENANCES.
7 DEMOLISH EXISTING MAKEUP AIR UNIT, AND ALL ASSOCIATED CONTROLS. COORDINATE WITH STRUCTURAL FOR PATCHING EXISTING ROOF PENETRATION. SEE 14/S-908 FOR MORE INFORMATION. COORDINATE WITH ELECTRICAL FOR EXTENSION OF EXISTING ELECTRICAL SERVICE AND CONTROLS TO LOCATION OF NEW REPLACEMENT UNIT.

THE DRAWINGS IN THIS SET ARE RECORD DRAWINGS. THEY ARE CONSTRUCTION CONTRACT DRAWINGS WHICH HAVE BEEN REVISED BASED ON AVAILABLE FIELD INFORMATION RECORDED BY OTHERS DURING CONSTRUCTION OF THIS CONTRACT. THERE HAS BEEN NO VERIFICATION OF DIMENSIONS SHOWN ON THE CONSTRUCTION DRAWINGS OR THE ACCURACY/COMPLETENESS OF THE FIELD INFORMATION RECEIVED.

SIGNATURE 2/7/2023 DATE

KEY PLAN

AS-BUILT REPLACEMENT SHEET

PROFESSIONAL CERTIFICATION

THIS DRAWING WAS ORIGINALLY APPROVED FOR CONSTRUCTION AND SEALED BY BRIAN M. BACLCHUNAS, A REGISTERED PROFESSIONAL ENGINEER IN THE STATE OF MARYLAND, NO. 200406

NOTICE TO CONTRACTORS

- PROJECT ELEVATIONS ARE BASED ON NAVD88 AND HOWARD COUNTY'S BENCHMARK SYSTEM
- PREVIOUS PROJECTS USED OTHER DATUMS
- APPLY THE FOLLOWING CONVERSIONS WHEN USING PREVIOUS CONTRACT DRAWINGS:
  - ADDITION NO. 6: SUBTRACT 0.80 FT
  - PRIOR ADDITIONS: SUBTRACT 1.04 FT

DEPARTMENT OF PUBLIC WORKS
HOWARD COUNTY, MARYLAND

CHIEF, BUREAU OF UTILITIES DATE

DES: KLP
DRN: REE
CHK: JRK
DATE: 12/2016

DATE	REV	DESCRIPTION
07/2019		RECORD DRAWING

DEMOLITION

DEAMMONIFICATION TOP PARTIAL PLAN 1

LITTLE PATUXENT WATER RECLAMATION PLANT
8TH ADDITION
BIOSOLIDS PROCESSING FACILITIES - PHASE I

CAPITAL PROJECT S-6295
CONTRACT NO. 24-4935

ELECTION DISTRICT NO. 6
HOWARD COUNTY, MARYLAND

SCALE AS SHOWN

SHEET 55 OF 463

X-262

BIM 360://10054364 – Little Patuxent WRP 8th Addition/264591_100_D_Y18.rvt
1/11/2022 10:04:21 AM

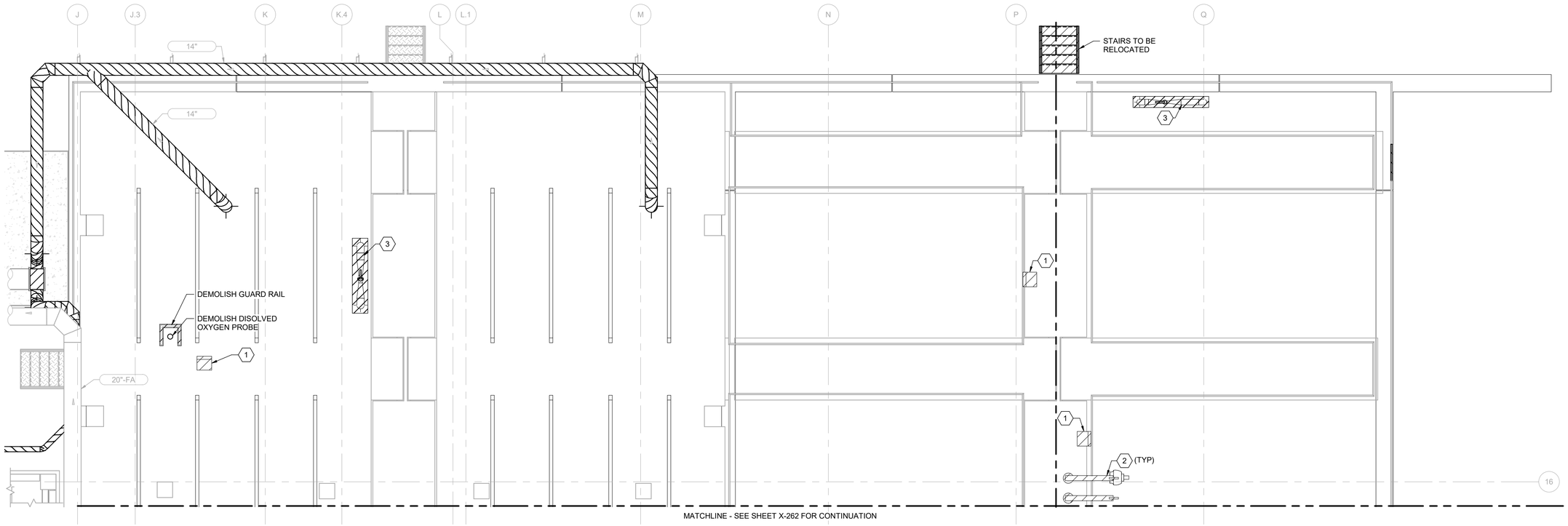

MATCHLINE - SEE SHEET X-262 FOR CONTINUATION

PLAN AT EL 146.00

3/16" = 1'-0"

N

GENERAL NOTES

1. AFTER DEMOLITION, PATCH ALL OPENINGS IN ALUMINUM COVERS WITH PENETRATION REINFORCEMENT. SEE DETAIL 8/S-905.

KEY NOTES (X)

1 DEMOLISH DISOLVED OXYGEN PROBE
2 DEMOLISH DAVIT CRANE
3 DEMOLISH AIR PIPING, VALVES AND APPURTENANCES.

THE DRAWINGS IN THIS SET ARE RECORD DRAWINGS. THEY ARE CONSTRUCTION CONTRACT DRAWINGS WHICH HAVE BEEN REVISED BASED ON AVAILABLE FIELD INFORMATION RECORDED BY OTHERS DURING CONSTRUCTION OF THIS CONTRACT. THERE HAS BEEN NO VERIFICATION OF DIMENSIONS SHOWN ON THE CONSTRUCTION DRAWINGS OR THE ACCURACY/COMPLETENESS OF THE FIELD INFORMATION RECEIVED.

SIGNATURE

2/7/2023
DATE

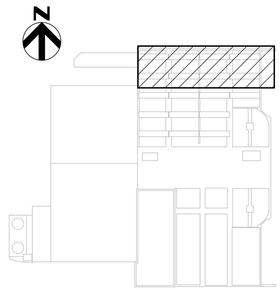

KEY PLAN

AS-BUILT REPLACEMENT SHEET

PROFESSIONAL CERTIFICATION

THIS DRAWING WAS ORIGINALLY APPROVED FOR CONSTRUCTION AND SEALED BY BRIAN M. BACLCHUNAS, A REGISTERED PROFESSIONAL ENGINEER IN THE STATE OF MARYLAND, NO. 200406

NOTICE TO CONTRACTORS

- PROJECT ELEVATIONS ARE BASED ON NAVD88 AND HOWARD COUNTY'S BENCHMARK SYSTEM
- PREVIOUS PROJECTS USED OTHER DATUMS
- APPLY THE FOLLOWING CONVERSIONS WHEN USING PREVIOUS CONTRACT DRAWINGS:
  - ADDITION NO. 6: SUBTRACT 0.80 FT
  - PRIOR ADDITIONS: SUBTRACT 1.04 FT

DEPARTMENT OF PUBLIC WORKS
HOWARD COUNTY, MARYLAND

CHIEF, BUREAU OF UTILITIES DATE

DES: KLP
DRN: REE
CHK: JRK
DATE: 12/2016

DATE	REV	DESCRIPTION
07/2019		RECORD DRAWING

DEMOLITION

DEAMMONIFICATION TOP PARTIAL PLAN 2

LITTLE PATUXENT WATER RECLAMATION PLANT
8TH ADDITION
BIOSOLIDS PROCESSING FACILITIES - PHASE I

CAPITAL PROJECT S-6295
CONTRACT NO. 24-4935

ELECTION DISTRICT NO. 6
HOWARD COUNTY, MARYLAND

SCALE AS SHOWN

SHEET 56 OF 463

X-263

BIM 360://10054364 – Little Patuxent WRP 8th Addition/264591_100_D_V18.rvt
1/11/2022 10:04:24 AM

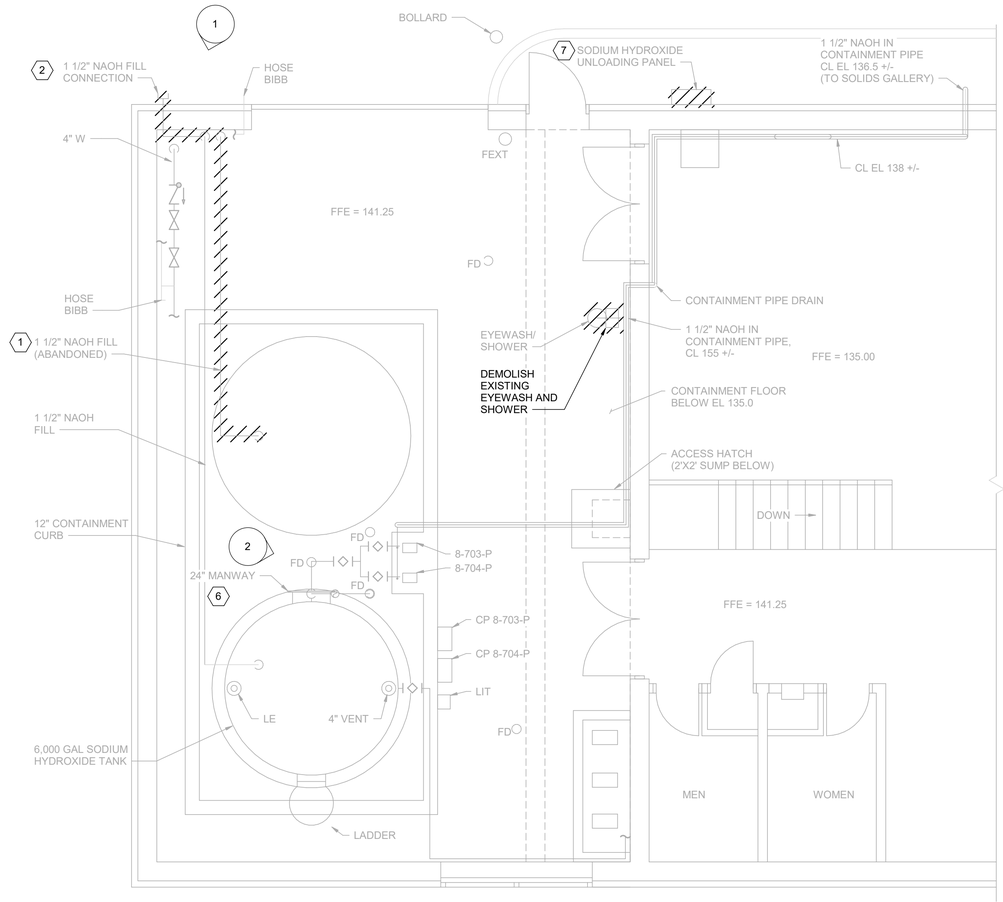

FILTER BUILDING - DEMOLITION PARTIAL PLAN

1/4" = 1'-0"

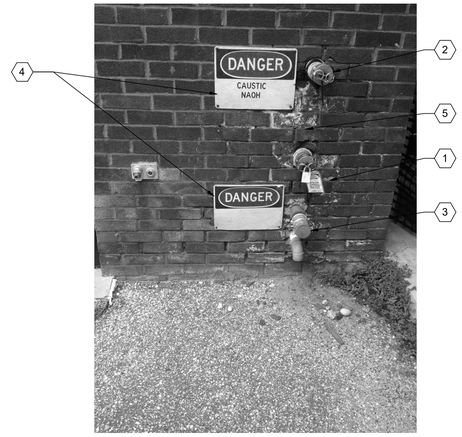

1 - PHOTO DETAIL
NOT TO SCALE

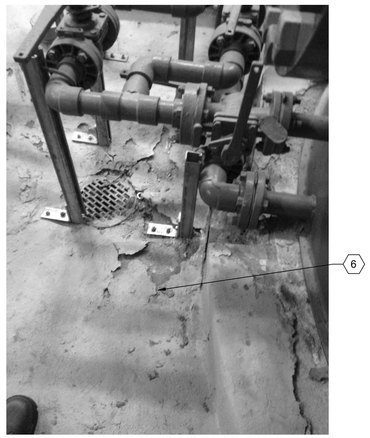

2 - PHOTO DETAIL
NOT TO SCALE

KEY NOTES (X)

1. DEMOLISH ABANDONED 1-1/2" NAOH FILL PIPE AND FILL CONNECTION.
2. DEMOLISH 1-1/2" NAOH TANK FILL CONNECTION UP TO EXISTING PLUG VALVE INSIDE BUILDING. RELOCATE EXISTING PLUG VALVE TO NEW FILL STATION AND MODIFY WALL PENETRATION FOR NEW FILL CONNECTION PER DRAWING M-640.
3. DEMOLISH ALUM FILL CONNECTION.
4. REMOVE EXISTING FILL STATION SIGNAGE.
5. CLEAN AND REPAIR BRICK MASONRY AND MORTAR, REPOINT AS REQUIRED.
6. PREPARE CONTAINMENT AREA FOR NEW PROTECTIVE COATING. REMOVE EXISTING COATING AND FINISH SURFACE WITH GROUT COMPATIBLE WITH NEW COATING SYSTEM. AREA OF WORK INCLUDES ALL SURFACES INSIDE CONTAINMENT CURB INCLUDING TOP OF CURB.
7. DEMOLISH EXISTING SODIUM HYDROXIDE UNLOADING PANEL AND TANK LEVEL INSTRUMENT.

THE DRAWINGS IN THIS SET ARE RECORD DRAWINGS. THEY ARE CONSTRUCTION CONTRACT DRAWINGS WHICH HAVE BEEN REVISED BASED ON AVAILABLE FIELD INFORMATION RECORDED BY OTHERS DURING CONSTRUCTION OF THIS CONTRACT. THERE HAS BEEN NO VERIFICATION OF DIMENSIONS SHOWN ON THE CONSTRUCTION DRAWINGS OR THE ACCURACY/COMPLETENESS OF THE FIELD INFORMATION RECEIVED.

SIGNATURE _____ DATE 2/7/2020

AS-BUILT REPLACEMENT SHEET

PROFESSIONAL CERTIFICATION

THIS DRAWING WAS ORIGINALLY APPROVED FOR CONSTRUCTION AND SEALED BY BRIAN M. BACLCHUNAS, A REGISTERED PROFESSIONAL ENGINEER IN THE STATE OF MARYLAND, NO. 200406

NOTICE TO CONTRACTORS

- PROJECT ELEVATIONS ARE BASED ON NAVD88 AND HOWARD COUNTY'S BENCHMARK SYSTEM
- PREVIOUS PROJECTS USED OTHER DATUMS
- APPLY THE FOLLOWING CONVERSIONS WHEN USING PREVIOUS CONTRACT DRAWINGS:
  - ADDITION NO. 6: SUBTRACT 0.80 FT
  - PRIOR ADDITIONS: SUBTRACT 1.04 FT

DEPARTMENT OF PUBLIC WORKS
HOWARD COUNTY, MARYLAND

CHIEF, BUREAU OF UTILITIES DATE

DES: CJM
DRN: REE
CHK: BMB
DATE: 12/2016

DATE	REV	DESCRIPTION
07/2019		RECORD DRAWING

DEMOLITION

FILTER BUILDING PLAN AND DETAILS

LITTLE PATUXENT WATER RECLAMATION PLANT
8TH ADDITION
BIOSOLIDS PROCESSING FACILITIES - PHASE I

CAPITAL PROJECT S-6295
CONTRACT NO. 24-4935

ELECTION DISTRICT NO. 6
HOWARD COUNTY, MARYLAND

SCALE AS SHOWN

SHEET 57 OF 463

X-640

BIM 360://10054364 – Little Patuxent WRP 8th Addition/264591_100_D_V18.rvt
1/11/2022 10:04:25 AM

SITE FEATURES

- PROPERTY LINE
- EX GRADE MAJOR CONTOUR (140)
- EX GRADE MINOR CONTOUR
- WETLAND BUFFER
- BUFFER
- EXISTING STORM LINE (SD)
- EXISTING WATER LINE (W)
- NEW WATER LINE (W)
- EXISTING ELECTRICAL (E)
- NEW ELECTRICAL (E)
- NEW NATURAL GAS MAIN (G)
- EXISTING STORMWATER LINE (S)
- NEW STORMWATER LINE (S)
- EXISTING TELEPHONE LINE (T)
- NEW UNDERGROUND FIBER OPTIC (UGF)
- NEW GRADE CONTOUR (132)
- EXISTING SPOT ELEVATION (129.50)
- NEW SPOT ELEVATION (129.50)
- EXISTING YARD HYDRANT
- NEW YARD HYDRANT
- EXISTING FIRE HYDRANT
- NEW FIRE HYDRANT
- NEW VALVE
- NEW REDUCER
- EXISTING SANITARY SEWER (SS)
- EXISTING STORM DRAINAGE MANHOLE (SD)
- TOP OF SLOPE
- BOTTOM OF SLOPE
- DIRECTION OF (SURFACE) FLOW
- EXISTING TREE LINE
- NEW TREE LINE
- EXISTING TREE OR SHRUB
- EXISTING FENCE
- NEW FENCE
- TEMPORARY SWALE A–2 STAKEOUT CONTROL POINT (A–2)
- COORDINATE IDENTIFICATION (2004)

PIPING AND UTILITIES

- EXISTING PIPE AND DESIGNATION (DOUBLE LINE) (12" SD)
- EXISTING PIPE AND DESIGNATION (SINGLE LINE) (4" SD)

EROSION & SEDIMENT CONTROL SYMBOLS

- LIMIT OF DISTURBANCE/ LIMIT OF WORK (LOD)
- SILT FENCE (SEE DETAIL E–1, SHEET C–43) (SF)
- SUPER SILT FENCE (SEE DETAIL E–3, SHEET C–43) (SSF)
- FILTER LOG (SEE DETAIL E–6, SHEET C–43) (FL–18)
- STABILIZED CONSTRUCTION ENTRANCE (SEE DETAIL B–1, SHEET C–43) (SCE)
- SUMP PIT (SP)
- PORTABLE SEDIMENT TANK (SEE DETAIL F–3, SHEET C–44) (PST)
- AT GRADE INLET PROTECTION (SEE DETAIL E–9–2, SHEET C–44) (AGIP)
- CURB INLET PROTECTION (SEE DETAIL E–9–3, SHEET C–44) (CIP)
- SUPER SILT FENCE INLET PROTECTION (SSIP)
- TEMPORARY SEDIMENT TRAP (TST)
- CONCRETE WASHOUT STRUCTURE SEE DETAIL H–6 ON SHEET C–44 (CWS)
- SILT FENCE ROCK OUTLET SEE DETAIL 1 ON SHEET C–41
- SEDIMENT FILTER BAG
- DIVERSION FENCE (DF)
- TEMPORARY ASPHALT BERM (LOCATED ON EXIST PAVING ONLY)
- TREE PROTECTION FENCING (SEE DETAIL L–9.02, SHEET C–44) (TP)

SURFACES

- NEW BITUMINOUS PAVEMENT/ BITUMINOUS PAVEMENT REPLACEMENT
- BITUMINOUS PAVEMENT RESTORATION (MILL, PATCH AND OVERLAY)
- NEW CONCRETE SURFACE
- TEMPORARY GRAVEL ACCESS ROAD
- DEMOLITION HATCH
- ASPHALT/PAVEMENT DEMOLITION HATCH

GENERAL NOTES

1. SEE EXISTING CONDITIONS SHEET FOR SURVEY INFORMATION.
2. EXISTING UTILITIES AND STRUCTURES SHOWN ARE FROM THE BEST AVAILABLE RECORDS, AND SHALL BE VERIFIED BY THE CONTRACTOR PRIOR TO COMMENCING WORK. THE COMPLETENESS OR CORRECTNESS OF THE INFORMATION GIVEN IS NEITHER WARRANTED NOR GUARANTEED. NECESSARY PRECAUTIONS SHALL BE TAKEN BY THE CONTRACTOR TO PROTECT EXISTING SERVICES AND MAINS. ANY DAMAGE TO THEM DUE TO HIS NEGLIGENCE SHALL BE REPAIRED IMMEDIATELY AT HIS OWN EXPENSE AND NO INCREASE IN CONTRACT TIME ALLOWED.
3. CONTRACTOR SHALL USE DESIGNATED AREAS FOR STAGING, STORAGE AND EMPLOYEE PARKING, AND SHALL MAINTAIN CLEAR ACCESS FOR PLANT FACILITIES AT ALL TIMES.
4. SOIL BORINGS AND THE GEOTECHNICAL REPORT ARE INCLUDED IN THE APPENDICES OF THE CONTRACT SPECIFICATIONS.
5. ALL DISTURBED AREAS SHALL BE STABILIZED IN ACCORDANCE WITH SEDIMENT CONTROL NOTES AND SPECIFICATIONS.
6. MAINTAIN MINIMUM ONE-FOOT VERTICAL CLEARANCE BETWEEN ALL STORM DRAIN CROSSINGS AND OTHER UTILITIES.
7. ALL WORK SHALL BE PERFORMED WITH REGARD FOR THE SAFETY OF THE CONSTRUCTION CREW.
8. COMPACT TRENCH BACKFILL TO NOT LESS THAN 95% DENSITY IN ACCORDANCE WITH ASTM D698. UNDER PAVEMENT, COMPACT LAST ONE-FOOT TO 100% DENSITY IN ACCORDANCE WITH ASTM D698.
9. SHEETING AND SHORING SHALL BE THE RESPONSIBILITY OF THE CONTRACTOR.
10. WHEN GROUNDWATER OR SURFACE RUNOFF IS PRESENT IN THE WORK AREA, DEWATER TO MAINTAIN WATER LEVEL BELOW PIPE OR STRUCTURE FOUNDATION TO PROVIDE A STABLE TRENCH BOTTOM.

WAIVER INFORMATION

THE DRAWINGS IN THIS SET ARE RECORD DRAWINGS. THEY ARE CONSTRUCTION CONTRACT DRAWINGS WHICH HAVE BEEN REVISED BASED ON AVAILABLE FIELD INFORMATION RECORDED BY OTHERS DURING CONSTRUCTION OF THIS CONTRACT. THERE HAS BEEN NO VERIFICATION OF DIMENSIONS SHOWN ON THE CONSTRUCTION DRAWINGS OR THE ACCURACY/COMPLETENESS OF THE FIELD INFORMATION RECEIVED.

SIGNATURE _____ DATE 2/7/2023

APPROVED: DEPARTMENT OF PLANNING AND ZONING

CHIEF, DEVELOPMENT ENGINEERING DIVISION — DATE:

CHIEF, DIVISION OF LAND DEVELOPMENT — DATE:

DIRECTOR — DATE:

ENGINEER'S CERTIFICATE

"I CERTIFY THAT THIS PLAN FOR SEDIMENT AND EROSION CONTROL REPRESENTS A PRACTICAL AND WORKABLE PLAN BASED ON MY PERSONAL KNOWLEDGE OF THE SITE CONDITIONS AND THAT IT WAS PREPARED IN ACCORDANCE WITH THE REQUIREMENTS OF THE HOWARD SOIL CONSERVATION DISTRICT."

SIGNATURE OF ENGINEER (PRINT NAME BELOW SIGNATURE) — DATE:

DEVELOPER'S CERTIFICATE

"I/WE CERTIFY THAT ALL DEVELOPMENT AND CONSTRUCTION WILL BE DONE ACCORDING TO THIS PLAN FOR SEDIMENT AND EROSION CONTROL, AND THAT ALL RESPONSIBLE PERSONNEL INVOLVED IN THE CONSTRUCTION PROJECT WILL HAVE A CERTIFICATE OF ATTENDANCE AT A DEPARTMENT OF THE ENVIRONMENT APPROVED TRAINING PROGRAM FOR THE CONTROL OF SEDIMENT AND EROSION BEFORE BEGINNING THE PROJECT. I ALSO AUTHORIZE PERIODIC ON–SITE INSPECTION BY THE HOWARD SOIL CONSERVATION DISTRICT."

SIGNATURE OF ENGINEER (PRINT NAME BELOW SIGNATURE) — DATE:

AS-BUILT REPLACEMENT SHEET

PROFESSIONAL CERTIFICATION
THIS DRAWING WAS ORIGINALLY APPROVED FOR CONSTRUCTION AND SEALED BY ROBERT BAYSDEN, A REGISTERED PROFESSIONAL ENGINEER IN THE STATE OF MARYLAND, NO. 49972.

NOTICE TO CONTRACTORS
- PROJECT ELEVATIONS ARE BASED ON NAVD88 AND HOWARD COUNTY'S BENCHMARK SYSTEM
- PREVIOUS PROJECTS USED OTHER DATUMS
- APPLY THE FOLLOWING CONVERSIONS WHEN USING PREVIOUS CONTRACT DRAWINGS:
  - ADDITION NO. 6: SUBTRACT 0.80 FT
  - PRIOR ADDITIONS: SUBTRACT 1.04 FT

DEPARTMENT OF PUBLIC WORKS
HOWARD COUNTY, MARYLAND

CHIEF, BUREAU OF UTILITIES DATE

DES: M.L.
DRN: S.W.
CHK: R.B.
DATE: 03/16

DATE	REV	DESCRIPTION
07/2019		RECORD DRAWINGS

CIVIL

LEGEND SYMBOLS AND GENERAL NOTES

LITTLE PATUXENT WATER RECLAMATION PLANT
8TH ADDITION
BIOSOLIDS PROCESSING FACILITIES – PHASE I

CAPITAL PROJECT S–6295
CONTRACT NO. 24–4935

ELECTION DISTRICT NO. 6
HOWARD COUNTY, MARYLAND

SCALE AS SHOWN

SHEET 58 OF 463

C-1

C:\pwworking\pitt\d1901214\ C-1.dwg 01/10/22_16:09

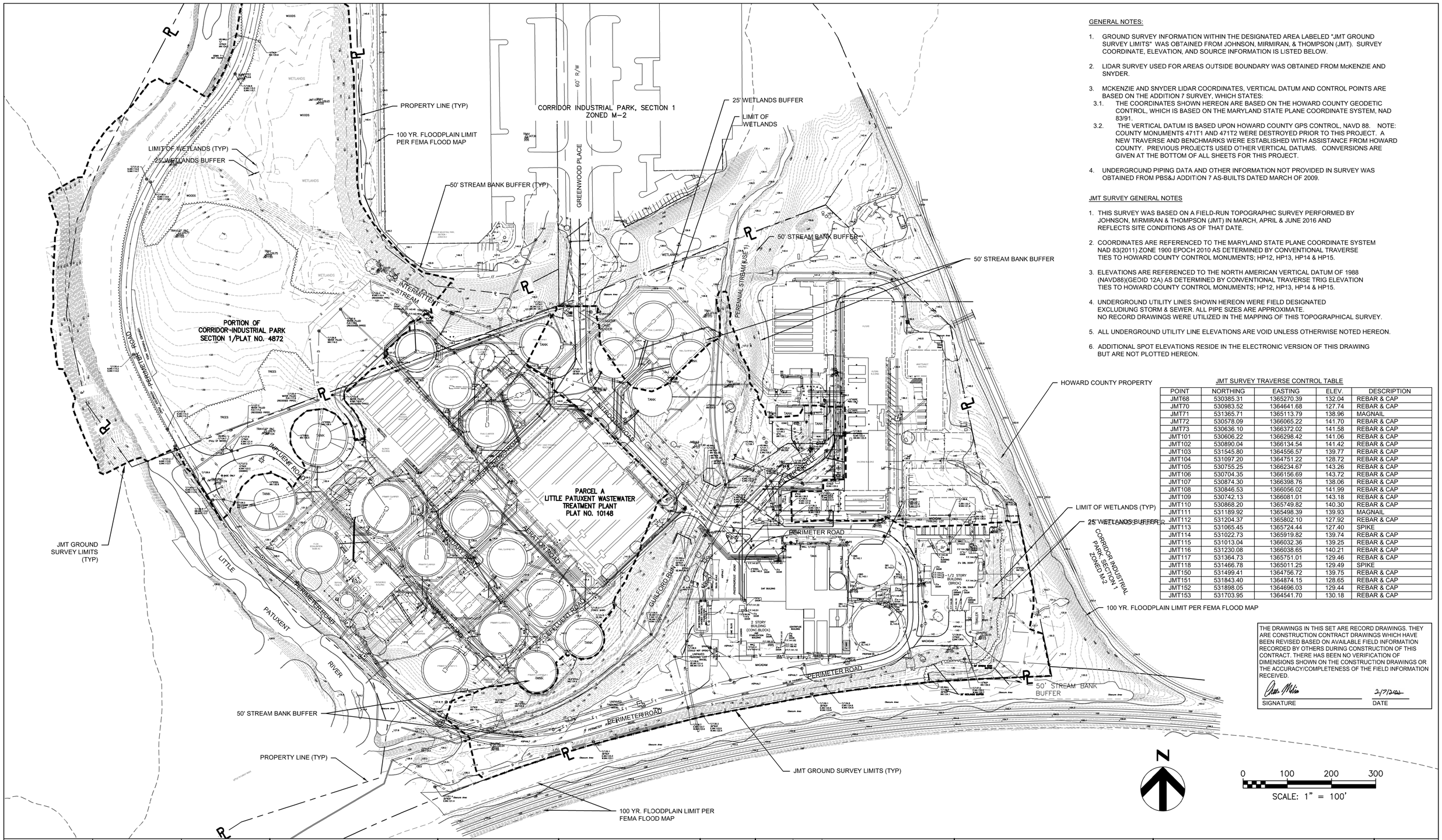

GENERAL NOTES:

1. GROUND SURVEY INFORMATION WITHIN THE DESIGNATED AREA LABELED "JMT GROUND SURVEY LIMITS" WAS OBTAINED FROM JOHNSON, MIRMIRAN, & THOMPSON (JMT). SURVEY COORDINATE, ELEVATION, AND SOURCE INFORMATION IS LISTED BELOW.
2. LIDAR SURVEY USED FOR AREAS OUTSIDE BOUNDARY WAS OBTAINED FROM McKENZIE AND SNYDER.
3. MCKENZIE AND SNYDER LIDAR COORDINATES, VERTICAL DATUM AND CONTROL POINTS ARE BASED ON THE ADDITION 7 SURVEY, WHICH STATES:
   - 3.1. THE COORDINATES SHOWN HEREON ARE BASED ON THE HOWARD COUNTY GEODETIC CONTROL, WHICH IS BASED ON THE MARYLAND STATE PLANE COORDINATE SYSTEM, NAD 83/91.
   - 3.2. THE VERTICAL DATUM IS BASED UPON HOWARD COUNTY GPS CONTROL, NAVD 88. NOTE: COUNTY MONUMENTS 471T1 AND 471T2 WERE DESTROYED PRIOR TO THIS PROJECT. A NEW TRAVERSE AND BENCHMARKS WERE ESTABLISHED WITH ASSISTANCE FROM HOWARD COUNTY. PREVIOUS PROJECTS USED OTHER VERTICAL DATUMS. CONVERSIONS ARE GIVEN AT THE BOTTOM OF ALL SHEETS FOR THIS PROJECT.
4. UNDERGROUND PIPING DATA AND OTHER INFORMATION NOT PROVIDED IN SURVEY WAS OBTAINED FROM PBS&J ADDITION 7 AS-BUILTS DATED MARCH OF 2009.

JMT SURVEY GENERAL NOTES

1. THIS SURVEY WAS BASED ON A FIELD-RUN TOPOGRAPHIC SURVEY PERFORMED BY JOHNSON, MIRMIRAN & THOMPSON (JMT) IN MARCH, APRIL & JUNE 2016 AND REFLECTS SITE CONDITIONS AS OF THAT DATE.
2. COORDINATES ARE REFERENCED TO THE MARYLAND STATE PLANE COORDINATE SYSTEM NAD 83(2011) ZONE 1900 EPOCH 2010 AS DETERMINED BY CONVENTIONAL TRAVERSE TIES TO HOWARD COUNTY CONTROL MONUMENTS; HP12, HP13, HP14 & HP15.
3. ELEVATIONS ARE REFERENCED TO THE NORTH AMERICAN VERTICAL DATUM OF 1988 (NAVD88)(GEOID 12A) AS DETERMINED BY CONVENTIONAL TRAVERSE TRIG ELEVATION TIES TO HOWARD COUNTY CONTROL MONUMENTS; HP12, HP13, HP14 & HP15.
4. UNDERGROUND UTILITY LINES SHOWN HEREON WERE FIELD DESIGNATED EXCLUDIUNG STORM & SEWER. ALL PIPE SIZES ARE APPROXIMATE. NO RECORD DRAWINGS WERE UTILIZED IN THE MAPPING OF THIS TOPOGRAPHICAL SURVEY.
5. ALL UNDERGROUND UTILITY LINE ELEVATIONS ARE VOID UNLESS OTHERWISE NOTED HEREON.
6. ADDITIONAL SPOT ELEVATIONS RESIDE IN THE ELECTRONIC VERSION OF THIS DRAWING BUT ARE NOT PLOTTED HEREON.

JMT SURVEY TRAVERSE CONTROL TABLE

POINT	NORTHING	EASTING	ELEV.	DESCRIPTION
JMT68	530385.31	1365270.39	132.04	REBAR & CAP
JMT70	530983.52	1364641.68	127.74	REBAR & CAP
JMT71	531365.71	1365113.79	138.96	MAGNAIL
JMT72	530578.09	1366065.22	141.70	REBAR & CAP
JMT73	530636.10	1366372.02	141.58	REBAR & CAP
JMT101	530606.22	1366298.42	141.06	REBAR & CAP
JMT102	530890.04	1366134.54	141.42	REBAR & CAP
JMT103	531545.80	1364556.57	139.77	REBAR & CAP
JMT104	531097.20	1364751.22	128.72	REBAR & CAP
JMT105	530755.25	1366234.67	143.26	REBAR & CAP
JMT106	530704.35	1366156.69	143.72	REBAR & CAP
JMT107	530874.30	1366398.76	138.06	REBAR & CAP
JMT108	530846.53	1366056.02	141.99	REBAR & CAP
JMT109	530742.13	1366081.01	143.18	REBAR & CAP
JMT110	530868.20	1365749.82	140.30	REBAR & CAP
JMT111	531189.92	1365498.39	139.93	MAGNAIL
JMT112	531204.37	1365802.10	127.92	REBAR & CAP
JMT113	531065.45	1365724.44	127.40	SPIKE
JMT114	531022.73	1365919.82	139.74	REBAR & CAP
JMT115	531013.04	1366032.36	139.25	REBAR & CAP
JMT116	531230.08	1366038.65	140.21	REBAR & CAP
JMT117	531364.73	1365751.01	129.46	REBAR & CAP
JMT118	531466.78	1365011.25	129.49	SPIKE
JMT150	531499.41	1364756.72	139.75	REBAR & CAP
JMT151	531843.40	1364874.15	128.65	REBAR & CAP
JMT152	531898.05	1364696.03	129.44	REBAR & CAP
JMT153	531703.95	1364541.70	130.18	REBAR & CAP

THE DRAWINGS IN THIS SET ARE RECORD DRAWINGS. THEY ARE CONSTRUCTION CONTRACT DRAWINGS WHICH HAVE BEEN REVISED BASED ON AVAILABLE FIELD INFORMATION RECORDED BY OTHERS DURING CONSTRUCTION OF THIS CONTRACT. THERE HAS BEEN NO VERIFICATION OF DIMENSIONS SHOWN ON THE CONSTRUCTION DRAWINGS OR THE ACCURACY/COMPLETENESS OF THE FIELD INFORMATION RECEIVED.

SIGNATURE _____ DATE 2/7/2023

N

0 100 200 300

SCALE: 1" = 100'

AS-BUILT REPLACEMENT SHEET

PROFESSIONAL CERTIFICATION
THIS DRAWING WAS ORIGINALLY APPROVED FOR CONSTRUCTION AND SEALED BY ROBERT BAYSDEN, A REGISTERED PROFESSIONAL ENGINEER IN THE STATE OF MARYLAND, NO. 49972.

NOTICE TO CONTRACTORS
- PROJECT ELEVATIONS ARE BASED ON NAVD88 AND HOWARD COUNTY'S BENCHMARK SYSTEM
- PREVIOUS PROJECTS USED OTHER DATUMS
- APPLY THE FOLLOWING CONVERSIONS WHEN USING PREVIOUS CONTRACT DRAWINGS:
  - ADDITION NO. 6: SUBTRACT 0.80 FT
  - PRIOR ADDITIONS: SUBTRACT 1.04 FT

DEPARTMENT OF PUBLIC WORKS
HOWARD COUNTY, MARYLAND

CHIEF, BUREAU OF UTILITIES DATE

DES:			
DRN:			
CHK:			
DATE:	07/2019		RECORD DRAWINGS
	DATE	REV	DESCRIPTION

CIVIL

OVERALL EXISTING CONDITIONS PLAN

LITTLE PATUXENT WATER RECLAMATION PLANT
8TH ADDITION
BIOSOLIDS PROCESSING FACILITIES – PHASE I

CAPITAL PROJECT S-6295
CONTRACT NO. 24-4935

ELECTION DISTRICT NO. 6
HOWARD COUNTY, MARYLAND

SCALE AS SHOWN

SHEET 59 OF 463

C-2

C:\pwworking\pitt\d1901214_C-2.dwg 01/10/22_16:10

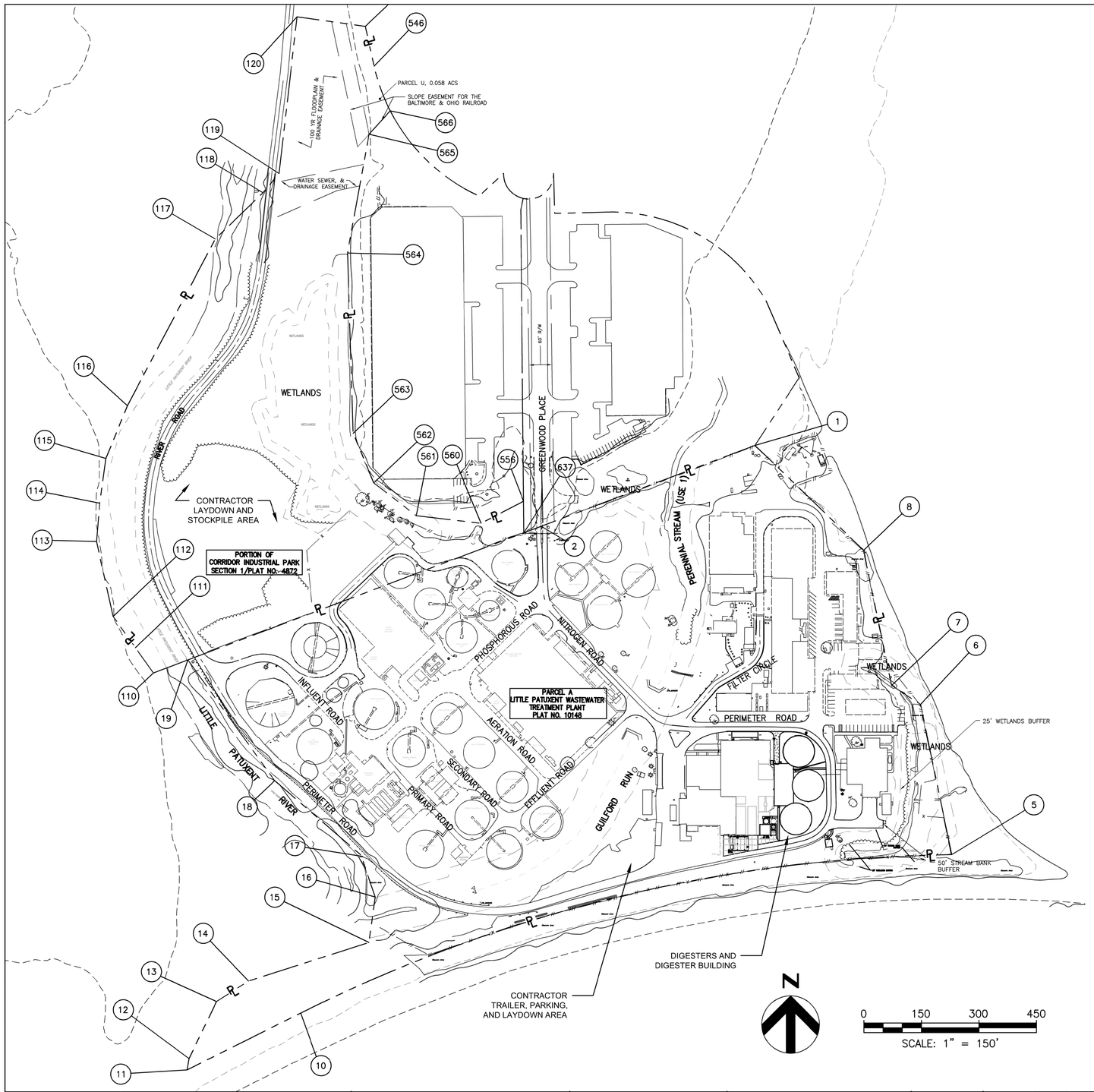

NOTE: COORDINATES SHOWN HEREON ARE BASED ON CORRIDOR INDUSTRIAL PARK SECTION ONE, PLAT BOOK 31, FOLIO 18

CORRIDOR INDUSTRIAL PARK - SECTION 1

PARCEL 'U' AND A PORTION OF THE HOWARD COUNTY PARK UTILITY AND DRAINAGE RESERVATION

PLAT NO. 4872 A RESUBDIVISION OF THE PARK, UTILITY AND DRAINAGE RESERVATION, 6TH ELECTION DISTRICT, HOWARD COUNTY, MARYLAND

NO	NORTHING	EASTING	POINTS	BEARING	DISTANCE
545	471951.91	852583.70	545 TO 546	S12°30'00"	106.20'
546	471848.22	852606.68	546 TO 566	(SEE CURVE DATA)	
566	47731.67	852648.54	566 TO 565	N42°15'00"E	82.13'
565	471670.87	852593.32	565 TO 564	N10°20'00"E	315.00'
564	471360.98	852536.81	564 TO 563	N01°45'00"W	470.00'
563	470891.20	852551.17	563 TO 562	N22°30'00"W	140.00'
562	470761.86	852604.74	562 TO 561	N52°15'00"W	140.00'
561	470676.15	852715.44	561 TO 560	N83°15'00"W	170.00'
560	470656.16	852884.26	560 TO 556	S62°36'00"W	125.00'
556	470713.69	852995.24	556 TO 637	S00°30'00"E	82.42'
637	470631.28	852995.96	637 TO 110	S69°20'14"W	1032.85'
110	470266.81	852029.54	110 TO 111	N35°12'18"W	80.93'
111	470332.94	851982.88	111 TO 112	N35°27'18"W	100.00'
112	470414.40	851924.87	112 TO 113	N12°27'18"W	200.00'
113	470609.70	851881.74	113 TO 114	N04°52'42"	100.00'
114	470709.33	851890.24	114 TO 115	N07°52'42"E	118.00'
115	470826.22	851906.41	115 TO 116	N22°17'42"W	148.50'
116	470963.62	851962.75	116 TO 117	N27°42'40"E	491.14'
117	471397.96	852192.02	117 TO 118	N45°54'10"E	173.25'
118	471518.52	852316.44	118 TO 119	N42°02'10"	63.40'
119	471568.59	852358.51	119 TO 120	N06°36'47"E	411.23'
120	471977.09	852405.87	120 TO 545	S81°56'24"E	178.60'

CURVE DATA

POINTS	RAD	DELTA	ARC	TAN	CHD	BEARING
546 to 566	490.34'	14°30'56"	124.18'	62.42'	123.85'	S19°45'18"E

SOURCE: PLAT–C.M.P NO. 4872

LITTLE PATUXENT WASTEWATER TREATMENT PLANT - PARCEL A

PLAT NO. 10148, A RESUBDIVISION OF PARCEL NO. 200, LIBER 423 FOLIO 516 AD PARCEL NO. 198, LIBER 618 FOLIO 537 AS SHOWN ON TAX MAP NO. 47, SIXTH ELECTION DISTRICT, HOWARD COUNTY, MARYLAND

NO	NORTHING	EASTING	POINTS	BEARING	DISTANCE
1	470858.65	853598.86	1 TO 8	S45°51'41"E	393.08'
8	470584.91	853880.95	8 TO 7	S11°41'47"E	360.00'
7	470232.38	853953.94	7 TO 6	S56°41'47"E	90.00'
6	470182.97	854029.16	6 TO 5	S11°41'47"E	400.00'
5	468791.27	854110.25	5 TO 10	(SEE CURVE DATA)	
10	469379.92	852412.86	10 TO 11	S63°29'14"W	331.00'
11	469232.16	852116.67	11 TO 12	N09°25'14"E	29.81'
12	469261.57	852121.55	12 TO 13	N25°49'14"	65.00'
13	469410.10	852193.42	13 TO 14	N57°19'14"E	99.00'
14	469463.55	852276.74	14 TO 15	N72°19'14"E	330.00'
15	469563.77	852591.16	15 TO 16	N07°49'14"E	119.62'
16	469682.28	852607.44	16 TO 17	N18°40'46"W	115.50'
17	469791.69	852570.44	17 TO 18	N49°10'46"W	297.00'
18	469985.84	852345.69	18 TO 19	N35°40'46"W	367.75'
19	470300.80	852119.53	19 TO 2	N69°20'24"E	985.03'
2	470648.34	853041.21	2 TO 1	N69°20'14"E	595.99'
1	470858.65	853598.86			

CURVE DATA

POINTS	RAD	DELTA	ARC	TAN	CHD	BEARING
5 TO 10	3909.83'	25°48'42"	1761.38'	895.89'	1746.52'	S76°22'38"W

SOURCE: PLAT–M.D.R. NO. 10148

ZONING SITE ANALYSIS:
AREA OF PARCEL/LOT:
AREA OF PLAT NO. 10148 = 38.01± ACRES
AREA OF PLAT NO. 4872 = 18.19± ACRES (EXCLUDES PARCEL "U")
TOTAL SITE AREA = 56.20± ACRES
PRESENT ZONING = M–2 PER 02/02/04 COMPREHENSIVE REZONING PLAN
EXISTING/PROPOSED USE: WATER RECLAMATION PLANT
NUMBER OF EMPLOYEES = 55 (NO CHANGE)

THE DRAWINGS IN THIS SET ARE RECORD DRAWINGS. THEY ARE CONSTRUCTION CONTRACT DRAWINGS WHICH HAVE BEEN REVISED BASED ON AVAILABLE FIELD INFORMATION RECORDED BY OTHERS DURING CONSTRUCTION OF THIS CONTRACT. THERE HAS BEEN NO VERIFICATION OF DIMENSIONS SHOWN ON THE CONSTRUCTION DRAWINGS OR THE ACCURACY/COMPLETENESS OF THE FIELD INFORMATION RECEIVED.

SIGNATURE _____ DATE 2/7/2023

AS-BUILT REPLACEMENT SHEET

PROFESSIONAL CERTIFICATION
THIS DRAWING WAS ORIGINALLY APPROVED FOR CONSTRUCTION AND SEALED BY ROBERT BAYSDEN, A REGISTERED PROFESSIONAL ENGINEER IN THE STATE OF MARYLAND, NO. 49972.

NOTICE TO CONTRACTORS
- PROJECT ELEVATIONS ARE BASED ON NAVD88 AND HOWARD COUNTY'S BENCHMARK SYSTEM
- PREVIOUS PROJECTS USED OTHER DATUMS
- APPLY THE FOLLOWING CONVERSIONS WHEN USING PREVIOUS CONTRACT DRAWINGS:
  – ADDITION NO. 6: SUBTRACT 0.80 FT
  – PRIOR ADDITIONS: SUBTRACT 1.04 FT

DEPARTMENT OF PUBLIC WORKS
HOWARD COUNTY, MARYLAND

CHIEF, BUREAU OF UTILITIES DATE

DES: M.L.
DRN: S.W.
CHK: R.B.
DATE: 03/16

DATE	REV	DESCRIPTION
07/2019		RECORD DRAWINGS

CIVIL

OVERALL PROPERTY BOUNDARY PLAN

LITTLE PATUXENT WATER RECLAMATION PLANT
8TH ADDITION
BIOSOLIDS PROCESSING FACILITIES – PHASE I

CAPITAL PROJECT S–6295
CONTRACT NO. 24–4935

ELECTION DISTRICT NO. 6
HOWARD COUNTY, MARYLAND

SCALE AS SHOWN

SHEET 60 OF 463

C-3

C:\prwworking\plt\d1901214\ C-3.dwg 01/10/22_16:11

STRUCTURE IDENTIFICATION

KEY NOTES	FACILITY DESCRIPTION
6	FLOW EQUALIZATION BASIN 2 (FEB–2)
14	EAST PIPE GALLERY ALUM/HYPO STORAGE & FEED
18	FINAL CLARIFIER (FC–6)
19	FINAL CLARIFIER (FC–7)
20	DISTRIBUTION FLOW CHAMBER
21	FINAL CLARIFIER (FC–8)
22	FINAL CLARIFIER (FC–9)
23	NORTH PROCESS REACTORS
25	FINAL CLARIFIER (FC–10)
26	FINAL CLARIFIER (FC–11)
27	FINAL CLARIFIER (FC–12)
28	NORTH GALLERY
29	PRETREATMENT CLARIFIER/THICKENER
30	PRETREATMENT FERMENTER
31	NORTH PROCESS REACTOR
32	FINAL CLARIFIER (FC–13) [92.3' DIA.]
33	AUXILIARY NORTH GALLERY
43	FILTER BUILDING
53	DENITRIFICATION FILTER COMPLEX
54	DENITRIFICATION FILTER MUDWELL
55	METHANOL STORAGE AND FEED FACILITY
56	METHANOL FILL STATION

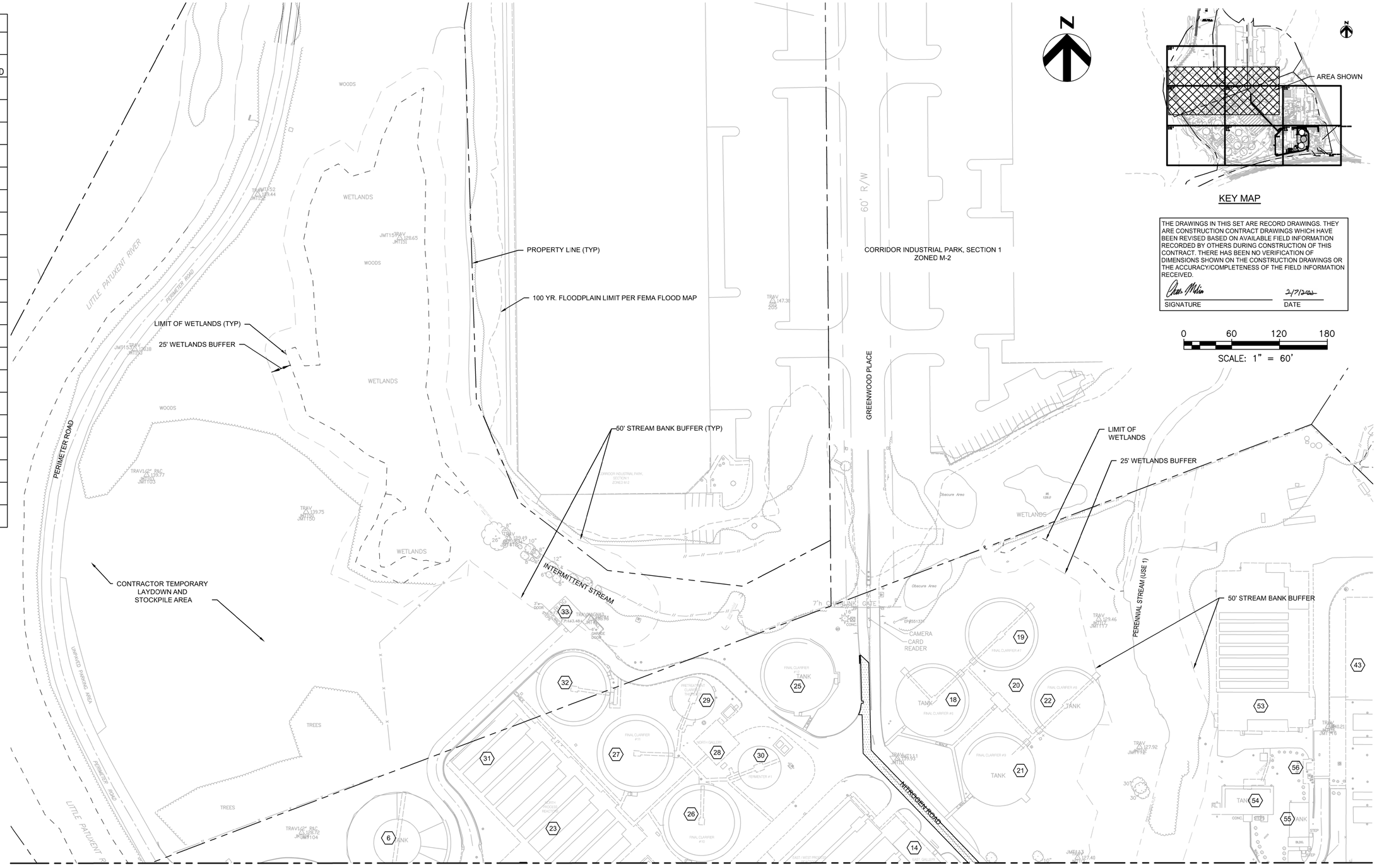

THE DRAWINGS IN THIS SET ARE RECORD DRAWINGS. THEY ARE CONSTRUCTION CONTRACT DRAWINGS WHICH HAVE BEEN REVISED BASED ON AVAILABLE FIELD INFORMATION RECORDED BY OTHERS DURING CONSTRUCTION OF THIS CONTRACT. THERE HAS BEEN NO VERIFICATION OF DIMENSIONS SHOWN ON THE CONSTRUCTION DRAWINGS OR THE ACCURACY/COMPLETENESS OF THE FIELD INFORMATION RECEIVED.

SIGNATURE _____ DATE 2/7/2022

MATCH LINE- SEE SHEET C-5

AS-BUILT REPLACEMENT SHEET

PROFESSIONAL CERTIFICATION
THIS DRAWING WAS ORIGINALLY APPROVED FOR CONSTRUCTION AND SEALED BY ROBERT BAYSDEN, A REGISTERED PROFESSIONAL ENGINEER IN THE STATE OF MARYLAND, NO. 49972.

NOTICE TO CONTRACTORS
- PROJECT ELEVATIONS ARE BASED ON NAVD88 AND HOWARD COUNTY'S BENCHMARK SYSTEM
- PREVIOUS PROJECTS USED OTHER DATUMS
- APPLY THE FOLLOWING CONVERSIONS WHEN USING PREVIOUS CONTRACT DRAWINGS:
  - ADDITION NO. 6: SUBTRACT 0.80 FT
  - PRIOR ADDITIONS: SUBTRACT 1.04 FT

DEPARTMENT OF PUBLIC WORKS
HOWARD COUNTY, MARYLAND

CHIEF, BUREAU OF UTILITIES DATE

DES: M.L.
DRN: S.W.
CHK: R.B.
DATE: 03/16

DATE	REV	DESCRIPTION
07/2019		RECORD DRAWINGS

CIVIL

PLANT SITE PLAN - NORTH

LITTLE PATUXENT WATER RECLAMATION PLANT
8TH ADDITION
BIOSOLIDS PROCESSING FACILITIES – PHASE I

CAPITAL PROJECT S–6295
CONTRACT NO. 24–4935

ELECTION DISTRICT NO. 6
HOWARD COUNTY, MARYLAND

SCALE AS SHOWN

SHEET 61 OF 463

C-4

C:\pwworking\pitt\d1901214_C-4.dwg 01/10/22_16:17

MATCH LINE SEE SHEET C-4

STRUCTURE IDENTIFICATION

KEY NOTES	FACILITY DESCRIPTION
1	SEPTAGE FACILITY
2	HEADWORKS BUILDING
3	HEADWORKS SUBSTATION
4	AUXILIARY PUMP STATION
5	FLOW EQUALIZATION BASIN 1 (FEB–1)
7	FLOW EQUALIZATION BASIN 3 (FEB–3)
8	GRIT BUILDING
9	PRIMARY CLARIFIER (PC–1)
10	PRIMARY CLARIFIER (PC–2)
11	NORTH PUMP STATION
12	NORTH SUBSTATION
13	EAST / WEST PROCESS REACTORS
15	WEST PIPE GALLERY FLOW SPLITTER BOX
16	FINAL CLARIFIER (FC–2)
17	FINAL CLARIFIER (FC–3)
24	NORTH BLOWER BUILDING
36	PRIMARY CLARIFIER (PC–3)
37	PRIMARY CLARIFIER (PC–4)
38	PRIMARY CLARIFIER (PC–5)
39	SOUTH PUMP STATION
40	FINAL CLARIFIER (FC–4)
41	FINAL CLARIFIER (FC–5)
44	CHLORINE BUILDING
45	POST AERATION
46	EMERGENCY CHLORINE CONTACT BASINS
48	BIOSOLIDS FACILITIES
49	LIME STABILIZATION ODOR CONTROL FACILITY
51	EAST/WEST BLOWER FACILITY
52	EAST SUBSTATION
57	FIRE PROTECTION BUILDING
58	EFFLUENT METER VAULT
59	NEW DIGESTERS
60	NEW DIGESTER BUILDING
61	NEW BIO–FILTER
63	NEW FLARE ON EXISTING PAD
64	NEW PHOSPHOROUS PRECIPITATION BUILDING

INFLUENT ROAD
PHOSPHOROUS ROAD
SECONDARY ROAD
AERATION ROAD
PRIMARY ROAD
EFFLUENT ROAD
FILTER CIRCLE
PERIMETER ROAD
LITTLE PATUXENT RIVER
GUILFORD RUN
CONTRACTOR TEMPORARY OFFICE TRAILER, PARKING AND LAYDOWN AREA
50' STREAM BANK BUFFER
PROPERTY LINE (TYP)
100 YR. FLOODPLAIN LIMIT PER FEMA FLOOD MAP

THE DRAWINGS IN THIS SET ARE RECORD DRAWINGS. THEY ARE CONSTRUCTION CONTRACT DRAWINGS WHICH HAVE BEEN REVISED BASED ON AVAILABLE FIELD INFORMATION RECORDED BY OTHERS DURING CONSTRUCTION OF THIS CONTRACT. THERE HAS BEEN NO VERIFICATION OF DIMENSIONS SHOWN ON THE CONSTRUCTION DRAWINGS OR THE ACCURACY/COMPLETENESS OF THE FIELD INFORMATION RECEIVED.

SIGNATURE — DATE 2/7/2022

GENERAL NOTES:
1. SEE SITE DEMOLITION PLAN SHEETS X-1 AND X-2 FOR EXISTING SITE FEATURES SCHEDULED TO BE DEMOLISHED.

N

0 60 120 180
SCALE: 1" = 60'

AREA SHOWN

KEYMAP

C:\pwworking\pitt\d1901214\C-5.dwg 01/10/22_16:19

AS-BUILT REPLACEMENT SHEET

PROFESSIONAL CERTIFICATION
THIS DRAWING WAS ORIGINALLY APPROVED FOR CONSTRUCTION AND SEALED BY ROBERT BAYSDEN, A REGISTERED PROFESSIONAL ENGINEER IN THE STATE OF MARYLAND, NO. 49972.

NOTICE TO CONTRACTORS
- PROJECT ELEVATIONS ARE BASED ON NAVD88 AND HOWARD COUNTY'S BENCHMARK SYSTEM
- PREVIOUS PROJECTS USED OTHER DATUMS
- APPLY THE FOLLOWING CONVERSIONS WHEN USING PREVIOUS CONTRACT DRAWINGS:
  – ADDITION NO. 6: SUBTRACT 0.80 FT
  – PRIOR ADDITIONS: SUBTRACT 1.04 FT

DEPARTMENT OF PUBLIC WORKS
HOWARD COUNTY, MARYLAND

CHIEF, BUREAU OF UTILITIES DATE

DES: M.L.
DRN: S.W.
CHK: R.B.
DATE: 03/16

DATE	REV	DESCRIPTION
07/2019		RECORD DRAWINGS

CIVIL

PLANT SITE PLAN - SOUTH

LITTLE PATUXENT WATER RECLAMATION PLANT
8TH ADDITION
BIOSOLIDS PROCESSING FACILITIES – PHASE I

CAPITAL PROJECT S–6295
CONTRACT NO. 24–4935

ELECTION DISTRICT NO. 6
HOWARD COUNTY, MARYLAND

SCALE AS SHOWN

SHEET 62 OF 463

C-5

THE DRAWINGS IN THIS SET ARE RECORD DRAWINGS. THEY ARE CONSTRUCTION CONTRACT DRAWINGS WHICH HAVE BEEN REVISED BASED ON AVAILABLE FIELD INFORMATION RECORDED BY OTHERS DURING CONSTRUCTION OF THIS CONTRACT. THERE HAS BEEN NO VERIFICATION OF DIMENSIONS SHOWN ON THE CONSTRUCTION DRAWINGS OR THE ACCURACY/COMPLETENESS OF THE FIELD INFORMATION RECEIVED.

SIGNATURE — DATE 2/7/2023

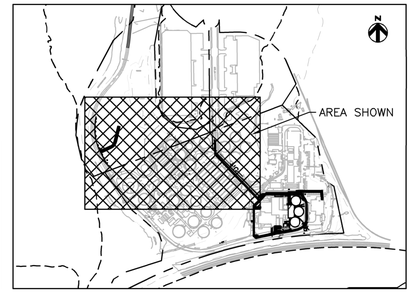

KEY MAP

0 60 120 180

SCALE: 1" = 60'

GENERAL NOTES:

1. SEE SHEET C-1 FOR LEGEND AND GENERAL NOTES.
2. SEE SHEETS C-41 THROUGH C-44 FOR EROSION CONTROL NOTES, DETAILS, AND SEEDING REQUIREMENTS.
3. SEE SHEETS C-11 & C-21 THROUGH C-27 FOR EROSION & SEDIMENT CONTROL PLANS.

PROPERTY LINE (TYP)

100 YR. FLOODPLAIN LIMIT PER FEMA FLOOD MAP

LIMIT OF WETLANDS (TYP)

25' WETLANDS BUFFER

50' STREAM BANK BUFFER (TYP)

CONTRACTOR TEMPORARY LAYDOWN AND STOCKPILE AREA

CORRIDOR INDUSTRIAL PARK, SECTION 1
ZONED M-2

60' R/W

GREENWOOD PLACE

PERIMETER ROAD

INTERMITTENT STREAM

LIMIT OF WETLANDS

25' WETLANDS BUFFER

PERENNIAL STREAM (USE 1)

50' STREAM BANK BUFFER

WOODS

TREES

WETLANDS

TANK

MATCH LINE- SEE SHEET C-7

C:\pwworking\pitt\d1901214\ C-6.dwg 01/10/22_16:20

	HDR	AS-BUILT REPLACEMENT SHEET	PROFESSIONAL CERTIFICATION THIS DRAWING WAS ORIGINALLY APPROVED FOR CONSTRUCTION AND SEALED BY ROBERT BAYSDEN, A REGISTERED PROFESSIONAL ENGINEER IN THE STATE OF MARYLAND, NO. 49972.	NOTICE TO CONTRACTORS • PROJECT ELEVATIONS ARE BASED ON NAVD88 AND HOWARD COUNTY'S BENCHMARK SYSTEM • PREVIOUS PROJECTS USED OTHER DATUMS • APPLY THE FOLLOWING CONVERSIONS WHEN USING PREVIOUS CONTRACT DRAWINGS: – ADDITION NO. 6: SUBTRACT 0.80 FT – PRIOR ADDITIONS: SUBTRACT 1.04 FT	DEPARTMENT OF PUBLIC WORKS HOWARD COUNTY, MARYLAND CHIEF, BUREAU OF UTILITIES DATE	DES: M.L. DRN: S.W. CHK: R.B. DATE: 03/16	07/2019 DATE	REV	RECORD DRAWINGS DESCRIPTION	CIVIL EROSION AND SEDIMENT CONTROL CONCEPT PLAN	LITTLE PATUXENT WATER RECLAMATION PLANT 8TH ADDITION BIOSOLIDS PROCESSING FACILITIES – PHASE I CAPITAL PROJECT S-6295 CONTRACT NO. 24-4935 ELECTION DISTRICT NO. 6 HOWARD COUNTY, MARYLAND	SCALE AS SHOWN SHEET 63 OF 463 C-6

MATCH LINE- SEE SHEET C-6

INFLUENT ROAD
PHOSPHOROUS ROAD
SECONDARY ROAD
AERATION ROAD
FILTER CIRCLE
PERIMETER ROAD
LITTLE PATUXENT RIVER
PRIMARY ROAD
EFFLUENT ROAD
GUILFORD RUN
CONTRACTOR TEMPORARY OFFICE TRAILER, PARKING AND LAYDOWN AREA
50' STREAM BANK BUFFER
PROPERTY LINE (TYP)
100 YR. FLOODPLAIN LIMIT PER FEMA FLOOD MAP
WETLANDS
Obscure Area

THE DRAWINGS IN THIS SET ARE RECORD DRAWINGS. THEY ARE CONSTRUCTION CONTRACT DRAWINGS WHICH HAVE BEEN REVISED BASED ON AVAILABLE FIELD INFORMATION RECORDED BY OTHERS DURING CONSTRUCTION OF THIS CONTRACT. THERE HAS BEEN NO VERIFICATION OF DIMENSIONS SHOWN ON THE CONSTRUCTION DRAWINGS OR THE ACCURACY/COMPLETENESS OF THE FIELD INFORMATION RECEIVED.

SIGNATURE _____ DATE 2/7/2023

N

0 60 120 180

SCALE: 1" = 60'

GENERAL NOTES:

1. SEE C-1 CIVIL LEGEND FOR SEDIMENTATION AND EROSION CONTROL SYMBOLS.
2. SEE SHEET C-41 THROUGH C-44 FOR EROSION CONTROL NOTES, DETAILS, AND SEEDING REQUIREMENTS.
3. SEE SHEETS C-11 & C-21 THROUGH C-29 FOR EROSION & SEDIMENT CONTROL PLANS.

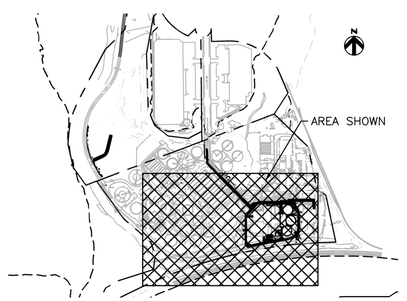

KEY MAP

C:\pwworking\pitt\d1901214\C-7.dwg 01/10/22_16:21

AS-BUILT REPLACEMENT SHEET

PROFESSIONAL CERTIFICATION
THIS DRAWING WAS ORIGINALLY APPROVED FOR CONSTRUCTION AND SEALED BY ROBERT BAYSDEN, A REGISTERED PROFESSIONAL ENGINEER IN THE STATE OF MARYLAND, NO. 49972.

NOTICE TO CONTRACTORS
- PROJECT ELEVATIONS ARE BASED ON NAVD88 AND HOWARD COUNTY'S BENCHMARK SYSTEM
- PREVIOUS PROJECTS USED OTHER DATUMS
- APPLY THE FOLLOWING CONVERSIONS WHEN USING PREVIOUS CONTRACT DRAWINGS:
  - ADDITION NO. 6: SUBTRACT 0.80 FT
  - PRIOR ADDITIONS: SUBTRACT 1.04 FT

DEPARTMENT OF PUBLIC WORKS
HOWARD COUNTY, MARYLAND

CHIEF, BUREAU OF UTILITIES DATE

DES: M.L.
DRN: S.W.
CHK: R.B.
DATE: 03/16

DATE	REV	DESCRIPTION
07/2019		RECORD DRAWINGS

CIVIL

EROSION AND SEDIMENT CONTROL CONCEPT PLAN

LITTLE PATUXENT WATER RECLAMATION PLANT
8TH ADDITION
BIOSOLIDS PROCESSING FACILITIES – PHASE I

CAPITAL PROJECT S-6295
CONTRACT NO. 24-4935

ELECTION DISTRICT NO. 6
HOWARD COUNTY, MARYLAND

SCALE AS SHOWN

SHEET 64 OF 463

C-7

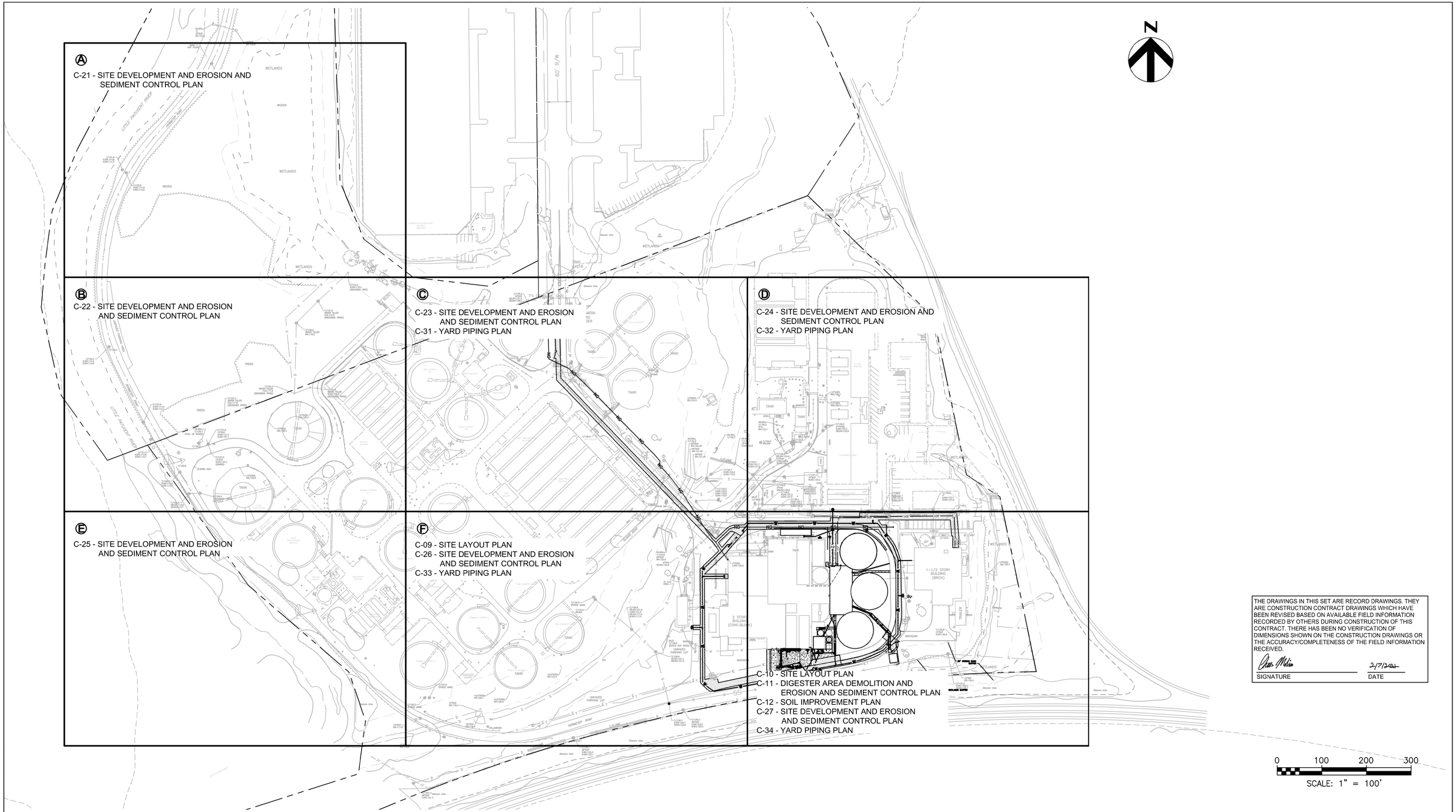

THE DRAWINGS IN THIS SET ARE RECORD DRAWINGS. THEY ARE CONSTRUCTION CONTRACT DRAWINGS WHICH HAVE BEEN REVISED BASED ON AVAILABLE FIELD INFORMATION RECORDED BY OTHERS DURING CONSTRUCTION OF THIS CONTRACT. THERE HAS BEEN NO VERIFICATION OF DIMENSIONS SHOWN ON THE CONSTRUCTION DRAWINGS OR THE ACCURACY/COMPLETENESS OF THE FIELD INFORMATION RECEIVED.

SIGNATURE — DATE 2/7/2023

AS-BUILT REPLACEMENT SHEET

PROFESSIONAL CERTIFICATION
THIS DRAWING WAS ORIGINALLY APPROVED FOR CONSTRUCTION AND SEALED BY ROBERT BAYSDEN, A REGISTERED PROFESSIONAL ENGINEER IN THE STATE OF MARYLAND, NO. 49972.

NOTICE TO CONTRACTORS
- PROJECT ELEVATIONS ARE BASED ON NAVD88 AND HOWARD COUNTY'S BENCHMARK SYSTEM
- PREVIOUS PROJECTS USED OTHER DATUMS
- APPLY THE FOLLOWING CONVERSIONS WHEN USING PREVIOUS CONTRACT DRAWINGS:
  - ADDITION NO. 6: SUBTRACT 0.80 FT
  - PRIOR ADDITIONS: SUBTRACT 1.04 FT

DEPARTMENT OF PUBLIC WORKS
HOWARD COUNTY, MARYLAND

CHIEF, BUREAU OF UTILITIES — DATE

DES: M.L.
DRN: S.W.
CHK: R.B.
DATE: 03/16

DATE	REV	DESCRIPTION
07/2019		RECORD DRAWINGS

CIVIL

CIVIL INDEX PLAN

LITTLE PATUXENT WATER RECLAMATION PLANT
8TH ADDITION
BIOSOLIDS PROCESSING FACILITIES – PHASE I

CAPITAL PROJECT S-6295
CONTRACT NO. 24-4935

ELECTION DISTRICT NO. 6
HOWARD COUNTY, MARYLAND

SCALE AS SHOWN

SHEET 65 OF 463

C-8

C:\pwworking\pitt\d1901214\ C-8 .dwg 01/10/22 16:23

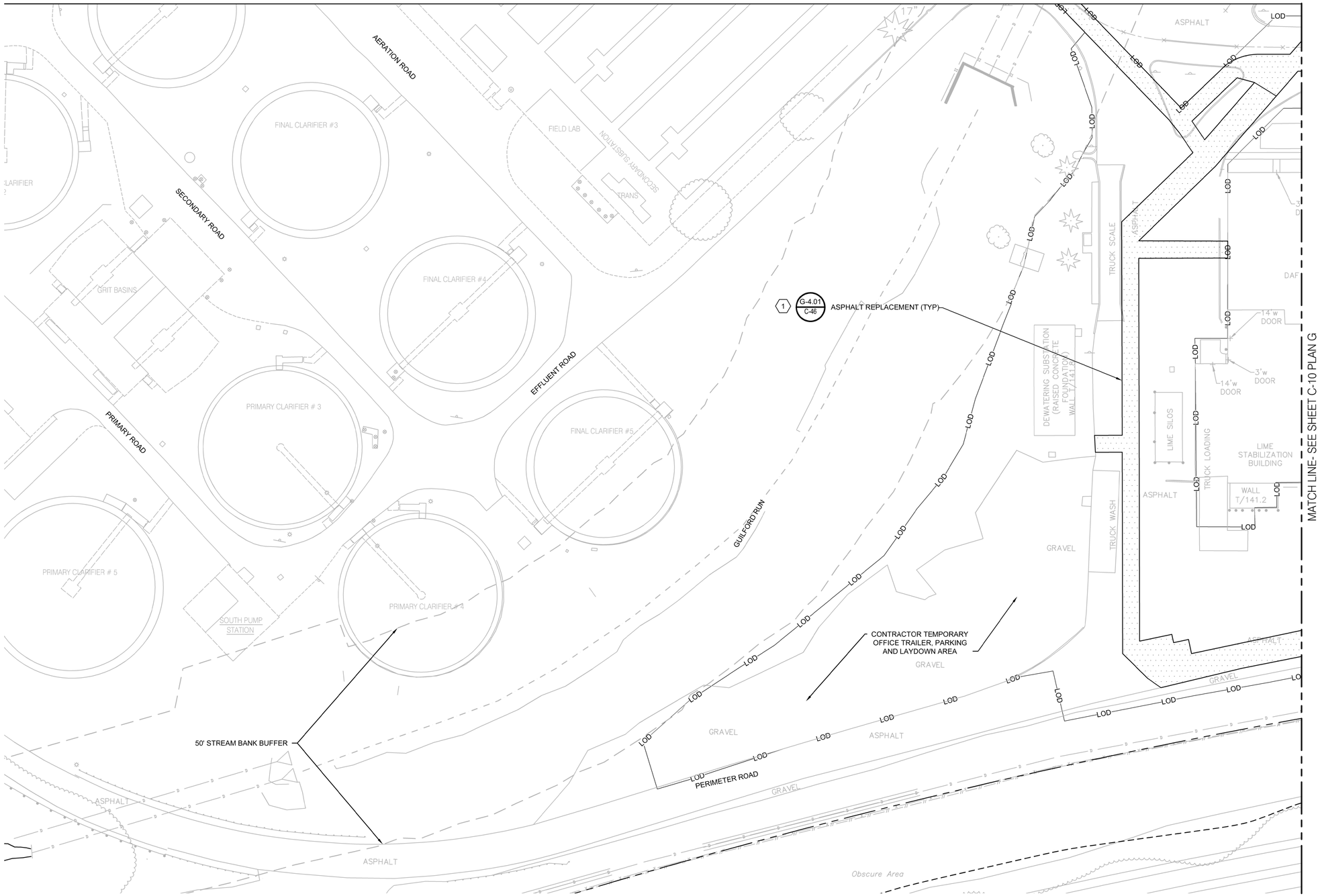

N

GENERAL NOTES:

1. SEE ELECTRICAL PLANS FOR PROPOSED SUBSTATION CONSTRUCTION DETAILS AND FOR EXISTING SUBSTATION DEMOLITION DETAILS.
2. REPAIR ASPHALT AS REQUIRED IMMEDIATELY AFTER UTILITY INSTALLATION THROUGH ASPHALT PAVEMENT AREAS.
3. SEE SHEET C-33 FOR PROPOSED UTILITIES AND YARD PIPING.
4. SEE SHEET X-1 FOR SITE DEMOLITION PLAN.
5. SEE SHEET C-21 - C-27 FOR SITE DEVELOPMENT AND EROSION CONTROL.

KEY NOTES:

1 SAW CUT EXISTING PAVEMENT FOR CLEAN BREAK ALONG EDGES WHERE EXISTING MEETS NEW WORK.

THE DRAWINGS IN THIS SET ARE RECORD DRAWINGS. THEY ARE CONSTRUCTION CONTRACT DRAWINGS WHICH HAVE BEEN REVISED BASED ON AVAILABLE FIELD INFORMATION RECORDED BY OTHERS DURING CONSTRUCTION OF THIS CONTRACT. THERE HAS BEEN NO VERIFICATION OF DIMENSIONS SHOWN ON THE CONSTRUCTION DRAWINGS OR THE ACCURACY/COMPLETENESS OF THE FIELD INFORMATION RECEIVED.

SIGNATURE — DATE 2/7/2023

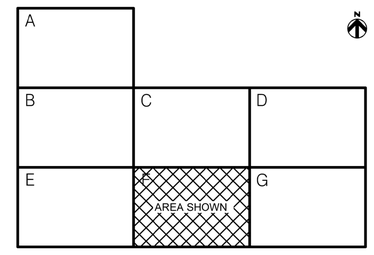

KEYMAP

0 30 60 90

SCALE: 1" = 30'

C:\pwworking\pitt\d1901214\C-9.dwg 01/10/22 16:24

AS-BUILT REPLACEMENT SHEET

PROFESSIONAL CERTIFICATION
THIS DRAWING WAS ORIGINALLY APPROVED FOR CONSTRUCTION AND SEALED BY ROBERT BAYSDEN, A REGISTERED PROFESSIONAL ENGINEER IN THE STATE OF MARYLAND, NO. 49972.

NOTICE TO CONTRACTORS
- PROJECT ELEVATIONS ARE BASED ON NAVD88 AND HOWARD COUNTY'S BENCHMARK SYSTEM
- PREVIOUS PROJECTS USED OTHER DATUMS
- APPLY THE FOLLOWING CONVERSIONS WHEN USING PREVIOUS CONTRACT DRAWINGS:
  - ADDITION NO. 6: SUBTRACT 0.80 FT
  - PRIOR ADDITIONS: SUBTRACT 1.04 FT

DEPARTMENT OF PUBLIC WORKS
HOWARD COUNTY, MARYLAND

CHIEF, BUREAU OF UTILITIES DATE

DES: xr
DRN: S.W.
CHK: R.B.
DATE: 03/16

DATE	REV	DESCRIPTION
07/2019		RECORD DRAWINGS

CIVIL

SITE LAYOUT PLAN - F

LITTLE PATUXENT WATER RECLAMATION PLANT
8TH ADDITION
BIOSOLIDS PROCESSING FACILITIES – PHASE I

CAPITAL PROJECT S-6295
CONTRACT NO. 24-4935

ELECTION DISTRICT NO. 6
HOWARD COUNTY, MARYLAND

SCALE AS SHOWN

SHEET 66 OF 463

C-9

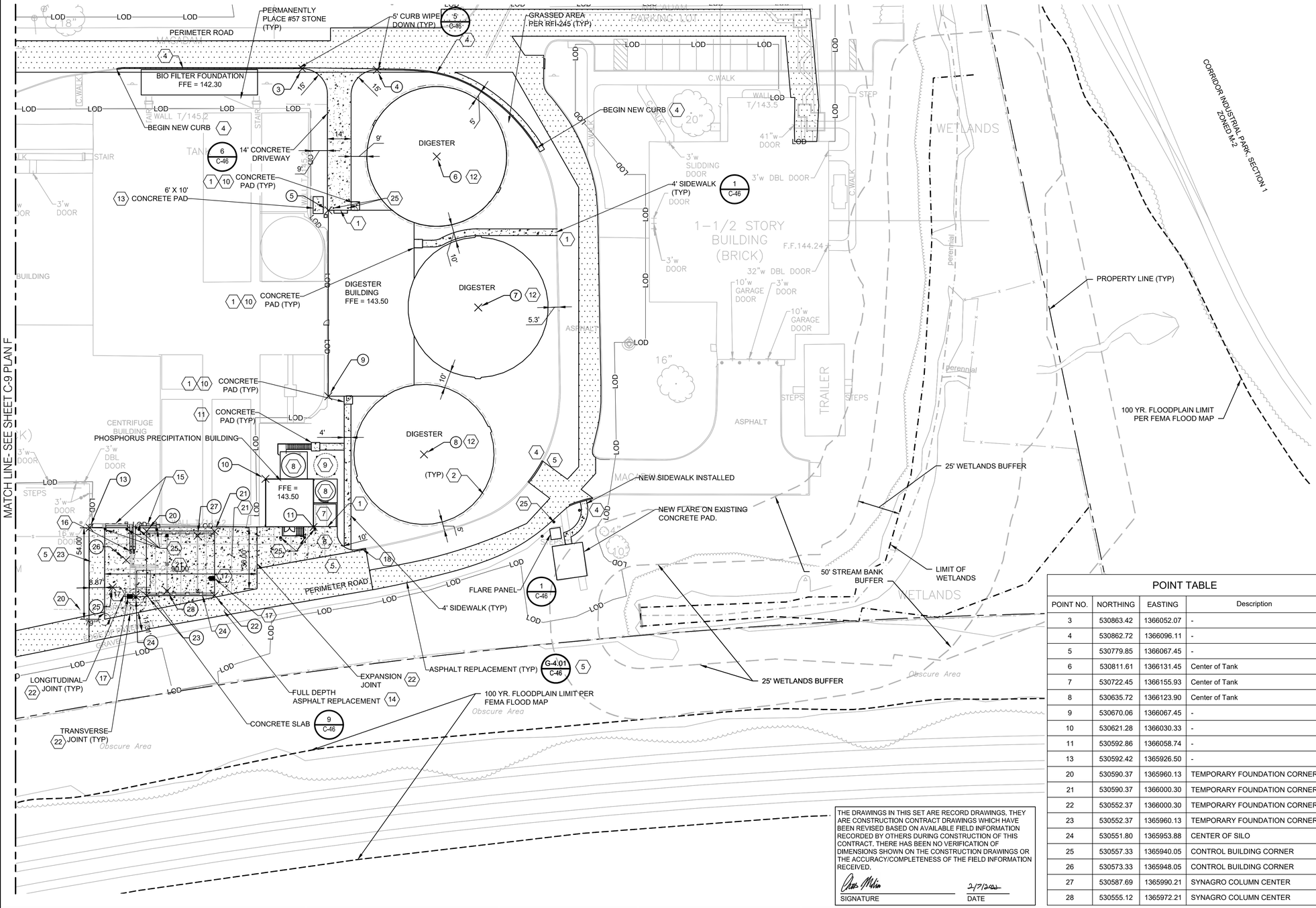

GENERAL NOTES:

1. SEE SHEET C-34 FOR PROPOSED UTILITIES AND YARD PIPING.
2. SEE SHEET X-2 FOR SITE DEMOLITION PLAN.
3. SEE SHEET C-11 FOR DEMOLITION EROSION CONTROL PLAN.
4. SEE SHEET C-21 - C-27 FOR SITE DEVELOPMENT AND EROSION CONTROL.
5. DIGESTER BUILDING, DIGESTER TANKS AND PHOSPHOROUS PRECIPITATION BUILDING ARE ENGINEERED PREFABRICATED BUILDINGS BY OTHERS. SEE STRUCTURAL SHEETS FOR FOUNDATION INFORMATION.
6. SEE SHEET C-1 FOR GENERAL NOTES & LEGEND.
7. DR-17 - CONTRACTOR TO VERIFY ELECTRICAL AND COMMUNICATION MANHOLE RIM AND DUCT BANK ELEVATIONS, NEW WATER LINE ELEVATIONS AT STORM CROSSING, AND EXISTING ELEVATIONS SHOWN ON PLAN. ADJUSTMENTS MAYBE REQUIRED BASED ON FIELD CONDITIONS.

KEY NOTES:

1. INSTALL 1 INCH EXPANSION JOINT WHERE CONCRETE DRIVEWAYS, PADS, AND SIDEWALKS MEET BUILDING FOUNDATIONS OR OTHER STRUCTURAL COMPONENTS.
2. DIGESTER CONCRETE FOUNDATION 1.2' BEYOND OUTSIDE WALL (TYP)
3. NOT USED.
4. CONSTRUCT NEW CURB SEE DETAIL R3.03/C-46.
5. SAW CUT EXISTING PAVEMENT FOR CLEAN BREAK ALONG EDGES WHERE EXISTING MEETS NEW WORK.
6. CONCRETE DRIVEWAY. SEE DETAIL 9/C-46. PROVIDE CONSTRUCTION JOINTS AS SHOWN.
7. DUMPSTER CONTAINMENT AREA, FFE = 141.50
8. TANK PAD, FFE 143.50
9. FUTURE TANK PAD, FFE 143.50
10. CONCRETE PAD, SEE ARCHITECTURAL DRAWING A-320 FOR PAD DESIGN.
11. 5'X5' CONCRETE PAD, SEE STRUCTURAL DETAIL 5/S-904
12. POINT DESIGNATES CENTER OF TANK
13. PIPE SUPPORT PAD DESIGNED BY CONTRACTOR. PROVIDE SIMILAR TO DETAIL 3 ON S-904.
14. SEE FULL DEPTH ASPHALT REPLACEMENT DETAIL R-201 (P-4) ON SHEET C-50.
15. ROLL UP DOORS FOR VEHICLE ACCESS.
16. OVERHEAD CONVEYORS
17. DROP INLET, SEE YARD PIPING PLAN C-34
18. CURB WIPE DOWN. SEE DETAIL 5/C-46.
19. 5' SIDEWALK. SEE 1/C-46.
20. PHASE 2 BUILDING FOUNDATION LIMITS (FOR REFERENCE ONLY)
21. CONCRETE CONTAINMENT AREA FOR STORM WATER RUNOFF DRAINING TO PROCESS, JOINTS PLACED ON 15' X 15' GRID.
22. SEE DETAIL 4/C-46
23. SEE KEY NOTE 5 ON SHEET C-27 FOR PAVEMENT TRANSITION ADJACENT TO CONCRETE CONTAINMENT AREA.
24. TEMPORARY CLASS B LIME STABILIZATION FACILITIES. SEE PLANS BY OTHERS.
25. BOLLARDS 2/S-904. INSTALL BOLLARDS AT PHOSPHORUS BUILDING STAIR AFTER REMOVAL OF TEMPORARY LIME SYSTEM.

POINT TABLE

POINT NO.	NORTHING	EASTING	Description
3	530863.42	1366052.07	-
4	530862.72	1366096.11	-
5	530779.85	1366067.45	-
6	530811.61	1366131.45	Center of Tank
7	530722.45	1366155.93	Center of Tank
8	530635.72	1366123.90	Center of Tank
9	530670.06	1366067.45	-
10	530621.28	1366030.33	-
11	530592.86	1366058.74	-
13	530592.42	1365926.50	-
20	530590.37	1365960.13	TEMPORARY FOUNDATION CORNER
21	530590.37	1366000.30	TEMPORARY FOUNDATION CORNER
22	530552.37	1366000.30	TEMPORARY FOUNDATION CORNER
23	530552.37	1365960.13	TEMPORARY FOUNDATION CORNER
24	530551.80	1365953.88	CENTER OF SILO
25	530557.33	1365940.05	CONTROL BUILDING CORNER
26	530573.33	1365948.05	CONTROL BUILDING CORNER
27	530587.69	1365990.21	SYNAGRO COLUMN CENTER
28	530555.12	1365972.21	SYNAGRO COLUMN CENTER

THE DRAWINGS IN THIS SET ARE RECORD DRAWINGS. THEY ARE CONSTRUCTION CONTRACT DRAWINGS WHICH HAVE BEEN REVISED BASED ON AVAILABLE FIELD INFORMATION RECORDED BY OTHERS DURING CONSTRUCTION OF THIS CONTRACT. THERE HAS BEEN NO VERIFICATION OF DIMENSIONS SHOWN ON THE CONSTRUCTION DRAWINGS OR THE ACCURACY/COMPLETENESS OF THE FIELD INFORMATION RECEIVED.

SIGNATURE — DATE 2/7/2020

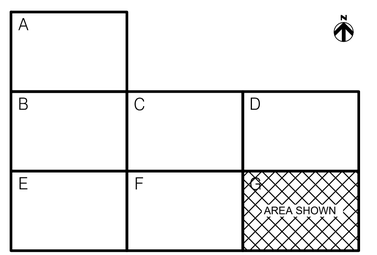

KEYMAP

0 30 60 90

SCALE: 1" = 30'

AS-BUILT REPLACEMENT SHEET

PROFESSIONAL CERTIFICATION
THIS DRAWING WAS ORIGINALLY APPROVED FOR CONSTRUCTION AND SEALED BY ROBERT BAYSDEN, A REGISTERED PROFESSIONAL ENGINEER IN THE STATE OF MARYLAND, NO. 49972.

NOTICE TO CONTRACTORS
- PROJECT ELEVATIONS ARE BASED ON NAVD88 AND HOWARD COUNTY'S BENCHMARK SYSTEM
- PREVIOUS PROJECTS USED OTHER DATUMS
- APPLY THE FOLLOWING CONVERSIONS WHEN USING PREVIOUS CONTRACT DRAWINGS:
  - ADDITION NO. 6: SUBTRACT 0.80 FT
  - PRIOR ADDITIONS: SUBTRACT 1.04 FT

DEPARTMENT OF PUBLIC WORKS
HOWARD COUNTY, MARYLAND

CHIEF, BUREAU OF UTILITIES DATE

DES: xr
DRN: S.W.
CHK: R.B.
DATE: 03/16

DATE	REV	DESCRIPTION
07/2019		RECORD DRAWINGS

CIVIL

SITE LAYOUT PLAN - G

LITTLE PATUXENT WATER RECLAMATION PLANT
8TH ADDITION
BIOSOLIDS PROCESSING FACILITIES – PHASE I

CAPITAL PROJECT S-6295
CONTRACT NO. 24-4935

ELECTION DISTRICT NO. 6
HOWARD COUNTY, MARYLAND

SCALE AS SHOWN

SHEET 67 OF 463

C-10

C:\pwworking\pitt\d1901214\ C-10.dwg 01/21/22_17:41

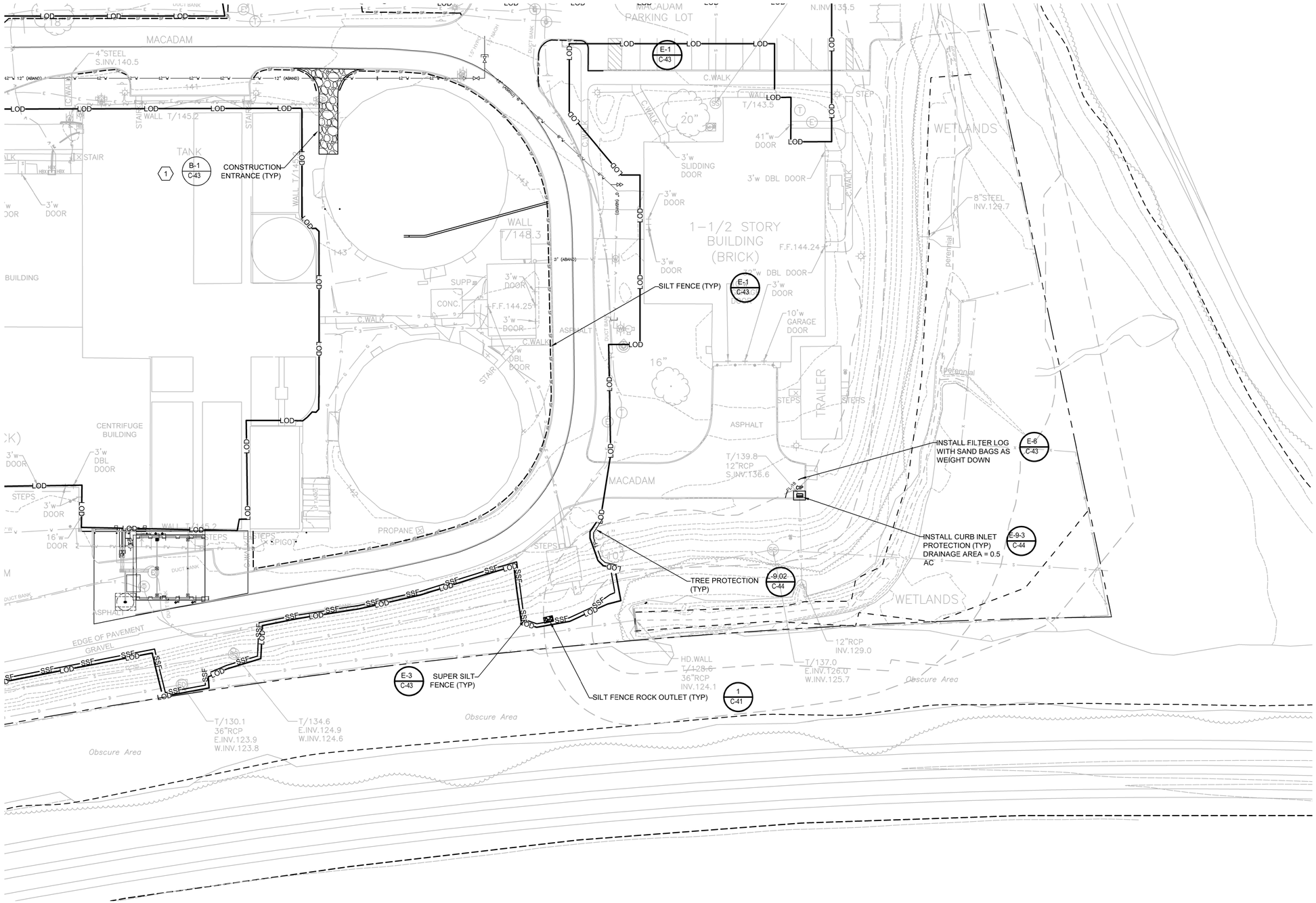

N

GENERAL NOTES:

1. SEE SHEET X-2 FOR DEMOLITION PLAN
2. SEE SHEETS C-21 TO C-27 FOR SITE DEVELOPMENT AND EROSION AND SEDIMENT CONTROL PLANS
3. DEWATERING OPERATIONS MUST OUTFALL INTO AN APPROVED FILTER BAG, BASIN OR TANK.
4. SEE SHEET C-1 FOR GENERAL NOTES AND LEGEND.
5. SEE SHEETS C-41 TO C-44 FOR EROSION CONTROL NOTES AND DETAILS.

KEY NOTES:

(1) INSTALL CONSTRUCTION ENTRANCE AT POINTS OF ENTRY INTO WORK AREA

THE DRAWINGS IN THIS SET ARE RECORD DRAWINGS. THEY ARE CONSTRUCTION CONTRACT DRAWINGS WHICH HAVE BEEN REVISED BASED ON AVAILABLE FIELD INFORMATION RECORDED BY OTHERS DURING CONSTRUCTION OF THIS CONTRACT. THERE HAS BEEN NO VERIFICATION OF DIMENSIONS SHOWN ON THE CONSTRUCTION DRAWINGS OR THE ACCURACY/COMPLETENESS OF THE FIELD INFORMATION RECEIVED.

SIGNATURE _____ DATE 2/7/2023

A		N
B	C	D
E	F	G AREA SHOWN

KEYMAP

0 30 60 90

SCALE: 1" = 30'

C:\pwworking\pitt\d1901214\C-11.dwg 01/10/22_17:04

AS-BUILT REPLACEMENT SHEET

PROFESSIONAL CERTIFICATION
THIS DRAWING WAS ORIGINALLY APPROVED FOR CONSTRUCTION AND SEALED BY ROBERT BAYSDEN, A REGISTERED PROFESSIONAL ENGINEER IN THE STATE OF MARYLAND, NO. 49972.

NOTICE TO CONTRACTORS
- PROJECT ELEVATIONS ARE BASED ON NAVD88 AND HOWARD COUNTY'S BENCHMARK SYSTEM
- PREVIOUS PROJECTS USED OTHER DATUMS
- APPLY THE FOLLOWING CONVERSIONS WHEN USING PREVIOUS CONTRACT DRAWINGS:
  - ADDITION NO. 6: SUBTRACT 0.80 FT
  - PRIOR ADDITIONS: SUBTRACT 1.04 FT

DEPARTMENT OF PUBLIC WORKS
HOWARD COUNTY, MARYLAND

CHIEF, BUREAU OF UTILITIES DATE

DES: xr
DRN: S.W.
CHK: R.B.
DATE: 03/16

DATE	REV	DESCRIPTION
07/2019		RECORD DRAWINGS

CIVIL

DIGESTER DEMOLITION
EROSION AND SEDIMENT
CONTROL PLAN - G

LITTLE PATUXENT WATER RECLAMATION PLANT
8TH ADDITION
BIOSOLIDS PROCESSING FACILITIES – PHASE I

CAPITAL PROJECT S-6295
CONTRACT NO. 24-4935

ELECTION DISTRICT NO. 6
HOWARD COUNTY, MARYLAND

SCALE AS SHOWN

SHEET 68 OF 463

C-11

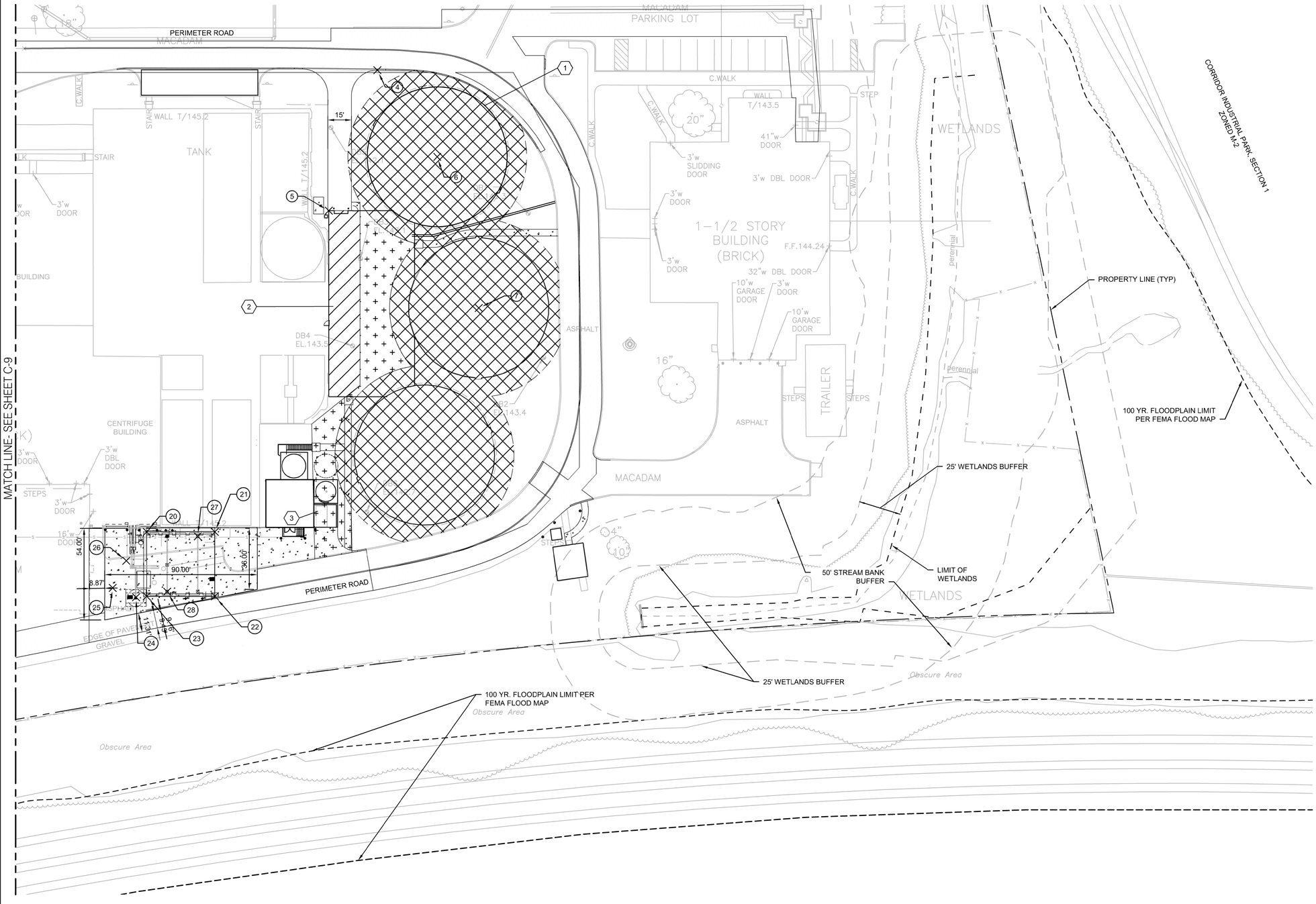

N

GENERAL NOTES:

1. EXTENTS OF LIMITS FOR RAPID IMPACT COMPACTION (RIC) IS SHOWN SCHEMATICALLY. FINAL LAYOUT OF RIC SHALL BE DETERMINED BY GEOTECHNICAL ENGINEER AND BY RIC CONTRACTOR.
2. SEE SPECIFICATION SECTIONS 31 23 00 AND 31 45 17 FOR ADDITIONAL INFORMATION.

KEY NOTES:

1. RIC REQUIRED AT DIGESTER TANKS
2. RIC NOT PERMITTED WITHIN 15' OF EXISTING BASEMENT WALLS.
3. RIC OPTIONAL. SEE SPECIFICATIONS AND GEOTECHNICAL REPORT FOR ADDITIONAL INFORMATION.

THE DRAWINGS IN THIS SET ARE RECORD DRAWINGS. THEY ARE CONSTRUCTION CONTRACT DRAWINGS WHICH HAVE BEEN REVISED BASED ON AVAILABLE FIELD INFORMATION RECORDED BY OTHERS DURING CONSTRUCTION OF THIS CONTRACT. THERE HAS BEEN NO VERIFICATION OF DIMENSIONS SHOWN ON THE CONSTRUCTION DRAWINGS OR THE ACCURACY/COMPLETENESS OF THE FIELD INFORMATION RECEIVED.

SIGNATURE — DATE 2/7/2023

A		
B	C	D
E	F	G AREA SHOWN

KEYMAP

0 30 60 90

SCALE: 1" = 30'

1

C:\pwworking\pitt\d1901214\C-12.dwg 01/10/22_17:03

AS-BUILT REPLACEMENT SHEET

PROFESSIONAL CERTIFICATION
THIS DRAWING WAS ORIGINALLY APPROVED FOR CONSTRUCTION AND SEALED BY ROBERT BAYSDEN, A REGISTERED PROFESSIONAL ENGINEER IN THE STATE OF MARYLAND, NO. 49972.

NOTICE TO CONTRACTORS
- PROJECT ELEVATIONS ARE BASED ON NAVD88 AND HOWARD COUNTY'S BENCHMARK SYSTEM
- PREVIOUS PROJECTS USED OTHER DATUMS
- APPLY THE FOLLOWING CONVERSIONS WHEN USING PREVIOUS CONTRACT DRAWINGS:
  - ADDITION NO. 6: SUBTRACT 0.80 FT
  - PRIOR ADDITIONS: SUBTRACT 1.04 FT

DEPARTMENT OF PUBLIC WORKS
HOWARD COUNTY, MARYLAND

CHIEF, BUREAU OF UTILITIES DATE

DES: xr
DRN: S.W.
CHK: R.B.
DATE: 03/16

DATE	REV	DESCRIPTION
07/2019		RECORD DRAWINGS

CIVIL

SOIL IMPROVEMENT PLAN - G

LITTLE PATUXENT WATER RECLAMATION PLANT
8TH ADDITION
BIOSOLIDS PROCESSING FACILITIES – PHASE I

CAPITAL PROJECT S-6295
CONTRACT NO. 24-4935

ELECTION DISTRICT NO. 6
HOWARD COUNTY, MARYLAND

SCALE AS SHOWN

SHEET 69 OF 463

C-12

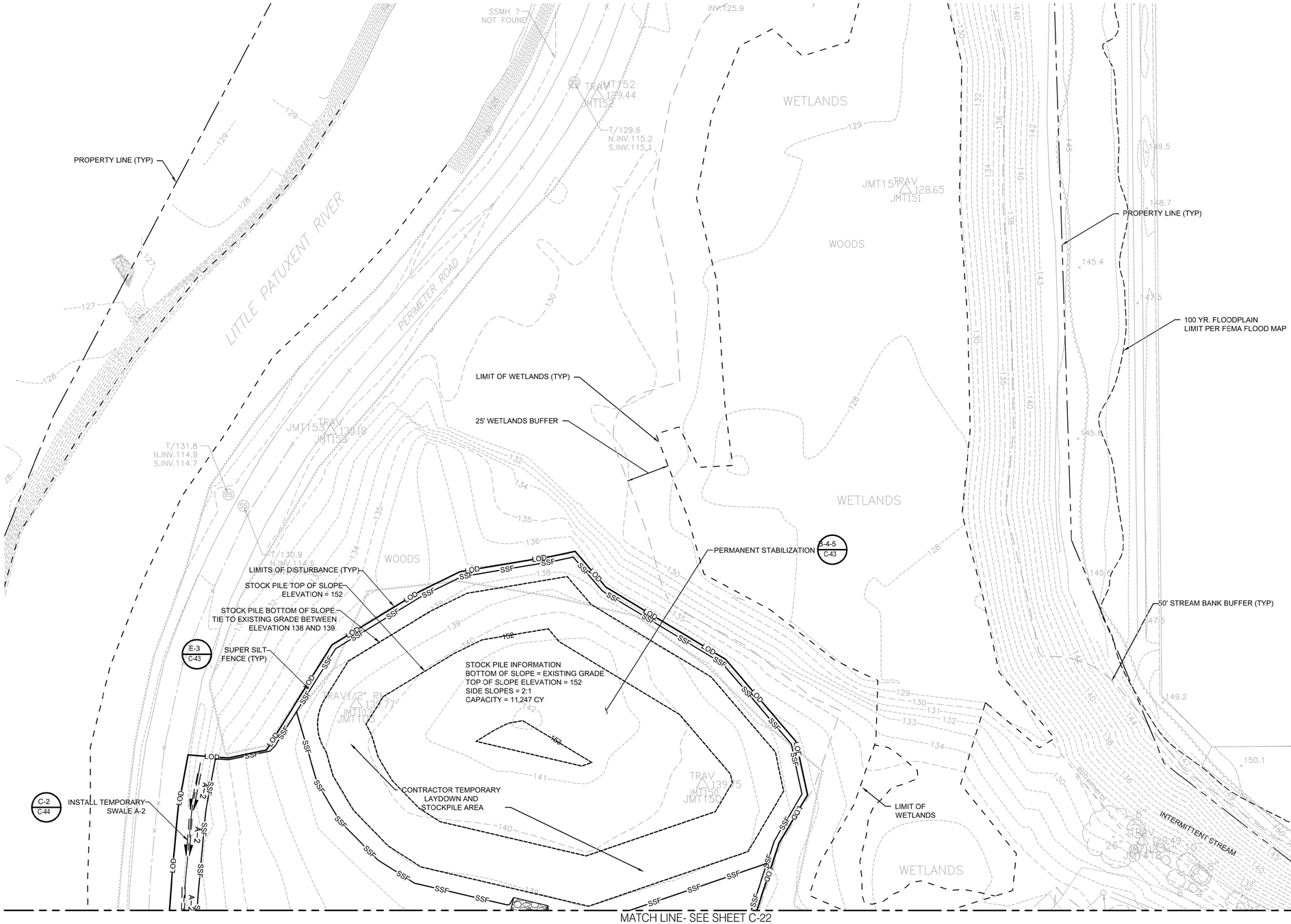

N

GENERAL NOTES:

1. SEE SHEETS C-41 - C-44 FOR EROSION AND SEDIMENT CONTROL NOTES AND DETAILS.
2. SEE SHEET C-1 FOR GENERAL NOTES AND LEGEND.

THE DRAWINGS IN THIS SET ARE RECORD DRAWINGS. THEY ARE CONSTRUCTION CONTRACT DRAWINGS WHICH HAVE BEEN REVISED BASED ON AVAILABLE FIELD INFORMATION RECORDED BY OTHERS DURING CONSTRUCTION OF THIS CONTRACT. THERE HAS BEEN NO VERIFICATION OF DIMENSIONS SHOWN ON THE CONSTRUCTION DRAWINGS OR THE ACCURACY/COMPLETENESS OF THE FIELD INFORMATION RECEIVED.

SIGNATURE _____ DATE 2/7/2023

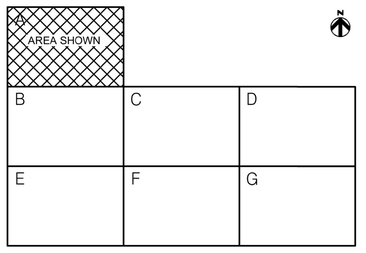

KEYMAP

0 30 60 90

SCALE: 1" = 30'

C:\pwworking\pitt\d1901214\...C-21.dwg 01/10/22 17:01

AS-BUILT REPLACEMENT SHEET

PROFESSIONAL CERTIFICATION
THIS DRAWING WAS ORIGINALLY APPROVED FOR CONSTRUCTION AND SEALED BY ROBERT BAYSDEN, A REGISTERED PROFESSIONAL ENGINEER IN THE STATE OF MARYLAND, NO. 49972.

NOTICE TO CONTRACTORS
- PROJECT ELEVATIONS ARE BASED ON NAVD88 AND HOWARD COUNTY'S BENCHMARK SYSTEM
- PREVIOUS PROJECTS USED OTHER DATUMS
- APPLY THE FOLLOWING CONVERSIONS WHEN USING PREVIOUS CONTRACT DRAWINGS:
  - ADDITION NO. 6: SUBTRACT 0.80 FT
  - PRIOR ADDITIONS: SUBTRACT 1.04 FT

DEPARTMENT OF PUBLIC WORKS
HOWARD COUNTY, MARYLAND

CHIEF, BUREAU OF UTILITIES DATE

DES: M.L.
DRN: S.W.
CHK: R.B.
DATE: 03/16

DATE	REV	DESCRIPTION
07/2019		RECORD DRAWINGS

CIVIL

SITE DEVELOPMENT AND EROSION AND SEDIMENT CONTROL PLAN - A

LITTLE PATUXENT WATER RECLAMATION PLANT
8TH ADDITION
BIOSOLIDS PROCESSING FACILITIES – PHASE I

CAPITAL PROJECT S-6295
CONTRACT NO. 24-4935

ELECTION DISTRICT NO. 6
HOWARD COUNTY, MARYLAND

SCALE AS SHOWN

SHEET 70 OF 463

C-21

MATCH LINE- SEE SHEET C-21 PLAN A

SUPER SILT FENCE (TYP)

E-3 C-43

CONTRACTOR LAYDOWN AREA

C-2 C-44 TEMPORARY SWALE A-2

C-2 C-43 ROCK CHECK DAM (TYP)

T/130.4
N.INV.114.2
S.INV.114.0

1 C-41 SILT FENCE ROCK OUTLET (TYP)

INSTALL TEMPORARY 15" RCP DRIVEWAY CULVERT

CONTRACTOR LAYDOWN AREA

CONTINUE CONSTRUCTION ENTRANCE TO STOCK PILE

CONSTRUCTION ENTRANCE (TYP)
MINIMUM LENGTH = 100'

B-1 C-43

1 C-41 SILT FENCE ROCK OUTLET (TYP)

T/127.8
N.INV.114.2
S.INV.114.0

CONNECT TEMPORARY SWALE TO EXISTING DITCH

T/127.2
N.INV.113.8
S.INV.113.7

PROPERTY LINE (TYP)

T/126.9
N.INV.113.6
S.INV.113.6

T/126.6
NW.INV.113.9
SE.INV.113.7

LIMIT OF WETLANDS (TYP)

25' WETLANDS BUFFER

50' STREAM BANK BUFFER (TYP)

INTER TENT STREAM

T/134.4
W.INV.119.4
(RECESSED PIPE)

BLDG
F.F.143.45
F.F.143.48 (LIMIT)

T/137.5
WATER FILLED
FLR.119.5
(RECESSED PIPES)

T/136.6
WATER FILLED
INV.119.2

T/137.1
W.INV.121.6

T/125.4
WATER FILLED
FLR.117.8
(RECESSED PIPES)

T/131.6
WATER FILLED
W.INV.118.6
(RECESSED PIPES)

T/127.2
WATER FILLED
FLR.117.9
(RECESSED PIPES)

12"STEEL
INV.128.4

TRAV1X2' R&C
EL 128.72
JMT104

HD WALL
T/126.7
(FULL OF WATER)

T/127.6
12"RCP
S.INV.121.4
N.INV.121.1

12"STEEL
INV.128.4

T/126.2

T/127.0
12"RCP
N.INV.123.2
(DEBRIS)

T/126.9

TRAV1X2' R&C
EL 127.74
JMT101

BASE ONLY

12"STEEL
INV.130.6

T/126.2
(RECESSED PIPES)
INV.113.4

TREES

TANK

NORTH PROCESS REACTORS

BLOWER BUILDING

PRIMARY CLARIFIER #1

FLOW EQUALIZATION BASIN #1

INFLUENT ROAD

PERIMETER ROAD

LITTLE PATUXENT RIVER

MATCH LINE- SEE SHEET C-23 PLAN C

MATCH LINE- SEE SHEET C-25 PLAN E

N

GENERAL NOTES:

1. SEE SHEETS C-41 - C-44 FOR EROSION AND SEDIMENT CONTROL NOTES AND DETAILS.
2. SEE SHEET C-1 FOR GENERAL NOTES AND LEGEND.

THE DRAWINGS IN THIS SET ARE RECORD DRAWINGS. THEY ARE CONSTRUCTION CONTRACT DRAWINGS WHICH HAVE BEEN REVISED BASED ON AVAILABLE FIELD INFORMATION RECORDED BY OTHERS DURING CONSTRUCTION OF THIS CONTRACT. THERE HAS BEEN NO VERIFICATION OF DIMENSIONS SHOWN ON THE CONSTRUCTION DRAWINGS OR THE ACCURACY/COMPLETENESS OF THE FIELD INFORMATION RECEIVED.

SIGNATURE _____ DATE 2/7/2023

A		
B AREA SHOWN	C	D
E	F	G

KEYMAP

0 30 60 90

SCALE: 1" = 30'

C:\pwworking\pitt\d1901214\C-22.dwg 01/10/22_16:59

AS-BUILT REPLACEMENT SHEET

PROFESSIONAL CERTIFICATION
THIS DRAWING WAS ORIGINALLY APPROVED FOR CONSTRUCTION AND SEALED BY ROBERT BAYSDEN, A REGISTERED PROFESSIONAL ENGINEER IN THE STATE OF MARYLAND, NO. 49972.

NOTICE TO CONTRACTORS
- PROJECT ELEVATIONS ARE BASED ON NAVD88 AND HOWARD COUNTY'S BENCHMARK SYSTEM
- PREVIOUS PROJECTS USED OTHER DATUMS
- APPLY THE FOLLOWING CONVERSIONS WHEN USING PREVIOUS CONTRACT DRAWINGS:
  - ADDITION NO. 6: SUBTRACT 0.80 FT.
  - PRIOR ADDITIONS: SUBTRACT 1.04 FT.

DEPARTMENT OF PUBLIC WORKS
HOWARD COUNTY, MARYLAND

CHIEF, BUREAU OF UTILITIES DATE

DES: xr
DRN: S.W.
CHK: R.B.
DATE: 03/16

DATE	REV	DESCRIPTION
07/2019		RECORD DRAWINGS

CIVIL

SITE DEVELOPMENT AND EROSION AND SEDIMENT CONTROL PLAN - B

LITTLE PATUXENT WATER RECLAMATION PLANT
8TH ADDITION
BIOSOLIDS PROCESSING FACILITIES – PHASE I

CAPITAL PROJECT S-6295
CONTRACT NO. 24-4935

ELECTION DISTRICT NO. 6
HOWARD COUNTY, MARYLAND

SCALE AS SHOWN

SHEET 71 OF 463

C-22

GENERAL NOTES:

1. SEE SHEETS C-41 - C-44 FOR EROSION AND SEDIMENT CONTROL NOTES AND DETAILS.
2. 4" NATURAL GAS LINE TO BE INSTALLED BY OTHERS FROM OFFSITE CONNECTION TO BUILDINGS (INCLUDING METERS) AND POINT OF TERMINATION FOR FUTURE EXPANSION.
3. SEE SHEET C-1 FOR GENERAL NOTES & LEGEND.

THE DRAWINGS IN THIS SET ARE RECORD DRAWINGS. THEY ARE CONSTRUCTION CONTRACT DRAWINGS WHICH HAVE BEEN REVISED BASED ON AVAILABLE FIELD INFORMATION RECORDED BY OTHERS DURING CONSTRUCTION OF THIS CONTRACT. THERE HAS BEEN NO VERIFICATION OF DIMENSIONS SHOWN ON THE CONSTRUCTION DRAWINGS OR THE ACCURACY/COMPLETENESS OF THE FIELD INFORMATION RECEIVED.

SIGNATURE _____ DATE 2/7/2023

A		
B	C AREA SHOWN	D
E	F	G

KEYMAP

0 30 60 90

SCALE: 1" = 30'

AS-BUILT REPLACEMENT SHEET

PROFESSIONAL CERTIFICATION
THIS DRAWING WAS ORIGINALLY APPROVED FOR CONSTRUCTION AND SEALED BY ROBERT BAYSDEN, A REGISTERED PROFESSIONAL ENGINEER IN THE STATE OF MARYLAND, NO. 49972.

NOTICE TO CONTRACTORS
- PROJECT ELEVATIONS ARE BASED ON NAVD88 AND HOWARD COUNTY'S BENCHMARK SYSTEM
- PREVIOUS PROJECTS USED OTHER DATUMS
- APPLY THE FOLLOWING CONVERSIONS WHEN USING PREVIOUS CONTRACT DRAWINGS:
  - ADDITION NO. 6: SUBTRACT 0.80 FT
  - PRIOR ADDITIONS: SUBTRACT 1.04 FT

DEPARTMENT OF PUBLIC WORKS
HOWARD COUNTY, MARYLAND

CHIEF, BUREAU OF UTILITIES DATE

DES: M.L.
DRN: S.W.
CHK: R.B.
DATE: 03/16

DATE	REV	DESCRIPTION
07/2019		RECORD DRAWINGS

CIVIL

SITE DEVELOPMENT AND EROSION AND SEDIMENT CONTROL PLAN - C

LITTLE PATUXENT WATER RECLAMATION PLANT
8TH ADDITION
BIOSOLIDS PROCESSING FACILITIES – PHASE I

CAPITAL PROJECT S-6295
CONTRACT NO. 24-4935

ELECTION DISTRICT NO. 6
HOWARD COUNTY, MARYLAND

SCALE AS SHOWN

SHEET 72 OF 463

C-23

C:\pwworking\pitt\d190214\C-23.dwg 01/10/22_16:57

MATCH LINE- SEE SHEET C-23 PLAN C

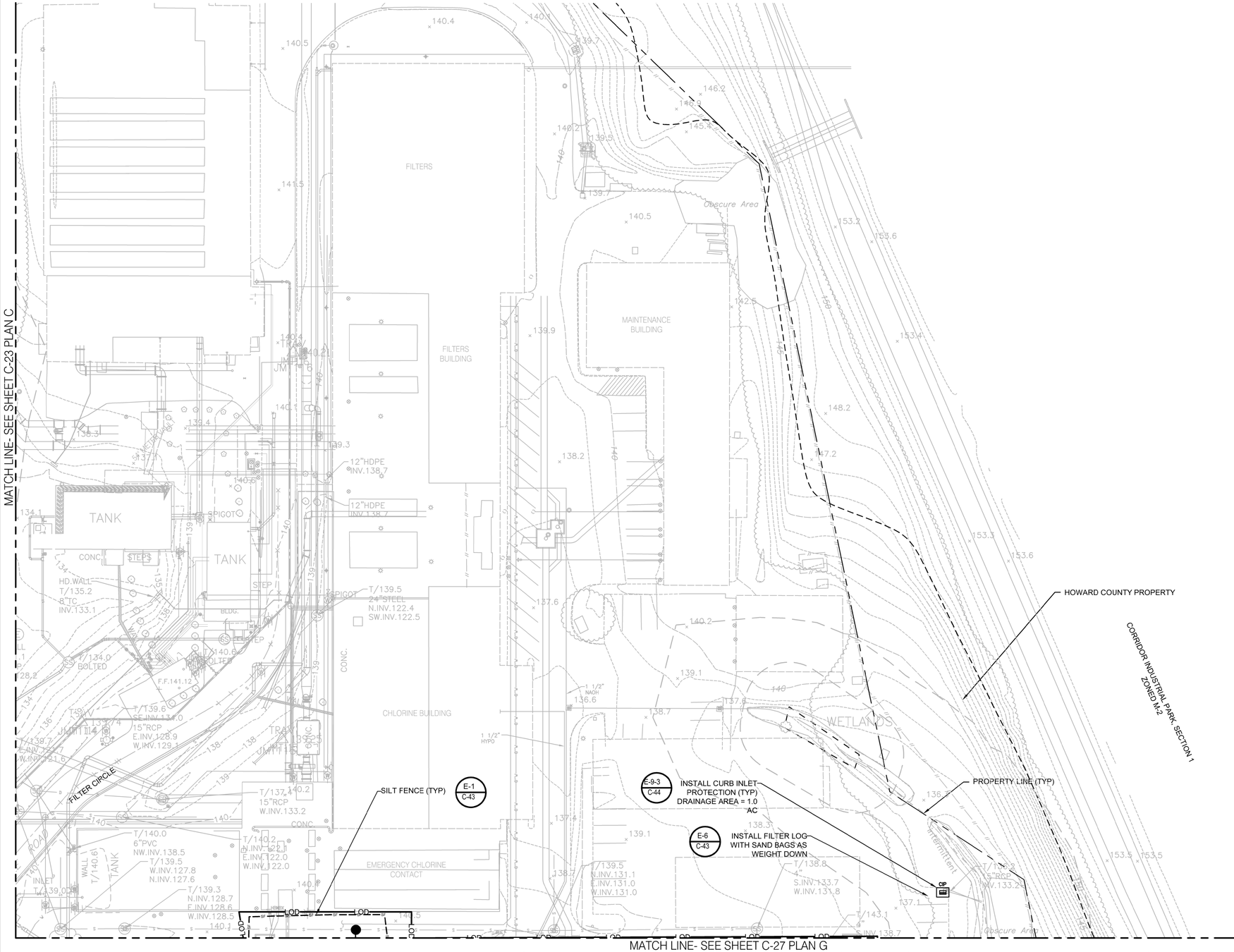

MATCH LINE- SEE SHEET C-27 PLAN G

N

GENERAL NOTES:

1. SEE SHEETS C-41 - C-44 FOR EROSION AND SEDIMENT CONTROL, NOTES, AND DETAILS.
2. SEE SHEET C-1 FOR GENERAL NOTES AND LEGEND.

THE DRAWINGS IN THIS SET ARE RECORD DRAWINGS. THEY ARE CONSTRUCTION CONTRACT DRAWINGS WHICH HAVE BEEN REVISED BASED ON AVAILABLE FIELD INFORMATION RECORDED BY OTHERS DURING CONSTRUCTION OF THIS CONTRACT. THERE HAS BEEN NO VERIFICATION OF DIMENSIONS SHOWN ON THE CONSTRUCTION DRAWINGS OR THE ACCURACY/COMPLETENESS OF THE FIELD INFORMATION RECEIVED.

SIGNATURE — DATE 2/7/2023

A		
B	C	D AREA SHOWN
E	F	G

KEYMAP

0 30 60 90

SCALE: 1" = 30'

C:\pwworking\pit\d1901214\C-24.dwg 01/10/22_16:56

AS-BUILT REPLACEMENT SHEET

PROFESSIONAL CERTIFICATION
THIS DRAWING WAS ORIGINALLY APPROVED FOR CONSTRUCTION AND SEALED BY ROBERT BAYSDEN, A REGISTERED PROFESSIONAL ENGINEER IN THE STATE OF MARYLAND, NO. 49972.

NOTICE TO CONTRACTORS
- PROJECT ELEVATIONS ARE BASED ON NAVD88 AND HOWARD COUNTY'S BENCHMARK SYSTEM
- PREVIOUS PROJECTS USED OTHER DATUMS
- APPLY THE FOLLOWING CONVERSIONS WHEN USING PREVIOUS CONTRACT DRAWINGS:
  - ADDITION NO. 6: SUBTRACT 0.80 FT.
  - PRIOR ADDITIONS: SUBTRACT 1.04 FT.

DEPARTMENT OF PUBLIC WORKS
HOWARD COUNTY, MARYLAND

CHIEF, BUREAU OF UTILITIES — DATE

DES: M.L.
DRN: S.W.
CHK: R.B.
DATE: 03/16

DATE	REV	DESCRIPTION
07/2019		RECORD DRAWINGS

CIVIL

SITE DEVELOPMENT AND EROSION AND SEDIMENT CONTROL PLAN D

LITTLE PATUXENT WATER RECLAMATION PLANT
8TH ADDITION
BIOSOLIDS PROCESSING FACILITIES – PHASE I

CAPITAL PROJECT S-6295
CONTRACT NO. 24-4935

ELECTION DISTRICT NO. 6
HOWARD COUNTY, MARYLAND

SCALE AS SHOWN

SHEET 73 OF 463

C-24

MATCH LINE- SEE SHEET C--22

N

GENERAL NOTES:

1. NO WORK IS SCHEDULED FOR THIS SHEET

THE DRAWINGS IN THIS SET ARE RECORD DRAWINGS. THEY ARE CONSTRUCTION CONTRACT DRAWINGS WHICH HAVE BEEN REVISED BASED ON AVAILABLE FIELD INFORMATION RECORDED BY OTHERS DURING CONSTRUCTION OF THIS CONTRACT. THERE HAS BEEN NO VERIFICATION OF DIMENSIONS SHOWN ON THE CONSTRUCTION DRAWINGS OR THE ACCURACY/COMPLETENESS OF THE FIELD INFORMATION RECEIVED.

SIGNATURE _____ DATE 2/7/2023

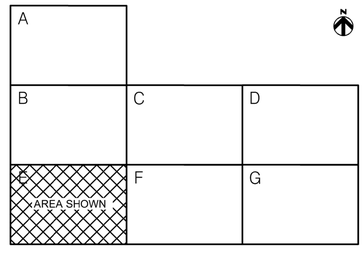

KEYMAP

0 30 60 90

SCALE: 1" = 30'

C:\pwworking\pitt\d1901214\C-25.dwg 01/10/22_16:51

AS-BUILT REPLACEMENT SHEET

PROFESSIONAL CERTIFICATION
THIS DRAWING WAS ORIGINALLY APPROVED FOR CONSTRUCTION AND SEALED BY ROBERT BAYSDEN, A REGISTERED PROFESSIONAL ENGINEER IN THE STATE OF MARYLAND, NO. 49972.

NOTICE TO CONTRACTORS
- PROJECT ELEVATIONS ARE BASED ON NAVD88 AND HOWARD COUNTY'S BENCHMARK SYSTEM
- PREVIOUS PROJECTS USED OTHER DATUMS
- APPLY THE FOLLOWING CONVERSIONS WHEN USING PREVIOUS CONTRACT DRAWINGS:
  - ADDITION NO. 6: SUBTRACT 0.80 FT
  - PRIOR ADDITIONS: SUBTRACT 1.04 FT

DEPARTMENT OF PUBLIC WORKS
HOWARD COUNTY, MARYLAND

CHIEF, BUREAU OF UTILITIES DATE

DES: xr
DRN: S.W.
CHK: R.B.
DATE: 03/16

DATE	REV	DESCRIPTION
07/2019		RECORD DRAWINGS

CIVIL

SITE DEVELOPMENT AND EROSION AND SEDIMENT CONTROL PLAN - E

LITTLE PATUXENT WATER RECLAMATION PLANT
8TH ADDITION
BIOSOLIDS PROCESSING FACILITIES – PHASE I

CAPITAL PROJECT S-6295
CONTRACT NO. 24-4935

ELECTION DISTRICT NO. 6
HOWARD COUNTY, MARYLAND

SCALE AS SHOWN

SHEET 74 OF 463

C-25

MATCH LINE- SEE SHEET C-23 PLAN C

MATCH LINE- SEE SHEET C-25 PLAN E

MATCH LINE- SEE SHEET C-27 PLAN G

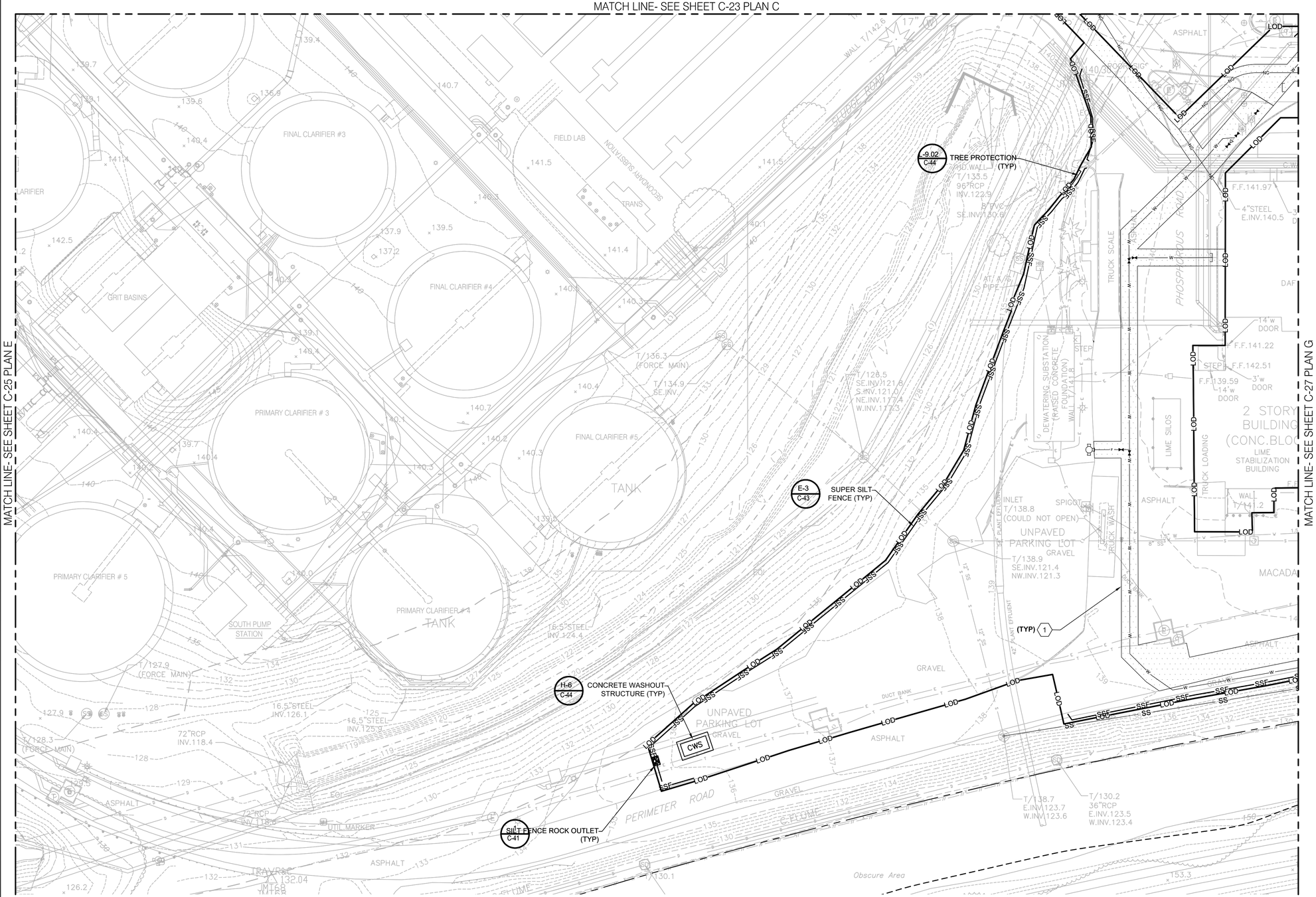

N

GENERAL NOTES:

1. SEE SHEETS C-41 - C-44 FOR EROSION AND SEDIMENT CONTROL NOTES AND DETAILS.
2. GAS LINE SHALL BE DESIGNED AND INSTALLED BY OTHERS.
3. SEE SHEET C-1 FOR GENERAL NOTES & LEGEND.

KEY NOTES:

(1) MATCH EXISTING PAVEMENT GRADES WHERE NEW PAVEMENT MEETS EXISTING.

THE DRAWINGS IN THIS SET ARE RECORD DRAWINGS. THEY ARE CONSTRUCTION CONTRACT DRAWINGS WHICH HAVE BEEN REVISED BASED ON AVAILABLE FIELD INFORMATION RECORDED BY OTHERS DURING CONSTRUCTION OF THIS CONTRACT. THERE HAS BEEN NO VERIFICATION OF DIMENSIONS SHOWN ON THE CONSTRUCTION DRAWINGS OR THE ACCURACY/COMPLETENESS OF THE FIELD INFORMATION RECEIVED.

SIGNATURE _____ DATE 2/7/2023

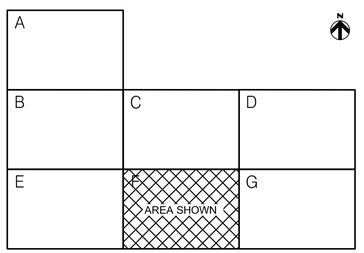

KEYMAP

0 30 60 90

SCALE: 1" = 30'

C:\pwworking\pitt\d1901214\C-26.dwg 01/11/22 7:52

AS-BUILT REPLACEMENT SHEET

PROFESSIONAL CERTIFICATION
THIS DRAWING WAS ORIGINALLY APPROVED FOR CONSTRUCTION AND SEALED BY ROBERT BAYSDEN, A REGISTERED PROFESSIONAL ENGINEER IN THE STATE OF MARYLAND, NO. 49972.

NOTICE TO CONTRACTORS
- PROJECT ELEVATIONS ARE BASED ON NAVD88 AND HOWARD COUNTY'S BENCHMARK SYSTEM
- PREVIOUS PROJECTS USED OTHER DATUMS
- APPLY THE FOLLOWING CONVERSIONS WHEN USING PREVIOUS CONTRACT DRAWINGS:
  - ADDITION NO. 6: SUBTRACT 0.80 FT
  - PRIOR ADDITIONS: SUBTRACT 1.04 FT

DEPARTMENT OF PUBLIC WORKS
HOWARD COUNTY, MARYLAND

CHIEF, BUREAU OF UTILITIES DATE

DES: xr
DRN: S.W.
CHK: R.B.
DATE: 03/16

DATE	REV	DESCRIPTION
07/2019		RECORD DRAWINGS

CIVIL

SITE DEVELOPMENT AND EROSION AND SEDIMENT CONTROL PLAN - F

LITTLE PATUXENT WATER RECLAMATION PLANT
8TH ADDITION
BIOSOLIDS PROCESSING FACILITIES – PHASE I

CAPITAL PROJECT S-6295
CONTRACT NO. 24-4935

ELECTION DISTRICT NO. 6
HOWARD COUNTY, MARYLAND

SCALE AS SHOWN

SHEET 75 OF 463

C-26

MATCH LINE- SEE SHEET C-24 PLAN D

MATCH LINE- SEE SHEET C-26 PLAN F

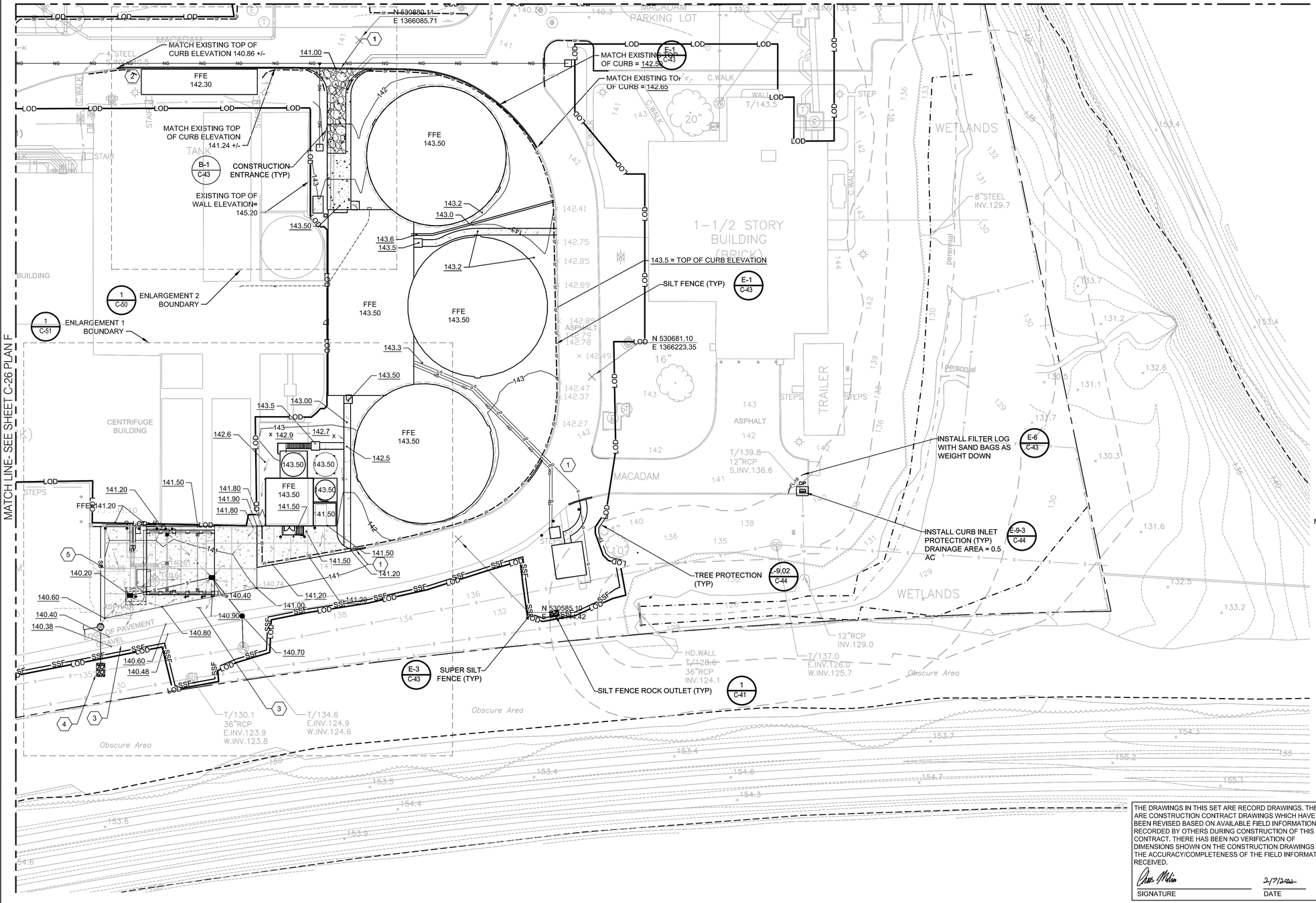

N

GENERAL NOTES:

1. SEE SHEETS C-41 - C-44 FOR EROSION AND SEDIMENT CONTROL NOTES AND DETAILS.
2. GAS LINE SHALL BE DESIGNED AND INSTALLED BY OTHERS.
3. SEE SHEET C-1 FOR GENERAL NOTES & LEGEND.

KEY NOTES:

1. MATCH EXISTING PAVEMENT GRADES WHERE CONCRETE DRIVEWAY AND SIDEWALK MEETS ASPHALT ACCESS DRIVE.
2. BACKFILL DEMOLISHED AREAS AROUND BIO-FILTER FOUNDATION, GRADE TO DRAIN.
3. DEMOLISH EXISTING ASPHALT AND REPLACE WITH NEW FULL DEPTH ASPHALT TO NEW FINISH ELEVATION. ADJUST GRAVEL SHOULDER TO NEW ELEVATION WITH COMPACTED AGGREGATE.
4. INSTALL 5FT X 8FT OF 12 INCH THICK CLASS I RIP RAP OVER NON-WOVEN GEOTEXTILE FABRIC.
5. CONTRACTOR TO SAW-CUT EXISTING PAVEMENT TO THE EXTENT NECESSARY TO PROVIDE A SMOOTH MATCH BETWEEN THE NEW CONCRETE PAD AND EXISTING ASPHALT DRIVE. EXISTING TOPOGRAPHY IS LIMITED. ADJUSTMENTS IN THE PAVEMENT SHALL BE MADE TO MAKE THE MATCH AND THE CONCRETE PAD SHALL BE KEPT AS DESIGNED. SEE DETAIL 1 ON THIS SHEET.

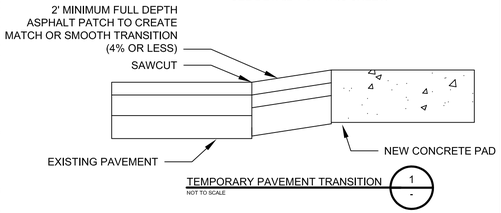

TEMPORARY PAVEMENT TRANSITION (NOT TO SCALE) — 1 / -

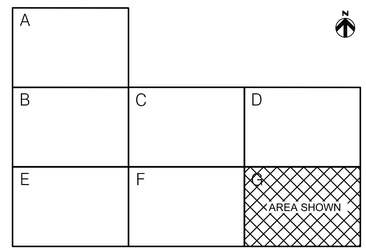

KEYMAP

0 30 60 90

SCALE: 1" = 30'

THE DRAWINGS IN THIS SET ARE RECORD DRAWINGS. THEY ARE CONSTRUCTION CONTRACT DRAWINGS WHICH HAVE BEEN REVISED BASED ON AVAILABLE FIELD INFORMATION RECORDED BY OTHERS DURING CONSTRUCTION OF THIS CONTRACT. THERE HAS BEEN NO VERIFICATION OF DIMENSIONS SHOWN ON THE CONSTRUCTION DRAWINGS OR THE ACCURACY/COMPLETENESS OF THE FIELD INFORMATION RECEIVED.

SIGNATURE — DATE 2/7/2022

C:\pwworking\pitt\d1901214\C-27.dwg 01/11/22_7:54

AS-BUILT REPLACEMENT SHEET

PROFESSIONAL CERTIFICATION
THIS DRAWING WAS ORIGINALLY APPROVED FOR CONSTRUCTION AND SEALED BY ROBERT BAYSDEN, A REGISTERED PROFESSIONAL ENGINEER IN THE STATE OF MARYLAND, NO. 49972.

NOTICE TO CONTRACTORS
- PROJECT ELEVATIONS ARE BASED ON NAVD88 AND HOWARD COUNTY'S BENCHMARK SYSTEM
- PREVIOUS PROJECTS USED OTHER DATUMS
- APPLY THE FOLLOWING CONVERSIONS WHEN USING PREVIOUS CONTRACT DRAWINGS:
  - ADDITION NO. 6: SUBTRACT 0.80 FT
  - PRIOR ADDITIONS: SUBTRACT 1.04 FT

DEPARTMENT OF PUBLIC WORKS
HOWARD COUNTY, MARYLAND

CHIEF, BUREAU OF UTILITIES — DATE

DES: xr
DRN: S.W.
CHK: R.B.
DATE: 03/16

DATE	REV	DESCRIPTION
07/2019		RECORD DRAWINGS

CIVIL

SITE DEVELOPMENT AND EROSION AND SEDIMENT CONTROL PLAN - G

LITTLE PATUXENT WATER RECLAMATION PLANT
8TH ADDITION
BIOSOLIDS PROCESSING FACILITIES – PHASE I

CAPITAL PROJECT S-6295
CONTRACT NO. 24-4935

ELECTION DISTRICT NO. 6
HOWARD COUNTY, MARYLAND

SCALE AS SHOWN

SHEET 76 OF 463

C-27

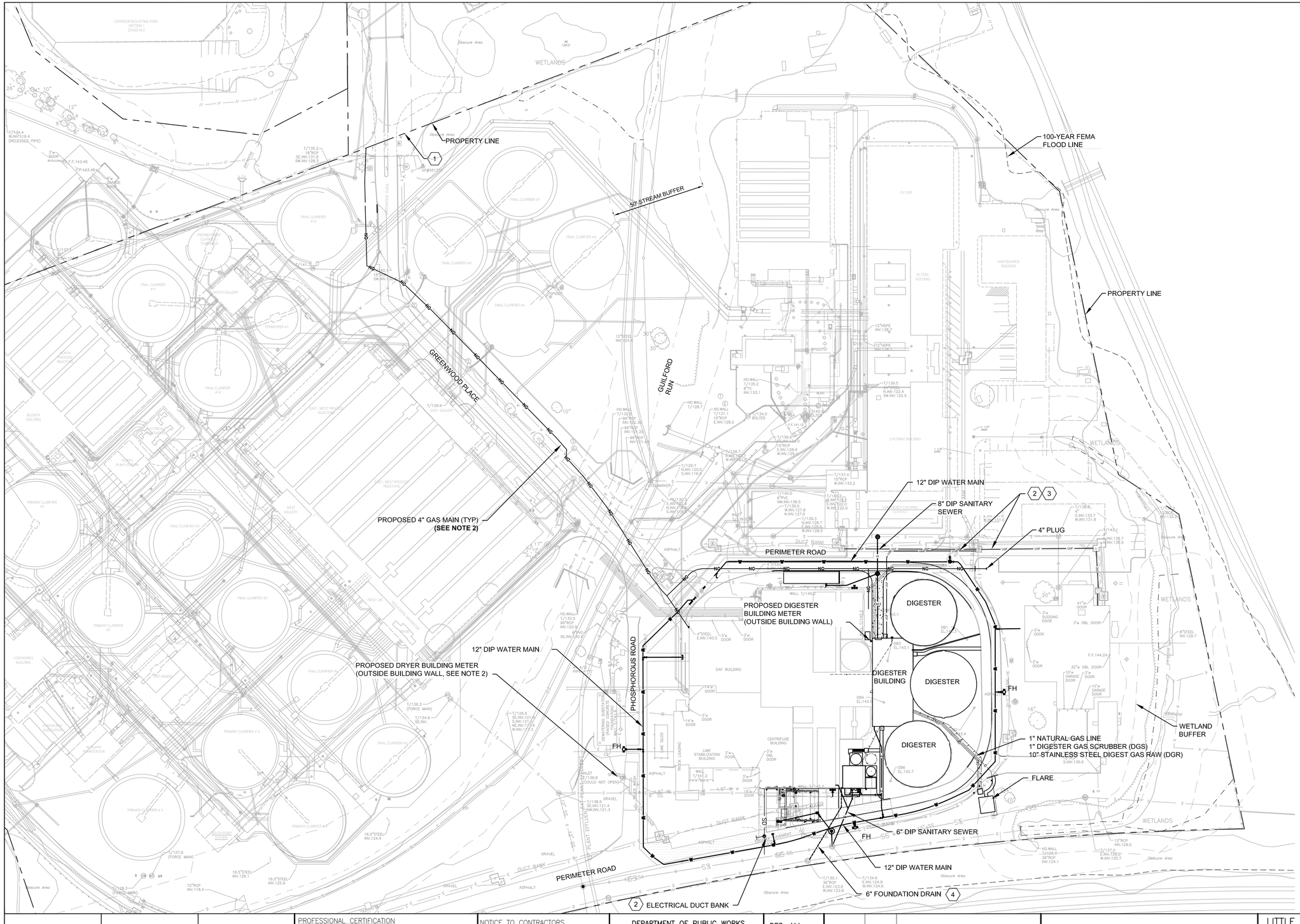

N

GENERAL NOTES:

1. SEE SHEETS C-41 - C-44 FOR EROSION AND SEDIMENT CONTROL, NOTES AND DETAILS.
2. 4" NATURAL GAS LINE TO BE INSTALLED BY OTHERS FROM OFFSITE CONNECTION TO BUILDINGS (INCLUDING METERS) AND POINT OF TERMINATION FOR FUTURE EXPANSION.
3. SEE SHEET C-1 FOR GENERAL NOTES & LEGEND.

KEY NOTES:

1. TIE TO EXISTING OFFSITE GAS MAIN. SEE NOTE 2.
2. SEE ELECTRICAL PLANS FOR ELECTRICAL AND DUCT BANK DESIGN
3. FIBER OPTIC COMMUNICATION LINES
4. SEE STRUCTURAL PLANS FOR FOUNDATION DRAIN CONNECTION

THE DRAWINGS IN THIS SET ARE RECORD DRAWINGS. THEY ARE CONSTRUCTION CONTRACT DRAWINGS WHICH HAVE BEEN REVISED BASED ON AVAILABLE FIELD INFORMATION RECORDED BY OTHERS DURING CONSTRUCTION OF THIS CONTRACT. THERE HAS BEEN NO VERIFICATION OF DIMENSIONS SHOWN ON THE CONSTRUCTION DRAWINGS OR THE ACCURACY/COMPLETENESS OF THE FIELD INFORMATION RECEIVED.

SIGNATURE _____ DATE 2/7/2023

A NOT USED	
B NOT USED	C D AREA SHOWN F G
E NOT USED	

KEY MAP

0 60 120 180

SCALE: 1" = 60'

C:\pwworking\pitt\d1901214_C-30.dwg 01/11/22_7:55

AS-BUILT REPLACEMENT SHEET

PROFESSIONAL CERTIFICATION
THIS DRAWING WAS ORIGINALLY APPROVED FOR CONSTRUCTION AND SEALED BY ROBERT BAYSDEN, A REGISTERED PROFESSIONAL ENGINEER IN THE STATE OF MARYLAND, NO. 49972.

NOTICE TO CONTRACTORS
- PROJECT ELEVATIONS ARE BASED ON NAVD88 AND HOWARD COUNTY'S BENCHMARK SYSTEM
- PREVIOUS PROJECTS USED OTHER DATUMS
- APPLY THE FOLLOWING CONVERSIONS WHEN USING PREVIOUS CONTRACT DRAWINGS:
  - ADDITION NO. 6: SUBTRACT 0.80 FT
  - PRIOR ADDITIONS: SUBTRACT 1.04 FT

DEPARTMENT OF PUBLIC WORKS
HOWARD COUNTY, MARYLAND

CHIEF, BUREAU OF UTILITIES DATE

DES: M.L.
DRN: S.W.
CHK: R.B.
DATE: 03/16

DATE	REV	DESCRIPTION
07/2019		RECORD DRAWINGS

CIVIL

OVERALL YARD PIPING PLAN

LITTLE PATUXENT WATER RECLAMATION PLANT
8TH ADDITION
BIOSOLIDS PROCESSING FACILITIES – PHASE I

CAPITAL PROJECT S-6295
CONTRACT NO. 24-4935

ELECTION DISTRICT NO. 6
HOWARD COUNTY, MARYLAND

SCALE AS SHOWN

SHEET 77 OF 463

C-30

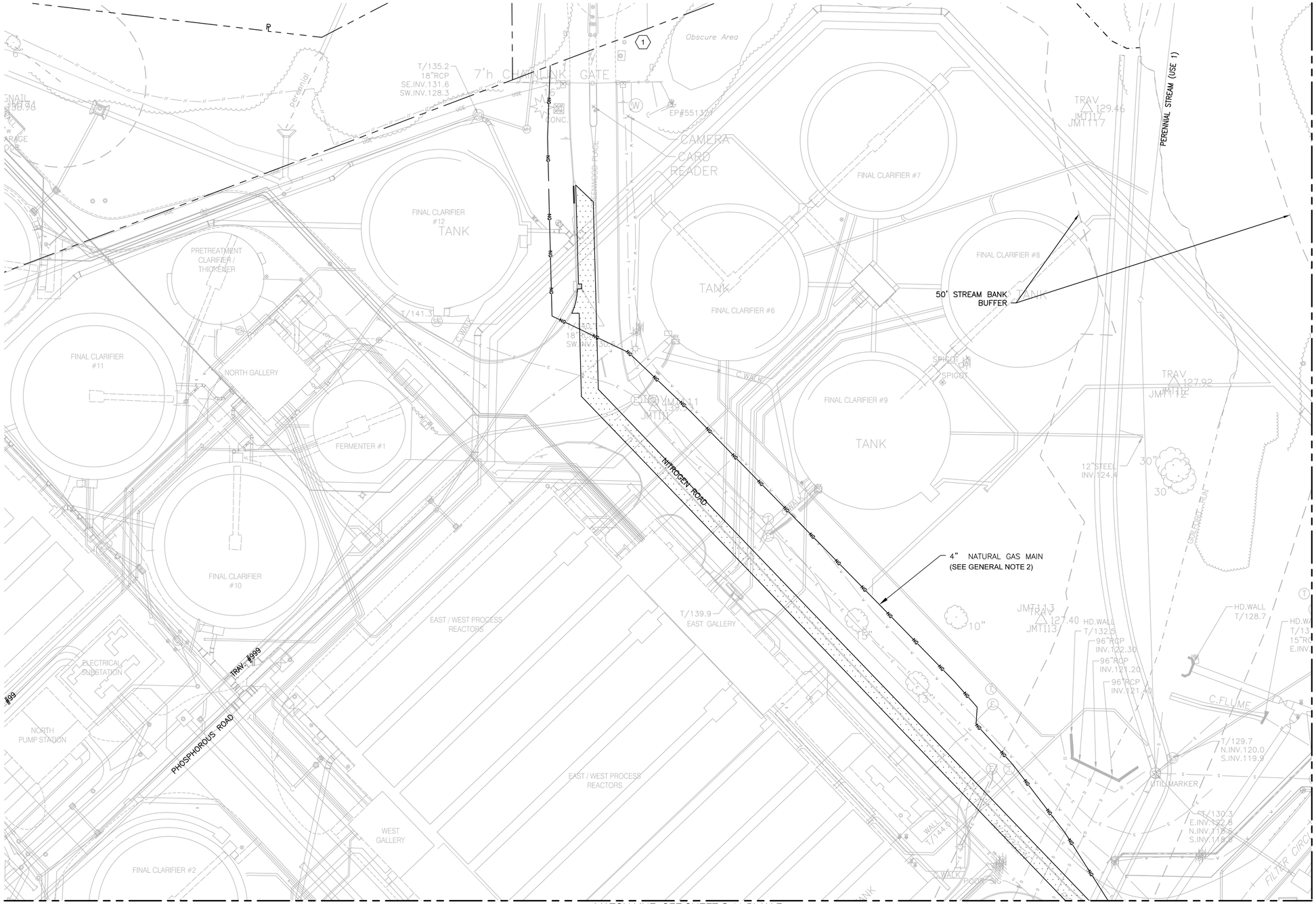

N

GENERAL NOTES:

1. SEE SHEETS C-41 - C-44 FOR EROSION AND SEDIMENT CONTROL, NOTES, AND DETAILS.
2. 4" NATURAL GAS LINE TO BE INSTALLED BY OTHERS FROM OFFSITE CONNECTION TO BUILDINGS (INCLUDING METERS) AND POINT OF TERMINATION FOR FUTURE EXPANSION.
3. SEE SHEET C-1 FOR GENERAL NOTES & LEGEND.

KEY NOTES:

(1) CONNECT TO EXISTING OFF SITE GAS LINE. SEE NOTE 2.

THE DRAWINGS IN THIS SET ARE RECORD DRAWINGS. THEY ARE CONSTRUCTION CONTRACT DRAWINGS WHICH HAVE BEEN REVISED BASED ON AVAILABLE FIELD INFORMATION RECORDED BY OTHERS DURING CONSTRUCTION OF THIS CONTRACT. THERE HAS BEEN NO VERIFICATION OF DIMENSIONS SHOWN ON THE CONSTRUCTION DRAWINGS OR THE ACCURACY/COMPLETENESS OF THE FIELD INFORMATION RECEIVED.

SIGNATURE _____ DATE 2/7/2023

A NOT USED		
B NOT USED	C AREA SHOWN	D
E NOT USED	F	G

KEYMAP

0 30 60 90

SCALE: 1" = 30'

C:\pwworking\pitt\d1901214\C-31.dwg 01/11/22_7:56

AS-BUILT REPLACEMENT SHEET

PROFESSIONAL CERTIFICATION
THIS DRAWING WAS ORIGINALLY APPROVED FOR CONSTRUCTION AND SEALED BY ROBERT BAYSDEN, A REGISTERED PROFESSIONAL ENGINEER IN THE STATE OF MARYLAND, NO. 49972.

NOTICE TO CONTRACTORS
- PROJECT ELEVATIONS ARE BASED ON NAVD88 AND HOWARD COUNTY'S BENCHMARK SYSTEM
- PREVIOUS PROJECTS USED OTHER DATUMS
- APPLY THE FOLLOWING CONVERSIONS WHEN USING PREVIOUS CONTRACT DRAWINGS:
  - ADDITION NO. 6: SUBTRACT 0.80 FT
  - PRIOR ADDITIONS: SUBTRACT 1.04 FT

DEPARTMENT OF PUBLIC WORKS
HOWARD COUNTY, MARYLAND

CHIEF, BUREAU OF UTILITIES DATE

DES: M.L.
DRN: S.W.
CHK: R.B.
DATE: 03/16

DATE	REV	DESCRIPTION
07/2019		RECORD DRAWINGS

CIVIL

YARD PIPING PLAN - C

LITTLE PATUXENT WATER RECLAMATION PLANT
8TH ADDITION
BIOSOLIDS PROCESSING FACILITIES – PHASE I

CAPITAL PROJECT S-6295
CONTRACT NO. 24-4935

ELECTION DISTRICT NO. 6
HOWARD COUNTY, MARYLAND

SCALE AS SHOWN

SHEET 78 OF 463

C-31

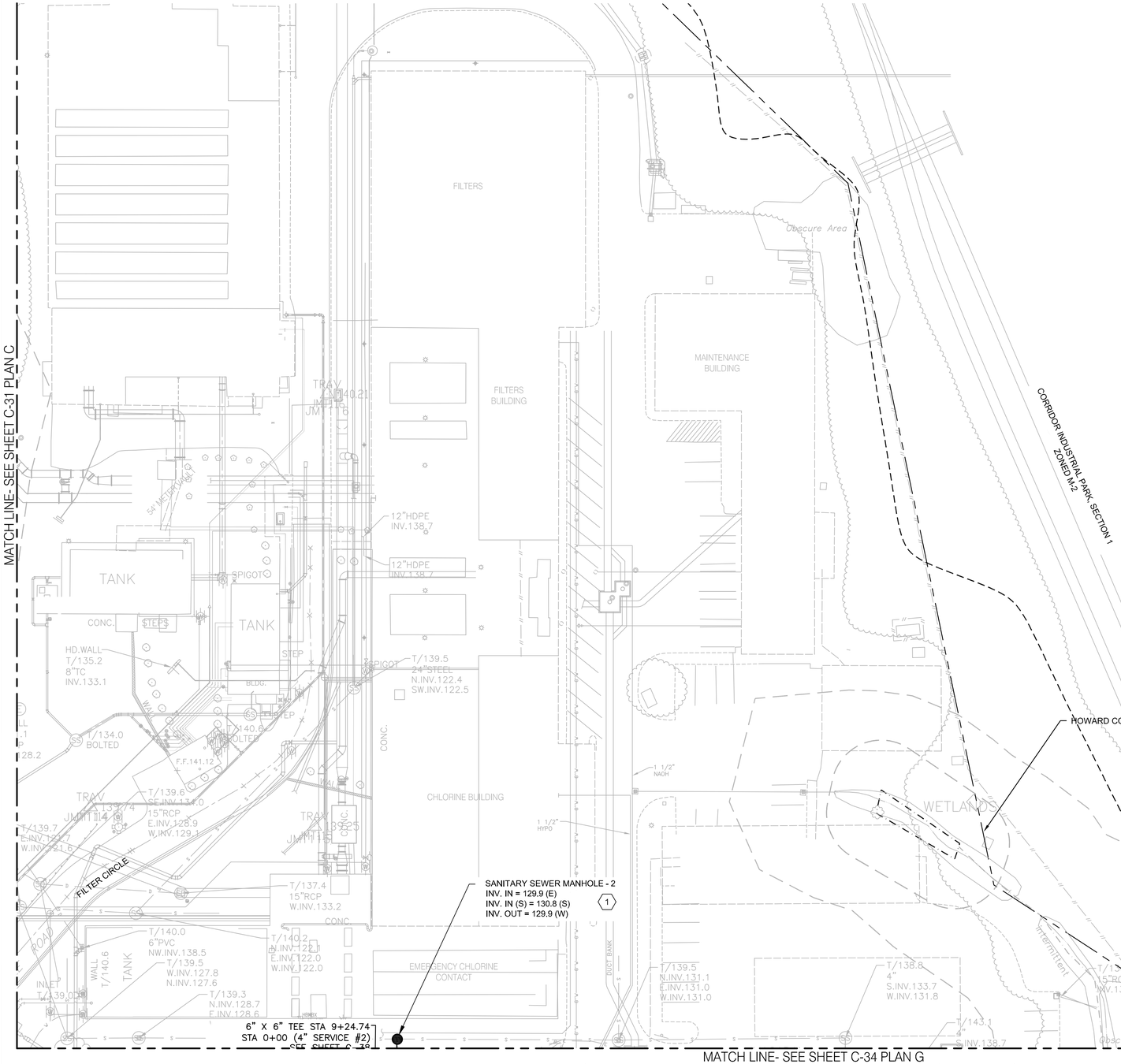

N

GENERAL NOTES:

1. 4" NATURAL GAS LINE TO BE INSTALLED BY OTHERS FROM OFFSITE CONNECTION TO BUILDINGS (INCLUDING METERS) AND POINT OF TERMINATION FOR FUTURE EXPANSION.

KEY NOTE:

(1) CONNECT 8" DIP SANITARY SEWER TO EXISTING SANITARY SEWER.
SEE DETAIL G-5.12/C-48 .

THE DRAWINGS IN THIS SET ARE RECORD DRAWINGS. THEY ARE CONSTRUCTION CONTRACT DRAWINGS WHICH HAVE BEEN REVISED BASED ON AVAILABLE FIELD INFORMATION RECORDED BY OTHERS DURING CONSTRUCTION OF THIS CONTRACT. THERE HAS BEEN NO VERIFICATION OF DIMENSIONS SHOWN ON THE CONSTRUCTION DRAWINGS OR THE ACCURACY/COMPLETENESS OF THE FIELD INFORMATION RECEIVED.

SIGNATURE — DATE 2/7/2020

A NOT USED		
B NOT USED	C	D AREA SHOWN
E NOT USED	F	G

KEYMAP

0 30 60 90

SCALE: 1" = 30'

AS-BUILT REPLACEMENT SHEET

PROFESSIONAL CERTIFICATION
THIS DRAWING WAS ORIGINALLY APPROVED FOR CONSTRUCTION AND SEALED BY ROBERT BAYSDEN, A REGISTERED PROFESSIONAL ENGINEER IN THE STATE OF MARYLAND, NO. 49972.

NOTICE TO CONTRACTORS
- PROJECT ELEVATIONS ARE BASED ON NAVD88 AND HOWARD COUNTY'S BENCHMARK SYSTEM
- PREVIOUS PROJECTS USED OTHER DATUMS
- APPLY THE FOLLOWING CONVERSIONS WHEN USING PREVIOUS CONTRACT DRAWINGS:
  - ADDITION NO. 6: SUBTRACT 0.80 FT
  - PRIOR ADDITIONS: SUBTRACT 1.04 FT

DEPARTMENT OF PUBLIC WORKS
HOWARD COUNTY, MARYLAND

CHIEF, BUREAU OF UTILITIES DATE

DES: M.L.
DRN: S.W.
CHK: R.B.
DATE: 03/16

DATE	REV	DESCRIPTION
07/2019		RECORD DRAWINGS

CIVIL

YARD PIPING PLAN - D

LITTLE PATUXENT WATER RECLAMATION PLANT
8TH ADDITION
BIOSOLIDS PROCESSING FACILITIES – PHASE I

CAPITAL PROJECT S–6295
CONTRACT NO. 24–4935

ELECTION DISTRICT NO. 6
HOWARD COUNTY, MARYLAND

SCALE AS SHOWN

SHEET 79 OF 463

C-32

C:\pwworking\pitt\d1901214\C-32.dwg 01/11/22 7:57

MATCH LINE- SEE SHEET C-31 PLAN C

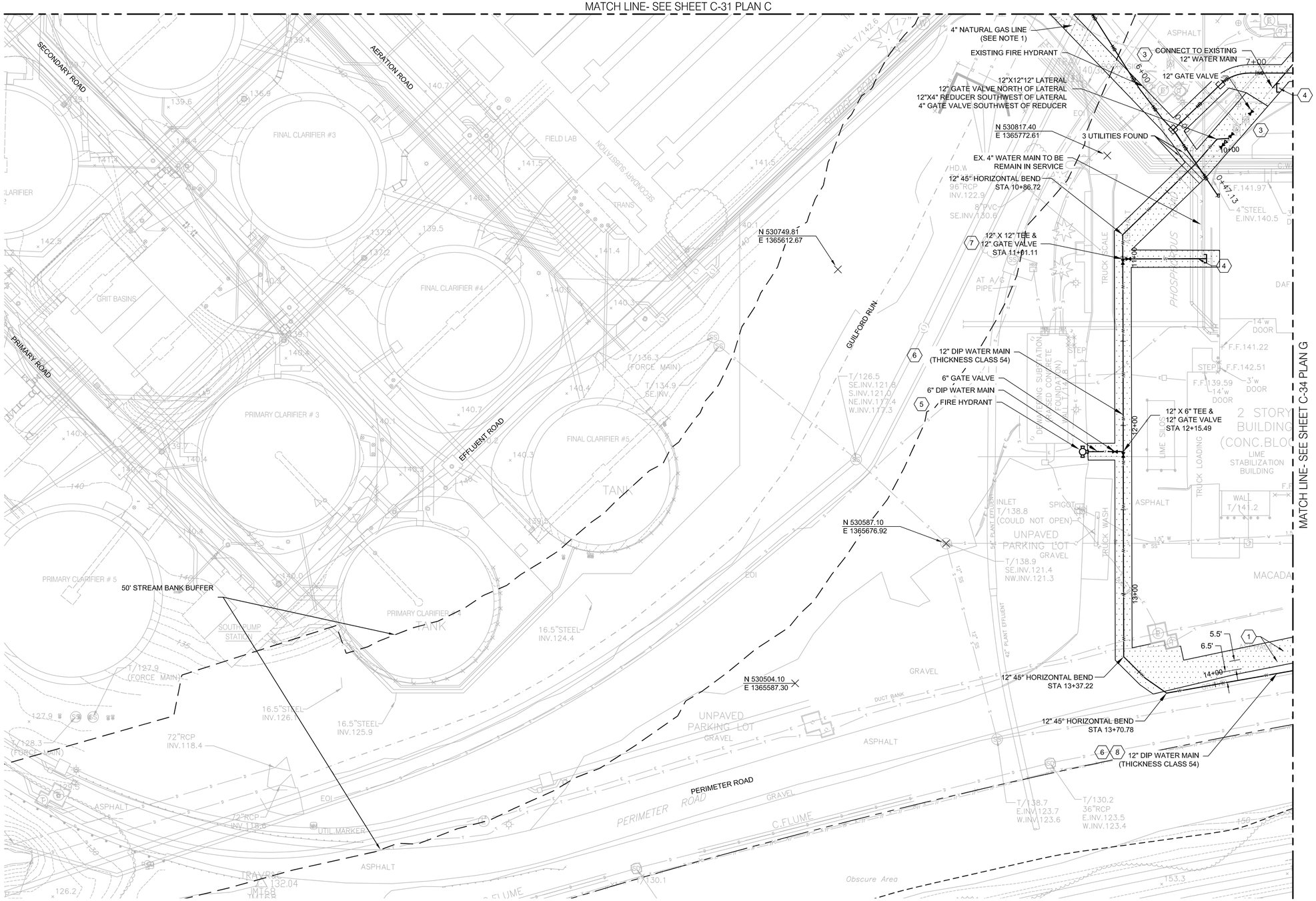

MATCH LINE- SEE SHEET C-34 PLAN G

N

GENERAL NOTES:

1. 4" NATURAL GAS LINE TO BE INSTALLED BY OTHERS FROM OFFSITE CONNECTION TO BUILDINGS (INCLUDING METERS) AND POINT OF TERMINATION FOR FUTURE EXPANSION.
2. INSTALL BUTTRESS AND ANCHORAGE AT TEES AND BENDS OF WATER LINE. SEE DETAILS W-2.22 AND W-2.23 ON SHEET C-7.
3. PIPE TRENCH DETAILS LOCATED ON C-7.

KEY NOTES:

1. PROPOSED 12" COMMUNICATION DUCT BANK AND 27" ELECTRICAL DUCTBANK.
2. NOT USED.
3. CONNECT TO EXISTING 12" WATER LINE. REMOVE FITTING AND INSTALL FLANGE.
4. ABANDONED IN PLACE
5. SEE FIRE HYDRANT SETTING DETAIL W-1.11/C-7.
6. SEE SHEET C-35 FOR 12" WATER MAIN PROFILE. SEE GENERAL NOTES 2 AND 3 ON THIS SHEET.
7. SEE WATER SERVICE CONNECTION DETAIL W-3.24/C-49
8. MAINTAIN 5' MINIMUM HORIZONTAL SEPARATION BETWEEN WATERLINE AND OTHER UTILITIES.

THE DRAWINGS IN THIS SET ARE RECORD DRAWINGS. THEY ARE CONSTRUCTION CONTRACT DRAWINGS WHICH HAVE BEEN REVISED BASED ON AVAILABLE FIELD INFORMATION RECORDED BY OTHERS DURING CONSTRUCTION OF THIS CONTRACT. THERE HAS BEEN NO VERIFICATION OF DIMENSIONS SHOWN ON THE CONSTRUCTION DRAWINGS OR THE ACCURACY/COMPLETENESS OF THE FIELD INFORMATION RECEIVED.

SIGNATURE _____ DATE 2/7/2022

A NOT USED		
B NOT USED	C	D
E NOT USED	F AREA SHOWN	G

KEYMAP

0 30 60 90

SCALE: 1" = 30'

C:\pwworking\pitt\d1901214\C-33.dwg 01/11/22_7:58

AS-BUILT REPLACEMENT SHEET

PROFESSIONAL CERTIFICATION
THIS DRAWING WAS ORIGINALLY APPROVED FOR CONSTRUCTION AND SEALED BY ROBERT BAYSDEN, A REGISTERED PROFESSIONAL ENGINEER IN THE STATE OF MARYLAND, NO. 49972.

NOTICE TO CONTRACTORS
- PROJECT ELEVATIONS ARE BASED ON NAVD88 AND HOWARD COUNTY'S BENCHMARK SYSTEM
- PREVIOUS PROJECTS USED OTHER DATUMS
- APPLY THE FOLLOWING CONVERSIONS WHEN USING PREVIOUS CONTRACT DRAWINGS:
  - ADDITION NO. 6: SUBTRACT 0.80 FT
  - PRIOR ADDITIONS: SUBTRACT 1.04 FT

DEPARTMENT OF PUBLIC WORKS
HOWARD COUNTY, MARYLAND

CHIEF, BUREAU OF UTILITIES DATE

DES: xr
DRN: S.W.
CHK: R.B.
DATE: 03/16

DATE	REV	DESCRIPTION
07/2019		RECORD DRAWINGS

CIVIL

YARD PIPING PLAN - F

LITTLE PATUXENT WATER RECLAMATION PLANT
8TH ADDITION
BIOSOLIDS PROCESSING FACILITIES – PHASE I

CAPITAL PROJECT S-6295
CONTRACT NO. 24-4935

ELECTION DISTRICT NO. 6
HOWARD COUNTY, MARYLAND

SCALE AS SHOWN

SHEET 80 OF 463

C-33

MATCH LINE- SEE SHEET C-32 PLAN D

MATCH LINE- SEE SHEET C-33 PLAN F

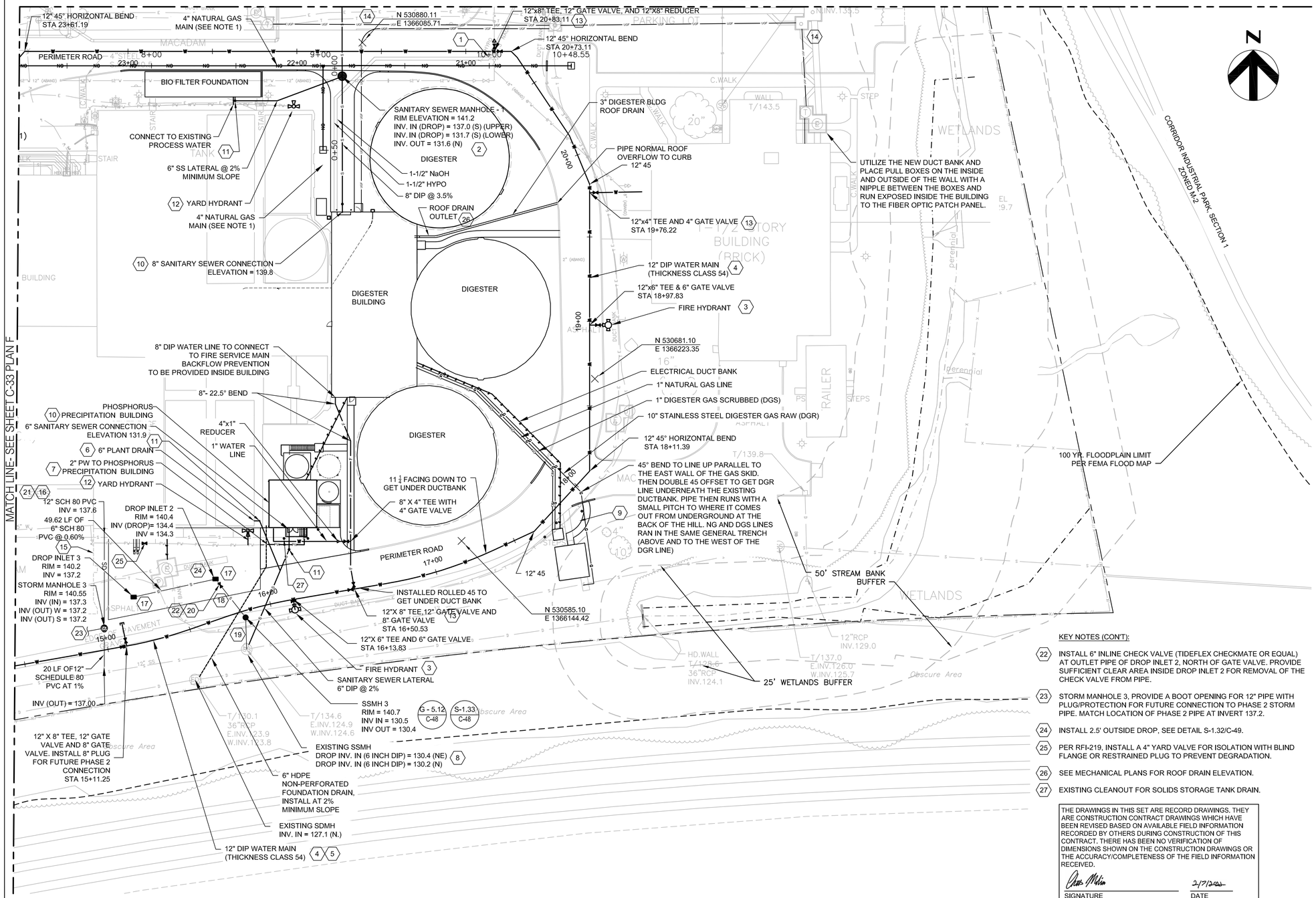

GENERAL NOTES:

1. 4" NATURAL GAS LINE TO BE INSTALLED BY OTHERS FROM OFFSITE CONNECTION TO BUILDINGS (INCLUDING METERS) AND POINT OF TERMINATION FOR FUTURE EXPANSION.
2. INSTALL BUTTRESS AND ANCHORAGE AT TEES AND BENDS OF WATER LINE. SEE DETAILS W-2.22 AND W-2.23 ON SHEET C-47.
3. PIPE TRENCH DETAILS LOCATED ON C-47.
4. SEE NOTE 7 ON SHEET C-10. 6 INCH DIP INVERTS WILL NEED TO BE ADJUSTED IF A 1' VERTICAL SEPARATION BETWEEN UTILITIES CAN NOT BE MAINTAINED AT CROSSINGS.

KEY NOTES:

(1) CONNECT TO EXISTING 1-1/2" NAOH AND HYPO LINES WITH CONTAINMENT PIPING AT EL. 130.5 +/-(FIELD VERIFY). OFFSET CHEMICAL LINES TO EL 137.00, SLOPE DOWN TO PIPE GALLERY AT EL 136.00. PROVIDE LOW POINT DETECTION DRAINS AT CONNECTION (SEE DETAIL 1/C-45) AND PIPE GALLERY ENTRANCE.

(2) INSTALL MANHOLE WITH INSIDE DROP. SEE DETAILS G-5.12/C-48 AND S-1.33/C-48.

(3) SEE FIRE HYDRANT SETTING DETAIL W-1.11/C-47.

(4) SEE SHEET C-35 FOR 12" WATER MAIN PROFILE. SEE DIP TRENCH DETAIL G-2.11/C-47.

(5) MAINTAIN 5' MINIMUM HORIZONTAL SEPARATION BETWEEN WATERLINE AND OTHER UTILITIES.

(6) CONNECT SOLIDS HOLDING TANK OVERFLOW TO PLANT DRAIN. MAINTAIN 2% SLOPE.

(7) CONNECT TO EXISTING PROCESS WATER (PW) LINE AS SHOWN. CONTRACTOR TO VERIFY DEPTH OF EXISTING PIPE.

(8) CONNECT 6" AND 8" DIP SANITARY PIPES TO EXISTING MANHOLE. USE INSIDE DROP SEE DETAIL S-1.33/C-48.

(9) GAS CONTROL PANELS ON CONCRETE SLABS.
SEE S-904 FOR CONCRETE SLAB DESIGN
SEE I-450 FOR CONTROL PANEL
SEE M-342 FOR GAS LINE CONFIGURATION FROM CONTROL PANEL TO FLARE.

(10) SEE PLUMBING PLANS FOR SANITARY SEWER AND WATER CONNECTIONS AT DIGESTER AND PHOSPHOROUS BUILDING

(11) INSTALL CLEAN OUT, SEE DETAIL S-3.21/C-49.

(12) SEE YARD HYDRANT DETAIL 2/C-45.

(13) SEE WATER SERVICE CONNECTION DETAIL W-3.24/C-49.

(14) PROPOSED ELECTRICAL DUCT BANKS SHOWN FOR REFERENCE ONLY. SEE ELECTRICAL SHEETS FOR DESIGN AND LOCATION.

(15) APPROXIMATE LOCATION OF PHASE 2 BUILDING FOUNDATION (FOR REFERENCE ONLY).

(16) CONNECT ROOF LEADER TO HDPE PIPE. MAINTAIN 0.5% MINIMUM SLOPE AND DAYLIGHT AS SHOWN.

(17) DROP INLET, SEE DETAIL 4.37, 4.95 AND 4.96 ON SHEET C-50.

(18) 28.9 FT OF 6 INCH DIP @ 0.69%

(19) 18.9 FT OF 6 INCH DIP @ 1.06%

(20) INSTALL 6 INCH GATE VALVE SOUTHEAST OF DROP INLET. SEE DETAIL W-3.65/C-47

(21) FIELD VERIFY PRIMARY DRAIN SYSTEM AND DEMOLISH PRIMARY EXTERIOR DOWNSPOUT DRAIN AND HORIZONTAL LEADER BACK TO ELBOW IN THE BUILDING. CLEAN UP EXISTING WALL PENETRATION AND PROVIDE NEW HORIZONTAL ROOF LEADER FROM EXISTING ELBOW THROUGH EXTERIOR WALL AND TURN DOWN AS SHOWN ON PLANS. SEAL PIPE PENETRATION THROUGH WALL AS INDICATED ON DETAIL. SECONDARY DOWNSPOUT SHALL REMAIN IN PLACE. SEE PIPE PENETRATION DETAIL 2/C-50.

KEY NOTES (CON'T):

(22) INSTALL 6" INLINE CHECK VALVE (TIDEFLEX CHECKMATE OR EQUAL) AT OUTLET PIPE OF DROP INLET 2, NORTH OF GATE VALVE. PROVIDE SUFFICIENT CLEAR AREA INSIDE DROP INLET 2 FOR REMOVAL OF THE CHECK VALVE FROM PIPE.

(23) STORM MANHOLE 3, PROVIDE A BOOT OPENING FOR 12" PIPE WITH PLUG/PROTECTION FOR FUTURE CONNECTION TO PHASE 2 STORM PIPE. MATCH LOCATION OF PHASE 2 PIPE AT INVERT 137.2.

(24) INSTALL 2.5' OUTSIDE DROP, SEE DETAIL S-1.32/C-49.

(25) PER RFI-219, INSTALL A 4" YARD VALVE FOR ISOLATION WITH BLIND FLANGE OR RESTRAINED PLUG TO PREVENT DEGRADATION.

(26) SEE MECHANICAL PLANS FOR ROOF DRAIN ELEVATION.

(27) EXISTING CLEANOUT FOR SOLIDS STORAGE TANK DRAIN.

THE DRAWINGS IN THIS SET ARE RECORD DRAWINGS. THEY ARE CONSTRUCTION CONTRACT DRAWINGS WHICH HAVE BEEN REVISED BASED ON AVAILABLE FIELD INFORMATION RECORDED BY OTHERS DURING CONSTRUCTION OF THIS CONTRACT. THERE HAS BEEN NO VERIFICATION OF DIMENSIONS SHOWN ON THE CONSTRUCTION DRAWINGS OR THE ACCURACY/COMPLETENESS OF THE FIELD INFORMATION RECEIVED.

SIGNATURE _____ DATE 2/7/2020

A NOT USED	
B NOT USED	C
E NOT USED	F

D

G AREA SHOWN

KEYMAP

0 30 60 90

SCALE: 1" = 30'

AS-BUILT REPLACEMENT SHEET

PROFESSIONAL CERTIFICATION
THIS DRAWING WAS ORIGINALLY APPROVED FOR CONSTRUCTION AND SEALED BY ROBERT BAYSDEN, A REGISTERED PROFESSIONAL ENGINEER IN THE STATE OF MARYLAND, NO. 49972.

NOTICE TO CONTRACTORS
- PROJECT ELEVATIONS ARE BASED ON NAVD88 AND HOWARD COUNTY'S BENCHMARK SYSTEM
- PREVIOUS PROJECTS USED OTHER DATUMS
- APPLY THE FOLLOWING CONVERSIONS WHEN USING PREVIOUS CONTRACT DRAWINGS:
  - ADDITION NO. 6: SUBTRACT 0.80 FT
  - PRIOR ADDITIONS: SUBTRACT 1.04 FT

DEPARTMENT OF PUBLIC WORKS
HOWARD COUNTY, MARYLAND

CHIEF, BUREAU OF UTILITIES DATE

DES: xr
DRN: S.W.
CHK: R.B.
DATE: 03/16

DATE	REV	DESCRIPTION
07/2019		RECORD DRAWINGS

CIVIL

YARD PIPING PLAN - G

LITTLE PATUXENT WATER RECLAMATION PLANT
8TH ADDITION
BIOSOLIDS PROCESSING FACILITIES – PHASE I

CAPITAL PROJECT S–6295
CONTRACT NO. 24–4935

ELECTION DISTRICT NO. 6
HOWARD COUNTY, MARYLAND

SCALE AS SHOWN

SHEET 81 OF 463

C-34

C:\pwworking\pitt\d1901214\C-34.dwg 01/11/22 7:58

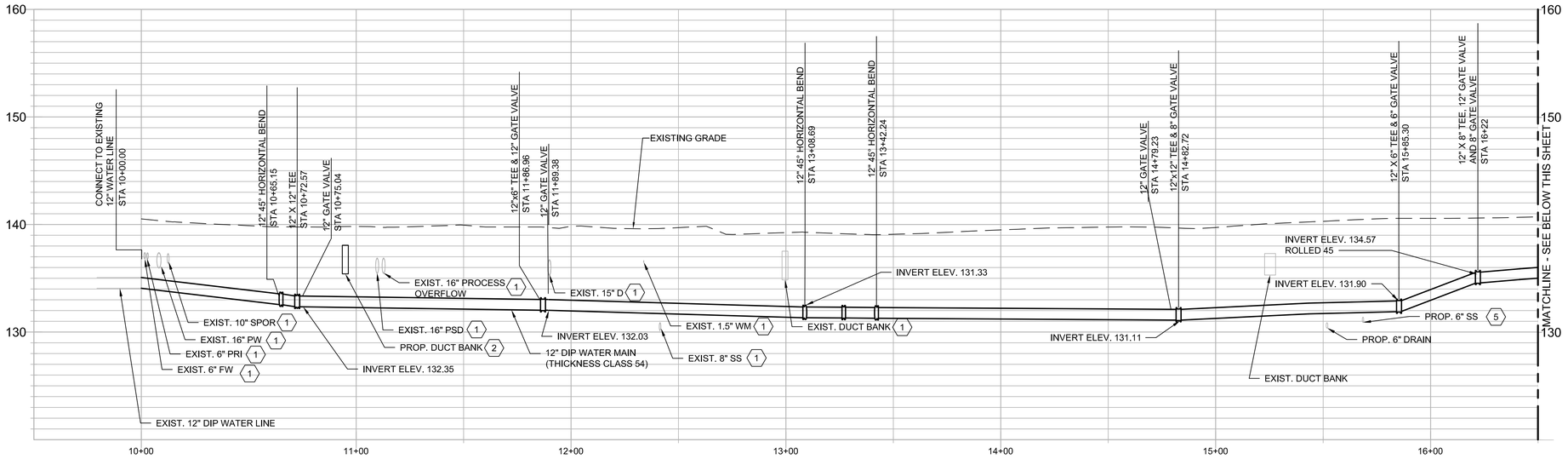

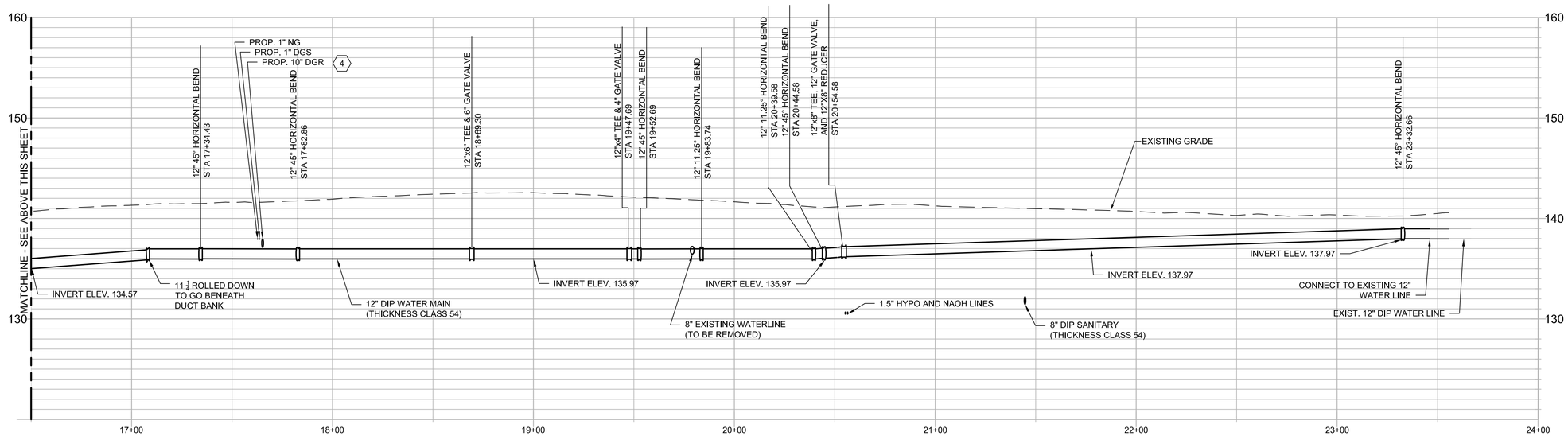

N

GENERAL NOTES:

1. INSTALL BUTTRESS AND ANCHORAGE AT TEES AND BENDS OF WATER LINE. SEE DETAILS W-2.22 AND W-2.23 ON SHEET C-7.
2. PIPE TRENCH DETAILS LOCATED ON C-7.
3. A MINIMUM OF 12" OF VERTICAL & 5' HORIZONTAL SEPARATION SHALL BE PROVIDED BETWEEN THE EXISTING UTILITIES AND THE PROPOSED 12" WATER MAIN.

KEY NOTES:

1. EXIST. UTILITIES ARE SHOWN AS APPROXIMATE. CONTRACTOR SHALL VERIFY EXACT LOCATION OF EXIST. UTILITIES PRIOR TO INSTALLATION OF THE PROP. 12" WATER MAIN. SEE NOTE 3.
2. SEE ELECTRICAL PLANS FOR PROP. DUCT BANK LAYOUT. SEE NOTE 3.
3. SEE YARD PIPING PLANS FOR PROP. GAS MAIN DESIGN. SEE NOTE 3.
4. SEE YARD PIPING PLANS FOR DIGESTER GAS RAW DESIGN. SEE NOTE 3.
5. SEE ADDITION 4 AS-BUILTS 1975 AND 1977.

THE DRAWINGS IN THIS SET ARE RECORD DRAWINGS. THEY ARE CONSTRUCTION CONTRACT DRAWINGS WHICH HAVE BEEN REVISED BASED ON AVAILABLE FIELD INFORMATION RECORDED BY OTHERS DURING CONSTRUCTION OF THIS CONTRACT. THERE HAS BEEN NO VERIFICATION OF DIMENSIONS SHOWN ON THE CONSTRUCTION DRAWINGS OR THE ACCURACY/COMPLETENESS OF THE FIELD INFORMATION RECEIVED.

SIGNATURE — DATE 2/7/2023

HORIZONTAL SCALE
0 30 60 90
SCALE: 1" = 30'

VERTICAL SCALE
0 6 12 18
SCALE: 1" = 6'

AS-BUILT REPLACEMENT SHEET

PROFESSIONAL CERTIFICATION
THIS DRAWING WAS ORIGINALLY APPROVED FOR CONSTRUCTION AND SEALED BY ROBERT BAYSDEN, A REGISTERED PROFESSIONAL ENGINEER IN THE STATE OF MARYLAND, NO. 49972.

NOTICE TO CONTRACTORS
- PROJECT ELEVATIONS ARE BASED ON NAVD88 AND HOWARD COUNTY'S BENCHMARK SYSTEM
- PREVIOUS PROJECTS USED OTHER DATUMS
- APPLY THE FOLLOWING CONVERSIONS WHEN USING PREVIOUS CONTRACT DRAWINGS:
  - ADDITION NO. 6: SUBTRACT 0.80 FT
  - PRIOR ADDITIONS: SUBTRACT 1.04 FT

DEPARTMENT OF PUBLIC WORKS
HOWARD COUNTY, MARYLAND

CHIEF, BUREAU OF UTILITIES — DATE

DES: xr
DRN: S.W.
CHK: R.B.
DATE: 03/16

DATE	REV	DESCRIPTION
07/2019		RECORD DRAWINGS

CIVIL

12" WATER MAIN PROFILE

LITTLE PATUXENT WATER RECLAMATION PLANT
8TH ADDITION
BIOSOLIDS PROCESSING FACILITIES – PHASE I

CAPITAL PROJECT S-6295
CONTRACT NO. 24-4935

ELECTION DISTRICT NO. 6
HOWARD COUNTY, MARYLAND

SCALE AS SHOWN

SHEET 82 OF 463

C-35

C:\pwworking\pitt\d1901214\C-35.dwg 01/11/22_7:51

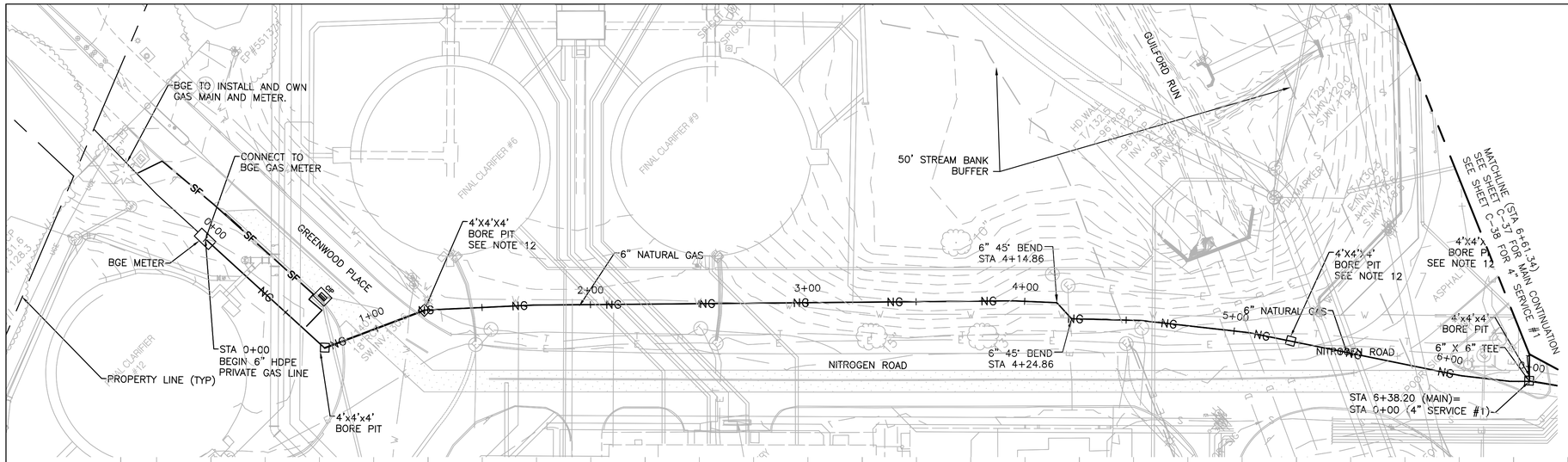

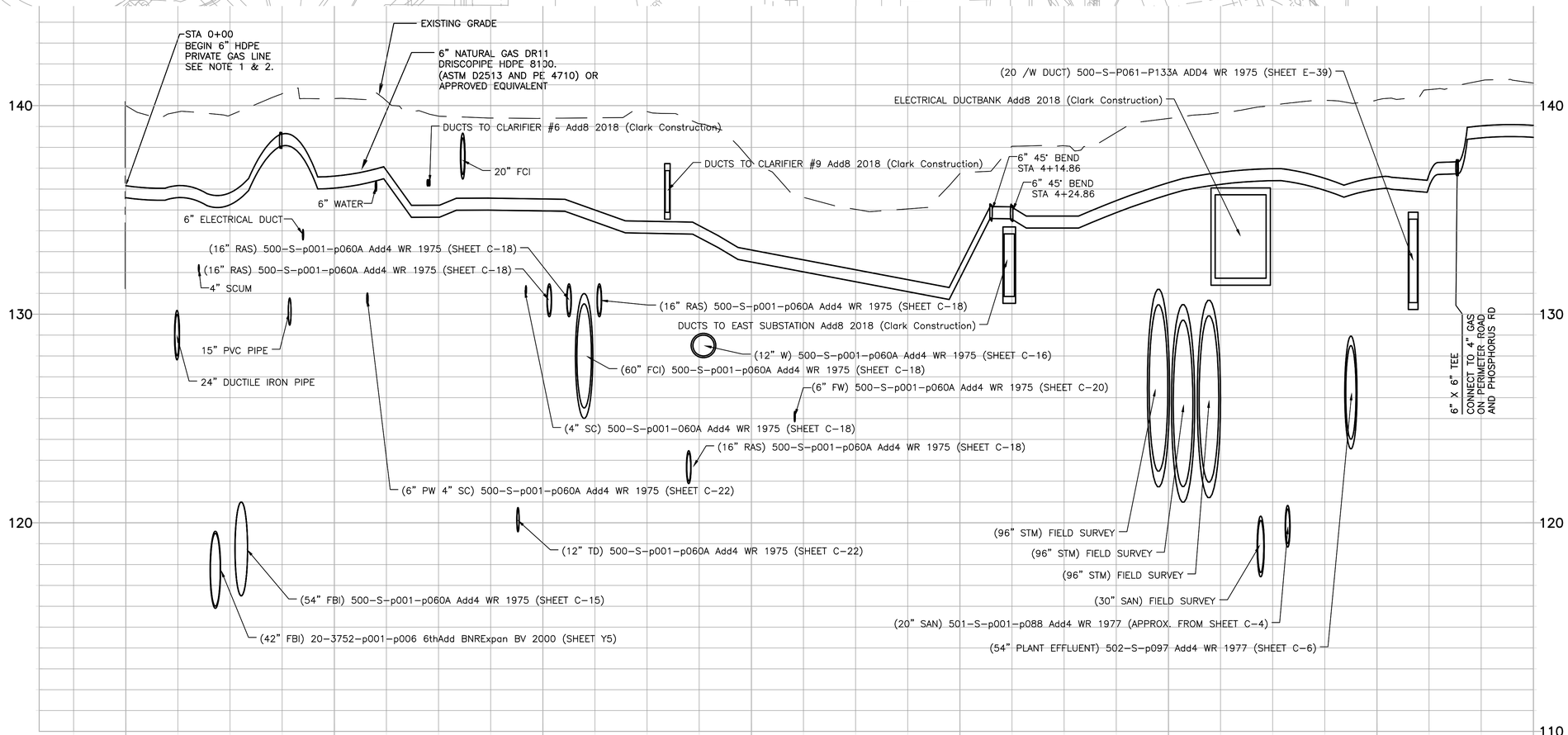

GENERAL NOTES:

1. BGE SHALL INSTALL PIPING AND FITTINGS FROM THE OFFSITE NATURAL GAS CONNECTION POINT TO THE NEW BGE METER. REFER TO BGE DRAWINGS FOR DESIGN DETAILS.
2. CONTRACTOR TO INSTALL NATURAL GAS PIPE AND FITTINGS FROM DOWNSTREAM OF THE NEW BGE METER AS PER NFPA 54.
3. CONTRACTOR TO VERIFY AND CONFIRM EXACT LOCATION OF BURIED UTILITIES/PIPING ENCOUNTERED BEFORE INSTALLING UNDERGROUND PIPING.
4. UNDERGROUND GAS PIPING SHALL BE INSTALLED WITH SUFFICIENT CLEARANCE FROM ANY OTHER UNDERGROUND STRUCTURE TO AVOID CONTACT THEREWITH. TO ALLOW MAINTENANCE, AND TO PROTECT AGAINST DAMAGE FROM PROXIMITY TO OTHER STRUCTURES.
5. ALL UTILITY CROSSINGS SHALL USE OPEN-CUT INSTALLATION PROCEDURES. TRENCHLESS INSTALLATIONS IS NOT APPROVED AT UTILITY CROSSINGS.
6. REFER TO HDR PIPING DRAWINGS ON ABOVE GROUND PRESSURE REGULATORS AND METER PIPING RUN AT DIGESTER AND DRYER BUILDING.
7. UTILITY NOTE:
   A. CONTRACTOR SHALL OPEN ONLY THAT SECTION OF TRENCH THAT CAN BE BACKFILLED AND STABILIZED EACH DAY. IF THE TRENCH MUST REMAIN OPEN LONGER THAN ONE DAY, SILT FENCE SHALL BE PLACED (DOWN SLOPE OF) THE TRENCH.
   B. PLACE ALL EXCAVATED MATERIAL ON THE UPHILL SIDE OF THE TRENCH.
   C. ANY SEDIMENT CONTROLS DISTURBED BY UTILITY CONSTRUCTION ARE TO BE REPAIRED IMMEDIATELY.
8. OPEN TRENCH INSTALLATION: SEE TRENCH DETAIL G-2.12/C-47. SEE NOTE 9 FOR TRACER WIRE INFORMATION. SEE NOTE 10 FOR PAVEMENT REPAIR.
9. TRACER WIRE: FOR NATURAL GAS SERVICE, A #14 INSULATED COPPER TRACER WIRE SHALL BE STRUNG ALONG THE FULL LENGTH OF THE PIPE. MAINTAIN THE TRACER WIRE CLOSE TO THE PIPE. SECTIONS OF TRACER WIRE SHOULD BE JOINED USING APPROVED CONNECTORS. REFER TO HDR SECTION 40 05 00 FOR ADDITIONAL DETAILS.
10. PAVEMENT REPAIR: SEE UTILITY TRENCH ROADWAY REPAVING DETAIL G-4.01/C-46.
11. IF OPEN TRENCH METHOD IS USED, DEMOLISH AND REMOVE SECTION OF CURB (SAW CUT FOR CLEAN LINES). REPLACE CONCRETE CURB PER DETAIL G-3.03/C-46.
12. INSTALL SILT FENCE ON LOW SIDE OF BORE PIT.
13. INSTALL CURB INLET PROTECTION PER DETAIL E-9-3/C-44.

THE DRAWINGS IN THIS SET ARE RECORD DRAWINGS. THEY ARE CONSTRUCTION CONTRACT DRAWINGS WHICH HAVE BEEN REVISED BASED ON AVAILABLE FIELD INFORMATION RECORDED BY OTHERS DURING CONSTRUCTION OF THIS CONTRACT. THERE HAS BEEN NO VERIFICATION OF DIMENSIONS SHOWN ON THE CONSTRUCTION DRAWINGS OR THE ACCURACY/COMPLETENESS OF THE FIELD INFORMATION RECEIVED.

SIGNATURE _____ DATE 2/7/2023

HORIZONTAL SCALE
0 30 60 90
SCALE: 1" = 30'

VERTICAL SCALE
0 3 6 9
SCALE: 1" = 3'

C:\pwworking\pitt\d1901214\ C-36.dwg 01/11/22 8:24

AS-BUILT REPLACEMENT SHEET

PROFESSIONAL CERTIFICATION
THIS DRAWING WAS ORIGINALLY APPROVED FOR CONSTRUCTION AND SEALED BY ROBERT BAYSDEN, A REGISTERED PROFESSIONAL ENGINEER IN THE STATE OF MARYLAND, NO. 49972.

NOTICE TO CONTRACTORS
- PROJECT ELEVATIONS ARE BASED ON NAVD88 AND HOWARD COUNTY'S BENCHMARK SYSTEM
- PREVIOUS PROJECTS USED OTHER DATUMS
- APPLY THE FOLLOWING CONVERSIONS WHEN USING PREVIOUS CONTRACT DRAWINGS:
  - ADDITION NO. 6: SUBTRACT 0.80 FT
  - PRIOR ADDITIONS: SUBTRACT 1.04 FT

DEPARTMENT OF PUBLIC WORKS
HOWARD COUNTY, MARYLAND

CHIEF, BUREAU OF UTILITIES DATE

DES: M.L.
DRN: S.W.
CHK: R.B.
DATE: 03/16

DATE	REV	DESCRIPTION
07/2019		RECORD DRAWINGS

CIVIL

PROPOSED NATURAL GAS LINE PLAN & PROFILE 1

LITTLE PATUXENT WATER RECLAMATION PLANT
8TH ADDITION
BIOSOLIDS PROCESSING FACILITIES – PHASE I

CAPITAL PROJECT S-6295
CONTRACT NO. 24-4935

ELECTION DISTRICT NO. 6
HOWARD COUNTY, MARYLAND

SCALE AS SHOWN

SHEET 83 OF 463

C-36

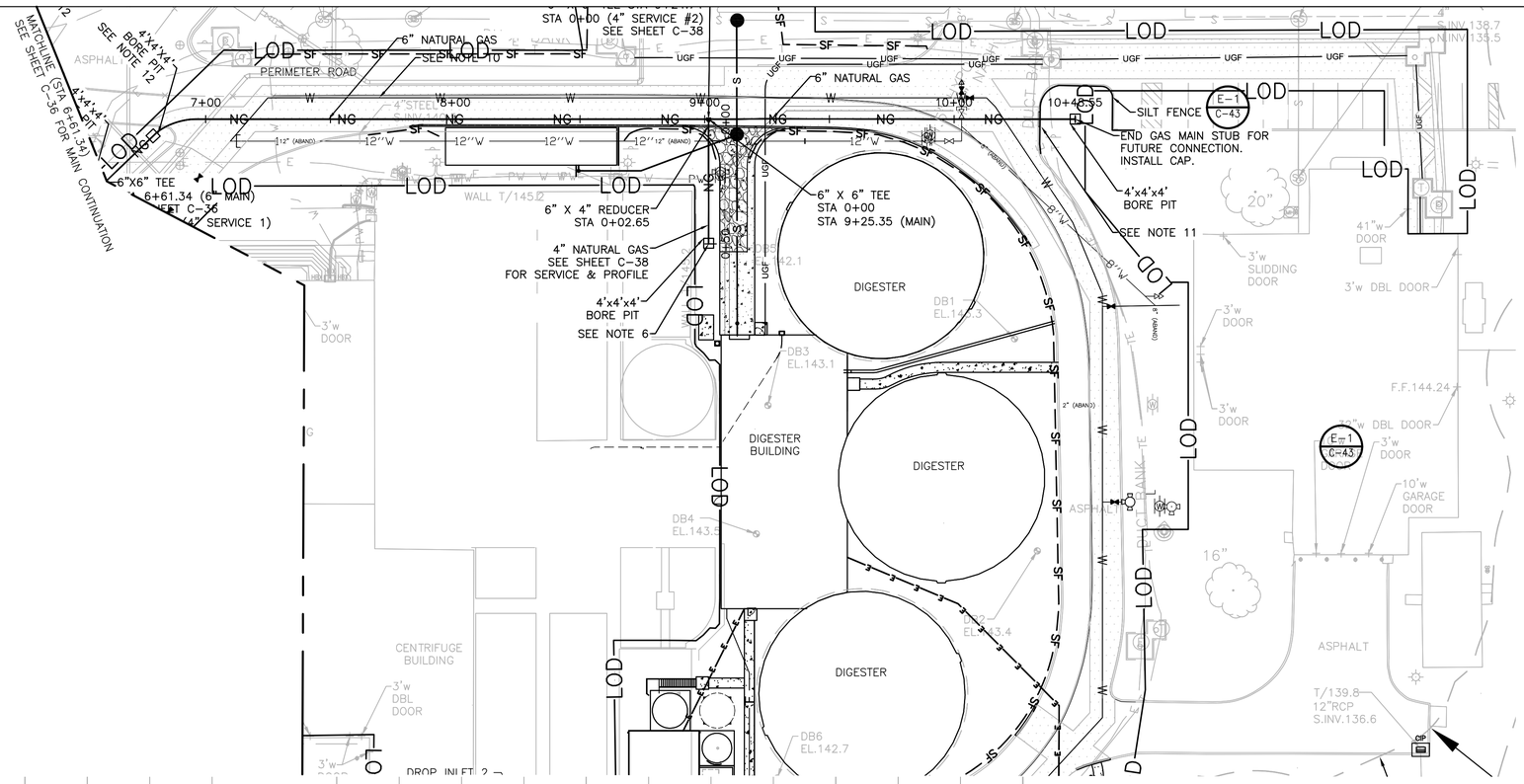

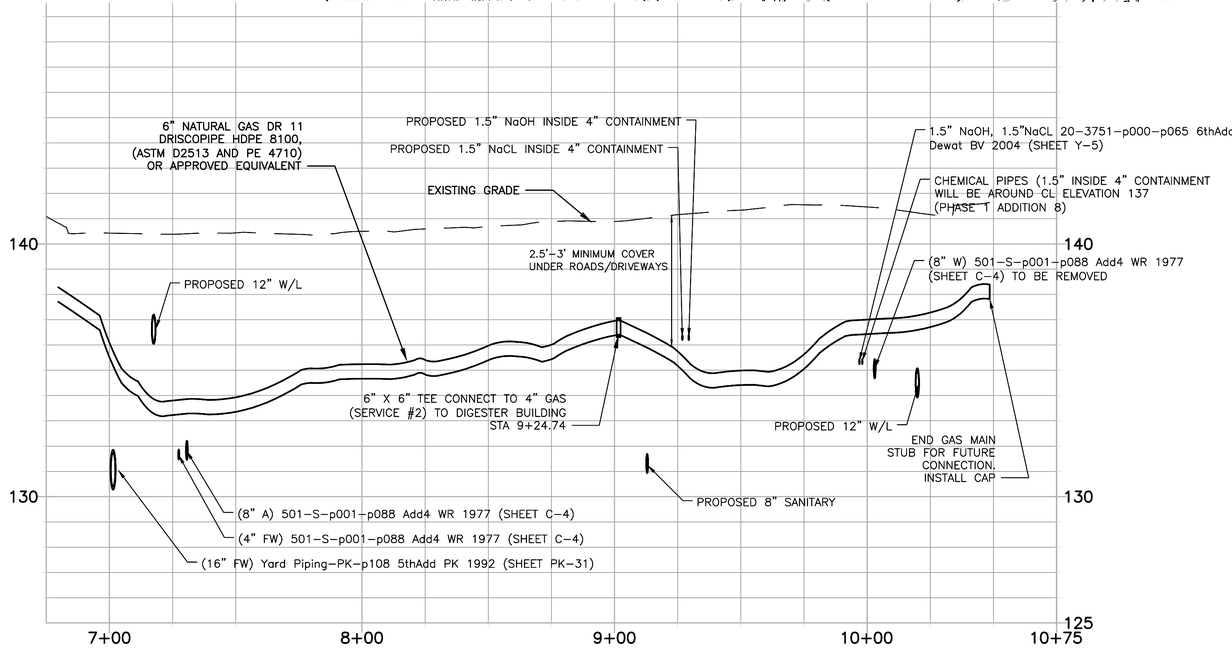

GENERAL NOTES:

1. BGE SHALL INSTALL PIPING AND FITTINGS FROM THE OFFSITE NATURAL GAS CONNECTION POINT TO THE NEW BGE METER. REFER TO BGE DRAWINGS FOR DESIGN DETAILS.
2. CONTRACTOR TO INSTALL NATURAL GAS PIPE AND FITTINGS FROM DOWNSTREAM OF THE NEW BGE METER AS PER NFPA 54.
3. CONTRACTOR TO VERIFY AND CONFIRM EXACT LOCATION OF BURIED UTILITIES/PIPING ENCOUNTERED BEFORE INSTALLING UNDERGROUND PIPING.
4. UNDERGROUND GAS PIPING SHALL BE INSTALLED WITH SUFFICIENT CLEARANCE FROM ANY OTHER UNDERGROUND STRUCTURE TO AVOID CONTACT THEREWITH, TO ALLOW MAINTENANCE, AND TO PROTECT AGAINST DAMAGE FROM PROXIMITY TO OTHER STRUCTURES.
5. ALL UTILITY CROSSINGS SHALL USE OPEN-CUT INSTALLATION PROCEDURES. TRENCHLESS INSTALLATIONS IS NOT APPROVED AT UTILITY CROSSINGS.
6. REFER TO HDR PIPING DRAWINGS ON ABOVE GROUND PRESSURE REGULATORS AND METER PIPING RUN AT DIGESTER AND DRYER BUILDING.
7. UTILITY NOTE:
   A. CONTRACTOR SHALL OPEN ONLY THAT SECTION OF TRENCH THAT CAN BE BACKFILLED AND STABILIZED EACH DAY. IF THE TRENCH MUST REMAIN OPEN LONGER THAN ONE DAY, SILT FENCE SHALL BE PLACED BELOW (DOWN SLOPE OF) THE TRENCH.
   B. PLACE ALL EXCAVATED MATERIAL ON THE UPHILL SIDE OF THE TRENCH.
   C. ANY SEDIMENT CONTROLS DISTURBED BY UTILITY CONSTRUCTION ARE TO BE REPAIRED IMMEDIATELY.
8. OPEN TRENCH INSTALLATION: SEE TRENCH DETAIL G-2.12/C-47. SEE NOTE 9 FOR TRACER WIRE INFORMATION. SEE NOTE 10 FOR PAVEMENT REPAIR.
9. TRACER WIRE: FOR NATURAL GAS SERVICE, A #14 INSULATED COPPER TRACER WIRE SHALL BE STRUNG ALONG THE FULL LENGTH OF THE PIPE. MAINTAIN THE TRACER WIRE CLOSE TO THE PIPE. SECTIONS OF TRACER WIRE SHOULD BE JOINED USING APPROVED CONNECTORS. REFER TO HDR SECTION 40 05 00 FOR ADDITIONAL DETAILS.
10. PAVEMENT REPAIR: SEE UTILITY TRENCH ROADWAY REPAVING DETAIL G-4.01/C-46 FOR PAVEMENT REPAIR.
11. IF OPEN TRENCH METHOD IS USED, DEMOLISH AND REMOVE SECTION OF CURB (SAW CUT FOR CLEAN LINES). REPLACE CONCRETE CURB PER DETAIL G-3.03/C-46.

THE DRAWINGS IN THIS SET ARE RECORD DRAWINGS. THEY ARE CONSTRUCTION CONTRACT DRAWINGS WHICH HAVE BEEN REVISED BASED ON AVAILABLE FIELD INFORMATION RECORDED BY OTHERS DURING CONSTRUCTION OF THIS CONTRACT. THERE HAS BEEN NO VERIFICATION OF DIMENSIONS SHOWN ON THE CONSTRUCTION DRAWINGS OR THE ACCURACY/COMPLETENESS OF THE FIELD INFORMATION RECEIVED.

SIGNATURE _____ DATE 2/7/2025

HORIZONTAL SCALE
0 30 60 90
SCALE: 1" = 30'

VERTICAL SCALE
0 3 6 9
SCALE: 1" = 3'

AS-BUILT REPLACEMENT SHEET

PROFESSIONAL CERTIFICATION
THIS DRAWING WAS ORIGINALLY APPROVED FOR CONSTRUCTION AND SEALED BY ROBERT BAYSDEN, A REGISTERED PROFESSIONAL ENGINEER IN THE STATE OF MARYLAND, NO. 49972.

NOTICE TO CONTRACTORS
- PROJECT ELEVATIONS ARE BASED ON NAVD88 AND HOWARD COUNTY'S BENCHMARK SYSTEM
- PREVIOUS PROJECTS USED OTHER DATUMS
- APPLY THE FOLLOWING CONVERSIONS WHEN USING PREVIOUS CONTRACT DRAWINGS:
  - ADDITION NO. 6: SUBTRACT 0.80 FT
  - PRIOR ADDITIONS: SUBTRACT 1.04 FT

DEPARTMENT OF PUBLIC WORKS
HOWARD COUNTY, MARYLAND

CHIEF, BUREAU OF UTILITIES DATE

DES: M.L.
DRN: S.W.
CHK: R.B.
DATE: 03/16

DATE	REV	DESCRIPTION
07/2019		RECORD DRAWINGS

CIVIL

PROPOSED NATURAL GAS LINE PLAN & PROFILE 2

LITTLE PATUXENT WATER RECLAMATION PLANT
8TH ADDITION
BIOSOLIDS PROCESSING FACILITIES – PHASE I

CAPITAL PROJECT S-6295
CONTRACT NO. 24-4935

ELECTION DISTRICT NO. 6
HOWARD COUNTY, MARYLAND

SCALE AS SHOWN

SHEET 84 OF 463

C-37

C:\pwworking\pitt\d1901214\ C-37.dwg 01/11/22_8:25

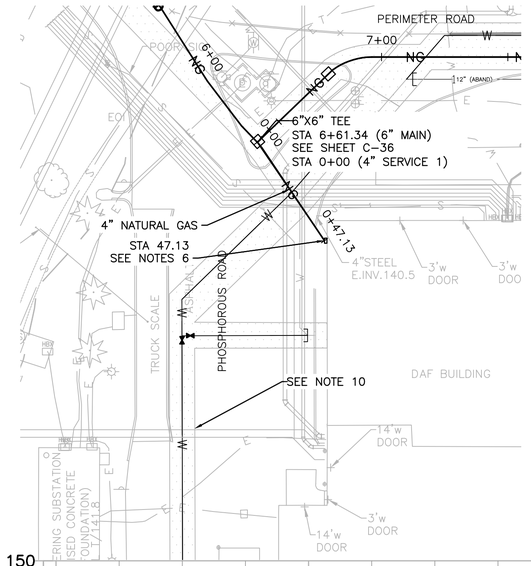

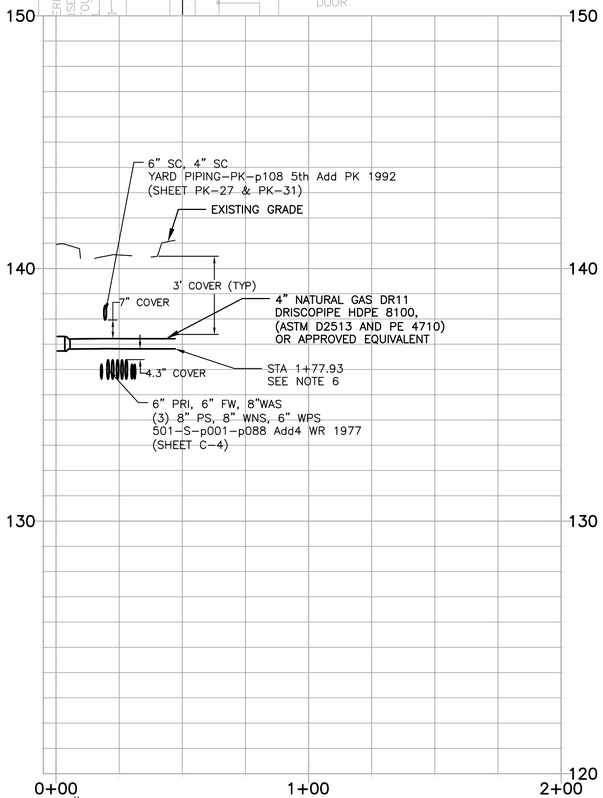

SERVICE #1
PROPOSED NATURAL GAS LINE TO PHASE 2 DRYER BUILDING

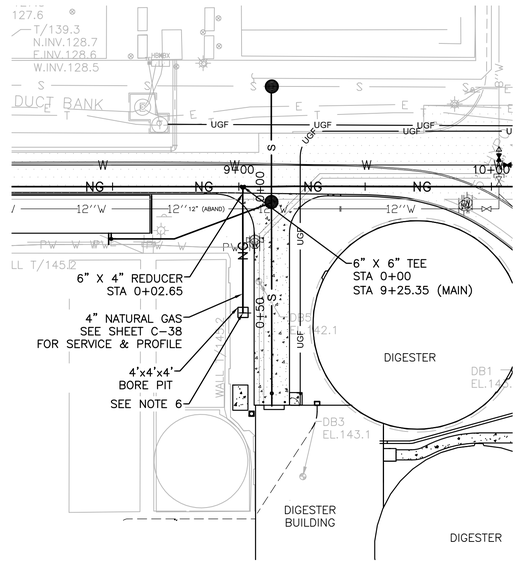

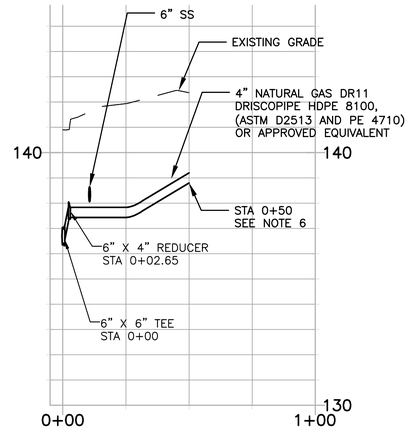

SERVICE #2
PROPOSED NATURAL GAS LINE TO DIGESTER BUILDING

N

GENERAL NOTES:

1. BGE SHALL INSTALL PIPING AND FITTINGS FROM THE OFFSITE NATURAL GAS CONNECTION POINT TO THE NEW BGE METER. REFER TO BGE DRAWINGS FOR DESIGN DETAILS.
2. CONTRACTOR TO INSTALL NATURAL GAS PIPE AND FITTINGS FROM DOWNSTREAM OF THE NEW BGE METER AS PER NFPA 54.
3. CONTRACTOR TO VERIFY AND CONFIRM EXACT LOCATION OF BURIED UTILITIES/PIPING ENCOUNTERED BEFORE INSTALLING UNDERGROUND PIPING.
4. UNDERGROUND GAS PIPING SHALL BE INSTALLED WITH SUFFICIENT CLEARANCE FROM ANY OTHER UNDERGROUND STRUCTURE TO AVOID CONTACT THEREWITH, TO ALLOW MAINTENANCE, AND TO PROTECT AGAINST DAMAGE FROM PROXIMITY TO OTHER STRUCTURES.
5. ALL UTILITY CROSSINGS SHALL USE OPEN-CUT INSTALLATION PROCEDURES. TRENCHLESS INSTALLATIONS IS NOT APPROVED AT UTILITY CROSSINGS.
6. REFER TO HDR PIPING DRAWINGS ON ABOVE GROUND PRESSURE REGULATORS AND METER PIPING RUN AT DIGESTER AND DRYER BUILDING.
7. UTILITY NOTE:
   A. CONTRACTOR SHALL OPEN ONLY THAT SECTION OF TRENCH THAT CAN BE BACKFILLED AND STABILIZED EACH DAY. IF THE TRENCH MUST REMAIN OPEN LONGER THAN ONE DAY, SILT FENCE SHALL BE PLACED BELOW (DOWN SLOPE OF) THE TRENCH.
   B. PLACE ALL EXCAVATED MATERIAL ON THE UPHILL SIDE OF THE TRENCH.
   C. ANY SEDIMENT CONTROLS DISTURBED BY UTILITY CONSTRUCTION ARE TO BE REPAIRED IMMEDIATELY.
8. OPEN TRENCH INSTALLATION: SEE TRENCH DETAIL G-2.12/C-47. SEE NOTE 9 FOR TRACER WIRE INFORMATION. SEE NOTE 10 FOR PAVEMENT REPAIR.
9. TRACER WIRE: FOR NATURAL GAS SERVICE, A #14 INSULATED COPPER TRACER WIRE SHALL BE STRUNG ALONG THE FULL LENGTH OF THE PIPE. MAINTAIN THE TRACER WIRE CLOSE TO THE PIPE. SECTIONS OF TRACER WIRE SHOULD BE JOINED USING APPROVED CONNECTORS. REFER TO HDR SECTION 40 05 00 FOR ADDITIONAL DETAILS.
10. PAVEMENT REPAIR: SEE UTILITY TRENCH ROADWAY REPAVING DETAIL G-4.01/C-46.
11. 4" SERVICE TO PHASE 2 DRYER BUILDING. END AND CAP MAIN AT RADIUS POINT (STA 1+38 +/-). INSTALL REMAINDER OF PIPE, ABOVE GROUND PIPE, VALVES, AND METERS DURING PHASE 2.

THE DRAWINGS IN THIS SET ARE RECORD DRAWINGS. THEY ARE CONSTRUCTION CONTRACT DRAWINGS WHICH HAVE BEEN REVISED BASED ON AVAILABLE FIELD INFORMATION RECORDED BY OTHERS DURING CONSTRUCTION OF THIS CONTRACT. THERE HAS BEEN NO VERIFICATION OF DIMENSIONS SHOWN ON THE CONSTRUCTION DRAWINGS OR THE ACCURACY/COMPLETENESS OF THE FIELD INFORMATION RECEIVED.

SIGNATURE — DATE 2/7/2023

HORIZONTAL SCALE
0 30 60 90
SCALE: 1" = 30'

VERTICAL SCALE
0 3 6 9
SCALE: 1" = 3'

C:\pwworking\pitt\d1901214\C-38.dwg 01/11/22_8:29

AS-BUILT REPLACEMENT SHEET

PROFESSIONAL CERTIFICATION
THIS DRAWING WAS ORIGINALLY APPROVED FOR CONSTRUCTION AND SEALED BY ROBERT BAYSDEN, A REGISTERED PROFESSIONAL ENGINEER IN THE STATE OF MARYLAND, NO. 49972.

NOTICE TO CONTRACTORS
- PROJECT ELEVATIONS ARE BASED ON NAVD88 AND HOWARD COUNTY'S BENCHMARK SYSTEM
- PREVIOUS PROJECTS USED OTHER DATUMS
- APPLY THE FOLLOWING CONVERSIONS WHEN USING PREVIOUS CONTRACT DRAWINGS:
  - ADDITION NO. 6: SUBTRACT 0.80 FT
  - PRIOR ADDITIONS: SUBTRACT 1.04 FT

DEPARTMENT OF PUBLIC WORKS
HOWARD COUNTY, MARYLAND

CHIEF, BUREAU OF UTILITIES DATE

DES: M.L.
DRN: S.W.
CHK: R.B.
DATE: 03/16

DATE	REV	DESCRIPTION
07/2019		RECORD DRAWINGS

CIVIL

PROPOSED NATURAL GAS LINE PLAN & PROFILE 3

LITTLE PATUXENT WATER RECLAMATION PLANT
8TH ADDITION
BIOSOLIDS PROCESSING FACILITIES – PHASE I

CAPITAL PROJECT S-6295
CONTRACT NO. 24-4935

ELECTION DISTRICT NO. 6
HOWARD COUNTY, MARYLAND

SCALE AS SHOWN

SHEET 85 OF 463

C-38

CONSTRUCTION SEQUENCE

1. APPLY FOR GRADING PERMIT AND SCHEDULE A PRE - CONSTRUCTION MEETING WITH THE INSPECTOR.
   OBTAIN GRADING PERMIT FROM THE INSPECTOR AT THE MEETING.
2. CLEAR AND GRUB AS NECESSARY FOR THE INSTALLATION OF THE PERIMETER CONTROLS.
3. CONSTRUCT AND STABILIZE PERIMETER CONTROLS AS SHOWN ON PLANS.
4. BEGIN DEMOLITION OF DIGESTER TANKS, DIGESTER BUILDING, EXISTING UTILITIES AND SITE FEATURES AS SHOWN ON THE DEMOLITION PLANS.
5. CONSTRUCT NEW DIGESTERS, DIGESTER BUILDING, FLARE, SUBSTATION, AND UTILITIES AS SHOWN ON PLANS.
6. STABILIZE AREAS IMMEDIATELY AFTER FINAL GRADES ARE CONSTRUCTED.
7. OBTAIN APPROVAL PRIOR TO THE REMOVAL OF SEDIMENT CONTROLS AFTER UPSTREAM AREAS ARE FULLY STABILIZED.
8. REMOVE SEDIMENT CONTROLS AND STABILIZE AREAS THAT AREA DISTURBED BY THE REMOVAL OF SEDIMENT CONTROLS.

GENERAL EROSION CONTROL NOTES:

1. STANDARD SILT FENCE MAY BE REPLACED WITH SUPER SILT FENCE AT THE DIRECTION OF THE SEDIMENT CONTROL INSPECTOR.
2. WHEN SUPER SILT FENCE IS RUNNING AT A SLOPE GREATER THEN 5% FOR A DISTANCE OVER 50' , CURL FENCE UP 2' FOR EVERY 2' OF ELEVATION CHANGE ALONG SILT FENCE.
3. SEDIMENT CONTROL INSPECTOR MAY RELOCATE STABILIZED CONSTRUCTION ENTRANCES.
4. ANY EARTH DIKE INTERRUPTED BY THE INSTALLATION OF A STORM DRAIN IS TO BE REPAIRED IMMEDIATELY.
5. THE STANDARD SEDIMENT CONTROL PLAN MAY NOT BE USED TO OBTAIN GRADING PERMITS FOR THIS PROJECT.

HOWARD SOIL CONSERVATION DISTRICT (HSCD) STANDARD SEDIMENT CONTROL NOTES

1. A PRE-CONSTRUCTION MEETING MUST OCCUR WITH THE HOWARD COUNTY DEPARTMENT OF PUBLIC WORKS, CONSTRUCTION INSPECTION DIVISION (CID), 410-313-1855 AFTER THE FUTURE LOD AND PROTECTED AREAS ARE MARKED CLEARLY IN THE FIELD. A MINIMUM OF 48 HOUR NOTICE TO CID MUST BE GIVEN AT THE FOLLOWING STAGES:

a. PRIOR TO THE START OF EARTH DISTURBANCE,
b. UPON COMPLETION OF THE INSTALLATION OF PERIMETER EROSION AND SEDIMENT CONTROLS, BUT BEFORE PROCEEDING WITH ANY OTHER EARTH DISTURBANCE OR GRADING,
c. PRIOR TO THE START OF ANOTHER PHASE OF CONSTRUCTION OR OPENING OF ANOTHER GRADING UNIT,
d. PRIOR TO THE REMOVAL OR MODIFICATION OF SEDIMENT CONTROL PRACTICES.

OTHER BUILDING OR GRADING INSPECTION APPROVALS MAY NOT BE AUTHORIZED UNTIL THIS INITIAL APPROVAL BY THE INSPECTION AGENCY IS MADE. OTHER RELATED STATE AND FEDERAL PERMITS SHALL BE REFERENCED, TO ENSURE COORDINATION AND TO AVOID CONFLICTS WITH THIS PLAN.

2. ALL VEGETATIVE AND STRUCTURAL PRACTICES ARE TO BE INSTALLED ACCORDING TO THE PROVISIONS OF THIS PLAN AND ARE TO BE IN CONFORMANCE WITH THE 2011 MARYLAND STANDARDS AND SPECIFICATIONS FOR SOIL EROSION AND SEDIMENT CONTROL, AND REVISIONS THERETO.

3. FOLLOWING INITIAL SOIL DISTURBANCE OR RE-DISTURBANCE, PERMANENT OR TEMPORARY STABILIZATION IS REQUIRED WITHIN THREE (3) CALENDAR DAYS AS TO THE SURFACE OF ALL PERIMETER CONTROLS, DIKES, SWALES, DITCHES, PERIMETER SLOPES, AND ALL SLOPES STEEPER THAN 3 HORIZONTAL TO 1 VERTICAL (3:1); AND SEVEN (7) CALENDAR DAYS AS TO ALL OTHER DISTURBED AREAS ON THE PROJECT SITE EXCEPT FOR THOSE AREAS UNDER ACTIVE GRADING.

4. ALL DISTURBED AREAS MUST BE STABILIZED WITHIN THE TIME PERIOD SPECIFIED ABOVE IN ACCORDANCE WITH THE 2011 MARYLAND STANDARDS AND SPECIFICATIONS FOR SOIL EROSION AND SEDIMENT CONTROL FOR TOPSOIL (SEC. B-4-2), PERMANENT SEEDING (SEC. B-4-5), TEMPORARY SEEDING (SEC. B-4-4) AND MULCHING (SEC. B-4-3). TEMPORARY STABILIZATION WITH MULCH ALONE CAN ONLY BE APPLIED BETWEEN THE FALL AND SPRING SEEDING DATES IF THE GROUND IS FROZEN. INCREMENTAL STABILIZATION (SEC. B-4-1) SPECIFICATIONS SHALL BE ENFORCED IN AREAS WITH >15' OF CUT AND/OR FILL. STOCKPILES (SEC. B-4-8) IN EXCESS OF 20 FT. MUST BE BENCHED WITH STABLE OUTLET. ALL CONCENTRATED FLOW, STEEP SLOPE, AND HIGHLY ERODIBLE AREAS SHALL RECEIVE SOIL STABILIZATION MATTING (SEC. B-4-6).

5. ALL SEDIMENT CONTROL STRUCTURES ARE TO REMAIN IN PLACE, AND ARE TO BE MAINTAINED IN OPERATIVE CONDITION UNTIL PERMISSION FOR THEIR REMOVAL HAS BEEN OBTAINED FROM THE CID.

6. SITE ANALYSIS:

TOTAL AREA OF SITE.....56.20± AC.
AREA DISTURBED.....6.67 ± AC.
AREA TO BE ROOFED.....1.28 ± AC.
AREA TO BE VEGETATIVELY STABILIZED.....4.71 ± AC.

* FOR ESTIMATING PURPOSES ONLY. CONTRACTOR TO VERIFY ACTUAL VALUES.

7. ANY SEDIMENT CONTROL PRACTICE WHICH IS DISTURBED BY GRADING ACTIVITY FOR PLACEMENT OF UTILITIES MUST BE REPAIRED ON THE SAME DAY OF DISTURBANCE.

8. ADDITIONAL SEDIMENT CONTROL MUST BE PROVIDED, IF DEEMED NECESSARY BY THE CID. THE SITE AND ALL CONTROLS SHALL BE INSPECTED BY THE CONTRACTOR WEEKLY; AND THE NEXT DAY AFTER EACH RAIN EVENT. A WRITTEN REPORT BY THE CONTRACTOR, MADE AVAILABLE UPON REQUEST, IS PART OF EVERY INSPECTION AND SHOULD INCLUDE:

* INSPECTION DATE
* INSPECTION TYPE (ROUTINE, PRE-STORM EVENT, DURING RAIN EVENT)
* NAME AND TITLE OF INSPECTOR
* WEATHER INFORMATION (CURRENT CONDITIONS AS WELL AS TIME AND AMOUNT OF LAST RECORDED PRECIPITATION)
* BRIEF DESCRIPTION OF PROJECT'S STATUS (E.G., PERCENT COMPLETE) AND/OR CURRENT ACTIVITIES
* EVIDENCE OF SEDIMENT DISCHARGES
* IDENTIFICATION OF PLAN DEFICIENCIES
* IDENTIFICATION OF SEDIMENT CONTROLS THAT REQUIRE MAINTENANCE
* IDENTIFICATION OF MISSING OR IMPROPERLY INSTALLED SEDIMENT CONTROLS
* COMPLIANCE STATUS REGARDING THE SEQUENCE OF CONSTRUCTION AND STABILIZATION REQUIREMENTS
* PHOTOGRAPHS
* MONITORING/SAMPLING
* MAINTENANCE AND/OR CORRECTIVE ACTION PERFORMED
* OTHER INSPECTION ITEMS AS REQUIRED BY THE GENERAL PERMIT FOR STORMWATER ASSOCIATED WITH CONSTRUCTION ACTIVITIES (NPDES, MDE).

9. TRENCHES FOR THE CONSTRUCTION OF UTILITIES IS LIMITED TO THREE PIPE LENGTHS OR THAT WHICH CAN AND SHALL BE BACK-FILLED AND STABILIZED BY THE END OF EACH WORKDAY, WHICHEVER IS SHORTER.

10. ANY MAJOR CHANGES OR REVISIONS TO THE PLAN OR SEQUENCE OF CONSTRUCTION MUST BE REVIEWED AND APPROVED BY THE HSCD PRIOR TO PROCEEDING WITH CONSTRUCTION. MINOR REVISIONS MAY ALLOWED BY THE CID PER THE LIST OF HSCD-APPROVED FIELD CHANGES.

11. DISTURBANCE SHALL NOT OCCUR OUTSIDE THE L.O.D. A PROJECT IS TO BE SEQUENCED SO THAT GRADING ACTIVITIES BEGIN ON ONE GRADING UNIT (MAXIMUM ACREAGE OF 20 AC. PER GRADING UNIT) AT A TIME. WORK MAY PROCEED TO A SUBSEQUENT GRADING UNIT WHEN AT LEAST 50 PERCENT OF THE DISTURBED AREA IN THE PRECEDING GRADING UNIT HAS BEEN STABILIZED AND APPROVED BY THE CID. UNLESS OTHERWISE SPECIFIED AND APPROVED BY THE CID, NO MORE THAN 30 ACRES CUMULATIVELY MAY BE DISTURBED AT A GIVEN TIME.

HOWARD SOIL CONSERVATION DISTRICT (HSCD) STANDARD SEDIMENT CONTROL NOTES (CONTINUED)

12. WASH WATER FROM ANY EQUIPMENT, VEHICLES, WHEELS, PAVEMENT, AND OTHER SOURCES MUST BE TREATED IN A SEDIMENT BASIN OR OTHER APPROVED WASHOUT STRUCTURE.

13. TOPSOIL SHALL BE STOCKPILED AND PRESERVED ON-SITE FOR REDISTRIBUTION ONTO FINAL GRADE.

14. ALL SILT FENCE AND SUPER SILT FENCE SHALL BE PLACED ON-THE-CONTOUR, AND BE IMBRICATED AT 25' MINIMUM INTERVALS, WITH LOWER ENDS CURLED UPHILL BY 2' IN ELEVATION.

15. STREAM CHANNELS MUST NOT BE DISTURBED DURING THE FOLLOWING RESTRICTED TIME PERIODS (INCLUSIVE):
* USE I AND IP MARCH 1 - JUNE 15
* USE III AND IIIP OCTOBER 1 - APRIL 30
* USE IV MARCH 1 - MAY 31

16. A COPY OF THIS PLAN, THE 2011 MARYLAND STANDARDS AND SPECIFICATIONS FOR SOIL EROSION AND SEDIMENT CONTROL, AND ASSOCIATED PERMITS SHALL BE ON-SITE AND AVAILABLE WHEN THE SITE IS ACTIVE.

SEDIMENT CONTROL

Owners/Developer Certification:

"I/We hereby certify that any clearing, grading, construction, or development will be done pursuant to this approved erosion and sediment control plan, including inspecting and maintaining controls, and that the responsible personnel involved in the construction project will have a Certificate of Training at a Maryland Department of the Environment (MDE) approved training program for the control on erosion and sediment prior to beginning the project. I certify right-of-entry for periodic on-site evaluation by Howard County, the Howard Soil Conservation District and/or MDE."

_____ _____
Owner's/ Developer's Signature Date

_____
Printed Name & Title

Design Certification:

"I hereby certify that this plan has been designed in accordance with current Maryland erosion and sediment control laws, regulations, and standards, that it represents a practical and workable plan based on my personal knowledge of the site, and that it was prepared in accordance with the requirements of the Howard Soil Conservation District."

_____ _____
Designer's Signature Date

_____ MD Registration No._____
Printed Name P.E., R.L.S., or R.L.A. (circle one)

Professional Certification:

"I hereby certify these documents were prepared or approved by me, and that I am a duly licensed professional engineer under the laws of the State Of Maryland,

License No._____, Expiration Date:_____"

(Title block, certification, seal, and signature shall appear close to each other)

Howard SCD Signature Block:

This plan is approved for soil erosion and sediment control by the Howard Soil Conservation District.

_____ _____
Howard Soil Conservation District Date

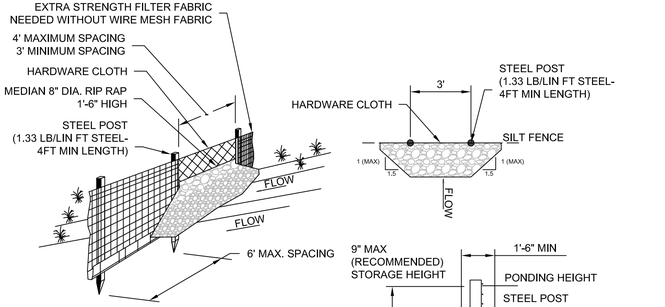

NOTES:

1. WASHED STONE (#57) TO BE REMOVED AND REPLACED ONCE IT BECOMES CLOGGED WITH SEDIMENT.
2. SEDIMENT TO BE REMOVED WHEN ACCUMULATIONS REACH 1/3 HEIGHT OF SILT FENCE
3. THE KEY TO FUNCTIONAL ROCK OUTLETS IS WEEKLY INSPECTIONS, ROUTINE MAINTENANCE, AND REGULAR SEDIMENT REMOVAL.

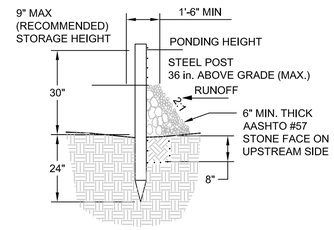

DESIGN TYPE	DRAINAGE AREA (APPROX.)	WEIR LENGTH (L) MIN.
1/4	1/2 ACRE	3.0 FT

ROCK SECTION DETAIL
TRENCH WITH GRAVEL

SILT FENCE ROCK OUTLET
NOT TO SCALE
1 - -

Rev. 8/2015

THE DRAWINGS IN THIS SET ARE RECORD DRAWINGS. THEY ARE CONSTRUCTION CONTRACT DRAWINGS WHICH HAVE BEEN REVISED BASED ON AVAILABLE FIELD INFORMATION RECORDED BY OTHERS DURING CONSTRUCTION OF THIS CONTRACT. THERE HAS BEEN NO VERIFICATION OF DIMENSIONS SHOWN ON THE CONSTRUCTION DRAWINGS OR THE ACCURACY/COMPLETENESS OF THE FIELD INFORMATION RECEIVED.

SIGNATURE DATE

C:\pwworking\pitt\d1901214\ C-41.dwg 01/11/22_8:30

AS-BUILT REPLACEMENT SHEET

PROFESSIONAL CERTIFICATION
THIS DRAWING WAS ORIGINALLY APPROVED FOR CONSTRUCTION AND SEALED BY ROBERT BAYSDEN, A REGISTERED PROFESSIONAL ENGINEER IN THE STATE OF MARYLAND, NO. 49972.

NOTICE TO CONTRACTORS
- PROJECT ELEVATIONS ARE BASED ON NAVD88 AND HOWARD COUNTY'S BENCHMARK SYSTEM
- PREVIOUS PROJECTS USED OTHER DATUMS
- APPLY THE FOLLOWING CONVERSIONS WHEN USING PREVIOUS CONTRACT DRAWINGS:
  – ADDITION NO. 6: SUBTRACT 0.80 FT
  – PRIOR ADDITIONS: SUBTRACT 1.04 FT

DEPARTMENT OF PUBLIC WORKS
HOWARD COUNTY, MARYLAND

CHIEF, BUREAU OF UTILITIES DATE

DES: M.L.
DRN: S.W.
CHK: R.B.
DATE: 03/16

DATE	REV	DESCRIPTION
07/2019		RECORD DRAWINGS

CIVIL

EROSION CONTROL NOTES AND DETAILS

LITTLE PATUXENT WATER RECLAMATION PLANT
8TH ADDITION
BIOSOLIDS PROCESSING FACILITIES – PHASE I

CAPITAL PROJECT S-6295
CONTRACT NO. 24-4935

ELECTION DISTRICT NO. 6
HOWARD COUNTY, MARYLAND

SCALE AS SHOWN

SHEET 86 OF 463

C-41

B-4-2 STANDARD AND SPECIFICATIONS FOR SOIL PREPARATION, TOPSOILING, AND SOIL AMENDMENTS

DEFINITION

THE PROCESS OF PREPARING THE SOILS TO SUSTAIN ADEQUATE VEGETATIVE STABILIZATION.

PURPOSE

TO PROVIDE A SUITABLE SOIL MEDIUM FOR VEGETATIVE GROWTH.

CONDITIONS WHERE PRACTICE APPLIES

WHERE VEGETATIVE STABILIZATION IS TO BE ESTABLISHED.

CRITERIA

A. SOIL PREPARATION

1. TEMPORARY STABILIZATION

a. SEEDBED PREPARATION CONSISTS OF LOOSENING SOIL TO A DEPTH OF 3 TO 5 INCHES BY MEANS OF SUITABLE AGRICULTURAL OR CONSTRUCTION EQUIPMENT, SUCH AS DISC HARROWS OR CHISEL PLOWS OR RIPPERS MOUNTED ON CONSTRUCTION EQUIPMENT. AFTER THE SOIL IS LOOSENED, IT MUST NOT BE ROLLED OR DRAGGED SMOOTH BUT LEFT IN THE ROUGHENED CONDITION. SLOPES 3:1 OR FLATTER ARE TO BE TRACKED WITH RIDGES RUNNING PARALLEL TO THE CONTOUR OF THE SLOPE.
b. APPLY FERTILIZER AND LIME AS PRESCRIBED ON THE PLANS.
c. INCORPORATE LIME AND FERTILIZER INTO THE TOP 3 TO 5 INCHES OF SOIL BY DISKING OR OTHER SUITABLE MEANS.

2. PERMANENT STABILIZATION

a. A SOIL TEST IS REQUIRED FOR ANY EARTH DISTURBANCE OF 5 ACRES OR MORE. THE MINIMUM SOIL CONDITIONS REQUIRED FOR PERMANENT VEGETATIVE ESTABLISHMENT ARE:

I. SOIL PH BETWEEN 6.0 AND 7.0.

II. SOLUBLE SALTS LESS THAN 500 PARTS PER MILLION (PPM).

III. SOIL CONTAINS LESS THAN 40 PERCENT CLAY BUT ENOUGH FINE GRAINED MATERIAL (GREATER THAN 30 PERCENT SILT PLUS CLAY) TO PROVIDE THE CAPACITY TO HOLD A MODERATE AMOUNT OF MOISTURE. AN EXCEPTION: IF LOVEGRASS WILL BE PLANTED, THEN A SANDY SOIL (LESS THAN 30 PERCENT SILT PLUS CLAY) WOULD BE ACCEPTABLE.

IV. SOIL CONTAINS 1.5 PERCENT MINIMUM ORGANIC MATTER BY WEIGHT.

V. SOIL CONTAINS SUFFICIENT PORE SPACE TO PERMIT ADEQUATE ROOT PENETRATION.

b. APPLICATION OF AMENDMENTS OR TOPSOIL IS REQUIRED IF ON-SITE SOILS DO NOT MEET THE ABOVE CONDITIONS.

c. GRADED AREAS MUST BE MAINTAINED IN A TRUE AND EVEN GRADE AS SPECIFIED ON THE APPROVED PLAN, THEN SCARIFIED OR OTHERWISE LOOSENED TO A DEPTH OF 3 TO 5 INCHES.

d. APPLY SOIL AMENDMENTS AS SPECIFIED ON THE APPROVED PLAN OR AS INDICATED BY THE RESULTS OF A SOIL TEST.

e. MIX SOIL AMENDMENTS INTO THE TOP 3 TO 5 INCHES OF SOIL BY DISKING OR OTHER SUITABLE MEANS. RAKE LAWN AREAS TO SMOOTH THE SURFACE, REMOVE LARGE OBJECTS LIKE STONES AND BRANCHES, AND READY THE AREA FOR SEED APPLICATION. LOOSEN SURFACE SOIL BY DRAGGING WITH A HEAVY CHAIN OR OTHER EQUIPMENT TO ROUGHEN THE SURFACE WHERE SITE CONDITIONS WILL NOT PERMIT NORMAL SEEDBED PREPARATION. TRACK SLOPES 3:1 OR FLATTER WITH TRACKED EQUIPMENT LEAVING THE SOIL IN AN IRREGULAR CONDITION WITH RIDGES RUNNING PARALLEL TO THE CONTOUR OF THE SLOPE. LEAVE THE TOP 1 TO 3 INCHES OF SOIL LOOSE AND FRIABLE. SEEDBED LOOSENING MAY BE UNNECESSARY ON NEWLY DISTURBED AREAS.

B. TOPSOILING

1. TOPSOIL IS PLACED OVER PREPARED SUBSOIL PRIOR TO ESTABLISHMENT OF PERMANENT VEGETATION. THE PURPOSE IS TO PROVIDE A SUITABLE SOIL MEDIUM FOR VEGETATIVE GROWTH. SOILS OF CONCERN HAVE LOW MOISTURE CONTENT, LOW NUTRIENT LEVELS, LOW PH, MATERIALS TOXIC TO PLANTS, AND/OR UNACCEPTABLE SOIL GRADATION.

2. TOPSOIL SALVAGED FROM AN EXISTING SITE MAY BE USED PROVIDED IT MEETS THE STANDARDS AS SET FORTH IN THESE SPECIFICATIONS. TYPICALLY, THE DEPTH OF TOPSOIL TO BE SALVAGED FOR A GIVEN SOIL TYPE CAN BE FOUND IN THE REPRESENTATIVE SOIL PROFILE SECTION IN THE SOIL SURVEY PUBLISHED BY USDA-NRCS.

3. TOPSOILING IS LIMITED TO AREAS HAVING 2:1 OR FLATTER SLOPES WHERE:

a. THE TEXTURE OF THE EXPOSED SUBSOIL/PARENT MATERIAL IS NOT ADEQUATE TO PRODUCE VEGETATIVE GROWTH.
b. THE SOIL MATERIAL IS SO SHALLOW THAT THE ROOTING ZONE IS NOT DEEP ENOUGH TO SUPPORT PLANTS OR FURNISH CONTINUING SUPPLIES OF MOISTURE AND PLANT NUTRIENTS.
c. THE ORIGINAL SOIL TO BE VEGETATED CONTAINS MATERIAL TOXIC TO PLANT GROWTH.
d. THE SOIL IS SO ACIDIC THAT TREATMENT WITH LIMESTONE IS NOT FEASIBLE.

4. AREAS HAVING SLOPES STEEPER THAN 2:1 REQUIRE SPECIAL CONSIDERATION AND DESIGN.

5. TOPSOIL SPECIFICATIONS: SOIL TO BE USED AS TOPSOIL MUST MEET THE FOLLOWING CRITERIA:

a. TOPSOIL MUST BE A LOAM, SANDY LOAM, CLAY LOAM, SILT LOAM, SANDY CLAY LOAM, OR LOAMY SAND. OTHER SOILS MAY BE USED IF RECOMMENDED BY AN AGRONOMIST OR SOIL SCIENTIST AND APPROVED BY THE APPROPRIATE APPROVAL AUTHORITY. TOPSOIL MUST NOT BE A MIXTURE OF CONTRASTING TEXTURED SUBSOILS AND MUST CONTAIN LESS THAN 5 PERCENT BY VOLUME OF CINDERS, STONES, SLAG, COARSE FRAGMENTS, GRAVEL, STICKS, ROOTS, TRASH, OR OTHER MATERIALS LARGER THAN 1.5 INCHES IN DIAMETER.

b. TOPSOIL MUST BE FREE OF NOXIOUS PLANTS OR PLANT PARTS SUCH AS BERMUDA GRASS, QUACK GRASS, JOHNSON GRASS, NUT SEDGE, POISON IVY, THISTLE, OR OTHERS AS SPECIFIED.

c. TOPSOIL SUBSTITUTES OR AMENDMENTS, AS RECOMMENDED BY A QUALIFIED AGRONOMIST OR SOIL SCIENTIST AND APPROVED BY THE APPROPRIATE APPROVAL AUTHORITY, MAY BE USED IN LIEU OF NATURAL TOPSOIL.

6. TOPSOIL APPLICATION

a. EROSION AND SEDIMENT CONTROL PRACTICES MUST BE MAINTAINED WHEN APPLYING TOPSOIL.
b. UNIFORMLY DISTRIBUTE TOPSOIL IN A 5 TO 8 INCH LAYER AND LIGHTLY COMPACT TO A MINIMUM THICKNESS OF 4 INCHES. SPREADING IS TO BE PERFORMED IN SUCH A MANNER THAT SODDING OR SEEDING CAN PROCEED WITH A MINIMUM OF ADDITIONAL SOIL PREPARATION AND TILLAGE. ANY IRREGULARITIES IN THE SURFACE RESULTING FROM TOPSOILING OR OTHER OPERATIONS MUST BE CORRECTED IN ORDER TO PREVENT THE FORMATION OF DEPRESSIONS OR WATER POCKETS.
c. TOPSOIL MUST NOT BE PLACED IF THE TOPSOIL OR SUBSOIL IS IN A FROZEN OR MUDDY CONDITION, WHEN THE SUBSOIL IS EXCESSIVELY WET OR IN A CONDITION THAT MAY OTHERWISE BE DETRIMENTAL TO PROPER GRADING AND SEEDBED PREPARATION.

B-4-2 (CONTINUED)

C. SOIL AMENDMENTS (FERTILIZER AND LIME SPECIFICATIONS)

1. SOIL TESTS MUST BE PERFORMED TO DETERMINE THE EXACT RATIOS AND APPLICATION RATES FOR BOTH LIME AND FERTILIZER ON SITES HAVING DISTURBED AREAS OF 5 ACRES OR MORE. SOIL ANALYSIS MAY BE PERFORMED BY A RECOGNIZED PRIVATE OR COMMERCIAL LABORATORY. SOIL SAMPLES TAKEN FOR ENGINEERING PURPOSES MAY ALSO BE USED FOR CHEMICAL ANALYSES.
2. FERTILIZERS MUST BE UNIFORM IN COMPOSITION, FREE FLOWING AND SUITABLE FOR ACCURATE APPLICATION BY APPROPRIATE EQUIPMENT. MANURE MAY BE SUBSTITUTED FOR FERTILIZER WITH PRIOR APPROVAL FROM THE APPROPRIATE APPROVAL AUTHORITY. FERTILIZERS MUST ALL BE DELIVERED TO THE SITE FULLY LABELED ACCORDING TO THE APPLICABLE LAWS AND MUST BEAR THE NAME, TRADE NAME OR TRADEMARK AND WARRANTY OF THE PRODUCER.
3. LIME MATERIALS MUST BE GROUND LIMESTONE (HYDRATED OR BURNT LIME MAY BE SUBSTITUTED EXCEPT WHEN HYDROSEEDING) WHICH CONTAINS AT LEAST 50 PERCENT TOTAL OXIDES (CALCIUM OXIDE PLUS MAGNESIUM OXIDE). LIMESTONE MUST BE GROUND TO SUCH FINENESS THAT AT LEAST 50 PERCENT WILL PASS THROUGH A #100 MESH SIEVE AND 98 TO 100 PERCENT WILL PASS THROUGH A #20 MESH SIEVE.
4. LIME AND FERTILIZER ARE TO BE EVENLY DISTRIBUTED AND INCORPORATED INTO THE TOP 3 TO 5 INCHES OF SOIL BY DISKING OR OTHER SUITABLE MEANS. WHERE THE SUBSOIL IS EITHER HIGHLY ACIDIC OR COMPOSED OF HEAVY CLAYS, SPREAD GROUND LIMESTONE AT THE AT THE RATE OF 4 TO 8 TONS/ACRE (200-400 POUNDS PER 1,000 SQUARE FEET) PRIOR TO THE PLACEMENT OF TOPSOIL.

B-4-3 STANDARDS AND SPECIFICATIONS FOR SEEDING AND MULCHING

DEFINITION

THE APPLICATION OF SEED AND MULCH TO ESTABLISH VEGETATIVE COVER.

PURPOSE

TO PROTECT DISTURBED SOILS FROM EROSION DURING AND AT THE END OF CONSTRUCTION.

CONDITIONS WHERE PRACTICE APPLIES

TO THE SURFACE OF ALL PERIMETER CONTROLS, SLOPES, AND ANY DISTURBED AREA NOT UNDER ACTIVE GRADING.

CRITERIA

A. SEEDING

1. SPECIFICATIONS

a. ALL SEED MUST MEET THE REQUIREMENTS OF THE MARYLAND STATE SEED LAW. ALL SEED MUST BE SUBJECT TO RE-TESTING BY A RECOGNIZED SEED LABORATORY. ALL SEED USED MUST HAVE BEEN TESTED WITHIN THE 6 MONTHS IMMEDIATELY PRECEDING THE DATE OF SOWING SUCH MATERIAL ON ANY PROJECT. REFER TO TABLE B.4 REGARDING THE QUALITY OF SEED. SEED TAGS MUST BE AVAILABLE UPON REQUEST TO THE INSPECTOR TO VERIFY TYPE OF SEED AND SEEDING RATE.
b. MULCH ALONE MAY BE APPLIED BETWEEN THE FALL AND SPRING SEEDING DATES ONLY IF THE GROUND IS FROZEN. THE APPROPRIATE SEEDING MIXTURE MUST BE APPLIED WHEN THE GROUND THAWS.
c. INOCULATES: THE INOCULATE FOR TREATING LEGUME SEED IN THE SEED MIXTURES MUST BE A PURE CULTURE OF NITROGEN FIXING BACTERIA PREPARED SPECIFICALLY FOR THE SPECIES. INOCULATES MUST NOT BE USED LATER THAN THE DATE INDICATED ON THE CONTAINER. ADD FRESH INOCULATES AS DIRECTED ON THE PACKAGE. USE FOUR TIMES THE RECOMMENDED RATE WHEN HYDROSEEDING. NOTE: IT IS VERY IMPORTANT TO KEEP INOCULATE AS COOL AS POSSIBLE UNTIL USED. TEMPERATURES ABOVE 75 TO 80 DEGREES FAHRENHEIT CAN WEAKEN BACTERIA AND MAKE THE INOCULATE LESS EFFECTIVE.
d. SOD OR SEED MUST NOT BE PLACED ON SOIL WHICH HAS BEEN TREATED WITH SOIL STERILANTS OR CHEMICALS USED FOR WEED CONTROL UNTIL SUFFICIENT TIME HAS ELAPSED (14 DAYS MIN.) TO PERMIT DISSIPATION OF PHYTO-TOXIC MATERIALS.

2. APPLICATION

a. DRY SEEDING: THIS INCLUDES USE OF CONVENTIONAL DROP OR BROADCAST SPREADERS.
   i. INCORPORATE SEED INTO THE SUBSOIL AT THE RATES PRESCRIBED ON TEMPORARY SEEDING TABLE B.1, PERMANENT SEEDING TABLE B.3, OR SITE-SPECIFIC SEEDING SUMMARIES.
   ii. APPLY SEED IN TWO DIRECTIONS, PERPENDICULAR TO EACH OTHER. APPLY HALF THE SEEDING RATE IN EACH DIRECTION. ROLL THE SEEDED AREA WITH A WEIGHTED ROLLER TO PROVIDE GOOD SEED TO SOIL CONTACT.

b. DRILL OR CULTIPACKER SEEDING: MECHANIZED SEEDERS THAT APPLY AND COVER SEED WITH SOIL.
   i. CULTIPACKING SEEDERS ARE REQUIRED TO BURY THE SEED IN SUCH A FASHION AS TO PROVIDE AT LEAST 1/4 INCH OF SOIL COVERING. SEEDBED MUST BE FIRM AFTER PLANTING.
   ii. APPLY SEED IN TWO DIRECTIONS, PERPENDICULAR TO EACH OTHER. APPLY HALF THE SEEDING RATE IN EACH DIRECTION.

c. HYDROSEEDING: APPLY SEED UNIFORMLY WITH HYDROSEEDER (SLURRY INCLUDES SEED AND FERTILIZER).
   i. IF FERTILIZER IS BEING APPLIED AT THE TIME OF SEEDING, THE APPLICATION RATES SHOULD NOT EXCEED THE FOLLOWING: NITROGEN, 100 POUNDS PER ACRE TOTAL OF SOLUBLE NITROGEN; P2O5 (PHOSPHOROUS), 200 POUNDS PER ACRE; K2O (POTASSIUM), 200 POUNDS PER ACRE.
   ii. LIME: USE ONLY GROUND AGRICULTURAL LIMESTONE (UP TO 3 TONS PER ACRE MAY BE APPLIED BY HYDROSEEDING). NORMALLY, NOT MORE THAN 2 TONS ARE APPLIED BY HYDROSEEDING AT ANY ONE TIME. DO NOT USE BURNT OR HYDRATED LIME WHEN HYDROSEEDING.
   iii. MIX SEED AND FERTILIZER ON SITE AND SEED IMMEDIATELY AND WITHOUT INTERRUPTION.
   iv. WHEN HYDROSEEDING DO NOT INCORPORATE SEED INTO THE SOIL.

B-4-3 (CONTINUED)

B. MULCHING

1. MULCH MATERIALS (IN ORDER OF PREFERENCE)

a. STRAW CONSISTING OF THOROUGHLY THRESHED WHEAT, RYE, OAT, OR BARLEY AND REASONABLY BRIGHT IN COLOR. STRAW IS TO BE FREE OF NOXIOUS WEED SEEDS AS SPECIFIED IN THE MARYLAND SEED LAW AND NOT MUSTY, MOLDY, CAKED, DECAYED, OR EXCESSIVELY DUSTY. NOTE: USE ONLY STERILE STRAW MULCH IN AREAS WHERE ONE SPECIES OF GRASS IS DESIRED.
b. WOOD CELLULOSE FIBER MULCH (WCFM) CONSISTING OF SPECIALLY PREPARED WOOD CELLULOSE PROCESSED INTO A UNIFORM FIBROUS PHYSICAL STATE.
   i. WCFM IS TO BE DYED GREEN OR CONTAIN A GREEN DYE IN THE PACKAGE THAT WILL PROVIDE AN APPROPRIATE COLOR TO FACILITATE VISUAL INSPECTION OF THE UNIFORMLY SPREAD SLURRY.
   ii. WCFM, INCLUDING DYE, MUST CONTAIN NO GERMINATION OR GROWTH INHIBITING FACTORS.
   iii. WCFM MATERIALS ARE TO BE MANUFACTURED AND PROCESSED IN SUCH A MANNER THAT THE WOOD CELLULOSE FIBER MULCH WILL REMAIN IN UNIFORM SUSPENSION IN WATER UNDER AGITATION AND WILL BLEND WITH SEED, FERTILIZER AND OTHER ADDITIVES TO FORM A HOMOGENEOUS SLURRY. THE MULCH MATERIAL MUST FORM A BLOTTER-LIKE GROUND COVER, ON APPLICATION, HAVING MOISTURE ABSORPTION AND PERCOLATION PROPERTIES AND MUST COVER AND HOLD GRASS SEED IN CONTACT WITH THE SOIL WITHOUT INHIBITING THE GROWTH OF THE GRASS SEEDLINGS.
   iv. WCFM MATERIAL MUST NOT CONTAIN ELEMENTS OR COMPOUNDS AT CONCENTRATION LEVELS THAT WILL BE PHYTO-TOXIC.
   v. WCFM MUST CONFORM TO THE FOLLOWING PHYSICAL REQUIREMENTS: FIBER LENGTH OF APPROXIMATELY 10 MILLIMETERS, DIAMETER APPROXIMATELY 1 MILLIMETER, PH RANGE OF 4.0 TO 8.5, ASH CONTENT OF 1.6 PERCENT MAXIMUM AND WATER HOLDING CAPACITY OF 90 PERCENT MINIMUM.

2. APPLICATION

a. APPLY MULCH TO ALL SEEDED AREAS IMMEDIATELY AFTER SEEDING.
b. WHEN STRAW MULCH IS USED, SPREAD IT OVER ALL SEEDED AREAS AT THE RATE OF 2 TONS PER ACRE TO A UNIFORM LOOSE DEPTH OF 1 TO 2 INCHES. APPLY MULCH TO ACHIEVE A UNIFORM DISTRIBUTION AND DEPTH SO THAT THE SOIL SURFACE IS NOT EXPOSED. WHEN USING A MULCH ANCHORING TOOL, INCREASE THE APPLICATION RATE TO 2.5 TONS PER ACRE.
c. WOOD CELLULOSE FIBER USED AS MULCH MUST BE APPLIED AT A NET DRY WEIGHT OF 1500 POUNDS PER ACRE. MIX THE WOOD CELLULOSE FIBER WITH WATER TO ATTAIN A MIXTURE WITH A MAXIMUM OF 50 POUNDS OF WOOD CELLULOSE FIBER PER 100 GALLONS OF WATER.

3. ANCHORING

a. PERFORM MULCH ANCHORING IMMEDIATELY FOLLOWING APPLICATION OF MULCH TO MINIMIZE LOSS BY WIND OR WATER. THIS MAY BE DONE BY ONE OF THE FOLLOWING METHODS (LISTED BY PREFERENCE), DEPENDING UPON THE SIZE OF THE AREA AND EROSION HAZARD:
   i. A MULCH ANCHORING TOOL IS A TRACTOR DRAWN IMPLEMENT DESIGNED TO PUNCH AND ANCHOR MULCH INTO THE SOIL SURFACE A MINIMUM OF 2 INCHES. THIS PRACTICE IS MOST EFFECTIVE ON LARGE AREAS, BUT IS LIMITED TO FLATTER SLOPES WHERE EQUIPMENT CAN OPERATE SAFELY. IF USED ON SLOPING LAND, THIS PRACTICE SHOULD FOLLOW THE CONTOUR.
   ii. WOOD CELLULOSE FIBER MAY BE USED FOR ANCHORING STRAW. APPLY THE FIBER BINDER AT A NET DRY WEIGHT OF 750 POUNDS PER ACRE. MIX THE WOOD CELLULOSE FIBER WITH WATER AT A MAXIMUM OF 50 POUNDS OF WOOD CELLULOSE FIBER PER 100 GALLONS OF WATER.
   iii. SYNTHETIC BINDERS SUCH AS ACRYLIC DLR (AGRO-TACK), DCA-70, PETROSET, TERRA TAX II, TERRA MANUFACTURER. APPLICATION OF LIQUID BINDERS NEEDS TO BE HEAVIER AT THE EDGES WHERE WIND CATCHES MULCH, SUCH AS IN VALLEYS AND ON CRESTS OF BANKS. USE OF ASPHALT BINDERS IS STRICTLY PROHIBITED.
   iv. LIGHTWEIGHT PLASTIC NETTING MAY BE STAPLED OVER THE MULCH ACCORDING TO MANUFACTURER RECOMMENDATIONS. NETTING IS USUALLY AVAILABLE IN ROLLS 4 TO 15 FEET WIDE AND 300 TO 3,000 FEET LONG.

B-4-4 STANDARDS AND SPECIFICATIONS FOR TEMPORARY STABILIZATION

DEFINITION

TO STABILIZE DISTURBED SOILS WITH VEGETATION FOR UP TO 6 MONTHS.

PURPOSE

TO USE FAST GROWING VEGETATION THAT PROVIDES COVER ON DISTURBED SOILS. CONDITIONS WHERE PRACTICE APPLIES EXPOSED SOILS WHERE GROUND COVER IS NEEDED FOR A PERIOD OF 6 MONTHS OR LESS. FOR LONGER DURATION OF TIME, PERMANENT STABILIZATION PRACTICES ARE REQUIRED.

CRITERIA

1. SELECT ONE OR MORE OF THE SPECIES OR SEED MIXTURES LISTED IN TABLE B.1 FOR THE APPROPRIATE PLANT HARDINESS ZONE (FROM FIGURE B.3), AND ENTER THEM IN THE TEMPORARY SEEDING SUMMARY BELOW ALONG WITH APPLICATION RATES, SEEDING DATES AND SEEDING DEPTHS. IF THIS SUMMARY IS NOT PUT ON THE PLAN AND COMPLETED, THEN TABLE B.1 PLUS FERTILIZER AND LIME RATES MUST BE PUT ON THE PLAN.
2. FOR SITES HAVING SOIL TESTS PERFORMED, USE AND SHOW THE RECOMMENDED RATES BY THE TESTING AGENCY SOIL TESTS ARE NOT REQUIRED FOR TEMPORARY SEEDING.
3. WHEN STABILIZATION IS REQUIRED OUTSIDE OF A SEEDING SEASON, APPLY SEED AND MULCH OR STRAW MULCH ALONE AS PRESCRIBED IN SECTION B-4-3.A.1.B AND MAINTAIN UNTIL THE NEXT SEEDING SEASON.

B-4-4 (CONTINUED)

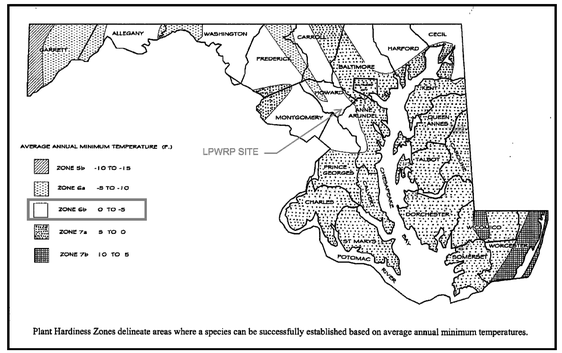

Plant Hardiness Zones delineate areas where a species can be successfully established based on average annual minimum temperatures.

Figure B.3: U.S.D.A. Plant Hardiness Zones

Table B.1: Temporary Seeding for Site Stabilization

Plant Species	Seeding Rate 1/		Seeding Depth 2/ (inches)	Recommended Seeding Dates by Plant Hardiness Zone 3/		
	lb/ac	lb/1000 ft²		5b and 6a	6b	7a and 7b
Cool-Season Grasses						
Annual Ryegrass (*Lolium perenne ssp. multiflorum*)	40	1.0	0.5	Mar 15 to May 31; Aug 1 to Sep 30	Mar 1 to May 15; Aug 1 to Oct 15	Feb 15 to Apr 30; Aug 15 to Nov 30
Barley (*Hordeum vulgare*)	96	2.2	1.0	Mar 15 to May 31; Aug 1 to Sep 30	Mar 1 to May 15; Aug 1 to Oct 15	Feb 15 to Apr 30; Aug 15 to Nov 30
Oats (*Avena sativa*)	72	1.7	1.0	Mar 15 to May 31; Aug 1 to Sep 30	Mar 1 to May 15; Aug 1 to Oct 15	Feb 15 to Apr 30; Aug 15 to Nov 30
Wheat (*Triticum aestivum*)	120	2.8	1.0	Mar 15 to May 31; Aug 1 to Sep 30	Mar 1 to May 15; Aug 1 to Oct 15	Feb 15 to Apr 30; Aug 15 to Nov 30
Cereal Rye (*Secale cereale*)	112	2.8	1.0	Mar 15 to May 31; Aug 1 to Oct 31	Mar 1 to May 15; Aug 1 to Nov 15	Feb 15 to Apr 30; Aug 15 to Dec 15
Warm-Season Grasses						
Foxtail Millet (*Setaria italica*)	30	0.7	0.5	Jun 1 to Jul 31	May 16 to Jul 31	May 1 to Aug 14
Pearl Millet (*Pennisetum glaucum*)	20	0.5	0.5	Jun 1 to Jul 31	May 16 to Jul 31	May 1 to Aug 14

NOTES:

1/ Seeding rates for the warm-season grasses are in pounds of Pure Live Seed (PLS). Actual planting rates shall be adjusted to reflect percent seed germination and purity, as tested. Adjustments are usually not needed for the cool-season grasses.

Seeding rates listed above are for temporary seedings, when planted alone. When planted as a nurse crop with permanent seed mixes, use 1/3 of the seeding rate listed above for barley, oats, and wheat. For smaller-seeded grasses (annual ryegrass, pearl millet, foxtail millet), do not exceed more than 5% (by weight) of the overall permanent seeding mix. Cereal rye generally should not be used as a nurse crop, unless planting will occur in very late fall beyond the seeding dates for other temporary seedings. Cereal rye has allelopathic properties that inhibit the germination and growth of other plants. If it must be used as a nurse crop, seed at 1/3 of the rate listed above.

Oats are the recommended nurse crop for warm-season grasses.

2/ For sandy soils, plant seeds at twice the depth listed above.
3/ The planting dates listed are averages for each Zone and may require adjustment to reflect local conditions, especially near the boundaries of the zone.

H-5 STANDARDS AND SPECIFICATIONS FOR DUST CONTROL

DEFINITION

CONTROLLING THE SUSPENSION OF DUST PARTICLES FROM CONSTRUCTION ACTIVITIES.

PURPOSE

TO PREVENT BLOWING AND MOVEMENT OF DUST FROM EXPOSED SOIL SURFACES TO REDUCE ON AND OFF-SITE DAMAGE INCLUDING HEALTH AND TRAFFIC HAZARDS.

CONDITIONS WHERE PRACTICE APPLIES

AREAS SUBJECT TO DUST BLOWING AND MOVEMENT WHERE ON AND OFF-SITE DAMAGE IS LIKELY WITHOUT TREATMENT.

SPECIFICATIONS

1. MULCHES: SEE SECTION B-4-2 SOIL PREPARATION, TOPSOILING, AND SOIL AMENDMENTS, SECTION B-4-3 SEEDING AND MULCHING, AND SECTION B-4-4 TEMPORARY STABILIZATION. MULCH MUST BE ANCHORED TO PREVENT BLOWING.
2. VEGETATIVE COVER: SEE SECTION B-4-4 TEMPORARY STABILIZATION.
3. TILLAGE: TILL TO ROUGHEN SURFACE AND BRING CLODS TO THE SURFACE. BEGIN PLOWING ON WINDWARD SIDE OF SITE. CHISEL-TYPE PLOWS SPACED ABOUT 12 INCHES APART, SPRING-TOOTHED HARROWS, AND SIMILAR PLOWS ARE EXAMPLES OF EQUIPMENT THAT MAY PRODUCE THE DESIRED EFFECT.
4. IRRIGATION: SPRINKLE SITE WITH WATER UNTIL THE SURFACE IS MOIST. REPEAT AS NEEDED. THE SITE MUST NOT BE IRRIGATED TO THE POINT THAT RUNOFF OCCURS.
5. BARRIERS: SOLID BOARD FENCES, SILT FENCES, SNOW FENCES, BURLAP FENCES, STRAW BALES, AND SIMILAR MATERIAL CAN BE USED TO CONTROL AIR CURRENTS AND SOIL BLOWING.
6. CHEMICAL TREATMENT: USE OF CHEMICAL TREATMENT REQUIRES APPROVAL BY THE APPROPRIATE PLAN REVIEW AUTHORITY.

THE DRAWINGS IN THIS SET ARE RECORD DRAWINGS. THEY ARE CONSTRUCTION CONTRACT DRAWINGS WHICH HAVE BEEN REVISED BASED ON AVAILABLE FIELD INFORMATION RECORDED BY OTHERS DURING CONSTRUCTION OF THIS CONTRACT. THERE HAS BEEN NO VERIFICATION OF DIMENSIONS SHOWN ON THE CONSTRUCTION DRAWINGS OR THE ACCURACY/COMPLETENESS OF THE FIELD INFORMATION RECEIVED.

SIGNATURE _____ DATE 2/7/2023

C:\pwworking\pitt\d1901214\C-42.dwg 01/11/22_8:31

AS-BUILT REPLACEMENT SHEET

PROFESSIONAL CERTIFICATION
THIS DRAWING WAS ORIGINALLY APPROVED FOR CONSTRUCTION AND SEALED BY ROBERT BAYSDEN, A REGISTERED PROFESSIONAL ENGINEER IN THE STATE OF MARYLAND, NO. 49972.

NOTICE TO CONTRACTORS
- PROJECT ELEVATIONS ARE BASED ON NAVD88 AND HOWARD COUNTY'S BENCHMARK SYSTEM
- PREVIOUS PROJECTS USED OTHER DATUMS
- APPLY THE FOLLOWING CONVERSIONS WHEN USING PREVIOUS CONTRACT DRAWINGS:
  – ADDITION NO. 6: SUBTRACT 0.80 FT
  – PRIOR ADDITIONS: SUBTRACT 1.04 FT

DEPARTMENT OF PUBLIC WORKS
HOWARD COUNTY, MARYLAND

CHIEF, BUREAU OF UTILITIES DATE

DES: M.L.
DRN: S.W.
CHK: R.B.
DATE: 03/16

DATE	REV	DESCRIPTION
07/2019		RECORD DRAWINGS

CIVIL

EROSION CONTROL NOTES AND DETAILS

LITTLE PATUXENT WATER RECLAMATION PLANT
8TH ADDITION
BIOSOLIDS PROCESSING FACILITIES – PHASE I

CAPITAL PROJECT S–6295
CONTRACT NO. 24–4935

ELECTION DISTRICT NO. 6
HOWARD COUNTY, MARYLAND

SCALE AS SHOWN

SHEET 87 OF 463

C-42

B-4-5 STANDARDS AND SPECIFICATIONS FOR PERMANENT STABILIZATION

DEFINITION

TO STABILIZE DISTURBED SOILS WITH PERMANENT VEGETATION.

PURPOSE

TO USE LONG-LIVED PERENNIAL GRASSES AND LEGUMES TO ESTABLISH PERMANENT GROUND COVER ON DISTURBED SOILS.

CONDITIONS WHERE PRACTICE APPLIES

EXPOSED SOILS WHERE GROUND COVER IS NEEDED FOR 6 MONTHS OR MORE.

CRITERIA

A. SEED MIXTURES

1. GENERAL USE
   a. SELECT ONE OR MORE OF THE SPECIES OR MIXTURES LISTED IN TABLE B.3 FOR THE APPROPRIATE PLANT HARDINESS ZONE (FROM FIGURE B.3) AND BASED ON THE SITE CONDITION OR PURPOSE FOUND ON TABLE B.2. ENTER SELECTED MIXTURE(S), APPLICATION RATES, AND SEEDING DATES IN THE PERMANENT SEEDING SUMMARY. THE SUMMARY IS TO BE PLACED ON THE PLAN.
   b. ADDITIONAL PLANTING SPECIFICATIONS FOR EXCEPTIONAL SITES SUCH AS SHORELINES, STREAM BANKS, OR DUNES OR FOR SPECIAL PURPOSES SUCH AS WILDLIFE OR AESTHETIC TREATMENT MAY BE FOUND IN USDA-NRCS TECHNICAL FIELD OFFICE GUIDE, SECTION 342 - CRITICAL AREA PLANTING.
   c. FOR SITES HAVING DISTURBED AREA OVER 5 ACRES, USE AND SHOW THE RATES RECOMMENDED BY THE SOIL TESTING AGENCY.
   d. FOR AREAS RECEIVING LOW MAINTENANCE, APPLY UREA FORM FERTILIZER (46-0-0) AT 3 1/2 POUNDS PER 1000 SQUARE FEET (150 POUNDS PER ACRE) AT THE TIME OF SEEDING IN ADDITION TO THE SOIL AMENDMENTS SHOWN IN THE PERMANENT SEEDING SUMMARY.

2. TURFGRASS MIXTURES
   a. AREAS WHERE TURFGRASS MAY BE DESIRED INCLUDE LAWNS, PARKS, PLAYGROUNDS, AND COMMERCIAL SITES WHICH WILL RECEIVE A MEDIUM TO HIGH LEVEL OF MAINTENANCE.
   b. SELECT ONE OR MORE OF THE SPECIES OR MIXTURES LISTED BELOW BASED ON THE SITE CONDITIONS OR PURPOSE. ENTER SELECTED MIXTURE(S), APPLICATION RATES, AND SEEDING DATES IN THE PERMANENT SEEDING SUMMARY. THE SUMMARY IS TO BE PLACED ON THE PLAN.
      i. KENTUCKY BLUEGRASS: FULL SUN MIXTURE: FOR USE IN AREAS THAT RECEIVE INTENSIVE MANAGEMENT. IRRIGATION REQUIRED IN THE AREAS OF CENTRAL MARYLAND AND EASTERN SHORE. RECOMMENDED CERTIFIED KENTUCKY BLUEGRASS CULTIVARS SEEDING RATE: 1.5 TO 2.0 POUNDS PER 1000 SQUARE FEET. CHOOSE A MINIMUM OF THREE KENTUCKY BLUEGRASS CULTIVARS WITH EACH RANGING FROM 10 TO 35 PERCENT OF THE TOTAL MIXTURE BY WEIGHT.
      ii. KENTUCKY BLUEGRASS/PERENNIAL RYE: FULL SUN MIXTURE: FOR USE IN FULL SUN AREAS WHERE RAPID ESTABLISHMENT IS NECESSARY AND WHEN TURF WILL RECEIVE MEDIUM TO INTENSIVE MANAGEMENT. CERTIFIED PERENNIAL RYEGRASS CULTIVARS/CERTIFIED KENTUCKY BLUEGRASS SEEDING RATE: 2 POUNDS MIXTURE PER 1000 SQUARE FEET. CHOOSE A MINIMUM OF THREE KENTUCKY BLUEGRASS CULTIVARS WITH EACH RANGING FROM 10 TO 35 PERCENT OF THE TOTAL MIXTURE BY WEIGHT.
      iii. TALL FESCUE/KENTUCKY BLUEGRASS: FULL SUN MIXTURE: FOR USE IN DROUGHT PRONE AREAS AND/OR FOR AREAS RECEIVING LOW TO MEDIUM MANAGEMENT IN FULL SUN TO MEDIUM SHADE.
      RECOMMENDED MIXTURE INCLUDES; CERTIFIED TALL FESCUE CULTIVARS 95 TO 100 PERCENT, CERTIFIED KENTUCKY BLUEGRASS CULTIVARS 0 TO 5 PERCENT. SEEDING RATE: 5 TO 8 POUNDS PER 1000 SQUARE FEET. ONE OR MORE CULTIVARS MAY BE BLENDED.
      iv. KENTUCKY BLUEGRASS/FINE FESCUE: SHADE MIXTURE: FOR USE IN AREAS WITH SHADE IN BLUEGRASS LAWNS. FOR ESTABLISHMENT IN HIGH QUALITY, INTENSIVELY MANAGED TURF AREA. MIXTURE INCLUDES; CERTIFIED KENTUCKY BLUEGRASS CULTIVARS 30 TO 40 PERCENT AND CERTIFIED FINE FESCUE AND 60 TO 70 PERCENT. SEEDING RATE: 1 1/2 TO 3 POUNDS PER 1000 SQUARE FEET.

      NOTES:

      SELECT TURFGRASS VARIETIES FROM THOSE LISTED IN THE MOST CURRENT UNIVERSITY OF MARYLAND PUBLICATION, AGRONOMY MEMO #77, "TURFGRASS CULTIVAR RECOMMENDATIONS FOR MARYLAND"

      CHOOSE CERTIFIED MATERIAL. CERTIFIED MATERIAL IS THE BEST GUARANTEE OF CULTIVAR PURITY. THE CERTIFICATION PROGRAM OF THE MARYLAND DEPARTMENT OF AGRICULTURE, TURF AND SEED SECTION, PROVIDES A RELIABLE MEANS OF CONSUMER PROTECTION AND ASSURES A PURE GENETIC LINE

i. IDEAL TIMES OF SEEDING FOR TURF GRASS MIXTURES
   WESTERN MD: MARCH 15 TO JUNE 1, AUGUST 1 TO OCTOBER 1 (HARDINESS ZONES: 5B, 6A)
   CENTRAL MD: MARCH 1 TO MAY 15, AUGUST 15 TO OCTOBER 15 (HARDINESS ZONE: 6B)
   SOUTHERN MD, EASTERN SHORE: MARCH 1 TO MAY 15, AUGUST 15 TO OCTOBER 15 (HARDINESS ZONES: 7A, 7B)

j. TILL AREAS TO RECEIVE SEED BY DISKING OR OTHER APPROVED METHODS TO A DEPTH OF 2 TO 4 INCHES, LEVEL AND RAKE THE AREAS TO PREPARE A PROPER SEEDBED. REMOVE STONES AND DEBRIS OVER 1 1/2 INCHES IN DIAMETER. THE RESULTING SEEDBED MUST BE IN SUCH CONDITION THAT FUTURE MOWING OF GRASSES WILL POSE NO DIFFICULTY.

k. IF SOIL MOISTURE IS DEFICIENT, SUPPLY NEW SEEDINGS WITH ADEQUATE WATER FOR PLANT GROWTH (1/2 TO 1 INCH EVERY 3 TO 4 DAYS DEPENDING ON SOIL TEXTURE) UNTIL THEY ARE FIRMLY ESTABLISHED. THIS IS ESPECIALLY TRUE WHEN SEEDINGS ARE MADE LATE IN THE PLANTING SEASON, IN ABNORMALLY DRY OR HOT SEASONS, OR ON ADVERSE SITES.

THE DRAWINGS IN THIS SET ARE RECORD DRAWINGS. THEY ARE CONSTRUCTION CONTRACT DRAWINGS WHICH HAVE BEEN REVISED BASED ON AVAILABLE FIELD INFORMATION RECORDED BY OTHERS DURING CONSTRUCTION OF THIS CONTRACT. THERE HAS BEEN NO VERIFICATION OF DIMENSIONS SHOWN ON THE CONSTRUCTION DRAWINGS OR THE ACCURACY/COMPLETENESS OF THE FIELD INFORMATION RECEIVED.

SIGNATURE _____ DATE 2/7/2023

B-4-5 (CONTINUED)

PERMANENT SEEDING SUMMARY

HARDINESS ZONE: 6b SEED MIXTURE: #9 (Tall Fescue/ Kentucky Bluegrass)				FERTILIZER RATE (10-20-20)	LIME RATE
	SPECIES	APPLICATION RATE	SEEDING DATES	SEEDING DEPTHS	
	*Certified Tall Fescue blend (95% by weight): Falcon IV, Penn 1901 & Rebel Exeda and Certified Kentucky Bluegrass blend (5% by weight): Courtyard, Raven & Yankee	6-8 lb/ 1000 s.f.	Mar. 1 to May 15, Aug. 15 to Oct. 15	1/4 - 1/2 IN.	1.0 lb/ 1000 s.f. (45 lb/acre)	90 lb/ 1000 s.f.

* Other cultivars listed as "proven" in the most current UMD TT-77 may also be used

B. SOD: TO PROVIDE QUICK COVER ON DISTURBED AREAS (2:1 GRADE OR FLATTER).

1. GENERAL SPECIFICATIONS
   a. CLASS OF TURFGRASS SOD MUST BE MARYLAND STATE CERTIFIED. SOD LABELS MUST BE MADE AVAILABLE TO THE JOB FOREMAN AND INSPECTOR.
   b. SOD MUST BE MACHINE CUT AT A UNIFORM SOIL THICKNESS OF 3/4 INCH, PLUS OR MINUS 1/4 INCH, AT THE TIME OF CUTTING. MEASUREMENT FOR THICKNESS MUST EXCLUDE TOP GROWTH AND THATCH. BROKEN PADS AND TORN OR UNEVEN ENDS WILL NOT BE ACCEPTABLE.
   c. STANDARD SIZE SECTIONS OF SOD MUST BE STRONG ENOUGH TO SUPPORT THEIR OWN WEIGHT AND RETAIN THEIR SIZE AND SHAPE WHEN SUSPENDED VERTICALLY WITH A FIRM GRASP ON THE UPPER 10 PERCENT OF THE SECTION.
   d. SOD MUST NOT BE HARVESTED OR TRANSPLANTED WHEN MOISTURE CONTENT (EXCESSIVELY DRY OR WET) MAY ADVERSELY AFFECT ITS SURVIVAL.
   e. SOD MUST BE HARVESTED, DELIVERED, AND INSTALLED WITHIN A PERIOD OF 36 HOURS. SOD NOT TRANSPLANTED WITHIN THIS PERIOD MUST BE APPROVED BY AN AGRONOMIST OR SOIL SCIENTIST PRIOR TO ITS INSTALLATION.

2. SOD INSTALLATION
   a. DURING PERIODS OF EXCESSIVELY HIGH TEMPERATURE OR IN AREAS HAVING DRY SUBSOIL, LIGHTLY IRRIGATE THE SUBSOIL IMMEDIATELY PRIOR TO LAYING THE SOD.
   b. LAY THE FIRST ROW OF SOD IN A STRAIGHT LINE WITH SUBSEQUENT ROWS PLACED PARALLEL TO IT AND TIGHTLY WEDGED AGAINST EACH OTHER. STAGGER LATERAL JOINTS TO PROMOTE MORE UNIFORM GROWTH AND STRENGTH. ENSURE THAT SOD IS NOT STRETCHED OR OVERLAPPED AND THAT ALL JOINTS ARE BUTTED TIGHT IN ORDER TO PREVENT VOIDS WHICH WOULD CAUSE AIR DRYING OF THE ROOTS.
   c. WHEREVER POSSIBLE, LAY SOD WITH THE LONG EDGES PARALLEL TO THE CONTOUR AND WITH STAGGERING JOINTS. ROLL AND TAMP, PEG OR OTHERWISE SECURE THE SOD TO PREVENT SLIPPAGE ON SLOPES. ENSURE SOLID CONTACT EXISTS BETWEEN SOD ROOTS AND THE UNDERLYING SOIL SURFACE.
   d. WATER THE SOD IMMEDIATELY FOLLOWING ROLLING AND TAMPING UNTIL THE UNDERSIDE OF THE NEW SOD PAD AND SOIL SURFACE BELOW THE SOD ARE THOROUGHLY WET. COMPLETE THE OPERATIONS OF LAYING, TAMPING AND IRRIGATING FOR ANY PIECE OF SOD WITHIN EIGHT HOURS.

3. SOD MAINTENANCE
   a. IN THE ABSENCE OF ADEQUATE RAINFALL, WATER DAILY DURING THE FIRST WEEK OR AS OFTEN AND SUFFICIENTLY AS NECESSARY TO MAINTAIN MOIST SOIL TO A DEPTH OF 4 INCHES. WATER SOD DURING THE HEAT OF THE DAY TO PREVENT WILTING.
   b. AFTER THE FIRST WEEK, SOD WATERING IS REQUIRED AS NECESSARY TO MAINTAIN ADEQUATE MOISTURE CONTENT.
   c. DO NOT MOW UNTIL THE SOD IS FIRMLY ROOTED. NO MORE THAN 1/3 OF THE GRASS LEAF MUST BE REMOVED BY THE INITIAL CUTTING OR SUBSEQUENT CUTTINGS. MAINTAIN A GRASS HEIGHT OF AT LEAST 3 INCHES UNLESS OTHERWISE SPECIFIED.

DETAIL D-2 STONE CHECK DAM

STANDARD SYMBOL: CD

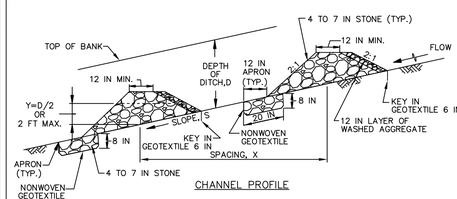

CHANNEL PROFILE

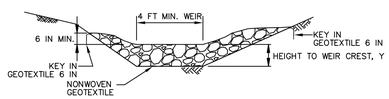

CROSS SECTION

CONSTRUCTION SPECIFICATIONS

1. PREPARE SWALES IN ACCORDANCE WITH THE CONSTRUCTION SPECIFICATIONS DESCRIBED IN SECTION C-2, STANDARDS AND SPECIFICATIONS FOR TEMPORARY SWALE, OR AS SPECIFIED ON PLAN.
2. PLACE NONWOVEN GEOTEXTILE, AS SPECIFIED IN SECTION H-1 MATERIALS, UNDER THE BOTTOM AND SIDES OF THE DAM PRIOR TO PLACEMENT OF STONE. CONSTRUCT THE CHECK DAM WITH WASHED 4 TO 7 INCH STONE OR EQUIVALENT RECYCLED CONCRETE (WITHOUT REBAR) WITH SIDE SLOPES OF 2:1 OR FLATTER AND A MINIMUM TOP WIDTH OF 12 INCHES. PLACE THE STONE SO THAT IT COMPLETELY COVERS THE WIDTH OF THE CHANNEL AND CHANNEL BANKS. FORM THE WEIR SO THAT TOP OF THE OUTLET CREST IS APPROXIMATELY 6 INCHES LOWER THAN THE OUTER EDGES. LINE THE UPSTREAM FACE OF THE DAM WITH A 1 FOOT THICK LAYER OF WASHED AGGREGATE (¾ TO 1½ INCH).
3. SET THE HEIGHT FOR THE WEIR CREST EQUAL TO ONE-HALF THE DEPTH OF THE CHANNEL OR DITCH. TO AVOID SCOUR THE MAXIMUM HEIGHT OF THE WEIR CREST MUST NOT EXCEED 2.0 FEET.
4. REMOVE ACCUMULATED SEDIMENT WHEN IT REACHES ONE-HALF OF THE HEIGHT OF THE WEIR CREST. MAINTAIN LINE, GRADE, AND CROSS SECTION.

MARYLAND STANDARDS AND SPECIFICATIONS FOR SOIL EROSION AND SEDIMENT CONTROL

U.S. DEPARTMENT OF AGRICULTURE NATURAL RESOURCES CONSERVATION SERVICE	2011	MARYLAND DEPARTMENT OF ENVIRONMENT WATER MANAGEMENT ADMINISTRATION

DETAIL E-3 SUPER SILT FENCE

STANDARD SYMBOL: SSF

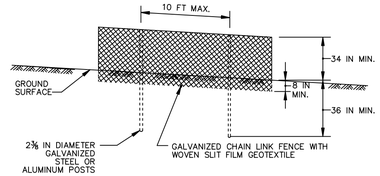

ELEVATION

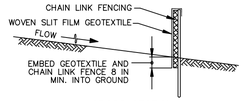

CROSS SECTION

CONSTRUCTION SPECIFICATIONS

1. INSTALL 2⅜ INCH DIAMETER GALVANIZED STEEL POSTS OF 0.095 INCH WALL THICKNESS AND SIX FOOT LENGTH SPACED NO FURTHER THAN 10 FEET APART. DRIVE THE POSTS A MINIMUM OF 36 INCHES INTO THE GROUND.
2. FASTEN 9 GAUGE OR HEAVIER GALVANIZED CHAIN LINK FENCE (2⅜ INCH MAXIMUM OPENING) 42 INCHES IN HEIGHT SECURELY TO THE FENCE POSTS WITH WIRE TIES OR HUG RINGS.
3. FASTEN WOVEN SLIT FILM GEOTEXTILE AS SPECIFIED IN SECTION H-1 MATERIALS, SECURELY TO THE UPSLOPE SIDE OF CHAIN LINK FENCE WITH TIES SPACED EVERY 24 INCHES AT THE TOP AND MID SECTION. EMBED GEOTEXTILE AND CHAIN LINK FENCE A MINIMUM OF 8 INCHES INTO THE GROUND.
4. WHERE ENDS OF THE GEOTEXTILE COME TOGETHER, THE ENDS SHALL BE OVERLAPPED BY 6 INCHES, FOLDED, AND STAPLED TO PREVENT SEDIMENT BY PASS.
5. EXTEND BOTH ENDS OF THE SUPER SILT FENCE A MINIMUM OF FIVE HORIZONTAL FEET UPSLOPE AT 45 DEGREES TO THE MAIN FENCE ALIGNMENT TO PREVENT RUNOFF FROM GOING AROUND THE ENDS OF THE SUPER SILT FENCE.
6. PROVIDE MANUFACTURER CERTIFICATION TO THE INSPECTION/ENFORCEMENT AUTHORITY SHOWING THAT GEOTEXTILE USED MEETS THE REQUIREMENTS IN SECTION H-1 MATERIALS.
7. REMOVE ACCUMULATED SEDIMENT AND DEBRIS WHEN BULGES DEVELOP IN FENCE OR WHEN SEDIMENT REACHES 25% OF FENCE HEIGHT. REPLACE GEOTEXTILE IF TORN. IF UNDERMINING OCCURS, REINSTALL CHAIN LINK FENCING AND GEOTEXTILE.

MARYLAND STANDARDS AND SPECIFICATIONS FOR SOIL EROSION AND SEDIMENT CONTROL

U.S. DEPARTMENT OF AGRICULTURE NATURAL RESOURCES CONSERVATION SERVICE	2011	MARYLAND DEPARTMENT OF ENVIRONMENT WATER MANAGEMENT ADMINISTRATION

DETAIL E-1 SILT FENCE

STANDARD SYMBOL: SF

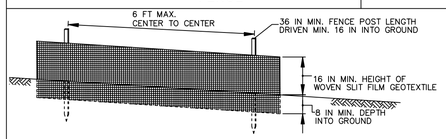

ELEVATION

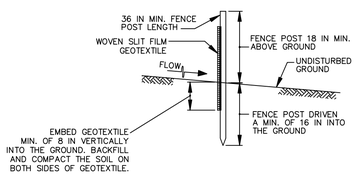

CROSS SECTION

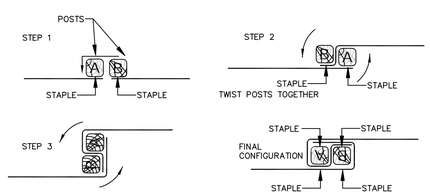

JOINING TWO ADJACENT SILT FENCE SECTIONS (TOP VIEW)

1 OF 2

MARYLAND STANDARDS AND SPECIFICATIONS FOR SOIL EROSION AND SEDIMENT CONTROL

U.S. DEPARTMENT OF AGRICULTURE NATURAL RESOURCES CONSERVATION SERVICE	2011	MARYLAND DEPARTMENT OF ENVIRONMENT WATER MANAGEMENT ADMINISTRATION

DETAIL B-1 STABILIZED CONSTRUCTION ENTRANCE

STANDARD SYMBOL: SCE

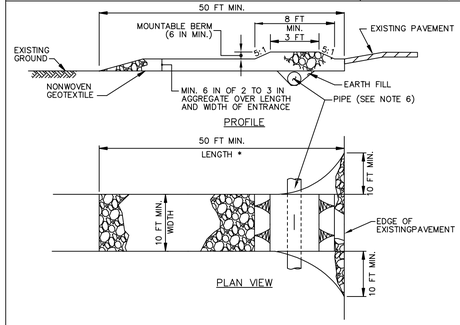

CONSTRUCTION SPECIFICATIONS

1. PLACE STABILIZED CONSTRUCTION ENTRANCE IN ACCORDANCE WITH THE APPROVED PLAN. VEHICLES MUST TRAVEL OVER THE ENTIRE LENGTH OF THE SCE. USE MINIMUM LENGTH OF 50 FEET (*30 FEET FOR SINGLE RESIDENCE LOT). USE MINIMUM WIDTH OF 10 FEET. FLARE SCE 10 FEET MINIMUM AT THE EXISTING ROAD TO PROVIDE A TURNING RADIUS.
2. PIPE ALL SURFACE WATER FLOWING TO OR DIVERTED TOWARD THE SCE UNDER THE ENTRANCE, MAINTAINING POSITIVE DRAINAGE. PROTECT PIPE INSTALLED THROUGH THE SCE WITH A MOUNTABLE BERM WITH 5:1 SLOPES AND A MINIMUM OF 12 INCHES OF STONE OVER THE PIPE. PROVIDE PIPE AS SPECIFIED ON APPROVED PLAN. WHEN THE SCE IS LOCATED AT A HIGH SPOT AND HAS NO DRAINAGE TO CONVEY, A PIPE IS NOT NECESSARY. A MOUNTABLE BERM IS REQUIRED WHEN SCE IS NOT LOCATED AT A HIGH SPOT.
3. PREPARE SUBGRADE AND PLACE NONWOVEN GEOTEXTILE, AS SPECIFIED IN SECTION H-1 MATERIALS.
4. PLACE CRUSHED AGGREGATE (2 TO 3 INCHES IN SIZE) OR EQUIVALENT RECYCLED CONCRETE (WITHOUT REBAR) AT LEAST 6 INCHES DEEP OVER THE LENGTH AND WIDTH OF THE SCE.
5. MAINTAIN ENTRANCE IN A CONDITION THAT MINIMIZES TRACKING OF SEDIMENT. ADD STONE OR MAKE OTHER REPAIRS AS CONDITIONS DEMAND TO MAINTAIN CLEAN SURFACE, MOUNTABLE BERM, AND SPECIFIED DIMENSIONS. IMMEDIATELY REMOVE STONE AND/OR SEDIMENT SPILLED, DROPPED, OR TRACKED ONTO ADJACENT ROADWAY BY VACUUMING, SCRAPING, AND/OR SWEEPING. WASHING ROADWAY TO REMOVE MUD TRACKED ONTO PAVEMENT IS NOT ACCEPTABLE UNLESS WASH WATER IS DIRECTED TO AN APPROVED SEDIMENT CONTROL PRACTICE.

MARYLAND STANDARDS AND SPECIFICATIONS FOR SOIL EROSION AND SEDIMENT CONTROL

U.S. DEPARTMENT OF AGRICULTURE NATURAL RESOURCES CONSERVATION SERVICE	2011	MARYLAND DEPARTMENT OF ENVIRONMENT WATER MANAGEMENT ADMINISTRATION

DETAIL E-1 SILT FENCE

STANDARD SYMBOL: SF

CONSTRUCTION SPECIFICATIONS

1. USE WOOD POSTS 1¾ X 1¾ ± ¾ INCH (MINIMUM) SQUARE CUT OF SOUND QUALITY HARDWOOD. AS AN ALTERNATIVE TO WOODEN POST USE STANDARD "T" OR "U" SECTION STEEL POSTS WEIGHING NOT LESS THAN 1 POUND PER LINEAR FOOT.
2. USE 36 INCH MINIMUM POSTS DRIVEN 16 INCH MINIMUM INTO GROUND NO MORE THAN 6 FEET APART.
3. USE WOVEN SLIT FILM GEOTEXTILE AS SPECIFIED IN SECTION H-1 MATERIALS AND FASTEN GEOTEXTILE SECURELY TO UPSLOPE SIDE OF FENCE POSTS WITH WIRE TIES OR STAPLES AT TOP AND MID-SECTION.
4. PROVIDE MANUFACTURER CERTIFICATION TO THE AUTHORIZED REPRESENTATIVE OF THE INSPECTION/ENFORCEMENT AUTHORITY SHOWING THAT THE GEOTEXTILE USED MEETS THE REQUIREMENTS IN SECTION H-1 MATERIALS.
5. EMBED GEOTEXTILE A MINIMUM OF 8 INCHES VERTICALLY INTO THE GROUND. BACKFILL AND COMPACT THE SOIL ON BOTH SIDES OF FABRIC.
6. WHERE TWO SECTIONS OF GEOTEXTILE ADJOIN: OVERLAP, TWIST, AND STAPLE TO POST IN ACCORDANCE WITH THIS DETAIL.
7. EXTEND BOTH ENDS OF THE SILT FENCE A MINIMUM OF FIVE HORIZONTAL FEET UPSLOPE AT 45 DEGREES TO THE MAIN FENCE ALIGNMENT TO PREVENT RUNOFF FROM GOING AROUND THE ENDS OF THE SILT FENCE.
8. REMOVE ACCUMULATED SEDIMENT AND DEBRIS WHEN BULGES DEVELOP IN SILT FENCE OR WHEN SEDIMENT REACHES 25% OF FENCE HEIGHT. REPLACE GEOTEXTILE IF TORN. IF UNDERMINING OCCURS, REINSTALL FENCE.

2 OF 2

MARYLAND STANDARDS AND SPECIFICATIONS FOR SOIL EROSION AND SEDIMENT CONTROL

U.S. DEPARTMENT OF AGRICULTURE NATURAL RESOURCES CONSERVATION SERVICE	2011	MARYLAND DEPARTMENT OF ENVIRONMENT WATER MANAGEMENT ADMINISTRATION

DETAIL E-6 FILTER LOG

STANDARD SYMBOL: FL-18

DESIGNATION FL-18 REFERS TO 18 INCH DIAMETER FILTER LOG.

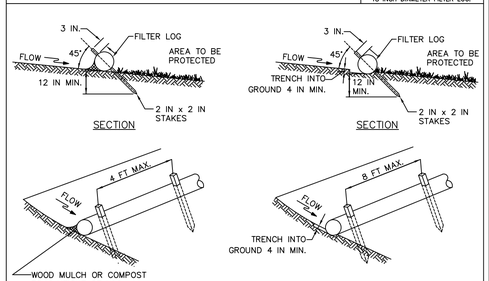

UNTRENCHED INSTALLATION OR ENTRENCHED INSTALLATION*

*THIS APPLICATION MAY NOT BE USED WITH LOGS SMALLER THAN 12 IN.

ISOMETRIC VIEW

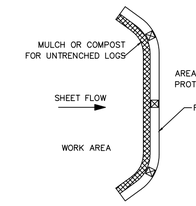

PLAN

1 OF 2

MARYLAND STANDARDS AND SPECIFICATIONS FOR SOIL EROSION AND SEDIMENT CONTROL

U.S. DEPARTMENT OF AGRICULTURE NATURAL RESOURCES CONSERVATION SERVICE	2011	MARYLAND DEPARTMENT OF ENVIRONMENT WATER MANAGEMENT ADMINISTRATION

DETAIL E-6 FILTER LOG

STANDARD SYMBOL: FL-18

DESIGNATION FL-18 REFERS TO 18 INCH DIAMETER FILTER LOG.

CONSTRUCTION SPECIFICATIONS

1. PRIOR TO INSTALLATION, CLEAR ALL OBSTRUCTIONS INCLUDING ROCKS, CLODS, AND DEBRIS GREATER THAN ONE INCH THAT MAY INTERFERE WITH PROPER FUNCTION OF FILTER LOG.
2. FILL LOG NETTING UNIFORMLY WITH COMPOST (IN ACCORDANCE WITH SECTION H-1 MATERIALS), OR OTHER APPROVED BIODEGRADABLE MATERIAL TO DESIRED LENGTH SUCH THAT LOGS DO NOT DEFORM.
3. INSTALL FILTER LOGS PERPENDICULAR TO THE FLOW DIRECTION AND PARALLEL TO THE SLOPE WITH THE BEGINNING AND END OF THE INSTALLATION POINTING SLIGHTLY UP THE SLOPE CREATING A "J" SHAPE AT EACH END TO PREVENT BYPASS.
4. FOR UNTRENCHED INSTALLATION BLOW OR HAND PLACE MULCH OR COMPOST ON UPHILL SIDE OF THE SLOPE ALONG LOG.
5. STAKE FILTER LOG EVERY 4 FEET OR CLOSER ALONG ENTIRE LENGTH OF LOG OR TRENCH LOG INTO GROUND A MINIMUM OF 4 INCHES AND STAKE LOG EVERY 8 FEET OR CLOSER.
6. USE STAKES WITH A MINIMUM NOMINAL CROSS SECTION OF 2X2 INCH AND OF SUFFICIENT LENGTH TO ATTAIN A MINIMUM OF 12 INCHES INTO THE GROUND AND 3 INCHES PROTRUDING ABOVE LOG.
7. WHEN MORE THAN ONE LOG IS NEEDED, OVERLAP ENDS 12 INCHES MINIMUM AND STAKE.
8. REMOVE SEDIMENT WHEN IT HAS ACCUMULATED TO A DEPTH OF ½ THE EXPOSED HEIGHT OF LOG AND REPLACE MULCH. REPLACE FILTER LOG IF TORN. REINSTALL FILTER LOG IF UNDERMINING OR DISLODGING OCCURS. REPLACE CLOGGED FILTER LOGS. FOR PERMANENT APPLICATIONS, ESTABLISH AND CONTINUOUSLY MEET REQUIREMENTS FOR ADEQUATE VEGETATIVE ESTABLISHMENT IN ACCORDANCE WITH SECTION B-4 VEGETATIVE STABILIZATION.

2 OF 2

MARYLAND STANDARDS AND SPECIFICATIONS FOR SOIL EROSION AND SEDIMENT CONTROL

U.S. DEPARTMENT OF AGRICULTURE NATURAL RESOURCES CONSERVATION SERVICE	2011	MARYLAND DEPARTMENT OF ENVIRONMENT WATER MANAGEMENT ADMINISTRATION

C:\pwworking\pitt\d1901214\ C-43.dwg 01/11/22_8:32

HDR

AS-BUILT REPLACEMENT SHEET

PROFESSIONAL CERTIFICATION
THIS DRAWING WAS ORIGINALLY APPROVED FOR CONSTRUCTION AND SEALED BY ROBERT BAYSDEN, A REGISTERED PROFESSIONAL ENGINEER IN THE STATE OF MARYLAND, NO. 49972.

NOTICE TO CONTRACTORS
- PROJECT ELEVATIONS ARE BASED ON NAVD88 AND HOWARD COUNTY'S BENCHMARK SYSTEM
- PREVIOUS PROJECTS USED OTHER DATUMS
- APPLY THE FOLLOWING CONVERSIONS WHEN USING PREVIOUS CONTRACT DRAWINGS:
  - ADDITION NO. 6: SUBTRACT 0.80 FT
  - PRIOR ADDITIONS: SUBTRACT 1.04 FT

DEPARTMENT OF PUBLIC WORKS
HOWARD COUNTY, MARYLAND

CHIEF, BUREAU OF UTILITIES DATE

DES: M.L.
DRN: S.W.
CHK: R.B.
DATE: 03/16

DATE	REV	DESCRIPTION
07/2019		RECORD DRAWINGS

CIVIL

EROSION CONTROL NOTES AND DETAILS

LITTLE PATUXENT WATER RECLAMATION PLANT
8TH ADDITION
BIOSOLIDS PROCESSING FACILITIES – PHASE I

CAPITAL PROJECT S-6295
CONTRACT NO. 24-4935

ELECTION DISTRICT NO. 6
HOWARD COUNTY, MARYLAND

SCALE AS SHOWN

SHEET 88 OF 463

C-43

DETAIL E-2 SILT FENCE ON PAVEMENT

STANDARD SYMBOL: SFOP

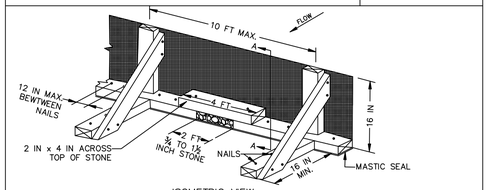

ISOMETRIC VIEW

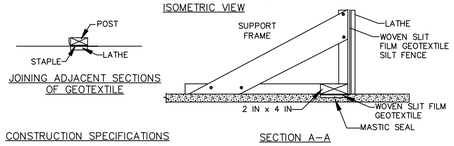

JOINING ADJACENT SECTIONS OF GEOTEXTILE

SECTION A–A

CONSTRUCTION SPECIFICATIONS

1. USE NOMINAL 2 INCH X 4 INCH LUMBER.
2. USE WOVEN SLIT FILM GEOTEXTILE, AS SPECIFIED IN SECTION H–1 MATERIALS.
3. PROVIDE MANUFACTURER CERTIFICATION TO THE AUTHORIZED REPRESENTATIVE OF THE INSPECTION/ENFORCEMENT AUTHORITY SHOWING THAT THE GEOTEXTILE USED MEETS THE REQUIREMENTS IN SECTION H–1 MATERIALS.
4. SPACE UPRIGHT SUPPORTS NO MORE THAN 10 FEET APART.
5. PROVIDE A TWO FOOT OPENING BETWEEN EVERY SET OF SUPPORTS AND PLACE STONE IN THE OPENING OVER GEOTEXTILE.
6. KEEP SILT FENCE TAUT AND SECURELY STAPLE TO THE UPSLOPE SIDE OF UPRIGHT SUPPORTS. EXTEND GEOTEXTILE UNDER 2x4.
7. WHERE TWO SECTIONS OF GEOTEXTILE ADJOIN: OVERLAP, FOLD, AND STAPLE TO POST IN ACCORDANCE WITH THIS DETAIL. ATTACH LATHE.
8. PROVIDE A MASTIC SEAL BETWEEN PAVEMENT, GEOTEXTILE, AND 2x4 TO PREVENT SEDIMENT–LADEN WATER FROM ESCAPING BENEATH SILT FENCE INSTALLATION.
9. SECURE BOARDS TO PAVEMENT WITH 40D 5 INCH MINIMUM LENGTH NAILS.
10. REMOVE ACCUMULATED SEDIMENT AND DEBRIS WHEN BULGES DEVELOP IN SILT FENCE OR WHEN SEDIMENT REACHES 25% OF FENCE HEIGHT. REPLACE GEOTEXTILE IF TORN. MAINTAIN WATER TIGHT SEAL ALONG BOTTOM. REPLACE STONE IF DISPLACED.

MARYLAND STANDARDS AND SPECIFICATIONS FOR SOIL EROSION AND SEDIMENT CONTROL

U.S. DEPARTMENT OF AGRICULTURE NATURAL RESOURCES CONSERVATION SERVICE	2011	MARYLAND DEPARTMENT OF ENVIRONMENT WATER MANAGEMENT ADMINISTRATION

DETAIL F-3 PORTABLE SEDIMENT TANK

STANDARD SYMBOL: PST

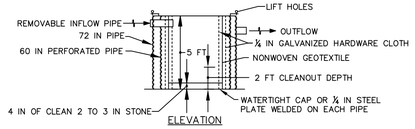

ELEVATION

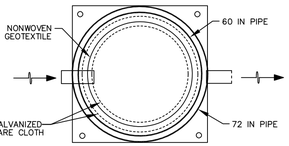

PLAN VIEW

CONSTRUCTION SPECIFICATIONS

1. PROVIDE 1 CUBIC FOOT OF STORAGE FOR EACH GALLON PER MINUTE OF PUMP CAPACITY. REQUIRED STORAGE VOLUME MAY BE ATTAINED BY PLACEMENT OF TANKS IN PARALLEL WITH INFLOW EVENLY DISTRIBUTED AMONG TANKS. OVERTOPPING OF TANKS IS NOT PERMITTED.
2. USE 60 INCH CORRUGATED METAL OR PLASTIC PIPE WITH 1 INCH DIAMETER PERFORATIONS, 6 INCHES ON CENTER FOR THE INNER PIPE. LINE PIPE WITH NONWOVEN GEOTEXTILE, AS SPECIFIED IN SECTION H–1 MATERIALS, SANDWICHED BETWEEN, AND ATTACHED TO, ¼ INCH HARDWARE CLOTH.
3. OVERLAP GEOTEXTILE 8 INCHES MINIMUM AT VERTICAL SEAM AND AT THE BOTTOM PLATE.
4. ANCHOR GEOTEXTILE AT BOTTOM OF TANK WITH 4 INCHES OF 2 TO 3 INCH CLEAN STONE OR EQUIVALENT RECYCLED CONCRETE.
5. USE 72 INCH CORRUGATED METAL OR PLASTIC OUTER PIPE WITH PERMANENT OUTFLOW PIPE WITH INVERT LOWER THAN INFLOW PIPE
6. INFLOW PIPE MUST DISCHARGE INTO INNER PIPE AND BE REMOVABLE.
7. PLACE TANK ON LEVEL SURFACE AND DISCHARGE TO A STABLE AREA AT A NONEROSIVE RATE.
8. A PORTABLE SEDIMENT TANK REQUIRES FREQUENT MAINTENANCE. REMOVE ACCUMULATED SEDIMENT FROM INNER PIPE WHEN IT REACHES TWO FEET IN DEPTH. IF SYSTEM CLOGS, PULL OUT INNER PIPE, REMOVE ACCUMULATED SEDIMENT, AND REPLACE GEOTEXTILE. KEEP POINT OF DISCHARGE FREE OF EROSION.

MARYLAND STANDARDS AND SPECIFICATIONS FOR SOIL EROSION AND SEDIMENT CONTROL

U.S. DEPARTMENT OF AGRICULTURE NATURAL RESOURCES CONSERVATION SERVICE	2011	MARYLAND DEPARTMENT OF ENVIRONMENT WATER MANAGEMENT ADMINISTRATION

DETAIL C-2 TEMPORARY SWALE

STANDARD SYMBOL: A–1

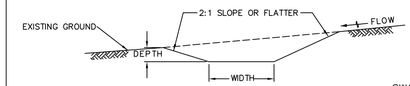

CROSS SECTION

SWALE TYPE	A	B
MIN. DEPTH	1 FT MIN.	1 FT MIN.
BOTTOM WIDTH	4 FT MIN.	6 FT MIN.

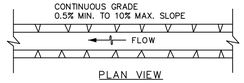

PLAN VIEW

FLOW CHANNEL STABILIZATION

A–1 SEED WITH STRAW MULCH AND TACK. (NOT ALLOWED FOR CLEAR WATER DIVERSION.)

A–2/B–2 SEED WITH SOIL STABILIZATION MATTING OR LINE WITH SOD.

A–3/B–3 4 TO 7 INCH STONE OR EQUIVALENT RECYCLED CONCRETE PRESSED INTO SOIL A MINIMUM OF 7 INCHES AND FLUSH WITH GROUND.

CONSTRUCTION SPECIFICATIONS

1. REMOVE AND DISPOSE OF ALL TREES, BRUSH, STUMPS, OBSTRUCTIONS, AND OTHER OBJECTIONABLE MATERIAL SO AS NOT TO INTERFERE WITH PROPER FUNCTION OF TEMPORARY SWALE.
2. EXCAVATE OR SHAPE TEMPORARY SWALE TO LINE, GRADE, AND CROSS SECTION AS SPECIFIED. BANK PROJECTIONS OR OTHER IRREGULARITIES ARE NOT ALLOWED.
3. STABILIZE TEMPORARY SWALE WITHIN THREE DAYS OF INSTALLATION. STABILIZE SWALES USED FOR CLEAR WATER DIVERSION WITHIN 24 HOURS OF INSTALLATION.
4. CONSTRUCT FLOW CHANNEL ON AN UNINTERRUPTED, CONTINUOUS GRADE, ADJUSTING THE LOCATION DUE TO FIELD CONDITIONS AS NECESSARY TO MAINTAIN POSITIVE DRAINAGE.
5. PROVIDE OUTLET PROTECTION AS REQUIRED ON APPROVED PLAN.
6. MAINTAIN LINE, GRADE, AND CROSS SECTION. REMOVE ACCUMULATED SEDIMENT AND DEBRIS, AND MAINTAIN POSITIVE DRAINAGE. KEEP TEMPORARY SWALE AND POINT OF DISCHARGE FREE OF EROSION, AND CONTINUOUSLY MEET REQUIREMENTS FOR ADEQUATE VEGETATIVE ESTABLISHMENT IN ACCORDANCE WITH SECTION B–4 VEGETATIVE STABILIZATION.
7. UPON REMOVAL OF TEMPORARY SWALE, GRADE AREA FLUSH WITH EXISTING GROUND. WITHIN 24 HOURS OF REMOVAL STABILIZE DISTURBED AREA WITH TOPSOIL, SEED, AND MULCH, OR AS SPECIFIED ON APPROVED PLAN.

MARYLAND STANDARDS AND SPECIFICATIONS FOR SOIL EROSION AND SEDIMENT CONTROL

U.S. DEPARTMENT OF AGRICULTURE NATURAL RESOURCES CONSERVATION SERVICE	2011	MARYLAND DEPARTMENT OF ENVIRONMENT WATER MANAGEMENT ADMINISTRATION

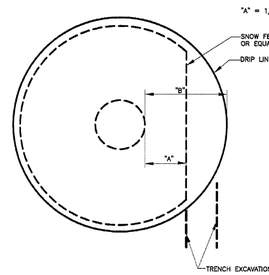

TEMPORARY TREE PROTECTION(PLAN)

NOTES:
FENCING SHALL BE PLACED AT THE DRIP LINE OF TREES TO BE PROTECTED DURING CONSTRUCTION EXCEPT ON THE SIDE OF THE UTILITY TRENCHING. FENCING SHALL NOT BE PLACED CLOSER TO THE TREE THAN 1/2 THE TOTAL DISTANCE FROM THE TREE TO THE LIMITS OF THE TREE'S DRIP LINE. THIS SPACE IS TO ACCOMMODATE TRENCHING ONLY AND NOT TO ALLOW ADDITIONAL WORKING SPACE.

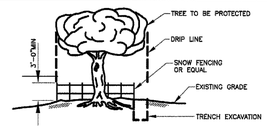

TEMPORARY TREE PROTECTION

NOTES:
1. GROUPS OF TREES MAY BE FENCED AS ONE.

Revised / Revised 5/1/2007 / Approved	Howard County, Maryland Department of Public Works — Approved: Chief, Bureau of Engineering	Temporary Tree Protection Fencing Private	Detail L–9.02

DETAIL E-9-3 CURB INLET PROTECTION

STANDARD SYMBOL: CIP

MAXIMUM DRAINAGE AREA = ¼ ACRE

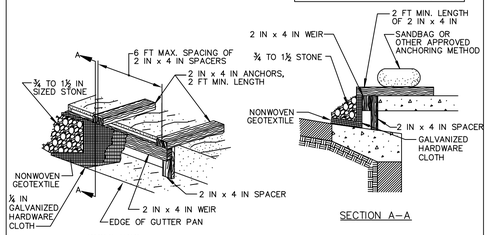

ISOMETRIC

SECTION A–A

CONSTRUCTION SPECIFICATIONS

1. USE NOMINAL 2 INCH x 4 INCH LUMBER
2. USE NONWOVEN GEOTEXTILE AS SPECIFIED IN SECTION H–1 MATERIALS.
3. NAIL THE 2x4 WEIR TO 9 INCH LONG VERTICAL SPACERS (MAXIMUM 6 FEET APART).
4. ATTACH A CONTINUOUS PIECE OF ¼ INCH GALVANIZED HARDWARE CLOTH, WITH A MINIMUM WIDTH OF 30 INCHES AND A MINIMUM LENGTH OF 4 FEET LONGER THAN THE THROAT OPENING, TO THE 2x4 WEIR, EXTENDING IT 2 FEET BEYOND THROAT ON EACH SIDE.
5. PLACE A CONTINUOUS PIECE OF NONWOVEN GEOTEXTILE OF THE SAME DIMENSIONS AS THE HARDWARE CLOTH OVER THE HARDWARE CLOTH AND SECURELY ATTACH TO THE 2x4 WEIR.
6. PLACE THE ASSEMBLY AGAINST THE INLET THROAT AND NAIL TO 2x4 ANCHORS (MINIMUM 2 FEET LENGTH). EXTEND THE ANCHORS ACROSS THE INLET TOP AND HOLD IN PLACE BY SANDBAGS OR OTHER APPROVED ANCHORING METHOD.
7. INSTALL END SPACERS A MINIMUM OF 1 FOOT BEYOND THE ENDS OF THE THROAT OPENING.
8. FORM THE HARDWARE CLOTH AND THE GEOTEXTILE TO THE CONCRETE GUTTER AND FACE OF CURB TO SPAN THE INLET OPENING. COVER THE HARDWARE CLOTH AND GEOTEXTILE WITH CLEAN ¾ TO 1½ INCH STONE OR EQUIVALENT RECYCLED CONCRETE.
9. AT NON–SUMP LOCATIONS, INSTALL A TEMPORARY SANDBAG OR ASPHALT BERM TO PREVENT INLET BYPASS.
10. STORM DRAIN INLET PROTECTION REQUIRES FREQUENT MAINTENANCE. REMOVE ACCUMULATED SEDIMENT AFTER EACH RAIN EVENT TO MAINTAIN FUNCTION AND AVOID PREMATURE CLOGGING. IF INLET PROTECTION DOES NOT COMPLETELY DRAIN WITHIN 24 HOURS AFTER A STORM EVENT, IT IS CLOGGED. WHEN THIS OCCURS, REMOVE ACCUMULATED SEDIMENT AND CLEAN, OR REPLACE GEOTEXTILE AND STONE.

MARYLAND STANDARDS AND SPECIFICATIONS FOR SOIL EROSION AND SEDIMENT CONTROL

U.S. DEPARTMENT OF AGRICULTURE NATURAL RESOURCES CONSERVATION SERVICE	2011	MARYLAND DEPARTMENT OF ENVIRONMENT WATER MANAGEMENT ADMINISTRATION

DETAIL E-9-2 AT-GRADE INLET PROTECTION

STANDARD SYMBOL: AGIP

MAXIMUM DRAINAGE AREA = 1 ACRE

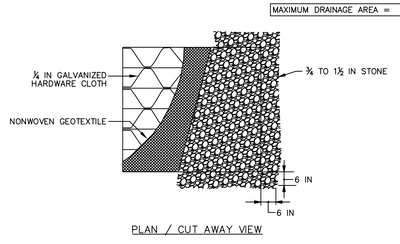

PLAN / CUT AWAY VIEW

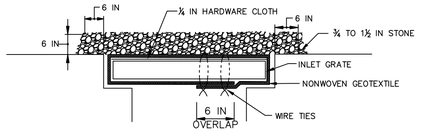

CROSS SECTION

CONSTRUCTION SPECIFICATIONS

1. USE NONWOVEN GEOTEXTILE AS SPECIFIED IN SECTION H–1 MATERIALS.
2. LIFT GRATE AND WRAP WITH NONWOVEN GEOTEXTILE TO COMPLETELY COVER ALL OPENINGS. SECURE WITH WIRE TIES AND SET GRATE BACK IN PLACE.
3. PLACE CLEAN ¾ TO 1½ INCH STONE OR EQUIVALENT RECYCLED CONCRETE 6 INCHES THICK ON THE GRATE.
4. STORM DRAIN INLET PROTECTION REQUIRES FREQUENT MAINTENANCE. REMOVE ACCUMULATED SEDIMENT AFTER EACH RAIN EVENT TO MAINTAIN FUNCTION AND AVOID PREMATURE CLOGGING. IF INLET PROTECTION DOES NOT COMPLETELY DRAIN WITHIN 24 HOURS AFTER A STORM EVENT, IT IS CLOGGED. WHEN THIS OCCURS, REMOVE ACCUMULATED SEDIMENT AND CLEAN, OR REPLACE GEOTEXTILE AND STONE.

MARYLAND STANDARDS AND SPECIFICATIONS FOR SOIL EROSION AND SEDIMENT CONTROL

U.S. DEPARTMENT OF AGRICULTURE NATURAL RESOURCES CONSERVATION SERVICE	2011	MARYLAND DEPARTMENT OF ENVIRONMENT WATER MANAGEMENT ADMINISTRATION

DETAIL H-6 ONSITE CONCRETE WASHOUT STRUCTURE

STANDARD SYMBOL: CWS

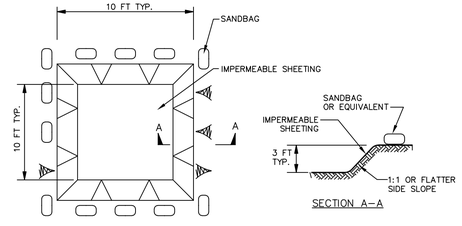

PLAN

SECTION A–A

EXCAVATED WASHOUT STRUCTURE

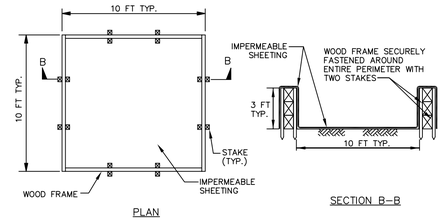

PLAN

SECTION B–B

WASHOUT STRUCTURE WITH WOOD PLANKS

1 OF 2

MARYLAND STANDARDS AND SPECIFICATIONS FOR SOIL EROSION AND SEDIMENT CONTROL

U.S. DEPARTMENT OF AGRICULTURE NATURAL RESOURCES CONSERVATION SERVICE	2011	MARYLAND DEPARTMENT OF ENVIRONMENT WATER MANAGEMENT ADMINISTRATION

DETAIL H-6 ONSITE CONCRETE WASHOUT STRUCTURE

STANDARD SYMBOL: CWS

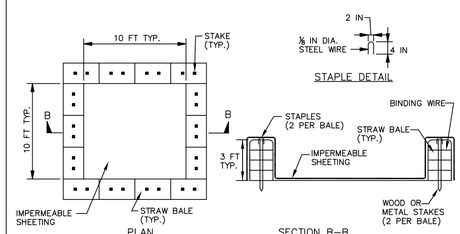

NOTE: CAN BE TWO STACKED BALES OR PARTIALLY EXCAVATED TO REACH 3 FT DEPTH

WASHOUT STRUCTURE WITH STRAW BALES

CONSTRUCTION SPECIFICATIONS

1. LOCATE WASHOUT STRUCTURE A MINIMUM OF 50 FEET AWAY FROM OPEN CHANNELS, STORM DRAIN INLETS, SENSITIVE AREAS, WETLANDS, BUFFERS AND WATER COURSES AND AWAY FROM CONSTRUCTION TRAFFIC.
2. SIZE WASHOUT STRUCTURE FOR VOLUME NECESSARY TO CONTAIN WASH WATER AND SOLIDS AND MAINTAIN AT LEAST 4 INCHES OF FREEBOARD. TYPICAL DIMENSIONS ARE 10 FEET X 10 FEET X 3 FEET DEEP.
3. PREPARE SOIL BASE FREE OF ROCKS OR OTHER DEBRIS THAT MAY CAUSE TEARS OR HOLES IN THE LINER. FOR LINER, USE 10 MIL OR THICKER UV RESISTANT, IMPERMEABLE SHEETING, FREE OF HOLES AND TEARS OR OTHER DEFECTS THAT COMPROMISE IMPERMEABILITY OF THE MATERIAL.
4. PROVIDE A SIGN FOR THE WASHOUT IN CLOSE PROXIMITY TO THE FACILITY.
5. KEEP CONCRETE WASHOUT STRUCTURE WATER TIGHT. REPLACE IMPERMEABLE LINER IF DAMAGED (E.G., RIPPED OR PUNCTURED). EMPTY OR REPLACE WASHOUT STRUCTURE THAT IS 75 PERCENT FULL, AND DISPOSE OF ACCUMULATED MATERIAL PROPERLY. DO NOT REUSE PLASTIC LINER. WET–VACUUM STORED LIQUIDS THAT HAVE NOT EVAPORATED AND DISPOSE OF IN AN APPROVED MANNER. PRIOR TO FORECASTED RAINSTORMS, REMOVE LIQUIDS OR COVER STRUCTURE TO PREVENT OVERFLOWS. REMOVE HARDENED SOLIDS, WHOLE OR BROKEN UP, FOR DISPOSAL OR RECYCLING. MAINTAIN RUNOFF DIVERSION AROUND EXCAVATED WASHOUT STRUCTURE UNTIL STRUCTURE IS REMOVED.

2 OF 2

MARYLAND STANDARDS AND SPECIFICATIONS FOR SOIL EROSION AND SEDIMENT CONTROL

U.S. DEPARTMENT OF AGRICULTURE NATURAL RESOURCES CONSERVATION SERVICE	2011	MARYLAND DEPARTMENT OF ENVIRONMENT WATER MANAGEMENT ADMINISTRATION

THE DRAWINGS IN THIS SET ARE RECORD DRAWINGS. THEY ARE CONSTRUCTION CONTRACT DRAWINGS WHICH HAVE BEEN REVISED BASED ON AVAILABLE FIELD INFORMATION RECORDED BY OTHERS DURING CONSTRUCTION OF THIS CONTRACT. THERE HAS BEEN NO VERIFICATION OF DIMENSIONS SHOWN ON THE CONSTRUCTION DRAWINGS OR THE ACCURACY/COMPLETENESS OF THE FIELD INFORMATION RECEIVED.

SIGNATURE — DATE 2/7/2020

C:\pwworking\pitt\d1901214\ C-44.dwg 01/11/22_8:33

AS-BUILT REPLACEMENT SHEET

PROFESSIONAL CERTIFICATION
THIS DRAWING WAS ORIGINALLY APPROVED FOR CONSTRUCTION AND SEALED BY ROBERT BAYSDEN, A REGISTERED PROFESSIONAL ENGINEER IN THE STATE OF MARYLAND, NO. 49972.

NOTICE TO CONTRACTORS
- PROJECT ELEVATIONS ARE BASED ON NAVD88 AND HOWARD COUNTY'S BENCHMARK SYSTEM
- PREVIOUS PROJECTS USED OTHER DATUMS
- APPLY THE FOLLOWING CONVERSIONS WHEN USING PREVIOUS CONTRACT DRAWINGS:
  - ADDITION NO. 6: SUBTRACT 0.80 FT
  - PRIOR ADDITIONS: SUBTRACT 1.04 FT

DEPARTMENT OF PUBLIC WORKS
HOWARD COUNTY, MARYLAND

CHIEF, BUREAU OF UTILITIES DATE

DES: M.L.
DRN: S.W.
CHK: R.B.
DATE: 03/16

DATE	REV	DESCRIPTION
07/2019		RECORD DRAWINGS

CIVIL

EROSION CONTROL NOTES AND DETAILS

LITTLE PATUXENT WATER RECLAMATION PLANT
8TH ADDITION
BIOSOLIDS PROCESSING FACILITIES – PHASE I

CAPITAL PROJECT S–6295
CONTRACT NO. 24–4935

ELECTION DISTRICT NO. 6
HOWARD COUNTY, MARYLAND

SCALE AS SHOWN

SHEET 89 OF 463

C-44

WATER AND SEWER NOTES

PART I

1. APPROXIMATE LOCATIONS OF EXISTING MAINS ARE SHOWN. THE CONTRACTOR SHALL TAKE ALL NECESSARY PRECAUTIONS TO PROTECT EXISTING MAINS AND SERVICES AND MAINTAINS UNINTERRUPTED SERVICE. ANY DAMAGE INCURRED SHALL BE REPAIRED IMMEDIATELY TO THE SATISFACTION OF THE ENGINEER AT THE CONTRACTOR'S EXPENSE

2. TOPOGRAPHIC FIELD SURVEYS WERE PERFORMED MARCH, APRIL, AND JUNE OF 2016 BY JOHNSON, MIRMIRAN, & THOMPSON (JMT)

3. HORIZONTAL AND VERTICAL SURVEY CONTROLS:
   3.1. *THE COORDINATES SHOWN ON THE DRAWINGS ARE BASED ON MARYLAND STATE REFERENCE SYSTEM NAD '83/'91 AS PROJECTED BY HOWARD COUNTY GEODETIC CONTROL STATIONS NO. ___ NO.___ AND NO.*

4. ALL PIPE ELEVATIONS SHOWN ARE INVERT ELEVATIONS UNLESS OTHERWISE NOTED ON THE PLANS

5. CLEAR ALL UTILITIES BY A MINIMUM OF 12 INCHES. CLEAR ALL POLES BY 5'-0" MINIMUM OR TUNNEL AS REQUIRED UNLESS OTHERWISE NOTED. THE OWNER HAS CONTACTED THE UTILITY COMPANIES AND HAS MADE ARRANGEMENTS FOR BRACING OF POLES AS SHOWN ON THE DRAWINGS. IN THE EVENT THE CONTRACTOR'S WORK REQUIRES THE BRACING OF ADDITIONAL POLES, ANY COST INCURRED BY THE OWNER FOR THE BRACING OF ADDITIONAL POLES OR DAMAGES SHALL BE DEDUCTED FROM MONIES OWED THE CONTRACTOR. THE CONTRACTOR SHALL COORDINATE WITH THE UTILITY COMPANIES TO SCHEDULE THE BRACING OF THE POLES

6. FOR DETAILS NOT SHOWN ON THE DRAWING, AND FOR MATERIALS AND CONSTRUCTION METHODS, USE HOWARD COUNTY DESIGN MANUAL, VOLUME IV, STANDARD SPECIFICATIONS AND DETAILS FOR CONSTRUCTION (LATEST EDITION). THE CONTRACTOR SHALL HAVE A COPY OF VOLUME IV ON THE JOB

7. WHERE TEST PITS HAVE BEEN MADE ON EXISTING UTILITIES, THEY ARE NOTED BY THE SYMBOL AT THE LOCATIONS OF THE TEST PITS. A NOTE OR NOTES CONTAINING THE RESULTS OF THE TEST PIT OR PITS IS INCLUDED ON THE DRAWINGS. EXISTING UTILITIES IN THE VICINITY OF THE PROPOSED WORK FOR WHICH TEST PITS HAVE NOT BEEN DUG SHALL BE LOCATED BY THE CONTRACTOR TWO WEEKS IN ADVANCE OF CONSTRUCTION OPERATIONS AT HIS OWN EXPENSE

8. THE CONTRACTOR SHALL NOTIFY THE FOLLOWING UTILITY COMPANIES OR AGENCIES AT LEAST FIVE WORKING DAYS BEFORE STARTING WORK SHOWN ON THESE PLANS:

AT&T	800-252-1133
BGE (CONTRACTOR SERVICES)	410-637-8713
BGE (EMERGENCY)	410-685-0123
BUREAU OF UTILITIES	410-313-4900
COLONIAL PIPELINE CO.	410-795-1390
MISS UTILITY	800-257-7777
STATE HIGHWAY ADMINISTRATION	410-531-5533
VERIZON	800-743-0033

9. TREES AND SHRUBS ARE TO BE PROTECTED FROM DAMAGE TO THE MAXIMUM EXTENT. TREES AND SHRUBS LOCATED WITHIN THE CONSTRUCTION STRIP ARE NOT TO BE REMOVED OR DAMAGED BY THE CONTRACTOR

10. THE CONTRACTOR SHALL REMOVE TREES, STUMPS, AND ROOTS ALONG THE LINE OF EXCAVATION. PAYMENT FOR SUCH REMOVAL SHALL BE INCLUDED IN THE UNIT PRICE BID FOR CONSTRUCTION OF THE MAIN

11. THE CONTRACTOR SHALL NOTIFY THE BUREAU OF HIGHWAYS, HOWARD COUNTY AT (410) 313-7450 AT LEAST FIVE WORKING DAYS BEFORE OPEN CUTTING OR BORING/JACKING OF ANY COUNTY ROADS FOR LAYING WATER/SEWER MAINS OR HOUSE CONNECTIONS. THE APPROVAL OF THESE DRAWINGS WILL CONSTITUTE COMPLIANCE WITH DPW REQUIREMENTS PER SECTION 18.114(A) OF THE HOWARD COUNTY CODE

PART II

1. ALL WATER MAINS SHALL BE D.I.P. CLASS 54 UNLESS OTHERWISE NOTED

2. TOPS OF ALL WATER MAINS SHALL HAVE A MINIMUM OF 3'-6" OF COVER UNLESS OTHERWISE NOTED

3. VALVES ADJACENT TO TREES SHALL BE STRAPPED TO TREES

4. ALL FITTINGS SHALL BE BUTTRESSED OR ANCHORED WITH CONCRETE IN ACCORDANCE WITH STANDARD DETAILS UNLESS OTHERWISE PROVIDED FOR ON THE DRAWINGS

5. FIRE HYDRANTS SHALL BE SET TO THE BURY LINE ELEVATIONS SHOWN ON THE DRAWINGS. ALL FIRE HYDRANTS SHALL BE INSTALLED IN ACCORDANCE WITH STANDARD DETAILS. THE SOIL AROUND THE FIRE HYDRANT SHALL BE COMPACTED IN ACCORDANCE WITH SECTION 1000 AND SECTION 1005 OF THE STANDARD SPECIFICATIONS

6. THE CONTRACTOR SHALL NOT OPERATE ANY WATER MAIN VALVES ON THE EXISTING WATER SYSTEM

7. TRACER WIRE AND CONTINUITY TEST STATIONS SHALL BE INSTALLED ON ALL DIP AND PVC WATER MAINS IN ACCORDANCE WITH THE HOWARD COUNTY DESIGN MANUAL

8. FOR PVC WATER MAINS, ALL RECORDS FOR THE QUALITY CONTROL AND QUALIFICATIONS TEST REQUIREMENTS NOTED ON SECTION 5.1 OF THE AWWA STANDARD C900 FOR PVC PRESSURE PIPES SHALL BE SUBMITTED WITH THE PIPE MATERIAL CERTIFICATIONS OR SHOP DRAWINGS PRIOR TO APPROVAL OF THE MATERIAL FOR USE. THE TEST RECORDS SHALL BE FOR THE PIPE TO BE INSTALLED UNDER THIS CONTRACT. ALL PVC PIPE SHALL CONTAIN MARKINGS TO ALLOW CROSS REFERENCING OF THE PIPE SUPPLIED TO THE TEST RECORDS RECEIVED

9. UNLESS OTHERWISE NOTED ON THE PLANS OR IN THE SPECIFICATIONS, SACRIFICIAL ANODE SHALL BE INSTALLED ON ALL VALVES AND METALLIC FITTINGS USED WITH PVC WATER MAINS IN ACCORDANCE WITH VOLUME IV STANDARD SPECIFICATIONS AND DETAILS FOR CONSTRUCTION. 17 POUND MAGNESIUM ANODES SHALL BE INSTALLED ON ALL VALVES AND DUCTILE IRON FITTINGS INCLUDING RESTRAINTS AND HARNESSES. 12 POUND ZINC ANODES SHALL BE INSTALLED ON ALL STAINLESS STEEL FITTINGS AND SADDLES USED WITH PVC MAINS. ALL "TEES" USED WITH PVC MAINS SHALL BE DUCTILE IRON.

10. PROPER ASSEMBLY OF GASKETED PVC PIPE JOINTS: THE MANUFACTURER'S INSERTION LINE OF GASKETED PVC PIPE JOINTS INDICATES THE MAXIMUM DEPTH OF INSERTION OF THE SPIGOT INTO THE BELL. AFTER ASSEMBLY OF THE JOINT, THE INSERTION LINE SHALL REMAIN VISIBLE. DUAL INSERTION LINES ON GASKETED PVC PIPE INDICATE THE MAXIMUM AND MINIMUM DEPTH OF INSERTION OF THE SPIGOT INTO THE BELL. THE CONTRACTOR SHALL NOT OVER INSERT OR OVER HOME THE SPIGOT INTO THE BELL OF THE PVC PIPE

11. ALL CHANGES IN HORIZONTAL OR VERTICAL DIRECTION OF PVC WATER PIPES SHALL BE MADE WITH STANDARD BENDS, 5-DEGREE SWEEPS OR HIGH DEFLECTION (HD) COUPLINGS. NO BENDING OF THE PIPE OR DEFLECTING OF PVC PIPE JOINTS IS PERMITTED. WHERE HIGH DEFLECTION COUPLINGS OR 5-DEGREE SWEEPS ARE PERMITTED, THE CONTRACTOR SHALL PROVIDE ON FULL PIPE LENGTH (20-FOOT LONG) ON EITHER SIDE OF THE HIGH DEFLECTION COUPLING OR 5-DEGREE SWEEP. THE CONTRACTOR SHALL USE A VIBRATORY PLATE COMPACTOR OR OTHER APPROVED MEANS TO THOROUGHLY COMPACT THE #57 STONE ON BOTH SIDES OF THE HIGH DEFLECTION COUPLING OR 5-DEGREE SWEEP, TAKING CARE NOT TO USE COMPACTION EQUIPMENT DIRECTLY OVER THE FITTING

    PVC HIGH DEFLECTION COUPLINGS SHALL BE LIMITED TO A TOTAL DEFLECTION OF 3-DEGREES (1-1/2-DEGREE ON EITHER END OF THE COUPLING), SHALL BE RATED FOR A MINIMUM 200 PSI MEETING THE REQUIREMENTS OF AWWA C900, SHALL HAVE A MINIMUM LAY LENGTH OF 9-INCHES AND SHALL HAVE CENTER STOPS. PVC HIGH DEFLECTION COUPLINGS SHALL BE CERTAIN TEED PVC HIGH DEFLECTION (HD) STOP COUPLINGS OR EQUAL

    FIVE DEGREE SWEEPS SHALL BE BELL BY SPIGOT, RATED FOR A MINIMUM 225 PSI, DR 18 MEETING THE REQUIREMENTS OF AWWA C900 AND SHALL BE MULTI FITTINGS (IPEX) BLUE BRUTE DR18 OR EQUAL

12. WHEN PVC HIGH DEFLECTION COUPLINGS OR PVC-5-DEGREE SWEEPS ARE USED TO FACILITATE CHANGES IN HORIZONTAL OR VERTICAL ALIGNMENTS OF AWWA C-900 PVC PIPELINES, THE CONTRACTOR SHALL INSTALL DEVICES FOR THE PREVENTION OF OVER-INSERTION OF THE PVC PIPE SPIGOTS OR PLAIN ENDS INTO THE PUSH ON BELL JOINT ON BOTH SIDES OF THE HIGH DEFLECTION COUPLINGS AND 5-DEGREE SWEEPS. BELL STOPS SHALL BE PLACED AT THE PROPER INSERTION LINE FOR THE FITTING. THE BELL STOP SHALL BE MANUFACTURED OF DUCTILE IRON AND INCORPORATES AN EXPANSION RETENTION SPRING TO ALLOW FOR PIPE EXPANSION AND CONTRACTION. THE BELL STOPS SHALL BE SERIES 5000 MEGA-STOP, AS MANUFACTURED BY EBAA IRON, INC. OR APPROVAL EQUAL

PART III

1. ALL SEWER MAINS SHALL BE D.I.P. OR P.V.C. UNLESS OTHERWISE NOTED

2. ALL MANHOLES SHALL BE 4'-0" INSIDE DIAMETER UNLESS OTHERWISE NOTED

3. FORCE MAINS SHALL BE D.I.P. ONLY

4. MANHOLES SHOWN WITH 12" AND 16" WALLS ARE BRICK MANHOLES ONLY

5. MANHOLES DESIGNATED W.T. IN PLAN AND PROFILE SHALL HAVE WATERTIGHT FRAME AND COVER. STANDARD DETAIL G5.52 WHERE WATERTIGHT MANHOLE FRAMES AND COVERS ARE USED, SET TOP OF FRAME 1'-6" ABOVE FINISHED GRADE UNLESS OTHERWISE NOTED ON THE DRAWINGS

6. HOUSE(S) WITH THE SYMBOL "C.N.S." INDICATED THE CELLAR CANNOT BE SERVED

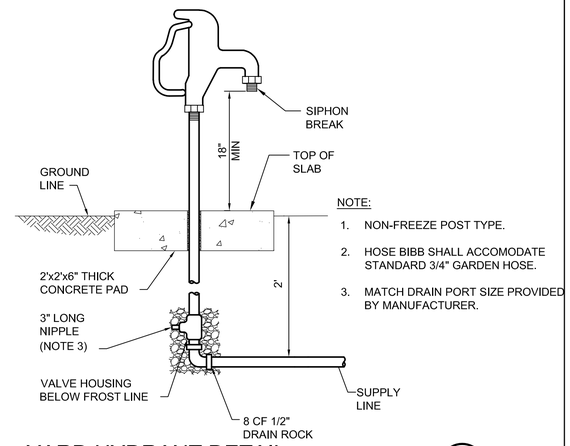

NOTE:

1. NON-FREEZE POST TYPE.
2. HOSE BIBB SHALL ACCOMODATE STANDARD 3/4" GARDEN HOSE.
3. MATCH DRAIN PORT SIZE PROVIDED BY MANUFACTURER.

YARD HYDRANT DETAIL

NOT TO SCALE

2 / -

NOTE:

1. PROVIDE RESTRAINED JOINTS ON CLEAN OUT BRANCH.

CONTAINMENT PIPING LOW POINT DETECTION DRAIN

NOT TO SCALE

1 / -

THE DRAWINGS IN THIS SET ARE RECORD DRAWINGS. THEY ARE CONSTRUCTION CONTRACT DRAWINGS WHICH HAVE BEEN REVISED BASED ON AVAILABLE FIELD INFORMATION RECORDED BY OTHERS DURING CONSTRUCTION OF THIS CONTRACT. THERE HAS BEEN NO VERIFICATION OF DIMENSIONS SHOWN ON THE CONSTRUCTION DRAWINGS OR THE ACCURACY/COMPLETENESS OF THE FIELD INFORMATION RECEIVED.

SIGNATURE _____ DATE 2/7/2023

C:\pwworking\pitt\d1901214_C-45.dwg 01/11/22_8:35

AS-BUILT REPLACEMENT SHEET

PROFESSIONAL CERTIFICATION
THIS DRAWING WAS ORIGINALLY APPROVED FOR CONSTRUCTION AND SEALED BY ROBERT BAYSDEN, A REGISTERED PROFESSIONAL ENGINEER IN THE STATE OF MARYLAND, NO. 49972.

NOTICE TO CONTRACTORS
- PROJECT ELEVATIONS ARE BASED ON NAVD88 AND HOWARD COUNTY'S BENCHMARK SYSTEM
- PREVIOUS PROJECTS USED OTHER DATUMS
- APPLY THE FOLLOWING CONVERSIONS WHEN USING PREVIOUS CONTRACT DRAWINGS:
  - ADDITION NO. 6: SUBTRACT 0.80 FT
  - PRIOR ADDITIONS: SUBTRACT 1.04 FT

DEPARTMENT OF PUBLIC WORKS
HOWARD COUNTY, MARYLAND

CHIEF, BUREAU OF UTILITIES DATE

DES: M.L.
DRN: S.W.
CHK: R.B.
DATE: 03/16

DATE	REV	DESCRIPTION
07/2019		RECORD DRAWINGS

CIVIL

CIVIL NOTES AND DETAILS

LITTLE PATUXENT WATER RECLAMATION PLANT
8TH ADDITION
BIOSOLIDS PROCESSING FACILITIES – PHASE I

CAPITAL PROJECT S-6295
CONTRACT NO. 24-4935

ELECTION DISTRICT NO. 6
HOWARD COUNTY, MARYLAND

SCALE AS SHOWN

SHEET 90 OF 463

C-45

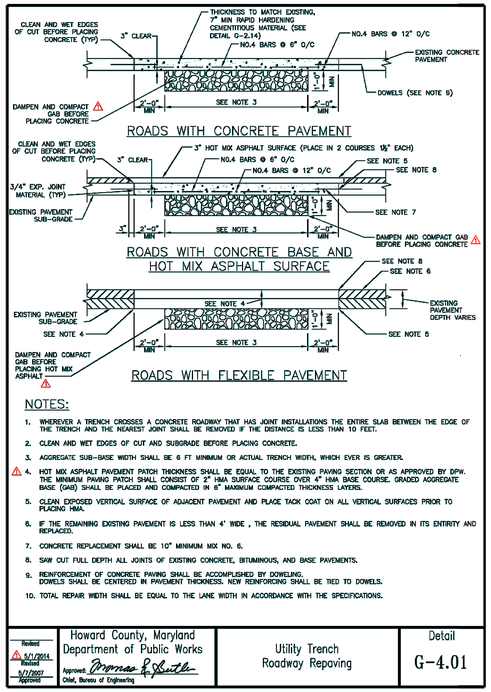

NOTES:

1. WHEREVER A TRENCH CROSSES A CONCRETE ROADWAY THAT HAS JOINT INSTALLATIONS THE ENTIRE SLAB BETWEEN THE EDGE OF THE TRENCH AND THE NEAREST JOINT SHALL BE REMOVED IF THE DISTANCE IS LESS THAN 10 FEET.
2. CLEAN AND WET EDGES OF CUT AND SUBGRADE BEFORE PLACING CONCRETE.
3. AGGREGATE SUB-BASE WIDTH SHALL BE 6 FT MINIMUM OR ACTUAL TRENCH WIDTH, WHICH EVER IS GREATER.
4. ⚠ HOT MIX ASPHALT PAVEMENT PATCH THICKNESS SHALL BE EQUAL TO THE EXISTING PAVING SECTION OR AS APPROVED BY DPW. THE MINIMUM PAVING PATCH SHALL CONSIST OF 2" HMA SURFACE COURSE OVER 4" HMA BASE COURSE. GRADED AGGREGATE BASE (GAB) SHALL BE PLACED AND COMPACTED IN 6" MAXIMUM COMPACTED THICKNESS LAYERS.
5. CLEAN EXPOSED VERTICAL SURFACE OF ADJACENT PAVEMENT AND PLACE TACK COAT ON ALL VERTICAL SURFACES PRIOR TO PLACING HMA.
6. IF THE REMAINING EXISTING PAVEMENT IS LESS THAN 4' WIDE , THE RESIDUAL PAVEMENT SHALL BE REMOVED IN ITS ENTIRITY AND REPLACED.
7. CONCRETE REPLACEMENT SHALL BE 10" MINIMUM MIX NO. 6.
8. SAW CUT FULL DEPTH ALL JOINTS OF EXISTING CONCRETE, BITUMINOUS, AND BASE PAVEMENTS.
9. REINFORCEMENT OF CONCRETE PAVING SHALL BE ACCOMPLISHED BY DOWELING. DOWELS SHALL BE CENTERED IN PAVEMENT THICKNESS. NEW REINFORCING SHALL BE TIED TO DOWELS.
10. TOTAL REPAIR WIDTH SHALL BE EQUAL TO THE LANE WIDTH IN ACCORDANCE WITH THE SPECIFICATIONS.

Revised 5/1/2014 Revised 5/1/2007 Approved	Howard County, Maryland Department of Public Works Approved: Chief, Bureau of Engineering	Utility Trench Roadway Repaving	Detail G-4.01

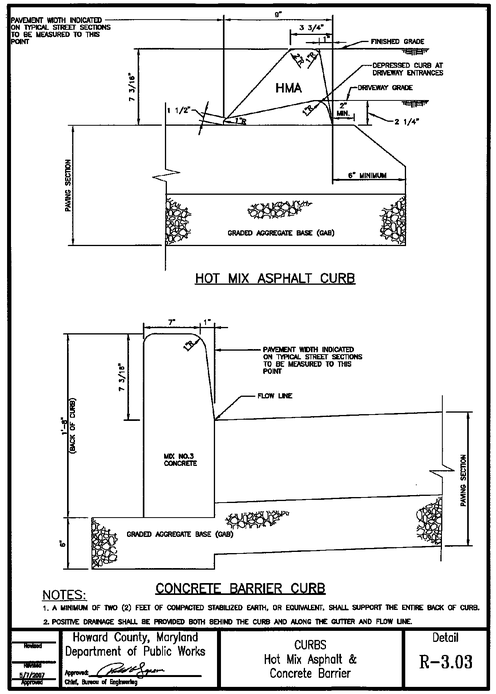

NOTES:

1. A MINIMUM OF TWO (2) FEET OF COMPACTED STABILIZED EARTH, OR EQUIVALENT, SHALL SUPPORT THE ENTIRE BACK OF CURB.
2. POSITIVE DRAINAGE SHALL BE PROVIDED BOTH BEHIND THE CURB AND ALONG THE GUTTER AND FLOW LINE.

Revised 10/2008 5/1/2002 Approved	Howard County, Maryland Department of Public Works Approved: Chief, Bureau of Engineering	CURBS Hot Mix Asphalt & Concrete Barrier	Detail R-3.03

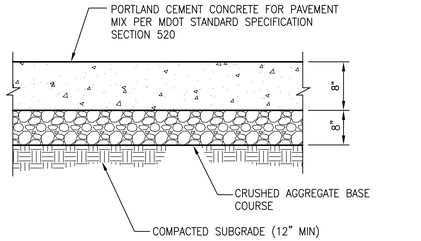

NOTES:

1. ALL PAVEMENT TO BE CONSTRUCTED PER MARYLAND DEPARTMENT OF TRANSPORTATION SPECIFICATION REQUIREMENTS.
2. CRUSHED AGGREGATE BASE COURSE TO EXTEND A MINIMUM 2 FEET BEYOND EDGE OF PAVEMENT.
3. SEE DETAIL 4/C-46 FOR JOINT DETAILS.

CONCRETE PAVEMENT SECTION (6)

NOT TO SCALE

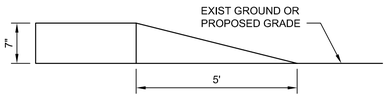

CURB WIPEDOWN DETAIL (5)

NOT TO SCALE

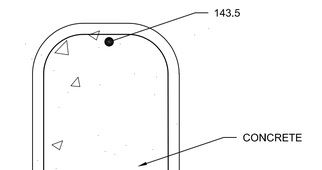

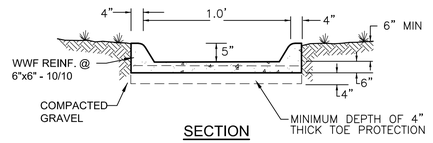

CONCRETE DRAINAGE FLUME (8)

NOT TO SCALE

THE DRAWINGS IN THIS SET ARE RECORD DRAWINGS. THEY ARE CONSTRUCTION CONTRACT DRAWINGS WHICH HAVE BEEN REVISED BASED ON AVAILABLE FIELD INFORMATION RECORDED BY OTHERS DURING CONSTRUCTION OF THIS CONTRACT. THERE HAS BEEN NO VERIFICATION OF DIMENSIONS SHOWN ON THE CONSTRUCTION DRAWINGS OR THE ACCURACY/COMPLETENESS OF THE FIELD INFORMATION RECEIVED.

SIGNATURE — DATE 2/7/2023

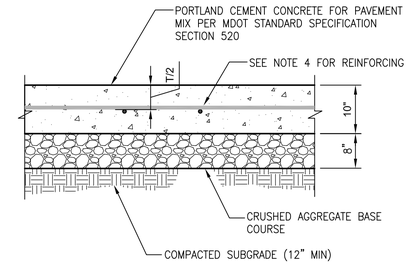

NOTES:

1. ALL PAVEMENT TO BE CONSTRUCTED PER MARYLAND DEPARTMENT OF TRANSPORTATION SPECIFICATION REQUIREMENTS.
2. CRUSHED AGGREGATE BASE COURSE TO EXTEND A MINIMUM 2 FEET BEYOND EDGE OF PAVEMENT.
3. SEE DETAIL 4/C-46 FOR JOINT DETAILS.
4. PROVIDE REINFORCEMENT #5 REBAR 12" O.C. BOTH DIRECTIONS.

CONCRETE PAVEMENT SECTION (9)

NOT TO SCALE

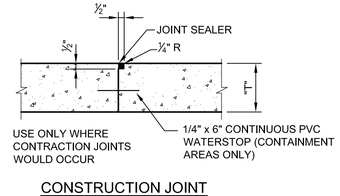

NOTES:

1. PROVIDE FULL DEPTH 3/8 INCH PREFORMED JOINT FILLER ALL AROUND AT ALL UTILITY POLES, METER BOXES, ETC.
2. PLACE PREFORMED JOINT FILLER FULL DEPTH THRU JOINTS AT POINT OF TANGENCY, ABUTTING BUILDINGS, CURBS, WALLS, STRUCTURES. AND AT MINIMUM 25 FOOT INTERVALS.
3. THICKNESS OF CONCRETE AS SHOWN ON DRAWINGS.
4. SEE DETAIL 2/C-46 FOR JOINT DETAILS.

CONCRETE WALKWAY/SIDEWALK/PAD (1)

NOT TO SCALE

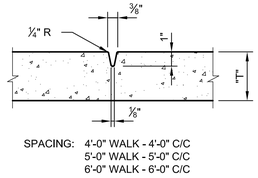

CONTRACTION JOINT

CONSTRUCTION JOINT

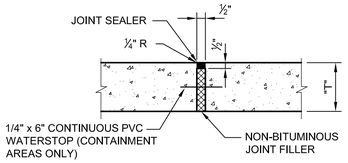

EXPANSION JOINT

"T" = THICKNESS PER PLAN (4" MIN)

CONCRETE WALK JOINT DETAILS (2)

NOT TO SCALE

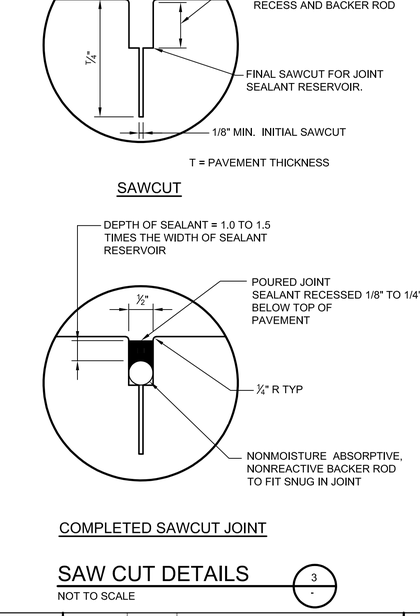

SAWCUT

COMPLETED SAWCUT JOINT

SAW CUT DETAILS (3)

NOT TO SCALE

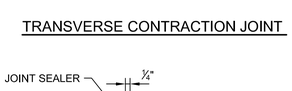

TRANSVERSE CONTRACTION JOINT

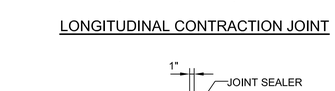

LONGITUDINAL CONTRACTION JOINT

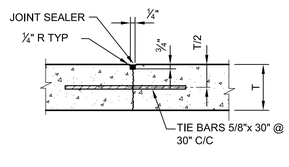

NOTE:

1. WHERE TYING INTO EXISTING PAVEMENT, ALSO USE 3/4" X 18" BARS AT 12" C/C

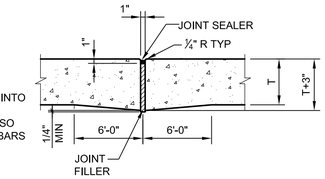

LONGITUDINAL CONSTRUCTION JOINT

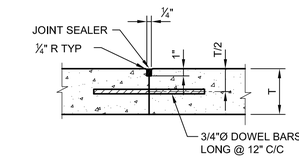

EXPANSION JOINT

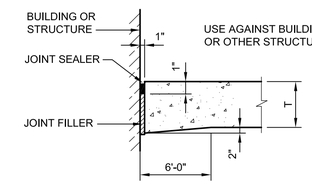

DOWELED CONSTRUCTION JOINT

EXPANSION JOINT AT STRUCTURE

NOTE:

T = PAVEMENT THICKNESS PER PLAN

CONCRETE PAVEMENT JOINT DETAILS (4)

NOT TO SCALE

C:\pwworking\pitt\d1901214\ C-46.dwg 01/11/22_8:41

	HDR	AS-BUILT REPLACEMENT SHEET	PROFESSIONAL CERTIFICATION: THIS DRAWING WAS ORIGINALLY APPROVED FOR CONSTRUCTION AND SEALED BY ROBERT BAYSDEN, A REGISTERED PROFESSIONAL ENGINEER IN THE STATE OF MARYLAND, NO. 49972.	NOTICE TO CONTRACTORS: • PROJECT ELEVATIONS ARE BASED ON NAVD88 AND HOWARD COUNTY'S BENCHMARK SYSTEM • PREVIOUS PROJECTS USED OTHER DATUMS • APPLY THE FOLLOWING CONVERSIONS WHEN USING PREVIOUS CONTRACT DRAWINGS: – ADDITION NO. 6: SUBTRACT 0.80 FT – PRIOR ADDITIONS: SUBTRACT 1.04 FT	DEPARTMENT OF PUBLIC WORKS HOWARD COUNTY, MARYLAND CHIEF, BUREAU OF UTILITIES DATE	DES: M.L. DRN: S.W. CHK: R.B. DATE: 03/16	07/2019		RECORD DRAWINGS	CIVIL CIVIL DETAILS	LITTLE PATUXENT WATER RECLAMATION PLANT 8TH ADDITION BIOSOLIDS PROCESSING FACILITIES – PHASE I CAPITAL PROJECT S-6295 CONTRACT NO. 24-4935 ELECTION DISTRICT NO. 6 HOWARD COUNTY, MARYLAND	SCALE AS SHOWN SHEET 91 OF 463 C-46
---	---	---	---	---	---	---	---	---	---	---	---	---	---
							DATE	REV	DESCRIPTION			

PLASTIC		
PIPE DIA "D"	"W"	TRENCH WIDTH
4	12	28
6	11	28
8	10	28
10	9	28
12	8	28

ALL DIMENSIONS IN INCHES

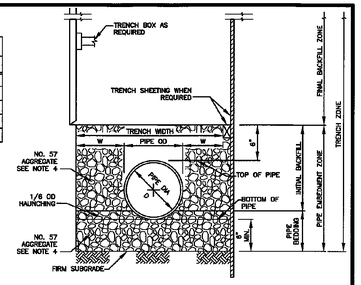

NOTES:

1. THE "W" DIMENSION SHALL BE USED TO CALCULATE MAXIMUM TRENCH PAY WIDTH.
2. FOR TRENCHES WHERE TRENCH BOX OR TRENCH SHEETING IS NOT REQUIRED, MEASUREMENT FOR CONTINGENT BORROW MATERIALS WILL BE BASED ON THE TRENCH WIDTH SHOWN.
3. FOR TRENCHES WHERE TRENCH BOX OR TRENCH SHEETING IS REQUIRED, MEASUREMENT FOR CONTINGENT BORROW MATERIALS WILL BE BASED ON THE TRENCH WIDTH SHOWN PLUS 24 INCHES.
4. FOR COPPER, PVC AND HDPE PIPE, 3 INCHES OR SMALLER:
   PIPE EMBEDMENT ZONE MATERIAL IS FINE AGGREGATE (SAND)
   "W" DIMENSION IS 6 INCHES MINIMUM AND BEDDING THICKNESS UNDER PIPE IS 4" MINIMUM.
   FOR TRENCHES IN ROCK, MINIMUM BEDDING THICKNESS IS 6 INCHES.
5. SPECIAL DESIGN IS REQUIRED AND SHALL BE SPECIFIED OR DETAILED IN THE CONTRACT DOCUMENTS FOR THE FOLLOWING PIPES:
   PVC AWWA C-905 LARGER THAN 12 INCHES
   PVC GRAVITY SANITARY SEWERS LARGER THAN 12 INCHES
   HDPE CORRUGATED DRAIN PIPE
   STREAM CROSSINGS SEE DETAILS S-3.11 AND S-3.12

Revised	Howard County, Maryland Department of Public Works	Pipe Trench Plastic & Copper	Detail G-2.12
Revised 5/1/2007 Approved	Approved: Chief, Bureau of Engineering		

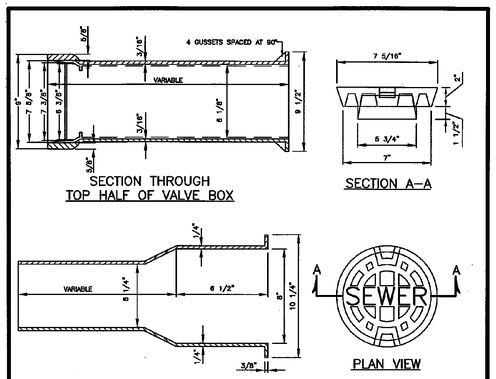

NOTES:

1. ALL VALVE BOXES SHALL BE THE SLIDING TYPE IN PAVED AREAS. USE SCREW TYPE VALVE BOXES IN LAWN AREAS.
2. ALL WATER VALVES SHALL BE MARKED "WATER" AND ALL SEWER VALVES SHALL BE MARKED "SEWER".
3. ENTIRE VALVE BOX AND ASSEMBLY SHALL BE CAST FROM CLASS 35 GREY IRON. ALL PARTS SHALL BE SUPPLIED BY THE SAME MANUFACTURER.
4. INSTALLATION SHALL BE PLUMB.
5. FOR BOXES ADJUSTABLE 23" TO 34"
   TOP SECTION-18"
   BOTTOM SECTION-15"
6. FOR BOXES ADJUSTABLE 34" TO 48"
   TOP SECTION-18"
   BOTTOM SECTION-30"
7. MINIMUM WEIGHT PER BOX- 100 LBS
8. BOTTOM SECTION SHALL REST ON VALVE BONNET.

Revised	Howard County, Maryland Department of Public Works	Valve Box Adjustable Round Head	Detail G-8.01
Revised 5/1/2007 Approved	Approved: Chief, Bureau of Engineering		

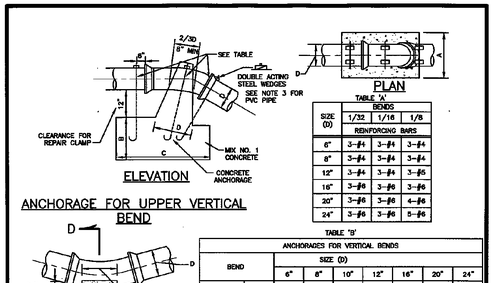

TABLE 'A'		
SIZE (D)	BENDS	
	1/32	1/16	1/8
	REINFORCING BARS	
6"	3-#4	3-#4	3-#4
8"	3-#4	3-#4	3-#4
12"	3-#4	3-#4	3-#5
16"	3-#5	3-#6	3-#6
20"	3-#5	5-#6	4-#6
24"	5-#5	5-#6	5-#6

TABLE 'B'

ANCHORAGES FOR VERTICAL BENDS							
BEND		SIZE (D)					
		6"	8"	10"	12"	16"	20"	24"
1/32 (11-1/4°)	A	1'-6"	1'-6"	1'-5"	3'-0"	3'-6"	4'-0"	4'-3"
	B	1'-3"	1'-5"	1'-3"	2'-0"	2'-0"	2'-6"	2'-6"
	C	2'-0"	2'-6"	2'-9"	3'-0"	4'-0"	5'-0"	5'-9"
1/16 (22-1/2°)	A	2'-0"	3'-4"	3'-8"	4'-0"	4'-4"	4'-8"	5'-0"
	B	1'-9"	2'-3"	2'-6"	2'-6"	2'-6"	2'-6"	3'-6"
	C	2'-6"	2'-8"	3'-10"	4'-0"	5'-6"	7'-6"	8'-6"
1/8 (45°)	A	2'-6"	3'-0"	4'-0"	4'-6"	5'-2"	5'-6"	6'-0"
	B	2'-6"	2'-9"	3'-0"	3'-6"	4'-0"	4'-6"	5'-6"
	C	3'-0"	4'-0"	4'-6"	4'-9"	6'-6"	8'-0"	9'-6"

BUTTRESSES FOR VERTICAL BENDS							
BEND		SIZE (D)					
		6"	8"	12"	16"	20"	24"
1/32 (11-1/4°)	E	5"	6"	1'-2"	1'-7"	2'-0"	2'-5"
	F	5"	6"	7"	9"	11"	1'-2"
	G	5"	6"	7"	9"	11"	1'-2"
1/16 (22-1/2°)	E	11"	1'-2"	1'-10"	2'-5"	3'-0"	3'-7"
	F	5"	6"	8"	11"	1'-2"	1'-5"
	G	5"	6"	8"	11"	1'-2"	1'-5"
1/8 (45°)	E	1'-0"	1'-10"	2'-10"	3'-9"	4'-8"	5'-7"
	F	7"	8"	11"	1'-3"	1'-7"	1'-11"
	G	7"	8"	11"	1'-3"	1'-7"	1'-11"

1. BUTTRESS & BUTTRESS DIMENSIONS ARE BASED ON A STATIC WATER PRESSURE OF 150 PSI AND A MINIMUM SOIL BEARING PRESSURE OF 3000 PSF WHEN ACTUAL FIELD CONDITIONS ARE DIFFERENT THE AREA OF BEARING SHALL BE INCREASED AS DETERMINED BY THE ENGINEER.
2. PAINT EXPOSED BARS/STRAPS WITH 2 COATS OF BITUMINOUS MATERIAL PROTECTIVE COATING PER AWWA C203.
3. WHEN ANCHORING PVC PIPE, THE STRAPPING IN CONTACT WITH THE PIPE SURFACE SHALL BE 1" WIDE X ⅜" THICK STEEL (NOT SHOWN). THE REMAINING PORTION OF THE STRAP SHALL BE A REINFORCING BAR SIZED IN ACCORDANCE WITH TABLE A.

Revised	Howard County, Maryland Department of Public Works	WATER MAIN Buttress & Anchorage Vertical Bend	Detail W-2.22
Revised 5/1/2007 Approved	Approved: Chief, Bureau of Engineering		

NOTES:

1. PROVIDE VALVE KEY EXTENSION WHEN DEPTH OF MAIN LINE VALVE OPERATING NUT EXCEEDS 6'-0".
2. ALL EXPOSED METAL TO RECEIVE 2 COATS BITUMINOUS PAINT. SHAFT AND CENTERING DISK TO RECEIVE 2 COATS BITUMINOUS PAINT.
3. OVERALL LENGTH OF VALVE KEY EXTENSION TO BE DETERMINED BY FIELD MEASUREMENT TO PROVIDE 3'-6" TO 3'-8" DEPTH FROM GRADE LEVEL.
4. BOX AND EXTENSION RODS SHALL BE PLUMB.

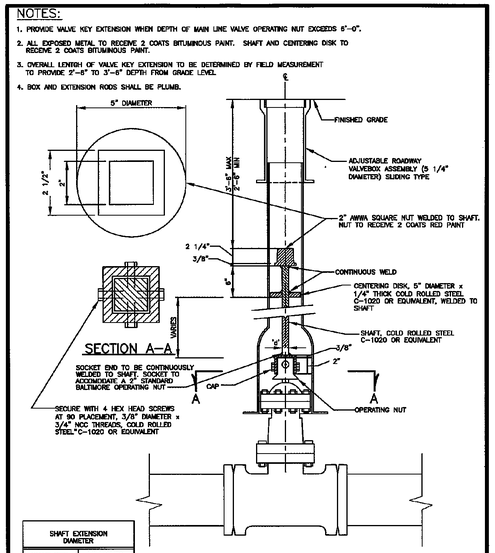

SHAFT EXTENSION DIAMETER	
VALVE SIZE	'd' INCHES
8" OR LESS	1"
10" TO 12"	1 1/4"
16" & UP	1 1/2"

Revised	Howard County, Maryland Department of Public Works	WATER MAIN Valve Key Extension	Detail W-3.65
Revised 5/1/2007 Approved	Approved: Chief, Bureau of Engineering		

DIP		
PIPE DIA "D"	"W"	TRENCH PAYMENT WIDTH
4	12	28
6	11	28
8	10	28
10	9	28
12	8	28
14	8	30
16	8	32
18	8	34
20	8	36
24	12	48

RCP		
PIPE DIA "D"	"W"	TRENCH PAYMENT WIDTH
4	12	28
6	11	28
12	8	28
15	8	31
18	8	34
21	8	37
24	12	48
27	12	51
30	12	54
33	15	63
36	15	66
42	15	72
48	18	84
54	18	90
60	18	96
66	18	102
72	18	108
78	18	114
84	18	120
90	18	126
96	18	132
102	18	138
108	18	144

ALL DIMENSIONS IN INCHES

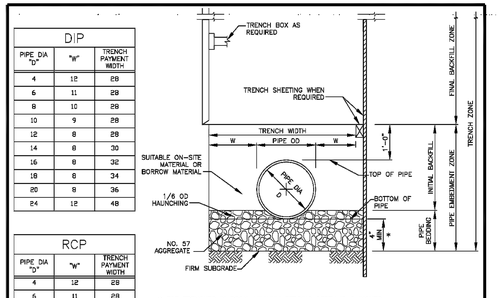

* FOR TRENCHES IN ROCK, MINIMUM BEDDING DEPTH IS 6 INCHES. FOR RCP 96 INCHES AND GREATER, MINIMUM BEDDING DEPTH IS 12 INCHES.

NOTES:

1. THE "W" DIMENSION SHALL BE USED TO CALCULATE MAXIMUM TRENCH PAY WIDTH.
2. FOR TRENCHES WHERE TRENCH BOX OR TRENCH SHEETING IS NOT REQUIRED, MEASUREMENT FOR CONTINGENT BORROW MATERIALS WILL BE BASED ON THE TRENCH WIDTH SHOWN.
3. FOR TRENCHES WHERE TRENCH BOX OR TRENCH SHEETING IS REQUIRED, MEASUREMENT FOR CONTINGENT BORROW MATERIALS WILL BE BASED ON THE TRENCH WIDTH SHOWN PLUS 24 INCHES.
4. THE MAXIMUM WIDTH OF THE TRENCH EXCAVATED ON-SITE FOR RCP, SHALL NOT EXCEED THE TRENCH PAYMENT WIDTH PLUS 12 INCHES.
5. MINIMUM SPACING BETWEEN PARALLEL CULVERT PIPES SHALL BE TWICE THE "W" DIMENSION.
6. SPECIAL DESIGN IS REQUIRED AND SHALL BE SPECIFIED OR DETAILED IN THE CONTRACT DOCUMENTS FOR THE FOLLOWING PIPES:
   RCP STORM DRAINS LARGER THAN 108 INCHES
   RCP GRAVITY SANITARY SEWERS LARGER THAN 48 INCHES
   DIP LARGER THAN 24 INCHES
   STREAM CROSSINGS SEE S-3.11 AND S-3.12

⚠7. WATERMAIN SHALL BE SPECIAL THICKNESS CLASS 54 DIP MINIMUM.

Revised ⚠ 8/30/2011 Revised 5/1/2007 Approved	Howard County, Maryland Department of Public Works Approved: Chief, Bureau of Engineering	Pipe Trench DIP & RCP	Detail G-2.11

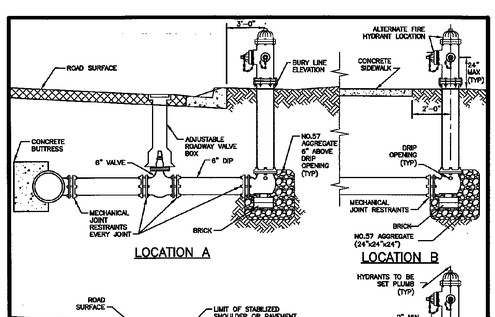

NOTES:

1. PLACE MINIMUM OF 1/3 CY OF NO.57 AGGREGATE, FULL WIDTH OF TRENCH FOR DRAIN SUMP.
2. WHEN LOCATION 'B' IS USED, PROVIDE 10'x10' R/W FOR FIRE HYDRANTS. (SEE DETAIL W-1.13).
3. ALL FIRE HYDRANTS SHALL BE RESTRAINED (SEE DETAIL W-2.11).
4. USE PLAIN CONCRETE 3000 PSI FOR ALL CONCRETE BUTTRESSES.
5. SEE DETAIL W-1.12 FOR GRADING AROUND FIRE HYDRANT.
6. HYDRANTS AND VALVE BOXES ARE TO BE INSTALLED PLUMB.
7. KEEP DRIP OPENING CLEAR AND FREE TO DRAIN.

SEE SHEET C-49

Revised	Howard County, Maryland Department of Public Works	FIRE HYDRANT Settings	Detail W-1.11
Revised 5/1/2007 Approved	Approved: Chief, Bureau of Engineering		

DIAMETER	Q	P	R	S
6"	1' - 2"	1' - 2"	1' - 8"	5"
8"	1' - 7"	1' - 8"	1' - 8"	6"
12"	2' - 0"	2' - 6"	1' - 11"	7"
16"	2' - 10"	3' - 0"	2' - 2"	10"
18"	3' - 1"	3' - 6"	2' - 6"	1' - 0"
20"	3' - 6"	3' - 10"	2' - 10"	1' - 0"
24"	4' - 8"	4' - 0"	3' - 0"	1' - 0"

MINIMUM DIMENSIONS OF BUTTRESS FOR TEES					
LABEL	SIZE OF BRANCH				
	6"	8"	12"	16"	20"	24"
D	6"	8"	12"	16"	20"	24"
H	8"	8"	1'-0"	1'-4"	1'-8"	2'-2"
I	10"	1'-1"	1'-7"	2'-2"	2'-8"	3'-2"
J	8"	8"	1'-1"	1'-5"	1'-9"	2'-1"
K	6"	7"	9"	10"	1'-2"	1'-4"

BUTTRESS FOR TEES

AREA OF BEARING = 2 X O X P

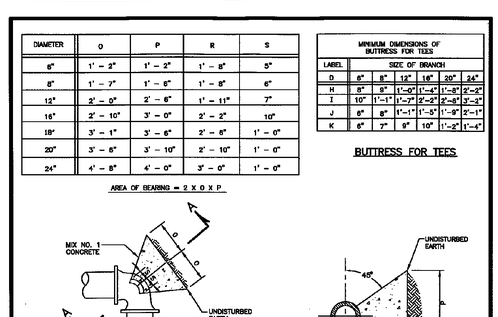

NOTES:

1. BUTTRESS DIMENSIONS ARE BASED ON A WATER PRESSURE OF 150 PSI AND A MINIMUM SOIL BEARING PRESSURE OF 3000 PSF. WHEN ACTUAL FIELD CONDITIONS ARE DIFFERENT THE AREA OF BEARING SHALL BE INCREASED AS DETERMINED BY THE ENGINEER AND SHOWN ON THE CONTRACT DOCUMENTS.
2. AREA OF BEARING = 2J x 2I

Revised	Howard County, Maryland Department of Public Works	WATER MAIN Buttress Tee & 1/4 Bend	Detail W-2.23
Revised 5/1/2007 Approved	Approved: Chief, Bureau of Engineering		

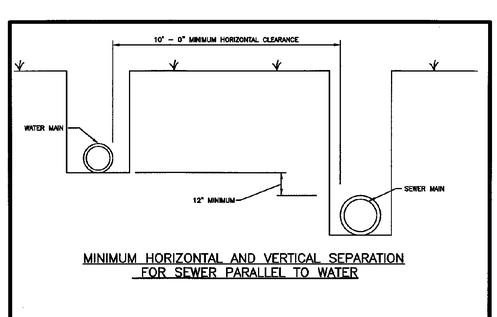

NOTES:

1. WHEN HORIZONTAL CLEARANCE IS LESS THAN 10' VERTICAL SEPARATION IS TO BE 6" MINIMUM, WITH MINIMUM HORIZONTAL CLEARANCE OF 3'. MAXIMUM SEWER DEPTH SHALL NOT EXCEED 16'.
2. PROVIDED BELL JOINT CLAMPS FOR ALL EXISTING WATER MAIN JOINTS THAT ARE WITHIN THE PIPE TRENCH OF A NEW SEWER INSTALLATION. FOR NEW WATER MAIN JOINTS OVER A SEWER TRENCH, PROVIDE RESTRAINED JOINTS ON THE NEW WATER MAIN IN LIEU OF BELL JOINT CLAMPS.

Revised	Howard County, Maryland Department of Public Works	Clearance Requirements Water To Sewer	Detail S-3.13
Revised 5/1/2007 Approved	Approved: Chief, Bureau of Engineering		

THE DRAWINGS IN THIS SET ARE RECORD DRAWINGS. THEY ARE CONSTRUCTION CONTRACT DRAWINGS WHICH HAVE BEEN REVISED BASED ON AVAILABLE FIELD INFORMATION RECORDED BY OTHERS DURING CONSTRUCTION OF THIS CONTRACT. THERE HAS BEEN NO VERIFICATION OF DIMENSIONS SHOWN ON THE CONSTRUCTION DRAWINGS OR THE ACCURACY/COMPLETENESS OF THE FIELD INFORMATION RECEIVED.

SIGNATURE — DATE 2/7/2020

HDR

AS-BUILT REPLACEMENT SHEET

PROFESSIONAL CERTIFICATION
THIS DRAWING WAS ORIGINALLY APPROVED FOR CONSTRUCTION AND SEALED BY ROBERT BAYSDEN, A REGISTERED PROFESSIONAL ENGINEER IN THE STATE OF MARYLAND, NO. 49972.

NOTICE TO CONTRACTORS
- PROJECT ELEVATIONS ARE BASED ON NAVD88 AND HOWARD COUNTY'S BENCHMARK SYSTEM
- PREVIOUS PROJECTS USED OTHER DATUMS
- APPLY THE FOLLOWING CONVERSIONS WHEN USING PREVIOUS CONTRACT DRAWINGS:
  - ADDITION NO. 6: SUBTRACT 0.80 FT
  - PRIOR ADDITIONS: SUBTRACT 1.04 FT

DEPARTMENT OF PUBLIC WORKS
HOWARD COUNTY, MARYLAND

CHIEF, BUREAU OF UTILITIES — DATE

DES: M.L.
DRN: S.W.
CHK: R.B.
DATE: 03/16

DATE	REV	DESCRIPTION
07/2019		RECORD DRAWINGS

CIVIL

CIVIL DETAILS

LITTLE PATUXENT WATER RECLAMATION PLANT
8TH ADDITION
BIOSOLIDS PROCESSING FACILITIES – PHASE I

CAPITAL PROJECT S-6295
CONTRACT NO. 24-4935

ELECTION DISTRICT NO. 6
HOWARD COUNTY, MARYLAND

SCALE AS SHOWN

SHEET 92 OF 463

C-47

C:\pwworking\pitt\d1901214\ C-47.dwg 01/11/22 8:43

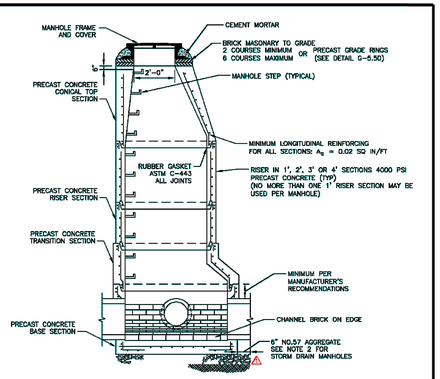

GENERAL NOTES APPLICABLE TO ALL PRECAST MANHOLES

1. MANHOLE BASE SECTION SHALL BE BEDDED ON 6-INCH NO.57 AGGREGATE ON FIRM SUBGRADE.
2. NO.57 AGGREGATE MATERIAL SHALL BE EXTENDED FROM 6-INCHES UNDERNEATH BOTTOM OF STRUCTURE TO SUBGRADE (STORM ONLY).
3. CONNECTION BETWEEN MANHOLE WALL AND SEWER SHALL BE NON-SHRINK GROUT (STORM) OR COMPRESSION TYPE RUBBER GASKET (SANITARY SEWER).
4. MANHOLE STEPS SHALL BE AS INDICATED ON DETAIL G-5.21.
5. MANHOLE COVER SHALL BE AS SPECIFIED ON DETAIL G-5.51, G-5.52, & G-5.53.
6. PROVIDE TWO APPLICATIONS OF BITUMINOUS MATERIAL (MINIMUM 18 MILS DFT) COATING ON EXTERIOR SURFACE OF MANHOLES (SANITARY SEWER ONLY).
7. MANHOLE CHANNELS SHALL BE FORMED TO PROVIDE A SMOOTH HYDRAULIC TRANSITION BETWEEN PIPES. BENCH SHALL BE TO TOP OF PIPE OR AS SHOWN ON CONTRACT DOCUMENTS. SANITARY SEWER MANHOLE CHANNEL AND BENCH SHALL BE PRECAST OR FORMED FROM SEWER BRICK SET ON EDGE. STORM DRAIN MANHOLE CHANNELS SHALL BE SEWER BRICK SET ON EDGE.
8. MANHOLE SHALL BE IN ACCORDANCE WITH ASTM C-478 EXCEPT AS INDICATED.
9. MAXIMUM INVERT DIFFERENTIAL IS 6 INCHES WITHOUT A DROP CONNECTION. SEE DETAIL S-1.32 FOR DROP CONNECTION DETAILS.
10. THE MINIMUM DISTANCE BETWEEN PIPE OPENINGS IN THE WALL OF THE MANHOLE SHALL BE 12 INCHES.
11. A MINIMUM OF 4" SHALL BE PROVIDED BETWEEN MANHOLE FLOOR AND LOWEST PIPE INVERT.
12. PRECAST RINGS MAY BE SUPPLIED IN PLACE OF BRICK MASONRY COURSES. SEE DETAIL G-5.50.
13. MANHOLE INTERMEDIATE LANDINGS SHALL BE AS INDICATED ON DETAIL G-5.16.

Revised 5/1/2014	Howard County, Maryland Department of Public Works	PRECAST MANHOLE Notes	Detail G-5.11
Revised 5/1/2007 Approved	Approved: Thomas J. Smith, Chief, Bureau of Engineering		

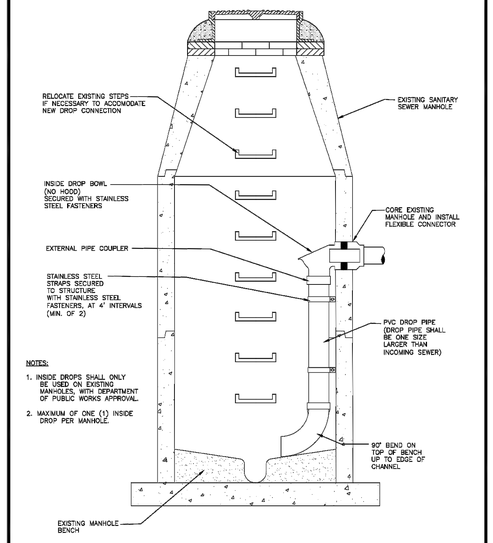

NOTES:
1. INSIDE DROPS SHALL ONLY BE USED ON EXISTING MANHOLES, WITH DEPARTMENT OF PUBLIC WORKS APPROVAL.
2. MAXIMUM OF ONE (1) INSIDE DROP PER MANHOLE.

Revised	Howard County, Maryland Department of Public Works	INSIDE DROP– EXISTING MANHOLE	Detail S-1.33
Revised 6/30/2011 Approved	Approved: Chief, Bureau of Engineering		

SECTION NUMBER	ROAD AND STREET CLASSIFICATION	CALIFORNIA BEARING RATIO (CBR)	3 TO <5	5 TO <7	≥ 7	3 TO <5	5 TO <7	≥ 7
		PAVEMENT MATERIAL (INCHES)	MIN HMA WITH GAB			HMA WITH CONSTANT GAB		
P-1	PARKING BAYS: RESIDENTIAL AND NON-RESIDENTIAL PARKING DRIVE AISLES: RESIDENTIAL AND NON-RESIDENTIAL WITH NO MORE THAN 2 HEAVY TRUCKS PER DAY	HMA SUPERPAVE FINAL SURFACE 9.5 MM PG 64-22, LEVEL 1 (ESAL)	1.5	1.5	1.5	1.5	1.5	1.5
		HMA SUPERPAVE INTERMEDIATE SURFACE (NA)	NA	NA	NA	NA	NA	NA
		HMA SUPERPAVE BASE 19.0 MM, PG 64-22, LEVEL 1 (ESAL)	2.0	2.0	2.0	3.5	3.0	2.5
		GRADED AGGREGATE BASE (GAB)	8.5	7.0	5.0	4.0	4.0	4.0
P-2	PARKING DRIVE AISLES: RESIDENTIAL AND NON-RESIDENTIAL WITH NO MORE THAN 10 HEAVY TRUCKS PER DAY LOCAL ROADS: ACESS PLACE, ACCESS STREET CUL-DE-SACS: RESIDENTIAL	HMA SUPERPAVE FINAL SURFACE 9.5 MM, PG 64-22, LEVEL 1 (ESAL)	1.5	1.5	1.5	1.5	1.5	1.5
		HMA SUPERPAVE INTERMEDIATE SURFACE 9.5 MM, PG 64-22, LEVEL 1 (ESAL)	1.0	1.0	1.0	1.0	1.0	1.0
		HMA SUPERPAVE BASE 19.0 MM, PG 64-22, LEVEL 1 (ESAL)	2.0	2.0	2.0	3.5	2.0	2.0
		GRADED AGGREGATE BASE (GAB)	8.0	4.0	3.0	4.0	4.0	4.0
P-3	PARKING DRIVE AISLES: RESIDENTIAL AND NON-RESIDENTIAL WITH NO MORE THAN 10 HEAVY TRUCKS PER DAY LOCAL ROADS: ACCESS PLACE, ACCESS STREET CUL-DE-SACS: NON-RESIDENTIAL MINOR COLLECTORS: RESIDENTIAL	HMA SUPERPAVE FINAL SURFACE 9.5 MM, PG 64-22, LEVEL 1 (ESAL)	1.5	1.5	1.5	1.5	1.5	1.5
		HMA SUPERPAVE INTERMEDIATE SURFACE 9.5 MM, PG 64-22, LEVEL 1 (ESAL)	1.0	1.0	1.0	1.0	1.0	1.0
		HMA SUPERPAVE BASE 19.0 MM, PG 64-22, LEVEL 1 (ESAL)	3.0	3.0	3.0	4.5	3.0	2.0
		GRADED AGGREGATE BASE (GAB)	10.0	8.0	3.0	6.0	6.0	6.0
P-4	MINOR COLLECTORS: NON-RESIDENTIAL MAJOR COLLECTORS	HMA SUPERPAVE FINAL SURFACE 12.5 MM, PG 64-22, LEVEL 2 (LOW ESAL)	2.0	2.0	2.0	2.0	2.0	2.0
		HMA SUPERPAVE INTERMEDIATE SURFACE 12.5 MM, PG 64-22, LEVEL 2 (LOW ESAL)	2.0	2.0	2.0	2.0	2.0	2.0
		HMA SUPERPAVE BASE 19.0 MM, PG 64-22, LEVEL 2 (LOW ESAL)	4.0	4.0	3.0	6.0	5.0	3.0
		GRADED AGGREGATE BASE (GAB)	13.0	7.0	4.0	6.0	6.0	6.0

Notes:
1) HEAVY TRUCKS ARE DEFINED AS THOSE WITH SIX (6) WHEELS OR MORE INCLUDING GARBAGE TRUCKS.
2) HMA SUPERPAVE LAYERS SHALL BE PLACED IN APPROPRIATE COMPACTED LIFT THICKNESS: 19.0 MM BASE (2.0" MIN TO 4.0" MAX), 12.5 MM SURFACE (1.5" MIN TO 3.0" MAX), AND 9.5 MM SURFACE (1.0" MIN TO 2.0" MAX)
3) GRADED AGGREGATE BASE (GAB) TO BE PLACED AND COMPACTED IN 6" MAX COMPACTED THICKNESS LAYERS.
4) THE INTERMEDIATE SURFACE COURSE LAYER MUST BE PLACED WITHIN 2 WEEKS OF PLACEMENT OF BASE COURSE, AND IS REQUIRED PRIOR TO SUBSTANTIAL COMPLETION INSPECTION AND BOND REDUCTION.
5) IN LIEU OF PLACING THE INTERMEDIATE SURFACE COURSE LAYER FOR COMMERCIAL/INDUSTRIAL ENTRANCE APRONS WITHIN THE COUNTY RIGHT-OF-WAY WHERE AUXILIARY LANES ARE NOT REQUIRED, THE THICKNESS OF THE INTERMEDIATE PAVEMENT LAYER CAN BE ADDED TO THE REQUIRED THICKNESS OF THE BASE ASPHALT LAYER.
6) THE CONSTRUCTION DRAWINGS SHALL SHOW THE PAVING SECTION, ROAD CLASSIFICATION AND CRB VALUE FOR EACH ROADWAY

HMA SUPERPAVE FINAL SURFACE
HMA SUPERPAVE INTERMEDIATE SURFACE
HMA SUPERPAVE BASE
GRADED AGGREGATE BASE (GAB)

Revised	Howard County, Maryland Department of Public Works	PAVING SECTIONS P-1 to P-4	Detail R-2.01
Revised 5/1/2007 Approved	Approved: Chief, Bureau of Engineering		

THE DRAWINGS IN THIS SET ARE RECORD DRAWINGS. THEY ARE CONSTRUCTION CONTRACT DRAWINGS WHICH HAVE BEEN REVISED BASED ON AVAILABLE FIELD INFORMATION RECORDED BY OTHERS DURING CONSTRUCTION OF THIS CONTRACT. THERE HAS BEEN NO VERIFICATION OF DIMENSIONS SHOWN ON THE CONSTRUCTION DRAWINGS OR THE ACCURACY/COMPLETENESS OF THE FIELD INFORMATION RECEIVED.

SIGNATURE — DATE 2/7/2020

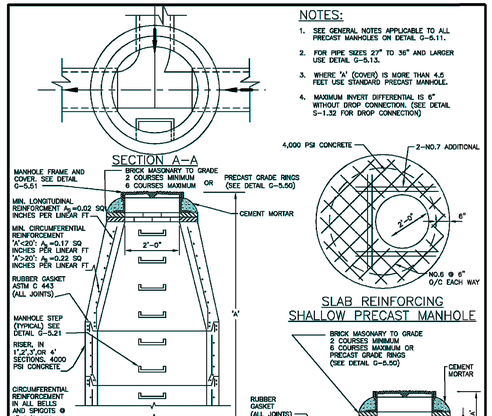

NOTES:
1. SEE GENERAL NOTES APPLICABLE TO ALL PRECAST MANHOLES ON DETAIL G-5.11.
2. FOR PIPE SIZES 27" TO 36" AND LARGER USE DETAIL G-5.13.
3. WHERE 'A' (COVER) IS MORE THAN 4.6 FEET USE STANDARD PRECAST MANHOLE.
4. MAXIMUM INVERT DIFFERENTIAL IS 6" WITHOUT DROP CONNECTION. (SEE DETAIL S-1.32 FOR DROP CONNECTION)

Revised 5/1/2014 Revised 5/1/2007 Approved	Howard County, Maryland Department of Public Works Approved: Chief, Bureau of Engineering	PRECAST MANHOLE Standard and Shallow 4'-0" for 24" Pipe and smaller	Detail G-5.12

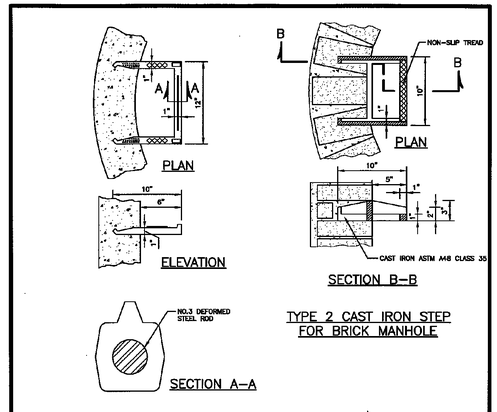

NOTES:
1. STEPS SHALL BE DESIGNED SO THAT FEET CANNOT SLIP OFF THE END.
2. STEPS SHALL BE ALIGNED TO FORM A CONTINUOUS LADDER WITH STEPS EQUALLY SPACED VERTICALLY AT A DISTANCE OF 12" APART.
3. BOTTOM STEP SHALL BE A MAXIMUM 12" ABOVE THE TOP OF BENCH.
4. THE TOP STEP SHALL BE 2'-0" BELOW THE TOP OF MANHOLE FRAME AND COVER FOR BRICK MANHOLES AND 6" BELOW TOP OF THE PRECAST SECTION OF THE MANHOLE.

Revised	Howard County, Maryland Department of Public Works	Manhole & Inlet Steps	Detail G-5.21
Revised 5/1/2007 Approved	Approved: Chief, Bureau of Engineering		

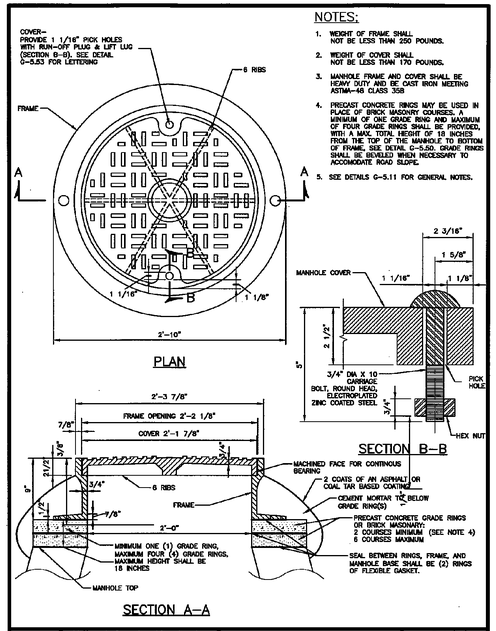

NOTES:
1. WEIGHT OF FRAME SHALL NOT BE LESS THAN 250 POUNDS.
2. WEIGHT OF COVER SHALL NOT BE LESS THAN 170 POUNDS.
3. MANHOLE FRAME AND COVER SHALL BE HEAVY DUTY AND BE CAST IRON MEETING ASTM-48 CLASS 35B
4. PRECAST CONCRETE RINGS MAY BE USED IN PLACE OF BRICK MASONRY COURSES. A MINIMUM OF ONE GRADE RING AND MAXIMUM OF FOUR GRADE RINGS SHALL BE PROVIDED, WITH A MAX TOTAL HEIGHT OF 18 INCHES FROM THE TOP OF THE MANHOLE TO BOTTOM OF FRAME. SEE DETAIL G-5.50. GRADE RINGS SHALL BE BEVELED WHEN NECESSARY TO ACCOMODATE ROAD SLOPE.
5. SEE DETAILS G-5.11 FOR GENERAL NOTES.

Revised	Howard County, Maryland Department of Public Works	Manhole Heavy Traffic Frame and Cover	Detail G-5.51
Revised 5/1/2007 Approved	Approved: Chief, Bureau of Engineering		

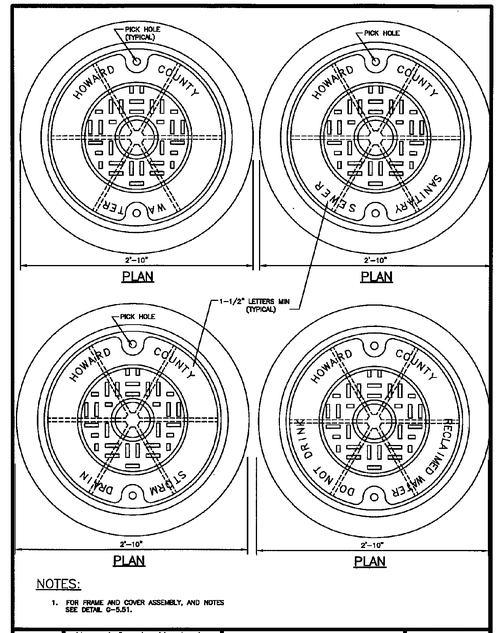

NOTES:
1. FOR FRAME AND COVER ASSEMBLY, AND NOTES SEE DETAIL G-5.51.

Revised	Howard County, Maryland Department of Public Works	Manhole Cover Lettering	Detail G-5.53
Revised 5/1/2007 Approved	Approved: Chief, Bureau of Engineering		

C:\pwworking\pitt\d1901214\C-48.dwg 01/11/22_8:48

AS-BUILT REPLACEMENT SHEET

PROFESSIONAL CERTIFICATION
THIS DRAWING WAS ORIGINALLY APPROVED FOR CONSTRUCTION AND SEALED BY ROBERT BAYSDEN, A REGISTERED PROFESSIONAL ENGINEER IN THE STATE OF MARYLAND, NO. 49972.

NOTICE TO CONTRACTORS
- PROJECT ELEVATIONS ARE BASED ON NAVD88 AND HOWARD COUNTY'S BENCHMARK SYSTEM
- PREVIOUS PROJECTS USED OTHER DATUMS
- APPLY THE FOLLOWING CONVERSIONS WHEN USING PREVIOUS CONTRACT DRAWINGS:
  - ADDITION NO. 6: SUBTRACT 0.80 FT
  - PRIOR ADDITIONS: SUBTRACT 1.04 FT

DEPARTMENT OF PUBLIC WORKS
HOWARD COUNTY, MARYLAND

CHIEF, BUREAU OF UTILITIES — DATE

DES: M.L.
DRN: S.W.
CHK: R.B.
DATE: 03/16

DATE	REV	DESCRIPTION
07/2019		RECORD DRAWINGS

CIVIL

CIVIL DETAILS

LITTLE PATUXENT WATER RECLAMATION PLANT
8TH ADDITION
BIOSOLIDS PROCESSING FACILITIES – PHASE I

CAPITAL PROJECT S-6295
CONTRACT NO. 24-4935

ELECTION DISTRICT NO. 6
HOWARD COUNTY, MARYLAND

SCALE AS SHOWN

SHEET 93 OF 463

C-48

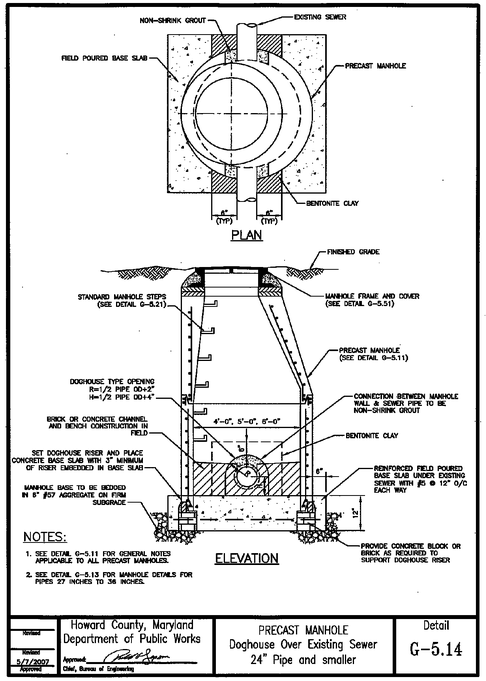

Revised	Howard County, Maryland Department of Public Works	PRECAST MANHOLE Doghouse Over Existing Sewer 24" Pipe and smaller	Detail G-5.14
Revised 5/1/2007 Approved	Approved: Chief, Bureau of Engineering		

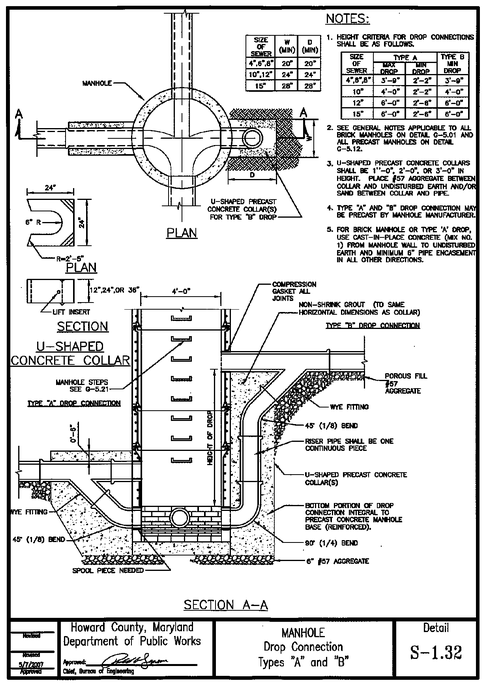

SIZE OF SEWER	W (MIN)	D (MIN)
4",6",8"	20"	20"
10",12"	24"	24"
15"	28"	28"

NOTES:
1. HEIGHT CRITERIA FOR DROP CONNECTIONS SHALL BE AS FOLLOWS.

SIZE OF SEWER	TYPE A MAX DROP	TYPE A MIN DROP	TYPE B MIN DROP
4",6",8"	5'-6"	2'-2"	3'-6"
10"	4'-0"	2'-2"	4'-0"
12"	6'-0"	2'-8"	6'-0"
15"	6'-0"	2'-8"	6'-0"

2. SEE GENERAL NOTES APPLICABLE TO ALL BRICK MANHOLES ON DETAIL G-5.01 AND ALL PRECAST MANHOLES ON DETAIL G-5.12.
3. U-SHAPED PRECAST CONCRETE COLLARS SHALL BE 1'-0", 2'-0", OR 3'-0" IN HEIGHT. PLACE #57 AGGREGATE BETWEEN COLLAR AND UNDISTURBED EARTH AND/OR SAND BETWEEN COLLAR AND PIPE.
4. TYPE "A" AND "B" DROP CONNECTION MAY BE PRECAST BY MANHOLE MANUFACTURER.
5. FOR BRICK MANHOLE OR TYPE 'A' DROP, USE CAST-IN-PLACE CONCRETE (MIX NO. 1) FROM MANHOLE WALL TO UNDISTURBED EARTH AND MINIMUM 6" PIPE ENCASEMENT IN ALL OTHER DIRECTIONS.

Revised	Howard County, Maryland Department of Public Works	MANHOLE Drop Connection Types "A" and "B"	Detail S-1.32
Revised 5/1/2007 Approved	Approved: Chief, Bureau of Engineering		

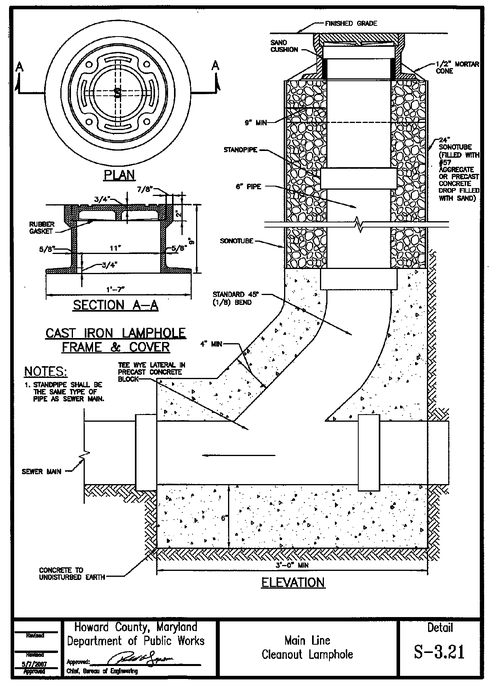

NOTES:
1. STANDPIPE SHALL BE THE SAME TYPE OF PIPE AS SEWER MAIN.

Revised	Howard County, Maryland Department of Public Works	Main Line Cleanout Lamphole	Detail S-3.21
Revised 5/1/2007 Approved	Approved: Chief, Bureau of Engineering		

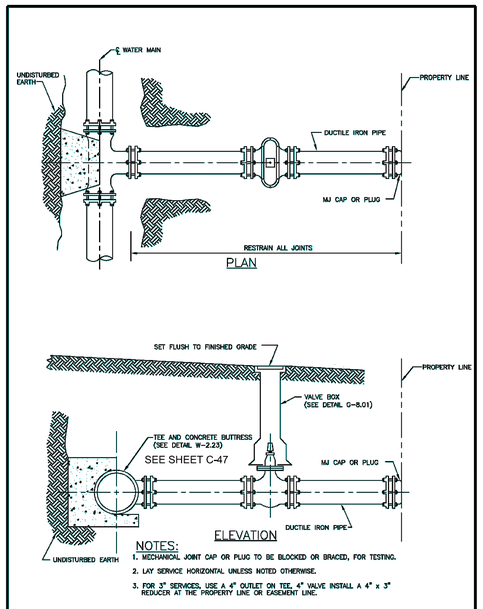

NOTES:
1. MECHANICAL JOINT CAP OR PLUG TO BE BLOCKED OR BRACED, FOR TESTING.
2. LAY SERVICE HORIZONTAL UNLESS NOTED OTHERWISE.
3. FOR 3" SERVICES, USE A 4" OUTLET ON TEE, 4" VALVE INSTALL A 4" x 3" REDUCER AT THE PROPERTY LINE OR EASEMENT LINE.

Revised	Howard County, Maryland Department of Public Works	WATER SERVICE CONNECTION 3", 4", 6", 8", 10", & 12" Inside Meter Settings	Detail W-3.24
Revised 5/1/2007 Approved	Approved: Chief, Bureau of Engineering		

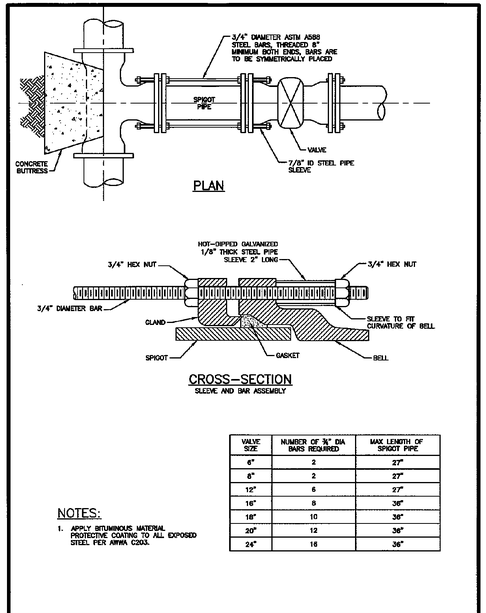

VALVE SIZE	NUMBER OF 3/4" DIA BARS REQUIRED	MAX LENGTH OF SPIGOT PIPE
6"	2	27"
8"	2	27"
12"	6	27"
16"	8	36"
18"	10	36"
20"	12	36"
24"	16	36"

NOTES:
1. APPLY BITUMINOUS MATERIAL PROTECTIVE COATING TO ALL EXPOSED STEEL PER AWWA C203.

Revised	Howard County, Maryland Department of Public Works	WATER MAIN Restraining Valve To Main	Detail W-2.13
Revised 5/1/2007 Approved	Approved: Chief, Bureau of Engineering		

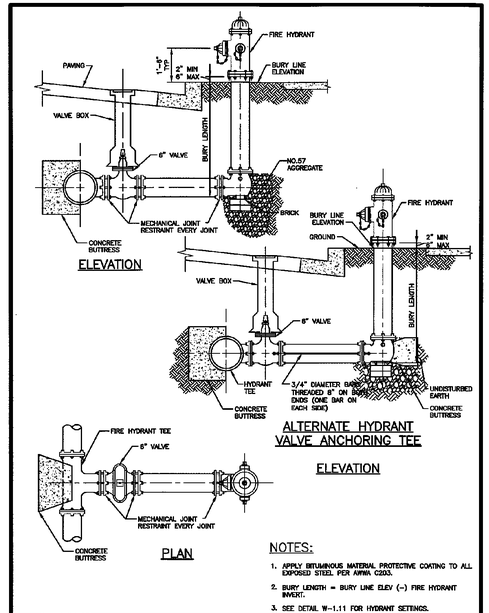

NOTES:
1. APPLY BITUMINOUS MATERIAL PROTECTIVE COATING TO ALL EXPOSED STEEL PER AWWA C203.
2. BURY LENGTH = BURY LINE ELEV (-) FIRE HYDRANT INVERT.
3. SEE DETAIL W-1.11 FOR HYDRANT SETTINGS.

Revised	Howard County, Maryland Department of Public Works	FIRE HYDRANT Restraining Hydrant to Main	Detail W-2.11
Revised 5/1/2007 Approved	Approved: Chief, Bureau of Engineering		

THE DRAWINGS IN THIS SET ARE RECORD DRAWINGS. THEY ARE CONSTRUCTION CONTRACT DRAWINGS WHICH HAVE BEEN REVISED BASED ON AVAILABLE FIELD INFORMATION RECORDED BY OTHERS DURING CONSTRUCTION OF THIS CONTRACT. THERE HAS BEEN NO VERIFICATION OF DIMENSIONS SHOWN ON THE CONSTRUCTION DRAWINGS OR THE ACCURACY/COMPLETENESS OF THE FIELD INFORMATION RECEIVED.

SIGNATURE — DATE 2/7/2023

AS-BUILT REPLACEMENT SHEET

PROFESSIONAL CERTIFICATION
THIS DRAWING WAS ORIGINALLY APPROVED FOR CONSTRUCTION AND SEALED BY ROBERT BAYSDEN, A REGISTERED PROFESSIONAL ENGINEER IN THE STATE OF MARYLAND, NO. 49972.

NOTICE TO CONTRACTORS
- PROJECT ELEVATIONS ARE BASED ON NAVD88 AND HOWARD COUNTY'S BENCHMARK SYSTEM
- PREVIOUS PROJECTS USED OTHER DATUMS
- APPLY THE FOLLOWING CONVERSIONS WHEN USING PREVIOUS CONTRACT DRAWINGS:
  - ADDITION NO. 6: SUBTRACT 0.80 FT
  - PRIOR ADDITIONS: SUBTRACT 1.04 FT

DEPARTMENT OF PUBLIC WORKS
HOWARD COUNTY, MARYLAND

CHIEF, BUREAU OF UTILITIES — DATE

DES: M.L.
DRN: S.W.
CHK: R.B.
DATE: 03/16

DATE	REV	DESCRIPTION
07/2019		RECORD DRAWINGS

CIVIL

CIVIL DETAILS

LITTLE PATUXENT WATER RECLAMATION PLANT
8TH ADDITION
BIOSOLIDS PROCESSING FACILITIES – PHASE I

CAPITAL PROJECT S-6295
CONTRACT NO. 24-4935

ELECTION DISTRICT NO. 6
HOWARD COUNTY, MARYLAND

SCALE AS SHOWN

SHEET 94 OF 463

C-49

C:\pwworking\pitt\d1901214\ C-49.dwg 01/11/22_8:52

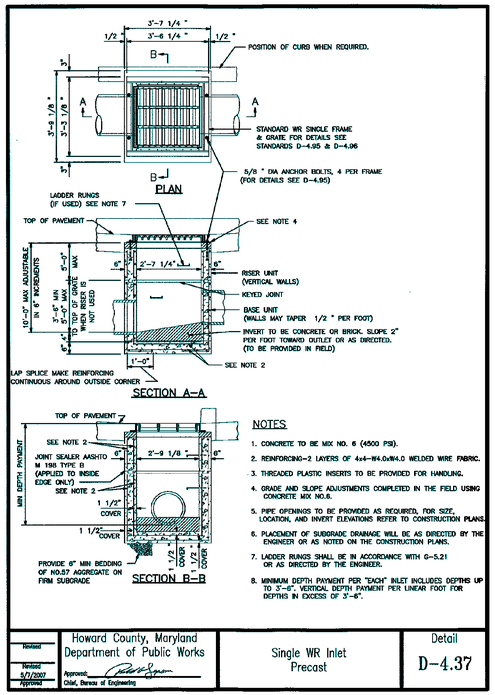

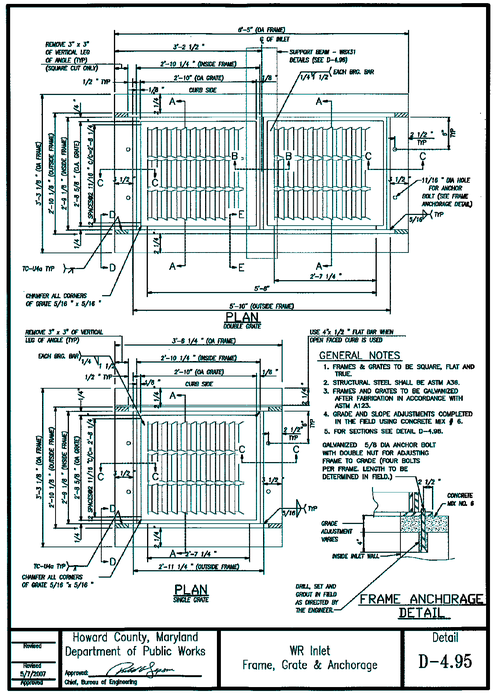

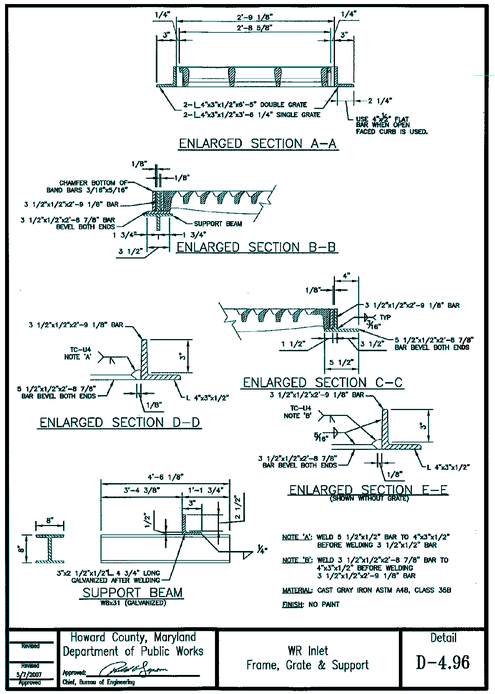

SECTION NUMBER	ROAD AND STREET CLASSIFICATION	CALIFORNIA BEARING RATIO (CBR)	3 TO <5	5 TO <7	≥ 7	3 TO <5	5 TO <7	≥ 7
		PAVEMENT MATERIAL (INCHES)	MIN HMA WITH GAB			HMA WITH CONSTANT GAB		
P-1	PARKING BAYS: RESIDENTIAL AND NON-RESIDENTIAL PARKING DRIVE AISLES: RESIDENTIAL AND NON-RESIDENTIAL WITH NO MORE THAN 2 HEAVY TRUCKS PER DAY	HMA SUPERPAVE FINAL SURFACE 9.5 MM PG 64-22, LEVEL 1 (ESAL)	1.5	1.5	1.5	1.5	1.5	1.5
		HMA SUPERPAVE INTERMEDIATE SURFACE (NA)	NA	NA	NA	NA	NA	NA
		HMA SUPERPAVE BASE 19.0 MM, PG 64-22, LEVEL 1 (ESAL)	2.0	2.0	2.0	3.5	3.0	2.5
		GRADED AGGREGATE BASE (GAB)	8.5	7.0	5.0	4.0	4.0	4.0
P-2	PARKING DRIVE AISLES: RESIDENTIAL AND NON-RESIDENTIAL WITH NO MORE THAN 10 HEAVY TRUCKS PER DAY LOCAL ROADS: ACCESS PLACE, ACCESS STREET CUL-DE-SACS: RESIDENTIAL	HMA SUPERPAVE FINAL SURFACE 9.5 MM, PG 64-22, LEVEL 1 (ESAL)	1.5	1.5	1.5	1.5	1.5	1.5
		HMA SUPERPAVE INTERMEDIATE SURFACE 9.5 MM, PG 64-22, LEVEL 1 (ESAL)	1.0	1.0	1.0	1.0	1.0	1.0
		HMA SUPERPAVE BASE 19.0 MM, PG 64-22, LEVEL 1 (ESAL)	2.0	2.0	2.0	3.5	2.0	2.0
		GRADED AGGREGATE BASE (GAB)	8.0	4.0	3.0	4.0	4.0	4.0
P-3	PARKING DRIVE AISLES: RESIDENTIAL AND NON-RESIDENTIAL WITH NO MORE THAN 10 HEAVY TRUCKS PER DAY LOCAL ROADS: ACCESS PLACE, ACCESS STREET CUL-DE-SACS: NON-RESIDENTIAL MINOR COLLECTORS: RESIDENTIAL	HMA SUPERPAVE FINAL SURFACE 9.5 MM, PG 64-22, LEVEL 1 (ESAL)	1.5	1.5	1.5	1.5	1.5	1.5
		HMA SUPERPAVE INTERMEDIATE SURFACE 9.5 MM, PG 64-22, LEVEL 1 (ESAL)	1.0	1.0	1.0	1.0	1.0	1.0
		HMA SUPERPAVE BASE 19.0 MM, PG 64-22, LEVEL 1 (ESAL)	3.0	3.0	3.0	4.5	3.0	2.0
		GRADED AGGREGATE BASE (GAB)	10.0	6.0	3.0	6.0	6.0	6.0
P-4	MINOR COLLECTORS: NON-RESIDENTIAL MAJOR COLLECTORS	HMA SUPERPAVE FINAL SURFACE 12.5 MM, PG 64-22, LEVEL 2 (LOW ESAL)	2.0	2.0	2.0	2.0	2.0	2.0
		HMA SUPERPAVE INTERMEDIATE SURFACE 12.5 MM, PG 64-22, LEVEL 2 (LOW ESAL)	2.0	2.0	2.0	2.0	2.0	2.0
		HMA SUPERPAVE BASE 19.0 MM, PG 64-22, LEVEL 2 (LOW ESAL)	4.0	4.0	3.0	6.0	5.0	3.0
		GRADED AGGREGATE BASE (GAB)	13.0	7.0	4.0	6.0	6.0	6.0

Notes:
1) HEAVY TRUCKS ARE DEFINED AS THOSE WITH SIX (6) WHEELS OR MORE INCLUDING GARBAGE TRUCKS.
2) HMA SUPERPAVE LAYERS SHALL BE PLACED IN APPROPRIATE COMPACTED LIFT THICKNESS: 19.0 MM BASE (2.0" MIN TO 4.0" MAX), 12.5 MM SURFACE (1.5" MIN TO 3.0" MAX), AND 9.5 MM SURFACE (1.0" MIN TO 2.0" MAX)
3) GRADED AGGREGATE BASE (GAB) TO BE PLACED AND COMPACTED IN 6" MAX COMPACTED THICKNESS LAYERS.
4) THE INTERMEDIATE SURFACE COURSE LAYER MUST BE PLACED WITHIN 2 WEEKS OF PLACEMENT OF BASE COURSE, AND IS REQUIRED PRIOR TO SUBSTANTIAL COMPLETION INSPECTION AND BOND REDUCTION.
5) IN LIEU OF PLACING THE INTERMEDIATE SURFACE COURSE LAYER FOR COMMERCIAL/INDUSTRIAL ENTRANCE APRONS WITHIN THE COUNTY RIGHT-OF-WAY WHERE AUXILIARY LANES ARE NOT REQUIRED, THE THICKNESS OF THE INTERMEDIATE PAVEMENT LAYER CAN BE ADDED TO THE REQUIRED THICKNESS OF THE BASE ASPHALT LAYER.
6) THE CONSTRUCTION DRAWINGS SHALL SHOW THE PAVING SECTION, ROAD CLASSIFICATION AND CRB VALUE FOR EACH ROADWAY

HMA SUPERPAVE FINAL SURFACE
HMA SUPERPAVE INTERMEDIATE SURFACE
HMA SUPERPAVE BASE
GRADED AGGREGATE BASE (GAB)

Howard County, Maryland Department of Public Works
Approved: Chief, Bureau of Engineering
PAVING SECTIONS P-1 to P-4
Detail R-2.01

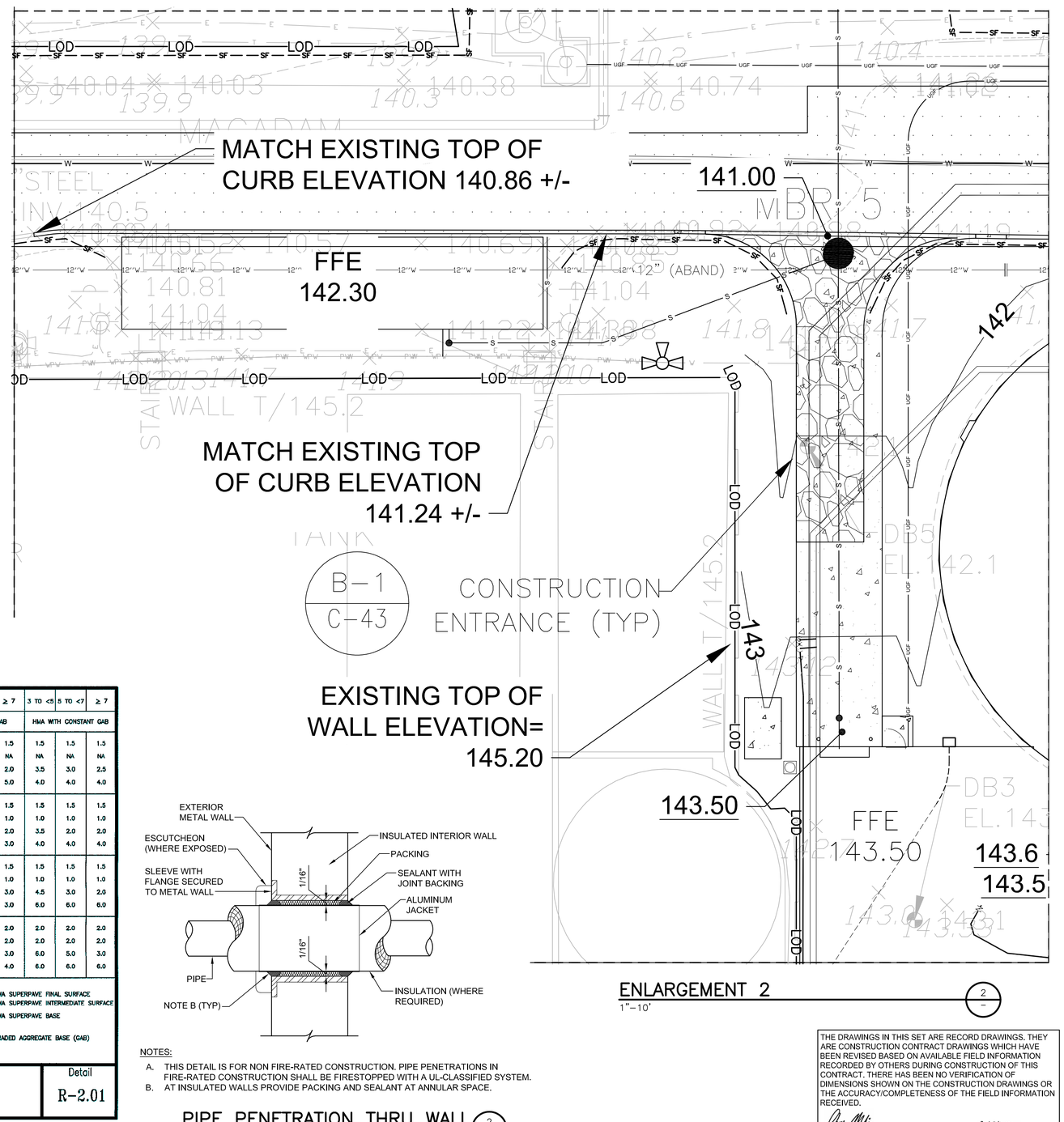

ENLARGEMENT 2
1"=10'
2

NOTES:
A. THIS DETAIL IS FOR NON FIRE-RATED CONSTRUCTION. PIPE PENETRATIONS IN FIRE-RATED CONSTRUCTION SHALL BE FIRESTOPPED WITH A UL-CLASSIFIED SYSTEM.
B. AT INSULATED WALLS PROVIDE PACKING AND SEALANT AT ANNULAR SPACE.

PIPE PENETRATION THRU WALL
NOT TO SCALE
2

THE DRAWINGS IN THIS SET ARE RECORD DRAWINGS. THEY ARE CONSTRUCTION CONTRACT DRAWINGS WHICH HAVE BEEN REVISED BASED ON AVAILABLE FIELD INFORMATION RECORDED BY OTHERS DURING CONSTRUCTION OF THIS CONTRACT. THERE HAS BEEN NO VERIFICATION OF DIMENSIONS SHOWN ON THE CONSTRUCTION DRAWINGS OR THE ACCURACY/COMPLETENESS OF THE FIELD INFORMATION RECEIVED.

SIGNATURE — DATE 2/7/2020

C:\pwworking\pitt\d1901214\ C-50.dwg 01/11/22 8:57

AS-BUILT REPLACEMENT SHEET

PROFESSIONAL CERTIFICATION
THIS DRAWING WAS ORIGINALLY APPROVED FOR CONSTRUCTION AND SEALED BY ROBERT BAYSDEN, A REGISTERED PROFESSIONAL ENGINEER IN THE STATE OF MARYLAND, NO. 49972.

NOTICE TO CONTRACTORS
- PROJECT ELEVATIONS ARE BASED ON NAVD88 AND HOWARD COUNTY'S BENCHMARK SYSTEM
- PREVIOUS PROJECTS USED OTHER DATUMS
- APPLY THE FOLLOWING CONVERSIONS WHEN USING PREVIOUS CONTRACT DRAWINGS:
  - ADDITION NO. 6: SUBTRACT 0.80 FT
  - PRIOR ADDITIONS: SUBTRACT 1.04 FT

DEPARTMENT OF PUBLIC WORKS
HOWARD COUNTY, MARYLAND
CHIEF, BUREAU OF UTILITIES — DATE

DES: M.L.
DRN: S.W.
CHK: R.B.
DATE: 03/16

DATE	REV	DESCRIPTION
07/2019		RECORD DRAWINGS

CIVIL

CIVIL DETAILS

LITTLE PATUXENT WATER RECLAMATION PLANT
8TH ADDITION
BIOSOLIDS PROCESSING FACILITIES – PHASE I

CAPITAL PROJECT S-6295
CONTRACT NO. 24-4935

ELECTION DISTRICT NO. 6
HOWARD COUNTY, MARYLAND

SCALE AS SHOWN

SHEET 95 OF 463

C-50

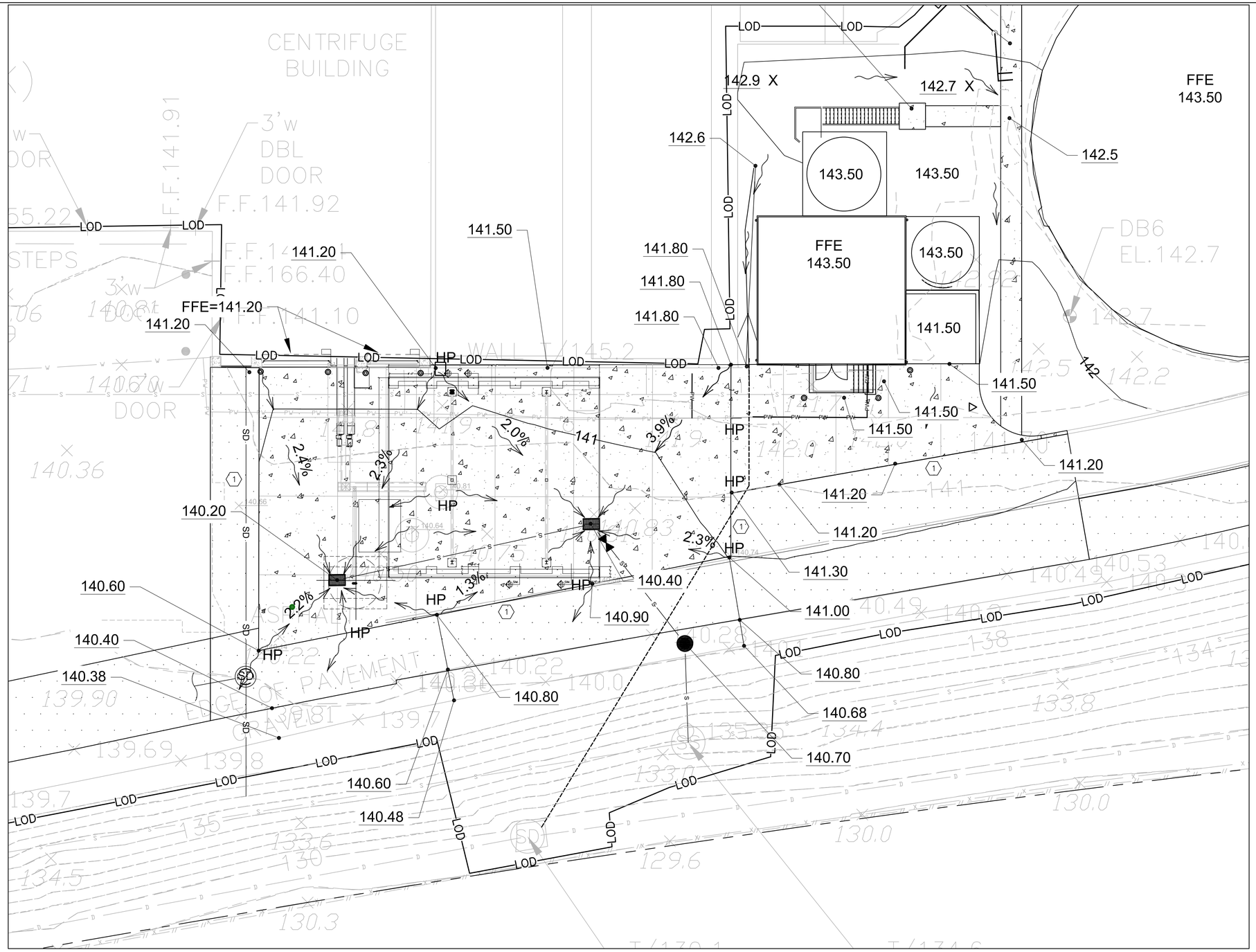

KEY NOTES:

(1) PROVIDE SMOOTH TRANSITION FROM CONCRETE TO ASPHALT PAVING.

ENLARGEMENT 1

1"–10'

THE DRAWINGS IN THIS SET ARE RECORD DRAWINGS. THEY ARE CONSTRUCTION CONTRACT DRAWINGS WHICH HAVE BEEN REVISED BASED ON AVAILABLE FIELD INFORMATION RECORDED BY OTHERS DURING CONSTRUCTION OF THIS CONTRACT. THERE HAS BEEN NO VERIFICATION OF DIMENSIONS SHOWN ON THE CONSTRUCTION DRAWINGS OR THE ACCURACY/COMPLETENESS OF THE FIELD INFORMATION RECEIVED.

SIGNATURE — DATE 2/7/2023

AS-BUILT REPLACEMENT SHEET

PROFESSIONAL CERTIFICATION
THIS DRAWING WAS ORIGINALLY APPROVED FOR CONSTRUCTION AND SEALED BY ROBERT BAYSDEN, A REGISTERED PROFESSIONAL ENGINEER IN THE STATE OF MARYLAND, NO. 49972.

NOTICE TO CONTRACTORS
- PROJECT ELEVATIONS ARE BASED ON NAVD88 AND HOWARD COUNTY'S BENCHMARK SYSTEM
- PREVIOUS PROJECTS USED OTHER DATUMS
- APPLY THE FOLLOWING CONVERSIONS WHEN USING PREVIOUS CONTRACT DRAWINGS:
  - ADDITION NO. 6: SUBTRACT 0.80 FT
  - PRIOR ADDITIONS: SUBTRACT 1.04 FT

DEPARTMENT OF PUBLIC WORKS
HOWARD COUNTY, MARYLAND

CHIEF, BUREAU OF UTILITIES — DATE

DES: M.L.
DRN: S.W.
CHK: R.B.
DATE: 03/16

DATE	REV	DESCRIPTION
07/2019		RECORD DRAWINGS

CIVIL

CIVIL DETAILS

LITTLE PATUXENT WATER RECLAMATION PLANT
8TH ADDITION
BIOSOLIDS PROCESSING FACILITIES – PHASE I

CAPITAL PROJECT S–6295
CONTRACT NO. 24–4935

ELECTION DISTRICT NO. 6
HOWARD COUNTY, MARYLAND

SCALE AS SHOWN

SHEET 96 OF 463

C-51

C:\pwworking\pitt\d1901214\ C-51.dwg 01/11/22_9:02

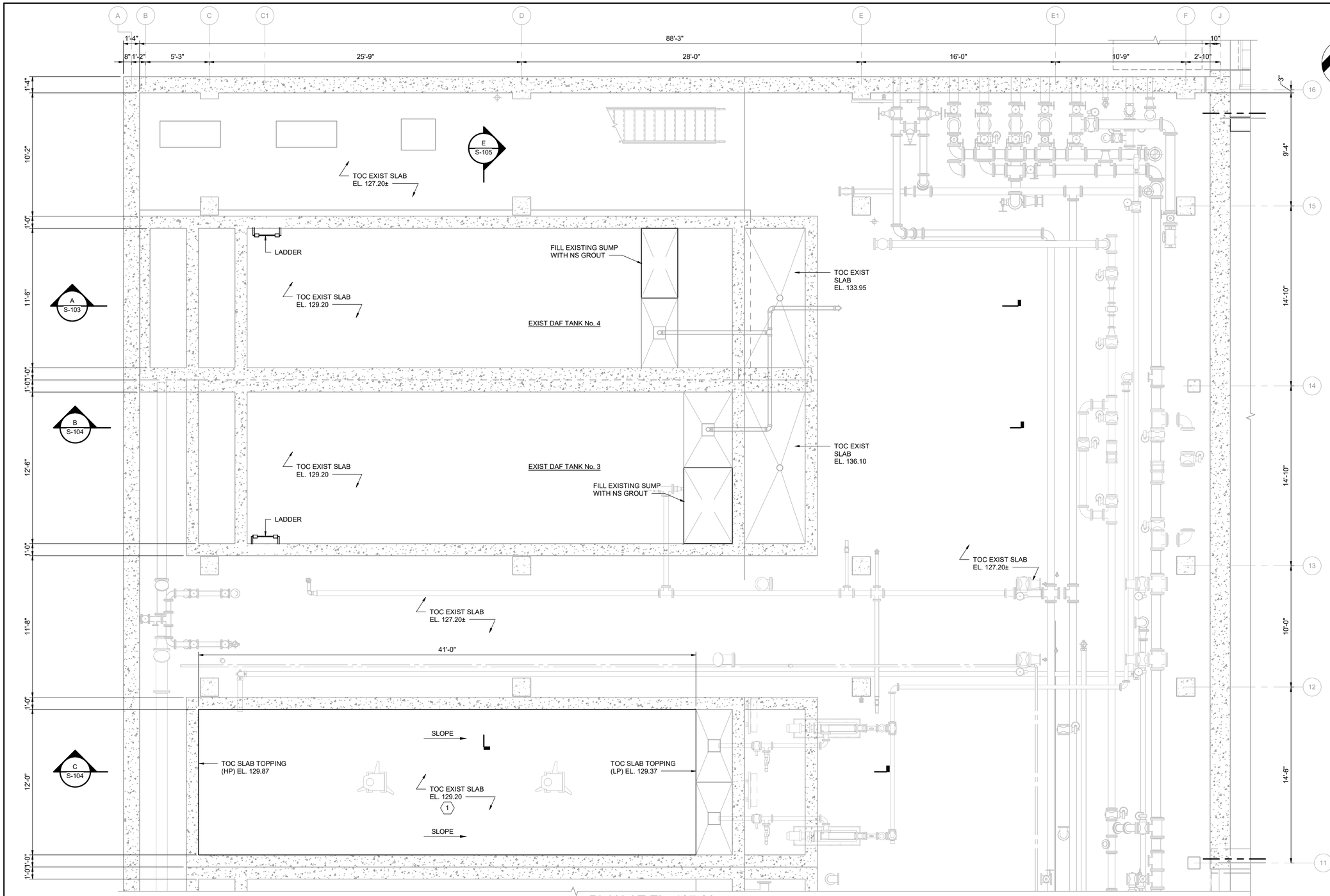

PLAN AT EL. 127.20

1/4" = 1'-0"

GENERAL NOTES:

1. SEE SHEET S-901 FOR STRUCTURAL NOTES.
2. (*) INDICATES DIMENSION/ITEM TO BE VERIFIED PRIOR TO FABRICATION/CONSTRUCTION.
3. SEE SHEET X-101 FOR DEMOLITION.

KEY NOTES:

1. HYDRO OR GRIT CLEAN EXISTING SLAB AND ROUGHEN SURFACE TO 1/4" AMPLITUDE PRIOR TO NEW CONCRETE TOPPING.

THE DRAWINGS IN THIS SET ARE RECORD DRAWINGS. THEY ARE CONSTRUCTION CONTRACT DRAWINGS WHICH HAVE BEEN REVISED BASED ON AVAILABLE FIELD INFORMATION RECORDED BY OTHERS DURING CONSTRUCTION OF THIS CONTRACT. THERE HAS BEEN NO VERIFICATION OF DIMENSIONS SHOWN ON THE CONSTRUCTION DRAWINGS OR THE ACCURACY/COMPLETENESS OF THE FIELD INFORMATION RECEIVED.

SIGNATURE 2/7/2023 DATE

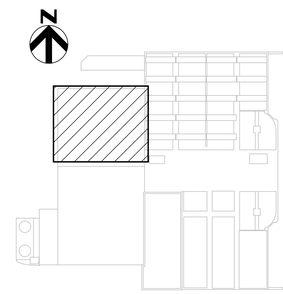

KEY PLAN

AS-BUILT REPLACEMENT SHEET

PROFESSIONAL CERTIFICATION

THIS DRAWING WAS ORIGINALLY APPROVED FOR CONSTRUCTION AND SEALED BY MICHAEL E. MARTIN, A REGISTERED PROFESSIONAL ENGINEER IN THE STATE OF MARYLAND, NO. 49839

NOTICE TO CONTRACTORS

- PROJECT ELEVATIONS ARE BASED ON NAVD88 AND HOWARD COUNTY'S BENCHMARK SYSTEM
- PREVIOUS PROJECTS USED OTHER DATUMS
- APPLY THE FOLLOWING CONVERSIONS WHEN USING PREVIOUS CONTRACT DRAWINGS:
  - ADDITION NO. 6: SUBTRACT 0.80 FT
  - PRIOR ADDITIONS: SUBTRACT 1.04 FT

DEPARTMENT OF PUBLIC WORKS
HOWARD COUNTY, MARYLAND

CHIEF, BUREAU OF UTILITIES DATE

DES: HMA
DRN: WTM
CHK: MEM
DATE: 12/2016

DATE	REV	DESCRIPTION
07/2019		RECORD DRAWING

STRUCTURAL

GRAVITY BELT THICKENER AREA PLAN - EL 127.20

LITTLE PATUXENT WATER RECLAMATION PLANT
8TH ADDITION
BIOSOLIDS PROCESSING FACILITIES - PHASE I

CAPITAL PROJECT S-6295
CONTRACT NO. 24-4935

ELECTION DISTRICT NO. 6
HOWARD COUNTY, MARYLAND

SCALE AS SHOWN

SHEET 97 OF 463

S-100

BIM 360://10054364 – Little Patuxent WRP 8th Addition/264591_100_S_V18.rvt
1/10/2022 2:13:09 PM

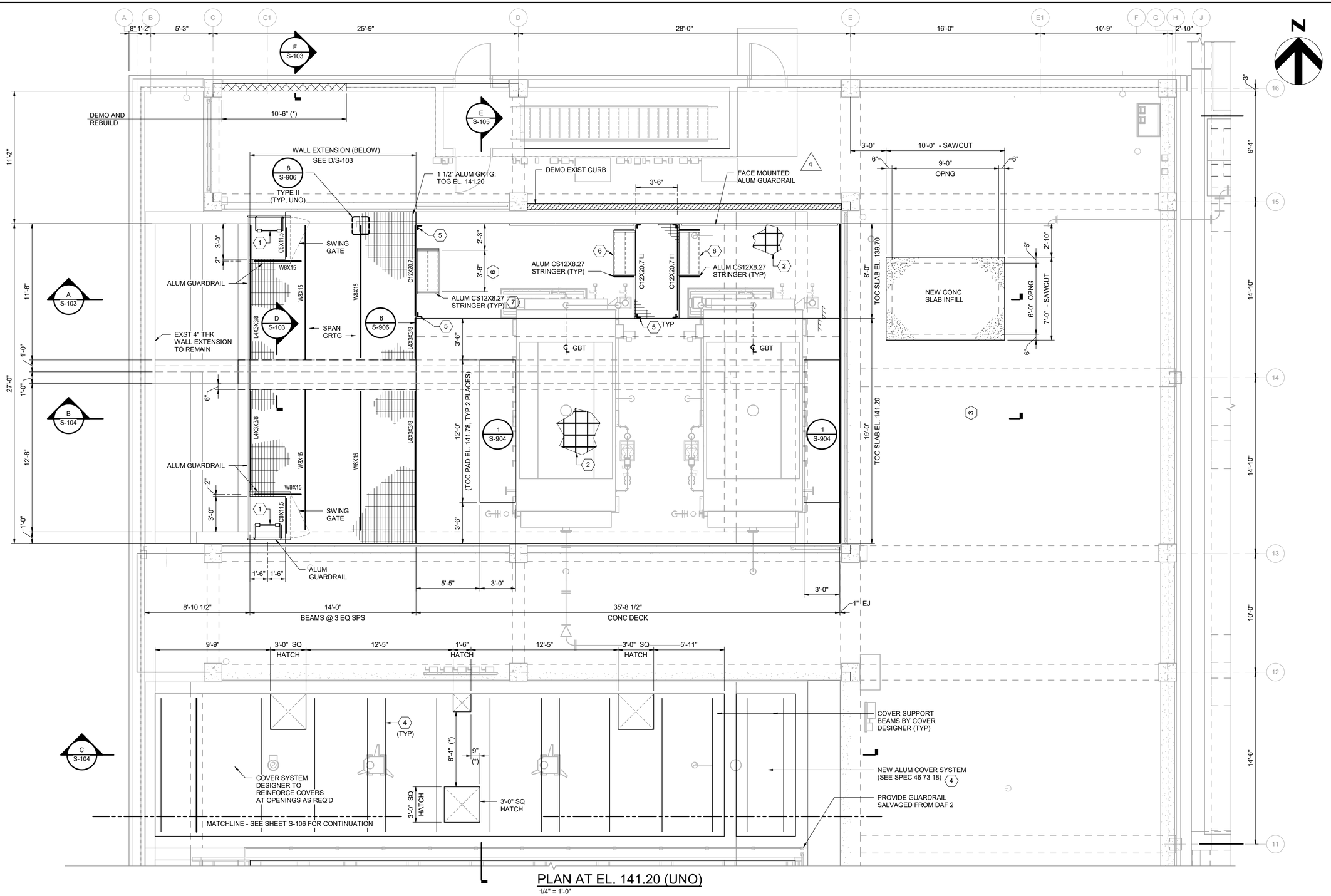

PLAN AT EL. 141.20 (UNO)

1/4" = 1'-0"

GENERAL NOTES:

1. SEE SHEET S-100 FOR ADDITIONAL NOTES.
2. ALL STEEL TO BE HOT-DIP GALVANIZED.

LOADING:

LIVE: 200 PSF
GRATING & STAIRS: 100 PSF
ALUM COVERS: 50 PSF

KEY NOTES:

1. SIDE-STEP LADDER DOWN TO ELEVATION 129.20.
2. 12" THICK (MIN CONC SLAB W/ #5@12 EW T&B (OUTSIDE MAT RUNS N/S, INSIDE MAT RUNS E/W), TOC SLAB ELEVATION SEE PLAN.
3. TOP OF CONCRETE SLAB TO MATCH EXISTING TOP OF CONCRETE FLOOR. VERIFY PRIOR TO CONSTRUCTION.
4. CONTRACTOR TO COORDINATE EQUIPMENT LOCATIONS/WEIGHTS AND PENETRATION LOCATIONS WITH COVER DESIGNER.
5. L4X4X3/8 WITH (2)-3/4"Ø BOLTS ON GAGE THRU C12 AND CONNECTED TO CONCRETE WITH (2)-3/4"Ø ADHESIVE ANCHORS (MINIMUM 6" EMBEDMENT).
6. 3 R @ 6" = 1'-6", 2 T @ 11" = 1'-10".
7. ISOLATE ALUMINUM FROM STEEL AND CONCRETE PER SPECIFICATIONS.

THE DRAWINGS IN THIS SET ARE RECORD DRAWINGS. THEY ARE CONSTRUCTION CONTRACT DRAWINGS WHICH HAVE BEEN REVISED BASED ON AVAILABLE FIELD INFORMATION RECORDED BY OTHERS DURING CONSTRUCTION OF THIS CONTRACT. THERE HAS BEEN NO VERIFICATION OF DIMENSIONS SHOWN ON THE CONSTRUCTION DRAWINGS OR THE ACCURACY/COMPLETENESS OF THE FIELD INFORMATION RECEIVED.

SIGNATURE — DATE 2/7/2023

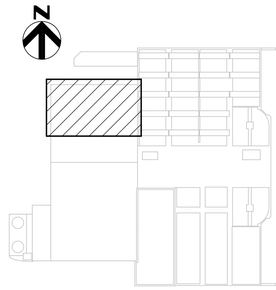

KEY PLAN

AS-BUILT REPLACEMENT SHEET

PROFESSIONAL CERTIFICATION

THIS DRAWING WAS ORIGINALLY APPROVED FOR CONSTRUCTION AND SEALED BY MICHAEL E. MARTIN, A REGISTERED PROFESSIONAL ENGINEER IN THE STATE OF MARYLAND, NO. 49839

NOTICE TO CONTRACTORS

- PROJECT ELEVATIONS ARE BASED ON NAVD88 AND HOWARD COUNTY'S BENCHMARK SYSTEM
- PREVIOUS PROJECTS USED OTHER DATUMS
- APPLY THE FOLLOWING CONVERSIONS WHEN USING PREVIOUS CONTRACT DRAWINGS:
  - ADDITION NO. 6: SUBTRACT 0.80 FT
  - PRIOR ADDITIONS: SUBTRACT 1.04 FT

DEPARTMENT OF PUBLIC WORKS
HOWARD COUNTY, MARYLAND

CHIEF, BUREAU OF UTILITIES — DATE

DES: HMA
DRN: WTM
CHK: MEM
DATE: 12/2016

DATE	REV	DESCRIPTION
07/2019		RECORD DRAWING

STRUCTURAL

GRAVITY BELT THICKENER AREA
PLAN - EL 141.20 (UNO)

LITTLE PATUXENT WATER RECLAMATION PLANT
8TH ADDITION
BIOSOLIDS PROCESSING FACILITIES - PHASE I

CAPITAL PROJECT S-6295
CONTRACT NO. 24-4935

ELECTION DISTRICT NO. 6
HOWARD COUNTY, MARYLAND

SCALE AS SHOWN

SHEET 98 OF 463

S-101

BIM 360://10054364 – Little Patuxent WRP 8th Addition/264591_100_S_V18.rvt
1/10/2022 2:13:12 PM

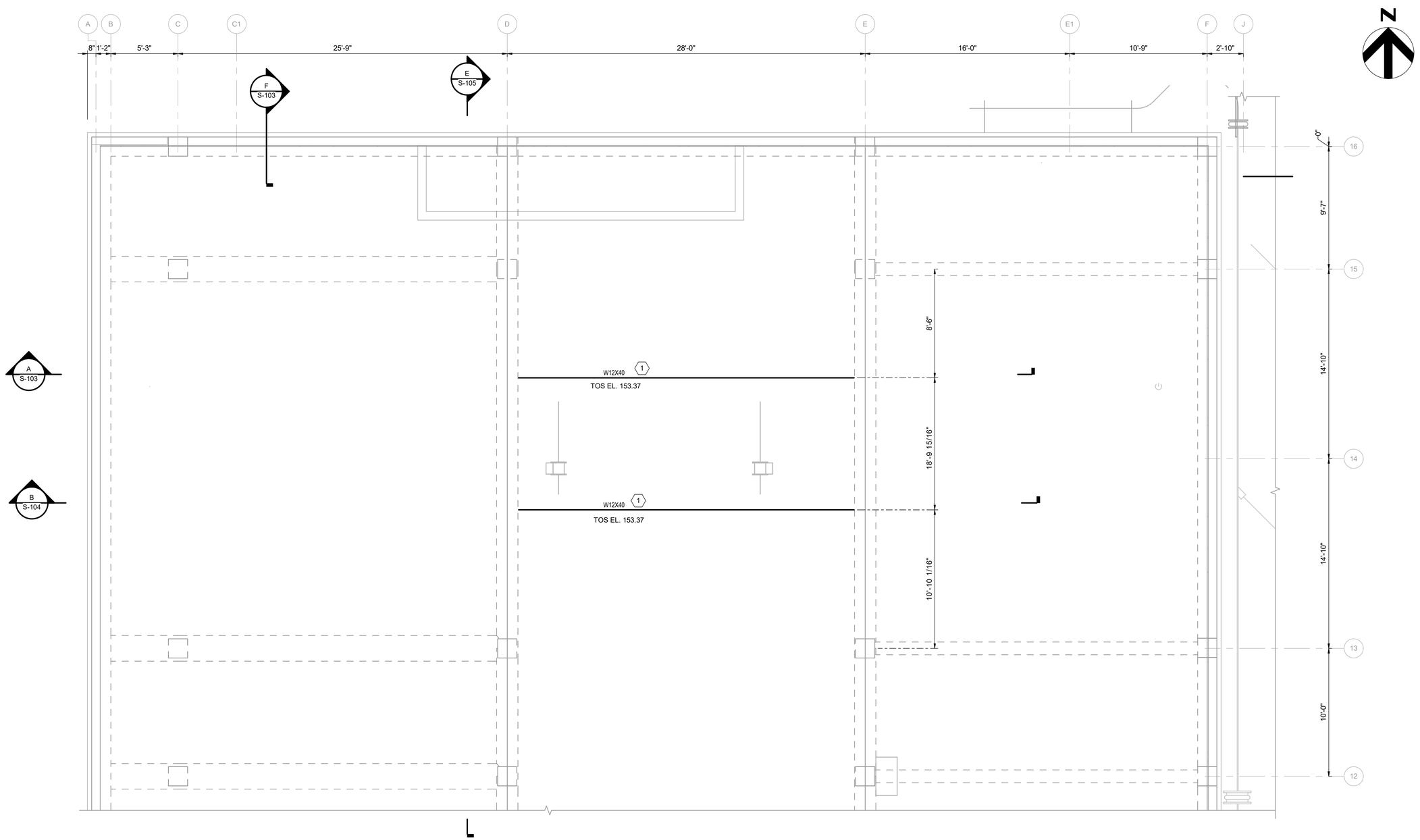

ROOF PLAN
1/4" = 1'-0"

GENERAL NOTES:
1. SEE SHEET S-100 FOR ADDITIONAL NOTES.

KEY NOTES:
1 LIFT BEAM - 4 TON CAPACITY.

THE DRAWINGS IN THIS SET ARE RECORD DRAWINGS. THEY ARE CONSTRUCTION CONTRACT DRAWINGS WHICH HAVE BEEN REVISED BASED ON AVAILABLE FIELD INFORMATION RECORDED BY OTHERS DURING CONSTRUCTION OF THIS CONTRACT. THERE HAS BEEN NO VERIFICATION OF DIMENSIONS SHOWN ON THE CONSTRUCTION DRAWINGS OR THE ACCURACY/COMPLETENESS OF THE FIELD INFORMATION RECEIVED.

SIGNATURE DATE

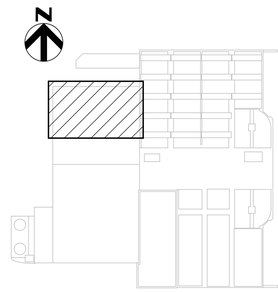

KEY PLAN

AS-BUILT REPLACEMENT SHEET

PROFESSIONAL CERTIFICATION
THIS DRAWING WAS ORIGINALLY APPROVED FOR CONSTRUCTION AND SEALED BY MICHAEL E. MARTIN, A REGISTERED PROFESSIONAL ENGINEER IN THE STATE OF MARYLAND, NO. 49839

NOTICE TO CONTRACTORS
- PROJECT ELEVATIONS ARE BASED ON NAVD88 AND HOWARD COUNTY'S BENCHMARK SYSTEM
- PREVIOUS PROJECTS USED OTHER DATUMS
- APPLY THE FOLLOWING CONVERSIONS WHEN USING PREVIOUS CONTRACT DRAWINGS:
  - ADDITION NO. 6: SUBTRACT 0.80 FT
  - PRIOR ADDITIONS: SUBTRACT 1.04 FT

DEPARTMENT OF PUBLIC WORKS
HOWARD COUNTY, MARYLAND

CHIEF, BUREAU OF UTILITIES DATE

DES: HMA
DRN: WTM
CHK: MEM
DATE: 12/2016

DATE	REV	DESCRIPTION
07/2019		RECORD DRAWING

STRUCTURAL

GRAVITY BELT THICKENER AREA ROOF PLAN

LITTLE PATUXENT WATER RECLAMATION PLANT
8TH ADDITION
BIOSOLIDS PROCESSING FACILITIES - PHASE I

CAPITAL PROJECT S-6295
CONTRACT NO. 24-4935

ELECTION DISTRICT NO. 6
HOWARD COUNTY, MARYLAND

SCALE AS SHOWN

SHEET 99 OF 463

S-102

BIM 360://10054364 – Little Patuxent WRP 8th Addition/264591_100_S_V18.rvt
1/10/2022 2:13:13 PM

GENERAL NOTES:

1. SEE SHEET S-101 FOR ADDITIONAL NOTES.

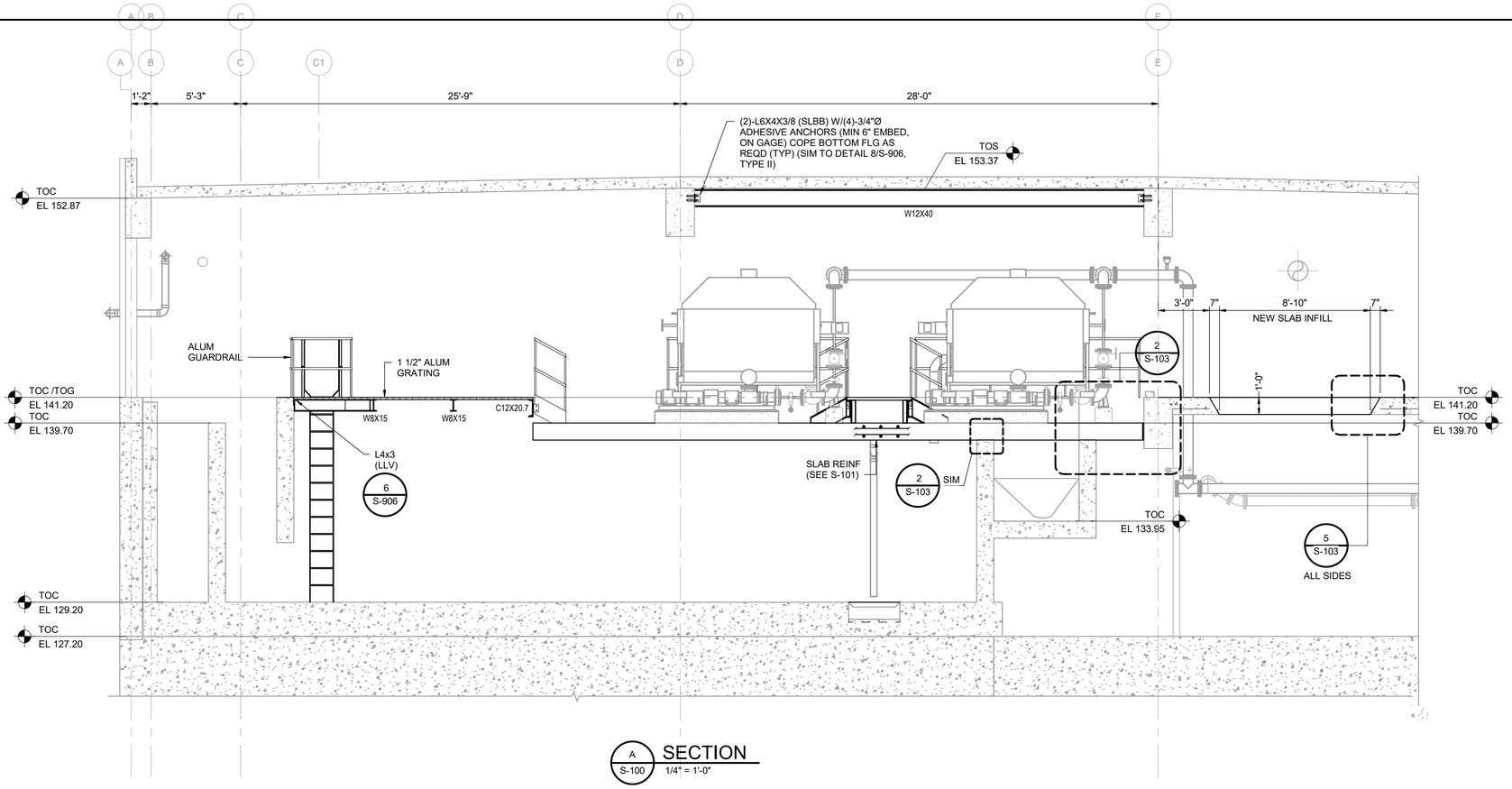

A S-100 SECTION
1/4" = 1'-0"

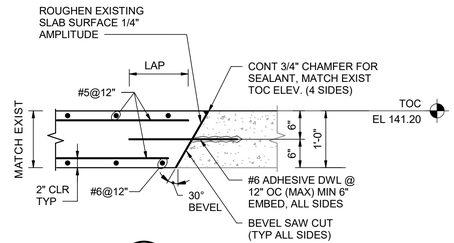

5 S-103 DETAIL
3/4" = 1'-0"

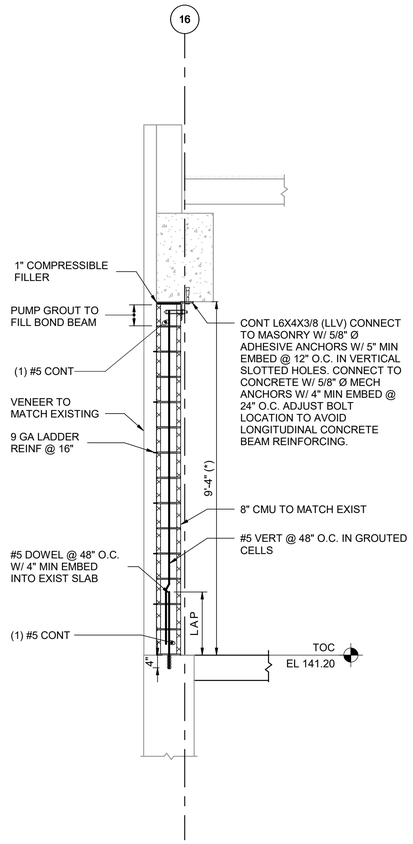

F S-101 SECTION
1/2" = 1'-0"

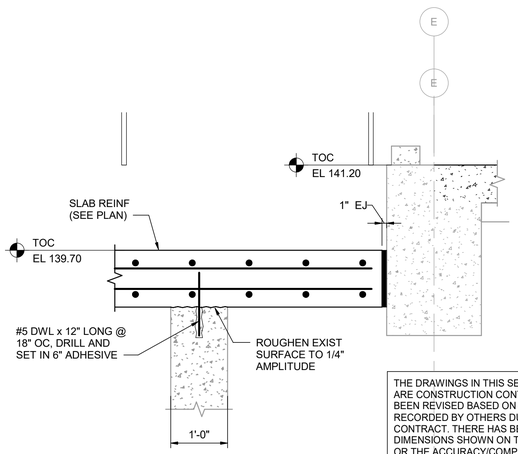

2 S-103 DETAIL
3/4" = 1'-0"

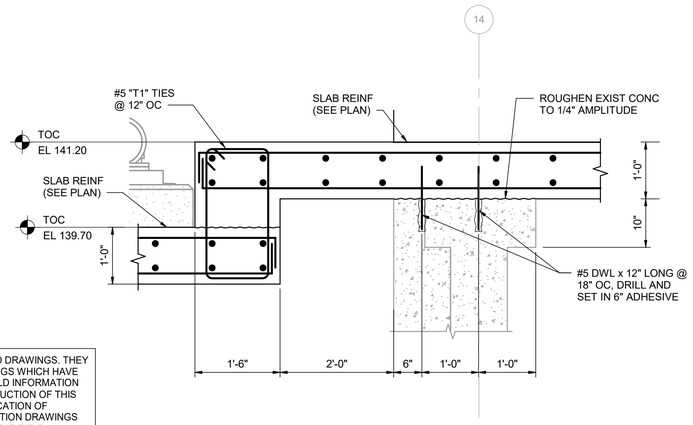

3 S-105 DETAIL
3/4" = 1'-0"

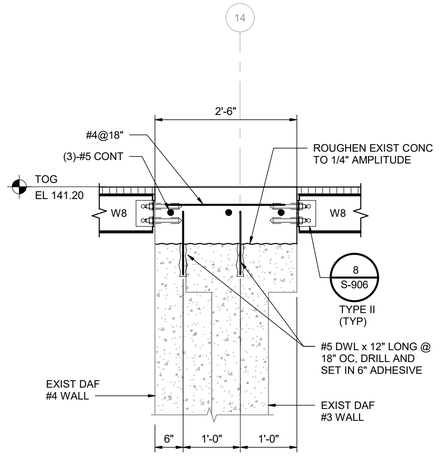

D S-101 SECTION
3/4" = 1'-0"

THE DRAWINGS IN THIS SET ARE RECORD DRAWINGS. THEY ARE CONSTRUCTION CONTRACT DRAWINGS WHICH HAVE BEEN REVISED BASED ON AVAILABLE FIELD INFORMATION RECORDED BY OTHERS DURING CONSTRUCTION OF THIS CONTRACT. THERE HAS BEEN NO VERIFICATION OF DIMENSIONS SHOWN ON THE CONSTRUCTION DRAWINGS OR THE ACCURACY/COMPLETENESS OF THE FIELD INFORMATION RECEIVED.

SIGNATURE _____ DATE 2/7/2023

BIM 360://10054364 – Little Patuxent WRP 8th Addition/264591_100_S_V18.rvt
1/10/2022 2:13:16 PM

AS-BUILT REPLACEMENT SHEET

PROFESSIONAL CERTIFICATION

THIS DRAWING WAS ORIGINALLY APPROVED FOR CONSTRUCTION AND SEALED BY MICHAEL E. MARTIN, A REGISTERED PROFESSIONAL ENGINEER IN THE STATE OF MARYLAND, NO. 49839

NOTICE TO CONTRACTORS

- PROJECT ELEVATIONS ARE BASED ON NAVD88 AND HOWARD COUNTY'S BENCHMARK SYSTEM
- PREVIOUS PROJECTS USED OTHER DATUMS
- APPLY THE FOLLOWING CONVERSIONS WHEN USING PREVIOUS CONTRACT DRAWINGS:
  - ADDITION NO. 6: SUBTRACT 0.80 FT
  - PRIOR ADDITIONS: SUBTRACT 1.04 FT

DEPARTMENT OF PUBLIC WORKS
HOWARD COUNTY, MARYLAND

CHIEF, BUREAU OF UTILITIES DATE

DES: HMA
DRN: WTM
CHK: MEM
DATE: 12/2016

DATE	REV	DESCRIPTION
07/2019		RECORD DRAWING

STRUCTURAL

GRAVITY BELT THICKENER AREA SECTIONS 1

LITTLE PATUXENT WATER RECLAMATION PLANT
8TH ADDITION
BIOSOLIDS PROCESSING FACILITIES - PHASE I

CAPITAL PROJECT S-6295
CONTRACT NO. 24-4935

ELECTION DISTRICT NO. 6
HOWARD COUNTY, MARYLAND

SCALE AS SHOWN

SHEET 100 OF 463

S-103

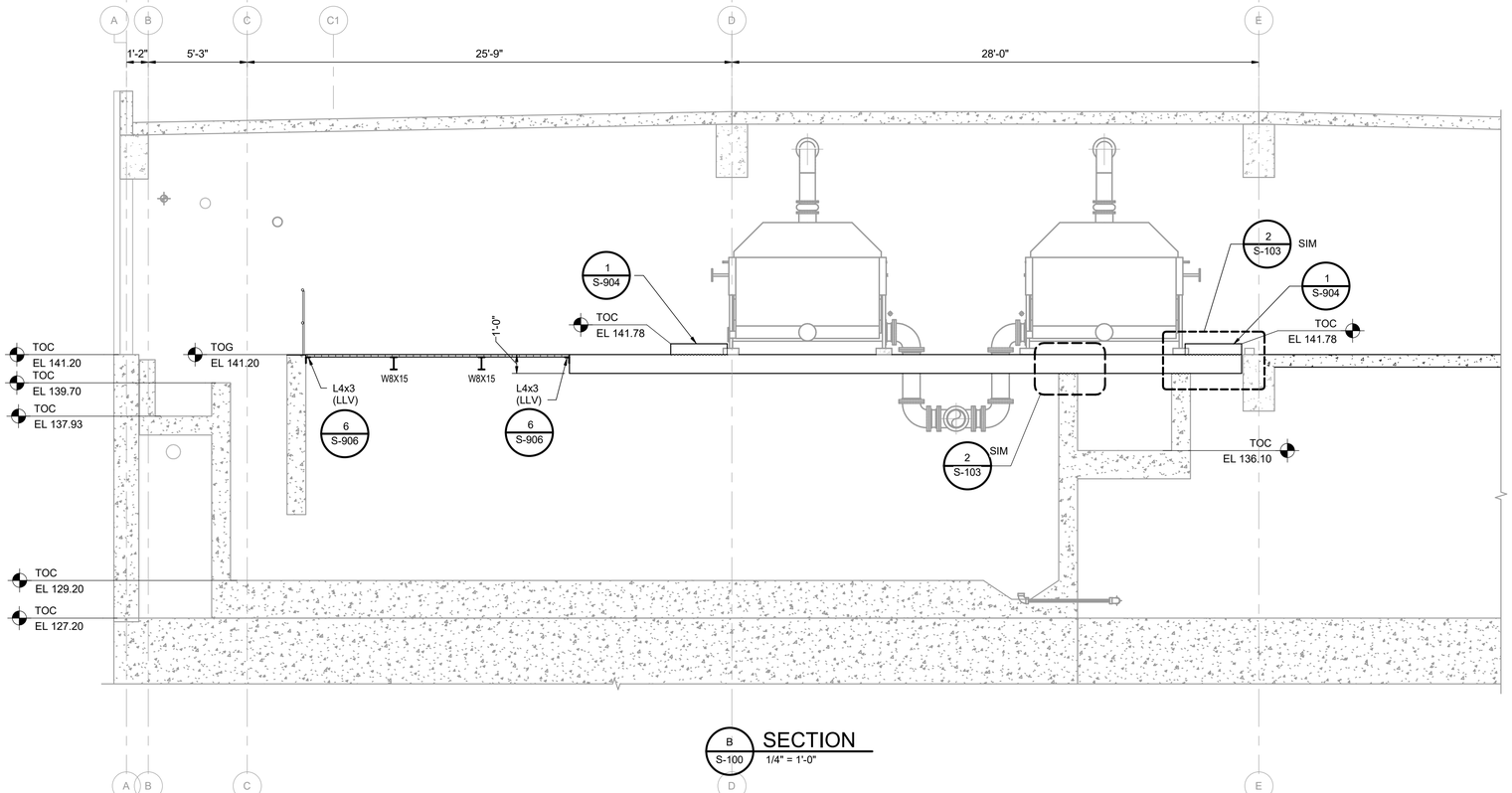

B S-100 SECTION
1/4" = 1'-0"

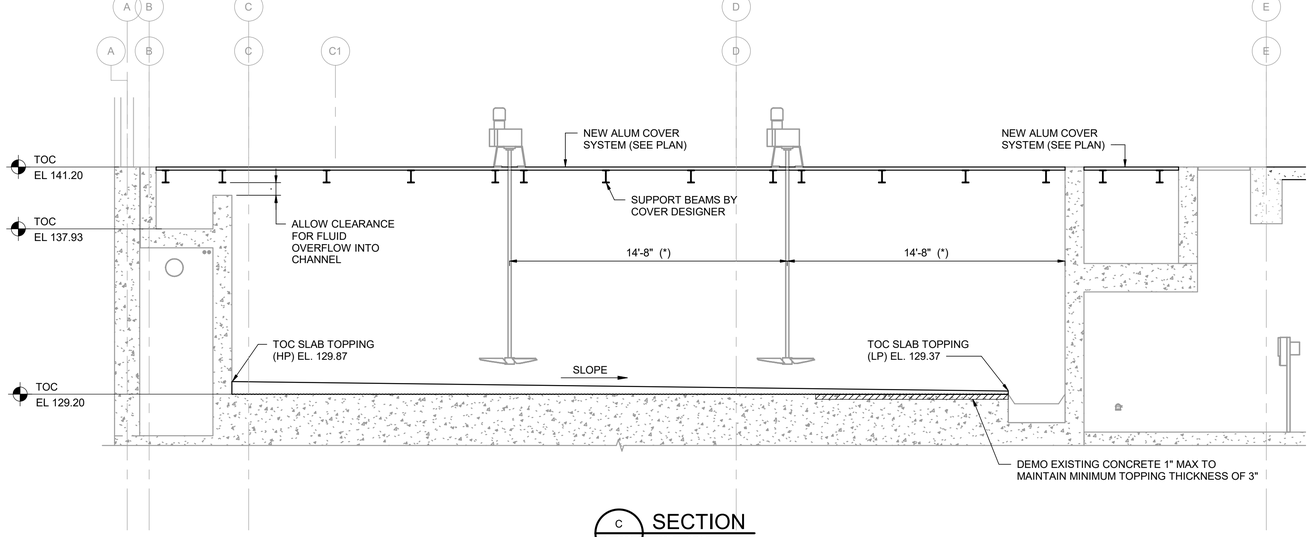

C S-100 SECTION
1/4" = 1'-0"

GENERAL NOTES:

1. SEE SHEET S-100 FOR ADDITIONAL NOTES.

THE DRAWINGS IN THIS SET ARE RECORD DRAWINGS. THEY ARE CONSTRUCTION CONTRACT DRAWINGS WHICH HAVE BEEN REVISED BASED ON AVAILABLE FIELD INFORMATION RECORDED BY OTHERS DURING CONSTRUCTION OF THIS CONTRACT. THERE HAS BEEN NO VERIFICATION OF DIMENSIONS SHOWN ON THE CONSTRUCTION DRAWINGS OR THE ACCURACY/COMPLETENESS OF THE FIELD INFORMATION RECEIVED.

SIGNATURE 2/7/2023 DATE

AS-BUILT REPLACEMENT SHEET

PROFESSIONAL CERTIFICATION

THIS DRAWING WAS ORIGINALLY APPROVED FOR CONSTRUCTION AND SEALED BY MICHAEL E. MARTIN, A REGISTERED PROFESSIONAL ENGINEER IN THE STATE OF MARYLAND, NO. 49839

NOTICE TO CONTRACTORS

- PROJECT ELEVATIONS ARE BASED ON NAVD88 AND HOWARD COUNTY'S BENCHMARK SYSTEM
- PREVIOUS PROJECTS USED OTHER DATUMS
- APPLY THE FOLLOWING CONVERSIONS WHEN USING PREVIOUS CONTRACT DRAWINGS:
  - ADDITION NO. 6: SUBTRACT 0.80 FT
  - PRIOR ADDITIONS: SUBTRACT 1.04 FT

DEPARTMENT OF PUBLIC WORKS
HOWARD COUNTY, MARYLAND

CHIEF, BUREAU OF UTILITIES DATE

DES: HMA
DRN: WTM
CHK: MEM
DATE: 12/2016

DATE	REV	DESCRIPTION
07/2019		RECORD DRAWING

STRUCTURAL

GRAVITY BELT THICKENER AREA SECTIONS 2

LITTLE PATUXENT WATER RECLAMATION PLANT
8TH ADDITION
BIOSOLIDS PROCESSING FACILITIES - PHASE I

CAPITAL PROJECT S-6295
CONTRACT NO. 24-4935

ELECTION DISTRICT NO. 6
HOWARD COUNTY, MARYLAND

SCALE AS SHOWN

SHEET 101 OF 463

S-104

BIM 360://10054364 – Little Patuxent WRP 8th Addition/264591_100_S_V18.rvt
1/10/2022 2:13:18 PM

GENERAL NOTES:

1. SEE SHEET S-100 FOR ADDITIONAL NOTES.

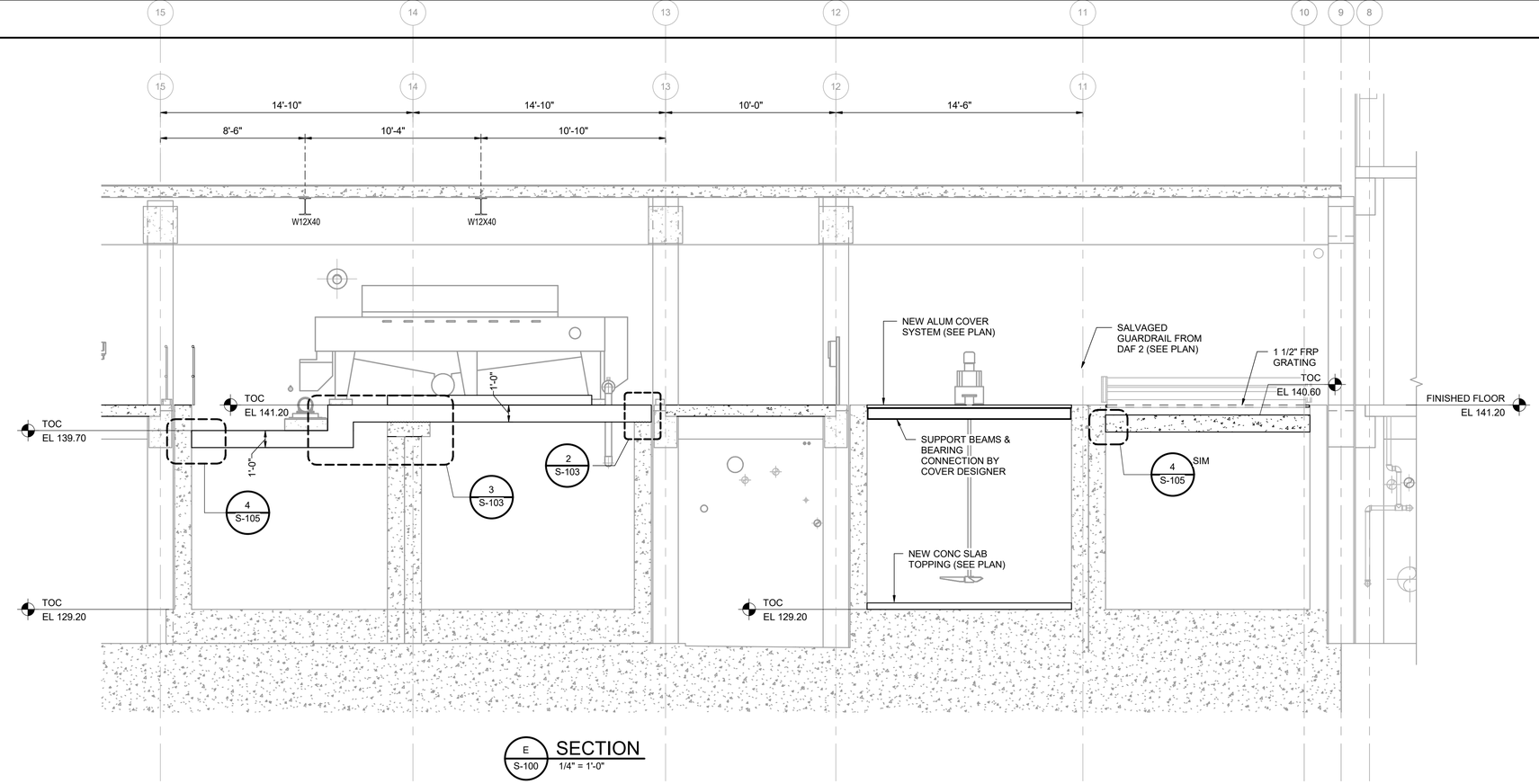

E S-100 SECTION
1/4" = 1'-0"

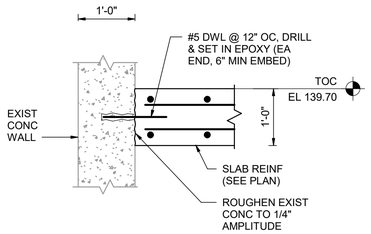

4 S-105 DETAIL
3/4" = 1'-0"

THE DRAWINGS IN THIS SET ARE RECORD DRAWINGS. THEY ARE CONSTRUCTION CONTRACT DRAWINGS WHICH HAVE BEEN REVISED BASED ON AVAILABLE FIELD INFORMATION RECORDED BY OTHERS DURING CONSTRUCTION OF THIS CONTRACT. THERE HAS BEEN NO VERIFICATION OF DIMENSIONS SHOWN ON THE CONSTRUCTION DRAWINGS OR THE ACCURACY/COMPLETENESS OF THE FIELD INFORMATION RECEIVED.

SIGNATURE _____ DATE 2/7/2023

AS-BUILT REPLACEMENT SHEET

PROFESSIONAL CERTIFICATION

THIS DRAWING WAS ORIGINALLY APPROVED FOR CONSTRUCTION AND SEALED BY MICHAEL E. MARTIN, A REGISTERED PROFESSIONAL ENGINEER IN THE STATE OF MARYLAND, NO. 49839

NOTICE TO CONTRACTORS

- PROJECT ELEVATIONS ARE BASED ON NAVD88 AND HOWARD COUNTY'S BENCHMARK SYSTEM
- PREVIOUS PROJECTS USED OTHER DATUMS
- APPLY THE FOLLOWING CONVERSIONS WHEN USING PREVIOUS CONTRACT DRAWINGS:
  - ADDITION NO. 6: SUBTRACT 0.80 FT
  - PRIOR ADDITIONS: SUBTRACT 1.04 FT

DEPARTMENT OF PUBLIC WORKS
HOWARD COUNTY, MARYLAND

CHIEF, BUREAU OF UTILITIES DATE

DES: HMA
DRN: WTM
CHK: MEM
DATE: 12/2016

DATE	REV	DESCRIPTION
07/2019		RECORD DRAWING

STRUCTURAL

GRAVITY BELT THICKENER AREA SECTIONS 3

LITTLE PATUXENT WATER RECLAMATION PLANT
8TH ADDITION
BIOSOLIDS PROCESSING FACILITIES - PHASE I

CAPITAL PROJECT S-6295
CONTRACT NO. 24-4935

ELECTION DISTRICT NO. 6
HOWARD COUNTY, MARYLAND

SCALE AS SHOWN

SHEET 102 OF 463

S-105

BIM 360://10054364 – Little Patuxent WRP 8th Addition/264591_100_S_V18.rvt
1/10/2022 2:13:20 PM

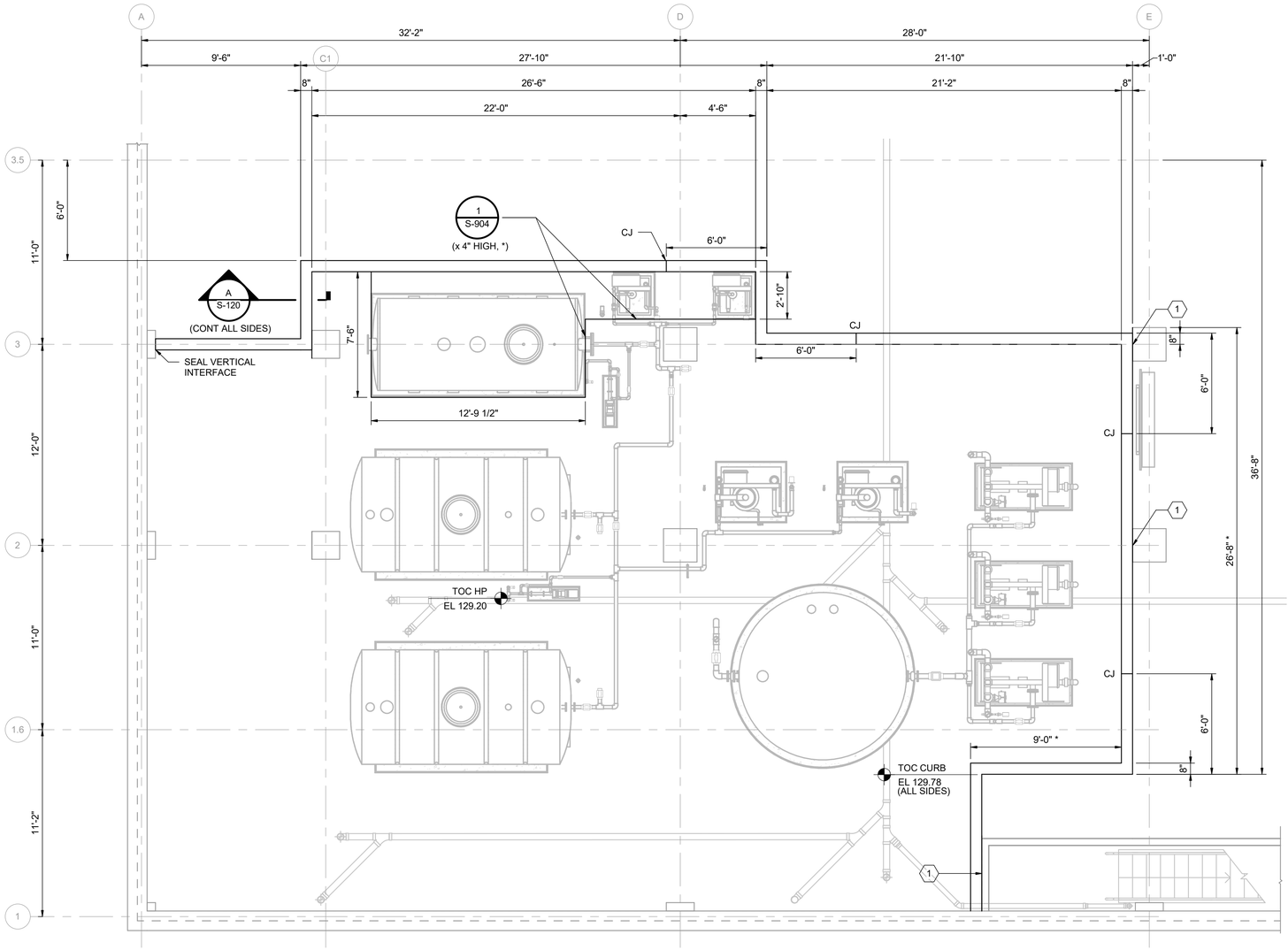

PARTIAL PLAN EL. 129.20 (HP)

1/4" = 1'-0"

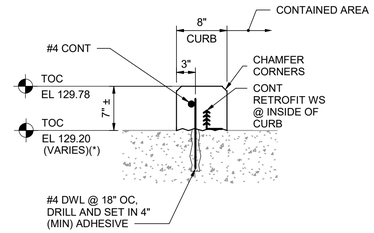

A S-120 SECTION

1" = 1'-0"

GENERAL NOTES

1. SEE SHEET S-901 FOR ADDITIONAL NOTES
2. (*) INDICATES DIMENSION OR ELEVATION TO BE CONFIRMED PRIOR TO CONSTRUCTION.

KEYNOTES

1 BOND BREAKER, NOT EXPANSION JOINT AT EXISTING CONSTRUCTION INTERFACE

THE DRAWINGS IN THIS SET ARE RECORD DRAWINGS. THEY ARE CONSTRUCTION CONTRACT DRAWINGS WHICH HAVE BEEN REVISED BASED ON AVAILABLE FIELD INFORMATION RECORDED BY OTHERS DURING CONSTRUCTION OF THIS CONTRACT. THERE HAS BEEN NO VERIFICATION OF DIMENSIONS SHOWN ON THE CONSTRUCTION DRAWINGS OR THE ACCURACY/COMPLETENESS OF THE FIELD INFORMATION RECEIVED.

SIGNATURE 2/7/2023 DATE

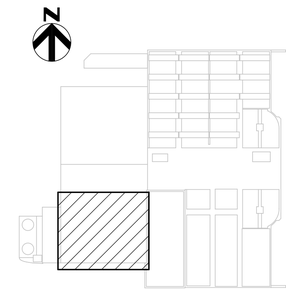

KEY PLAN

AS-BUILT REPLACEMENT SHEET

PROFESSIONAL CERTIFICATION

THIS DRAWING WAS ORIGINALLY APPROVED FOR CONSTRUCTION AND SEALED BY MICHAEL E. MARTIN, A REGISTERED PROFESSIONAL ENGINEER IN THE STATE OF MARYLAND, NO. 49839

NOTICE TO CONTRACTORS

- PROJECT ELEVATIONS ARE BASED ON NAVD88 AND HOWARD COUNTY'S BENCHMARK SYSTEM
- PREVIOUS PROJECTS USED OTHER DATUMS
- APPLY THE FOLLOWING CONVERSIONS WHEN USING PREVIOUS CONTRACT DRAWINGS:
  - ADDITION NO. 6: SUBTRACT 0.80 FT
  - PRIOR ADDITIONS: SUBTRACT 1.04 FT

DEPARTMENT OF PUBLIC WORKS
HOWARD COUNTY, MARYLAND

CHIEF, BUREAU OF UTILITIES DATE

DES: MEM
DRN: WM
CHK: MEM
DATE: 12/2016

DATE	REV	DESCRIPTION
07/2019		RECORD DRAWING

STRUCTURAL

POLYMER SYSTEM PLAN - EL 129.20

LITTLE PATUXENT WATER RECLAMATION PLANT
8TH ADDITION
BIOSOLIDS PROCESSING FACILITIES - PHASE I

CAPITAL PROJECT S-6295
CONTRACT NO. 24-4935

ELECTION DISTRICT NO. 6
HOWARD COUNTY, MARYLAND

SCALE AS SHOWN

SHEET **93B** OF **463**

S-120

BIM 360://10054364 – Little Patuxent WRP 8th Addition/264591_100_S_V18.rvt
1/10/2022 2:13:23 PM

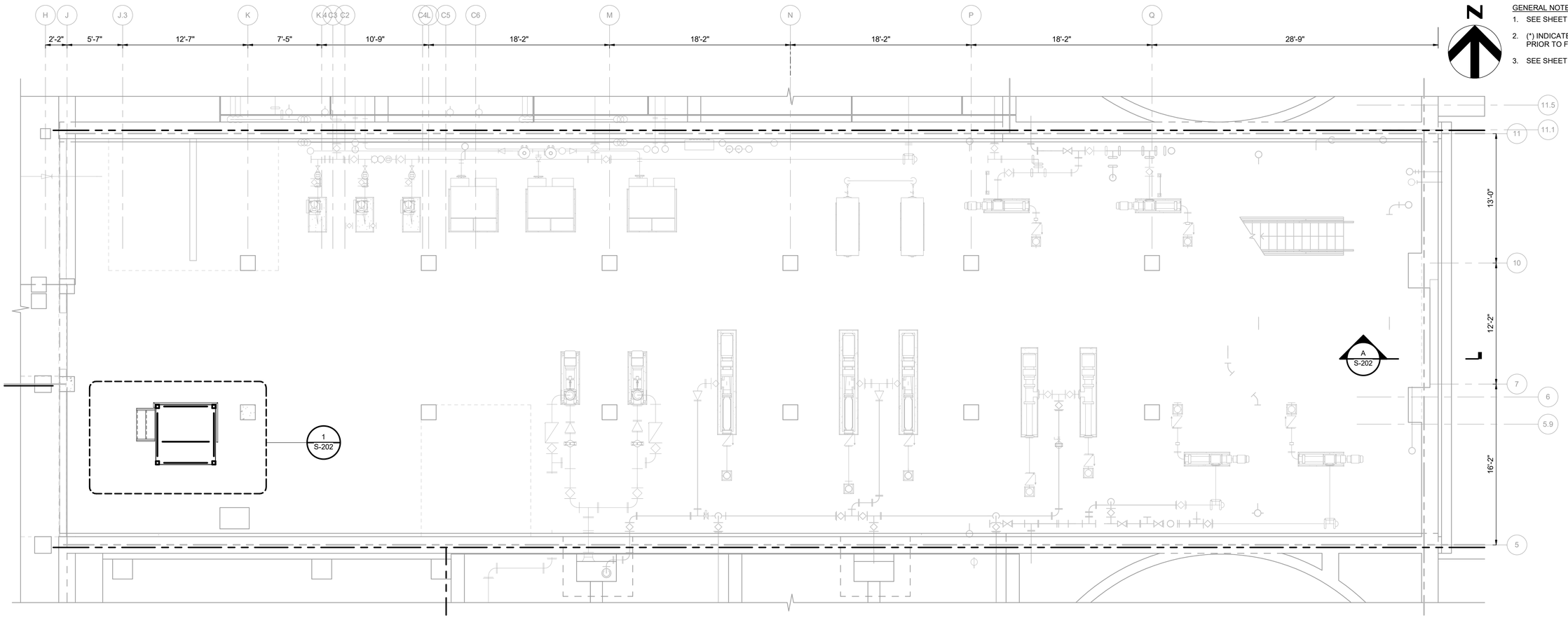

PARTIAL FOUNDATION PLAN

3/16" = 1'-0"

GENERAL NOTES:

1. SEE SHEET S-901 FOR STRUCTURAL NOTES.
2. (*) INDICATES DIMENSION/ITEM TO BE VERIFIED PRIOR TO FABRICATION/CONSTRUCTION.
3. SEE SHEET X-101 FOR DEMOLITION.

THE DRAWINGS IN THIS SET ARE RECORD DRAWINGS. THEY ARE CONSTRUCTION CONTRACT DRAWINGS WHICH HAVE BEEN REVISED BASED ON AVAILABLE FIELD INFORMATION RECORDED BY OTHERS DURING CONSTRUCTION OF THIS CONTRACT. THERE HAS BEEN NO VERIFICATION OF DIMENSIONS SHOWN ON THE CONSTRUCTION DRAWINGS OR THE ACCURACY/COMPLETENESS OF THE FIELD INFORMATION RECEIVED.

SIGNATURE — DATE 2/7/2022

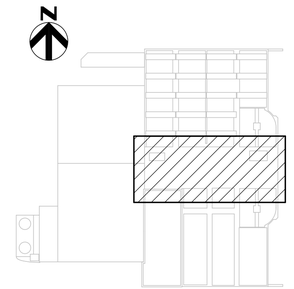

KEY PLAN

AS-BUILT REPLACEMENT SHEET

PROFESSIONAL CERTIFICATION

THIS DRAWING WAS ORIGINALLY APPROVED FOR CONSTRUCTION AND SEALED BY MICHAEL E. MARTIN, A REGISTERED PROFESSIONAL ENGINEER IN THE STATE OF MARYLAND, NO. 49839

NOTICE TO CONTRACTORS

- PROJECT ELEVATIONS ARE BASED ON NAVD88 AND HOWARD COUNTY'S BENCHMARK SYSTEM
- PREVIOUS PROJECTS USED OTHER DATUMS
- APPLY THE FOLLOWING CONVERSIONS WHEN USING PREVIOUS CONTRACT DRAWINGS:
  - ADDITION NO. 6: SUBTRACT 0.80 FT
  - PRIOR ADDITIONS: SUBTRACT 1.04 FT

DEPARTMENT OF PUBLIC WORKS
HOWARD COUNTY, MARYLAND

CHIEF, BUREAU OF UTILITIES — DATE

DES: HMA
DRN: WTM
CHK: MEM
DATE: 12/2016

DATE	REV	DESCRIPTION
07/2019		RECORD DRAWING

STRUCTURAL

SOLIDS PIPE GALLERY FOUNDATION PLAN

LITTLE PATUXENT WATER RECLAMATION PLANT
8TH ADDITION
BIOSOLIDS PROCESSING FACILITIES - PHASE I

CAPITAL PROJECT S-6295
CONTRACT NO. 24-4935

ELECTION DISTRICT NO. 6
HOWARD COUNTY, MARYLAND

SCALE AS SHOWN

SHEET **104** OF **463**

S-200

BIM 360://10054364 – Little Patuxent WRP 8th Addition/264591_100_S_V18.rvt
1/10/2022 2:13:25 PM

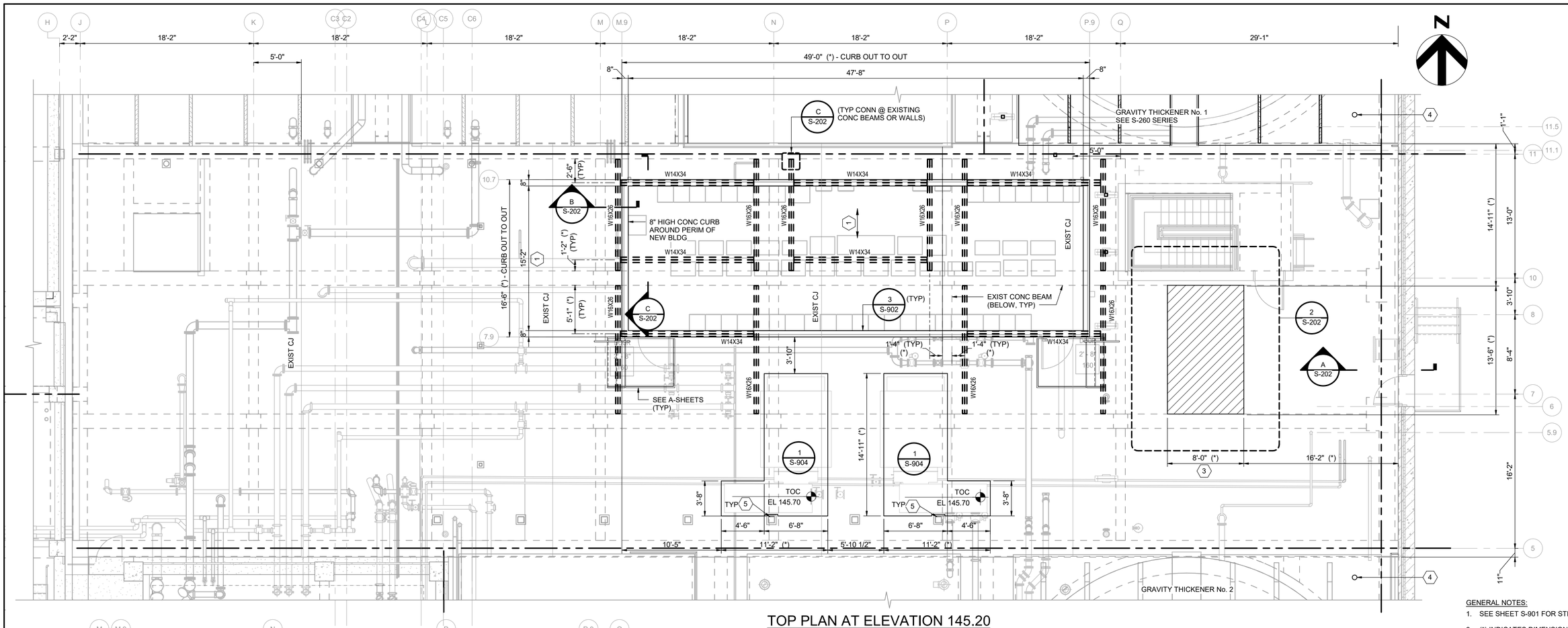

TOP PLAN AT ELEVATION 145.20

3/16" = 1'-0"

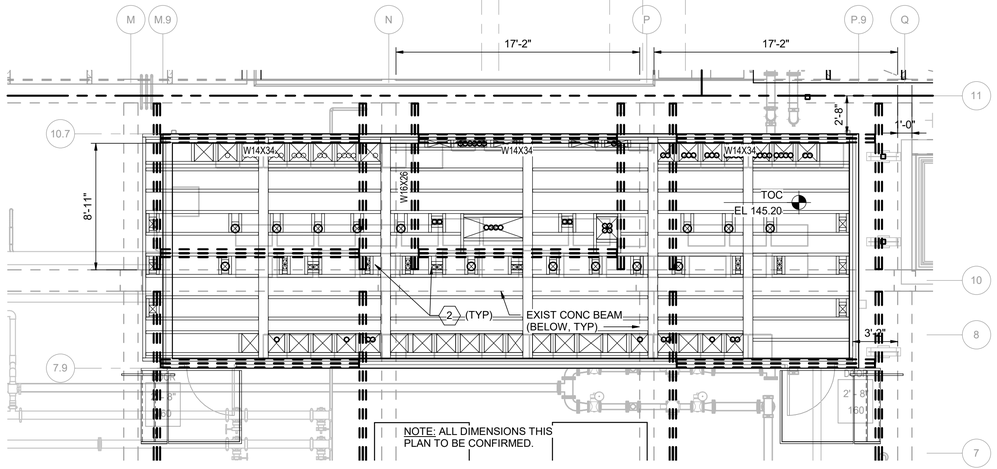

CORE DRILL/SAWCUT SLOTS LOCATION PLAN

3/16" = 1'-0"

GENERAL NOTES:

1. SEE SHEET S-901 FOR STRUCTURAL NOTES.
2. (*) INDICATES DIMENSION/ITEM TO BE VERIFIED PRIOR TO FABRICATION/CONSTRUCTION.
3. ALL PENETRATIONS THROUGH EXISTING SLAB SHALL BE LOCATED TO MISS EXISTING CONCRETE BEAMS.
4. DO NOT BEGIN WORK OR FABRICATE STEEL BELOW MCC BUILDING UNTIL MCC BUILDING SHOP DRAWINGS HAVE BEEN REVIEWED AND APPROVED.

KEY NOTES:

1. NEW BUILDING FLOOR SHALL BE DESIGNED TO FRAME NORTH/SOUTH FROM CURB TO CURB. NO CENTRAL SUPPORTS PERMITTED.
2. AREA OF EXISTING SLAB TO BE SAWCUT TO RECEIVE CONDUIT. SAWCUT AND CORE DRILLED AREAS SHALL BE LOCATED SUCH THAT EXISTING CONCRETE BEAMS ARE NOT DAMAGED. WHERE SAWCUTS AND CORE DRILLS ARE WITHIN 2" OF EXISTING BEAM, DRILL PILOT HOLES INTO CONCRTETE SLAB FROM UNDERNEATH SLAB NEXT TO BEAM TO ENSURE EXISTING BEAMS ARE NOT DAMAGED. LOCATE EXISTING REINFORCING PRIOR TO CORE DRILLING AND ADJUST LOCATION TO AVOID REBAR DAMAGE.
3. AT CONTRACTOR'S OPTION, DEMOLISH SLAB BETWEEN BEAMS TO PROVIDE TEMPORARY OPENING. SEE DETAIL 2/S-202 FOR REPAIR.
4. DRILL 6"Ø CORE INTO EXISTING SLAB AT ELEVATION 142.00, FILL VOID BELOW WITH FLOWABLE FILL TO BOTTOM OF SLAB.
5. EXISTING DUCT SUPPORT MODIFY AS NECESSARY FOR EQUIPMENT SUPPORT. PROVIDE 2" BLOCKOUT FOR SUPPORTS AT EQUIPMENT PADS

THE DRAWINGS IN THIS SET ARE RECORD DRAWINGS. THEY ARE CONSTRUCTION CONTRACT DRAWINGS WHICH HAVE BEEN REVISED BASED ON AVAILABLE FIELD INFORMATION RECORDED BY OTHERS DURING CONSTRUCTION OF THIS CONTRACT. THERE HAS BEEN NO VERIFICATION OF DIMENSIONS SHOWN ON THE CONSTRUCTION DRAWINGS OR THE ACCURACY/COMPLETENESS OF THE FIELD INFORMATION RECEIVED.

SIGNATURE _____ DATE 2/7/2023

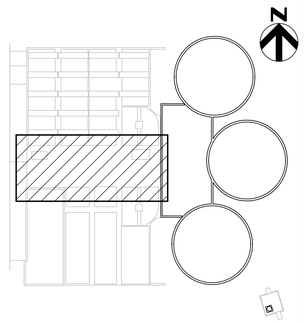

KEY PLAN

BIM 360://10054364 – Little Patuxent WRP 8th Addition/264591_100_S_V18.rvt
1/10/2022 2:13:31 PM

AS-BUILT REPLACEMENT SHEET

PROFESSIONAL CERTIFICATION

THIS DRAWING WAS ORIGINALLY APPROVED FOR CONSTRUCTION AND SEALED BY MICHAEL E. MARTIN, A REGISTERED PROFESSIONAL ENGINEER IN THE STATE OF MARYLAND, NO. 49839

NOTICE TO CONTRACTORS

- PROJECT ELEVATIONS ARE BASED ON NAVD88 AND HOWARD COUNTY'S BENCHMARK SYSTEM
- PREVIOUS PROJECTS USED OTHER DATUMS
- APPLY THE FOLLOWING CONVERSIONS WHEN USING PREVIOUS CONTRACT DRAWINGS:
  - ADDITION NO. 6: SUBTRACT 0.80 FT
  - PRIOR ADDITIONS: SUBTRACT 1.04 FT

DEPARTMENT OF PUBLIC WORKS
HOWARD COUNTY, MARYLAND

CHIEF, BUREAU OF UTILITIES DATE

DES: HMA
DRN: WTM
CHK: MEM
DATE: 12/2016

DATE	REV	DESCRIPTION
07/2019		RECORD DRAWING

STRUCTURAL

MCC BUILDING TOP PLAN - EL 145.20

LITTLE PATUXENT WATER RECLAMATION PLANT
8TH ADDITION
BIOSOLIDS PROCESSING FACILITIES - PHASE I

CAPITAL PROJECT S-6295
CONTRACT NO. 24-4935

ELECTION DISTRICT NO. 6
HOWARD COUNTY, MARYLAND

SCALE AS SHOWN

SHEET 105 OF 463

S-201

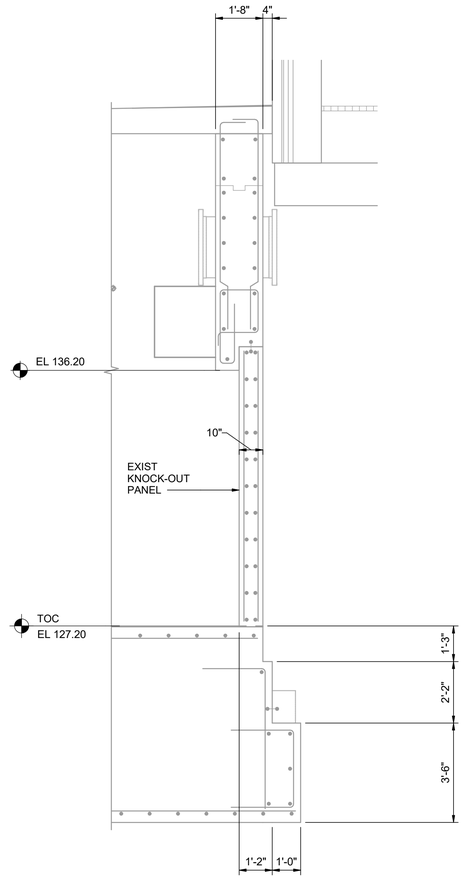

A S-201 SECTION 3/8" = 1'-0"

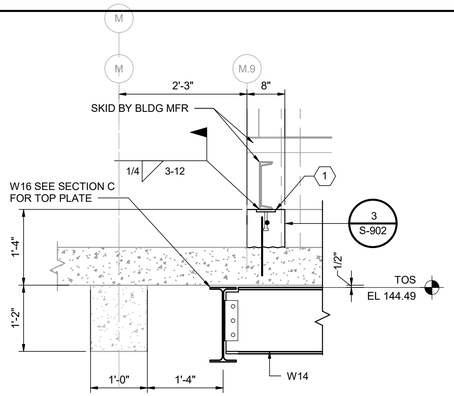

B S-201 SECTION 3/4" = 1'-0"

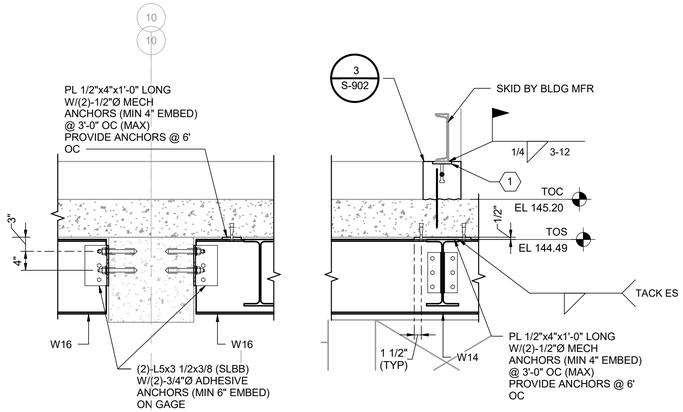

C S-201 SECTION 3/4" = 1'-0"

GENERAL NOTES:

1. SEE SHEET S-200 FOR ADDITIONAL NOTES.
2. CONFIRM NEW MCC BUILDING CONNECTION TO CONCRETE WITH BUILDING MANUFACTURER.

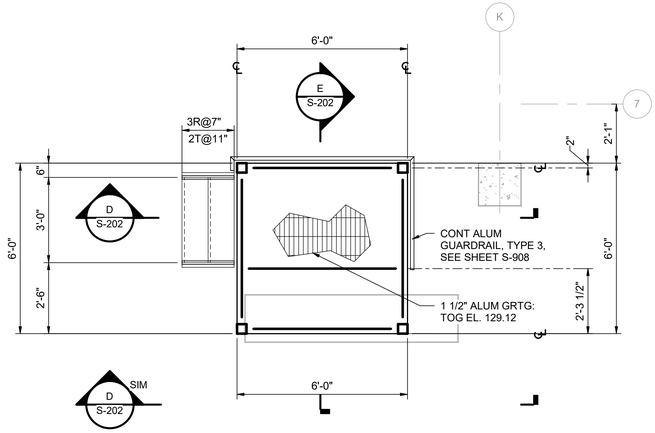

NOTES:
1. PLATFORM DESIGNED BY OTHERS, SEE SHOP DRAWINGS FOR ADDITIONAL INFORMATION
2. FOR PLATFORM LOCATION SEE SHEET M-200.
3. LL = 100 PSF.

1 M-200 DETAIL 3/8" = 1'-0"

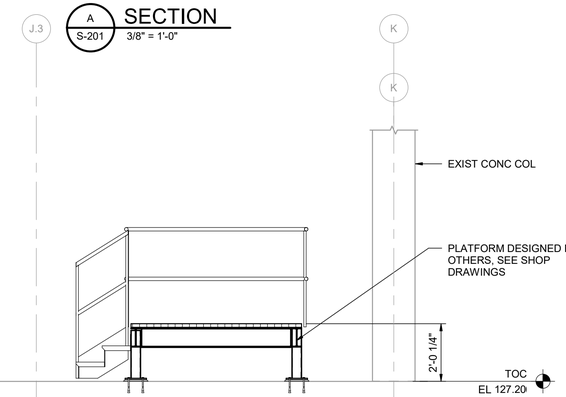

D S-202 SECTION 3/8" = 1'-0"

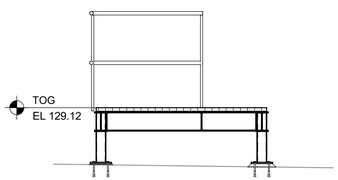

E S-202 SECTION 3/8" = 1'-0"

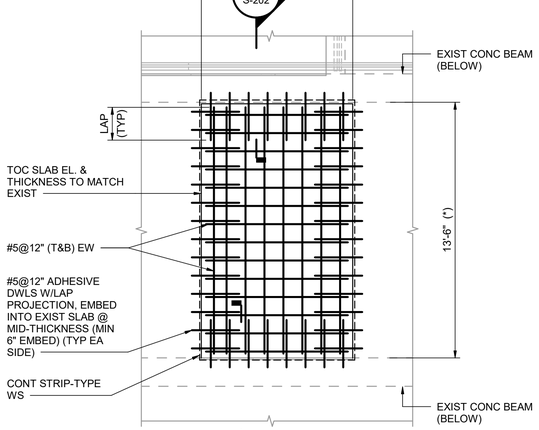

2 S-201 DETAIL 1/4" = 1'-0"

KEY NOTES:

1 EMBEDDED PLATE 1/2"x4"x4" WITH (1)-5/8"Ø x 6" LONG HEADED STUD @ 12" OC

THE DRAWINGS IN THIS SET ARE RECORD DRAWINGS. THEY ARE CONSTRUCTION CONTRACT DRAWINGS WHICH HAVE BEEN REVISED BASED ON AVAILABLE FIELD INFORMATION RECORDED BY OTHERS DURING CONSTRUCTION OF THIS CONTRACT. THERE HAS BEEN NO VERIFICATION OF DIMENSIONS SHOWN ON THE CONSTRUCTION DRAWINGS OR THE ACCURACY/COMPLETENESS OF THE FIELD INFORMATION RECEIVED.

SIGNATURE — DATE 2/7/2023

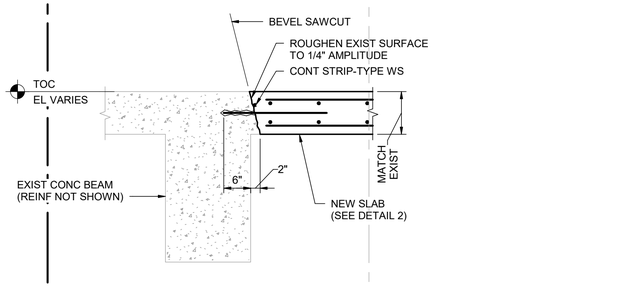

F S-202 SECTION 3/4" = 1'-0"

BIM 360://10054364 – Little Patuxent WRP 8th Addition/264591_100_S_V18.rvt
1/10/2022 2:13:36 PM

	HDR	**AS-BUILT REPLACEMENT SHEET**	PROFESSIONAL CERTIFICATION THIS DRAWING WAS ORIGINALLY APPROVED FOR CONSTRUCTION AND SEALED BY MICHAEL E. MARTIN, A REGISTERED PROFESSIONAL ENGINEER IN THE STATE OF MARYLAND, NO. 49839	NOTICE TO CONTRACTORS • PROJECT ELEVATIONS ARE BASED ON NAVD88 AND HOWARD COUNTY'S BENCHMARK SYSTEM • PREVIOUS PROJECTS USED OTHER DATUMS • APPLY THE FOLLOWING CONVERSIONS WHEN USING PREVIOUS CONTRACT DRAWINGS: - ADDITION NO. 6: SUBTRACT 0.80 FT - PRIOR ADDITIONS: SUBTRACT 1.04 FT	DEPARTMENT OF PUBLIC WORKS HOWARD COUNTY, MARYLAND CHIEF, BUREAU OF UTILITIES DATE	DES: HMA DRN: WTM CHK: MEM DATE: 12/2016	DATE: 07/2019	REV:	DESCRIPTION: RECORD DRAWING	**STRUCTURAL** **MCC BUILDING SECTIONS AND DETAILS**	LITTLE PATUXENT WATER RECLAMATION PLANT 8TH ADDITION BIOSOLIDS PROCESSING FACILITIES - PHASE I CAPITAL PROJECT S-6295 CONTRACT NO. 24-4935 ELECTION DISTRICT NO. 6 HOWARD COUNTY, MARYLAND	SCALE AS SHOWN SHEET **106** OF **463** **S-202**

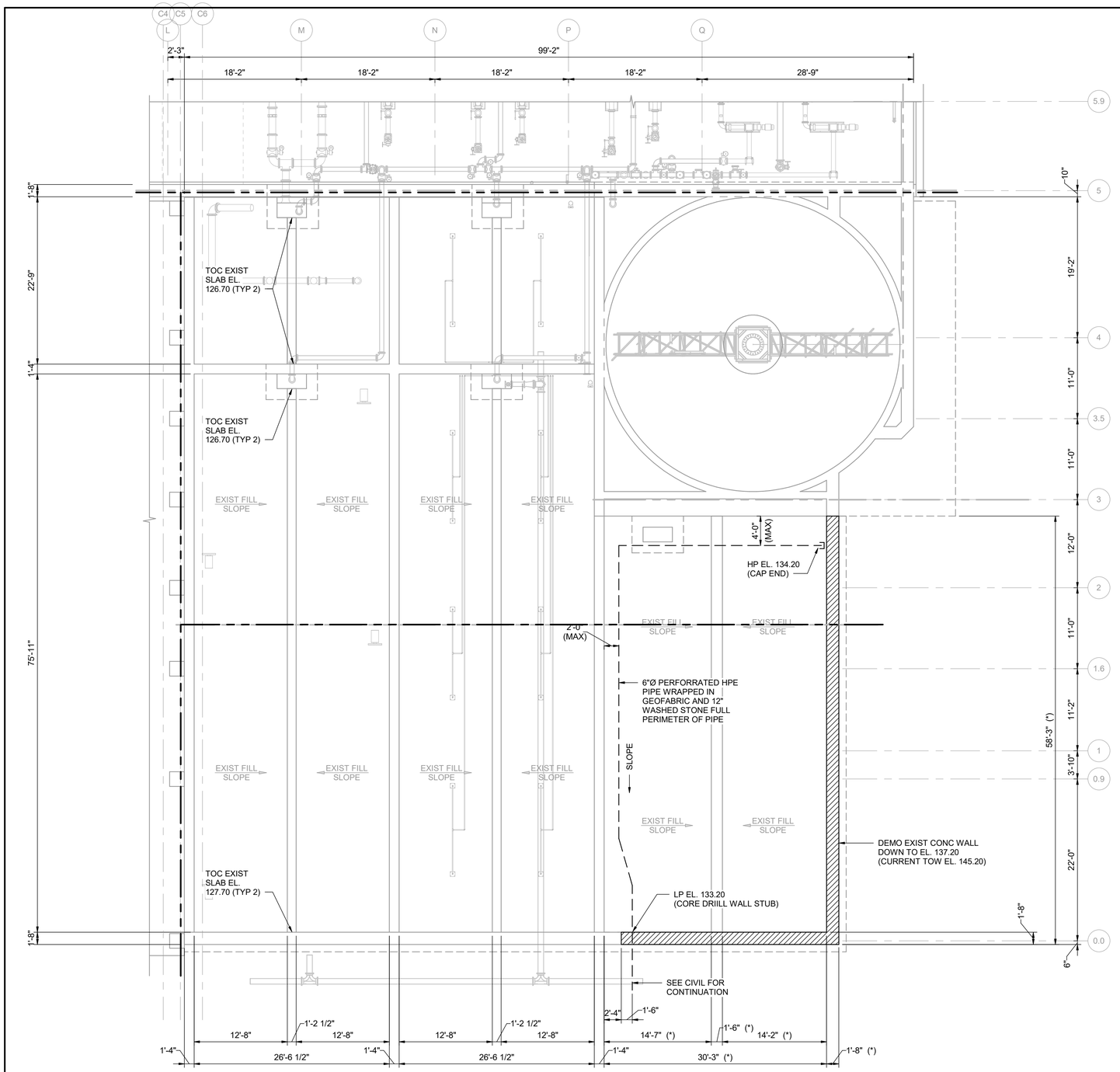

FOUNDATION PLAN

1/8" = 1'-0"

GENERAL NOTES:

1. SEE SHEET S-901 FOR STRUCTURAL NOTES.
2. (*) INDICATES DIMENSION/ITEM TO BE VERIFIED PRIOR TO FABRICATION/CONSTRUCTION.

THE DRAWINGS IN THIS SET ARE RECORD DRAWINGS. THEY ARE CONSTRUCTION CONTRACT DRAWINGS WHICH HAVE BEEN REVISED BASED ON AVAILABLE FIELD INFORMATION RECORDED BY OTHERS DURING CONSTRUCTION OF THIS CONTRACT. THERE HAS BEEN NO VERIFICATION OF DIMENSIONS SHOWN ON THE CONSTRUCTION DRAWINGS OR THE ACCURACY/COMPLETENESS OF THE FIELD INFORMATION RECEIVED.

SIGNATURE — DATE 2/7/2023

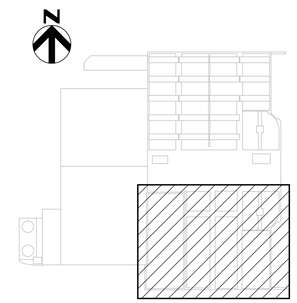

KEY PLAN

AS-BUILT REPLACEMENT SHEET

PROFESSIONAL CERTIFICATION

THIS DRAWING WAS ORIGINALLY APPROVED FOR CONSTRUCTION AND SEALED BY MICHAEL E. MARTIN, A REGISTERED PROFESSIONAL ENGINEER IN THE STATE OF MARYLAND, NO. 49839

NOTICE TO CONTRACTORS

- PROJECT ELEVATIONS ARE BASED ON NAVD88 AND HOWARD COUNTY'S BENCHMARK SYSTEM
- PREVIOUS PROJECTS USED OTHER DATUMS
- APPLY THE FOLLOWING CONVERSIONS WHEN USING PREVIOUS CONTRACT DRAWINGS:
  - ADDITION NO. 6: SUBTRACT 0.80 FT
  - PRIOR ADDITIONS: SUBTRACT 1.04 FT

DEPARTMENT OF PUBLIC WORKS
HOWARD COUNTY, MARYLAND

CHIEF, BUREAU OF UTILITIES — DATE

DES: HMA
DRN: WTM
CHK: MEM
DATE: 12/2016

DATE	REV	DESCRIPTION
07/2019		RECORD DRAWING

STRUCTURAL

SOLIDS HOLDING TANKS AND GT-2 FOUNDATION PLAN

LITTLE PATUXENT WATER RECLAMATION PLANT
8TH ADDITION
BIOSOLIDS PROCESSING FACILITIES - PHASE I

CAPITAL PROJECT S-6295
CONTRACT NO. 24-4935

ELECTION DISTRICT NO. 6
HOWARD COUNTY, MARYLAND

SCALE AS SHOWN

SHEET 107 OF 463

S-220

BIM 360://10054364 – Little Patuxent WRP 8th Addition/264591_100_S_V18.rvt
1/10/2022 2:13:39 PM

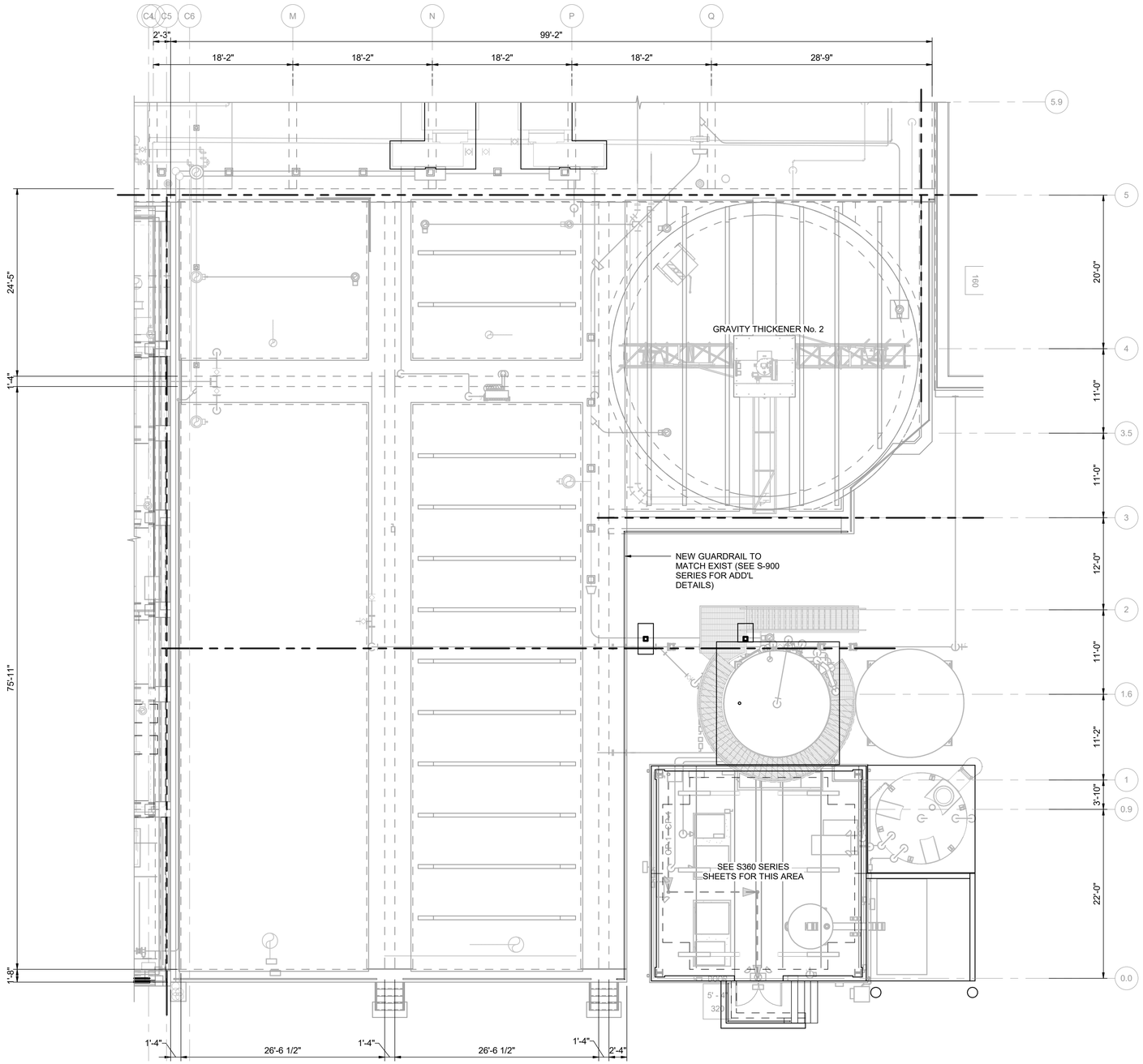

UPPER PLAN

1/8" = 1'-0"

GENERAL NOTES:

1. SEE SHEET S-220 FOR ADDITIONAL NOTES.

THE DRAWINGS IN THIS SET ARE RECORD DRAWINGS. THEY ARE CONSTRUCTION CONTRACT DRAWINGS WHICH HAVE BEEN REVISED BASED ON AVAILABLE FIELD INFORMATION RECORDED BY OTHERS DURING CONSTRUCTION OF THIS CONTRACT. THERE HAS BEEN NO VERIFICATION OF DIMENSIONS SHOWN ON THE CONSTRUCTION DRAWINGS OR THE ACCURACY/COMPLETENESS OF THE FIELD INFORMATION RECEIVED.

SIGNATURE — DATE 2/7/2023

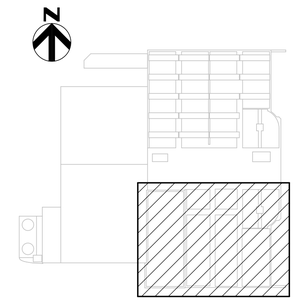

KEY PLAN

AS-BUILT REPLACEMENT SHEET

PROFESSIONAL CERTIFICATION

THIS DRAWING WAS ORIGINALLY APPROVED FOR CONSTRUCTION AND SEALED BY MICHAEL E. MARTIN, A REGISTERED PROFESSIONAL ENGINEER IN THE STATE OF MARYLAND, NO. 49839

NOTICE TO CONTRACTORS

- PROJECT ELEVATIONS ARE BASED ON NAVD88 AND HOWARD COUNTY'S BENCHMARK SYSTEM
- PREVIOUS PROJECTS USED OTHER DATUMS
- APPLY THE FOLLOWING CONVERSIONS WHEN USING PREVIOUS CONTRACT DRAWINGS:
  - ADDITION NO. 6: SUBTRACT 0.80 FT
  - PRIOR ADDITIONS: SUBTRACT 1.04 FT

DEPARTMENT OF PUBLIC WORKS
HOWARD COUNTY, MARYLAND

CHIEF, BUREAU OF UTILITIES — DATE

DES: HMA
DRN: WTM
CHK: MEM
DATE: 12/2016

DATE	REV	DESCRIPTION
07/2019		RECORD DRAWING

STRUCTURAL

SOLIDS HOLDING TANKS AND GT-2 UPPER PLAN

LITTLE PATUXENT WATER RECLAMATION PLANT
8TH ADDITION
BIOSOLIDS PROCESSING FACILITIES - PHASE I

CAPITAL PROJECT S-6295
CONTRACT NO. 24-4935

ELECTION DISTRICT NO. 6
HOWARD COUNTY, MARYLAND

SCALE AS SHOWN

SHEET 108 OF 463

S-221

BIM 360://10054364 – Little Patuxent WRP 8th Addition/264591_100_S_V18.rvt
1/10/2022 2:13:42 PM

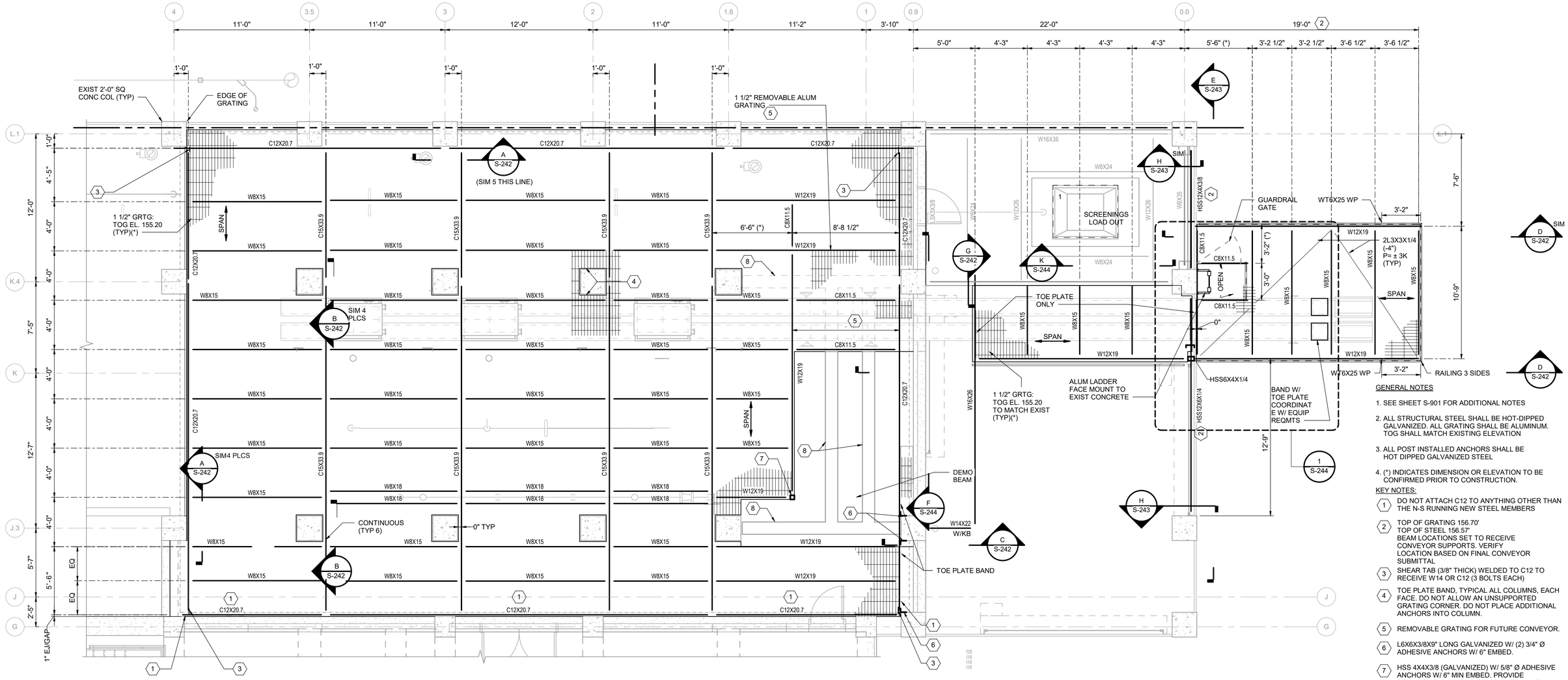

PLATFORM PLAN ELEVATION 155.20 (UNO)

1/4" = 1'-0" LIVE LOAD = 100 PSF TOS(-0.13')

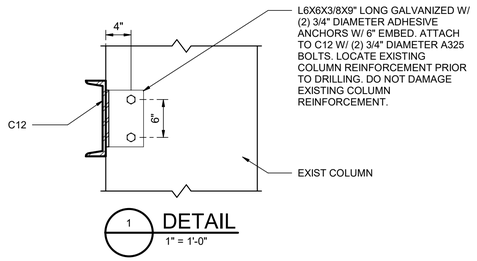

1 DETAIL
1" = 1'-0"

GENERAL NOTES

1. SEE SHEET S-901 FOR ADDITIONAL NOTES
2. ALL STRUCTURAL STEEL SHALL BE HOT-DIPPED GALVANIZED. ALL GRATING SHALL BE ALUMINUM. TOG SHALL MATCH EXISTING ELEVATION
3. ALL POST INSTALLED ANCHORS SHALL BE HOT DIPPED GALVANIZED STEEL
4. (*) INDICATES DIMENSION OR ELEVATION TO BE CONFIRMED PRIOR TO CONSTRUCTION.

KEY NOTES:

1. DO NOT ATTACH C12 TO ANYTHING OTHER THAN THE N-S RUNNING NEW STEEL MEMBERS
2. TOP OF GRATING 156.70' TOP OF STEEL 156.57' BEAM LOCATIONS SET TO RECEIVE CONVEYOR SUPPORTS. VERIFY LOCATION BASED ON FINAL CONVEYOR SUBMITTAL
3. SHEAR TAB (3/8" THICK) WELDED TO C12 TO RECEIVE W14 OR C12 (3 BOLTS EACH)
4. TOE PLATE BAND, TYPICAL ALL COLUMNS, EACH FACE. DO NOT ALLOW AN UNSUPPORTED GRATING CORNER. DO NOT PLACE ADDITIONAL ANCHORS INTO COLUMN.
5. REMOVABLE GRATING FOR FUTURE CONVEYOR.
6. L6X6X3/8X9" LONG GALVANIZED W/ (2) 3/4" Ø ADHESIVE ANCHORS W/ 6" EMBED.
7. HSS 4X4X3/8 (GALVANIZED) W/ 5/8" Ø ADHESIVE ANCHORS W/ 6" MIN EMBED. PROVIDE CONNECTION AT TOP TO EXISTING BEAMS WITH A SHEAR TAB SIMILAR TO DETAIL 2/S-906.
8. CONVEYOR SUPPORT BEAM PROVIDED BY OTHERS

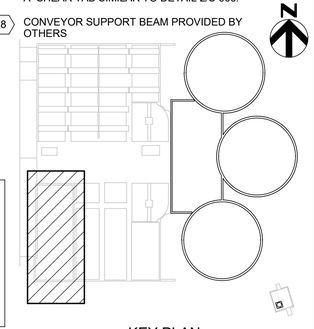

KEY PLAN

THE DRAWINGS IN THIS SET ARE RECORD DRAWINGS. THEY ARE CONSTRUCTION CONTRACT DRAWINGS WHICH HAVE BEEN REVISED BASED ON AVAILABLE FIELD INFORMATION RECORDED BY OTHERS DURING CONSTRUCTION OF THIS CONTRACT. THERE HAS BEEN NO VERIFICATION OF DIMENSIONS SHOWN ON THE CONSTRUCTION DRAWINGS OR THE ACCURACY/COMPLETENESS OF THE FIELD INFORMATION RECEIVED.

SIGNATURE 2/7/2023 DATE

AS-BUILT REPLACEMENT SHEET

PROFESSIONAL CERTIFICATION

THIS DRAWING WAS ORIGINALLY APPROVED FOR CONSTRUCTION AND SEALED BY MICHAEL E. MARTIN, A REGISTERED PROFESSIONAL ENGINEER IN THE STATE OF MARYLAND, NO. 49839

NOTICE TO CONTRACTORS

- PROJECT ELEVATIONS ARE BASED ON NAVD88 AND HOWARD COUNTY'S BENCHMARK SYSTEM
- PREVIOUS PROJECTS USED OTHER DATUMS
- APPLY THE FOLLOWING CONVERSIONS WHEN USING PREVIOUS CONTRACT DRAWINGS:
  - ADDITION NO. 6: SUBTRACT 0.80 FT
  - PRIOR ADDITIONS: SUBTRACT 1.04 FT

DEPARTMENT OF PUBLIC WORKS
HOWARD COUNTY, MARYLAND

CHIEF, BUREAU OF UTILITIES DATE

DES: MEM
DRN: NCC
CHK: HMA
DATE: 12/2016

DATE	REV	DESCRIPTION
07/2019		RECORD DRAWING

STRUCTURAL

PLATFORM PLAN AT ELEVATION 155.20

LITTLE PATUXENT WATER RECLAMATION PLANT
8TH ADDITION
BIOSOLIDS PROCESSING FACILITIES - PHASE I

CAPITAL PROJECT S-6295
CONTRACT NO. 24-4935

ELECTION DISTRICT NO. 6
HOWARD COUNTY, MARYLAND

SCALE AS SHOWN

SHEET 98A OF 463

S-241

BIM 360://10054364 – Little Patuxent WRP 8th Addition/264591_100_S_V18.rvt
1/10/2022 2:13:44 PM

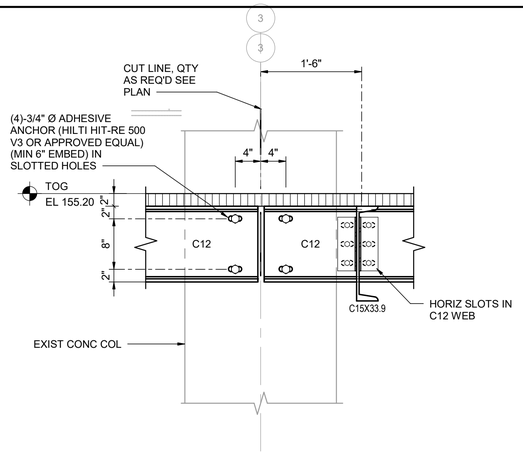

A S-241 SECTION
1" = 1'-0"

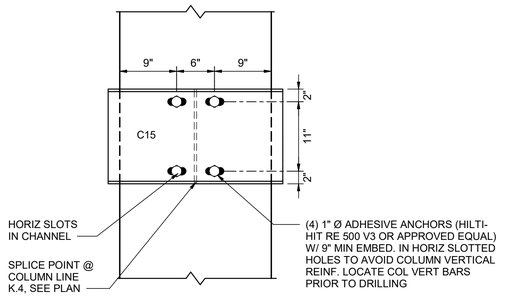

B S-241 SECTION
1" = 1'-0"

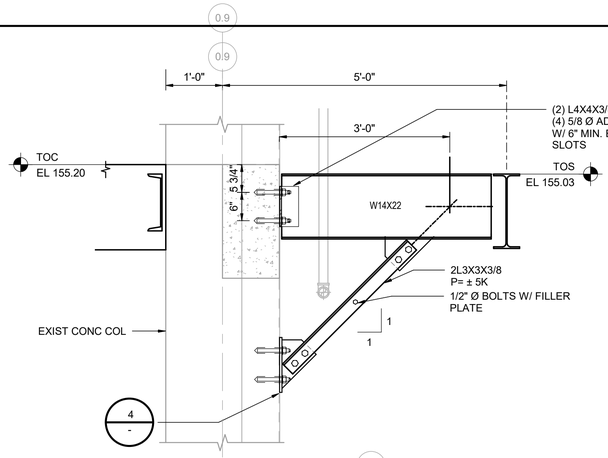

C S-241 SECTION
3/4" = 1'-0"

GENERAL NOTES

1. SEE S-241 FOR ADDITIONAL NOTES

THE DRAWINGS IN THIS SET ARE RECORD DRAWINGS. THEY ARE CONSTRUCTION CONTRACT DRAWINGS WHICH HAVE BEEN REVISED BASED ON AVAILABLE FIELD INFORMATION RECORDED BY OTHERS DURING CONSTRUCTION OF THIS CONTRACT. THERE HAS BEEN NO VERIFICATION OF DIMENSIONS SHOWN ON THE CONSTRUCTION DRAWINGS OR THE ACCURACY/COMPLETENESS OF THE FIELD INFORMATION RECEIVED.

SIGNATURE — DATE 2/7/2023

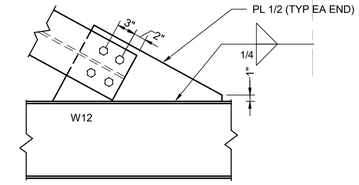

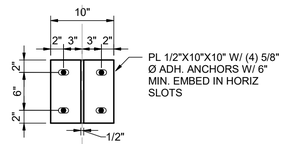

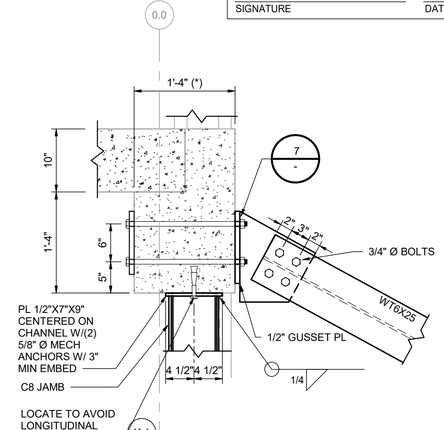

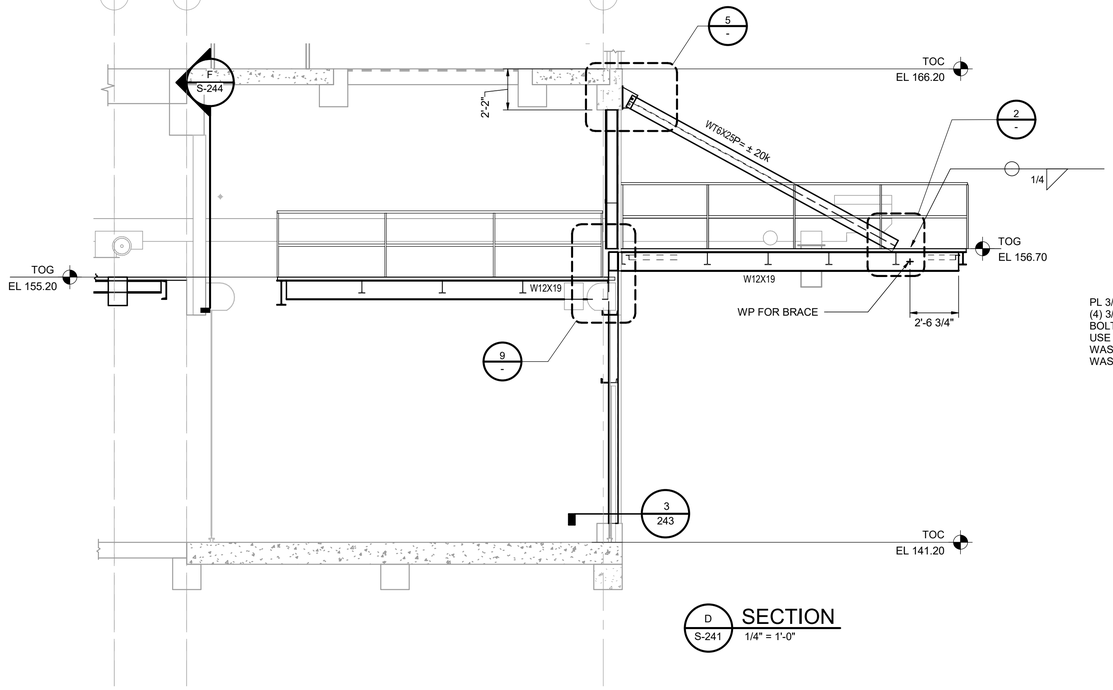

D S-241 SECTION
1/4" = 1'-0"

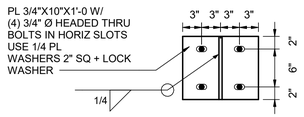

7 - ELEVATION
1" = 1'-0"

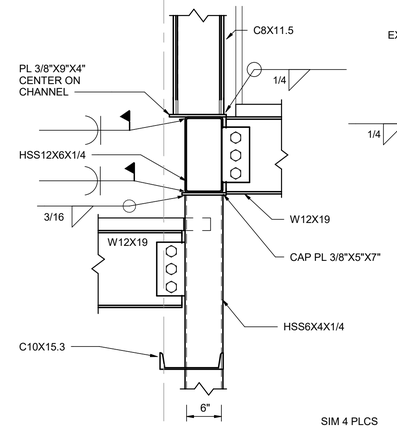

SIM 4 PLCS

NOTE: SIDING NOT SHOWN FOR CLARITY

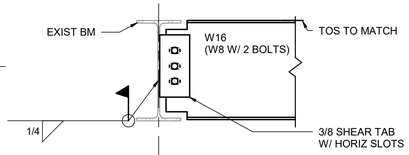

G S-241 SECTION
1" = 1'-0"

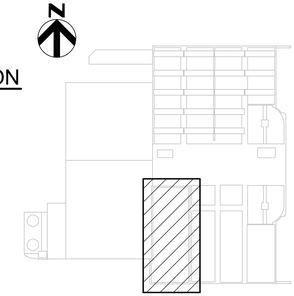

KEY PLAN

AS-BUILT REPLACEMENT SHEET

PROFESSIONAL CERTIFICATION

THIS DRAWING WAS ORIGINALLY APPROVED FOR CONSTRUCTION AND SEALED BY MICHAEL E. MARTIN, A REGISTERED PROFESSIONAL ENGINEER IN THE STATE OF MARYLAND, NO. 49839

NOTICE TO CONTRACTORS

- PROJECT ELEVATIONS ARE BASED ON NAVD88 AND HOWARD COUNTY'S BENCHMARK SYSTEM
- PREVIOUS PROJECTS USED OTHER DATUMS
- APPLY THE FOLLOWING CONVERSIONS WHEN USING PREVIOUS CONTRACT DRAWINGS:
  - ADDITION NO. 6: SUBTRACT 0.80 FT
  - PRIOR ADDITIONS: SUBTRACT 1.04 FT

DEPARTMENT OF PUBLIC WORKS
HOWARD COUNTY, MARYLAND

CHIEF, BUREAU OF UTILITIES — DATE

DES: MEM
DRN: NCC
CHK: HMA
DATE: 12/2016

DATE	REV	DESCRIPTION
07/2019		RECORD DRAWING

STRUCTURAL

SECTIONS AND DETAILS

LITTLE PATUXENT WATER RECLAMATION PLANT
8TH ADDITION
BIOSOLIDS PROCESSING FACILITIES - PHASE I

CAPITAL PROJECT S-6295
CONTRACT NO. 24-4935

ELECTION DISTRICT NO. 6
HOWARD COUNTY, MARYLAND

SCALE AS SHOWN

SHEET 98B OF 463

S-242

BIM 360://10054364 – Little Patuxent WRP 8th Addition/264591_100_S_V18.rvt
1/10/2022 2:13:49 PM

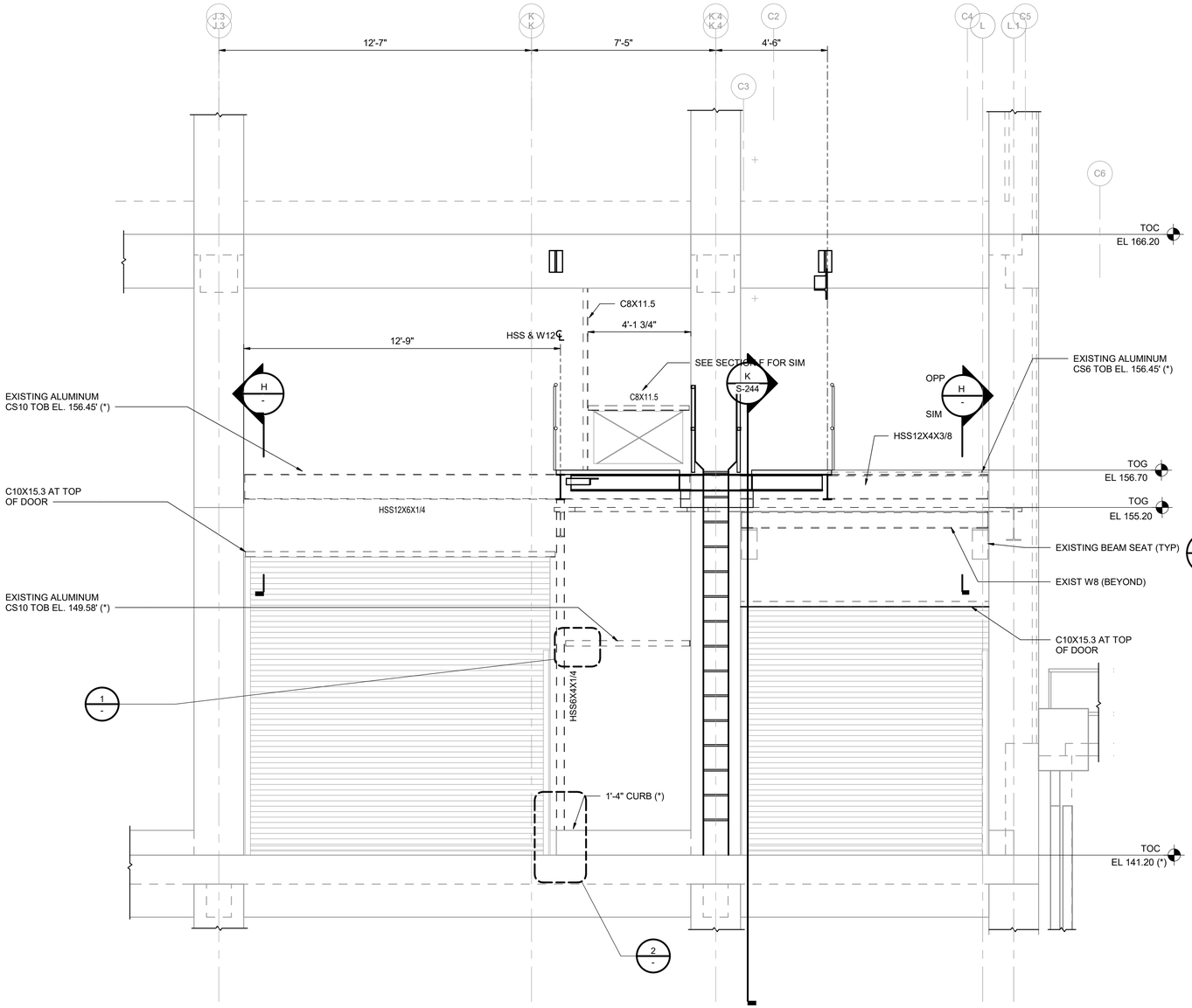

E S-241 ELEVATION
3/8" = 1'-0"

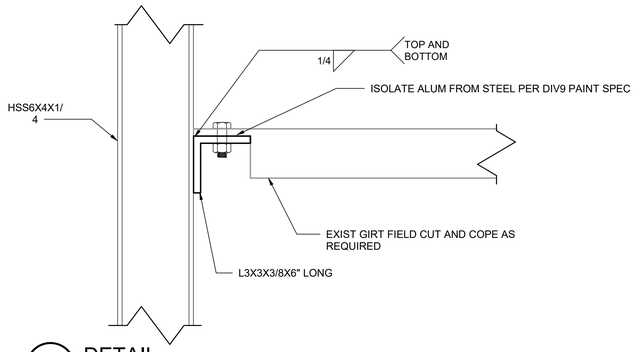

1 - DETAIL
3" = 1'-0"

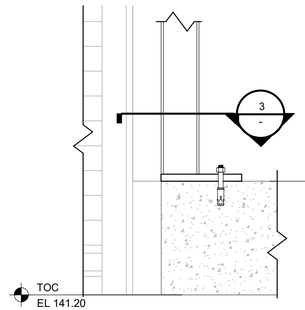

2 - DETAIL
1 1/2" = 1'-0"

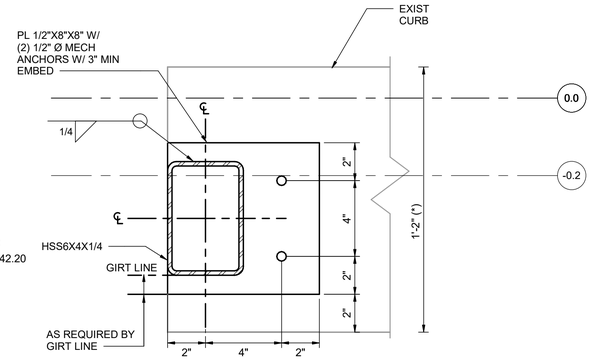

3 - DETAIL
3" = 1'-0"

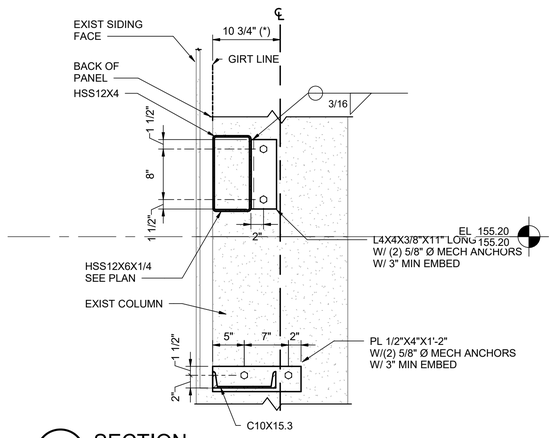

H S-241 SECTION
1" = 1'-0"

GENERAL NOTES

1. SEE S-241 FOR ADDITIONAL NOTES

THE DRAWINGS IN THIS SET ARE RECORD DRAWINGS. THEY ARE CONSTRUCTION CONTRACT DRAWINGS WHICH HAVE BEEN REVISED BASED ON AVAILABLE FIELD INFORMATION RECORDED BY OTHERS DURING CONSTRUCTION OF THIS CONTRACT. THERE HAS BEEN NO VERIFICATION OF DIMENSIONS SHOWN ON THE CONSTRUCTION DRAWINGS OR THE ACCURACY/COMPLETENESS OF THE FIELD INFORMATION RECEIVED.

SIGNATURE — DATE 2/7/2023

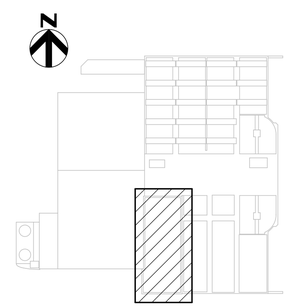

KEY PLAN

AS-BUILT REPLACEMENT SHEET

PROFESSIONAL CERTIFICATION

THIS DRAWING WAS ORIGINALLY APPROVED FOR CONSTRUCTION AND SEALED BY MICHAEL E. MARTIN, A REGISTERED PROFESSIONAL ENGINEER IN THE STATE OF MARYLAND, NO. 49839

NOTICE TO CONTRACTORS

- PROJECT ELEVATIONS ARE BASED ON NAVD88 AND HOWARD COUNTY'S BENCHMARK SYSTEM
- PREVIOUS PROJECTS USED OTHER DATUMS
- APPLY THE FOLLOWING CONVERSIONS WHEN USING PREVIOUS CONTRACT DRAWINGS:
  - ADDITION NO. 6: SUBTRACT 0.80 FT
  - PRIOR ADDITIONS: SUBTRACT 1.04 FT

DEPARTMENT OF PUBLIC WORKS
HOWARD COUNTY, MARYLAND

CHIEF, BUREAU OF UTILITIES — DATE

DES: MEM
DRN: NCC
CHK: HMA
DATE: 12/2016

DATE	REV	DESCRIPTION
07/2019		RECORD DRAWING

STRUCTURAL

SECTIONS AND DETAILS

LITTLE PATUXENT WATER RECLAMATION PLANT
8TH ADDITION
BIOSOLIDS PROCESSING FACILITIES - PHASE I

CAPITAL PROJECT S-6295
CONTRACT NO. 24-4935

ELECTION DISTRICT NO. 6
HOWARD COUNTY, MARYLAND

SCALE AS SHOWN

SHEET 98C OF 463

S-243

BIM 360://10054364 – Little Patuxent WRP 8th Addition/264591_100_S_V18.rvt
1/10/2022 2:13:53 PM

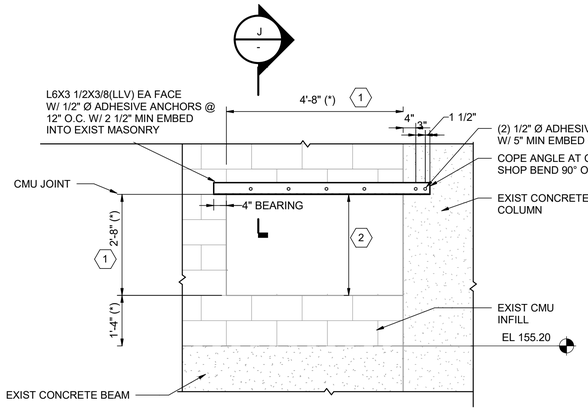

F S-241 **ELEVATION** 1/2" = 1'-0"

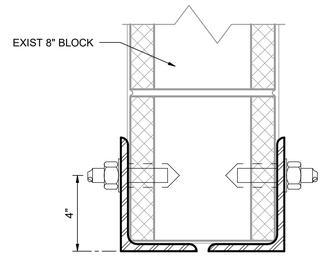

J - **SECTION** 3" = 1'-0"

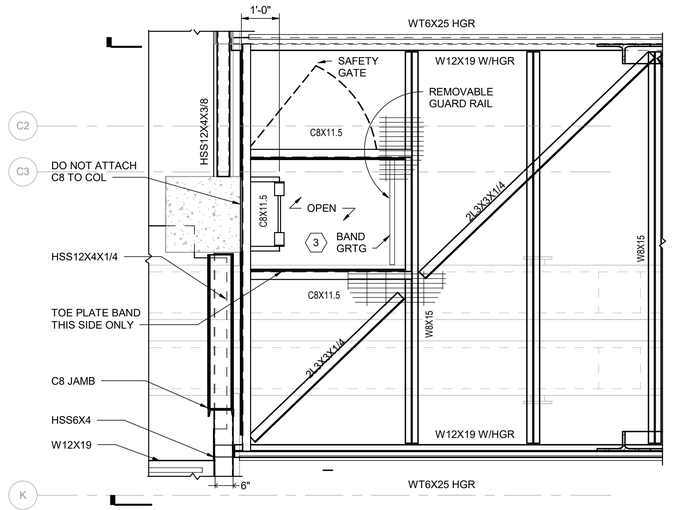

1 S-241 **DETAIL** 1/2" = 1'-0"

SIM D S-242 GENERAL NOTES

1. SEE S-241 FOR ADDITIONAL NOTES

KEY NOTES:

1. OPENING FOR CONVEYORS VERIFY SIZE AND LOCATION
2. SHORE AS REQUIRED UNTIL LINTEL INSTALLED
3. PROVIDE GRATING SECTION THAT CAN BE USED TO TEMPORARILY CLOSE LADDER ACCESS OPENING FOR SAFER SERVICING OF EQUIPMENT

SIM D S-242

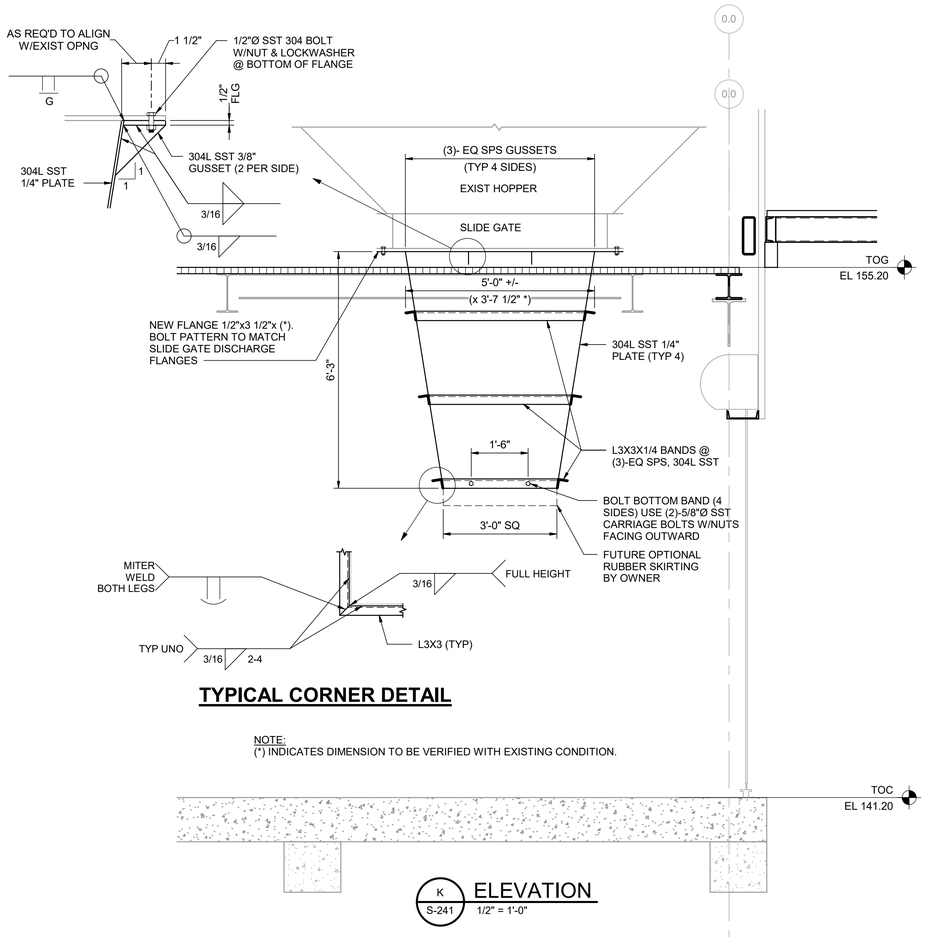

TYPICAL CORNER DETAIL

NOTE:
(*) INDICATES DIMENSION TO BE VERIFIED WITH EXISTING CONDITION.

K S-241 **ELEVATION** 1/2" = 1'-0"

THE DRAWINGS IN THIS SET ARE RECORD DRAWINGS. THEY ARE CONSTRUCTION CONTRACT DRAWINGS WHICH HAVE BEEN REVISED BASED ON AVAILABLE FIELD INFORMATION RECORDED BY OTHERS DURING CONSTRUCTION OF THIS CONTRACT. THERE HAS BEEN NO VERIFICATION OF DIMENSIONS SHOWN ON THE CONSTRUCTION DRAWINGS OR THE ACCURACY/COMPLETENESS OF THE FIELD INFORMATION RECEIVED.

SIGNATURE _____ DATE 2/7/2023

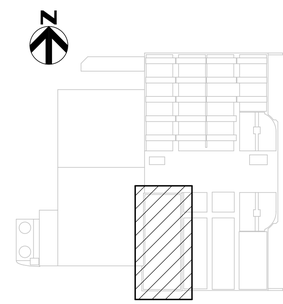

KEY PLAN

AS-BUILT REPLACEMENT SHEET

PROFESSIONAL CERTIFICATION

THIS DRAWING WAS ORIGINALLY APPROVED FOR CONSTRUCTION AND SEALED BY MICHAEL E. MARTIN, A REGISTERED PROFESSIONAL ENGINEER IN THE STATE OF MARYLAND, NO. 49839

NOTICE TO CONTRACTORS

- PROJECT ELEVATIONS ARE BASED ON NAVD88 AND HOWARD COUNTY'S BENCHMARK SYSTEM
- PREVIOUS PROJECTS USED OTHER DATUMS
- APPLY THE FOLLOWING CONVERSIONS WHEN USING PREVIOUS CONTRACT DRAWINGS:
  - ADDITION NO. 6: SUBTRACT 0.80 FT
  - PRIOR ADDITIONS: SUBTRACT 1.04 FT

DEPARTMENT OF PUBLIC WORKS
HOWARD COUNTY, MARYLAND

CHIEF, BUREAU OF UTILITIES DATE

DES: MEM
DRN: NCC
CHK: Checker
DATE: 12/2016

DATE	REV	DESCRIPTION
08/2019	1	ADDED ELEVATION K; DR 45
07/2019		RECORD DRAWING

STRUCTURAL

SECTIONS AND DETAILS

LITTLE PATUXENT WATER RECLAMATION PLANT
8TH ADDITION
BIOSOLIDS PROCESSING FACILITIES - PHASE I

CAPITAL PROJECT S-6295
CONTRACT NO. 24-4935

ELECTION DISTRICT NO. 6
HOWARD COUNTY, MARYLAND

SCALE AS SHOWN

SHEET **98D** OF **463**

S-244

BIM 360://10054364 – Little Patuxent WRP 8th Addition/264591_100_S_V18.rvt
1/10/2022 2:13:56 PM

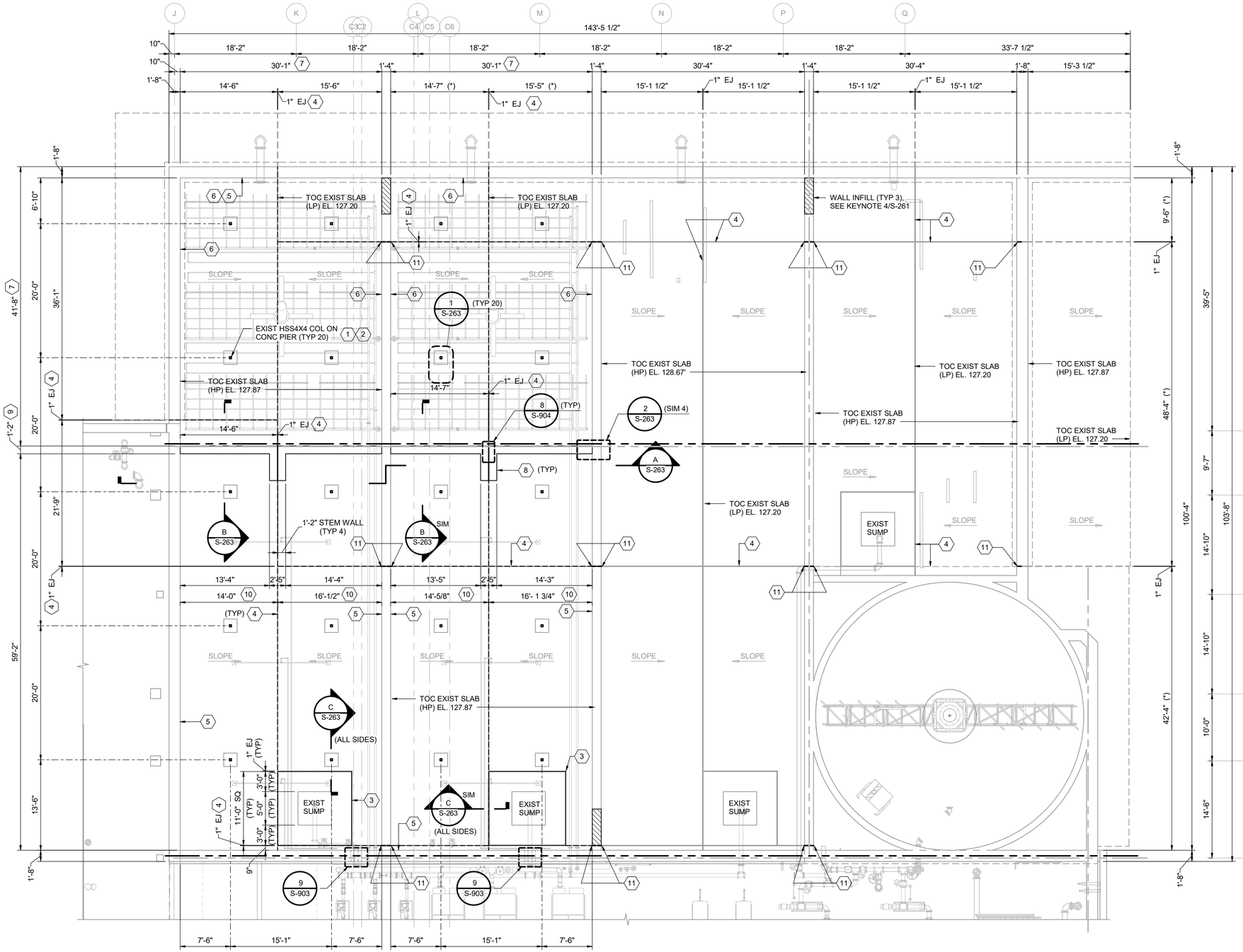

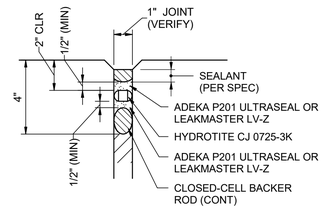

NOTE:
BOTH SIDES OF COMMON WALLS AND LAP 24" ONTO FLOOR SEE KEYNOTE 11.

5 - EXPANSION JOINT REPAIR
3" = 1'-0"

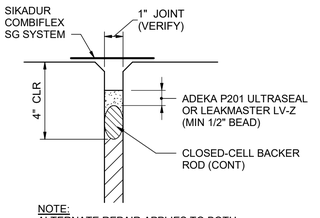

NOTE:
ALTERNATE REPAIR APPLIES TO BOTH SIDES OF COMMON WALLS AND LAP 24" ONTO FLOOR SEE KEYNOTE 11.

5A - ALTERNATE EXPANSION JOINT REPAIR
NOT TO SCALE

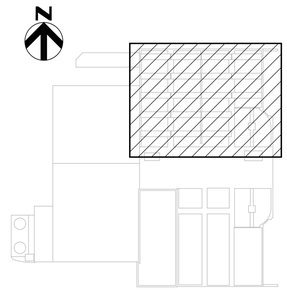

KEY PLAN

FOUNDATION PLAN
1/8" = 1'-0"

GENERAL NOTES:

1. SEE SHEET S-901 FOR STRUCTURAL NOTES.
2. (*) INDICATES DIMENSION/ITEM TO BE VERIFIED PRIOR TO FABRICATION/CONSTRUCTION.

KEY NOTES:

1. REPLACE EXISTING HSS4X4 COLUMN WITH HSS4X4X3/8 304 SST COLUMN, REUSE ANCHOR BOLTS IF OF SST MATERIAL.
2. REPLACEMENT PROCESS SHALL ONLY BE DONE WHEN ALL EXISTING COVERS ARE REMOVED FROM BEAMS THAT NORMALLY SUPPORT THEM. REMOVE ALL LOAD FROM EXISTING CONCRETE EAST/WEST WALKWAY.
3. REMOVE BLISTERED CONCRETE COATING AND SEAL FULL PERIMETER JOINT BETWEEN SUMP AND FLOOR WITH SIKADUR COMBIFLEX SG.
4. REMOVE EXISTING EJ MATERIAL AND BACKER ROD. REPLACE WITH NEW MATERIALS PER SPECIFICATIONS. FULL LENGTH/WIDTH OF FOUR TANKS, INCLUDING WALLS.
5. HYDRO OR GRIT CLEAN WALLS AND BEAMS TO REMOVE ALL COATINGS AND SURFACE APPLIED MATERIALS. EXERCISE GREAT CARE AT EXPANSION JOINTS TO AVOID FURTHER DAMAGE. REPAIR AS REQUIRED TO COMPLY WITH SURFACE FINISH #2 PER SPECIFICATION 03 35 00. SEE S-910 FOR ADDITIONAL INFORMATION ON CONCRETE REPAIR.
6. REPAIR EXISTING WALL SURFACE DEFECTS PRIOR TO LEAK TEST. REFERENCE SPECIFICATION 03 35 00 AND COMPLY WITH AS-CAST FORM FINISH #2.
7. EACH TANK SHALL BE LEAK TESTED INDIVIDUALLY, REFERENCE SPECIFICATION 01 45 25.
8. NO DOWELS FROM 8/S-904 REQUIRED IN COUNTERFORT, ONLY ALONG WALL.
9. NEW CONCRETE WALL ASSEMBLY AND CHANNEL SHALL BE LEAK TESTED AND MEET REQUIREMENTS OF SPECIFICATION 01 45 25, EXCEPT FOR VOLUME LOSS OF TANKS. TEST SHALL BE PERFORMED FROM BOTH SIDES.
10. ACTUAL DIMENSION BASED ON FIELD DIMENSION.
11. INSTALL MOUNTAIN GROUT ULTRA BY GREEN MOUNTAIN INTERNATIONAL, FULL LENGTH AT FLOOR OVERLAP OF DETAIL 5 OR 5A REPAIR. TYPICAL AT FLOOR ON BOTH SIDES OF COMMON WALLS AT 12 LOCATIONS.

THE DRAWINGS IN THIS SET ARE RECORD DRAWINGS. THEY ARE CONSTRUCTION CONTRACT DRAWINGS WHICH HAVE BEEN REVISED BASED ON AVAILABLE FIELD INFORMATION RECORDED BY OTHERS DURING CONSTRUCTION OF THIS CONTRACT. THERE HAS BEEN NO VERIFICATION OF DIMENSIONS SHOWN ON THE CONSTRUCTION DRAWINGS OR THE ACCURACY/COMPLETENESS OF THE FIELD INFORMATION RECEIVED.

SIGNATURE — DATE 2/7/2023

AS-BUILT REPLACEMENT SHEET

PROFESSIONAL CERTIFICATION
THIS DRAWING WAS ORIGINALLY APPROVED FOR CONSTRUCTION AND SEALED BY MICHAEL E. MARTIN, A REGISTERED PROFESSIONAL ENGINEER IN THE STATE OF MARYLAND, NO. 49839

NOTICE TO CONTRACTORS
- PROJECT ELEVATIONS ARE BASED ON NAVD88 AND HOWARD COUNTY'S BENCHMARK SYSTEM
- PREVIOUS PROJECTS USED OTHER DATUMS
- APPLY THE FOLLOWING CONVERSIONS WHEN USING PREVIOUS CONTRACT DRAWINGS:
  - ADDITION NO. 6: SUBTRACT 0.80 FT
  - PRIOR ADDITIONS: SUBTRACT 1.04 FT

DEPARTMENT OF PUBLIC WORKS
HOWARD COUNTY, MARYLAND

CHIEF, BUREAU OF UTILITIES — DATE

DES: HMA
DRN: WTM
CHK: MEM
DATE: 12/2016

DATE	REV	DESCRIPTION
07/2019		RECORD DRAWING

STRUCTURAL

DEAMMONIFICATION AND GT-1 FOUNDATION PLAN

LITTLE PATUXENT WATER RECLAMATION PLANT
8TH ADDITION
BIOSOLIDS PROCESSING FACILITIES - PHASE I

CAPITAL PROJECT S-6295
CONTRACT NO. 24-4935

ELECTION DISTRICT NO. 6
HOWARD COUNTY, MARYLAND

SCALE AS SHOWN

SHEET 113 OF 463

S-260

BIM 360://10054364 – Little Patuxent WRP 8th Addition/264591_100_S_V18.rvt
1/10/2022 2:14:00 PM

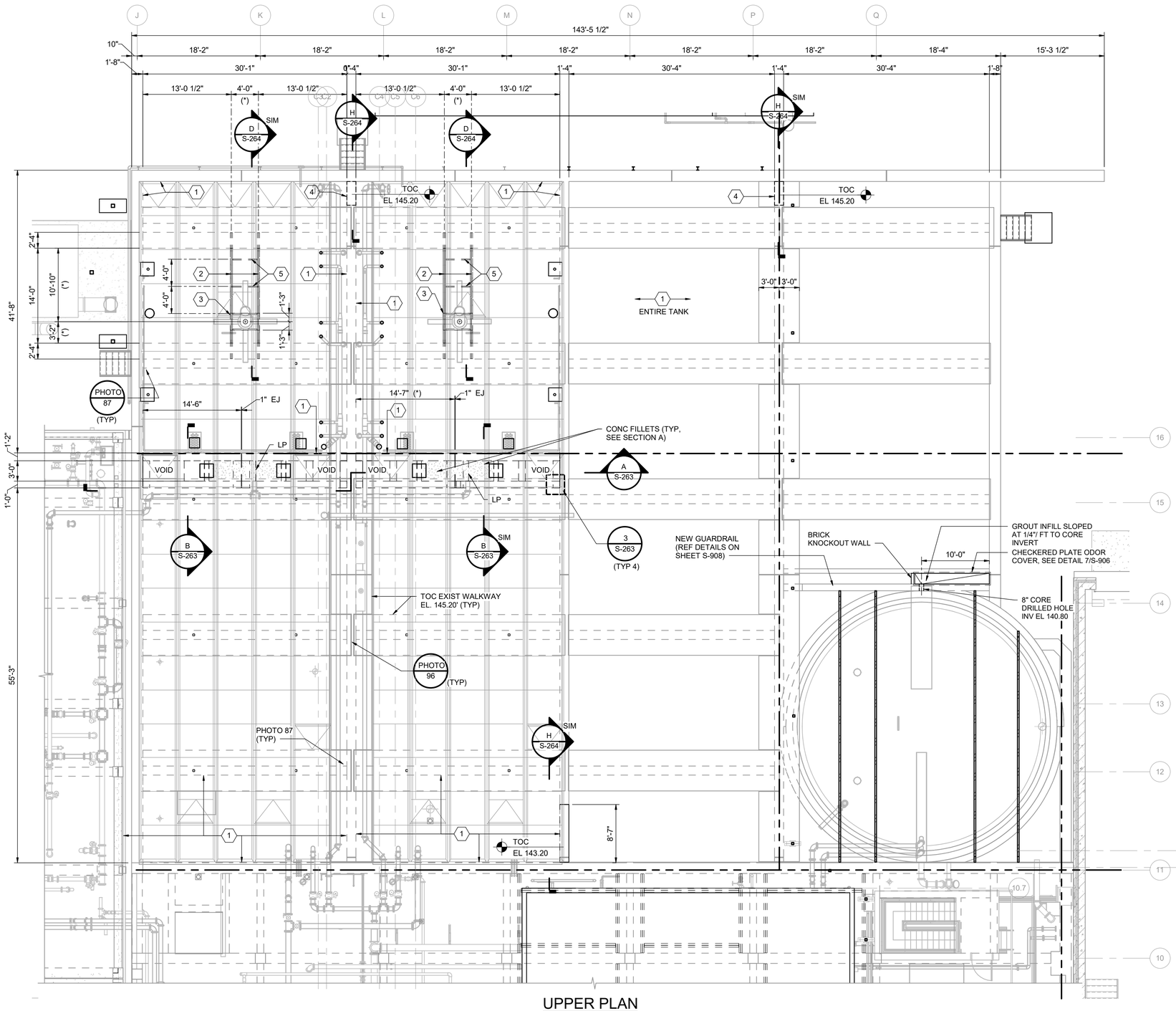

UPPER PLAN

1/8" = 1'-0"

NOTE: PHOTO 87 IS REPRESENTATIVE OF TYPICAL CRACKING FOUND DURING STRUCTURAL INSPECTION. REPAIR IS TO BE PERFORMED TANK WIDE WITH CONTRACTOR DETERMINING FULL EXTENT NECESSARY.

PHOTO 87 (TYP)

NOT TO SCALE

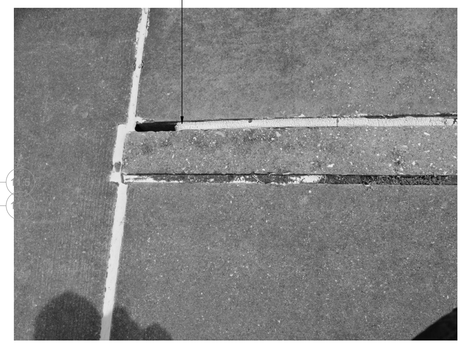

PHOTO 96 (TYP)

NOT TO SCALE

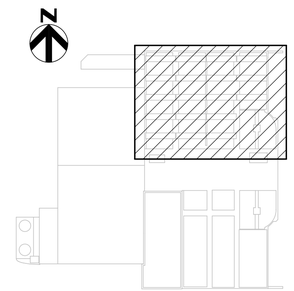

KEY PLAN

GENERAL NOTES:

1. SEE SHEET S-260 FOR ADDITIONAL NOTES.
2. SEE SHEET S-260 FOR EXPANSION JOINT LOCATIONS AND REPAIR INFORMATION.
3. EXISTING COVERS NOT SHOWN ON PLAN FOR CLARITY, SEE SHEET S-262.
4. PROVIDE DISSIMILAR MATERIAL PROTECTION PER SPECIFICATIONS.

KEY NOTES:

1. REMOVE EXISTING EJ MATERIAL AND BACKER ROD. REPLACE WITH NEW MATERIALS PER SPECIFICATIONS. FULL LENGTH/WIDTH OF FOUR TANKS INCLUDING WALLS.
2. ALUMINUM I8x6.18 ON TOP OF ALUMINUM I10x8.65, TOP OF I8 ELEVATION 145.16' (*) (TYP 4 PLACES). SEE SECTIONS.
3. 1/2" THICK ALUMINUM PLATE x 2'-0" WIDE WITH 10"Ø HOLE CENTERED ON TOP OF (2)-ALUMINUM CS8x4.15's, TOP OF PLATE ELEVATION TO MATCH EXISTING ALUMINUM PLANK ELEVATION. COORDINATE HOLE DIAMETER WITH EQUIPMENT MANUFACTURER
4. CLOSE EXISTING WALL OPENING WITH CONCRETE, SEE SECTION FOR ADDITIONAL INFORMATION.
5. ALUMINUM C6X2.83, TOP OF C6 TO BE FLUSH WITH TOP OF I10.

THE DRAWINGS IN THIS SET ARE RECORD DRAWINGS. THEY ARE CONSTRUCTION CONTRACT DRAWINGS WHICH HAVE BEEN REVISED BASED ON AVAILABLE FIELD INFORMATION RECORDED BY OTHERS DURING CONSTRUCTION OF THIS CONTRACT. THERE HAS BEEN NO VERIFICATION OF DIMENSIONS SHOWN ON THE CONSTRUCTION DRAWINGS OR THE ACCURACY/COMPLETENESS OF THE FIELD INFORMATION RECEIVED.

SIGNATURE — DATE 2/7/2023

AS-BUILT REPLACEMENT SHEET

PROFESSIONAL CERTIFICATION

THIS DRAWING WAS ORIGINALLY APPROVED FOR CONSTRUCTION AND SEALED BY MICHAEL E. MARTIN, A REGISTERED PROFESSIONAL ENGINEER IN THE STATE OF MARYLAND, NO. 49839

NOTICE TO CONTRACTORS

- PROJECT ELEVATIONS ARE BASED ON NAVD88 AND HOWARD COUNTY'S BENCHMARK SYSTEM
- PREVIOUS PROJECTS USED OTHER DATUMS
- APPLY THE FOLLOWING CONVERSIONS WHEN USING PREVIOUS CONTRACT DRAWINGS:
  - ADDITION NO. 6: SUBTRACT 0.80 FT
  - PRIOR ADDITIONS: SUBTRACT 1.04 FT

DEPARTMENT OF PUBLIC WORKS
HOWARD COUNTY, MARYLAND

CHIEF, BUREAU OF UTILITIES — DATE

DES: HMA
DRN: WTM
CHK: MEM
DATE: 12/2016

DATE	REV	DESCRIPTION
07/2019		RECORD DRAWING

STRUCTURAL

DEAMMONIFICATION AND GT-1 UPPER PLAN

LITTLE PATUXENT WATER RECLAMATION PLANT
8TH ADDITION
BIOSOLIDS PROCESSING FACILITIES - PHASE I

CAPITAL PROJECT S-6295
CONTRACT NO. 24-4935

ELECTION DISTRICT NO. 6
HOWARD COUNTY, MARYLAND

SCALE AS SHOWN

SHEET 114 OF 463

S-261

BIM 360://10054364 – Little Patuxent WRP 8th Addition/264591_100_S_V18.rvt
1/10/2022 2:14:05 PM

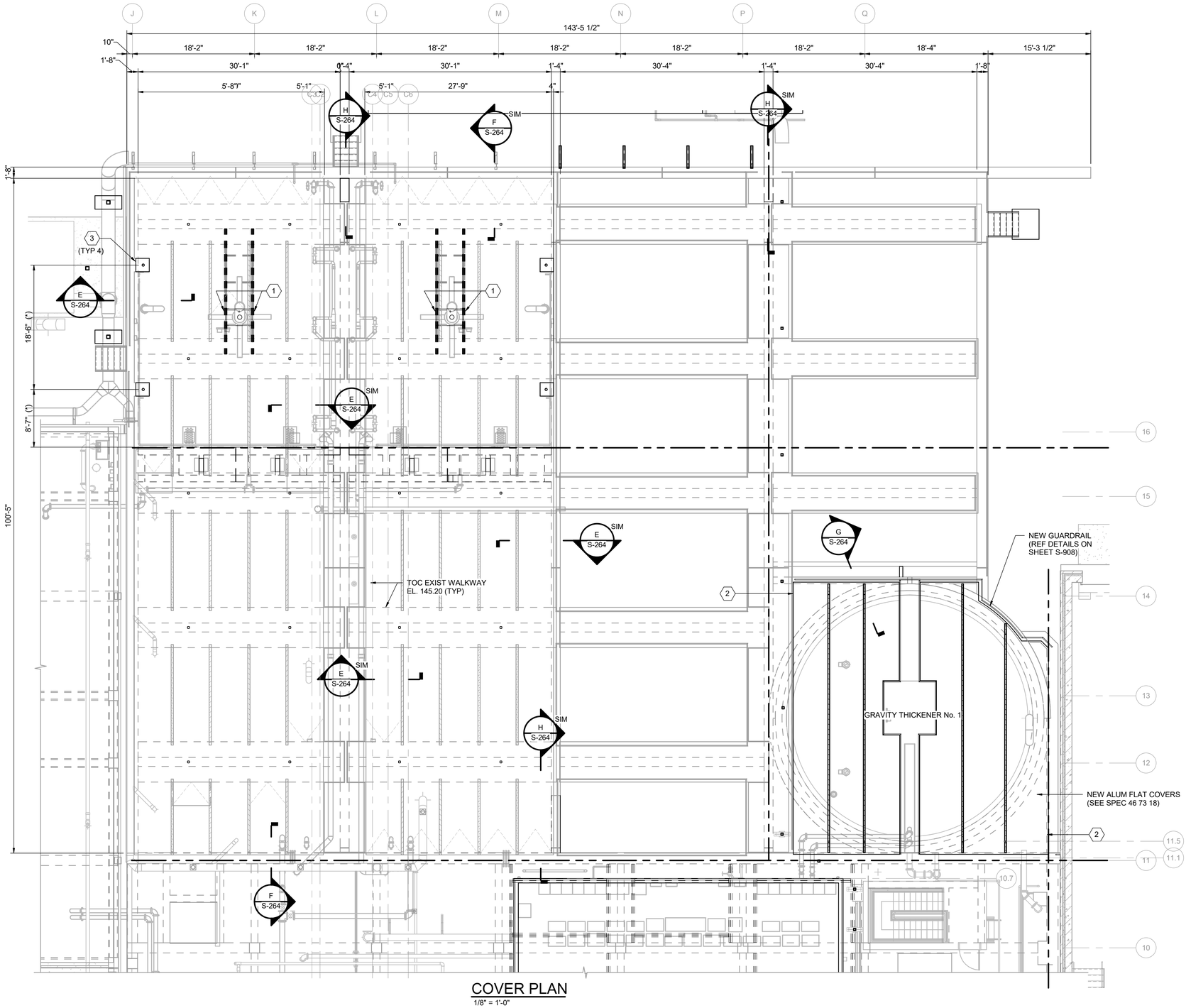

COVER PLAN

1/8" = 1'-0"

GENERAL NOTES:

1. SEE SHEET S-260 FOR ADDITIONAL NOTES.

KEY NOTES:

1. MODIFY EXISTING ALUMINUM COVERS TO ACCOMMODATE NEW MIXER INSTALLATION. SEE DETAIL 8/S-905 FOR COVER REPLACEMENT.
2. COVER EXTENT TO BE SAME AS THOSE EXISTING ON GRAVITY THICKENER No. 2.
3. NEW 24" SQUARE ALUMINUM HATCH, CREATE OPENING AS REQUIRED USING MANUFACTURER REQUIREMENTS OF HALLSTEN FIELD PENETRATION KIT.

THE DRAWINGS IN THIS SET ARE RECORD DRAWINGS. THEY ARE CONSTRUCTION CONTRACT DRAWINGS WHICH HAVE BEEN REVISED BASED ON AVAILABLE FIELD INFORMATION RECORDED BY OTHERS DURING CONSTRUCTION OF THIS CONTRACT. THERE HAS BEEN NO VERIFICATION OF DIMENSIONS SHOWN ON THE CONSTRUCTION DRAWINGS OR THE ACCURACY/COMPLETENESS OF THE FIELD INFORMATION RECEIVED.

SIGNATURE

2/7/2023
DATE

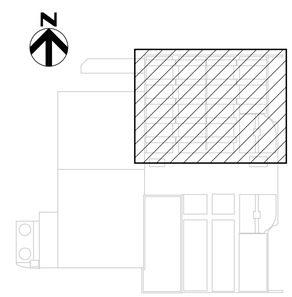

KEY PLAN

AS-BUILT REPLACEMENT SHEET

PROFESSIONAL CERTIFICATION

THIS DRAWING WAS ORIGINALLY APPROVED FOR CONSTRUCTION AND SEALED BY MICHAEL E. MARTIN, A REGISTERED PROFESSIONAL ENGINEER IN THE STATE OF MARYLAND, NO. 49839

NOTICE TO CONTRACTORS

- PROJECT ELEVATIONS ARE BASED ON NAVD88 AND HOWARD COUNTY'S BENCHMARK SYSTEM
- PREVIOUS PROJECTS USED OTHER DATUMS
- APPLY THE FOLLOWING CONVERSIONS WHEN USING PREVIOUS CONTRACT DRAWINGS:
  - ADDITION NO. 6: SUBTRACT 0.80 FT
  - PRIOR ADDITIONS: SUBTRACT 1.04 FT

DEPARTMENT OF PUBLIC WORKS
HOWARD COUNTY, MARYLAND

CHIEF, BUREAU OF UTILITIES — DATE

DES: HMA
DRN: WTM
CHK: MEM
DATE: 12/2016

DATE	REV	DESCRIPTION
07/2019		RECORD DRAWING

STRUCTURAL

DEAMMONIFICATION AND GT-1 COVER PLAN

LITTLE PATUXENT WATER RECLAMATION PLANT
8TH ADDITION
BIOSOLIDS PROCESSING FACILITIES - PHASE I

CAPITAL PROJECT S-6295
CONTRACT NO. 24-4935

ELECTION DISTRICT NO. 6
HOWARD COUNTY, MARYLAND

SCALE AS SHOWN

SHEET 115 OF 463

S-262

BIM 360://10054364 – Little Patuxent WRP 8th Addition/264591_100_S_V18.rvt
1/10/2022 2:14:09 PM

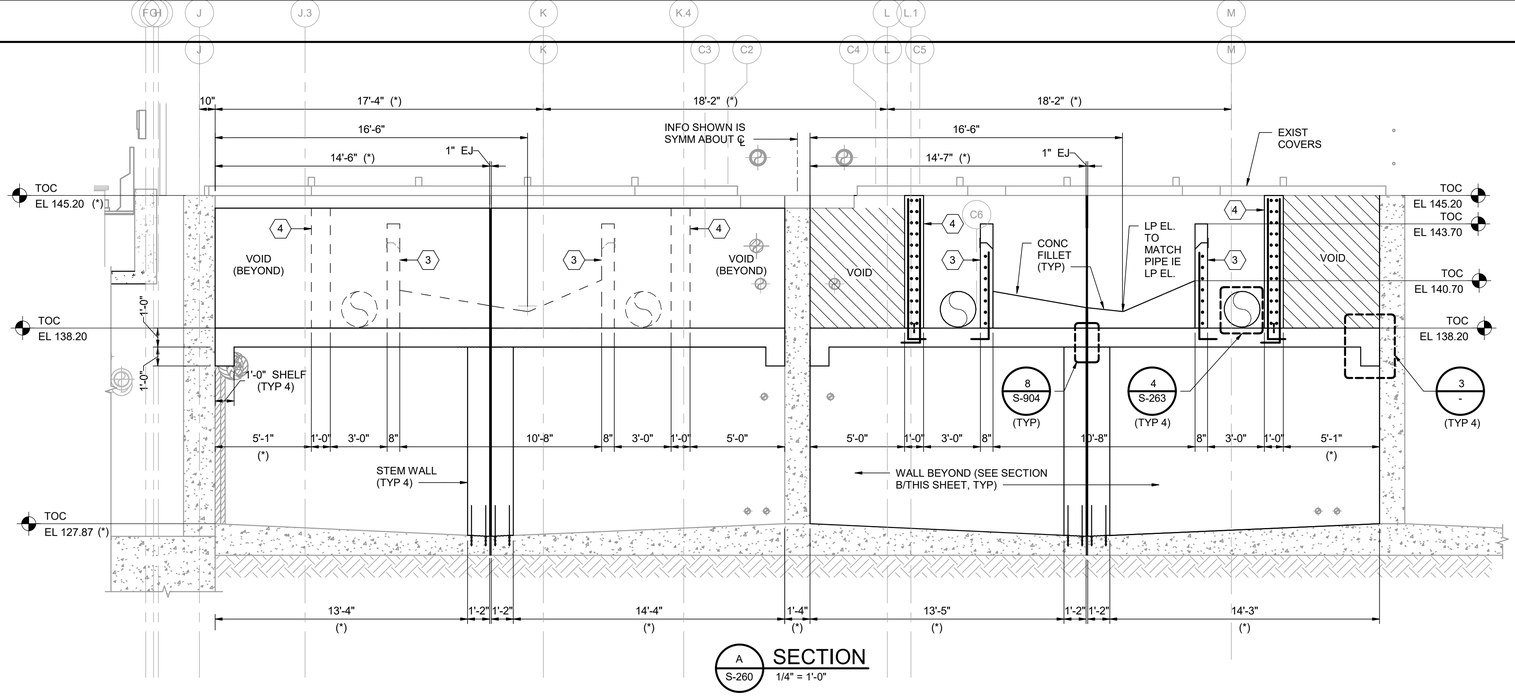

A S-260 SECTION 1/4" = 1'-0"

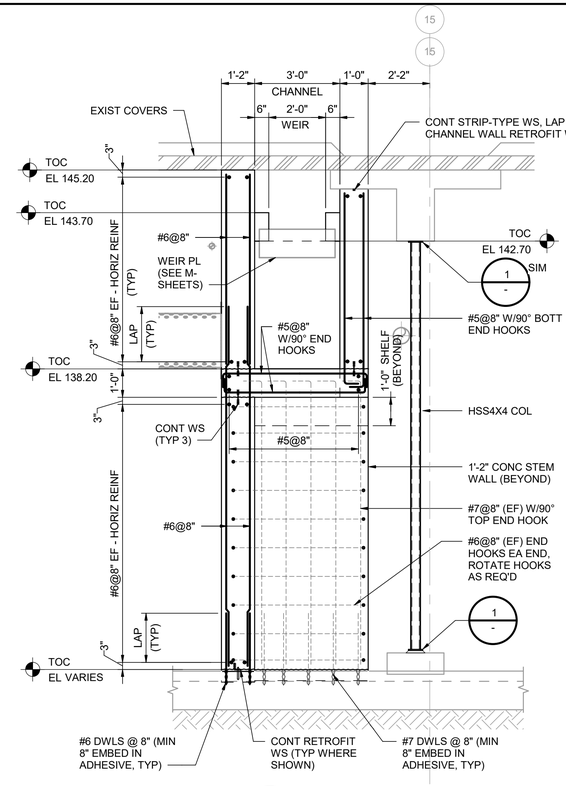

B S-260 SECTION 3/8" = 1'-0"

GENERAL NOTES:

1. SEE SHEET S-260 FOR ADDITIONAL NOTES.
2. (*) INDICATES ITEM/DIMENSION TO BE VERIFIED PRIOR TO FABRICATION/CONSTRUCTION.

KEY NOTES:

1. 8"(*) TO CENTERLINE UP (2)-3/4"Ø SST ADHESIVE ANCHORS (MINIMUM 8" EMBEDMENT).

   ROUGHEN EXISTING SURFACE TO 1/4" AMPLITUDE EXCEPT AT RETROFIT WATERSTOP LOCATION.
2. #5@8" VERTICAL REINFORCING WITH 90° BOTTOM END HOOKS, #5@8" HORIZONTAL REINFORCING WITH 90° END HOOKS INTO INTERSECTING WALLS.
3. #5@8" (EF) VERTICAL REINFORCING WITH 90° BOTTOM END HOOKS, #5@8" HORIZONTAL REINFORCING (EF) WITH 90° END HOOKS INTO INTERSECTING WALLS.
4.

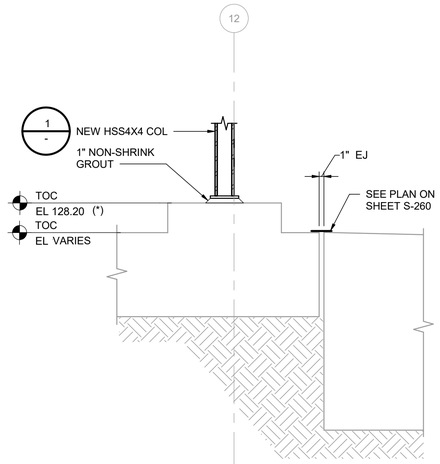

C S-260 SECTION 3/4" = 1'-0"

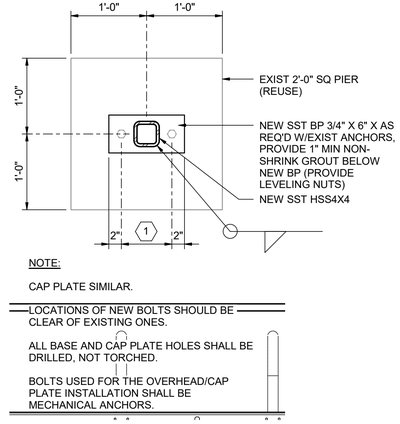

1 S-260 DETAIL 1" = 1'-0"

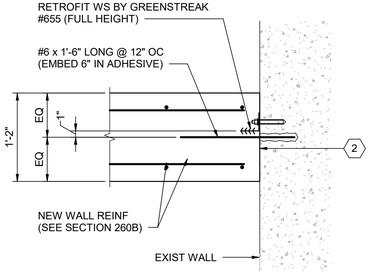

2 S-260 DETAIL 1" = 1'-0"

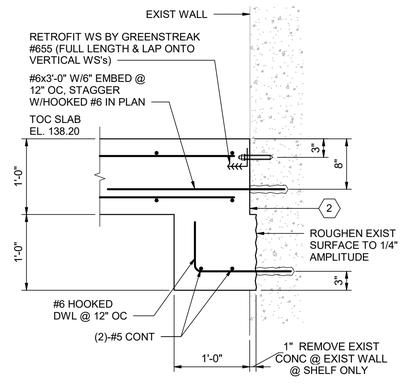

3 S-261 DETAIL 1" = 1'-0"

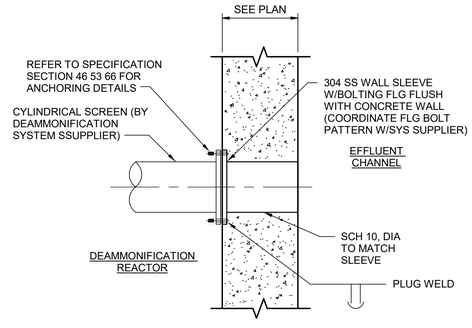

4 - DETAIL NOT TO SCALE

THE DRAWINGS IN THIS SET ARE RECORD DRAWINGS. THEY ARE CONSTRUCTION CONTRACT DRAWINGS WHICH HAVE BEEN REVISED BASED ON AVAILABLE FIELD INFORMATION RECORDED BY OTHERS DURING CONSTRUCTION OF THIS CONTRACT. THERE HAS BEEN NO VERIFICATION OF DIMENSIONS SHOWN ON THE CONSTRUCTION DRAWINGS OR THE ACCURACY/COMPLETENESS OF THE FIELD INFORMATION RECEIVED.

SIGNATURE 2/7/2023 DATE

AS-BUILT REPLACEMENT SHEET

PROFESSIONAL CERTIFICATION

THIS DRAWING WAS ORIGINALLY APPROVED FOR CONSTRUCTION AND SEALED BY MICHAEL E. MARTIN, A REGISTERED PROFESSIONAL ENGINEER IN THE STATE OF MARYLAND, NO. 49839

NOTICE TO CONTRACTORS

- PROJECT ELEVATIONS ARE BASED ON NAVD88 AND HOWARD COUNTY'S BENCHMARK SYSTEM
- PREVIOUS PROJECTS USED OTHER DATUMS
- APPLY THE FOLLOWING CONVERSIONS WHEN USING PREVIOUS CONTRACT DRAWINGS:
  - ADDITION NO. 6: SUBTRACT 0.80 FT
  - PRIOR ADDITIONS: SUBTRACT 1.04 FT

DEPARTMENT OF PUBLIC WORKS
HOWARD COUNTY, MARYLAND

CHIEF, BUREAU OF UTILITIES DATE

DES: HMA
DRN: WTM
CHK: MEM
DATE: 12/2016

DATE	REV	DESCRIPTION
07/2019		RECORD DRAWING

STRUCTURAL

DEAMMONIFICATION AND GT-1 SECTIONS AND DETAILS

LITTLE PATUXENT WATER RECLAMATION PLANT
8TH ADDITION
BIOSOLIDS PROCESSING FACILITIES - PHASE I

CAPITAL PROJECT S-6295
CONTRACT NO. 24-4935

ELECTION DISTRICT NO. 6
HOWARD COUNTY, MARYLAND

SCALE AS SHOWN

SHEET 116 OF 463

S-263

BIM 360://10054364 – Little Patuxent WRP 8th Addition/264591_100_S_V18.rvt
1/10/2022 2:14:13 PM

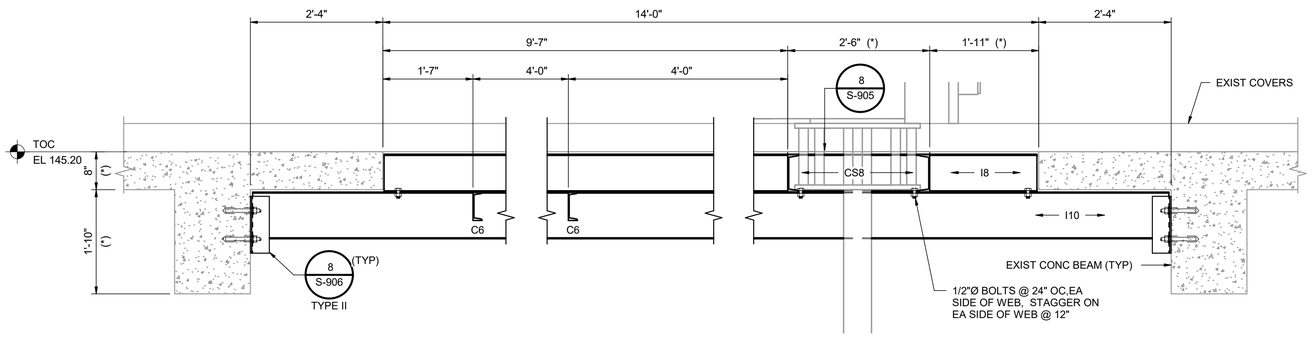

D S-261 **SECTION**
3/4" = 1'-0"

GENERAL NOTES:

1. SEE SHEET S-260 FOR ADDITIONAL NOTES.

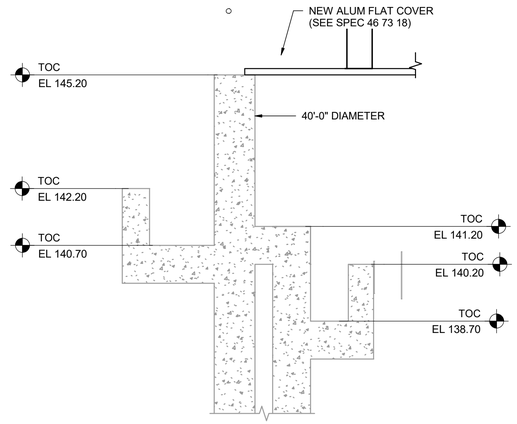

G S-262 **SECTION**
1/2" = 1'-0"

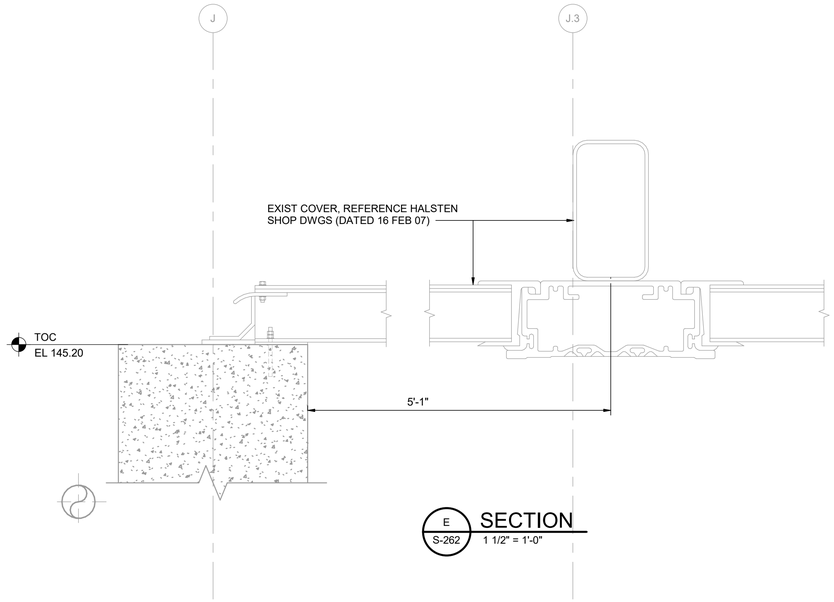

E S-262 **SECTION**
1 1/2" = 1'-0"

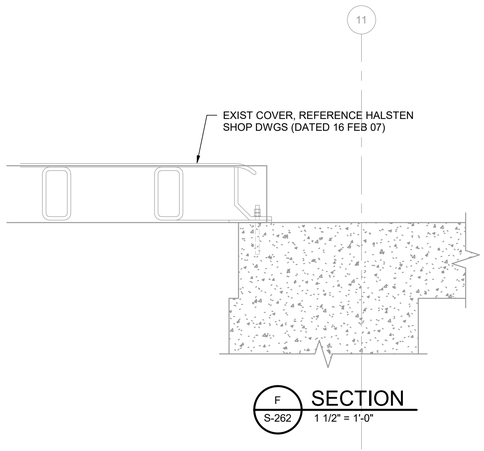

F S-262 **SECTION**
1 1/2" = 1'-0"

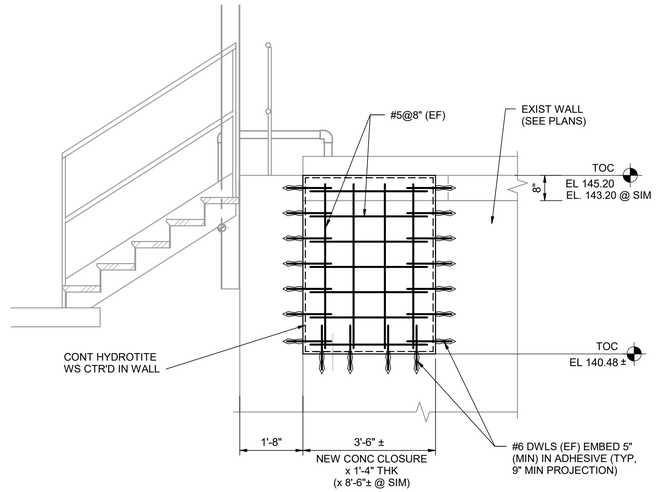

H S-261 **SECTION**
1/2" = 1'-0"

S-263

THE DRAWINGS IN THIS SET ARE RECORD DRAWINGS. THEY ARE CONSTRUCTION CONTRACT DRAWINGS WHICH HAVE BEEN REVISED BASED ON AVAILABLE FIELD INFORMATION RECORDED BY OTHERS DURING CONSTRUCTION OF THIS CONTRACT. THERE HAS BEEN NO VERIFICATION OF DIMENSIONS SHOWN ON THE CONSTRUCTION DRAWINGS OR THE ACCURACY/COMPLETENESS OF THE FIELD INFORMATION RECEIVED.

SIGNATURE — DATE 2/7/2023

AS-BUILT REPLACEMENT SHEET

PROFESSIONAL CERTIFICATION

THIS DRAWING WAS ORIGINALLY APPROVED FOR CONSTRUCTION AND SEALED BY MICHAEL E. MARTIN, A REGISTERED PROFESSIONAL ENGINEER IN THE STATE OF MARYLAND, NO. 49839

NOTICE TO CONTRACTORS

- PROJECT ELEVATIONS ARE BASED ON NAVD88 AND HOWARD COUNTY'S BENCHMARK SYSTEM
- PREVIOUS PROJECTS USED OTHER DATUMS
- APPLY THE FOLLOWING CONVERSIONS WHEN USING PREVIOUS CONTRACT DRAWINGS:
  - ADDITION NO. 6: SUBTRACT 0.80 FT
  - PRIOR ADDITIONS: SUBTRACT 1.04 FT

DEPARTMENT OF PUBLIC WORKS
HOWARD COUNTY, MARYLAND

CHIEF, BUREAU OF UTILITIES — DATE

DES: HMA
DRN: WTM
CHK: MEM
DATE: 12/2016

DATE	REV	DESCRIPTION
07/2019		RECORD DRAWING

STRUCTURAL

DEAMMONIFICATION AND GT-1 SECTIONS AND DETAILS

LITTLE PATUXENT WATER RECLAMATION PLANT
8TH ADDITION
BIOSOLIDS PROCESSING FACILITIES - PHASE I

CAPITAL PROJECT S-6295
CONTRACT NO. 24-4935

ELECTION DISTRICT NO. 6
HOWARD COUNTY, MARYLAND

SCALE AS SHOWN

SHEET 117 OF 463

S-264

BIM 360://10054364 – Little Patuxent WRP 8th Addition/264591_100_S_V18.rvt
1/10/2022 2:14:17 PM

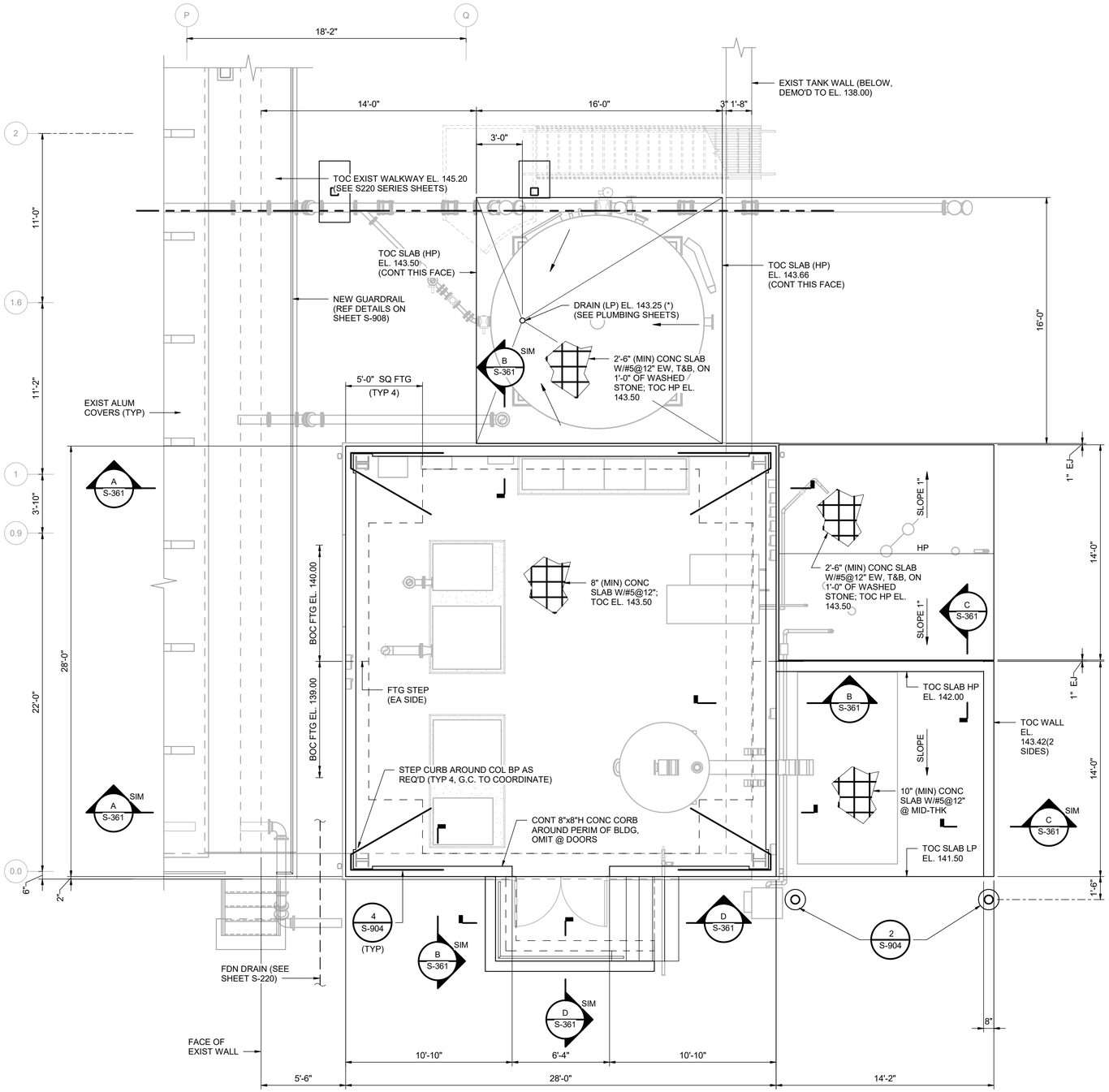

PLAN AT ELEVATION 142.70 (UNO)

1/4" = 1'-0"

GENERAL NOTES:

1. SEE SHEET S-901 FOR STRUCTURAL NOTES.
2. (*) INDICATES DIMENSION/ITEM TO BE VERIFIED PRIOR TO FABRICATION/CONSTRUCTION.

LOADING:

EQUIPMENT OR LIVE: 250 PSF

THE DRAWINGS IN THIS SET ARE RECORD DRAWINGS. THEY ARE CONSTRUCTION CONTRACT DRAWINGS WHICH HAVE BEEN REVISED BASED ON AVAILABLE FIELD INFORMATION RECORDED BY OTHERS DURING CONSTRUCTION OF THIS CONTRACT. THERE HAS BEEN NO VERIFICATION OF DIMENSIONS SHOWN ON THE CONSTRUCTION DRAWINGS OR THE ACCURACY/COMPLETENESS OF THE FIELD INFORMATION RECEIVED.

SIGNATURE — DATE 2/7/2022

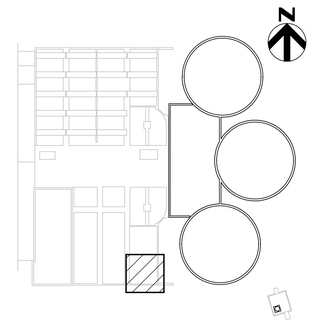

KEY PLAN

AS-BUILT REPLACEMENT SHEET

PROFESSIONAL CERTIFICATION

THIS DRAWING WAS ORIGINALLY APPROVED FOR CONSTRUCTION AND SEALED BY MICHAEL E. MARTIN, A REGISTERED PROFESSIONAL ENGINEER IN THE STATE OF MARYLAND, NO. 49839

NOTICE TO CONTRACTORS

- PROJECT ELEVATIONS ARE BASED ON NAVD88 AND HOWARD COUNTY'S BENCHMARK SYSTEM
- PREVIOUS PROJECTS USED OTHER DATUMS
- APPLY THE FOLLOWING CONVERSIONS WHEN USING PREVIOUS CONTRACT DRAWINGS:
  - ADDITION NO. 6: SUBTRACT 0.80 FT
  - PRIOR ADDITIONS: SUBTRACT 1.04 FT

DEPARTMENT OF PUBLIC WORKS
HOWARD COUNTY, MARYLAND

CHIEF, BUREAU OF UTILITIES — DATE

DES: HMA
DRN: WTM
CHK: MEM
DATE: 12/2016

DATE	REV	DESCRIPTION
07/2019		RECORD DRAWING

STRUCTURAL

PHOSPHORUS PRECIPITATION BUILDING FOUNDATION PLAN

LITTLE PATUXENT WATER RECLAMATION PLANT
8TH ADDITION
BIOSOLIDS PROCESSING FACILITIES - PHASE I

CAPITAL PROJECT S-6295
CONTRACT NO. 24-4935

ELECTION DISTRICT NO. 6
HOWARD COUNTY, MARYLAND

SCALE AS SHOWN

SHEET 118 OF 463

S-360

BIM 360://10054364 – Little Patuxent WRP 8th Addition/264591_100_S_V18.rvt
1/10/2022 2:14:18 PM

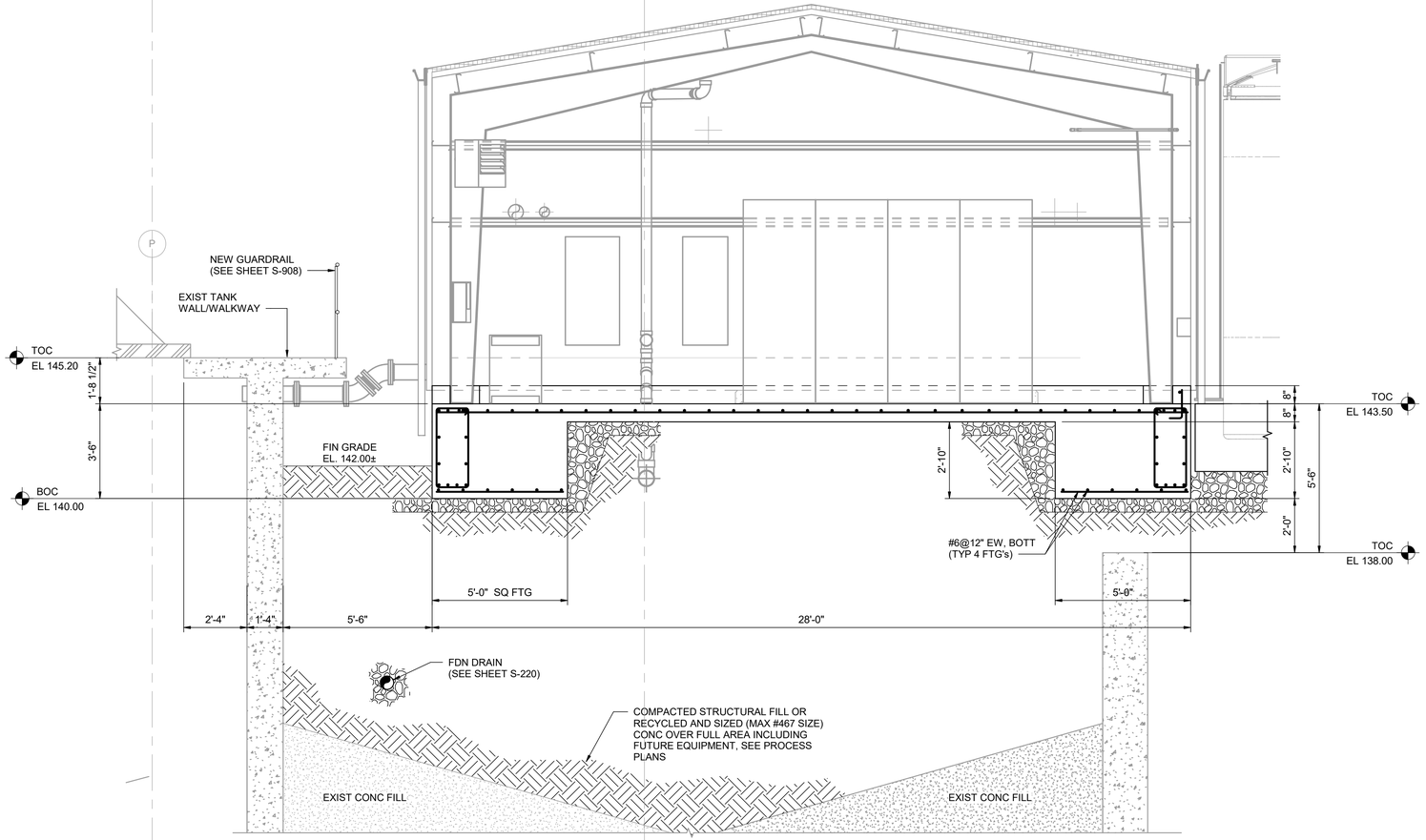

A S-360 SECTION
3/8" = 1'-0"

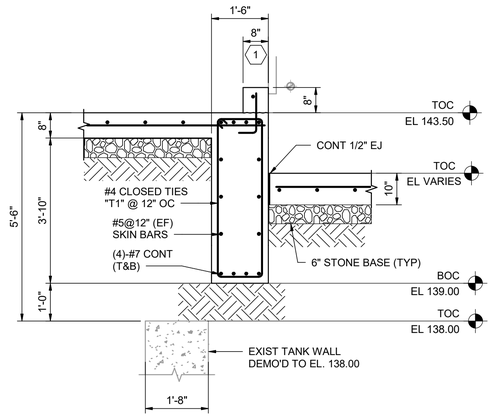

B S-360 SECTION
1/2" = 1'-0"

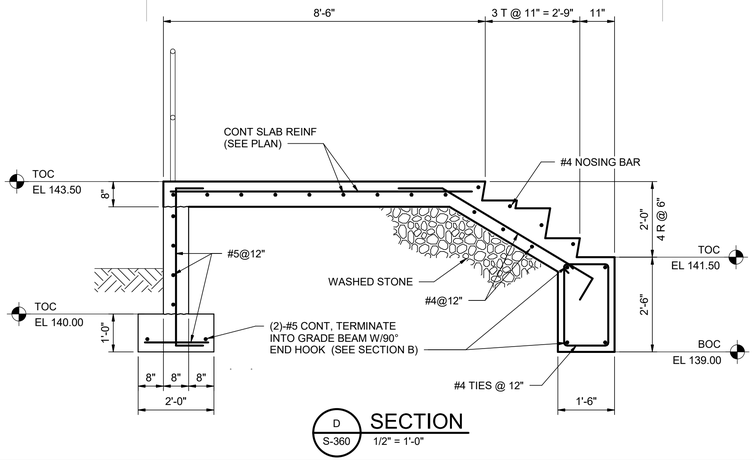

D S-360 SECTION
1/2" = 1'-0"

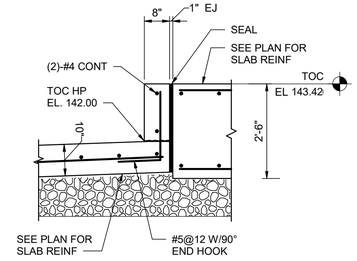

C S-360 SECTION
1/2" = 1'-0"

GENERAL NOTES:

1. SEE SHEET S-360 FOR ADDITIONAL NOTES.

KEY NOTES:

(1) REFERENCE CURB DETAIL 3/S-902, USE CAST-IN-PLACE VERTICAL DOWEL TO AVOID DAMAGING BEAM REINFORCING.

THE DRAWINGS IN THIS SET ARE RECORD DRAWINGS. THEY ARE CONSTRUCTION CONTRACT DRAWINGS WHICH HAVE BEEN REVISED BASED ON AVAILABLE FIELD INFORMATION RECORDED BY OTHERS DURING CONSTRUCTION OF THIS CONTRACT. THERE HAS BEEN NO VERIFICATION OF DIMENSIONS SHOWN ON THE CONSTRUCTION DRAWINGS OR THE ACCURACY/COMPLETENESS OF THE FIELD INFORMATION RECEIVED.

SIGNATURE 2/7/2023 DATE

AS-BUILT REPLACEMENT SHEET

PROFESSIONAL CERTIFICATION

THIS DRAWING WAS ORIGINALLY APPROVED FOR CONSTRUCTION AND SEALED BY MICHAEL E. MARTIN, A REGISTERED PROFESSIONAL ENGINEER IN THE STATE OF MARYLAND, NO. 49839

NOTICE TO CONTRACTORS

- PROJECT ELEVATIONS ARE BASED ON NAVD88 AND HOWARD COUNTY'S BENCHMARK SYSTEM
- PREVIOUS PROJECTS USED OTHER DATUMS
- APPLY THE FOLLOWING CONVERSIONS WHEN USING PREVIOUS CONTRACT DRAWINGS:
  - ADDITION NO. 6: SUBTRACT 0.80 FT
  - PRIOR ADDITIONS: SUBTRACT 1.04 FT

DEPARTMENT OF PUBLIC WORKS
HOWARD COUNTY, MARYLAND

CHIEF, BUREAU OF UTILITIES DATE

DES: HMA
DRN: WTM
CHK: MEM
DATE: 12/2016

DATE	REV	DESCRIPTION
07/2019		RECORD DRAWING

STRUCTURAL

PHOSPHORUS PRECIPITATION BUILDING SECTIONS

LITTLE PATUXENT WATER RECLAMATION PLANT
8TH ADDITION
BIOSOLIDS PROCESSING FACILITIES - PHASE I

CAPITAL PROJECT S-6295
CONTRACT NO. 24-4935

ELECTION DISTRICT NO. 6
HOWARD COUNTY, MARYLAND

SCALE AS SHOWN

SHEET 119 OF 463

S-361

BIM 360://10054364 – Little Patuxent WRP 8th Addition/264591_100_S_V18.rvt
1/10/2022 2:14:22 PM

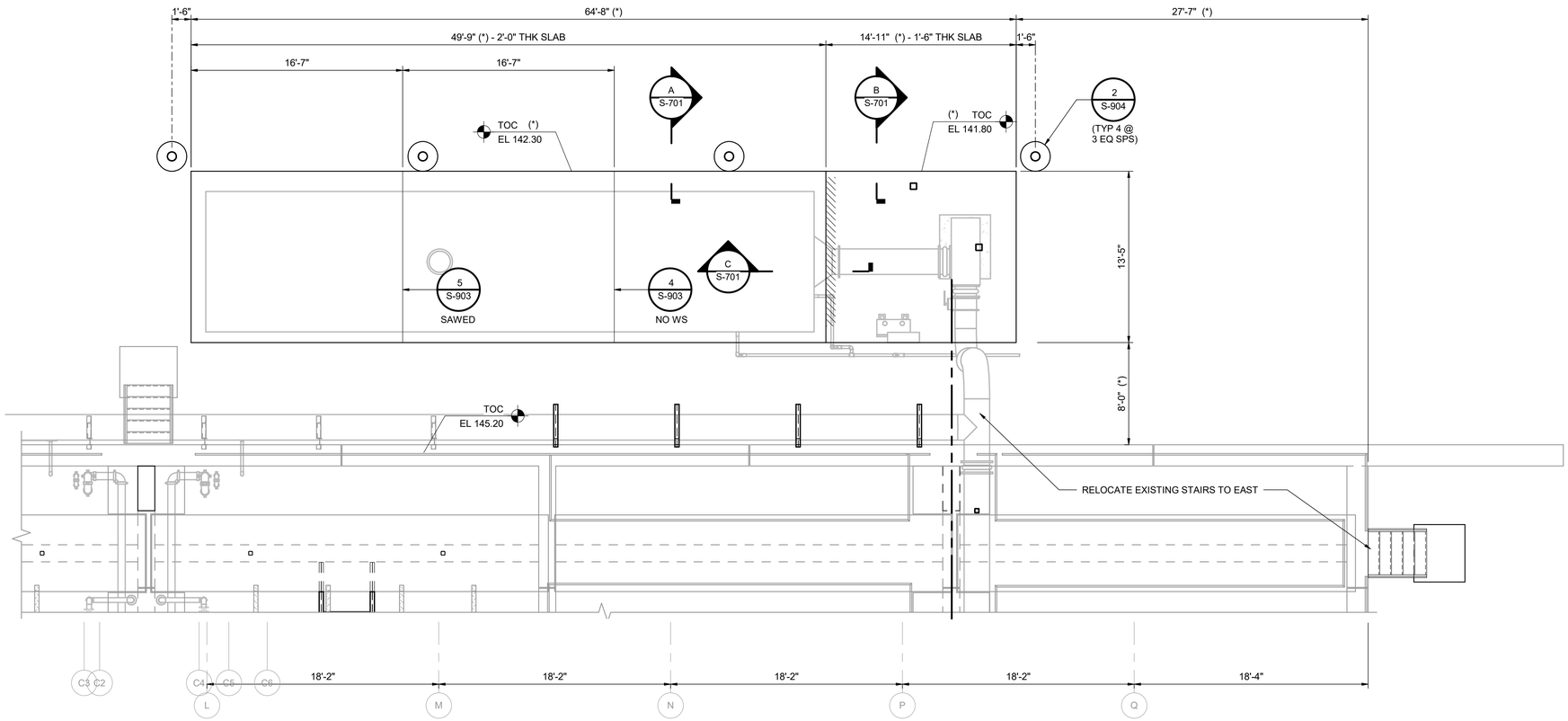

FOUNDATION PLAN

3/16" = 1'-0"

GENERAL NOTES:

1. SEE SHEET S-901 FOR STRUCTURAL NOTES AND S-900 SERIES FOR STANDARD DETAILS.
2. (*) INDICATES DIMENSION/ITEM TO BE VERIFIED PRIOR TO FABRICATION/CONSTRUCTION.

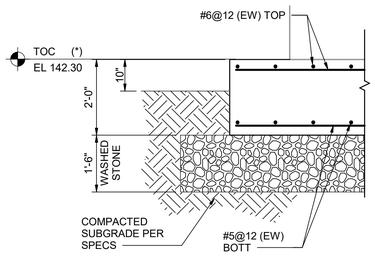

A S-701 SECTION

1/2" = 1'-0"

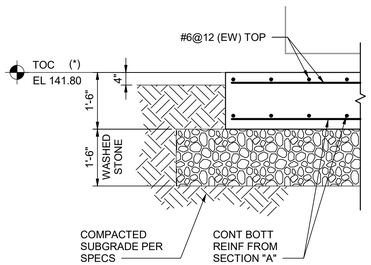

B S-701 SECTION

1/2" = 1'-0"

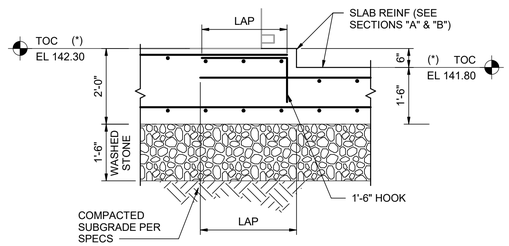

C S-701 SECTION

1/2" = 1'-0"

THE DRAWINGS IN THIS SET ARE RECORD DRAWINGS. THEY ARE CONSTRUCTION CONTRACT DRAWINGS WHICH HAVE BEEN REVISED BASED ON AVAILABLE FIELD INFORMATION RECORDED BY OTHERS DURING CONSTRUCTION OF THIS CONTRACT. THERE HAS BEEN NO VERIFICATION OF DIMENSIONS SHOWN ON THE CONSTRUCTION DRAWINGS OR THE ACCURACY/COMPLETENESS OF THE FIELD INFORMATION RECEIVED.

SIGNATURE _____ DATE 2/7/2023

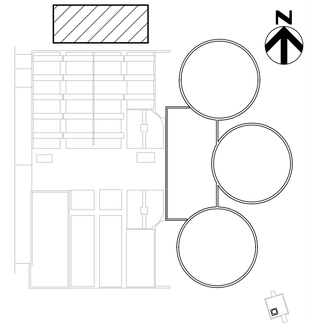

KEY PLAN

AS-BUILT REPLACEMENT SHEET

PROFESSIONAL CERTIFICATION

THIS DRAWING WAS ORIGINALLY APPROVED FOR CONSTRUCTION AND SEALED BY MICHAEL E. MARTIN, A REGISTERED PROFESSIONAL ENGINEER IN THE STATE OF MARYLAND, NO. 49839

NOTICE TO CONTRACTORS

- PROJECT ELEVATIONS ARE BASED ON NAVD88 AND HOWARD COUNTY'S BENCHMARK SYSTEM
- PREVIOUS PROJECTS USED OTHER DATUMS
- APPLY THE FOLLOWING CONVERSIONS WHEN USING PREVIOUS CONTRACT DRAWINGS:
  - ADDITION NO. 6: SUBTRACT 0.80 FT
  - PRIOR ADDITIONS: SUBTRACT 1.04 FT

DEPARTMENT OF PUBLIC WORKS
HOWARD COUNTY, MARYLAND

CHIEF, BUREAU OF UTILITIES DATE

DES: HMA
DRN: WTM
CHK: MEM
DATE: 12/2016

DATE	REV	DESCRIPTION
07/2019		RECORD DRAWING

STRUCTURAL

BIOFILTER FOUNDATION PLAN

LITTLE PATUXENT WATER RECLAMATION PLANT
8TH ADDITION
BIOSOLIDS PROCESSING FACILITIES - PHASE I

CAPITAL PROJECT S-6295
CONTRACT NO. 24-4935

ELECTION DISTRICT NO. 6
HOWARD COUNTY, MARYLAND

SCALE AS SHOWN

SHEET 120 OF 463

S-701

BIM 360://10054364 – Little Patuxent WRP 8th Addition/264591_100_S_V18.rvt
1/10/2022 2:14:25 PM

STRUCTURAL GENERAL NOTES:

G1 SCOPE:
THE NOTES ON THIS SHEET AND ALL THE STANDARD STRUCTURAL DETAILS ARE GENERAL AND APPLY TO THE ENTIRE PROJECT WHETHER SPECIFICALLY CALLED OUT OR NOT, UNLESS OTHERWISE SPECIFIED.

G2 APPLICABLE SPECIFICATIONS AND CODES:
1. INTERNATIONAL BUILDING CODE, 2015 EDITION, INCLUDING JURISDICTIONAL AMENDMENTS.
2. ACI 318-14
3. ACI 350-06
4. ACI 530-13
5. ASCE 7-10
6. AISC STEEL CONSTRUCTION MANUAL, 14th EDITION; 360-10
7. ALUMINUM DESIGN MANUAL, 2015 EDITION

G3 DESIGN CRITERIA:
1. MINIMUM VERTICAL LIVE LOADS: SEE INDIVIDUAL PLANS.
   A. UNIFORM LIVE LOAD INCLUDES ALLOWANCE FOR:
      * UNIFORM SNOW LOAD.
      * UNIFORM PIPING LOAD (ONLY FOR PIPES SMALLER THAN 12"-DIA).
      * LIGHTING AND MECHANICAL DUCTWORK.
   B. FOR ROOF LOADS OTHER THAN LIVE LOAD; REFER TO SPECIFICATIONS AND OTHER DISCIPLINE'S REQUIREMENTS.
   C. ALL SLABS ON GRADE: 250 PSF (UNO)
   D. ADDITIONAL LOADS FROM OTHER DISCIPLINE DRAWINGS INCLUDE:
      * UNIFORM DEAD LOADS PER ARCH DRAWINGS
      * CONCENTRATED EQUIPMENT LOADS
      * PIPING LOADS
      * ELECTRICAL LOADS

2. WIND LOADS:
   A. RISK CATEGORY: III
   B. BASIC WIND SPEED: 120 MPH
   C. WIND EXPOSURE: C
   D. WIND IMPORTANCE FACTOR (Iw): 1.0

3. SEISMIC:
   A. SITE CLASS: D
   B. RISK CATEGORY: III
   C. SEISMIC IMPORTANCE FACTOR (Ie): 1.25
   D. SPECTRAL RESPONSE COEFF: SDS=0.130, SD1=0.081 (SITE SPECIFIC RESPONSE)
   E. SEISMIC DESIGN CATEGORY: B

4. SNOW LOAD:
   A. GROUND SNOW (PG): 25 PSF
   B. IMPORTANCE FACTOR (Ii): 1.1

5. FLOOD ZONE:
   TBD

6. FUTURE LOADS:
   UNLESS SPECIFICALLY NOTED, THERE ARE NO PROVISIONS MADE FOR FUTURE FLOOR, ROOF, OR OTHER LOADS.

G4 GEOTECHNICAL REPORT:
GEOTECHNICAL REPORT BY THE WALTER B. BUTLER COMPANY ENTITLED "GEOTECHNICAL EVALUATION REVISED" DATED OCTOBER 24, 2016. WBB PROJECT No. 16732-0MD.

G5 SITEWORK/EXCAVATION:
1. FOR EXCAVATION REQUIREMENTS SEE SPECIFICATION 31 23 00.
2. FOR BACKFILL REQUIREMENTS SEE SPECIFICATION 31 23 33.
3. SUBGRADE PREPARATION: PRIOR TO FILL PLACEMENT, FOUNDATION, AND SLAB-ON-GROUND CONSTRUCTION THE EXPOSED SUBGRADE SOILS SHALL BE EVALUATED BY GEOTECHNICAL ENGINEER. ALL STRUCTURE SUBGRADES SHALL BE PROOF ROLLED PRIOR TO PLACEMENT OF STONE SUBBASE. SUITABLE PROOF ROLLING EQUIPMENT SHALL BE DETERMINED BY GEOTECHNICAL ENGINEER. AREAS REQUIRING SUBGRADE REMEDIATION AS WELL METHODS FOR REMEDIATION SHALL BE DETERMINED BY GEOTECHNICAL ENGINEER.

G5 SAFETY:
SAFETY AND STRUCTURE STABILITY DURING CONSTRUCTION ARE THE SOLE RESPONSIBILITY OF THE DESIGN-BUILDER. STRUCTURES HAVE BEEN DESIGNED TO RESIST THE DESIGN LIVE LOADS ONLY AS A COMPLETED STRUCTURE.

G6 STANDARD DETAILS:
THE STANDARD DETAILS DEPICT TYPICAL DETAILING TO BE USED ON THIS PROJECT. IF CONDITIONS ARE NOT EXPLICITLY SHOWN ON THE DRAWINGS THEY SHALL BE MADE SIMILAR TO THE STANDARD DETAILS. OBTAIN ENGINEER APPROVAL IN WRITING FOR SIMILAR CONDITIONS PRIOR TO CONSTRUCTION.

G7 CONFLICTS:
IF THERE ARE CONFLICTS BETWEEN CONTRACT DRAWINGS AND SPECIFICATIONS, REQUEST CLARIFICATION FROM ENGINEER OR RECORD.

STRUCTURAL GENERAL NOTES: (CONT)

G8 DEFERRED SUBMITTALS:
1. ALL DESIGNS BY OTHERS (SUCH AS PRECAST CONCRETE DESIGN ELEMENTS, PRE-ENGINEERED METAL BUILDINGS, AND TANKS) ARE HEREBY CLASSIFIED AS "DEFERRED" BY THE BUILDING CODE.

STEEL

S1 STRUCTURAL STEEL DESIGN PROPERTIES (UNO):
WIDE FLANGE AND TEES: Fy=50 KSI
PIPES: Fy=35 KSI
HSS SECTIONS: Fy=42 KSI
ALL OTHER PLATES AND SHAPES: Fy=36 KSI

S2 DIMENSIONS:
TO CENTERLINES OF COLUMNS AND BEAMS, TOP SURFACES OF BEAMS AND TUBES AND BACKS OF CHANNELS AND ANGLES UNLESS NOTED OTHERWISE.

S2 ELEVATIONS:
REFER TO TOP SURFACE OF MEMBER OR FLANGE UNLESS NOTED OTHERWISE.

S4 UNLESS OTHERWISE NOTED, BOLTED BEAM CONNECTIONS SHALL BE SIMPLE FRAMED SHEAR CONNECTIONS. BOLTED STEEL CONNECTIONS SHALL BE IN ACCORDANCE WITH THE AISC MANUAL OF STEEL CONSTRUCTION LATEST EDITION USING ASTM A325 GALVANIZED BOLTS. USE ASTM A593 FOR STAINLESS STEEL CONNECTIONS WHERE REQUIRED. ALL BOLTED STRUCTURAL CONNECTIONS SHALL BE BEARING TYPE CONNECTIONS UNLESS OTHERWISE INDICATED TO BE SLIP-CRITICAL.

S5 UNLESS OTHERWISE SHOWN ON THE DRAWINGS, CONNECTIONS SHALL BE DESIGNED FOR THE REACTIONS, AXIAL LOADS, AND MOMENTS AS PER THE FOLLOWING CRITERIA:
1. WHERE BEAM REACTIONS ARE NOT SHOWN, BEAM CONNECTIONS SHALL BE DESIGNED TO 50 PERCENT OF THE TOTAL UNIFORM LOAD CAPACITY OF THE LATERALLY-BRACED BEAM.
2. CONNECTIONS SHALL BE DESIGNED FOR AXIAL LOADS WHERE INDICATED THUS (+- 60) AS KIPS, (+) INDICATES TENSION IN MEMBER AND (-) INDICATES COMPRESSION.
3. MOMENT CONNECTIONS (MC) SHALL BE DESIGNED FOR THE MOMENT INDICATED ON THE DRAWINGS IN FOOT-KIPS. WHERE MOMENTS ARE NOT SHOWN, CONNECTIONS SHALL BE DESIGNED TO DEVELOP THE ALLOWABLE FLEXURAL STRENGTH OF THE SMALLER MEMBER.
4. UNLESS OTHERWISE NOTED, BRACING MEMBER CONNECTIONS SHALL BE DESIGNED FOR THE MAXIMUM ALLOWABLE CAPACITY OF THE BRACING MEMBER.
5. CONNECTIONS THAT ARE NOT COMPLETELY DETAILED ARE SCHEMATIC IN NATURE ONLY. ADDITIONAL COMPONENTS, SUCH AS REINFORCING MAY BE REQUIRED BASED ON LOADING CRITERIA PROVIDED OR LISTED ABOVE.

S6 WHEN FILLET WELD SIZE IS NOT INDICATED, PROVIDE MAXIMUM WELD SIZE IN ACCORDANCE WITH AISC SPECIFICATIONS.

S7 GROUT UNDER COLUMN/POST BASE SHALL NOT EXTEND ABOVE BOTTOM OF BASE PLATE. CHAMFER GROUT AT 45 DEGREES.

ALUMINUM

A1 STRUCTURAL ALUMINUM IS ALLOY 6061-T6 UNLESS NOTED OTHERWISE. ALL BOLTS SHALL BE STAINLESS STEEL.

A2 DIMENSIONS:
TO CENTERLINES OF COLUMNS AND BEAMS, TOP SURFACES OF BEAMS AND TUBES AND BACKS OF CHANNELS AND ANGLES UNLESS NOTED OTHERWISE.

A3 ELEVATIONS:
REFER TO TOP SURFACE OR FLANGE OF MEMBER UNLESS NOTED OTHERWISE.

A4 WHEN FILLET WELD SIZE IS NOT INDICATED, PROVIDE MAXIMUM WELD SIZE IN ACCORDANCE WITH THE LATEST EDITION OF THE "ALUMINUM DESIGN MANUAL" BY THE ALUMINUM ASSOCIATION.

A5 ALUMINUM IN CONTACT WITH DISSIMILAR MATERIALS OR CONCRETE:
CONTACT SURFACES SHALL BE COATED PER SPECIFICATION 09 91 00.

A6 GROUT UNDER COLUMN/POST BASE SHALL NOT EXTEND ABOVE BOTTOM OF BASE PLATE. CHAMFER GROUT AT 45 DEGREES.

CONCRETE

C1 CONCRETE DESIGN PROPERTIES:
f'c = 4,000 PSI (UNO)
f'c = 4,500 PSI (FOR WORK ON S-260 SERIES)
f'c = 5,000 PSI (PRECAST CONCRETE)
Fy = 60,000 PSI

C2 CONCRETE COVER UNLESS OTHERWISE NOTED, PROVIDE CONCRETE COVER FOR REINFORCING AS FOLLOWS:

CONCRETE DEPOSITED AGAINST EARTH:	3"
UNDER WATERSTOPS (WALL TO SLAB):	3"
ALL OTHER:	2"

SEE DRAWINGS FOR EXCEPTIONS.

C3 SEE SPECIFICATIONS FOR REINFORCING PLACEMENT REQUIREMENTS.

C4 PROVIDE 3/4" CHAMFERS AT ALL EXPOSED EDGES AND 1/2" CHAMFERS AT JOINTS AS SHOWN. NOT ALL CHAMFERS MAY BE SHOWN ON DRAWINGS.

C5 FIELD ADJUST REINFORCING AT OPENINGS AND EMBEDDED ITEMS AS SPECIFIED OR AS REQUIRED BY STANDARD DETAILS.

C6 ANCHOR BOLTS NOT SPECIFIED BY ENGINEER SHALL BE DESIGNED BY CONTRACTOR IN ACCORDANCE WITH APPLICABLE PROJECT CODE REQUIREMENTS. COORDINATE LOCATION, SIZE AND EMBEDMENT PRIOR TO CASTING CONCRETE.

C7 ABSOLUTELY NO WELDING OF REINFORCING BARS OR TORCHING TO BEND REINFORCING BARS SHALL BE ALLOWED WITHOUT WRITTEN SPECIFIC APPROVAL FROM THE STRUCTURAL ENGINEER.

MASONRY

M1 DESIGN PROPERTIES:
f'm = 1,500 PSI
Fy = 60,000 PSI

M2 GROUT TO BE COARSE GROUT UNLESS NOTED OTHERWISE, MAXIMUM AGGREGATE SIZE IS 3/8 INCH.

M3 GROUT POURS SHALL NOT EXCEED 4-FEET IN HEIGHT UNLESS CLEANOUTS ARE PROVIDED IN THE BOTTOM COURSE OF THE CELL(S) TO BE GROUTED.

M4 RESTRICTED BAR ANCHORAGE: IN CASES WHERE REINFORCING BARS CANNOT BE EXTENDED AS FAR AS REQUIRED, THE BARS SHALL EXTEND AS FAR AS POSSIBLE AND END IN STANDARD HOOK. IDENTIFY THIS SITUATION ON SHOP DRAWINGS AND CLOUD TO BRING TO ENGINEER'S ATTENTION.

M5 IF BOND BEAMS AT INTERSECTING WALLS ARE SHOWN ON THE DRAWINGS TO MEET AT DIFFERENT ELEVATIONS, EXTEND BOTH BOND BEAMS AROUND INTERSECTING CORNER NOT LESS THAN 4-FEET IN EACH DIRECTION FOR OVERLAP CONDITION.

POST-INSTALLED ANCHORS

PA1 FOR ANCHORAGE TO CONCRETE SEE SPECIFICATION 03 15 19.

PA2 POST-INSTALLED ANCHORS SHALL ONLY BE USED WHERE SPECIFIED ON THE CONTRACT DRAWINGS. THE CONTRACTOR SHALL OBTAIN APPROVAL FROM THE ENGINEER-OF-RECORD (EOR) PRIOR TO INSTALLING POST-INSTALLED ANCHORS FOR MISSING OR MISPLACED CAST-IN-PLACE ANCHORS.

PA3 CARE SHALL BE TAKEN IN PLACING POST-INSTALLED ANCHORS TO AVOID CONFLICTS WITH EXISTING REBAR. HOLES SHALL BE DRILLED AND CLEANED IN ACCORDANCE WITH THE MANUFACTURER'S WRITTEN INSTRUCTIONS.

PA4 SPECIAL INSPECTION SHALL BE PROVIDED FOR ALL POST INSTALLED ANCHOR (MECHANICAL AND ADHESIVE) INSTALLATIONS AS REQUIRED BY THE BUILDING CODE AND APPLICABLE ICC EVALUATION REPORTS. INDEPENDENT ON-SITE PROOF LOAD TESTING MAY BE REQUIRED BY THE EOR. SEE SPECIFICATIONS 03 15 19 AND 01 45 33 FOR ADDITIONAL DETAILS.

PA5 SUBSTITUTION REQUESTS, FOR PRODUCTS OTHER THAN THOSE SPECIFIED, SHALL BE SUBMITTED BY THE CONTRACTOR TO THE EOR ALONG WITH CALCULATIONS THAT ARE PREPARED & SEALED BY A REGISTERED PROFESSIONAL ENGINEER. THE CALCULATIONS SHALL DEMONSTRATE THAT THE SUBSTITUTED PRODUCT IS CAPABLE OF ACHIEVING THE PERTINENT EQUIVALENT PERFORMANCE VALUES (MINIMUM) OF THE SPECIFIED PRODUCT USING THE APPROPRIATE DESIGN PROCEDURE AND/OR STANDARD(S) AS REQUIRED BY THE BUILDING CODE. PRODUCT ICC-ES CODE REPORTS SHALL BE INCLUDED WITH THE SUBMITTAL PACKAGE.

PA5 FOR TRAINING AND CERTIFICATION REQUIREMENTS FOR INSPECTORS AND INSTALLERS SEE SPECIFICATIONS 03 15 19 AND 01 45 33.

PA 6 POST INSTALLED ADHESIVE ANCHORS INSTALLED IN EITHER A HORIZONTAL OR INCLINED ORIENTATION REQUIRE INSTALLER TRAINING AND APPROVAL PER BUILDING CODE REQUIREMENTS PER SPECIFICATION 03 15 19.

THE DRAWINGS IN THIS SET ARE RECORD DRAWINGS. THEY ARE CONSTRUCTION CONTRACT DRAWINGS WHICH HAVE BEEN REVISED BASED ON AVAILABLE FIELD INFORMATION RECORDED BY OTHERS DURING CONSTRUCTION OF THIS CONTRACT. THERE HAS BEEN NO VERIFICATION OF DIMENSIONS SHOWN ON THE CONSTRUCTION DRAWINGS OR THE ACCURACY/COMPLETENESS OF THE FIELD INFORMATION RECEIVED.

SIGNATURE 2/7/2023 DATE

C:\pwworking\pitt\d1901391\S-901.dwg 01/10/22_15:23

AS-BUILT REPLACEMENT SHEET

PROFESSIONAL CERTIFICATION
THIS DRAWING WAS ORIGINALLY APPROVED FOR CONSTRUCTION AND SEALED BY MICHAEL E. MARTIN, A REGISTERED PROFESSIONAL ENGINEER IN THE STATE OF MARYLAND, NO. 49839.

NOTICE TO CONTRACTORS
- PROJECT ELEVATIONS ARE BASED ON NAVD88 AND HOWARD COUNTY'S BENCHMARK SYSTEM
- PREVIOUS PROJECTS USED OTHER DATUMS
- APPLY THE FOLLOWING CONVERSIONS WHEN USING PREVIOUS CONTRACT DRAWINGS:
  - ADDITION NO. 6: SUBTRACT 0.80 FT.
  - PRIOR ADDITIONS: SUBTRACT 1.04 FT.

DEPARTMENT OF PUBLIC WORKS
HOWARD COUNTY, MARYLAND

CHIEF, BUREAU OF UTILITIES DATE

DES: J.C.
DRN: W.M.
CHK: M.E.M.
DATE: 03/16

DATE	REV	DESCRIPTION
07/2019		RECORD DRAWINGS

STRUCTURAL

GENERAL AND MATERIAL NOTES

LITTLE PATUXENT WATER RECLAMATION PLANT
8TH ADDITION
BIOSOLIDS PROCESSING FACILITIES – PHASE I

CAPITAL PROJECT S-6295
CONTRACT NO. 24-4935

ELECTION DISTRICT NO. 6
HOWARD COUNTY, MARYLAND

SCALE AS SHOWN

SHEET 121 OF 463

S-901

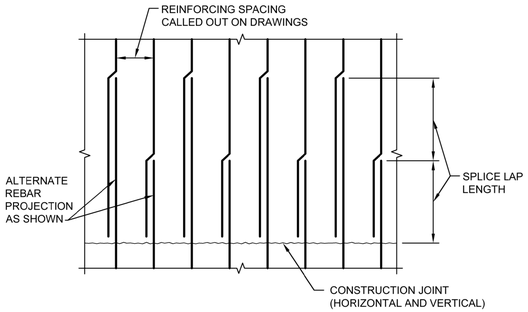

STAGGERED REINFORCING AT CONSTRUCTION JOINT

NTS 1A

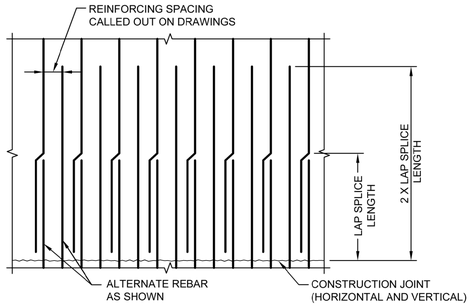

WALL VERTICAL REINFORCING AT CONSTRUCTION JOINT

NTS 1B

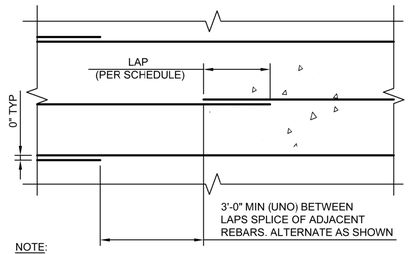

NOTE:

1. APPLIES TO SLABS AND WALLS (BOTH HORIZONTAL AND VERTICAL)

REINFORCING SPLICE WHEN NOT AT CJ

NTS 2

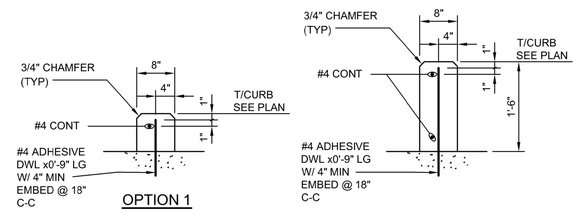

TYPICAL CURB DETAIL

NTS 3

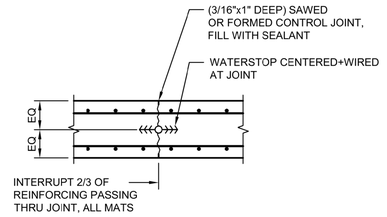

NOTES:

1. ONLY WATER BEARING SLABS OR WALLS REQUIRE WATERSTOP.
2. JOINT MAY BE FORMED WITH 1/2" CHAMFER STRIPS BACK-TO-BACK AT WALLS, CONTRACTOR'S OPTION.

CONTROL JOINT (CLJ)

NTS 4

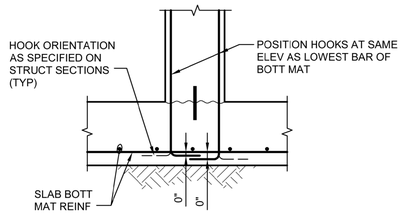

WALL DOWEL HOOK LOCATION

NTS 5

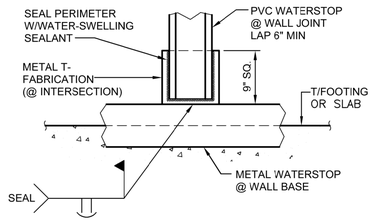

PVC/METAL WATERSTOP INTERSECTION

NTS (OPTIONAL ONLY) 6

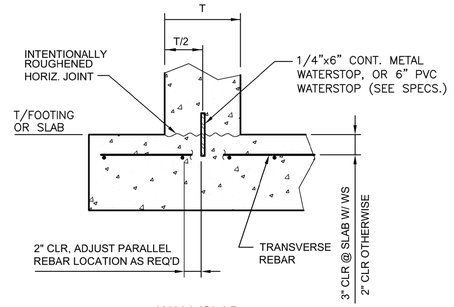

WALL/SLAB

CONSTRUCTION JOINT (CJ)

NTS 7

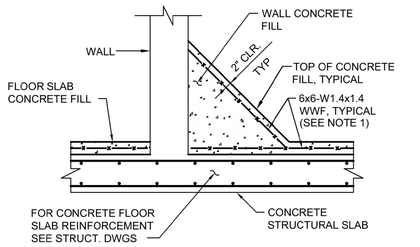

NOTE:

1. REINFORCE CONCRETE FILL AS SHOWN WHENEVER CONCRETE FILL THICKNESS EXCEEDS 6".

CONCRETE FILL REINFORCING

NTS 8

LAP SPLICE AND EMDEDMENT LENGTHS f'c =4.0 ksi fy = 60 ksi		
BAR	BARS SPACED GREATER THAN 4"	BARS SPACED LESS THAN OR EQUAL TO 4"
#3	14"	14"
#4	19"	19"
#5	24"	30"
#6	29"	43"
#7	46"	74"
#8	60"	96"
#9	76"	122"
#10	97"	155"
#11	120"	191"

NOTES:

1. PROVIDE MINIMUM LAP SPLICE LENGTHS AND EMBEDMENTS PER TABLE UNLESS NOTED OTHERWISE. EMBEDMENT LENGTH EQUALS THE LAP SPLICE LENGTH UNLESS OTHERWISE NOTED.
2. BAR SPACING AT LAP SPLICE IS THE MINIMUM CLEAR DISTANCE BETWEEN LAPPED BARS PLUS ONE BAR DIAMETER.
3. ALL SPLICES TO BE CONTACT SPLICES AND WIRED TOGETHER UNLESS OTHERWISE APPROVED BY ENGINEER.
4. REQUIREMENTS FOR SPACINGS 4 INCHES OR LESS SHALL NOT APPLY TO "ADD" BARS AROUND OPENINGS.

REINFORCING LAP AND EMBEDMENT SCHEDULE

NTS 9

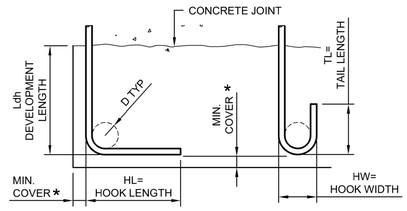

90° STD HOOK 180° STD HOOK

BAR SIZE GRADE 60	HL	HW	TL	D	f'c=4000 psi OR GREATER Ldh *
#3	6"	3"	4"	2 1/4"	6"
#4	8"	4"	4 1/2"	3"	7"
#5	10"	5"	5"	3 3/4"	9"
#6	1'-0"	6"	6"	4 1/2"	10"
#7	1'-2"	7"	7"	5 1/4"	12"
#8	1'-4"	8"	8"	6"	14"
#9	1'-7"	11 3/4"	10 1/2"	9 1/2"	15"
#10	1'-10"	1'-1 1/4"	11 1/2"	10 3/4"	17"
#11	2'-0"	1'-2 3/4"	1'-1"	12"	19"

* COMPLYING WITH MINIMUM COVER REQUIREMENTS OF ACI 318, 12.5.3. OTHERWISE Ldh MUST BE RE-CALCULATED.

REINFORCING HOOK SCHEDULE

NTS 10

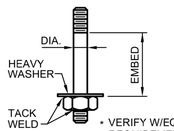

* VERIFY W/EQUIPMENT REQUIREMENTS

NOTES:

1. ALL BOLTS SHALL BE STAINLESS STEEL, UNO.
2. MINIMUM EMBEDMENTS, UNO.

ANCHOR BOLT SCHEDULE		
MK	DIA (IN)	EMBED (IN)
2	3/4	1'-3"
3	1	1'-3"
5	1 1/2	2'-1"

ANCHOR BOLTS

NTS 11

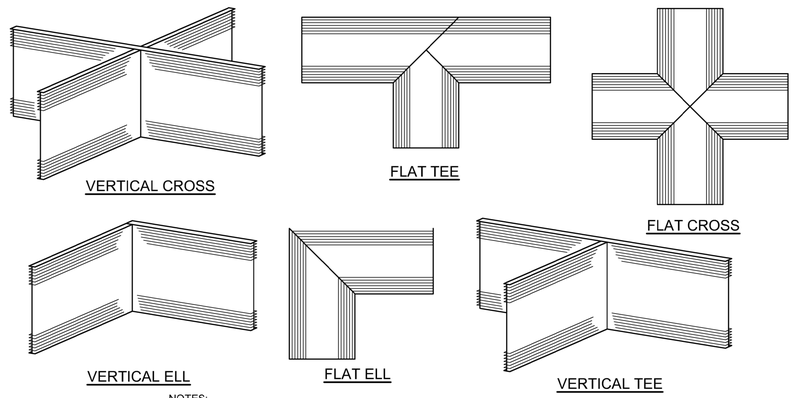

NOTES:

1. BULB TYPE WATERSTOPS SHALL BE HANDLED SIMILAR TO AS SHOWN WITH BULB JOINTS MITERED FOR FULL CONTINUITY OF HOLLOW BULB.
2. ONLY STRAIGHT BUTT JOINT WELDS ARE ALLOWED IN THE FIELD.

SHOP FABRICATED WATERSTOP

NTS 12

THE DRAWINGS IN THIS SET ARE RECORD DRAWINGS. THEY ARE CONSTRUCTION CONTRACT DRAWINGS WHICH HAVE BEEN REVISED BASED ON AVAILABLE FIELD INFORMATION RECORDED BY OTHERS DURING CONSTRUCTION OF THIS CONTRACT. THERE HAS BEEN NO VERIFICATION OF DIMENSIONS SHOWN ON THE CONSTRUCTION DRAWINGS OR THE ACCURACY/COMPLETENESS OF THE FIELD INFORMATION RECEIVED.

SIGNATURE 2/7/2020 DATE

AS-BUILT REPLACEMENT SHEET

PROFESSIONAL CERTIFICATION
THIS DRAWING WAS ORIGINALLY APPROVED FOR CONSTRUCTION AND SEALED BY MICHAEL E. MARTIN, A REGISTERED PROFESSIONAL ENGINEER IN THE STATE OF MARYLAND, NO. 49839.

NOTICE TO CONTRACTORS
- PROJECT ELEVATIONS ARE BASED ON NAVD88 AND HOWARD COUNTY'S BENCHMARK SYSTEM
- PREVIOUS PROJECTS USED OTHER DATUMS
- APPLY THE FOLLOWING CONVERSIONS WHEN USING PREVIOUS CONTRACT DRAWINGS:
  - ADDITION NO. 6: SUBTRACT 0.80 FT
  - PRIOR ADDITIONS: SUBTRACT 1.04 FT

DEPARTMENT OF PUBLIC WORKS
HOWARD COUNTY, MARYLAND

CHIEF, BUREAU OF UTILITIES DATE

DES: J.C.
DRN: W.M.
CHK: M.E.M.
DATE: 03/16

DATE	REV	DESCRIPTION
07/2019		RECORD DRAWINGS

STRUCTURAL

STRUCTURAL STANDARD DETAILS 1

LITTLE PATUXENT WATER RECLAMATION PLANT
8TH ADDITION
BIOSOLIDS PROCESSING FACILITIES – PHASE I

CAPITAL PROJECT S-6295
CONTRACT NO. 24-4935

ELECTION DISTRICT NO. 6
HOWARD COUNTY, MARYLAND

SCALE AS SHOWN

SHEET 122 OF 463

S-902

C:\pwworking\pitt\d1901391\ S-902.dwg 01/10/22 15:24

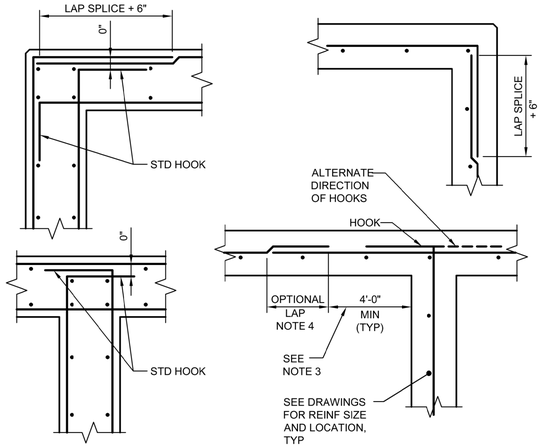

NOTES:

1. ALL HOOKS SHALL BE STD 90 DEGREE HOOKS.

2. SEE DRAWINGS FOR ADDITIONAL HORIZONTAL BARS. STAGGER BETWEEN TYPICAL REINF SPACING, EXTEND TO 1/5 OF DISTANCE TO NEAREST ADJACENT WALL IN EACH DIRECTION, UNO.

3. OPTIONAL LAP LOCATION APPLIES TO BOTH DOUBLE AND SINGLE LAYER CONDITIONS TYP.

4. BARS MAY BE ONE PIECE CONTINUOUS, THUS TWO PIECE REBAR NOT REQUIRED WITH LAP.

TYPICAL WALL REINFORCEMENT AT CORNERS & INTERSECTIONS

1 -

NTS

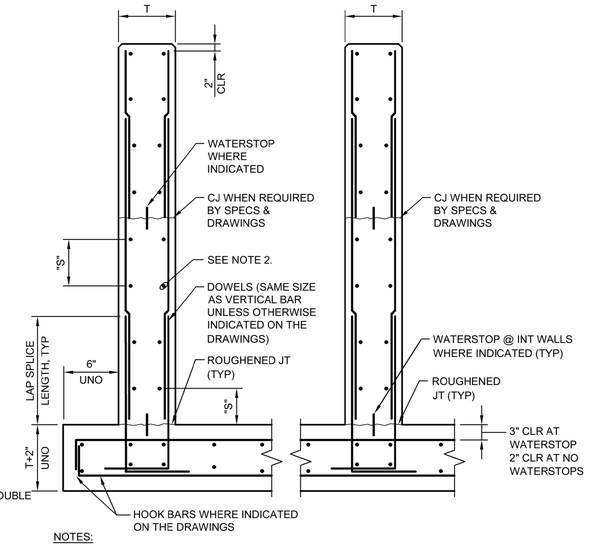

NOTES:

1. "S" = BAR SPACING INDICATED ON THE DRAWINGS

2. FOR HORIZONTAL REINF BAR LOCATION RELATIVE TO VERTICAL REINF BAR LOCATION (INSIDE OR OUTSIDE) SEE DRAWING (INSIDE SHOWN).

HORIZONTAL WALL JOINTS W/WATERSTOPS

2 -

NTS

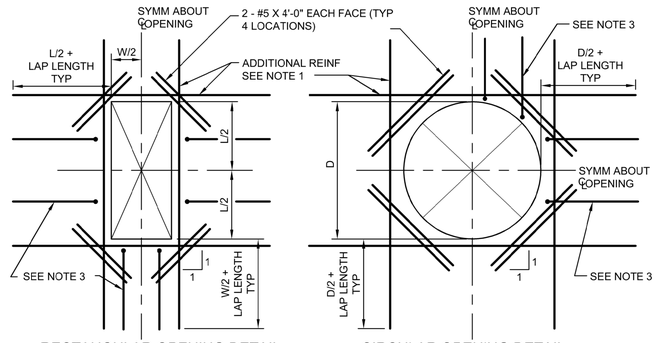

RECTANGULAR OPENING DETAIL

CIRCULAR OPENING DETAIL

NOTES:

1. PROVIDE ADDITIONAL REINFORCING THE SAME SIZE AS DISCONTINUOUS REINFORCEMENT AT OPENING. QUANTITY OF REINFORCING IN EACH DIRECTION SHALL BE EQUAL TO OR ONE GREATER THAN THE NUMBER OF DISCONTINUOUS BARS. PLACE 1/2 OF ADDITIONAL REINFORCING BARS EACH SIDE OF OPENING. PLACE ADDITIONAL REINFORCEMENT AT 3" OC (TYPICAL BOTH DIRECTIONS AND ALL LAYERS OF REINFORCEMENT). START FIRST BAR 2" CLEAR TO OPENING.
2. EXTEND ADDITIONAL REINFORCING BEYOND EDGE OF OPENING AS SHOWN ABOVE. ADDITIONAL BARS MAY TERMINATE AT THE END OF THE WALL WITH A STANDARD HOOK WHERE THE LENGTH OF THE WALL WILL NOT PERMIT BARS TO EXTEND AS SHOWN ABOVE.
3. TYPICAL WALL OR SLAB REINFORCING NOT COMPLETELY SHOWN FOR CLARITY. TERMINATE TYPICAL REINFORCING 2" CLEAR TO OPENING WITH STANDARD 90° HOOKS.
4. OPENINGS 12" OR LESS IN SLABS AND 18" OR LESS IN WALLS, NO EXTRA REBARS ARE REQUIRED UNLESS SHOWN OTHERWISE. TYPICAL REINFORCING SHALL BE RESPACED (NOT CUT) TO ALLOW FOR OPENINGS TO BE MADE.
5. UNLESS SHOWN OTHERWISE ON DRAWINGS, PROVIDE EXTRA REINFORCING AROUND OPENINGS AS SHOWN AND INDICATED ABOVE.
6. PROVIDE ADDITIONAL DOWELS PER NOTE 1 ABOVE FOR ALL OPENINGS NEAR THE FLOOR SLAB, BASE SLAB, OR CORNERS

REINFORCING AROUND OPENINGS AND REENTRANT CORNERS

3 -

NTS

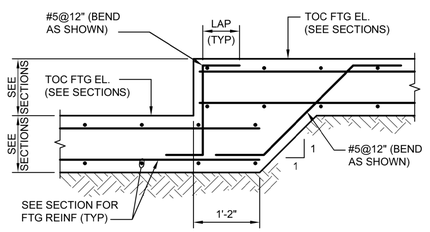

STEPPED FOOTING

6 -

NTS

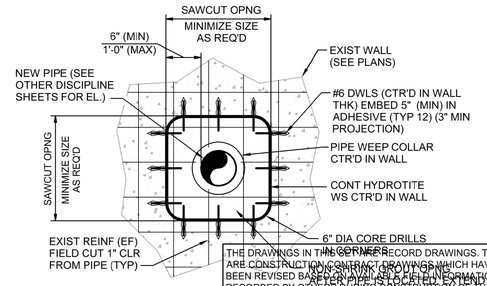

NEW OPENING IN EXIST WALL OR SLAB

THE DRAWINGS IN THIS CONTRACT RECORD DRAWINGS. THEY ARE CONSTRUCTION CONTRACT DRAWINGS WHICH HAVE BEEN REVISED BASED UPON FIELD INFORMATION RECORDED BY OTHERS DURING CONSTRUCTION OF THIS CONTRACT. THERE HAS BEEN NO VERIFICATION OF EXISTING SHOWN ON THE CONSTRUCTION DRAWINGS OR ANY ACCURACY/COMPLETENESS OF THE FIELD INFORMATION RECEIVED.

SIGNATURE — DATE 2/7/2020

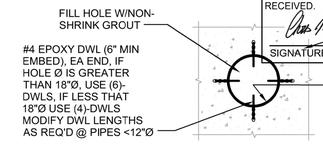

PATCHING EXISTING OPENING IN EXISTING WALL OR SLAB

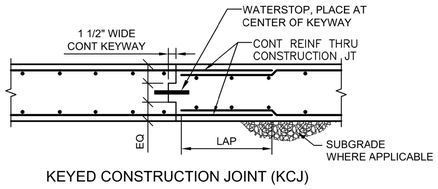

KEYED CONSTRUCTION JOINT (KCJ)

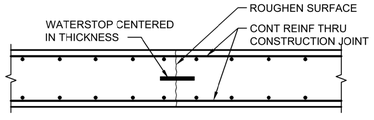

ROUGHEN CONSTRUCTION JOINT

NOTES:

1. FURNISH CONSTRUCTION JOINTS SHOWN HERE AT ALL WALL VERTICAL AND SLAB CONSTRUCTION JOINTS.

2. ALL FORMED CJ MUST BE KCJ TYPE.

3. SEE SPECIFICATION FOR REQUIREMENT TO TIE WATERSTOPS IN PLACE TO PREVENT MOVEMENT OR FOLDING OVER.

CONSTRUCTION JOINT (CJ)

4 -

NTS

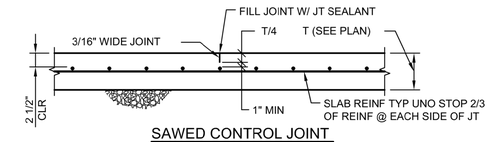

SAWED CONTROL JOINT

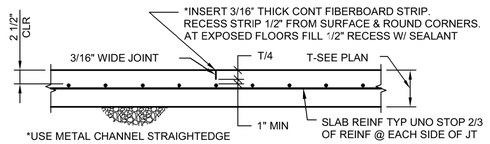

*USE METAL CHANNEL STRAIGHTEDGE TO INSERT FIBERBOARD STRIPS.

FORMED CONTROL JOINT

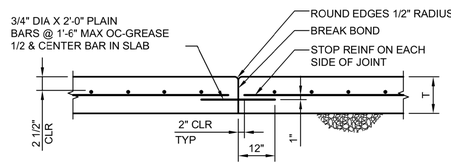

DOWELLED CONSTRUCTION JOINT

NOTES:

1. ANY ONE OF THE DETAILS ABOVE MAY BE USED AT LOCATIONS INDICATED ON DRAWINGS AS "SJ," AT CONTRACTOR'S OPTION.

2. ONLY FOR USE ON NON-PILE SUPPORTED SLABS.

SLAB-ON-GRADE JOINT (SJ)

5 -

NTS

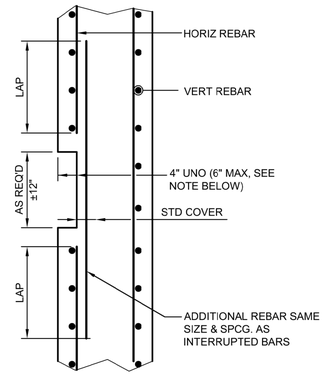

NOTE: IF RECESS DEPTH IS GREATER THAN 6", ADDITIONAL REBAR MODIFICATION AND DESIGN WILL BE REQUIRED.

SINGLE RECESS STOP LOG OR GATE

7 -

NTS

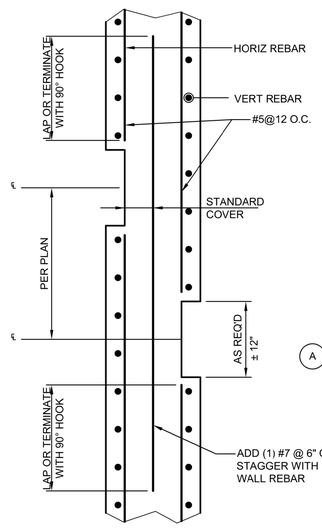

DOUBLE RECESS STOP LOG OR GATE

8 -

NTS

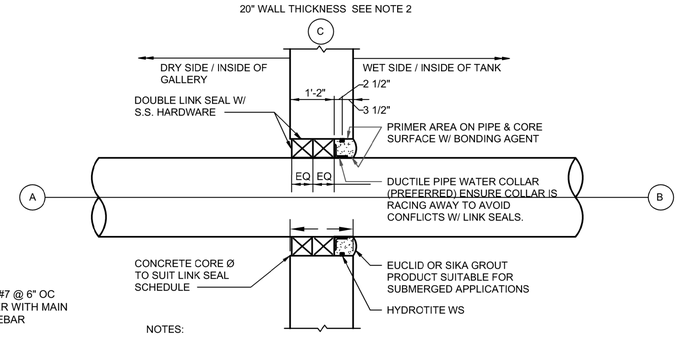

NOTES:

1. ENSURE "A" & "B" SIDES ARE ADEQUATELY SUPPORTED TO AVOID TORSIONING DUE TO DEAD LOADS OR PROCESS EQUIPMENT LOADS. EXAMPLE, HANGARS, BASE 90° ELBOWS, OR OTHER COMMON PIPE SUPPORTS.
2. ASSUME WALL THICKNESS "C" IS SUITABLE FOR DOUBLE LINK SEALS AND GROUT.

PIPE PENETRATION IN EXIST WALL

9 -

NTS

10 - DETAIL

NTS

C:\pwworking\pitt\d1901391\S-903.dwg 01/10/22_15:22

AS-BUILT REPLACEMENT SHEET

PROFESSIONAL CERTIFICATION
THIS DRAWING WAS ORIGINALLY APPROVED FOR CONSTRUCTION AND SEALED BY MICHAEL E. MARTIN, A REGISTERED PROFESSIONAL ENGINEER IN THE STATE OF MARYLAND, NO. 49839.

NOTICE TO CONTRACTORS
- PROJECT ELEVATIONS ARE BASED ON NAVD88 AND HOWARD COUNTY'S BENCHMARK SYSTEM
- PREVIOUS PROJECTS USED OTHER DATUMS
- APPLY THE FOLLOWING CONVERSIONS WHEN USING PREVIOUS CONTRACT DRAWINGS:
  - ADDITION NO. 6: SUBTRACT 0.80 FT.
  - PRIOR ADDITIONS: SUBTRACT 1.04 FT.

DEPARTMENT OF PUBLIC WORKS
HOWARD COUNTY, MARYLAND

CHIEF, BUREAU OF UTILITIES — DATE

DES: J.C.
DRN: W.M.
CHK: M.E.M.
DATE: 03/16

DATE	REV	DESCRIPTION
07/2019		RECORD DRAWINGS

STRUCTURAL

STRUCTURAL STANDARD DETAILS 2

LITTLE PATUXENT WATER RECLAMATION PLANT
8TH ADDITION
BIOSOLIDS PROCESSING FACILITIES – PHASE I

CAPITAL PROJECT S-6295
CONTRACT NO. 24-4935

ELECTION DISTRICT NO. 6
HOWARD COUNTY, MARYLAND

SCALE AS SHOWN

SHEET 123 OF 463

S-903

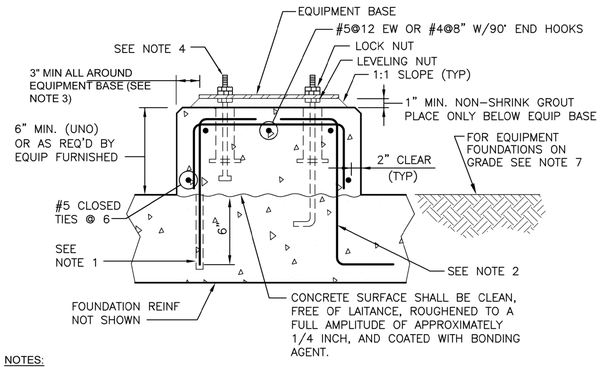

NOTES:

1. FOR NEW EQUIPMENT BASES ON EXISTING SLABS, DRILL INTO EXISTING SLAB TO INDICATED DEPTH AT 12" CENTERS AROUND PERIMETER OF EQUIPMENT BASE AND SET #5 DOWEL HOOKED AS SHOWN (OR #4 DOWEL HOOKED @ 8" OC) IN ADHESIVE ANCHOR SYSTEM.
2. FOR EQUIPMENT BASES ON NEW SLABS, PROVIDE #5 DOWELS HAVING TWO HOOKED ENDS AT 12" CENTERS AROUND PERIMETER.
3. EQUIPMENT BASE DIMENSIONS SHALL BE AS INDICATED ON THE DRAWINGS OR AS DETERMINED BY THE EQUIPMENT MANUFACTURER AND APPROVED BY THE ENGINEER.
4. THE SIZE, NUMBER, TYPE, LOCATION, AND THREAD PROJECTION OF THE ANCHOR BOLTS SHALL BE AS DETERMINED BY THE EQUIPMENT MANUFACTURER AND SHALL BE AS APPROVED BY THE ENGINEER. ANCHOR BOLTS SHALL BE HELD IN POSITION WITH A TEMPLATE WHILE EQUIPMENT BASE IS BEING CAST. ALL ANCHOR BOLTS SHALL BE STAINLESS STEEL.
5. PIPE SLEEVES SHALL BE USED TO PROVIDE THE ANCHOR BOLT A MINIMUM MOVEMENT OF 1/2" IN ALL DIRECTIONS. THE MINIMUM SLEEVE LENGTH SHALL BE 8 TIMES THE BOLT DIAMETER. PIPE SLEEVES SHALL HAVE A MINIMUM INTERNAL DIAMETER 1" GREATER THAN BOLT DIAMETER AND A MAXIMUM INTERNAL DIAMETER OF 3" GREATER THAN BOLT DIAMETER. SLEEVES SHALL BE FILLED WITH NON-SHRINK GROUT AFTER INSTALLATION OF GROUT.
6. EQUIPMENT BASES SHALL BE INSTALLED LEVEL UNLESS SPECIFIED OTHERWISE.
7. FOR EQUIPMENT PLACED ON GRADE; EXTEND FOUNDATION MINIMUM OF 18" UNO BELOW GRADE; USE #5 @ 12" T&B EW.

EQUIPMENT BASE 1

NTS

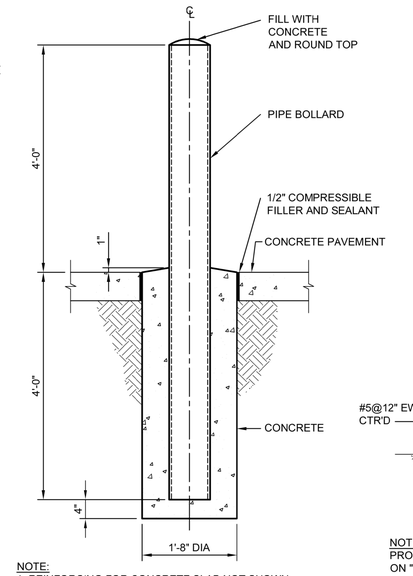

NOTE:
1. REINFORCING FOR CONCRETE SLAB NOT SHOWN.

BOLLARD 2

NTS

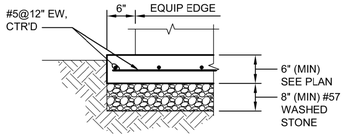

NOTE:
PROVIDE FOR ALL CONCRETE PADS NOTED ON "C" AND "D" SHEETS (UNO).

CONCRETE PAD 5

NTS

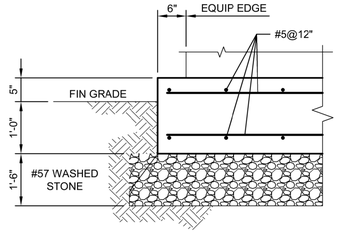

EQUIPMENT PAD 3

NTS

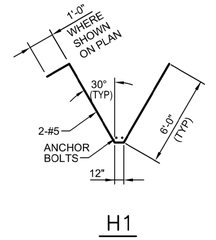

HAIRPIN REINFORCING 4

NTS

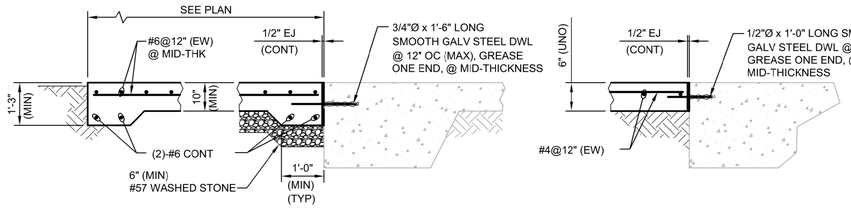

CONCRETE STOOP 6

NTS

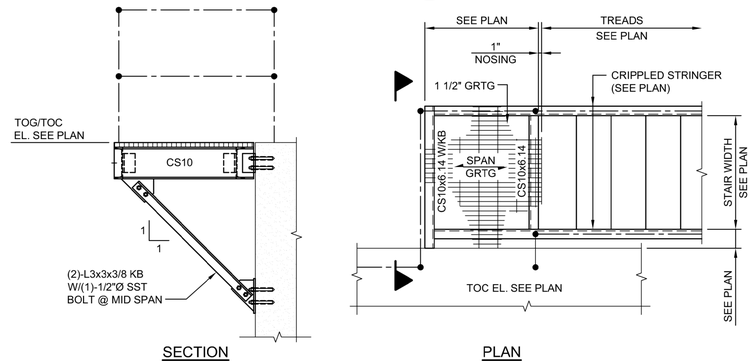

STAIR LANDING SUPPORT 9

NTS

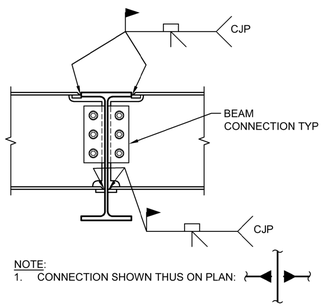

NOTE:
1. CONNECTION SHOWN THUS ON PLAN:

MOMENT CONNECTION BEAM THRU BEAM 7

NTS

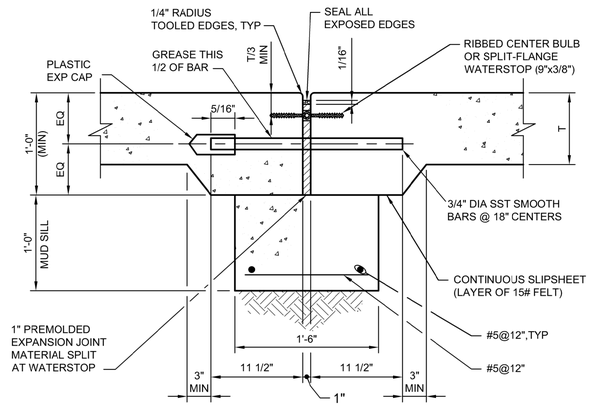

SLABS ON GRADE

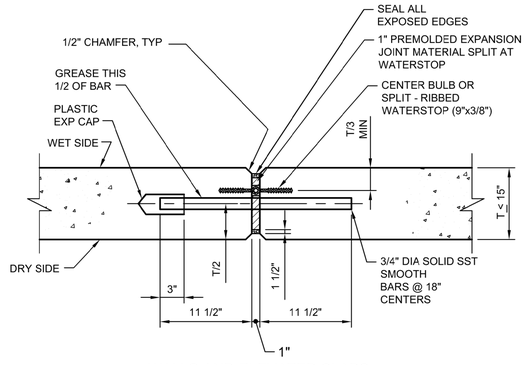

WALLS AND ELEVATED SLABS

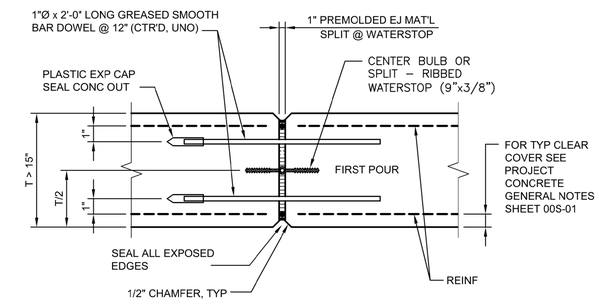

EXPANSION JOINT (EJ) WALLS

EXPANSION JOINTS 8

NONE

THE DRAWINGS IN THIS SET ARE RECORD DRAWINGS. THEY ARE CONSTRUCTION CONTRACT DRAWINGS WHICH HAVE BEEN REVISED BASED ON AVAILABLE FIELD INFORMATION RECORDED BY OTHERS DURING CONSTRUCTION OF THIS CONTRACT. THERE HAS BEEN NO VERIFICATION OF DIMENSIONS SHOWN ON THE CONSTRUCTION DRAWINGS OR THE ACCURACY/COMPLETENESS OF THE FIELD INFORMATION RECEIVED.

SIGNATURE _____ DATE 2/7/2020

C:\pwworking\pitt\d1901391\S-904.dwg 01/10/22 15:20

AS-BUILT REPLACEMENT SHEET

PROFESSIONAL CERTIFICATION
THIS DRAWING WAS ORIGINALLY APPROVED FOR CONSTRUCTION AND SEALED BY MICHAEL E. MARTIN, A REGISTERED PROFESSIONAL ENGINEER IN THE STATE OF MARYLAND, NO. 49839.

NOTICE TO CONTRACTORS
- PROJECT ELEVATIONS ARE BASED ON NAVD88 AND HOWARD COUNTY'S BENCHMARK SYSTEM
- PREVIOUS PROJECTS USED OTHER DATUMS
- APPLY THE FOLLOWING CONVERSIONS WHEN USING PREVIOUS CONTRACT DRAWINGS:
  - ADDITION NO. 6: SUBTRACT 0.80 FT
  - PRIOR ADDITIONS: SUBTRACT 1.04 FT

DEPARTMENT OF PUBLIC WORKS
HOWARD COUNTY, MARYLAND

CHIEF, BUREAU OF UTILITIES DATE

DES: J.C.
DRN: W.M.
CHK: M.E.M.
DATE: 03/16

DATE	REV	DESCRIPTION
07/2019		RECORD DRAWINGS

STRUCTURAL

STRUCTURAL STANDARD DETAILS 3

LITTLE PATUXENT WATER RECLAMATION PLANT
8TH ADDITION
BIOSOLIDS PROCESSING FACILITIES – PHASE I

CAPITAL PROJECT S-6295
CONTRACT NO. 24-4935

ELECTION DISTRICT NO. 6
HOWARD COUNTY, MARYLAND

SCALE AS SHOWN

SHEET 124 OF 463

S-904

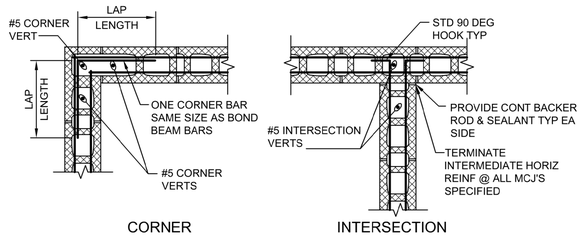

CORNER

INTERSECTION

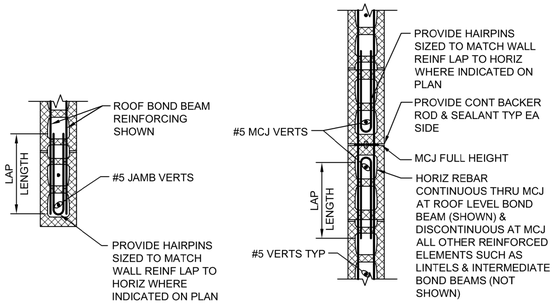

JAMB OR END OF WALL

MASONRY CONTROL JOINT (MCJ)

NOTES:
1. FOR REINFORCING SEE EITHER "CMU REINFORCING SCHEDULE" AND "DETAILS" OR REINFORCING DETAILED ON PLANS AND SECTIONS.
2. LOCATE VERT BARS AT CENTERLINE OF WALL, UNO IN SCHEDULE.
3. EXTEND MCJ FULL HEIGHT OF MASONRY BOND BEAM.
4. LIMIT DISTANCE BETWEEN MCJ TO MAX 24'-0". SEE DRAWINGS FOR LOCATIONS.
5. HORIZONTAL JOINT REINFORCING NOT SHOWN.
6. MODIFY BAR CONFIGURATION SHOWN AS REQUIRED WHERE TWO VERTICAL REINFORCING BARS ARE SHOWN ON THE SCHEDULE.

CMU WALL REINFORCING
NTS — 1

CMU MASONRY LAP SPLICE SCHEDULE				
BAR SIZE	LAP (PER WALL THICKNESS)			NOTES:
	6"	8"	12"	1. LAPS PER ACI 530-11 EQ 2-12 2. SINGLE BAR PER CELL. 3. BAR LOCATED @ CENTER CELL. 4. f'm = 1500 PSI 5. Fy = 60 KSI
#4	20"	20"	20"	
#5	32"	25"	25"	
#6	54"	43"	39"	
#7	-	60"	46"	

MASONRY REINFORCING LAP SCHEDULE
NTS — 5

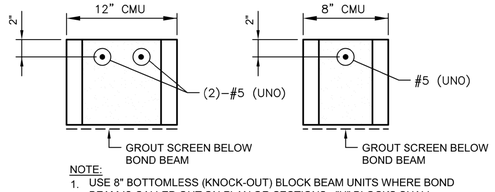

NOTE:
1. USE 8" BOTTOMLESS (KNOCK-OUT) BLOCK BEAM UNITS WHERE BOND BEAM IS CALLED OUT ON PLAN OR SECTIONS. "U" BLOCKS SHALL ONLY BE USED AT LINTELS.

BOND BEAM
NTS — 6

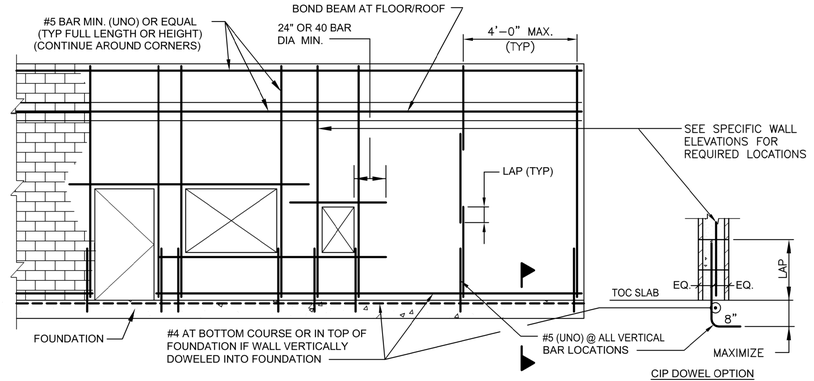

CIP DOWEL OPTION

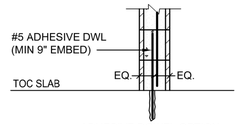

ADHESIVE DOWEL OPTION
(SEE CIP OPTION FOR INFO NOT SHOWN)

NOTES:
1. THIS STANDARD FOLLOWS REQUIREMENTS OF IBC-2012 FOR SEISMIC DESIGN CATEGORY "B" AND RUNNING BOND CONSTRUCTION.
2. ALL HORIZONTAL BAR REINFORCING SHALL BE SET IN LINTELS OR BOND BEAMS, NOT IN JOINTS.
3. PROVIDE CONTINUOUS GALVANIZED "LADDER" MASONRY JOINT REINFORCING @ 16" O/C VERTICALLY (UNO). CONTINUE JOINT REINFORCING INTO INTERSECTING WALL. USE PREFABRICATED CORNER AND TEE SECTIONS

CMU WALL REINFORCING
NTS — 2

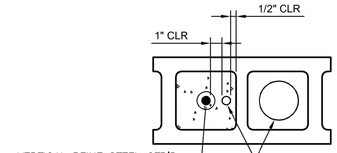

PIPES SHALL NOT BE EMBEDDED IN MASONRY IF THEY ARE:
1) CONTAINING, LIQUID, GAS, OR VAPORS HIGHER THEN 150° F (66° C)
2) UNDER PRESSURE IN EXCESS OF 55 PSI (379 kPa)
3) CONTAINING WATER OR OTHER LIQUIDS SUBJECT TO FREEZING

EMBEDDED CONDUITS, PIPES AND SLEEVES IN CMU
NTS — 3

LINTEL REINFORCEMENT SCHEDULE					
MARK	NOM WIDTH	NOM HEIGHT	"R"	STIRRUPS	REMARKS
L1	8"	8"	(1)-#5	-	
L2	8"	16"	(2)-#4	-	"R" - TOP AND BOTTOM
L3	8"	8"	(1)-#5	-	
L4	12"	24"	(2)-#6	-	
L5	8"	8"	(2)-#4	-	"R" - TOP AND BOTTOM
L6	8"	16"	(1)-#5	-	
L7	8"	16"	(1)-#5	#3@6"	
L8	12"	16"	(1)-#5	-	"R" - TOP AND BOTTOM
L9	8"	24"	(1)-#5	-	"R" - TOP AND BOTTOM

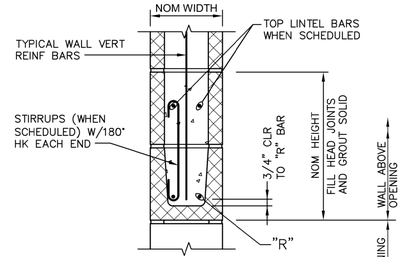

SECTION OF LINTEL AT OPENING

NOTES:
1. OPENINGS 8" OR LESS WIDE MAY OCCUR WITHOUT LINTEL REINFORCING AS LONG AS NO REINFORCING IS INTERRUPTED..
2. SEE DRAWINGS FOR LINTEL TYPES.

LINTEL SCHEDULE
NTS — 4

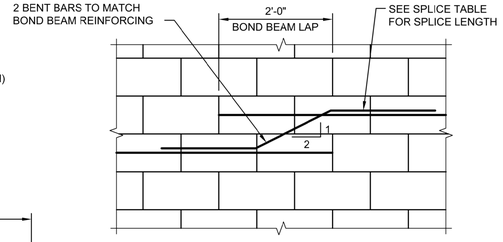

TYPICAL STEPPED BOND BEAM
NTS — 7

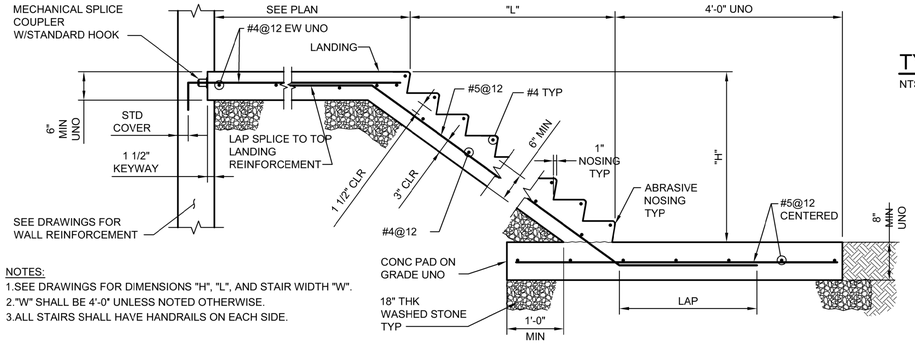

NOTES:
1.SEE DRAWINGS FOR DIMENSIONS "H", "L", AND STAIR WIDTH "W".
2."W" SHALL BE 4'-0" UNLESS NOTED OTHERWISE.
3.ALL STAIRS SHALL HAVE HANDRAILS ON EACH SIDE.

CONCRETE STAIR GRADE SUPPORTED
3/4"=1'-0" — 11

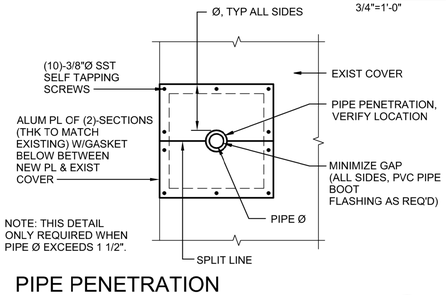

PIPE PENETRATION REINFORCEMENT @ ALUM PLATE
NTS — 8

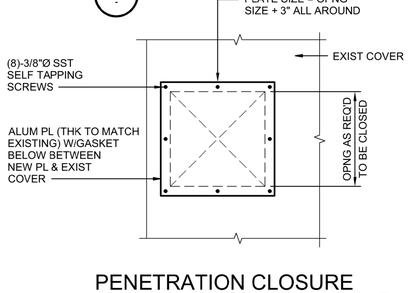

PENETRATION CLOSURE @ ALUM PLATE
NTS — 9

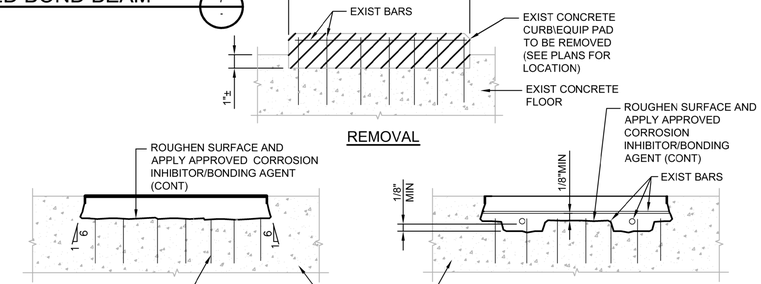

THE DRAWINGS IN THIS SET ARE RECORD DRAWINGS. THEY ARE CONSTRUCTION CONTRACT DRAWINGS WHICH HAVE BEEN REVISED BASED ON AVAILABLE FIELD INFORMATION RECORDED BY OTHERS DURING CONSTRUCTION OF THIS CONTRACT. THERE HAS BEEN NO VERIFICATION OF DIMENSIONS SHOWN ON THE CONSTRUCTION DRAWINGS OR THE ACCURACY/COMPLETENESS OF THE FIELD INFORMATION RECEIVED.

SIGNATURE — DATE 2/7/2023

(A) CLEAN SURFACE OF EXISTING CONCRETE AND PREPARE REPAIR BOUNDARIES AFTER REMOVING CONCRETE.

(B) SAW CUT 1/2" DEEP AT EDGES OF REPAIR AREA.

(C) REMOVE DETERIORATED, CONTAMINATED, OR DAMAGED CONCRETE AND SOUND CONCRETE TO A DEPTH AT LEAST 1" AND MIN 1" CLEAR OF EXPOSED EXISTING REINFORCEMENT, AVOID DAMAGING ENCOUNTERED REINFORCING STEEL.

(D) BARS DAMAGED DURING REMOVAL OPERATION OR IF REINFORCING STEEL HAS LOST MORE THAN 20% OF ITS CROSS SECTION, THEN REPLACEMENT BAR OVER AFFECTED LENGTH PLUS LAP LENGTH EACH END WITH A NEW BAR (OF SAME SIZE AS AFFECTED BAR).

(E) CLEAN EXPOSED SOUND CONCRETE AND ABRASIVE BLAST EXISTING REINFORCING BARS.

(F) APPLY CORROSION INHIBITOR/BONDING AGENT TO CONCRETE AND REINFORCING.

(G) APPLY AND CURE REPAIR MORTAR IN ACCORDANCE WITH THE MANUFACTURER'S RECOMMENDATIONS AND THE SPECIFICATIONS.

(H) FINISH SURFACE TO MATCH COLOR AND TEXTURE OF EXISTING SURFACE.

CONCRETE REPAIR AT CONCRETE CURB OR EQUIPMENT PAD REMOVAL
NTS — 10

AS-BUILT REPLACEMENT SHEET

PROFESSIONAL CERTIFICATION
THIS DRAWING WAS ORIGINALLY APPROVED FOR CONSTRUCTION AND SEALED BY MICHAEL E. MARTIN, A REGISTERED PROFESSIONAL ENGINEER IN THE STATE OF MARYLAND, NO. 49839.

NOTICE TO CONTRACTORS
- PROJECT ELEVATIONS ARE BASED ON NAVD88 AND HOWARD COUNTY'S BENCHMARK SYSTEM
- PREVIOUS PROJECTS USED OTHER DATUMS
- APPLY THE FOLLOWING CONVERSIONS WHEN USING PREVIOUS CONTRACT DRAWINGS:
  - ADDITION NO. 6: SUBTRACT 0.80 FT
  - PRIOR ADDITIONS: SUBTRACT 1.04 FT

DEPARTMENT OF PUBLIC WORKS
HOWARD COUNTY, MARYLAND

CHIEF, BUREAU OF UTILITIES — DATE

DES: J.C.
DRN: W.M.
CHK: M.E.M.
DATE: 03/16

DATE	REV	DESCRIPTION
07/2019		RECORD DRAWINGS

STRUCTURAL

STRUCTURAL STANDARD DETAILS 4

LITTLE PATUXENT WATER RECLAMATION PLANT
8TH ADDITION
BIOSOLIDS PROCESSING FACILITIES – PHASE I

CAPITAL PROJECT S-6295
CONTRACT NO. 24-4935

ELECTION DISTRICT NO. 6
HOWARD COUNTY, MARYLAND

SCALE AS SHOWN

SHEET 125 OF 463

S-905

C:\pwworking\pitt\d1901391\S-905.dwg 01/10/22_15:19

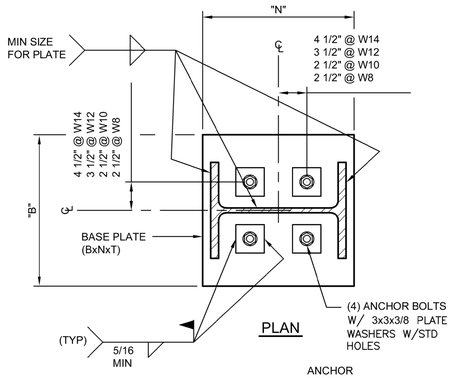

PLAN

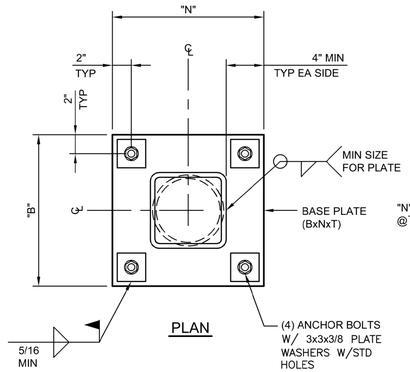

PLAN

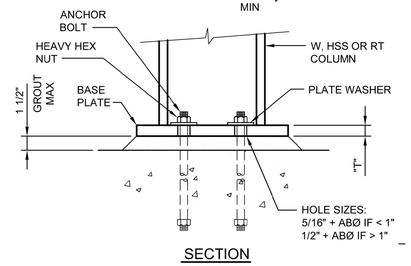

SECTION

COLUMN BASE PLATE

1

NTS

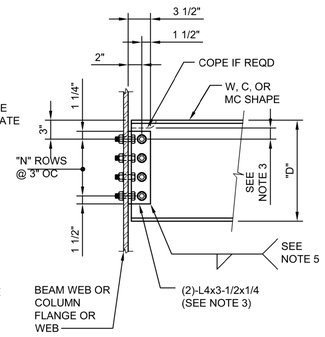

STANDARD BOLTED CONNECTION SCHEDULE		
NOMINAL BEAM SIZE "D"	NUMBER OF BOLT ROWS "N"	WELD SIZE
W8	2	3/16
W10	2	3/16
W12	3	3/16
W14	3	3/16
W16	3	1/4
W18	4	1/4
W21	4	1/4
W24	4	1/4
W27	5	1/4
W30	5	5/16
W33	6	5/16
W36	6	5/16

NOTES:

1. ALL BOLTS SHALL BE 3/4"Ø A325-N FOR STEEL CONSTRUCTION. ALL BOLTS SHALL BE 3/4"Ø SST FOR ALL OTHER CONSTRUCTION.
2. PROVIDE MINIMUM NUMBER OF BOLT ROWS "N" SHOWN AS THE TYPICAL CONN. INCREASE NUMBER OF ROWS AND / OR BOLT DIA. IF INDICATED ON PLANS.
3. MIN. DISTANCE FROM ℄ OF TOP BOLT TO A COPE SHALL BE 1-1/2". WHERE DEEP COPES ARE REQD., INCREASE DISTANCE FROM TOP OF BEAM TO ℄ OF TOP BOLT.
4. USE STANDARD OR SHORT HORIZONTAL SLOTTED HOLES AS REQUIRED.
5. WELD DOUBLE ANGLES TO BEAM WEB IN LIEU OF BOLTING AT CONTRACTORS OPTION.

TYPICAL BEAM CONNECTION

2

NTS

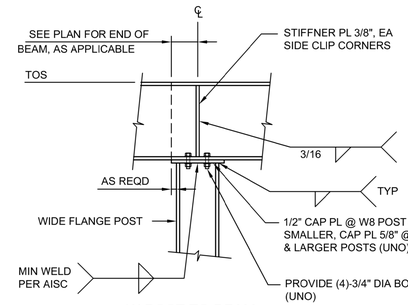

W POST TO BEAM

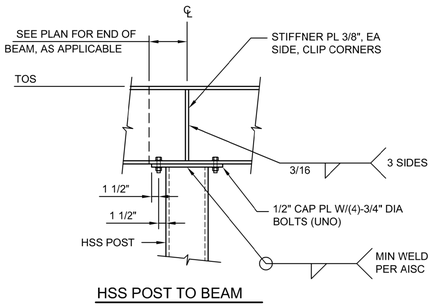

HSS POST TO BEAM

POST TO BEAM CONNECTIONS

3

NTS

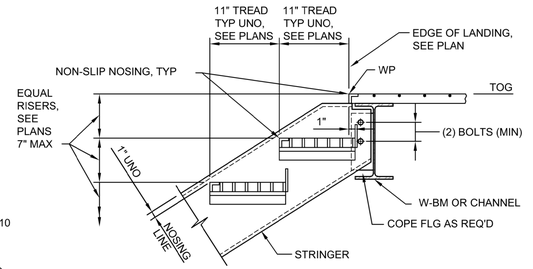

STAIR NOTES:

1. SEE SPECS AND DRAWINGS FOR MATERIAL TYPE.
2. FASTENER MATERIAL SHALL MATCH STAIR MATERIAL TYPE EXCEPT THAT ALUMINUM STAIRS SHALL USE SST TYPE 304 FASTENERS.
3. SEE ARCH STAIR SCHEDULE AS APPLICABLE.

TOP CONNECTION AT BEAM

4

NTS

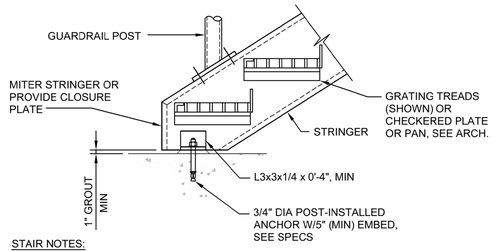

STAIR NOTES:

1. ALL STAIRS AND APPURTENANT ITEMS SHOWN ON DRAWINGS SHALL BE ALUMINUM, UNLESS SHOWN AS CONCRETE STAIRS ON DRAWINGS. ALL FASTENERS SHALL BE STAINLESS STEEL TYPE 304.
2. BASE PLATES FOR ALUMINUM COLUMNS SHALL REST ON 1" NON-SHRINK GROUT.

STAIR BOTTOM CONNECTION

5

NTS

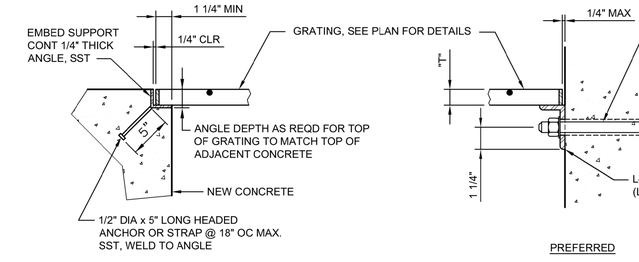

ALTERNATE

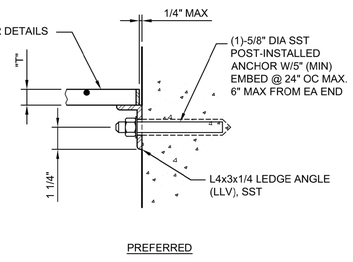

PREFERRED

NOTES:

1. GRATING SIZE PER CONTRACT DOCUMENTS.
2. ALL ENDS AND OPENINGS SHALL BE BANDED, SEE SPECIFICATION.
3. ATTACH GRATING TO ALL SUPPORT ANGLES WITH BOLTED CLIPS, SPACED AT 2'-0" MAX CENTERS.
4. PROVIDE DISSIMILAR MATERIAL PROTECTION FOR ALUMINUM IN CONTACT WITH CONCRETE PER SPECIFICATION.

GRATING AND SUPPORT DETAIL

6

NTS

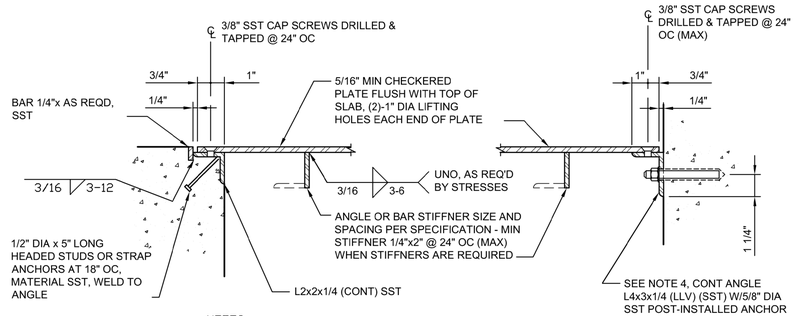

NOTES:

1. CHECKERED PLATE SIZE TO BE DETERMINED PER CONTRACT DOCUMENTS.
2. FIELD DRILL HOLES FOR SCREWS AT CONTRACTORS OPTION.
3. PROVIDE DISSIMILAR MATERIAL PROTECTION FOR ALUMINUM IN CONTACT WITH CONCRETE PER SPECIFICATION.
4. ONLY TO BE USED AT CONTINUOUS WALL ABOVE CHECKERED PLATE OR AT PRE-EXISTING CONCRETE CONSTRUCTION.

CHECKERED PLATE SUPPORT

7

NTS

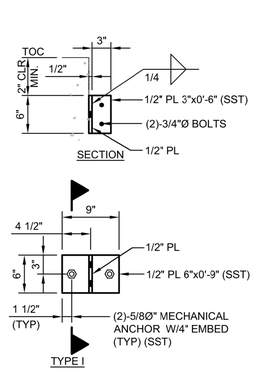

WALL BRACKET

8

NTS

THE DRAWINGS IN THIS SET ARE RECORD DRAWINGS. THEY ARE CONSTRUCTION CONTRACT DRAWINGS WHICH HAVE BEEN REVISED BASED ON AVAILABLE FIELD INFORMATION RECORDED BY OTHERS DURING CONSTRUCTION OF THIS CONTRACT. THERE HAS BEEN NO VERIFICATION OF DIMENSIONS SHOWN ON THE CONSTRUCTION DRAWINGS OR THE ACCURACY/COMPLETENESS OF THE FIELD INFORMATION RECEIVED.

SIGNATURE — DATE 2/7/2023

C:\pwworking\pitt\d1901391\S-906.dwg 01/10/22_15:18

AS-BUILT REPLACEMENT SHEET

PROFESSIONAL CERTIFICATION
THIS DRAWING WAS ORIGINALLY APPROVED FOR CONSTRUCTION AND SEALED BY MICHAEL E. MARTIN, A REGISTERED PROFESSIONAL ENGINEER IN THE STATE OF MARYLAND, NO. 49839.

NOTICE TO CONTRACTORS
- PROJECT ELEVATIONS ARE BASED ON NAVD88 AND HOWARD COUNTY'S BENCHMARK SYSTEM
- PREVIOUS PROJECTS USED OTHER DATUMS
- APPLY THE FOLLOWING CONVERSIONS WHEN USING PREVIOUS CONTRACT DRAWINGS:
  - ADDITION NO. 6: SUBTRACT 0.80 FT
  - PRIOR ADDITIONS: SUBTRACT 1.04 FT

DEPARTMENT OF PUBLIC WORKS
HOWARD COUNTY, MARYLAND

CHIEF, BUREAU OF UTILITIES — DATE

DES: J.C.
DRN: W.M.
CHK: M.E.M.
DATE: 03/16

DATE	REV	DESCRIPTION
07/2019		RECORD DRAWINGS

STRUCTURAL

STRUCTURAL STANDARD DETAILS 5

LITTLE PATUXENT WATER RECLAMATION PLANT
8TH ADDITION
BIOSOLIDS PROCESSING FACILITIES – PHASE I

CAPITAL PROJECT S-6295
CONTRACT NO. 24-4935

ELECTION DISTRICT NO. 6
HOWARD COUNTY, MARYLAND

SCALE AS SHOWN

SHEET 126 OF 463

S-906

REINFORCING BAR KEY

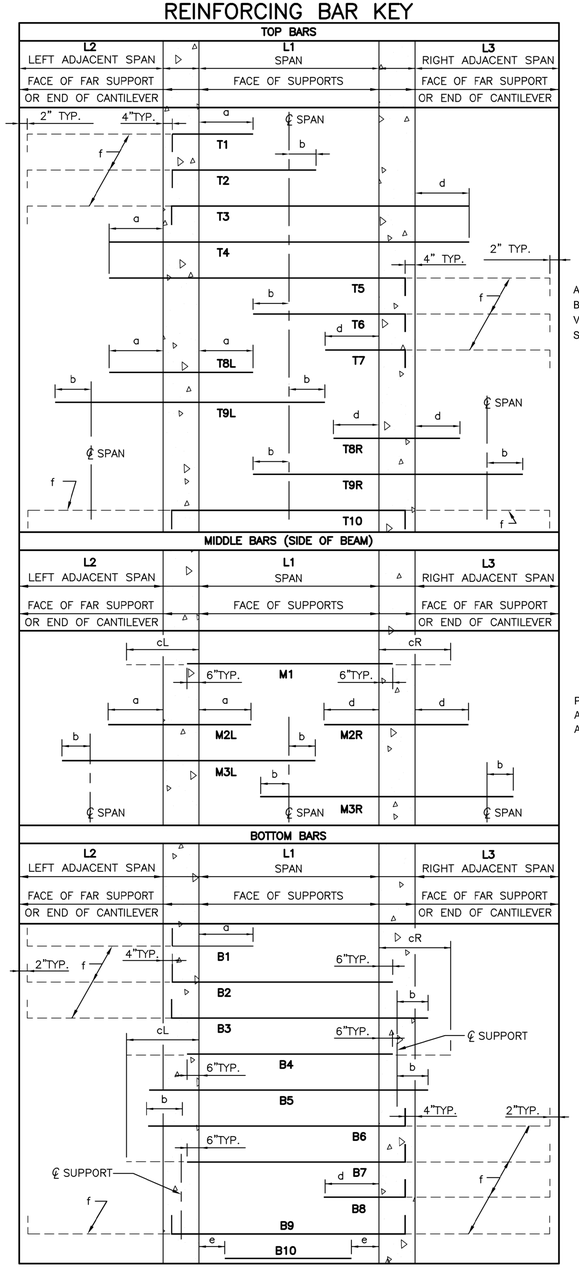

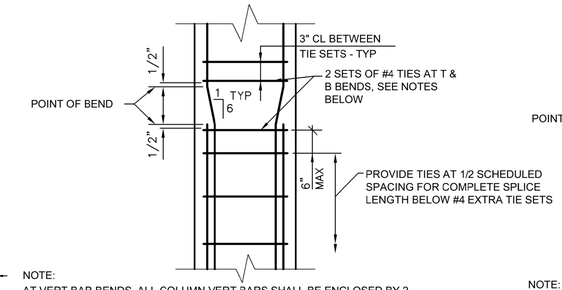

NOTE:
AT VERT BAR BENDS, ALL COLUMN VERT BARS SHALL BE ENCLOSED BY 2 ADD. #4 TIES ABOVE AND BELOW BENDS. IF THE SCHEDULED TIES DO NOT BEND AROUND SOME OF THE VERT BARS (SEE SKETCH 1 BELOW), THEN @ VERT BAR BENDS, PROVIDE 2-#4 TIES AROUND THOSE BARS AS SHOWN IN SKETCH 2 BELOW. STAGGER LOCATION OF ADJACENT TIE HOOKS

COLUMN REINFORCEMENT SPLICE #8 AND SMALLER

NTS

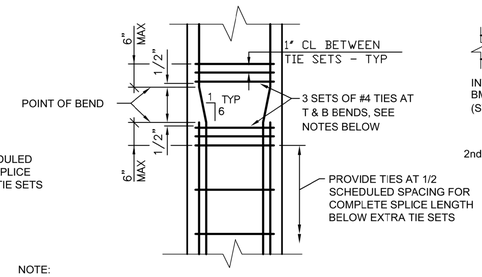

NOTE:
AT VERT BAR BENDS, ALL COLUMN VERT BARS SHALL BE ENCLOSED BY 3-#4 TIES ABOVE AND BELOW BENDS. IF THE SCHEDULED TIES DO NOT BEND AROUND SOME OF THE VERT BARS (SEE SKETCH 1 BELOW), THEN @ VERT BAR BENDS, PROVIDE 3-#4 TIES AROUND THOSE BARS AS SHOWN IN SKETCH 2 BELOW. STAGGER LOCATION OF ADJACENT TIE HOOKS

COLUMN REINFORCEMENT SPLICE #9 AND LARGER

NTS

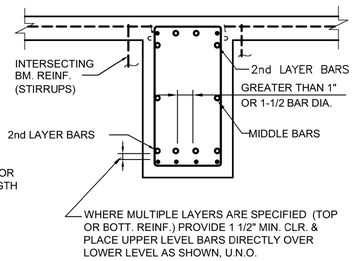

TYPICAL BEAM SECTION

NTS

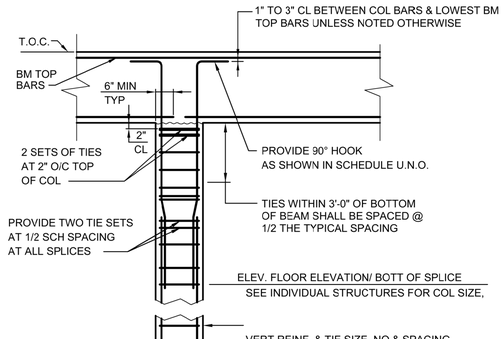

TYPICAL COLUMN DETAIL

NTS

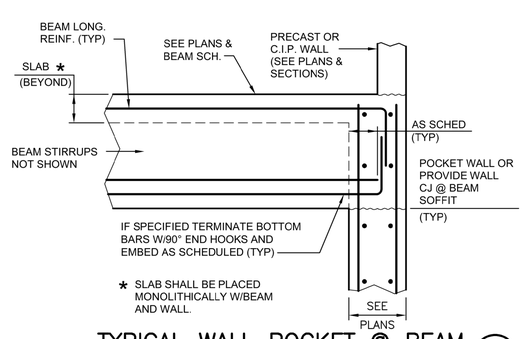

TYPICAL WALL POCKET @ BEAM

4

NTS

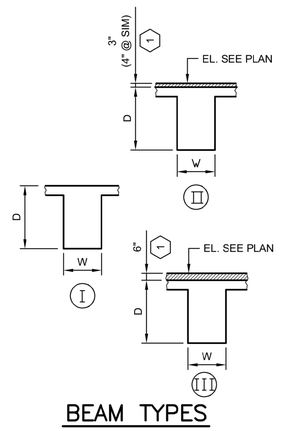

BEAM TYPES

1 LOWER TOP REINFORCING TO ACCOMMODATE DROPS/FLOOR SLOPES; REINFORCING LEVEL

TYPICAL BEAM ELEVATION

NTS

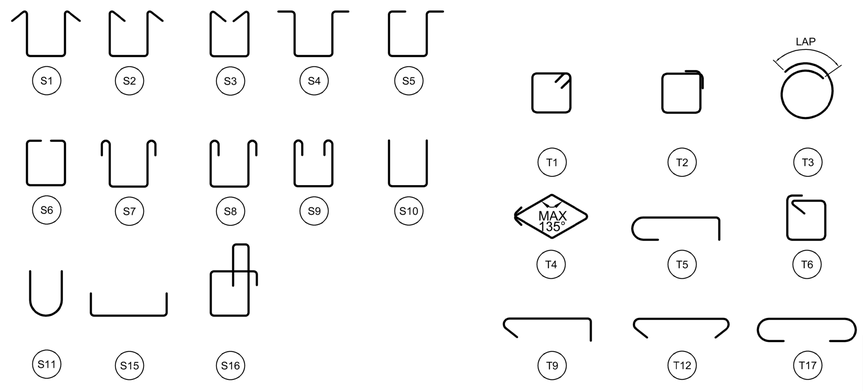

STIRRUP AND TIE DEFINITIONS

APPLY AS SPECIFIED

NOTES:

1. WORK THIS SHEET WITH APPLICABLE SCHEDULE. (BEAM AND COLUMN)
2. FOR BAR PLACEMENT DESCRIPTIONS GIVEN ON THE PLANS, THE LEFT AND RIGHT ENDS OF MEMBERS ARE ORIENTED RELATIVE TO THE WAY THE MEMBER MARK IS READ ON THE PLANS.
3. ALL BAR TYPES INDICATED WITH A "T" PREFIX ARE TOP BARS AND SHALL BE PLACED IN THE UPPERMOST PORTION OF THE MEMBER DEPTH.
4. ALL BAR TYPES INDICATED WITH A "B" PREFIX ARE BOTTOM BARS AND SHALL BE PLACED IN THE LOWERMOST PORTION OF THE MEMBER DEPTH.
5. ALL BAR TYPES INDICATED WITH A "M" PREFIX ARE MIDDLE/SIDE BARS AND SHALL BE PLACED ON EACH SIDE FACE EQUALLY SPACED NO MORE THAN 12" FROM BOTH TOP AND BOTTOM BARS OR AS INDICATED IN THE REMARKS COLUMN OF THE SCHEDULE.
6. ALL END HOOKS SHALL BE STANDARD 90 DEG. HOOKS IN ACCORDANCE WITH ACI 318. WHERE 90 DEGREE HOOK WOULD EXCEED MEMBER DEPTH, 180 DEG. HOOKS MAY BE USED.
7. STIRRUPS SHALL BE SPACED AS INDICATED IN THE CONCRETE BEAM SCHEDULE. SPACING SHALL BEGIN 2" FROM THE FACE OF EACH SUPPORT, WORKING FROM EACH END TOWARDS THE CENTER.
8. BEAM DEPTH "D" INDICATED IN THE SCHEDULE IS THE MINIMUM REQUIRED. WHERE FLOOR DROPS OCCUR, SOFFITS OF BEAMS SHALL BE DROPPED TO MAINTAIN THIS MINIMUM DEPTH. TO DETAIL STIRRUPS, USE "D" DIMENSION.
9. BAR TYPES INDICATED WITH AN "X" SUFFIX (I.E., BX, MX, TX) ARE NON TYPICAL BARS AND ARE DETAILED IN THE BEAM SCHEDULE, ON A SPECIAL BEAM PROFILE DETAIL, OR IN THE APPLICABLE SECTION.
10. SEE DESIGN DRAWINGS FOR ADDITIONAL NOTES.

REINFORCING BAR KEY NOTES:

USE BELOW UNLESS NOTED OTHERWISE IN SCHEDULE.

- a ..... LENGTH = 0.33 x (GREATER OF L1 OR L2)
- b ..... 0.5 x LAP SPLICE
- cL/cR .... SPECIFIED IN REMARKS COLUMN IN SCHEDULE WHEN DIFFERENT THAN TYPICAL 6"
- d ..... LENGTH = 0.33 x (GREATER OF L1 OR L3)
- e ..... LENGTH = 0.125 x L1
- f ..... EXTEND HOOKED BAR TO END OF CANTILEVER WHEN APPLICABLE

DESIGNER NOTES:

1. DEPTH OF BEAM ("D") IS DETERMINED BY ESTABLISHING THE LOWEST FLOOR ELEVATION.
2. OVERALL DEPTH OF CONCRETE SHALL BE "D" PLUS ANY COVER SPECIFIED (TYPES II AND III).
3. SLAB REINFORCING TO BE ABOVE "D" IN TYPES II AND III.

THE DRAWINGS IN THIS SET ARE RECORD DRAWINGS. THEY ARE CONSTRUCTION CONTRACT DRAWINGS WHICH HAVE BEEN REVISED BASED ON AVAILABLE FIELD INFORMATION RECORDED BY OTHERS DURING CONSTRUCTION OF THIS CONTRACT. THERE HAS BEEN NO VERIFICATION OF DIMENSIONS SHOWN ON THE CONSTRUCTION DRAWINGS OR THE ACCURACY/COMPLETENESS OF THE FIELD INFORMATION RECEIVED.

SIGNATURE — DATE 2/7/2023

AS-BUILT REPLACEMENT SHEET

PROFESSIONAL CERTIFICATION
THIS DRAWING WAS ORIGINALLY APPROVED FOR CONSTRUCTION AND SEALED BY MICHAEL E. MARTIN, A REGISTERED PROFESSIONAL ENGINEER IN THE STATE OF MARYLAND, NO. 49839.

NOTICE TO CONTRACTORS
- PROJECT ELEVATIONS ARE BASED ON NAVD88 AND HOWARD COUNTY'S BENCHMARK SYSTEM
- PREVIOUS PROJECTS USED OTHER DATUMS
- APPLY THE FOLLOWING CONVERSIONS WHEN USING PREVIOUS CONTRACT DRAWINGS:
  - ADDITION NO. 6: SUBTRACT 0.80 FT.
  - PRIOR ADDITIONS: SUBTRACT 1.04 FT

DEPARTMENT OF PUBLIC WORKS
HOWARD COUNTY, MARYLAND

CHIEF, BUREAU OF UTILITIES — DATE

DES: J.C.
DRN: W.M.
CHK: M.E.M.
DATE: 03/16

DATE	REV	DESCRIPTION
07/2019		RECORD DRAWINGS

STRUCTURAL

STRUCTURAL STANDARD DETAILS 6

LITTLE PATUXENT WATER RECLAMATION PLANT
8TH ADDITION
BIOSOLIDS PROCESSING FACILITIES – PHASE I

CAPITAL PROJECT S-6295
CONTRACT NO. 24-4935

ELECTION DISTRICT NO. 6
HOWARD COUNTY, MARYLAND

SCALE AS SHOWN

SHEET 127 OF 463

S-907

C:\pwworking\pitt\d1901391\S-907.dwg 01/10/22_15:17

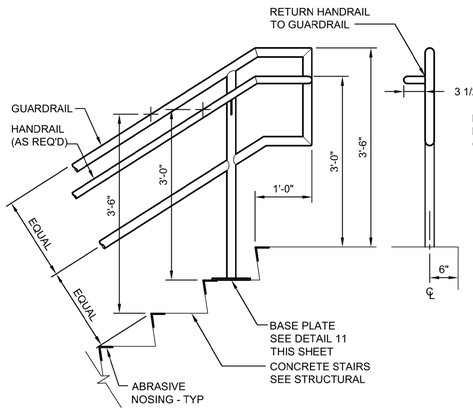

1 - STAIR RAIL TYPE '1'
3/4" = 1'-0"

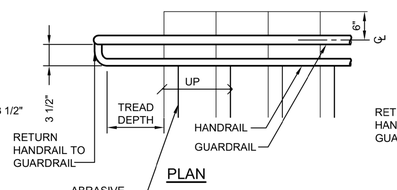

PLAN

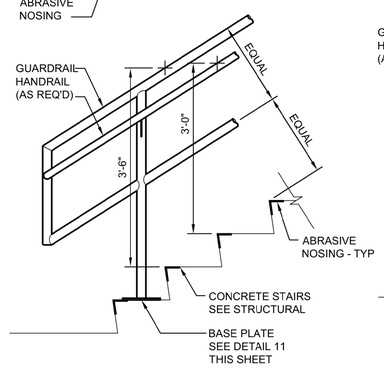

ELEVATION

2 - STAIR RAIL TYPE '1'
3/4" = 1'-0"

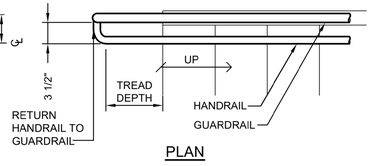

PLAN

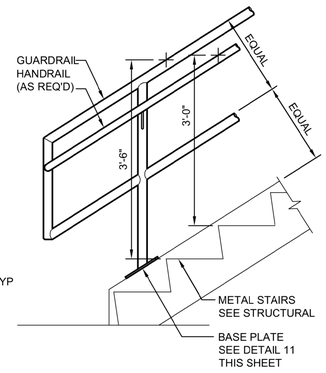

ELEVATION

3 - STAIR RAIL TYPE '2'
3/4" = 1'-0"

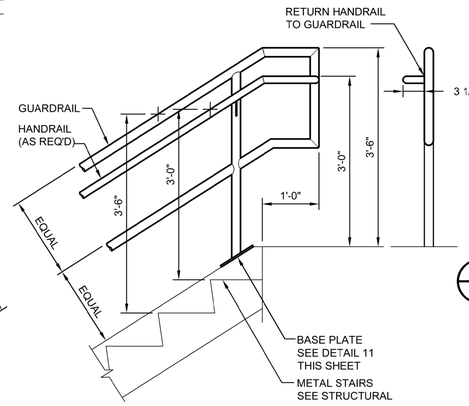

4 - STAIR RAIL TYPE '2'
3/4" = 1'-0"

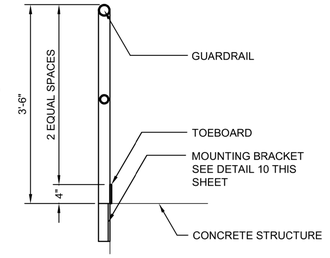

5 - GUARDRAIL TYPE '1'
3/4" = 1'-0"

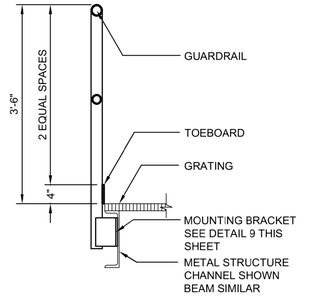

7 - GUARDRAIL TYPE '3'
3/4" = 1'-0"

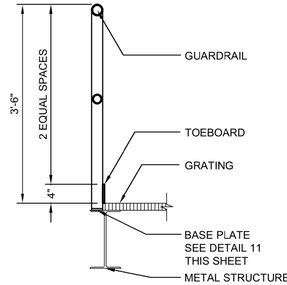

6 - GUARDRAIL TYPE '2'
3/4" = 1'-0"

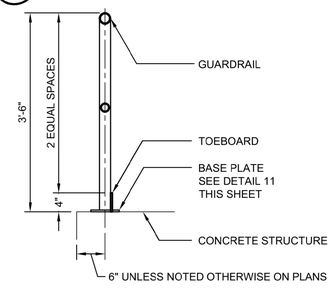

8 - GUARDRAIL TYPE '4'
3/4" = 1'-0"

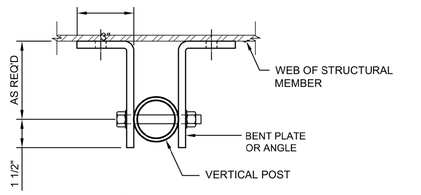

PLAN VIEW

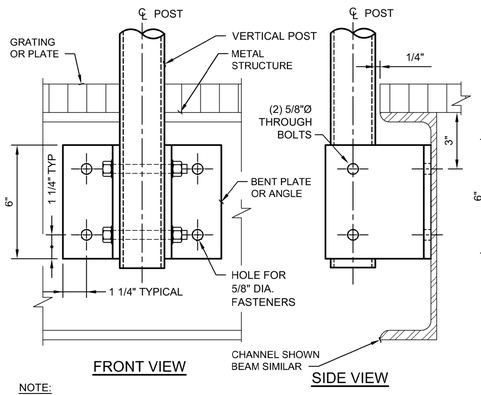

FRONT VIEW SIDE VIEW

NOTE:
1. TOEBOARD NOT SHOWN.
2. COAT SURFACES WITH BITUMINOUS PAINT AT DISSIMILAR MATERIALS, SEE SPECIFICATION 09905.

9 - ALUMINUM GUARDRAIL POST DETAIL
NTS

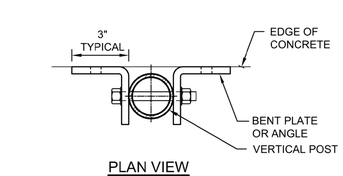

PLAN VIEW

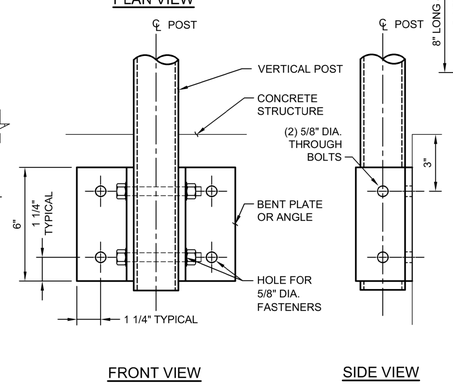

FRONT VIEW SIDE VIEW

NOTE:
1. TOEBOARD NOT SHOWN.
2. COAT SURFACES WITH BITUMINOUS PAINT AT DISSIMILAR MATERIALS, SEE SPECIFICATION 09905.

10 - ALUMINUM GUARDRAIL POST DETAIL
NTS

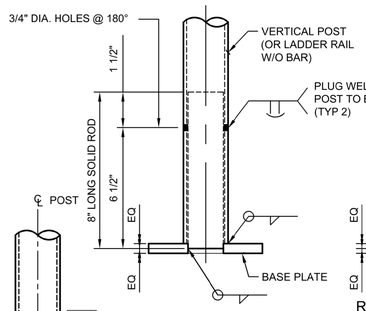

TYPICAL VERTICAL POST

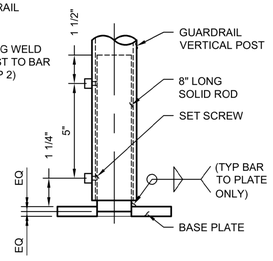

REMOVABLE GUARDRAIL VERTICAL POST

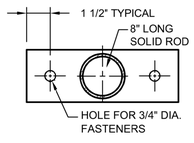

BASE PLATE FOR MOUNTING TO METAL STRUCTURE

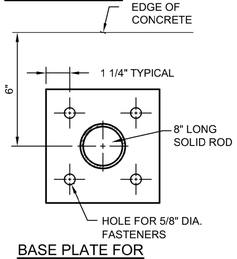

BASE PLATE FOR MOUNTING TO CONCRETE

NOTE:
1. TOEBOARD NOT SHOWN.
2. COAT SURFACES WITH BITUMINOUS PAINT AT DISSIMILAR MATERIALS, SEE SPECIFICATION 09905.

11 - ALUMINUM VERTICAL POST BASE
NTS

THE DRAWINGS IN THIS SET ARE RECORD DRAWINGS. THEY ARE CONSTRUCTION CONTRACT DRAWINGS WHICH HAVE BEEN REVISED BASED ON AVAILABLE FIELD INFORMATION RECORDED BY OTHERS DURING CONSTRUCTION OF THIS CONTRACT. THERE HAS BEEN NO VERIFICATION OF DIMENSIONS SHOWN ON THE CONSTRUCTION DRAWINGS OR THE ACCURACY/COMPLETENESS OF THE FIELD INFORMATION RECEIVED.

SIGNATURE — DATE 2/7/2020

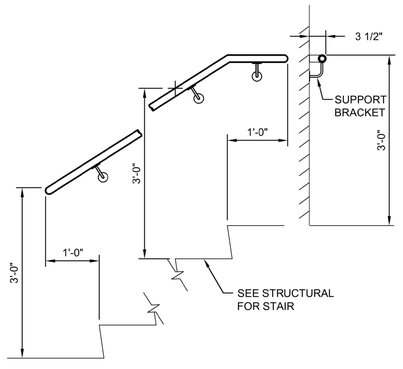

12 - WALL MOUNTED HANDRAIL DETAIL
3/4" = 1'-0"

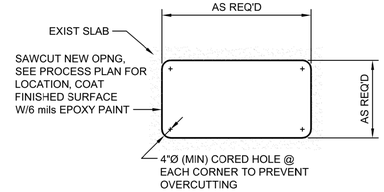

PLAN

13 - DETAIL
NTS

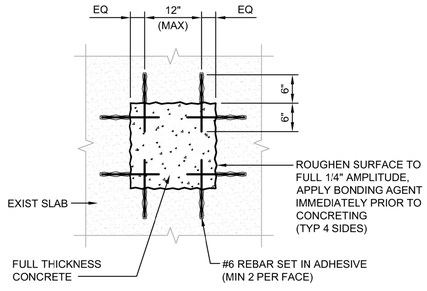

PLAN

14 - DETAIL
NTS

C:\pwworking\pitt\d1901391\S-908.dwg 01/10/22_15:16

AS-BUILT REPLACEMENT SHEET

PROFESSIONAL CERTIFICATION
THIS DRAWING WAS ORIGINALLY APPROVED FOR CONSTRUCTION AND SEALED BY MICHAEL E. MARTIN, A REGISTERED PROFESSIONAL ENGINEER IN THE STATE OF MARYLAND, NO. 49839.

NOTICE TO CONTRACTORS
- PROJECT ELEVATIONS ARE BASED ON NAVD88 AND HOWARD COUNTY'S BENCHMARK SYSTEM
- PREVIOUS PROJECTS USED OTHER DATUMS
- APPLY THE FOLLOWING CONVERSIONS WHEN USING PREVIOUS CONTRACT DRAWINGS:
  - ADDITION NO. 6: SUBTRACT 0.80 FT
  - PRIOR ADDITIONS: SUBTRACT 1.04 FT

DEPARTMENT OF PUBLIC WORKS
HOWARD COUNTY, MARYLAND

CHIEF, BUREAU OF UTILITIES DATE

DES: J.C.
DRN: W.M.
CHK: M.E.M.
DATE: 03/16

DATE	REV	DESCRIPTION
07/2019		RECORD DRAWINGS

STRUCTURAL

STRUCTURAL STANDARD DETAILS 7

LITTLE PATUXENT WATER RECLAMATION PLANT
8TH ADDITION
BIOSOLIDS PROCESSING FACILITIES – PHASE I

CAPITAL PROJECT S-6295
CONTRACT NO. 24-4935

ELECTION DISTRICT NO. 6
HOWARD COUNTY, MARYLAND

SCALE AS SHOWN

SHEET 128 OF 463

S-908

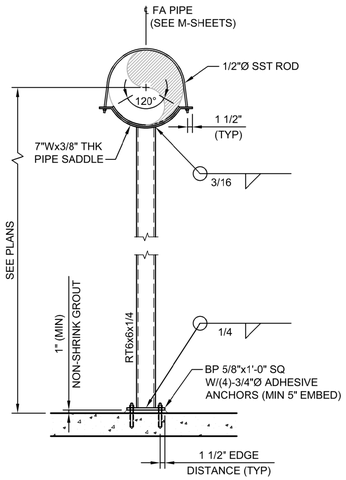

1 DETAIL
NTS

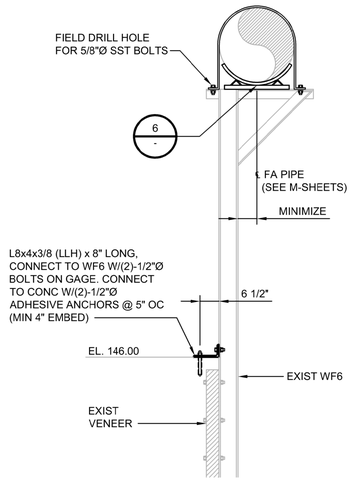

2 DETAIL
NTS

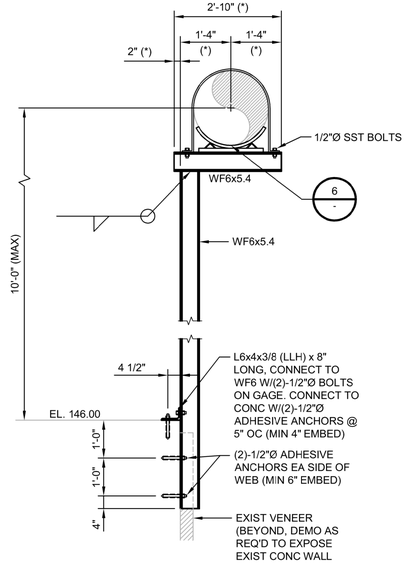

3 DETAIL
NTS

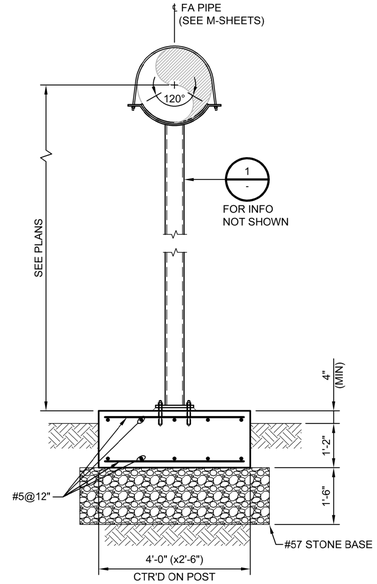

4 DETAIL
NTS

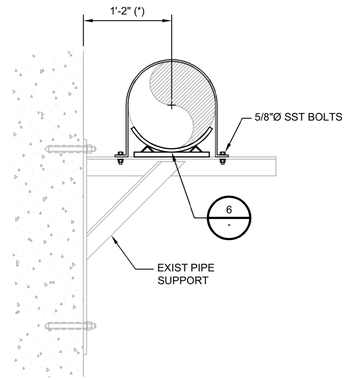

5 DETAIL
NTS

GENERAL NOTES:

1. SEE S-901 FOR GENERAL NOTES.
2. ALL PIPE SUPPORT MATERIAL SHALL BE ALUMINUM (UNO). ALL CONNECTIONS SHALL BE SST (UNO).

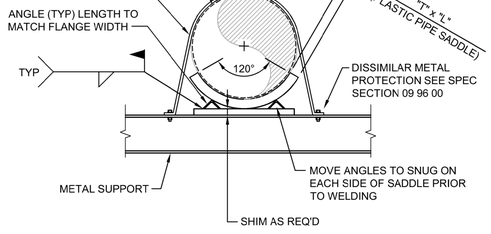

NOTE:
ANGLE AND SHIM MATERIAL TO MATCH METAL SUPPORT MATERIAL, UNO.

PIPE DIA	"T"	ANGLE SIZE	STRAP SIZE	"L" SADDLE LENGTH (CTR'D ON SUPPORT)
< 12"	3/4"	L2x2x1/4	1/4" x 3", QTY 1	PIPE DIA
12" ≤ Ø < 24"	1"	L3x3x1/4	3/8" x 4", QTY 1	PIPE DIA
24" ≤ Ø < 36"	1 1/4"	L4x4x1/4	3/8" x 3", QTY 2	3/4 PIPE DIA

6 FA SUPPORT
NTS

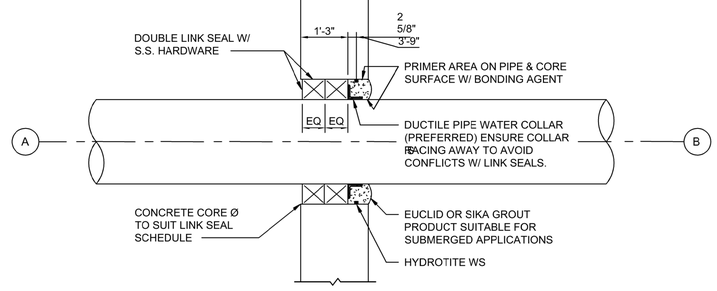

NOTES:

1. ENSURE "A" & "B" SIDES ARE ADEQUATELY SUPPORTED TO AVOID TORSIONING DUE TO DEAD LOADS OR PROCESS EQUIPMENT LOADS. EXAMPLE, HANGARS, BASE 90° ELBOWS, OR OTHER COMMON PIPE SUPPORTS.
2. ASSUME WALL THICKNESS "C" IS SUITABLE FOR DOUBLE LINK SEALS AND GROUT.

7 PIPE WALL PENETRATION
NTS

THE DRAWINGS IN THIS SET ARE RECORD DRAWINGS. THEY ARE CONSTRUCTION CONTRACT DRAWINGS WHICH HAVE BEEN REVISED BASED ON AVAILABLE FIELD INFORMATION RECORDED BY OTHERS DURING CONSTRUCTION OF THIS CONTRACT. THERE HAS BEEN NO VERIFICATION OF DIMENSIONS SHOWN ON THE CONSTRUCTION DRAWINGS OR THE ACCURACY/COMPLETENESS OF THE FIELD INFORMATION RECEIVED.

SIGNATURE — DATE 2/7/2023

AS-BUILT REPLACEMENT SHEET

PROFESSIONAL CERTIFICATION
THIS DRAWING WAS ORIGINALLY APPROVED FOR CONSTRUCTION AND SEALED BY MICHAEL E. MARTIN, A REGISTERED PROFESSIONAL ENGINEER IN THE STATE OF MARYLAND, NO. 49839.

NOTICE TO CONTRACTORS
- PROJECT ELEVATIONS ARE BASED ON NAVD88 AND HOWARD COUNTY'S BENCHMARK SYSTEM
- PREVIOUS PROJECTS USED OTHER DATUMS
- APPLY THE FOLLOWING CONVERSIONS WHEN USING PREVIOUS CONTRACT DRAWINGS:
  - ADDITION NO. 6: SUBTRACT 0.80 FT
  - PRIOR ADDITIONS: SUBTRACT 1.04 FT

DEPARTMENT OF PUBLIC WORKS
HOWARD COUNTY, MARYLAND

CHIEF, BUREAU OF UTILITIES — DATE

DES: J.C.
DRN: W.M.
CHK: M.E.M.
DATE: 03/16

DATE	REV	DESCRIPTION
07/2019		RECORD DRAWINGS

STRUCTURAL

PIPE SUPPORT DETAILS

LITTLE PATUXENT WATER RECLAMATION PLANT
8TH ADDITION
BIOSOLIDS PROCESSING FACILITIES – PHASE I

CAPITAL PROJECT S-6295
CONTRACT NO. 24-4935

ELECTION DISTRICT NO. 6
HOWARD COUNTY, MARYLAND

SCALE AS SHOWN

SHEET 129 OF 463

S-909

C:\pwworking\pitt\d1901391\S-909.dwg 01/10/22_15:15

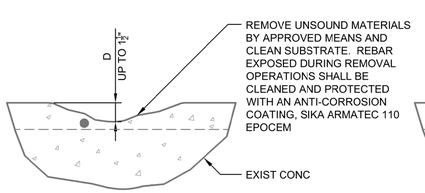

SECTION

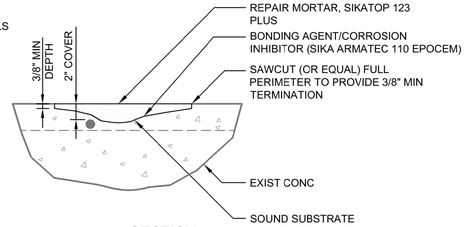

SECTION

TYPE I - THIN LOCAL CONCRETE REPAIR (1 -)

NTS (UP TO 1 1/2" IN DEPTH)

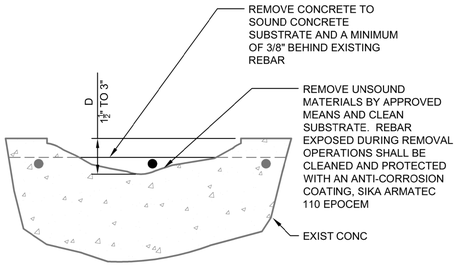

SECTION

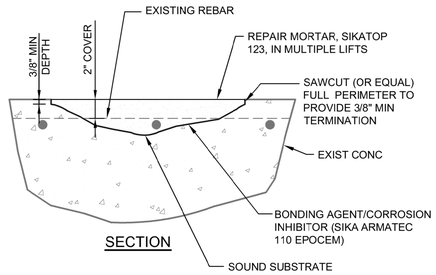

SECTION

TYPE II - MODERATE LOCAL CONCRETE REPAIR (2 -)

NTS (1 1/2" TO 3" IN DEPTH)

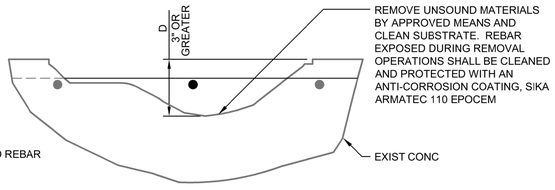

SECTION A-A

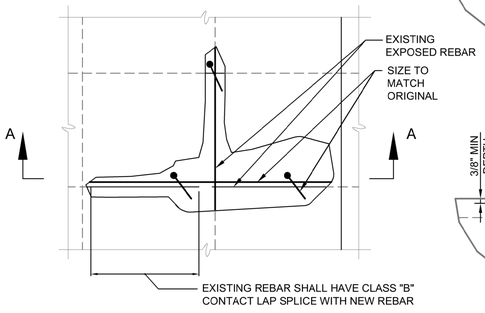

PARTIAL PLAN OR ELEVATION

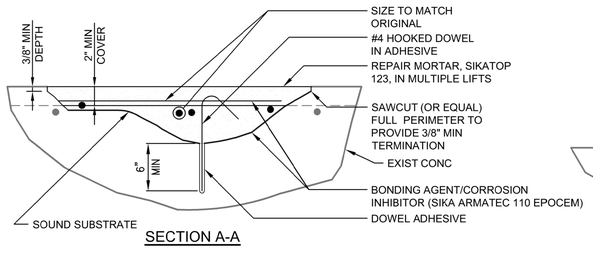

SECTION A-A

TYPE III - SEVERE LOCAL CONCRETE REPAIR (3 -)

NTS (GREATER THAN 3" IN DEPTH)

INTRODUCTION

THE CONDITIONS ENCOUNTERED UPON INITIAL CLEANING OF THE STRUCTURE MAY BE SUCH THAT ADDITIONAL STRUCTURAL REPAIRS ARE REQUIRED PRIOR TO IMPLEMENTING THE OTHER SPECIFIED REPAIR WORK. OR IT MAY BE SUCH THAT A FULL WALL AREA MACHINE APPLIED OVERLAY IS THE BEST SOLUTION DUE TO EXTENT AND DEFICIENCIES EXPOSED.

SCOPE AND PRODUCTS

CONTRACTOR SHALL USE A SHOTCRETE METHOD TO BUILD BACK THE WALL SURFACES TO A PLANE THAT OF THE ORIGINAL CONSTRUCTION'S FINISHED SURFACES (SEE PROJECT'S DRAWINGS FOR DIMENSIONS). OWNER AND ENGINEER WILL PROVIDE DIRECTION FOR REPAIR TYPE TO BE APPLIED. SEE OTHER NOTES THIS SHEET.

S1. COMPLY WITH ACI 506, 506.2 AND 506.4R

S2. USE HIGH OR LOW PRESSURE INSTALLATION TECHNIQUES AND EQUIPMENT, AS APPROPRIATE

S3. FOLLOW PERTINENT ACI RAP BULLETINS (SUCH AS #12)

S4. AS A MINIMUM, WET THE SURFACES TO A SSD CONDITION IMMEDIATELY PRIOR TO START OF THIS WORK

S5. APPLIED PRODUCT SHALL BE BASICALLY CHLORIDE FREE (ION CONTENT LESS THAN 0.10% OF TOTAL CEMENT BY WEIGHT)

S6. PREPACKAGED MIXES SHALL MEET ASTM C1480 REQUIREMENTS

S7. MINIMUM COMPRESSIVE STRENGTH SHALL BE 4500 PSI AT 28 DAYS

S8. PORTLAND CEMENT SHALL BE TYPE I/II (AS PER ASTM C 150); MIX SHALL INCLUDE SILICA FUME AT A RATE OF 7% BY WEIGHT OF THE CEMENTITIOUS PRODUCT; USE NO RETARDANT ADMIXTURE.

S9. USE OF COARSE AGGREGATES IS NOT REQUIRED, BUT MAY BE PROPOSED, BASED UPON PRESENT CONDITION AND ANTICIPATED REPAIR THICKNESS.

S10. IT IS NOT ANTICIPATED, BUT IF SIGNIFICANT REINFORCING REPLACEMENT MAY BE REQUIRED DUE TO CONDITION OF THE MATERIAL ENCOUNTERED. THIS STEEL SHALL BE LAPPED EACH END (ACI 318 CLASS B LAP) ONTO REMAINING STEEL THAT IS AT LEAST 80% OF ITS ORIGINAL CROSS-SECTIONAL AREA. STEEL SHALL BE TREATED WITH BONDING AGENT AND CORROSION INHIBITOR. REPLACEMENT REBAR SHALL MATCH SIZE AND SPACING OF EXISTING REBAR.

EXECUTION AND QUALITY ASSURANCE

S11. CONTRACTOR SHALL PREPARE A SURVEY WITH SURFACE CONTOURS IN ORDER TO ESTABLISH PAYMENT BASIS (VOLUMETRIC NOT AREA DETERMINATION).

S12. SUBMITTALS FOR THIS WORK SHALL FOLLOW THE REQUIREMENTS OF THE APPLICABLE DIVISION 3 SPECIFICATIONS.

S13. SHOTCRETE SUBCONTRACTOR SHALL BE AN EXPERIENCED, QUALIFIED REPAIR FIRM, REGULARLY ENGAGED IN SIMILAR WORK FOR A MINIMUM OF 3 CONSECUTIVE YEARS.

S14. ALL NOZZLEMEN SHALL HOLD CURRENT CERTIFICATION PER THE ACI NOZZLEMAN PROGRAM; CONTRACTOR SHALL SUBMIT THE ACI WORK EXPERIENCE FORM AND OTHER NECESSARY DOCUMENTATION TO VALIDATE APPLICATOR'S QUALIFICATIONS.

S15. SURFACES TO RECEIVE SHOTCRETE SHALL HAVE OUTCROPPINGS GREATER THAN 1-1/2 INCHES BEYOND ADJACENT MATERIAL BE REMOVED TO ELIMINATE RISERS AND THINNER REPAIRED AREAS. FEATHER EDGES ARE NOT ACCEPTABLE.

S16. BASE CONCRETE CONDITION SHALL BE FREE OF ANY CONTAMINANTS AND CHEMICAL CONDITION THAT WOULD IMPAIR THE SHOTCRETE BOND THERETO.

S17. TIMING OF THE STEEL INSTALLATION SHALL BE COORDINATED WITH GENERAL CONTRACTOR, SO AS TO PROVIDE A SOUND INSTALLATION WITHOUT ANY VOIDS UNDER THE REINFORCING CURTAIN. REINFORCING SHALL BE FULLY EMBEDDED IN THE SHOTCRETE. IT MAY BE REQUIRED TO DELAY STEEL INSTALLATION UNTIL AFTER PARTIAL SHOTCRETING ONLY; COMPLETION OF SHOTCRETE EFFORT SHALL THEN BE RESUMED.

S18. FINAL SURFACE CONDITION SHALL BE SMOOTH, SIMILAR TO FINISH #2 OF SPECIFICATION SECTION 03 35 00.

S19. FINAL SHOTCRETE INSTALLATION WILL BE TESTED FOR BOND (150 PSI MINIMUM) PER ACI 506.4R BY A THIRD PARTY FIRM PRIOR TO ACCEPTANCE OF THIS PHASE OF THE WORK. (SONIC TESTING MAY BE AN OPTION).

TYPE IV - SHOTCRETE REPAIR (3 -)

NTS

GENERAL NOTES:

G1. ALL EXISTING INFORMATION SHOWN ON THESE DRAWINGS INCLUDING LOCATION, DIMENSIONS, ELEVATIONS, AND CONFIGURATIONS IS DERIVED FROM THE ORIGINAL CONSTRUCTION AND IS NOT GUARANTEED TO BE COMPLETE OR CORRECT. THE CONTRACTOR IS RESPONSIBLE FOR VERIFYING ALL EXISTING INFORMATION IN THE FIELD AS REQUIRED.

G2. UNLESS SCOPE OF REPAIR WORK IS CLEARLY DEFINED IN CONTRACT DOCUMENTS, CONCRETE REPAIRS SHALL BE PAID FOR UNDER THE APPLICABLE UNIT PRICE BID ITEM. THE CONTRACT AMOUNT SHALL INCLUDE ALL WORK RELATING TO CONCRETE REPAIRS AS INDICATED PER THE DRAWINGS AND SPECIFICATIONS. THE LISTED QUANTITIES IN THE BID FORM BY WORK ITEM ARE ESTIMATES ONLY.

G3. CONCRETE REPAIR WORK SHALL BE PERFORMED PER SPECIFICATION SECTION 03 35 00 AND THE DETAILS ON THE DRAWINGS. CONCRETE REPAIR WORK USING SHOTCRETE SHALL BE PERFORMED IN ACCORDANCE WITH DRAWINGS REQUIREMENTS.

G4. A PREWORK CONDITION ASSESSMENT INSPECTION SHALL BE UNDERTAKEN BY THE CONTRACTOR, REPAIR/SURFACE PREPARATION SUB-CONTRACTOR, ENGINEER, AND THE OWNER IMMEDIATELY. ALL NECESSARY SAFETY PRECAUTIONS SHALL BE IN PLACE, AND ALL PERSONNEL ENTERING THE STRUCTURE MUST BE PROPERLY TRAINED AND QUALIFIED.

G5. BEFORE PERFORMING ANY CONCRETE REPAIR WORK, THE CONTRACTOR SHALL GRITBLAST OR WATERBLAST (5,000 PSI WATERJET W/ORBITTAL NOZZLE) 100% OF AREAS TO REMOVE ALL LOOSE CONCRETE, EXISTING COATINGS, UNSOUND MATERIAL AND DEBRIS. ALL SURFACES SHALL BE CLEAN, FREE OF DIRT, GREASE, LOOSE PARTICLES, AND DELETERIOUS SUBSTANCES AND SHALL BE PREPARED ACCORDING TO MANUFACTURER'S PRINTED INSTALLATION INSTRUCTIONS (MPII). IF NECESSARY, USE A DETERGENT AND FOLLOW WITH RINSES TO REMOVE DETERGENT.

G6. AFTER THE CONCRETE SURFACE PREPARATION HAS BEEN COMPLETED A SECONDARY INSPECTION OF THE SURFACES SHALL BE PERFORMED BY THE CONTRACTOR, REPAIR SUB-CONTRACTOR, ENGINEER, AND OWNER. THE INSPECTION SHALL SERVE AS A MEANS TO DETERMINE THE EXTENT OF CONCRETE REPAIR THAT IS REQUIRED. WITHIN 96 HOURS OF COMPLETING THE INSPECTION, THE ENGINEER SHALL PROVIDE A REPORT SUMMARIZING THE INSPECTION FINDINGS AND DETAILING THE REPAIRS REQUIRED FOR THE INTERIOR SURFACES.

G7. A SLURRY BOND COAT MAY BE USED IN LIEU OF BONDING AGENT WHEN APPROVED BY THE REPAIR PRODUCT MANUFACTURER AND ENGINEER. CONTRACTOR SHALL OBTAIN WRITTEN APPROVAL. WET CONCRETE SURFACES TO SURFACE SATURATED DRY (SSD) PRIOR TO APPLYING SLURRY BOND COAT. APPLY REPAIR MORTAR WHILE SLURRY BOND COAT IS STILL WET.

G8. CONTRACTOR SHALL COORDINATE PIPING REPLACEMENT OR REPAIR WITH THE OWNER.

G9. THE CONTRACTOR SHALL NOT PERFORM ANY CONCRETE REPAIR WORK WHEN AMBIENT TEMPERATURES ARE BELOW MANUFACTURER'S RECOMMENDATIONS. NO ADMIXTURES, EXCEPT THOSE REQUIRED BY THE MANUFACTURER, SHALL BE USED IN THE REPAIRS HEREIN. ALL PRODUCTS SHALL BE APPLIED IN STRICT ACCORDANCE WITH THE MPII BY APPROVED INSTALLERS.

G10. CONCRETE REPAIRS SHALL RESTORE ALL INTERIOR SURFACES TO THE APPROXIMATE DIMENSIONS OF THE ORIGINAL CONSTRUCTION. ALL REINFORCING STEEL SHALL HAVE A MINIMUM COVER OF 2".

G11. THE CONTRACTOR SHALL PERFORM THE REPAIR WORK AS OUTLINED. THE CONTRACTOR SHALL BE PAID FOR THE REPAIR WORK UNDER UNIT PRICE BID ITEMS AS LISTED IN THE CONTRACT DOCUMENTS AND AS FOLLOWS:

TYPE I - THIN LOCAL CONCRETE REPAIR
TYPE II - MODERATE LOCAL CONCRETE REPAIR
TYPE III - SEVERE LOCAL CONCRETE REPAIR
TYPE IV - LARGE AREA SHOTCRETE REPAIR/OVERLAY
BELOW WATER LEVEL OR LEAKING CRACK - WATERPROOF INJECTION GROUT (DETERMINATION SHALL BE MADE AT TIME OF INSPECTION)
TYPE XI - STRUCTURAL CRACK - EPOXY CRACK REPAIR BINDER (DETERMINATION SHALL BE MADE AT TIME OF INSPECTION)

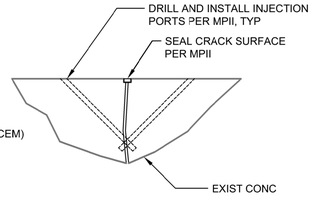

TYPE X - CRACKS BELOW WATER
(WATERPROOF INJECTION GROUT)

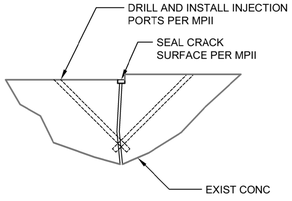

TYPE XI - STRUCTURAL CRACKS
(EPOXY CRACK REPAIR BINDER)

CRACK REPAIR DETAILS (5 -)

NTS

THE DRAWINGS IN THIS SET ARE RECORD DRAWINGS. THEY ARE CONSTRUCTION CONTRACT DRAWINGS WHICH HAVE BEEN REVISED BASED ON AVAILABLE FIELD INFORMATION RECORDED BY OTHERS DURING CONSTRUCTION OF THIS CONTRACT. THERE HAS BEEN NO VERIFICATION OF DIMENSIONS SHOWN ON THE CONSTRUCTION DRAWINGS OR THE ACCURACY/COMPLETENESS OF THE FIELD INFORMATION RECEIVED.

SIGNATURE — DATE 2/7/2023

AS-BUILT REPLACEMENT SHEET

PROFESSIONAL CERTIFICATION
THIS DRAWING WAS ORIGINALLY APPROVED FOR CONSTRUCTION AND SEALED BY MICHAEL E. MARTIN, A REGISTERED PROFESSIONAL ENGINEER IN THE STATE OF MARYLAND, NO. 49839.

NOTICE TO CONTRACTORS
- PROJECT ELEVATIONS ARE BASED ON NAVD88 AND HOWARD COUNTY'S BENCHMARK SYSTEM
- PREVIOUS PROJECTS USED OTHER DATUMS
- APPLY THE FOLLOWING CONVERSIONS WHEN USING PREVIOUS CONTRACT DRAWINGS:
  - ADDITION NO. 6: SUBTRACT 0.80 FT
  - PRIOR ADDITIONS: SUBTRACT 1.04 FT

DEPARTMENT OF PUBLIC WORKS
HOWARD COUNTY, MARYLAND

CHIEF, BUREAU OF UTILITIES DATE

DES: J.C.
DRN: W.M.
CHK: M.E.M.
DATE: 03/16

DATE	REV	DESCRIPTION
07/2019		RECORD DRAWINGS

STRUCTURAL

CONCRETE REPAIR DETAILS

LITTLE PATUXENT WATER RECLAMATION PLANT
8TH ADDITION
BIOSOLIDS PROCESSING FACILITIES – PHASE I

CAPITAL PROJECT S-6295
CONTRACT NO. 24-4935

ELECTION DISTRICT NO. 6
HOWARD COUNTY, MARYLAND

SCALE AS SHOWN

SHEET 130 OF 463

S-910

C:\pwworking\pitt\d1901391\ S-910.dwg 01/10/22_15:07

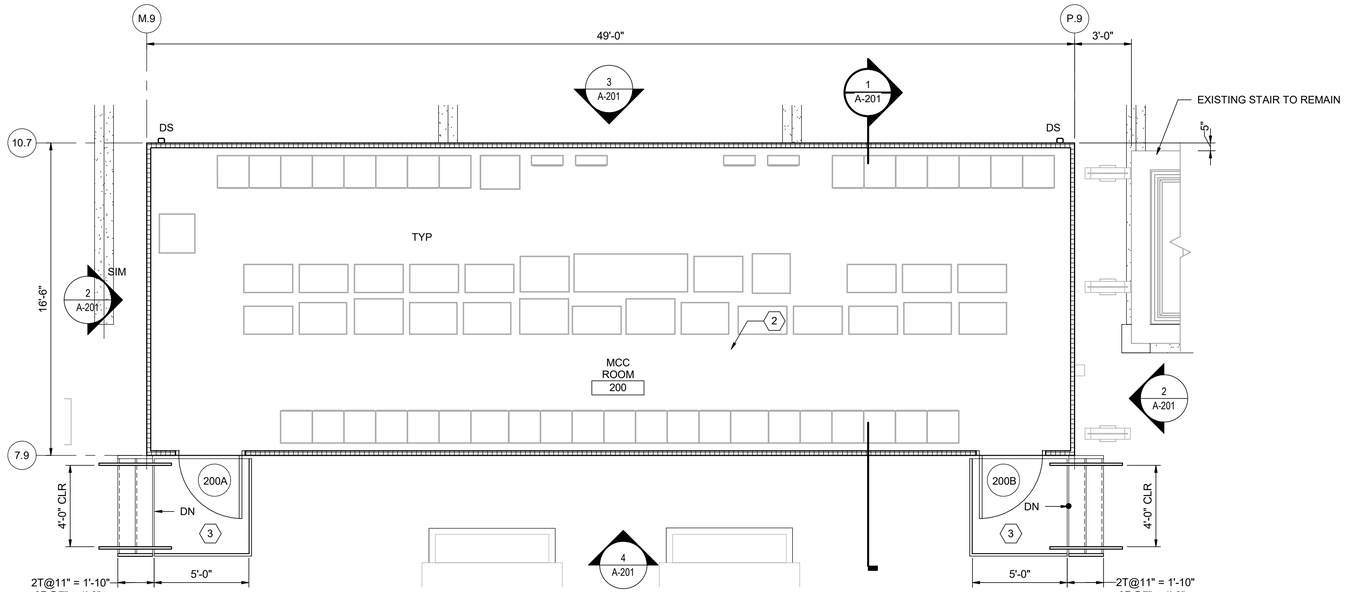

1 A-201 FLOOR PLAN @ EL 146.00
1/4" = 1'-0"

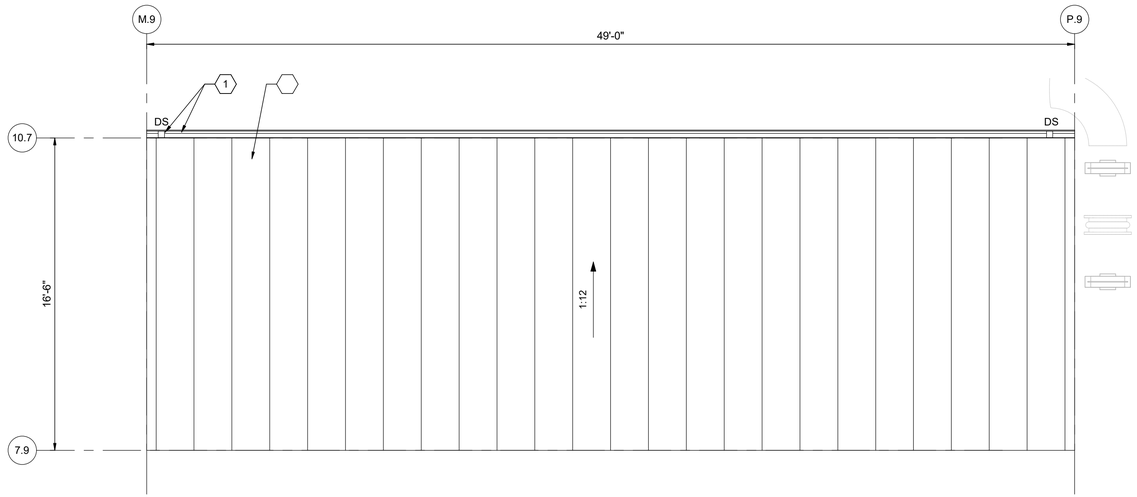

6 - ROOF PLAN
1/4" = 1'-0"

N

GENERAL NOTES

1 MODULAR ENCLOSURE SHALL COMPLY WITH ALL LOCAL, STATE AND FEDERAL REGULATIONS. SEE SPECIFICATIONS 13 34 20.

2 CONTRACTOR SHALL FIELD VERIFY ALL DIMENSIONS AND EXISTING CONDITIONS PRIOR TO FABRICATION AND INSTALLATION OF MODULAR ENCLOSURE.

3 EXTERIOR STAIRS, INCLUDING SUPPORTS, GUARDRAILS AND HANDRAILS REQUIRED FOR MODULAR ENCLOSURE ACCESS SHALL BE DESIGNED AND FABRICATED BY THE MODULAR ENCLOSURE MANUFACTURER.

4 SEE SHEET A-901 FOR ROOM FINISH AND DOOR SCHEDULE.

5 REFER TO ELECTRICAL DRAWNGS FOR EQUIPMENT LAYOUT INFORMATION.

6 HVAC EQUIPMENT SHALL BE DESIGNED & PROVIDED BY MODULAR ENCLSOURE MANUFACTURER. PROVIDE 6" HT. MIN LEVEL CONCRETE EQUIPMENT PAD FOR HVAC EQUIPMENT MOUNTED TO TOP OF GALLERY ROOF.

KEY NOTES (X)

1 PREFINISHED 6X6 AL GUTTER AND 4X4 AL DOWNSPOUT

2 PREFABRICATED MODULAR ENCLOSURE W/ INSULATEDMETAL WALL PANELS AND STEEL FABRICATED FLOOR SYSTEM.

THE DRAWINGS IN THIS SET ARE RECORD DRAWINGS. THEY ARE CONSTRUCTION CONTRACT DRAWINGS WHICH HAVE BEEN REVISED BASED ON AVAILABLE FIELD INFORMATION RECORDED BY OTHERS DURING CONSTRUCTION OF THIS CONTRACT. THERE HAS BEEN NO VERIFICATION OF DIMENSIONS SHOWN ON THE CONSTRUCTION DRAWINGS OR THE ACCURACY/COMPLETENESS OF THE FIELD INFORMATION RECEIVED.

SIGNATURE 2/7/2023 DATE

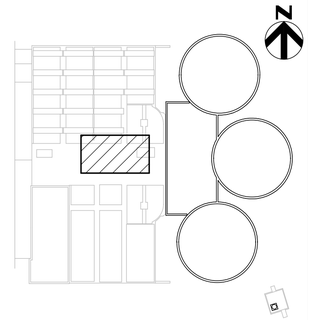

KEY PLAN

AS-BUILT REPLACEMENT SHEET

PROFESSIONAL CERTIFICATION

THIS DRAWING WAS ORIGINALLY APPROVED FOR CONSTRUCTION AND SEALED BY BRIAN T. ELLINGTON, A REGISTERED ARCHITECT IN THE STATE OF MARYLAND, NO. 18821.

NOTICE TO CONTRACTORS

- PROJECT ELEVATIONS ARE BASED ON NAVD88 AND HOWARD COUNTY'S BENCHMARK SYSTEM
- PREVIOUS PROJECTS USED OTHER DATUMS
- APPLY THE FOLLOWING CONVERSIONS WHEN USING PREVIOUS CONTRACT DRAWINGS:
  - ADDITION NO. 6: SUBTRACT 0.80 FT
  - PRIOR ADDITIONS: SUBTRACT 1.04 FT

DEPARTMENT OF PUBLIC WORKS
HOWARD COUNTY, MARYLAND

CHIEF, BUREAU OF UTILITIES DATE

DES: RK
DRN: RK
CHK: BE
DATE: 12/2016

DATE	REV	DESCRIPTION
07/2019		RECORD DRAWING

ARCHITECTURAL

MCC BUILDING FLOOR PLAN AND ROOF PLAN

LITTLE PATUXENT WATER RECLAMATION PLANT
8TH ADDITION
BIOSOLIDS PROCESSING FACILITIES - PHASE I

CAPITAL PROJECT S-6295
CONTRACT NO. 24-4935

ELECTION DISTRICT NO. 6
HOWARD COUNTY, MARYLAND

SCALE AS SHOWN

SHEET 131 OF 463

A-200

BIM 360://10054364 – Little Patuxent WRP 8th Addition/264591_100_A_V18.rvt
1/11/2022 9:30:16 AM

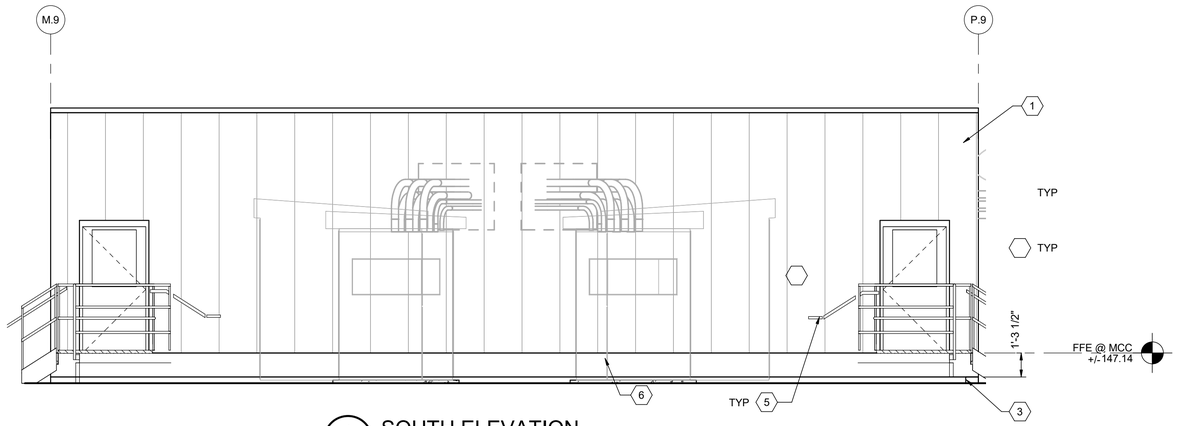

4 A-200 SOUTH ELEVATION
1/4" = 1'-0"

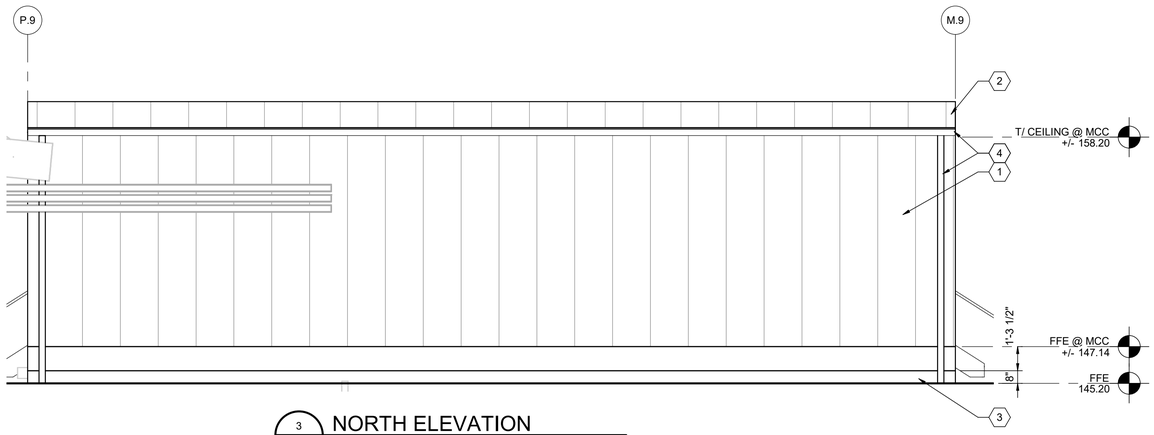

3 A-200 NORTH ELEVATION
1/4" = 1'-0"

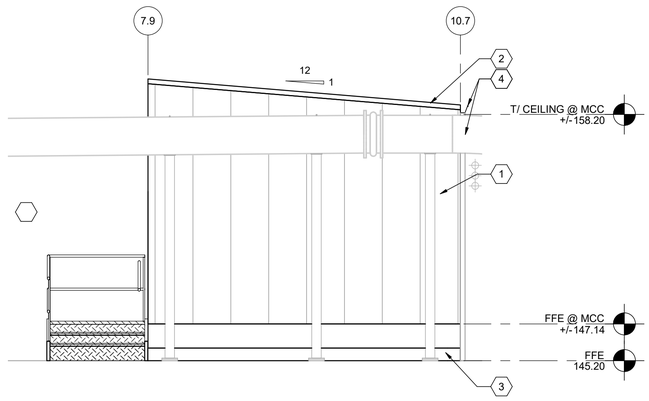

2 A-200 EAST ELEVATION (WEST SIM)
1/4" = 1'-0"

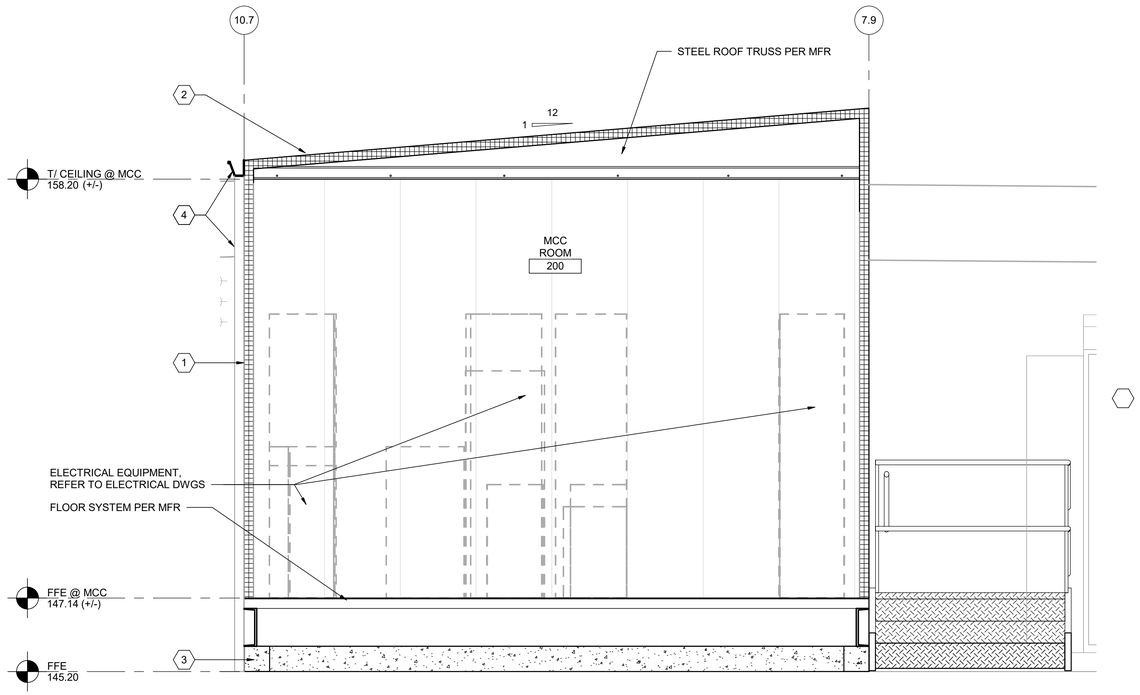

1 A-200 TYPICAL BUILDING SECTION
1/2" = 1'-0"

GENERAL NOTES:

1 MODULAR ENCLOSURE SHALL COMPLY WITH ALL LOCAL, STATE AND FEDERAL REGULATIONS. SEE SPECIFICATION 13 34 20.

2 ELEVATIONS MAY VARY. CONTRACTOR SHALL COORDINATE AND FIELD VERIFY ELEVATIONS BEFORE MODULAR ENCLOSURE ACCESS STAIRS ARE FABRICATED.

3 MODULAR ENCLOSURE SHALL BE INSULATED TO MEET THE REQUIREMENT OF THE ENERGY CODE. SEE SPECIFICATION 13 34 20 FOR MIN U-VALUE REQUIREMENTS FOR EACH ASSEMBLY.

KEY NOTES (X)

1 INSULATED METAL WALL PANEL: R-25
2 INSULATED METAL ROOF PANEL: R-24
3 CONCRETE FOUNDATION, SEE TO STRUCT DWGS
4 PREFINISHED 6X6 AL GUTTER AND 4X4 AL DOWNSPOUT
5 AL GUARDRAIL AND HANDRAIL, REFER TO STRUCT DWGS FOR DETAILS
6 HVAC EQUIPMENT LOCATION FOR CONDENSERS. CONTRACTOR SHALL PROVIDE LEVEL CONCRETE PAD. SIZED AS NEEDED FOR EQUIPMENT.

THE DRAWINGS IN THIS SET ARE RECORD DRAWINGS. THEY ARE CONSTRUCTION CONTRACT DRAWINGS WHICH HAVE BEEN REVISED BASED ON AVAILABLE FIELD INFORMATION RECORDED BY OTHERS DURING CONSTRUCTION OF THIS CONTRACT. THERE HAS BEEN NO VERIFICATION OF DIMENSIONS SHOWN ON THE CONSTRUCTION DRAWINGS OR THE ACCURACY/COMPLETENESS OF THE FIELD INFORMATION RECEIVED.

SIGNATURE — DATE 2/7/2023

AS-BUILT REPLACEMENT SHEET

PROFESSIONAL CERTIFICATION

THIS DRAWING WAS ORIGINALLY APPROVED FOR CONSTRUCTION AND SEALED BY BRIAN T. ELLINGTON, A REGISTERED ARCHITECT IN THE STATE OF MARYLAND, NO. 18821.

NOTICE TO CONTRACTORS

- PROJECT ELEVATIONS ARE BASED ON NAVD88 AND HOWARD COUNTY'S BENCHMARK SYSTEM
- PREVIOUS PROJECTS USED OTHER DATUMS
- APPLY THE FOLLOWING CONVERSIONS WHEN USING PREVIOUS CONTRACT DRAWINGS:
  - ADDITION NO. 6: SUBTRACT 0.80 FT
  - PRIOR ADDITIONS: SUBTRACT 1.04 FT

DEPARTMENT OF PUBLIC WORKS
HOWARD COUNTY, MARYLAND

CHIEF, BUREAU OF UTILITIES — DATE

DES: RK
DRN: RK
CHK: BE
DATE: 12/2016

DATE	REV	DESCRIPTION
07/2019		RECORD DRAWING

ARCHITECTURAL

MCC BUILDING ELEVATIONS AND SECTIONS

LITTLE PATUXENT WATER RECLAMATION PLANT
8TH ADDITION
BIOSOLIDS PROCESSING FACILITIES - PHASE I

CAPITAL PROJECT S-6295
CONTRACT NO. 24-4935

ELECTION DISTRICT NO. 6
HOWARD COUNTY, MARYLAND

SCALE AS SHOWN

SHEET 132 OF 463

A-201

BIM 360://10054364 – Little Patuxent WRP 8th Addition/264591_100_A_V18.rvt
1/11/2022 9:30:19 AM

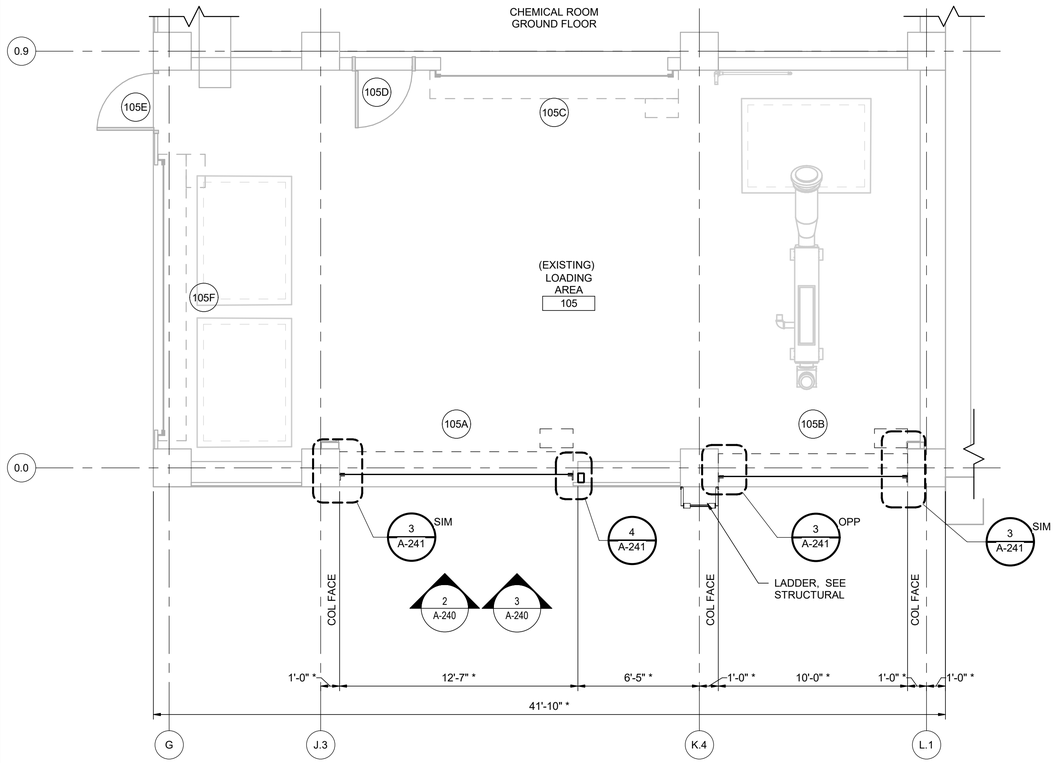

1 A-240 CENTRIFUGE PLAN EL 142.00
1/4" = 1'-0"

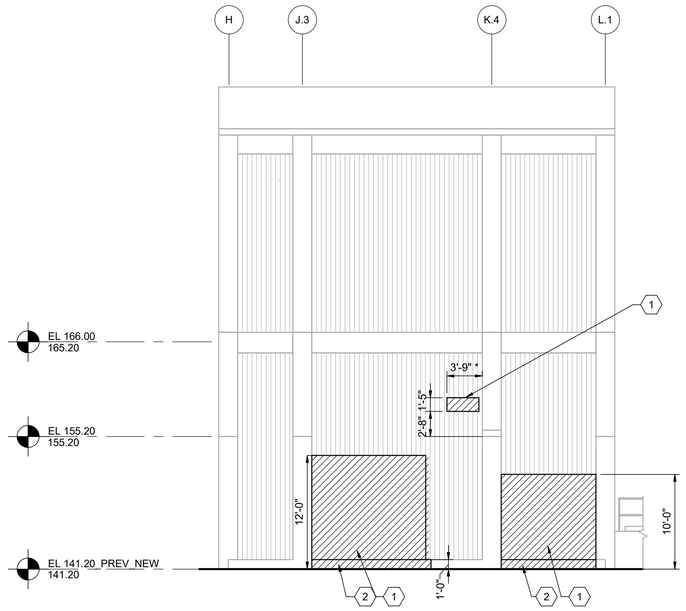

2 A-240 SOUTH ELEVATION - DEMOLITION
1/8" = 1'-0"

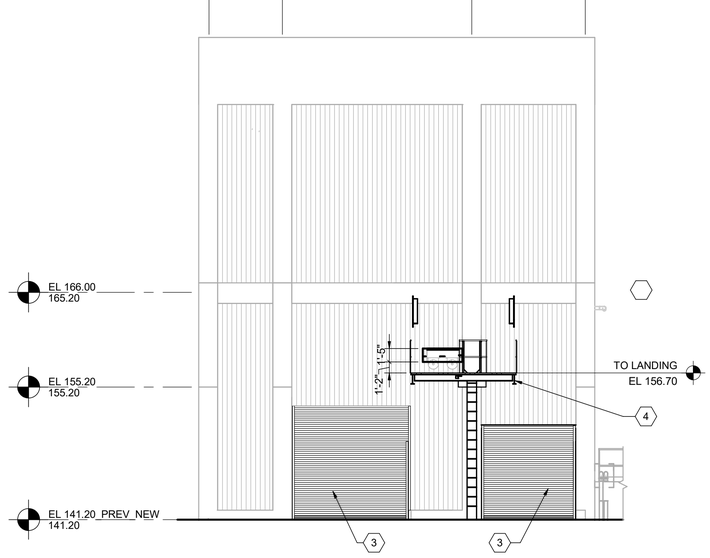

3 A-240 SOUTH ELEVATION - NEW
1/8" = 1'-0"

GENERAL NOTES

1 REFER TO A241 FOR DOOR SCHEDULE.

KEY NOTES (X)

1 INSULATED METAL ROOF PANEL: R-24
2 INSULATED METAL WALL PANEL: R-25
3 CONCRETE LANDING, REFER TO STRUCT DWGS
4 PRECAST WALL PANELS PER MFR

THE DRAWINGS IN THIS SET ARE RECORD DRAWINGS. THEY ARE CONSTRUCTION CONTRACT DRAWINGS WHICH HAVE BEEN REVISED BASED ON AVAILABLE FIELD INFORMATION RECORDED BY OTHERS DURING CONSTRUCTION OF THIS CONTRACT. THERE HAS BEEN NO VERIFICATION OF DIMENSIONS SHOWN ON THE CONSTRUCTION DRAWINGS OR THE ACCURACY/COMPLETENESS OF THE FIELD INFORMATION RECEIVED.

SIGNATURE 2/7/2023 DATE

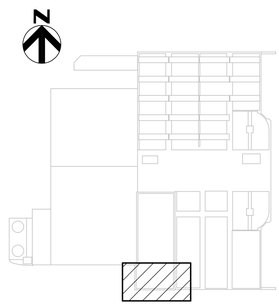

KEY PLAN

AS-BUILT REPLACEMENT SHEET

PROFESSIONAL CERTIFICATION

THIS DRAWING WAS ORIGINALLY APPROVED FOR CONSTRUCTION AND SEALED BY BRIAN T. ELLINGTON, A REGISTERED ARCHITECT IN THE STATE OF MARYLAND, NO. 18821.

NOTICE TO CONTRACTORS

- PROJECT ELEVATIONS ARE BASED ON NAVD88 AND HOWARD COUNTY'S BENCHMARK SYSTEM
- PREVIOUS PROJECTS USED OTHER DATUMS
- APPLY THE FOLLOWING CONVERSIONS WHEN USING PREVIOUS CONTRACT DRAWINGS:
  - ADDITION NO. 6: SUBTRACT 0.80 FT
  - PRIOR ADDITIONS: SUBTRACT 1.04 FT

DEPARTMENT OF PUBLIC WORKS
HOWARD COUNTY, MARYLAND

CHIEF, BUREAU OF UTILITIES DATE

DES: RK
DRN: RK
CHK: BE
DATE: 12/2016

DATE	REV	DESCRIPTION
07/2019		RECORD DRAWING

ARCHITECTURAL

CENTRIFUGE BUILDING PLAN & ELEVATIONS

LITTLE PATUXENT WATER RECLAMATION PLANT
8TH ADDITION
BIOSOLIDS PROCESSING FACILITIES - PHASE I

CAPITAL PROJECT S-6295
CONTRACT NO. 24-4935

ELECTION DISTRICT NO. 6
HOWARD COUNTY, MARYLAND

SCALE AS SHOWN

SHEET 133 OF 463

A-240

BIM 360://10054364 – Little Patuxent WRP 8th Addition/264591_100_A_V18.rvt
1/11/2022 9:31:40 AM

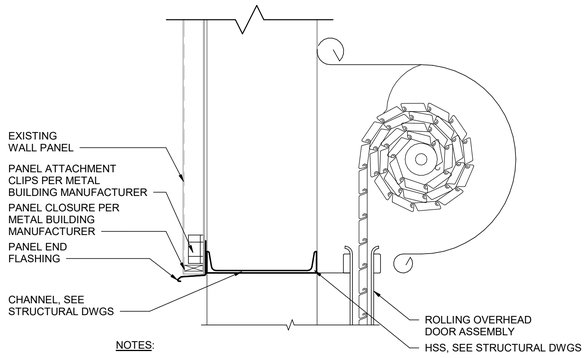

NOTES:

1. FINISH PAINT STEEL LINTEL PRIOR TO INSTALLATION.
2. WALL INSULATION NOT SHOWN.

1 ROLLING OVERHEAD DOOR HEAD

1 1/2" = 1'-0"

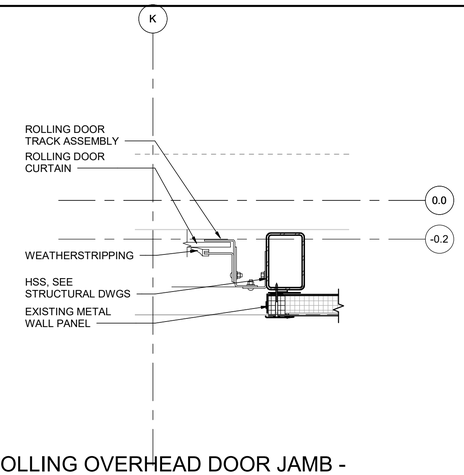

4 A-240 ROLLING OVERHEAD DOOR JAMB - SIDE MOUNTED ON STEEL COLUMN

1 1/2" = 1'-0"

DOOR SCHEDULE

DOOR NUMBER	DOOR SIZES	DOOR			FRAME			HEAD	JAMB	COMMENTS
		TYPE	MATERIA	FINISH	TYPE	MATERIA	FINISH			
105A	OH 12'-0"X12'-0"	A	A	F	-	-	-	1/A-241	2 & 3/A-241	2, 3
105B	OH 9'-6"X10'-0"	A	A	F	-	-	-	1/A-241	3/A-241	3
105C	◄ EXISTING DOOR TO REMAIN ►									1
105D	◄ EXISTING DOOR TO REMAIN ►									
105E	◄ EXISTING DOOR TO REMAIN ►									
105F	◄ EXISTING DOOR TO REMAIN ►									

MATERIAL		FINISH	
A	ALUMINUM	F	FACTORY FINISH
B			

COMMENTS:

1. REMOVE THE EXISTING MOTOR AND MOUNTING BRACKET. INSTALL NEW SIDE MOUNTED MOTOR W/ NEW WELDED MOUNTING BRACKET.
2. COORDINATE TRACK MOUNTING AT SPECIFIC LOCATIONS PER DETAILS WITH DOOR MANUFACTURER PRIOR TO INSTALLATION.
3. NEW EXTERIOR OVERHEAD COILING DOORS TO BE MINIMUM R-4.75.

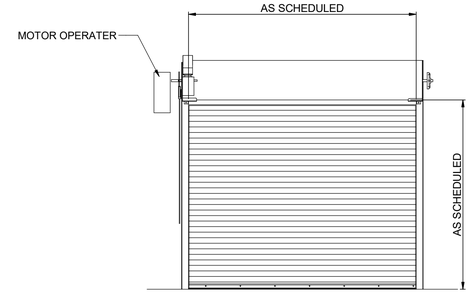

A
INTERIOR VIEW

6 DOOR TYPE

1/4" = 1'-0"

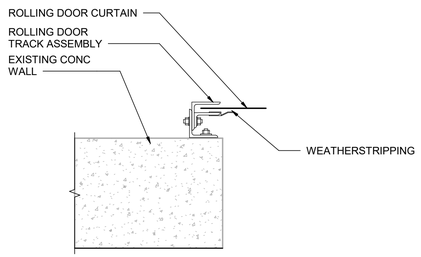

2 ROLLING OVERHEAD DOOR JAMB - REAR MOUNTED ON CONCRETE

1 1/2" = 1'-0"

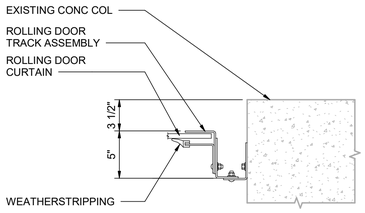

3 A-240 ROLLING OVERHEAD DOOR JAMB - SIDE MOUNTED ON CONCRETE

1 1/2" = 1'-0"

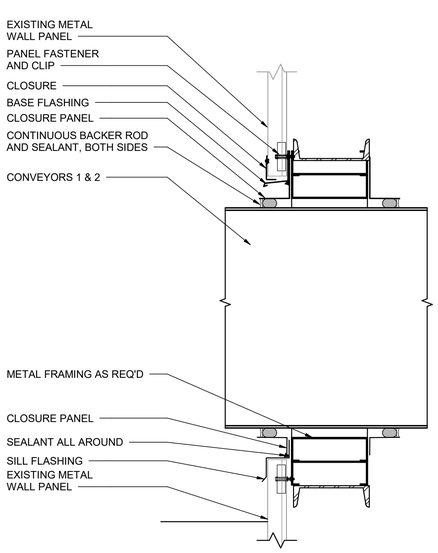

CONVEYOR PENETRATION SECTION

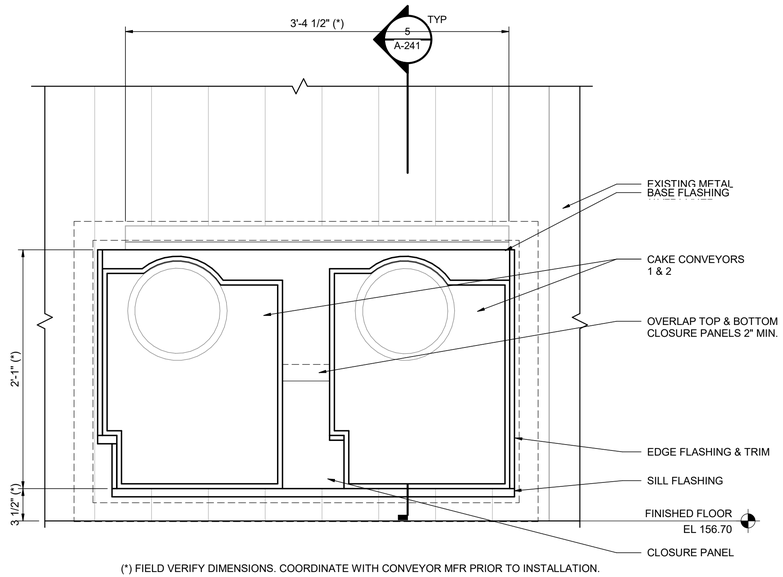

(*) FIELD VERIFY DIMENSIONS. COORDINATE WITH CONVEYOR MFR PRIOR TO INSTALLATION.

CONVEYOR PENETRATION EXTERIOR ELEVATION

5 A-241 CONVEYOR CLOSURE DETAIL

1 1/2" = 1'-0"

THE DRAWINGS IN THIS SET ARE RECORD DRAWINGS. THEY ARE CONSTRUCTION CONTRACT DRAWINGS WHICH HAVE BEEN REVISED BASED ON AVAILABLE FIELD INFORMATION RECORDED BY OTHERS DURING CONSTRUCTION OF THIS CONTRACT. THERE HAS BEEN NO VERIFICATION OF DIMENSIONS SHOWN ON THE CONSTRUCTION DRAWINGS OR THE ACCURACY/COMPLETENESS OF THE FIELD INFORMATION RECEIVED.

SIGNATURE — DATE 2/7/2023

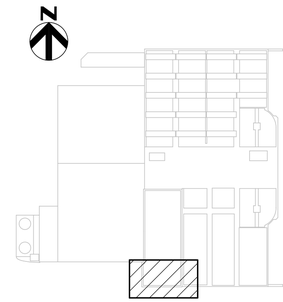

KEY PLAN

BIM 360://10054364 – Little Patuxent WRP 8th Addition/264591_100_A_V18.rvt
1/11/2022 9:32:09 AM

AS-BUILT REPLACEMENT SHEET

PROFESSIONAL CERTIFICATION

THIS DRAWING WAS ORIGINALLY APPROVED FOR CONSTRUCTION AND SEALED BY BRIAN T. ELLINGTON, A REGISTERED ARCHITECT IN THE STATE OF MARYLAND, NO. 18821.

NOTICE TO CONTRACTORS

- PROJECT ELEVATIONS ARE BASED ON NAVD88 AND HOWARD COUNTY'S BENCHMARK SYSTEM
- PREVIOUS PROJECTS USED OTHER DATUMS
- APPLY THE FOLLOWING CONVERSIONS WHEN USING PREVIOUS CONTRACT DRAWINGS:
  - ADDITION NO. 6: SUBTRACT 0.80 FT
  - PRIOR ADDITIONS: SUBTRACT 1.04 FT

DEPARTMENT OF PUBLIC WORKS
HOWARD COUNTY, MARYLAND

CHIEF, BUREAU OF UTILITIES — DATE

DES: BTE
DRN: RSK
CHK: BTE
DATE: 12/2016

DATE	REV	DESCRIPTION
07/2019		RECORD DRAWING

ARCHITECTURAL

CENTRIFUGE BUILDING SCHEDULES & DETAILS

LITTLE PATUXENT WATER RECLAMATION PLANT
8TH ADDITION
BIOSOLIDS PROCESSING FACILITIES - PHASE I

CAPITAL PROJECT S-6295
CONTRACT NO. 24-4935

ELECTION DISTRICT NO. 6
HOWARD COUNTY, MARYLAND

SCALE AS SHOWN

SHEET 134 OF 463

A-241

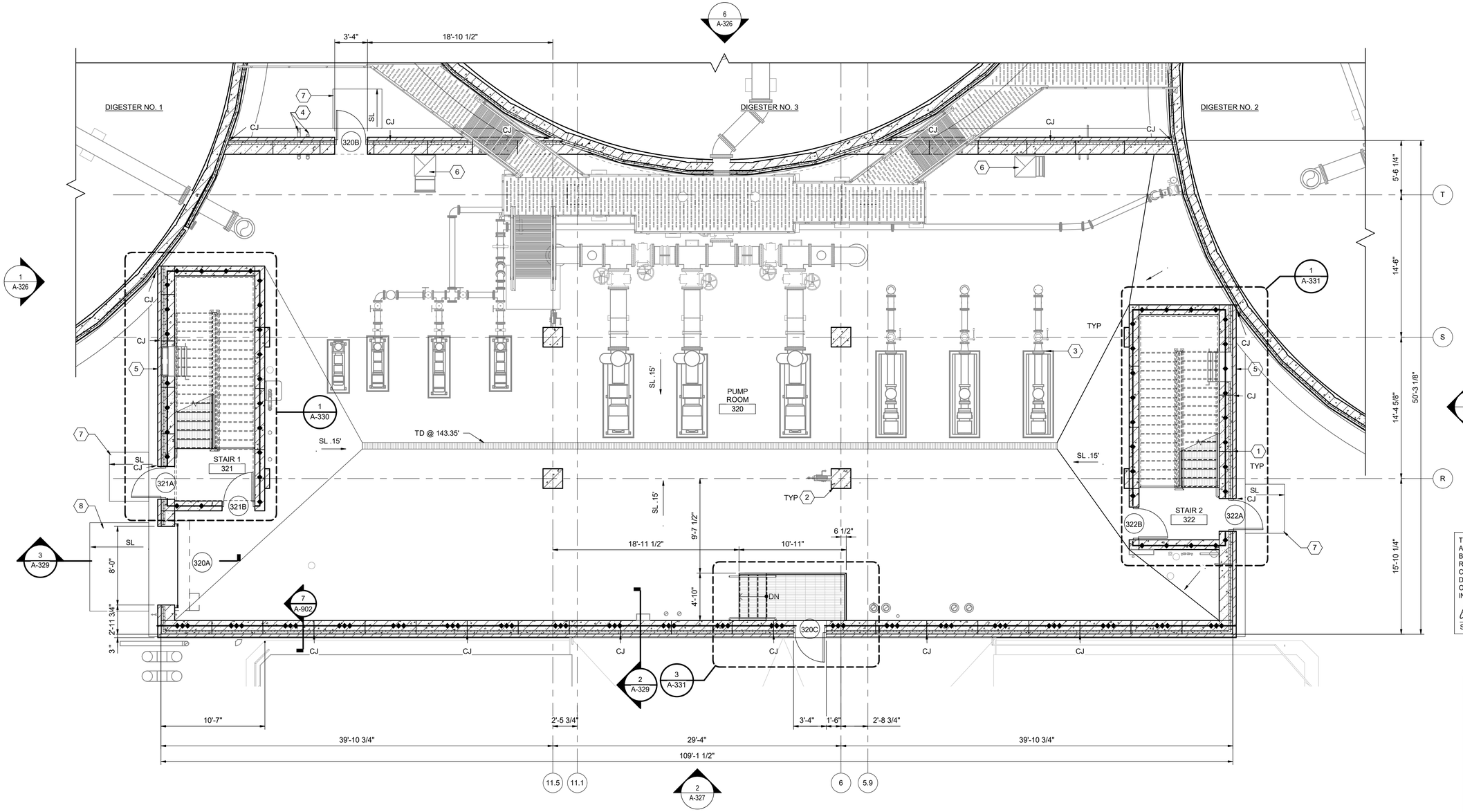

KEY NOTES (X)

1 PRECAST WALL PANELS PER MFR
2 PRECAST COLUMN PER MFR
3 PUMPS, REFER TO PROCESS DWGS
4 ROOF SCUPPERS TO STORM SYSTEM
5 PREFINISHED AL LOUVER, REFER TO LOUVER SCHEDULE FOR DETAILS. PROVIDE FIRE DAMPER FOR LOUVERS LOCATED IN FIRE RATED WALLS
6 HVAC EQUIPMENT, REFER TO MECH DWGS
7 4'-0" x 5'-0" - 6" THICK CONCRETE STOOP SLOPED AWAY FROM BUILDING. SET TOP OF STOOP 1/2" BELOW FINISH FLOOR AT THRESHOLD. PROVIDE 18" THICK WASHED STONE SUBBASE BELOW.
8 6'-0" x 9'-0" - 6" THICK CONCRETE STOOP SLOPED AWAY FROM BUILDING. SET TOP OF STOOP 1/2" BELOW FINISH FLOOR AT THRESHOLD. PROVIDE 18" THICK WASHED STONE SUBBASE BELOW.

WALL RATING LEGEND

1 HOUR FIRE BARRIER
3 HOUR FIRE WALL

THE DRAWINGS IN THIS SET ARE RECORD DRAWINGS. THEY ARE CONSTRUCTION CONTRACT DRAWINGS WHICH HAVE BEEN REVISED BASED ON AVAILABLE FIELD INFORMATION RECORDED BY OTHERS DURING CONSTRUCTION OF THIS CONTRACT. THERE HAS BEEN NO VERIFICATION OF DIMENSIONS SHOWN ON THE CONSTRUCTION DRAWINGS OR THE ACCURACY/COMPLETENESS OF THE FIELD INFORMATION RECEIVED.

SIGNATURE — DATE 2/7/2023

KEY PLAN

FIRST FLOOR PLAN - EL 143.50

3/16" = 1'-0"

AS-BUILT REPLACEMENT SHEET

PROFESSIONAL CERTIFICATION

THIS DRAWING WAS ORIGINALLY APPROVED FOR CONSTRUCTION AND SEALED BY BRIAN T. ELLINGTON, A REGISTERED ARCHITECT IN THE STATE OF MARYLAND, NO. 18821.

NOTICE TO CONTRACTORS

- PROJECT ELEVATIONS ARE BASED ON NAVD88 AND HOWARD COUNTY'S BENCHMARK SYSTEM
- PREVIOUS PROJECTS USED OTHER DATUMS
- APPLY THE FOLLOWING CONVERSIONS WHEN USING PREVIOUS CONTRACT DRAWINGS:
  - ADDITION NO. 6: SUBTRACT 0.80 FT
  - PRIOR ADDITIONS: SUBTRACT 1.04 FT

DEPARTMENT OF PUBLIC WORKS
HOWARD COUNTY, MARYLAND

CHIEF, BUREAU OF UTILITIES — DATE

DES: RK
DRN: RK
CHK: BE
DATE: 12/2016

DATE	REV	DESCRIPTION
07/2019		RECORD DRAWING

ARCHITECTURAL

DIGESTER BUILDING PLAN - EL 143.50

LITTLE PATUXENT WATER RECLAMATION PLANT
8TH ADDITION
BIOSOLIDS PROCESSING FACILITIES - PHASE I

CAPITAL PROJECT S-6295
CONTRACT NO. 24-4935

ELECTION DISTRICT NO. 6
HOWARD COUNTY, MARYLAND

SCALE AS SHOWN

SHEET 135 OF 463

A-320

BIM 360://10054364 – Little Patuxent WRP 8th Addition/264591_300_S_V18.rvt
1/12/2022 3:54:09 PM

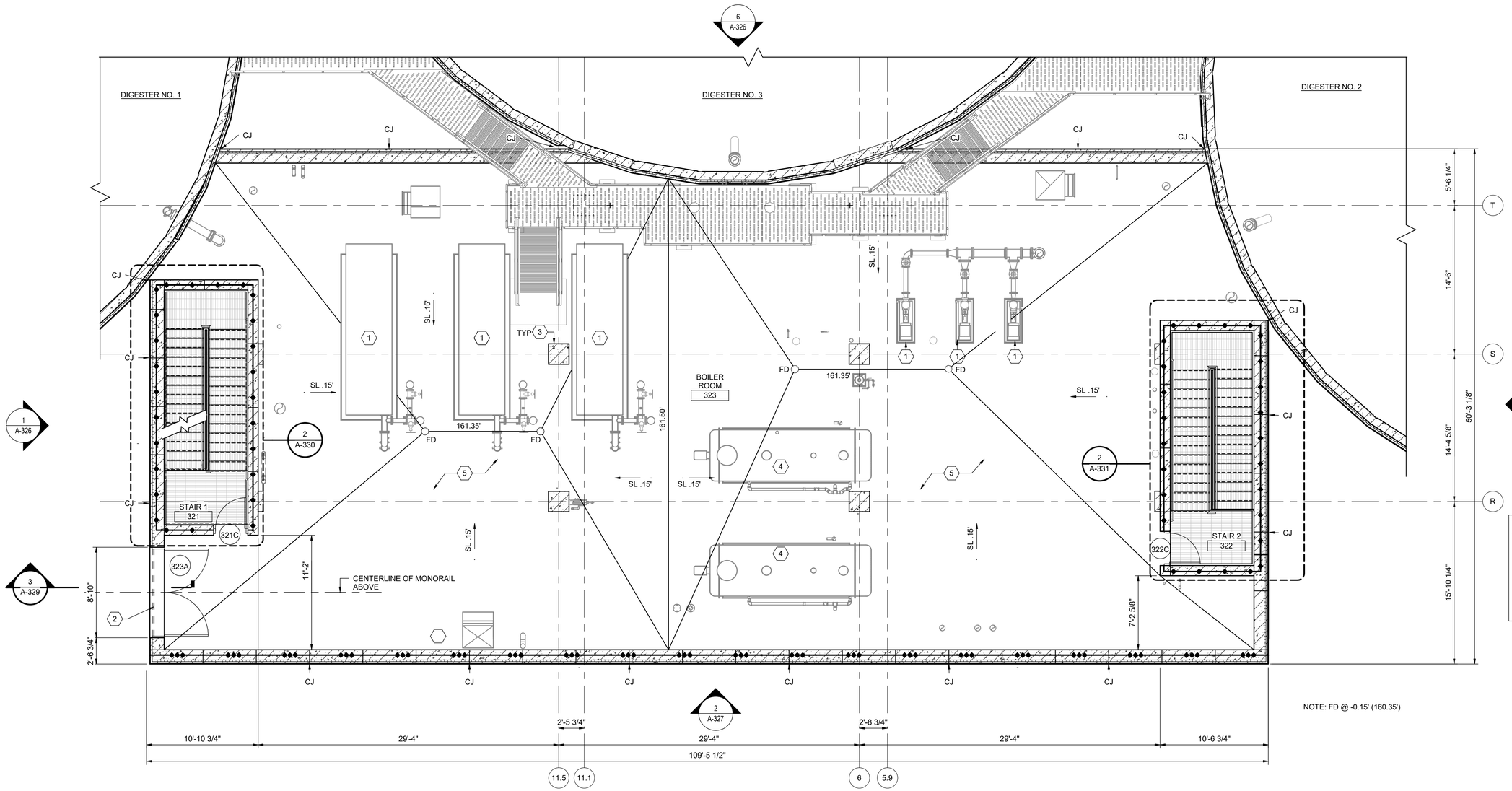

KEY NOTES (X)

1 PUMPS, REFER TO PROCESS DWGS

2 REMOVABLE GUARDRAIL SECTION

3 PRECAST COLUMN PER MFR

4 BOILERS, REFER TO PROCESS DWGS

5 PROVIDE A MAX OF 4" THICK CONCRETE TOPPING OVER PRECAST CONCRETE FLOOR PANELS SLOPED TO FLOOR DRAINS. MIN CONC TOPPING AT FLOOR DRAINS SHALL BE 2".

6 HVAC EQUIPMENT, REFER TO MECH DWGS

WALL RATING LEGEND

1 HOUR FIRE BARRIER

3 HOUR FIRE WALL

THE DRAWINGS IN THIS SET ARE RECORD DRAWINGS. THEY ARE CONSTRUCTION CONTRACT DRAWINGS WHICH HAVE BEEN REVISED BASED ON AVAILABLE FIELD INFORMATION RECORDED BY OTHERS DURING CONSTRUCTION OF THIS CONTRACT. THERE HAS BEEN NO VERIFICATION OF DIMENSIONS SHOWN ON THE CONSTRUCTION DRAWINGS OR THE ACCURACY/COMPLETENESS OF THE FIELD INFORMATION RECEIVED.

SIGNATURE — DATE 2/7/2025

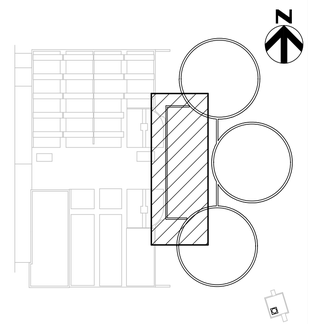

KEY PLAN

SECOND FLOOR PLAN - EL 161.67

3/16" = 1'-0"

AS-BUILT REPLACEMENT SHEET

PROFESSIONAL CERTIFICATION

THIS DRAWING WAS ORIGINALLY APPROVED FOR CONSTRUCTION AND SEALED BY BRIAN T. ELLINGTON, A REGISTERED ARCHITECT IN THE STATE OF MARYLAND, NO. 18821.

NOTICE TO CONTRACTORS

- PROJECT ELEVATIONS ARE BASED ON NAVD88 AND HOWARD COUNTY'S BENCHMARK SYSTEM
- PREVIOUS PROJECTS USED OTHER DATUMS
- APPLY THE FOLLOWING CONVERSIONS WHEN USING PREVIOUS CONTRACT DRAWINGS:
  - ADDITION NO. 6: SUBTRACT 0.80 FT
  - PRIOR ADDITIONS: SUBTRACT 1.04 FT

DEPARTMENT OF PUBLIC WORKS
HOWARD COUNTY, MARYLAND

CHIEF, BUREAU OF UTILITIES — DATE

DES: RK
DRN: RK
CHK: BE
DATE: 12/2016

DATE	REV	DESCRIPTION
07/2019		RECORD DRAWING

ARCHITECTURAL

DIGESTER BUILDING PLAN - EL 161.67

LITTLE PATUXENT WATER RECLAMATION PLANT
8TH ADDITION
BIOSOLIDS PROCESSING FACILITIES - PHASE I

CAPITAL PROJECT S-6295
CONTRACT NO. 24-4935

ELECTION DISTRICT NO. 6
HOWARD COUNTY, MARYLAND

SCALE AS SHOWN

SHEET 136 OF 463

A-321

BIM 360://10054364 – Little Patuxent WRP 8th Addition/264591_300_S_V18.rvt
1/12/2022 3:54:12 PM

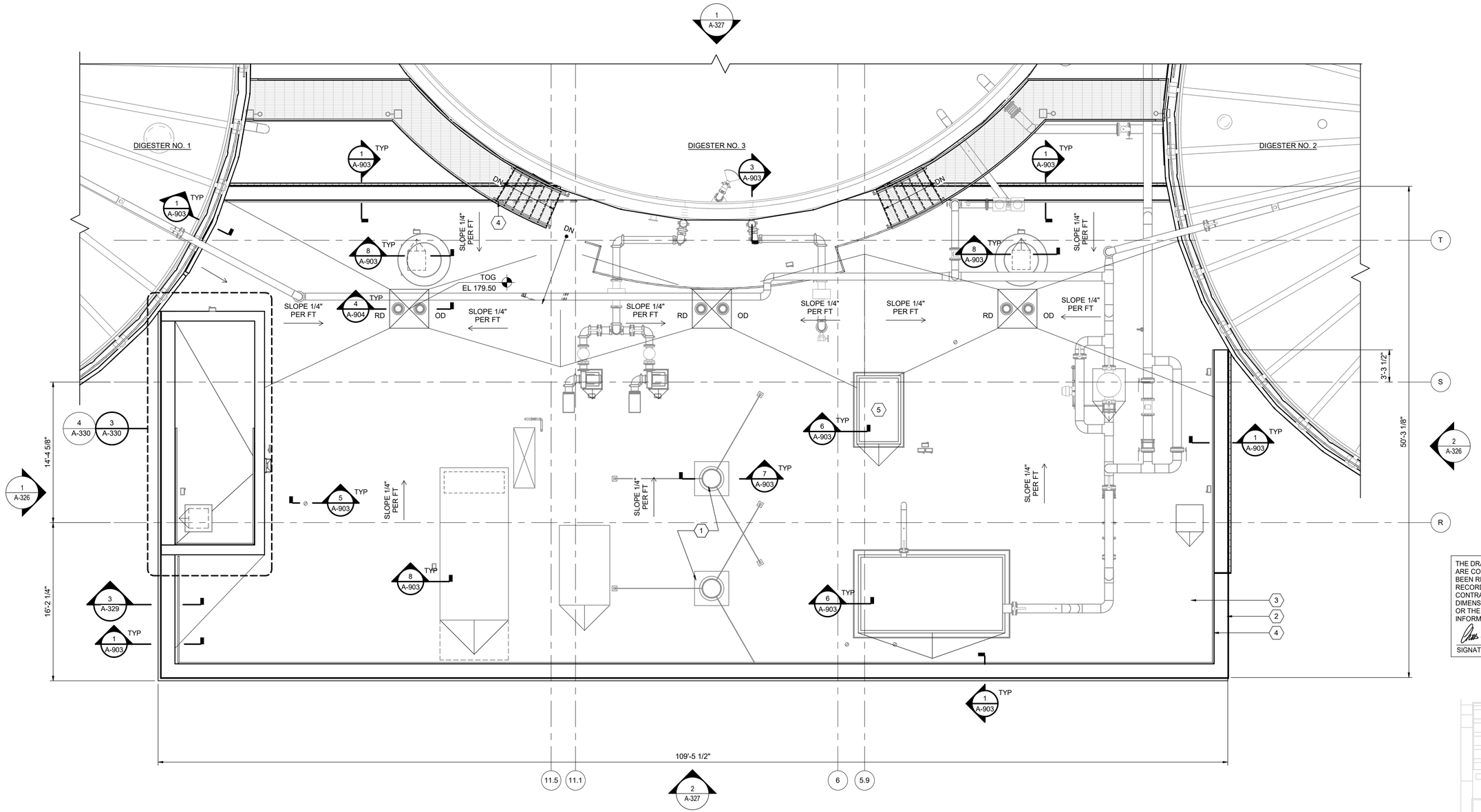

GENERAL NOTES:

1 SEE SHEETS A-903 AND A-904 FOR ROOFING DETAILS.

2 PROVIDE PITCH POCKET FOR ALL STRUCTURAL MEMBERS & EQUIPMENT PIPE SUPPORTS THAT PENETRATE ROOF SYSTEM. SEE DETAIL 7/A904.

3 ROOFING SYSTEM TAPERED INSULATION SHALL HAVE A MIN THICKNESS OF 2" AT DRAINS AND MIN SLOPE OF 1/4" PER FT. MINIMUM R-VALUE SHALL BE R-15.

KEY NOTES (X)

1 HOT PIPE, REFER TO PROCESS DWGS

2 ROOF PARAPET W/ CONT AL COPING CAP

3 SBS MODIFIED BITUMEN ROOFING SYSTEM. SEE SPECIFICATION 07 52 16. PROVIDE CONTINUOUS FLUID APPLIED FLOOD COAT W/ MARBLE CHIP OVER ROOFING CAP SHEET.

4 AL GUARDRAIL AND HANDRAIL, REFER TO STRUCT DWGS FOR DETAILS

THE DRAWINGS IN THIS SET ARE RECORD DRAWINGS. THEY ARE CONSTRUCTION CONTRACT DRAWINGS WHICH HAVE BEEN REVISED BASED ON AVAILABLE FIELD INFORMATION RECORDED BY OTHERS DURING CONSTRUCTION OF THIS CONTRACT. THERE HAS BEEN NO VERIFICATION OF DIMENSIONS SHOWN ON THE CONSTRUCTION DRAWINGS OR THE ACCURACY/COMPLETENESS OF THE FIELD INFORMATION RECEIVED.

SIGNATURE 2/7/2023 DATE

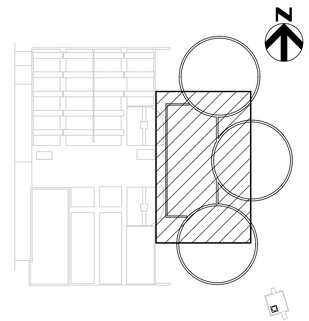

KEY PLAN

ROOF PLAN - EL 179.17

3/16" = 1'-0"

AS-BUILT REPLACEMENT SHEET

PROFESSIONAL CERTIFICATION

THIS DRAWING WAS ORIGINALLY APPROVED FOR CONSTRUCTION AND SEALED BY BRIAN T. ELLINGTON, A REGISTERED ARCHITECT IN THE STATE OF MARYLAND, NO. 18821.

NOTICE TO CONTRACTORS

- PROJECT ELEVATIONS ARE BASED ON NAVD88 AND HOWARD COUNTY'S BENCHMARK SYSTEM
- PREVIOUS PROJECTS USED OTHER DATUMS
- APPLY THE FOLLOWING CONVERSIONS WHEN USING PREVIOUS CONTRACT DRAWINGS:
  - ADDITION NO. 6: SUBTRACT 0.80 FT
  - PRIOR ADDITIONS: SUBTRACT 1.04 FT

DEPARTMENT OF PUBLIC WORKS
HOWARD COUNTY, MARYLAND

CHIEF, BUREAU OF UTILITIES DATE

DES: RK
DRN: RK
CHK: BE
DATE: 12/2016

DATE	REV	DESCRIPTION
07/2019		RECORD DRAWING

ARCHITECTURAL

DIGESTER BUILDING ROOF PLAN - EL 179.17

LITTLE PATUXENT WATER RECLAMATION PLANT
8TH ADDITION
BIOSOLIDS PROCESSING FACILITIES - PHASE I

CAPITAL PROJECT S-6295
CONTRACT NO. 24-4935

ELECTION DISTRICT NO. 6
HOWARD COUNTY, MARYLAND

SCALE AS SHOWN

SHEET 137 OF 463

A-322

BIM 360://10054364 - Little Patuxent WRP 8th Addition/264591_300_S_V18.rvt
1/12/2022 3:54:15 PM

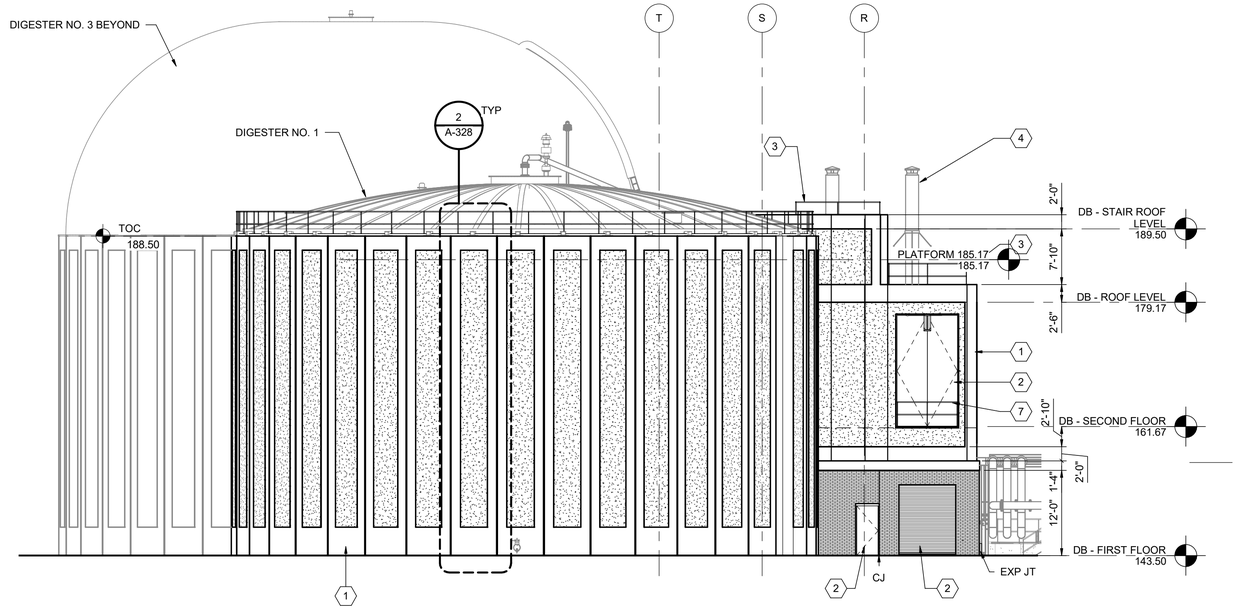

1 A-320 NORTH ELEVATION
3/32" = 1'-0"

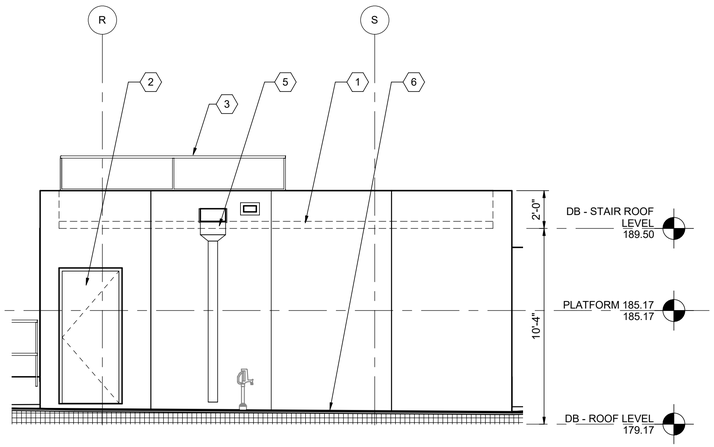

5 A-330 SOUTH STAIR ELEVATION
1/4" = 1'-0"

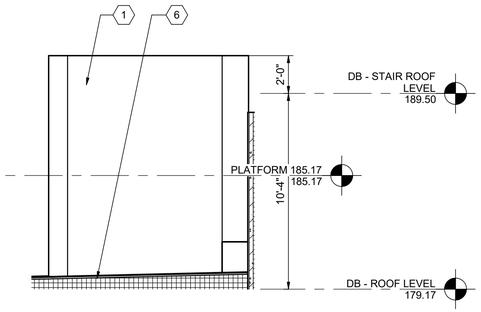

4 A-330 EAST STAIR ELEVATION
1/4" = 1'-0"

GENERAL NOTES

1 CONTRACTOR SHALL FIELD VERIFY ALL DIMENSIONS AND EXISTING CONDITIONS.

2 SEE S-908 FOR GUARDRAIL DETAILS.

KEY NOTES (X)

1 PRECAST WALL PANELS PER MFR
2 DOOR, AS SCHEDULED
3 AL GUARDRAIL AND HANDRAIL. REFER TO STRUCT DWGS FOR DETAILS
4 HOT PIPE, REFER TO PROCESS DWGS
5 PREFINISHED 6X6 AL GUTTER AND 4X4 AL DOWNSPOUT
6 SBS MODIFIED BITUMEN ROOFING SYSTEM. SEE SPECIFICATION 07 52 16. PROVIDE CONTINUOUS FLUID APPLIED FLOOD COAT W/ MARBLE CHIP OVER ROOFING CAP SHEET.
7 REMOVABLE GUARDRAIL SECTION

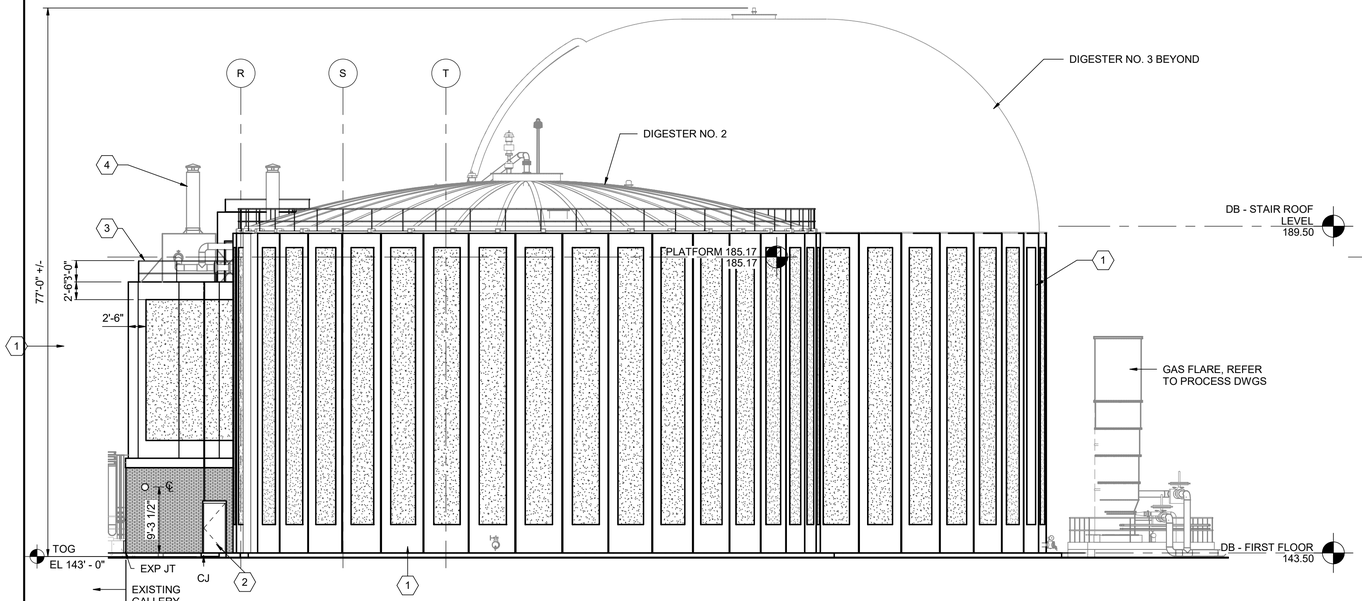

2 A-320 SOUTH ELEVATION
3/32" = 1'-0"

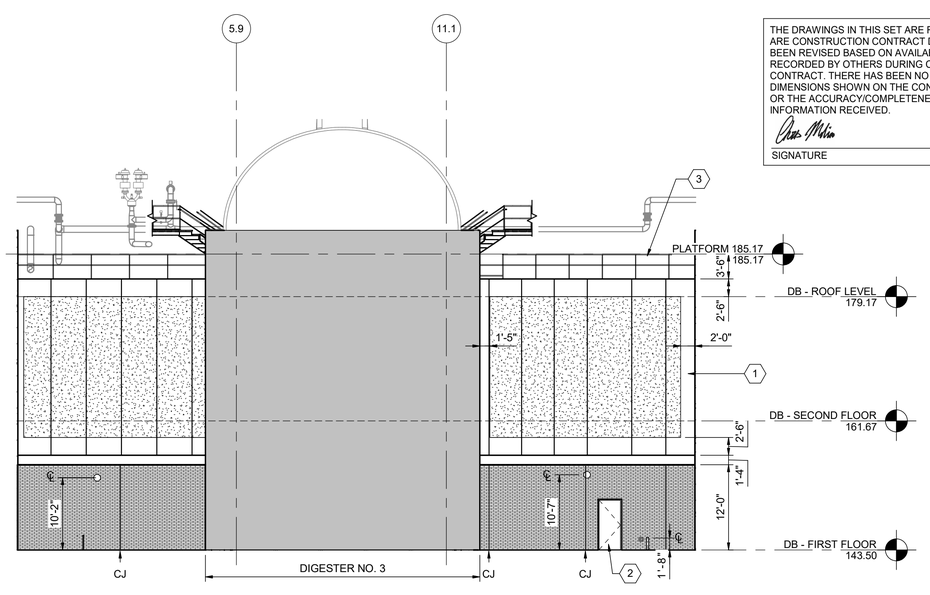

6 A-320 PARTIAL EAST ELEVATION
3/32" = 1'-0"

THE DRAWINGS IN THIS SET ARE RECORD DRAWINGS. THEY ARE CONSTRUCTION CONTRACT DRAWINGS WHICH HAVE BEEN REVISED BASED ON AVAILABLE FIELD INFORMATION RECORDED BY OTHERS DURING CONSTRUCTION OF THIS CONTRACT. THERE HAS BEEN NO VERIFICATION OF DIMENSIONS SHOWN ON THE CONSTRUCTION DRAWINGS OR THE ACCURACY/COMPLETENESS OF THE FIELD INFORMATION RECEIVED.

SIGNATURE — DATE 2/7/2023

AS-BUILT REPLACEMENT SHEET

PROFESSIONAL CERTIFICATION

THIS DRAWING WAS ORIGINALLY APPROVED FOR CONSTRUCTION AND SEALED BY BRIAN T. ELLINGTON, A REGISTERED ARCHITECT IN THE STATE OF MARYLAND, NO. 18821.

NOTICE TO CONTRACTORS

- PROJECT ELEVATIONS ARE BASED ON NAVD88 AND HOWARD COUNTY'S BENCHMARK SYSTEM
- PREVIOUS PROJECTS USED OTHER DATUMS
- APPLY THE FOLLOWING CONVERSIONS WHEN USING PREVIOUS CONTRACT DRAWINGS:
  - ADDITION NO. 6: SUBTRACT 0.80 FT
  - PRIOR ADDITIONS: SUBTRACT 1.04 FT

DEPARTMENT OF PUBLIC WORKS
HOWARD COUNTY, MARYLAND

CHIEF, BUREAU OF UTILITIES — DATE

DES: RK
DRN: RK
CHK: BE
DATE: 12/2016

DATE	REV	DESCRIPTION
07/2019		RECORD DRAWING

ARCHITECTURAL

DIGESTER BUILDING EXTERIOR ELEVATIONS

LITTLE PATUXENT WATER RECLAMATION PLANT
8TH ADDITION
BIOSOLIDS PROCESSING FACILITIES - PHASE I

CAPITAL PROJECT S-6295
CONTRACT NO. 24-4935

ELECTION DISTRICT NO. 6
HOWARD COUNTY, MARYLAND

SCALE AS SHOWN

SHEET 138 OF 463

A-326

BIM 360://10054364 – Little Patuxent WRP 8th Addition/264591_300_S_V18.rvt
1/12/2022 3:54:26 PM

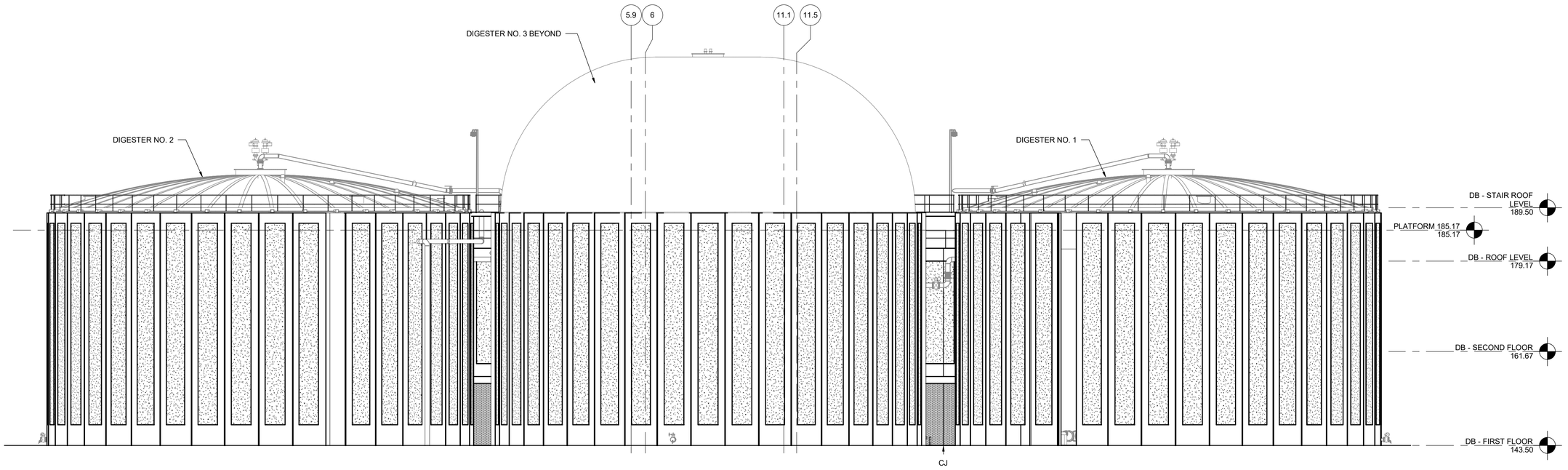

1 A-320 **EAST ELEVATION**
3/32" = 1'-0"

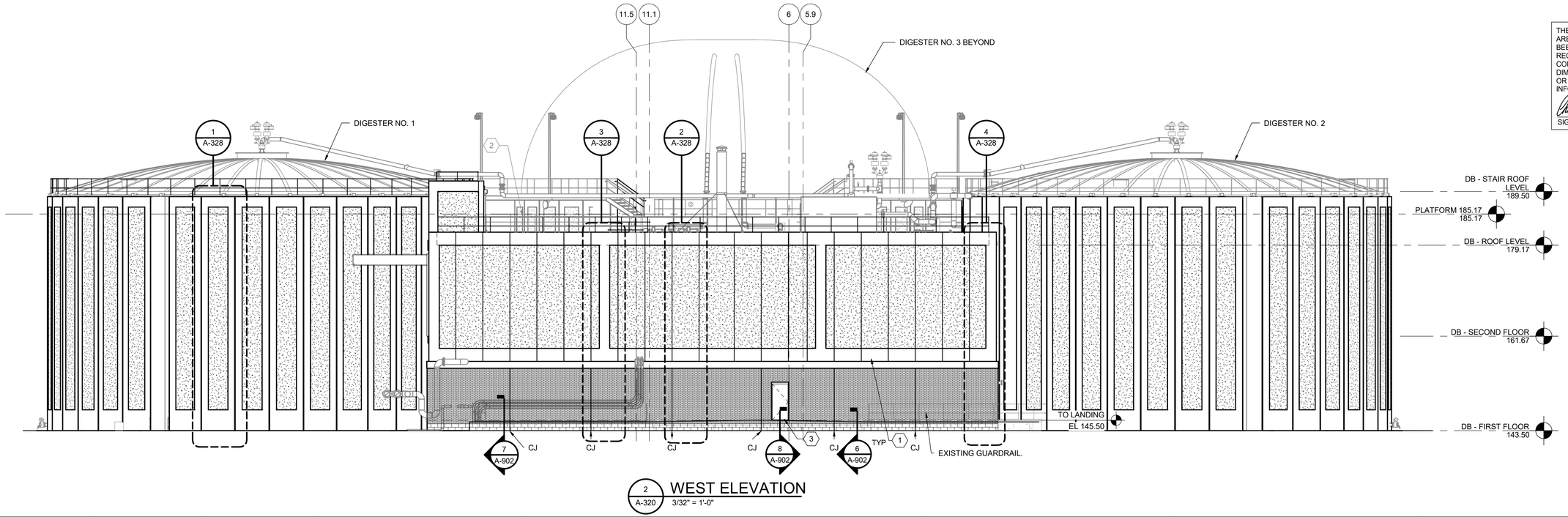

2 A-320 **WEST ELEVATION**
3/32" = 1'-0"

KEY NOTES (X)

1 PRECAST WALL PANELS PER MFR
2 AL GUARDRAIL AND HANDRAIL, REFER TO STRUCT DWGS FOR DETAILS
3 DOOR, AS SCHEDULED

THE DRAWINGS IN THIS SET ARE RECORD DRAWINGS. THEY ARE CONSTRUCTION CONTRACT DRAWINGS WHICH HAVE BEEN REVISED BASED ON AVAILABLE FIELD INFORMATION RECORDED BY OTHERS DURING CONSTRUCTION OF THIS CONTRACT. THERE HAS BEEN NO VERIFICATION OF DIMENSIONS SHOWN ON THE CONSTRUCTION DRAWINGS OR THE ACCURACY/COMPLETENESS OF THE FIELD INFORMATION RECEIVED.

SIGNATURE 2/7/2023 DATE

AS-BUILT REPLACEMENT SHEET

PROFESSIONAL CERTIFICATION

THIS DRAWING WAS ORIGINALLY APPROVED FOR CONSTRUCTION AND SEALED BY BRIAN T. ELLINGTON, A REGISTERED ARCHITECT IN THE STATE OF MARYLAND, NO. 18821.

NOTICE TO CONTRACTORS

- PROJECT ELEVATIONS ARE BASED ON NAVD88 AND HOWARD COUNTY'S BENCHMARK SYSTEM
- PREVIOUS PROJECTS USED OTHER DATUMS
- APPLY THE FOLLOWING CONVERSIONS WHEN USING PREVIOUS CONTRACT DRAWINGS:
  - ADDITION NO. 6: SUBTRACT 0.80 FT
  - PRIOR ADDITIONS: SUBTRACT 1.04 FT

DEPARTMENT OF PUBLIC WORKS
HOWARD COUNTY, MARYLAND

CHIEF, BUREAU OF UTILITIES DATE

DES: RK
DRN: RK
CHK: BE
DATE: 12/2016

DATE	REV	DESCRIPTION
07/2019		RECORD DRAWING

ARCHITECTURAL

DIGESTER BUILDING EXTERIOR ELEVATIONS

LITTLE PATUXENT WATER RECLAMATION PLANT
8TH ADDITION
BIOSOLIDS PROCESSING FACILITIES - PHASE I

CAPITAL PROJECT S-6295
CONTRACT NO. 24-4935

ELECTION DISTRICT NO. 6
HOWARD COUNTY, MARYLAND

SCALE AS SHOWN

SHEET 139 OF 463

A-327

BIM 360://10054364 – Little Patuxent WRP 8th Addition/264591_300_S_V18.rvt
1/12/2022 3:54:34 PM

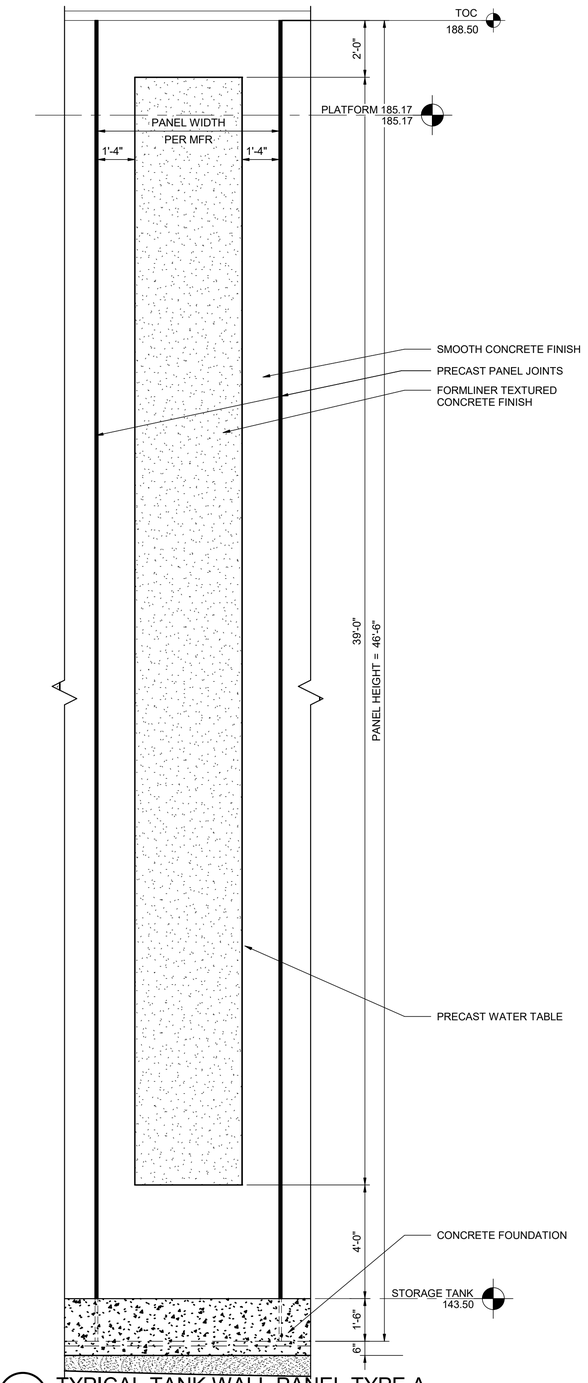

1 A-327 TYPICAL TANK WALL PANEL TYPE A

3/8" = 1'-0"

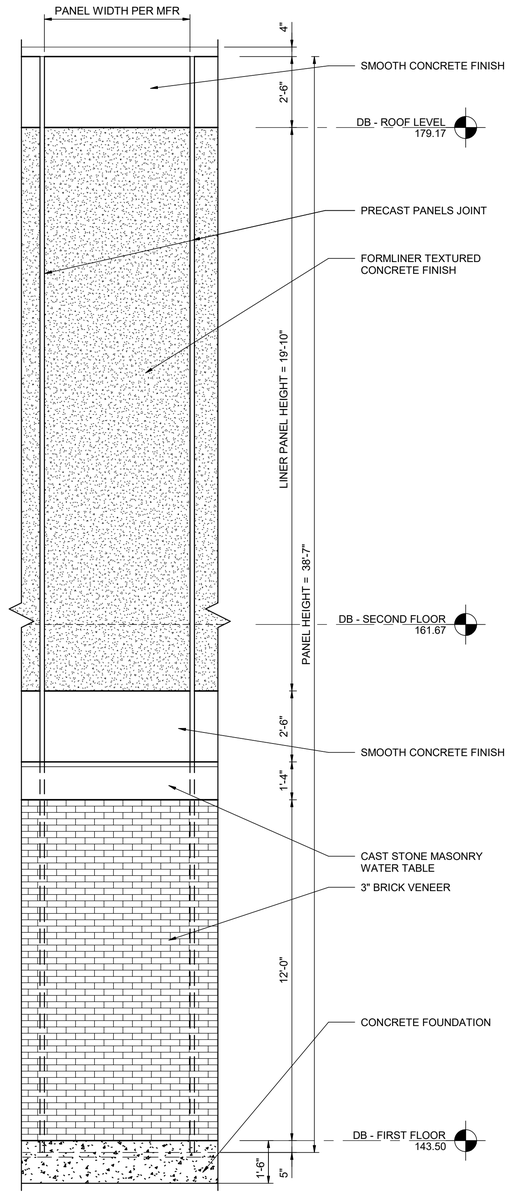

2 A-326 TYPICAL WALL PANEL TYPE B

3/8" = 1'-0"

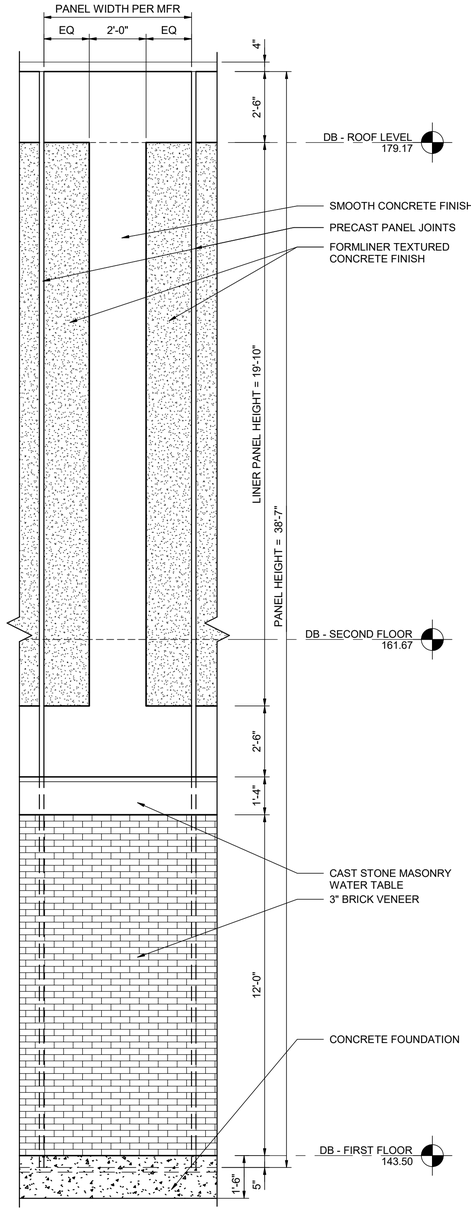

3 A-327 TYPICAL WALL PANEL TYPE C

3/8" = 1'-0"

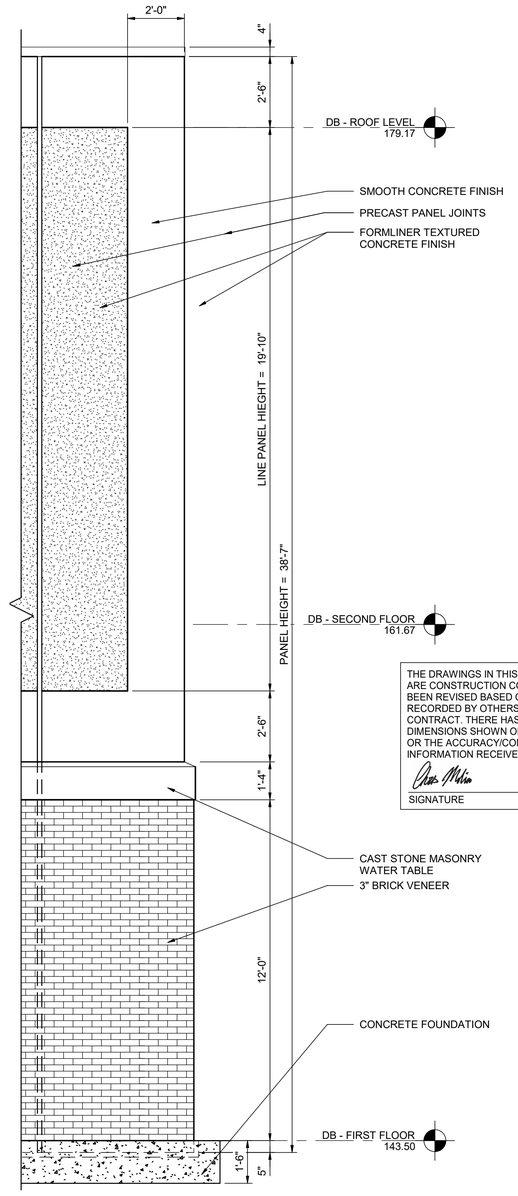

4 A-327 TYPICAL WALL PANEL TYPE D

3/8" = 1'-0"

THE DRAWINGS IN THIS SET ARE RECORD DRAWINGS. THEY ARE CONSTRUCTION CONTRACT DRAWINGS WHICH HAVE BEEN REVISED BASED ON AVAILABLE FIELD INFORMATION RECORDED BY OTHERS DURING CONSTRUCTION OF THIS CONTRACT. THERE HAS BEEN NO VERIFICATION OF DIMENSIONS SHOWN ON THE CONSTRUCTION DRAWINGS OR THE ACCURACY/COMPLETENESS OF THE FIELD INFORMATION RECEIVED.

SIGNATURE

2/7/2023
DATE

AS-BUILT REPLACEMENT SHEET

PROFESSIONAL CERTIFICATION

THIS DRAWING WAS ORIGINALLY APPROVED FOR CONSTRUCTION AND SEALED BY BRIAN T. ELLINGTON, A REGISTERED ARCHITECT IN THE STATE OF MARYLAND, NO. 18821.

NOTICE TO CONTRACTORS

- PROJECT ELEVATIONS ARE BASED ON NAVD88 AND HOWARD COUNTY'S BENCHMARK SYSTEM
- PREVIOUS PROJECTS USED OTHER DATUMS
- APPLY THE FOLLOWING CONVERSIONS WHEN USING PREVIOUS CONTRACT DRAWINGS:
  - ADDITION NO. 6: SUBTRACT 0.80 FT
  - PRIOR ADDITIONS: SUBTRACT 1.04 FT

DEPARTMENT OF PUBLIC WORKS
HOWARD COUNTY, MARYLAND

CHIEF, BUREAU OF UTILITIES DATE

DES: RK
DRN: RK
CHK: BE
DATE: 12/2016

DATE	REV	DESCRIPTION
07/2019		RECORD DRAWING

ARCHITECTURAL

DIGESTER BUILDING TYPICAL PANEL ELEVATIONS

LITTLE PATUXENT WATER RECLAMATION PLANT
8TH ADDITION
BIOSOLIDS PROCESSING FACILITIES - PHASE I

CAPITAL PROJECT S-6295
CONTRACT NO. 24-4935

ELECTION DISTRICT NO. 6
HOWARD COUNTY, MARYLAND

SCALE AS SHOWN

SHEET 140 OF 463

A-328

BIM 360://10054364 – Little Patuxent WRP 8th Addition/264591_300_S_V18.rvt
1/12/2022 3:54:35 PM

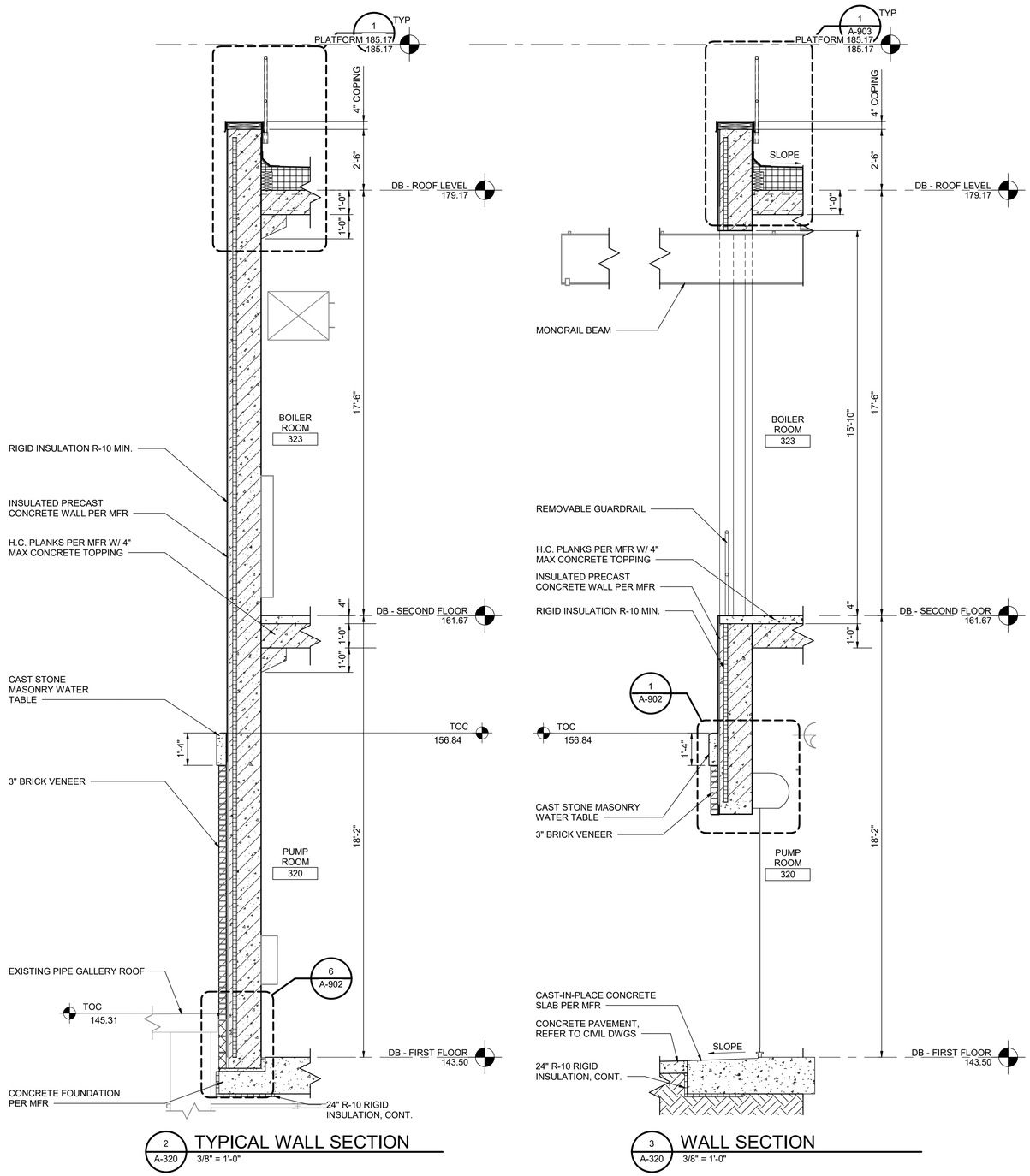

2 A-320 TYPICAL WALL SECTION
3/8" = 1'-0"

3 A-320 WALL SECTION
3/8" = 1'-0"

THE DRAWINGS IN THIS SET ARE RECORD DRAWINGS. THEY ARE CONSTRUCTION CONTRACT DRAWINGS WHICH HAVE BEEN REVISED BASED ON AVAILABLE FIELD INFORMATION RECORDED BY OTHERS DURING CONSTRUCTION OF THIS CONTRACT. THERE HAS BEEN NO VERIFICATION OF DIMENSIONS SHOWN ON THE CONSTRUCTION DRAWINGS OR THE ACCURACY/COMPLETENESS OF THE FIELD INFORMATION RECEIVED.

SIGNATURE _____ DATE 2/7/2023

AS-BUILT REPLACEMENT SHEET

PROFESSIONAL CERTIFICATION

THIS DRAWING WAS ORIGINALLY APPROVED FOR CONSTRUCTION AND SEALED BY BRIAN T. ELLINGTON, A REGISTERED ARCHITECT IN THE STATE OF MARYLAND, NO. 18821.

NOTICE TO CONTRACTORS

- PROJECT ELEVATIONS ARE BASED ON NAVD88 AND HOWARD COUNTY'S BENCHMARK SYSTEM
- PREVIOUS PROJECTS USED OTHER DATUMS
- APPLY THE FOLLOWING CONVERSIONS WHEN USING PREVIOUS CONTRACT DRAWINGS:
  - ADDITION NO. 6: SUBTRACT 0.80 FT
  - PRIOR ADDITIONS: SUBTRACT 1.04 FT

DEPARTMENT OF PUBLIC WORKS
HOWARD COUNTY, MARYLAND

CHIEF, BUREAU OF UTILITIES DATE

DES: RK
DRN: RK
CHK: BE
DATE: 12/2016

DATE	REV	DESCRIPTION
07/2019		RECORD DRAWING

ARCHITECTURAL

DIGESTER BUILDING TYPICAL PANEL & WALL SECTIONS

LITTLE PATUXENT WATER RECLAMATION PLANT
8TH ADDITION
BIOSOLIDS PROCESSING FACILITIES - PHASE I

CAPITAL PROJECT S-6295
CONTRACT NO. 24-4935

ELECTION DISTRICT NO. 6
HOWARD COUNTY, MARYLAND

SCALE AS SHOWN

SHEET 141 OF 463

A-329

BIM 360://10054364 – Little Patuxent WRP 8th Addition/284591_300_S_V18.rvt
1/12/2022 3:54:36 PM

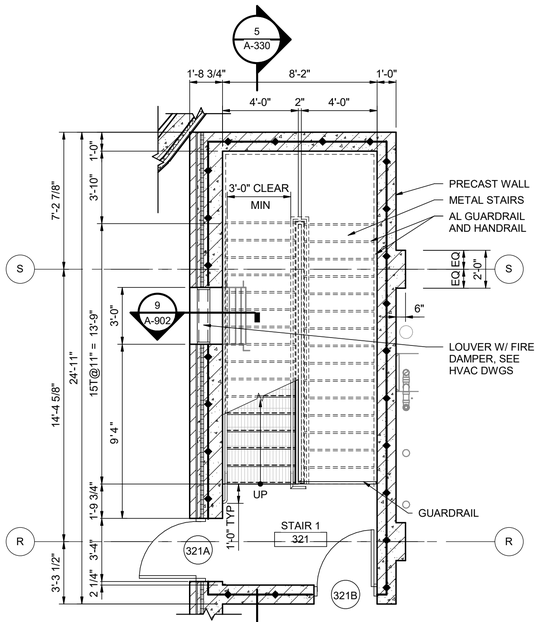

STAIR #1 - ENLARGED PLAN @ 143.00

1 A-320 — 1/4" = 1'-0"

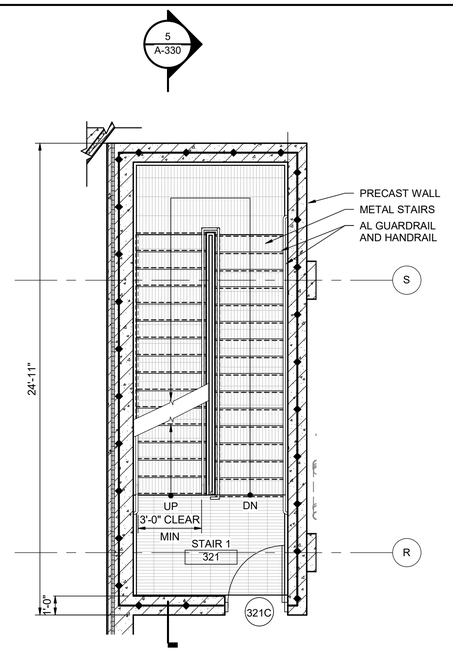

STAIR #1 - ENLARGED STAIR PLAN @ 161.00

2 A-321 — 1/4" = 1'-0"

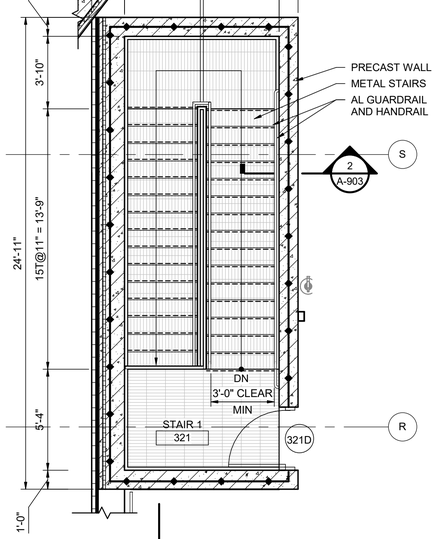

STAIR #1 - ENLARGED PLAN @ 179.00

3 A-322 — 1/4" = 1'-0"

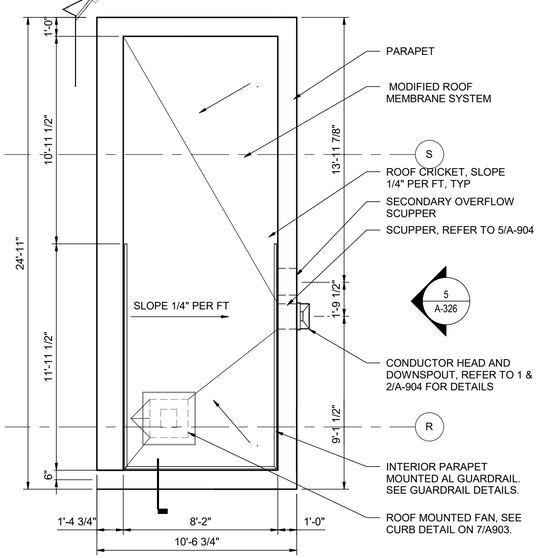

STAIR #1 - ENLARGED ROOF PLAN 188.00

4 A-326 — 1/4" = 1'-0"

GENERAL NOTES:

1 SEE A-905 FOR RAILING DETAILS

2 SEE 12/S-908 FOR WALL MOUNTED RAIL DETAILS.

3 ALL WALL PENETRATIONS AND JOINTS IN STAIRWELLS SHALL BE FIRE-STOPPED AND SEALED TO MEET THE REQUIREMENTS FOR A 1 HR FIRE RATED ASSEMBLY.

WALL RATING LEGEND

1 HOUR FIRE BARRIER

3 HOUR FIRE WALL

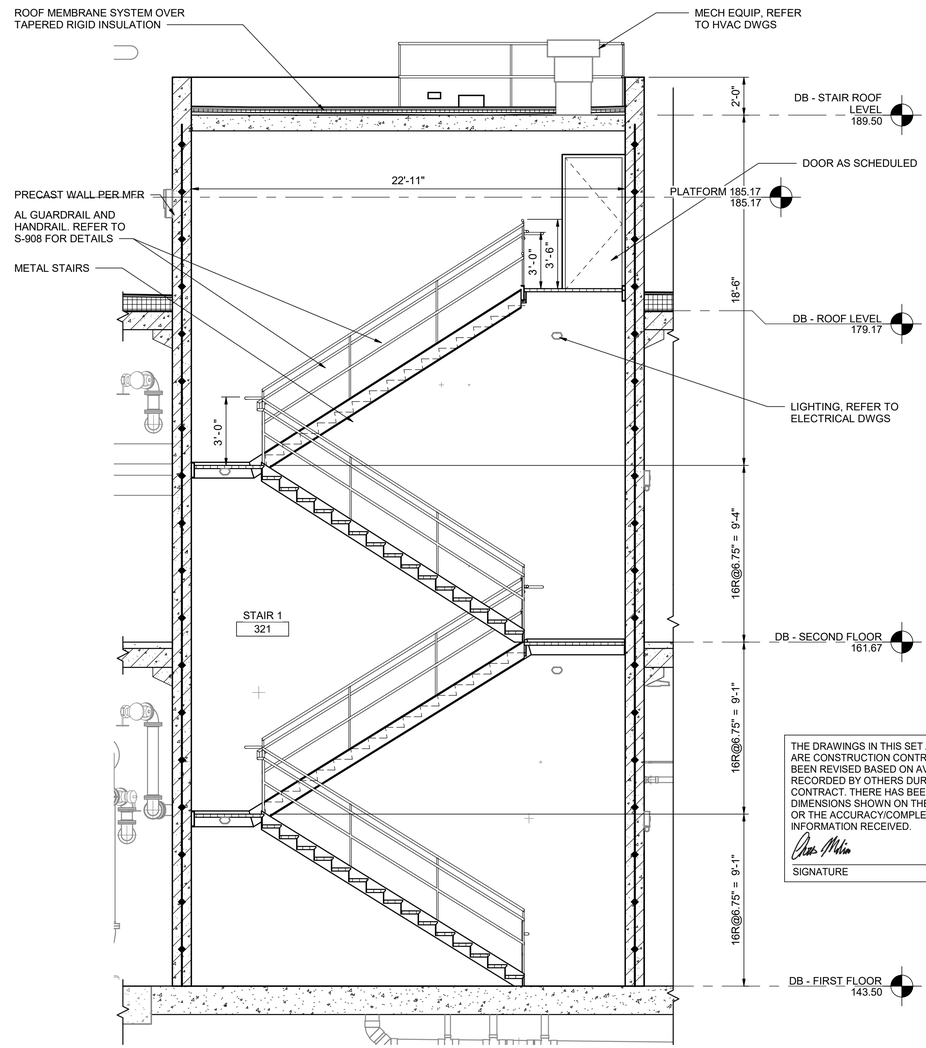

STAIR #1 SECTION

5 A-330 — 1/4" = 1'-0"

THE DRAWINGS IN THIS SET ARE RECORD DRAWINGS. THEY ARE CONSTRUCTION CONTRACT DRAWINGS WHICH HAVE BEEN REVISED BASED ON AVAILABLE FIELD INFORMATION RECORDED BY OTHERS DURING CONSTRUCTION OF THIS CONTRACT. THERE HAS BEEN NO VERIFICATION OF DIMENSIONS SHOWN ON THE CONSTRUCTION DRAWINGS OR THE ACCURACY/COMPLETENESS OF THE FIELD INFORMATION RECEIVED.

SIGNATURE — DATE 2/7/2023

AS-BUILT REPLACEMENT SHEET

PROFESSIONAL CERTIFICATION

THIS DRAWING WAS ORIGINALLY APPROVED FOR CONSTRUCTION AND SEALED BY BRIAN T. ELLINGTON, A REGISTERED ARCHITECT IN THE STATE OF MARYLAND, NO. 18821.

NOTICE TO CONTRACTORS

- PROJECT ELEVATIONS ARE BASED ON NAVD88 AND HOWARD COUNTY'S BENCHMARK SYSTEM
- PREVIOUS PROJECTS USED OTHER DATUMS
- APPLY THE FOLLOWING CONVERSIONS WHEN USING PREVIOUS CONTRACT DRAWINGS:
  - ADDITION NO. 6: SUBTRACT 0.80 FT
  - PRIOR ADDITIONS: SUBTRACT 1.04 FT

DEPARTMENT OF PUBLIC WORKS
HOWARD COUNTY, MARYLAND

CHIEF, BUREAU OF UTILITIES — DATE

DES: RK
DRN: RK
CHK: BE
DATE: 12/2016

DATE	REV	DESCRIPTION
07/2019		RECORD DRAWING

ARCHITECTURAL

DIGESTER BUILDING STAIR PLANS AND SECTIONS

LITTLE PATUXENT WATER RECLAMATION PLANT
8TH ADDITION
BIOSOLIDS PROCESSING FACILITIES - PHASE I

CAPITAL PROJECT S-6295
CONTRACT NO. 24-4935

ELECTION DISTRICT NO. 6
HOWARD COUNTY, MARYLAND

SCALE AS SHOWN

SHEET 142 OF 463

A-330

BIM 360://10054364 – Little Patuxent WRP 8th Addition/264591_300_S_V18.rvt
1/12/2022 3:54:41 PM

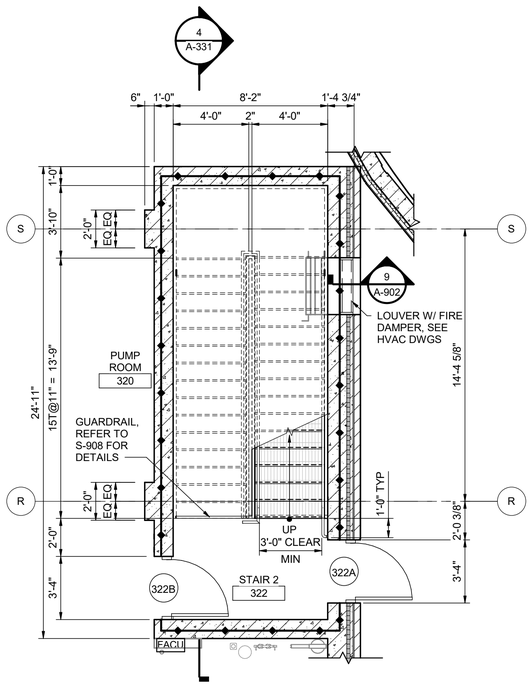

1 A-320 STAIR #2 - ENLARGED PLAN @143.50

1/4" = 1'-0"

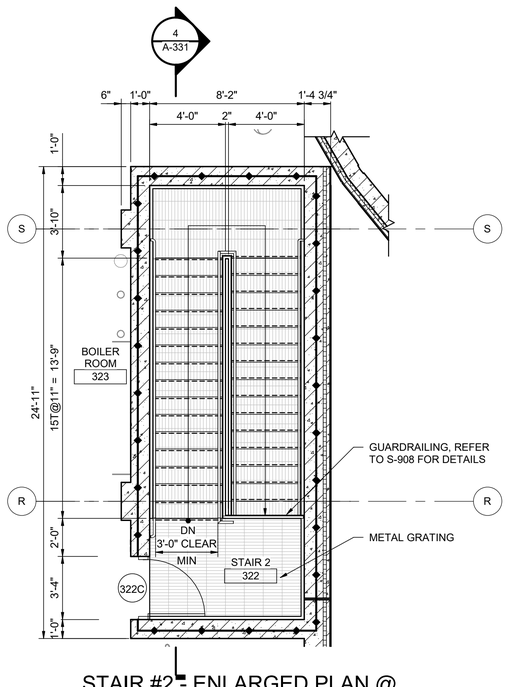

2 A-321 STAIR #2 - ENLARGED PLAN @ 161.67

1/4" = 1'-0"

GENERAL NOTES:

1 SEE A-905 FOR RAILING DETAILS

2 SEE 12/S-908 FOR WALL MOUNTED RAIL DETAILS.

3 ALL WALL PENETRATIONS AND JOINTS IN STAIRWELLS SHALL BE FIRE-STOPPED AND SEALED TO MEET THE REQUIREMENTS FOR A 1 HR FIRE RATED ASSEMBLY.

WALL RATING LEGEND

1 HOUR FIRE BARRIER

3 HOUR FIRE WALL

3 A-320 STAIR #3 - ENLARGED PLAN @ 143.50

3/8" = 1'-0"

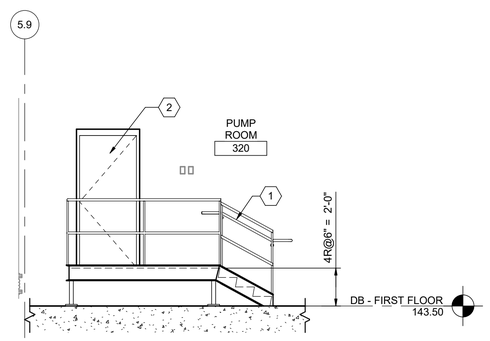

5 A-331 STAIR #3 SECTION

1/4" = 1'-0"

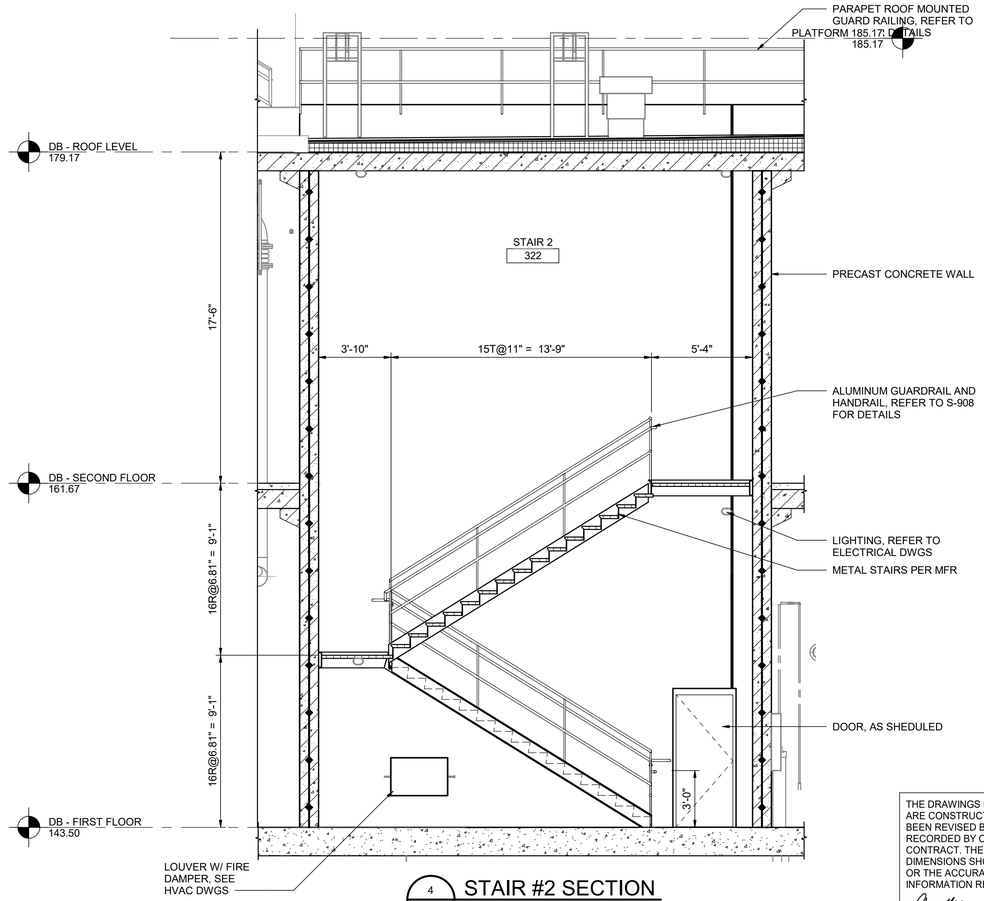

4 A-331 STAIR #2 SECTION

1/4" = 1'-0"

THE DRAWINGS IN THIS SET ARE RECORD DRAWINGS. THEY ARE CONSTRUCTION CONTRACT DRAWINGS WHICH HAVE BEEN REVISED BASED ON AVAILABLE FIELD INFORMATION RECORDED BY OTHERS DURING CONSTRUCTION OF THIS CONTRACT. THERE HAS BEEN NO VERIFICATION OF DIMENSIONS SHOWN ON THE CONSTRUCTION DRAWINGS OR THE ACCURACY/COMPLETENESS OF THE FIELD INFORMATION RECEIVED.

SIGNATURE

2/7/2023
DATE

AS-BUILT REPLACEMENT SHEET

PROFESSIONAL CERTIFICATION

THIS DRAWING WAS ORIGINALLY APPROVED FOR CONSTRUCTION AND SEALED BY BRIAN T. ELLINGTON, A REGISTERED ARCHITECT IN THE STATE OF MARYLAND, NO. 18821.

NOTICE TO CONTRACTORS

- PROJECT ELEVATIONS ARE BASED ON NAVD88 AND HOWARD COUNTY'S BENCHMARK SYSTEM
- PREVIOUS PROJECTS USED OTHER DATUMS
- APPLY THE FOLLOWING CONVERSIONS WHEN USING PREVIOUS CONTRACT DRAWINGS:
  - ADDITION NO. 6: SUBTRACT 0.80 FT
  - PRIOR ADDITIONS: SUBTRACT 1.04 FT

DEPARTMENT OF PUBLIC WORKS
HOWARD COUNTY, MARYLAND

CHIEF, BUREAU OF UTILITIES DATE

DES: RK
DRN: RK
CHK: BE
DATE: 12/2016

DATE	REV	DESCRIPTION
07/2019		RECORD DRAWING

ARCHITECTURAL

DIGESTER BUILDING STAIR PLANS AND SECTIONS

LITTLE PATUXENT WATER RECLAMATION PLANT
8TH ADDITION
BIOSOLIDS PROCESSING FACILITIES - PHASE I

CAPITAL PROJECT S-6295
CONTRACT NO. 24-4935

ELECTION DISTRICT NO. 6
HOWARD COUNTY, MARYLAND

SCALE AS SHOWN

SHEET 143 OF 463

A-331

BIM 360://10054364 – Little Patuxent WRP 8th Addition/264581_300_S_V18.rvt
1/12/2022 3:54:45 PM

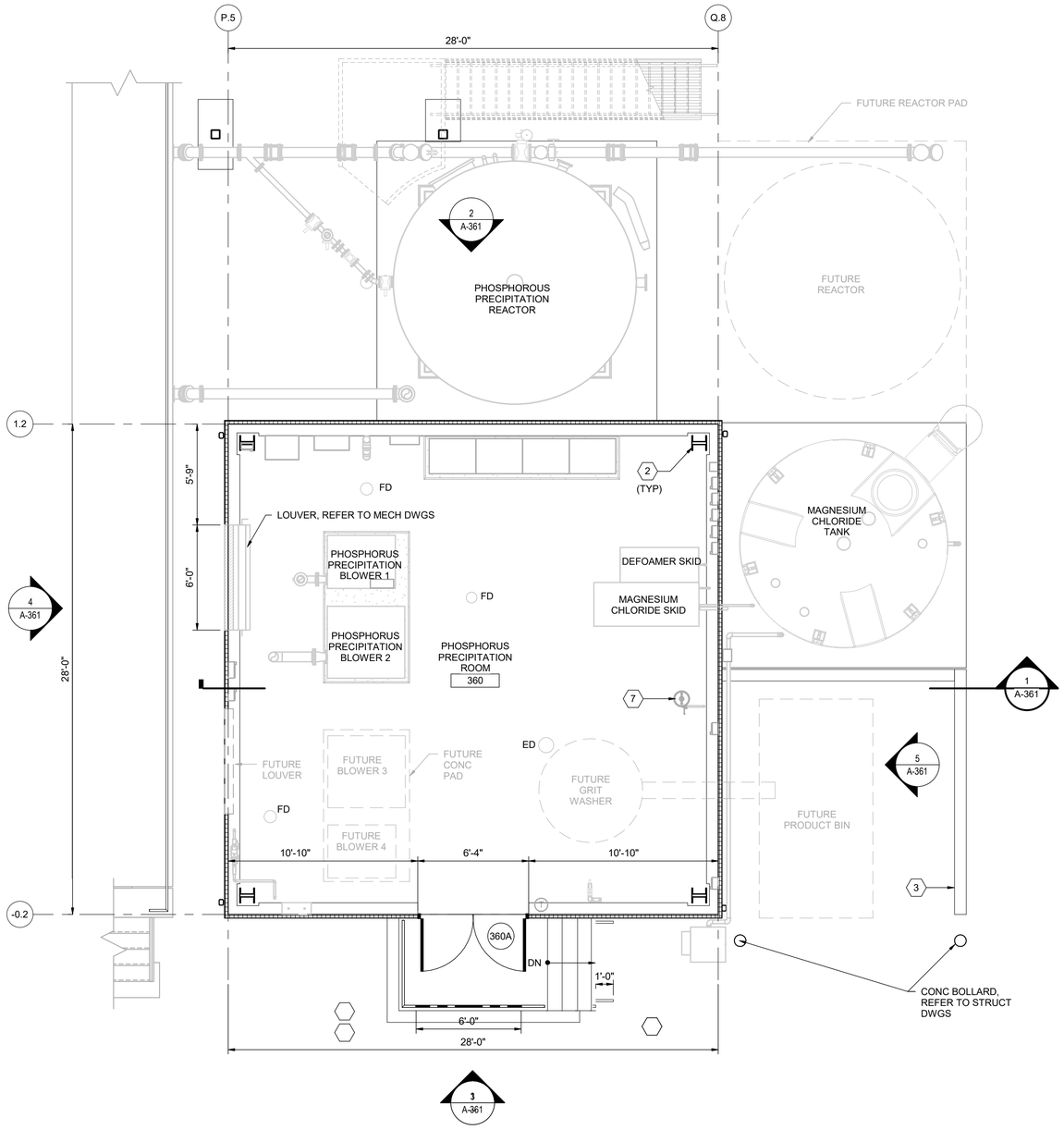

FLOOR PLAN - EL 143.50

1/4" = 1'-0"

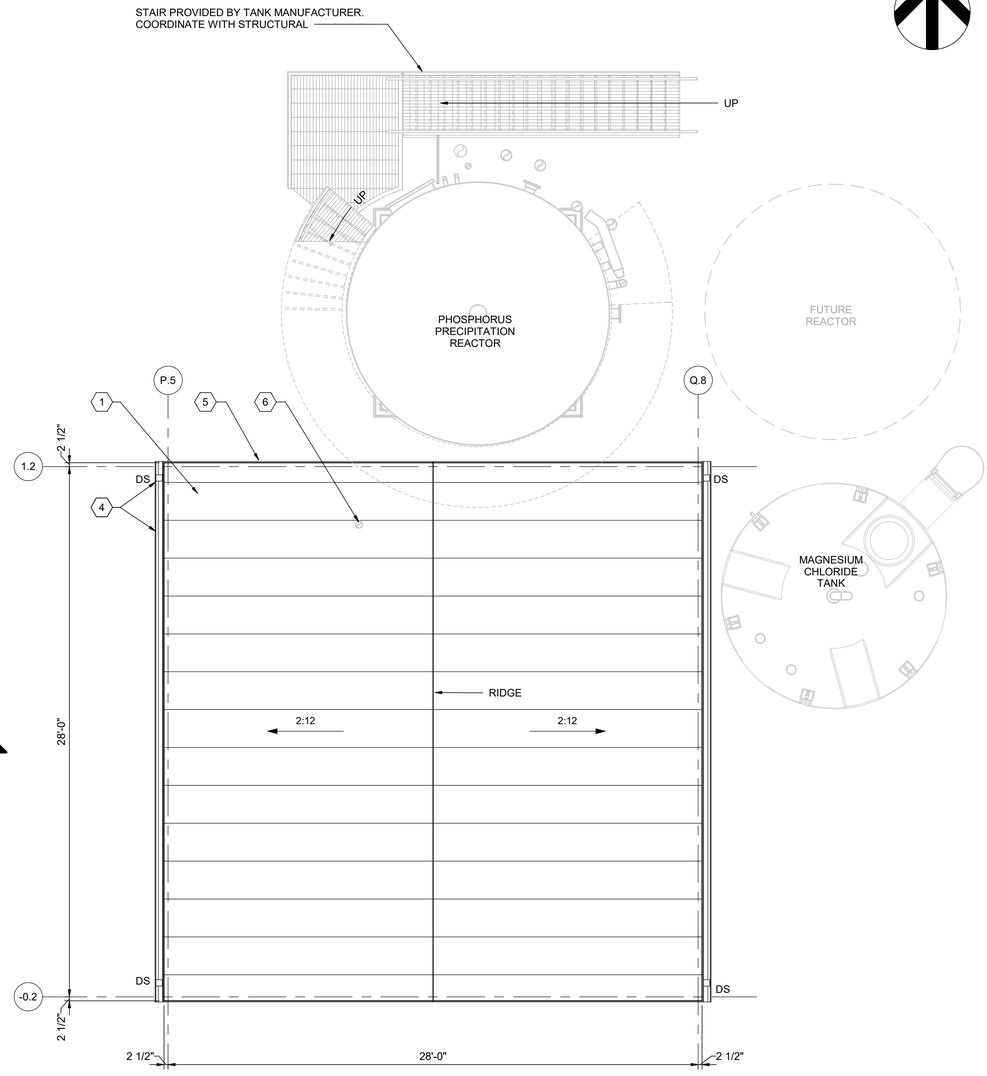

ROOF PLAN

1/4" = 1'-0"

GENERAL NOTES

1 CONTRACTOR SHALL FIELD VERIFY ALL DIMENSIONS AND EXISTING CONDITIONS.

2 SEE SHEET A-901 FOR ROOM FINISH AND DOOR SCHEDULE.

3 PRE-ENGINEERED MTL BUIDLING, SEE SPECIFICATION 13 34 19.

KEY NOTES (X)

1 INSULATED METAL ROOF PANEL: R-24
2 METAL BUILDING SYSTEM PER PEMB MFR
3 CONCRETE RETAINING WALL, REFER TO STRUCT DWGS
4 PREFINISHED 6X6 AL GUTTER AND 4X4 AL DOWNSPOUT
5 PREFINISHED METAL FASCIA PER PEMB MFR
6 ROOF VENT, REFER TO PLUMBING DWGS
7 EMERGENCY EYEWASH STATION

THE DRAWINGS IN THIS SET ARE RECORD DRAWINGS. THEY ARE CONSTRUCTION CONTRACT DRAWINGS WHICH HAVE BEEN REVISED BASED ON AVAILABLE FIELD INFORMATION RECORDED BY OTHERS DURING CONSTRUCTION OF THIS CONTRACT. THERE HAS BEEN NO VERIFICATION OF DIMENSIONS SHOWN ON THE CONSTRUCTION DRAWINGS OR THE ACCURACY/COMPLETENESS OF THE FIELD INFORMATION RECEIVED.

SIGNATURE — DATE 2/7/2023

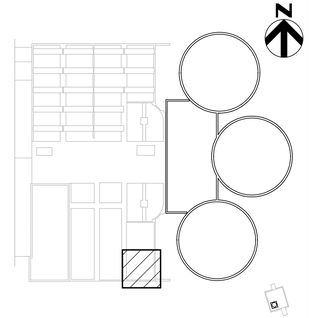

KEY PLAN

AS-BUILT REPLACEMENT SHEET

PROFESSIONAL CERTIFICATION

THIS DRAWING WAS ORIGINALLY APPROVED FOR CONSTRUCTION AND SEALED BY BRIAN T. ELLINGTON, A REGISTERED ARCHITECT IN THE STATE OF MARYLAND, NO. 18821.

NOTICE TO CONTRACTORS

- PROJECT ELEVATIONS ARE BASED ON NAVD88 AND HOWARD COUNTY'S BENCHMARK SYSTEM
- PREVIOUS PROJECTS USED OTHER DATUMS
- APPLY THE FOLLOWING CONVERSIONS WHEN USING PREVIOUS CONTRACT DRAWINGS:
  - ADDITION NO. 6: SUBTRACT 0.80 FT
  - PRIOR ADDITIONS: SUBTRACT 1.04 FT

DEPARTMENT OF PUBLIC WORKS
HOWARD COUNTY, MARYLAND

CHIEF, BUREAU OF UTILITIES — DATE

DES: RK
DRN: RK
CHK: BE
DATE: 12/2016

DATE	REV	DESCRIPTION
07/2019		RECORD DRAWING

ARCHITECTURAL

PHOSPHORUS PRECIPITATION BUILDING FLOOR PLAN & ROOF PLAN

LITTLE PATUXENT WATER RECLAMATION PLANT
8TH ADDITION
BIOSOLIDS PROCESSING FACILITIES - PHASE I

CAPITAL PROJECT S-6295
CONTRACT NO. 24-4935

ELECTION DISTRICT NO. 6
HOWARD COUNTY, MARYLAND

SCALE AS SHOWN

SHEET 144 OF 463

A-360

BIM 360://10054364 – Little Patuxent WRP 8th Addition/264591_100_A_V18.rvt
1/11/2022 9:30:26 AM

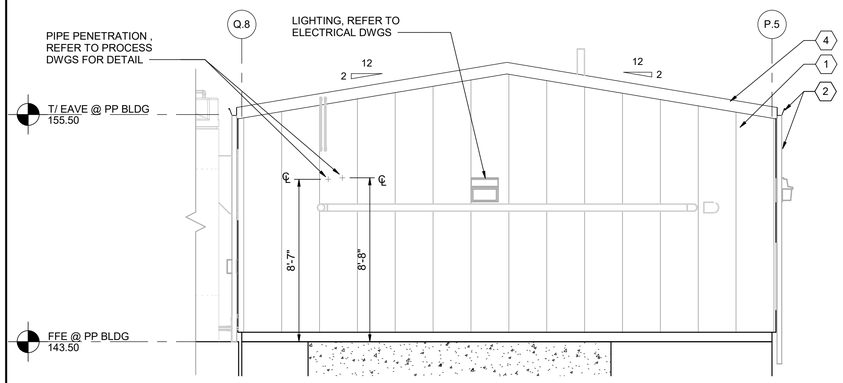

2 A-360 NORTH ELEVATION
1/4" = 1'-0"

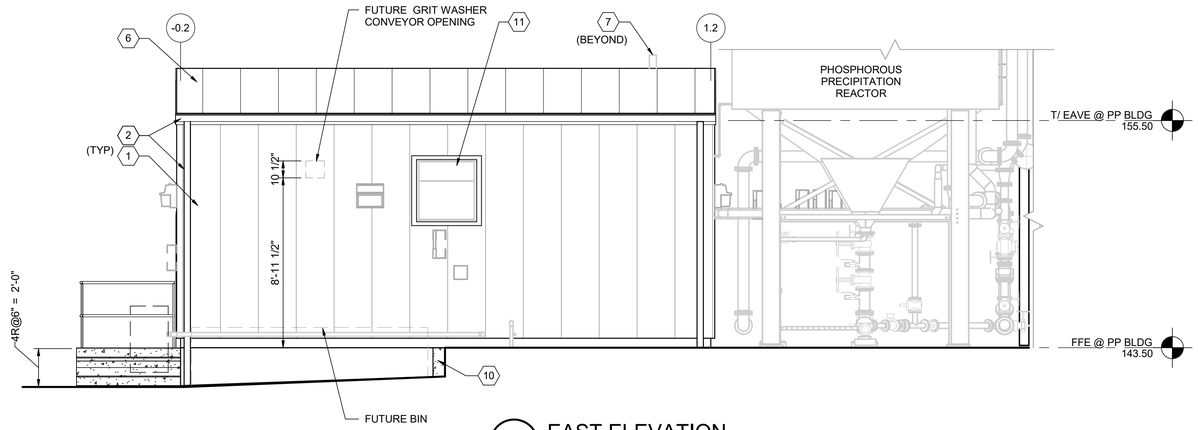

5 A-360 EAST ELEVATION
1/4" = 1'-0"

GENERAL NOTES:

1 SEE SPECIFICATION 07 42 14 FOR INSULATED METAL WALL AND ROOF PANELS

KEY NOTES (X)

1 INSULATED METAL WALL PANEL: R-25
2 PREFINISHED 6X6 AL GUTTER AND 4X4 AL DOWNSPOUT
3 DOOR, AS SCHEDULED
4 PREFINISHED METAL FASCIA PER PEMB MFR
5 CONCRETE FOUNDATION, SEE TO STRUCT DWGS
6 INSULATED METAL ROOF PANEL: R-24
7 ROOF VENT, REFER TO PLUMBING DWGS
8 PREFINISHED AL LOUVER, REFER TO LOUVER SCHEDULE FOR DETAILS. PROVIDE FIRE DAMPER FOR LOUVERS LOCATED IN FIRE RATED WALLS
9 METAL BUILDING SYSTEM PER PEMB MFR
10 CONCRETE RETAINING WALL, REFER TO STRUCT DWGS
11 HVAC EQUIPMENT, REFER TO MECH DWGS
12 EXTERIOR CAST-IN-PLACE CONCRETE STAIR AND LANDING
13 REMOVABLE GUARDRAIL SECTION

THE DRAWINGS IN THIS SET ARE RECORD DRAWINGS. THEY ARE CONSTRUCTION CONTRACT DRAWINGS WHICH HAVE BEEN REVISED BASED ON AVAILABLE FIELD INFORMATION RECORDED BY OTHERS DURING CONSTRUCTION OF THIS CONTRACT. THERE HAS BEEN NO VERIFICATION OF DIMENSIONS SHOWN ON THE CONSTRUCTION DRAWINGS OR THE ACCURACY/COMPLETENESS OF THE FIELD INFORMATION RECEIVED.

SIGNATURE — DATE 2/7/2023

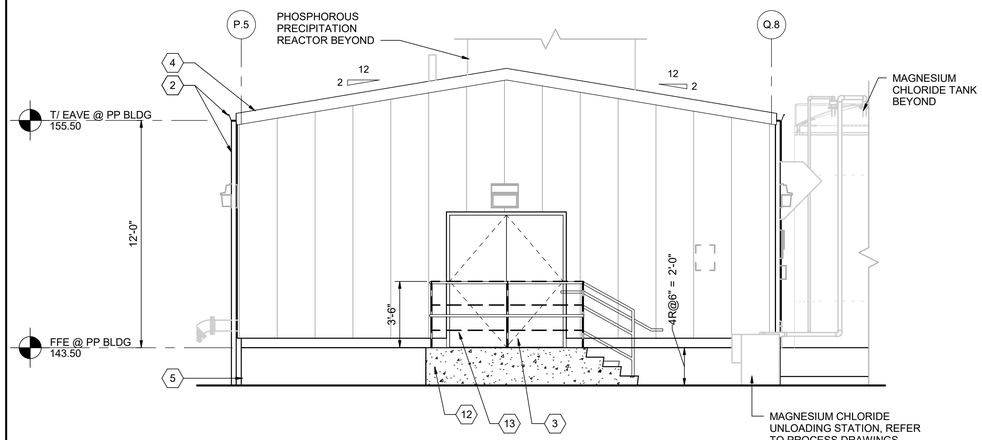

3 A-360 SOUTH ELEVATION
1/4" = 1'-0"

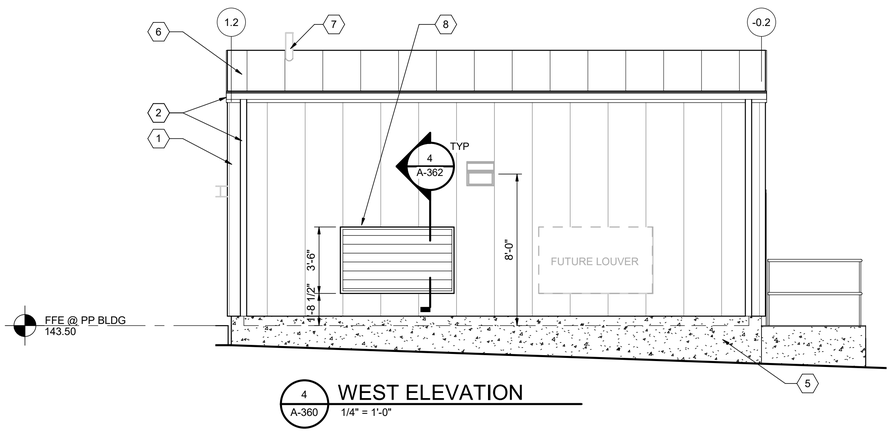

4 A-360 WEST ELEVATION
1/4" = 1'-0"

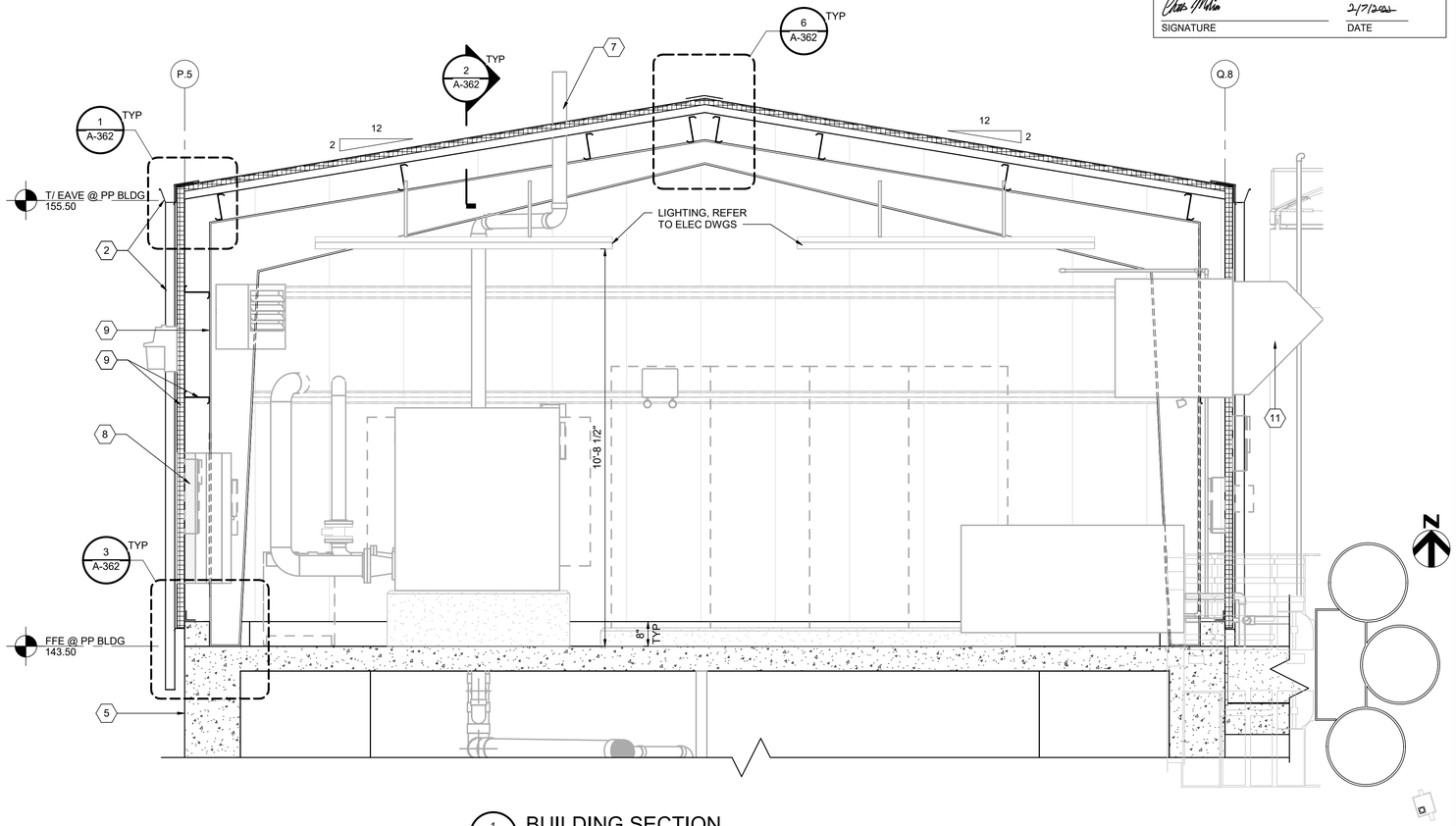

1 A-360 BUILDING SECTION
1/2" = 1'-0"

KEY PLAN

BIM 360://10054364 – Little Patuxent WRP 8th Addition/264591_100_A_V18.rvt
1/11/2022 9:30:34 AM

AS-BUILT REPLACEMENT SHEET

PROFESSIONAL CERTIFICATION
THIS DRAWING WAS ORIGINALLY APPROVED FOR CONSTRUCTION AND SEALED BY BRIAN T. ELLINGTON, A REGISTERED ARCHITECT IN THE STATE OF MARYLAND, NO. 18821.

NOTICE TO CONTRACTORS
- PROJECT ELEVATIONS ARE BASED ON NAVD88 AND HOWARD COUNTY'S BENCHMARK SYSTEM
- PREVIOUS PROJECTS USED OTHER DATUMS
- APPLY THE FOLLOWING CONVERSIONS WHEN USING PREVIOUS CONTRACT DRAWINGS:
  - ADDITION NO. 6: SUBTRACT 0.80 FT
  - PRIOR ADDITIONS: SUBTRACT 1.04 FT

DEPARTMENT OF PUBLIC WORKS
HOWARD COUNTY, MARYLAND

CHIEF, BUREAU OF UTILITIES — DATE

DES: RK
DRN: RK
CHK: BE
DATE: 12/2016

DATE	REV	DESCRIPTION
07/2019		RECORD DRAWING

ARCHITECTURAL

PHOSPHORUS PRECIPITATION BUILDING
ELEVATIONS, SECTIONS AND DETAILS

LITTLE PATUXENT WATER RECLAMATION PLANT
8TH ADDITION
BIOSOLIDS PROCESSING FACILITIES - PHASE I

CAPITAL PROJECT S-6295
CONTRACT NO. 24-4935

ELECTION DISTRICT NO. 6
HOWARD COUNTY, MARYLAND

SCALE AS SHOWN

SHEET 145 OF 463

A-361

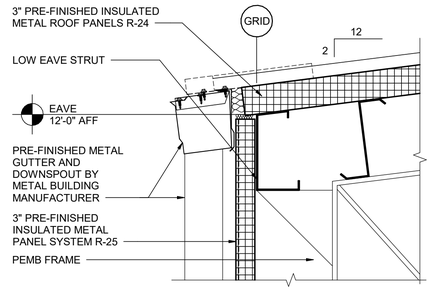

1 A-361 **EAVE DETAIL**
1 1/2" = 1'-0"

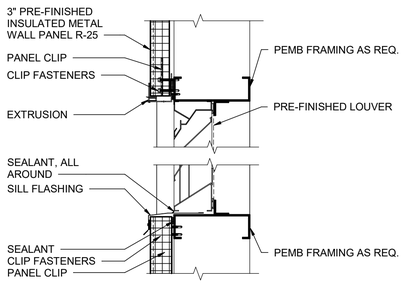

4 - **LOUVER HEAD-SILL DETAIL**
1 1/2" = 1'-0"

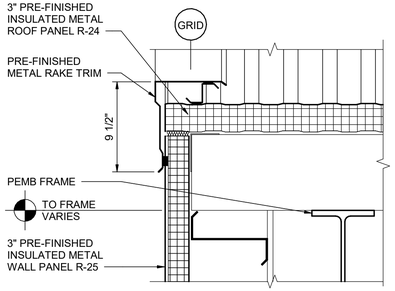

2 A-361 **RAKE DETAIL**
1 1/2" = 1'-0"

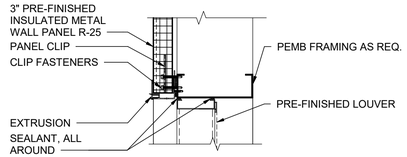

5 - **LOUVER JAMB DETAL**
1 1/2" = 1'-0"

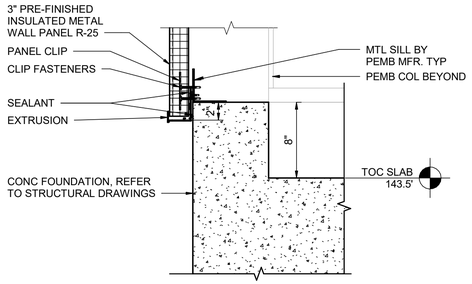

3 A-361 **BASE DETAIL**
1 1/2" = 1'-0"

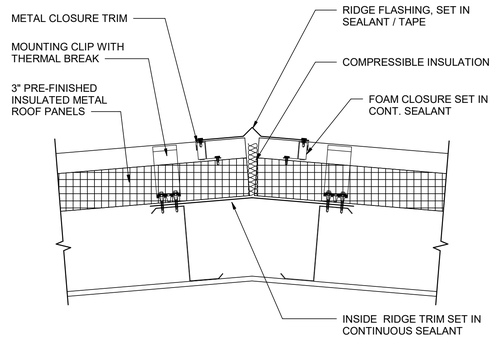

6 A-361 **RIDGE FLASHING DETAIL**
1 1/2" = 1'-0"

THE DRAWINGS IN THIS SET ARE RECORD DRAWINGS. THEY ARE CONSTRUCTION CONTRACT DRAWINGS WHICH HAVE BEEN REVISED BASED ON AVAILABLE FIELD INFORMATION RECORDED BY OTHERS DURING CONSTRUCTION OF THIS CONTRACT. THERE HAS BEEN NO VERIFICATION OF DIMENSIONS SHOWN ON THE CONSTRUCTION DRAWINGS OR THE ACCURACY/COMPLETENESS OF THE FIELD INFORMATION RECEIVED.

SIGNATURE 2/7/2023 DATE

AS-BUILT REPLACEMENT SHEET

PROFESSIONAL CERTIFICATION

THIS DRAWING WAS ORIGINALLY APPROVED FOR CONSTRUCTION AND SEALED BY BRIAN T. ELLINGTON, A REGISTERED ARCHITECT IN THE STATE OF MARYLAND, NO. 18821.

NOTICE TO CONTRACTORS

- PROJECT ELEVATIONS ARE BASED ON NAVD88 AND HOWARD COUNTY'S BENCHMARK SYSTEM
- PREVIOUS PROJECTS USED OTHER DATUMS
- APPLY THE FOLLOWING CONVERSIONS WHEN USING PREVIOUS CONTRACT DRAWINGS:
  - ADDITION NO. 6: SUBTRACT 0.80 FT
  - PRIOR ADDITIONS: SUBTRACT 1.04 FT

DEPARTMENT OF PUBLIC WORKS
HOWARD COUNTY, MARYLAND

CHIEF, BUREAU OF UTILITIES DATE

DES: RK
DRN: RK
CHK: RK
DATE: 12/2016

DATE	REV	DESCRIPTION
07/2019		RECORD DRAWING

ARCHITECTURAL

DETAILS

LITTLE PATUXENT WATER RECLAMATION PLANT
8TH ADDITION
BIOSOLIDS PROCESSING FACILITIES - PHASE I

CAPITAL PROJECT S-6295
CONTRACT NO. 24-4935

ELECTION DISTRICT NO. 6
HOWARD COUNTY, MARYLAND

SCALE AS SHOWN

SHEET **146** OF **463**

A-362

BIM 360://10054364 – Little Patuxent WRP 8th Addition/264591_100_A_V18.rvt
1/11/2022 9:30:34 AM

ROOM SCHEDULE

NUMBER	NAME	FLOOR FINISH	BASE FINISH	NORTH WALL FINISH	EAST WALL FINISH	SOUTH WALL FINISH	WEST WALL FINISH	CEILING FINISH	CEILING HEIGHT	COMMENT
BIOSOLIDS TREATMENT FACILITIES										
200	MCC ROOM	C	N	MWP	MWP	MWP	MWP	MRP	-	
360	PHOSPHORUS PRECIPITATION ROOM	C	N	MWP	MWP	MWP	MWP	ES	-	
DIGESTER BUILDING										
320	PUMP ROOM	N	N	PC	PC	PC	PC	ES	17'-0"	1,2,3
321	STAIR 1	N	N	PC	PC	PC	PC	ES	-	1,2,3
322	STAIR 2	N	N	PC	PC	PC	PC	ES	-	1,2,3
323	BOILER ROOM	N	N	PC	PC	PC	PC	ES	17'-0"	1,2,3
DIGESTER GAS TREATMENT BUILDING										
320	PUMP ROOM	C	N	PC	PC	PC	PC	ES	17'-0"	1,2,3
321	STAIR 1	C	N	PC	PC	PC	PC	ES	-	1,2,3
322	STAIR 2	C	N	PC	PC	PC	PC	ES	-	1,2,3
323	BOILER ROOM	C	N	PC	PC	PC	PC	ES	17'-0"	1,2,3

FLOOR	BASE	WALL	CEILING
C - SEALED CONCRETE	N - NONE	MWP - METAL WALL PANEL - FACTORY FINISH	MRP - METAL ROOF PANEL
C - SEALED CONCRETE	C - SEALED CONCRETE	PC - PRECAST CONC. - UNPAINTED	ES - EXPOSED STRUCTURE

COMMENTS:

1 PATCH AND REPAIR ANY CHIPPED OR DAMAGED PRECAST CONCRETE SURFACES EXPOSED TO VIEW W/ PATCHING MATERIAL TO MATCH CONCRETE COLOR.

2 PRE-CAST CONCRETE SURFACES SHALL NOT BE PAINTED.

3 GLAVANIZED SURFACES SHALL NOT BE PAINTED. PROVIDE GALVANIZING REPAIR COATING FOR AREAS DAMAGED DURING CONSTRUCTION.

4 PRIMARY AND SECONDARY GLAVANIZED STEEL STRUCTURE SHALL NOT BE PAINTED.

GENERAL FINISH NOTE:

1 PAINT ALL NON-GALVANIZED FERROUS METALS, PROCESS PIPING, AND EQUIPMENT AS DIRECTED IN SPECIFICATION SECTION 09 96 00 UNLESS NOTED OTHERWISE.

2 DO NOT PAINT PIPE CONNECTION NUTS AND BOLTS.

DOOR SCHEDULE

DOOR NUMBER	Door Sizes	DOOR TYPE	DOOR MATERIAL	DOOR FINISH	FRAME TYPE	FRAME MATERIAL	FRAME FINISH	RATING	HARDWARE	HEAD	JAMB	COMMENTS
BIOSOLIDS TREATMENT FACILITIES												
105G	3'-6"x-7'-0"	B	D	G	2	D	G	--	HW-1			1
105H	3'-6"x-7'-0"	B	D	G	2	D	G	--	HW-1			1
360A	PR 3'-0"x7'-0"	B	D	G	2	B	P	--	HW-3	5/A903	6/A903	
DIGESTER BUILDING												
320A	OH 8'-0"x10'-0"	C	A	F	-	C	F	--	-	1/A902	2/A902	1,2
320B	3'-0"x7'-0"	B	D	G	2	D	G	--	HW-1	3/A902	4/A902	1
320C	3'-0"x7'-0"	A	B	P	1	B	P	180 MIN	HW-1	3/A902	4/A902	1,3
321A	3'-0"x7'-0"	B	D	G	1	C	G	60 MIN	HW-1	3/A902	4/A902	1,3
321B	3'-0"x7'-0"	B	D	G	2	C	G	60 MIN	HW-2	3/A902	4/A902	3
321C	3'-0"x7'-0"	B	D	G	2	C	G	60 MIN	HW-2	3/A902	4/A902	3
321D	3'-0"x7'-0"	B	D	G	2	C	G	60 MIN	HW-1	3/A902	4/A902	1,3
322A	3'-0"x7'-0"	B	D	G	1	C	G	60 MIN	HW-1	3/A902	4/A902	1,3
322B	3'-0"x7'-0"	B	D	G	2	C	G	60 MIN	HW-2	3/A902	4/A902	3
322C	3'-0"x7'-0"	B	D	G	2	C	G	60 MIN	HW-2	3/A902	4/A902	3
323A	8'-6"x15'-8"	D	A	F	1	A	F	--	HW-4	3/A902	4/A902	1,4
SUBSTATION PS2												
400A	3'-6"x5'-0"	A	D	G	3	D	G	--	--			5

MATERIAL		FINISH	
A	ALUMINUM	A	ANODIZED
B	HOLLOW METAL	F	FACTORY FINISH
C	STEEL	P	PAINT
D	FRP	G	GEL COAL

COMMENTS:
1. PROVIDE INSULATED DOOR
2. ALL DOOR HARDWARE FURNISHED AND INSTALLED BY OVERHEAD DOOR MANUFACTURER.
3. PROVIDE RATED HARDWARE.
4. PROVIDE NEOPRENE SEAL FOR MONORAIL .
5. PROVIDE (3) BUTT HINGES, WEATHER STRIPPING, AND DEAD BOLT LOCK.

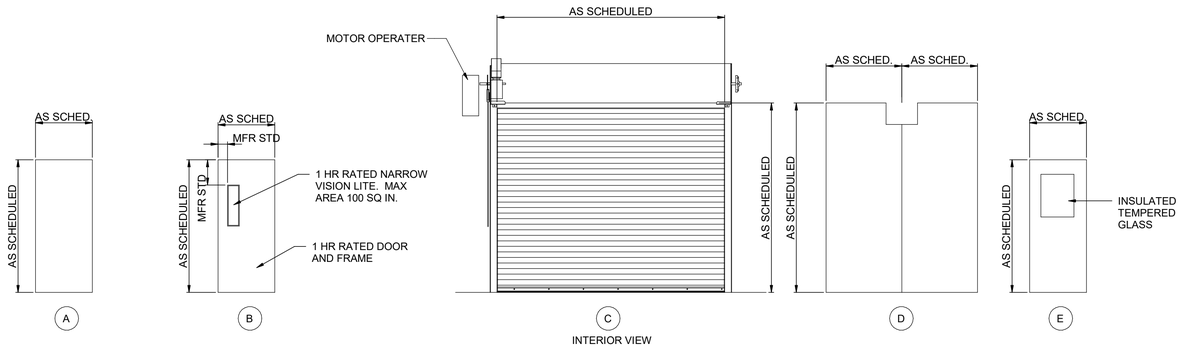

DOOR TYPES

1/4" = 1'-0"

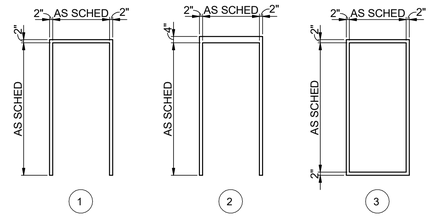

FRAME TYPES

1/4" = 1'-0"

THE DRAWINGS IN THIS SET ARE RECORD DRAWINGS. THEY ARE CONSTRUCTION CONTRACT DRAWINGS WHICH HAVE BEEN REVISED BASED ON AVAILABLE FIELD INFORMATION RECORDED BY OTHERS DURING CONSTRUCTION OF THIS CONTRACT. THERE HAS BEEN NO VERIFICATION OF DIMENSIONS SHOWN ON THE CONSTRUCTION DRAWINGS OR THE ACCURACY/COMPLETENESS OF THE FIELD INFORMATION RECEIVED.

SIGNATURE

2/7/2023
DATE

AS-BUILT REPLACEMENT SHEET

PROFESSIONAL CERTIFICATION

THIS DRAWING WAS ORIGINALLY APPROVED FOR CONSTRUCTION AND SEALED BY BRIAN T. ELLINGTON, A REGISTERED ARCHITECT IN THE STATE OF MARYLAND, NO. 18821.

NOTICE TO CONTRACTORS

- PROJECT ELEVATIONS ARE BASED ON NAVD88 AND HOWARD COUNTY'S BENCHMARK SYSTEM
- PREVIOUS PROJECTS USED OTHER DATUMS
- APPLY THE FOLLOWING CONVERSIONS WHEN USING PREVIOUS CONTRACT DRAWINGS:
  - ADDITION NO. 6: SUBTRACT 0.80 FT
  - PRIOR ADDITIONS: SUBTRACT 1.04 FT

DEPARTMENT OF PUBLIC WORKS
HOWARD COUNTY, MARYLAND

CHIEF, BUREAU OF UTILITIES DATE

DES: RK
DRN: RK
CHK: BE
DATE: 12/2016

DATE	REV	DESCRIPTION
07/2019		RECORD DRAWING

ARCHITECTURAL

SCHEDULES

LITTLE PATUXENT WATER RECLAMATION PLANT
8TH ADDITION
BIOSOLIDS PROCESSING FACILITIES - PHASE I

CAPITAL PROJECT S-6295
CONTRACT NO. 24-4935

ELECTION DISTRICT NO. 6
HOWARD COUNTY, MARYLAND

SCALE AS SHOWN

SHEET 147 OF 463

A-901

BIM 360://10054364 – Little Patuxent WRP 8th Addition/264591_300_S_V18.rvt
1/12/2022 3:54:47 PM

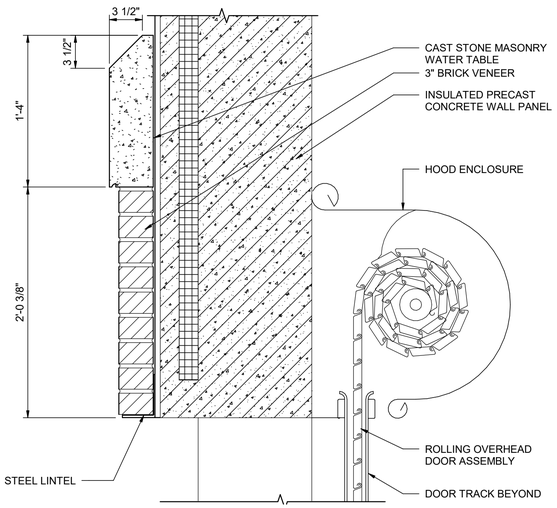

1 A-329 OVERHEAD DOOR HEAD

1 1/2" = 1'-0"

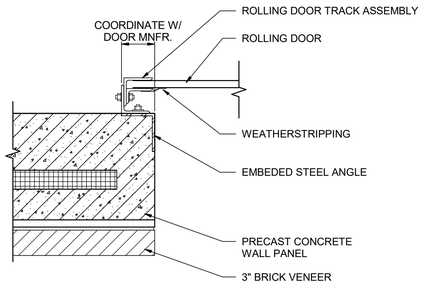

2 OVERHEAD DOOR JAMB

1 1/2" = 1'-0"

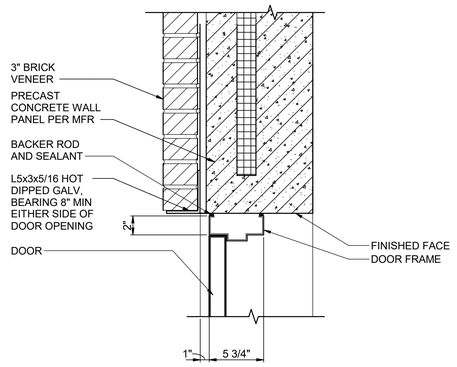

3 DOOR HEAD DETAIL AT BRICK ON PRECAST WALL (SIM AT PRECAST ONLY)

1 1/2" = 1'-0"

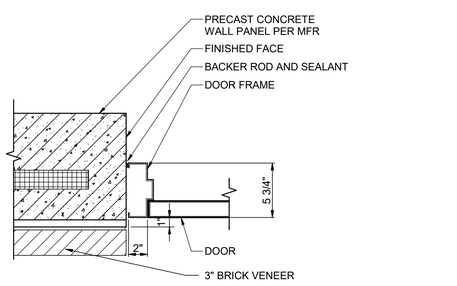

4 DOOR JAMB DETAIL AT BRICK ON PRECAST WALL (SIM AT PRECAST ONLY)

1 1/2" = 1'-0"

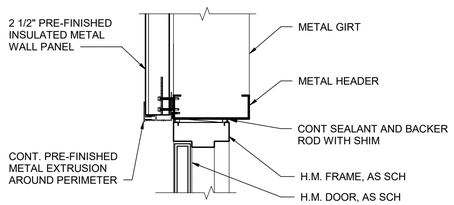

5 - DOOR HEAD DETAIL IN METAL BUILDING (JAMB SIM)

1 1/2" = 1'-0"

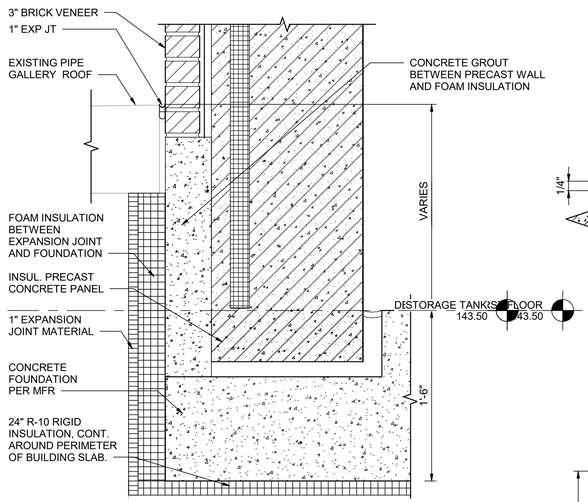

6 A-327 DETAIL

1 1/2" = 1'-0"

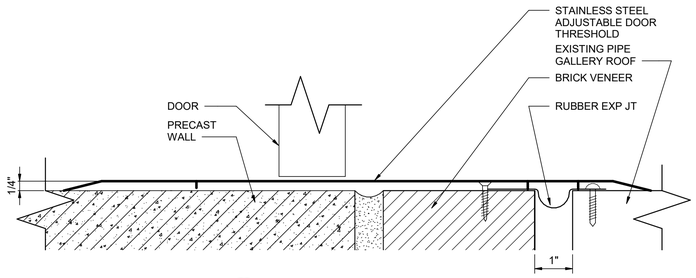

8 A-327 THRESHOLD DETAIL

6" = 1'-0"

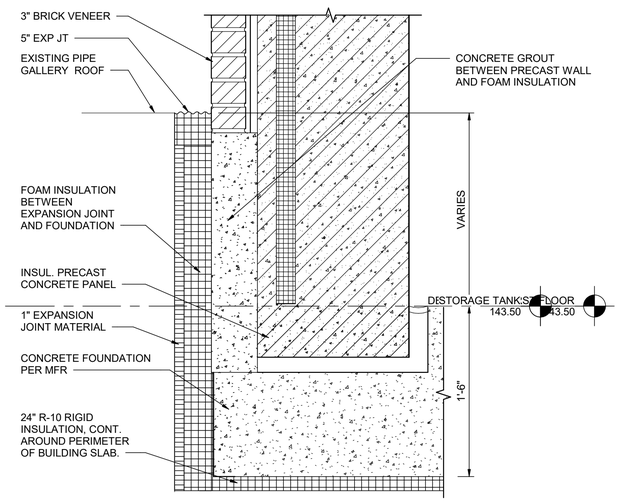

7 A-320 DETAIL

1 1/2" = 1'-0"

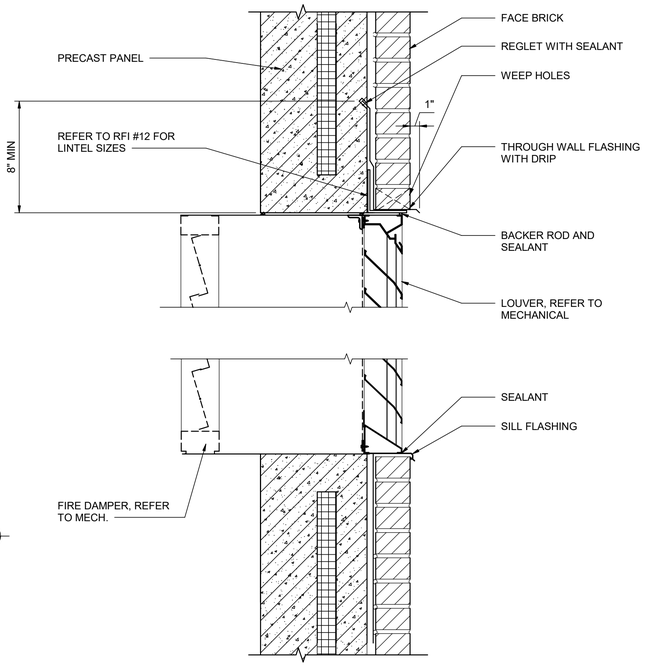

9 A-330 SECTION THROUGH LOUVER

1 1/2" = 1'-0"

THE DRAWINGS IN THIS SET ARE RECORD DRAWINGS. THEY ARE CONSTRUCTION CONTRACT DRAWINGS WHICH HAVE BEEN REVISED BASED ON AVAILABLE FIELD INFORMATION RECORDED BY OTHERS DURING CONSTRUCTION OF THIS CONTRACT. THERE HAS BEEN NO VERIFICATION OF DIMENSIONS SHOWN ON THE CONSTRUCTION DRAWINGS OR THE ACCURACY/COMPLETENESS OF THE FIELD INFORMATION RECEIVED.

SIGNATURE — DATE 2/7/2023

AS-BUILT REPLACEMENT SHEET

PROFESSIONAL CERTIFICATION

THIS DRAWING WAS ORIGINALLY APPROVED FOR CONSTRUCTION AND SEALED BY BRIAN T. ELLINGTON, A REGISTERED ARCHITECT IN THE STATE OF MARYLAND, NO. 18821.

NOTICE TO CONTRACTORS

- PROJECT ELEVATIONS ARE BASED ON NAVD88 AND HOWARD COUNTY'S BENCHMARK SYSTEM
- PREVIOUS PROJECTS USED OTHER DATUMS
- APPLY THE FOLLOWING CONVERSIONS WHEN USING PREVIOUS CONTRACT DRAWINGS:
  - ADDITION NO. 6: SUBTRACT 0.80 FT
  - PRIOR ADDITIONS: SUBTRACT 1.04 FT

DEPARTMENT OF PUBLIC WORKS
HOWARD COUNTY, MARYLAND

CHIEF, BUREAU OF UTILITIES — DATE

DES: RK
DRN: RK
CHK: BE
DATE: 12/2016

DATE	REV	DESCRIPTION
07/2019		RECORD DRAWING

ARCHITECTURAL

DETAILS 1

LITTLE PATUXENT WATER RECLAMATION PLANT
8TH ADDITION
BIOSOLIDS PROCESSING FACILITIES - PHASE I

CAPITAL PROJECT S-6295
CONTRACT NO. 24-4935

ELECTION DISTRICT NO. 6
HOWARD COUNTY, MARYLAND

SCALE AS SHOWN

SHEET 148 OF 463

A-902

BIM 360://10054364 – Little Patuxent WRP 8th Addition/264591_300_S_V18.rvt
1/12/2022 3:54:50 PM

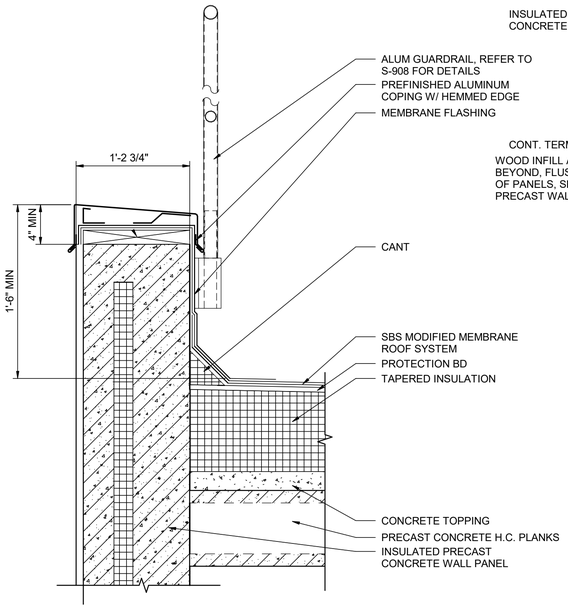

1 A-322 — ROOF DETAIL AT EXTERIOR WALL

1 1/2" = 1'-0"

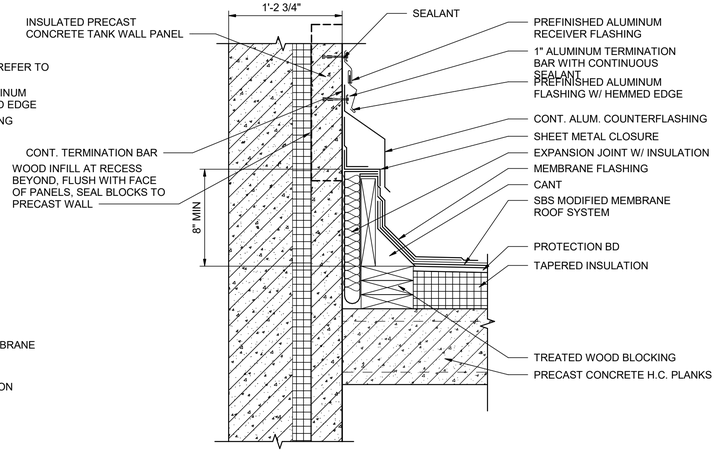

3 A-322 — ROOF DETAIL AT DIGESTER TANK

1 1/2" = 1'-0"

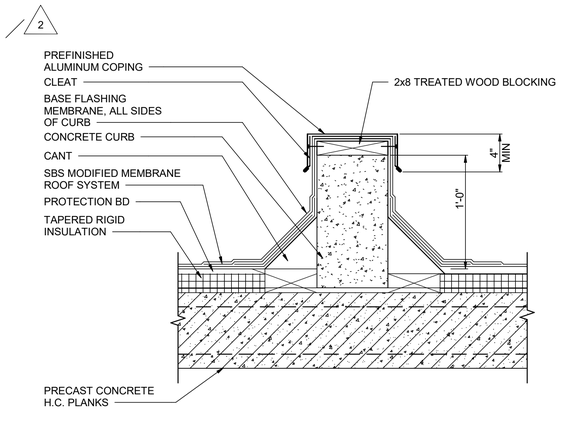

6 A-322 — TYPICAL ROOF CURB DETAIL

1 1/2" = 1'-0"

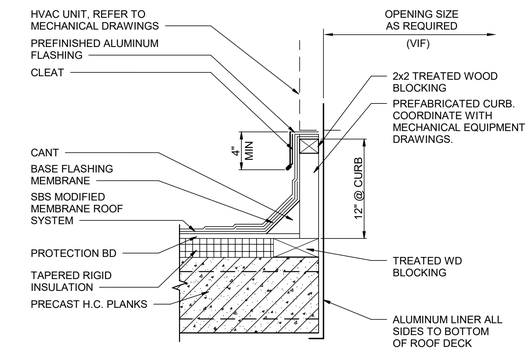

8 A-322 — PREFABRICATED HVAC CURB DETAIL

1 1/2" = 1'-0"

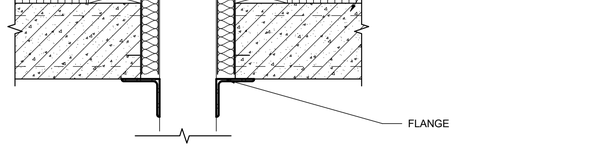

4 HOT VENT DETAIL

1 1/2" = 1'-0"

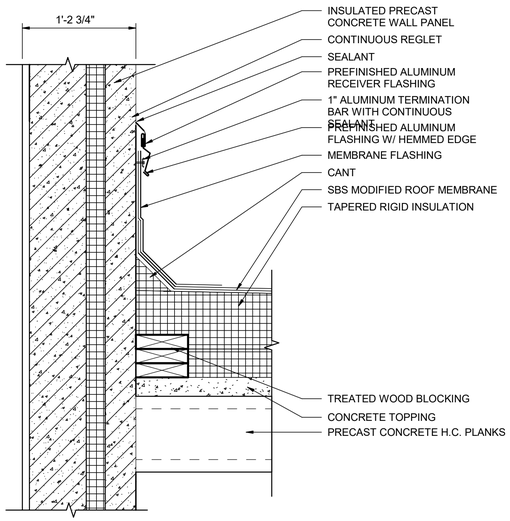

2 A-330 — ROOF DETAIL AT PENTHOUSE

1 1/2" = 1'-0"

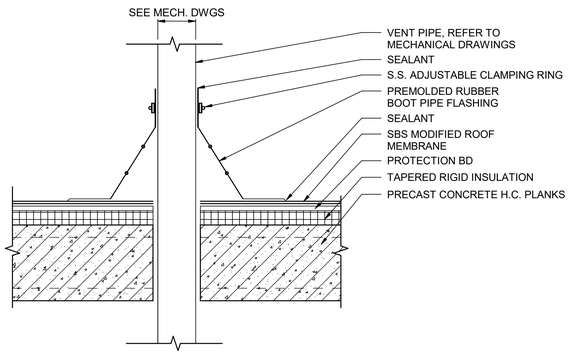

5 A-322 — TYPICAL PLUMBING VENT FLASHING DETAIL

1 1/2" = 1'-0"

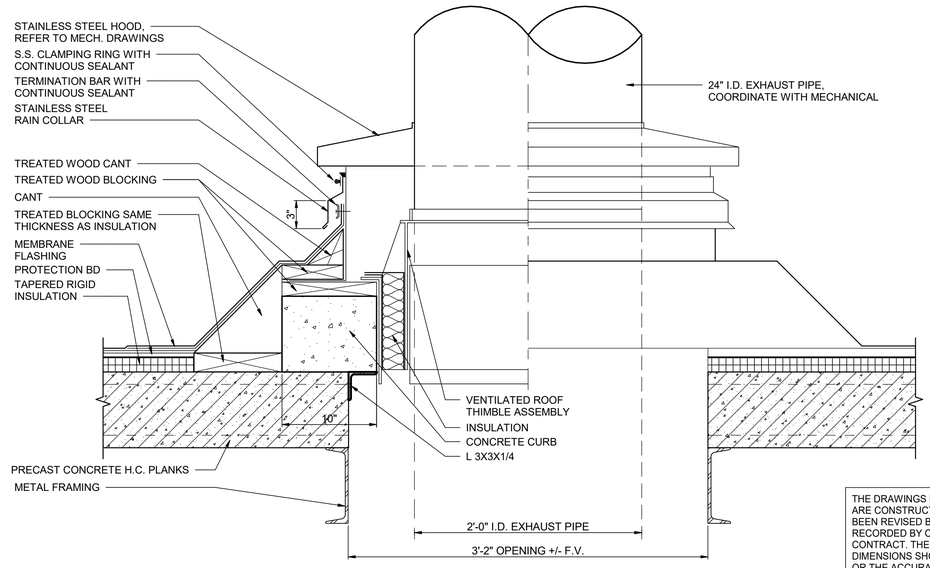

7 A-322 — BOILER STACK DETAIL

1 1/2" = 1'-0"

THE DRAWINGS IN THIS SET ARE RECORD DRAWINGS. THEY ARE CONSTRUCTION CONTRACT DRAWINGS WHICH HAVE BEEN REVISED BASED ON AVAILABLE FIELD INFORMATION RECORDED BY OTHERS DURING CONSTRUCTION OF THIS CONTRACT. THERE HAS BEEN NO VERIFICATION OF DIMENSIONS SHOWN ON THE CONSTRUCTION DRAWINGS OR THE ACCURACY/COMPLETENESS OF THE FIELD INFORMATION RECEIVED.

SIGNATURE — DATE 2/7/2023

HDR

AS-BUILT REPLACEMENT SHEET

PROFESSIONAL CERTIFICATION

THIS DRAWING WAS ORIGINALLY APPROVED FOR CONSTRUCTION AND SEALED BY BRIAN T. ELLINGTON, A REGISTERED ARCHITECT IN THE STATE OF MARYLAND, NO. 18821.

NOTICE TO CONTRACTORS

- PROJECT ELEVATIONS ARE BASED ON NAVD88 AND HOWARD COUNTY'S BENCHMARK SYSTEM
- PREVIOUS PROJECTS USED OTHER DATUMS
- APPLY THE FOLLOWING CONVERSIONS WHEN USING PREVIOUS CONTRACT DRAWINGS:
  - ADDITION NO. 6: SUBTRACT 0.80 FT
  - PRIOR ADDITIONS: SUBTRACT 1.04 FT

DEPARTMENT OF PUBLIC WORKS
HOWARD COUNTY, MARYLAND

CHIEF, BUREAU OF UTILITIES — DATE

DES: RK
DRN: RK
CHK: BE
DATE: 12/2016

DATE	REV	DESCRIPTION
07/2019		RECORD DRAWING

ARCHITECTURAL

DETAILS 2

LITTLE PATUXENT WATER RECLAMATION PLANT
8TH ADDITION
BIOSOLIDS PROCESSING FACILITIES - PHASE I

CAPITAL PROJECT S-6295
CONTRACT NO. 24-4935

ELECTION DISTRICT NO. 6
HOWARD COUNTY, MARYLAND

SCALE AS SHOWN

SHEET 149 OF 463

A-903

BIM 360://10054364 – Little Patuxent WRP 8th Addition/264591_300_S_V18.rvt
1/12/2022 3:54:51 PM

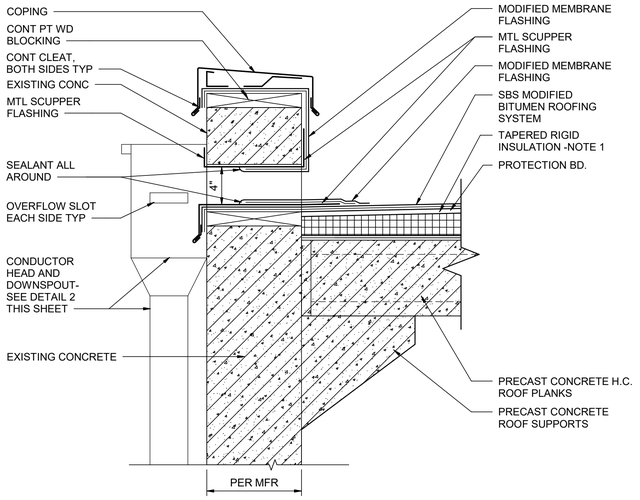

1. MINIMUM ROOF SLOPE SHALL BE 1/4" PER FOOT.
2. MINIMUM SCUPPER SIZE 4"X8".

1 SCUPPER DETAIL
1 1/2" = 1'-0"

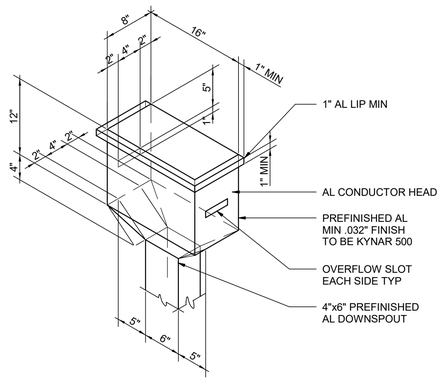

2 CONDUCTOR HEAD
NOT TO SCALE

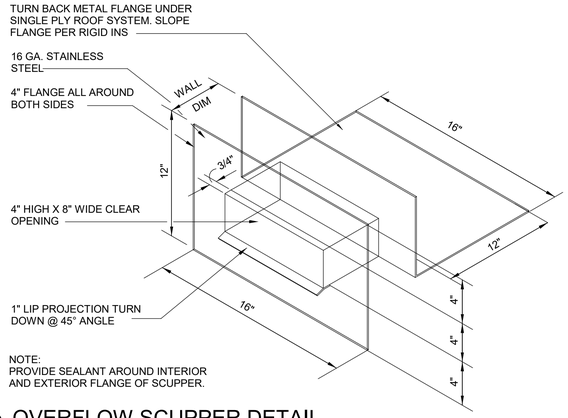

NOTE:
PROVIDE SEALANT AROUND INTERIOR AND EXTERIOR FLANGE OF SCUPPER.

3 OVERFLOW SCUPPER DETAIL
NOT TO SCALE

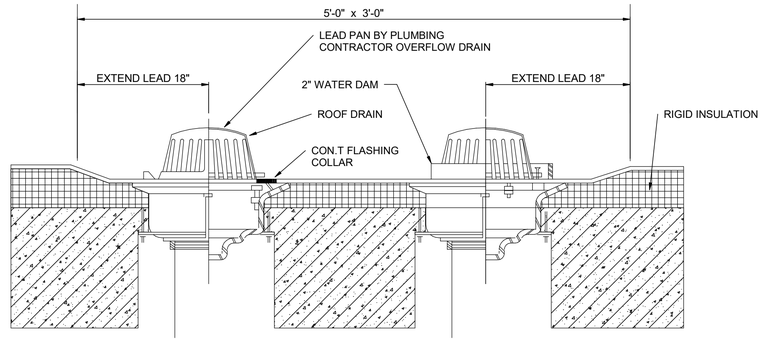

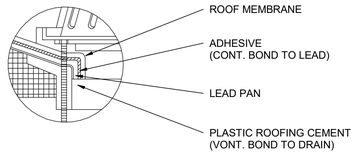

4 TYPICAL ROOF DRAIN DETAIL
A-322 NOT TO SCALE

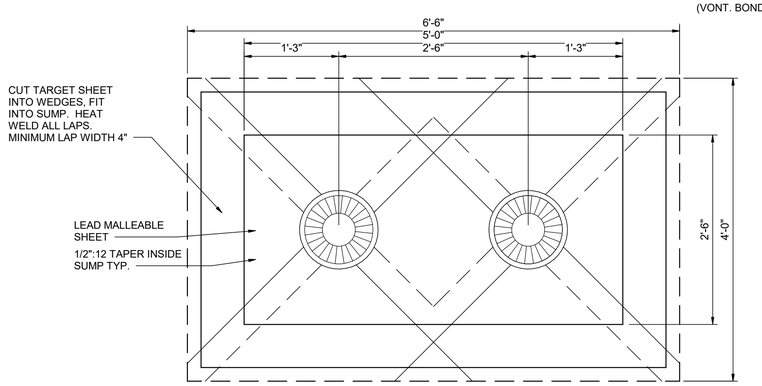

NOTE: ROOF DRAIN SUMP SHALL BE TYP. FOR ALL ROOF DRAINS.

5 ROOF DRAIN SUMP DETAIL
NOT TO SCALE

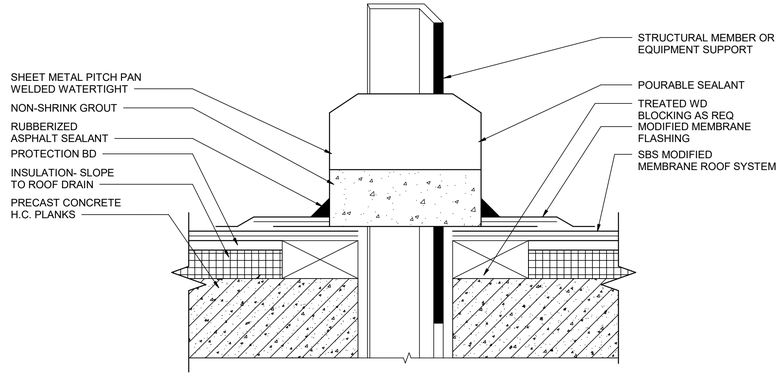

7 PITCH POCKET DETAIL
3" = 1'-0"

THE DRAWINGS IN THIS SET ARE RECORD DRAWINGS. THEY ARE CONSTRUCTION CONTRACT DRAWINGS WHICH HAVE BEEN REVISED BASED ON AVAILABLE FIELD INFORMATION RECORDED BY OTHERS DURING CONSTRUCTION OF THIS CONTRACT. THERE HAS BEEN NO VERIFICATION OF DIMENSIONS SHOWN ON THE CONSTRUCTION DRAWINGS OR THE ACCURACY/COMPLETENESS OF THE FIELD INFORMATION RECEIVED.

SIGNATURE _____ DATE 2/7/2023

AS-BUILT REPLACEMENT SHEET

PROFESSIONAL CERTIFICATION
THIS DRAWING WAS ORIGINALLY APPROVED FOR CONSTRUCTION AND SEALED BY BRIAN T. ELLINGTON, A REGISTERED ARCHITECT IN THE STATE OF MARYLAND, NO. 18821.

NOTICE TO CONTRACTORS
- PROJECT ELEVATIONS ARE BASED ON NAVD88 AND HOWARD COUNTY'S BENCHMARK SYSTEM
- PREVIOUS PROJECTS USED OTHER DATUMS
- APPLY THE FOLLOWING CONVERSIONS WHEN USING PREVIOUS CONTRACT DRAWINGS:
  - ADDITION NO. 6: SUBTRACT 0.80 FT
  - PRIOR ADDITIONS: SUBTRACT 1.04 FT

DEPARTMENT OF PUBLIC WORKS
HOWARD COUNTY, MARYLAND

CHIEF, BUREAU OF UTILITIES DATE

DES: RK
DRN: RK
CHK: BE
DATE: 12/2016

DATE	REV	DESCRIPTION
07/2019		RECORD DRAWING

ARCHITECTURAL

DETAILS 3

LITTLE PATUXENT WATER RECLAMATION PLANT
8TH ADDITION
BIOSOLIDS PROCESSING FACILITIES - PHASE I

CAPITAL PROJECT S-6295
CONTRACT NO. 24-4935

ELECTION DISTRICT NO. 6
HOWARD COUNTY, MARYLAND

SCALE AS SHOWN

SHEET 150 OF 463

A-904

BIM 360://10054364 – Little Patuxent WRP 8th Addition/264591_300_S_V18.rvt
1/12/2022 3:54:51 PM

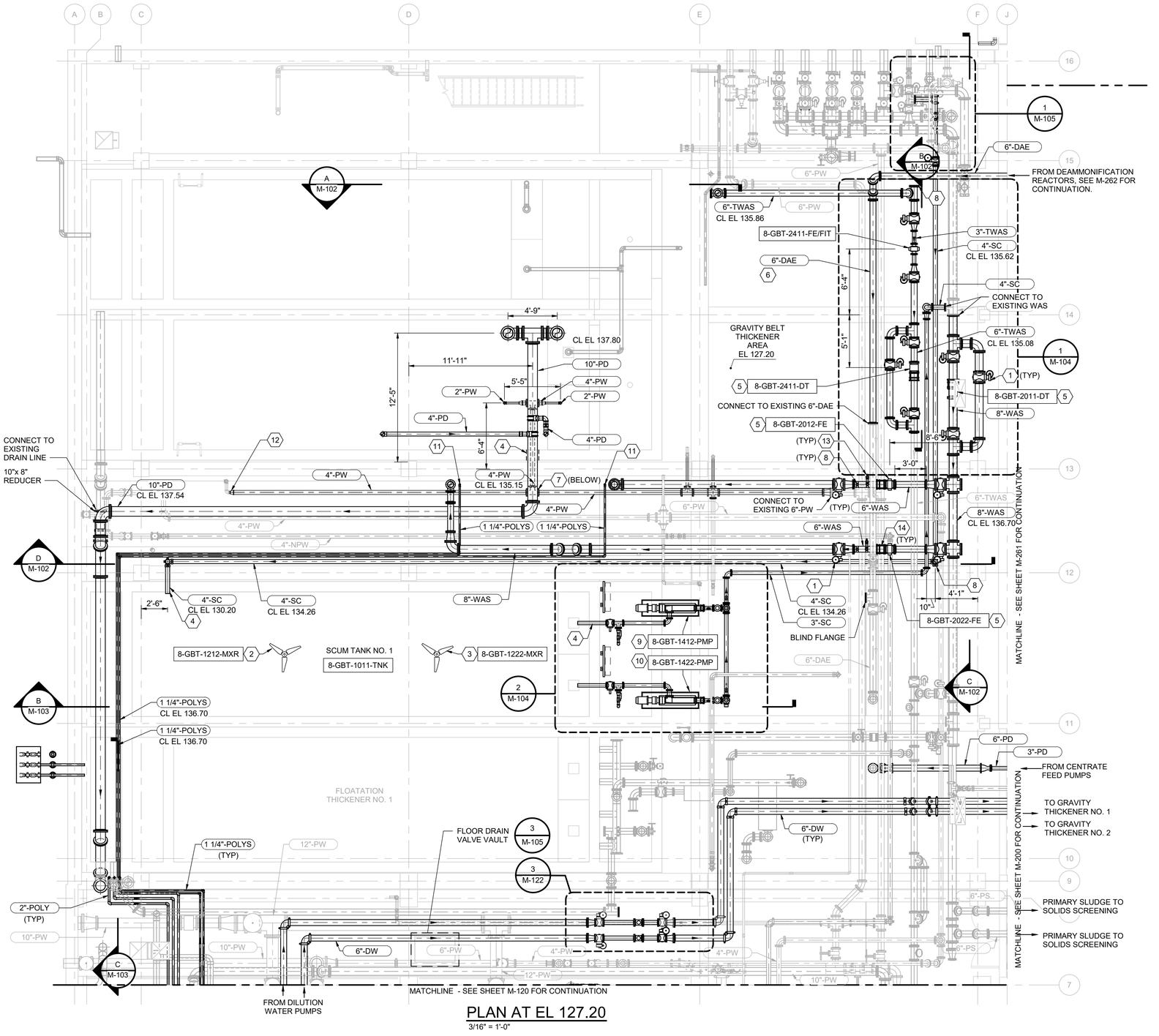

PLAN AT EL 127.20

3/16" = 1'-0"

N

GENERAL NOTES

1. MANUFACTURER TO PROVIDE LOCATION OF POLYMER SLUDGE CONDITIONING SYSTEM UPSTREAM OF GRAVITY BELT THICKENERS. POLYMER SOLUTION PIPING HAS BEEN ROUTED TO THE APPROXIMATE LOCATION OF THE POLYMER SLUDGE CONDITIONING SYSTEM, BUT SHALL BE THE RESPONSIBILITY OF THE CONTRACTOR TO CONNECT THE POLYMER SOLUTION PIPING TO THE MANUFACTURER SPECIFIED INJECTION LOCATION.
2. CONTRACTOR TO COORDINATE LOCATION OF 10" PD PIPING FROM GBT'S W/ GBT EQUIPMENT MANUFACTURER PROVIDED.

KEY NOTES (X)

1 8" PLUG VALVE
2 SCUM TANK MIXER NO. 1
3 SCUM TANK MIXER NO. 2
4 WALL PENETRATION, SEE DETAIL 9/S-903.
5 DENSITY METER, SEE DETAIL 3/M-104.
6 SLOPE 6" DAE PIPE TO EXISTING PLANT DRAIN.
7 TAP INTO EXISTING 4"-PW.
8 DRAIN CONNECTION, SEE DETAIL 3/M-902.
9 SCUM PUMP NO. 1
10 SCUM PUMP NO. 2
11 ROUTE 1-1/4"-POLYS PIPING THROUGH FLOOR TO CONNECT TO 8"-WAS LINE GBT. SEE GENERAL NOTE 1 ABOVE.
12 CONNECT TO EXISTING 2"-NPW WITH 4"X2" REDUCER
13 PROVIDE MANUAL AIR RELEASE. SEE DETAIL 5/M-902.
14 DISMANTLING JOINT.

THE DRAWINGS IN THIS SET ARE RECORD DRAWINGS. THEY ARE CONSTRUCTION CONTRACT DRAWINGS WHICH HAVE BEEN REVISED BASED ON AVAILABLE FIELD INFORMATION RECORDED BY OTHERS DURING CONSTRUCTION OF THIS CONTRACT. THERE HAS BEEN NO VERIFICATION OF DIMENSIONS SHOWN ON THE CONSTRUCTION DRAWINGS OR THE ACCURACY/COMPLETENESS OF THE FIELD INFORMATION RECEIVED.

SIGNATURE — DATE 2/7/2023

N

KEY PLAN

BIM 360://10054364 – Little Patuxent WRP 8th Addition/264591_100_D_V18.rvt
1/11/2022 10:30:36 AM

AS-BUILT REPLACEMENT SHEET

PROFESSIONAL CERTIFICATION

THIS DRAWING WAS ORIGINALLY APPROVED FOR CONSTRUCTION AND SEALED BY BRIAN M. BACLCHUNAS, A REGISTERED PROFESSIONAL ENGINEER IN THE STATE OF MARYLAND, NO. 200406

NOTICE TO CONTRACTORS

- PROJECT ELEVATIONS ARE BASED ON NAVD88 AND HOWARD COUNTY'S BENCHMARK SYSTEM
- PREVIOUS PROJECTS USED OTHER DATUMS
- APPLY THE FOLLOWING CONVERSIONS WHEN USING PREVIOUS CONTRACT DRAWINGS:
  - ADDITION NO. 6: SUBTRACT 0.80 FT
  - PRIOR ADDITIONS: SUBTRACT 1.04 FT

DEPARTMENT OF PUBLIC WORKS
HOWARD COUNTY, MARYLAND

CHIEF, BUREAU OF UTILITIES — DATE

DES: MJW
DRN: REE
CHK: JRK
DATE: 12/2016

DATE	REV	DESCRIPTION
07/2019		RECORD DRAWING

PROCESS

GRAVITY BELT THICKENER AREA PLAN - EL 127.20

LITTLE PATUXENT WATER RECLAMATION PLANT
8TH ADDITION
BIOSOLIDS PROCESSING FACILITIES - PHASE I

CAPITAL PROJECT S-6295
CONTRACT NO. 24-4935

ELECTION DISTRICT NO. 6
HOWARD COUNTY, MARYLAND

SCALE AS SHOWN

SHEET 151 OF 463

M-100

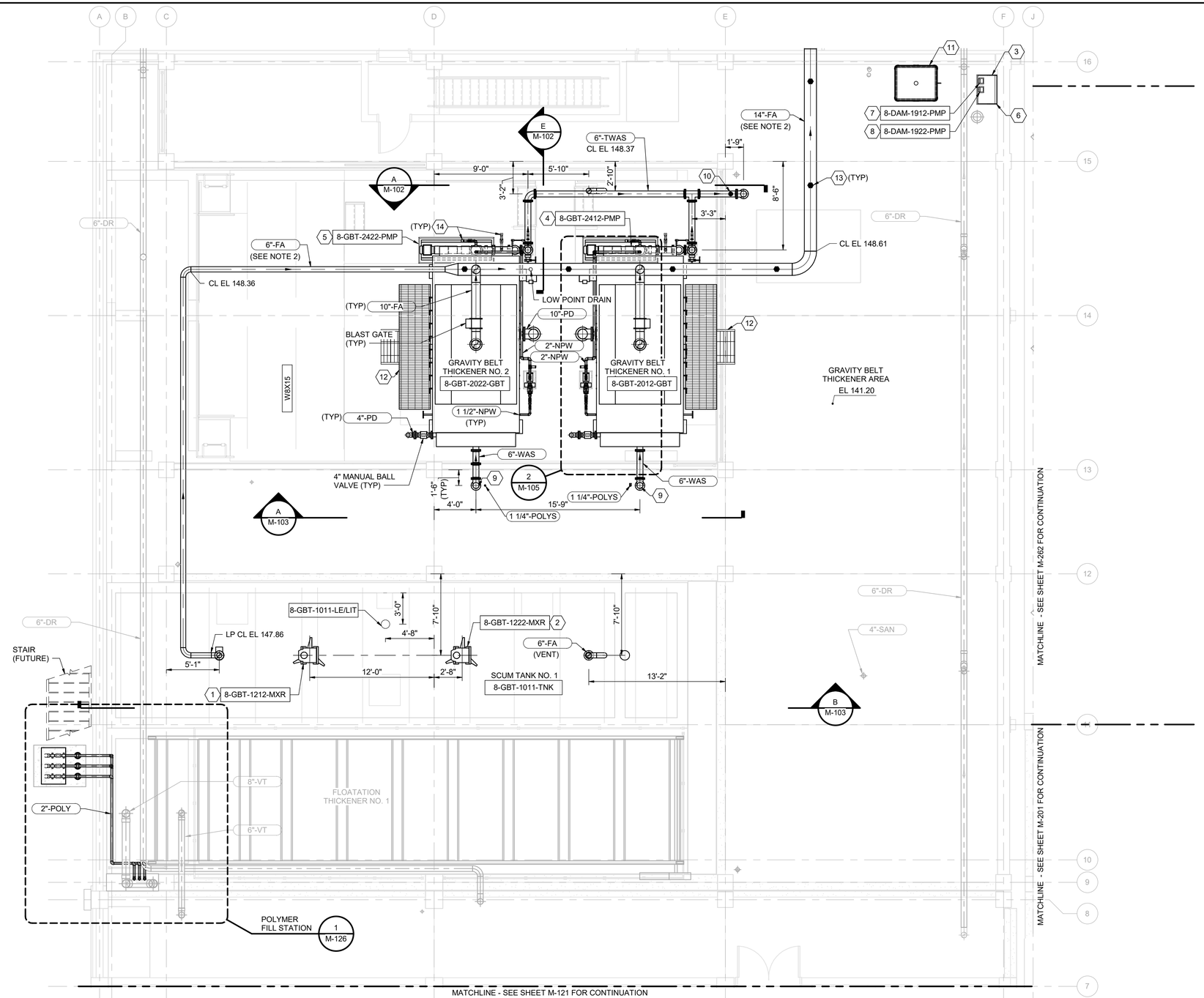

PLAN AT EL 141.20

3/16" = 1'-0"

N

GENERAL NOTES

1. MANUFACTURER SHALL SET LOCATION OF POLYMER SLUDGE CONDITIONING SYSTEM UPSTREAM OF GRAVITY BELT THICKENERS. POLYMER SOLUTION PIPING HAS BEEN ROUTED TO THE APPROXIMATE LOCATION OF THE POLYMER SLUDGE CONDITIONING SYSTEM, BUT SHALL BE THE RESPONSIBILITY OF THE CONTRACTOR TO CONNECT THE POLYMER SOLUTION PIPING TO THE MANUFACTURER SPECIFIED INJECTION LOCATION.
2. SLOPE DUCTWORK TOWARDS SCUM TANK NO. 1 @ 1/8 INCH PER FOOT.

KEY NOTES (X)

1 SCUM TANK MIXER NO. 1
2 SCUM TANK MIXER NO. 2
3 (2) 1/2" MICRO-NUTRIENT FEED LINES (ONE PER PUMP, ONE LINE PER DEAMMONIFICATION REACTOR). SLOPE DOWN TO DEAMMONIFICATION REACTORS. SEE M-266 FOR CONTINUATION.
4 THICKENED WAS PUMP NO. 1
5 THICKENED WAS PUMP NO. 2
6 DUPLEX CHEMICAL FEED PUMP SKID BY DEAMMONIFICATION SYSTEM SUPPLIER. REFER TO SCHEMATIC I/602 FOR DETAILS.
7 MICRO-NUTRIENT FEED PUMP NO. 1.
8 MICRO-NUTRIENT FEED PUMP NO. 2.
9 DRILL FLOOR PENETRATIONS FOR 2" FILL PIPE. ROUGHEN CONCRETE. USE EPOXY/POURABLE GROUT TO FILL AROUND OPENING.
10 AIR RELEASE VALVE.
11 275 GAL MICRO-NUTRIENT STORAGE TOTE, FURNISHED BY DEAMMONIFICATION SYSTEM SUPPLIER.
12 GRAVITY BELT THICKENER ACCESS PLATFORM. CONTRACTOR TO COORDINATE PLATFORM DIMENSIONS AND ELEVATION WITH EQUIPMENT PROVIDED.
13 PIPE SUPPORT, SEE DETAIL 4/M-906. SPACE @ 10'-0" MAX.
14 DRAIN CONNECTION, SEE DETAIL 3/M-902.

THE DRAWINGS IN THIS SET ARE RECORD DRAWINGS. THEY ARE CONSTRUCTION CONTRACT DRAWINGS WHICH HAVE BEEN REVISED BASED ON AVAILABLE FIELD INFORMATION RECORDED BY OTHERS DURING CONSTRUCTION OF THIS CONTRACT. THERE HAS BEEN NO VERIFICATION OF DIMENSIONS SHOWN ON THE CONSTRUCTION DRAWINGS OR THE ACCURACY/COMPLETENESS OF THE FIELD INFORMATION RECEIVED.

SIGNATURE 2/7/2020 DATE

KEY PLAN

AS-BUILT REPLACEMENT SHEET

PROFESSIONAL CERTIFICATION

THIS DRAWING WAS ORIGINALLY APPROVED FOR CONSTRUCTION AND SEALED BY BRIAN M. BACLCHUNAS, A REGISTERED PROFESSIONAL ENGINEER IN THE STATE OF MARYLAND, NO. 200406

NOTICE TO CONTRACTORS

- PROJECT ELEVATIONS ARE BASED ON NAVD88 AND HOWARD COUNTY'S BENCHMARK SYSTEM
- PREVIOUS PROJECTS USED OTHER DATUMS
- APPLY THE FOLLOWING CONVERSIONS WHEN USING PREVIOUS CONTRACT DRAWINGS:
  - ADDITION NO. 6: SUBTRACT 0.80 FT
  - PRIOR ADDITIONS: SUBTRACT 1.04 FT

DEPARTMENT OF PUBLIC WORKS
HOWARD COUNTY, MARYLAND

CHIEF, BUREAU OF UTILITIES DATE

DES: MJW
DRN: REE
CHK: JRK
DATE: 12/2016

DATE	REV	DESCRIPTION
07/2019		RECORD DRAWING

PROCESS

GRAVITY BELT THICKENER AREA PLAN - EL 141.20

LITTLE PATUXENT WATER RECLAMATION PLANT
8TH ADDITION
BIOSOLIDS PROCESSING FACILITIES - PHASE I

CAPITAL PROJECT S-6295
CONTRACT NO. 24-4935

ELECTION DISTRICT NO. 6
HOWARD COUNTY, MARYLAND

SCALE AS SHOWN

SHEET 152 OF 463

M-101

BIM 360://10054364 – Little Patuxent WRP 8th Addition/264591_100_D_V18.rvt
1/11/2022 10:30:41 AM

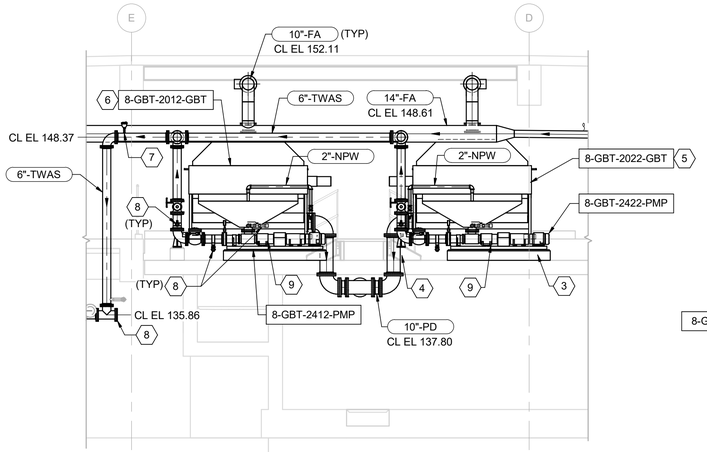

A M-100 SECTION
3/16" = 1'-0"

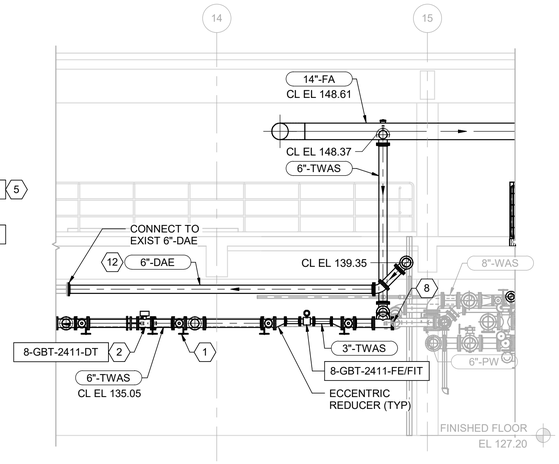

B M-100 SECTION
3/16" = 1'-0"

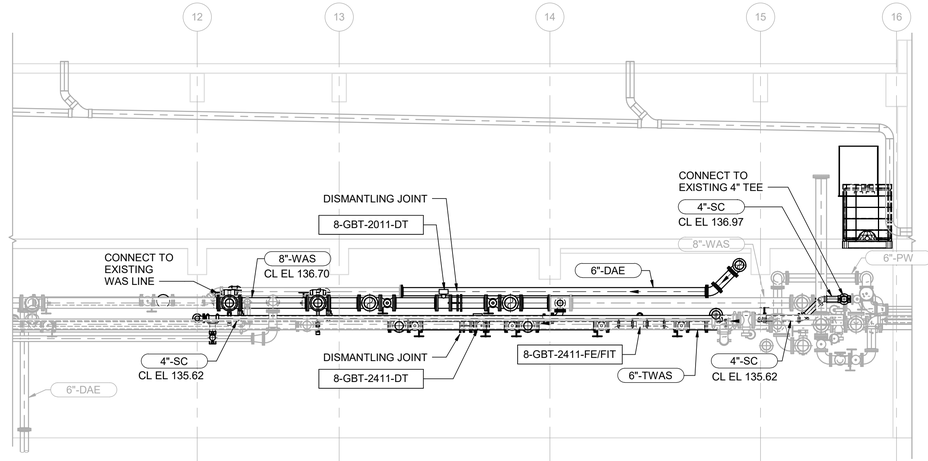

C M-100 SECTION
3/16" = 1'-0"

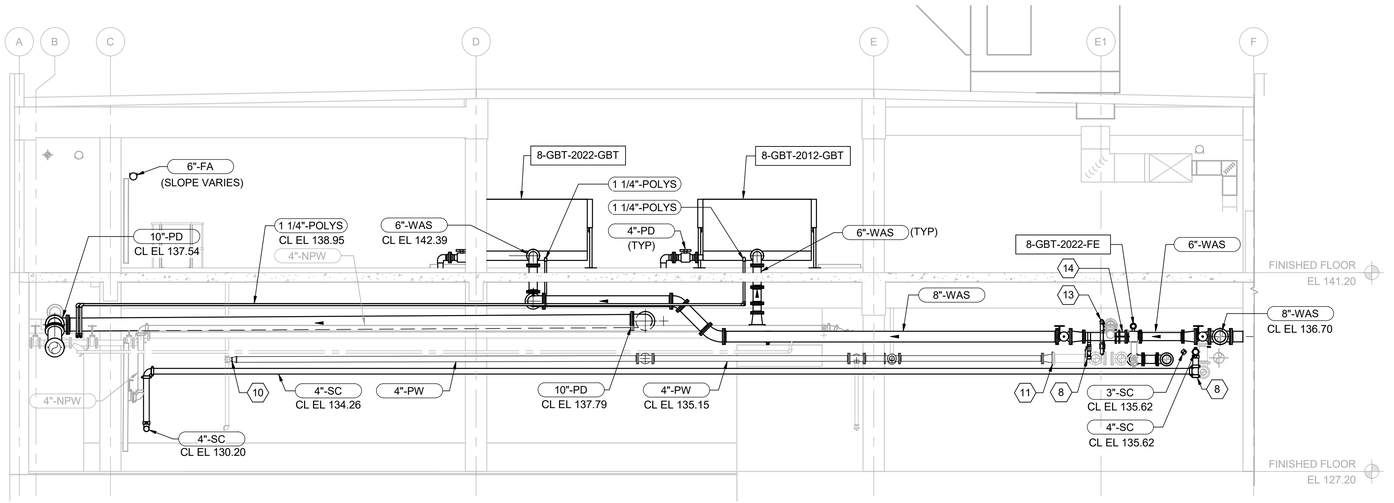

D M-100 SECTION
3/16" = 1'-0"

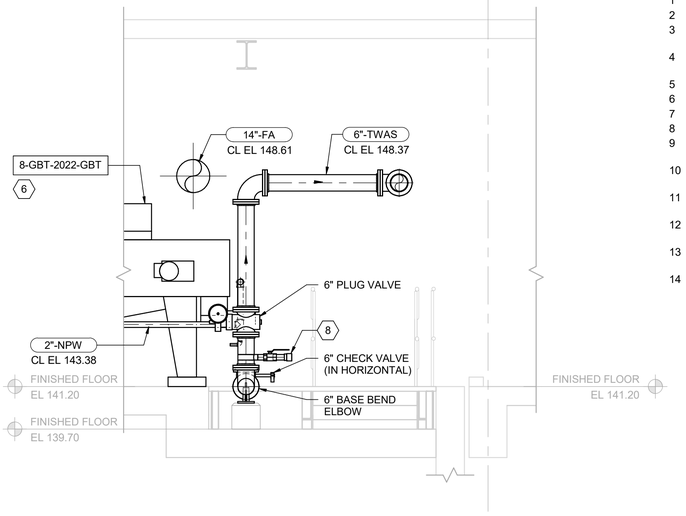

E M-101 SECTION
3/8" = 1'-0"

KEY NOTES (X)

1 6" PLUG VALVE (TYP)
2 DENSITY METER, SEE DETAIL 3/M-104.
3 CONCRETE EQUIPMENT BASE, SEE DETAIL 1/S-904.
4 CONCRETE FITTING BASE, SEE DETAIL 5/M-905.
5 GRAVITY BELT THICKENER NO. 1
6 GRAVITY BELT THICKENER NO. 2
7 AIR RELEASE VALVE.
8 DRAIN CONNECTION, SEE DETAIL 3/M-902.
9 PUMP FLUSHING WATER PANEL. SEE DETAIL 4/M-903.
10 CONNECT TO EXISTING 2"-NPW WITH 4"X2" REDUCER
11 CONNECT TO EXISTING 6"-NPW WITH 6"X4" REDUCER
12 SLOPE 6" DAE PIPE TO EXISTING PLANT DRAIN.
13 PROVIDE MANUAL AIR RELEASE. SEE DETAIL 5/M-902.
14 DISMANTLING JOINT.

THE DRAWINGS IN THIS SET ARE RECORD DRAWINGS. THEY ARE CONSTRUCTION CONTRACT DRAWINGS WHICH HAVE BEEN REVISED BASED ON AVAILABLE FIELD INFORMATION RECORDED BY OTHERS DURING CONSTRUCTION OF THIS CONTRACT. THERE HAS BEEN NO VERIFICATION OF DIMENSIONS SHOWN ON THE CONSTRUCTION DRAWINGS OR THE ACCURACY/COMPLETENESS OF THE FIELD INFORMATION RECEIVED.

SIGNATURE DATE 2/7/2023

BIM 360://10054364 – Little Patuxent WRP 8th Addition/264591_100_D_V18.rvt
1/11/2022 10:30:50 AM

AS-BUILT REPLACEMENT SHEET

PROFESSIONAL CERTIFICATION

THIS DRAWING WAS ORIGINALLY APPROVED FOR CONSTRUCTION AND SEALED BY BRIAN M. BACLCHUNAS, A REGISTERED PROFESSIONAL ENGINEER IN THE STATE OF MARYLAND, NO. 200406

NOTICE TO CONTRACTORS

- PROJECT ELEVATIONS ARE BASED ON NAVD88 AND HOWARD COUNTY'S BENCHMARK SYSTEM
- PREVIOUS PROJECTS USED OTHER DATUMS
- APPLY THE FOLLOWING CONVERSIONS WHEN USING PREVIOUS CONTRACT DRAWINGS:
  - ADDITION NO. 6: SUBTRACT 0.80 FT
  - PRIOR ADDITIONS: SUBTRACT 1.04 FT

DEPARTMENT OF PUBLIC WORKS
HOWARD COUNTY, MARYLAND

CHIEF, BUREAU OF UTILITIES DATE

DES: MJW
DRN: REE
CHK: JRK
DATE: 12/2016

DATE	REV	DESCRIPTION
07/2019		RECORD DRAWING

PROCESS

GRAVITY BELT THICKENER AREA SECTIONS 1

LITTLE PATUXENT WATER RECLAMATION PLANT
8TH ADDITION
BIOSOLIDS PROCESSING FACILITIES - PHASE I

CAPITAL PROJECT S-6295
CONTRACT NO. 24-4935

ELECTION DISTRICT NO. 6
HOWARD COUNTY, MARYLAND

SCALE AS SHOWN

SHEET 153 OF 463

M-102

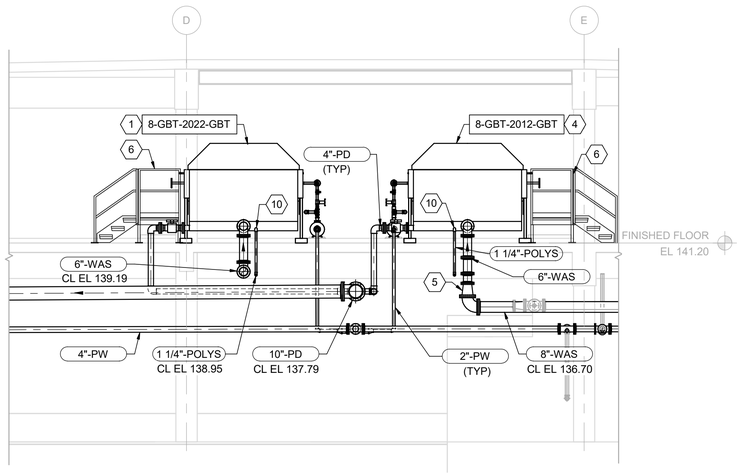

A M-101 SECTION
3/16" = 1'-0"

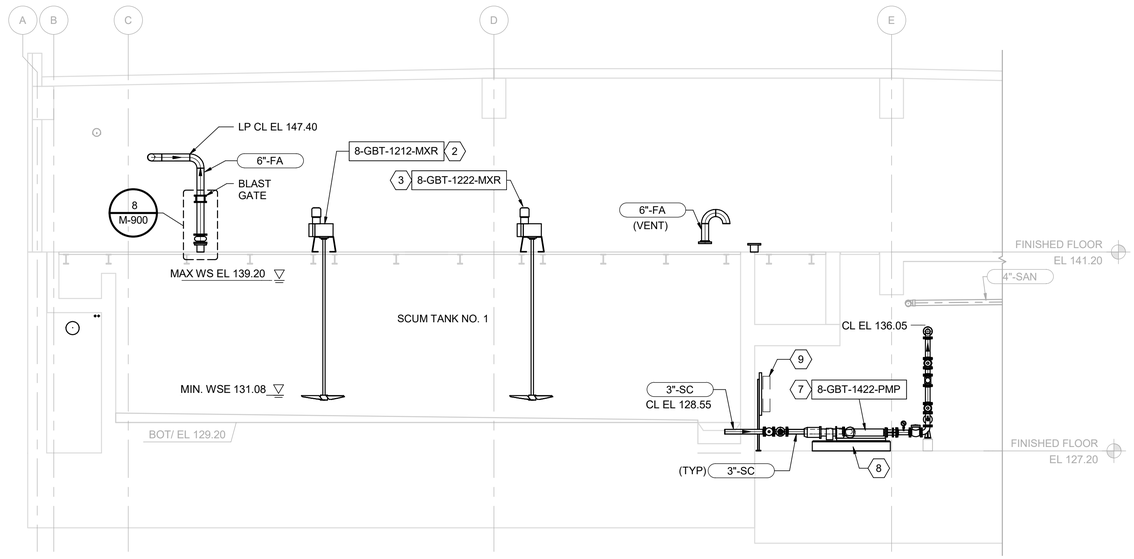

B M-100 SECTION
3/16" = 1'-0"

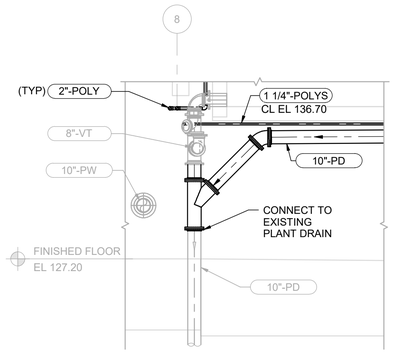

C M-100 SECTION
3/16" = 1'-0"

KEY NOTES (X)

1 GRAVITY BELT THICKENER NO. 1
2 SCUM TANK MIXER NO. 1
3 SCUM TANK MIXER NO. 2
4 GRAVITY BELT THICKENER NO. 2
5 8"X6" REDUCER.
6 GRAVITY BELT THICKENER ACCESS PLATFORM. CONTRACTOR TO COORDINATE PLATFORM DIMENSIONS AND ELEVATION WITH EQUIPMENT PROVIDED.
7 SCUM PUMP NO. 2
8 CONCRETE EQUIPMENT BASE, SEE DETAIL 1/S-904.
9 FLUSHING PANEL, SEE DETAIL 4/M-903
10 CONNECT 1-1/4"- PLYS TO POLYMER SLUDGE CONDITING SYSTEM UPSTREAM OF GRAVITY BELT THICKENERS.

THE DRAWINGS IN THIS SET ARE RECORD DRAWINGS. THEY ARE CONSTRUCTION CONTRACT DRAWINGS WHICH HAVE BEEN REVISED BASED ON AVAILABLE FIELD INFORMATION RECORDED BY OTHERS DURING CONSTRUCTION OF THIS CONTRACT. THERE HAS BEEN NO VERIFICATION OF DIMENSIONS SHOWN ON THE CONSTRUCTION DRAWINGS OR THE ACCURACY/COMPLETENESS OF THE FIELD INFORMATION RECEIVED.

SIGNATURE 2/7/2023 DATE

HDR

AS-BUILT REPLACEMENT SHEET

PROFESSIONAL CERTIFICATION
THIS DRAWING WAS ORIGINALLY APPROVED FOR CONSTRUCTION AND SEALED BY BRIAN M. BACLCHUNAS, A REGISTERED PROFESSIONAL ENGINEER IN THE STATE OF MARYLAND, NO. 200406

NOTICE TO CONTRACTORS
- PROJECT ELEVATIONS ARE BASED ON NAVD88 AND HOWARD COUNTY'S BENCHMARK SYSTEM
- PREVIOUS PROJECTS USED OTHER DATUMS
- APPLY THE FOLLOWING CONVERSIONS WHEN USING PREVIOUS CONTRACT DRAWINGS:
  - ADDITION NO. 6: SUBTRACT 0.80 FT
  - PRIOR ADDITIONS: SUBTRACT 1.04 FT

DEPARTMENT OF PUBLIC WORKS
HOWARD COUNTY, MARYLAND

CHIEF, BUREAU OF UTILITIES DATE

DES: MJW
DRN: REE
CHK: JRK
DATE: 12/2016

DATE	REV	DESCRIPTION
07/2019		RECORD DRAWING

PROCESS

GRAVITY BELT THICKENER AREA SECTIONS 2

LITTLE PATUXENT WATER RECLAMATION PLANT
8TH ADDITION
BIOSOLIDS PROCESSING FACILITIES - PHASE I

CAPITAL PROJECT S-6295
CONTRACT NO. 24-4935

ELECTION DISTRICT NO. 6
HOWARD COUNTY, MARYLAND

SCALE AS SHOWN

SHEET 154 OF 463

M-103

BIM 360://10054364 – Little Patuxent WRP 8th Addition/264591_100_D_V18.rvt
1/11/2022 10:30:54 AM

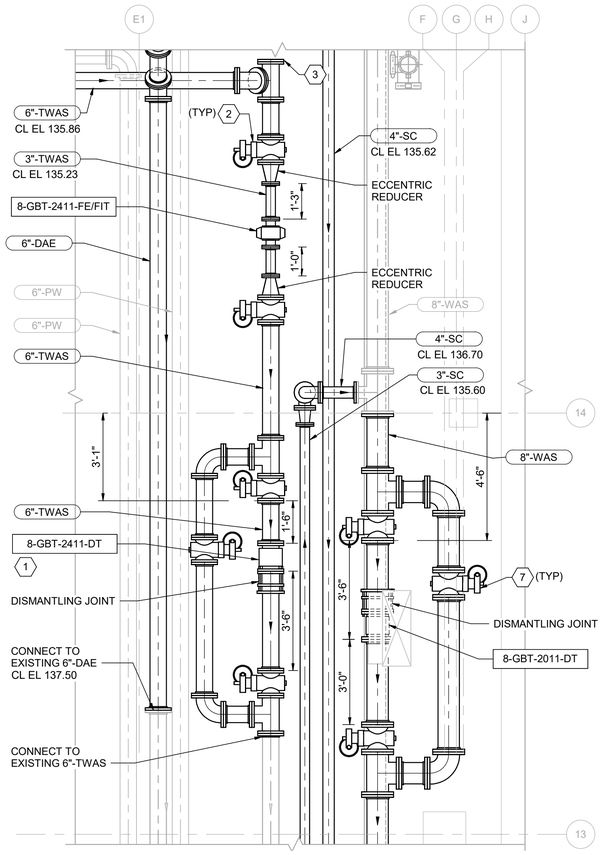

1 M-100 THICKENED WAS METERS PLAN
3/8" = 1'-0"

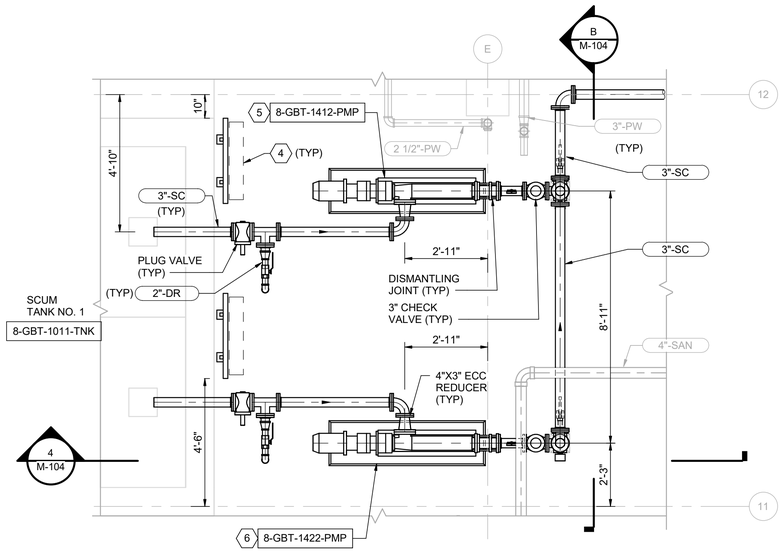

2 M-100 SCUM SYSTEM PLAN
3/8" = 1'-0"

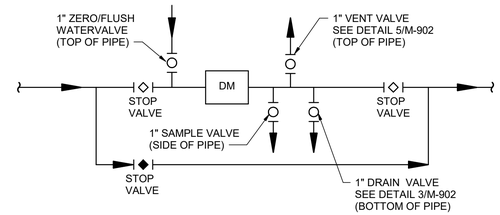

3 DENSITY METER INSTALLATION DIAGRAM
NOT TO SCALE

N

KEY NOTES (X)

1 DENSITY METER, SEE DETAIL 3/M-104.
2 6" PLUG VALVE
3 DRAIN CONNECTION, SEE DETAIL 3/M-902.
4 FLUSHING PANEL, SEE DETAIL 4/M-903
5 SCUM PUMP NO. 1
6 SCUM PUMP NO. 2
7 8" PLUG VALVE
8 PRESSURE GAUGE W/ DIAPHRAGM SEAL, SEE DETAIL 2/I-910

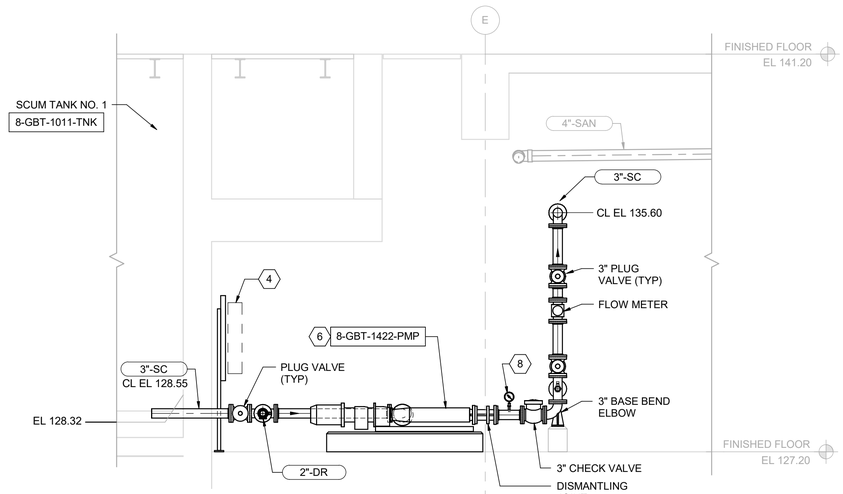

4 M-104 SECTION
3/8" = 1'-0"

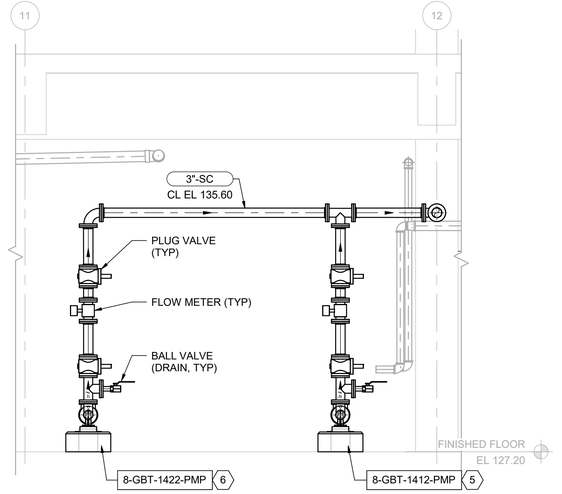

B - SECTION
3/8" = 1'-0"

THE DRAWINGS IN THIS SET ARE RECORD DRAWINGS. THEY ARE CONSTRUCTION CONTRACT DRAWINGS WHICH HAVE BEEN REVISED BASED ON AVAILABLE FIELD INFORMATION RECORDED BY OTHERS DURING CONSTRUCTION OF THIS CONTRACT. THERE HAS BEEN NO VERIFICATION OF DIMENSIONS SHOWN ON THE CONSTRUCTION DRAWINGS OR THE ACCURACY/COMPLETENESS OF THE FIELD INFORMATION RECEIVED.

SIGNATURE _____ DATE 2/7/2023

BIM 360://10054364 – Little Patuxent WRP 8th Addition/264591_100_D_V18.rvt
1/11/2022 10:31:00 AM

AS-BUILT REPLACEMENT SHEET

PROFESSIONAL CERTIFICATION
THIS DRAWING WAS ORIGINALLY APPROVED FOR CONSTRUCTION AND SEALED BY BRIAN M. BACLCHUNAS, A REGISTERED PROFESSIONAL ENGINEER IN THE STATE OF MARYLAND, NO. 200406

NOTICE TO CONTRACTORS
- PROJECT ELEVATIONS ARE BASED ON NAVD88 AND HOWARD COUNTY'S BENCHMARK SYSTEM
- PREVIOUS PROJECTS USED OTHER DATUMS
- APPLY THE FOLLOWING CONVERSIONS WHEN USING PREVIOUS CONTRACT DRAWINGS:
  - ADDITION NO. 6: SUBTRACT 0.80 FT
  - PRIOR ADDITIONS: SUBTRACT 1.04 FT

DEPARTMENT OF PUBLIC WORKS
HOWARD COUNTY, MARYLAND

CHIEF, BUREAU OF UTILITIES DATE

DES: MJW
DRN: REE
CHK: JRK
DATE: 12/2016

DATE	REV	DESCRIPTION
07/2019		RECORD DRAWING

PROCESS

GRAVITY BELT THICKENER AREA PLANS AND SECTIONS 1

LITTLE PATUXENT WATER RECLAMATION PLANT
8TH ADDITION
BIOSOLIDS PROCESSING FACILITIES - PHASE I

CAPITAL PROJECT S-6295
CONTRACT NO. 24-4935

ELECTION DISTRICT NO. 6
HOWARD COUNTY, MARYLAND

SCALE AS SHOWN

SHEET 155 OF 463

M-104

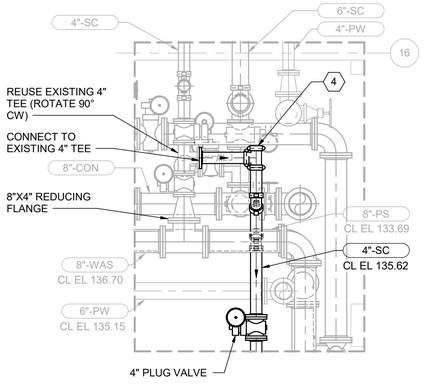

1 / M-100 PIPING PLAN
3/8" = 1'-0"

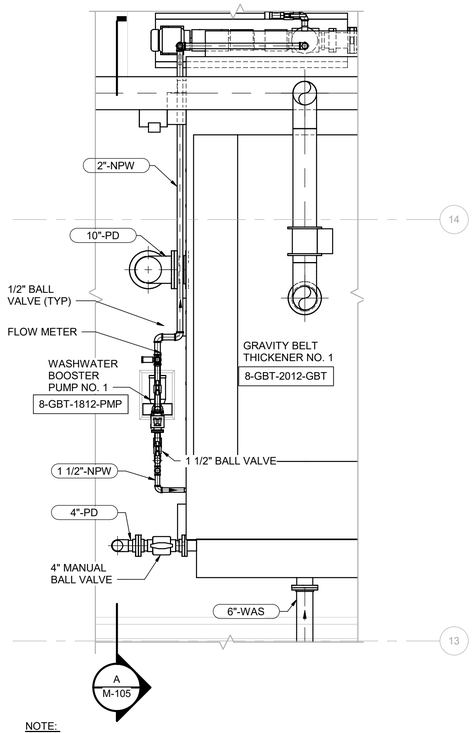

NOTE:
PIPING IS TYPICAL FOR BOTH GRAVITY BELT THICKENERS.

2 / M-101 WASHWATER BOOSTER PUMP PLAN - EL 142.00
3/8" = 1'-0"

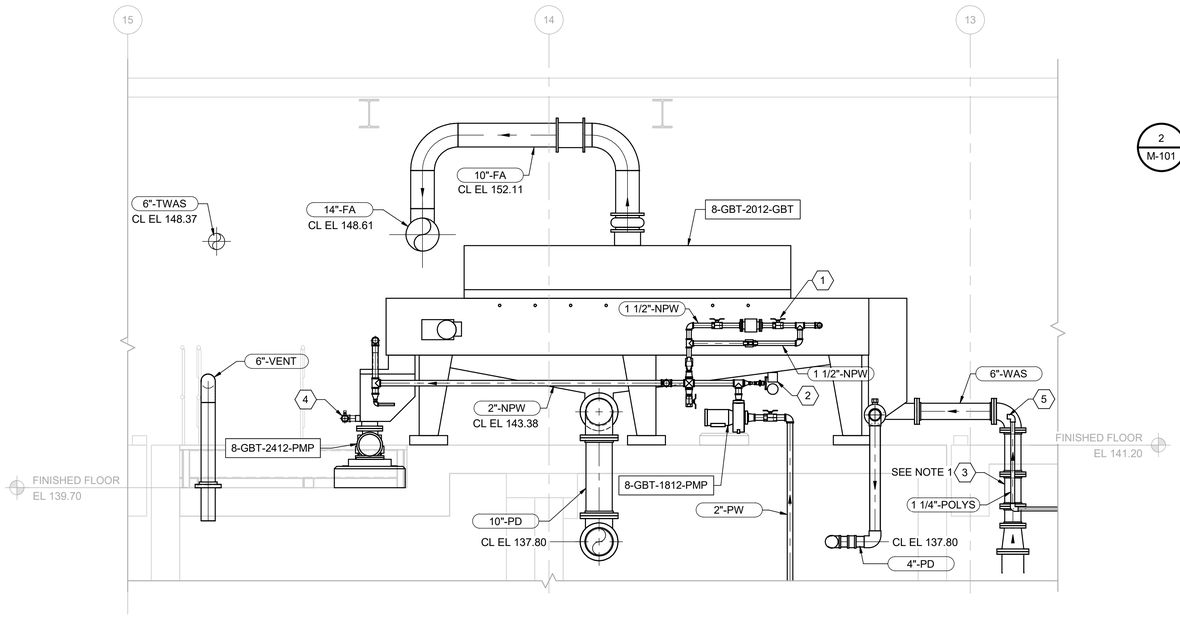

A / M-105 WASHWATER PUMP SECTION
3/8" = 1'-0"

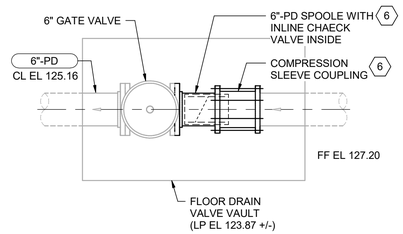

3 / FLOOR DRAIN VALVE VAULT DETAIL
3/4" = 1'-0"

GENERAL NOTES

1. MANUFACTURER TO PROVIDE LOCATION OF POLYMER SLUDGE CONDITIONING SYSTEM UPSTREAM OF GRAVITY BELT THICKENERS. POLYMER SOLUTION PIPING HAS BEEN ROUTED TO THE APPROXIMATE LOCATION OF THE POLYMER SLUDGE CONDITIONING SYSTEM, BUT SHALL BE THE RESPONSIBILITY OF THE CONTRACTOR TO CONNECT THE POLYMER SOLUTION PIPING TO THE MANUFACTURER SPECIFIED INJECTION LOCATION.
2. CONTRACTOR TO COORDINATE LOCATION OF 10" PD PIPING FROM GBT'S W/ GBT EQUIPMENT MANUFACTURER PROVIDED.

KEY NOTES (X)

1 1 1/2" BALL VALVE
2 PRESSURE GAUGE AND SWITCH W/ DIAPHRAGM SEAL.SEE DETAIL 1/I-910
3 POLYMER INJECTION ASSEMBLY.
4 DRAIN CONNECTION, SEE DETAIL 3/M-902.
5 CONNECT 1-1/4"- PLYS TO POLYMER SLUDGE CONDITING SYSTEM UPSTREAM OF GRAVITY BELT THICKENERS.
6 REMOVE EXISTING 6" PD SPOOL AND COMPRESSION SLEEVE COUPLING. INSTALL NEW 6" PD FLG X PE SPOOL WITH TIDEFLEX ULTRAFLEX INLINE CHECK VALVE INSIDE. INSTALL SPOOL AND CHECK VALVE ASSEMBLY WITH NEW COMPRESSION SLEEVE COUPLING. IF NECESSARY CUT EXISTING EXPOSED PIPE TO LENGTH FOR INSTALLATION OF SPOOL AND CHECK VALVE ASSEMBLY.

THE DRAWINGS IN THIS SET ARE RECORD DRAWINGS. THEY ARE CONSTRUCTION CONTRACT DRAWINGS WHICH HAVE BEEN REVISED BASED ON AVAILABLE FIELD INFORMATION RECORDED BY OTHERS DURING CONSTRUCTION OF THIS CONTRACT. THERE HAS BEEN NO VERIFICATION OF DIMENSIONS SHOWN ON THE CONSTRUCTION DRAWINGS OR THE ACCURACY/COMPLETENESS OF THE FIELD INFORMATION RECEIVED.

SIGNATURE 2/7/2023 DATE

BIM 360://10054364 – Little Patuxent WRP 8th Addition/264591_100_D_V18.rvt
1/11/2022 10:31:02 AM

AS-BUILT REPLACEMENT SHEET

PROFESSIONAL CERTIFICATION
THIS DRAWING WAS ORIGINALLY APPROVED FOR CONSTRUCTION AND SEALED BY BRIAN M. BACLCHUNAS, A REGISTERED PROFESSIONAL ENGINEER IN THE STATE OF MARYLAND, NO. 200406

NOTICE TO CONTRACTORS
- PROJECT ELEVATIONS ARE BASED ON NAVD88 AND HOWARD COUNTY'S BENCHMARK SYSTEM
- PREVIOUS PROJECTS USED OTHER DATUMS
- APPLY THE FOLLOWING CONVERSIONS WHEN USING PREVIOUS CONTRACT DRAWINGS:
  - ADDITION NO. 6: SUBTRACT 0.80 FT
  - PRIOR ADDITIONS: SUBTRACT 1.04 FT

DEPARTMENT OF PUBLIC WORKS
HOWARD COUNTY, MARYLAND

CHIEF, BUREAU OF UTILITIES DATE

DES: MJW
DRN: REE
CHK: JRK
DATE: 12/2016

DATE	REV	DESCRIPTION
07/2019		RECORD DRAWING

PROCESS

GRAVITY BELT THICKENER AREA PLANS AND SECTIONS 2

LITTLE PATUXENT WATER RECLAMATION PLANT
8TH ADDITION
BIOSOLIDS PROCESSING FACILITIES - PHASE I

CAPITAL PROJECT S-6295
CONTRACT NO. 24-4935

ELECTION DISTRICT NO. 6
HOWARD COUNTY, MARYLAND

SCALE AS SHOWN

SHEET 156 OF 463

M-105

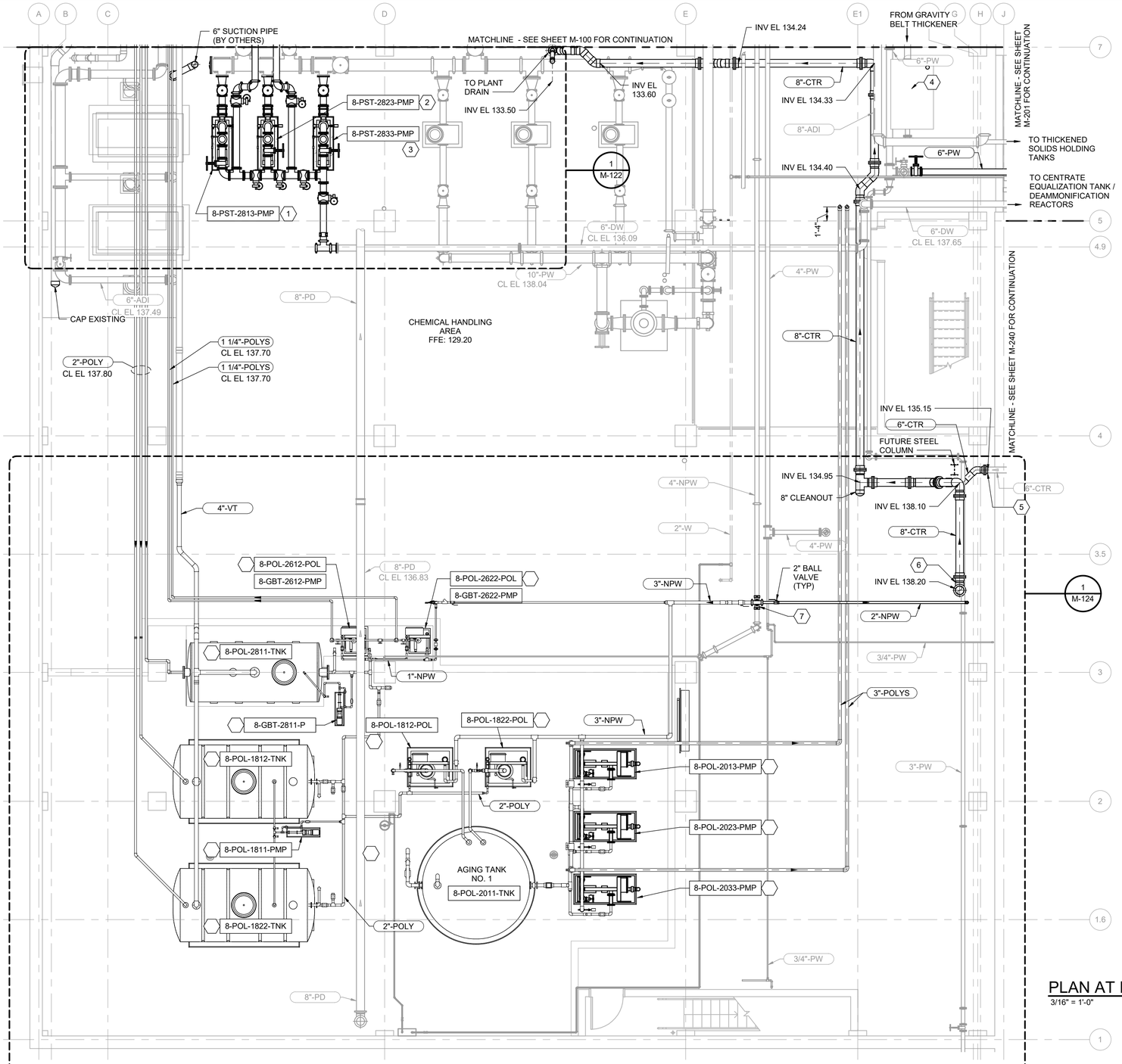

PLAN AT EL 129.20
3/16" = 1'-0"

N

KEY NOTES (X)

1 DILUTION WATER PUMP NO. 1
2 DILUTION WATER PUMP NO. 2
3 DILUTION WATER PUMP NO. 3
4 FLUSHING AND DRAIN CONNECTION. SEE DETAIL 4/M-902.
5 CONNECT TO EXISTING 6"-CTR WITH FLANGED FITTINGS
6 TRANSITION 8"-CTR FROM DIP TO FLANGED PVC PIPING
7 CONNECT TO EXISTING 4" NPW WITH 4"X4"X3" REDUCING TEE AND DIELECTRIC FITTINGS FOR DISSIMILAR METALS.

THE DRAWINGS IN THIS SET ARE RECORD DRAWINGS. THEY ARE CONSTRUCTION CONTRACT DRAWINGS WHICH HAVE BEEN REVISED BASED ON AVAILABLE FIELD INFORMATION RECORDED BY OTHERS DURING CONSTRUCTION OF THIS CONTRACT. THERE HAS BEEN NO VERIFICATION OF DIMENSIONS SHOWN ON THE CONSTRUCTION DRAWINGS OR THE ACCURACY/COMPLETENESS OF THE FIELD INFORMATION RECEIVED.

SIGNATURE

DATE 2/7/2023

N

KEY PLAN

AS-BUILT REPLACEMENT SHEET

PROFESSIONAL CERTIFICATION
THIS DRAWING WAS ORIGINALLY APPROVED FOR CONSTRUCTION AND SEALED BY BRIAN M. BACLCHUNAS, A REGISTERED PROFESSIONAL ENGINEER IN THE STATE OF MARYLAND, NO. 200406

NOTICE TO CONTRACTORS
- PROJECT ELEVATIONS ARE BASED ON NAVD88 AND HOWARD COUNTY'S BENCHMARK SYSTEM
- PREVIOUS PROJECTS USED OTHER DATUMS
- APPLY THE FOLLOWING CONVERSIONS WHEN USING PREVIOUS CONTRACT DRAWINGS:
  - ADDITION NO. 6: SUBTRACT 0.80 FT
  - PRIOR ADDITIONS: SUBTRACT 1.04 FT

DEPARTMENT OF PUBLIC WORKS
HOWARD COUNTY, MARYLAND

CHIEF, BUREAU OF UTILITIES DATE

DES: MJW
DRN: REE
CHK: JRK
DATE: 12/2016

DATE	REV	DESCRIPTION
07/2019		RECORD DRAWING

PROCESS

CHEMICAL HANDLING AREA PLAN EL 129.20

LITTLE PATUXENT WATER RECLAMATION PLANT
8TH ADDITION
BIOSOLIDS PROCESSING FACILITIES - PHASE I

CAPITAL PROJECT S-6295
CONTRACT NO. 24-4935

ELECTION DISTRICT NO. 6
HOWARD COUNTY, MARYLAND

SCALE AS SHOWN

SHEET 157 OF 463

M-120

BIM 360://10054364 – Little Patuxent WRP 8th Addition/264591_100_D_V18.rvt
1/11/2022 10:41:37 AM

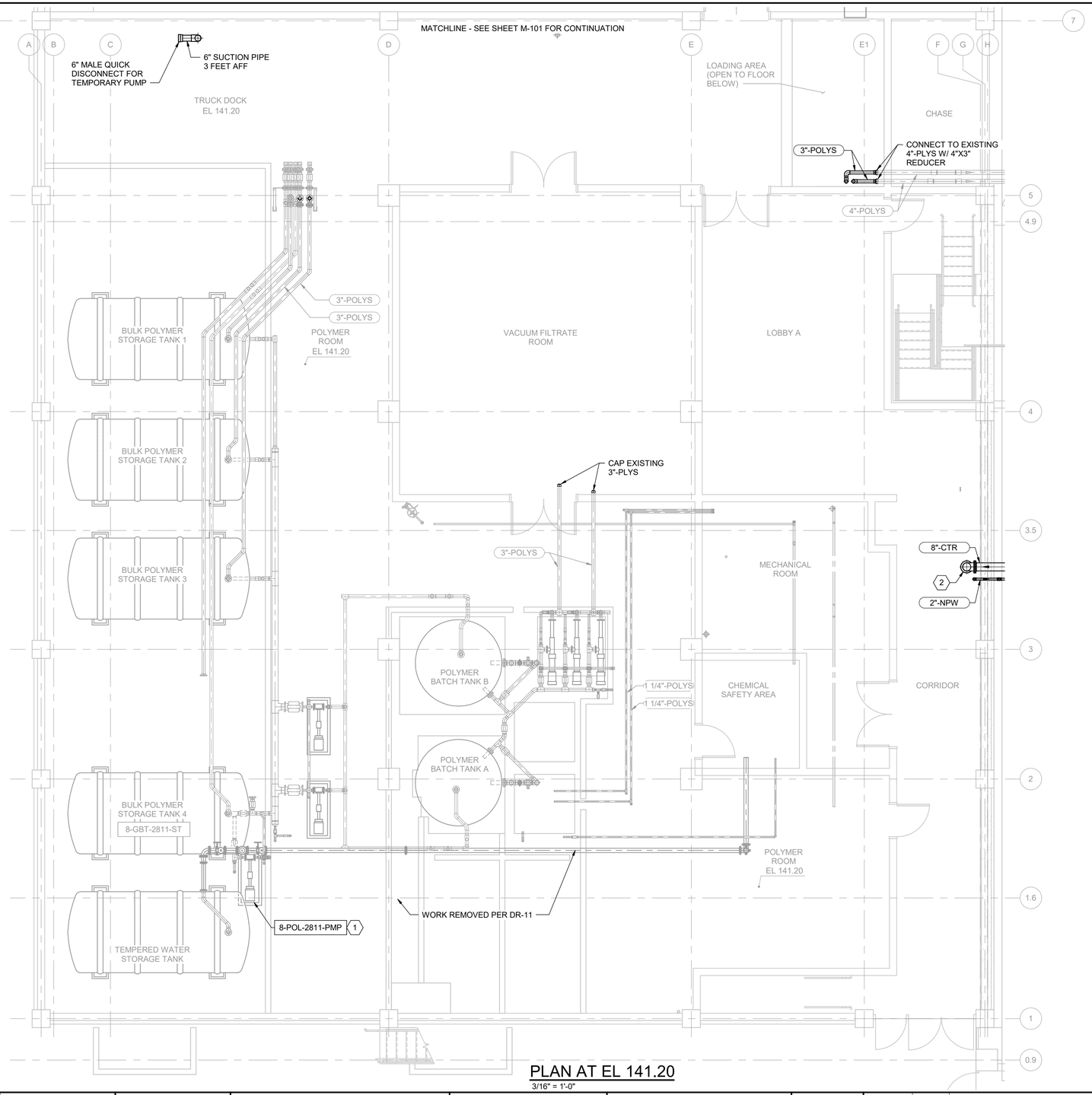

PLAN AT EL 141.20

3/16" = 1'-0"

N

KEY NOTES (X)

1 POLYMER RECIRCULATION PUMP NO. 1

2 FLOOR PENETRATION TYPE G, CATEGORY 1

THE DRAWINGS IN THIS SET ARE RECORD DRAWINGS. THEY ARE CONSTRUCTION CONTRACT DRAWINGS WHICH HAVE BEEN REVISED BASED ON AVAILABLE FIELD INFORMATION RECORDED BY OTHERS DURING CONSTRUCTION OF THIS CONTRACT. THERE HAS BEEN NO VERIFICATION OF DIMENSIONS SHOWN ON THE CONSTRUCTION DRAWINGS OR THE ACCURACY/COMPLETENESS OF THE FIELD INFORMATION RECEIVED.

SIGNATURE

2/7/2023
DATE

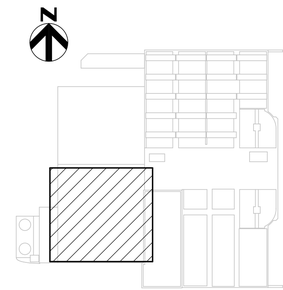

KEY PLAN

AS-BUILT REPLACEMENT SHEET

PROFESSIONAL CERTIFICATION

THIS DRAWING WAS ORIGINALLY APPROVED FOR CONSTRUCTION AND SEALED BY BRIAN M. BACLCHUNAS, A REGISTERED PROFESSIONAL ENGINEER IN THE STATE OF MARYLAND, NO. 200406

NOTICE TO CONTRACTORS

- PROJECT ELEVATIONS ARE BASED ON NAVD88 AND HOWARD COUNTY'S BENCHMARK SYSTEM
- PREVIOUS PROJECTS USED OTHER DATUMS
- APPLY THE FOLLOWING CONVERSIONS WHEN USING PREVIOUS CONTRACT DRAWINGS:
  - ADDITION NO. 6: SUBTRACT 0.80 FT
  - PRIOR ADDITIONS: SUBTRACT 1.04 FT

DEPARTMENT OF PUBLIC WORKS
HOWARD COUNTY, MARYLAND

CHIEF, BUREAU OF UTILITIES DATE

DES: MJW
DRN: REE
CHK: JRK
DATE: 12/2016

DATE	REV	DESCRIPTION
07/2019		RECORD DRAWING

PROCESS

CHEMICAL HANDLING AREA
PLAN EL 141.20

LITTLE PATUXENT WATER RECLAMATION PLANT
8TH ADDITION
BIOSOLIDS PROCESSING FACILITIES - PHASE I

CAPITAL PROJECT S-6295
CONTRACT NO. 24-4935

ELECTION DISTRICT NO. 6
HOWARD COUNTY, MARYLAND

SCALE AS SHOWN

SHEET 158 OF 463

M-121

BIM 360://10054364 – Little Patuxent WRP 8th Addition/264591_100_D_V18.rvt
1/11/2022 10:41:41 AM

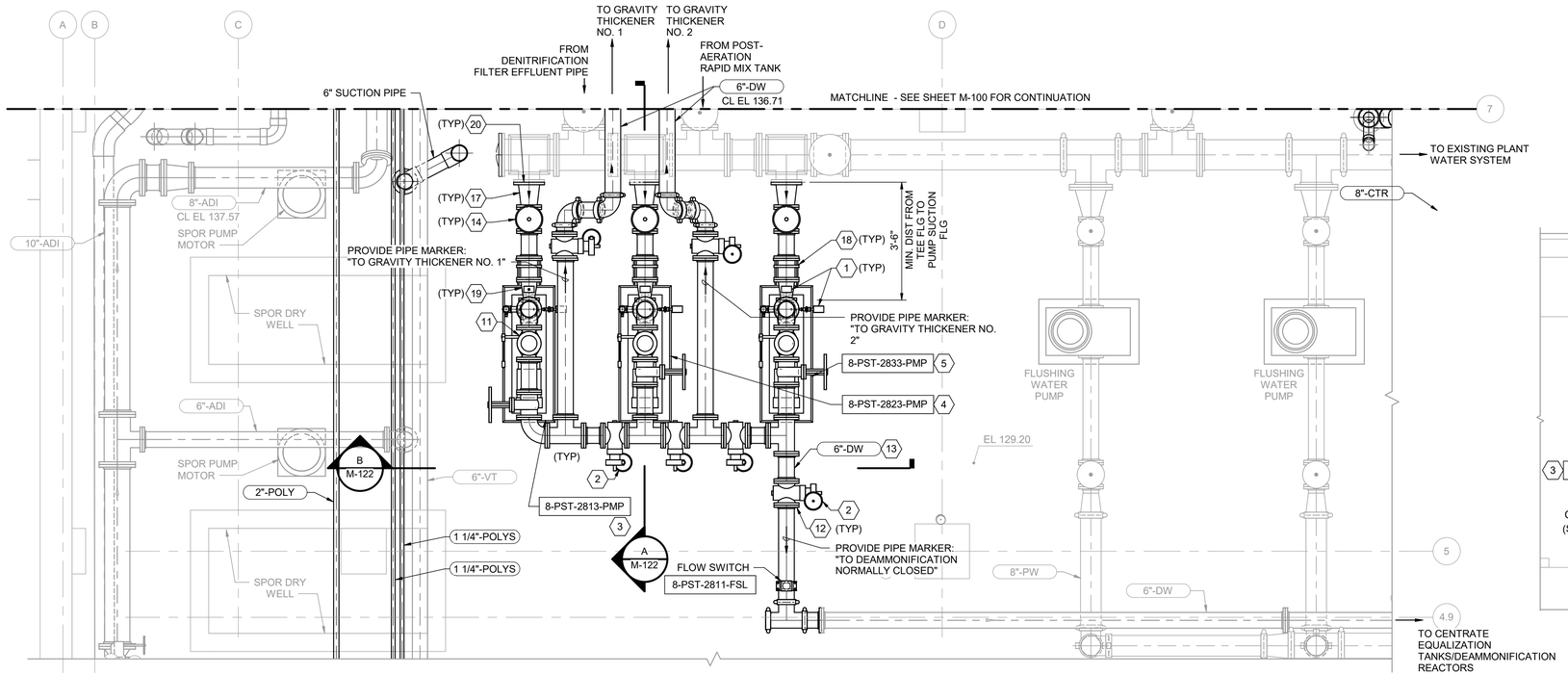

1 M-120 DILUTION WATER PUMP ENLARGED PLAN - EL 129.20
3/8" = 1'-0"

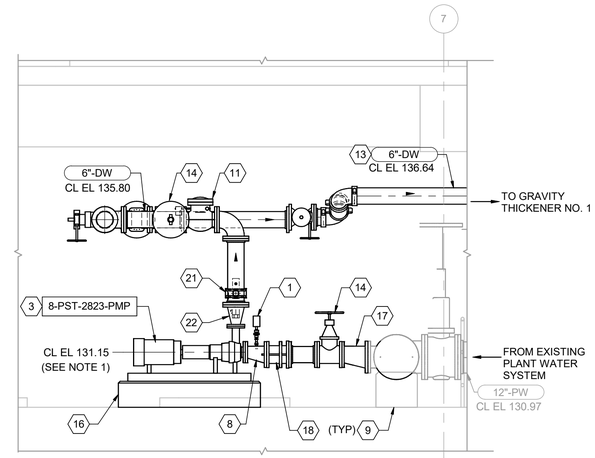

A M-122 SECTION
3/8" = 1'-0"

GENERAL NOTES

1. CONTRACTOR TO VERIFY AND MATCH EXISTING ELEVATIONS WHEN CONNECTING TO EXISITNG PIPING SYSTEMS.

KEY NOTES (X)

1 PRESSURE GAUGE W/ DIAPHRAGM SEAL, SEE DETAIL 2/I-910
2 6" PLUG VALVE
3 DILUTION WATER PUMP NO. 1
4 DILUTION WATER PUMP NO. 2
5 DILUTION WATER PUMP NO. 3
6 4" FLOW METER AND TRANSMITTER.SEE DETAIL 4/I-909.
7 4" PLUG VALVE
8 6"X4" ECCENTRIC REDUCER
9 CONCRETE FITTING BASE, SEE DETAIL 5/M-905.
10 DRAIN CONNECTION SEE DETAIL 3/M-902.
11 6" SWING CHECK VALVE
12 GROOVED PIPE FLANGE COUPLING ADAPTER.
13 INSTALL FLANGED PIPE WHERE SHOWN ON DRAWING.
14 6" GATE VALVE
15 PROVIDE MANUAL VENT PER DETAIL 5/M-902 AND DRAIN CONNECTION PER DETAIL 3/M-902.
16 CONCRETE EQUIPMENT BASE, SEE DETAIL 1/S-904.
17 8"x6" ECCENTRIC REDUCER
18 DISMANTLING JOINT
19 6"X4" REDUCER
20 CONNECT TO EXISTING 12"X8" REDUCING TEE
21 TAPPING SADDLE
22 6"X3" REDUCER

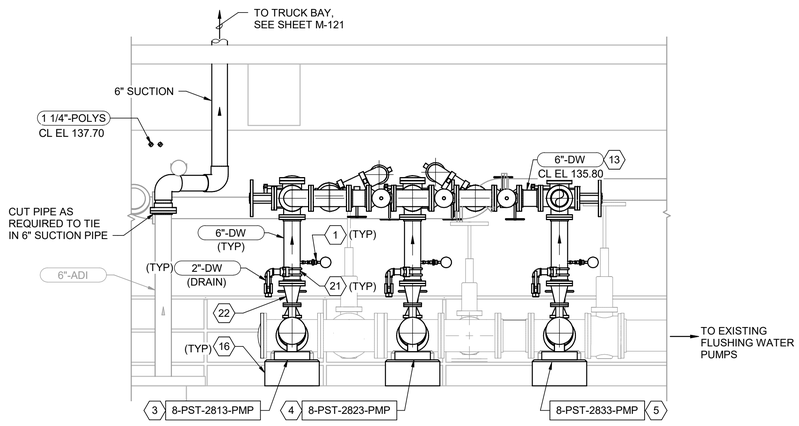

B M-122 SECTION
3/8" = 1'-0"

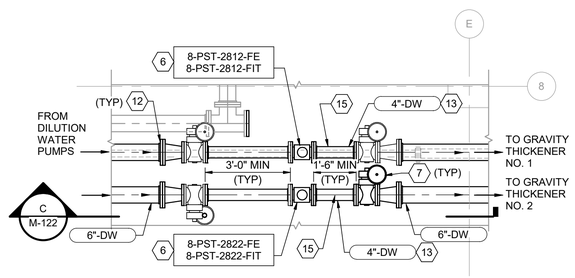

3 M-100 DILUTION WATER METER ENLARGED PLAN
3/8" = 1'-0"

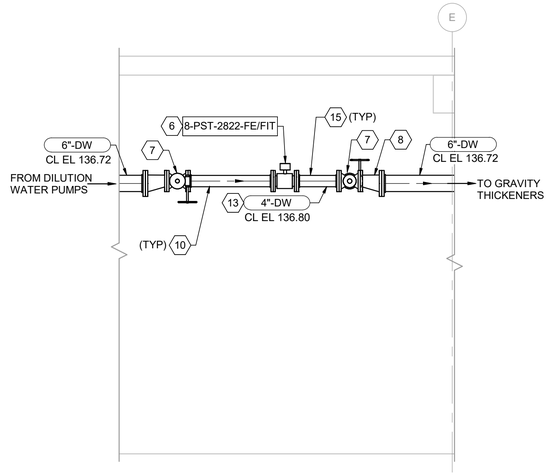

C M-122 DILUTION WATER FLOW METER SECTION
3/8" = 1'-0"

THE DRAWINGS IN THIS SET ARE RECORD DRAWINGS. THEY ARE CONSTRUCTION CONTRACT DRAWINGS WHICH HAVE BEEN REVISED BASED ON AVAILABLE FIELD INFORMATION RECORDED BY OTHERS DURING CONSTRUCTION OF THIS CONTRACT. THERE HAS BEEN NO VERIFICATION OF DIMENSIONS SHOWN ON THE CONSTRUCTION DRAWINGS OR THE ACCURACY/COMPLETENESS OF THE FIELD INFORMATION RECEIVED.

SIGNATURE — DATE 2/7/2023

AS-BUILT REPLACEMENT SHEET

PROFESSIONAL CERTIFICATION

THIS DRAWING WAS ORIGINALLY APPROVED FOR CONSTRUCTION AND SEALED BY BRIAN M. BACLCHUNAS, A REGISTERED PROFESSIONAL ENGINEER IN THE STATE OF MARYLAND, NO. 200406

NOTICE TO CONTRACTORS

- PROJECT ELEVATIONS ARE BASED ON NAVD88 AND HOWARD COUNTY'S BENCHMARK SYSTEM
- PREVIOUS PROJECTS USED OTHER DATUMS
- APPLY THE FOLLOWING CONVERSIONS WHEN USING PREVIOUS CONTRACT DRAWINGS:
  - ADDITION NO. 6: SUBTRACT 0.80 FT
  - PRIOR ADDITIONS: SUBTRACT 1.04 FT

DEPARTMENT OF PUBLIC WORKS
HOWARD COUNTY, MARYLAND

CHIEF, BUREAU OF UTILITIES — DATE

DES: KLP
DRN: REE
CHK: JRK
DATE: 12/2016

DATE	REV	DESCRIPTION
07/2019		RECORD DRAWING

PROCESS

CHEMICAL HANDLING AREA DILUTION WATER PUMPS PLAN AND SECTIONS

LITTLE PATUXENT WATER RECLAMATION PLANT
8TH ADDITION
BIOSOLIDS PROCESSING FACILITIES - PHASE I

CAPITAL PROJECT S-6295
CONTRACT NO. 24-4935

ELECTION DISTRICT NO. 6
HOWARD COUNTY, MARYLAND

SCALE AS SHOWN

SHEET 159 OF 463

M-122

BIM 360://10054364 – Little Patuxent WRP 8th Addition/264591_100_D_V18.rvt
1/11/2022 10:41:49 AM

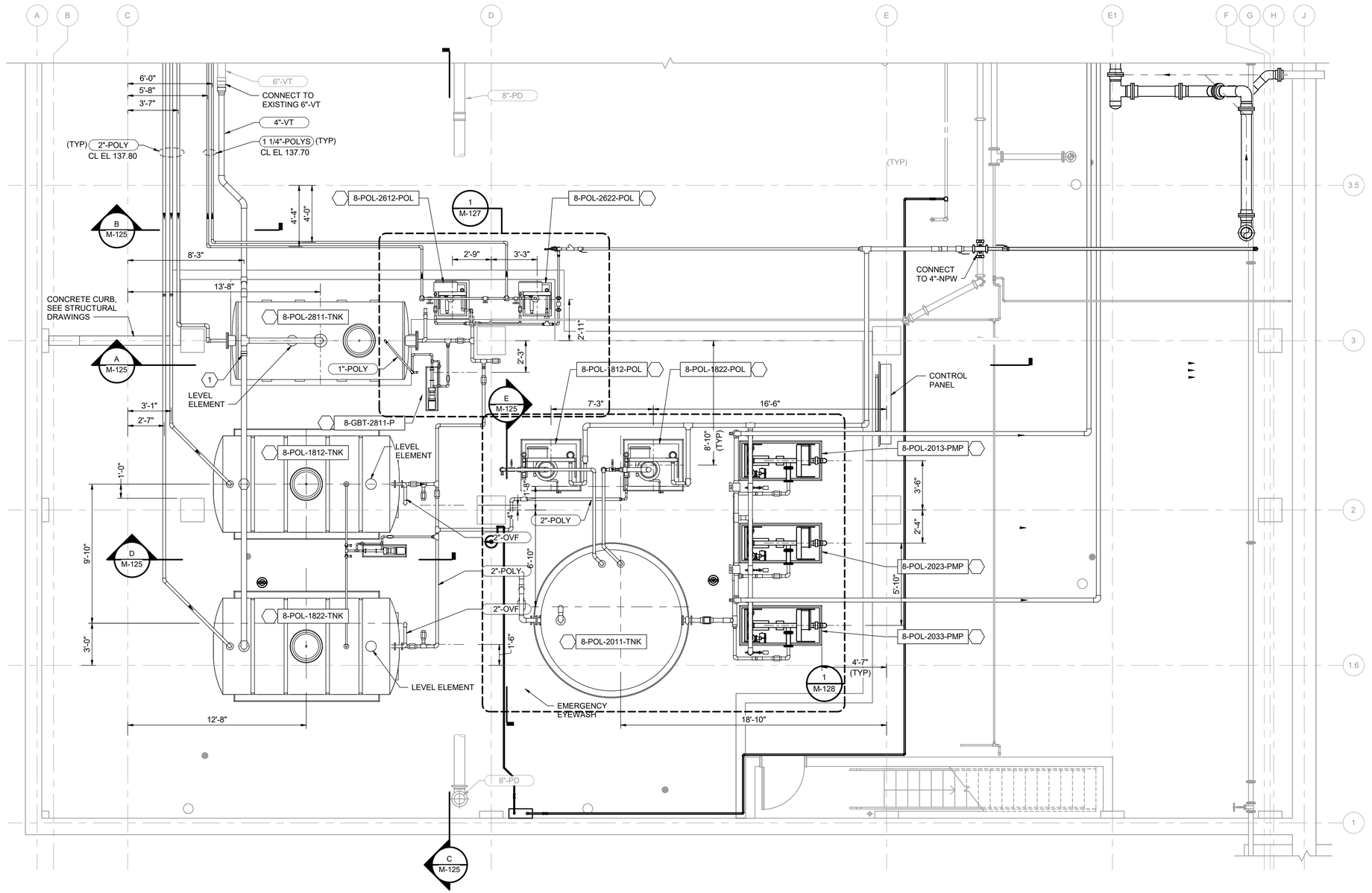

1 M-120 ENALARGED PARTIAL PLAN - EL 129.20

1/4" = 1'-0"

KEY NOTES (X)

1 REMOVE CAP AND CONNECT 4"-VT

THE DRAWINGS IN THIS SET ARE RECORD DRAWINGS. THEY ARE CONSTRUCTION CONTRACT DRAWINGS WHICH HAVE BEEN REVISED BASED ON AVAILABLE FIELD INFORMATION RECORDED BY OTHERS DURING CONSTRUCTION OF THIS CONTRACT. THERE HAS BEEN NO VERIFICATION OF DIMENSIONS SHOWN ON THE CONSTRUCTION DRAWINGS OR THE ACCURACY/COMPLETENESS OF THE FIELD INFORMATION RECEIVED.

SIGNATURE

2/7/2023
DATE

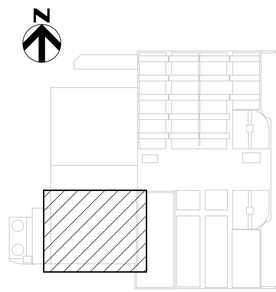

KEY PLAN

AS-BUILT REPLACEMENT SHEET

PROFESSIONAL CERTIFICATION

THIS DRAWING WAS ORIGINALLY APPROVED FOR CONSTRUCTION AND SEALED BY BRIAN M. BACLCHUNAS, A REGISTERED PROFESSIONAL ENGINEER IN THE STATE OF MARYLAND, NO. 200406

NOTICE TO CONTRACTORS

- PROJECT ELEVATIONS ARE BASED ON NAVD88 AND HOWARD COUNTY'S BENCHMARK SYSTEM
- PREVIOUS PROJECTS USED OTHER DATUMS
- APPLY THE FOLLOWING CONVERSIONS WHEN USING PREVIOUS CONTRACT DRAWINGS:
  - ADDITION NO. 6: SUBTRACT 0.80 FT
  - PRIOR ADDITIONS: SUBTRACT 1.04 FT

DEPARTMENT OF PUBLIC WORKS
HOWARD COUNTY, MARYLAND

CHIEF, BUREAU OF UTILITIES DATE

DES: MJW
DRN: REE
CHK: JRK
DATE: 12/2016

DATE	REV	DESCRIPTION
07/2019		RECORD DRAWING

PROCESS

CHEMICAL HANDLING AREA
POLYMER SYSTEM PLAN - EL 129.20

LITTLE PATUXENT WATER RECLAMATION PLANT
8TH ADDITION
BIOSOLIDS PROCESSING FACILITIES - PHASE I

CAPITAL PROJECT S-6295
CONTRACT NO. 24-4935

ELECTION DISTRICT NO. 6
HOWARD COUNTY, MARYLAND

SCALE AS SHOWN

SHEET 160 OF 463

M-124

BIM 360://10054364 – Little Patuxent WRP 8th Addition/264591_100_D_V18.rvt
1/11/2022 10:41:53 AM

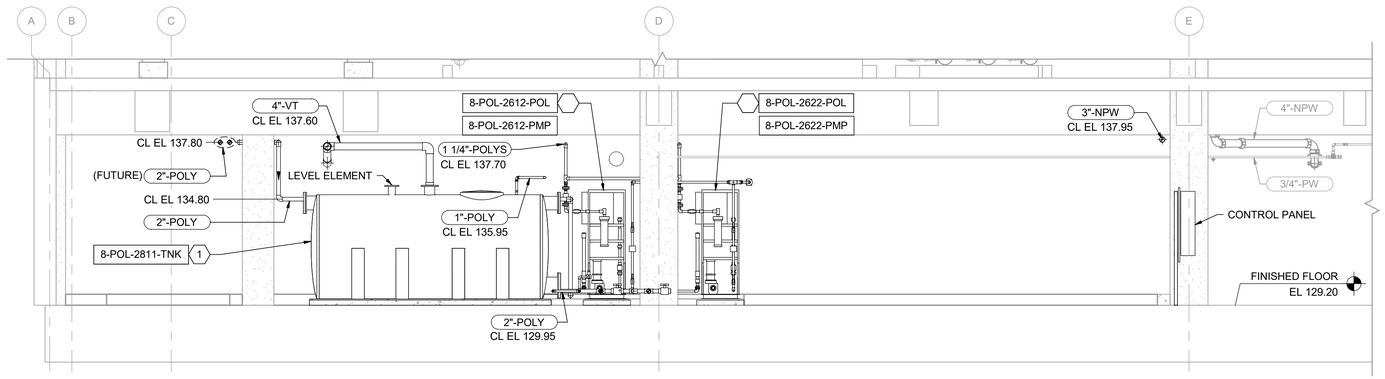

A M-124 SECTION
1/4" = 1'-0"

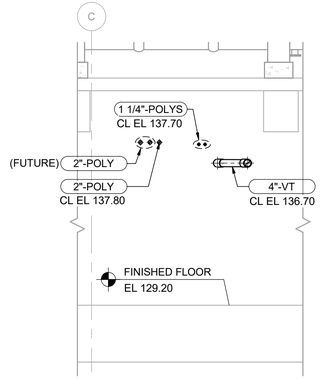

B M-124 SECTION
1/4" = 1'-0"

KEY NOTES (X)

1 GBT POLYMER STORAGE NO. 1 (RELOCATED CENTRATE TANK)
2 REMOVE PIPE CAP AND CONNECT TO EXISTING SYSTEM
3 3" MANUAL BALL VALVE

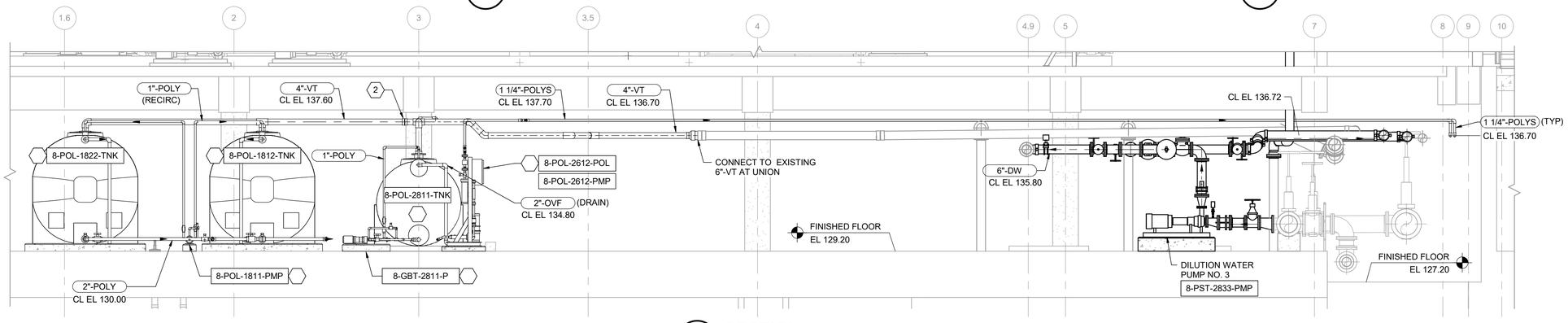

C M-124 SECTION
1/4" = 1'-0"

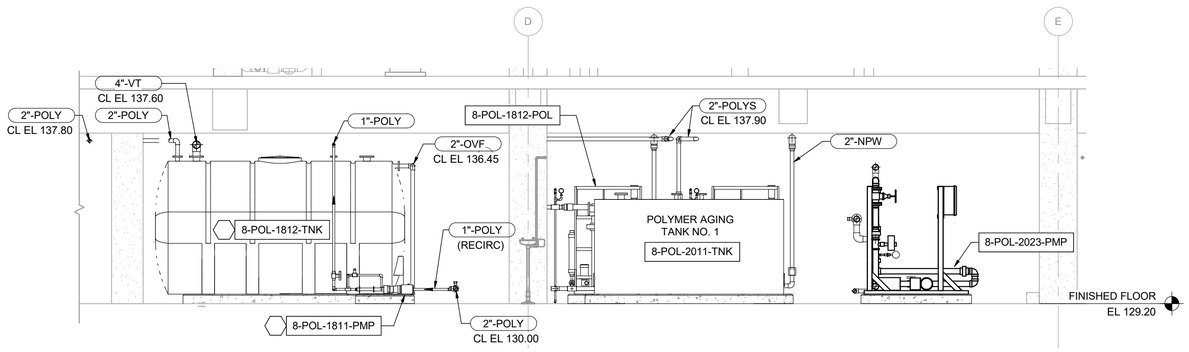

D M-124 SECTION
1/4" = 1'-0"

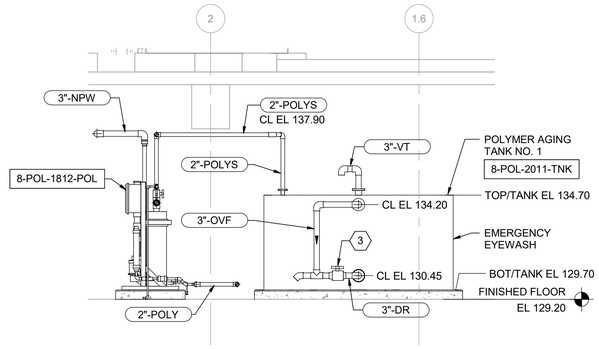

E M-124 SECTION
1/4" = 1'-0"

THE DRAWINGS IN THIS SET ARE RECORD DRAWINGS. THEY ARE CONSTRUCTION CONTRACT DRAWINGS WHICH HAVE BEEN REVISED BASED ON AVAILABLE FIELD INFORMATION RECORDED BY OTHERS DURING CONSTRUCTION OF THIS CONTRACT. THERE HAS BEEN NO VERIFICATION OF DIMENSIONS SHOWN ON THE CONSTRUCTION DRAWINGS OR THE ACCURACY/COMPLETENESS OF THE FIELD INFORMATION RECEIVED.

SIGNATURE 2/7/2022 DATE

HDR

AS-BUILT REPLACEMENT SHEET

PROFESSIONAL CERTIFICATION

THIS DRAWING WAS ORIGINALLY APPROVED FOR CONSTRUCTION AND SEALED BY BRIAN M. BACLCHUNAS, A REGISTERED PROFESSIONAL ENGINEER IN THE STATE OF MARYLAND, NO. 200406

NOTICE TO CONTRACTORS

- PROJECT ELEVATIONS ARE BASED ON NAVD88 AND HOWARD COUNTY'S BENCHMARK SYSTEM
- PREVIOUS PROJECTS USED OTHER DATUMS
- APPLY THE FOLLOWING CONVERSIONS WHEN USING PREVIOUS CONTRACT DRAWINGS:
  - ADDITION NO. 6: SUBTRACT 0.80 FT
  - PRIOR ADDITIONS: SUBTRACT 1.04 FT

DEPARTMENT OF PUBLIC WORKS
HOWARD COUNTY, MARYLAND

CHIEF, BUREAU OF UTILITIES DATE

DES: MJW
DRN: SLB
CHK: JRK
DATE: 12/2016

DATE	REV	DESCRIPTION
07/2019		RECORD DRAWING

PROCESS

CHEMICAL HANDLING AREA POLYMER SYSTEM SECTIONS AND DETAILS

LITTLE PATUXENT WATER RECLAMATION PLANT
8TH ADDITION
BIOSOLIDS PROCESSING FACILITIES - PHASE I

CAPITAL PROJECT S-6295
CONTRACT NO. 24-4935

ELECTION DISTRICT NO. 6
HOWARD COUNTY, MARYLAND

SCALE AS SHOWN

SHEET 161 OF 463

M-125

BIM 360://10054364 – Little Patuxent WRP 8th Addition/264591_100_D_V18.rvt
1/11/2022 10:42:00 AM

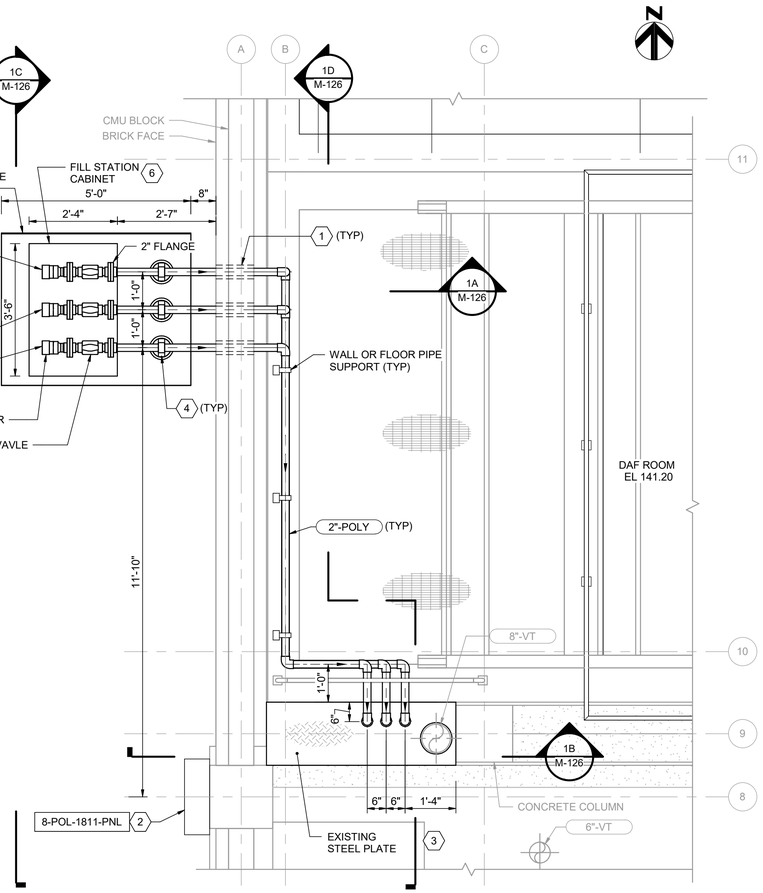

1 M-101 POLYMER FILL STATION DETAIL - EL 141.20
1/2" = 1'-0"

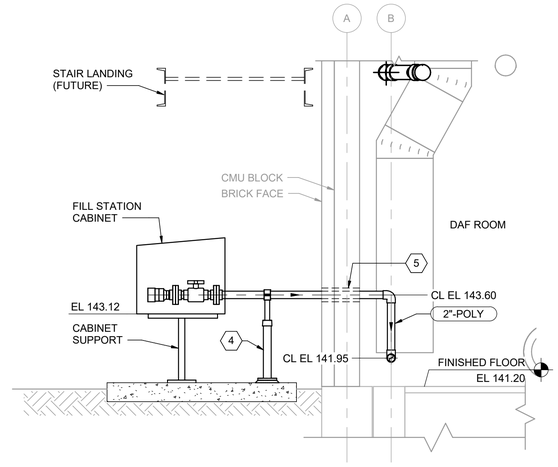

1A M-126 SECTION
1/2" = 1'-0"

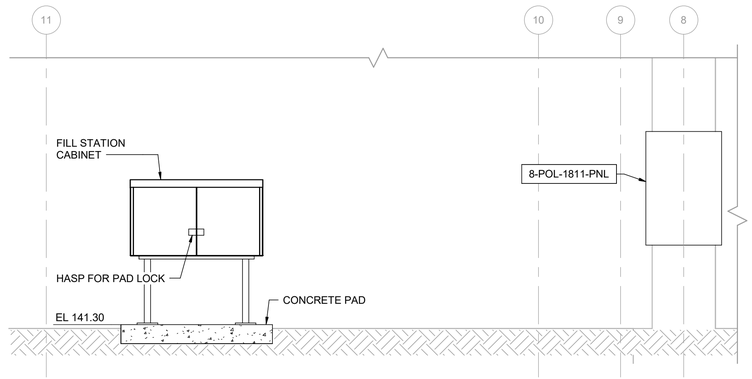

1C M-126 SECTION
1/2" = 1'-0"

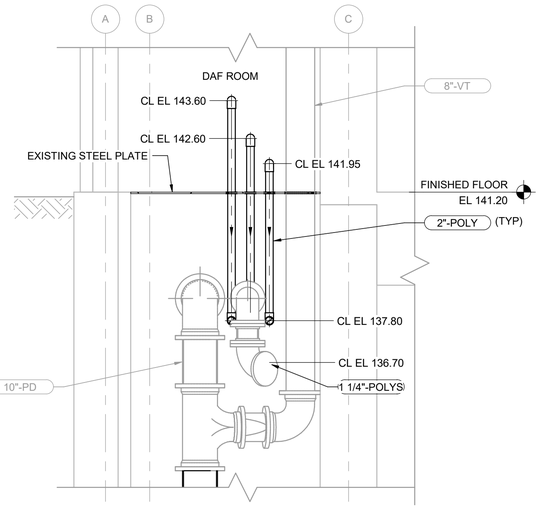

1B M-126 SECTION
1/2" = 1'-0"

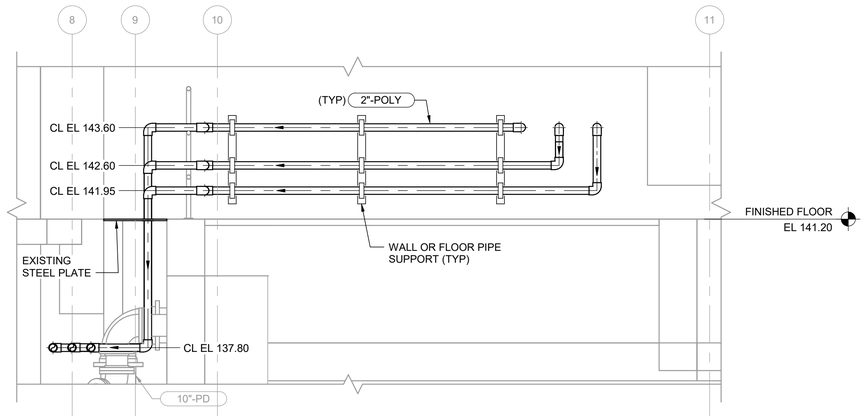

1D M-126 SECTION
1/2" = 1'-0"

KEY NOTES (X)

1. CORE DRILL PIPE PENETRATION. SEAL PENETRATION BY HAND PACKING WITH GROUT. USE GROUT SCREENS TO PREVENT GROUT FROM FILLING CMU CAVITY.
2. REFER TO ELECTRICAL PANEL SCHEDULE ON E-902 FOR PANEL REQUIREMENTS AND CONDUIT SCHEDULE ON E-906.
3. MODIFY EXISTING STEEL PLATE, PROVIDE PENETRATIONS FOR 2"-PLY
4. ADJUSTABLE PIPE SUPPORT, SEE DETAIL 1/M-905
5. WALL PENETRATION, SEE DETAIL 9/S-903.
6. PROVIDE LABELES TO IDENTIFY STORAGE VESSEL BEING SERVICED
7. SERVICE CONNECTION FOR GBT POLYMER STORAGE NO. 1
8. SERVICE CONNECTION FOR CENTRIFUGE POLYMER STORAGE NO. 1
9. SERVICE CONNECTION FOR CENTRIFUGE POLYMER STORAGE NO. 2

THE DRAWINGS IN THIS SET ARE RECORD DRAWINGS. THEY ARE CONSTRUCTION CONTRACT DRAWINGS WHICH HAVE BEEN REVISED BASED ON AVAILABLE FIELD INFORMATION RECORDED BY OTHERS DURING CONSTRUCTION OF THIS CONTRACT. THERE HAS BEEN NO VERIFICATION OF DIMENSIONS SHOWN ON THE CONSTRUCTION DRAWINGS OR THE ACCURACY/COMPLETENESS OF THE FIELD INFORMATION RECEIVED.

SIGNATURE _____ DATE 2/7/2023

BIM 360://10054364 – Little Patuxent WRP 8th Addition/264591_100_D_V18.rvt
1/11/2022 10:42:04 AM

AS-BUILT REPLACEMENT SHEET

PROFESSIONAL CERTIFICATION

THIS DRAWING WAS ORIGINALLY APPROVED FOR CONSTRUCTION AND SEALED BY BRIAN M. BACLCHUNAS, A REGISTERED PROFESSIONAL ENGINEER IN THE STATE OF MARYLAND, NO. 200406

NOTICE TO CONTRACTORS

- PROJECT ELEVATIONS ARE BASED ON NAVD88 AND HOWARD COUNTY'S BENCHMARK SYSTEM
- PREVIOUS PROJECTS USED OTHER DATUMS
- APPLY THE FOLLOWING CONVERSIONS WHEN USING PREVIOUS CONTRACT DRAWINGS:
  - ADDITION NO. 6: SUBTRACT 0.80 FT
  - PRIOR ADDITIONS: SUBTRACT 1.04 FT

DEPARTMENT OF PUBLIC WORKS
HOWARD COUNTY, MARYLAND

CHIEF, BUREAU OF UTILITIES DATE

DES: MJW
DRN: SLB
CHK: JRK
DATE: 12/2016

DATE	REV	DESCRIPTION
07/2019		RECORD DRAWING

PROCESS

CHEMICAL HANDLING AREA POLYMER SYSTEM DETAIL

LITTLE PATUXENT WATER RECLAMATION PLANT
8TH ADDITION
BIOSOLIDS PROCESSING FACILITIES - PHASE I

CAPITAL PROJECT S-6295
CONTRACT NO. 24-4935

ELECTION DISTRICT NO. 6
HOWARD COUNTY, MARYLAND

SCALE AS SHOWN

SHEET 162 OF 463

M-126

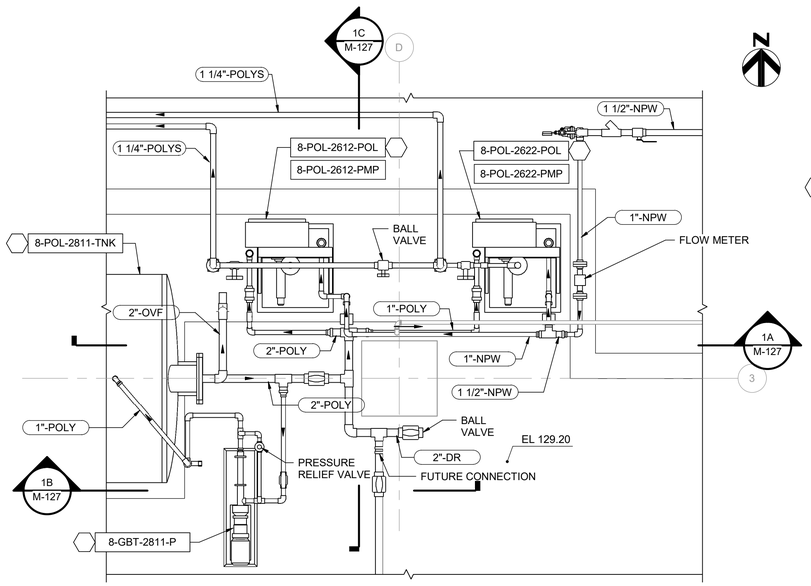

1 M-124 GBT POLYMER SYSTEM DETAIL
1/2" = 1'-0"

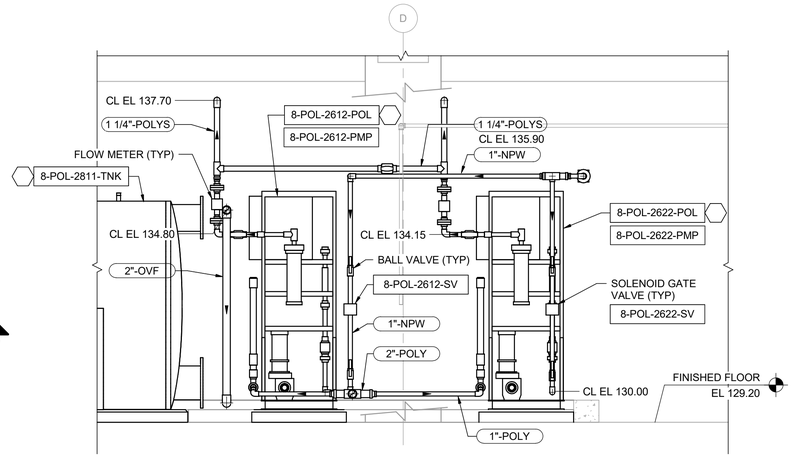

1A M-127 SECTION
1/2" = 1'-0"

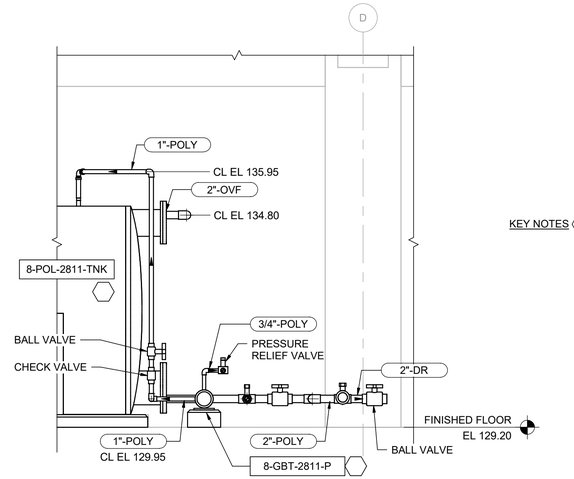

1B M-127 SECTION
1/2" = 1'-0"

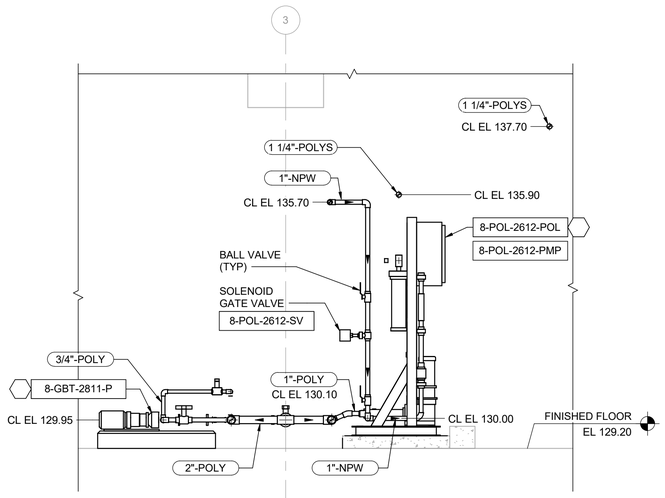

1C M-127 SECTION
1/2" = 1'-0"

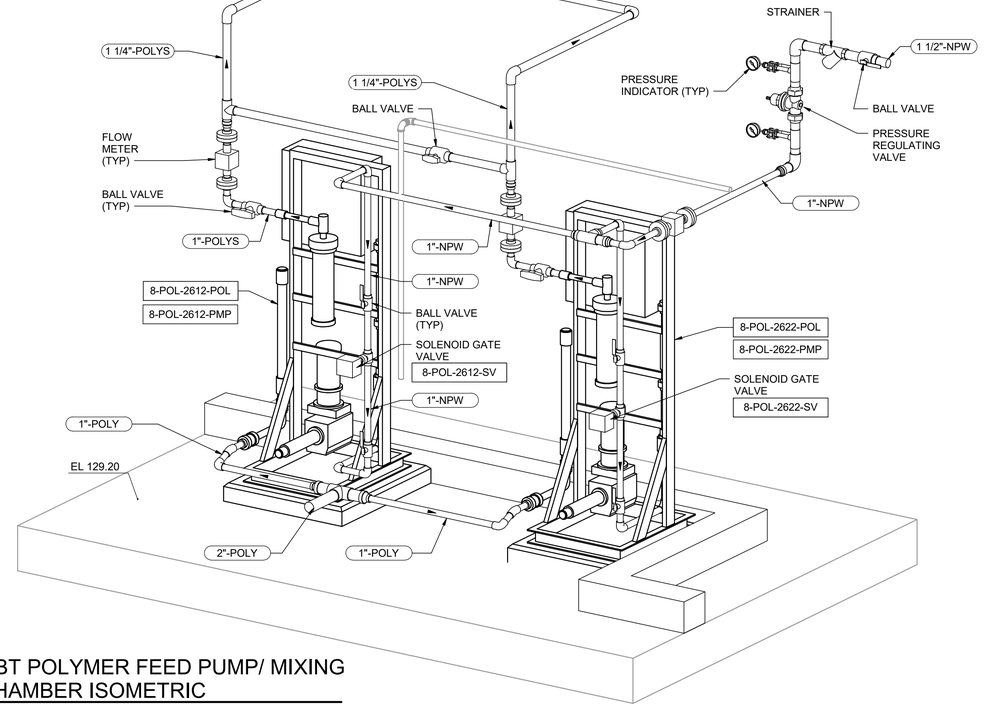

GBT POLYMER FEED PUMP/ MIXING CHAMBER ISOMETRIC

THE DRAWINGS IN THIS SET ARE RECORD DRAWINGS. THEY ARE CONSTRUCTION CONTRACT DRAWINGS WHICH HAVE BEEN REVISED BASED ON AVAILABLE FIELD INFORMATION RECORDED BY OTHERS DURING CONSTRUCTION OF THIS CONTRACT. THERE HAS BEEN NO VERIFICATION OF DIMENSIONS SHOWN ON THE CONSTRUCTION DRAWINGS OR THE ACCURACY/COMPLETENESS OF THE FIELD INFORMATION RECEIVED.

SIGNATURE — DATE 2/7/2022

BIM 360://10054364 – Little Patuxent WRP 8th Addition/264591_100_D_V18.rvt
1/11/2022 10:42:11 AM

AS-BUILT REPLACEMENT SHEET

PROFESSIONAL CERTIFICATION
THIS DRAWING WAS ORIGINALLY APPROVED FOR CONSTRUCTION AND SEALED BY BRIAN M. BACLCHUNAS, A REGISTERED PROFESSIONAL ENGINEER IN THE STATE OF MARYLAND, NO. 200406

NOTICE TO CONTRACTORS
- PROJECT ELEVATIONS ARE BASED ON NAVD88 AND HOWARD COUNTY'S BENCHMARK SYSTEM
- PREVIOUS PROJECTS USED OTHER DATUMS
- APPLY THE FOLLOWING CONVERSIONS WHEN USING PREVIOUS CONTRACT DRAWINGS:
  - ADDITION NO. 6: SUBTRACT 0.80 FT
  - PRIOR ADDITIONS: SUBTRACT 1.04 FT

DEPARTMENT OF PUBLIC WORKS
HOWARD COUNTY, MARYLAND

CHIEF, BUREAU OF UTILITIES — DATE

DES: MJW
DRN: SLB
CHK: JRK
DATE: 12/2016

DATE	REV	DESCRIPTION
07/2019		RECORD DRAWING

PROCESS

CHEMICAL HANDLING AREA POLYMER SYSTEM DETAILS

LITTLE PATUXENT WATER RECLAMATION PLANT
8TH ADDITION
BIOSOLIDS PROCESSING FACILITIES - PHASE I

CAPITAL PROJECT S-6295
CONTRACT NO. 24-4935

ELECTION DISTRICT NO. 6
HOWARD COUNTY, MARYLAND

SCALE AS SHOWN

SHEET 163 OF 463

M-127

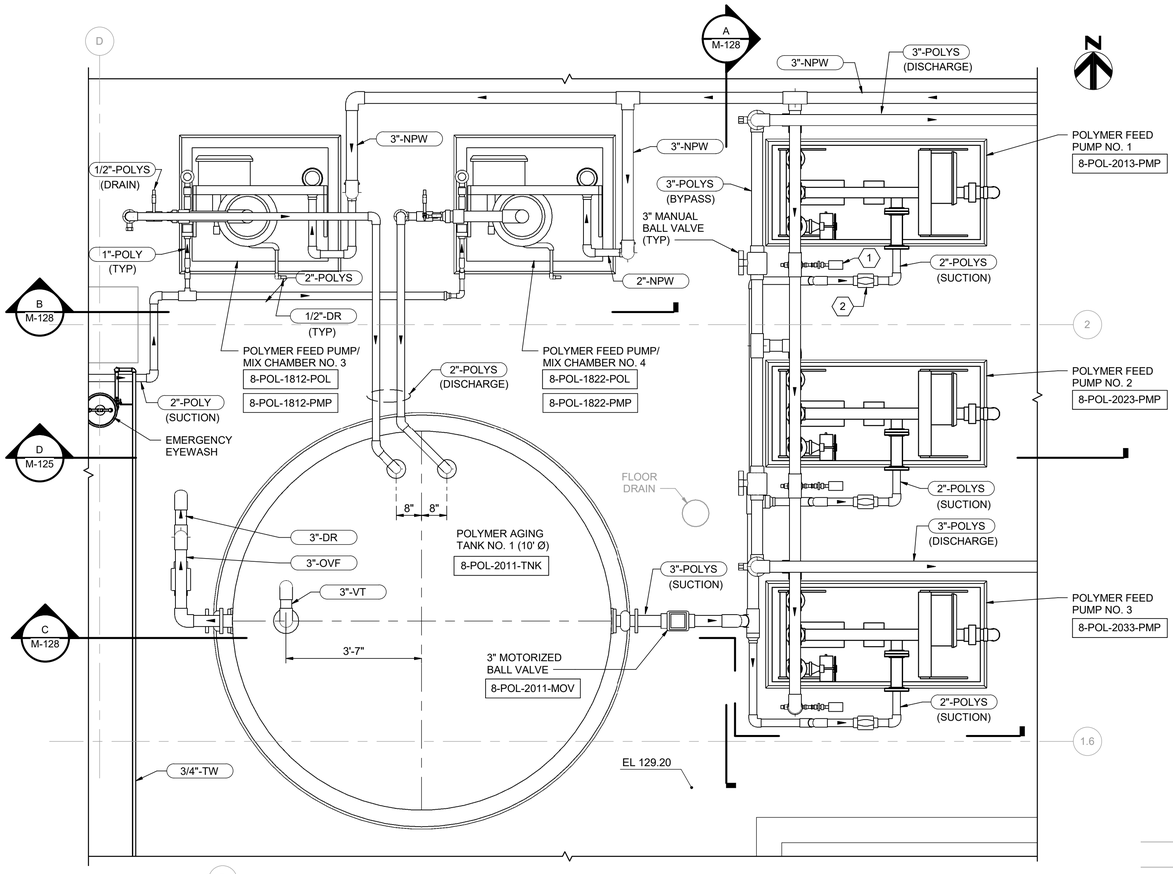

SECTION

A M-128 — 1/2" = 1'-0"

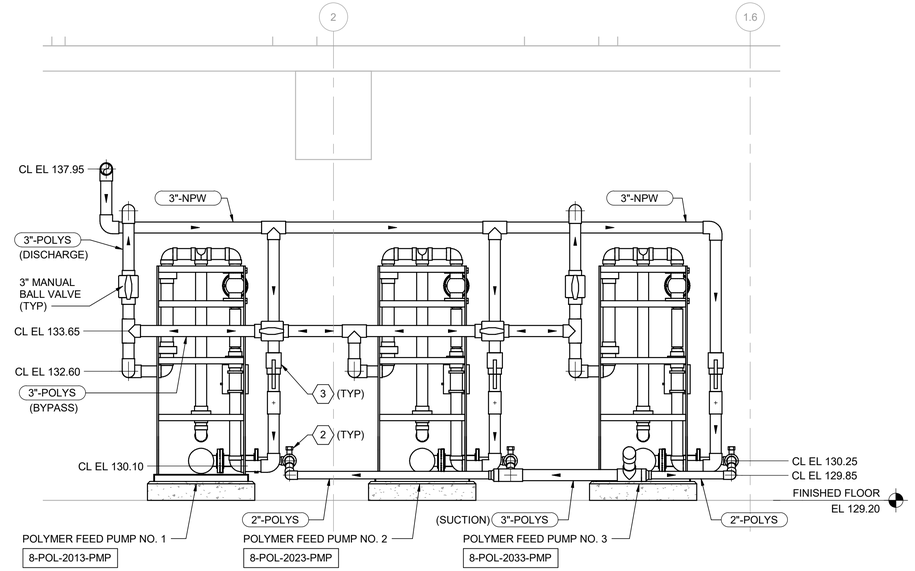

KEY NOTES (X)

1 PRESSURE GAUGE W/ DIAPHRAGM SEAL, SEE DETAIL 2/I-910
2 2" MANUAL BALL VALVE
3 3" MANUAL BALL VALVE

CENTRIFUGE POLYMER SYSTEM DETAIL

1 M-124 — 1/2" = 1'-0"

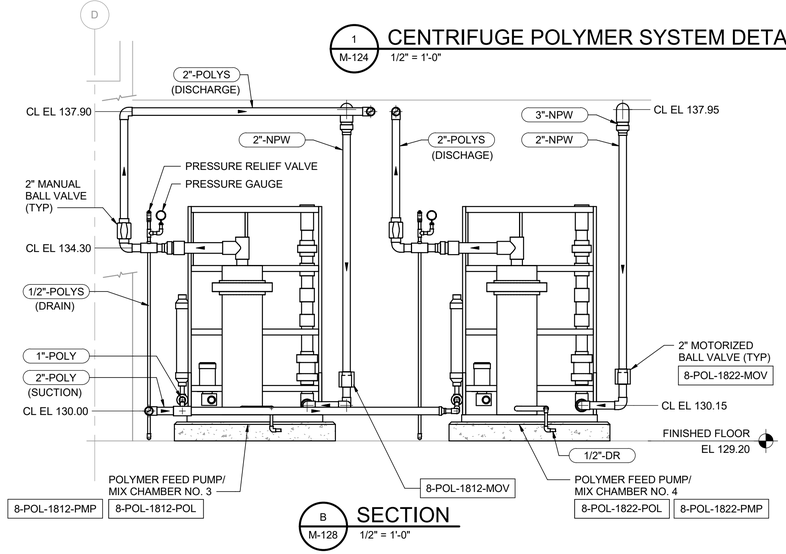

SECTION

B M-128 — 1/2" = 1'-0"

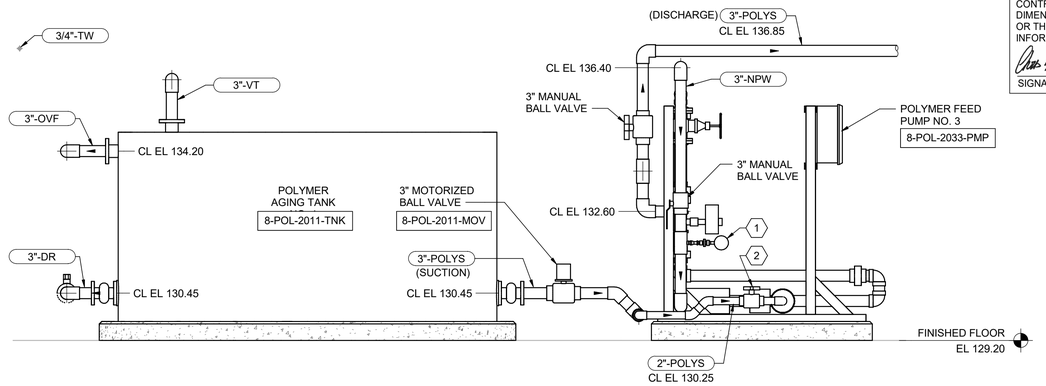

SECTION

C M-128 — 1/2" = 1'-0"

THE DRAWINGS IN THIS SET ARE RECORD DRAWINGS. THEY ARE CONSTRUCTION CONTRACT DRAWINGS WHICH HAVE BEEN REVISED BASED ON AVAILABLE FIELD INFORMATION RECORDED BY OTHERS DURING CONSTRUCTION OF THIS CONTRACT. THERE HAS BEEN NO VERIFICATION OF DIMENSIONS SHOWN ON THE CONSTRUCTION DRAWINGS OR THE ACCURACY/COMPLETENESS OF THE FIELD INFORMATION RECEIVED.

SIGNATURE — DATE 2/7/2023

AS-BUILT REPLACEMENT SHEET

PROFESSIONAL CERTIFICATION

THIS DRAWING WAS ORIGINALLY APPROVED FOR CONSTRUCTION AND SEALED BY BRIAN M. BACLCHUNAS, A REGISTERED PROFESSIONAL ENGINEER IN THE STATE OF MARYLAND, NO. 200406

NOTICE TO CONTRACTORS

- PROJECT ELEVATIONS ARE BASED ON NAVD88 AND HOWARD COUNTY'S BENCHMARK SYSTEM
- PREVIOUS PROJECTS USED OTHER DATUMS
- APPLY THE FOLLOWING CONVERSIONS WHEN USING PREVIOUS CONTRACT DRAWINGS:
  - ADDITION NO. 6: SUBTRACT 0.80 FT
  - PRIOR ADDITIONS: SUBTRACT 1.04 FT

DEPARTMENT OF PUBLIC WORKS
HOWARD COUNTY, MARYLAND

CHIEF, BUREAU OF UTILITIES — DATE

DES: ADP
DRN: SLB
CHK: JRK
DATE: 12/2016

DATE	REV	DESCRIPTION
07/2019		RECORD DRAWING

PROCESS

CHEMICAL HANDLING AREA POLYMER SYSTEM DETAILS

LITTLE PATUXENT WATER RECLAMATION PLANT
8TH ADDITION
BIOSOLIDS PROCESSING FACILITIES - PHASE I

CAPITAL PROJECT S-6295
CONTRACT NO. 24-4935

ELECTION DISTRICT NO. 6
HOWARD COUNTY, MARYLAND

SCALE AS SHOWN

SHEET 164 OF 463

M-128

BIM 360://10054364 – Little Patuxent WRP 8th Addition/264591_100_D_V18.rvt
1/11/2022 10:42:18 AM

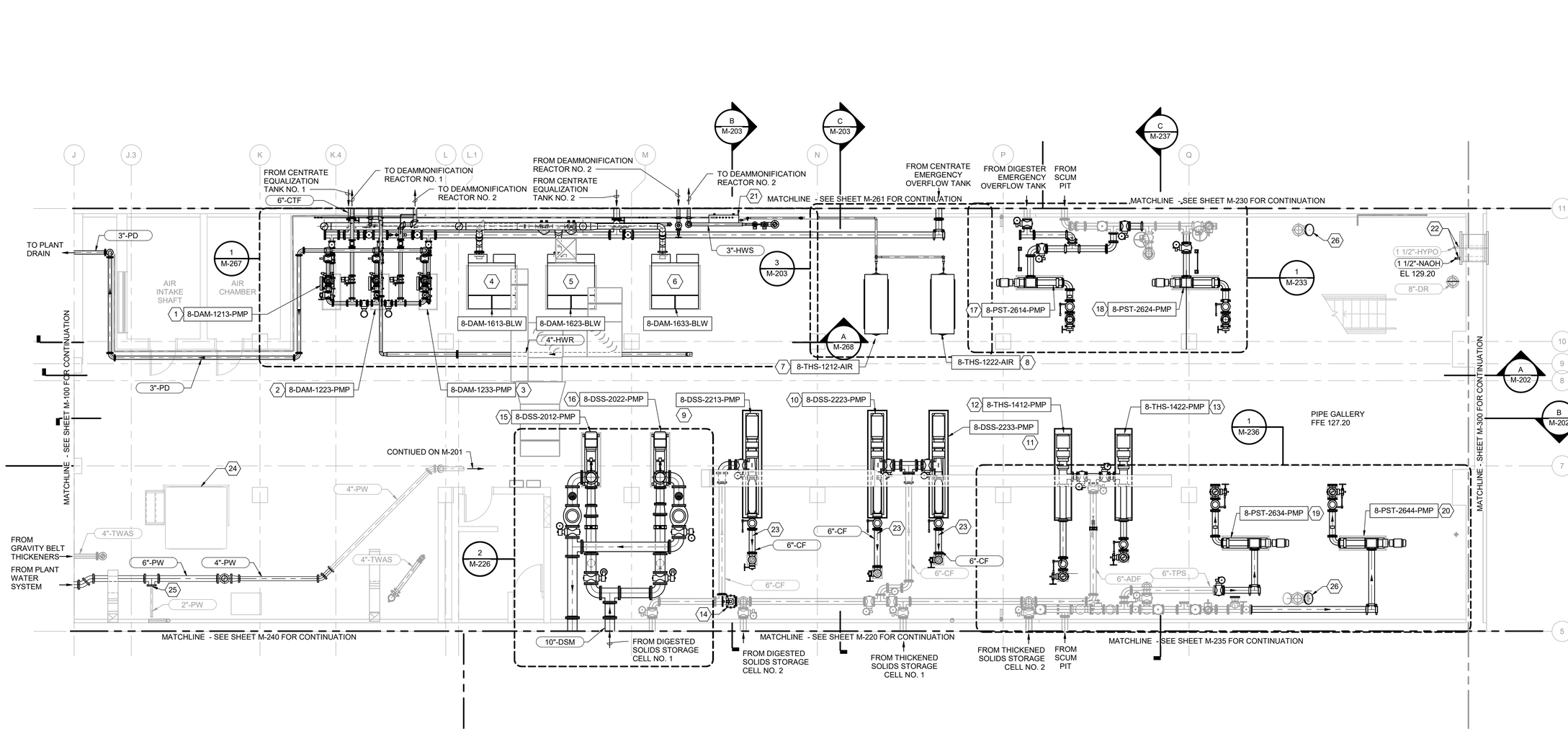

PLAN AT EL 128.00

3/16" = 1'-0"

GENERAL NOTES

1. CONTRACTOR TO VERIFY AND MATCH EXISTING ELEVATIONS WHEN CONNECTING TO EXISITNG PIPING SYSTEMS

KEY NOTES (X)

1 CENTRIFUGE FEED PUMP NO. 1.
2 CENTRIFUGE FEED PUMP NO. 2.
3 CENTRIFUGE FEED PUMP NO. 3.
4 DEAMMONIFICATION BLOWER NO. 1.
5 DEAMMONIFICATION BLOWER NO. 2.
6 DEAMMONIFICATION BLOWER NO. 3.
7 HC AIR COMPRESSOR NO. 1
8 HC AIR COMPRESSOR NO. 2
9 CENTRIFUGE FEED PUMP NO. 1.
10 CENTRIFUGE FEED PUMP NO. 2.
11 CENTRIFUGE FEED PUMP NO. 3.
12 ANAEROBIC DIGESTER FEED PUMP NO. 1.
13 ANAEROBIC DIGESTER FEED PUMP NO. 2.
14 KNIFE GATE.
15 DIGESTED SOLIDS MIXING PUMP NO. 1.
16 DIGESTED SOLIDS MIXING PUMP NO. 2.
17 GRAVITY THICKENER TRANSFER PUMP NO. 1
18 GRAVITY THICKENER TRANSFER PUMP NO. 2
19 GRAVITY THICKENER TRANSFER PUMP NO. 3
20 GRAVITY THICKENER TRANSFER PUMP NO. 4
21 CENTRATE EQUALIZATION TANK LARGE BUBBLE MIXING SYSTEM VALVE CONTROL PANEL.
22 PROVIDE CONTAINMENT PIPE LOW POINT DRAIN, SEE DETAIL 2/M-903.
23 PRESSURE GAUGE AND SWITCH W/ DIAPHRAGM SEAL.SEE DETAIL 1/I-910
24 DEAMMONIFICATION CONTROL PANEL PLATFORM. SEE SHEET S-202 FOR DIMENSIONS AND STRUCTURAL DETAILS.
25 RECONNECT PW PIPING TO SAMPLE SINK
26 BLIND FLANGE.

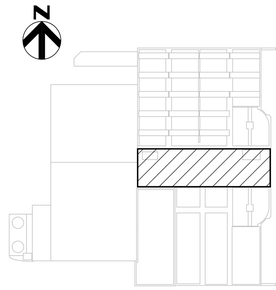

KEY PLAN

THE DRAWINGS IN THIS SET ARE RECORD DRAWINGS. THEY ARE CONSTRUCTION CONTRACT DRAWINGS WHICH HAVE BEEN REVISED BASED ON AVAILABLE FIELD INFORMATION RECORDED BY OTHERS DURING CONSTRUCTION OF THIS CONTRACT. THERE HAS BEEN NO VERIFICATION OF DIMENSIONS SHOWN ON THE CONSTRUCTION DRAWINGS OR THE ACCURACY/COMPLETENESS OF THE FIELD INFORMATION RECEIVED.

SIGNATURE — DATE 2/7/2023

AS-BUILT REPLACEMENT SHEET

PROFESSIONAL CERTIFICATION

THIS DRAWING WAS ORIGINALLY APPROVED FOR CONSTRUCTION AND SEALED BY BRIAN M. BACLCHUNAS, A REGISTERED PROFESSIONAL ENGINEER IN THE STATE OF MARYLAND, NO. 200406

NOTICE TO CONTRACTORS

- PROJECT ELEVATIONS ARE BASED ON NAVD88 AND HOWARD COUNTY'S BENCHMARK SYSTEM
- PREVIOUS PROJECTS USED OTHER DATUMS
- APPLY THE FOLLOWING CONVERSIONS WHEN USING PREVIOUS CONTRACT DRAWINGS:
  - ADDITION NO. 6: SUBTRACT 0.80 FT
  - PRIOR ADDITIONS: SUBTRACT 1.04 FT

DEPARTMENT OF PUBLIC WORKS
HOWARD COUNTY, MARYLAND

CHIEF, BUREAU OF UTILITIES — DATE

DES: CJM
DRN: REE
CHK: JRK
DATE: 12/2016

DATE	REV	DESCRIPTION
10/01/2019	10	DESIGN REVISION NO. 50
07/2019		RECORD DRAWING

PROCESS

SOLIDS PIPE GALLERY LOWER PLAN

LITTLE PATUXENT WATER RECLAMATION PLANT
8TH ADDITION
BIOSOLIDS PROCESSING FACILITIES - PHASE I

CAPITAL PROJECT S-6295
CONTRACT NO. 24-4935

ELECTION DISTRICT NO. 6
HOWARD COUNTY, MARYLAND

SCALE AS SHOWN

SHEET 165 OF 463

M-200

BIM 360://10054364 – Little Patuxent WRP 8th Addition/264591_100_D_V18.rvt
1/11/2022 1:51:57 PM

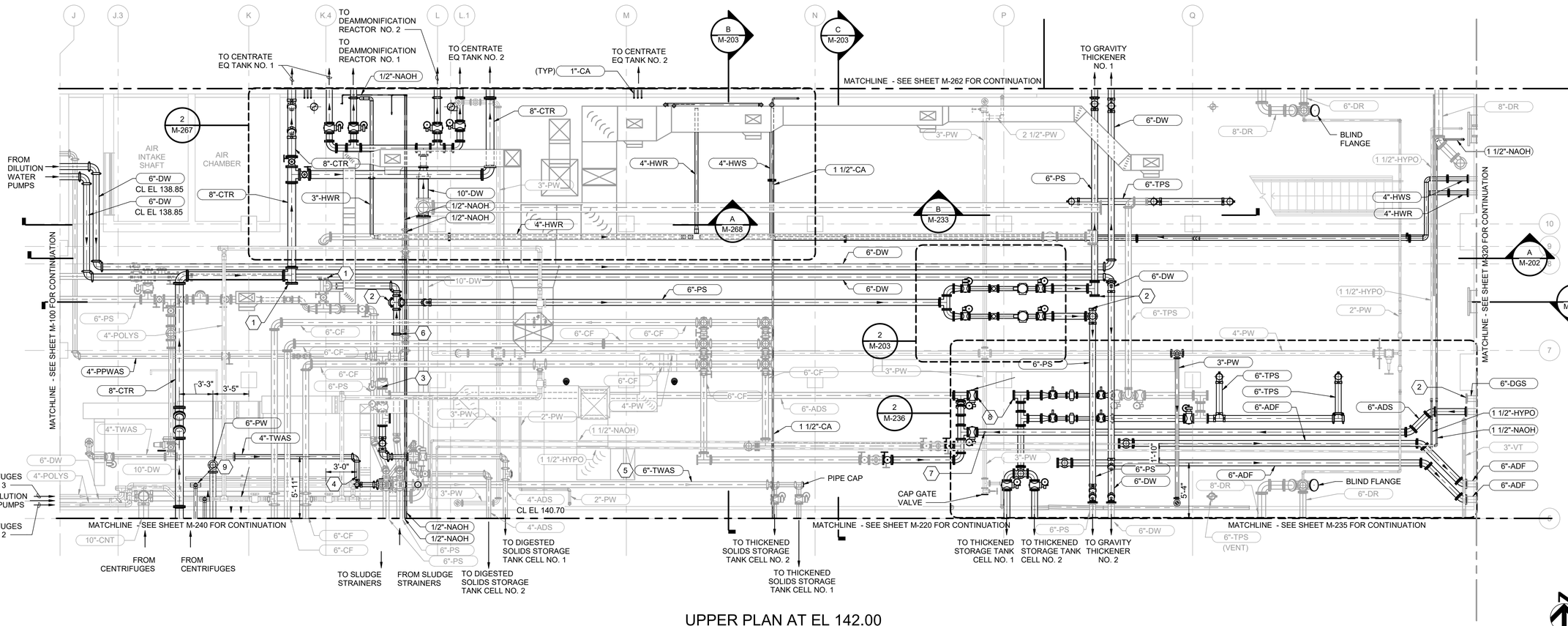

UPPER PLAN AT EL 142.00

3/16" = 1'-0"

N

GENERAL NOTES

1. CONTRACTOR TO VERIFY AND MATCH EXISTING ELEVATIONS WHEN CONNECTING TO EXISITNG PIPING SYSTEMS

KEY NOTES (X)

1 FLUSHING CONNECTION, SEE DETAIL 2/M-902
2 TEE OR WYE WITH BLIND FLANGE FOR CLEANOUT
3 FLUSHING AND DRAIN CONNECTION. SEE DETAIL 4/M-902.
4 PROVIDE MANUAL AIR RELEASE. SEE DETAIL 5/M-902.
5 USE EXISTING 6"-TPS TO CONVEY TWAS TO SOLIDS STORAGE TANKS.
6 TIE INTO EXISTING 6"-PS.
7 DRAIN CONNECTION, SEE DETAIL 3/M-902.
8 BLIND FLANGE.
9 TIE INTO EXISTING 4"-POLYS WITH 4"X3" REDUCING TEE.

THE DRAWINGS IN THIS SET ARE RECORD DRAWINGS. THEY ARE CONSTRUCTION CONTRACT DRAWINGS WHICH HAVE BEEN REVISED BASED ON AVAILABLE FIELD INFORMATION RECORDED BY OTHERS DURING CONSTRUCTION OF THIS CONTRACT. THERE HAS BEEN NO VERIFICATION OF DIMENSIONS SHOWN ON THE CONSTRUCTION DRAWINGS OR THE ACCURACY/COMPLETENESS OF THE FIELD INFORMATION RECEIVED.

SIGNATURE — DATE 2/7/2023

KEY PLAN

AS-BUILT REPLACEMENT SHEET

PROFESSIONAL CERTIFICATION

THIS DRAWING WAS ORIGINALLY APPROVED FOR CONSTRUCTION AND SEALED BY BRIAN M. BACLCHUNAS, A REGISTERED PROFESSIONAL ENGINEER IN THE STATE OF MARYLAND, NO. 200406

NOTICE TO CONTRACTORS

- PROJECT ELEVATIONS ARE BASED ON NAVD88 AND HOWARD COUNTY'S BENCHMARK SYSTEM
- PREVIOUS PROJECTS USED OTHER DATUMS
- APPLY THE FOLLOWING CONVERSIONS WHEN USING PREVIOUS CONTRACT DRAWINGS:
  - ADDITION NO. 6: SUBTRACT 0.80 FT
  - PRIOR ADDITIONS: SUBTRACT 1.04 FT

DEPARTMENT OF PUBLIC WORKS
HOWARD COUNTY, MARYLAND

CHIEF, BUREAU OF UTILITIES — DATE

DES: CJM
DRN: REE
CHK: JRK
DATE: 12/2016

DATE	REV	DESCRIPTION
07/2019		RECORD DRAWING

PROCESS

SOLIDS PIPE GALLERY UPPER PLAN

LITTLE PATUXENT WATER RECLAMATION PLANT
8TH ADDITION
BIOSOLIDS PROCESSING FACILITIES - PHASE I

CAPITAL PROJECT S-6295
CONTRACT NO. 24-4935

ELECTION DISTRICT NO. 6
HOWARD COUNTY, MARYLAND

SCALE AS SHOWN

SHEET 166 OF 463

M-201

BIM 360://10054364 – Little Patuxent WRP 8th Addition/264591_100_D_V18.rvt
1/11/2022 1:52:05 PM

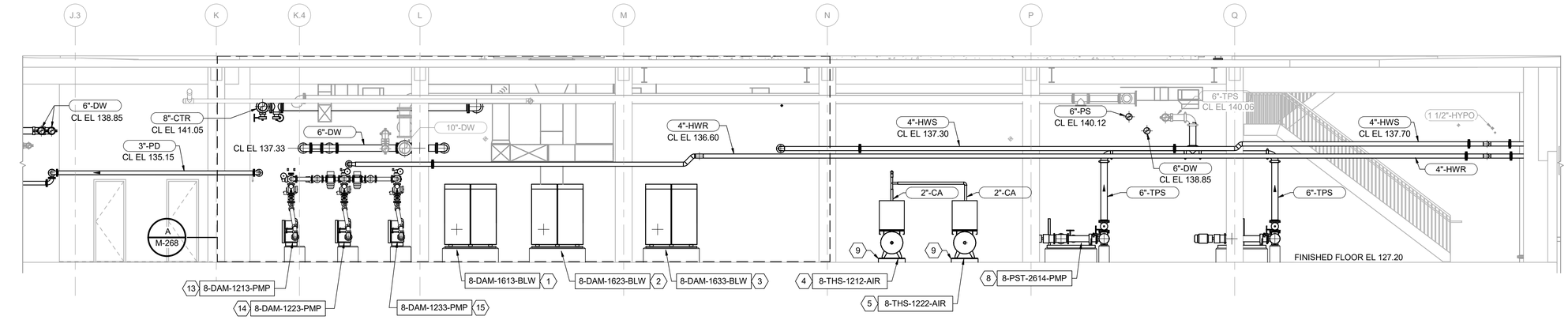

A M-200 SECTION
3/16" = 1'-0"

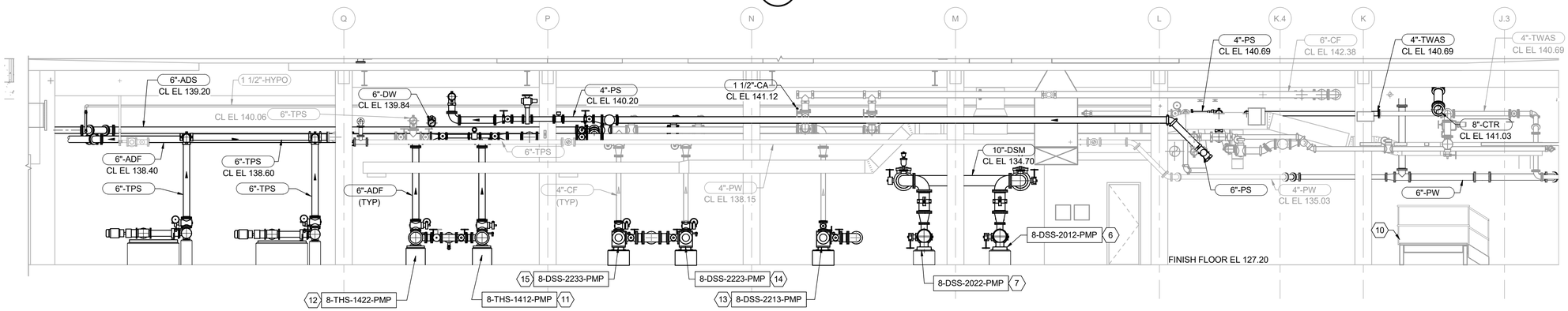

B M-200 SECTION
3/16" = 1'-0"

GENERAL NOTES

1. DRAWINGS ARE INTENDED TO DEPICT DESIGN INTENT; CONTRACTOR TO REFER TO SPECIFICATIONS, P&IDS, AND STANDARD DETAILS FOR FURTHER INSTALLATION REQUIREMENTS.
2. VALVES, INLINE APPURTENANCES AND EQUIPMENT ARE SHOWN GRAPHICALLY AS THE DEVICE BODY; REFER TO P&IDS FOR DEVICE TYPE, SIZE, AND DETAILS. INSTALL DEVICES IN ACCORDANCE WITH SPECIFICATIONS AND MFR'S REQUIREMENTS. ENSURE ADEQUATE ACCESS FOR OPERATION OF DEVICES—NOTIFY ENGINEER PRIOR TO INSTALLATION IF INADEQUATE CLEARANCE IS ANTICIPATED.
3. CONTRACTOR TO VERIFY AND MATCH EXISTING ELEVATIONS WHEN CONNECTING TO EXISITNG PIPING SYSTEMS

KEY NOTES (X)

1 DEAMMONIFICATION BLOWER NO. 1.
2 DEAMMONIFICATION BLOWER NO. 2.
3 DEAMMONIFICATION BLOWER NO. 3.
4 HC AIR COMPRESSOR NO. 1
5 HC AIR COMPRESSOR NO. 2
6 DIGESTED SOLIDS MIXING PUMP NO. 1.
7 DIGESTED SOLIDS MIXING PUMP NO. 2.
8 GRAVITY THICKENER TRANSFER PUMP NO. 1
9 CONCRETE EQUIPMENT BASE, SEE DETAIL 1/S-904.
10 DEAMMONIFICATION CONTROL PANEL PLATFORM. SEE SHEET S-202 FOR DIMENSIONS AND STRUCTURAL DETAILS.
11 ANAEROBIC DIGESTER FEED PUMP NO. 1.
12 ANAEROBIC DIGESTER FEED PUMP NO. 2.
13 CENTRIFUGE FEED PUMP NO. 1.
14 CENTRIFUGE FEED PUMP NO. 2.
15 CENTRIFUGE FEED PUMP NO. 3.

THE DRAWINGS IN THIS SET ARE RECORD DRAWINGS. THEY ARE CONSTRUCTION CONTRACT DRAWINGS WHICH HAVE BEEN REVISED BASED ON AVAILABLE FIELD INFORMATION RECORDED BY OTHERS DURING CONSTRUCTION OF THIS CONTRACT. THERE HAS BEEN NO VERIFICATION OF DIMENSIONS SHOWN ON THE CONSTRUCTION DRAWINGS OR THE ACCURACY/COMPLETENESS OF THE FIELD INFORMATION RECEIVED.

SIGNATURE — DATE 2/7/2022

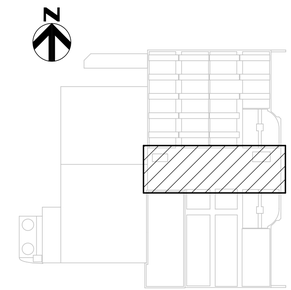

KEY PLAN

AS-BUILT REPLACEMENT SHEET

PROFESSIONAL CERTIFICATION

THIS DRAWING WAS ORIGINALLY APPROVED FOR CONSTRUCTION AND SEALED BY BRIAN M. BACLCHUNAS, A REGISTERED PROFESSIONAL ENGINEER IN THE STATE OF MARYLAND, NO. 200406

NOTICE TO CONTRACTORS

- PROJECT ELEVATIONS ARE BASED ON NAVD88 AND HOWARD COUNTY'S BENCHMARK SYSTEM
- PREVIOUS PROJECTS USED OTHER DATUMS
- APPLY THE FOLLOWING CONVERSIONS WHEN USING PREVIOUS CONTRACT DRAWINGS:
  - ADDITION NO. 6: SUBTRACT 0.80 FT
  - PRIOR ADDITIONS: SUBTRACT 1.04 FT

DEPARTMENT OF PUBLIC WORKS
HOWARD COUNTY, MARYLAND

CHIEF, BUREAU OF UTILITIES — DATE

DES: CJM
DRN: REE
CHK: JRK
DATE: 12/2016

DATE	REV	DESCRIPTION
07/2019		RECORD DRAWING

PROCESS

SOLIDS PIPE GALLERY SECTIONS 1

LITTLE PATUXENT WATER RECLAMATION PLANT
8TH ADDITION
BIOSOLIDS PROCESSING FACILITIES - PHASE I

CAPITAL PROJECT S-6295
CONTRACT NO. 24-4935

ELECTION DISTRICT NO. 6
HOWARD COUNTY, MARYLAND

SCALE AS SHOWN

SHEET 167 OF 463

M-202

BIM 360://10054364 – Little Patuxent WRP 8th Addition/264591_100_D_V18.rvt
1/11/2022 1:52:11 PM

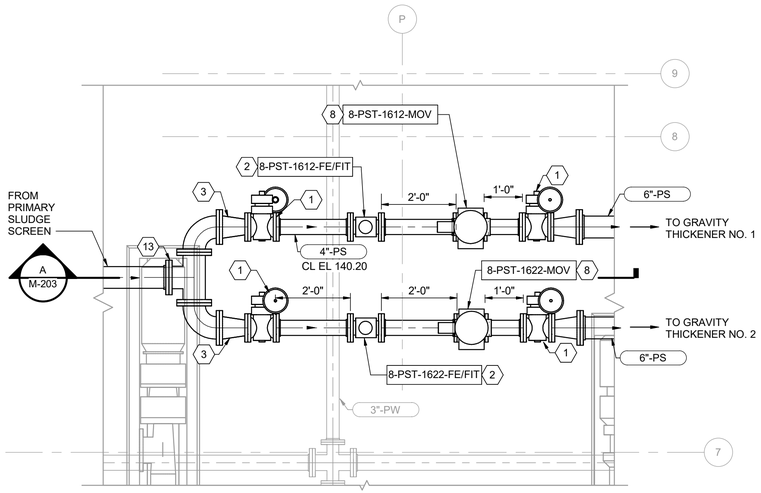

2 M-201 PRIMARY SLUDGE METER ENLARGED PLAN

1/2" = 1'-0"

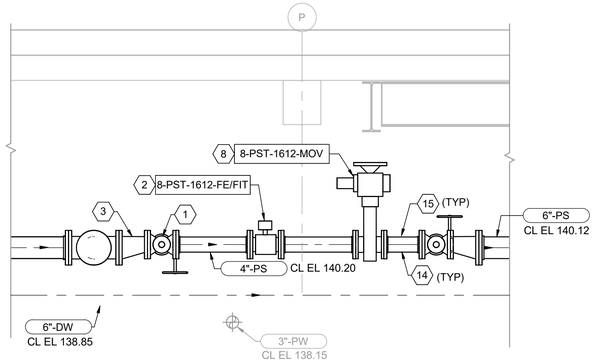

A M-203 PRIMARY SLUDGE METER SECTION

1/2" = 1'-0"

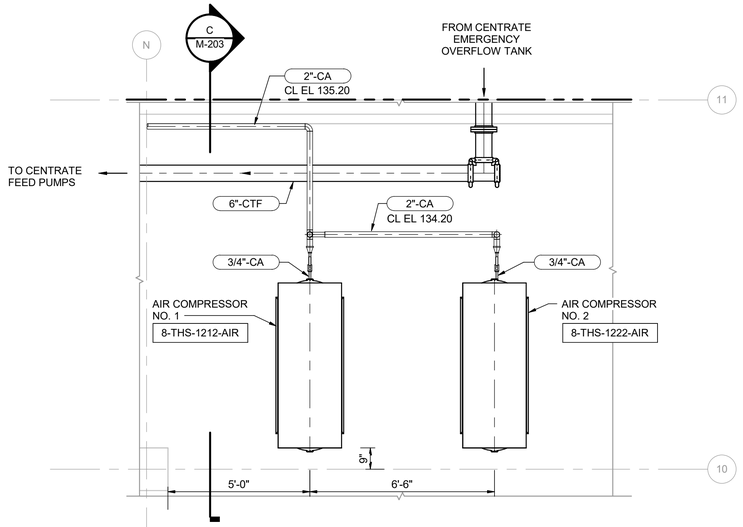

3 M-200 AIR COMPRESSOR ENLARGED PLAN

3/8" = 1'-0"

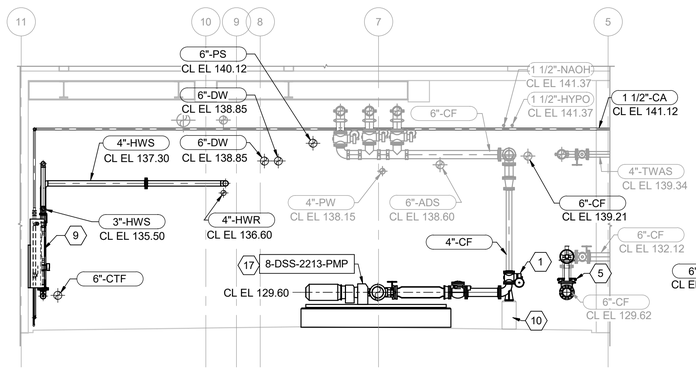

B M-200 SECTION

3/16" = 1'-0"

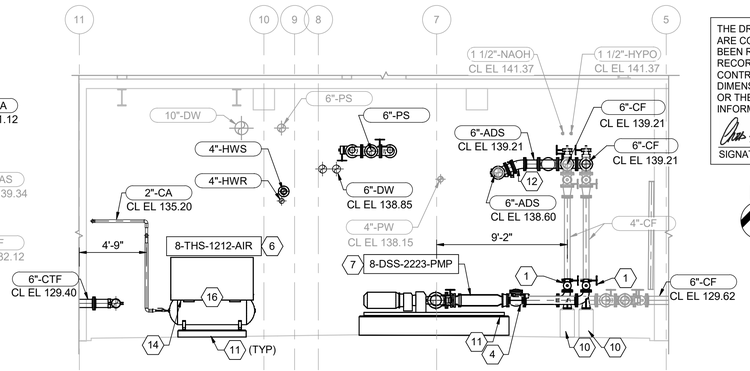

C M-200 SECTION

3/16" = 1'-0"

GENERAL NOTES

1. DRAWINGS ARE INTENDED TO DEPICT DESIGN INTENT; CONTRACTOR TO REFER TO SPECIFICATIONS, P&IDS, AND STANDARD DETAILS FOR FURTHER INSTALLATION REQUIREMENTS.
2. VALVES, INLINE APPURTENANCES AND EQUIPMENT ARE SHOWN GRAPHICALLY AS THE DEVICE BODY; REFER TO P&IDS FOR DEVICE TYPE, SIZE, AND DETAILS. INSTALL DEVICES IN ACCORDANCE WITH SPECIFICATIONS AND MFR'S REQUIREMENTS. ENSURE ADEQUATE ACCESS FOR OPERATION OF DEVICES—NOTIFY ENGINEER PRIOR TO INSTALLATION IF INADEQUATE CLEARANCE IS ANTICIPATED.
3. CONTRACTOR TO VERIFY AND MATCH EXISTING ELEVATIONS WHEN CONNECTING TO EXISITNG PIPING SYSTEMS

KEY NOTES (X)

1 4" PLUG VALVE
2 FLOW METER
3 6"X4" ECCENTRIC REDUCER
4 6" SWING CHECK VALVE
5 KNIFE GATE.
6 HC AIR COMPRESSOR NO. 1
7 CENTRIFUGE FEED PUMP NO. 2.
8 4" PINCH VALVE
9 CENTRATE EQUALIZATION TANK LARGE BUBBLE MIXING SYSTEM VALVE CONTROL PANEL.
10 CONCRETE FITTING BASE, SEE DETAIL 5/M-905.
11 CONCRETE EQUIPMENT BASE, SEE DETAIL 1/S-904.
12 22.5 DEGREE BEND.
13 PROVIDE FLANGED COMPONENTS FOR ALL PIPE AND FITTINGS SHOWN AS FLANGED IN ENLARGED PLAN 1/M-233. CONNECT GROOVED PIPE SYSTEMS WITH FLANGE ADAPTERS.
14 DRAIN CONNECTION SEE DETAIL 3/M-902.
15 PROVIDE MANUAL AIR RELEASE. SEE DETAIL 5/M-902.
16 PROVIDE FIXED SUPPORT FOR ALP PIPING.
17 CENTRIFUGE FEED PUMP NO. 1.

THE DRAWINGS IN THIS SET ARE RECORD DRAWINGS. THEY ARE CONSTRUCTION CONTRACT DRAWINGS WHICH HAVE BEEN REVISED BASED ON AVAILABLE FIELD INFORMATION RECORDED BY OTHERS DURING CONSTRUCTION OF THIS CONTRACT. THERE HAS BEEN NO VERIFICATION OF DIMENSIONS SHOWN ON THE CONSTRUCTION DRAWINGS OR THE ACCURACY/COMPLETENESS OF THE FIELD INFORMATION RECEIVED.

SIGNATURE

2/7/2020
DATE

KEY PLAN

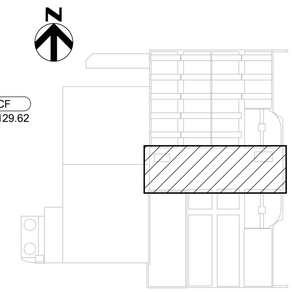

AS-BUILT REPLACEMENT SHEET

PROFESSIONAL CERTIFICATION

THIS DRAWING WAS ORIGINALLY APPROVED FOR CONSTRUCTION AND SEALED BY BRIAN M. BACLCHUNAS, A REGISTERED PROFESSIONAL ENGINEER IN THE STATE OF MARYLAND, NO. 200406

NOTICE TO CONTRACTORS

- PROJECT ELEVATIONS ARE BASED ON NAVD88 AND HOWARD COUNTY'S BENCHMARK SYSTEM
- PREVIOUS PROJECTS USED OTHER DATUMS
- APPLY THE FOLLOWING CONVERSIONS WHEN USING PREVIOUS CONTRACT DRAWINGS:
  - ADDITION NO. 6: SUBTRACT 0.80 FT
  - PRIOR ADDITIONS: SUBTRACT 1.04 FT

DEPARTMENT OF PUBLIC WORKS
HOWARD COUNTY, MARYLAND

CHIEF, BUREAU OF UTILITIES DATE

DES: CJM
DRN: REE
CHK: JRK
DATE: 12/2016

DATE	REV	DESCRIPTION
07/2019		RECORD DRAWING

PROCESS

SOLIDS PIPE GALLERY SECTIONS 2

LITTLE PATUXENT WATER RECLAMATION PLANT
8TH ADDITION
BIOSOLIDS PROCESSING FACILITIES - PHASE I

CAPITAL PROJECT S-6295
CONTRACT NO. 24-4935

ELECTION DISTRICT NO. 6
HOWARD COUNTY, MARYLAND

SCALE AS SHOWN

SHEET 168 OF 463

M-203

BIM 360://10054364 – Little Patuxent WRP 8th Addition/264591_100_D_V18.rvt
1/11/2022 1:52:16 PM

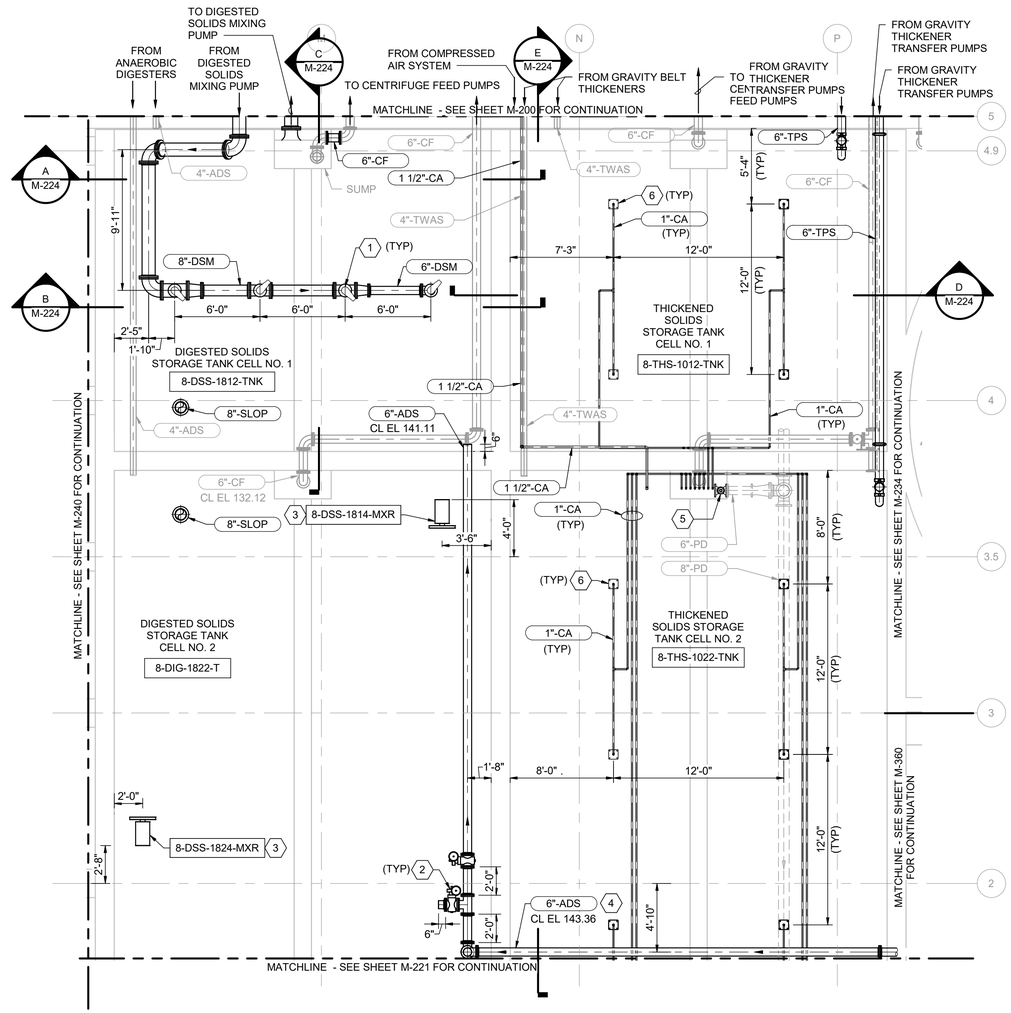

PARTIAL LOWER PLAN AT EL 128.00

3/16" = 1'-0"

N

GENERAL NOTES

1. EXISTING SLUDGE STORAGE TANKS TO BE INSPECTED BY ENGINEER AFTER REMOVAL FROM SERVICE FOR POTENTIAL CONCRETE REPAIRS.
2. CONTRACTOR TO VERIFY AND MATCH EXISTING ELEVATIONS WHEN CONNECTING TO EXISITNG PIPING SYSTEMS.

KEY NOTES (X)

1 MIXING NOZZLE
2 PROVIDE STAINLESS STEEL VALVE ACTUATOR EXTENSION STEM AND STEM SUPPORT.
3 INSTALL RELOCATED MIXERS FROM THICKENED SLUDGE STORAGE TANKS.
4 INSTALL 6" ADS WITH 2% SLOPE TOWARD DIGESTED SOLIDS HOLDING TANK.
5 REPLACE 6" PLUG VALVE AT TANK SUMP. EXISTING FLANGE IS ENCASED IN CONCRETE. PROVIDE SS VALVE ACTUATOR EXTENSION STEM AND SUPPORT. REPAIR CONCRETE TO MATCH EXISTING.
6 COMPRESSED AIR MIXING NOZZLE. REFER TO MANUFACTURER INSTALLATION DRAWINGS FOR SUPPORT DETAILS.

THE DRAWINGS IN THIS SET ARE RECORD DRAWINGS. THEY ARE CONSTRUCTION CONTRACT DRAWINGS WHICH HAVE BEEN REVISED BASED ON AVAILABLE FIELD INFORMATION RECORDED BY OTHERS DURING CONSTRUCTION OF THIS CONTRACT. THERE HAS BEEN NO VERIFICATION OF DIMENSIONS SHOWN ON THE CONSTRUCTION DRAWINGS OR THE ACCURACY/COMPLETENESS OF THE FIELD INFORMATION RECEIVED.

SIGNATURE 2/7/2023 DATE

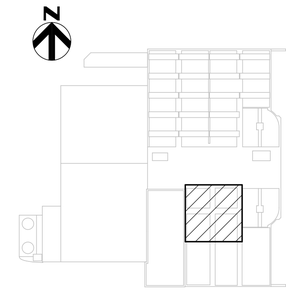

KEY PLAN

AS-BUILT REPLACEMENT SHEET

PROFESSIONAL CERTIFICATION

THIS DRAWING WAS ORIGINALLY APPROVED FOR CONSTRUCTION AND SEALED BY BRIAN M. BACLCHUNAS, A REGISTERED PROFESSIONAL ENGINEER IN THE STATE OF MARYLAND, NO. 200406

NOTICE TO CONTRACTORS

- PROJECT ELEVATIONS ARE BASED ON NAVD88 AND HOWARD COUNTY'S BENCHMARK SYSTEM
- PREVIOUS PROJECTS USED OTHER DATUMS
- APPLY THE FOLLOWING CONVERSIONS WHEN USING PREVIOUS CONTRACT DRAWINGS:
  - ADDITION NO. 6: SUBTRACT 0.80 FT
  - PRIOR ADDITIONS: SUBTRACT 1.04 FT

DEPARTMENT OF PUBLIC WORKS
HOWARD COUNTY, MARYLAND

CHIEF, BUREAU OF UTILITIES DATE

DES: MJW
DRN: REE
CHK: JRK
DATE: 12/2016

DATE	REV	DESCRIPTION
07/2019		RECORD DRAWING

PROCESS

SOLIDS HOLDING TANKS
LOWER PARTIAL PLAN 1

LITTLE PATUXENT WATER RECLAMATION PLANT
8TH ADDITION
BIOSOLIDS PROCESSING FACILITIES - PHASE I

CAPITAL PROJECT S-6295
CONTRACT NO. 24-4935

ELECTION DISTRICT NO. 6
HOWARD COUNTY, MARYLAND

SCALE AS SHOWN

SHEET 169 OF 463

M-220

BIM 360://10054364 – Little Patuxent WRP 8th Addition/264591_100_D_V18.rvt
1/11/2022 1:57:44 PM

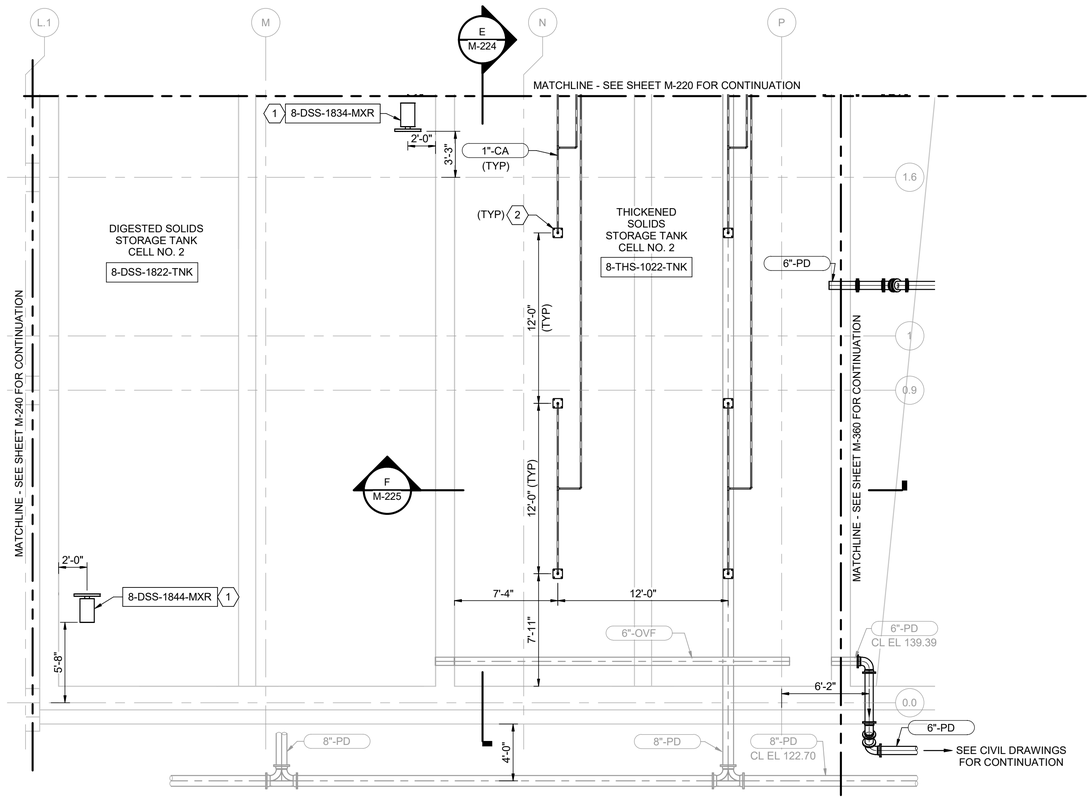

PARTIAL LOWER PLAN AT EL 128.00

3/16" = 1'-0"

N

GENERAL NOTES

1. CONTRACTOR TO VERIFY AND MATCH EXISTING ELEVATIONS WHEN CONNECTING TO EXISITNG PIPING SYSTEMS.

KEY NOTES (X)

1 INSTALL RELOCATED MIXERS FROM THICKENED SLUDGE STORAGE TANKS.

2 COMPRESSED AIR MIXING NOZZLE. REFER TO MANUFACTURER INSTALLATION DRAWINGS FOR SUPPORT DETAILS.

THE DRAWINGS IN THIS SET ARE RECORD DRAWINGS. THEY ARE CONSTRUCTION CONTRACT DRAWINGS WHICH HAVE BEEN REVISED BASED ON AVAILABLE FIELD INFORMATION RECORDED BY OTHERS DURING CONSTRUCTION OF THIS CONTRACT. THERE HAS BEEN NO VERIFICATION OF DIMENSIONS SHOWN ON THE CONSTRUCTION DRAWINGS OR THE ACCURACY/COMPLETENESS OF THE FIELD INFORMATION RECEIVED.

SIGNATURE — DATE 2/7/2023

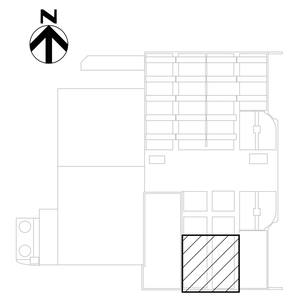

KEY PLAN

AS-BUILT REPLACEMENT SHEET

PROFESSIONAL CERTIFICATION

THIS DRAWING WAS ORIGINALLY APPROVED FOR CONSTRUCTION AND SEALED BY BRIAN M. BACLCHUNAS, A REGISTERED PROFESSIONAL ENGINEER IN THE STATE OF MARYLAND, NO. 200406

NOTICE TO CONTRACTORS

- PROJECT ELEVATIONS ARE BASED ON NAVD88 AND HOWARD COUNTY'S BENCHMARK SYSTEM
- PREVIOUS PROJECTS USED OTHER DATUMS
- APPLY THE FOLLOWING CONVERSIONS WHEN USING PREVIOUS CONTRACT DRAWINGS:
  - ADDITION NO. 6: SUBTRACT 0.80 FT
  - PRIOR ADDITIONS: SUBTRACT 1.04 FT

DEPARTMENT OF PUBLIC WORKS
HOWARD COUNTY, MARYLAND

CHIEF, BUREAU OF UTILITIES — DATE

DES: MJW
DRN: REE
CHK: JRK
DATE: 12/2016

DATE	REV	DESCRIPTION
07/2019		RECORD DRAWING

PROCESS

SOLIDS HOLDING TANKS
LOWER PARTIAL PLAN 2

LITTLE PATUXENT WATER RECLAMATION PLANT
8TH ADDITION
BIOSOLIDS PROCESSING FACILITIES - PHASE I

CAPITAL PROJECT S-6295
CONTRACT NO. 24-4935

ELECTION DISTRICT NO. 6
HOWARD COUNTY, MARYLAND

SCALE
AS
SHOWN

SHEET
170 OF 463

M-221

BIM 360://10054364 – Little Patuxent WRP 8th Addition/264591_100_D_V18.rvt
1/11/2022 1:57:46 PM

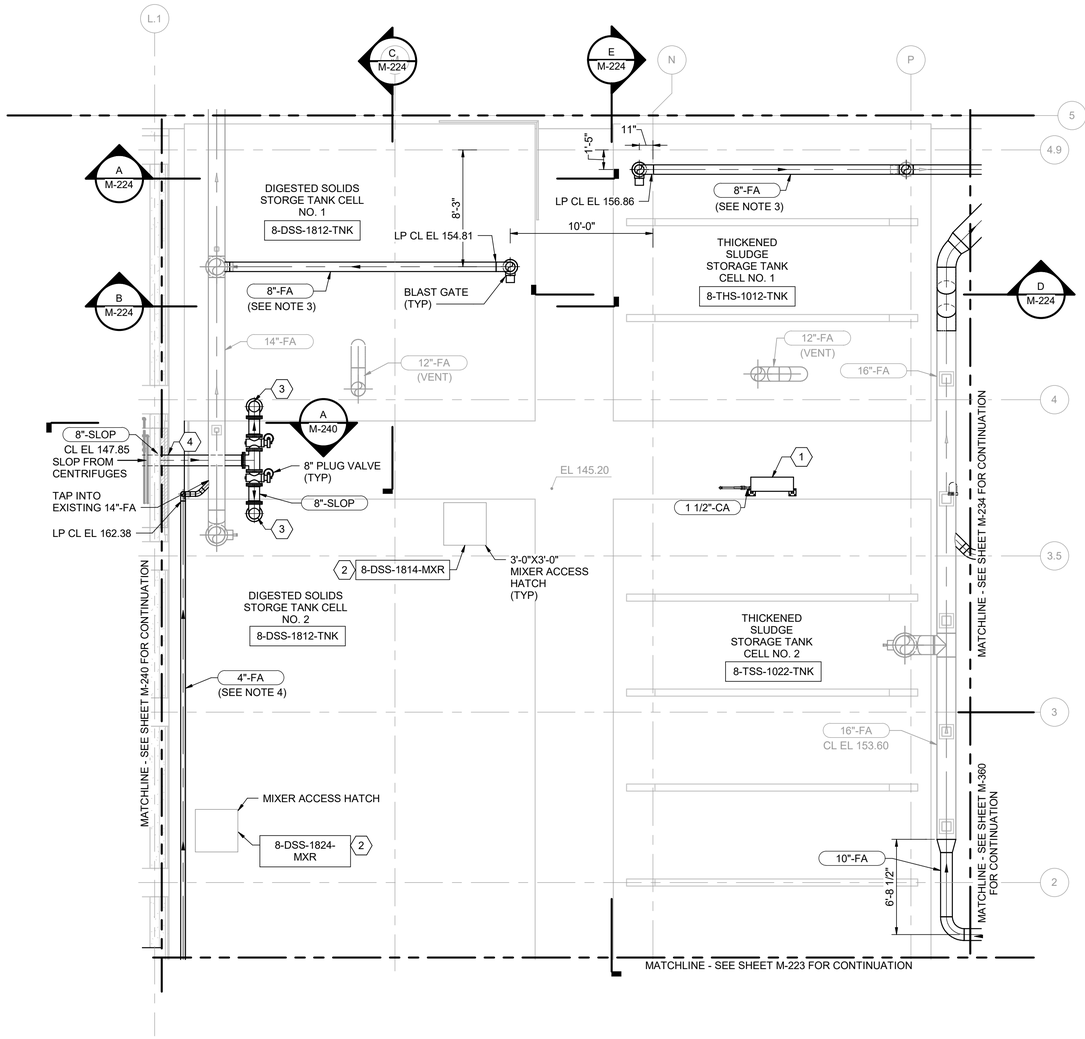

PARTIAL COVER PLAN AT EL 145.20

3/16" = 1'-0"

N

GENERAL NOTES

1. CONTRACTOR TO VERIFY AND MATCH EXISTING ELEVATIONS WHEN CONNECTING TO EXISITNG PIPING SYSTEMS.
2. CONTRACTOR TO COORDINATE LOCATION OF LARGE BUBLE MIXING SYSTEM AND CONTRO PANEL.
3. SLOPE STORAGE TANK DUCTWORK TOWARD TANK.
4. SLOPE DUCTWORK TOWARDS DIGESTED SOLIDS STORAGE HEADER @ 1/8" PER FOOT.

KEY NOTES (X)

1 SLUDGE STORAGE BUBBLE MIXING VALVE CONTROL PANEL

2 INSTALL RELOCATED MIXERS FROM THICKENED SLUDGE STORAGE TANKS.

3 AT ALL PENETRATIONS FOR PIPING, EQUIPMENT, AND INSTRUMENTATION, INSTALL REMOVABLE ALUM PLATE. SEE DETAIL 8/S-905.

4 WALL PENETRATION, SEE DETAIL 9/S-903.

THE DRAWINGS IN THIS SET ARE RECORD DRAWINGS. THEY ARE CONSTRUCTION CONTRACT DRAWINGS WHICH HAVE BEEN REVISED BASED ON AVAILABLE FIELD INFORMATION RECORDED BY OTHERS DURING CONSTRUCTION OF THIS CONTRACT. THERE HAS BEEN NO VERIFICATION OF DIMENSIONS SHOWN ON THE CONSTRUCTION DRAWINGS OR THE ACCURACY/COMPLETENESS OF THE FIELD INFORMATION RECEIVED.

SIGNATURE _____ DATE 2/7/2023

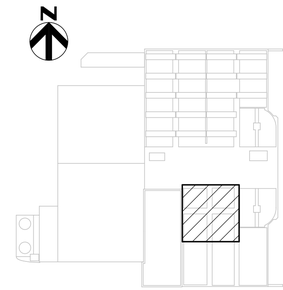

KEY PLAN

BIM 360://10054364 – Little Patuxent WRP 8th Addition/264591_100_D_V18.rvt
1/11/2022 1:57:48 PM

AS-BUILT REPLACEMENT SHEET

PROFESSIONAL CERTIFICATION

THIS DRAWING WAS ORIGINALLY APPROVED FOR CONSTRUCTION AND SEALED BY BRIAN M. BACLCHUNAS, A REGISTERED PROFESSIONAL ENGINEER IN THE STATE OF MARYLAND, NO. 200406

NOTICE TO CONTRACTORS

- PROJECT ELEVATIONS ARE BASED ON NAVD88 AND HOWARD COUNTY'S BENCHMARK SYSTEM
- PREVIOUS PROJECTS USED OTHER DATUMS
- APPLY THE FOLLOWING CONVERSIONS WHEN USING PREVIOUS CONTRACT DRAWINGS:
  - ADDITION NO. 6: SUBTRACT 0.80 FT
  - PRIOR ADDITIONS: SUBTRACT 1.04 FT

DEPARTMENT OF PUBLIC WORKS
HOWARD COUNTY, MARYLAND

CHIEF, BUREAU OF UTILITIES DATE

DES: MJW
DRN: REE
CHK: JRK
DATE: 12/2016

DATE	REV	DESCRIPTION
07/2019		RECORD DRAWING

PROCESS

SOLIDS HOLDING TANKS TOP PARTIAL PLAN 1

LITTLE PATUXENT WATER RECLAMATION PLANT
8TH ADDITION
BIOSOLIDS PROCESSING FACILITIES - PHASE I

CAPITAL PROJECT S-6295
CONTRACT NO. 24-4935

ELECTION DISTRICT NO. 6
HOWARD COUNTY, MARYLAND

SCALE AS SHOWN

SHEET 171 OF 463

M-222

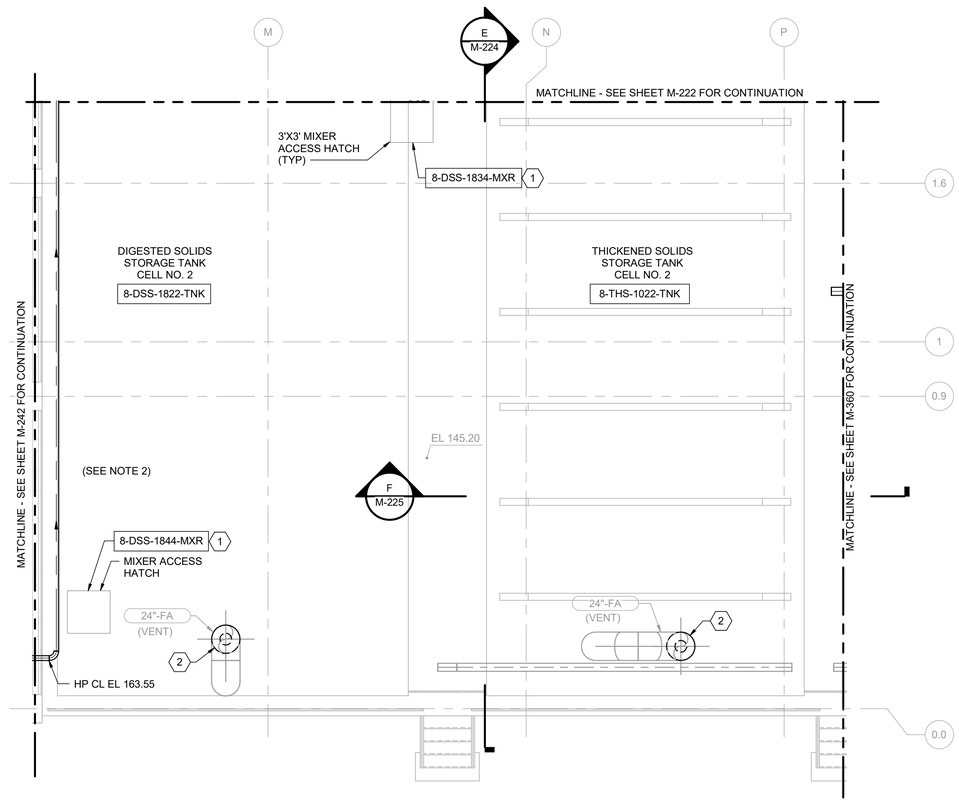

PARTIAL COVER PLAN AT EL 146.00

3/16" = 1'-0"

N

GENERAL NOTES

1. CONTRACTOR TO VERIFY AND MATCH EXISTING ELEVATIONS WHEN CONNECTING TO EXISITNG PIPING SYSTEMS
2. SLOPE DUCTWORK TOWARDS DIGESTED SOLIDS STORAGE HEADER

KEY NOTES (X)

1 INSTALL RELOCATED MIXERS FROM THICKENED SLUDGE STORAGE TANKS.

2 REDUCE VENT INLET TO 12" DIAMETER, PROVIDE PLUG OR FLANGE WITH 12" DIAMETER OPENING.

THE DRAWINGS IN THIS SET ARE RECORD DRAWINGS. THEY ARE CONSTRUCTION CONTRACT DRAWINGS WHICH HAVE BEEN REVISED BASED ON AVAILABLE FIELD INFORMATION RECORDED BY OTHERS DURING CONSTRUCTION OF THIS CONTRACT. THERE HAS BEEN NO VERIFICATION OF DIMENSIONS SHOWN ON THE CONSTRUCTION DRAWINGS OR THE ACCURACY/COMPLETENESS OF THE FIELD INFORMATION RECEIVED.

SIGNATURE — DATE 2/7/2023

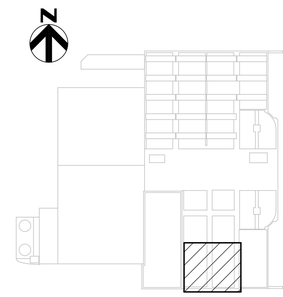

KEY PLAN

AS-BUILT REPLACEMENT SHEET

PROFESSIONAL CERTIFICATION

THIS DRAWING WAS ORIGINALLY APPROVED FOR CONSTRUCTION AND SEALED BY BRIAN M. BACLCHUNAS, A REGISTERED PROFESSIONAL ENGINEER IN THE STATE OF MARYLAND, NO. 200406

NOTICE TO CONTRACTORS

- PROJECT ELEVATIONS ARE BASED ON NAVD88 AND HOWARD COUNTY'S BENCHMARK SYSTEM
- PREVIOUS PROJECTS USED OTHER DATUMS
- APPLY THE FOLLOWING CONVERSIONS WHEN USING PREVIOUS CONTRACT DRAWINGS:
  - ADDITION NO. 6: SUBTRACT 0.80 FT
  - PRIOR ADDITIONS: SUBTRACT 1.04 FT

DEPARTMENT OF PUBLIC WORKS
HOWARD COUNTY, MARYLAND

CHIEF, BUREAU OF UTILITIES — DATE

DES: MJW
DRN: REE
CHK: JRK
DATE: 12/2016

DATE	REV	DESCRIPTION
07/2019		RECORD DRAWING

PROCESS

SOLIDS HOLDING TANKS TOP PARTIAL PLAN 2

LITTLE PATUXENT WATER RECLAMATION PLANT
8TH ADDITION
BIOSOLIDS PROCESSING FACILITIES - PHASE I

CAPITAL PROJECT S-6295
CONTRACT NO. 24-4935

ELECTION DISTRICT NO. 6
HOWARD COUNTY, MARYLAND

SCALE AS SHOWN

SHEET 172 OF 463

M-223

BIM 360://10054364 – Little Patuxent WRP 8th Addition/264591_100_D_V18.rvt
1/11/2022 1:57:51 PM

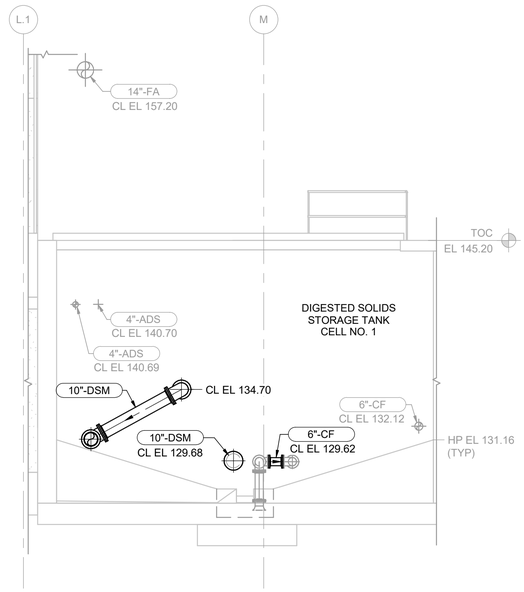

A M-220 SECTION
3/16" = 1'-0"

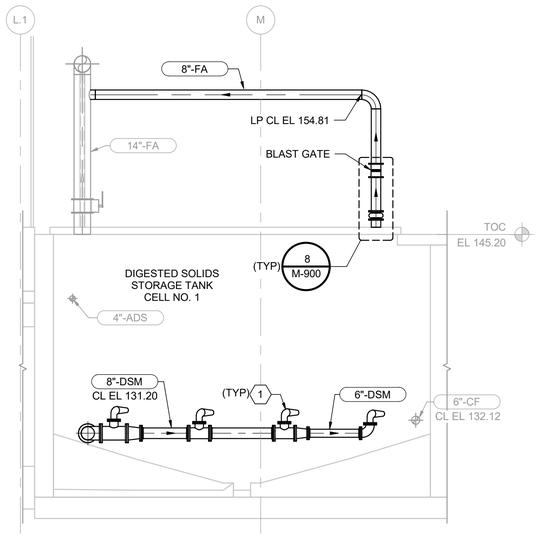

B M-220 SECTION
3/16" = 1'-0"

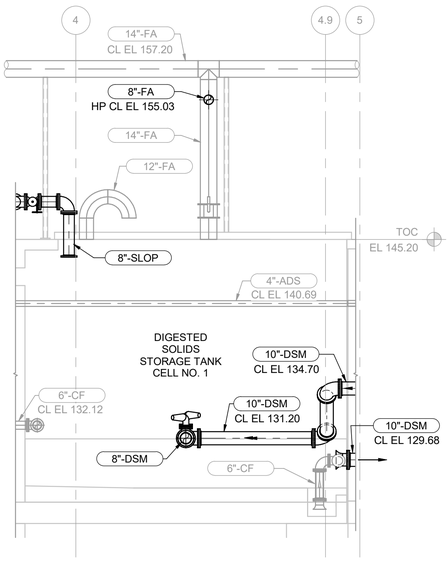

C M-220 SECTION
3/16" = 1'-0"

GENERAL NOTES

1. CONTRACTOR TO VERIFY AND MATCH EXISTING ELEVATIONS WHEN CONNECTING TO EXISITNG PIPING SYSTEMS.
2. CONTRACTOR TO COORDINATE NOZZLE LOCATION & ORIENTATION W/ MIXER SUPPLIER.

KEY NOTES (X)

1 MIXING NOZZLE
2 COMPRESSED AIR MIXING NOZZLE. REFER TO MANUFACTURER INSTALLATION DRAWINGS FOR SUPPORT DETAILS.
3 THICKENED PRIMARY SLUDGE (TPS) DISCHARGE INTO THICKENED SOLIDS STORAGE TANKS: RUN DROP PIPE DOWN TO ELBOW AT ELEVATION 132 +/-. PROVIDE GOOSENECK AT TOP OF PIPE FOR AIR RELEASE. SET BOTTOM OF GOOSENECK ELEVATION AT LEAST 1'-0" ABOVE MAX WSE.
4 REDUCE VENT INLET TO 12" DIAMETER, PROVIDE PLUG OR FLANGE WITH 12" DIAMETER OPENING.

THE DRAWINGS IN THIS SET ARE RECORD DRAWINGS. THEY ARE CONSTRUCTION CONTRACT DRAWINGS WHICH HAVE BEEN REVISED BASED ON AVAILABLE FIELD INFORMATION RECORDED BY OTHERS DURING CONSTRUCTION OF THIS CONTRACT. THERE HAS BEEN NO VERIFICATION OF DIMENSIONS SHOWN ON THE CONSTRUCTION DRAWINGS OR THE ACCURACY/COMPLETENESS OF THE FIELD INFORMATION RECEIVED.

SIGNATURE _____ DATE 2/7/2023

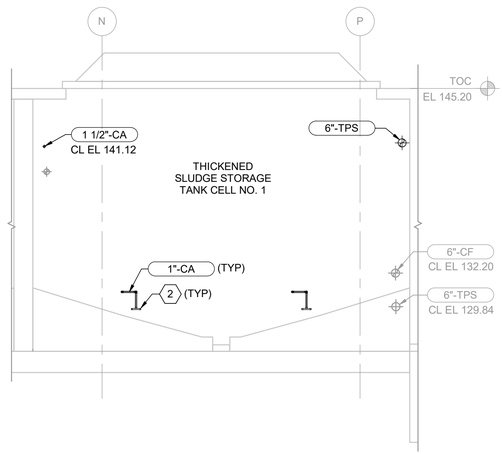

D M-220 SECTION
3/16" = 1'-0"

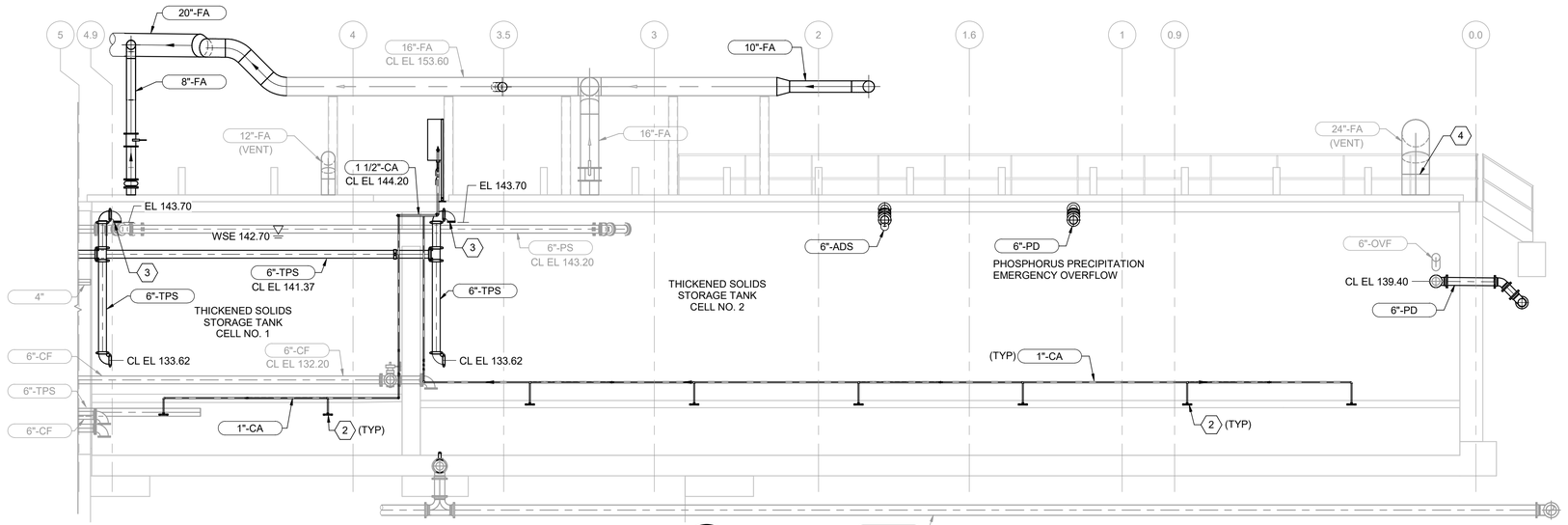

E M-220 SECTION
3/16" = 1'-0"

BIM 360://10054364 – Little Patuxent WRP 8th Addition/264591_100_D_V18.rvt
1/11/2022 1:57:57 PM

AS-BUILT REPLACEMENT SHEET

PROFESSIONAL CERTIFICATION
THIS DRAWING WAS ORIGINALLY APPROVED FOR CONSTRUCTION AND SEALED BY BRIAN M. BACLCHUNAS, A REGISTERED PROFESSIONAL ENGINEER IN THE STATE OF MARYLAND, NO. 200406

NOTICE TO CONTRACTORS
- PROJECT ELEVATIONS ARE BASED ON NAVD88 AND HOWARD COUNTY'S BENCHMARK SYSTEM
- PREVIOUS PROJECTS USED OTHER DATUMS
- APPLY THE FOLLOWING CONVERSIONS WHEN USING PREVIOUS CONTRACT DRAWINGS:
  - ADDITION NO. 6: SUBTRACT 0.80 FT
  - PRIOR ADDITIONS: SUBTRACT 1.04 FT

DEPARTMENT OF PUBLIC WORKS
HOWARD COUNTY, MARYLAND

_____ CHIEF, BUREAU OF UTILITIES DATE

DES: MJW
DRN: SLB
CHK: JRK
DATE: 12/2016

DATE	REV	DESCRIPTION
07/2019		RECORD DRAWING

PROCESS

SOLIDS HOLDING TANKS
SECTIONS 1

LITTLE PATUXENT WATER RECLAMATION PLANT
8TH ADDITION
BIOSOLIDS PROCESSING FACILITIES - PHASE I

CAPITAL PROJECT S-6295
CONTRACT NO. 24-4935

ELECTION DISTRICT NO. 6
HOWARD COUNTY, MARYLAND

SCALE AS SHOWN

SHEET 173 OF 463

M-224

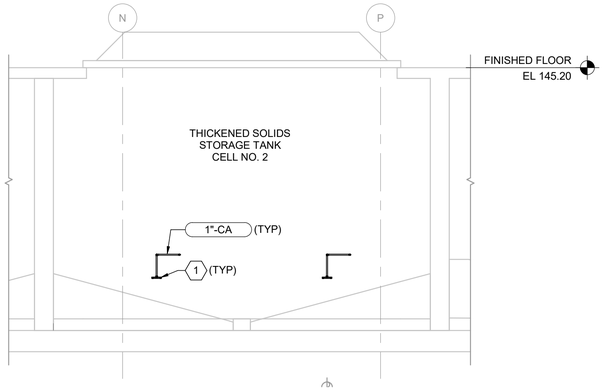

F
M-221
SECTION
3/16" = 1'-0"

GENERAL NOTES

1. CONTRACTOR TO VERIFY AND MATCH EXISTING ELEVATIONS WHEN CONNECTING TO EXISITNG PIPING SYSTEMS

KEY NOTES ⟨X⟩

1 COMPRESSED AIR MIXING NOZZLE. REFER TO MANUFACTURER INSTALLATION DRAWINGS FOR SUPPORT DETAILS.

THE DRAWINGS IN THIS SET ARE RECORD DRAWINGS. THEY ARE CONSTRUCTION CONTRACT DRAWINGS WHICH HAVE BEEN REVISED BASED ON AVAILABLE FIELD INFORMATION RECORDED BY OTHERS DURING CONSTRUCTION OF THIS CONTRACT. THERE HAS BEEN NO VERIFICATION OF DIMENSIONS SHOWN ON THE CONSTRUCTION DRAWINGS OR THE ACCURACY/COMPLETENESS OF THE FIELD INFORMATION RECEIVED.

SIGNATURE — DATE 2/7/2023

AS-BUILT REPLACEMENT SHEET

PROFESSIONAL CERTIFICATION

THIS DRAWING WAS ORIGINALLY APPROVED FOR CONSTRUCTION AND SEALED BY BRIAN M. BACLCHUNAS, A REGISTERED PROFESSIONAL ENGINEER IN THE STATE OF MARYLAND, NO. 200406

NOTICE TO CONTRACTORS

- PROJECT ELEVATIONS ARE BASED ON NAVD88 AND HOWARD COUNTY'S BENCHMARK SYSTEM
- PREVIOUS PROJECTS USED OTHER DATUMS
- APPLY THE FOLLOWING CONVERSIONS WHEN USING PREVIOUS CONTRACT DRAWINGS:
  - ADDITION NO. 6: SUBTRACT 0.80 FT
  - PRIOR ADDITIONS: SUBTRACT 1.04 FT

DEPARTMENT OF PUBLIC WORKS
HOWARD COUNTY, MARYLAND

CHIEF, BUREAU OF UTILITIES — DATE

DES: MJW
DRN: SLB
CHK: JRK
DATE: 12/2016

DATE	REV	DESCRIPTION
07/2019		RECORD DRAWING

PROCESS

SOLIDS HOLDING TANKS SECTIONS 2

LITTLE PATUXENT WATER RECLAMATION PLANT
8TH ADDITION
BIOSOLIDS PROCESSING FACILITIES - PHASE I

CAPITAL PROJECT S-6295
CONTRACT NO. 24-4935

ELECTION DISTRICT NO. 6
HOWARD COUNTY, MARYLAND

SCALE AS SHOWN

SHEET 174 OF 463

M-225

BIM 360://10054364 – Little Patuxent WRP 8th Addition/264591_100_D_V18.rvt
1/11/2022 1:57:59 PM

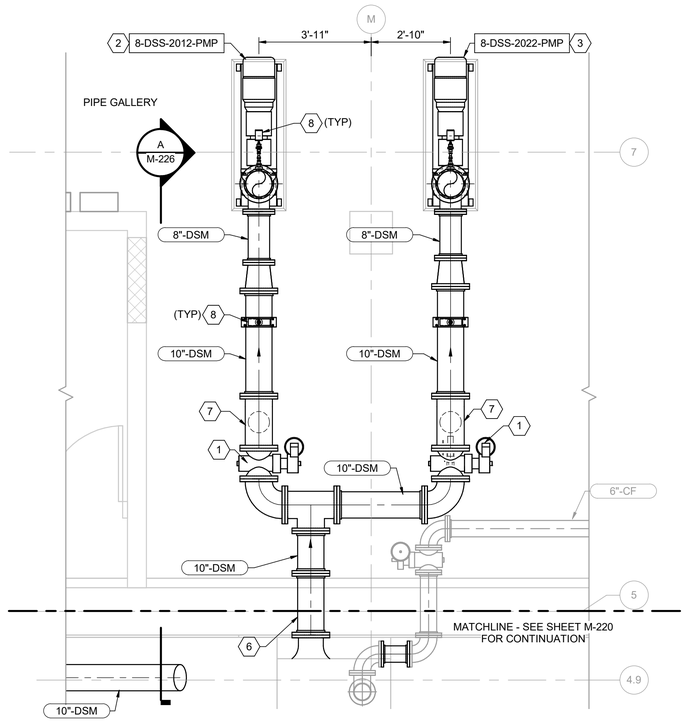

1 M-200 DIGESTED SOLIDS MIXING PUMP PARTIAL PLAN

3/8" = 1'-0"

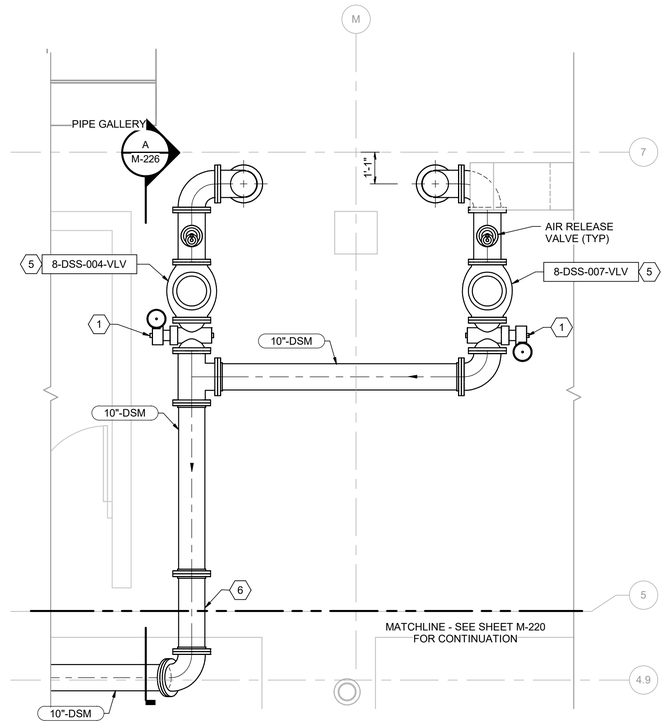

2 M-200 DIGESTED SOLIDS MIXING PUMP PARTIAL PLAN

3/8" = 1'-0"

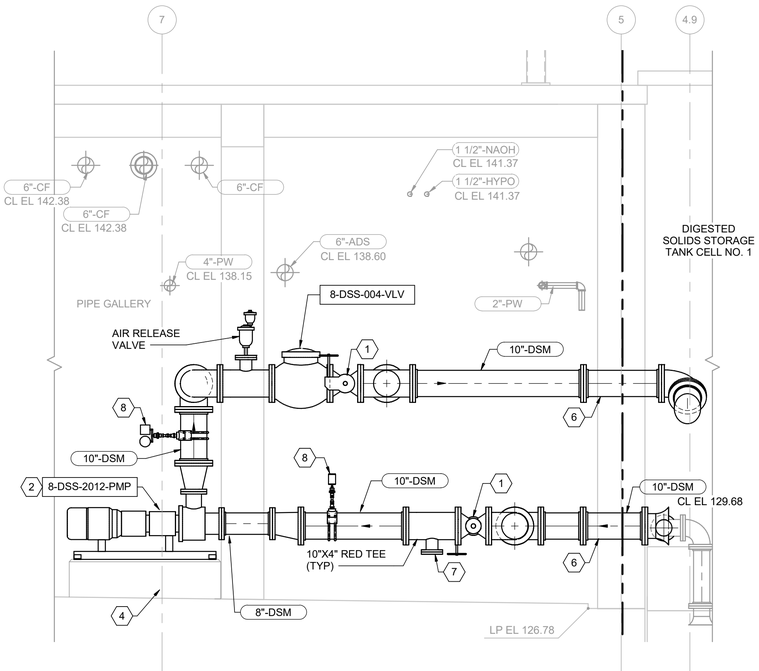

A M-226 SECTION

3/8" = 1'-0"

GENERAL NOTES

1. CONTRACTOR TO VERIFY AND MATCH EXISTING ELEVATIONS WHEN CONNECTING TO EXISITNG PIPING SYSTEMS

KEY NOTES (X)

1 10" PLUG VALVE
2 DIGESTED SOLIDS MIXING PUMP NO. 1.
3 DIGESTED SOLIDS MIXING PUMP NO. 2.
4 CONCRETE EQUIPMENT BASE, SEE DETAIL 1/S-904.
5 10" CHECK VALVE
6 PIPE PENETRATION AT WALL, SEE DETAIL 5/S-900
7 DRAIN CONNECTION, SEE DETAIL 3/M-902.
8 PRESSURE GAUGE AND SWITCH W/ DIAPHRAGM SEAL.SEE DETAIL 1/I-910

THE DRAWINGS IN THIS SET ARE RECORD DRAWINGS. THEY ARE CONSTRUCTION CONTRACT DRAWINGS WHICH HAVE BEEN REVISED BASED ON AVAILABLE FIELD INFORMATION RECORDED BY OTHERS DURING CONSTRUCTION OF THIS CONTRACT. THERE HAS BEEN NO VERIFICATION OF DIMENSIONS SHOWN ON THE CONSTRUCTION DRAWINGS OR THE ACCURACY/COMPLETENESS OF THE FIELD INFORMATION RECEIVED.

SIGNATURE 2/7/2023 DATE

AS-BUILT REPLACEMENT SHEET

PROFESSIONAL CERTIFICATION

THIS DRAWING WAS ORIGINALLY APPROVED FOR CONSTRUCTION AND SEALED BY BRIAN M. BACLCHUNAS, A REGISTERED PROFESSIONAL ENGINEER IN THE STATE OF MARYLAND, NO. 200406

NOTICE TO CONTRACTORS

- PROJECT ELEVATIONS ARE BASED ON NAVD88 AND HOWARD COUNTY'S BENCHMARK SYSTEM
- PREVIOUS PROJECTS USED OTHER DATUMS
- APPLY THE FOLLOWING CONVERSIONS WHEN USING PREVIOUS CONTRACT DRAWINGS:
  - ADDITION NO. 6: SUBTRACT 0.80 FT
  - PRIOR ADDITIONS: SUBTRACT 1.04 FT

DEPARTMENT OF PUBLIC WORKS
HOWARD COUNTY, MARYLAND

CHIEF, BUREAU OF UTILITIES DATE

DES: MJW
DRN: SLB
CHK: JRK
DATE: 12/2016

DATE	REV	DESCRIPTION
07/2019		RECORD DRAWING

PROCESS

SOLIDS HOLDING TANKS SECTIONS AND DETAILS 1

LITTLE PATUXENT WATER RECLAMATION PLANT
8TH ADDITION
BIOSOLIDS PROCESSING FACILITIES - PHASE I

CAPITAL PROJECT S-6295
CONTRACT NO. 24-4935

ELECTION DISTRICT NO. 6
HOWARD COUNTY, MARYLAND

SCALE AS SHOWN

SHEET 175 OF 463

M-226

BIM 360://10054364 – Little Patuxent WRP 8th Addition/264591_100_D_V18.rvt
1/11/2022 1:58:00 PM

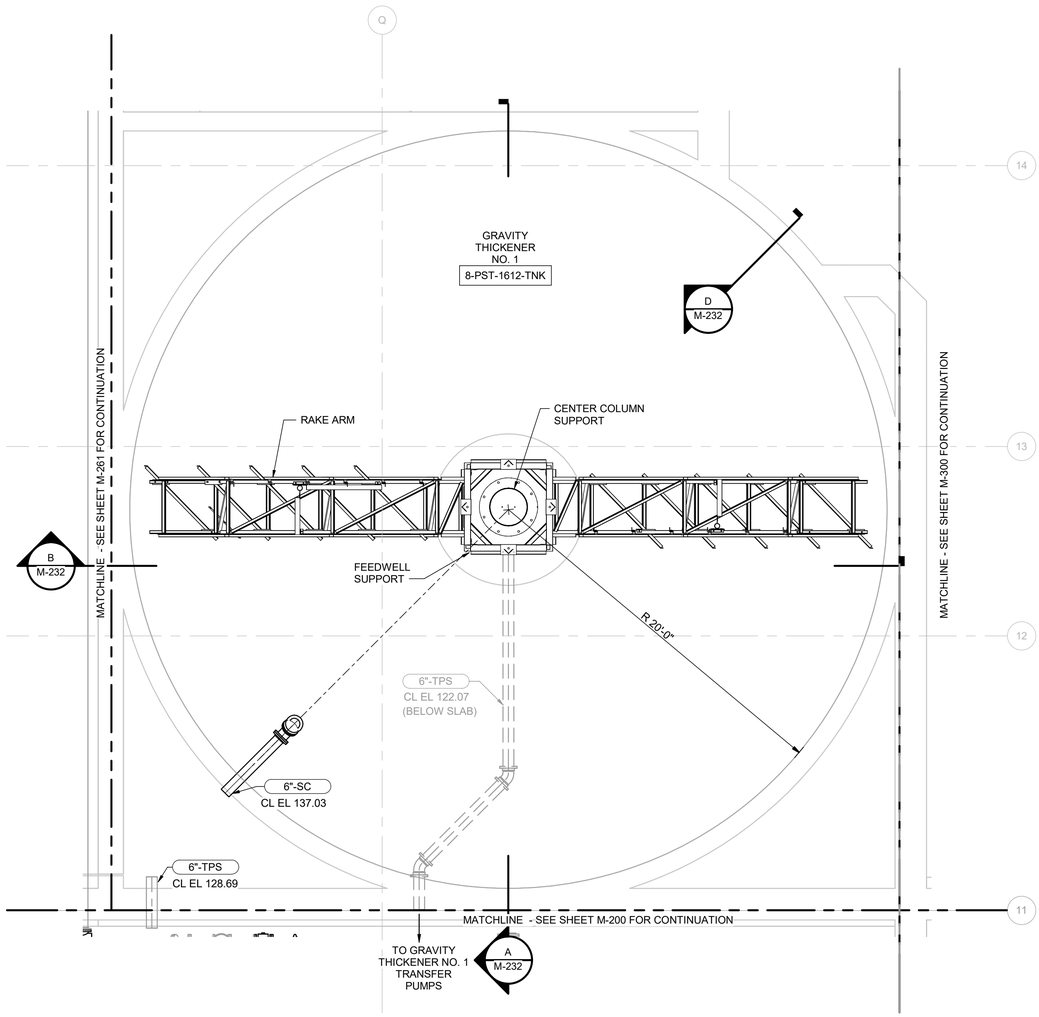

1 / M-260 GRAVITY THICKENER NO 1 LOWER PLAN AT EL 128.00

1/4" = 1'-0"

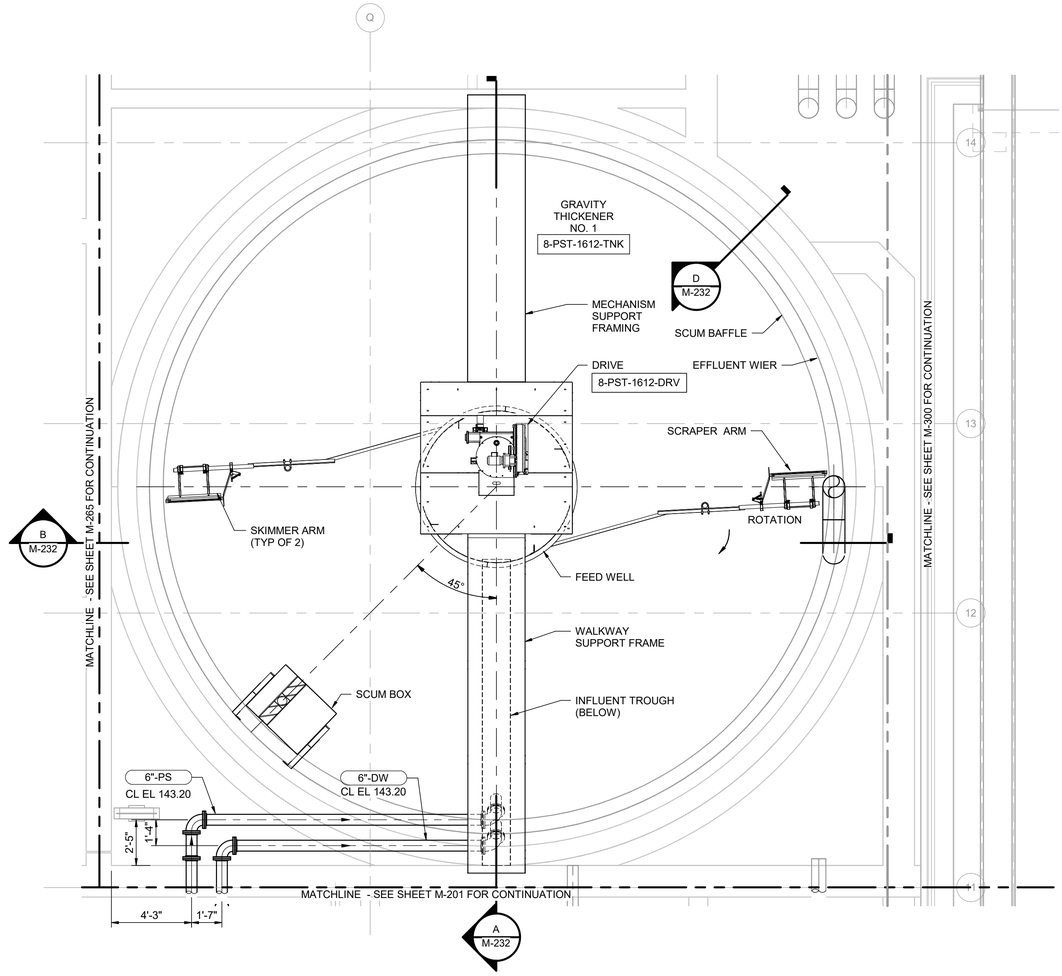

GRAVITY THICKENER NO 1 UPPER PLAN AT EL 144.00

NOT TO SCALE

GENERAL NOTES

1. DRAWINGS ARE INTENDED TO DEPICT DESIGN INTENT; CONTRACTOR TO REFER TO SPECIFICATIONS, P&IDS, AND STANDARD DETAILS FOR FURTHER INSTALLATION REQUIREMENTS.
2. VALVES, INLINE APPURTENANCES AND EQUIPMENT ARE SHOWN GRAPHICALLY AS THE DEVICE BODY; REFER TO P&IDS FOR DEVICE TYPE, SIZE, AND DETAILS. INSTALL DEVICES IN ACCORDANCE WITH SPECIFICATIONS AND MFR'S REQUIREMENTS. ENSURE ADEQUATE ACCESS FOR OPERATION OF DEVICES—NOTIFY ENGINEER PRIOR TO INSTALLATION IF INADEQUATE CLEARANCE IS ANTICIPATED.
3. CONTRACTOR TO VERIFY AND MATCH EXISTING ELEVATIONS WHEN CONNECTING TO EXISITNG PIPING SYSTEMS

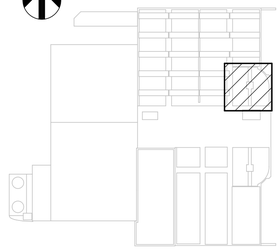

KEY PLAN

THE DRAWINGS IN THIS SET ARE RECORD DRAWINGS. THEY ARE CONSTRUCTION CONTRACT DRAWINGS WHICH HAVE BEEN REVISED BASED ON AVAILABLE FIELD INFORMATION RECORDED BY OTHERS DURING CONSTRUCTION OF THIS CONTRACT. THERE HAS BEEN NO VERIFICATION OF DIMENSIONS SHOWN ON THE CONSTRUCTION DRAWINGS OR THE ACCURACY/COMPLETENESS OF THE FIELD INFORMATION RECEIVED.

SIGNATURE — DATE 2/7/2023

AS-BUILT REPLACEMENT SHEET

PROFESSIONAL CERTIFICATION

THIS DRAWING WAS ORIGINALLY APPROVED FOR CONSTRUCTION AND SEALED BY BRIAN M. BACLCHUNAS, A REGISTERED PROFESSIONAL ENGINEER IN THE STATE OF MARYLAND, NO. 200406

NOTICE TO CONTRACTORS

- PROJECT ELEVATIONS ARE BASED ON NAVD88 AND HOWARD COUNTY'S BENCHMARK SYSTEM
- PREVIOUS PROJECTS USED OTHER DATUMS
- APPLY THE FOLLOWING CONVERSIONS WHEN USING PREVIOUS CONTRACT DRAWINGS:
  - ADDITION NO. 6: SUBTRACT 0.80 FT
  - PRIOR ADDITIONS: SUBTRACT 1.04 FT

DEPARTMENT OF PUBLIC WORKS
HOWARD COUNTY, MARYLAND

CHIEF, BUREAU OF UTILITIES — DATE

DES: KLP
DRN: REE
CHK: JRK
DATE: 12/2016

DATE	REV	DESCRIPTION
07/2019		RECORD DRAWING

PROCESS

GRAVITY THICKENER NO. 1 LOWER / UPPER PLANS

LITTLE PATUXENT WATER RECLAMATION PLANT
8TH ADDITION
BIOSOLIDS PROCESSING FACILITIES - PHASE I

CAPITAL PROJECT S-6295
CONTRACT NO. 24-4935

ELECTION DISTRICT NO. 6
HOWARD COUNTY, MARYLAND

SCALE AS SHOWN

SHEET 176 OF 463

M-230

BIM 360://10054364 – Little Patuxent WRP 8th Addition/264591_100_D_V18.rvt
1/11/2022 2:02:57 PM

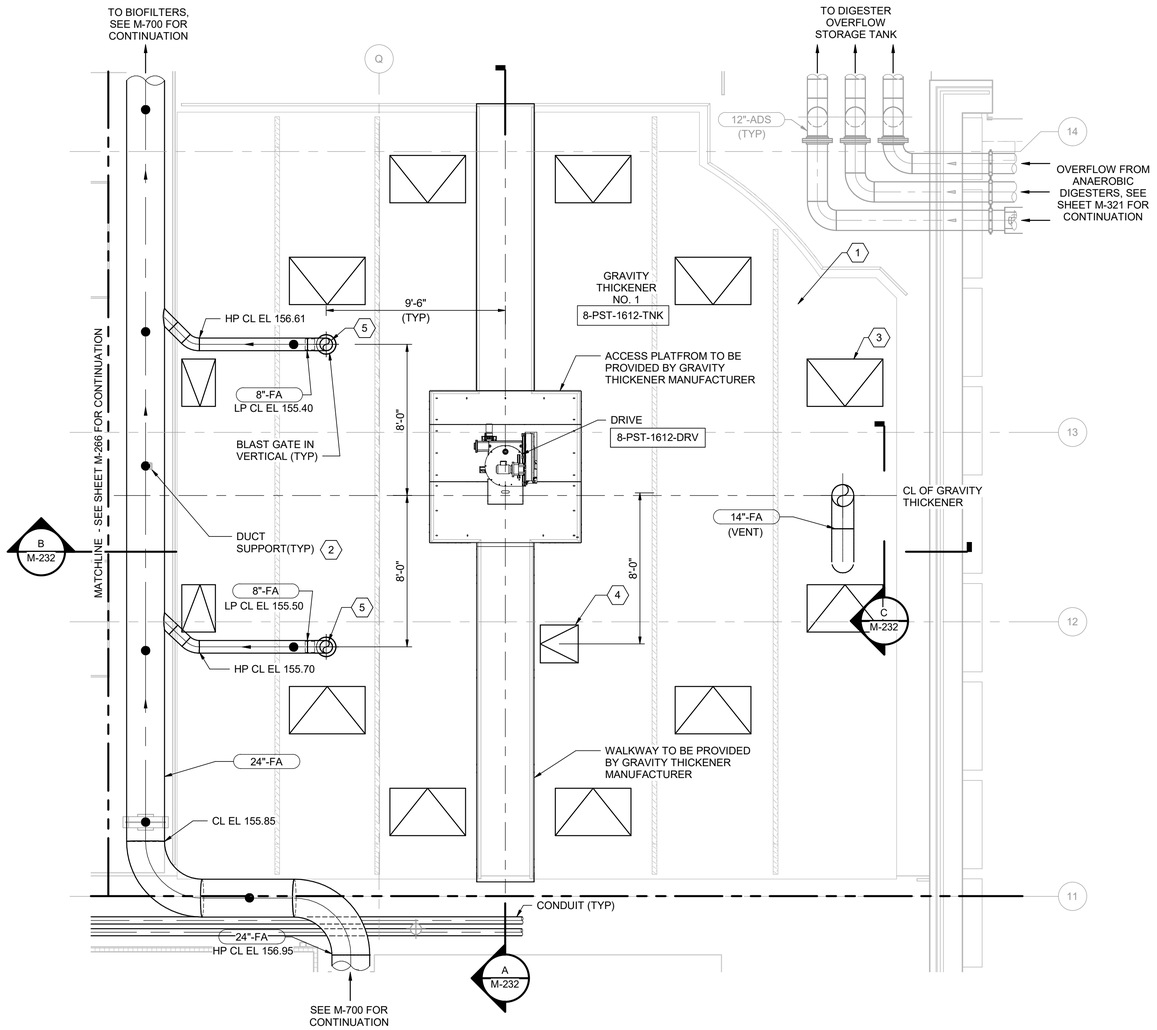

GRAVITY THICKENER NO. 1 COVER PLAN AT EL 146.00

1/4" = 1'-0"

GENERAL NOTE:

1. SLOPE GRAVITY THICKENER DUCTWORK TOWARD TANK @ 1/8" PER FOOT.

KEY NOTES (X)

1 ALUMINUM FLAT PANEL TANK COVER MANUFACTURER TO COORDINATE INSTALLATION OF GRAVITY THICKENER WALKWAY WITH GRAVITY THICKENER MANUFACTURER.

2 PIPE SUPPORT, SEE DETAIL 1/S-909

3 PERIMETER ACCESS HATCHES. COVER MANUFACTURER TO PROVIDE HATCHES ABOVE WEIR, LAUNDER, AND SCUM BEACH. LOCATIONS ON DRAWING ARE APPROXIMATE. QUANTITY AS SHOWN ON DRAWING. COORDINATE WITH GRAVITY THICKENER MANUFACTURER.

4 24" x 24" SLUDGE BLANKET SAMPLING HATCH.

5 DUCTWORK MODIFIED PER RFI-42. COORDINATE PENETRATION AND SUPPORT LOCATIONS WITH COVER SUPPLIER.

THE DRAWINGS IN THIS SET ARE RECORD DRAWINGS. THEY ARE CONSTRUCTION CONTRACT DRAWINGS WHICH HAVE BEEN REVISED BASED ON AVAILABLE FIELD INFORMATION RECORDED BY OTHERS DURING CONSTRUCTION OF THIS CONTRACT. THERE HAS BEEN NO VERIFICATION OF DIMENSIONS SHOWN ON THE CONSTRUCTION DRAWINGS OR THE ACCURACY/COMPLETENESS OF THE FIELD INFORMATION RECEIVED.

SIGNATURE 2/7/2023 DATE

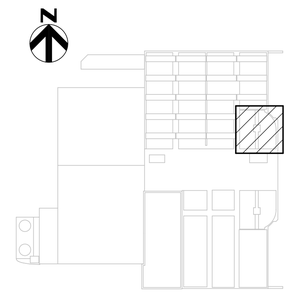

KEY PLAN

AS-BUILT REPLACEMENT SHEET

PROFESSIONAL CERTIFICATION

THIS DRAWING WAS ORIGINALLY APPROVED FOR CONSTRUCTION AND SEALED BY BRIAN M. BACLCHUNAS, A REGISTERED PROFESSIONAL ENGINEER IN THE STATE OF MARYLAND, NO. 200406

NOTICE TO CONTRACTORS

- PROJECT ELEVATIONS ARE BASED ON NAVD88 AND HOWARD COUNTY'S BENCHMARK SYSTEM
- PREVIOUS PROJECTS USED OTHER DATUMS
- APPLY THE FOLLOWING CONVERSIONS WHEN USING PREVIOUS CONTRACT DRAWINGS:
  - ADDITION NO. 6: SUBTRACT 0.80 FT
  - PRIOR ADDITIONS: SUBTRACT 1.04 FT

DEPARTMENT OF PUBLIC WORKS
HOWARD COUNTY, MARYLAND

CHIEF, BUREAU OF UTILITIES DATE

DES: KLP
DRN: REE
CHK: JRK
DATE: 12/2016

DATE	REV	DESCRIPTION
07/2019		RECORD DRAWING

PROCESS

GRAVITY THICKENER NO. 1 COVER PLAN

LITTLE PATUXENT WATER RECLAMATION PLANT
8TH ADDITION
BIOSOLIDS PROCESSING FACILITIES - PHASE I

CAPITAL PROJECT S-6295
CONTRACT NO. 24-4935

ELECTION DISTRICT NO. 6
HOWARD COUNTY, MARYLAND

SCALE AS SHOWN

SHEET 177 OF 463

M-231

BIM 360://10054364 – Little Patuxent WRP 8th Addition/264591_100_D_V18.rvt
1/11/2022 2:03:00 PM

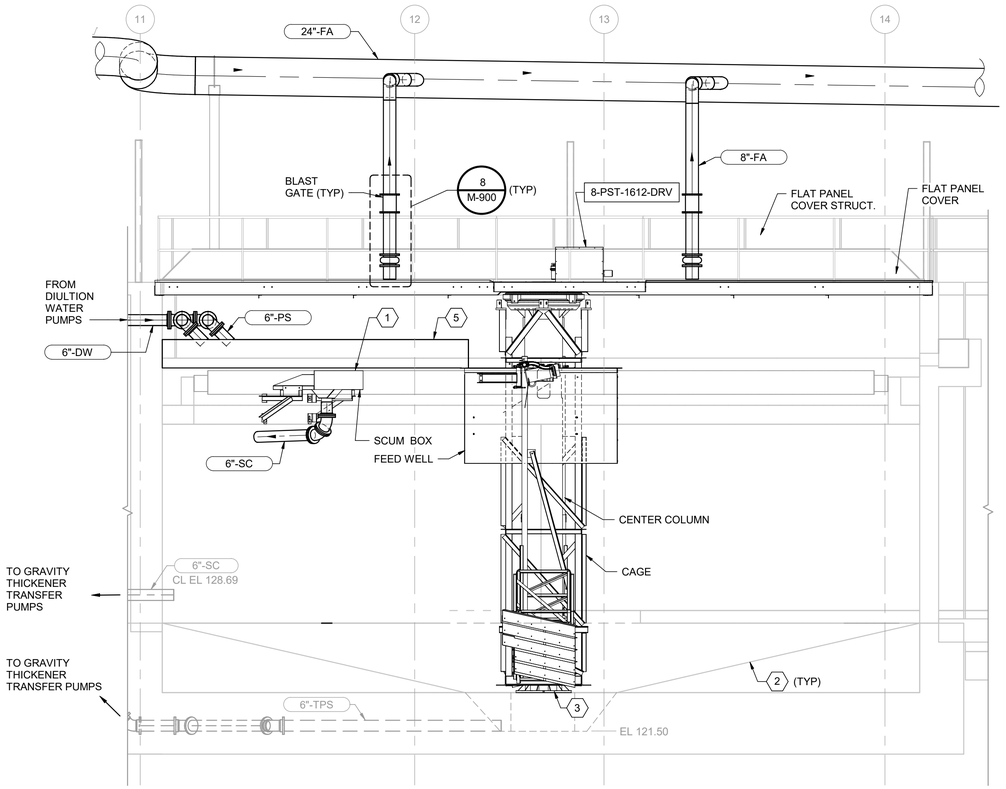

A M-230 GRAVITY THICKENER NO 1 SECTION

1/4" = 1'-0"

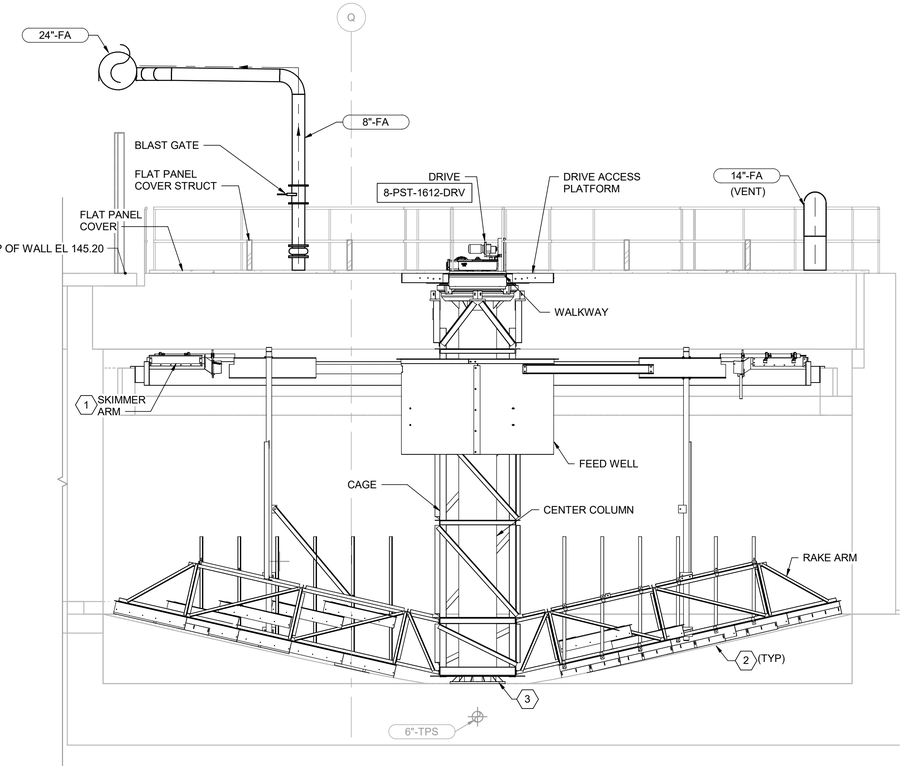

B M-230 GRAVITY THICKENER NO 1 SECTION

1/4" = 1'-0"

GENERAL NOTES

1. CONTRACTOR TO VERIFY AND MATCH EXISTING ELEVATIONS WHEN CONNECTING TO EXISITNG PIPING SYSTEMS
2. SLOPE GRAVITY THICKENER DUCTWORK TOWARD TANK @ 1/8" PER FOOT.

KEY NOTES (X)

1 ELEVATIONS SHOWN ARE PRELIMINARY. ALL GRAVITY THICKENER COMPONENTS, INCLUDING INFLUENT TROUGH, SCUM SKIMMER, SCUM BEACH, WEIRS, BAFFLES SHALL BE SET AT SAME ELEVATION AS EXISTING GRAVITY THICKENER NO. 2. CONTRACTOR TO FIELD-VERIFY.

2 INSTALL NEW GROUT FLOOR IN COMPLIANCE WITH INSTRUCTIONS OF GRAVITY THICKENER MANUFACTURER.

3 COORDINATE CENTER COLUMN ANCHORING WITH GRAVITY THICKENER MANUFACTURER.

4 MECHANICAL ANCHOR BOLTS FOR WEIR AND SCUM BAFFLE BRACKETS: 316/316L STAINLESS STEEL, 1/2" DIA, 4" EMBEDMENT,WITH SS NUT, SS PLATE WASHER, SS LOCK WASHER. STRADDLE EXISTING BOLT HOLES.

5 INFLUENT TROUGH, MATCH GEOMETRY, DIMENSIONS, AND SLOPE OF EXISTING TROUGH IN GRAVITY THICKENER NO. 2. REFER TO DETAIL THIS SHEET.

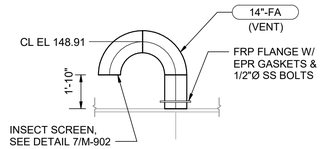

C M-231 ODOR CONTROL INLET VENT

1/4" = 1'-0"

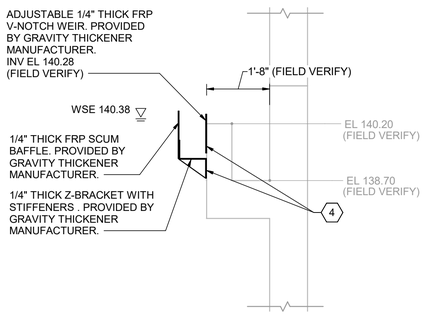

D M-230 SCUM AND EFFLUENT WIER DETAIL

1/2" = 1'-0"

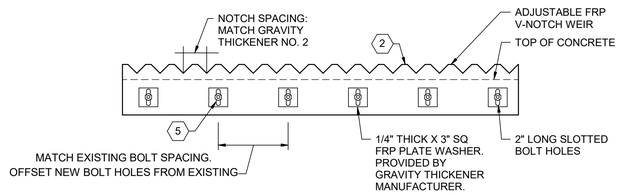

1 WEIR PLATE MOUNTING DETAIL

1" = 1'-0"

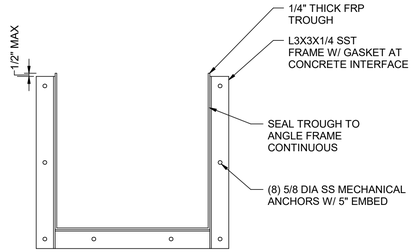

2 INFLUENT TROUGH DETAIL

1" = 1'-0"

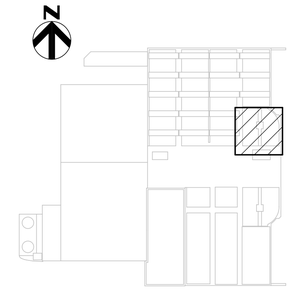

KEY PLAN

THE DRAWINGS IN THIS SET ARE RECORD DRAWINGS. THEY ARE CONSTRUCTION CONTRACT DRAWINGS WHICH HAVE BEEN REVISED BASED ON AVAILABLE FIELD INFORMATION RECORDED BY OTHERS DURING CONSTRUCTION OF THIS CONTRACT. THERE HAS BEEN NO VERIFICATION OF DIMENSIONS SHOWN ON THE CONSTRUCTION DRAWINGS OR THE ACCURACY/COMPLETENESS OF THE FIELD INFORMATION RECEIVED.

SIGNATURE — DATE 2/7/2023

AS-BUILT REPLACEMENT SHEET

PROFESSIONAL CERTIFICATION

THIS DRAWING WAS ORIGINALLY APPROVED FOR CONSTRUCTION AND SEALED BY BRIAN M. BACLCHUNAS, A REGISTERED PROFESSIONAL ENGINEER IN THE STATE OF MARYLAND, NO. 200406

NOTICE TO CONTRACTORS

- PROJECT ELEVATIONS ARE BASED ON NAVD88 AND HOWARD COUNTY'S BENCHMARK SYSTEM
- PREVIOUS PROJECTS USED OTHER DATUMS
- APPLY THE FOLLOWING CONVERSIONS WHEN USING PREVIOUS CONTRACT DRAWINGS:
  - ADDITION NO. 6: SUBTRACT 0.80 FT
  - PRIOR ADDITIONS: SUBTRACT 1.04 FT

DEPARTMENT OF PUBLIC WORKS
HOWARD COUNTY, MARYLAND

CHIEF, BUREAU OF UTILITIES — DATE

DES: KLP
DRN: REE
CHK: JRK
DATE: 12/2016

DATE	REV	DESCRIPTION
07/2019		RECORD DRAWING

PROCESS

GRAVITY THICKENER NO. 1 SECTIONS AND DETAILS

LITTLE PATUXENT WATER RECLAMATION PLANT
8TH ADDITION
BIOSOLIDS PROCESSING FACILITIES - PHASE I

CAPITAL PROJECT S-6295
CONTRACT NO. 24-4935

ELECTION DISTRICT NO. 6
HOWARD COUNTY, MARYLAND

SCALE AS SHOWN

SHEET 178 OF 463

M-232

BIM 360://10054364 – Little Patuxent WRP 8th Addition/264591_100_D_V18.rvt
1/11/2022 2:03:09 PM

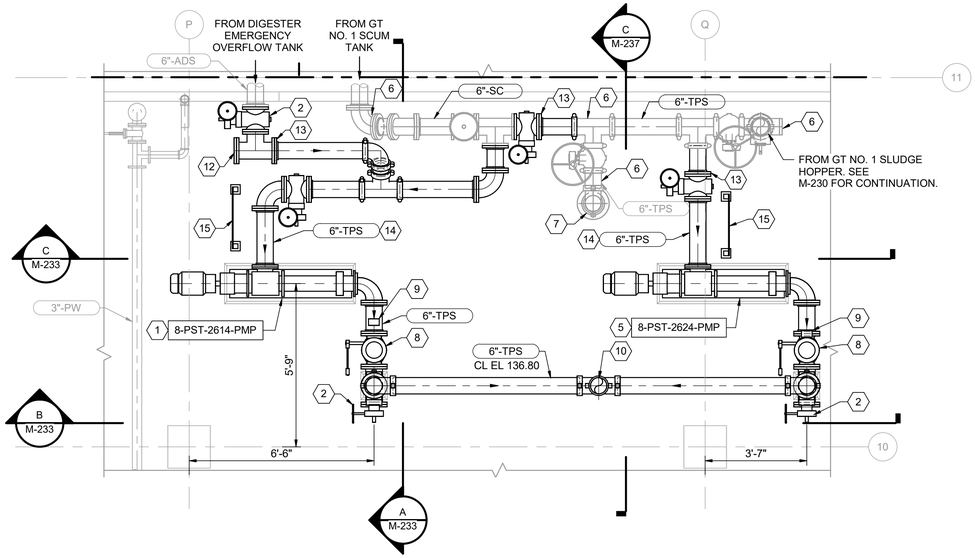

1 M-200 GRAVITY THICKENER NO 1 TRANSFER PUMP PLAN

3/8" = 1'-0"

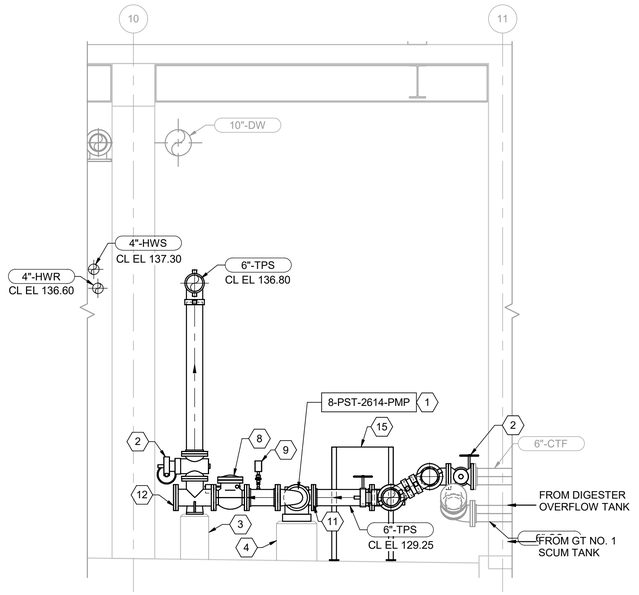

A M-233 GRAVITY THICKENER NO. 1 TRANSFER PUMP SECTION

3/8" = 1'-0"

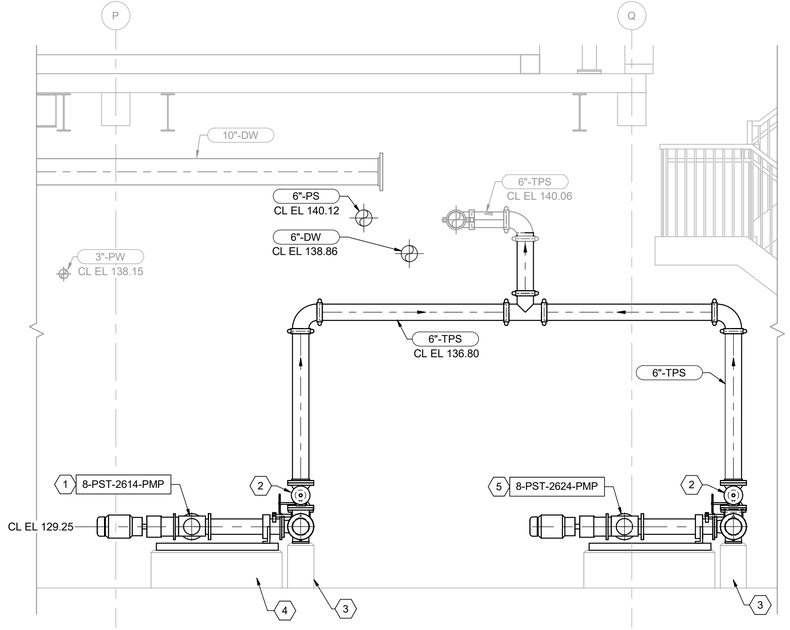

B M-201 GRAVITY THICKENER NO 1 TRANSFER PUMP SECTION

3/8" = 1'-0"

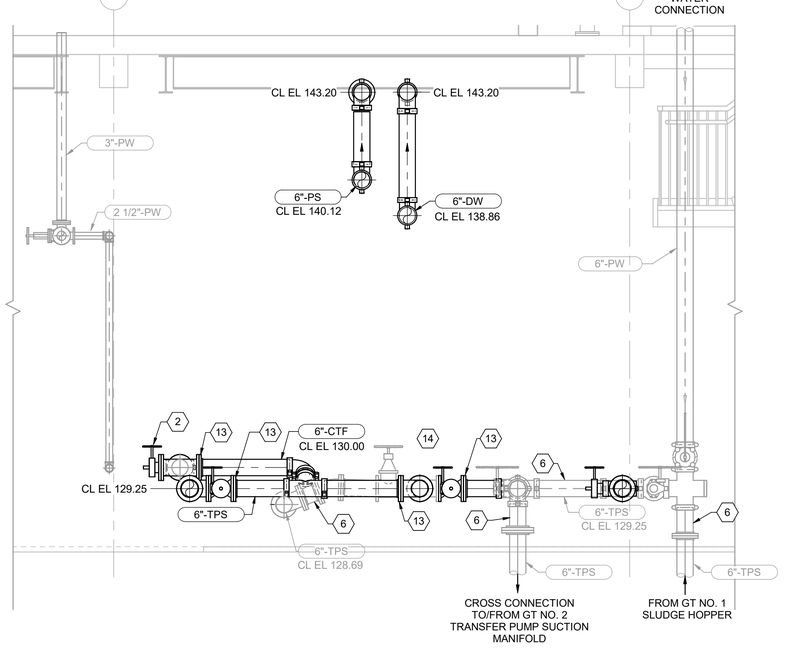

C M-233 GRAVITY THICKENER NO. 1 TRANSFER PIPING SECTION

3/8" = 1'-0"

N

GENERAL NOTES

1. CONTRACTOR TO VERIFY AND MATCH EXISTING ELEVATIONS WHEN CONNECTING TO EXISITNG PIPING SYSTEMS

KEY NOTES (X)

1 GRAVITY THICKENER TRANSFER PUMP NO. 1
2 6" PLUG VALVE
3 CONCRETE FITTING BASE, SEE DETAIL 5/M-905.
4 CONCRETE EQUIPMENT BASE, SEE DETAIL 1/S-904.
5 GRAVITY THICKENER TRANSFER PUMP NO. 2
6 CONTRACTOR TO FIELD-VERIFY MATERIAL OF 6"-TPS PIPE FROM SLAB/WALL CASTINGS TO PUMPS. NOTIFY ENGINEER IF PIPES, VALVES, AND/OR FITTINGS ARE FOUND TO BE CEMENT-LINED.
7 BELOW SLAB CROSS CONNECTION TO/FROM GT NO. 2 TRANSFER PUMP SUCTION MANIFOLD.
8 6" SWING CHECK VALVE
9 PRESSURE GAUGE AND SWITCH W/ DIAPHRAGM SEAL.SEE DETAIL 1/I-910
10 TO THICKENED SOLIDS STORAGE TANKS. SEE M-201 FOR CONTINUATION.
11 DRAIN CONNECTION SEE DETAIL 3/M-902.
12 DRAIN CONNECTION. SEE DETAIL 4/M-902.
13 GROOVED PIPE FLANGE COUPLING ADAPTER.
14 PROVIDE FLANGED COMPONENTS FOR ALL PIPE AND FITTINGS SHOWN AS FLANGED IN ENLARGED PLAN 1/M-233. CONNECT GROOVED PIPE SYSTEMS WITH FLANGE ADAPTERS.
15 PUMP FLUSHING WATER PANEL. SEE DETAIL 4/M-903.

THE DRAWINGS IN THIS SET ARE RECORD DRAWINGS. THEY ARE CONSTRUCTION CONTRACT DRAWINGS WHICH HAVE BEEN REVISED BASED ON AVAILABLE FIELD INFORMATION RECORDED BY OTHERS DURING CONSTRUCTION OF THIS CONTRACT. THERE HAS BEEN NO VERIFICATION OF DIMENSIONS SHOWN ON THE CONSTRUCTION DRAWINGS OR THE ACCURACY/COMPLETENESS OF THE FIELD INFORMATION RECEIVED.

SIGNATURE — DATE 2/7/2023

N

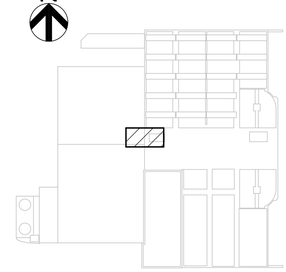

KEY PLAN

AS-BUILT REPLACEMENT SHEET

PROFESSIONAL CERTIFICATION

THIS DRAWING WAS ORIGINALLY APPROVED FOR CONSTRUCTION AND SEALED BY BRIAN M. BACLCHUNAS, A REGISTERED PROFESSIONAL ENGINEER IN THE STATE OF MARYLAND, NO. 200406

NOTICE TO CONTRACTORS

- PROJECT ELEVATIONS ARE BASED ON NAVD88 AND HOWARD COUNTY'S BENCHMARK SYSTEM
- PREVIOUS PROJECTS USED OTHER DATUMS
- APPLY THE FOLLOWING CONVERSIONS WHEN USING PREVIOUS CONTRACT DRAWINGS:
  - ADDITION NO. 6: SUBTRACT 0.80 FT
  - PRIOR ADDITIONS: SUBTRACT 1.04 FT

DEPARTMENT OF PUBLIC WORKS
HOWARD COUNTY, MARYLAND

CHIEF, BUREAU OF UTILITIES — DATE

DES: KLP
DRN: REE
CHK: JRK
DATE: 12/2016

DATE	REV	DESCRIPTION
07/2019		RECORD DRAWING

PROCESS

GRAVITY THICKENER NO. 1 TRANSFER PUMP PLAN AND SECTIONS

LITTLE PATUXENT WATER RECLAMATION PLANT
8TH ADDITION
BIOSOLIDS PROCESSING FACILITIES - PHASE I

CAPITAL PROJECT S-6295
CONTRACT NO. 24-4935

ELECTION DISTRICT NO. 6
HOWARD COUNTY, MARYLAND

SCALE AS SHOWN

SHEET 179 OF 463

M-233

BIM 360://10054364 – Little Patuxent WRP 8th Addition/264591_100_D_V18.rvt
1/11/2022 2:03:16 PM

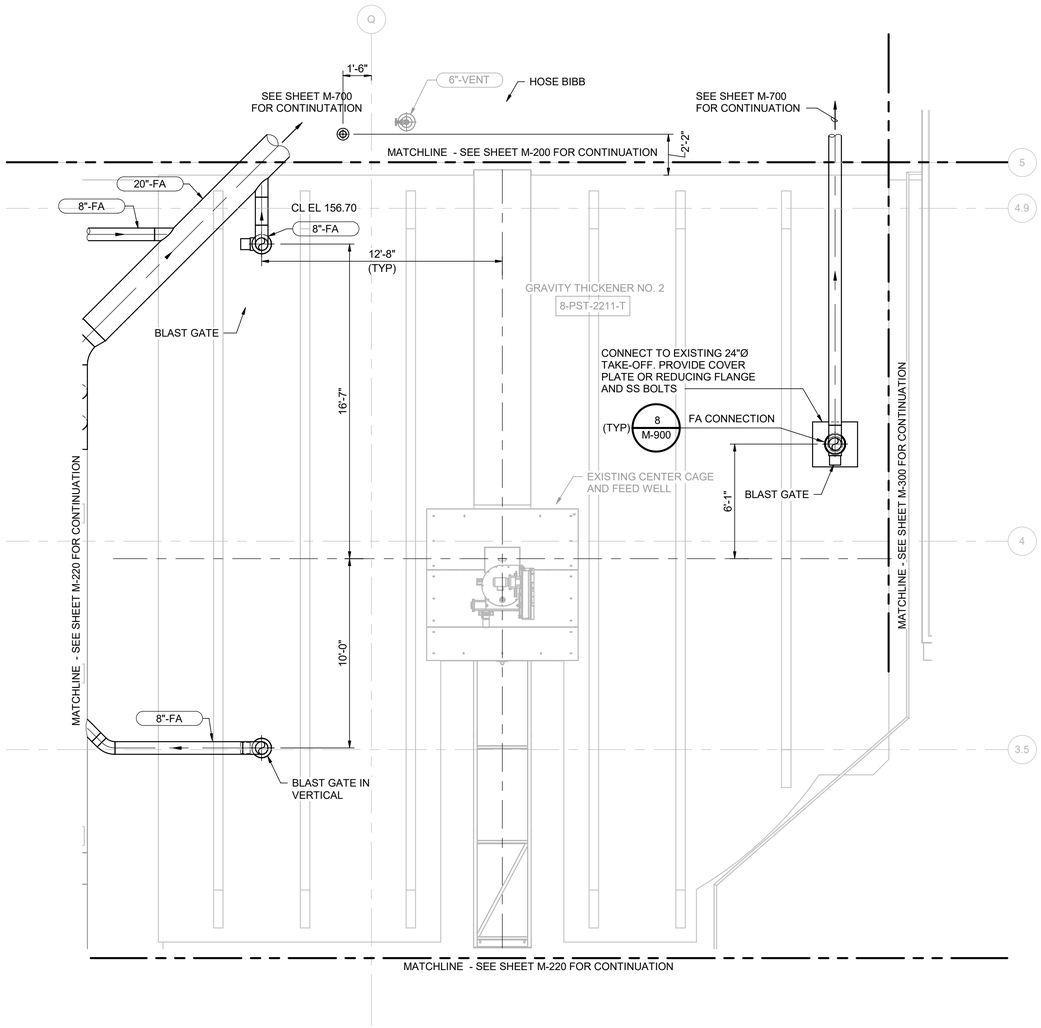

GRAVITY THICKENER NO. 2 COVER PLAN AT EL 145.20

1/4" = 1'-0"

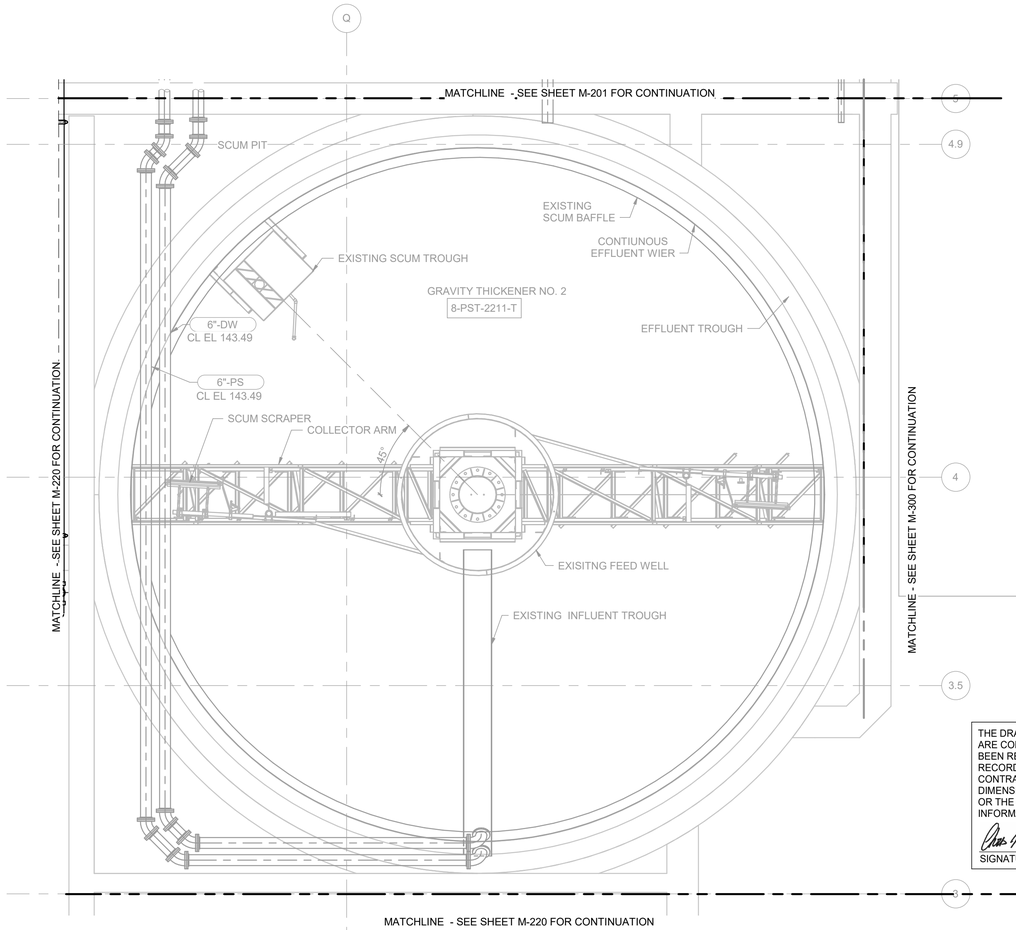

GRAVITY THICKENER NO. 2 UPPER PLAN AT EL 144.00

1/4" = 1'-0"

FOR INFROMATION PURPOSES ONLY
NOT IN CONTRACT

N

GENERAL NOTE:

1. SLOPE GRAVITY THICKENER DUCTWORK TOWARD TANK.

KEY NOTES (X)

THE DRAWINGS IN THIS SET ARE RECORD DRAWINGS. THEY ARE CONSTRUCTION CONTRACT DRAWINGS WHICH HAVE BEEN REVISED BASED ON AVAILABLE FIELD INFORMATION RECORDED BY OTHERS DURING CONSTRUCTION OF THIS CONTRACT. THERE HAS BEEN NO VERIFICATION OF DIMENSIONS SHOWN ON THE CONSTRUCTION DRAWINGS OR THE ACCURACY/COMPLETENESS OF THE FIELD INFORMATION RECEIVED.

SIGNATURE — DATE 2/7/2023

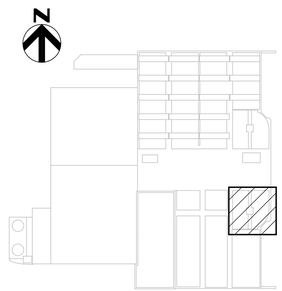

KEY PLAN

AS-BUILT REPLACEMENT SHEET

PROFESSIONAL CERTIFICATION

THIS DRAWING WAS ORIGINALLY APPROVED FOR CONSTRUCTION AND SEALED BY BRIAN M. BACLCHUNAS, A REGISTERED PROFESSIONAL ENGINEER IN THE STATE OF MARYLAND, NO. 200406

NOTICE TO CONTRACTORS

- PROJECT ELEVATIONS ARE BASED ON NAVD88 AND HOWARD COUNTY'S BENCHMARK SYSTEM
- PREVIOUS PROJECTS USED OTHER DATUMS
- APPLY THE FOLLOWING CONVERSIONS WHEN USING PREVIOUS CONTRACT DRAWINGS:
  - ADDITION NO. 6: SUBTRACT 0.80 FT
  - PRIOR ADDITIONS: SUBTRACT 1.04 FT

DEPARTMENT OF PUBLIC WORKS
HOWARD COUNTY, MARYLAND

CHIEF, BUREAU OF UTILITIES — DATE

DES: KLP
DRN: REE
CHK: JRK
DATE: 12/2016

DATE	REV	DESCRIPTION
07/2019		RECORD DRAWING

PROCESS

GRAVITY THICKENER NO. 2 LOWER AND UPPER PLANS

LITTLE PATUXENT WATER RECLAMATION PLANT
8TH ADDITION
BIOSOLIDS PROCESSING FACILITIES - PHASE I

CAPITAL PROJECT S-6295
CONTRACT NO. 24-4935

ELECTION DISTRICT NO. 6
HOWARD COUNTY, MARYLAND

SCALE AS SHOWN

SHEET 180 OF 463

M-235

BIM 360://10054364 – Little Patuxent WRP 8th Addition/264591_100_D_V18.rvt
1/11/2022 2:03:21 PM

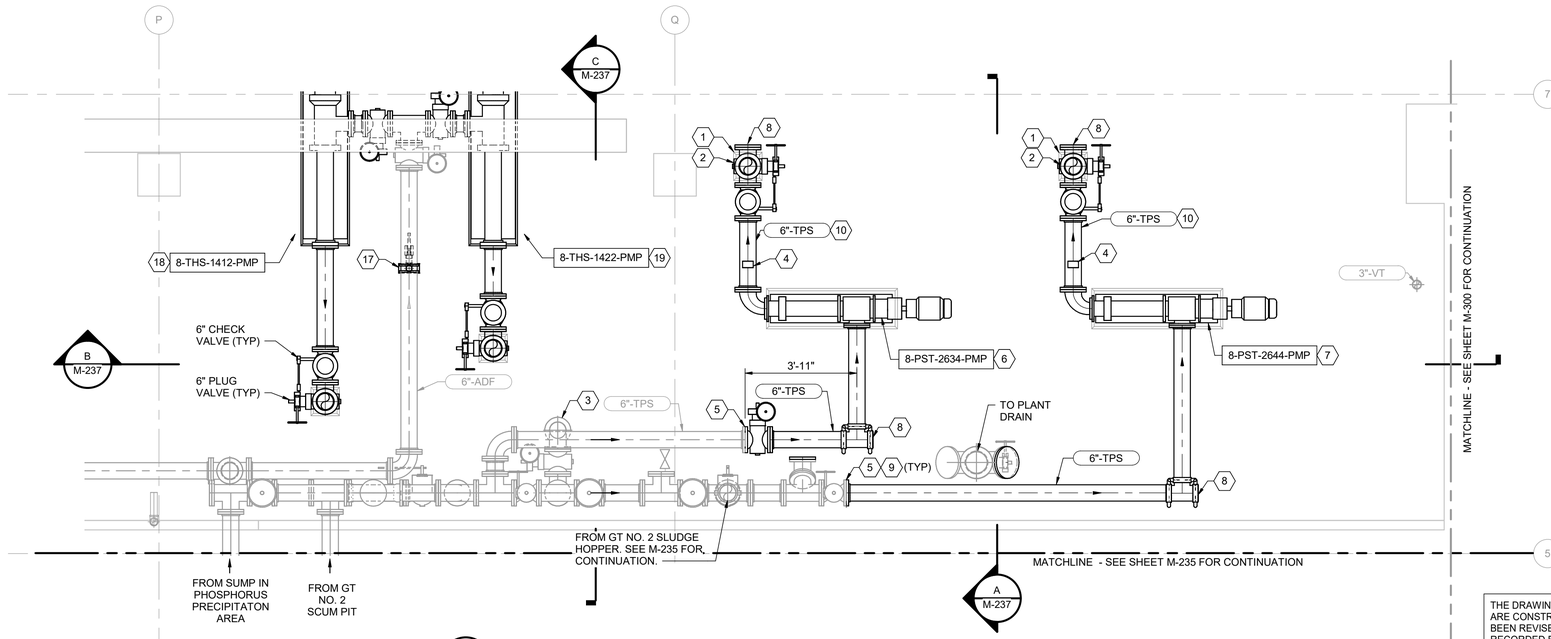

1 M-200 GRAVITY THICKENER NO 2 TRANSFER PUMP PLAN AT 128.00

3/8" = 1'-0"

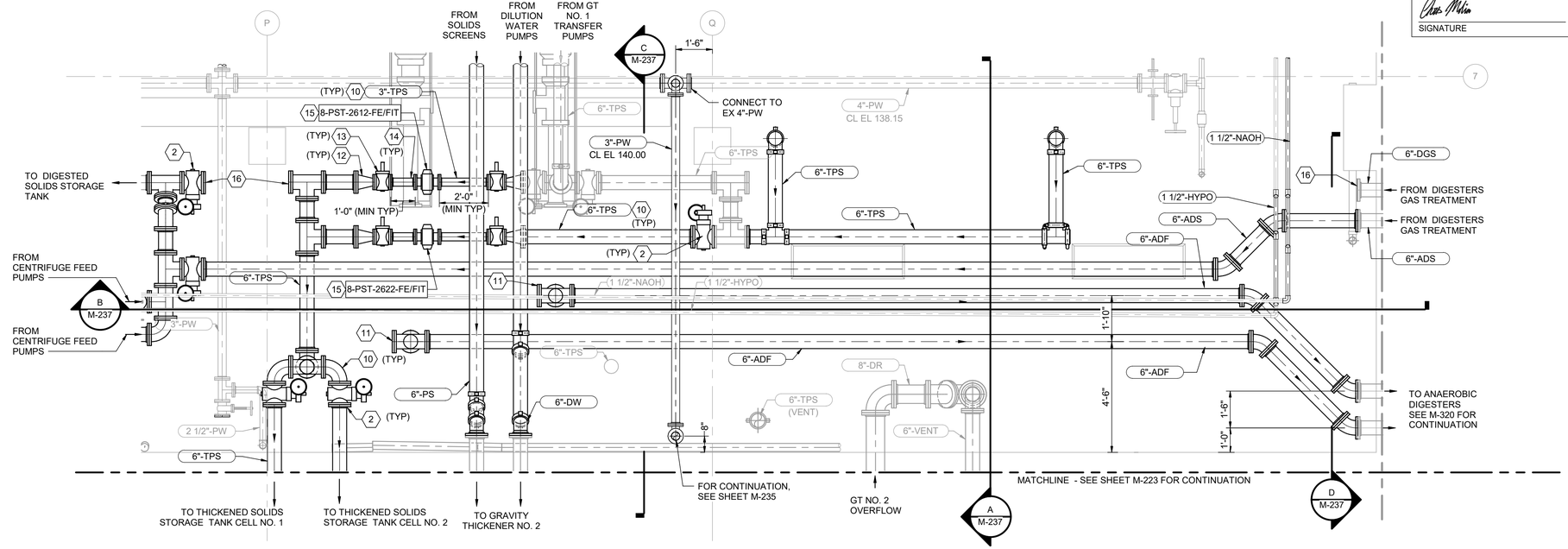

2 M-201 THICKENED PRIMARY SLUDGE FLOW METER ENLARGED PLAN

3/8" = 1'-0"

N

GENERAL NOTES

1. DRAWINGS ARE INTENDED TO DEPICT DESIGN INTENT; CONTRACTOR TO REFER TO SPECIFICATIONS, P&IDS, AND STANDARD DETAILS FOR FURTHER INSTALLATION REQUIREMENTS.
2. VALVES, INLINE APPURTENANCES AND EQUIPMENT ARE SHOWN GRAPHICALLY AS THE DEVICE BODY; REFER TO P&IDS FOR DEVICE TYPE, SIZE, AND DETAILS. INSTALL DEVICES IN ACCORDANCE WITH SPECIFICATIONS AND MFR'S REQUIREMENTS. ENSURE ADEQUATE ACCESS FOR OPERATION OF DEVICES—NOTIFY ENGINEER PRIOR TO INSTALLATION IF INADEQUATE CLEARANCE IS ANTICIPATED.
3. CONTRACTOR TO VERIFY AND MATCH EXISTING ELEVATIONS WHEN CONNECTING TO EXISITNG PIPING SYSTEMS

KEY NOTES (X)

1 CONCRETE FITTING BASE, SEE DETAIL 5/M-905.
2 6" PLUG VALVE
3 BELOW SLAB CROSS CONNECTION TO/FROM GT NO. 1 TRANSFER PUMP SUCTION MANIFOLD.
4 PRESSURE GAUGE AND SWITCH W/ DIAPHRAGM SEAL.SEE DETAIL 1/I-910
5 CONNECT TO EXISTING FLANGE.
6 GRAVITY THICKENER TRANSFER PUMP NO. 3
7 GRAVITY THICKENER TRANSFER PUMP NO. 4
8 DRAIN CONNECTION. SEE DETAIL 4/M-902.
9 GROOVED PIPE FLANGE COUPLING ADAPTER.
10 PROVIDE FLANGED COMPONENTS FOR ALL PIPE AND FITTINGS SHOWN AS FLANGED IN ENLARGED PLAN 1/M-233. CONNECT GROOVED PIPE SYSTEMS WITH FLANGE ADAPTERS.
11 FLUSHING AND DRAIN CONNECTION. SEE DETAIL 4/M-902.
12 6"X3" ECCENTRIC REDUCER
13 3" PLUG VALVE
14 PROVIDE MANUAL VENT PER DETAIL 5/M-902 AND DRAIN CONNECTION PER DETAIL 3/M-902.
15 FLOW METER
16 BLIND FLANGE.
17 DRAIN CONNECTION SEE DETAIL 3/M-902.
18 ANAEROBIC DIGESTER FEED PUMP NO. 1.
19 ANAEROBIC DIGESTER FEED PUMP NO. 2.

THE DRAWINGS IN THIS SET ARE RECORD DRAWINGS. THEY ARE CONSTRUCTION CONTRACT DRAWINGS WHICH HAVE BEEN REVISED BASED ON AVAILABLE FIELD INFORMATION RECORDED BY OTHERS DURING CONSTRUCTION OF THIS CONTRACT. THERE HAS BEEN NO VERIFICATION OF DIMENSIONS SHOWN ON THE CONSTRUCTION DRAWINGS OR THE ACCURACY/COMPLETENESS OF THE FIELD INFORMATION RECEIVED.

SIGNATURE 2/7/2023 DATE

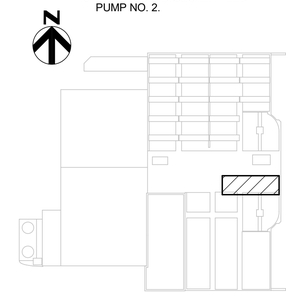

KEY PLAN

AS-BUILT REPLACEMENT SHEET

PROFESSIONAL CERTIFICATION

THIS DRAWING WAS ORIGINALLY APPROVED FOR CONSTRUCTION AND SEALED BY BRIAN M. BACLCHUNAS, A REGISTERED PROFESSIONAL ENGINEER IN THE STATE OF MARYLAND, NO. 200406

NOTICE TO CONTRACTORS

- PROJECT ELEVATIONS ARE BASED ON NAVD88 AND HOWARD COUNTY'S BENCHMARK SYSTEM
- PREVIOUS PROJECTS USED OTHER DATUMS
- APPLY THE FOLLOWING CONVERSIONS WHEN USING PREVIOUS CONTRACT DRAWINGS:
  - ADDITION NO. 6: SUBTRACT 0.80 FT
  - PRIOR ADDITIONS: SUBTRACT 1.04 FT

DEPARTMENT OF PUBLIC WORKS
HOWARD COUNTY, MARYLAND

CHIEF, BUREAU OF UTILITIES DATE

DES: KLP
DRN: REE
CHK: JRK
DATE: 12/2016

DATE	REV	DESCRIPTION
07/2019		RECORD DRAWING

PROCESS

GRAVITY THICKENER NO. 2 TRANSFER PUMP PROCESS PLAN

LITTLE PATUXENT WATER RECLAMATION PLANT
8TH ADDITION
BIOSOLIDS PROCESSING FACILITIES - PHASE I

CAPITAL PROJECT S-6295
CONTRACT NO. 24-4935

ELECTION DISTRICT NO. 6
HOWARD COUNTY, MARYLAND

SCALE AS SHOWN

SHEET 181 OF 463

M-236

BIM 360://10054364 – Little Patuxent WRP 8th Addition/264591_100_D_V18.rvt
1/11/2022 2:03:28 PM

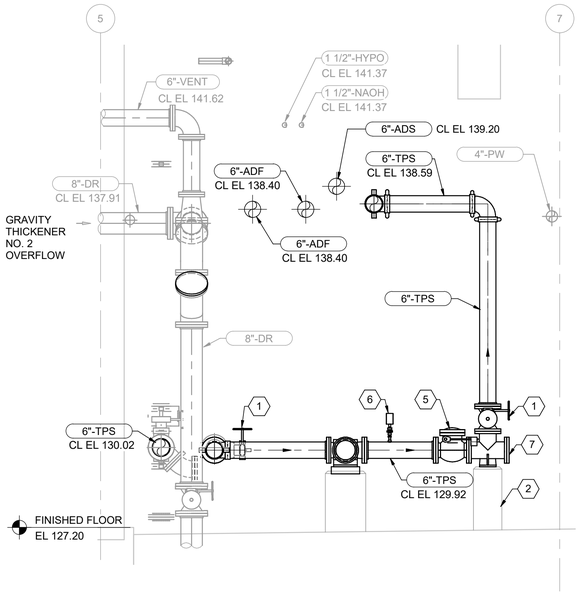

A M-236 GRAVITY THICKENER NO 2 TRANSFER PUMP SECTION
3/8" = 1'-0"

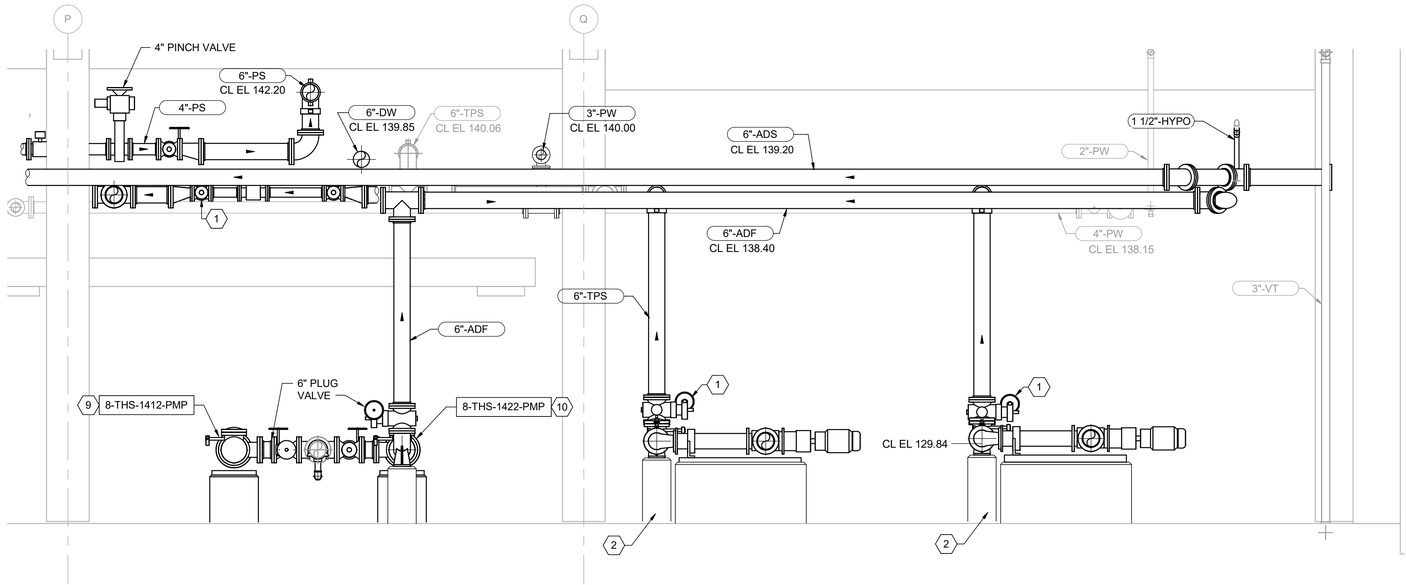

B M-236 GRAVITY THICKENER NO 2 TRANSFER PUMP SECTION
3/8" = 1'-0"

GENERAL NOTES

1. DRAWINGS ARE INTENDED TO DEPICT DESIGN INTENT; CONTRACTOR TO REFER TO SPECIFICATIONS, P&IDS, AND STANDARD DETAILS FOR FURTHER INSTALLATION REQUIREMENTS.
2. VALVES, INLINE APPURTENANCES AND EQUIPMENT ARE SHOWN GRAPHICALLY AS THE DEVICE BODY; REFER TO P&IDS FOR DEVICE TYPE, SIZE, AND DETAILS. INSTALL DEVICES IN ACCORDANCE WITH SPECIFICATIONS AND MFR'S REQUIREMENTS. ENSURE ADEQUATE ACCESS FOR OPERATION OF DEVICES—NOTIFY ENGINEER PRIOR TO INSTALLATION IF INADEQUATE CLEARANCE IS ANTICIPATED.
3. CONTRACTOR TO VERIFY AND MATCH EXISTING ELEVATIONS WHEN CONNECTING TO EXISITNG PIPING SYSTEMS

KEY NOTES (X)

1 6" PLUG VALVE
2 CONCRETE FITTING BASE, SEE DETAIL 5/M-905.
3 DIGESTER FEED PUMP NO. 2.
4 GRAVITY THICKENER TRANSFER PUMP NO. 2
5 6" SWING CHECK VALVE
6 PRESSURE GAUGE AND SWITCH W/ DIAPHRAGM SEAL.SEE DETAIL 1/I-910
7 PUMP FLUSHING WATER PANEL. SEE DETAIL 4/M-903.
8 DRAIN CONNECTION SEE DETAIL 3/M-902.
9 ANAEROBIC DIGESTER FEED PUMP NO. 1.
10 ANAEROBIC DIGESTER FEED PUMP NO. 2.

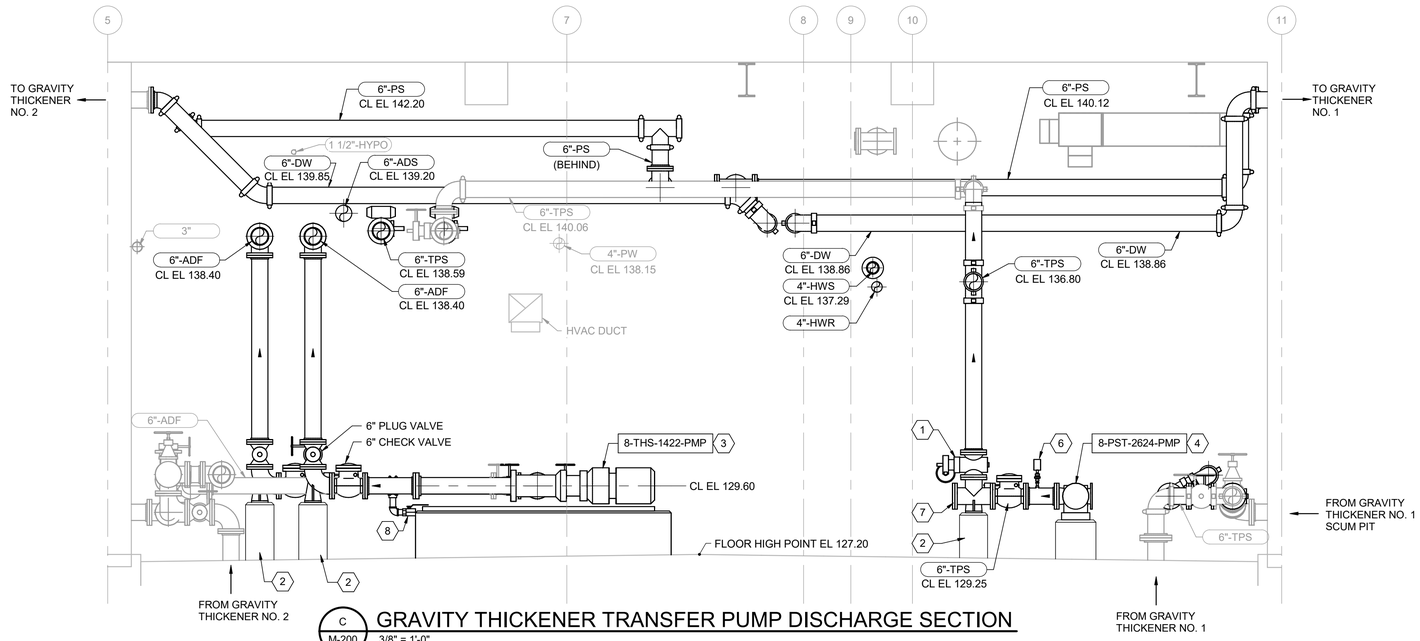

C M-200 GRAVITY THICKENER TRANSFER PUMP DISCHARGE SECTION
3/8" = 1'-0"

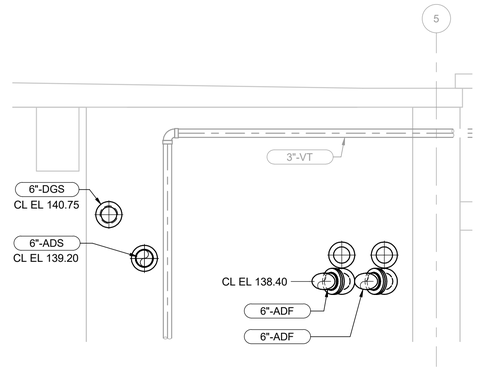

D M-236 SECTION
3/8" = 1'-0"

THE DRAWINGS IN THIS SET ARE RECORD DRAWINGS. THEY ARE CONSTRUCTION CONTRACT DRAWINGS WHICH HAVE BEEN REVISED BASED ON AVAILABLE FIELD INFORMATION RECORDED BY OTHERS DURING CONSTRUCTION OF THIS CONTRACT. THERE HAS BEEN NO VERIFICATION OF DIMENSIONS SHOWN ON THE CONSTRUCTION DRAWINGS OR THE ACCURACY/COMPLETENESS OF THE FIELD INFORMATION RECEIVED.

SIGNATURE 2/7/2023 DATE

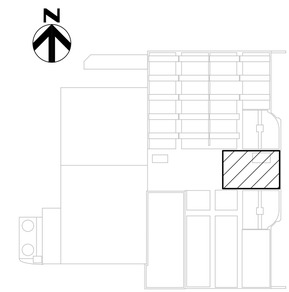

KEY PLAN

AS-BUILT REPLACEMENT SHEET

PROFESSIONAL CERTIFICATION
THIS DRAWING WAS ORIGINALLY APPROVED FOR CONSTRUCTION AND SEALED BY BRIAN M. BACLCHUNAS, A REGISTERED PROFESSIONAL ENGINEER IN THE STATE OF MARYLAND, NO. 200406

NOTICE TO CONTRACTORS
- PROJECT ELEVATIONS ARE BASED ON NAVD88 AND HOWARD COUNTY'S BENCHMARK SYSTEM
- PREVIOUS PROJECTS USED OTHER DATUMS
- APPLY THE FOLLOWING CONVERSIONS WHEN USING PREVIOUS CONTRACT DRAWINGS:
  - ADDITION NO. 6: SUBTRACT 0.80 FT
  - PRIOR ADDITIONS: SUBTRACT 1.04 FT

DEPARTMENT OF PUBLIC WORKS
HOWARD COUNTY, MARYLAND

CHIEF, BUREAU OF UTILITIES DATE

DES: KLP
DRN: REE
CHK: JRK
DATE: 12/2016

DATE	REV	DESCRIPTION
07/2019		RECORD DRAWING

PROCESS

GRAVITY THICKENER NO. 2
GRAVITY THICKENER TRANSFER
PUMP SECTIONS

LITTLE PATUXENT WATER RECLAMATION PLANT
8TH ADDITION
BIOSOLIDS PROCESSING FACILITIES - PHASE I

CAPITAL PROJECT S-6295
CONTRACT NO. 24-4935

ELECTION DISTRICT NO. 6
HOWARD COUNTY, MARYLAND

SCALE AS SHOWN

SHEET 182 OF 463

M-237

BIM 360://10054364 – Little Patuxent WRP 8th Addition/264591_100_D_V18.rvt
1/11/2022 2:03:30 PM

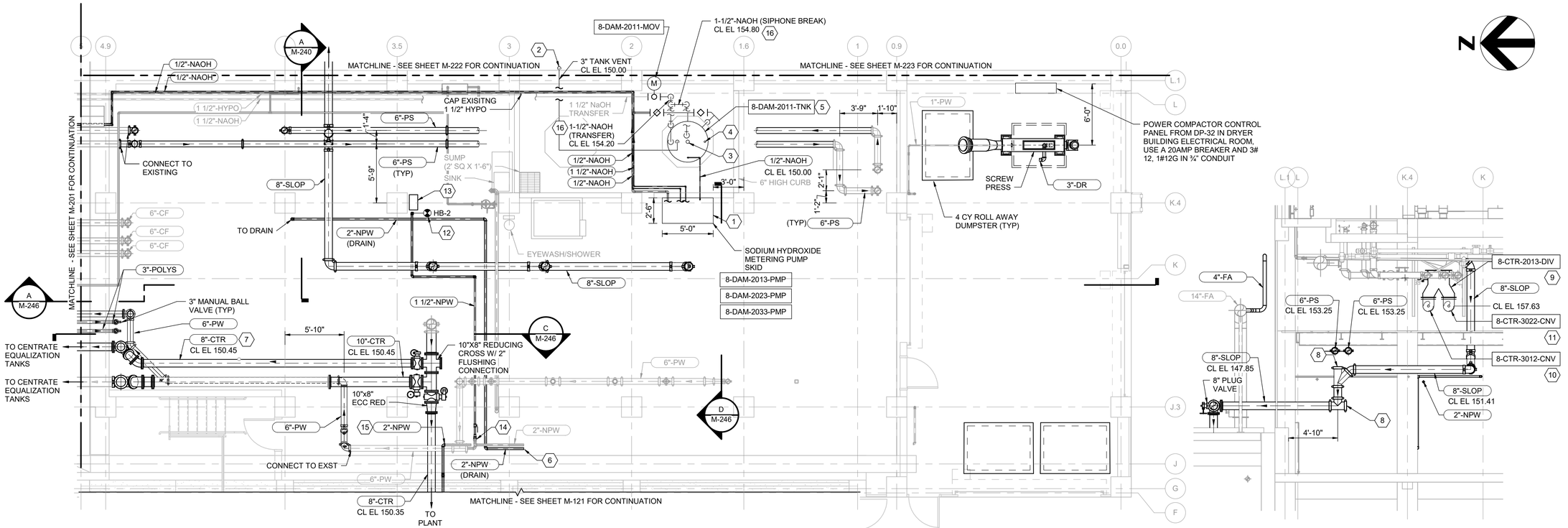

PLAN AT EL 141.20

3/16" = 1'-0"

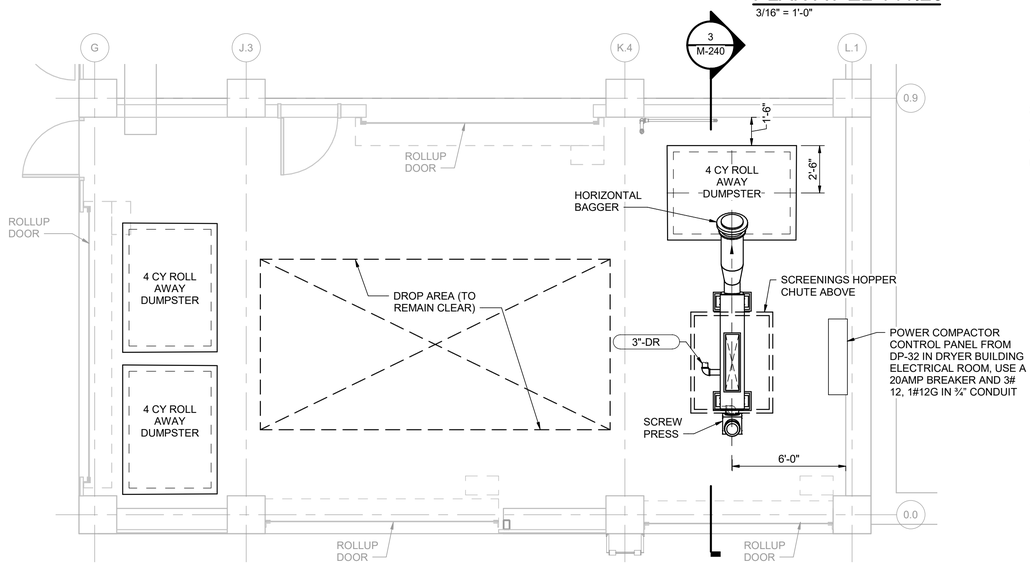

PLAN AT EL 141.20

1/4" = 1'-0"

SECTION

3/16" = 1'-0"

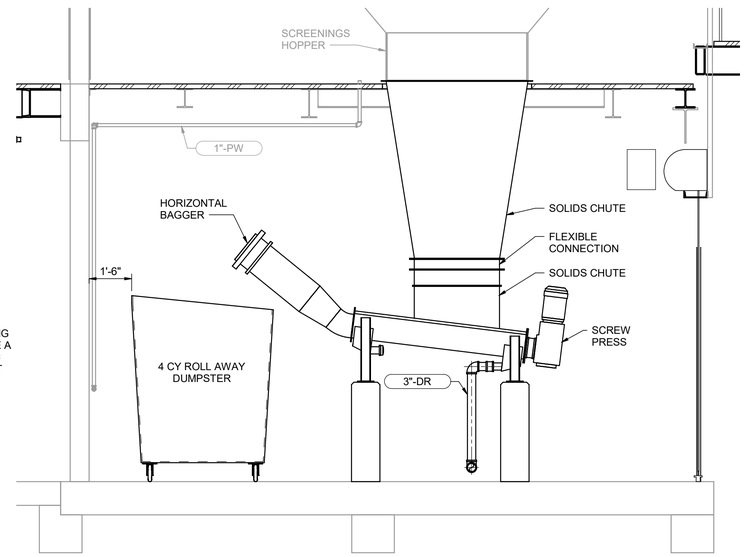

SECTION

3/8" = 1'-0"

GENERAL NOTES

1. DRAWINGS ARE INTENDED TO DEPICT DESIGN INTENT; CONTRACTOR TO REFER TO SPECIFICATIONS, P&IDS, AND STANDARD DETAILS FOR FURTHER INSTALLATION REQUIREMENTS.
2. VALVES, INLINE APPURTENANCES AND EQUIPMENT ARE SHOWN GRAPHICALLY AS THE DEVICE BODY; REFER TO P&IDS FOR DEVICE TYPE, SIZE, AND DETAILS. INSTALL DEVICES IN ACCORDANCE WITH SPECIFICATIONS AND MFR'S REQUIREMENTS. ENSURE ADEQUATE ACCESS FOR OPERATION OF DEVICES—NOTIFY ENGINEER PRIOR TO INSTALLATION IF INADEQUATE CLEARANCE IS ANTICIPATED.

KEY NOTES (X)

1 CHEMICAL FEED SKID PIPING LAYOUT AND DIMENSIONS SHALL BE SUBMITTED TO ENGINEER AND APPROVED PRIOR TO CONSTRUCTION. SEE SECTION 46 33 11 AND DWG I-650.
2 INSTALL BIRD SCREEN ON TANK VENT PIPING, SEE DETAIL 7/M-902.
3 LEVEL ELEMENT
4 LEVEL SWITCH
5 SODIUM HYDROXIDE TANK
6 CONNECT TO EXISTING 2" LUBE OIL COOLING WATER RETURN PIPE AND ROUTE TO DRAIN. SEE PLUMBING DRAWINGS FOR NPW SUPPLY PIPING.
7 SEGMENT OF 8" CTR PIPING THROUGH EXISTING SCRUBBER SHALL BE INSTALLED AFTER DEMOLITION OF SCRUBBER IN PHASE 2.
8 GROOVED JOINT CAP
9 DIVERTER GATE NO. 1
10 CAKE CONVEYOR NO. 1
11 CAKE CONVEYOR NO. 2
12 HOSE BIBB, SEE DETAIL3/M-904
13 WALL MOUNTED HOSE RACK, SEE DETAIL 1/M-904
14 CONNECT TO EXISTING 2"-PW WITH 2"X1 1/2" REDUCER AND 1 1/2" BALL VALVE
15 CONNECT TO EXISTING 2"-NPW
16 SEE I-650 FOR PIPING SCHEMATIC. 1-1/2" NAOH TRANSFER PIPING SHALL RISE TO CL EL 154.20, BEFORE DROPPING DOWN TO TANK. HORIZONTAL PIPE AT CL EL 154.20 SHALL INCLUDE A TEE WITH BRANCH IN VERTICAL UP TO SIPHON BREAK PIPING AT CL EL 154.80 (BELOW GRATING). CONNECT SIPHON BREAK PIPING TO TOP OF TANK.

THE DRAWINGS IN THIS SET ARE RECORD DRAWINGS. THEY ARE CONSTRUCTION CONTRACT DRAWINGS WHICH HAVE BEEN REVISED BASED ON AVAILABLE FIELD INFORMATION RECORDED BY OTHERS DURING CONSTRUCTION OF THIS CONTRACT. THERE HAS BEEN NO VERIFICATION OF DIMENSIONS SHOWN ON THE CONSTRUCTION DRAWINGS OR THE ACCURACY/COMPLETENESS OF THE FIELD INFORMATION RECEIVED.

SIGNATURE — DATE 2/7/2023

KEY PLAN

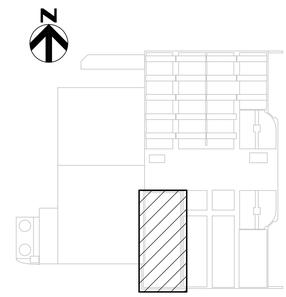

AS-BUILT REPLACEMENT SHEET

PROFESSIONAL CERTIFICATION

THIS DRAWING WAS ORIGINALLY APPROVED FOR CONSTRUCTION AND SEALED BY BRIAN M. BACLCHUNAS, A REGISTERED PROFESSIONAL ENGINEER IN THE STATE OF MARYLAND, NO. 200406

NOTICE TO CONTRACTORS

- PROJECT ELEVATIONS ARE BASED ON NAVD88 AND HOWARD COUNTY'S BENCHMARK SYSTEM
- PREVIOUS PROJECTS USED OTHER DATUMS
- APPLY THE FOLLOWING CONVERSIONS WHEN USING PREVIOUS CONTRACT DRAWINGS:
  - ADDITION NO. 6: SUBTRACT 0.80 FT
  - PRIOR ADDITIONS: SUBTRACT 1.04 FT

DEPARTMENT OF PUBLIC WORKS
HOWARD COUNTY, MARYLAND

CHIEF, BUREAU OF UTILITIES — DATE

DES: ADP
DRN: SLB
CHK: BMB
DATE: 12/2016

DATE	REV	DESCRIPTION
07/2019		RECORD DRAWING

PROCESS

SOLIDS SCREENING AREA
PLAN - EL 141.20

LITTLE PATUXENT WATER RECLAMATION PLANT
8TH ADDITION
BIOSOLIDS PROCESSING FACILITIES - PHASE I

CAPITAL PROJECT S-6295
CONTRACT NO. 24-4935

ELECTION DISTRICT NO. 6
HOWARD COUNTY, MARYLAND

SCALE AS SHOWN

SHEET 183 OF 463

M-240

BIM 360://10054364 – Little Patuxent WRP 8th Addition/264591_100_D_V18.rvt
1/11/2022 2:11:17 PM

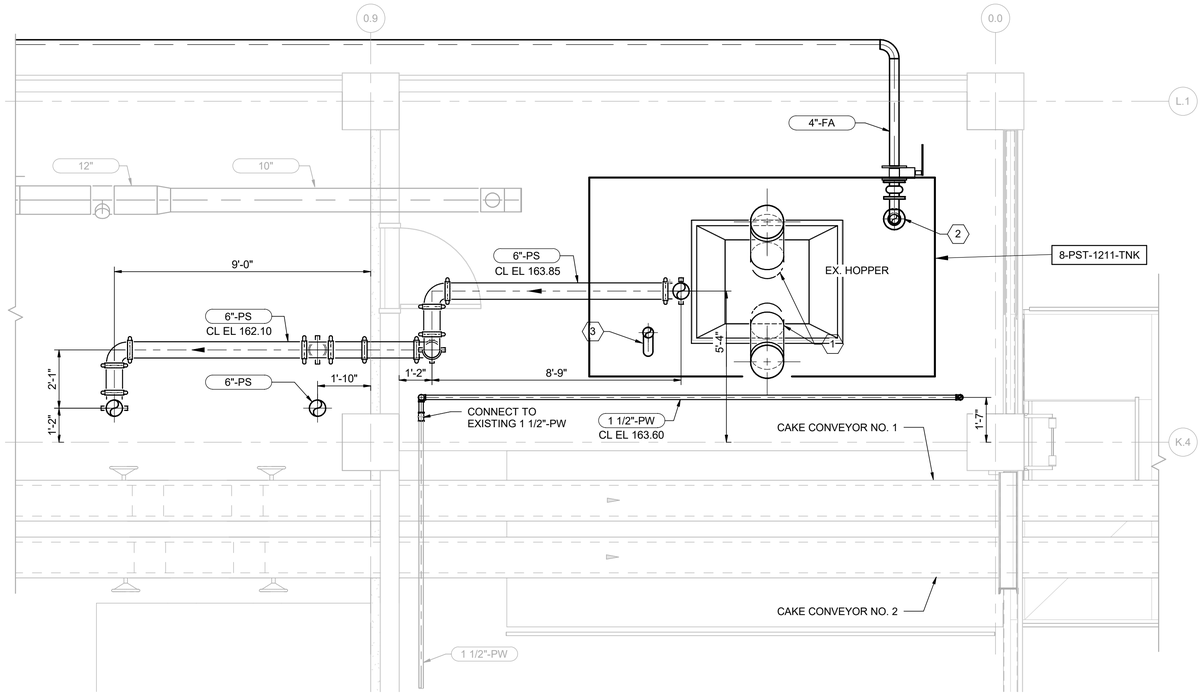

PRIMARY SLUDGE SCREEN - PLAN AT EL 155.20

3/8" = 1'-0"

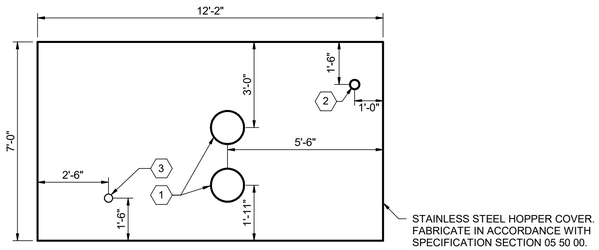

1 / M-244 HOPPER COVER DETAIL

NOT TO SCALE

1' 0 1' 2' 3'

SCALE: 3/8" = 1'-0"

GENERAL NOTES:

1. IF SPECIFIC DIMENSIONS OF PIPING ARE NOT SHOWN, CONTRACTOR MAY PROPOSE ALTERNATIVE PIPE ROUTING, SUBJECT TO APPROVAL OF THE ENGINEER.
2. PROVIDE MANUAL AIR RELEASE VALVES PER DETAIL 5/M-902 FOR ALL HIGH POINTS IN PROCESS PIPING. PROVIDE VENT PIPE TO NEAREST FLOOR DRAIN WITH 2" AIR GAP BETWEEN VENT PIPE AND FLOOR DRAIN.
3. PROVIDE FLUSHING AND DRAIN CONNECTIONS ON SUCTION AND DISCHARGE SIDE OF ALL PUMPS PER DETAIL 1/M-902.
4. PROVIDE FLOW SENSING AND PRESSURE MONITORING DEVICES FOR ALL PUMPS AS SHOWN ON THE P&IDs. ISOLATE PRESSURE GAUGES AND PRESSURE SWITCHES PER DETAIL X/M-90X.
5. EXISTING PIPE LOCATIONS BASED ON LiDAR SURVEY COMPLETED BY HDR, INC. IN OCTOBER, 2015.
6. LiDAR DATA WILL BE AVAILABLE TO CONTRACTOR AFTER AWARD FOR INFORMATION ONLY.
7. CONTRACTOR SHALL FIELD VERIFY ALL PIPE LOCATIONS.
8. EXISTING GRINDER AND GRINDER CONTROL PANEL SHALL BE REINSTALLED.

KEYNOTES (X)

1 14" STAINLESS STEEL SLUDGE SCREEN DISCHARGE TO HOPPER. SEE SPECIFICATION SECTION 46 20 00.
2 4" ODOR CONTROL PIPING FROM HOPPER
3 4" GOOSENECK CONNECTION TO ALLOW AIR INFILTRATION

THE DRAWINGS IN THIS SET ARE RECORD DRAWINGS. THEY ARE CONSTRUCTION CONTRACT DRAWINGS WHICH HAVE BEEN REVISED BASED ON AVAILABLE FIELD INFORMATION RECORDED BY OTHERS DURING CONSTRUCTION OF THIS CONTRACT. THERE HAS BEEN NO VERIFICATION OF DIMENSIONS SHOWN ON THE CONSTRUCTION DRAWINGS OR THE ACCURACY/COMPLETENESS OF THE FIELD INFORMATION RECEIVED.

SIGNATURE 2/7/2020 DATE

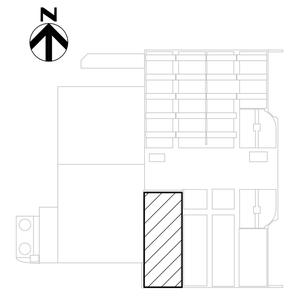

KEY PLAN

AS-BUILT REPLACEMENT SHEET

PROFESSIONAL CERTIFICATION

THIS DRAWING WAS ORIGINALLY APPROVED FOR CONSTRUCTION AND SEALED BY BRIAN M. BACLCHUNAS, A REGISTERED PROFESSIONAL ENGINEER IN THE STATE OF MARYLAND, NO. 200406

NOTICE TO CONTRACTORS

- PROJECT ELEVATIONS ARE BASED ON NAVD88 AND HOWARD COUNTY'S BENCHMARK SYSTEM
- PREVIOUS PROJECTS USED OTHER DATUMS
- APPLY THE FOLLOWING CONVERSIONS WHEN USING PREVIOUS CONTRACT DRAWINGS:
  - ADDITION NO. 6: SUBTRACT 0.80 FT
  - PRIOR ADDITIONS: SUBTRACT 1.04 FT

DEPARTMENT OF PUBLIC WORKS
HOWARD COUNTY, MARYLAND

CHIEF, BUREAU OF UTILITIES DATE

DES: KSB
DRN: DPG
CHK: BA
DATE: 2/17/2017

DATE	REV	DESCRIPTION
07/2019		RECORD DRAWING

PROCESS

SOLIDS SCREENING AREA PLAN - EL. 155.20

LITTLE PATUXENT WATER RECLAMATION PLANT
8TH ADDITION
BIOSOLIDS PROCESSING FACILITIES - PHASE I

CAPITAL PROJECT S-6295
CONTRACT NO. 24-4935

ELECTION DISTRICT NO. 6
HOWARD COUNTY, MARYLAND

SCALE AS SHOWN

SHEET 184 OF 463

M-241

BIM 360://10054364 – Little Patuxent WRP 8th Addition/264591_100_D_V18_JMT.rvt
1/11/2022 2:40:02 PM

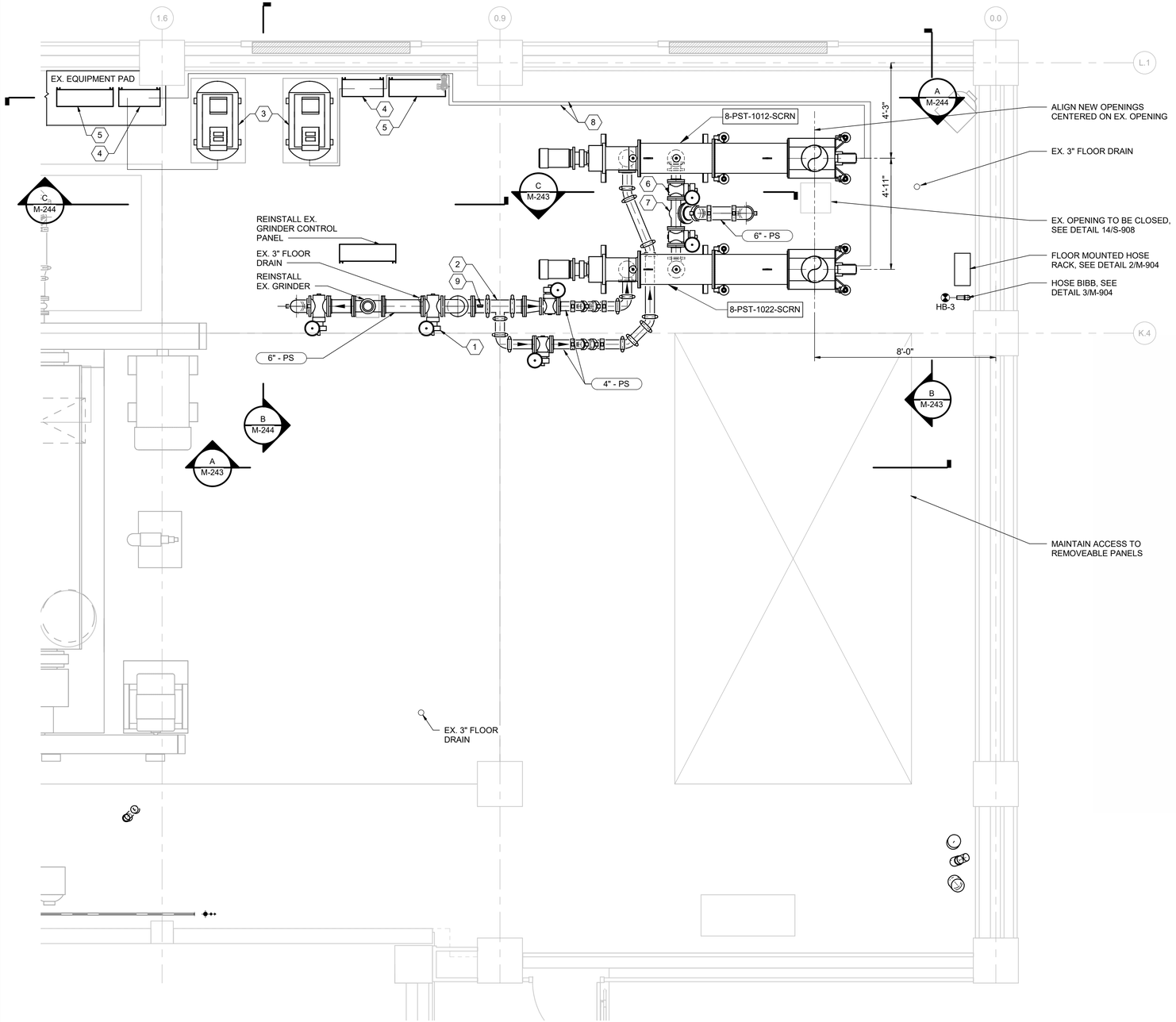

PRIMARY SLUDGE SCREEN - PLAN AT EL 166.20

3/8" = 1'-0"

SCALE: 3/8" = 1'-0"

GENERAL NOTES:

1. IF SPECIFIC DIMENSIONS OF PIPING ARE NOT SHOWN, CONTRACTOR MAY PROPOSE ALTERNATIVE PIPE ROUTING, SUBJECT TO APPROVAL OF THE ENGINEER.
2. PROVIDE MANUAL AIR RELEASE VALVES PER DETAIL 5/M-902 FOR ALL HIGH POINTS IN PROCESS PIPING. PROVIDE VENT PIPE TO NEAREST FLOOR DRAIN WITH 2" AIR GAP BETWEEN VENT PIPE AND FLOOR DRAIN.
3. PROVIDE FLUSHING AND DRAIN CONNECTIONS ON SUCTION AND DISCHARGE SIDE OF ALL PUMPS PER DETAIL 1/M-902
4. PROVIDE FLOW SENSING AND PRESSURE MONITORING DEVICES FOR ALL PUMPS AS SHOWN ON THE P&IDs. ISOLATE PRESSURE GAUGES AND PRESSURE SWITCHES PER DETAIL X/M-90X.
5. EXISTING PIPE LOCATIONS BASED ON LiDAR SURVEY COMPLETED BY HDR, INC. IN OCTOBER, 2015.
6. LIDAR DATA WILL BE AVAILABLE TO CONTRACTOR AFTER AWARD FOR INFORMATION ONLY.
7. CONTRACTOR SHALL FIELD VERIFY ALL PIPE LOCATIONS.
8. EXISTING GRINDER AND GRINDER CONTROL PANEL SHALL BE REINSTALLED.
9. CONTRACTOR SHALL PROVIDE FLUSHING CONNECTION WHERE REQUIRED . SEE DETAILS 1-4/M-902.

KEYNOTES (X)

1 6" PLUG VALVE (TYP.)
2 6" x 6" x 4" TEE
3 AIR COMPRESSOR WITH 6" CONCRETE EQUIPMENT PAD PER DETAIL 1/S-904.
4 COMPRESSED AIR CONTROL PANEL
5 SCREEN CONTROL PANEL
6 4" PLUG VALVE (TYP.)
7 4" x 4" x 6" TEE
8 1/4" POLYETHYLENE AIR TUBING IN 1" PVC CONDUIT. PVC CONDUIT SHALL BE DISCONTINUED AND LEFT OPEN AT ALL 90° BENDS.
9 PIT

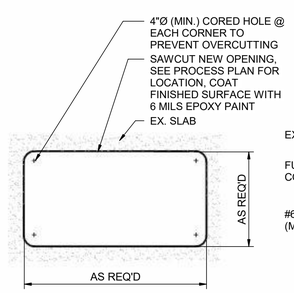

43 M-244 DETAIL NOT TO SCALE

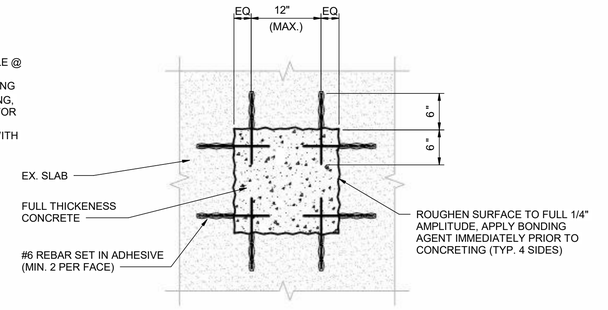

44 M-244 DETAIL NOT TO SCALE

THE DRAWINGS IN THIS SET ARE RECORD DRAWINGS. THEY ARE CONSTRUCTION CONTRACT DRAWINGS WHICH HAVE BEEN REVISED BASED ON AVAILABLE FIELD INFORMATION RECORDED BY OTHERS DURING CONSTRUCTION OF THIS CONTRACT. THERE HAS BEEN NO VERIFICATION OF DIMENSIONS SHOWN ON THE CONSTRUCTION DRAWINGS OR THE ACCURACY/COMPLETENESS OF THE FIELD INFORMATION RECEIVED.

SIGNATURE 2/7/2023 DATE

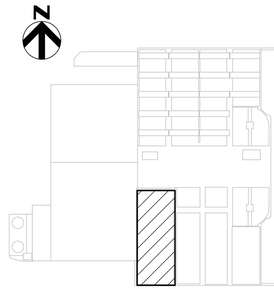

KEY PLAN

AS-BUILT REPLACEMENT SHEET

PROFESSIONAL CERTIFICATION

THIS DRAWING WAS ORIGINALLY APPROVED FOR CONSTRUCTION AND SEALED BY BRIAN M. BACLCHUNAS, A REGISTERED PROFESSIONAL ENGINEER IN THE STATE OF MARYLAND, NO. 200406

NOTICE TO CONTRACTORS

- PROJECT ELEVATIONS ARE BASED ON NAVD88 AND HOWARD COUNTY'S BENCHMARK SYSTEM
- PREVIOUS PROJECTS USED OTHER DATUMS
- APPLY THE FOLLOWING CONVERSIONS WHEN USING PREVIOUS CONTRACT DRAWINGS:
  - ADDITION NO. 6: SUBTRACT 0.80 FT
  - PRIOR ADDITIONS: SUBTRACT 1.04 FT

DEPARTMENT OF PUBLIC WORKS
HOWARD COUNTY, MARYLAND

CHIEF, BUREAU OF UTILITIES DATE

DES: KSB
DRN: DPG
CHK: BA
DATE: 2/17/2017

DATE	REV	DESCRIPTION
07/2019		RECORD DRAWING

PROCESS

SOLIDS SCREENING AREA PLAN - EL 166.20

LITTLE PATUXENT WATER RECLAMATION PLANT
8TH ADDITION
BIOSOLIDS PROCESSING FACILITIES - PHASE I

CAPITAL PROJECT S-6295
CONTRACT NO. 24-4935

ELECTION DISTRICT NO. 6
HOWARD COUNTY, MARYLAND

SCALE AS SHOWN

SHEET 185 OF 463

M-242

BIM 360://10054364 – Little Patuxent WRP 8th Addition/264591_100_D_V18_JMT.rvt
1/11/2022 2:40:03 PM

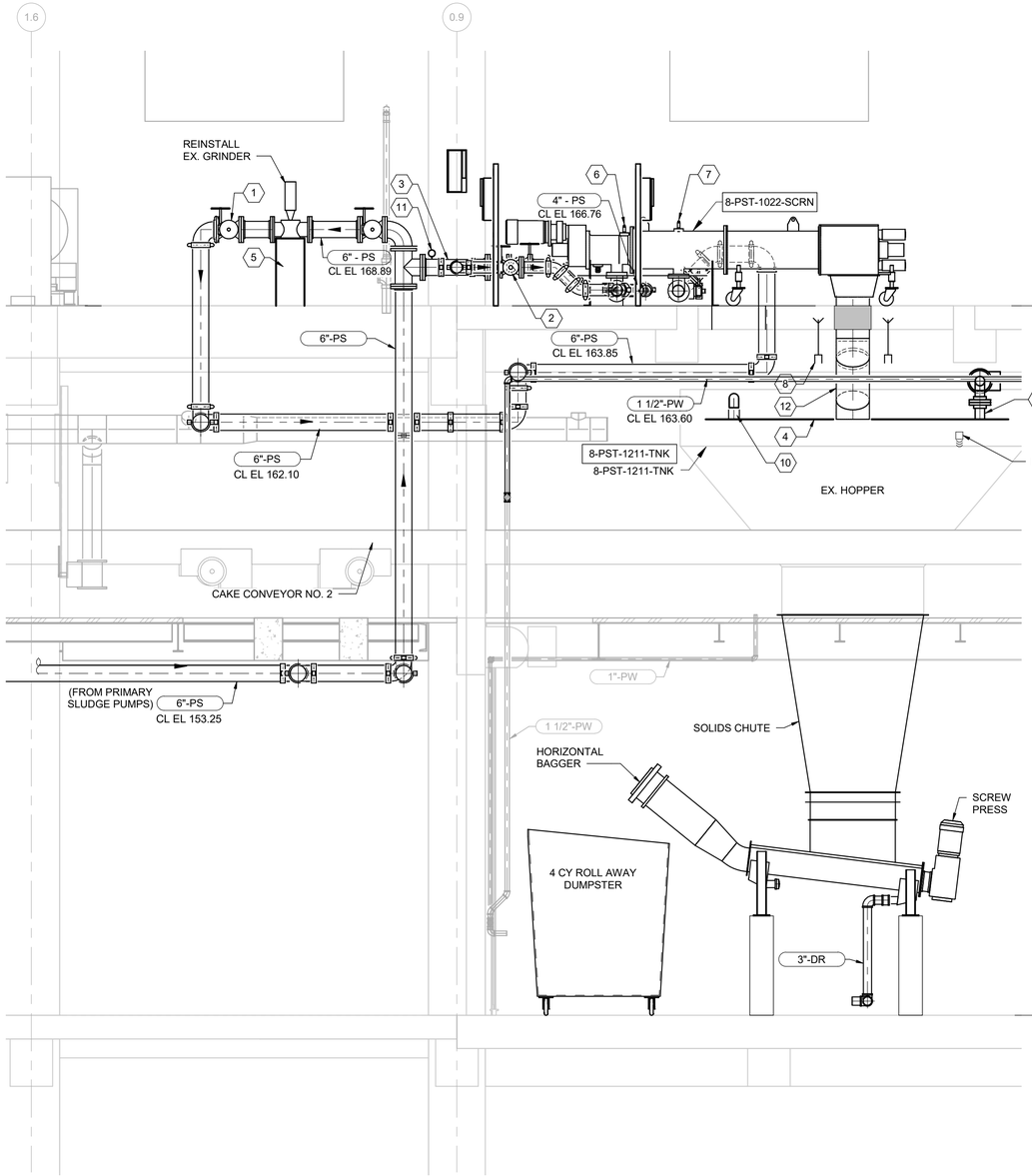

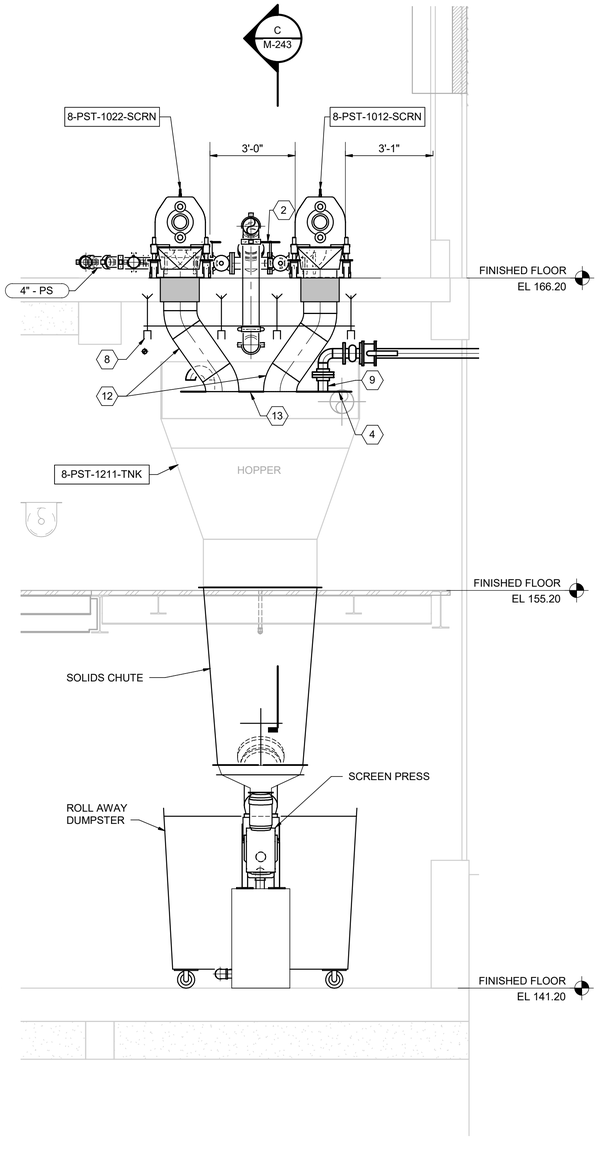

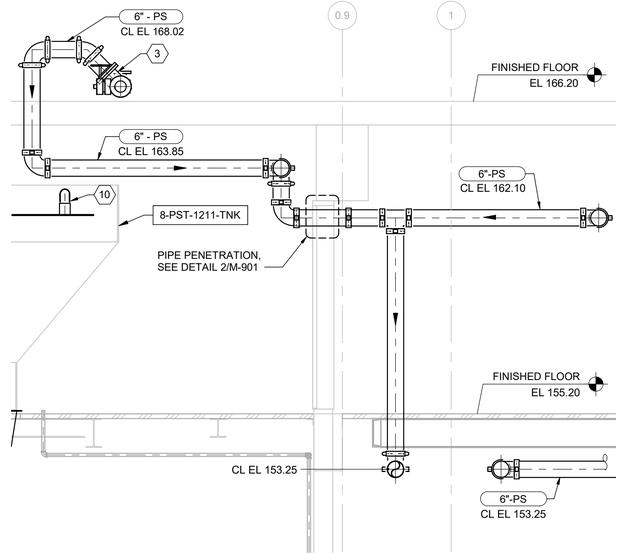

GENERAL NOTES:

1. IF SPECIFIC DIMENSIONS OF PIPING ARE NOT SHOWN, CONTRACTOR MAY PROPOSE ALTERNATIVE PIPE ROUTING, SUBJECT TO APPROVAL OF THE ENGINEER.
2. PROVIDE MANUAL AIR RELEASE VALVES PER DETAIL 5/M-902 FOR ALL HIGH POINTS IN PROCESS PIPING. PROVIDE VENT PIPE TO NEAREST FLOOR DRAIN WITH 2" AIR GAP BETWEEN VENT PIPE AND FLOOR DRAIN.
3. PROVIDE FLUSHING AND DRAIN CONNECTIONS ON SUCTION AND DISCHARGE SIDE OF ALL PUMPS PER DETAIL 1/M-902.
4. PROVIDE FLOW SENSING AND PRESSURE MONITORING DEVICES FOR ALL PUMPS AS SHOWN ON THE P&IDs. ISOLATE PRESSURE GAUGES AND PRESSURE SWITCHES PER DETAIL X/M-90X.
5. EXISTING PIPE LOCATIONS BASED ON LiDAR SURVEY COMPLETED BY HDR, INC. IN OCTOBER, 2015.
6. LiDAR DATA WILL BE AVAILABLE TO CONTRACTOR AFTER AWARD FOR INFORMATION ONLY.
7. CONTRACTOR SHALL FIELD VERIFY ALL PIPE LOCATIONS.
8. EXISTING GRINDER AND GRINDER CONTROL PANEL SHALL BE REINSTALLED.

KEYNOTES (X)

1 6" PLUG VALVE (TYP.)
2 4" PLUG VALVE (TYP.)
3 4"x4"x6" TEE
4 PROVIDE NEW STAINLESS STEEL HOPPER COVER. SEE DETAIL 1/M-243.
5 NEW CONCRETE PIPE SUPPORT. SEE DETAIL M-905/906.
6 PRESSURE TRANSMITTER SLUDGE INLET
7 PRESSURE TRANSMITTER SLUDGE OUTLET
8 PAIR STAINLESS STEEL 304 UNISTRUT CHUTE SUPPORTS, CONFIGURATION P1001T. EACH SUPPORTS HELD BY 4 ALL THREAD 1/2" RODS OF STAINLESS STEEL 304. EMBED RODS IN ADHESIVE 5" INTO SLAB ABOVE (TYP.)
9 4" ODOR CONTROL TAKE-OFF
10 4" GOOSENECK CONNECTION TO ALLOW AIR INFILTRATION
11 PIT
12 14" STAINLESS STEEL SLUDGE SCREEN DISCHARGE TO HOPPER. SEE SPECIFICATION SECTION 46 20 00.
13 CREATE PENETRATIONS FOR THE 14" SS SLUDGE SCREEN SOLIDS DISCHARGE CHUTES THAT ARE NO MORE THAN 1/4" AROUND THE PERIMETER OF THE CHUTE TO ALLOW SOME CLEARANCE ON ALL SIDES OF THE CHUTE. PENETRATIONS WILL NOT BE AIRTIGHT.

A M-242 SECTION
3/8" = 1'-0"

B M-242 SECTION
3/8" = 1'-0"

C M-242 SECTION
3/8" = 1'-0"

1' 0 1' 2' 3'
SCALE: 3/8" = 1'-0"

THE DRAWINGS IN THIS SET ARE RECORD DRAWINGS. THEY ARE CONSTRUCTION CONTRACT DRAWINGS WHICH HAVE BEEN REVISED BASED ON AVAILABLE FIELD INFORMATION RECORDED BY OTHERS DURING CONSTRUCTION OF THIS CONTRACT. THERE HAS BEEN NO VERIFICATION OF DIMENSIONS SHOWN ON THE CONSTRUCTION DRAWINGS OR THE ACCURACY/COMPLETENESS OF THE FIELD INFORMATION RECEIVED.

SIGNATURE 2/7/2022 DATE

AS-BUILT REPLACEMENT SHEET

PROFESSIONAL CERTIFICATION
THIS DRAWING WAS ORIGINALLY APPROVED FOR CONSTRUCTION AND SEALED BY BRIAN M. BACLCHUNAS, A REGISTERED PROFESSIONAL ENGINEER IN THE STATE OF MARYLAND, NO. 200406

NOTICE TO CONTRACTORS
- PROJECT ELEVATIONS ARE BASED ON NAVD88 AND HOWARD COUNTY'S BENCHMARK SYSTEM
- PREVIOUS PROJECTS USED OTHER DATUMS
- APPLY THE FOLLOWING CONVERSIONS WHEN USING PREVIOUS CONTRACT DRAWINGS:
  - ADDITION NO. 6: SUBTRACT 0.80 FT
  - PRIOR ADDITIONS: SUBTRACT 1.04 FT

DEPARTMENT OF PUBLIC WORKS
HOWARD COUNTY, MARYLAND

CHIEF, BUREAU OF UTILITIES DATE

DES: KSB
DRN: DPG
CHK: BA
DATE: 2/17/2017

DATE	REV	DESCRIPTION
07/2019		RECORD DRAWING

PROCESS

SOLIDS SCREENING AREA SECTIONS 1

LITTLE PATUXENT WATER RECLAMATION PLANT
8TH ADDITION
BIOSOLIDS PROCESSING FACILITIES - PHASE I

CAPITAL PROJECT S-6295
CONTRACT NO. 24-4935

ELECTION DISTRICT NO. 6
HOWARD COUNTY, MARYLAND

SCALE AS SHOWN

SHEET 186 OF 463

M-243

BIM 360://10054364 – Little Patuxent WRP 8th Addition/264591_100_D_V18_JMT.rvt
1/11/2022 2:40:07 PM

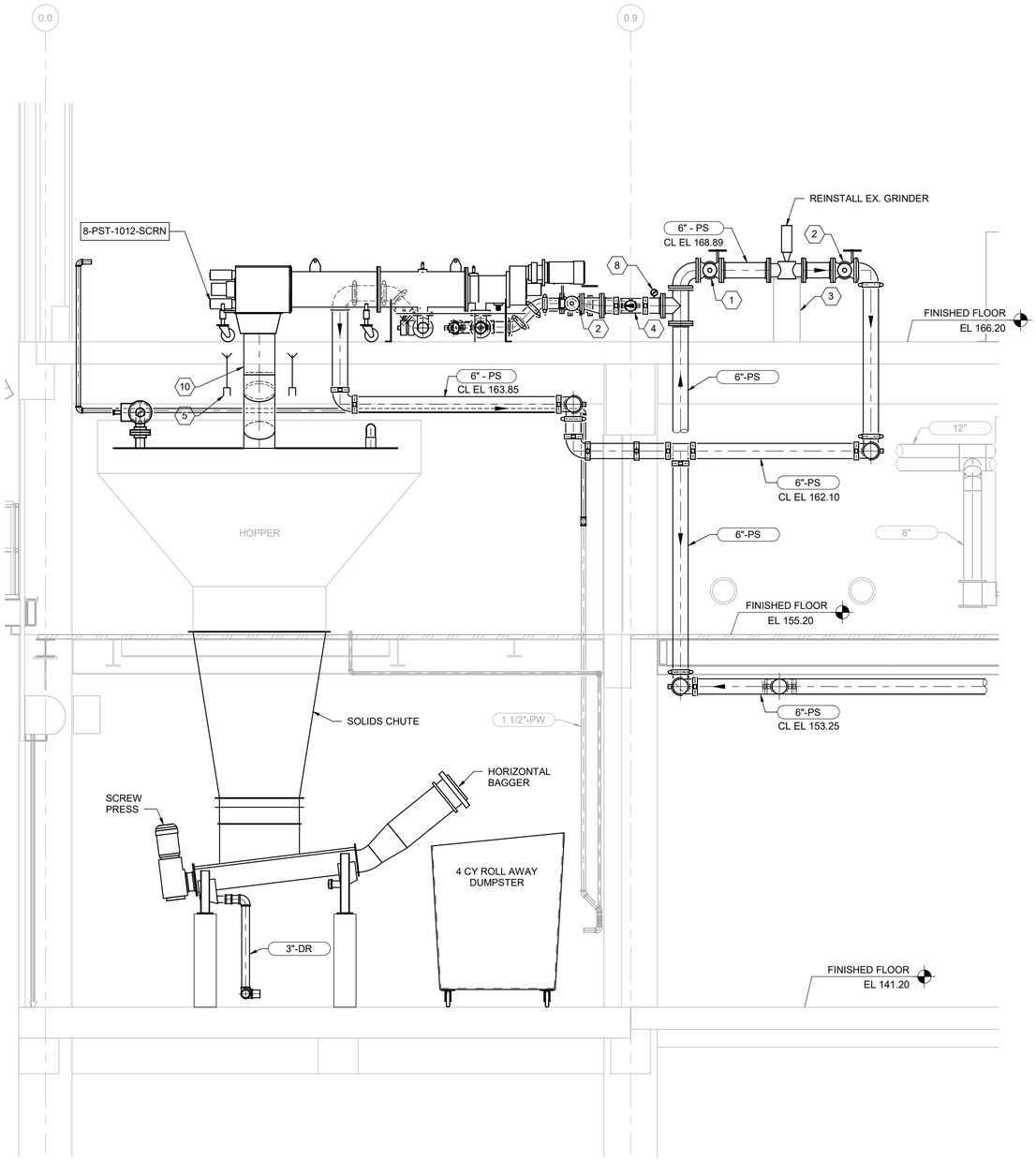

A M-242 SECTION
3/8" = 1'-0"

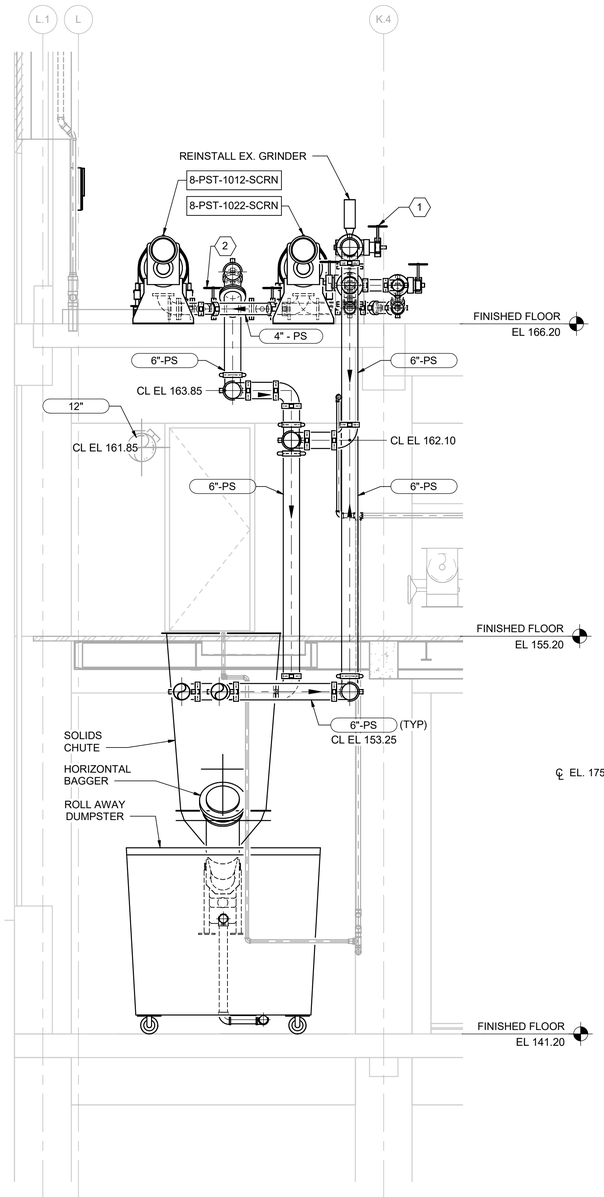

B M-242 SECTION
3/8" = 1'-0"

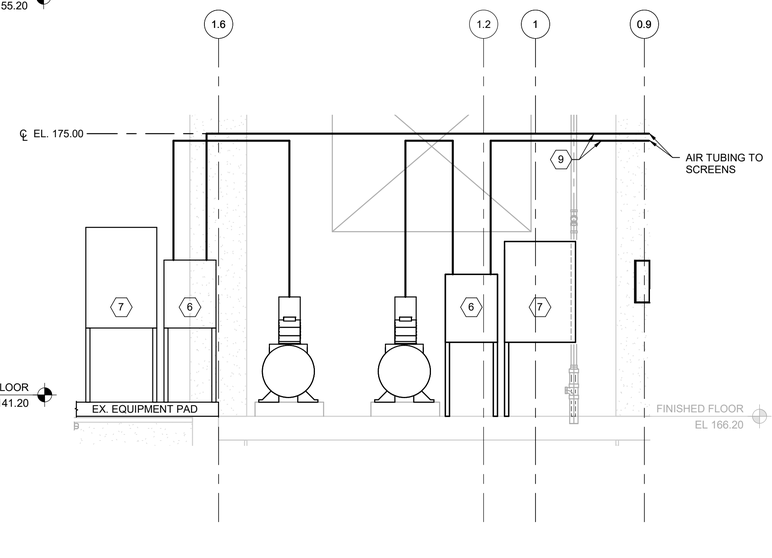

C M-242 SECTION
3/8" = 1'-0"

SCALE: 3/8" = 1'-0"

GENERAL NOTES:

1. IF SPECIFIC DIMENSIONS OF PIPING ARE NOT SHOWN, CONTRACTOR MAY PROPOSE ALTERNATIVE PIPE ROUTING, SUBJECT TO APPROVAL OF THE ENGINEER.
2. PROVIDE MANUAL AIR RELEASE VALVES PER DETAIL 5/M-902 FOR ALL HIGH POINTS IN PROCESS PIPING. PROVIDE VENT PIPE TO NEAREST FLOOR DRAIN WITH 2" AIR GAP BETWEEN VENT PIPE AND FLOOR DRAIN.
3. PROVIDE FLUSHING AND DRAIN CONNECTIONS ON SUCTION AND DISCHARGE SIDE OF ALL PUMPS PER DETAIL 1/M-902
4. PROVIDE FLOW SENSING AND PRESSURE MONITORING DEVICES FOR ALL PUMPS AS SHOWN ON THE P&IDs. ISOLATE PRESSURE GAUGES AND PRESSURE SWITCHES PER DETAIL X/M-90X.
5. EXISTING PIPE LOCATIONS BASED ON LiDAR SURVEY COMPLETED BY HDR, INC. IN OCTOBER, 2015.
6. LiDAR DATA WILL BE AVAILABLE TO CONTRACTOR AFTER AWARD FOR INFORMATION ONLY.
7. CONTRACTOR SHALL FIELD VERIFY ALL PIPE LOCATIONS.
8. EXISTING GRINDER AND GRINDER CONTROL PANEL SHALL BE REINSTALLED.

KEYNOTES (X)

1 6" PLUG VALVE (TYP.)
2 4" PLUG VALVE (TYP.)
3 NEW CONCRETE PIPE SUPPORT. SEE DETAIL 1/S-904
4 6" x 6" x 4" TEE
5 PAIR STAINLESS STEEL 304 UNISTRUT CHUTE SUPPORTS, CONFIGURATION P1001T. EACH SUPPORTS HELD BY 4 ALL THREAD 1/2" RODS OF STAINLESS STEEL 304. EMBED RODS IN ADHESIVE 5" INTO SLAB ABOVE (TYP.)
6 COMPRESSED AIR CONTROL PANEL
7 SCREEN CONTROL PANEL
8 PIT
9 1/4" POLYETHYLENE AIR TUBING IN 1" PVC CONDUIT. PVC CONDUIT SHALL BE DISCONTINUED AND LEFT OPEN AT ALL 90° BENDS.
10 14" STAINLESS STEEL SLUDGE SCREEN DISCHARGE TO HOPPER. SEE SPECIFICATION SECTION 46 20 00.

THE DRAWINGS IN THIS SET ARE RECORD DRAWINGS. THEY ARE CONSTRUCTION CONTRACT DRAWINGS WHICH HAVE BEEN REVISED BASED ON AVAILABLE FIELD INFORMATION RECORDED BY OTHERS DURING CONSTRUCTION OF THIS CONTRACT. THERE HAS BEEN NO VERIFICATION OF DIMENSIONS SHOWN ON THE CONSTRUCTION DRAWINGS OR THE ACCURACY/COMPLETENESS OF THE FIELD INFORMATION RECEIVED.

SIGNATURE 2/7/2023 DATE

JMT HDR

AS-BUILT REPLACEMENT SHEET

PROFESSIONAL CERTIFICATION
THIS DRAWING WAS ORIGINALLY APPROVED FOR CONSTRUCTION AND SEALED BY BRIAN M. BACLCHUNAS, A REGISTERED PROFESSIONAL ENGINEER IN THE STATE OF MARYLAND, NO. 200406

NOTICE TO CONTRACTORS
- PROJECT ELEVATIONS ARE BASED ON NAVD88 AND HOWARD COUNTY'S BENCHMARK SYSTEM
- PREVIOUS PROJECTS USED OTHER DATUMS
- APPLY THE FOLLOWING CONVERSIONS WHEN USING PREVIOUS CONTRACT DRAWINGS:
  - ADDITION NO. 6: SUBTRACT 0.80 FT
  - PRIOR ADDITIONS: SUBTRACT 1.04 FT

DEPARTMENT OF PUBLIC WORKS
HOWARD COUNTY, MARYLAND

CHIEF, BUREAU OF UTILITIES DATE

DES: KSB
DRN: DPG
CHK: BA
DATE: 2/17/2017

DATE	REV	DESCRIPTION
07/2019		RECORD DRAWING

PROCESS

SOLIDS SCREENING AREA SECTIONS 2

LITTLE PATUXENT WATER RECLAMATION PLANT
8TH ADDITION
BIOSOLIDS PROCESSING FACILITIES - PHASE I

CAPITAL PROJECT S-6295
CONTRACT NO. 24-4935

ELECTION DISTRICT NO. 6
HOWARD COUNTY, MARYLAND

SCALE AS SHOWN

SHEET 187 OF 463

M-244

BIM 360://10054364 – Little Patuxent WRP 8th Addition/264591_100_D_V18_JMT.rvt
1/11/2022 2:40:11 PM

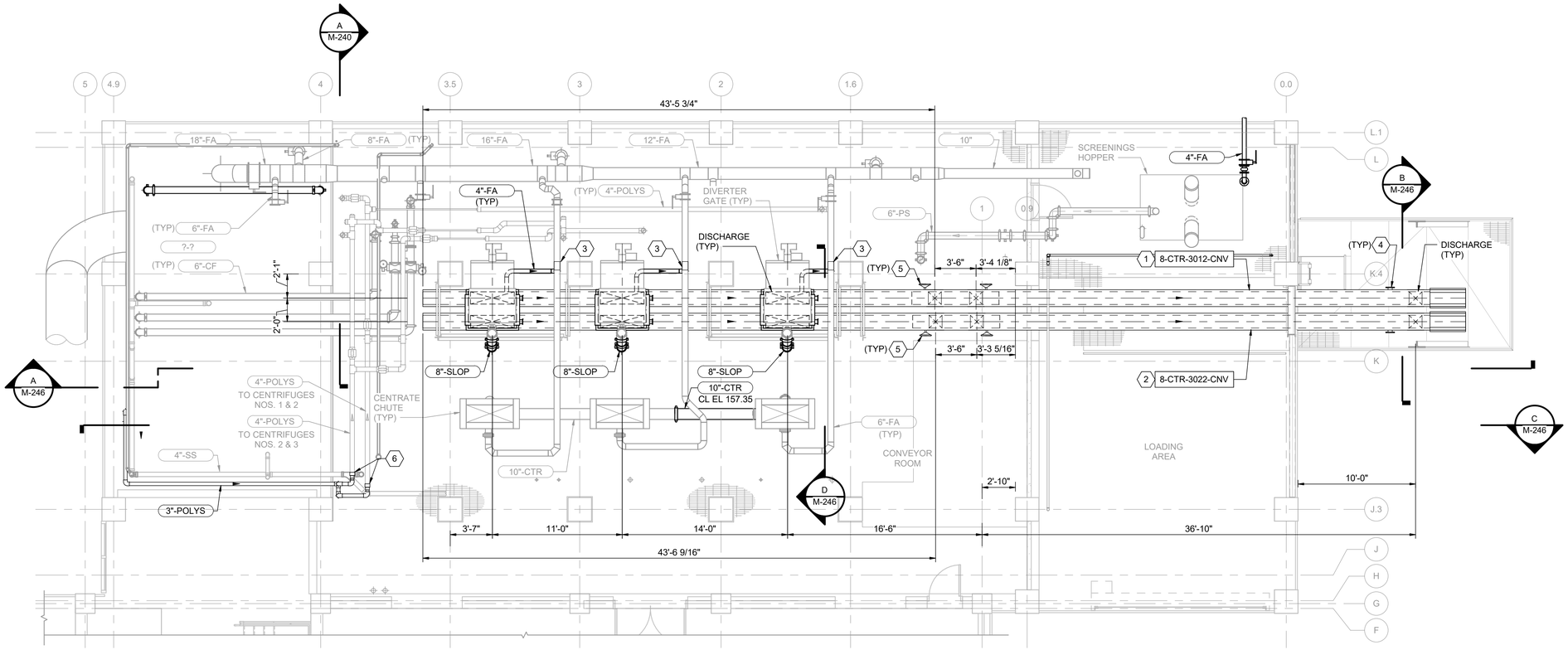

PLAN AT EL 155.20

3/16" = 1'-0"

KEY NOTES (X)

1 CAKE CONVEYOR NO. 1
2 CAKE CONVEYOR NO. 2
3 CONNECT TO EXISTING 6"-FA
4 4" FLUSHING DRAIN CONNECTION
5 MANUAL SLIDE GATE FOR FUTURE SCREW CONVEYOR
6 TIE INTO EXISTING 4"-POLYS WITH 4"X3" REDUCER.

THE DRAWINGS IN THIS SET ARE RECORD DRAWINGS. THEY ARE CONSTRUCTION CONTRACT DRAWINGS WHICH HAVE BEEN REVISED BASED ON AVAILABLE FIELD INFORMATION RECORDED BY OTHERS DURING CONSTRUCTION OF THIS CONTRACT. THERE HAS BEEN NO VERIFICATION OF DIMENSIONS SHOWN ON THE CONSTRUCTION DRAWINGS OR THE ACCURACY/COMPLETENESS OF THE FIELD INFORMATION RECEIVED.

SIGNATURE — DATE 2/7/2023

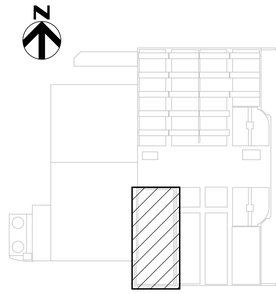

KEY PLAN

AS-BUILT REPLACEMENT SHEET

PROFESSIONAL CERTIFICATION

THIS DRAWING WAS ORIGINALLY APPROVED FOR CONSTRUCTION AND SEALED BY BRIAN M. BACLCHUNAS, A REGISTERED PROFESSIONAL ENGINEER IN THE STATE OF MARYLAND, NO. 200406

NOTICE TO CONTRACTORS

- PROJECT ELEVATIONS ARE BASED ON NAVD88 AND HOWARD COUNTY'S BENCHMARK SYSTEM
- PREVIOUS PROJECTS USED OTHER DATUMS
- APPLY THE FOLLOWING CONVERSIONS WHEN USING PREVIOUS CONTRACT DRAWINGS:
  - ADDITION NO. 6: SUBTRACT 0.80 FT
  - PRIOR ADDITIONS: SUBTRACT 1.04 FT

DEPARTMENT OF PUBLIC WORKS
HOWARD COUNTY, MARYLAND

CHIEF, BUREAU OF UTILITIES — DATE

DES: ADP
DRN: SLB
CHK: BMB
DATE: 12/2016

DATE	REV	DESCRIPTION
07/2019		RECORD DRAWING

PROCESS

DEWATERING AND DRYING AREA PLAN AT EL 155.20

LITTLE PATUXENT WATER RECLAMATION PLANT
8TH ADDITION
BIOSOLIDS PROCESSING FACILITIES - PHASE I

CAPITAL PROJECT S-6295
CONTRACT NO. 24-4935

ELECTION DISTRICT NO. 6
HOWARD COUNTY, MARYLAND

SCALE AS SHOWN

SHEET 188 OF 463

M-245

BIM 360://10054364 – Little Patuxent WRP 8th Addition/264591_100_D_V18.rvt
1/11/2022 2:11:21 PM

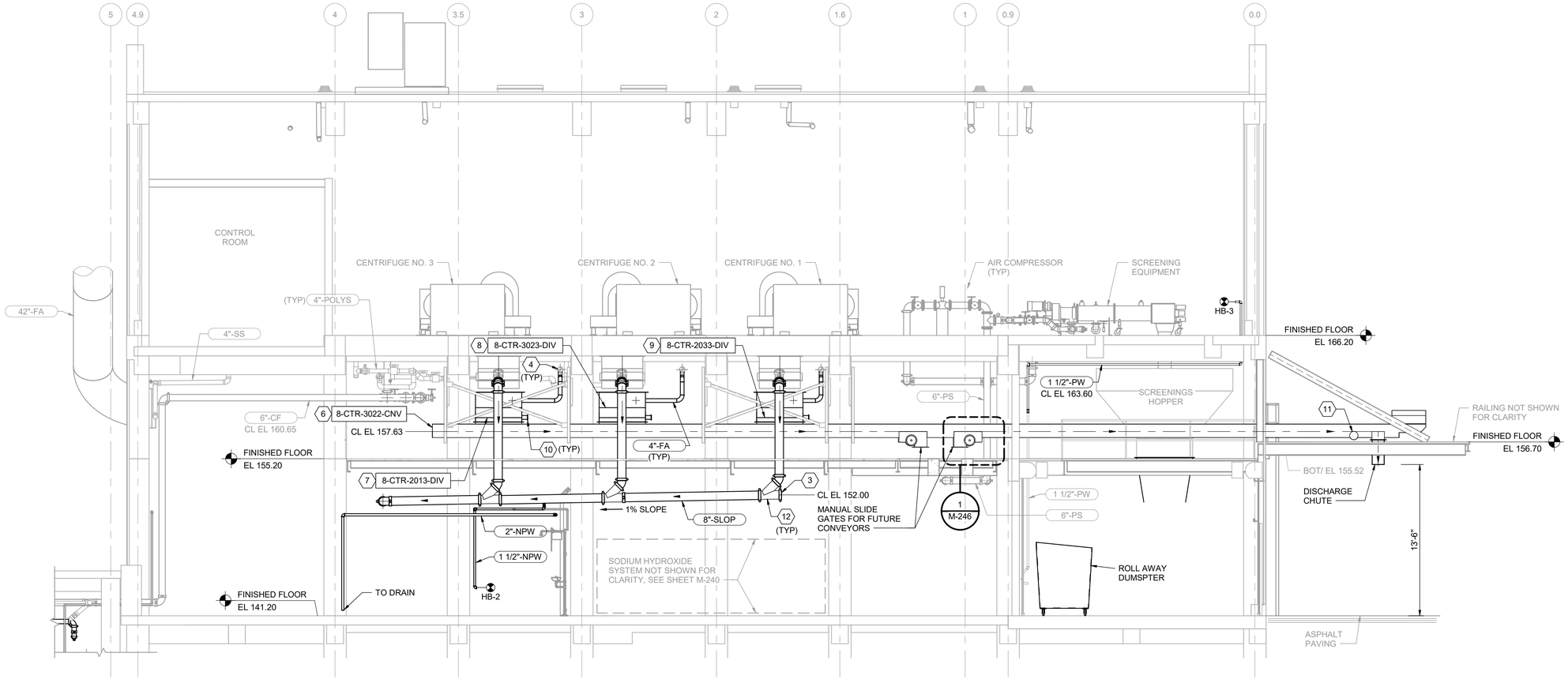

A M-240 SECTION
3/16" = 1'-0"

KEY NOTES (X)

1 22.5 DEGREE BEND.
2 45 DEGREE BEND.
3 GROOVED JOINT CAP
4 CONNECT TO EXISTING 6"-FA
5 CAKE CONVEYOR NO. 1
6 CAKE CONVEYOR NO. 2
7 DIVERTER GATE NO. 1
8 DIVERTER GATE NO. 2
9 DIVERTER GATE NO. 3
10 SAMPLE PORT
11 4" FLUSHING DRAIN CONNECTION
12 WYE FITTING
13 TIE INTO EXISTING 4"-POLYS WITH 4"X3" REDUCER.

THE DRAWINGS IN THIS SET ARE RECORD DRAWINGS. THEY ARE CONSTRUCTION CONTRACT DRAWINGS WHICH HAVE BEEN REVISED BASED ON AVAILABLE FIELD INFORMATION RECORDED BY OTHERS DURING CONSTRUCTION OF THIS CONTRACT. THERE HAS BEEN NO VERIFICATION OF DIMENSIONS SHOWN ON THE CONSTRUCTION DRAWINGS OR THE ACCURACY/COMPLETENESS OF THE FIELD INFORMATION RECEIVED.

SIGNATURE 2/7/2023 DATE

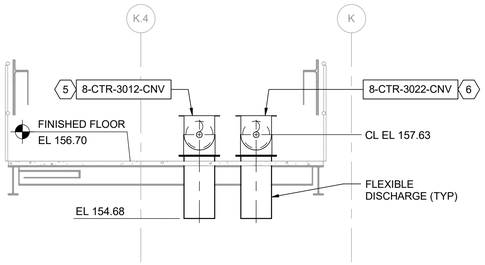

B M-245 DISCHARGE CHUTE SECTION
3/8" = 1'-0"

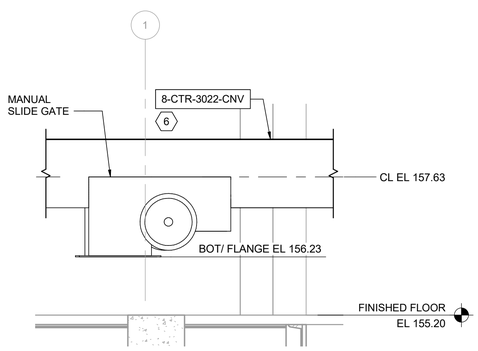

1 M-246 SLIDE GATE DETAIL (SIM)
3/4" = 1'-0"

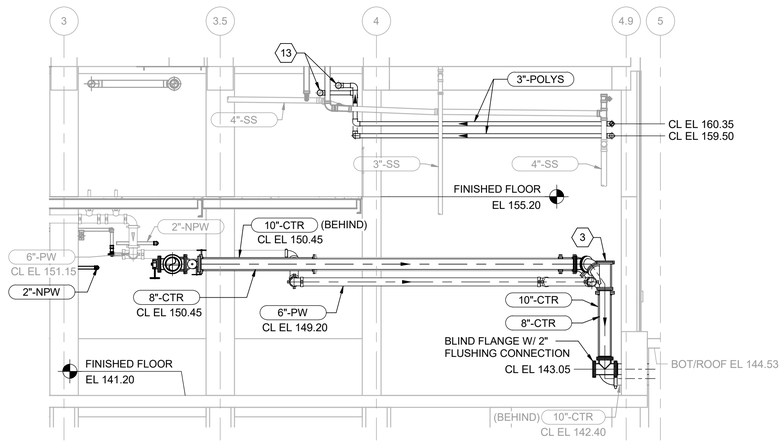

C M-240 SECTION
3/16" = 1'-0"

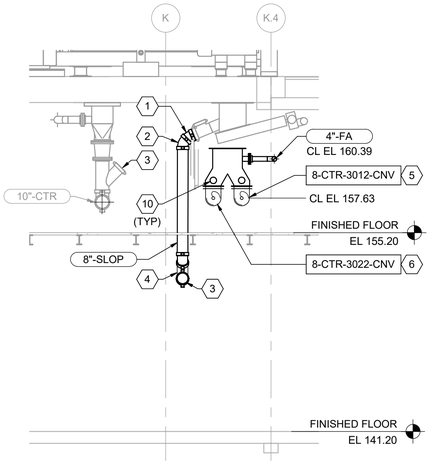

D M-240 SECTION
3/16" = 1'-0"

	HDR	AS-BUILT REPLACEMENT SHEET	PROFESSIONAL CERTIFICATION THIS DRAWING WAS ORIGINALLY APPROVED FOR CONSTRUCTION AND SEALED BY BRIAN M. BACLCHUNAS, A REGISTERED PROFESSIONAL ENGINEER IN THE STATE OF MARYLAND, NO. 200406	NOTICE TO CONTRACTORS • PROJECT ELEVATIONS ARE BASED ON NAVD88 AND HOWARD COUNTY'S BENCHMARK SYSTEM • PREVIOUS PROJECTS USED OTHER DATUMS • APPLY THE FOLLOWING CONVERSIONS WHEN USING PREVIOUS CONTRACT DRAWINGS: - ADDITION NO. 6: SUBTRACT 0.80 FT - PRIOR ADDITIONS: SUBTRACT 1.04 FT	DEPARTMENT OF PUBLIC WORKS HOWARD COUNTY, MARYLAND CHIEF, BUREAU OF UTILITIES DATE	DES: ADP DRN: SLB CHK: BMB DATE: 12/2016	07/2019		RECORD DRAWING	PROCESS DEWATERING AND DRYING AREA SECTIONS AND DETAIL	LITTLE PATUXENT WATER RECLAMATION PLANT 8TH ADDITION BIOSOLIDS PROCESSING FACILITIES - PHASE I CAPITAL PROJECT S-6295 CONTRACT NO. 24-4935 ELECTION DISTRICT NO. 6 HOWARD COUNTY, MARYLAND	SCALE AS SHOWN SHEET 189 OF 463 M-246

DATE | REV | DESCRIPTION

BIM 360://10054364 – Little Patuxent WRP 8th Addition/264591_100_D_V18.rvt
1/11/2022 2:11:27 PM

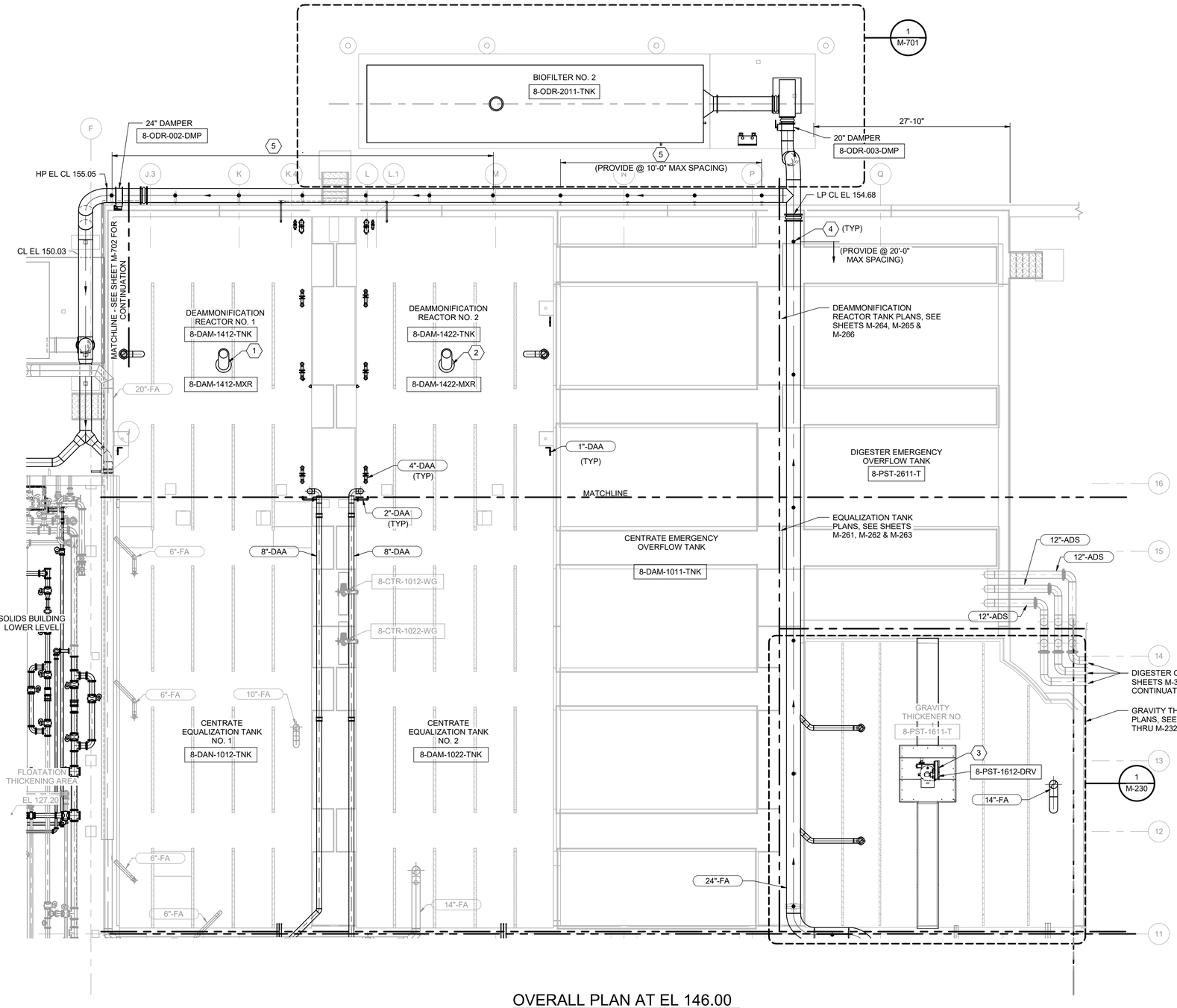

OVERALL PLAN AT EL 146.00

1/8" = 1'-0"

N

GENERAL NOTES

1. INSULATE ALL EXPOSED DEAMMONIFICATION AIR PIPING IN ACCORDANCE WITH SPECIFICATION SECTION 40 42 00.

KEY NOTES (X)

1 DEAMMONIFICATION MIXER NO. 1.
2 DEAMMONIFICATION MIXER NO. 2.
3 GRAVITY THICKENER NO. 1 DRIVE.
4 PIPE SUPPORT, SEE DETAIL 1/S-909
5 PIPE SUPPORT, SEE DETAIL 3/S-909

THE DRAWINGS IN THIS SET ARE RECORD DRAWINGS. THEY ARE CONSTRUCTION CONTRACT DRAWINGS WHICH HAVE BEEN REVISED BASED ON AVAILABLE FIELD INFORMATION RECORDED BY OTHERS DURING CONSTRUCTION OF THIS CONTRACT. THERE HAS BEEN NO VERIFICATION OF DIMENSIONS SHOWN ON THE CONSTRUCTION DRAWINGS OR THE ACCURACY/COMPLETENESS OF THE FIELD INFORMATION RECEIVED.

SIGNATURE — DATE 2/7/2023

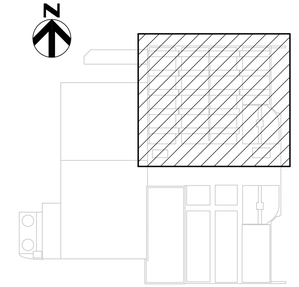

KEY PLAN

AS-BUILT REPLACEMENT SHEET

PROFESSIONAL CERTIFICATION

THIS DRAWING WAS ORIGINALLY APPROVED FOR CONSTRUCTION AND SEALED BY BRIAN M. BACLCHUNAS, A REGISTERED PROFESSIONAL ENGINEER IN THE STATE OF MARYLAND, NO. 200406

NOTICE TO CONTRACTORS

- PROJECT ELEVATIONS ARE BASED ON NAVD88 AND HOWARD COUNTY'S BENCHMARK SYSTEM
- PREVIOUS PROJECTS USED OTHER DATUMS
- APPLY THE FOLLOWING CONVERSIONS WHEN USING PREVIOUS CONTRACT DRAWINGS:
  - ADDITION NO. 6: SUBTRACT 0.80 FT
  - PRIOR ADDITIONS: SUBTRACT 1.04 FT

DEPARTMENT OF PUBLIC WORKS
HOWARD COUNTY, MARYLAND

CHIEF, BUREAU OF UTILITIES — DATE

DES: KLP
DRN: REE
CHK: JRK
DATE: 12/2016

DATE	REV	DESCRIPTION
07/2019		RECORD DRAWING

PROCESS

DEAMMONIFICATION REACTORS OVERALL PLAN

LITTLE PATUXENT WATER RECLAMATION PLANT
8TH ADDITION
BIOSOLIDS PROCESSING FACILITIES - PHASE I

CAPITAL PROJECT S-6295
CONTRACT NO. 24-4935

ELECTION DISTRICT NO. 6
HOWARD COUNTY, MARYLAND

SCALE AS SHOWN

SHEET 190 OF 463

M-260

BIM 360://10054364 – Little Patuxent WRP 8th Addition/264591_100_D_V18.rvt
1/11/2022 2:11:34 PM

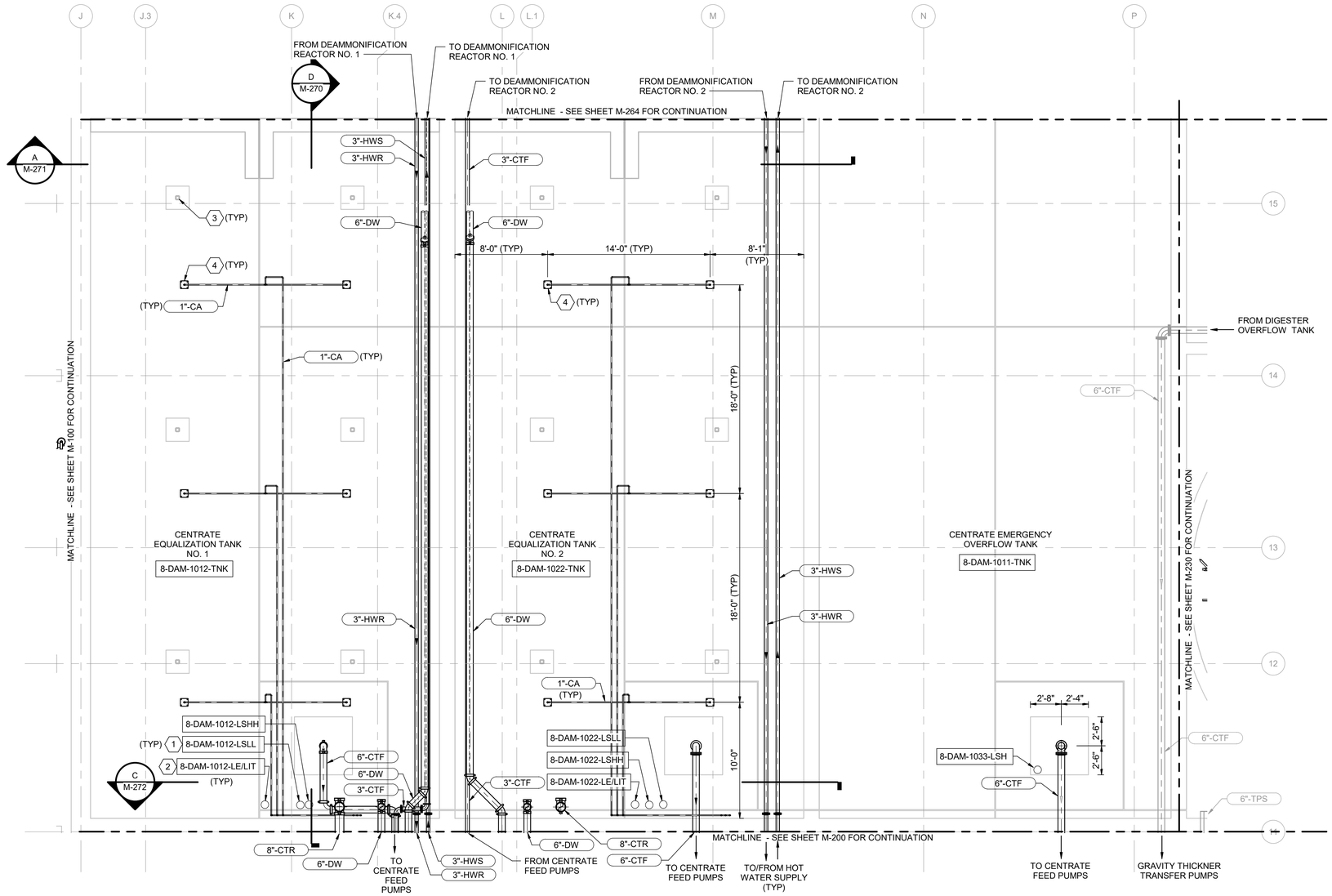

PLAN AT EL 128.00

3/16" = 1'-0"

N

1. INSTRUMENTATION LOCATIONS TO BE VERIFIED WITH SYSTEM SUPPLIER AND ENGINEER. REFER TO DRAWINGS I-909 AND I-910 FOR INSTRUMENTATION MOUNTING DETAILS. PROVIDE PVC STILLING WELL FOR INSTRUMENTS IN REACTOR (SEE DETAIL 1/M-903).

KEY NOTES (X)

1 FLOAT SWITCH. SEE DETAIL 1/-909. REFER TO SECTION D/M-269 FOR ELEVATION. CONFIRM LOCATION AND ELEVATION WITH DEAMMONIFICATION SYSTEM SUPPLIER.

2 SUBMERSIBLE PRESSURE TRANSDUCER. LOCATE AT BOTTOM OF TANK. PROVDE STILLING WELL PER DETAIL 1/M903.

3 COVER SUPPORT POST. REFER TO STRUCTURAL DRAWINGS.

4 COMPRESSED AIR MIXING NOZZLE. REFER TO MANUFACTURER INSTALLATION DRAWINGS FOR SUPPORT DETAILS.

THE DRAWINGS IN THIS SET ARE RECORD DRAWINGS. THEY ARE CONSTRUCTION CONTRACT DRAWINGS WHICH HAVE BEEN REVISED BASED ON AVAILABLE FIELD INFORMATION RECORDED BY OTHERS DURING CONSTRUCTION OF THIS CONTRACT. THERE HAS BEEN NO VERIFICATION OF DIMENSIONS SHOWN ON THE CONSTRUCTION DRAWINGS OR THE ACCURACY/COMPLETENESS OF THE FIELD INFORMATION RECEIVED.

SIGNATURE — DATE 2/7/2023

N

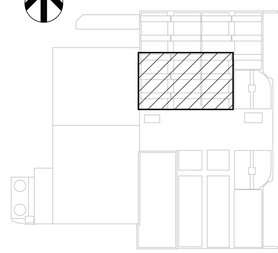

KEY PLAN

AS-BUILT REPLACEMENT SHEET

PROFESSIONAL CERTIFICATION

THIS DRAWING WAS ORIGINALLY APPROVED FOR CONSTRUCTION AND SEALED BY BRIAN M. BACLCHUNAS, A REGISTERED PROFESSIONAL ENGINEER IN THE STATE OF MARYLAND, NO. 200406

NOTICE TO CONTRACTORS

- PROJECT ELEVATIONS ARE BASED ON NAVD88 AND HOWARD COUNTY'S BENCHMARK SYSTEM
- PREVIOUS PROJECTS USED OTHER DATUMS
- APPLY THE FOLLOWING CONVERSIONS WHEN USING PREVIOUS CONTRACT DRAWINGS:
  - ADDITION NO. 6: SUBTRACT 0.80 FT
  - PRIOR ADDITIONS: SUBTRACT 1.04 FT

DEPARTMENT OF PUBLIC WORKS
HOWARD COUNTY, MARYLAND

CHIEF, BUREAU OF UTILITIES — DATE

DES: KLP
DRN: REE
CHK: JRK
DATE: 12/2016

DATE	REV	DESCRIPTION
07/2019		RECORD DRAWING

PROCESS

CENTRATE EQUALIZATION TANKS LOWER PLAN

LITTLE PATUXENT WATER RECLAMATION PLANT
8TH ADDITION
BIOSOLIDS PROCESSING FACILITIES - PHASE I

CAPITAL PROJECT S-6295
CONTRACT NO. 24-4935

ELECTION DISTRICT NO. 6
HOWARD COUNTY, MARYLAND

SCALE AS SHOWN

SHEET 191 OF 463

M-261

BIM 360://10054364 – Little Patuxent WRP 8th Addition/264591_100_D_V18.rvt
1/11/2022 2:11:38 PM

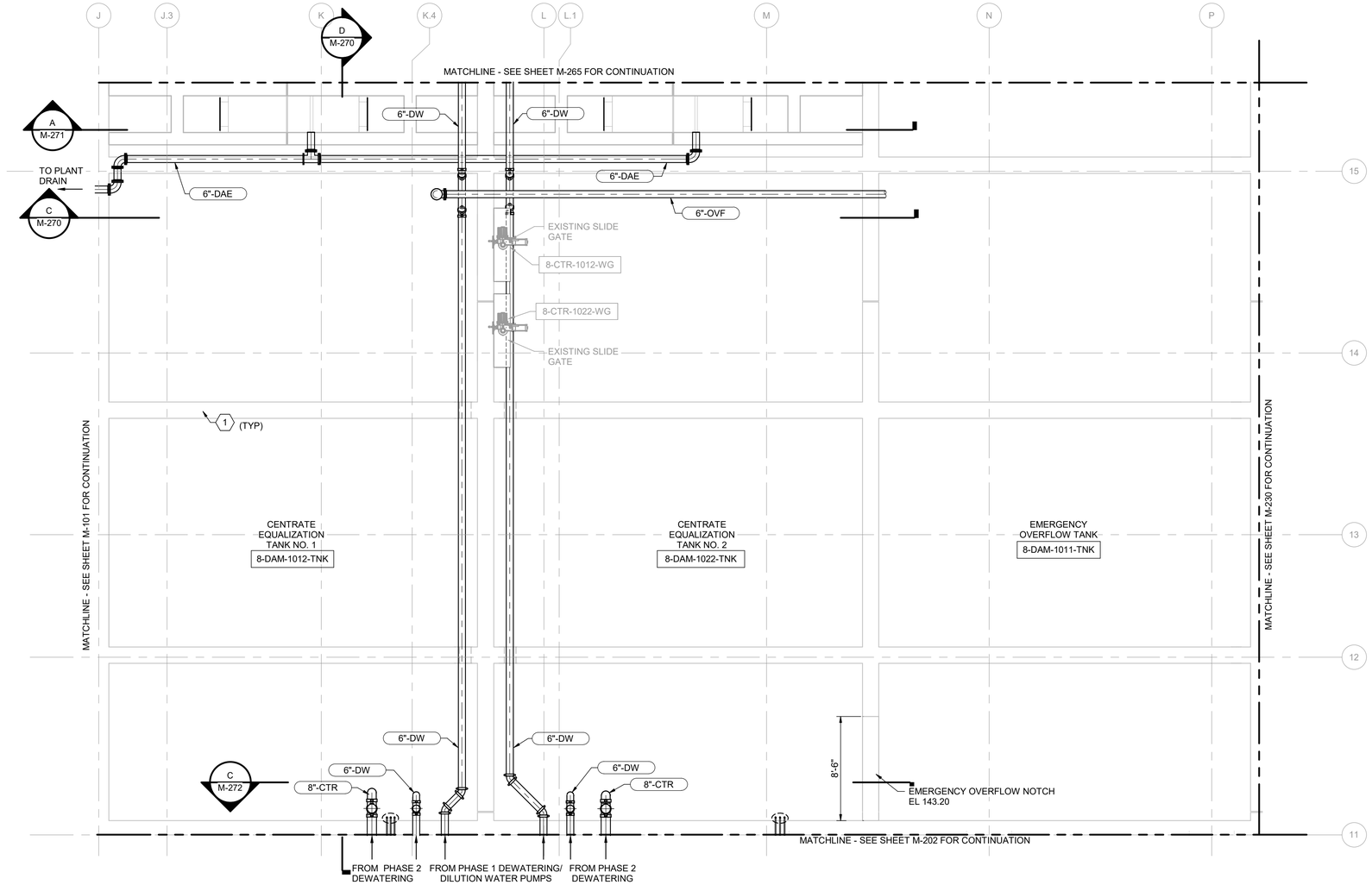

PLAN AT EL 142.00

3/16" = 1'-0"

N

GENERAL NOTES

1. CONTRACTOR TO VERIFY AND MATCH EXISTING ELEVATIONS WHEN CONNECTING TO EXISITNG PIPING SYSTEMS.

KEY NOTES (X)

1 COVER SUPPORT POST, REFER TO STRUCTURAL DRAWINGS.

THE DRAWINGS IN THIS SET ARE RECORD DRAWINGS. THEY ARE CONSTRUCTION CONTRACT DRAWINGS WHICH HAVE BEEN REVISED BASED ON AVAILABLE FIELD INFORMATION RECORDED BY OTHERS DURING CONSTRUCTION OF THIS CONTRACT. THERE HAS BEEN NO VERIFICATION OF DIMENSIONS SHOWN ON THE CONSTRUCTION DRAWINGS OR THE ACCURACY/COMPLETENESS OF THE FIELD INFORMATION RECEIVED.

SIGNATURE — DATE 2/7/2023

N

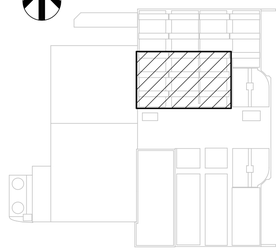

KEY PLAN

AS-BUILT REPLACEMENT SHEET

PROFESSIONAL CERTIFICATION

THIS DRAWING WAS ORIGINALLY APPROVED FOR CONSTRUCTION AND SEALED BY BRIAN M. BACLCHUNAS, A REGISTERED PROFESSIONAL ENGINEER IN THE STATE OF MARYLAND, NO. 200406

NOTICE TO CONTRACTORS

- PROJECT ELEVATIONS ARE BASED ON NAVD88 AND HOWARD COUNTY'S BENCHMARK SYSTEM
- PREVIOUS PROJECTS USED OTHER DATUMS
- APPLY THE FOLLOWING CONVERSIONS WHEN USING PREVIOUS CONTRACT DRAWINGS:
  - ADDITION NO. 6: SUBTRACT 0.80 FT
  - PRIOR ADDITIONS: SUBTRACT 1.04 FT

DEPARTMENT OF PUBLIC WORKS
HOWARD COUNTY, MARYLAND

CHIEF, BUREAU OF UTILITIES — DATE

DES: KLP
DRN: REE
CHK: JRK
DATE: 12/2016

DATE	REV	DESCRIPTION
07/2019		RECORD DRAWING

PROCESS

CENTRATE EQUALIZATION TANKS UPPER PLAN

LITTLE PATUXENT WATER RECLAMATION PLANT
8TH ADDITION
BIOSOLIDS PROCESSING FACILITIES - PHASE I

CAPITAL PROJECT S-6295
CONTRACT NO. 24-4935

ELECTION DISTRICT NO. 6
HOWARD COUNTY, MARYLAND

SCALE AS SHOWN

SHEET 192 OF 463

M-262

BIM 360://10054364 – Little Patuxent WRP 8th Addition/264591_100_D_V18.rvt
1/11/2022 2:11:42 PM

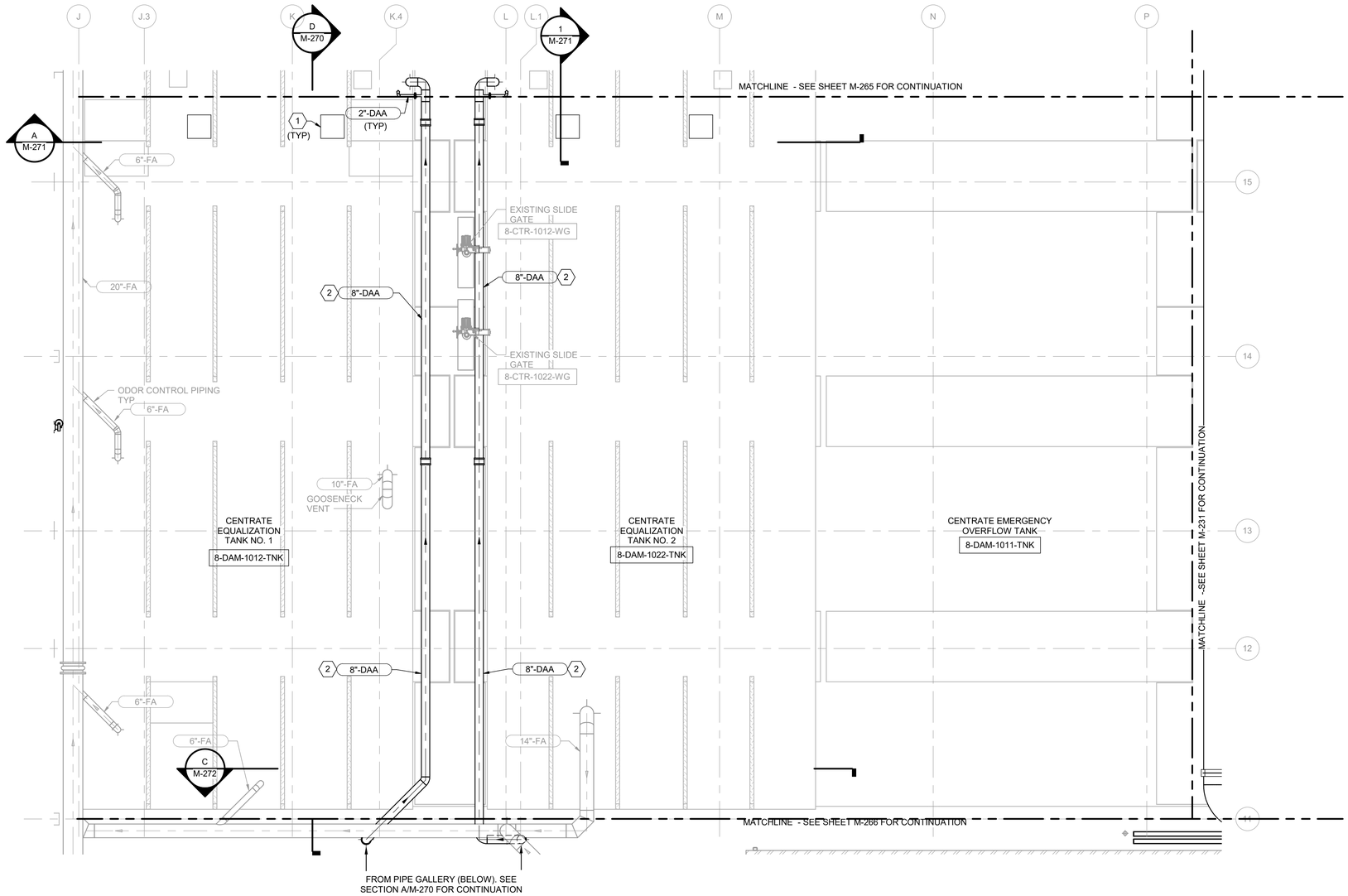

PLAN AT EL 146.00

3/16" = 1'-0"

N

GENERAL NOTES

1. CONTRACTOR TO VERIFY AND MATCH EXISTING ELEVATIONS WHEN CONNECTING TO EXISITNG PIPING SYSTEMS

KEY NOTES (X)

1 CUT 24"X24" OPENING ABOVE EACH EFFLUENT WEIR AND COVER WITH PENETRATION REINFORCEMENT @ ALUM PLATE. VERIFY LOCATION W/ ENGINEER IN FIELD PRIOR TO INSTALLATION. SEE DETAIL 9/S-905.

2 INSULATE ALL EXPOSED DEAMMONIFICATION AIR PIPING IN ACCORDANCE WITH SPECIFICATION SECTION 40 42 00.

THE DRAWINGS IN THIS SET ARE RECORD DRAWINGS. THEY ARE CONSTRUCTION CONTRACT DRAWINGS WHICH HAVE BEEN REVISED BASED ON AVAILABLE FIELD INFORMATION RECORDED BY OTHERS DURING CONSTRUCTION OF THIS CONTRACT. THERE HAS BEEN NO VERIFICATION OF DIMENSIONS SHOWN ON THE CONSTRUCTION DRAWINGS OR THE ACCURACY/COMPLETENESS OF THE FIELD INFORMATION RECEIVED.

SIGNATURE — DATE 2/7/2023

N

KEY PLAN

AS-BUILT REPLACEMENT SHEET

PROFESSIONAL CERTIFICATION

THIS DRAWING WAS ORIGINALLY APPROVED FOR CONSTRUCTION AND SEALED BY BRIAN M. BACLCHUNAS, A REGISTERED PROFESSIONAL ENGINEER IN THE STATE OF MARYLAND, NO. 200406

NOTICE TO CONTRACTORS

- PROJECT ELEVATIONS ARE BASED ON NAVD88 AND HOWARD COUNTY'S BENCHMARK SYSTEM
- PREVIOUS PROJECTS USED OTHER DATUMS
- APPLY THE FOLLOWING CONVERSIONS WHEN USING PREVIOUS CONTRACT DRAWINGS:
  - ADDITION NO. 6: SUBTRACT 0.80 FT
  - PRIOR ADDITIONS: SUBTRACT 1.04 FT

DEPARTMENT OF PUBLIC WORKS
HOWARD COUNTY, MARYLAND

CHIEF, BUREAU OF UTILITIES — DATE

DES: KLP
DRN: REE
CHK: JRK
DATE: 12/2016

DATE	REV	DESCRIPTION
07/2019		RECORD DRAWING

PROCESS

CENTRATE EQUALIZATION TANKS TOP PLAN

LITTLE PATUXENT WATER RECLAMATION PLANT
8TH ADDITION
BIOSOLIDS PROCESSING FACILITIES - PHASE I

CAPITAL PROJECT S-6295
CONTRACT NO. 24-4935

ELECTION DISTRICT NO. 6
HOWARD COUNTY, MARYLAND

SCALE AS SHOWN

SHEET 193 OF 463

M-263

BIM 360://10054364 – Little Patuxent WRP 8th Addition/264591_100_D_V18.rvt
1/11/2022 2:11:45 PM

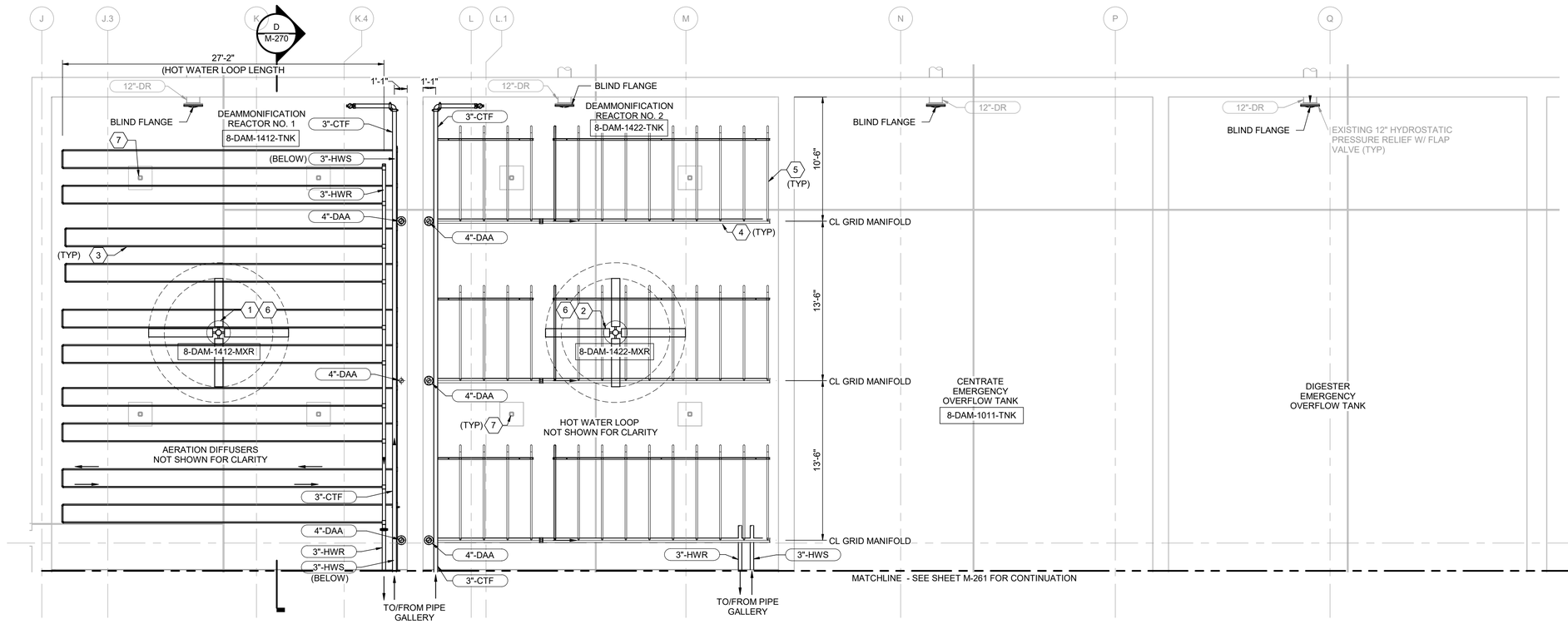

PLAN AT EL 128.00

3/16" = 1'-0"

N

GENERAL NOTES

1. CONTRACTOR TO VERIFY AND MATCH EXISTING ELEVATIONS WHEN CONNECTING TO EXISITNG PIPING SYSTEMS

KEY NOTES (X)

1 DEAMMONIFICATION MIXER NO. 1.
2 DEAMMONIFICATION MIXER NO. 2.
3 1" HOT WATER LOOP (10 PER REACTOR)
4 AERATION GRID MANIFOLD.
5 AERATION GRID LATERAL.
6 CONTRACTOR TO COORDINATE WITH MIXER MANUFACTURER TO ENSURE ADEQUATE CLEARANCE BETWEEN MIXER IMPELLERS AND COLUMNS.
7 COVER SUPPORT POST, SEE STRUCTURAL DRAWINGS.

THE DRAWINGS IN THIS SET ARE RECORD DRAWINGS. THEY ARE CONSTRUCTION CONTRACT DRAWINGS WHICH HAVE BEEN REVISED BASED ON AVAILABLE FIELD INFORMATION RECORDED BY OTHERS DURING CONSTRUCTION OF THIS CONTRACT. THERE HAS BEEN NO VERIFICATION OF DIMENSIONS SHOWN ON THE CONSTRUCTION DRAWINGS OR THE ACCURACY/COMPLETENESS OF THE FIELD INFORMATION RECEIVED.

SIGNATURE 2/7/2023 DATE

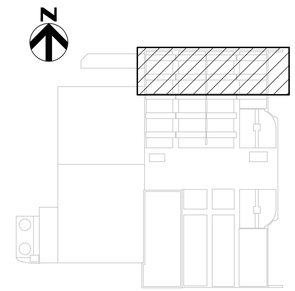

KEY PLAN

HDR

AS-BUILT REPLACEMENT SHEET

PROFESSIONAL CERTIFICATION

THIS DRAWING WAS ORIGINALLY APPROVED FOR CONSTRUCTION AND SEALED BY BRIAN M. BACLCHUNAS, A REGISTERED PROFESSIONAL ENGINEER IN THE STATE OF MARYLAND, NO. 200406

NOTICE TO CONTRACTORS

- PROJECT ELEVATIONS ARE BASED ON NAVD88 AND HOWARD COUNTY'S BENCHMARK SYSTEM
- PREVIOUS PROJECTS USED OTHER DATUMS
- APPLY THE FOLLOWING CONVERSIONS WHEN USING PREVIOUS CONTRACT DRAWINGS:
  - ADDITION NO. 6: SUBTRACT 0.80 FT
  - PRIOR ADDITIONS: SUBTRACT 1.04 FT

DEPARTMENT OF PUBLIC WORKS
HOWARD COUNTY, MARYLAND

CHIEF, BUREAU OF UTILITIES DATE

DES: KLP
DRN: REE
CHK: JRK
DATE: 12/2019

DATE	REV	DESCRIPTION
07/2019		RECORD DRAWING

PROCESS

DEAMMONIFICATION REACTORS LOWER PLAN

LITTLE PATUXENT WATER RECLAMATION PLANT
8TH ADDITION
BIOSOLIDS PROCESSING FACILITIES - PHASE I

CAPITAL PROJECT S-6295
CONTRACT NO. 24-4935

ELECTION DISTRICT NO. 6
HOWARD COUNTY, MARYLAND

SCALE AS SHOWN

SHEET 194 OF 463

M-264

BIM 360://10054364 – Little Patuxent WRP 8th Addition/264591_100_D_V18.rvt
1/11/2022 2:11:48 PM

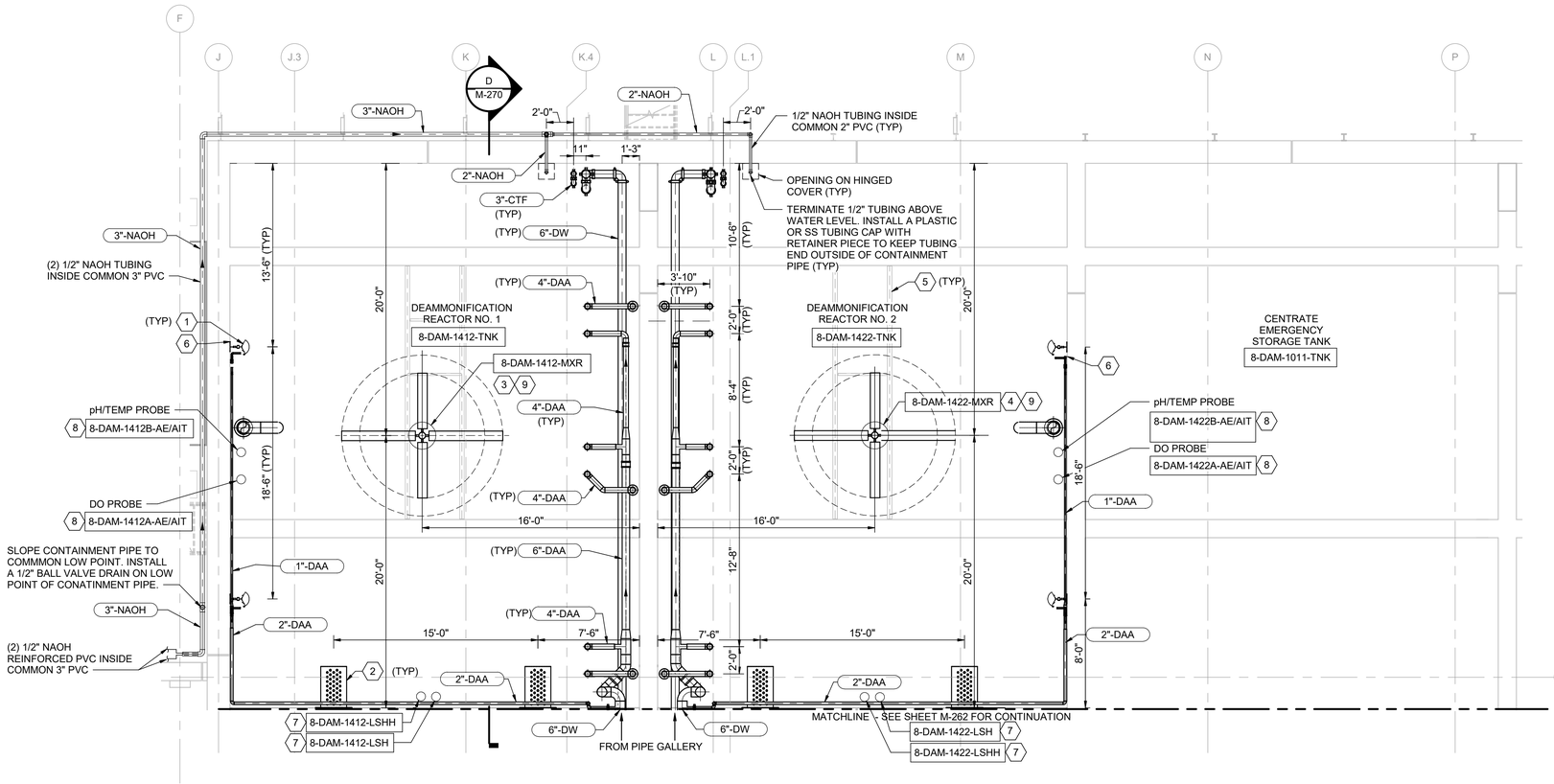

PLAN AT EL 142.00

3/16" = 1'-0"

N

GENERAL NOTES

1. INSTRUMENTATION LOCATIONS TO BE VERIFIED WITH SYSTEM SUPPLIER AND ENGINEER. REFER TO DRAWINGS I-909 AND I-910 FOR INSTRUMENTATION MOUNTING DETAILS. PROVIDE PVC STILLING WELL FOR INSTRUMENTS IN REACTOR (SEE DETAIL 1/M-903).

GENERAL NOTES FOR NAOH PIPING

1. PIPING IS SHOWN SCHEMATICALLY ON THIS DRAWING AND DOES NOT ILLUSTRATE ACTUAL FITTINGS. FOR ALL PVC CONTAINMENT PIPE BENDS, USE TWO 45 DEGREE ELBOWS FOLLOWED BY A TEE WITH THREADED CAP. DO NOT USE 90 DEG ELBOWS WITHOUT SPECIFIC APPROVAL BY ENGINEER. (45 DEG ELBOWS ARE REQUIRED TO AVOID CRIMPING CARRIER HOSES. THE TEE WITH THREADED CAP ALLOWS CARRIER HOSE TO BE PULLED.)
2. REVIEW PIPE ROUTING, OPENINGS, AND PENETRATSIONS WITH ENGINEER PRIOR TO INSTALLATION.
3. PAINT AND LABEL ALL NAOH PIPING PER THE SPECIFICATIONS. CONFIRM PAINT COLOR FOR EXTERIOR PIPING WITH OWNER/ENGINEER PRIOR TO WORK.
4. RECONNECT MICRONUTRIENT FEED PIPING.

KEY NOTES (X)

1 AIR LIFT PUMP.
2 CYLINDRICAL SCREEN.
3 DEAMMONIFICATION MIXER NO. 1.
4 DEAMMONIFICATION MIXER NO. 2.
5 MIXER SUPPORTS SEE STRUCTURAL DWGS.
6 RUN MICRO-NUTRIENT PIPING AROUNND TANK PERIMETER AND TERMINATE PIPE UNDER ACCESS HATCH. DISCHARGE SHALL BE ABOVE EL 144.25. SLOPE PIPE DOWN TOWARDS DISCHARGE. THERE SHALL BE NO LOW POINTS IN PIPE.
7 FLOAT SWITCH. SEE DETAIL 1/-909. REFER TO SECTION D/M-269 FOR ELEVATION. CONFIRM LOCATION AND ELEVATION WITH DEAMMONIFICATION SYSTEM SUPPLIER.
8 DISSOLVED OXYGEN PROBE AND COMBINATION PH/TEMPERATURE PROBE. REFER TO DETAIL 3/I-909 FOR MOUNTING DETAILS. PROVDE STILLING WELL PER DETAIL 1/M-903 AND SUN SHADE PER DETAIL 6/I-904. CONFIRM LOCATION WITH DEAMMONIFICATION SYSTEM SUPPLIER.
9 CONTRACTOR TO COORDINATE WITH MIXER MANUFACTURER TO ENSURE ADEQUATE CLEARANCE BETWEEN MIXER IMPELLERS AND COLUMNS.

THE DRAWINGS IN THIS SET ARE RECORD DRAWINGS. THEY ARE CONSTRUCTION CONTRACT DRAWINGS WHICH HAVE BEEN REVISED BASED ON AVAILABLE FIELD INFORMATION RECORDED BY OTHERS DURING CONSTRUCTION OF THIS CONTRACT. THERE HAS BEEN NO VERIFICATION OF DIMENSIONS SHOWN ON THE CONSTRUCTION DRAWINGS OR THE ACCURACY/COMPLETENESS OF THE FIELD INFORMATION RECEIVED.

SIGNATURE 2/7/2023 DATE

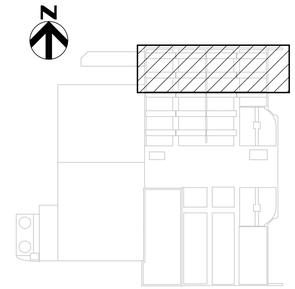

KEY PLAN

AS-BUILT REPLACEMENT SHEET

PROFESSIONAL CERTIFICATION

THIS DRAWING WAS ORIGINALLY APPROVED FOR CONSTRUCTION AND SEALED BY BRIAN M. BACLCHUNAS, A REGISTERED PROFESSIONAL ENGINEER IN THE STATE OF MARYLAND, NO. 200406

NOTICE TO CONTRACTORS

- PROJECT ELEVATIONS ARE BASED ON NAVD88 AND HOWARD COUNTY'S BENCHMARK SYSTEM
- PREVIOUS PROJECTS USED OTHER DATUMS
- APPLY THE FOLLOWING CONVERSIONS WHEN USING PREVIOUS CONTRACT DRAWINGS:
  - ADDITION NO. 6: SUBTRACT 0.80 FT
  - PRIOR ADDITIONS: SUBTRACT 1.04 FT

DEPARTMENT OF PUBLIC WORKS
HOWARD COUNTY, MARYLAND

CHIEF, BUREAU OF UTILITIES DATE

DES: KLP
DRN: REE
CHK: JRK
DATE: 12/2016

DATE	REV	DESCRIPTION
07/2019		RECORD DRAWING

PROCESS

DEAMMONIFICATION REACTORS UPPER PLAN

LITTLE PATUXENT WATER RECLAMATION PLANT
8TH ADDITION
BIOSOLIDS PROCESSING FACILITIES - PHASE I

CAPITAL PROJECT S-6295
CONTRACT NO. 24-4935

ELECTION DISTRICT NO. 6
HOWARD COUNTY, MARYLAND

SCALE AS SHOWN

SHEET 195 OF 463

M-265

BIM 360://10054364 – Little Patuxent WRP 8th Addition/264591_100_D_V18.rvt
1/11/2022 2:11:54 PM

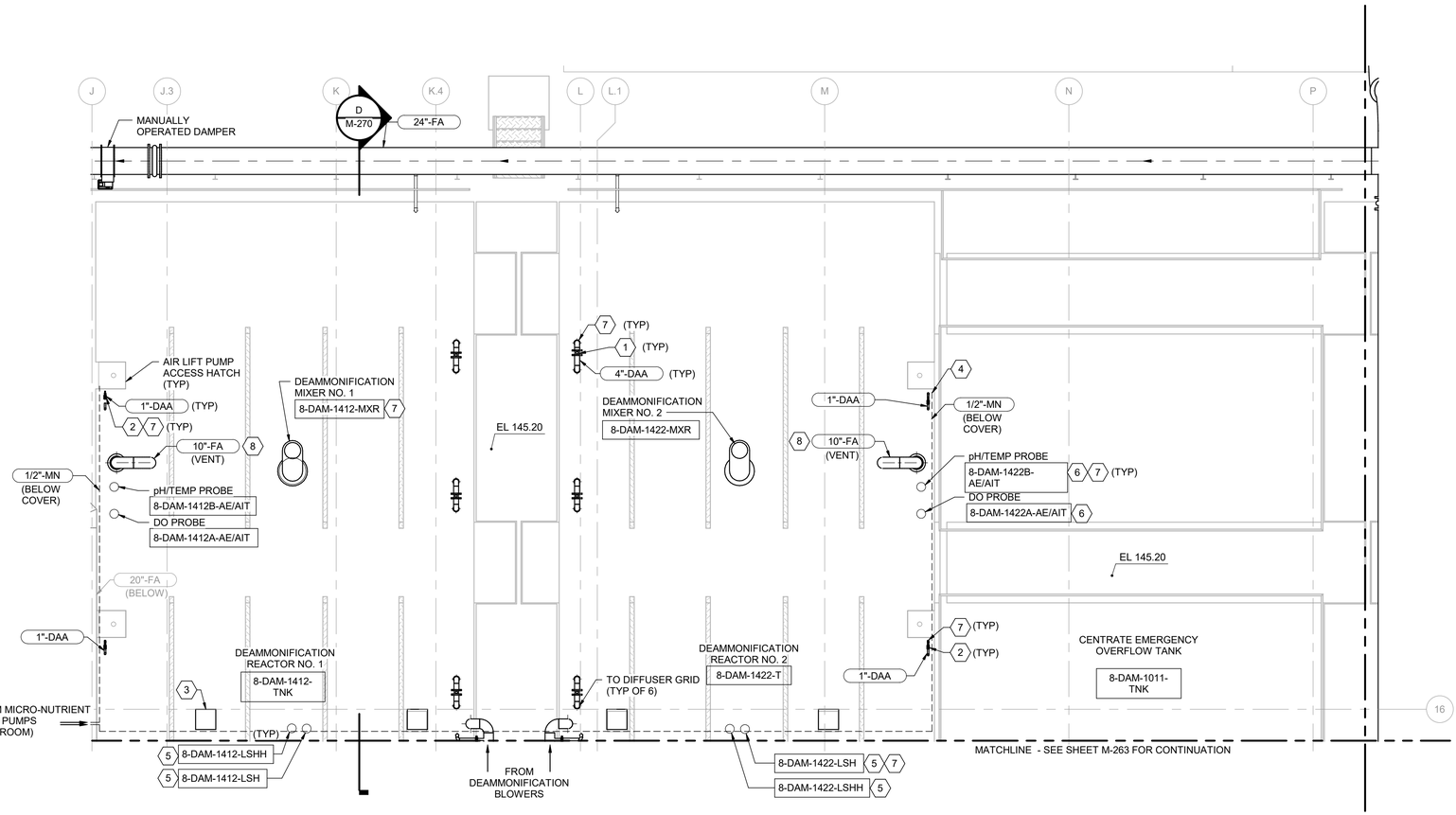

PLAN AT EL 145.20

3/16" = 1'-0"

N

GENERAL NOTES

1. INSTRUMENTATION LOCATIONS TO BE VERIFIED WITH SYSTEM SUPPLIER AND ENGINEER. REFER TO DRAWINGS I-909 AND I-910 FOR INSTRUMENTATION MOUNTING DETAILS. PROVIDE PVC STILLING WELL FOR INSTRUMENTS IN REACTOR (SEE DETAIL 1/M-903).
2. DRAWINGS ARE INTENDED TO DEPICT DESIGN INTENT; CONTRACTOR TO REFER TO SPECIFICATIONS, P&IDS, AND STANDARD DETAILS FOR FURTHER INSTALLATION REQUIREMENTS.
3. VALVES, INLINE APPURTENANCES AND EQUIPMENT ARE SHOWN GRAPHICALLY AS THE DEVICE BODY; REFER TO P&IDS FOR DEVICE TYPE, SIZE, AND DETAILS. INSTALL DEVICES IN ACCORDANCE WITH SPECIFICATIONS AND MFR'S REQUIREMENTS. ENSURE ADEQUATE ACCESS FOR OPERATION OF DEVICES—NOTIFY ENGINEER PRIOR TO INSTALLATION IF INADEQUATE CLEARANCE IS ANTICIPATED.

KEY NOTES (X)

1 4" BUTTERFLY VALVE
2 1" BALL VALVE
3 CUT 18"X18" OPENING ABOVE EACH CYLINDRICAL SCREEN AND COVER WITH PENETRATION REINFORCEMENT @ ALUM PLATE. VERIFY LOCATION W/ ENGINEER IN FIELD PRIOR TO INSTALLATION. SEE DETAIL 8/S-905.
4 RUN MICRO-NUTRIENT PIPING AROUNND TANK PERIMETER AND TERMINATE PIPE UNDER ACCESS HATCH. DISCHARGE SHALL BE ABOVE EL 144.25. SLOPE PIPE DOWN TOWARDS DISCHARGE. THERE SHALL BE NO LOW POINTS IN PIPE.
5 FLOAT SWITCH. SEE DETAIL 1/-909. REFER TO SECTION D/M-269 FOR ELEVATION. CONFIRM LOCATION AND ELEVATION WITH DEAMMONIFICATION SYSTEM SUPPLIER.
6 DISSOLVED OXYGEN PROBE AND COMBINATION PH/TEMPERATURE PROBE. REFER TO DETAIL 3/I-909 FOR MOUNTING DETAILS. PROVDE STILLING WELL PER DETAIL 1/M-903 AND SUN SHADE PER DETAIL 6/I-904. CONFIRM LOCATION WITH DEAMMONIFICATION SYSTEM SUPPLIER.
7 AT ALL PENETRATIONS FOR PIPING, EQUIPMENT, AND INSTRUMENTATION, INSTALL REMOVABLE ALUM PLATE. SEE DETAIL 8/S-905.
8 GOOSENECK VENT, SECTION C/M-232 SIMILAR.

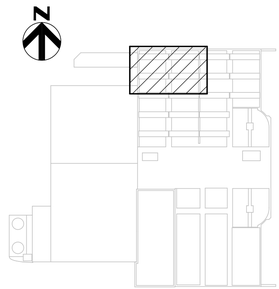

KEY PLAN

THE DRAWINGS IN THIS SET ARE RECORD DRAWINGS. THEY ARE CONSTRUCTION CONTRACT DRAWINGS WHICH HAVE BEEN REVISED BASED ON AVAILABLE FIELD INFORMATION RECORDED BY OTHERS DURING CONSTRUCTION OF THIS CONTRACT. THERE HAS BEEN NO VERIFICATION OF DIMENSIONS SHOWN ON THE CONSTRUCTION DRAWINGS OR THE ACCURACY/COMPLETENESS OF THE FIELD INFORMATION RECEIVED.

SIGNATURE _____ DATE 2/7/2022

AS-BUILT REPLACEMENT SHEET

PROFESSIONAL CERTIFICATION

THIS DRAWING WAS ORIGINALLY APPROVED FOR CONSTRUCTION AND SEALED BY BRIAN M. BACLCHUNAS, A REGISTERED PROFESSIONAL ENGINEER IN THE STATE OF MARYLAND, NO. 200406

NOTICE TO CONTRACTORS

- PROJECT ELEVATIONS ARE BASED ON NAVD88 AND HOWARD COUNTY'S BENCHMARK SYSTEM
- PREVIOUS PROJECTS USED OTHER DATUMS
- APPLY THE FOLLOWING CONVERSIONS WHEN USING PREVIOUS CONTRACT DRAWINGS:
  - ADDITION NO. 6: SUBTRACT 0.80 FT
  - PRIOR ADDITIONS: SUBTRACT 1.04 FT

DEPARTMENT OF PUBLIC WORKS
HOWARD COUNTY, MARYLAND

CHIEF, BUREAU OF UTILITIES DATE

DES: KLP
DRN: REE
CHK: JRK
DATE: 12/2016

DATE	REV	DESCRIPTION
07/2019		RECORD DRAWING

PROCESS

DEAMMONIFICATION REACTORS TOP PLAN

LITTLE PATUXENT WATER RECLAMATION PLANT
8TH ADDITION
BIOSOLIDS PROCESSING FACILITIES - PHASE I

CAPITAL PROJECT S-6295
CONTRACT NO. 24-4935

ELECTION DISTRICT NO. 6
HOWARD COUNTY, MARYLAND

SCALE AS SHOWN

SHEET 196 OF 463

M-266

BIM 360://10054364 – Little Patuxent WRP 8th Addition/264591_100_D_V18.rvt
1/11/2022 2:11:57 PM

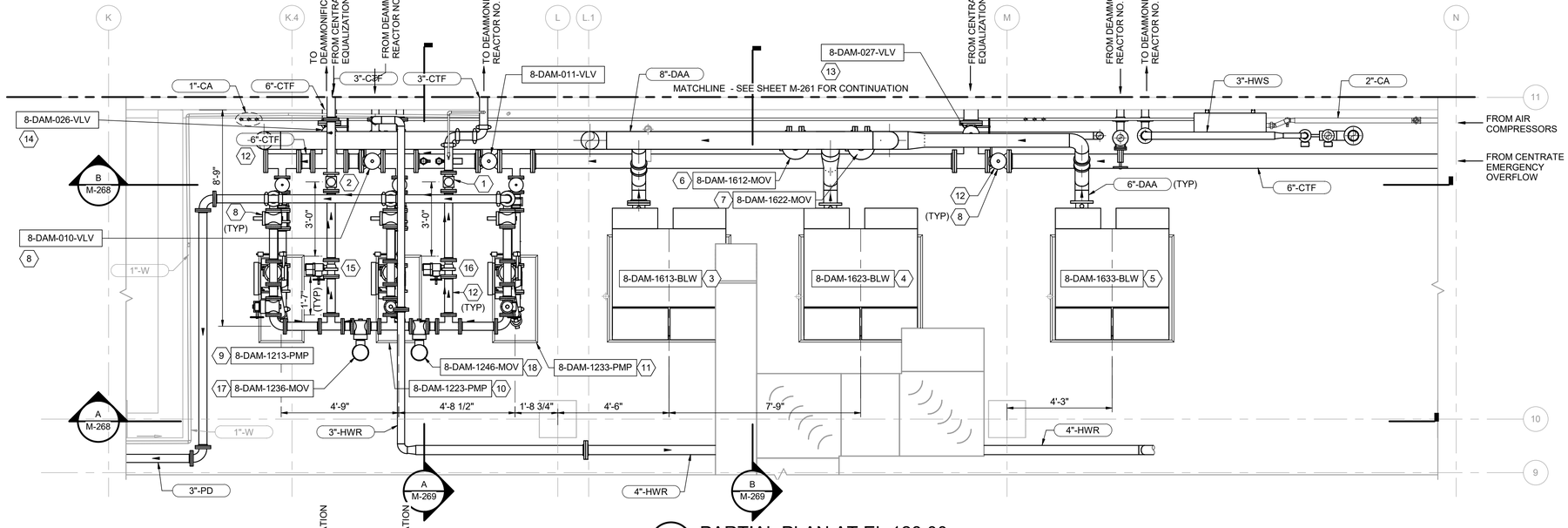

1 M-200 PARTIAL PLAN AT EL 128.00

3/8" = 1'-0"

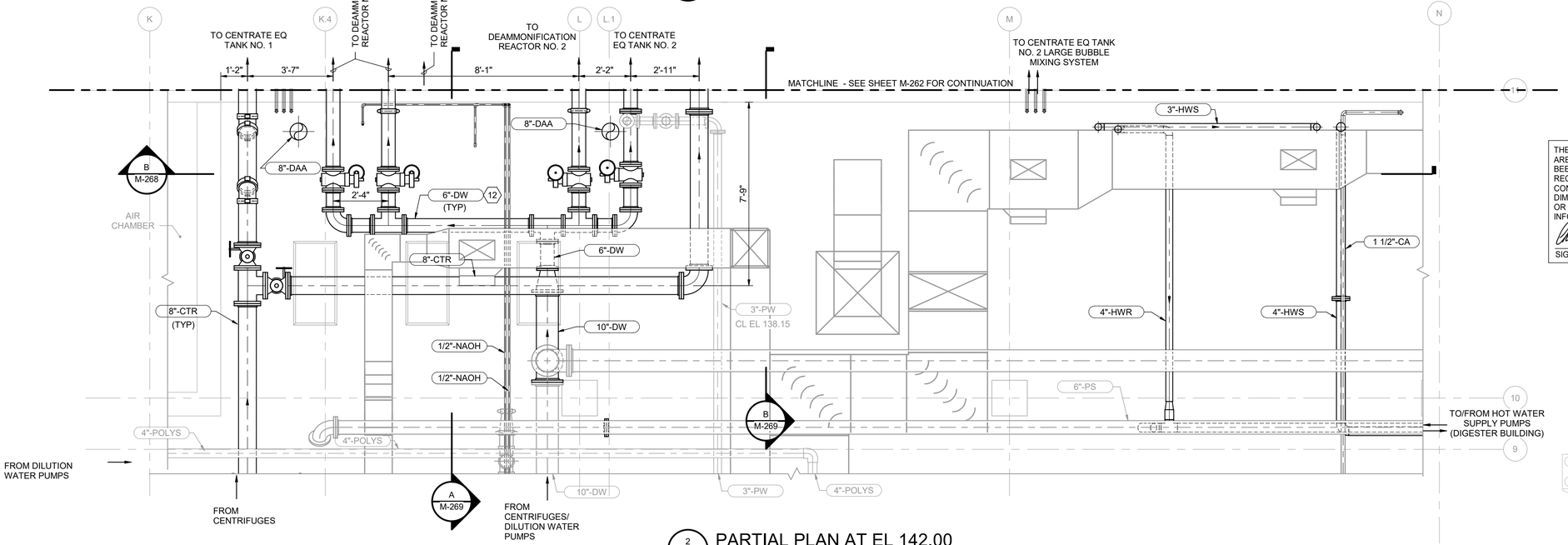

2 M-201 PARTIAL PLAN AT EL 142.00

3/8" = 1'-0"

N

GENERAL NOTES

1. INSULATE ALL EXPOSED BLOWER DISCHARGE AIR PIPING IN PIPE GALLERY. INSULATE ALL EXPOSED HOT WATER (HWS, HWR) PIPING IN PIPE GALLERY. REFER TO SPECIFICATION SECTION 40 42 00
2. PIPE PENETRATIONS THROUGH EXISTING WALLS: SEE DETAILS TO 4/S-260 OR 3/M-900.

KEY NOTES (X)

1 CENTRATE FEED FLOW METER NO. 2, 8-CTR-1222-FE/FIT.
2 CENTRATE FEED FLOW METER NO. 1, 8-CTR-1212-FE/FIT.
3 DEAMMONIFICATION BLOWER NO. 1.
4 DEAMMONIFICATION BLOWER NO. 2.
5 DEAMMONIFICATION BLOWER NO. 3.
6 DEAMMONIFICATION SWING BLOWER CONTROL VALVE NO. 1, 8-CTR-1612-BV.
7 DEAMMONIFICATION SWING BLOWER CONTROL VALVE NO. 2, 8-CTR-1622-BV.
8 PLUG VALVE.
9 CENTRATE FEED PUMP NO. 1.
10 CENTRATE FEED PUMP NO. 2.
11 CENTRIFUGE FEED PUMP NO. 3.
12 PROVIDE FLANGED COMPONENTS FOR ALL PIPE AND FITTINGS SHOWN AS FLANGED IN ENLARGED PLAN 1/M-233. CONNECT GROOVED PIPE SYSTEMS WITH FLANGE ADAPTERS.
13 CENTRATE FEED INTAKE VALVE NO. 1.
14 CENTRATE FEED INTAKE VALVE NO. 2.
15 CENTRATE FEED THROTTLING VALVE NO. 1, 8-CTR-1212-FV.
16 CENTRATE FEED THROTTLING VALVE NO. 2, 8-CTR-1222-FV.
17 CENTRATE FEED SWING PUMP CONTROL VALVE NO. 1.
18 CENTRATE FEED SWING PUMP CONTROL VALVE NO. 2.

THE DRAWINGS IN THIS SET ARE RECORD DRAWINGS. THEY ARE CONSTRUCTION CONTRACT DRAWINGS WHICH HAVE BEEN REVISED BASED ON AVAILABLE FIELD INFORMATION RECORDED BY OTHERS DURING CONSTRUCTION OF THIS CONTRACT. THERE HAS BEEN NO VERIFICATION OF DIMENSIONS SHOWN ON THE CONSTRUCTION DRAWINGS OR THE ACCURACY/COMPLETENESS OF THE FIELD INFORMATION RECEIVED.

SIGNATURE — DATE 2/7/2023

N

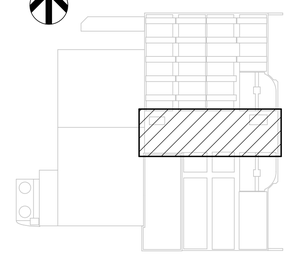

KEY PLAN

AS-BUILT REPLACEMENT SHEET

PROFESSIONAL CERTIFICATION

THIS DRAWING WAS ORIGINALLY APPROVED FOR CONSTRUCTION AND SEALED BY BRIAN M. BACLCHUNAS, A REGISTERED PROFESSIONAL ENGINEER IN THE STATE OF MARYLAND, NO. 20040 6

NOTICE TO CONTRACTORS

- PROJECT ELEVATIONS ARE BASED ON NAVD88 AND HOWARD COUNTY'S BENCHMARK SYSTEM
- PREVIOUS PROJECTS USED OTHER DATUMS
- APPLY THE FOLLOWING CONVERSIONS WHEN USING PREVIOUS CONTRACT DRAWINGS:
  - ADDITION NO. 6: SUBTRACT 0.80 FT
  - PRIOR ADDITIONS: SUBTRACT 1.04 FT

DEPARTMENT OF PUBLIC WORKS
HOWARD COUNTY, MARYLAND

CHIEF, BUREAU OF UTILITIES — DATE

DES: KLP
DRN: REE
CHK: JRK
DATE: 12/2016

DATE	REV	DESCRIPTION
07/2019		RECORD DRAWING

PROCESS

DEAMMONIFICATION REACTORS PARTIAL PLANS

LITTLE PATUXENT WATER RECLAMATION PLANT
8TH ADDITION
BIOSOLIDS PROCESSING FACILITIES - PHASE I

CAPITAL PROJECT S-6295
CONTRACT NO. 24-4935

ELECTION DISTRICT NO. 6
HOWARD COUNTY, MARYLAND

SCALE AS SHOWN

SHEET 197 OF 463

M-267

BIM 360://10054364 – Little Patuxent WRP 8th Addition/264591_100_D_V18.rvt
1/11/2022 2:12:03 PM

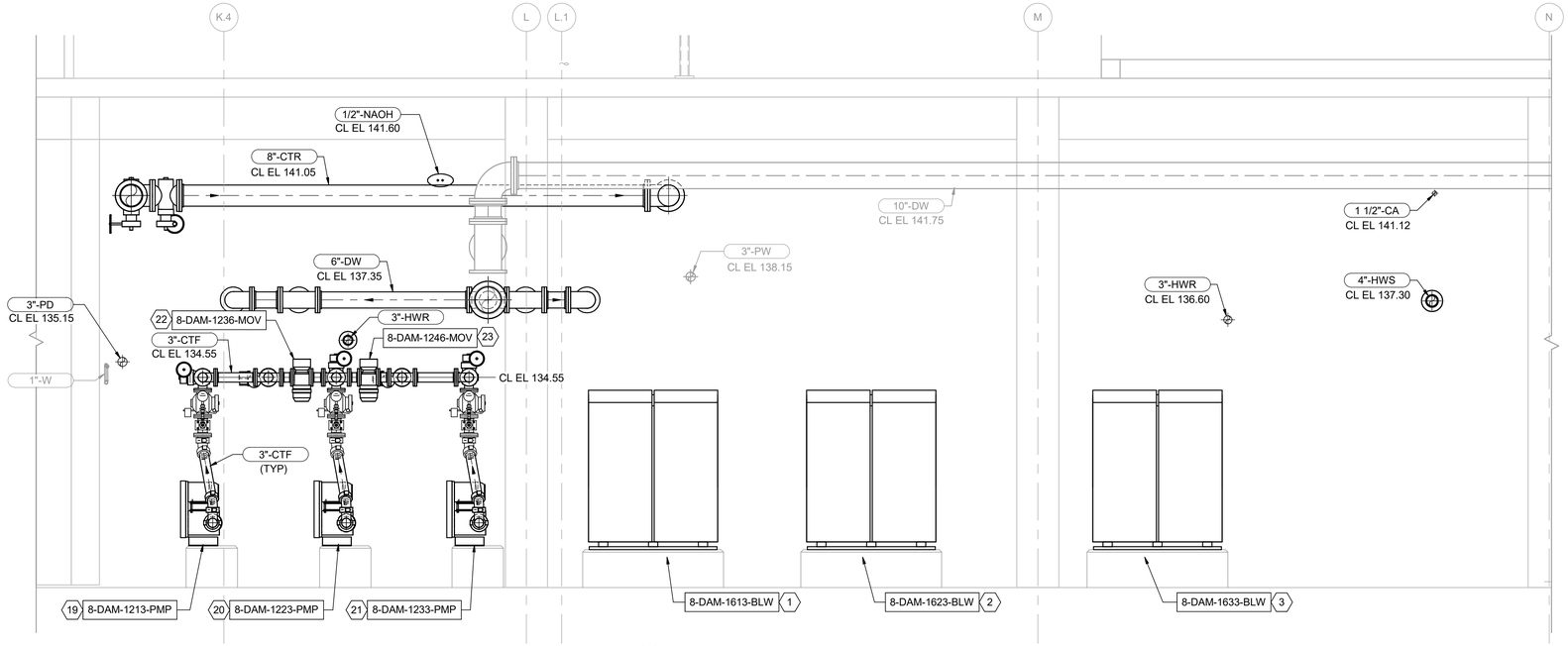

A M-200 SECTION
3/8" = 1'-0"

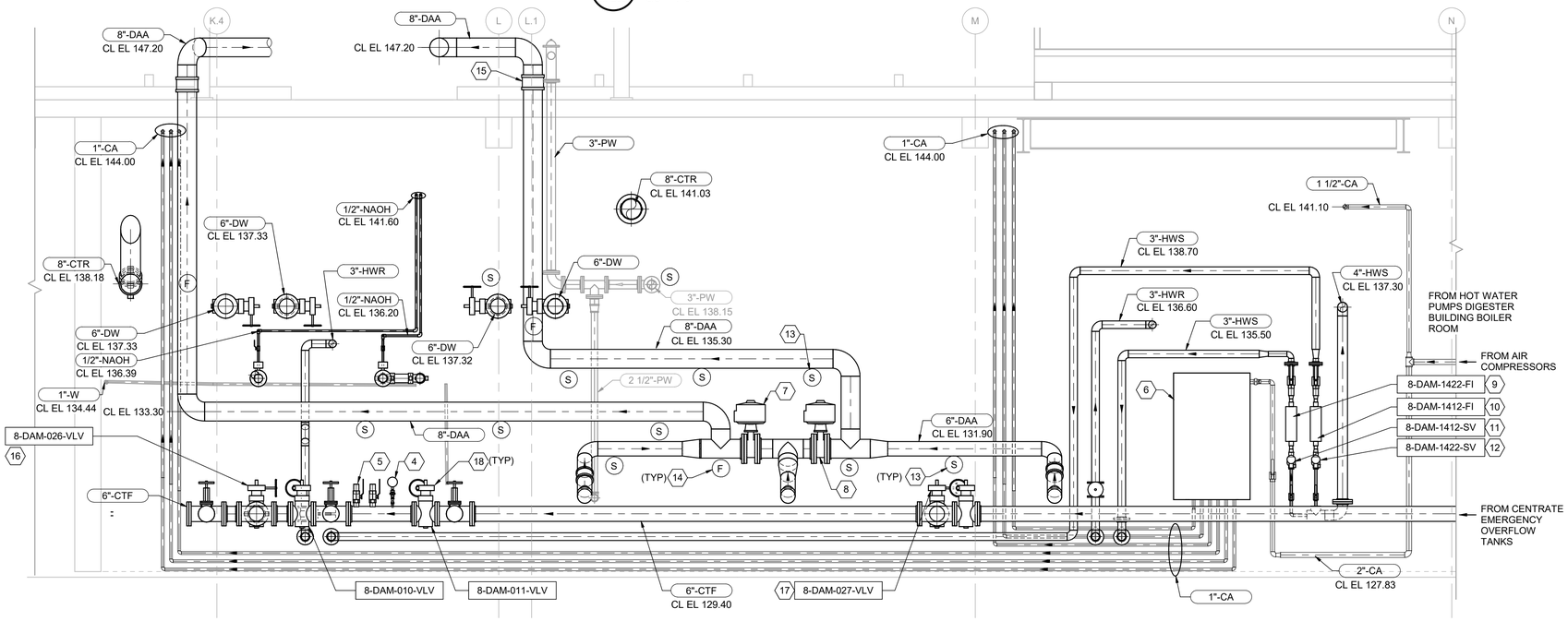

B M-267 SECTION
3/8" = 1'-0"

GENERAL NOTES

1. CONTRACTOR TO VERIFY AND MATCH EXISTING ELEVATIONS WHEN CONNECTING TO EXISITNG PIPING SYSTEMS

KEY NOTES (X)

1 DEAMMONIFICATION BLOWER NO. 1.
2 DEAMMONIFICATION BLOWER NO. 2.
3 DEAMMONIFICATION BLOWER NO. 3.
4 PRESSURE GAUGE AND SWITCH W/ DIAPHRAGM SEAL.SEE DETAIL 1/I-910
5 FLUSHING AND DRAIN CONNECTION. SEE DETAIL 1/M-902.
6 CENTRATE EQUALIZATION TANKS LARGE BUBBLE MIXING SYSTEM VALVE CONTROL PANEL (VCP) WITH PLC AND HMI. SEE SPECIFICATION SECTION 46 41 48.
7 DEAMMONIFICATION SWING BLOWER CONTROL VALVE NO. 1, 8-CTR-1612-BV.
8 DEAMMONIFICATION SWING BLOWER CONTROL VALVE NO. 2, 8-CTR-1622-BV.
9 DEAMMONIFICATION REACTOR NO. 1 HOT WATER SUPPLY ROTAMETER.
10 DEAMMONIFICATION REACTOR NO. 2 HOT WATER SUPPLY ROTAMETER.
11 DEAMMONIFICATION HOT WATER SUPPLY VALVE NO. 1.
12 DEAMMONIFICATION HOT WATER SUPPLY VALVE NO. 2.
13 SLIDING PIPE SUPPORT, TYPICAL OF EACH BLOWER.
14 FIXED PIPE SUPPORT.
15 NON-RESTRAINED FLEXIBLE EXPANSION COUPLING (VICTAULIC STYLE 231S OR EQUAL).
16 CENTRATE FEED INTAKE VALVE NO. 1.
17 CENTRATE FEED INTAKE VALVE NO. 2.
18 PLUG VALVE.
19 CENTRIFUGE FEED PUMP NO. 1.
20 CENTRIFUGE FEED PUMP NO. 2.
21 CENTRIFUGE FEED PUMP NO. 3.
22 CENTRATE FEED SWING PUMP CONTROL VALVE NO. 1.
23 CENTRATE FEED SWING PUMP CONTROL VALVE NO. 2.

LEGEND

(S) SLIDING SUPPORT
(F) FIXED SUPPORT

THE DRAWINGS IN THIS SET ARE RECORD DRAWINGS. THEY ARE CONSTRUCTION CONTRACT DRAWINGS WHICH HAVE BEEN REVISED BASED ON AVAILABLE FIELD INFORMATION RECORDED BY OTHERS DURING CONSTRUCTION OF THIS CONTRACT. THERE HAS BEEN NO VERIFICATION OF DIMENSIONS SHOWN ON THE CONSTRUCTION DRAWINGS OR THE ACCURACY/COMPLETENESS OF THE FIELD INFORMATION RECEIVED.

SIGNATURE — DATE 2/7/2023

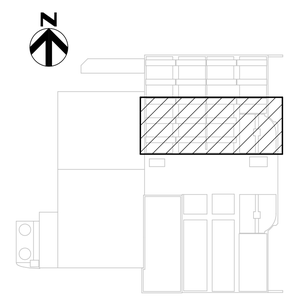

KEY PLAN

AS-BUILT REPLACEMENT SHEET

PROFESSIONAL CERTIFICATION

THIS DRAWING WAS ORIGINALLY APPROVED FOR CONSTRUCTION AND SEALED BY BRIAN M. BACLCHUNAS, A REGISTERED PROFESSIONAL ENGINEER IN THE STATE OF MARYLAND, NO. 200406

NOTICE TO CONTRACTORS

- PROJECT ELEVATIONS ARE BASED ON NAVD88 AND HOWARD COUNTY'S BENCHMARK SYSTEM
- PREVIOUS PROJECTS USED OTHER DATUMS
- APPLY THE FOLLOWING CONVERSIONS WHEN USING PREVIOUS CONTRACT DRAWINGS:
  - ADDITION NO. 6: SUBTRACT 0.80 FT
  - PRIOR ADDITIONS: SUBTRACT 1.04 FT

DEPARTMENT OF PUBLIC WORKS
HOWARD COUNTY, MARYLAND

CHIEF, BUREAU OF UTILITIES — DATE

DES: KLP
DRN: REE
CHK: JRK
DATE: 12/2016

DATE	REV	DESCRIPTION
07/2019		RECORD DRAWING

PROCESS

DEAMMONIFICATION SYSTEMS SECTIONS 1

LITTLE PATUXENT WATER RECLAMATION PLANT
8TH ADDITION
BIOSOLIDS PROCESSING FACILITIES - PHASE I

CAPITAL PROJECT S-6295
CONTRACT NO. 24-4935

ELECTION DISTRICT NO. 6
HOWARD COUNTY, MARYLAND

SCALE AS SHOWN

SHEET 198 OF 463

M-268

BIM 360://10054364 – Little Patuxent WRP 8th Addition/264591_100_D_V18.rvt
1/11/2022 2:12:08 PM

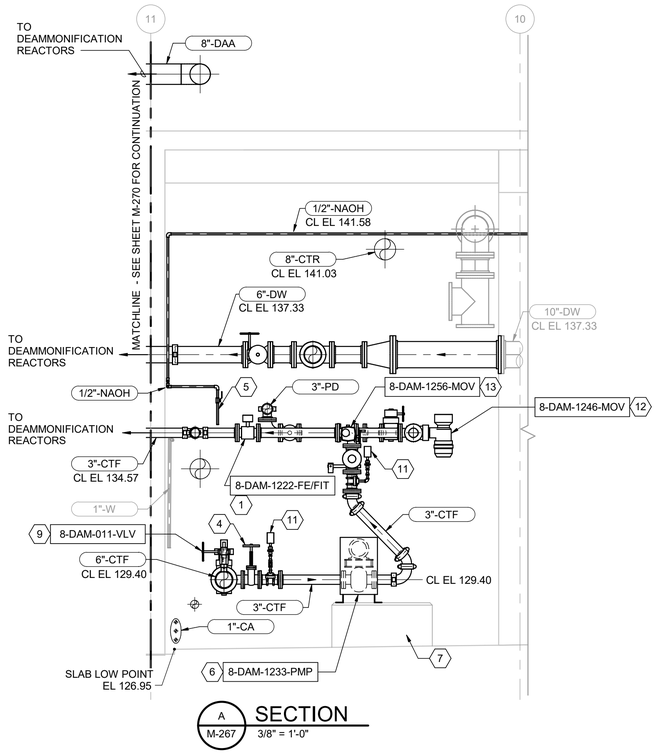

A M-267 SECTION
3/8" = 1'-0"

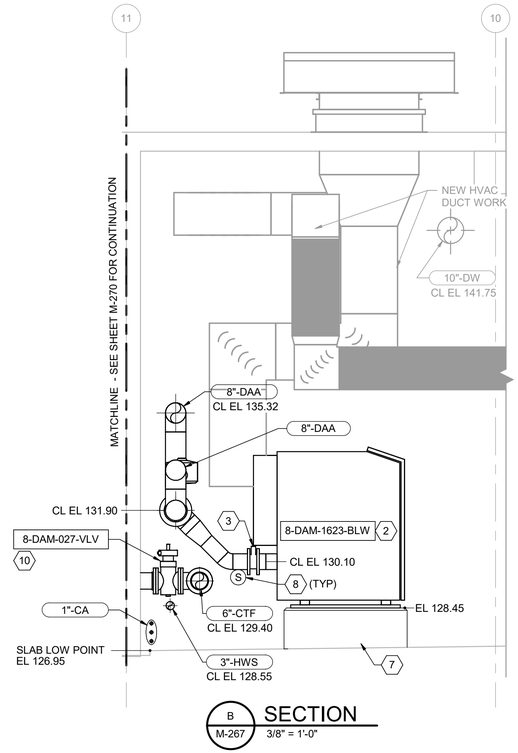

B M-267 SECTION
3/8" = 1'-0"

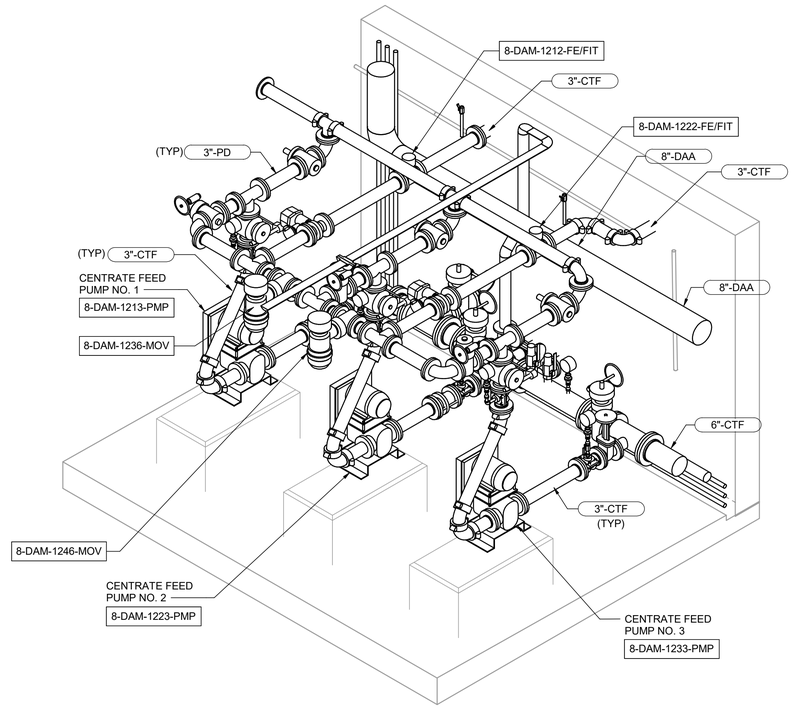

CENTRATE FEED SYSTEM ISOMETRIC

GENERAL NOTES

1. DRAWINGS ARE INTENDED TO DEPICT DESIGN INTENT; CONTRACTOR TO REFER TO SPECIFICATIONS, P&IDS, AND STANDARD DETAILS FOR FURTHER INSTALLATION REQUIREMENTS.
2. VALVES, INLINE APPURTENANCES AND EQUIPMENT ARE SHOWN GRAPHICALLY AS THE DEVICE BODY; REFER TO P&IDS FOR DEVICE TYPE, SIZE, AND DETAILS. INSTALL DEVICES IN ACCORDANCE WITH SPECIFICATIONS AND MFR'S REQUIREMENTS. ENSURE ADEQUATE ACCESS FOR OPERATION OF DEVICES—NOTIFY ENGINEER PRIOR TO INSTALLATION IF INADEQUATE CLEARANCE IS ANTICIPATED

KEY NOTES (X)

1 CENTRATE FEED FLOW METER NO. 2, 8-CTR-1222-FE/FIT.
2 DEAMMONIFICATION BLOWER NO. 2.
3 6 INCH BUTTERFLY VALVE. INSTALL VALVE WITH STEM IN VERTICAL ORIENTATION.
4 3" GATE VALVE.
5 CHEMICAL INJECTION QUILL, SEE DETAIL 3/M-903.
6 CENTRATE FEED PUMP NO. 3.
7 CONCRETE EQUIPMENT BASE, SEE DETAIL 1/S-904.
8 SLIDING PIPE SUPPORT, TYPICAL OF EACH BLOWER.
9 PLUG VALVE.
10 CENTRATE FEED INTAKE VALVE NO. 2.
11 PRESSURE GAUGE W/ DIAPHRAGM SEAL, SEE DETAIL 2/I-910
12 CENTRATE FEED SWING PUMP CONTROL VALVE NO. 2.
13 CENTRATE FEED THROTTLING VALVE NO. 2, 8-CTR-1222-FV.

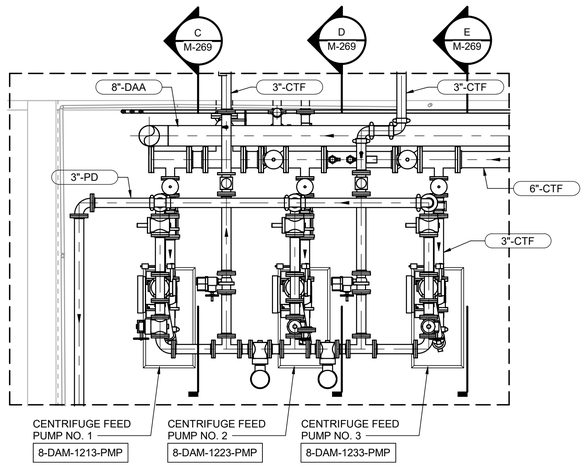

CENTRATE PUMPING SYSTEM PLAN
3/8" = 1'-0"

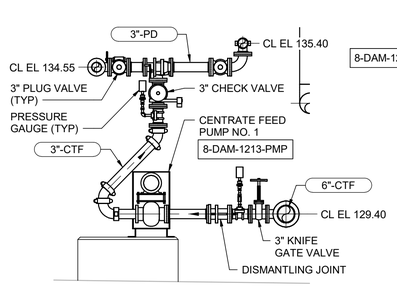

C M-269 SECTION
3/8" = 1'-0"

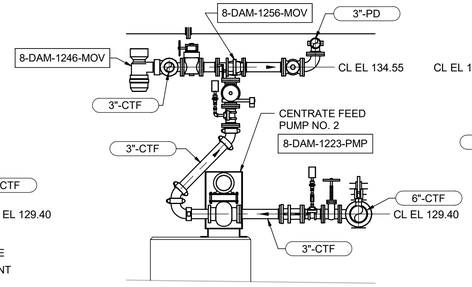

D M-269 SECTION
3/8" = 1'-0"

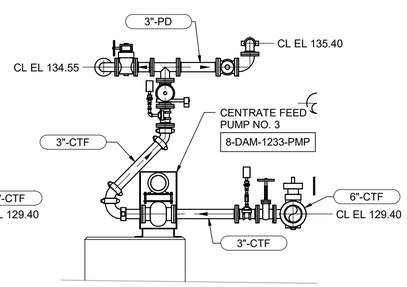

E M-269 SECTION
3/8" = 1'-0"

THE DRAWINGS IN THIS SET ARE RECORD DRAWINGS. THEY ARE CONSTRUCTION CONTRACT DRAWINGS WHICH HAVE BEEN REVISED BASED ON AVAILABLE FIELD INFORMATION RECORDED BY OTHERS DURING CONSTRUCTION OF THIS CONTRACT. THERE HAS BEEN NO VERIFICATION OF DIMENSIONS SHOWN ON THE CONSTRUCTION DRAWINGS OR THE ACCURACY/COMPLETENESS OF THE FIELD INFORMATION RECEIVED.

SIGNATURE — DATE 2/7/2023

AS-BUILT REPLACEMENT SHEET

PROFESSIONAL CERTIFICATION
THIS DRAWING WAS ORIGINALLY APPROVED FOR CONSTRUCTION AND SEALED BY BRIAN M. BACLCHUNAS, A REGISTERED PROFESSIONAL ENGINEER IN THE STATE OF MARYLAND, NO. 200406

NOTICE TO CONTRACTORS
- PROJECT ELEVATIONS ARE BASED ON NAVD88 AND HOWARD COUNTY'S BENCHMARK SYSTEM
- PREVIOUS PROJECTS USED OTHER DATUMS
- APPLY THE FOLLOWING CONVERSIONS WHEN USING PREVIOUS CONTRACT DRAWINGS:
  - ADDITION NO. 6: SUBTRACT 0.80 FT
  - PRIOR ADDITIONS: SUBTRACT 1.04 FT

DEPARTMENT OF PUBLIC WORKS
HOWARD COUNTY, MARYLAND

CHIEF, BUREAU OF UTILITIES — DATE

DES: KLP
DRN: REE
CHK: JRK
DATE: 12/2016

DATE	REV	DESCRIPTION
07/2019		RECORD DRAWING

PROCESS

DEAMMONIFICATION SYSTEMS SECTIONS 2

LITTLE PATUXENT WATER RECLAMATION PLANT
8TH ADDITION
BIOSOLIDS PROCESSING FACILITIES - PHASE I

CAPITAL PROJECT S-6295
CONTRACT NO. 24-4935

ELECTION DISTRICT NO. 6
HOWARD COUNTY, MARYLAND

SCALE AS SHOWN

SHEET 199 OF 463

M-269

BIM 360://10054364 – Little Patuxent WRP 8th Addition/264591_100_D_V18.rvt
1/11/2022 2:12:16 PM

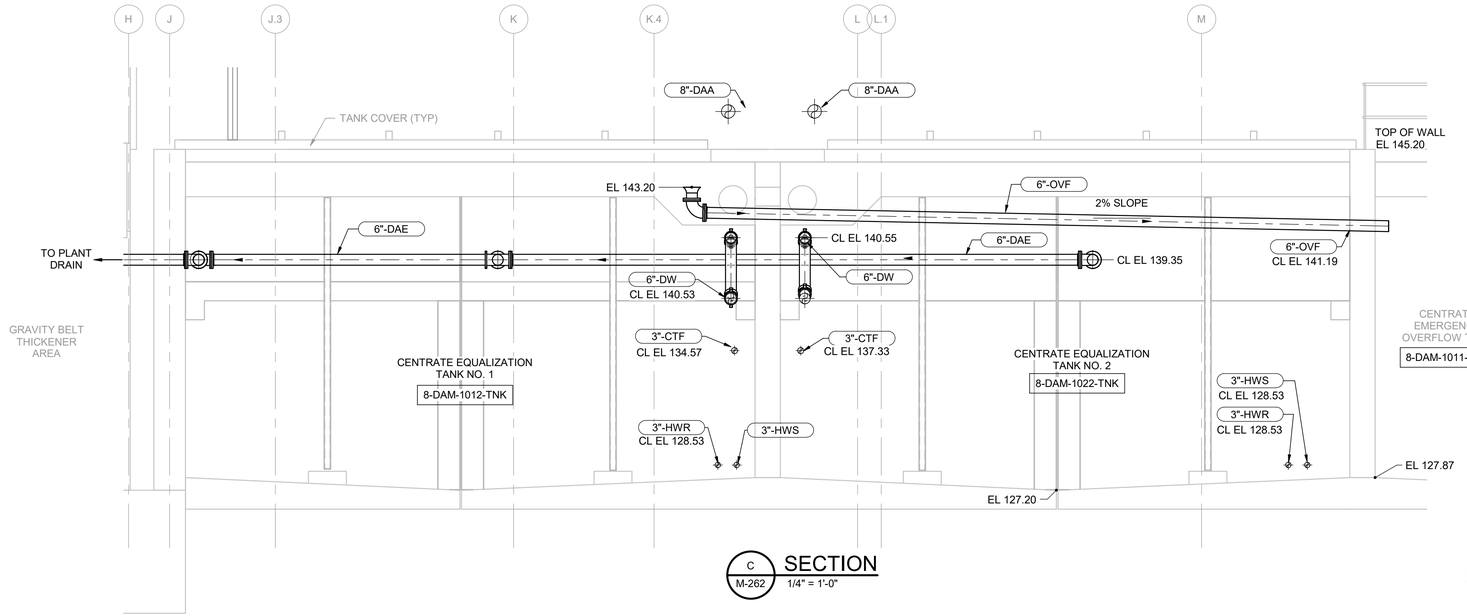

C / M-262 SECTION
1/4" = 1'-0"

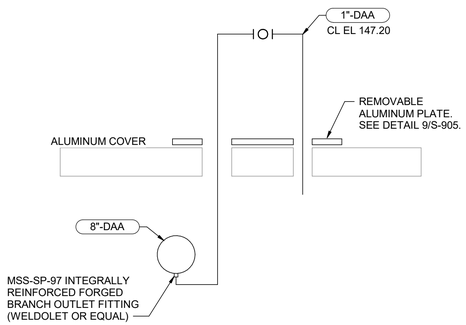

(TYP OF 1 PER REACTOR)

1 / - DEAMMONIFICATION AIR CONDENSATE BLOW-OFF
NOT TO SCALE

KEY NOTES (X)

1 CYLINDRICAL SCREEN.
2 DEAMMONIFICATION MIXER NO. 1.
3 4" BUTTERFLY VALVE
4 FIXED PIPE SUPPORT.
5 MEDIUM BUBBLE DIFFUSER GRID (TYP).
6 DIFFUSER MANUFACTURER TO SUPPLY DROP LEG TO ELEVATION 143.70, WITH FLANGE FOR CONNECTION TO CONTRACTOR-SUPPLIED PIPE.
7 6" FLARED END FITTING
8 INSTALL CONDENSATE DRAIN ON LOW POINTS OF DEAMMONIFICATION AIR (DAA) PIPE. SEE DETAIL THIS SHEET.
9 SLIDING PIPE SUPPORT, TYPICAL OF EACH BLOWER.
10 CENTRATE (CTR) AND DILUTION WATER (DW) DISCHARGE INTO EQUALIZATION TANKS: RUN DROP PIPE DOWN TO ELBOW WITH FREE DISCHARGE. PROVIDE GOOSENECK AT TOP OF PIPE FOR AIR RELEASE.
11 NON-RESTRAINED FLEXIBLE EXPANSION COUPLING (VICTAULIC STYLE 231S OR EQUAL).
12 COMPRESSED AIR MIXING NOZZLE. REFER TO MANUFACTURER INSTALLATION DRAWINGS FOR SUPPORT DETAILS.

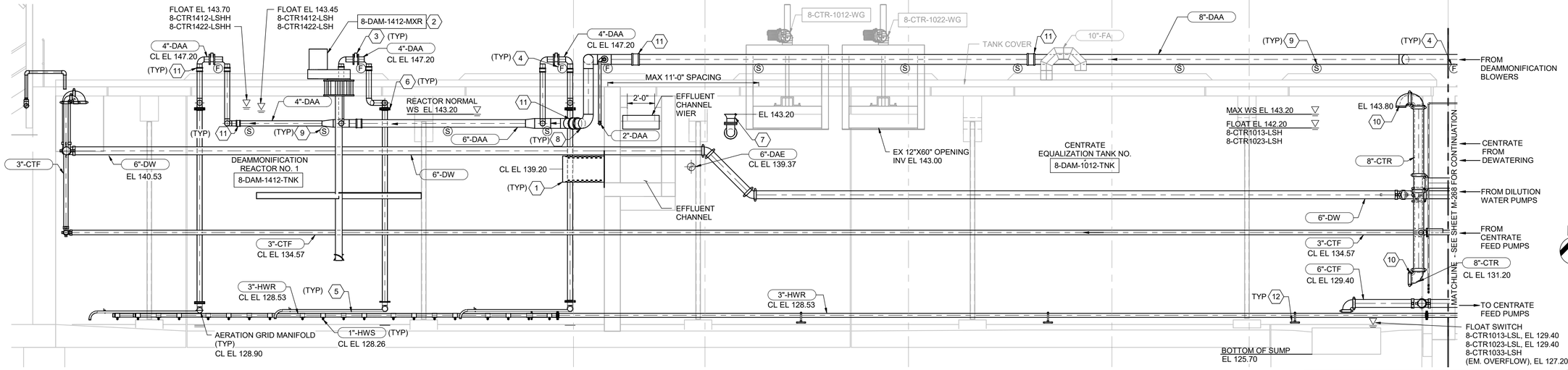

D / M-261 SECTION
1/4" = 1'-0"

KEY PLAN

THE DRAWINGS IN THIS SET ARE RECORD DRAWINGS. THEY ARE CONSTRUCTION CONTRACT DRAWINGS WHICH HAVE BEEN REVISED BASED ON AVAILABLE FIELD INFORMATION RECORDED BY OTHERS DURING CONSTRUCTION OF THIS CONTRACT. THERE HAS BEEN NO VERIFICATION OF DIMENSIONS SHOWN ON THE CONSTRUCTION DRAWINGS OR THE ACCURACY/COMPLETENESS OF THE FIELD INFORMATION RECEIVED.

SIGNATURE 2/7/2023 DATE

AS-BUILT REPLACEMENT SHEET

PROFESSIONAL CERTIFICATION

THIS DRAWING WAS ORIGINALLY APPROVED FOR CONSTRUCTION AND SEALED BY BRIAN M. BACLCHUNAS, A REGISTERED PROFESSIONAL ENGINEER IN THE STATE OF MARYLAND, NO. 200406

NOTICE TO CONTRACTORS

- PROJECT ELEVATIONS ARE BASED ON NAVD88 AND HOWARD COUNTY'S BENCHMARK SYSTEM
- PREVIOUS PROJECTS USED OTHER DATUMS
- APPLY THE FOLLOWING CONVERSIONS WHEN USING PREVIOUS CONTRACT DRAWINGS:
  - ADDITION NO. 6: SUBTRACT 0.80 FT
  - PRIOR ADDITIONS: SUBTRACT 1.04 FT

DEPARTMENT OF PUBLIC WORKS
HOWARD COUNTY, MARYLAND

CHIEF, BUREAU OF UTILITIES DATE

DES: KLP
DRN: REE
CHK: JRK
DATE: 12/2016

DATE	REV	DESCRIPTION
07/2019		RECORD DRAWING

PROCESS

DEAMMONIFICATION SYSTEMS SECTIONS 3

LITTLE PATUXENT WATER RECLAMATION PLANT
8TH ADDITION
BIOSOLIDS PROCESSING FACILITIES - PHASE I

CAPITAL PROJECT S-6295
CONTRACT NO. 24-4935

ELECTION DISTRICT NO. 6
HOWARD COUNTY, MARYLAND

SCALE AS SHOWN

SHEET 200 OF 463

M-270

BIM 360://10054364 – Little Patuxent WRP 8th Addition/264591_100_D_V18.rvt
1/11/2022 2:12:45 PM

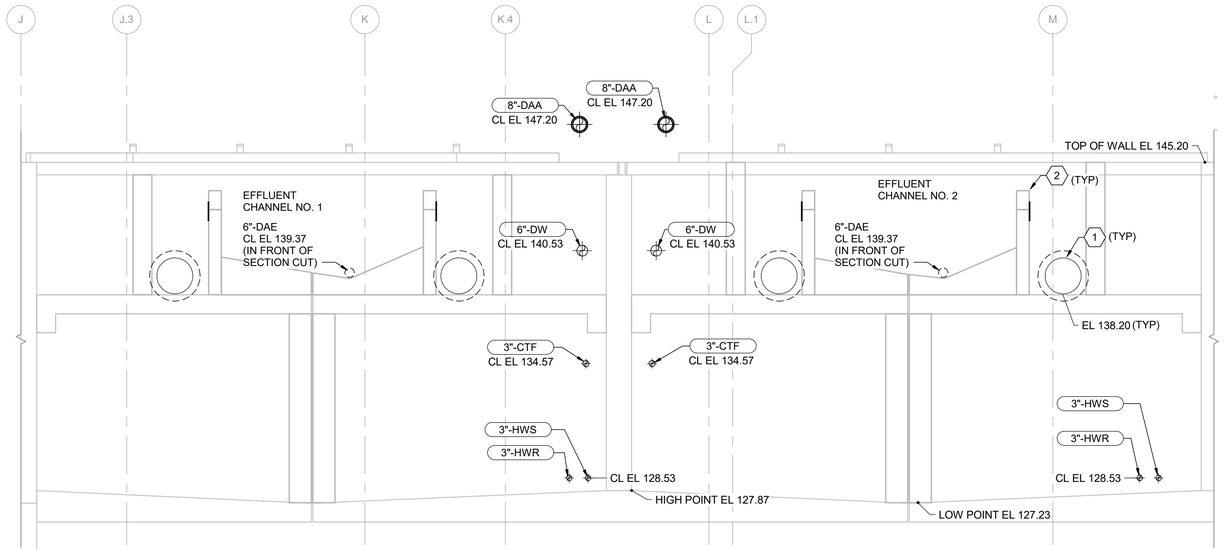

A M-261 SECTION
1/4" = 1'-0"

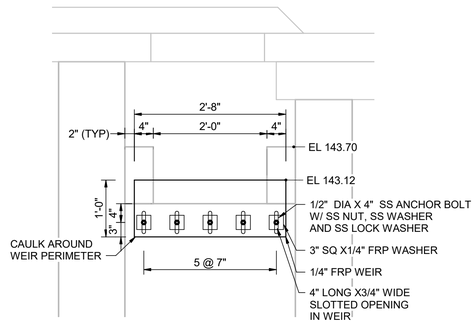

1 M-263 DEAMMONIFICATION REACTOR FRP WEIR PLATE DETAIL
3/4" = 1'-0"

KEY NOTES (X)

1 CYLINDRICAL SCREEN.
2 DEAMMONIFICATION REACTOR FRP WEIR, SEE DETAIL D/M-271.

THE DRAWINGS IN THIS SET ARE RECORD DRAWINGS. THEY ARE CONSTRUCTION CONTRACT DRAWINGS WHICH HAVE BEEN REVISED BASED ON AVAILABLE FIELD INFORMATION RECORDED BY OTHERS DURING CONSTRUCTION OF THIS CONTRACT. THERE HAS BEEN NO VERIFICATION OF DIMENSIONS SHOWN ON THE CONSTRUCTION DRAWINGS OR THE ACCURACY/COMPLETENESS OF THE FIELD INFORMATION RECEIVED.

SIGNATURE _____ DATE 2/7/2022

AS-BUILT REPLACEMENT SHEET

PROFESSIONAL CERTIFICATION

THIS DRAWING WAS ORIGINALLY APPROVED FOR CONSTRUCTION AND SEALED BY BRIAN M. BACLCHUNAS, A REGISTERED PROFESSIONAL ENGINEER IN THE STATE OF MARYLAND, NO. 200406

NOTICE TO CONTRACTORS

- PROJECT ELEVATIONS ARE BASED ON NAVD88 AND HOWARD COUNTY'S BENCHMARK SYSTEM
- PREVIOUS PROJECTS USED OTHER DATUMS
- APPLY THE FOLLOWING CONVERSIONS WHEN USING PREVIOUS CONTRACT DRAWINGS:
  - ADDITION NO. 6: SUBTRACT 0.80 FT
  - PRIOR ADDITIONS: SUBTRACT 1.04 FT

DEPARTMENT OF PUBLIC WORKS
HOWARD COUNTY, MARYLAND

CHIEF, BUREAU OF UTILITIES DATE

DES: KLP
DRN: REE
CHK: JRK
DATE: 12/2016

DATE	REV	DESCRIPTION
07/2019		RECORD DRAWING

PROCESS

DEAMMONIFICATION SYSTEMS SECTIONS 4

LITTLE PATUXENT WATER RECLAMATION PLANT
8TH ADDITION
BIOSOLIDS PROCESSING FACILITIES - PHASE I

CAPITAL PROJECT S-6295
CONTRACT NO. 24-4935

ELECTION DISTRICT NO. 6
HOWARD COUNTY, MARYLAND

SCALE AS SHOWN

SHEET 201 OF 463

M-271

BIM 360://10054364 – Little Patuxent WRP 8th Addition/264591_100_D_V18.rvt
1/11/2022 2:12:48 PM

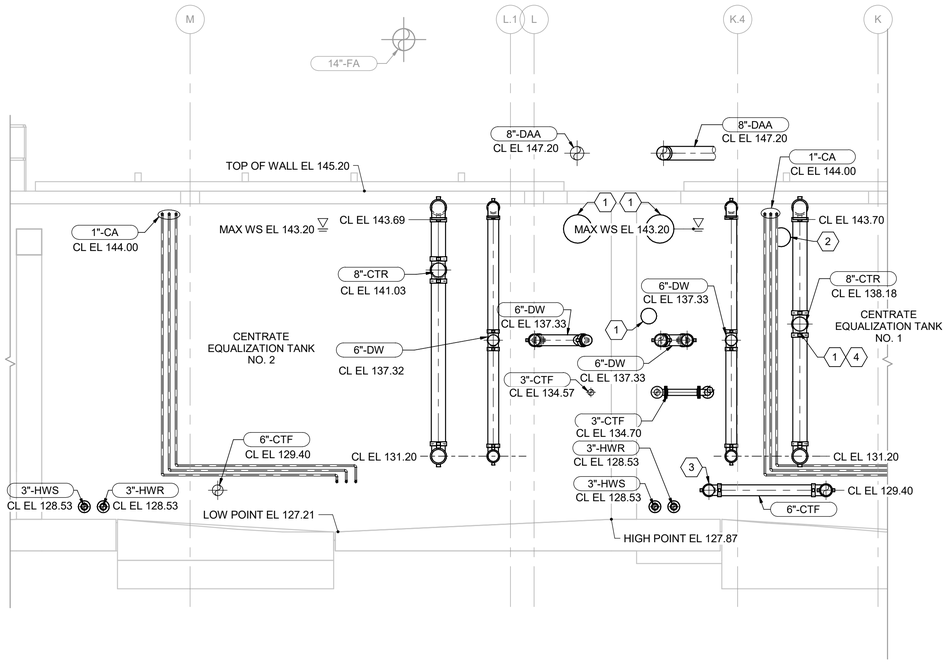

C
M-261
SOUTH DEAMMONIFICTION
1/4" = 1'-0"

GENERAL NOTES

1. CONTRACTOR TO VERIFY AND MATCH EXISTING ELEVATIONS WHEN CONNECTING TO EXISITNG PIPING SYSTEMS.

KEY NOTES (X)

1 HATCHED AREAS INDICATE LOCATIONS OF PIPES MARKED FOR DEMOLITION. PATCH OPENINGS OF DEMOLISHED PIPES WITH NON-SHRINK GROUT AND EMBEDDED DOWELS AS SHOWN ON DETAIL 9/S903. CONTRACTOR MAY CAP PIPE PENETRATIONS MARKED FOR DEMOLITION INSTEAD OF REMOVING CAST-IN-PLACE WALL PIPE.

2 PATCH OPENINGS OF DEMOLISHED 10" CENTRATE PIPE WITH NON-SHRINK GROUT AND EMBEDDED DOWELS AS SHOWN ON DETAIL 9/S-903.

3 DEMOLISH EXISTING PIPE PENETRATION AND SURROUNDING CONCRETE. CAST NEW PIPE IN PLACE. SEE DETAIL 9/S-903.

4 EXISTING OPENING MAY BE REPURPOSED WHERE INDICATED

THE DRAWINGS IN THIS SET ARE RECORD DRAWINGS. THEY ARE CONSTRUCTION CONTRACT DRAWINGS WHICH HAVE BEEN REVISED BASED ON AVAILABLE FIELD INFORMATION RECORDED BY OTHERS DURING CONSTRUCTION OF THIS CONTRACT. THERE HAS BEEN NO VERIFICATION OF DIMENSIONS SHOWN ON THE CONSTRUCTION DRAWINGS OR THE ACCURACY/COMPLETENESS OF THE FIELD INFORMATION RECEIVED.

SIGNATURE 2/7/2022 DATE

AS-BUILT REPLACEMENT SHEET

PROFESSIONAL CERTIFICATION

THIS DRAWING WAS ORIGINALLY APPROVED FOR CONSTRUCTION AND SEALED BY BRIAN M. BACLCHUNAS, A REGISTERED PROFESSIONAL ENGINEER IN THE STATE OF MARYLAND, NO. 200406

NOTICE TO CONTRACTORS

- PROJECT ELEVATIONS ARE BASED ON NAVD88 AND HOWARD COUNTY'S BENCHMARK SYSTEM
- PREVIOUS PROJECTS USED OTHER DATUMS
- APPLY THE FOLLOWING CONVERSIONS WHEN USING PREVIOUS CONTRACT DRAWINGS:
  - ADDITION NO. 6: SUBTRACT 0.80 FT
  - PRIOR ADDITIONS: SUBTRACT 1.04 FT

DEPARTMENT OF PUBLIC WORKS
HOWARD COUNTY, MARYLAND

CHIEF, BUREAU OF UTILITIES DATE

DES: KLP
DRN: REE
CHK: JRK
DATE: 12/2016

DATE	REV	DESCRIPTION
07/2019		RECORD DRAWING

PROCESS

DEAMMONIFICATION SYSTEMS SECTIONS 5

LITTLE PATUXENT WATER RECLAMATION PLANT
8TH ADDITION
BIOSOLIDS PROCESSING FACILITIES - PHASE I

CAPITAL PROJECT S-6295
CONTRACT NO. 24-4935

ELECTION DISTRICT NO. 6
HOWARD COUNTY, MARYLAND

SCALE AS SHOWN

SHEET 202 OF 463

M-272

BIM 360://10054364 – Little Patuxent WRP 8th Addition/264591_100_D_V18.rvt
1/11/2022 2:12:50 PM

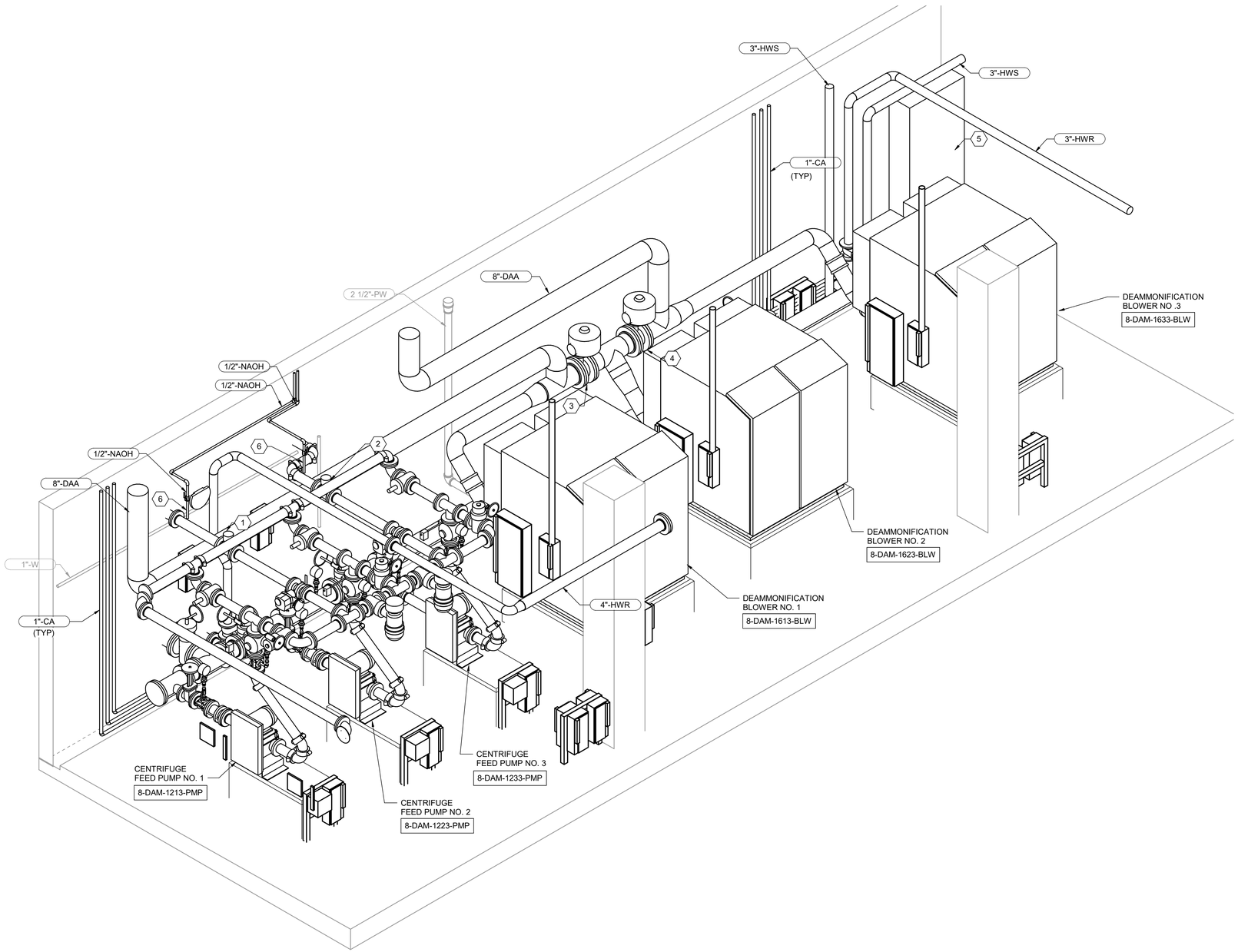

CENTRATE PUMPING SYSTEM ISOMETRIC

NOT TO SCALE

GENERAL NOTES

1. DRAWINGS ARE INTENDED TO DEPICT DESIGN INTENT. CONTRACTOR TO REFER TO SPECIFICATIONS, P&IDS, AND STANDARD DETAILS FOR FURTHER INSTALLATION REQUIREMENTS.
2. VALVES, INLINE APPURTENANCES AND EQUIPMENT ARE SHOWN GRAPHICALLY AS THE DEVICE BODY; REFER TO P&IDS FOR DEVICE TYPE, SIZE, AND DETAILS. INSTALL DEVICES IN ACCORDANCE WITH SPECIFICATIONS AND MFR'S REQUIREMENTS. ENSURE ADEQUATE ACCESS FOR OPERATION OF DEVICES—NOTIFY ENGINEER PRIOR TO INSTALLATION IF INADEQUATE CLEARANCE IS ANTICIPATED.

KEY NOTES (X)

1 CENTRATE FEED FLOW METER NO. 1, 8-CTR-1212-FE/FIT.
2 CENTRATE FEED FLOW METER NO. 2, 8-CTR-1222-FE/FIT.
3 DEAMMONIFICATION SWING BLOWER CONTROL VALVE NO. 1, 8-CTR-1612-BV.
4 DEAMMONIFICATION SWING BLOWER CONTROL VALVE NO. 2, 8-CTR-1622-BV.
5 CENTRATE EQUALIZATION TANKS LARGE BUBBLE MIXING SYSTEM VALVE CONTROL PANEL (VCP) WITH PLC AND HMI. SEE SPECIFICATION SECTION 46 41 48.
6 CHEMICAL INJECTION QUILL, SEE DETAIL 3/M-903.

THE DRAWINGS IN THIS SET ARE RECORD DRAWINGS. THEY ARE CONSTRUCTION CONTRACT DRAWINGS WHICH HAVE BEEN REVISED BASED ON AVAILABLE FIELD INFORMATION RECORDED BY OTHERS DURING CONSTRUCTION OF THIS CONTRACT. THERE HAS BEEN NO VERIFICATION OF DIMENSIONS SHOWN ON THE CONSTRUCTION DRAWINGS OR THE ACCURACY/COMPLETENESS OF THE FIELD INFORMATION RECEIVED.

SIGNATURE — DATE 2/7/2023

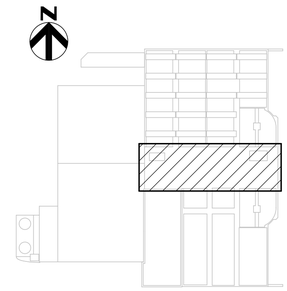

KEY PLAN

AS-BUILT REPLACEMENT SHEET

PROFESSIONAL CERTIFICATION

THIS DRAWING WAS ORIGINALLY APPROVED FOR CONSTRUCTION AND SEALED BY BRIAN M. BACLCHUNAS, A REGISTERED PROFESSIONAL ENGINEER IN THE STATE OF MARYLAND, NO. 200406

NOTICE TO CONTRACTORS

- PROJECT ELEVATIONS ARE BASED ON NAVD88 AND HOWARD COUNTY'S BENCHMARK SYSTEM
- PREVIOUS PROJECTS USED OTHER DATUMS
- APPLY THE FOLLOWING CONVERSIONS WHEN USING PREVIOUS CONTRACT DRAWINGS:
  - ADDITION NO. 6: SUBTRACT 0.80 FT
  - PRIOR ADDITIONS: SUBTRACT 1.04 FT

DEPARTMENT OF PUBLIC WORKS
HOWARD COUNTY, MARYLAND

CHIEF, BUREAU OF UTILITIES — DATE

DES: KLP
DRN: REE
CHK: JRK
DATE: 12/2016

DATE	REV	DESCRIPTION
07/2019		RECORD DRAWING

PROCESS

DEAMMONIFICATION SYSTEMS DETAILS

LITTLE PATUXENT WATER RECLAMATION PLANT
8TH ADDITION
BIOSOLIDS PROCESSING FACILITIES - PHASE I

CAPITAL PROJECT S-6295
CONTRACT NO. 24-4935

ELECTION DISTRICT NO. 6
HOWARD COUNTY, MARYLAND

SCALE AS SHOWN

SHEET 203 OF 463

M-273

BIM 360://10054364 – Little Patuxent WRP 8th Addition/264591_100_D_V18.rvt
1/11/2022 2:12:53 PM

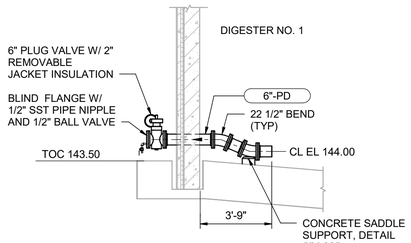

E / - SECTION
1/4" = 1'-0"

(DIGESTER NOS. 2 AND 3 SIMILAR)

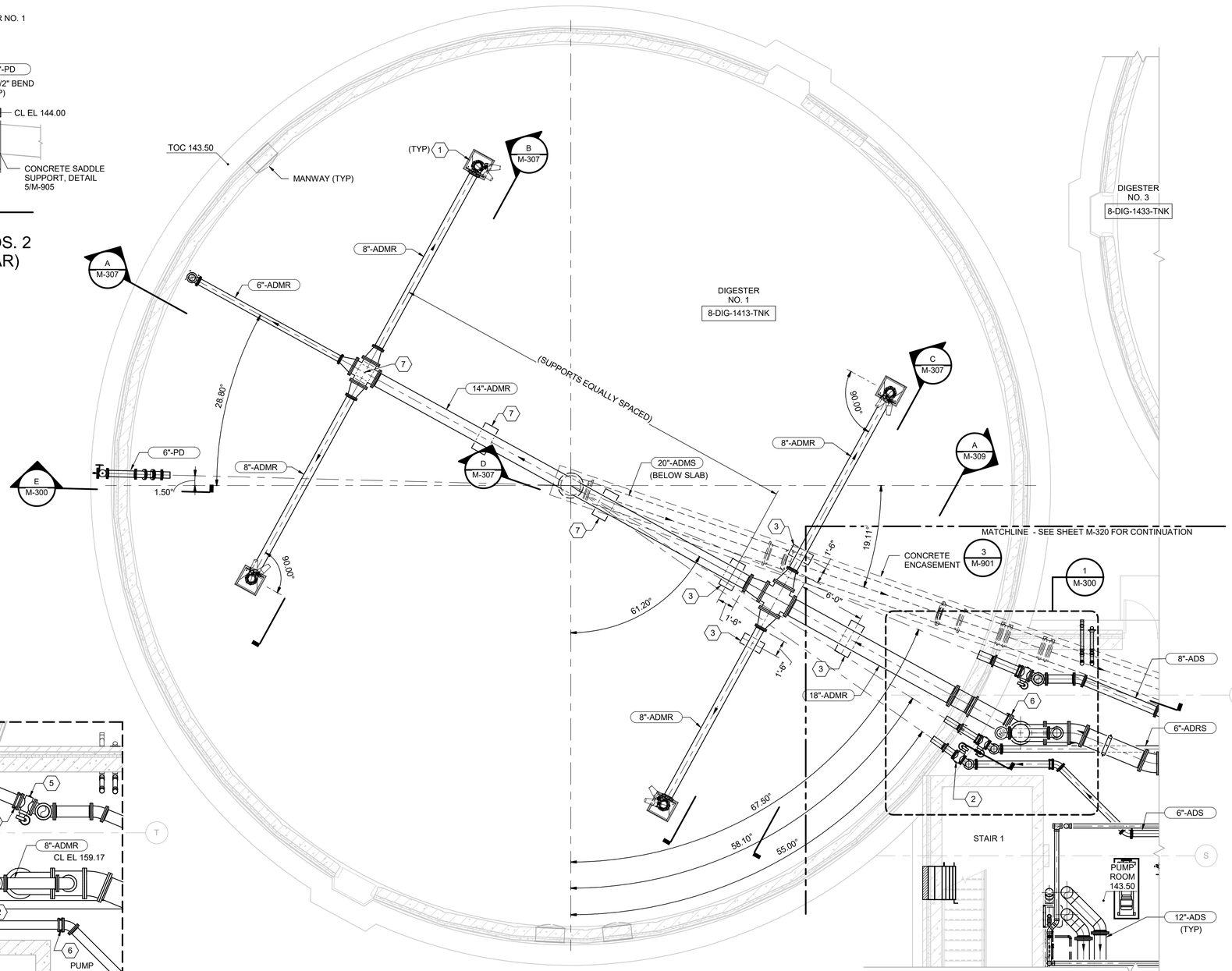

PLAN AT EL 143.50
3/16" = 1'-0"

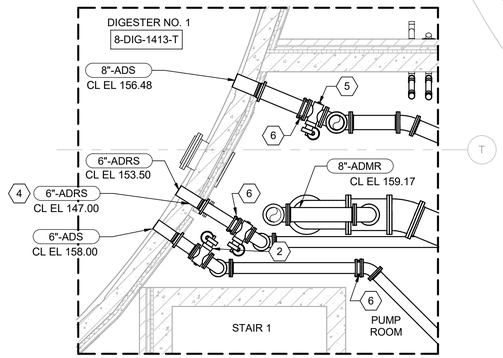

1 / M-300 DETAIL
1/4" = 1'-0"

N

GENERAL NOTES:

1. FOR CLARITY, NOT ALL DIGESTER BUILDING SECTION REFERENCE LINES ARE SHOWN. SEE 320 & 340 SERIES SHEETS FOR DIGESTER BUILDING SECTIONS.
2. FOR ANAEROBIC DIGESTER MIXING SUPPLY AND RETURN PIPING (ADMS, ADMR) DIMENSIONS, SEE SHEET M-303. VERIFY DIMENSIONS WITH MIXING SUPPLIER MANUFACTURER.
3. ALL PIPE PENETRATIONS IN DIGESTER TO BE PRECAST FLANGE/FLANGE WALL PIPE WITH WATERSTOP. SEE DETAIL 4/M-900.
4. ALL PIPE SUPPORTS NOT SHOWN TO BE COORDINATED BETWEEN THE CONTRACTOR AND PRECASTER.

KEY NOTES (X)

1 DUAL NOZZLE ASSEMBLY
2 6" PLUG VALVE
3 WALL PIPE WITH CONCRETE SUPPORT, SEE DETAIL 4A/M-905.
4 6"-ADRS WITH BLIND FLANGE BELOW
5 8" PLUG VALVE
6 PROVIDE FLEXIBLE CONNECTION USING ROMAC RFCA
7 GRAVITY SUPPORT; ALL STAINLESS STEEL CONSTRUCTION PER DETAIL 1/M-905 OR CONCRETE PER DETAIL 4/M-905.

THE DRAWINGS IN THIS SET ARE RECORD DRAWINGS. THEY ARE CONSTRUCTION CONTRACT DRAWINGS WHICH HAVE BEEN REVISED BASED ON AVAILABLE FIELD INFORMATION RECORDED BY OTHERS DURING CONSTRUCTION OF THIS CONTRACT. THERE HAS BEEN NO VERIFICATION OF DIMENSIONS SHOWN ON THE CONSTRUCTION DRAWINGS OR THE ACCURACY/COMPLETENESS OF THE FIELD INFORMATION RECEIVED.

SIGNATURE — DATE 2/7/2023

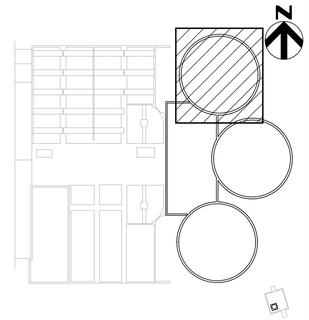

KEY PLAN

AS-BUILT REPLACEMENT SHEET

PROFESSIONAL CERTIFICATION
THIS DRAWING WAS ORIGINALLY APPROVED FOR CONSTRUCTION AND SEALED BY BRIAN M. BACLCHUNAS, A REGISTERED PROFESSIONAL ENGINEER IN THE STATE OF MARYLAND, NO. 200406

NOTICE TO CONTRACTORS
- PROJECT ELEVATIONS ARE BASED ON NAVD88 AND HOWARD COUNTY'S BENCHMARK SYSTEM
- PREVIOUS PROJECTS USED OTHER DATUMS
- APPLY THE FOLLOWING CONVERSIONS WHEN USING PREVIOUS CONTRACT DRAWINGS:
  - ADDITION NO. 6: SUBTRACT 0.80 FT
  - PRIOR ADDITIONS: SUBTRACT 1.04 FT

DEPARTMENT OF PUBLIC WORKS
HOWARD COUNTY, MARYLAND

CHIEF, BUREAU OF UTILITIES — DATE

DES: MJW
DRN: SLB
CHK: JRK
DATE: 12/2016

DATE	REV	DESCRIPTION
07/2019		RECORD DRAWING

PROCESS

ANAEROBIC DIGESTERS
DIGESTER NO. 1 PLAN 1

LITTLE PATUXENT WATER RECLAMATION PLANT
8TH ADDITION
BIOSOLIDS PROCESSING FACILITIES - PHASE I

CAPITAL PROJECT S-6295
CONTRACT NO. 24-4935

ELECTION DISTRICT NO. 6
HOWARD COUNTY, MARYLAND

SCALE AS SHOWN

SHEET 204 OF 463

M-300

BIM 360://10054364 – Little Patuxent WRP 8th Addition/264591_300_D_V18.rvt
1/11/2022 2:53:37 PM

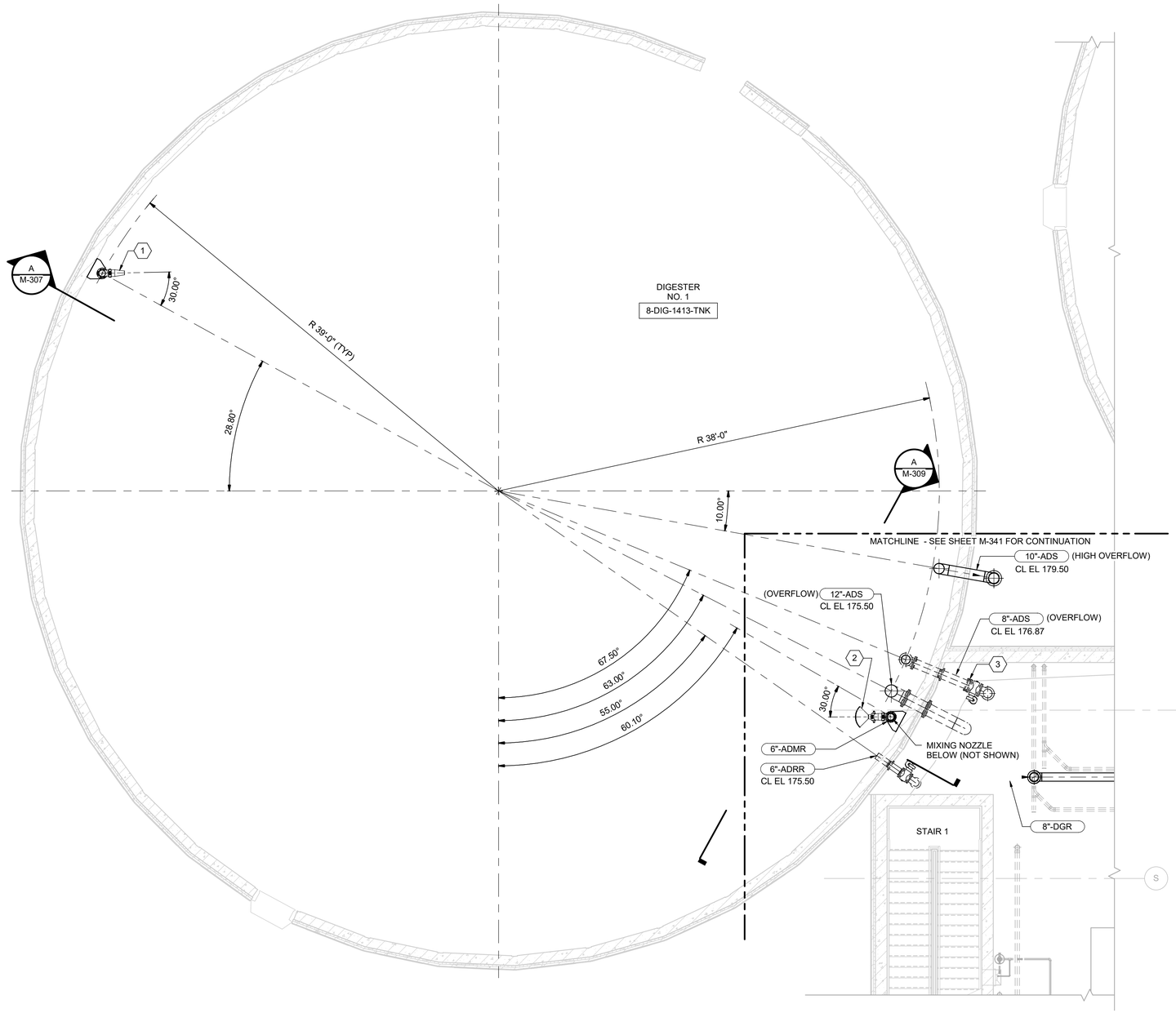

PLAN AT EL 179.17

3/16" = 1'-0"

N

GENERAL NOTES:

1. FOR CLARITY, NOT ALL DIGESTER BUILDING SECTION REFERENCE LINES ARE SHOWN. SEE 320 & 340 SERIES SHEETS FOR DIGESTER BUILDING SECTIONS.
2. ALL PIPE PENETRATIONS IN DIGESTER TO BE PRECAST FLANGE/FLANGE WALL PIPE WITH WATERSTOP. SEE DETAIL 4/M-900.

KEY NOTES (X)

1 MIXING NOZZLE
2 SCUM BUSTER NOZZLE
3 PROVIDE FLEXIBLE CONNECTION USING ROMAC RFCA

THE DRAWINGS IN THIS SET ARE RECORD DRAWINGS. THEY ARE CONSTRUCTION CONTRACT DRAWINGS WHICH HAVE BEEN REVISED BASED ON AVAILABLE FIELD INFORMATION RECORDED BY OTHERS DURING CONSTRUCTION OF THIS CONTRACT. THERE HAS BEEN NO VERIFICATION OF DIMENSIONS SHOWN ON THE CONSTRUCTION DRAWINGS OR THE ACCURACY/COMPLETENESS OF THE FIELD INFORMATION RECEIVED.

SIGNATURE 2/7/2023 DATE

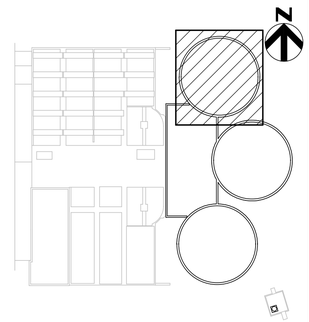

KEY PLAN

AS-BUILT REPLACEMENT SHEET

PROFESSIONAL CERTIFICATION

THIS DRAWING WAS ORIGINALLY APPROVED FOR CONSTRUCTION AND SEALED BY BRIAN M. BACLCHUNAS, A REGISTERED PROFESSIONAL ENGINEER IN THE STATE OF MARYLAND, NO. 200406

NOTICE TO CONTRACTORS

- PROJECT ELEVATIONS ARE BASED ON NAVD88 AND HOWARD COUNTY'S BENCHMARK SYSTEM
- PREVIOUS PROJECTS USED OTHER DATUMS
- APPLY THE FOLLOWING CONVERSIONS WHEN USING PREVIOUS CONTRACT DRAWINGS:
  - ADDITION NO. 6: SUBTRACT 0.80 FT
  - PRIOR ADDITIONS: SUBTRACT 1.04 FT

DEPARTMENT OF PUBLIC WORKS
HOWARD COUNTY, MARYLAND

CHIEF, BUREAU OF UTILITIES DATE

DES: MJW
DRN: SLB
CHK: JRK
DATE: 12/2016

DATE	REV	DESCRIPTION
07/2019		RECORD DRAWING

PROCESS

ANAEROBIC DIGESTERS DIGESTER NO. 1 PLAN 2

LITTLE PATUXENT WATER RECLAMATION PLANT
8TH ADDITION
BIOSOLIDS PROCESSING FACILITIES - PHASE I

CAPITAL PROJECT S-6295
CONTRACT NO. 24-4935

ELECTION DISTRICT NO. 6
HOWARD COUNTY, MARYLAND

SCALE AS SHOWN

SHEET 205 OF 463

M-301

BIM 360://10054364 – Little Patuxent WRP 8th Addition/264591_300_D_V18.rvt
1/11/2022 2:53:41 PM

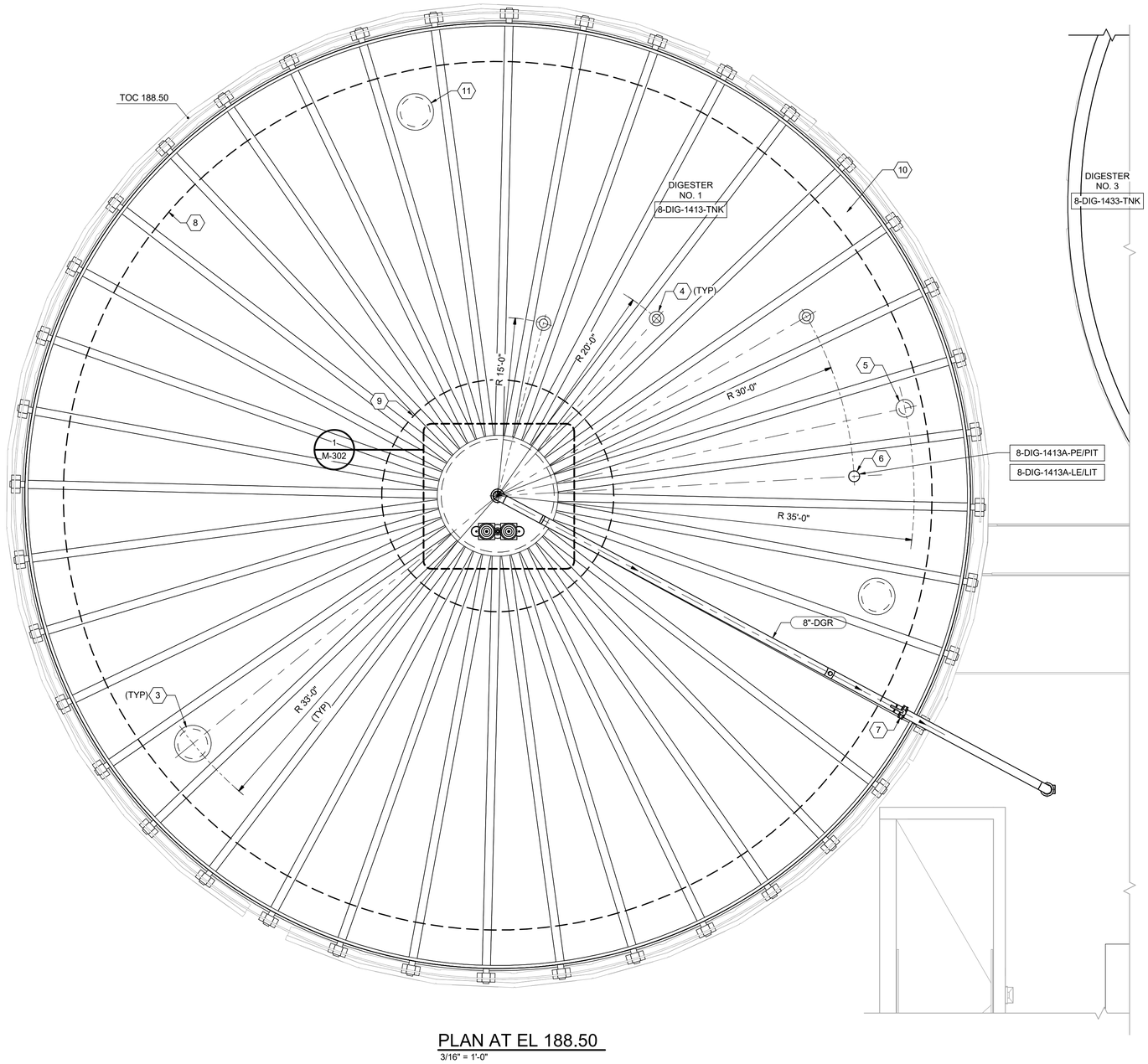

PLAN AT EL 188.50

3/16" = 1'-0"

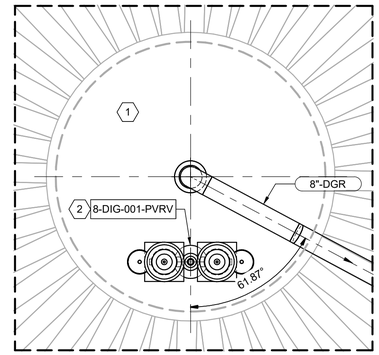

1 - CENTER RING DETAIL

3/8" = 1'-0"

GENERAL NOTE:

1. FOR CLARITY, NOT ALL DIGESTER BUILDING SECTION REFERENCE LINES ARE SHOWN. SEE 320 & 340 SERIES SHEETS FOR DIGESTER BUILDING SECTIONS.

KEY NOTES (X)

1 9'-6" DIAMETER CENTER RING
2 GAS PRESSURE/ VACUUM RELIEF VALVE
3 30" MANHOLE
4 8" SAMPLE TUBE
5 12" PORT WITH PRV MANHOLE COVER MOUNTED ON 12" GATE VALVE
6 6" PRESSURE AND LEVEL SENSOR PORT WITH SPECTACLE BLIND FLANGE
7 8" BUTTERFLY VALVE
8 INSULATION AT PERIMETER MUST BE BUILT UP FLUSH WITH TENSION RING TO ALLOW DRAINAGE AND PREVENT PONDING
9 FULLY COVER BEAMS WITH INSULATION WITHIN 5 FEET OF CENTER RING TO PROVIDE WALKWAY
10 FULL COVER BEAMS IN THIS QUADRANT TO PROVIDE WALKWAY ACCESS TO PORTS
11 30" PRV MANHOLE COVER

THE DRAWINGS IN THIS SET ARE RECORD DRAWINGS. THEY ARE CONSTRUCTION CONTRACT DRAWINGS WHICH HAVE BEEN REVISED BASED ON AVAILABLE FIELD INFORMATION RECORDED BY OTHERS DURING CONSTRUCTION OF THIS CONTRACT. THERE HAS BEEN NO VERIFICATION OF DIMENSIONS SHOWN ON THE CONSTRUCTION DRAWINGS OR THE ACCURACY/COMPLETENESS OF THE FIELD INFORMATION RECEIVED.

SIGNATURE 2/7/2023 DATE

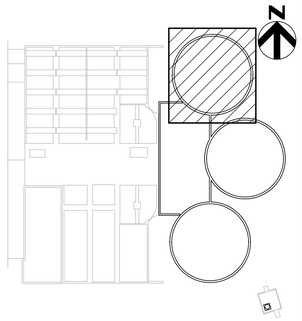

KEY PLAN

AS-BUILT REPLACEMENT SHEET

PROFESSIONAL CERTIFICATION

THIS DRAWING WAS ORIGINALLY APPROVED FOR CONSTRUCTION AND SEALED BY BRIAN M. BACLCHUNAS, A REGISTERED PROFESSIONAL ENGINEER IN THE STATE OF MARYLAND, NO. 200406

NOTICE TO CONTRACTORS

- PROJECT ELEVATIONS ARE BASED ON NAVD88 AND HOWARD COUNTY'S BENCHMARK SYSTEM
- PREVIOUS PROJECTS USED OTHER DATUMS
- APPLY THE FOLLOWING CONVERSIONS WHEN USING PREVIOUS CONTRACT DRAWINGS:
  - ADDITION NO. 6: SUBTRACT 0.80 FT
  - PRIOR ADDITIONS: SUBTRACT 1.04 FT

DEPARTMENT OF PUBLIC WORKS
HOWARD COUNTY, MARYLAND

CHIEF, BUREAU OF UTILITIES DATE

DES: MJW
DRN: SLB
CHK: JRK
DATE: 12/2016

DATE	REV	DESCRIPTION
07/2019		RECORD DRAWING

PROCESS

ANAEROBIC DIGESTERS DIGESTER NO. 1 PLAN 3

LITTLE PATUXENT WATER RECLAMATION PLANT
8TH ADDITION
BIOSOLIDS PROCESSING FACILITIES - PHASE I

CAPITAL PROJECT S-6295
CONTRACT NO. 24-4935

ELECTION DISTRICT NO. 6
HOWARD COUNTY, MARYLAND

SCALE AS SHOWN

SHEET 206 OF 463

M-302

BIM 360://10054364 – Little Patuxent WRP 8th Addition/264591_300_D_V18.rvt
1/11/2022 2:53:44 PM

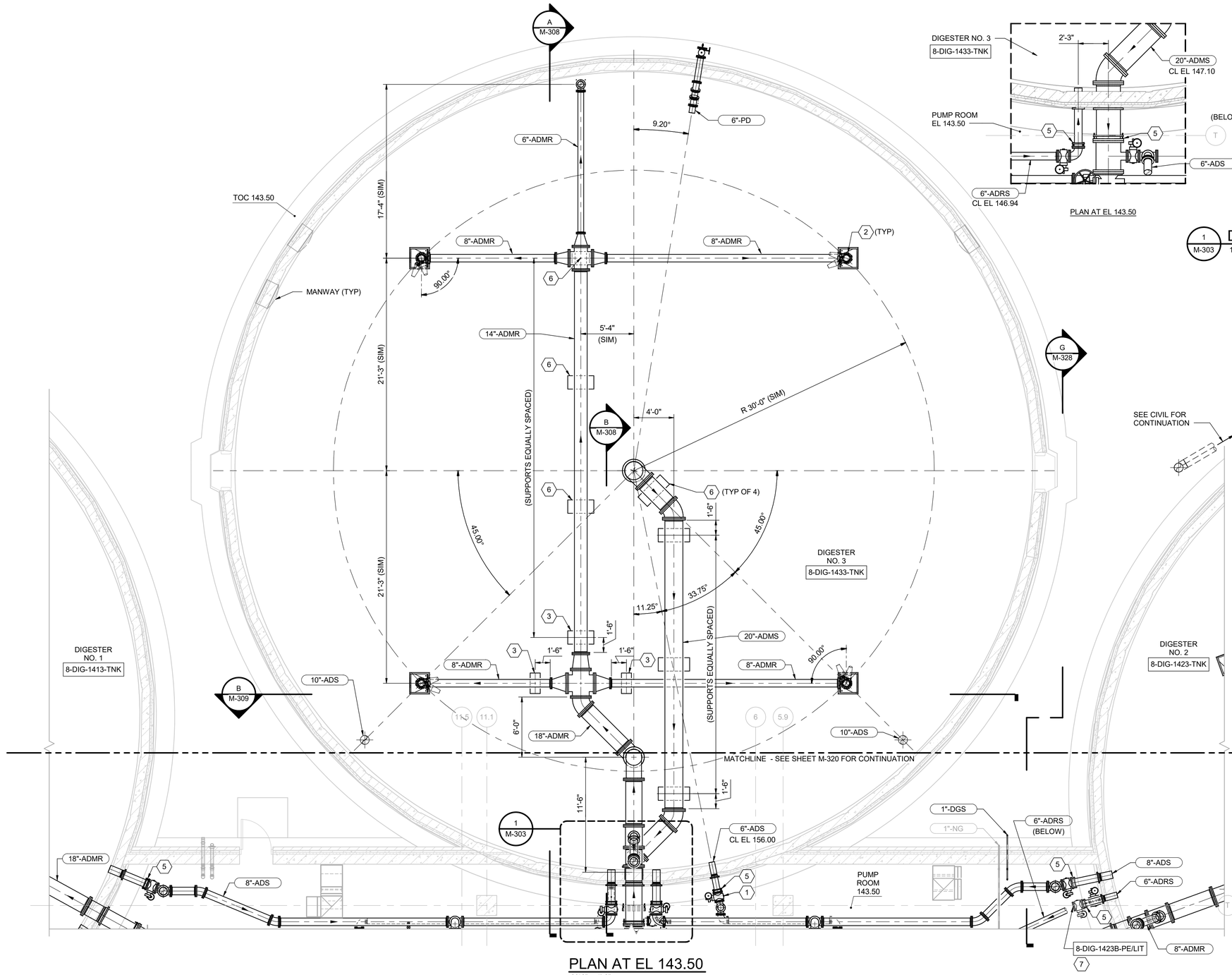

PLAN AT EL 143.50

3/16" = 1'-0"

PLAN AT EL 143.50

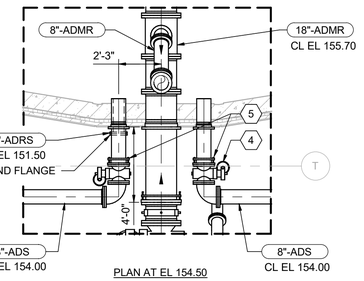

PLAN AT EL 154.50

1/M-303 DETAIL

1/4" = 1'-0"

N

GENERAL NOTES:

1. FOR CLARITY, NOT ALL DIGESTER BUILDING SECTION REFERENCE LINES ARE SHOWN. SEE 320 & 340 SERIES SHEETS FOR DIGESTER BUILDING SECTIONS.
2. ALL PIPE PENETRATIONS IN DIGESTER TO BE PRECAST FLANGE/FLANGE WALL PIPE WITH WATERSTOP. SEE DETAIL 4/M-900.

KEY NOTES (X)

1 6" PLUG VALVE
2 DUAL NOZZLE ASSEMBLY
3 WALL PIPE WITH CONCRETE SUPPORT, SEE DETAIL 4A/M-905.
4 8" PLUG VALVE
5 PROVIDE FLEXIBLE CONNECTION USING ROMAC RFCA
6 GRAVITY SUPPORT; ALL STAINLESS STEEL CONSTRUCTION PER DETAIL 1/M-905 OR CONCRETE PER DETAIL 4/M-905.
7 PRESSURE-BASED LEVEL ELEMENT FOR DIGESTER TANKS. SEE DETAIL 4/I-910

THE DRAWINGS IN THIS SET ARE RECORD DRAWINGS. THEY ARE CONSTRUCTION CONTRACT DRAWINGS WHICH HAVE BEEN REVISED BASED ON AVAILABLE FIELD INFORMATION RECORDED BY OTHERS DURING CONSTRUCTION OF THIS CONTRACT. THERE HAS BEEN NO VERIFICATION OF DIMENSIONS SHOWN ON THE CONSTRUCTION DRAWINGS OR THE ACCURACY/COMPLETENESS OF THE FIELD INFORMATION RECEIVED.

SIGNATURE — DATE 2/7/2023

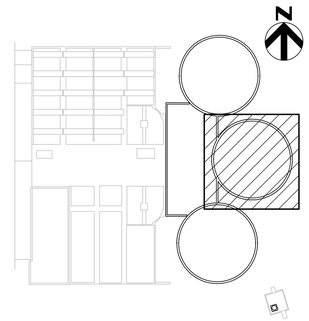

KEY PLAN

AS-BUILT REPLACEMENT SHEET

PROFESSIONAL CERTIFICATION

THIS DRAWING WAS ORIGINALLY APPROVED FOR CONSTRUCTION AND SEALED BY BRIAN M. BACLCHUNAS, A REGISTERED PROFESSIONAL ENGINEER IN THE STATE OF MARYLAND, NO. 200406

NOTICE TO CONTRACTORS

- PROJECT ELEVATIONS ARE BASED ON NAVD88 AND HOWARD COUNTY'S BENCHMARK SYSTEM
- PREVIOUS PROJECTS USED OTHER DATUMS
- APPLY THE FOLLOWING CONVERSIONS WHEN USING PREVIOUS CONTRACT DRAWINGS:
  - ADDITION NO. 6: SUBTRACT 0.80 FT
  - PRIOR ADDITIONS: SUBTRACT 1.04 FT

DEPARTMENT OF PUBLIC WORKS
HOWARD COUNTY, MARYLAND

CHIEF, BUREAU OF UTILITIES — DATE

DES: JRM
DRN: SLB
CHK: JRK
DATE: 12/2016

DATE	REV	DESCRIPTION
07/2019		RECORD DRAWING

PROCESS

ANAEROBIC DIGESTERS
DIGESTER NO. 3 PLAN 1

LITTLE PATUXENT WATER RECLAMATION PLANT
8TH ADDITION
BIOSOLIDS PROCESSING FACILITIES - PHASE I

CAPITAL PROJECT S-6295
CONTRACT NO. 24-4935

ELECTION DISTRICT NO. 6
HOWARD COUNTY, MARYLAND

SCALE AS SHOWN

SHEET 207 OF 463

M-303

BIM 360://10054364 – Little Patuxent WRP 8th Addition/264591_300_D_V18.rvt
1/11/2022 2:53:55 PM

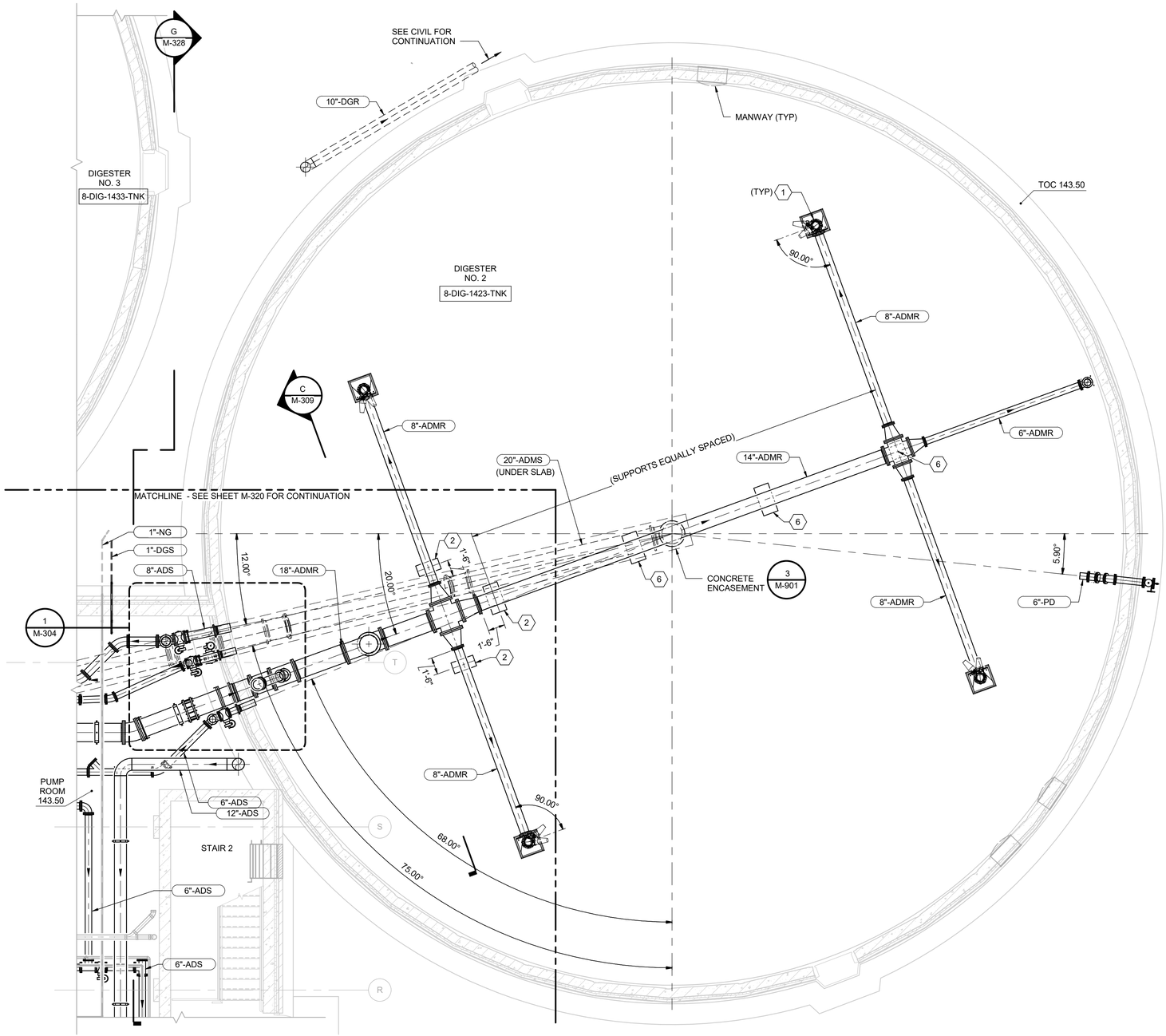

PLAN AT EL 143.50

3/16" = 1'-0"

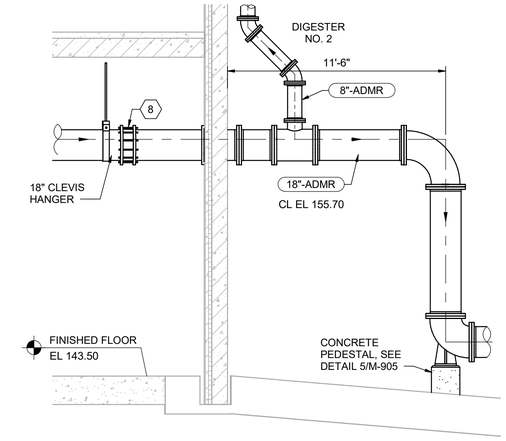

A M-304 SECTION

1/4" = 1'-0"

GENERAL NOTES:

1. FOR CLARITY, NOT ALL DIGESTER BUILDING SECTION REFERENCE LINES ARE SHOWN. SEE 320 & 340 SERIES SHEETS FOR DIGESTER BUILDING SECTIONS.
2. FOR ANAEROBIC DIGESTER MIXING SUPPLY AND RETURN PIPING (ADMS, ADMR) DIMENSIONS, SEE SHEET M-303. VERIFY DIMENSIONS WITH MIXING SUPPLIER MANUFACTURER.
3. ALL PIPE PENETRATIONS IN DIGESTER TO BE PRECAST FLANGE/FLANGE WALL PIPE WITH WATERSTOP. SEE DETAIL 4/M-900.

KEY NOTES (X)

1	DUAL NOZZLE ASSEMBLY
2	WALL PIPE WITH CONCRETE SUPPORT, SEE DETAIL 4A/M-905.
3	6"-ADRS WITH BLIND FLANGE BELOW
4	8" PLUG VALVE
5	6" PLUG VALVE
6	GRAVITY SUPPORT; ALL STAINLESS STEEL CONSTRUCTION PER DETAIL 1/M-905 OR CONCRETE PER DETAIL 4/M-905.
7	PROVIDE FLEXIBLE CONNECTION USING ROMAC RFCA
8	RESTRAINED COMPRESSION SLEEVE COUPLING. INSTALL WITHOUT DEFLECTION.
9	DEFELECT RFCA AND MJ WALL PIPE CONNECTIONS 1 DEGREE TO ALIGN PIPE.
10	PRESSURE-BASED LEVEL ELEMENT FOR DIGESTER TANKS. SEE DETAIL 4/I-910

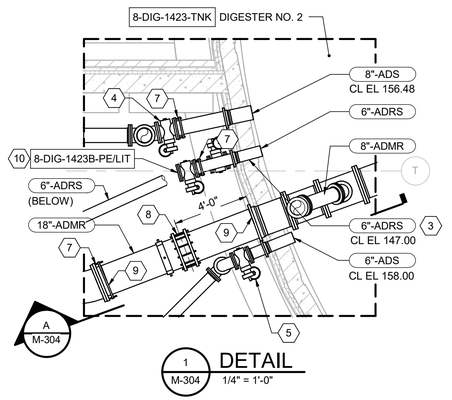

1 M-304 DETAIL

1/4" = 1'-0"

THE DRAWINGS IN THIS SET ARE RECORD DRAWINGS. THEY ARE CONSTRUCTION CONTRACT DRAWINGS WHICH HAVE BEEN REVISED BASED ON AVAILABLE FIELD INFORMATION RECORDED BY OTHERS DURING CONSTRUCTION OF THIS CONTRACT. THERE HAS BEEN NO VERIFICATION OF DIMENSIONS SHOWN ON THE CONSTRUCTION DRAWINGS OR THE ACCURACY/COMPLETENESS OF THE FIELD INFORMATION RECEIVED.

SIGNATURE — DATE 2/7/2022

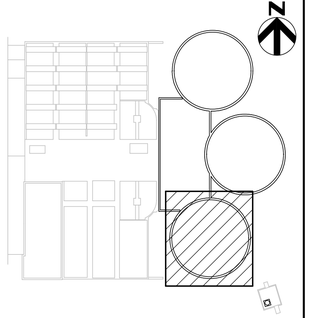

KEY PLAN

AS-BUILT REPLACEMENT SHEET

PROFESSIONAL CERTIFICATION

THIS DRAWING WAS ORIGINALLY APPROVED FOR CONSTRUCTION AND SEALED BY BRIAN M. BACLCHUNAS, A REGISTERED PROFESSIONAL ENGINEER IN THE STATE OF MARYLAND, NO. 200406

NOTICE TO CONTRACTORS

- PROJECT ELEVATIONS ARE BASED ON NAVD88 AND HOWARD COUNTY'S BENCHMARK SYSTEM
- PREVIOUS PROJECTS USED OTHER DATUMS
- APPLY THE FOLLOWING CONVERSIONS WHEN USING PREVIOUS CONTRACT DRAWINGS:
  - ADDITION NO. 6: SUBTRACT 0.80 FT
  - PRIOR ADDITIONS: SUBTRACT 1.04 FT

DEPARTMENT OF PUBLIC WORKS
HOWARD COUNTY, MARYLAND

CHIEF, BUREAU OF UTILITIES — DATE

DES: MJW
DRN: SLB
CHK: JRK
DATE: 12/2016

DATE	REV	DESCRIPTION
07/2019		RECORD DRAWING

PROCESS

ANAEROBIC DIGESTERS DIGESTER NO. 2 PLAN 1

LITTLE PATUXENT WATER RECLAMATION PLANT
8TH ADDITION
BIOSOLIDS PROCESSING FACILITIES - PHASE I

CAPITAL PROJECT S-6295
CONTRACT NO. 24-4935

ELECTION DISTRICT NO. 6
HOWARD COUNTY, MARYLAND

SCALE AS SHOWN

SHEET 208 OF 463

M-304

BIM 360://10054364 – Little Patuxent WRP 8th Addition/264591_300_D_V18.rvt
1/11/2022 2:54:07 PM

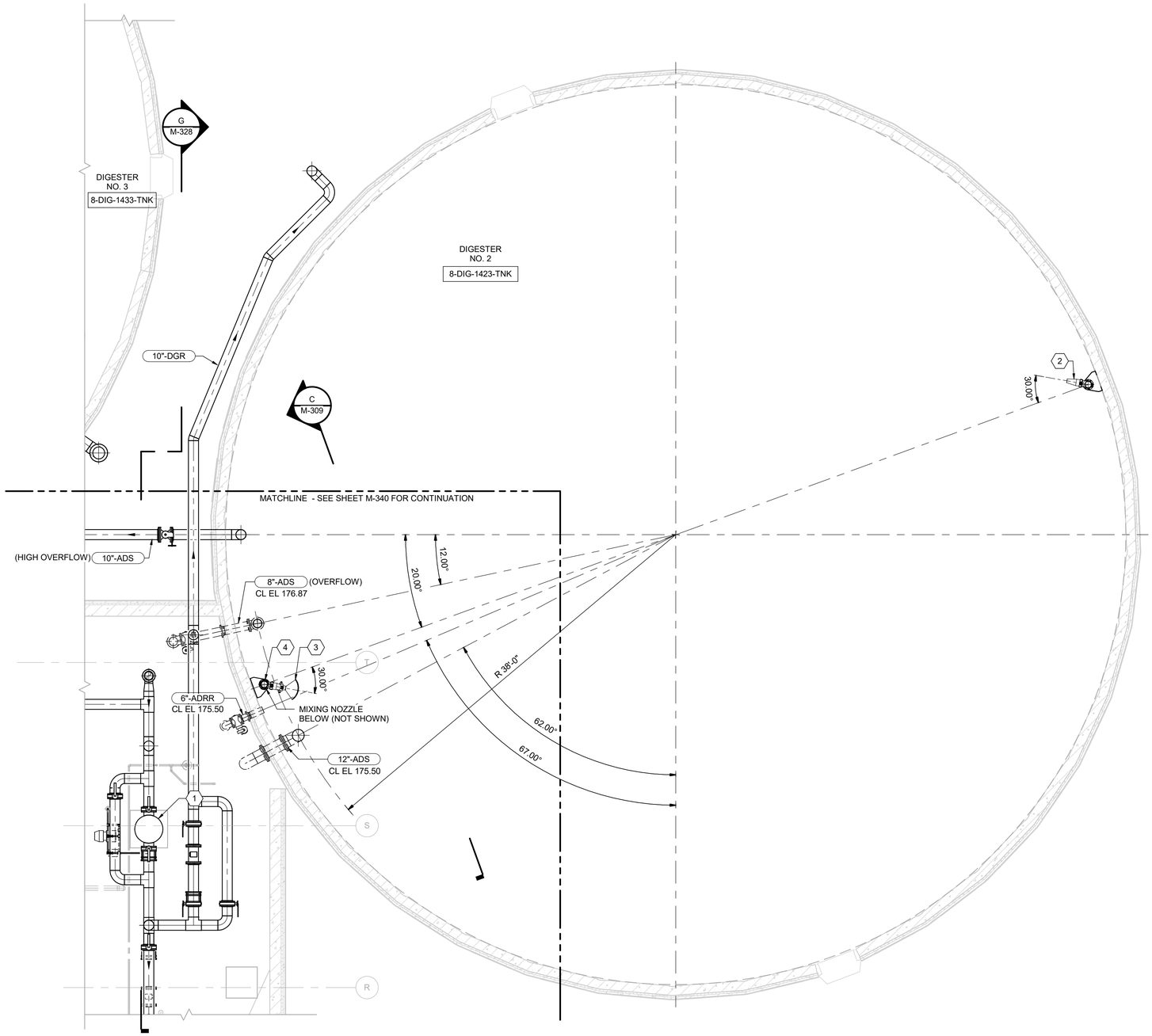

PLAN AT EL 179.17

3/16" = 1'-0"

N

GENERAL NOTES:

1. FOR CLARITY, NOT ALL DIGESTER BUILDING SECTION REFERENCE LINES ARE SHOWN. SEE 320 & 340 SERIES SHEETS FOR DIGESTER BUILDING SECTIONS.
2. ALL PIPE PENETRATIONS IN DIGESTER TO BE PRECAST FLANGE/FLANGE WALL PIPE WITH WATERSTOP. SEE DETAIL 4/M-900.

KEY NOTES (X)

1 BIOGAS SEDIMENT TRAP
2 MIXING NOZZLE
3 SCUM BUSTER NOZZLE
4 A SCH40 TP316L STAINLESS STEEL FLANGED SPOOL PIECE WAS USED IN BETWEEN THE UPPER MIXING NOZZLE AND SCUM BUSTER.

THE DRAWINGS IN THIS SET ARE RECORD DRAWINGS. THEY ARE CONSTRUCTION CONTRACT DRAWINGS WHICH HAVE BEEN REVISED BASED ON AVAILABLE FIELD INFORMATION RECORDED BY OTHERS DURING CONSTRUCTION OF THIS CONTRACT. THERE HAS BEEN NO VERIFICATION OF DIMENSIONS SHOWN ON THE CONSTRUCTION DRAWINGS OR THE ACCURACY/COMPLETENESS OF THE FIELD INFORMATION RECEIVED.

SIGNATURE — DATE 2/7/2022

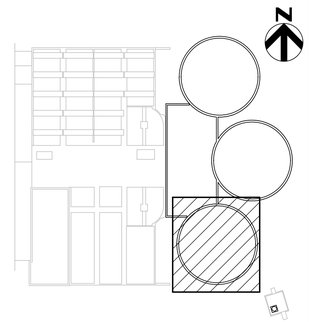

KEY PLAN

AS-BUILT REPLACEMENT SHEET

PROFESSIONAL CERTIFICATION

THIS DRAWING WAS ORIGINALLY APPROVED FOR CONSTRUCTION AND SEALED BY BRIAN M. BACLCHUNAS, A REGISTERED PROFESSIONAL ENGINEER IN THE STATE OF MARYLAND, NO. 200406

NOTICE TO CONTRACTORS

- PROJECT ELEVATIONS ARE BASED ON NAVD88 AND HOWARD COUNTY'S BENCHMARK SYSTEM
- PREVIOUS PROJECTS USED OTHER DATUMS
- APPLY THE FOLLOWING CONVERSIONS WHEN USING PREVIOUS CONTRACT DRAWINGS:
  - ADDITION NO. 6: SUBTRACT 0.80 FT
  - PRIOR ADDITIONS: SUBTRACT 1.04 FT

DEPARTMENT OF PUBLIC WORKS
HOWARD COUNTY, MARYLAND

CHIEF, BUREAU OF UTILITIES — DATE

DES: MJW
DRN: SLB
CHK: JRK
DATE: 12/2016

DATE	REV	DESCRIPTION
07/2019		RECORD DRAWING

PROCESS

ANAEROBIC DIGESTERS
DIGESTER NO. 2 PLAN 2

LITTLE PATUXENT WATER RECLAMATION PLANT
8TH ADDITION
BIOSOLIDS PROCESSING FACILITIES - PHASE I

CAPITAL PROJECT S-6295
CONTRACT NO. 24-4935

ELECTION DISTRICT NO. 6
HOWARD COUNTY, MARYLAND

SCALE AS SHOWN

SHEET 209 OF 463

M-305

BIM 360://10054364 – Little Patuxent WRP 8th Addition/264591_300_D_V18.rvt
1/11/2022 2:54:12 PM

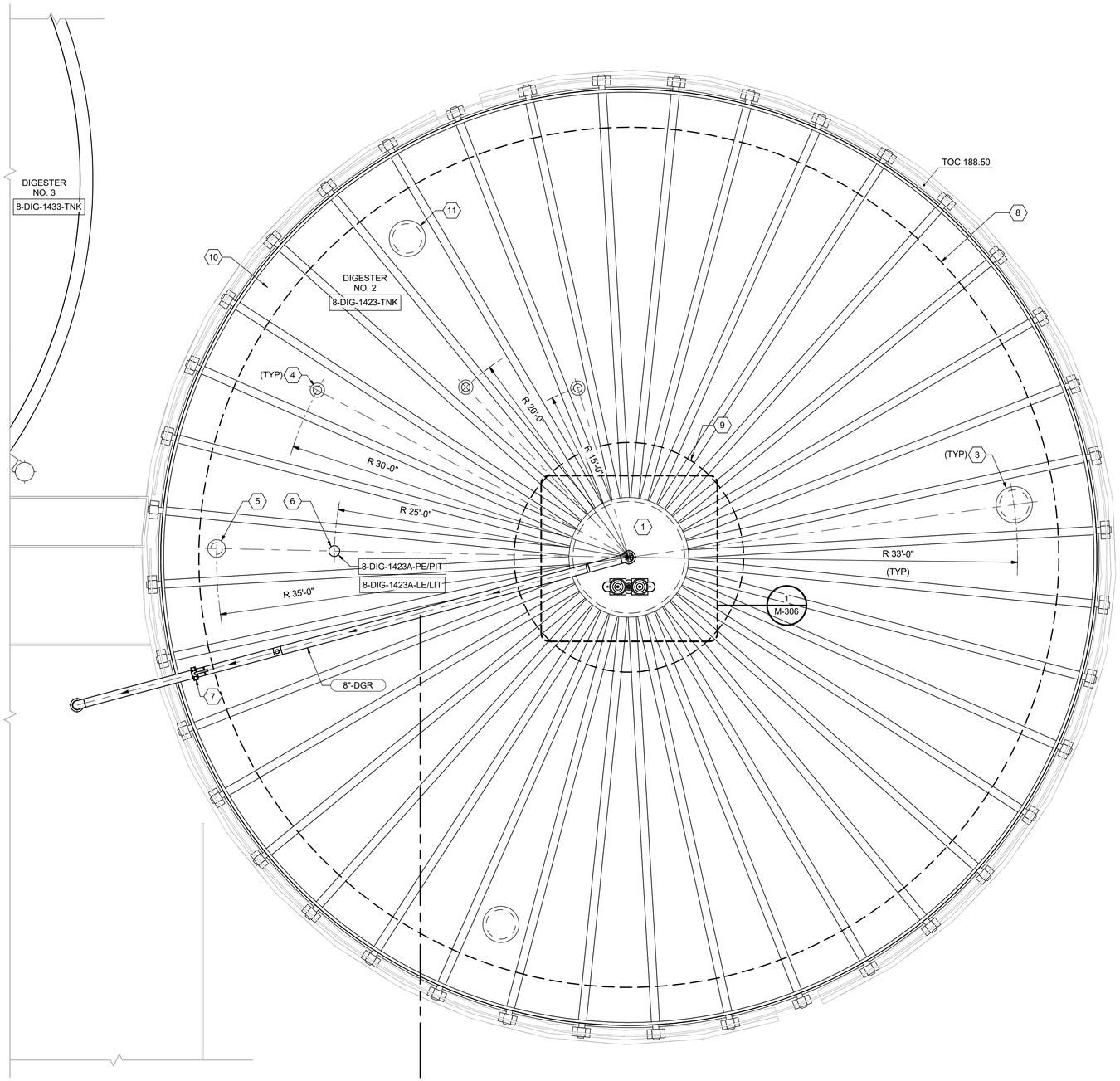

PLAN AT EL 188.50

3/16" = 1'-0"

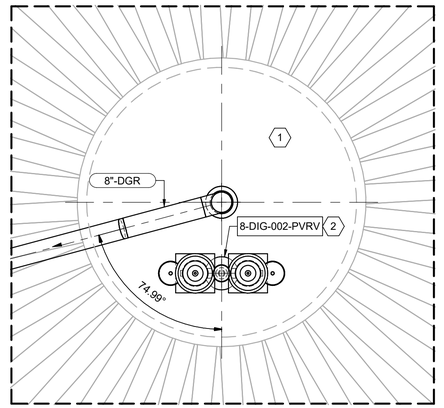

1 / - CENTER RING DETAIL

3/8" = 1'-0"

N

GENERAL NOTE:

1. FOR CLARITY, NOT ALL DIGESTER BUILDING SECTION REFERENCE LINES ARE SHOWN. SEE 320 & 340 SERIES SHEETS FOR DIGESTER BUILDING SECTIONS.

KEY NOTES (X)

1 9'-6" DIAMETER CENTER RING
2 GAS PRESSURE/ VACUUM RELIEF VALVE
3 30" MANHOLE
4 8" SAMPLE TUBE
5 12" PORT WITH PRV MANHOLE COVER MOUNTED ON 12" GATE VALVE
6 6" PRESSURE AND LEVEL SENSOR PORT WITH SPECTACLE BLIND FLANGE
7 8" BUTTERFLY VALVE
8 INSULATION AT PERIMETER MUST BE BUILT UP FLUSH WITH TENSION RING TO ALLOW DRAINAGE AND PREVENT PONDING
9 FULLY COVER BEAMS WITH INSULATION WITHIN 5 FEET OF CENTER RING TO PROVIDE WALKWAY
10 FULL COVER BEAMS IN THIS QUADRANT TO PROVIDE WALKWAY ACCESS TO PORTS
11 30" PRV MANHOLE COVER

THE DRAWINGS IN THIS SET ARE RECORD DRAWINGS. THEY ARE CONSTRUCTION CONTRACT DRAWINGS WHICH HAVE BEEN REVISED BASED ON AVAILABLE FIELD INFORMATION RECORDED BY OTHERS DURING CONSTRUCTION OF THIS CONTRACT. THERE HAS BEEN NO VERIFICATION OF DIMENSIONS SHOWN ON THE CONSTRUCTION DRAWINGS OR THE ACCURACY/COMPLETENESS OF THE FIELD INFORMATION RECEIVED.

SIGNATURE — DATE 2/7/2022

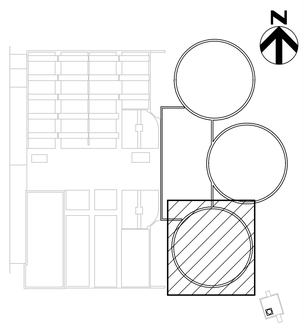

KEY PLAN

AS-BUILT REPLACEMENT SHEET

PROFESSIONAL CERTIFICATION

THIS DRAWING WAS ORIGINALLY APPROVED FOR CONSTRUCTION AND SEALED BY BRIAN M. BACLCHUNAS, A REGISTERED PROFESSIONAL ENGINEER IN THE STATE OF MARYLAND, NO. 200406

NOTICE TO CONTRACTORS

- PROJECT ELEVATIONS ARE BASED ON NAVD88 AND HOWARD COUNTY'S BENCHMARK SYSTEM
- PREVIOUS PROJECTS USED OTHER DATUMS
- APPLY THE FOLLOWING CONVERSIONS WHEN USING PREVIOUS CONTRACT DRAWINGS:
  - ADDITION NO. 6: SUBTRACT 0.80 FT
  - PRIOR ADDITIONS: SUBTRACT 1.04 FT

DEPARTMENT OF PUBLIC WORKS
HOWARD COUNTY, MARYLAND

CHIEF, BUREAU OF UTILITIES — DATE

DES: MJW
DRN: SLB
CHK: JRK
DATE: 12/2016

DATE	REV	DESCRIPTION
07/2019		RECORD DRAWING

PROCESS

ANAEROBIC DIGESTERS
DIGESTER NO. 2 PLAN 3

LITTLE PATUXENT WATER RECLAMATION PLANT
8TH ADDITION
BIOSOLIDS PROCESSING FACILITIES - PHASE I

CAPITAL PROJECT S-6295
CONTRACT NO. 24-4935

ELECTION DISTRICT NO. 6
HOWARD COUNTY, MARYLAND

SCALE AS SHOWN

SHEET 210 OF 463

M-306

BIM 360://10054364 – Little Patuxent WRP 8th Addition/264591_300_D_V18.rvt
1/11/2022 2:54:15 PM

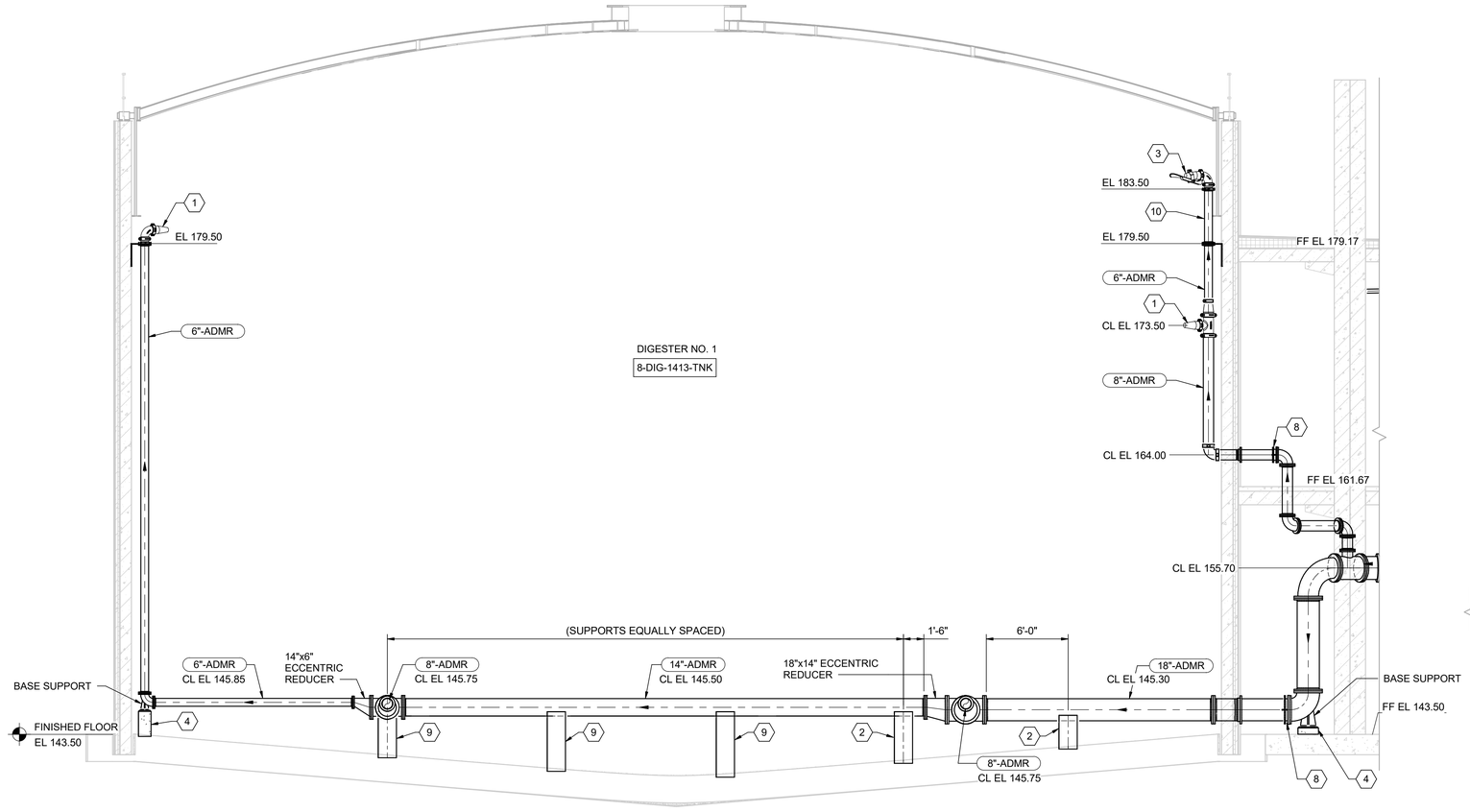

A M-300 SECTION (DIGESTER TANK NO. 2 SIMILAR)
3/16" = 1'-0"

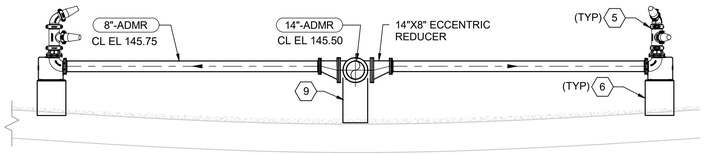

B M-300 SECTION (DIGESTER TANKS 1 & 2 SIMILAR)
3/16" = 1'-0"

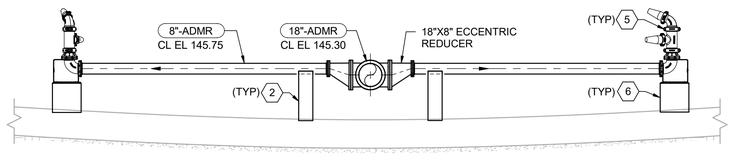

C M-300 SECTION (DIGESTER TANKS 1 & 2 SIMILAR)
3/16" = 1'-0"

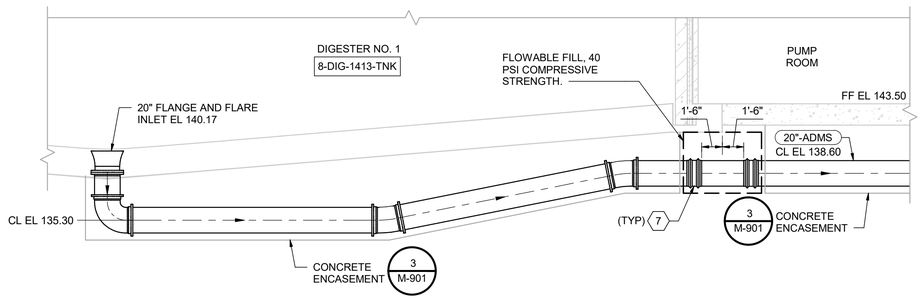

D M-300 SECTION (DIGESTER TANK NO. 2 SIMILAR)
3/16" = 1'-0"

GENERAL NOTE

1. FOR CLARITY, ONLY ANAEROBIC DIGESTER MIXING SUPPLY AND RETURN PIPING (ADMS, ADMR) IS SHOWN.
2. ALL PIPE PENETRATIONS IN DIGESTER TO BE PRECAST FLANGE/FLANGE WALL PIPE WITH WATERSTOP. SEE DETAIL 4/M-900.

KEY NOTES (X)

1 MIXING NOZZLE
2 WALL PIPE WITH CONCRETE SUPPORT, SEE DETAIL 4A/M-905.
3 SCUM BUSTER NOZZLE
4 CONCRETE PEDESTAL, SEE DETAIL 5/M-905.
5 DUAL NOZZLE ASSEMBLY
6 DOUBLE NOZZLE BASE. SEE SHEET M-905. SIZE TO MATCH BASEPLATE
7 RESTRAINED FLEXIBLE COUPLING. WRAP FITTINGS WITH WAX TAPE PRIOR TO ENCASING WITH POLYETHYLENE.
8 PROVIDE FLEXIBLE CONNECTION USING ROMAC RFCA
9 GRAVITY SUPPORT; ALL STAINLESS STEEL CONSTRUCTION PER DETAIL 1/M-905 OR CONCRETE PER DETAIL 4/M-905.
10 A SCH40 TP316L STAINLESS STEEL FLANGED SPOOL PIECE WAS USED IN BETWEEN THE UPPER MIXING NOZZLE AND SCUM BUSTER.

THE DRAWINGS IN THIS SET ARE RECORD DRAWINGS. THEY ARE CONSTRUCTION CONTRACT DRAWINGS WHICH HAVE BEEN REVISED BASED ON AVAILABLE FIELD INFORMATION RECORDED BY OTHERS DURING CONSTRUCTION OF THIS CONTRACT. THERE HAS BEEN NO VERIFICATION OF DIMENSIONS SHOWN ON THE CONSTRUCTION DRAWINGS OR THE ACCURACY/COMPLETENESS OF THE FIELD INFORMATION RECEIVED.

SIGNATURE — DATE 2/7/2023

AS-BUILT REPLACEMENT SHEET

PROFESSIONAL CERTIFICATION
THIS DRAWING WAS ORIGINALLY APPROVED FOR CONSTRUCTION AND SEALED BY BRIAN M. BACLCHUNAS, A REGISTERED PROFESSIONAL ENGINEER IN THE STATE OF MARYLAND, NO. 200406

NOTICE TO CONTRACTORS
- PROJECT ELEVATIONS ARE BASED ON NAVD88 AND HOWARD COUNTY'S BENCHMARK SYSTEM
- PREVIOUS PROJECTS USED OTHER DATUMS
- APPLY THE FOLLOWING CONVERSIONS WHEN USING PREVIOUS CONTRACT DRAWINGS:
  - ADDITION NO. 6: SUBTRACT 0.80 FT
  - PRIOR ADDITIONS: SUBTRACT 1.04 FT

DEPARTMENT OF PUBLIC WORKS
HOWARD COUNTY, MARYLAND

CHIEF, BUREAU OF UTILITIES — DATE

DES: MJW
DRN: SLB
CHK: JRK
DATE: 12/2016

DATE	REV	DESCRIPTION
07/2019		RECORD DRAWING

PROCESS

ANAEROBIC DIGESTERS SECTIONS 1

LITTLE PATUXENT WATER RECLAMATION PLANT
8TH ADDITION
BIOSOLIDS PROCESSING FACILITIES - PHASE I

CAPITAL PROJECT S-6295
CONTRACT NO. 24-4935

ELECTION DISTRICT NO. 6
HOWARD COUNTY, MARYLAND

SCALE AS SHOWN

SHEET 211 OF 463

M-307

BIM 360://10054364 – Little Patuxent WRP 8th Addition/264591_300_D_V18.rvt
1/11/2022 2:54:25 PM

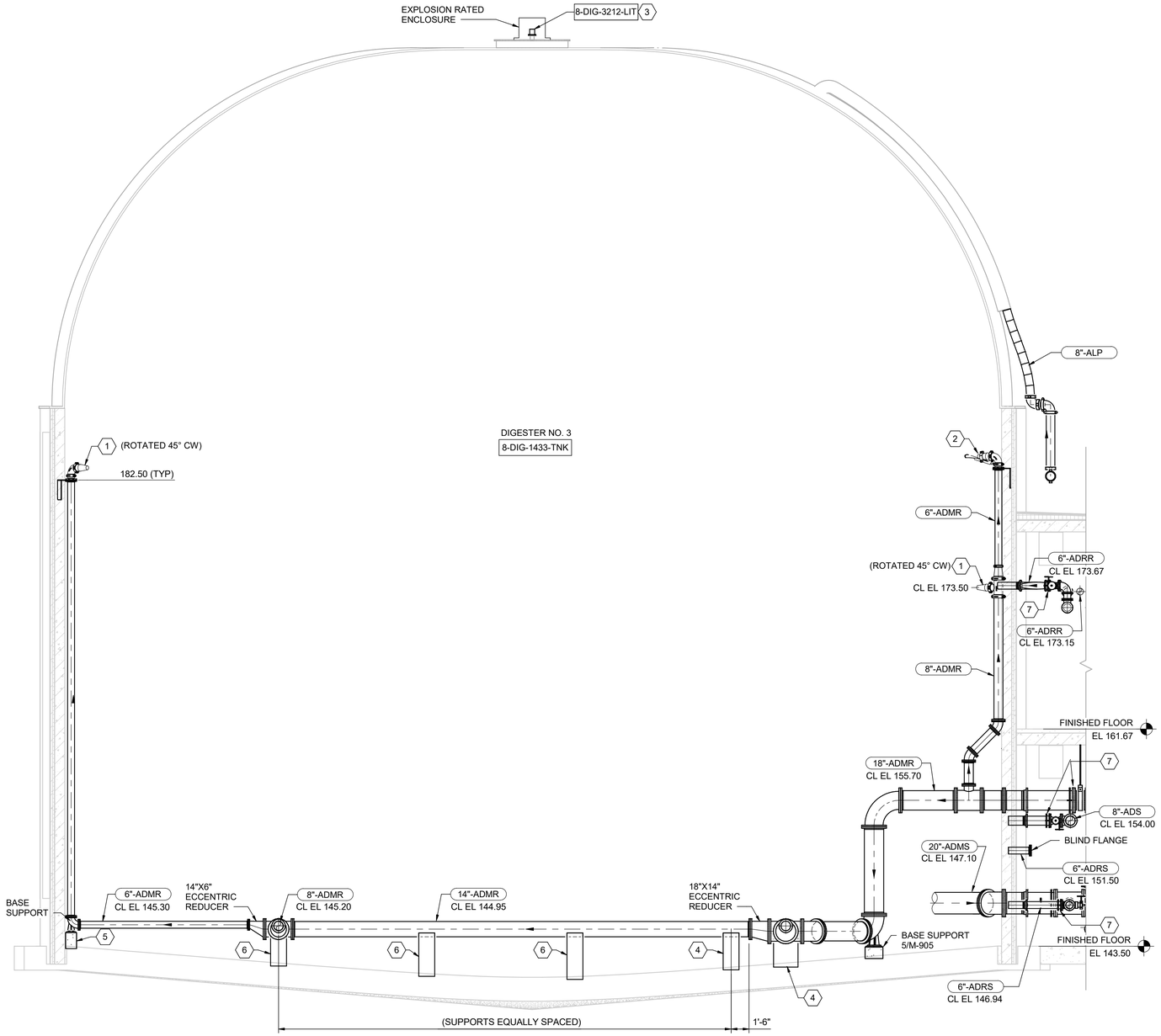

A M-303 SECTION
3/16" = 1'-0"

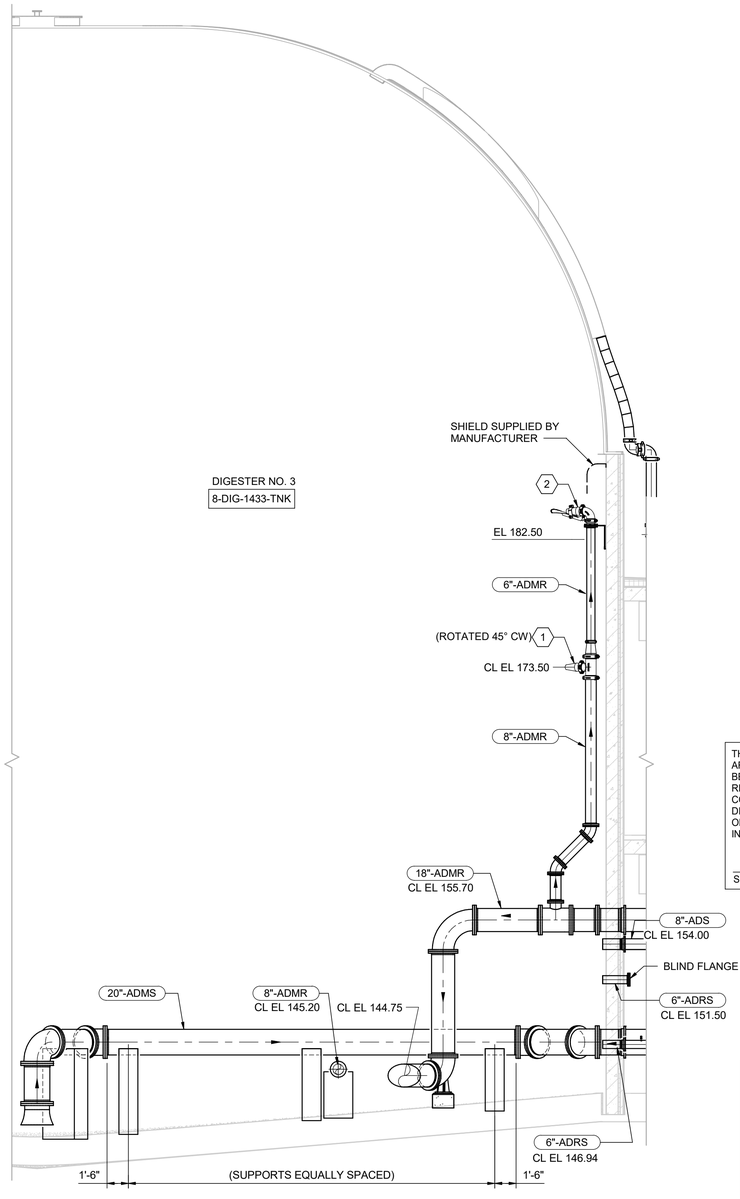

B M-303 SECTION
3/16" = 1'-0"

GENERAL NOTE

1. FOR CLARITY, ONLY ANAEROBIC DIGESTER MIXING SUPPLY AND RETURN PIPING (ADMS, ADMR) IS SHOWN.
2. ALL PIPE PENETRATIONS IN DIGESTER TO BE PRECAST FLANGE/FLANGE WALL PIPE WITH WATERSTOP. SEE DETAIL 4/M-900.

KEY NOTES (X)

1 MIXING NOZZLE
2 SCUM BUSTER NOZZLE
3 LASER LEVEL SENSOR NO. 1
4 WALL PIPE WITH CONCRETE SUPPORT, SEE DETAIL 4A/M-905.
5 CONCRETE PEDESTAL, SEE DETAIL 5/M-905.
6 GRAVITY SUPPORT; ALL STAINLESS STEEL CONSTRUCTION PER DETAIL 1/M-905 OR CONCRETE PER DETAIL 4/M-905.
7 PROVIDE FLEXIBLE CONNECTION USING ROMAC RFCA

THE DRAWINGS IN THIS SET ARE RECORD DRAWINGS. THEY ARE CONSTRUCTION CONTRACT DRAWINGS WHICH HAVE BEEN REVISED BASED ON AVAILABLE FIELD INFORMATION RECORDED BY OTHERS DURING CONSTRUCTION OF THIS CONTRACT. THERE HAS BEEN NO VERIFICATION OF DIMENSIONS SHOWN ON THE CONSTRUCTION DRAWINGS OR THE ACCURACY/COMPLETENESS OF THE FIELD INFORMATION RECEIVED.

SIGNATURE — DATE 2/7/2023

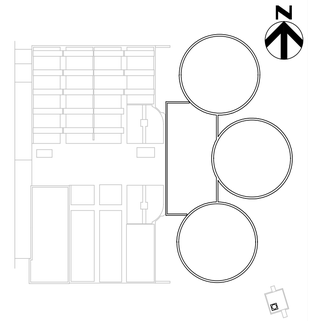

KEY PLAN

AS-BUILT REPLACEMENT SHEET

PROFESSIONAL CERTIFICATION

THIS DRAWING WAS ORIGINALLY APPROVED FOR CONSTRUCTION AND SEALED BY BRIAN M. BACLCHUNAS, A REGISTERED PROFESSIONAL ENGINEER IN THE STATE OF MARYLAND, NO. 200406

NOTICE TO CONTRACTORS

- PROJECT ELEVATIONS ARE BASED ON NAVD88 AND HOWARD COUNTY'S BENCHMARK SYSTEM
- PREVIOUS PROJECTS USED OTHER DATUMS
- APPLY THE FOLLOWING CONVERSIONS WHEN USING PREVIOUS CONTRACT DRAWINGS:
  - ADDITION NO. 6: SUBTRACT 0.80 FT
  - PRIOR ADDITIONS: SUBTRACT 1.04 FT

DEPARTMENT OF PUBLIC WORKS
HOWARD COUNTY, MARYLAND

CHIEF, BUREAU OF UTILITIES — DATE

DES: MJW
DRN: SLB
CHK: JRK
DATE: 12/2016

DATE	REV	DESCRIPTION
07/2019		RECORD DRAWING

PROCESS

ANAEROBIC DIGESTERS SECTIONS 2

LITTLE PATUXENT WATER RECLAMATION PLANT
8TH ADDITION
BIOSOLIDS PROCESSING FACILITIES - PHASE I

CAPITAL PROJECT S-6295
CONTRACT NO. 24-4935

ELECTION DISTRICT NO. 6
HOWARD COUNTY, MARYLAND

SCALE AS SHOWN

SHEET 212 OF 463

M-308

BIM 360://10054364 – Little Patuxent WRP 8th Addition/264591_300_D_V18.rvt
1/11/2022 2:54:31 PM

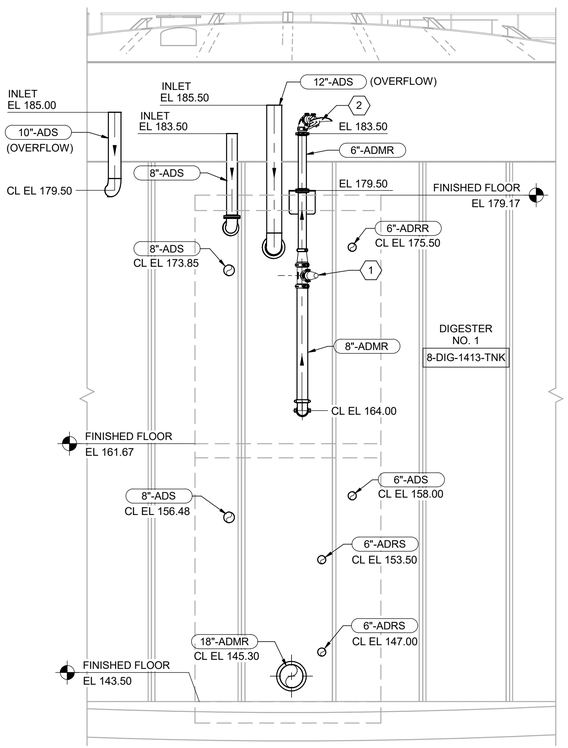

A M-300 SECTION DIGESTER NO. 1
3/16" = 1'-0"

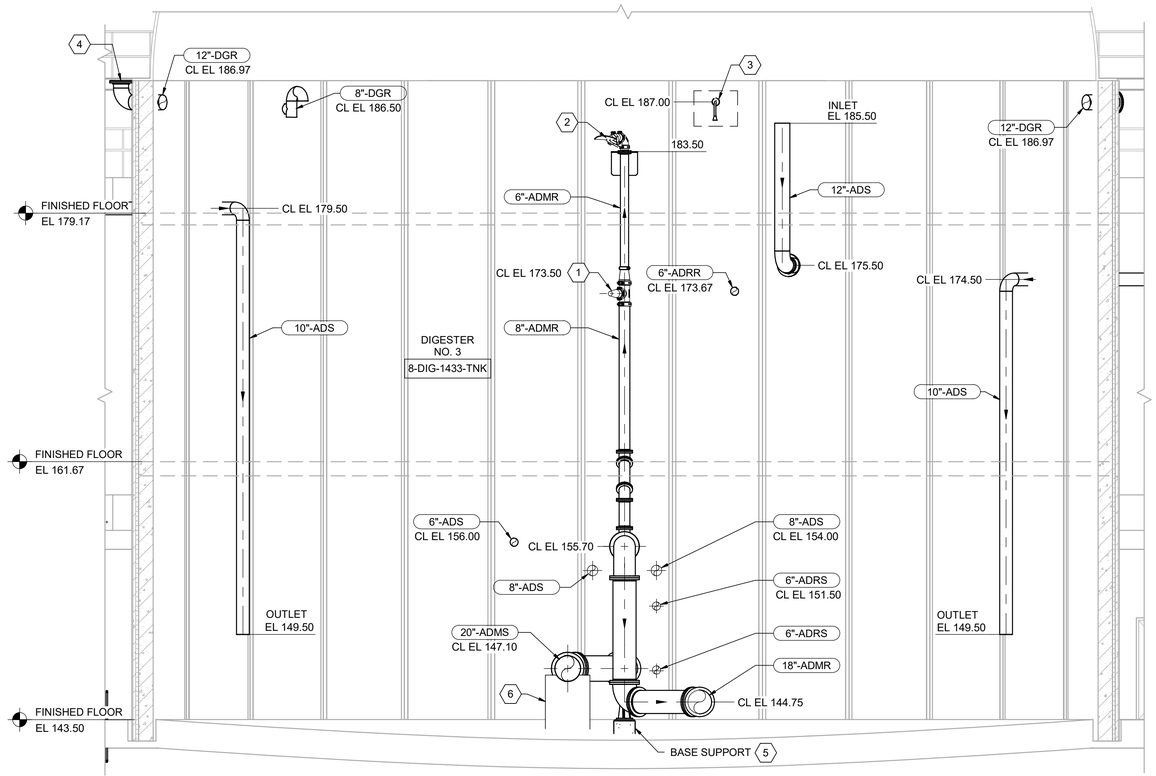

B M-303 SECTION DIGESTER NO. 3
3/16" = 1'-0"

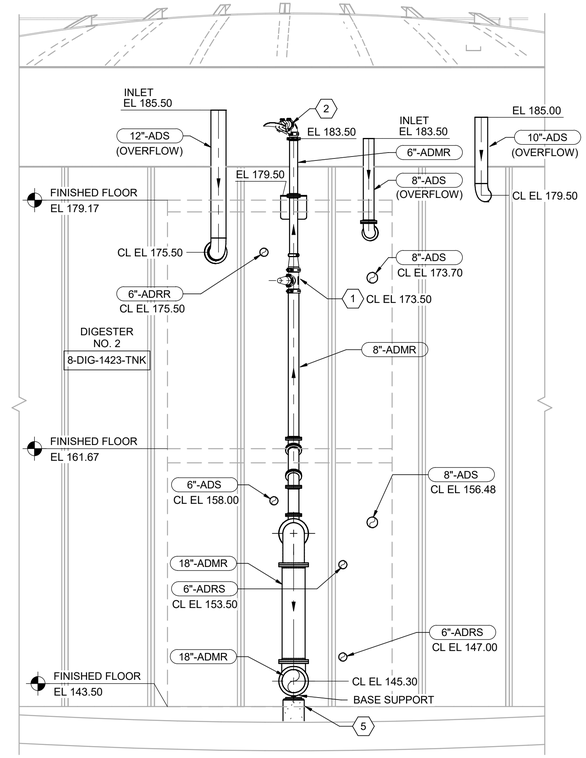

C M-304 SECTION DIGESTER NO. 2
3/16" = 1'-0"

GENERAL NOTE

1. ALL PIPE PENETRATIONS IN DIGESTER TO BE PRECAST FLANGE/FLANGE WALL PIPE WITH WATERSTOP. SEE DETAIL 4/M-900.

KEY NOTES (X)

1 MIXING NOZZLE
2 SCUM BUSTER NOZZLE
3 RADAR LEVEL TRANSMITTER WITH RIGHT ANGLE ANTENNA
4 12" EMERGENCY PORT WITH PRV MANHOLE COVER, TOP OF MANHOLE EL 188.50
5 CONCRETE PEDESTAL, SEE DETAIL 5/M-905.
6 WALL PIPE WITH CONCRETE SUPPORT, SEE DETAIL 4A/M-905.

THE DRAWINGS IN THIS SET ARE RECORD DRAWINGS. THEY ARE CONSTRUCTION CONTRACT DRAWINGS WHICH HAVE BEEN REVISED BASED ON AVAILABLE FIELD INFORMATION RECORDED BY OTHERS DURING CONSTRUCTION OF THIS CONTRACT. THERE HAS BEEN NO VERIFICATION OF DIMENSIONS SHOWN ON THE CONSTRUCTION DRAWINGS OR THE ACCURACY/COMPLETENESS OF THE FIELD INFORMATION RECEIVED.

SIGNATURE 2/7/2023 DATE

AS-BUILT REPLACEMENT SHEET

PROFESSIONAL CERTIFICATION

THIS DRAWING WAS ORIGINALLY APPROVED FOR CONSTRUCTION AND SEALED BY BRIAN M. BACLCHUNAS, A REGISTERED PROFESSIONAL ENGINEER IN THE STATE OF MARYLAND, NO. 200406

NOTICE TO CONTRACTORS

- PROJECT ELEVATIONS ARE BASED ON NAVD88 AND HOWARD COUNTY'S BENCHMARK SYSTEM
- PREVIOUS PROJECTS USED OTHER DATUMS
- APPLY THE FOLLOWING CONVERSIONS WHEN USING PREVIOUS CONTRACT DRAWINGS:
  - ADDITION NO. 6: SUBTRACT 0.80 FT
  - PRIOR ADDITIONS: SUBTRACT 1.04 FT

DEPARTMENT OF PUBLIC WORKS
HOWARD COUNTY, MARYLAND

CHIEF, BUREAU OF UTILITIES DATE

DES: MJW
DRN: SLB
CHK: JRK
DATE: 12/2016

DATE	REV	DESCRIPTION
07/2019		RECORD DRAWING

PROCESS

ANAEROBIC DIGESTERS SECTIONS 3

LITTLE PATUXENT WATER RECLAMATION PLANT
8TH ADDITION
BIOSOLIDS PROCESSING FACILITIES - PHASE I

CAPITAL PROJECT S-6295
CONTRACT NO. 24-4935

ELECTION DISTRICT NO. 6
HOWARD COUNTY, MARYLAND

SCALE AS SHOWN

SHEET 213 OF 463

M-309

BIM 360://10054364 – Little Patuxent WRP 8th Addition/264591_300_D_V18.rvt
1/11/2022 2:54:34 PM

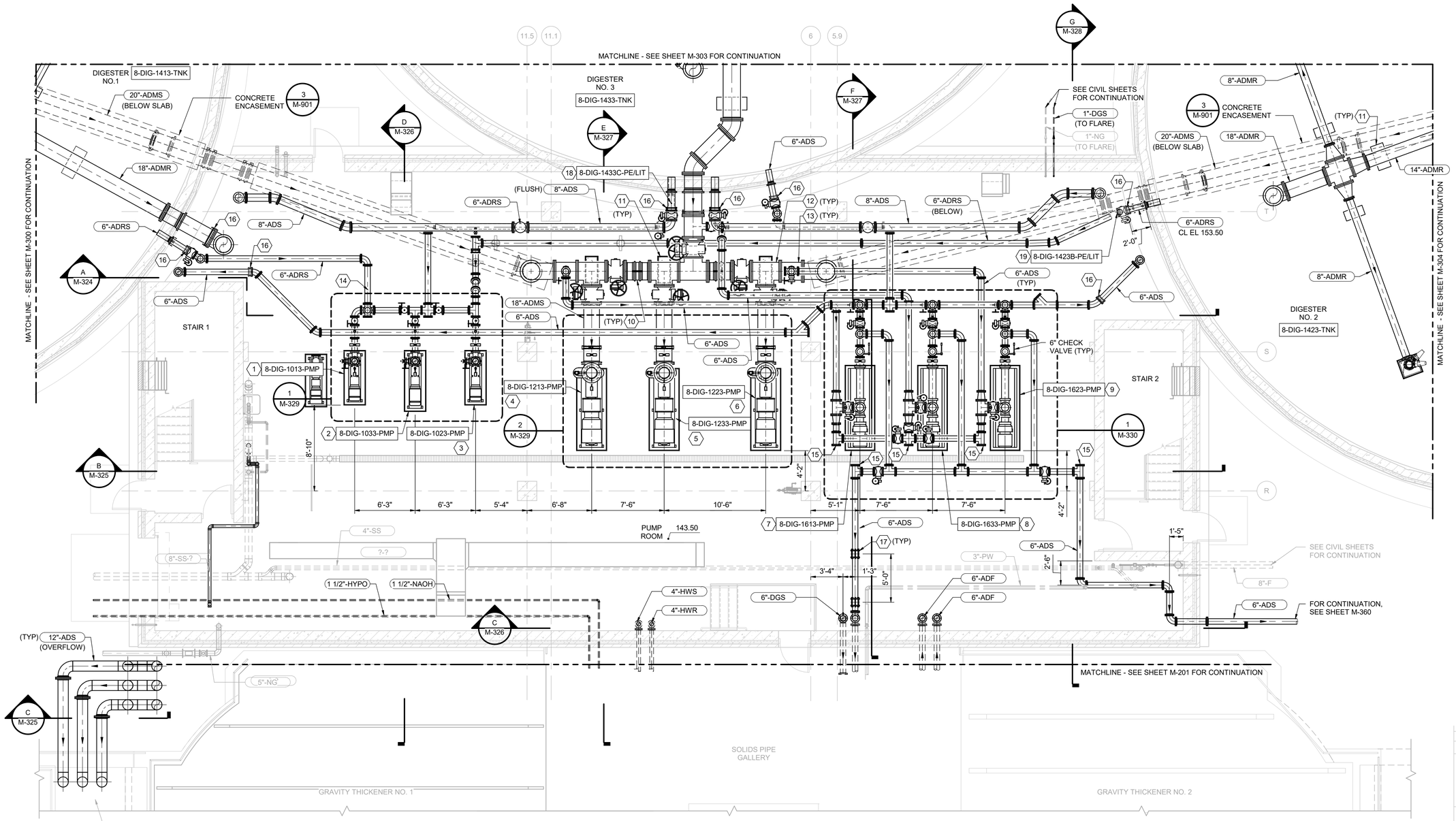

PLAN AT EL 143.50

3/16" = 1'-0"

GENERAL NOTES

1. FOR CLARITY, TANK SECTION REFERENCE LINES ARE NOT SHOWN. SEE 300 SERIES SHEETS FOR DIGESTER TANK SECTIONS.

   TO ALLOW FOR DIFFERENTIAL SETTLING,
2. (2) RESTRAINED FLEXIBLE COUPLINGS SHALL BE INSTALLED AT ALL LOCATIONS WHERE PIPING IN THE DIGESTER BUILDING PASSES INTO THE DIGESTER OR INTO PIPE GALLERY. PIPING SHALL NOT BE CONNECTED TO DIGESTER PENETRATIONS UNTIL AFTER TANKS ARE LEAK TESTED.

KEY NOTES (X)

1 DIGESTER RECIRCULATION PUMP NO. 1
2 DIGESTER RECIRCULATION PUMP NO. 3
3 DIGESTER RECIRCULATION PUMP NO. 2
4 MIXING PUMP NO. 1
5 MIXING PUMP NO. 3
6 MIXING PUMP NO. 2
7 ANAEROBIC DIGESTER TRANSFER PUMP NO. 1
8 ANAEROBIC DIGESTER TRANSFER PUMP NO. 3
9 ANAEROBIC DIGESTER TRANSFER PUMP NO. 2
10 RESTRAINED FLEXIBLE COUPLING
11 WALL PIPE WITH CONCRETE SUPPORT, SEE DETAIL 4A/M-905.
12 20"x18" REDUCING TEE
13 20"x6" REDUCING TEE
14 MANUAL AIR RELEASE VALVE, SEE DETAIL 5/M-902. VENT OUTSIDE AT LEAST 10'-0" FROM ANY OPENING.
15 FLUSHING CONNECTION, SEE DETAIL 2/M-902. ROUTE PIPE TO WALL OR COLUMN WITH QUICK CONNECT AND BALL VALVE AT 3'-6" AFF.
16 PROVIDE FLEXIBLE CONNECTION USING ROMAC RFCA
17 RESTRAINED COMPRESSION SLEEVE COUPLING
18 PRESSURE INDICATING TRANSMITTER, SEE DETAIL 2/M-910.
19 PRESSURE-BASED LEVEL ELEMENT FOR DIGESTER TANKS. SEE DETAIL 4/I-910

THE DRAWINGS IN THIS SET ARE RECORD DRAWINGS. THEY ARE CONSTRUCTION CONTRACT DRAWINGS WHICH HAVE BEEN REVISED BASED ON AVAILABLE FIELD INFORMATION RECORDED BY OTHERS DURING CONSTRUCTION OF THIS CONTRACT. THERE HAS BEEN NO VERIFICATION OF DIMENSIONS SHOWN ON THE CONSTRUCTION DRAWINGS OR THE ACCURACY/COMPLETENESS OF THE FIELD INFORMATION RECEIVED.

SIGNATURE 2/7/2023 DATE

KEY PLAN

AS-BUILT REPLACEMENT SHEET

PROFESSIONAL CERTIFICATION

THIS DRAWING WAS ORIGINALLY APPROVED FOR CONSTRUCTION AND SEALED BY BRIAN M. BACLCHUNAS, A REGISTERED PROFESSIONAL ENGINEER IN THE STATE OF MARYLAND, NO. 200406

NOTICE TO CONTRACTORS

- PROJECT ELEVATIONS ARE BASED ON NAVD88 AND HOWARD COUNTY'S BENCHMARK SYSTEM
- PREVIOUS PROJECTS USED OTHER DATUMS
- APPLY THE FOLLOWING CONVERSIONS WHEN USING PREVIOUS CONTRACT DRAWINGS:
  - ADDITION NO. 6: SUBTRACT 0.80 FT
  - PRIOR ADDITIONS: SUBTRACT 1.04 FT

DEPARTMENT OF PUBLIC WORKS
HOWARD COUNTY, MARYLAND

CHIEF, BUREAU OF UTILITIES DATE

DES: MJW/JRM
DRN: SLB
CHK: JRK
DATE: 12/2016

DATE	REV	DESCRIPTION
07/2019		RECORD DRAWING

PROCESS

DIGESTER BUILDING PUMP ROOM PLAN AT EL 143.50

LITTLE PATUXENT WATER RECLAMATION PLANT
8TH ADDITION
BIOSOLIDS PROCESSING FACILITIES - PHASE I

CAPITAL PROJECT S-6295
CONTRACT NO. 24-4935

ELECTION DISTRICT NO. 6
HOWARD COUNTY, MARYLAND

SCALE AS SHOWN

SHEET 214 OF 463

M-320

BIM 360://10054364 – Little Patuxent WRP 8th Addition/264591_300_D_V18.rvt
1/11/2022 3:04:02 PM

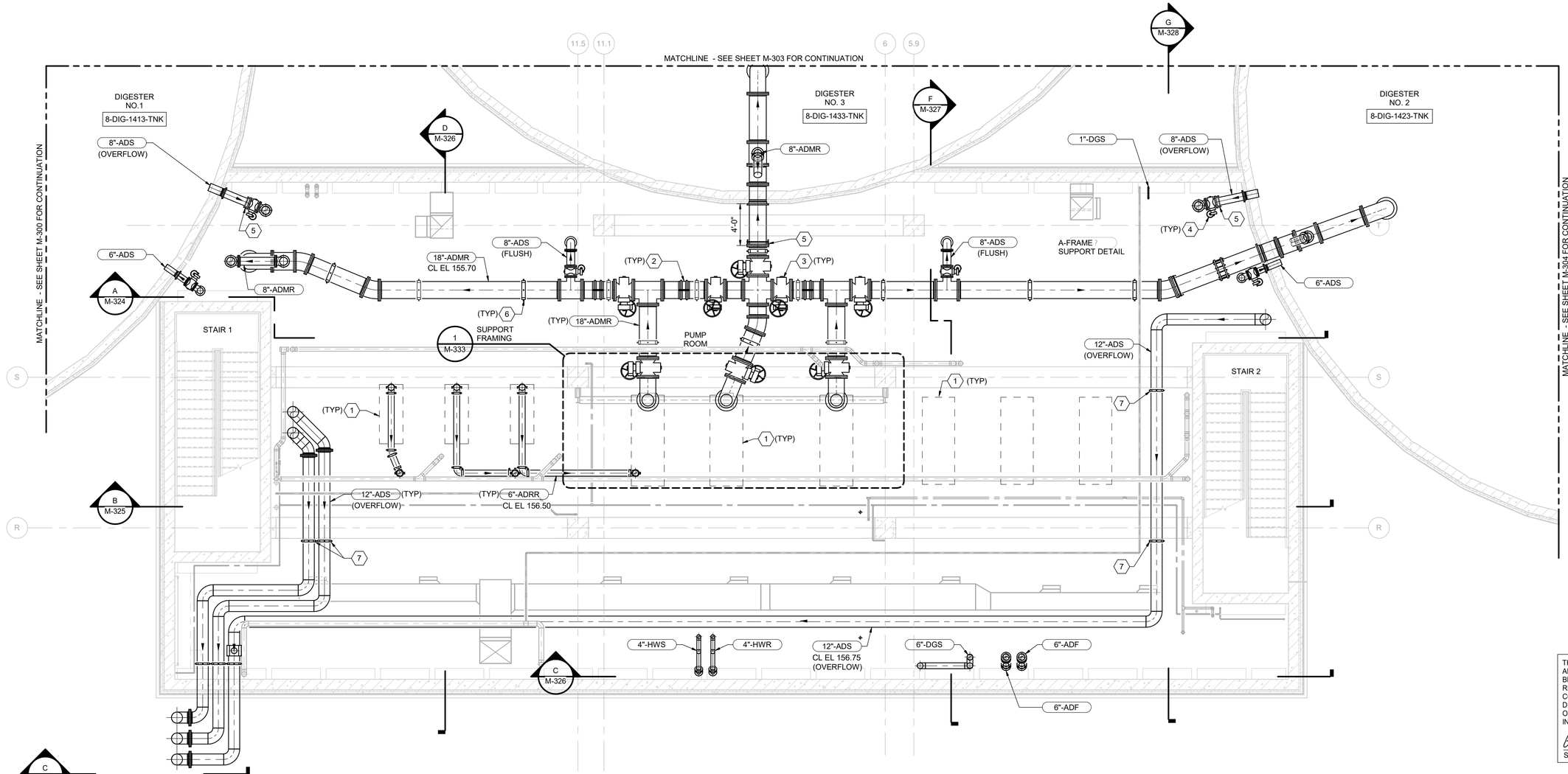

UPPER PLAN AT EL 154.50

3/16" = 1'-0"

GENERAL NOTES

1. FOR CLARITY, TANK SECTION REFERENCE LINES ARE NOT SHOWN. SEE 300 SERIES SHEETS FOR DIGESTER TANK SECTIONS.
2. TO ALLOW FOR DIFFERENTIAL SETTLING, (2) RESTRAINED FLEXIBLE COUPLINGS SHALL BE INSTALLED AT ALL LOCATIONS WHERE PIPING IN THE DIGESTER BUILDING PASSES INTO THE DIGESTER OR INTO PIPE GALLERY. PIPING SHALL NOT BE CONNECTED TO DIGESTER PENETRATIONS UNTIL AFTER TANKS ARE LEAK TESTED.

KEY NOTES (X)

1 EQUIPMENT OUTLINE FOR REFERENCE
2 RESTRAINED FLEXIBLE COUPLING
3 18" PLUG VALVE
4 8" PLUG VALVE
5 PROVIDE FLEXIBLE CONNECTION USING ROMAC RFCA
6 HANGER PIPE SUPPORT, SEE DETAIL 4/M-906. MAXIMUM SPACING 10'-0" OC. STRUCTURE TO SUPPORT 5000# SERVICE LOAD AT EACH HANGER LOCATION
7 HANGER PIPE SUPPORT. HANG ADS FROM MID HEIGHT OF THE CONCRETE BEAM, THIS FACE. SEE DETAIL 6/M-906. BALANCE OF SUPPORTS BY GENERAL CONTRACTOR.

THE DRAWINGS IN THIS SET ARE RECORD DRAWINGS. THEY ARE CONSTRUCTION CONTRACT DRAWINGS WHICH HAVE BEEN REVISED BASED ON AVAILABLE FIELD INFORMATION RECORDED BY OTHERS DURING CONSTRUCTION OF THIS CONTRACT. THERE HAS BEEN NO VERIFICATION OF DIMENSIONS SHOWN ON THE CONSTRUCTION DRAWINGS OR THE ACCURACY/COMPLETENESS OF THE FIELD INFORMATION RECEIVED.

SIGNATURE — DATE 2/7/2023

KEY PLAN

AS-BUILT REPLACEMENT SHEET

PROFESSIONAL CERTIFICATION

THIS DRAWING WAS ORIGINALLY APPROVED FOR CONSTRUCTION AND SEALED BY BRIAN M. BACLCHUNAS, A REGISTERED PROFESSIONAL ENGINEER IN THE STATE OF MARYLAND, NO. 200406

NOTICE TO CONTRACTORS

- PROJECT ELEVATIONS ARE BASED ON NAVD88 AND HOWARD COUNTY'S BENCHMARK SYSTEM
- PREVIOUS PROJECTS USED OTHER DATUMS
- APPLY THE FOLLOWING CONVERSIONS WHEN USING PREVIOUS CONTRACT DRAWINGS:
  - ADDITION NO. 6: SUBTRACT 0.80 FT
  - PRIOR ADDITIONS: SUBTRACT 1.04 FT

DEPARTMENT OF PUBLIC WORKS
HOWARD COUNTY, MARYLAND

CHIEF, BUREAU OF UTILITIES — DATE

DES: MJW/JRM
DRN: SLB
CHK: JRK
DATE: 12/2016

DATE	REV	DESCRIPTION
07/2019		RECORD DRAWING

PROCESS

DIGESTER BUILDING
PUMP ROOM PLAN AT EL 154.50

LITTLE PATUXENT WATER RECLAMATION PLANT
8TH ADDITION
BIOSOLIDS PROCESSING FACILITIES - PHASE I

CAPITAL PROJECT S-6295
CONTRACT NO. 24-4935

ELECTION DISTRICT NO. 6
HOWARD COUNTY, MARYLAND

SCALE AS SHOWN

SHEET 215 OF 463

M-321

BIM 360://10054364 – Little Patuxent WRP 8th Addition/264591_300_D_V18.rvt
1/11/2022 3:04:06 PM

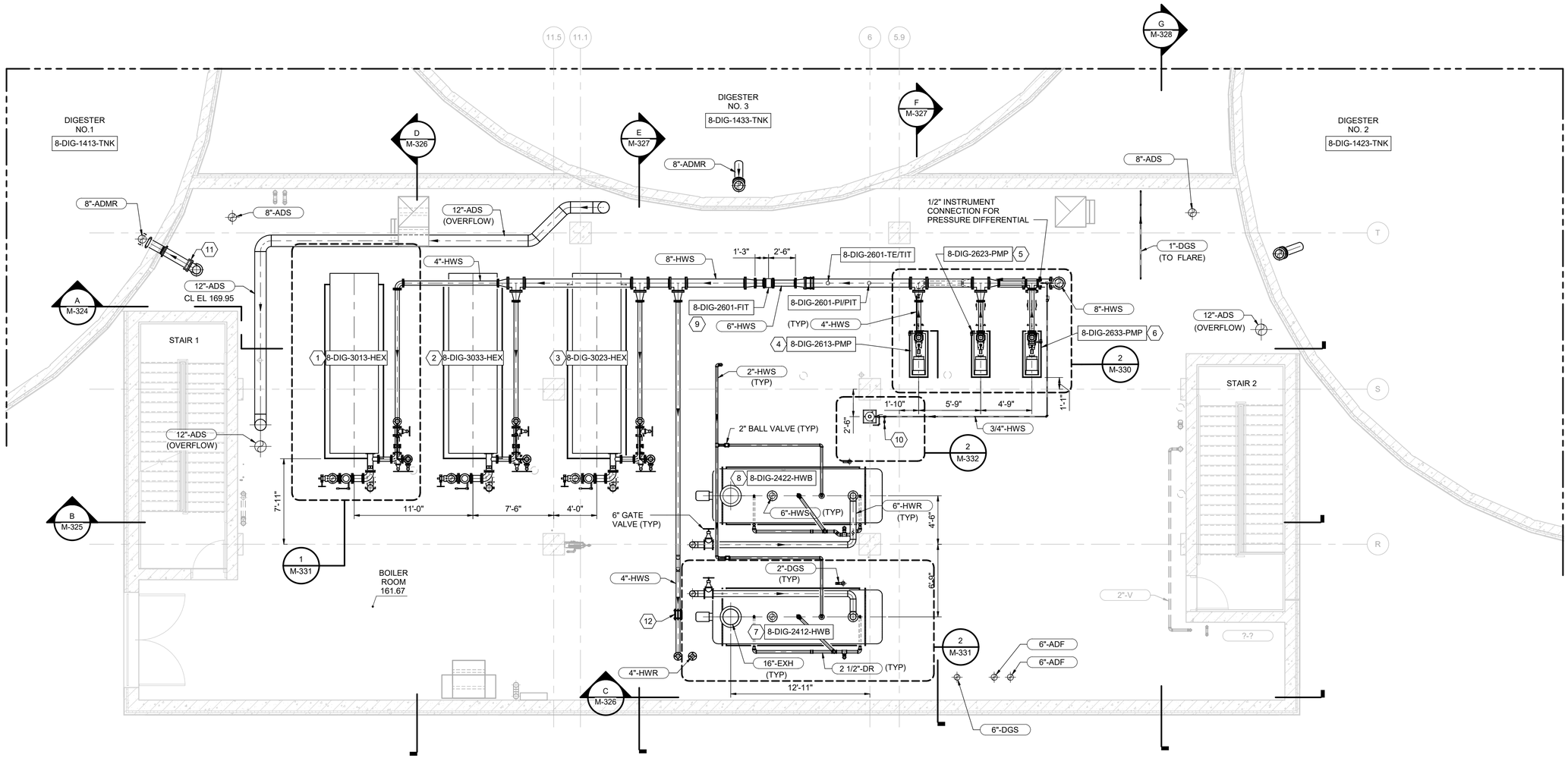

PLAN AT EL 161.67

3/16" = 1'-0"

GENERAL NOTES

1. FOR CLARITY, TANK SECTION REFERENCE LINES ARE NOT SHOWN. SEE 300 SERIES SHEETS FOR DIGESTER TANK SECTIONS.
2. TO ALLOW FOR DIFFERENTIAL SETTLING, (2) RESTRAINED FLEXIBLE COUPLINGS SHALL BE INSTALLED AT ALL LOCATIONS WHERE PIPING IN THE DIGESTER BUILDING PASSES INTO THE DIGESTER OR INTO PIPE GALLERY. PIPING SHALL NOT BE CONNECTED TO DIGESTER PENETRATIONS UNTIL AFTER TANKS ARE LEAK TESTED.

KEY NOTES (X)

1	DIGESTER HEAT EXCHANGER NO. 1
2	DIGESTER HEAT EXCHANGER NO. 3
3	DIGESTER HEAT EXCHANGER NO. 2
4	HOT WATER SUPPLY PUMP NO. 1
5	HOT WATER SUPPLY PUMP NO. 2
6	HOT WATER SUPPLY PUMP NO. 3
7	HOT WATER BOILER NO. 1
8	HOT WATER BOILER NO. 2
9	6" FLOW METER
10	ROUTE TO 8"-HWS ABOVE
11	PROVIDE FLEXIBLE CONNECTION USING ROMAC RFCA
12	RESTRAINED COMPRESSION SLEEVE COUPLING

THE DRAWINGS IN THIS SET ARE RECORD DRAWINGS. THEY ARE CONSTRUCTION CONTRACT DRAWINGS WHICH HAVE BEEN REVISED BASED ON AVAILABLE FIELD INFORMATION RECORDED BY OTHERS DURING CONSTRUCTION OF THIS CONTRACT. THERE HAS BEEN NO VERIFICATION OF DIMENSIONS SHOWN ON THE CONSTRUCTION DRAWINGS OR THE ACCURACY/COMPLETENESS OF THE FIELD INFORMATION RECEIVED.

SIGNATURE — DATE 2/7/2023

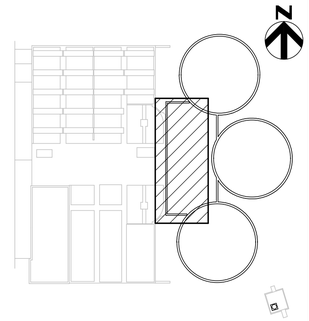

KEY PLAN

AS-BUILT REPLACEMENT SHEET

PROFESSIONAL CERTIFICATION

THIS DRAWING WAS ORIGINALLY APPROVED FOR CONSTRUCTION AND SEALED BY BRIAN M. BACLCHUNAS, A REGISTERED PROFESSIONAL ENGINEER IN THE STATE OF MARYLAND, NO. 200406

NOTICE TO CONTRACTORS

- PROJECT ELEVATIONS ARE BASED ON NAVD88 AND HOWARD COUNTY'S BENCHMARK SYSTEM
- PREVIOUS PROJECTS USED OTHER DATUMS
- APPLY THE FOLLOWING CONVERSIONS WHEN USING PREVIOUS CONTRACT DRAWINGS:
  - ADDITION NO. 6: SUBTRACT 0.80 FT
  - PRIOR ADDITIONS: SUBTRACT 1.04 FT

DEPARTMENT OF PUBLIC WORKS
HOWARD COUNTY, MARYLAND

CHIEF, BUREAU OF UTILITIES — DATE

DES: JRM
DRN: SLB
CHK: JRK
DATE: 12/2016

DATE	REV	DESCRIPTION
07/2019		RECORD DRAWING

PROCESS

DIGESTER BUILDING BOILER ROOM PLAN AT EL 161.50

LITTLE PATUXENT WATER RECLAMATION PLANT
8TH ADDITION
BIOSOLIDS PROCESSING FACILITIES - PHASE I

CAPITAL PROJECT S-6295
CONTRACT NO. 24-4935

ELECTION DISTRICT NO. 6
HOWARD COUNTY, MARYLAND

SCALE AS SHOWN

SHEET 216 OF 463

M-322

BIM 360://10054364 – Little Patuxent WRP 8th Addition/264591_300_D_V18.rvt
1/11/2022 3:04:12 PM

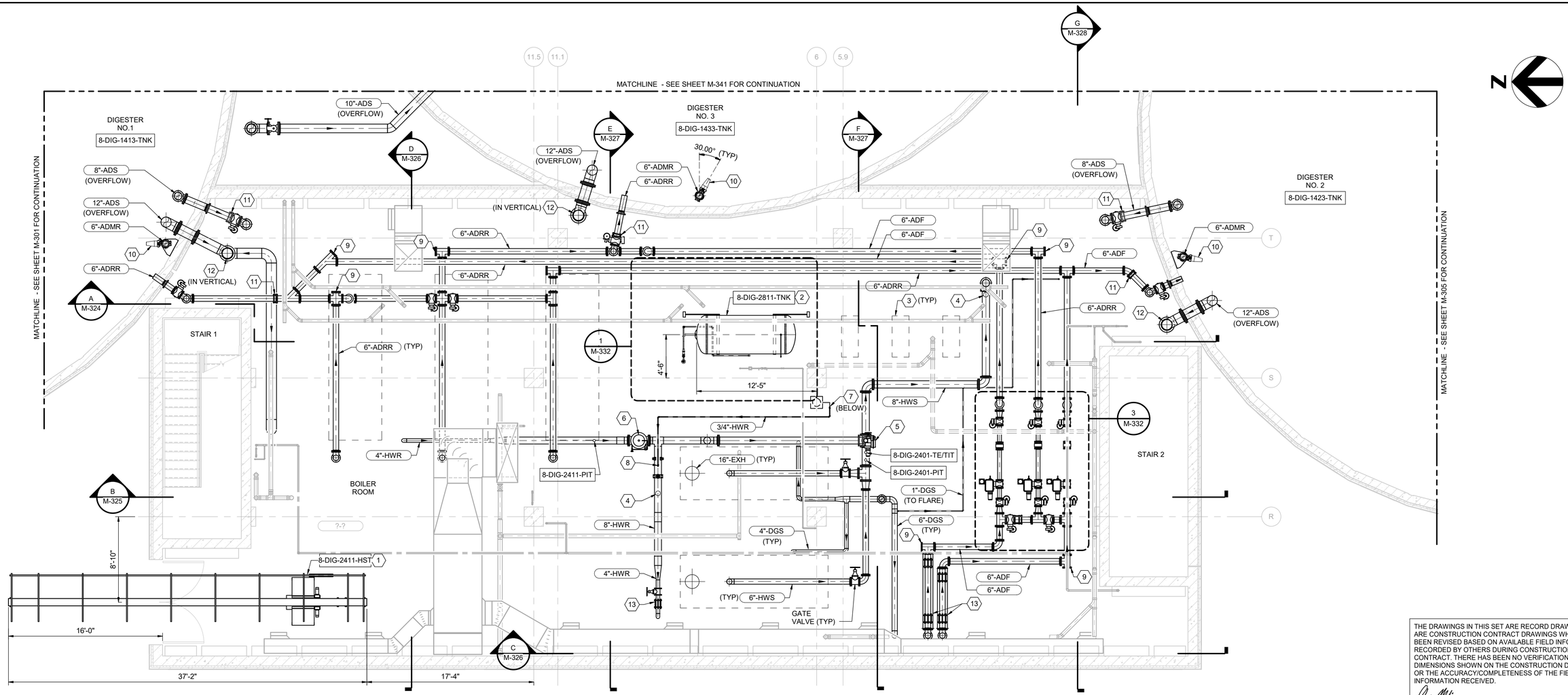

UPPER PLAN AT EL 170.75

3/16" = 1'-0"

GENERAL NOTES

1. FOR CLARITY, TANK SECTION REFERENCE LINES ARE NOT SHOWN. SEE 300 SERIES SHEETS FOR DIGESTER TANK SECTIONS.

   TO ALLOW FOR DIFFERENTIAL SETTLING,
2. (2) RESTRAINED FLEXIBLE COUPLINGS SHALL BE INSTALLED AT ALL LOCATIONS WHERE PIPING IN THE DIGESTER BUILDING PASSES INTO THE DIGESTER OR INTO PIPE GALLERY. PIPING SHALL NOT BE CONNECTED TO DIGESTER PENETRATIONS UNTIL AFTER TANKS ARE LEAK TESTED.

KEY NOTES (X)

1 MONORAIL HOIST AND TROLLEY, COORDINATE CONNECTIONS WITH PRECAST BUILDING
2 EXPANSION TANK
3 EQUIPMENT OUTLINE FOR REFERENCE
4 1" WATER AUTOMATIC RELEASE VALVE ON TOP OF 1" MANUAL BALL VALVE
5 8" 3-WAY PLUG VALVE (MIXING VALVE)
6 8" PRESSURE REDUCING VALVE
7 BYPASS CHEMICAL FEEDER
8 3/4"-HWS CONNECTION FROM BYPASS CHEMICAL FEEDER
9 FLUSHING CONNECTION, SEE DETAIL 2/M-902. ROUTE PIPE TO WALL OR COLUMN WITH QUICK CONNECT AND BALL VALVE AT 3'-6" AFF.
10 MIXING NOZZLE
11 PROVIDE FLEXIBLE CONNECTION USING ROMAC RFCA
12 12" SST BELLOWS EXPANSION JOINT TO ALLOW UP TO 1/2" VERTICAL DISPLACEMENT
13 RESTRAINED COMPRESSION SLEEVE COUPLING

THE DRAWINGS IN THIS SET ARE RECORD DRAWINGS. THEY ARE CONSTRUCTION CONTRACT DRAWINGS WHICH HAVE BEEN REVISED BASED ON AVAILABLE FIELD INFORMATION RECORDED BY OTHERS DURING CONSTRUCTION OF THIS CONTRACT. THERE HAS BEEN NO VERIFICATION OF DIMENSIONS SHOWN ON THE CONSTRUCTION DRAWINGS OR THE ACCURACY/COMPLETENESS OF THE FIELD INFORMATION RECEIVED.

SIGNATURE — DATE 2/7/2023

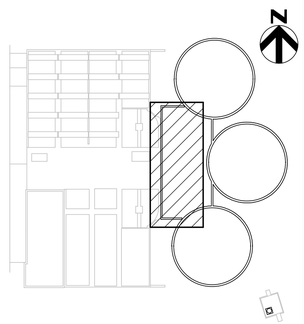

KEY PLAN

BIM 360://10054364 – Little Patuxent WRP 8th Addition/264591_300_D_Y18.rvt
1/11/2022 3:04:20 PM

	HDR	AS-BUILT REPLACEMENT SHEET	PROFESSIONAL CERTIFICATION THIS DRAWING WAS ORIGINALLY APPROVED FOR CONSTRUCTION AND SEALED BY BRIAN M. BACLCHUNAS, A REGISTERED PROFESSIONAL ENGINEER IN THE STATE OF MARYLAND, NO. 200406	NOTICE TO CONTRACTORS • PROJECT ELEVATIONS ARE BASED ON NAVD88 AND HOWARD COUNTY'S BENCHMARK SYSTEM • PREVIOUS PROJECTS USED OTHER DATUMS • APPLY THE FOLLOWING CONVERSIONS WHEN USING PREVIOUS CONTRACT DRAWINGS: - ADDITION NO. 6: SUBTRACT 0.80 FT - PRIOR ADDITIONS: SUBTRACT 1.04 FT	DEPARTMENT OF PUBLIC WORKS HOWARD COUNTY, MARYLAND CHIEF, BUREAU OF UTILITIES DATE	DES: JRM DRN: SLB CHK: JRK DATE: 12/2016	07/2019 — RECORD DRAWING DATE / REV / DESCRIPTION	PROCESS DIGESTER BUILDING BOILER ROOM PLAN AT EL 170.75	LITTLE PATUXENT WATER RECLAMATION PLANT 8TH ADDITION BIOSOLIDS PROCESSING FACILITIES - PHASE I CAPITAL PROJECT S-6295 CONTRACT NO. 24-4935 ELECTION DISTRICT NO. 6 HOWARD COUNTY, MARYLAND	SCALE AS SHOWN SHEET 217 OF 463 M-323

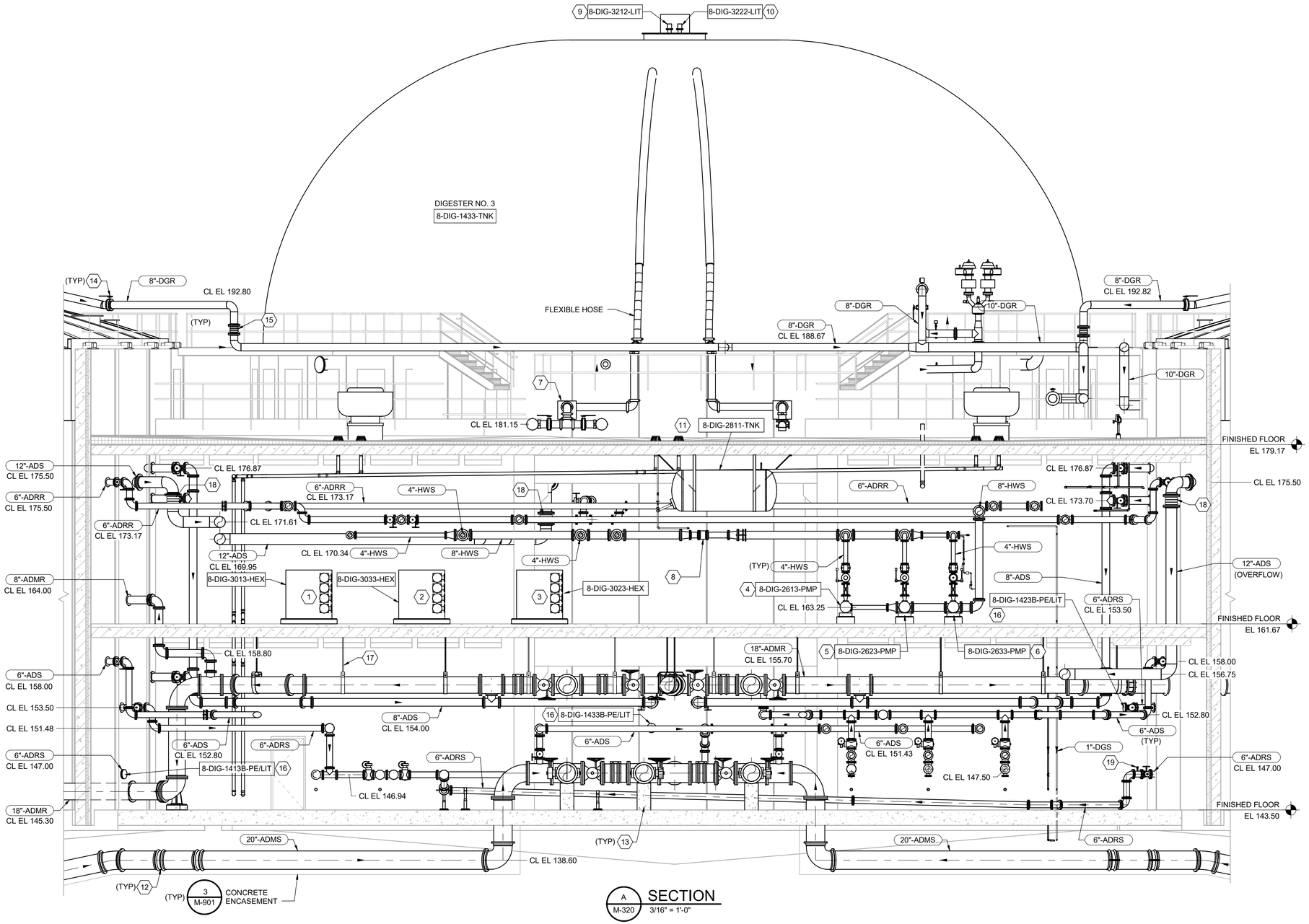

GENERAL NOTES

1. ALL PENETRATONS IN PRECAST WALLS SHALL BE CAST-IN, FLANGED WALL PIPE. SEE DETAIL 4/M-900.

KEY NOTES (X)

1	DIGESTER HEAT EXCHANGER NO. 1
2	DIGESTER HEAT EXCHANGER NO. 3
3	DIGESTER HEAT EXCHANGER NO. 2
4	HOT WATER SUPPLY PUMP NO. 1
5	HOT WATER SUPPLY PUMP NO. 2
6	HOT WATER SUPPLY PUMP NO. 3
7	FLAME ARRESTOR
8	6" FLOW METER
9	LASER LEVEL SENSOR NO. 1
10	LASER LEVEL SENSOR NO. 2
11	EXPANSION TANK
12	RESTRAINED FLEXIBLE COUPLING
13	WALL PIPE WITH CONCRETE SUPPORT, SEE DETAIL 4A/M-905.
14	8" BUTTERFLY VALVE
15	8" SST BELLOWS EXPANSION JOINT TO ALLOW UP TO 1/2" VERTICAL DISPLACEMENT
16	PRESSURE-BASED LEVEL ELEMENT FOR DIGESTER TANKS. SEE DETAIL 4/I-910
17	HANGER PIPE SUPPORT, SEE DETAIL 4/M-906. MAXIMUM SPACING 10'-0" OC. STRUCTURE TO SUPPORT 5000# SERVICE LOAD AT EACH HANGER LOCATION
18	12" SST BELLOWS EXPANSION JOINT TO ALLOW UP TO 1/2" VERTICAL DISPLACEMENT
19	MANUAL BALL VALVE FOR AIR RELEASE.

THE DRAWINGS IN THIS SET ARE RECORD DRAWINGS. THEY ARE CONSTRUCTION CONTRACT DRAWINGS WHICH HAVE BEEN REVISED BASED ON AVAILABLE FIELD INFORMATION RECORDED BY OTHERS DURING CONSTRUCTION OF THIS CONTRACT. THERE HAS BEEN NO VERIFICATION OF DIMENSIONS SHOWN ON THE CONSTRUCTION DRAWINGS OR THE ACCURACY/COMPLETENESS OF THE FIELD INFORMATION RECEIVED.

SIGNATURE — DATE 2/7/2023

AS-BUILT REPLACEMENT SHEET

PROFESSIONAL CERTIFICATION

THIS DRAWING WAS ORIGINALLY APPROVED FOR CONSTRUCTION AND SEALED BY BRIAN M. BACLCHUNAS, A REGISTERED PROFESSIONAL ENGINEER IN THE STATE OF MARYLAND, NO. 200406

NOTICE TO CONTRACTORS

- PROJECT ELEVATIONS ARE BASED ON NAVD88 AND HOWARD COUNTY'S BENCHMARK SYSTEM
- PREVIOUS PROJECTS USED OTHER DATUMS
- APPLY THE FOLLOWING CONVERSIONS WHEN USING PREVIOUS CONTRACT DRAWINGS:
  - ADDITION NO. 6: SUBTRACT 0.80 FT
  - PRIOR ADDITIONS: SUBTRACT 1.04 FT

DEPARTMENT OF PUBLIC WORKS
HOWARD COUNTY, MARYLAND

CHIEF, BUREAU OF UTILITIES — DATE

DES: MJW/JRM
DRN: SLB
CHK: JRK
DATE: 12/2016

DATE	REV	DESCRIPTION
07/2019		RECORD DRAWING

PROCESS

DIGESTER BUILDING SECTIONS 1

LITTLE PATUXENT WATER RECLAMATION PLANT
8TH ADDITION
BIOSOLIDS PROCESSING FACILITIES - PHASE I

CAPITAL PROJECT S-6295
CONTRACT NO. 24-4935

ELECTION DISTRICT NO. 6
HOWARD COUNTY, MARYLAND

SCALE AS SHOWN

SHEET 218 OF 463

M-324

BIM 360://10054364 – Little Patuxent WRP 8th Addition/264591_300_D_V18.rvt
1/11/2022 3:04:26 PM

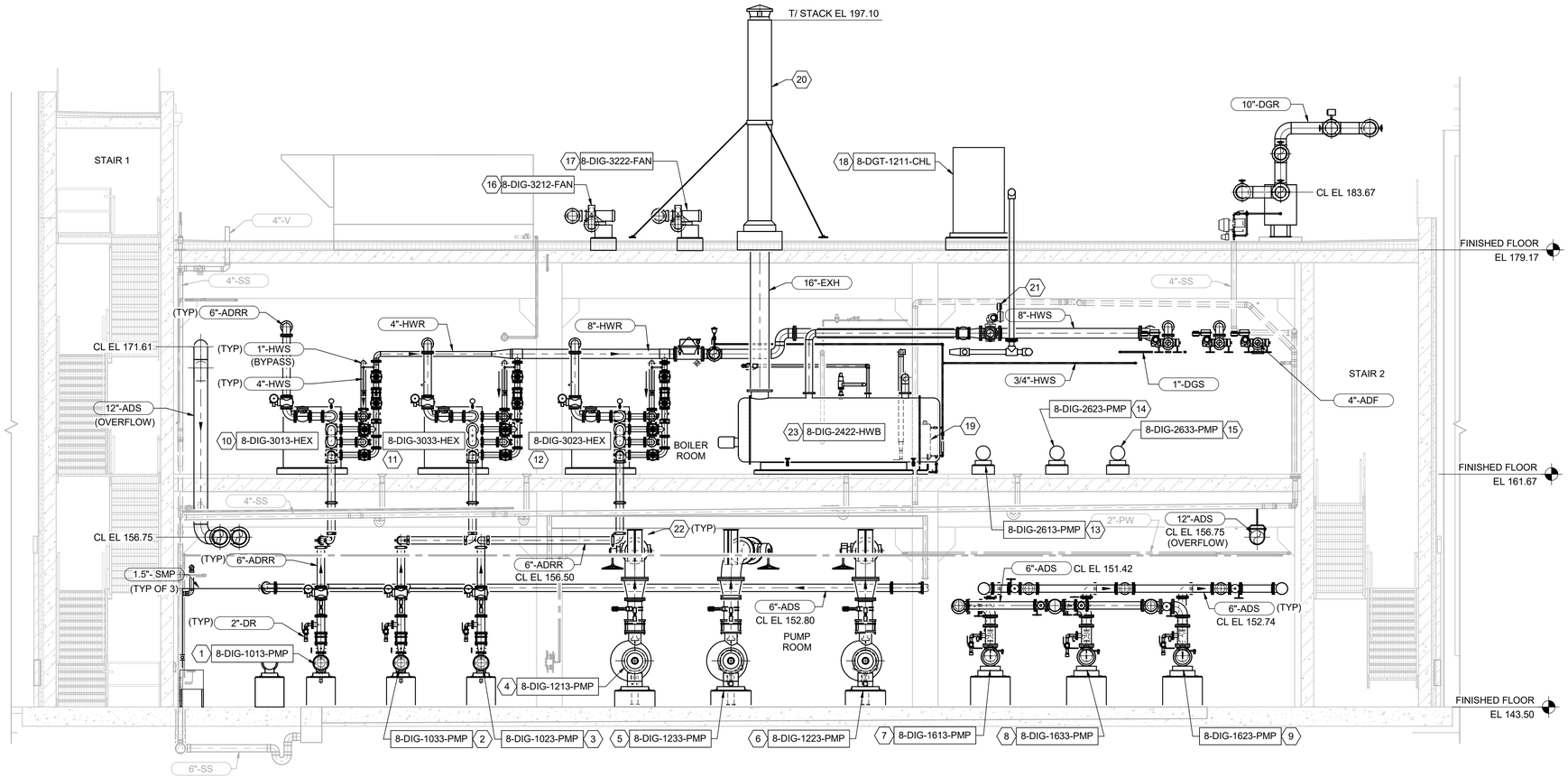

B / M-320 SECTION
3/16" = 1'-0"

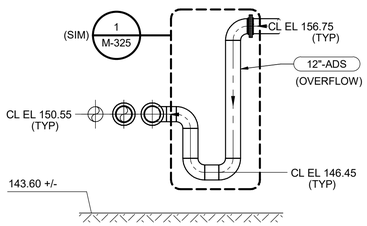

C / M-320 SECTION
3/16" = 1'-0"

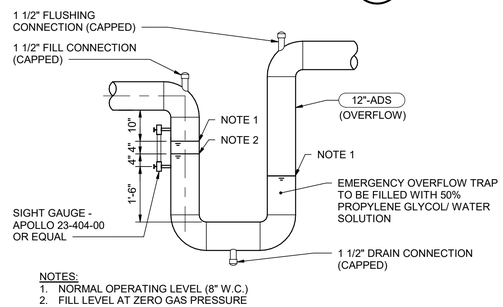

NOTES:
1. NORMAL OPERATING LEVEL (8" W.C.)
2. FILL LEVEL AT ZERO GAS PRESSURE

1 / - DIGESTER EMERGENCY OVERFLOW TRAP DETAIL
1/2" = 1'-0"

GENERAL NOTES

1. ALL PENETRATONS IN PRECAST WALLS SHALL BE CAST-IN, FLANGED WALL PIPE. SEE DETAIL 4/M-900.

KEY NOTES (X)

1 DIGESTER RECIRCULATION PUMP NO. 1
2 DIGESTER RECIRCULATION PUMP NO. 3
3 DIGESTER RECIRCULATION PUMP NO. 2
4 MIXING PUMP NO. 1
5 MIXING PUMP NO. 3
6 MIXING PUMP NO. 2
7 ANAEROBIC DIGESTER TRANSFER PUMP NO. 1
8 ANAEROBIC DIGESTER TRANSFER PUMP NO. 3
9 ANAEROBIC DIGESTER TRANSFER PUMP NO. 2
10 DIGESTER HEAT EXCHANGER NO. 1
11 DIGESTER HEAT EXCHANGER NO. 3
12 DIGESTER HEAT EXCHANGER NO. 2
13 HOT WATER SUPPLY PUMP NO. 1
14 HOT WATER SUPPLY PUMP NO. 2
15 HOT WATER SUPPLY PUMP NO. 3
16 GAS STORAGE FAN NO. 1
17 GAS STORAGE FAN NO. 2
18 GLYCOL CHILLER
19 BYPASS CHEMICAL FEEDER
20 STEAM BOILER STACK NO. 1
21 8" 3-WAY PLUG VALVE (MIXING VALVE)
22 HANGER PIPE SUPPORT, SEE DETAIL 4/M-906. MAXIMUM SPACING 10'-0" OC. STRUCTURE TO SUPPORT 5000# SERVICE LOAD AT EACH HANGER LOCATION
23 HOT WATER BOILER NO. 2

THE DRAWINGS IN THIS SET ARE RECORD DRAWINGS. THEY ARE CONSTRUCTION CONTRACT DRAWINGS WHICH HAVE BEEN REVISED BASED ON AVAILABLE FIELD INFORMATION RECORDED BY OTHERS DURING CONSTRUCTION OF THIS CONTRACT. THERE HAS BEEN NO VERIFICATION OF DIMENSIONS SHOWN ON THE CONSTRUCTION DRAWINGS OR THE ACCURACY/COMPLETENESS OF THE FIELD INFORMATION RECEIVED.

SIGNATURE 2/7/2023 DATE

AS-BUILT REPLACEMENT SHEET

PROFESSIONAL CERTIFICATION

THIS DRAWING WAS ORIGINALLY APPROVED FOR CONSTRUCTION AND SEALED BY BRIAN M. BACLCHUNAS, A REGISTERED PROFESSIONAL ENGINEER IN THE STATE OF MARYLAND, NO. 200406

NOTICE TO CONTRACTORS

- PROJECT ELEVATIONS ARE BASED ON NAVD88 AND HOWARD COUNTY'S BENCHMARK SYSTEM
- PREVIOUS PROJECTS USED OTHER DATUMS
- APPLY THE FOLLOWING CONVERSIONS WHEN USING PREVIOUS CONTRACT DRAWINGS:
  - ADDITION NO. 6: SUBTRACT 0.80 FT
  - PRIOR ADDITIONS: SUBTRACT 1.04 FT

DEPARTMENT OF PUBLIC WORKS
HOWARD COUNTY, MARYLAND

CHIEF, BUREAU OF UTILITIES DATE

DES: MJW/JRM
DRN: SLB
CHK: JRK
DATE: 12/2016

DATE	REV	DESCRIPTION
07/2019		RECORD DRAWING

PROCESS

DIGESTER BUILDING SECTIONS 2

LITTLE PATUXENT WATER RECLAMATION PLANT
8TH ADDITION
BIOSOLIDS PROCESSING FACILITIES - PHASE I

CAPITAL PROJECT S-6295
CONTRACT NO. 24-4935

ELECTION DISTRICT NO. 6
HOWARD COUNTY, MARYLAND

SCALE AS SHOWN

SHEET 219 OF 463

M-325

BIM 360://10054364 – Little Patuxent WRP 8th Addition/264591_300_D_V18.rvt
1/11/2022 3:04:36 PM

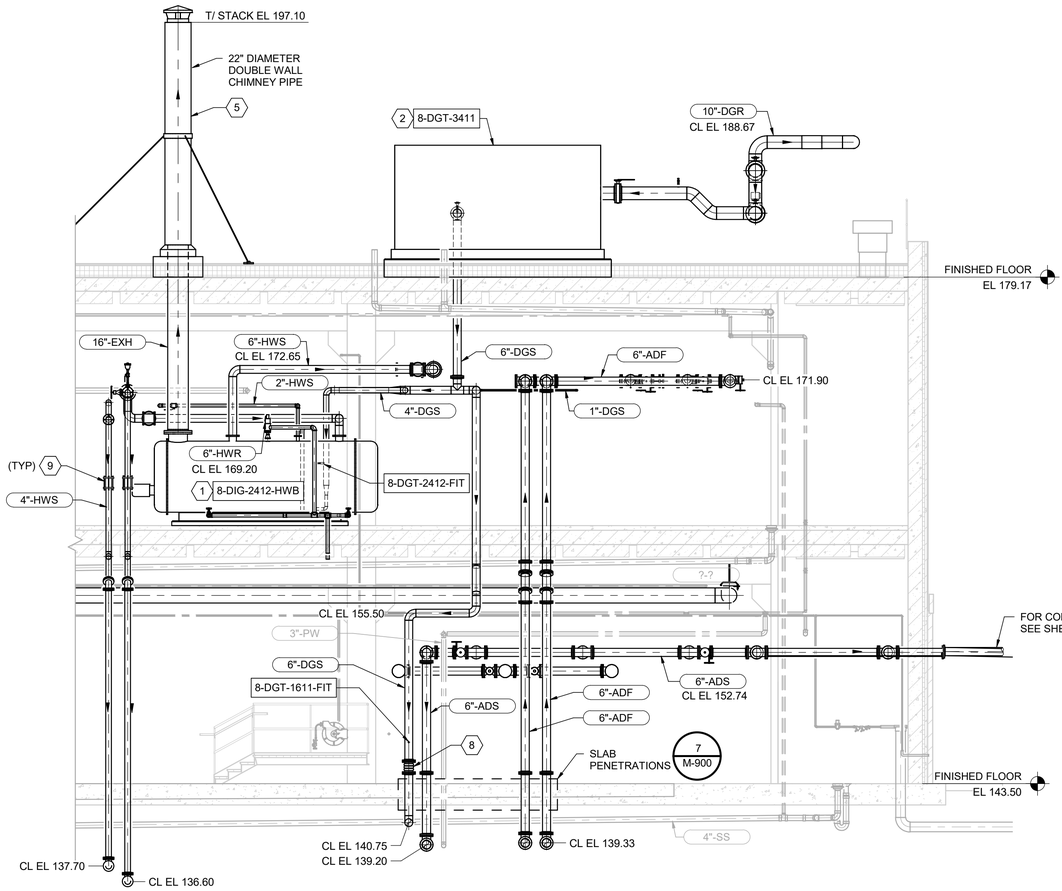

C M-320 SECTION
3/16" = 1'-0"

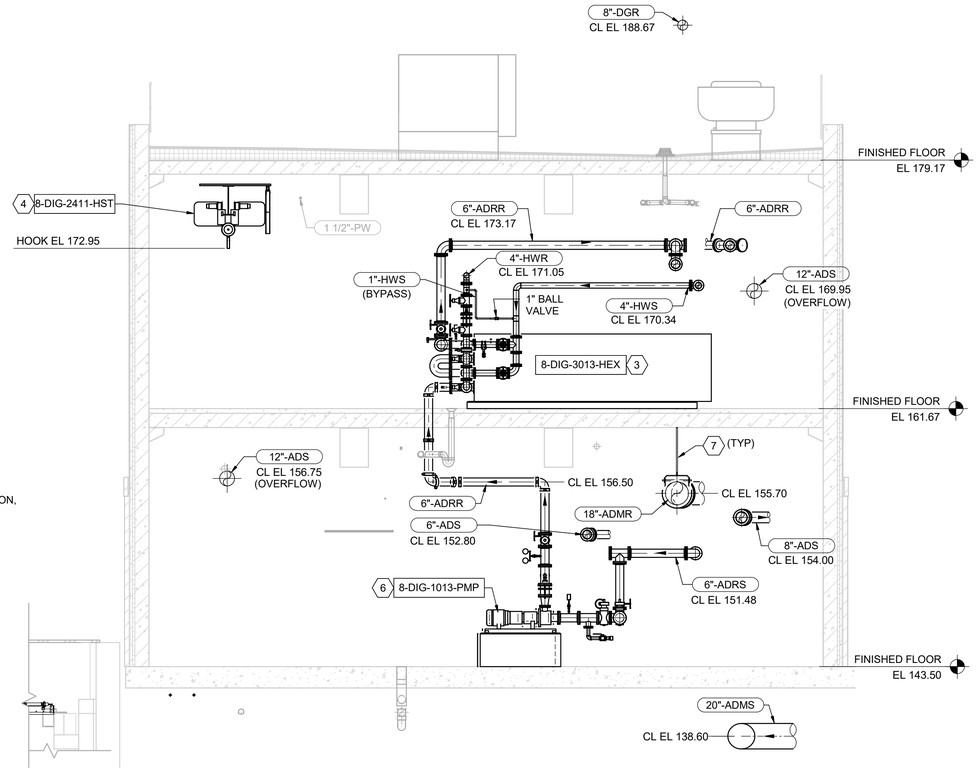

D M-320 SECTION
3/16" = 1'-0"

KEY NOTES (X)

1 HOT WATER BOILER NO. 1
2 GAS COMPRESSION MOISTURE REMOVAL SYSTEM
3 DIGESTER HEAT EXCHANGER NO. 1
4 MONORAIL HOIST AND TROLLEY, COORDINATE CONNECTIONS WITH PRECAST BUILDING
5 STEAM BOILER STACK NO. 1
6 DIGESTER RECIRCULATION PUMP NO. 1
7 HANGER PIPE SUPPORT, SEE DETAIL 4/M-906. MAXIMUM SPACING 10'-0" OC. STRUCTURE TO SUPPORT 5000# SERVICE LOAD AT EACH HANGER LOCATION
8 6" SST BELLOWS EXPANSION JOINT TO ALLOW UP TO 1/2" VERTICAL DISPLACEMENT
9 RESTRAINED COMPRESSION SLEEVE COUPLING

THE DRAWINGS IN THIS SET ARE RECORD DRAWINGS. THEY ARE CONSTRUCTION CONTRACT DRAWINGS WHICH HAVE BEEN REVISED BASED ON AVAILABLE FIELD INFORMATION RECORDED BY OTHERS DURING CONSTRUCTION OF THIS CONTRACT. THERE HAS BEEN NO VERIFICATION OF DIMENSIONS SHOWN ON THE CONSTRUCTION DRAWINGS OR THE ACCURACY/COMPLETENESS OF THE FIELD INFORMATION RECEIVED.

SIGNATURE — DATE 2/7/2023

AS-BUILT REPLACEMENT SHEET

PROFESSIONAL CERTIFICATION

THIS DRAWING WAS ORIGINALLY APPROVED FOR CONSTRUCTION AND SEALED BY BRIAN M. BACLCHUNAS, A REGISTERED PROFESSIONAL ENGINEER IN THE STATE OF MARYLAND, NO. 200406

NOTICE TO CONTRACTORS

- PROJECT ELEVATIONS ARE BASED ON NAVD88 AND HOWARD COUNTY'S BENCHMARK SYSTEM
- PREVIOUS PROJECTS USED OTHER DATUMS
- APPLY THE FOLLOWING CONVERSIONS WHEN USING PREVIOUS CONTRACT DRAWINGS:
  - ADDITION NO. 6: SUBTRACT 0.80 FT
  - PRIOR ADDITIONS: SUBTRACT 1.04 FT

DEPARTMENT OF PUBLIC WORKS
HOWARD COUNTY, MARYLAND

CHIEF, BUREAU OF UTILITIES — DATE

DES: MJW/JRM
DRN: SLB
CHK: JRK
DATE: 12/2016

DATE	REV	DESCRIPTION
07/2019		RECORD DRAWING

PROCESS

DIGESTER BUILDING SECTIONS 3

LITTLE PATUXENT WATER RECLAMATION PLANT
8TH ADDITION
BIOSOLIDS PROCESSING FACILITIES - PHASE I

CAPITAL PROJECT S-6295
CONTRACT NO. 24-4935

ELECTION DISTRICT NO. 6
HOWARD COUNTY, MARYLAND

SCALE AS SHOWN

SHEET 220 OF 463

M-326

BIM 360://10054364 – Little Patuxent WRP 8th Addition/264591_300_D_V18.rvt
1/11/2022 3:04:44 PM

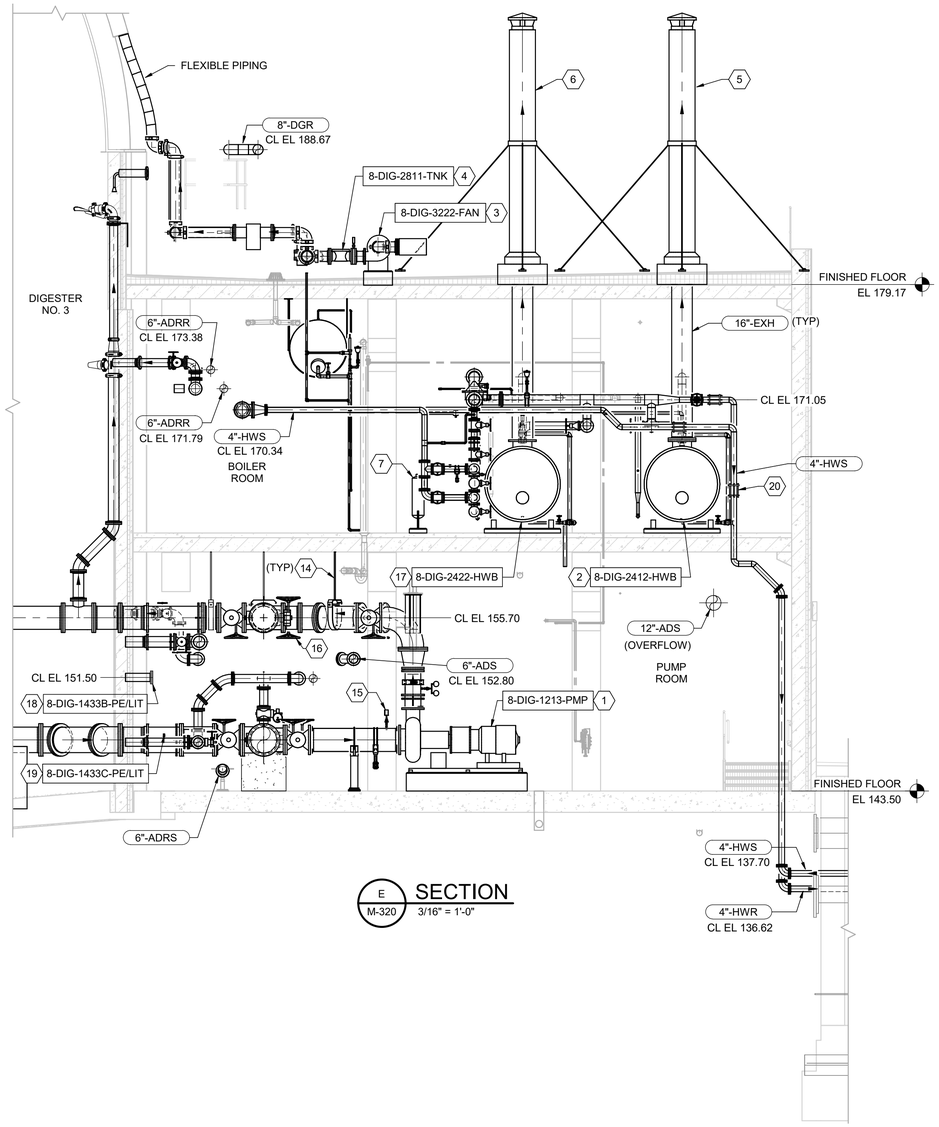

E M-320 SECTION
3/16" = 1'-0"

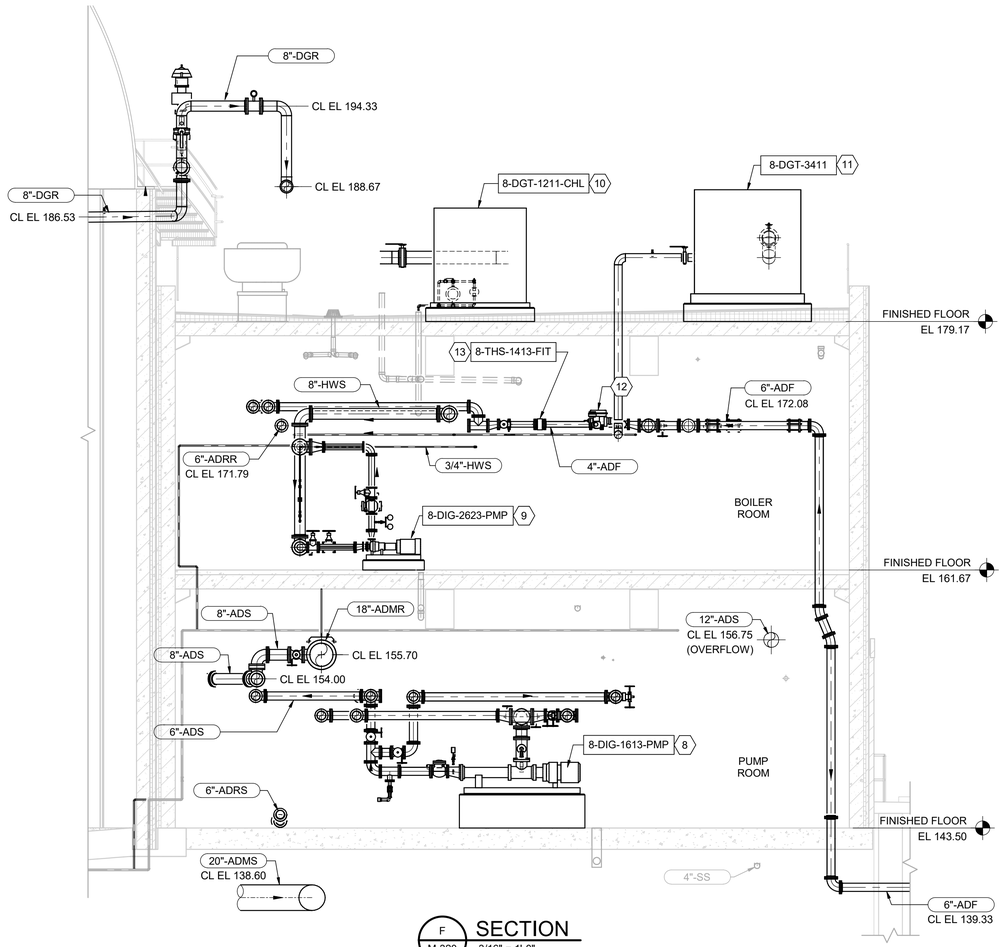

F M-320 SECTION
3/16" = 1'-0"

GENERAL NOTES

1. ALL PENETRATONS IN PRECAST WALLS SHALL BE CAST-IN, FLANGED WALL PIPE. SEE DETAIL 4/M-900.

KEY NOTES (X)

1 MIXING PUMP NO. 1
2 HOT WATER BOILER NO. 1
3 GAS STORAGE FAN NO. 2
4 EXPANSION TANK
5 STEAM BOILER STACK NO. 1
6 STEAM BOILER STACK NO. 2
7 BYPASS CHEMICAL FEEDER
8 ANAEROBIC DIGESTER TRANSFER PUMP NO. 1
9 HOT WATER SUPPLY PUMP NO. 2
10 GLYCOL CHILLER
11 GAS COMPRESSION MOISTURE REMOVAL SYSTEM
12 4" MOTORIZED PLUG VALVE
13 4" FLOW METER
14 HANGER PIPE SUPPORT, SEE DETAIL 4/M-906. MAXIMUM SPACING 10'-0" OC. STRUCTURE TO SUPPORT 5000# SERVICE LOAD AT EACH HANGER LOCATION
15 PRESSURE SWITCH AND GAUGE. SEE DETAIL 1/I-910
16 PLUG VALVE IN COMMON HEADER ALLOWING PUMP NO. 3 TO SERVE AS SWING PUMP.
17 HOT WATER BOILER NO. 2
18 PRESSURE-BASED LEVEL ELEMENT FOR DIGESTER TANKS. SEE DETAIL 4/I-910
19 PRESSURE INDICATING TRANSMITTER, SEE DETAIL 2/M-910.
20 RESTRAINED COMPRESSION SLEEVE COUPLING

THE DRAWINGS IN THIS SET ARE RECORD DRAWINGS. THEY ARE CONSTRUCTION CONTRACT DRAWINGS WHICH HAVE BEEN REVISED BASED ON AVAILABLE FIELD INFORMATION RECORDED BY OTHERS DURING CONSTRUCTION OF THIS CONTRACT. THERE HAS BEEN NO VERIFICATION OF DIMENSIONS SHOWN ON THE CONSTRUCTION DRAWINGS OR THE ACCURACY/COMPLETENESS OF THE FIELD INFORMATION RECEIVED.

SIGNATURE _____ DATE 2/7/2023

AS-BUILT REPLACEMENT SHEET

PROFESSIONAL CERTIFICATION

THIS DRAWING WAS ORIGINALLY APPROVED FOR CONSTRUCTION AND SEALED BY BRIAN M. BACLCHUNAS, A REGISTERED PROFESSIONAL ENGINEER IN THE STATE OF MARYLAND, NO. 200406

NOTICE TO CONTRACTORS

- PROJECT ELEVATIONS ARE BASED ON NAVD88 AND HOWARD COUNTY'S BENCHMARK SYSTEM
- PREVIOUS PROJECTS USED OTHER DATUMS
- APPLY THE FOLLOWING CONVERSIONS WHEN USING PREVIOUS CONTRACT DRAWINGS:
  - ADDITION NO. 6: SUBTRACT 0.80 FT
  - PRIOR ADDITIONS: SUBTRACT 1.04 FT

DEPARTMENT OF PUBLIC WORKS
HOWARD COUNTY, MARYLAND

CHIEF, BUREAU OF UTILITIES DATE

DES: MJW/JRM
DRN: SLB
CHK: JRK
DATE: 12/2016

DATE	REV	DESCRIPTION
07/2019		RECORD DRAWING

PROCESS

DIGESTER BUILDING
SECTIONS 4

LITTLE PATUXENT WATER RECLAMATION PLANT
8TH ADDITION
BIOSOLIDS PROCESSING FACILITIES - PHASE I

CAPITAL PROJECT S-6295
CONTRACT NO. 24-4935

ELECTION DISTRICT NO. 6
HOWARD COUNTY, MARYLAND

SCALE AS SHOWN

SHEET 221 OF 463

M-327

BIM 360://10054364 – Little Patuxent WRP 8th Addition/264591_300_D_V18.rvt
1/11/2022 3:04:57 PM

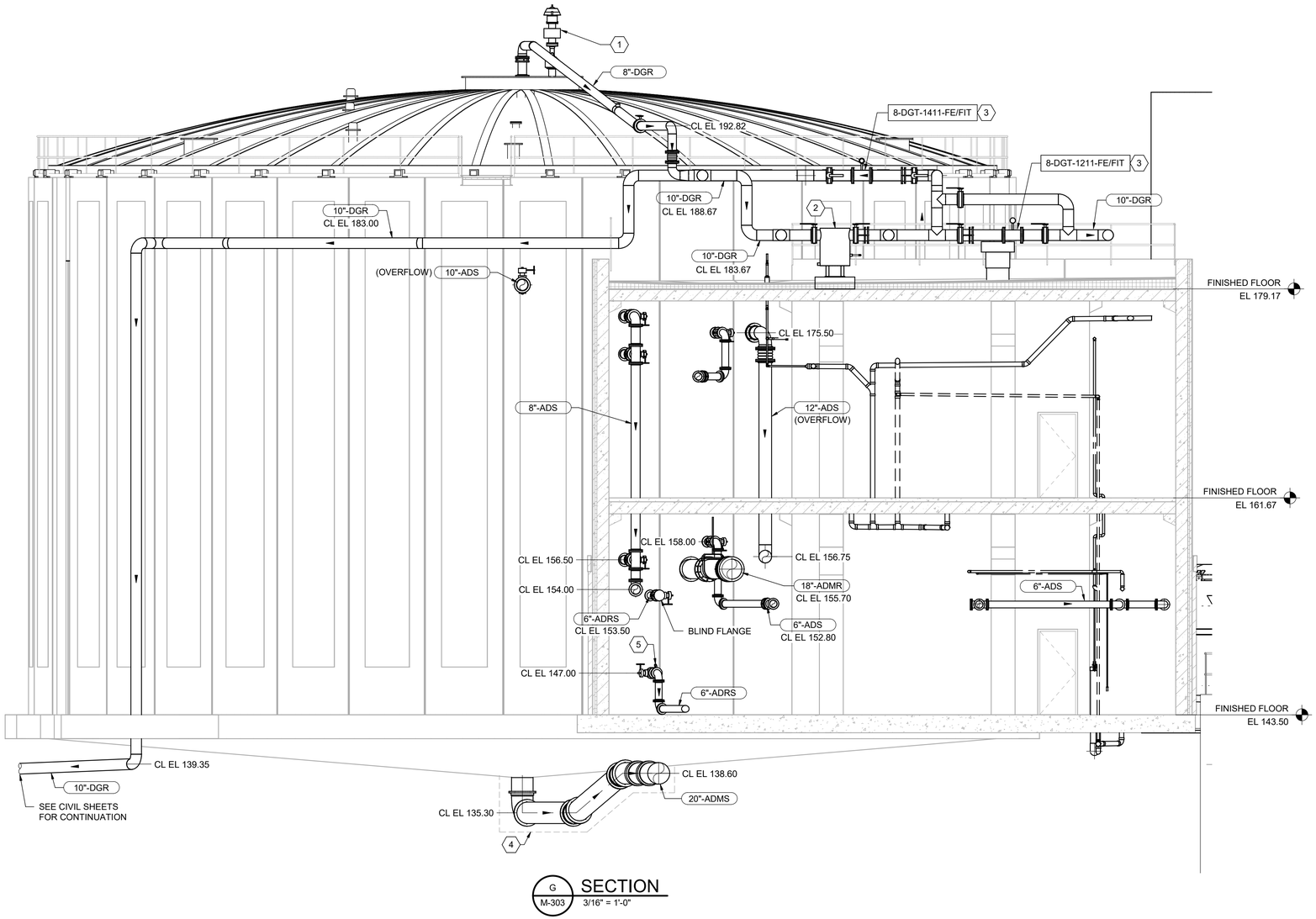

G / M-303 SECTION
3/16" = 1'-0"

N

GENERAL NOTES

1. ALL PENETRATONS IN PRECAST WALLS SHALL BE CAST-IN, FLANGED WALL PIPE. SEE DETAIL 4/M-900.

KEY NOTES (X)

1 GAS PRESSURE/ VACUUM RELIEF VALVE
2 BIOGAS SEDIMENT TRAP
3 MASS FLOW METER, SEE DETAIL 5/M-903. INSTALL FLOW CONDITIONER UPSTREAM.
4 CONCRETE ENCASEMENT, SEE DETAIL 3/M-901.
5 MANUAL BALL VALVE FOR AIR RELEASE.

THE DRAWINGS IN THIS SET ARE RECORD DRAWINGS. THEY ARE CONSTRUCTION CONTRACT DRAWINGS WHICH HAVE BEEN REVISED BASED ON AVAILABLE FIELD INFORMATION RECORDED BY OTHERS DURING CONSTRUCTION OF THIS CONTRACT. THERE HAS BEEN NO VERIFICATION OF DIMENSIONS SHOWN ON THE CONSTRUCTION DRAWINGS OR THE ACCURACY/COMPLETENESS OF THE FIELD INFORMATION RECEIVED.

SIGNATURE _____ DATE 2/7/2022

AS-BUILT REPLACEMENT SHEET

PROFESSIONAL CERTIFICATION

THIS DRAWING WAS ORIGINALLY APPROVED FOR CONSTRUCTION AND SEALED BY BRIAN M. BACLCHUNAS, A REGISTERED PROFESSIONAL ENGINEER IN THE STATE OF MARYLAND, NO. 20040 6

NOTICE TO CONTRACTORS

- PROJECT ELEVATIONS ARE BASED ON NAVD88 AND HOWARD COUNTY'S BENCHMARK SYSTEM
- PREVIOUS PROJECTS USED OTHER DATUMS
- APPLY THE FOLLOWING CONVERSIONS WHEN USING PREVIOUS CONTRACT DRAWINGS:
  - ADDITION NO. 6: SUBTRACT 0.80 FT
  - PRIOR ADDITIONS: SUBTRACT 1.04 FT

DEPARTMENT OF PUBLIC WORKS
HOWARD COUNTY, MARYLAND

CHIEF, BUREAU OF UTILITIES DATE

DES: MJW
DRN: SLB
CHK: JRK
DATE: 12/2016

DATE	REV	DESCRIPTION
07/2019		RECORD DRAWING

PROCESS

DIGESTER BUILDING SECTIONS 5

LITTLE PATUXENT WATER RECLAMATION PLANT
8TH ADDITION
BIOSOLIDS PROCESSING FACILITIES - PHASE I

CAPITAL PROJECT S-6295
CONTRACT NO. 24-4935

ELECTION DISTRICT NO. 6
HOWARD COUNTY, MARYLAND

SCALE AS SHOWN

SHEET 222 OF 463

M-328

BIM 360://10054364 – Little Patuxent WRP 8th Addition/264591_300_D_V18.rvt
1/11/2022 3:05:01 PM

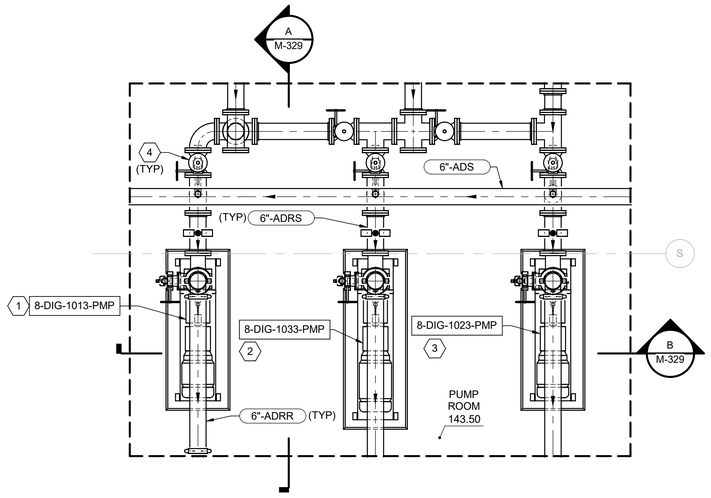

1 M-320 RECIRCULATION PUMPS DETAIL
3/8" = 1'-0"

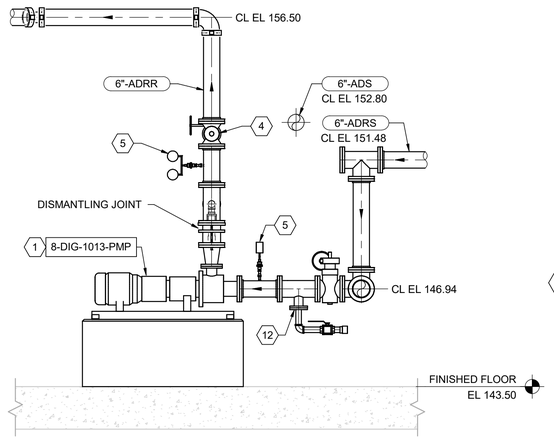

A M-329 SECTION
3/8" = 1'-0"

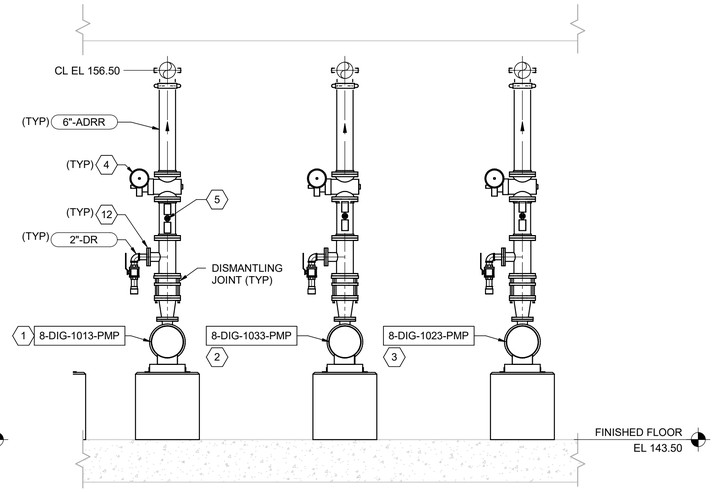

B M-329 SECTION
3/8" = 1'-0"

N

KEY NOTES (X)

1 DIGESTER RECIRCULATION PUMP NO. 1
2 DIGESTER RECIRCULATION PUMP NO. 3
3 DIGESTER RECIRCULATION PUMP NO. 2
4 6" PLUG VALVE
5 PRESSURE GAUGE AND SWITCH WITH DIAPHRAGM SEAL, SEE DETAIL 1/I-910
6 MIXING PUMP NO. 1
7 MIXING PUMP NO. 3
8 MIXING PUMP NO. 2
9 18" PLUG VALVE
10 HANGER PIPE SUPPORT, SEE DETAIL 4/M-906. MAXIMUM SPACING 10'-0" OC. STRUCTURE TO SUPPORT 5000# SERVICE LOAD AT EACH HANGER LOCATION
11 2" BALL VALVE
12 DRAIN CONNECTION SEE DETAIL 4/M-902.

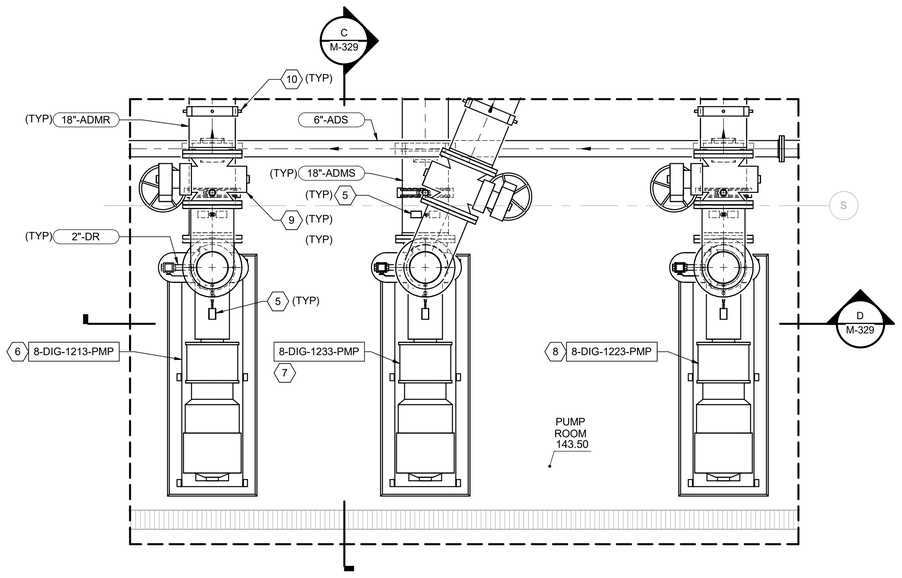

2 M-320 MIXING PUMPS DETAIL
3/8" = 1'-0"

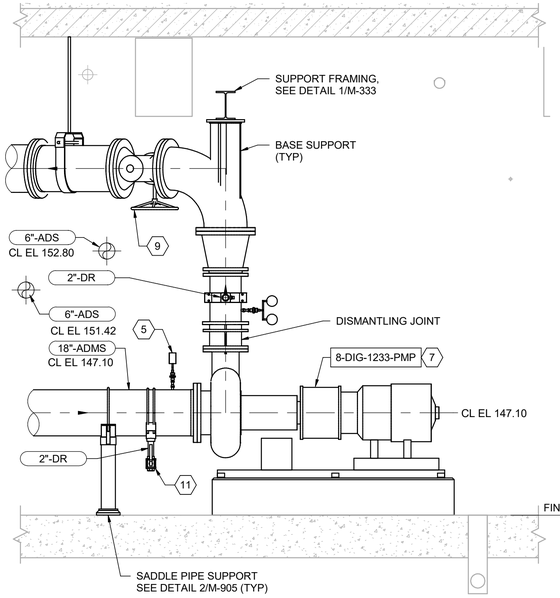

C M-329 SECTION
3/8" = 1'-0"

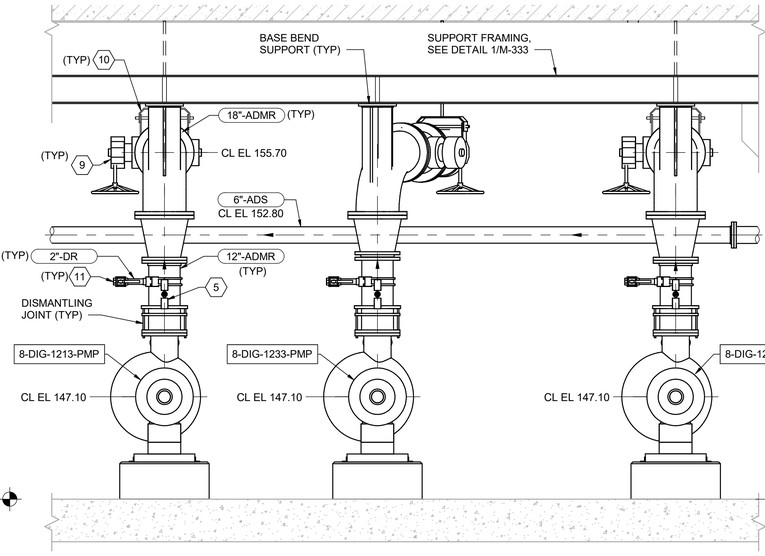

D M-329 SECTION
3/8" = 1'-0"

THE DRAWINGS IN THIS SET ARE RECORD DRAWINGS. THEY ARE CONSTRUCTION CONTRACT DRAWINGS WHICH HAVE BEEN REVISED BASED ON AVAILABLE FIELD INFORMATION RECORDED BY OTHERS DURING CONSTRUCTION OF THIS CONTRACT. THERE HAS BEEN NO VERIFICATION OF DIMENSIONS SHOWN ON THE CONSTRUCTION DRAWINGS OR THE ACCURACY/COMPLETENESS OF THE FIELD INFORMATION RECEIVED.

SIGNATURE — DATE 2/7/2023

AS-BUILT REPLACEMENT SHEET

PROFESSIONAL CERTIFICATION
THIS DRAWING WAS ORIGINALLY APPROVED FOR CONSTRUCTION AND SEALED BY BRIAN M. BACLCHUNAS, A REGISTERED PROFESSIONAL ENGINEER IN THE STATE OF MARYLAND, NO. 200406

NOTICE TO CONTRACTORS
- PROJECT ELEVATIONS ARE BASED ON NAVD88 AND HOWARD COUNTY'S BENCHMARK SYSTEM
- PREVIOUS PROJECTS USED OTHER DATUMS
- APPLY THE FOLLOWING CONVERSIONS WHEN USING PREVIOUS CONTRACT DRAWINGS:
  - ADDITION NO. 6: SUBTRACT 0.80 FT
  - PRIOR ADDITIONS: SUBTRACT 1.04 FT

DEPARTMENT OF PUBLIC WORKS
HOWARD COUNTY, MARYLAND

CHIEF, BUREAU OF UTILITIES — DATE

DES: JRM
DRN: SLB
CHK: JRK
DATE: 12/2016

DATE	REV	DESCRIPTION
07/2019		RECORD DRAWING

PROCESS

DIGESTER BUILDING DETAILS AND SECTIONS 1

LITTLE PATUXENT WATER RECLAMATION PLANT
8TH ADDITION
BIOSOLIDS PROCESSING FACILITIES - PHASE I

CAPITAL PROJECT S-6295
CONTRACT NO. 24-4935

ELECTION DISTRICT NO. 6
HOWARD COUNTY, MARYLAND

SCALE AS SHOWN

SHEET 223 OF 463

M-329

BIM 360://10054364 – Little Patuxent WRP 8th Addition/264591_300_D_V18.rvt
1/11/2022 3:05:10 PM

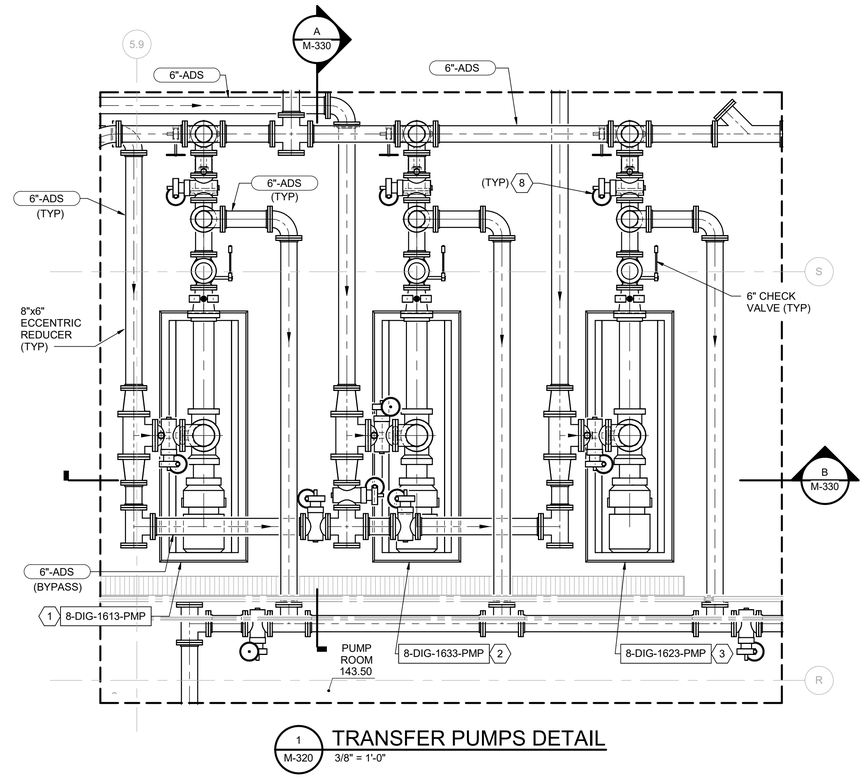

1 / M-320 TRANSFER PUMPS DETAIL
3/8" = 1'-0"

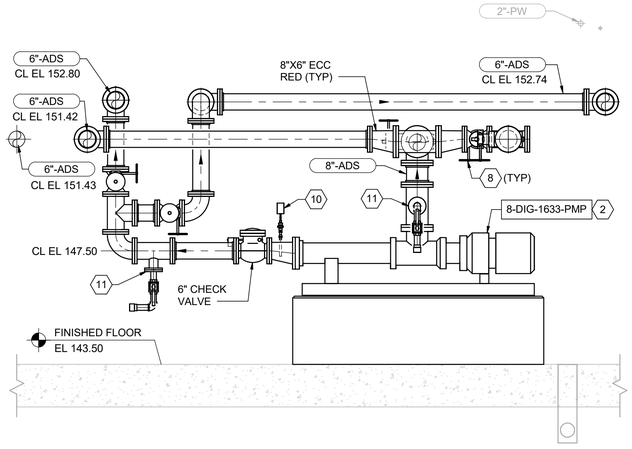

A / M-330 SECTION
3/8" = 1'-0"

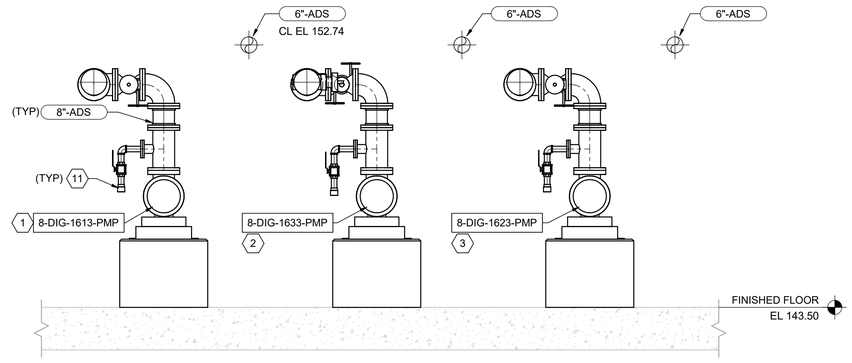

B / M-330 SECTION
3/8" = 1'-0"

KEY NOTES (X)

1 ANAEROBIC DIGESTER TRANSFER PUMP NO. 1
2 ANAEROBIC DIGESTER TRANSFER PUMP NO. 3
3 ANAEROBIC DIGESTER TRANSFER PUMP NO. 2
4 HOT WATER SUPPLY PUMP NO. 1
5 HOT WATER SUPPLY PUMP NO. 2
6 HOT WATER SUPPLY PUMP NO. 3
7 4" GATE VALVE
8 6" PLUG VALVE
9 4" CHECK VALVE
10 PRESSURE GAUGE AND SWITCH WITH DIAPHRAGM SEAL, SEE DETAIL 1/I-910
11 DRAIN CONNECTION SEE DETAIL 4/M-902.

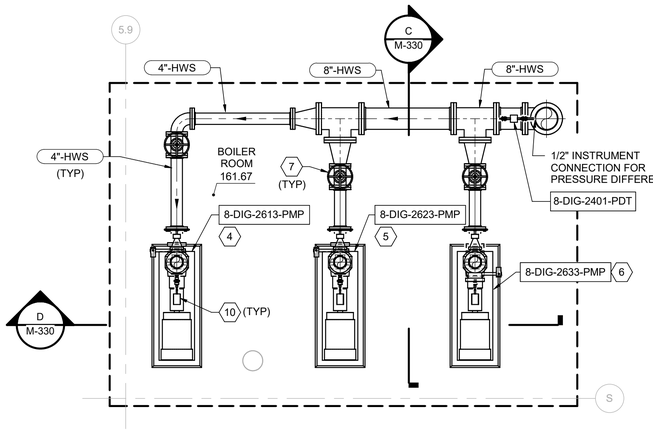

2 / M-322 HOT WATER SERVICE PUMPS DETAIL
3/8" = 1'-0"

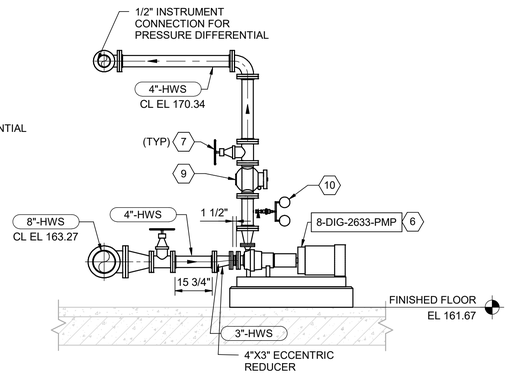

C / M-330 SECTION
3/8" = 1'-0"

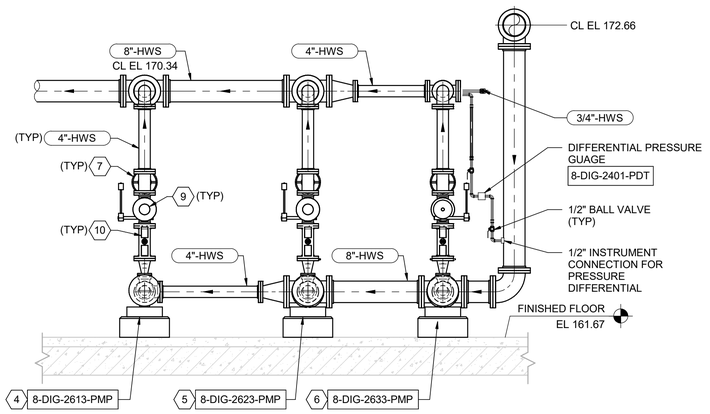

D / M-330 SECTION
3/8" = 1'-0"

THE DRAWINGS IN THIS SET ARE RECORD DRAWINGS. THEY ARE CONSTRUCTION CONTRACT DRAWINGS WHICH HAVE BEEN REVISED BASED ON AVAILABLE FIELD INFORMATION RECORDED BY OTHERS DURING CONSTRUCTION OF THIS CONTRACT. THERE HAS BEEN NO VERIFICATION OF DIMENSIONS SHOWN ON THE CONSTRUCTION DRAWINGS OR THE ACCURACY/COMPLETENESS OF THE FIELD INFORMATION RECEIVED.

SIGNATURE 2/7/2022 DATE

HDR

AS-BUILT REPLACEMENT SHEET

PROFESSIONAL CERTIFICATION

THIS DRAWING WAS ORIGINALLY APPROVED FOR CONSTRUCTION AND SEALED BY BRIAN M. BACLCHUNAS, A REGISTERED PROFESSIONAL ENGINEER IN THE STATE OF MARYLAND, NO. 200406

NOTICE TO CONTRACTORS

- PROJECT ELEVATIONS ARE BASED ON NAVD88 AND HOWARD COUNTY'S BENCHMARK SYSTEM
- PREVIOUS PROJECTS USED OTHER DATUMS
- APPLY THE FOLLOWING CONVERSIONS WHEN USING PREVIOUS CONTRACT DRAWINGS:
  - ADDITION NO. 6: SUBTRACT 0.80 FT
  - PRIOR ADDITIONS: SUBTRACT 1.04 FT

DEPARTMENT OF PUBLIC WORKS
HOWARD COUNTY, MARYLAND

CHIEF, BUREAU OF UTILITIES DATE

DES: MJW/JRM
DRN: SLB
CHK: JRK
DATE: 12/2016

DATE	REV	DESCRIPTION
07/2019		RECORD DRAWING

PROCESS

DIGESTER BUILDING DETAILS AND SECTIONS 2

LITTLE PATUXENT WATER RECLAMATION PLANT
8TH ADDITION
BIOSOLIDS PROCESSING FACILITIES - PHASE I

CAPITAL PROJECT S-6295
CONTRACT NO. 24-4935

ELECTION DISTRICT NO. 6
HOWARD COUNTY, MARYLAND

SCALE AS SHOWN

SHEET 224 OF 463

M-330

BIM 360://10054364 – Little Patuxent WRP 8th Addition/264591_300_D_V18.rvt
1/11/2022 3:05:19 PM

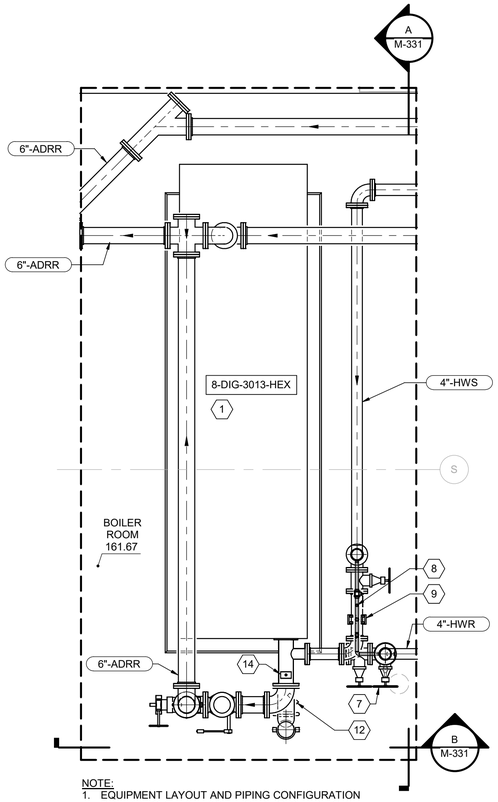

NOTE:
1. EQUIPMENT LAYOUT AND PIPING CONFIGURATION SIMILAR FOR HEAT EXCHANGER NO. 2 AND NO. 3.

1 M-322 HEAT EXCHANGER DETAIL
3/8" = 1'-0"

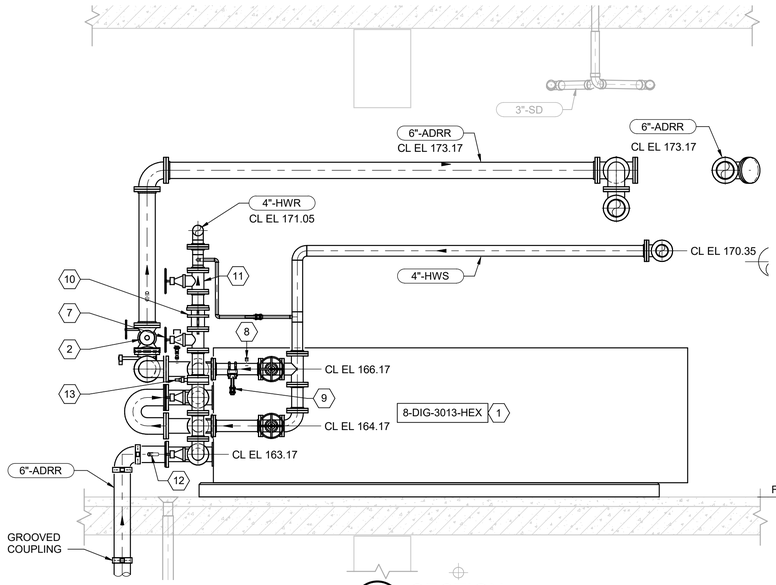

A M-331 SECTION
3/8" = 1'-0"

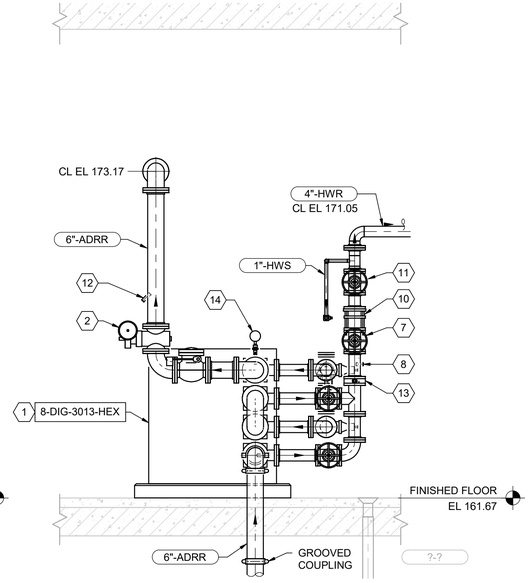

B M-331 SECTION
3/8" = 1'-0"

KEY NOTES (X)

1 DIGESTER HEAT EXCHANGER NO. 1
2 6" PLUG VALVE
3 HOT WATER BOILER NO. 1
4 6" GATE VALVE
5 GAS COMPRESSION MOISTURE REMOVAL SYSTEM
6 STEAM BOILER STACK NO. 1
7 PRESSURE INDEPENDENT FLOW CONTROL VALVE
8 DIFFERENTIAL PRESSURE TRANSMITTER
9 FLUSHING DRAIN CONNECTION WITH 1" VALVE AND FITTINGS
10 DISMANTLING JOINT
11 4" GATE VALVE
12 TEMPERATURE ELEMENT AND TRANSMITTER, PROVIDE FACTORY WELD-ON OUTLET AT 45 DEGREES ANGLED IN DIRECTION OF FLOW
13 TEMPERATURE ELEMENT AND TRANSMITTER
14 PRESSURE GAUGE AND TRANSMITTER WITH DIAPHRAGM SEAL. SEE DETAIL 1/I-910
15 RESTRAINED COMPRESSION SLEEVE COUPLING

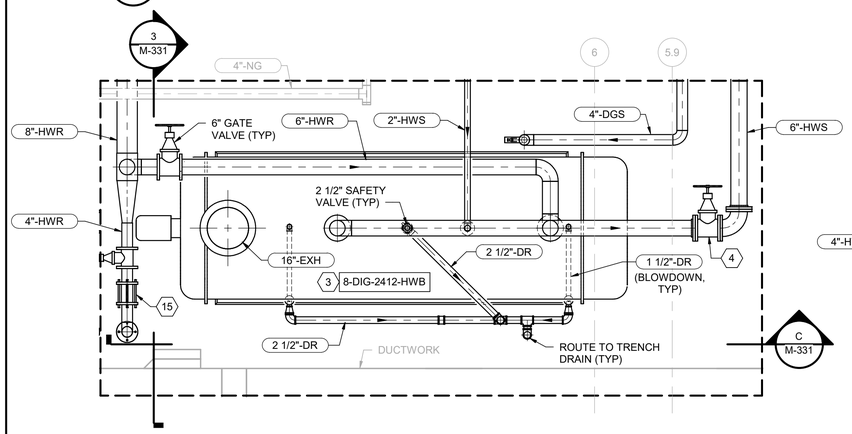

2 M-322 HOT WATER BOILER DETAIL
3/8" = 1'-0"

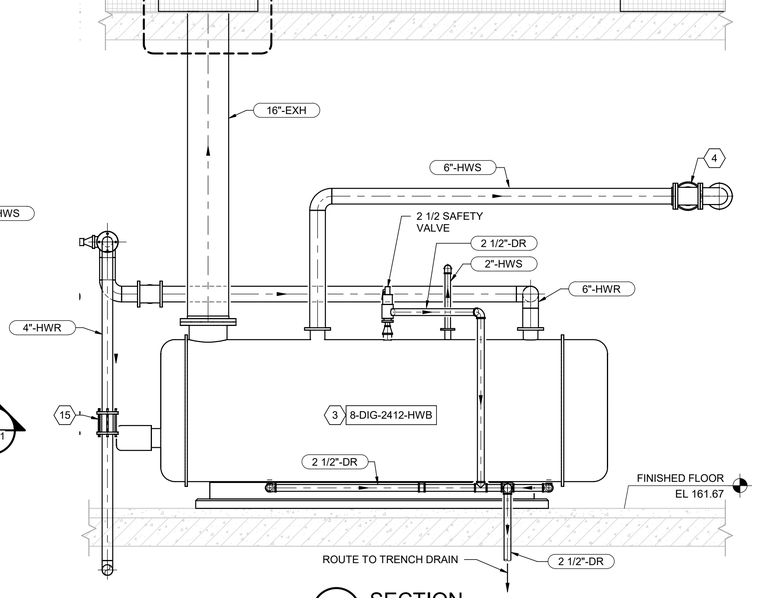

C M-331 SECTION
3/8" = 1'-0"

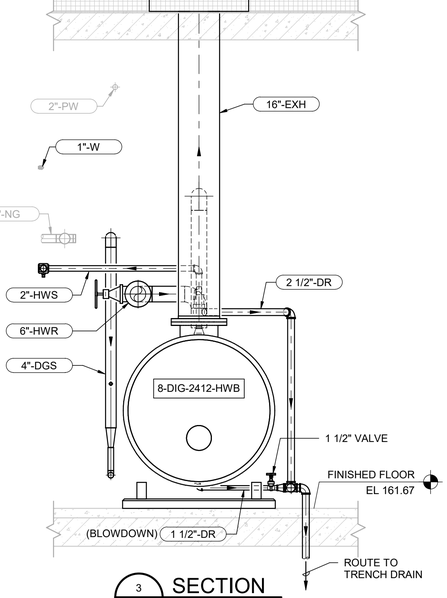

3 M-331 SECTION
3/8" = 1'-0"

THE DRAWINGS IN THIS SET ARE RECORD DRAWINGS. THEY ARE CONSTRUCTION CONTRACT DRAWINGS WHICH HAVE BEEN REVISED BASED ON AVAILABLE FIELD INFORMATION RECORDED BY OTHERS DURING CONSTRUCTION OF THIS CONTRACT. THERE HAS BEEN NO VERIFICATION OF DIMENSIONS SHOWN ON THE CONSTRUCTION DRAWINGS OR THE ACCURACY/COMPLETENESS OF THE FIELD INFORMATION RECEIVED.

SIGNATURE 2/7/2023 DATE

HDR

AS-BUILT REPLACEMENT SHEET

PROFESSIONAL CERTIFICATION
THIS DRAWING WAS ORIGINALLY APPROVED FOR CONSTRUCTION AND SEALED BY BRIAN M. BACLCHUNAS, A REGISTERED PROFESSIONAL ENGINEER IN THE STATE OF MARYLAND, NO. 200406

NOTICE TO CONTRACTORS
- PROJECT ELEVATIONS ARE BASED ON NAVD88 AND HOWARD COUNTY'S BENCHMARK SYSTEM
- PREVIOUS PROJECTS USED OTHER DATUMS
- APPLY THE FOLLOWING CONVERSIONS WHEN USING PREVIOUS CONTRACT DRAWINGS:
  - ADDITION NO. 6: SUBTRACT 0.80 FT
  - PRIOR ADDITIONS: SUBTRACT 1.04 FT

DEPARTMENT OF PUBLIC WORKS
HOWARD COUNTY, MARYLAND

CHIEF, BUREAU OF UTILITIES DATE

DES: MJW/JRM
DRN: SLB
CHK: JRK
DATE: 12/2016

DATE	REV	DESCRIPTION
07/2019		RECORD DRAWING

PROCESS

DIGESTER BUILDING DETAILS AND SECTIONS 3

LITTLE PATUXENT WATER RECLAMATION PLANT
8TH ADDITION
BIOSOLIDS PROCESSING FACILITIES - PHASE I

CAPITAL PROJECT S-6295
CONTRACT NO. 24-4935

ELECTION DISTRICT NO. 6
HOWARD COUNTY, MARYLAND

SCALE AS SHOWN

SHEET 225 OF 463

M-331

BIM 360://10054364 – Little Patuxent WRP 8th Addition/264591_300_D_V18.rvt
1/11/2022 3:05:28 PM

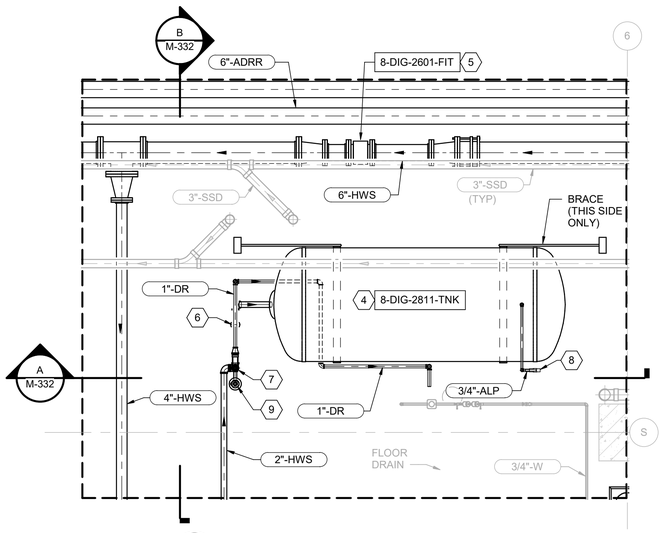

1 / M-323 EXPANSION TANK DETAIL
3/8" = 1'-0"

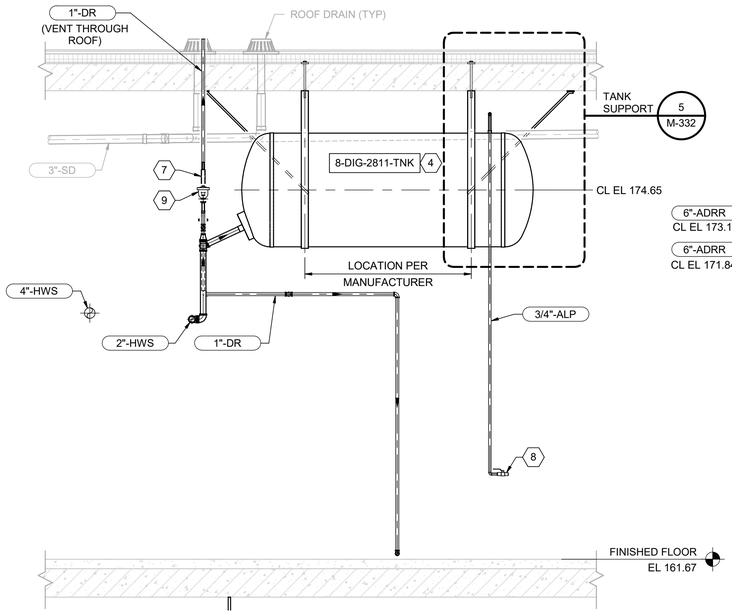

A / M-332 SECTION
3/8" = 1'-0"

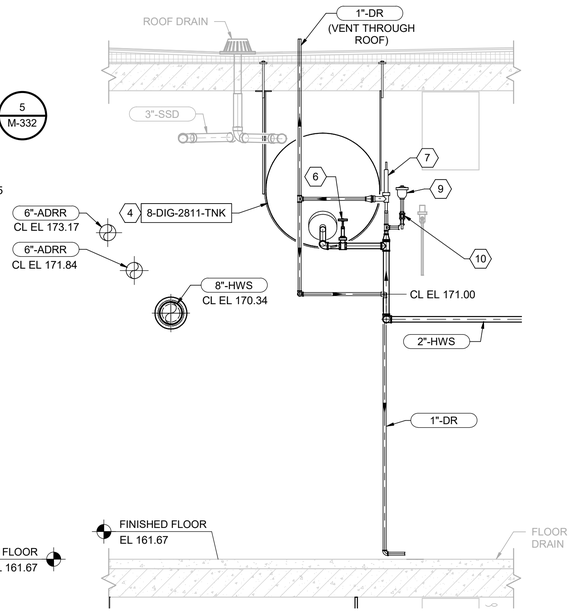

B / M-332 SECTION
3/8" = 1'-0"

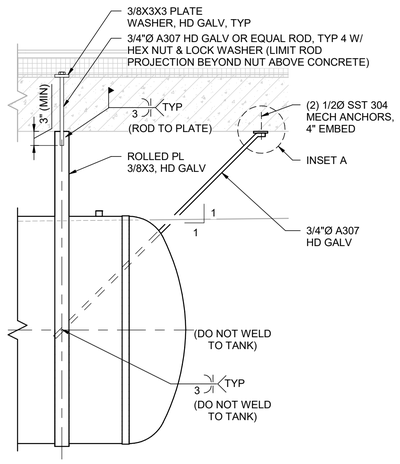

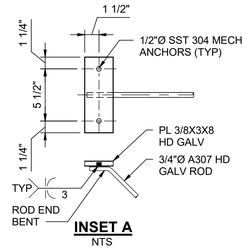

INSET A
NTS

5 / - TANK SUPPORT DETAIL
3/4" = 1'-0"

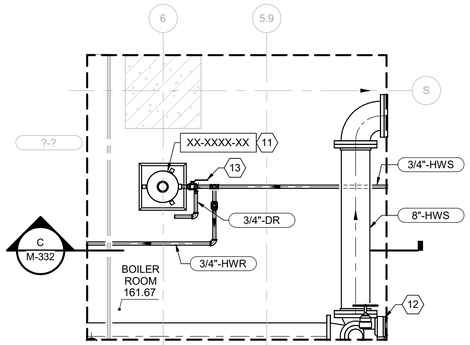

2 / M-322 BYPASS CHEMICAL FEEDER DETAIL
1/2" = 1'-0"

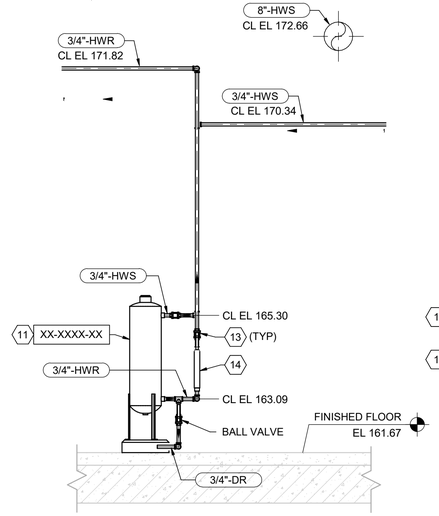

C / M-332 SECTION
1/2" = 1'-0"

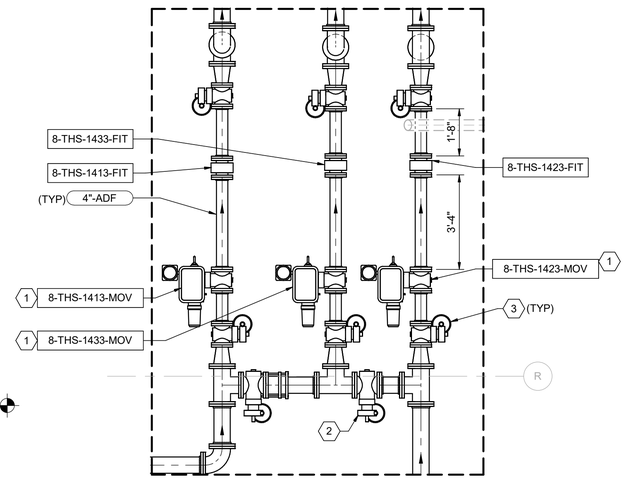

3 / M-323 ANAEROBIC DIGESTER FEED FLOW METER DETAIL
3/8" = 1'-0"

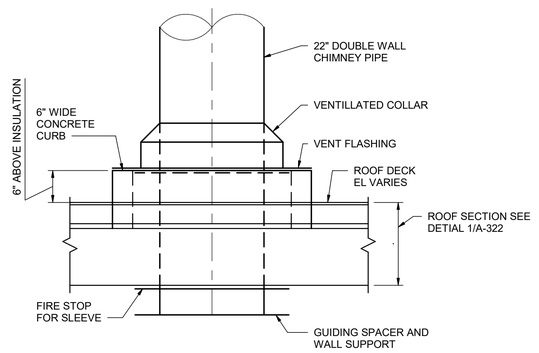

4 / M-331 BOILER STACK ROOF PENETRATION DETAIL
NOT TO SCALE

KEY NOTES (X)

1	4" MOTORIZED PLUG VALVE
2	6" PLUG VALVE
3	4" PLUG VALVE
4	EXPANSION TANK
5	6" FLOW METER
6	2" BALL VALVE
7	1" PRESSURE RELIEF VALVE
8	3/4" BALL VALVE WITH QUICK RELEASE FITTING
9	1" AIR RELEASE VALVE
10	1" BALL VALVE
11	BYPASS CHEMICAL FEEDER
12	8" 3-WAY PLUG VALVE (MIXING VALVE)
13	3/4" BALL VLAVE
14	ROTAMETER

THE DRAWINGS IN THIS SET ARE RECORD DRAWINGS. THEY ARE CONSTRUCTION CONTRACT DRAWINGS WHICH HAVE BEEN REVISED BASED ON AVAILABLE FIELD INFORMATION RECORDED BY OTHERS DURING CONSTRUCTION OF THIS CONTRACT. THERE HAS BEEN NO VERIFICATION OF DIMENSIONS SHOWN ON THE CONSTRUCTION DRAWINGS OR THE ACCURACY/COMPLETENESS OF THE FIELD INFORMATION RECEIVED.

SIGNATURE — DATE 2/7/2023

HDR

AS-BUILT REPLACEMENT SHEET

PROFESSIONAL CERTIFICATION
THIS DRAWING WAS ORIGINALLY APPROVED FOR CONSTRUCTION AND SEALED BY BRIAN M. BACLCHUNAS, A REGISTERED PROFESSIONAL ENGINEER IN THE STATE OF MARYLAND, NO. 200406

NOTICE TO CONTRACTORS
- PROJECT ELEVATIONS ARE BASED ON NAVD88 AND HOWARD COUNTY'S BENCHMARK SYSTEM
- PREVIOUS PROJECTS USED OTHER DATUMS
- APPLY THE FOLLOWING CONVERSIONS WHEN USING PREVIOUS CONTRACT DRAWINGS:
  - ADDITION NO. 6: SUBTRACT 0.80 FT
  - PRIOR ADDITIONS: SUBTRACT 1.04 FT

DEPARTMENT OF PUBLIC WORKS
HOWARD COUNTY, MARYLAND

CHIEF, BUREAU OF UTILITIES — DATE

DES: MJW/JRM
DRN: SLB
CHK: JRK
DATE: 12/2016

DATE	REV	DESCRIPTION
07/2019		RECORD DRAWING

PROCESS

DIGESTER BUILDING DETAILS AND SECTIONS 4

LITTLE PATUXENT WATER RECLAMATION PLANT
8TH ADDITION
BIOSOLIDS PROCESSING FACILITIES - PHASE I

CAPITAL PROJECT S-6295
CONTRACT NO. 24-4935

ELECTION DISTRICT NO. 6
HOWARD COUNTY, MARYLAND

SCALE AS SHOWN

SHEET 226 OF 463

M-332

BIM 360://10054364 – Little Patuxent WRP 8th Addition/264591_300_D_V18.rvt
1/11/2022 3:05:36 PM

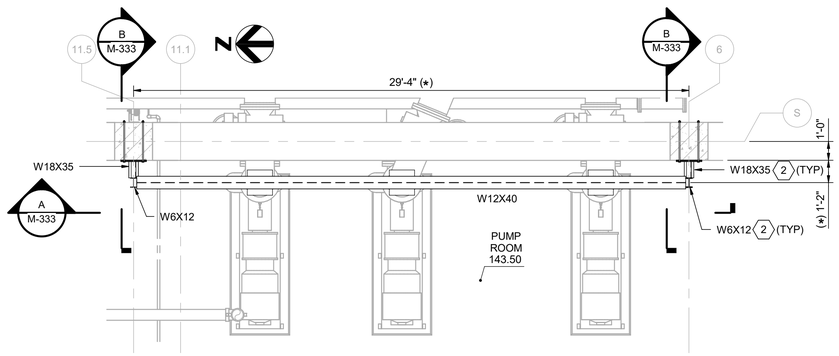

PIPE SUPPORT PLAN

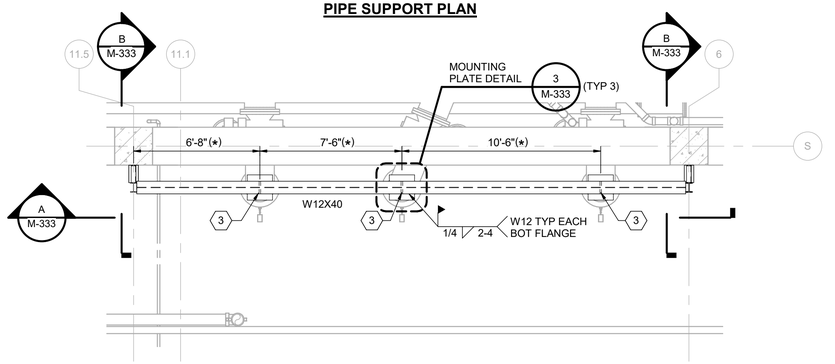

TOS PLAN AT EL 158.42 1

1 M-321 SUPPORT FRAMING DETAIL
1/4" = 1'-0"

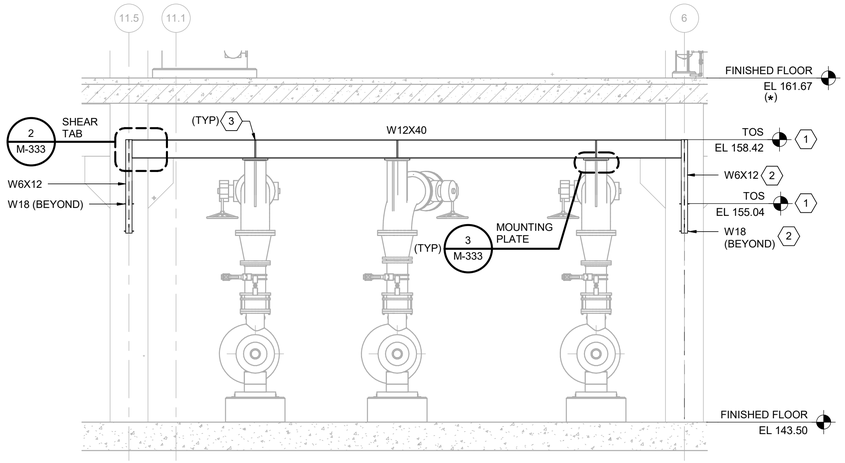

A M-333 SECTION
1/4" = 1'-0"

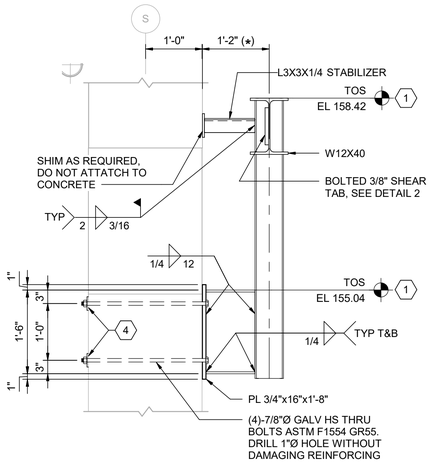

B M-333 SECTION
3/4" = 1'-0"

3 - MOUNTING DETAIL (LOOKING UP)
1" = 1'-0"

2 - SHEAR TAB DETAIL
1" = 1'-0"

GENERAL NOTES:

1. DIMENSIONS MARKED (*) SHALL VERIFIED PRIOR TO FABRICATION AND CONSTRUCTION.
2. CONNECTING GUSSET PLATES NOT SHOWN.
3. ALL HD GALVANIZED CONSTRUCTION.

KEY NOTES (X)

1 ELEVATION TO BE COMFIRMED BASED UPON PIPING DIMENSIONAL STACKUP
2 ASSEMBLY CENTERED ON CONCRETE COLUMN
3 3/8" STIFFENER PLATES EACH SIDE OF WEB, CENTERED AT DETAIL 3
4 PLATE WASHERS 3X3X3/8 EACH BOLT PLUS LOCK WASHERS

THE DRAWINGS IN THIS SET ARE RECORD DRAWINGS. THEY ARE CONSTRUCTION CONTRACT DRAWINGS WHICH HAVE BEEN REVISED BASED ON AVAILABLE FIELD INFORMATION RECORDED BY OTHERS DURING CONSTRUCTION OF THIS CONTRACT. THERE HAS BEEN NO VERIFICATION OF DIMENSIONS SHOWN ON THE CONSTRUCTION DRAWINGS OR THE ACCURACY/COMPLETENESS OF THE FIELD INFORMATION RECEIVED.

SIGNATURE 2/7/2023 DATE

AS-BUILT REPLACEMENT SHEET

PROFESSIONAL CERTIFICATION

THIS DRAWING WAS ORIGINALLY APPROVED FOR CONSTRUCTION AND SEALED BY BRIAN M. BACLCHUNAS, A REGISTERED PROFESSIONAL ENGINEER IN THE STATE OF MARYLAND, NO. 200406

NOTICE TO CONTRACTORS

- PROJECT ELEVATIONS ARE BASED ON NAVD88 AND HOWARD COUNTY'S BENCHMARK SYSTEM
- PREVIOUS PROJECTS USED OTHER DATUMS
- APPLY THE FOLLOWING CONVERSIONS WHEN USING PREVIOUS CONTRACT DRAWINGS:
  - ADDITION NO. 6: SUBTRACT 0.80 FT
  - PRIOR ADDITIONS: SUBTRACT 1.04 FT

DEPARTMENT OF PUBLIC WORKS
HOWARD COUNTY, MARYLAND

CHIEF, BUREAU OF UTILITIES DATE

DES: Designer
DRN: Author
CHK: Checker
DATE: 12/2016

DATE	REV	DESCRIPTION
07/2019		RECORD DRAWING

PROCESS

PIPE SUPPORTS AND SECTIONS

LITTLE PATUXENT WATER RECLAMATION PLANT
8TH ADDITION
BIOSOLIDS PROCESSING FACILITIES - PHASE I

CAPITAL PROJECT S-6295
CONTRACT NO. 24-4935

ELECTION DISTRICT NO. 6
HOWARD COUNTY, MARYLAND

SCALE AS SHOWN

SHEET 227 OF 463

M-333

BIM 360://10054364 – Little Patuxent WRP 8th Addition/264591_300_D_Y18.rvt
1/11/2022 3:05:37 PM

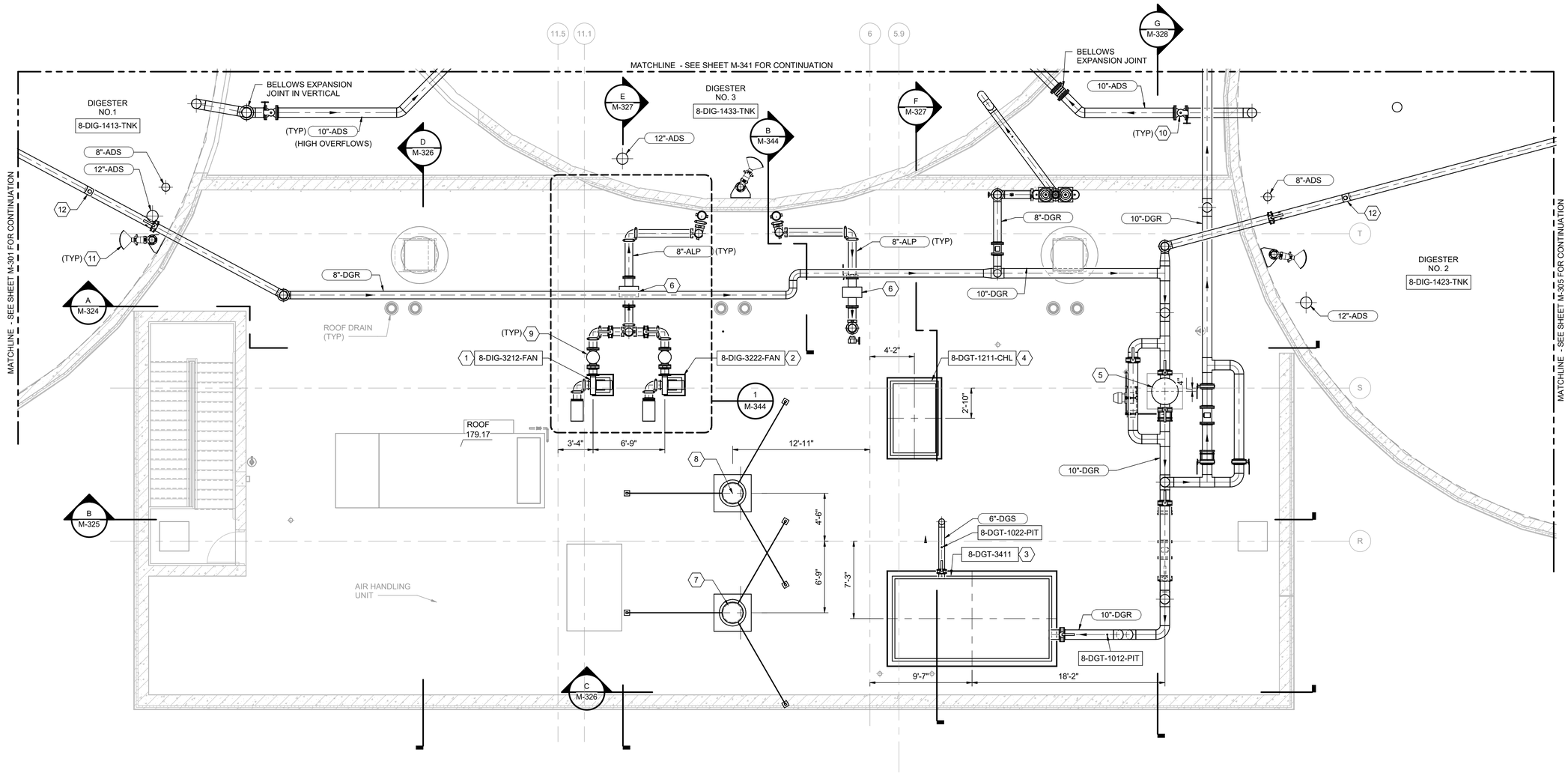

PLAN AT EL 179.17

3/16" = 1'-0"

GENERAL NOTES

1. DRAWINGS ARE INTENDED TO DEPICT DESIGN INTENT; CONTRACTOR TO REFER TO SPECIFICATIONS, P&IDS, AND STANDARD DETAILS FOR FURTHER INSTALLATION REQUIREMENTS.
2. VALVES, INLINE APPURTENANCES AND EQUIPMENT ARE SHOWN GRAPHICALLY AS THE DEVICE BODY; REFER TO P&IDS FOR DEVICE TYPE, SIZE AND DETAILS. INSTALL DEVICES IN ACCORDANCE WITH SPECIFICATIONS AND MANUFACTURERS REQUIREMENTS. ENSURE ADEQUATE ACCESS FOR OPERATION OF DEVICES - NOTIFY ENGINEER PRIOR TO INSTALLATION IF INADEQUATE CLEARANCE IS ANTICIPATED.
3. FOR CLARITY, TANK SECTION REFERENCE LINES ARE NOT SHOWN. SEE 300 SERIES SHEETS FOR DIGESTER TANK SECTIONS.

KEY NOTES (X)

1 GAS STORAGE FAN NO. 1
2 GAS STORAGE FAN NO. 2
3 GAS COMPRESSION MOISTURE REMOVAL SYSTEM
4 GLYCOL CHILLER
5 BIOGAS SEDIMENT TRAP
6 FLAME ARRESTOR
7 STEAM BOILER STACK NO. 1
8 STEAM BOILER STACK NO. 2
9 8" CHECK VALVE
10 10" PLUG VALVE
11 SCUM BUSTER NOZZLE
12 MASS FLOW METER WITH ISOLATION BALL VALVE, SEE DETAIL 5/M-903.

THE DRAWINGS IN THIS SET ARE RECORD DRAWINGS. THEY ARE CONSTRUCTION CONTRACT DRAWINGS WHICH HAVE BEEN REVISED BASED ON AVAILABLE FIELD INFORMATION RECORDED BY OTHERS DURING CONSTRUCTION OF THIS CONTRACT. THERE HAS BEEN NO VERIFICATION OF DIMENSIONS SHOWN ON THE CONSTRUCTION DRAWINGS OR THE ACCURACY/COMPLETENESS OF THE FIELD INFORMATION RECEIVED.

SIGNATURE — DATE 2/7/2023

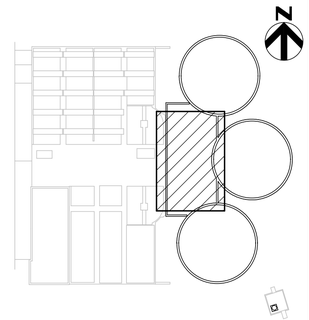

KEY PLAN

AS-BUILT REPLACEMENT SHEET

PROFESSIONAL CERTIFICATION

THIS DRAWING WAS ORIGINALLY APPROVED FOR CONSTRUCTION AND SEALED BY BRIAN M. BACLCHUNAS, A REGISTERED PROFESSIONAL ENGINEER IN THE STATE OF MARYLAND, NO. 200406

NOTICE TO CONTRACTORS

- PROJECT ELEVATIONS ARE BASED ON NAVD88 AND HOWARD COUNTY'S BENCHMARK SYSTEM
- PREVIOUS PROJECTS USED OTHER DATUMS
- APPLY THE FOLLOWING CONVERSIONS WHEN USING PREVIOUS CONTRACT DRAWINGS:
  - ADDITION NO. 6: SUBTRACT 0.80 FT
  - PRIOR ADDITIONS: SUBTRACT 1.04 FT

DEPARTMENT OF PUBLIC WORKS
HOWARD COUNTY, MARYLAND

CHIEF, BUREAU OF UTILITIES — DATE

DES: JRM
DRN: SLB
CHK: JRK
DATE: 12/2016

DATE	REV	DESCRIPTION
07/2019		RECORD DRAWING

PROCESS

DIGESTER GAS FACILITIES
ROOF PLAN 1

LITTLE PATUXENT WATER RECLAMATION PLANT
8TH ADDITION
BIOSOLIDS PROCESSING FACILITIES - PHASE I

CAPITAL PROJECT S-6295
CONTRACT NO. 24-4935

ELECTION DISTRICT NO. 6
HOWARD COUNTY, MARYLAND

SCALE AS SHOWN

SHEET 228 OF 463

M-340

BIM 360://10054364 – Little Patuxent WRP 8th Addition/264591_300_D_V18.rvt
1/11/2022 3:16:40 PM

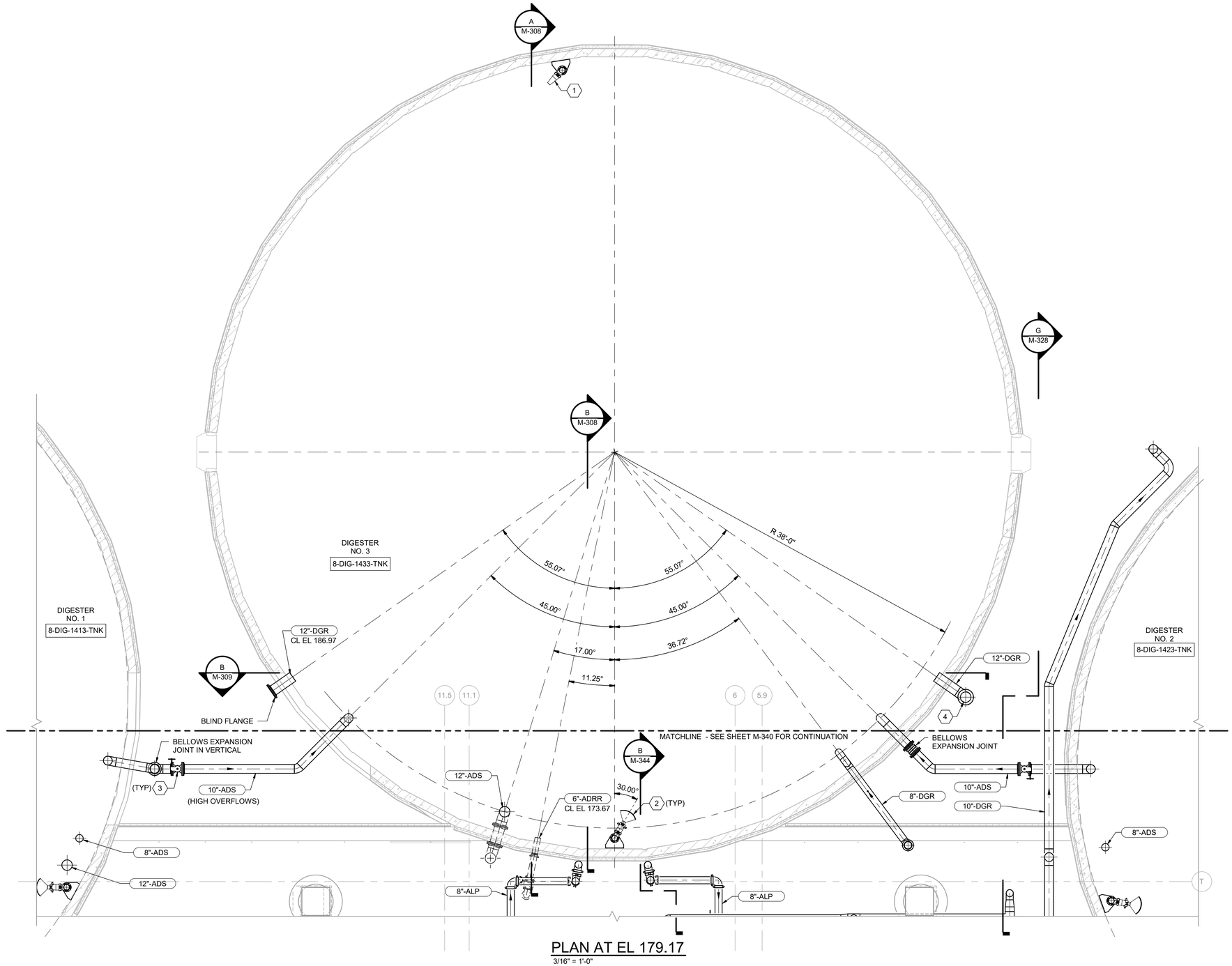

PLAN AT EL 179.17
3/16" = 1'-0"

N

GENERAL NOTES

1. FOR CLARITY, TANK SECTION REFERENCE LINES ARE NOT SHOWN. SEE 300 SERIES SHEETS FOR DIGESTER TANK SECTIONS.

KEY NOTES (X)

1 MIXING NOZZLE
2 SCUM BUSTER NOZZLE
3 10" PLUG VALVE
4 12" EMERGENCY PORT WITH PRV MANHOLE COVER, TOP OF MANHOLE EL 188.50

THE DRAWINGS IN THIS SET ARE RECORD DRAWINGS. THEY ARE CONSTRUCTION CONTRACT DRAWINGS WHICH HAVE BEEN REVISED BASED ON AVAILABLE FIELD INFORMATION RECORDED BY OTHERS DURING CONSTRUCTION OF THIS CONTRACT. THERE HAS BEEN NO VERIFICATION OF DIMENSIONS SHOWN ON THE CONSTRUCTION DRAWINGS OR THE ACCURACY/COMPLETENESS OF THE FIELD INFORMATION RECEIVED.

SIGNATURE — DATE 2/7/2023

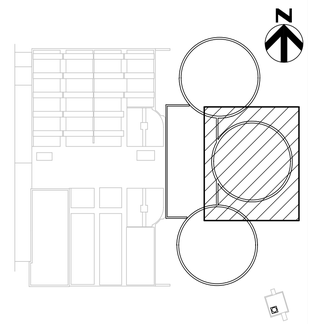

KEY PLAN

AS-BUILT REPLACEMENT SHEET

PROFESSIONAL CERTIFICATION

THIS DRAWING WAS ORIGINALLY APPROVED FOR CONSTRUCTION AND SEALED BY BRIAN M. BACLCHUNAS, A REGISTERED PROFESSIONAL ENGINEER IN THE STATE OF MARYLAND, NO. 200406

NOTICE TO CONTRACTORS

- PROJECT ELEVATIONS ARE BASED ON NAVD88 AND HOWARD COUNTY'S BENCHMARK SYSTEM
- PREVIOUS PROJECTS USED OTHER DATUMS
- APPLY THE FOLLOWING CONVERSIONS WHEN USING PREVIOUS CONTRACT DRAWINGS:
  - ADDITION NO. 6: SUBTRACT 0.80 FT
  - PRIOR ADDITIONS: SUBTRACT 1.04 FT

DEPARTMENT OF PUBLIC WORKS
HOWARD COUNTY, MARYLAND

CHIEF, BUREAU OF UTILITIES — DATE

DES: JRM
DRN: SLB
CHK: JRK
DATE: 12/2016

DATE	REV	DESCRIPTION
07/2019		RECORD DRAWING

PROCESS

DIGESTER GAS FACILITIES ROOF PLAN 2

LITTLE PATUXENT WATER RECLAMATION PLANT
8TH ADDITION
BIOSOLIDS PROCESSING FACILITIES - PHASE I

CAPITAL PROJECT S-6295
CONTRACT NO. 24-4935

ELECTION DISTRICT NO. 6
HOWARD COUNTY, MARYLAND

SCALE AS SHOWN

SHEET 229 OF 463

M-341

BIM 360://10054364 – Little Patuxent WRP 8th Addition/264591_300_D_V18.rvt
1/11/2022 3:16:46 PM

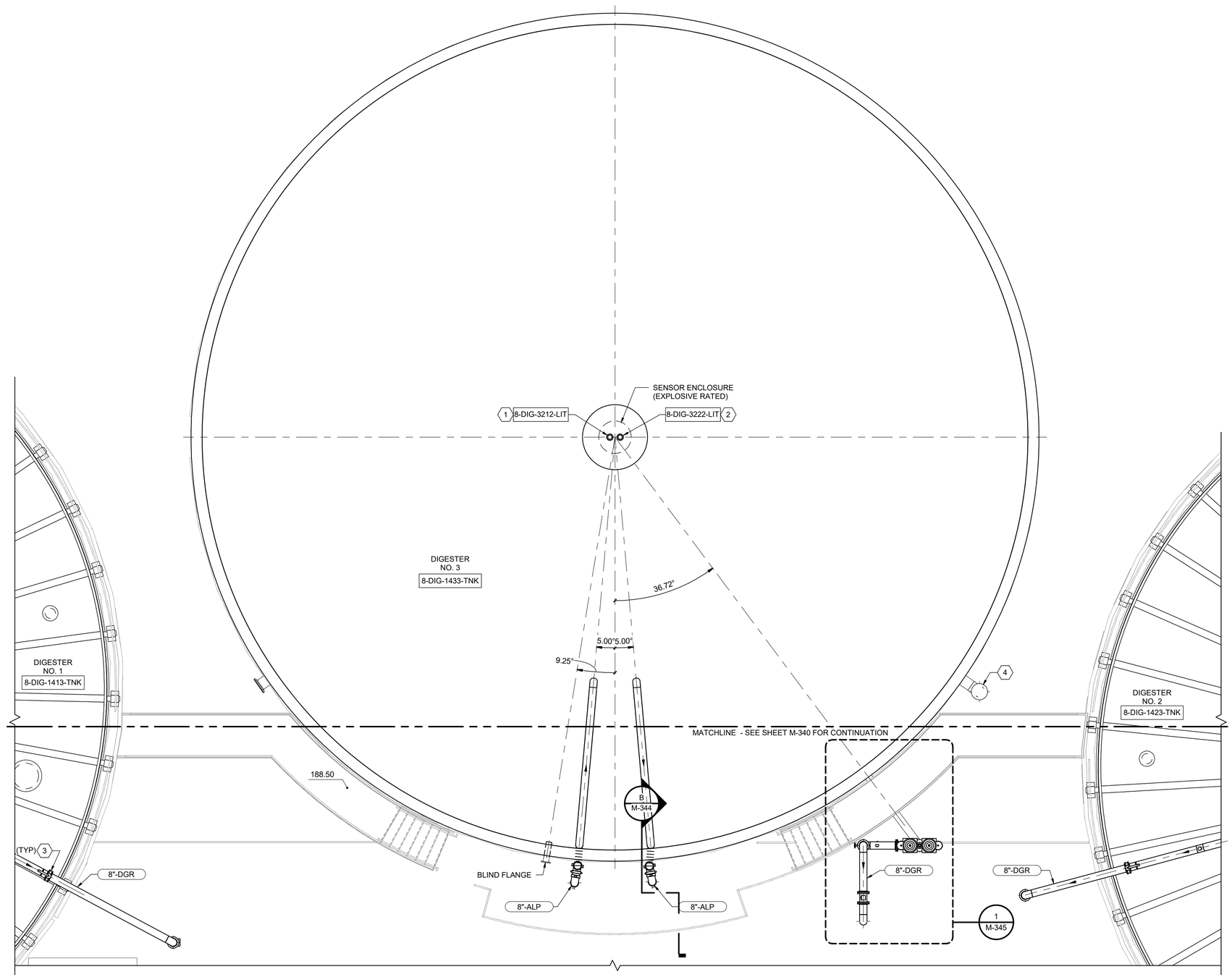

PLAN AT EL 188.50

3/16" = 1'-0"

GENERAL NOTES

1. FOR CLARITY, TANK SECTION REFERENCE LINES ARE NOT SHOWN. SEE 300 SERIES SHEETS FOR DIGESTER TANK SECTIONS.

KEY NOTES (X)

1 LASER LEVEL SENSOR NO. 1
2 LASER LEVEL SENSOR NO. 2
3 8" BUTTERFLY VALVE
4 12" EMERGENCY PORT WITH PRV MANHOLE COVER, TOP OF MANHOLE EL 188.50

THE DRAWINGS IN THIS SET ARE RECORD DRAWINGS. THEY ARE CONSTRUCTION CONTRACT DRAWINGS WHICH HAVE BEEN REVISED BASED ON AVAILABLE FIELD INFORMATION RECORDED BY OTHERS DURING CONSTRUCTION OF THIS CONTRACT. THERE HAS BEEN NO VERIFICATION OF DIMENSIONS SHOWN ON THE CONSTRUCTION DRAWINGS OR THE ACCURACY/COMPLETENESS OF THE FIELD INFORMATION RECEIVED.

SIGNATURE — DATE 2/7/2023

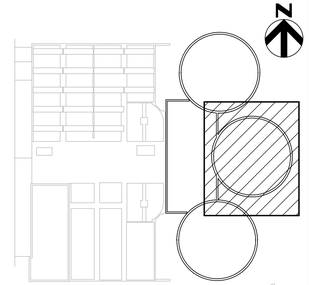

KEY PLAN

AS-BUILT REPLACEMENT SHEET

PROFESSIONAL CERTIFICATION

THIS DRAWING WAS ORIGINALLY APPROVED FOR CONSTRUCTION AND SEALED BY BRIAN M. BACLCHUNAS, A REGISTERED PROFESSIONAL ENGINEER IN THE STATE OF MARYLAND, NO. 200406

NOTICE TO CONTRACTORS

- PROJECT ELEVATIONS ARE BASED ON NAVD88 AND HOWARD COUNTY'S BENCHMARK SYSTEM
- PREVIOUS PROJECTS USED OTHER DATUMS
- APPLY THE FOLLOWING CONVERSIONS WHEN USING PREVIOUS CONTRACT DRAWINGS:
  - ADDITION NO. 6: SUBTRACT 0.80 FT
  - PRIOR ADDITIONS: SUBTRACT 1.04 FT

DEPARTMENT OF PUBLIC WORKS
HOWARD COUNTY, MARYLAND

CHIEF, BUREAU OF UTILITIES — DATE

DES: JRM
DRN: SLB
CHK: JRK
DATE: 12/2016

DATE	REV	DESCRIPTION
07/2019		RECORD DRAWING

PROCESS

DIGESTER GAS FACILITIES ROOF PLAN 3

LITTLE PATUXENT WATER RECLAMATION PLANT
8TH ADDITION
BIOSOLIDS PROCESSING FACILITIES - PHASE I

CAPITAL PROJECT S-6295
CONTRACT NO. 24-4935

ELECTION DISTRICT NO. 6
HOWARD COUNTY, MARYLAND

SCALE AS SHOWN

SHEET 230 OF 463

M-342

BIM 360://10054364 – Little Patuxent WRP 8th Addition/264591_300_D_V18.rvt
1/11/2022 3:16:49 PM

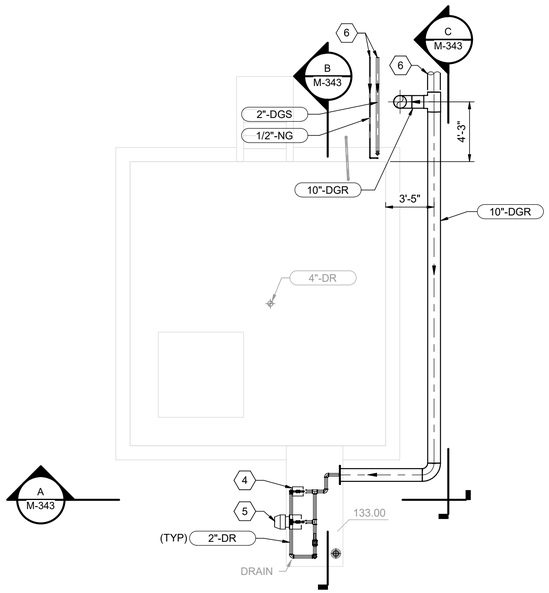

PLAN AT EL 133.00

3/16" = 1'-0"

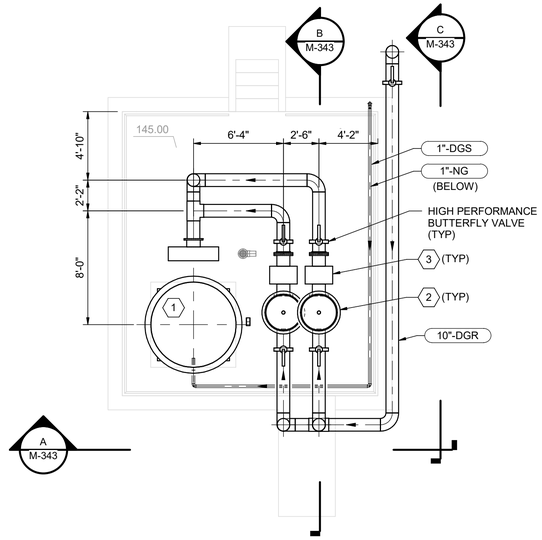

PLAN AT EL 145.00

3/16" = 1'-0"

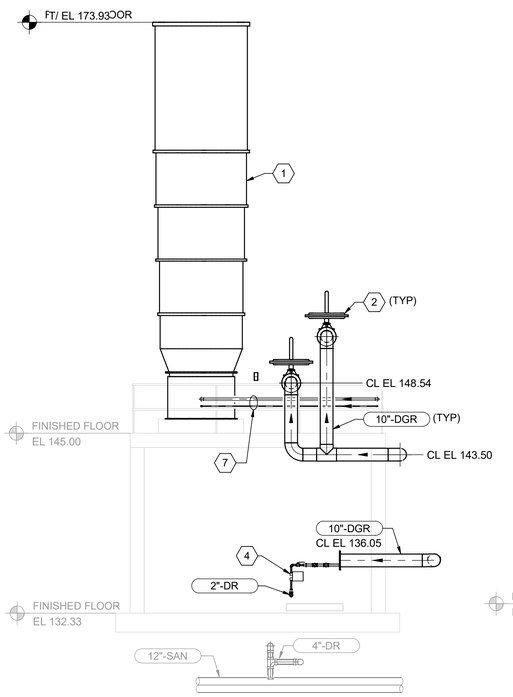

A M-343 SECTION

3/16" = 1'-0"

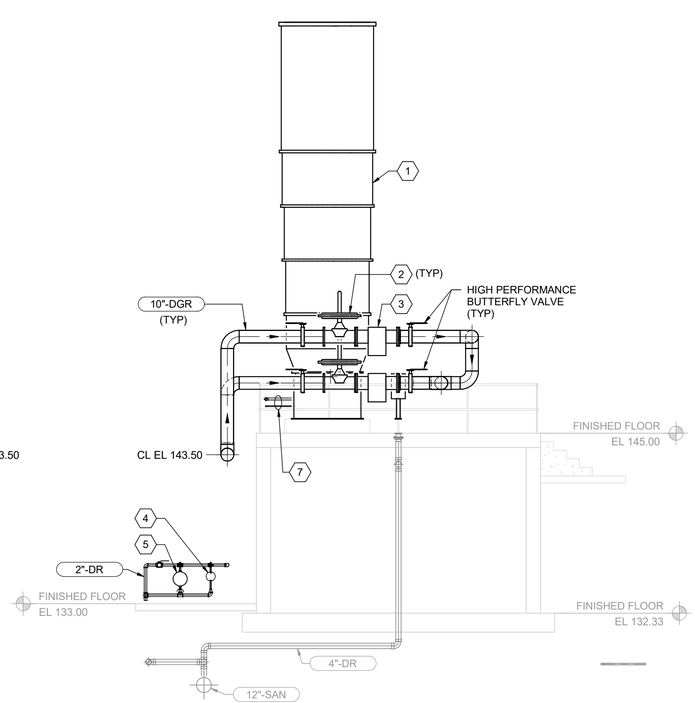

B M-343 SECTION

3/16" = 1'-0"

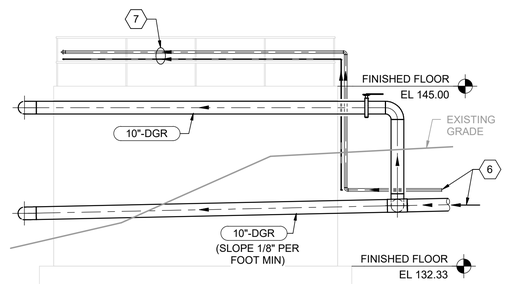

C M-343 SECTION

3/16" = 1'-0"

GENERAL NOTES

1. COORDINATE ANCHORING DETAILS WITH FLARE MANUFACTURER.

KEY NOTES (X)

1 FLARE STACK
2 10" BACK PRESSURE REGULATOR
3 FLAME ARRESTOR
4 MANUAL DRIP TRAP
5 AUTOMATIC DRIP TRAP
6 SEE CIVIL SHEETS FOR CONTINUTATION
7 2" CONTINUOUS SUPPPLY FROM THE PANEL TO THE FLARE AND A 1/2" RETENTION SUPPLY TO THE FLARE FROM BOTH THE NG AND DGS PANELS.

THE DRAWINGS IN THIS SET ARE RECORD DRAWINGS. THEY ARE CONSTRUCTION CONTRACT DRAWINGS WHICH HAVE BEEN REVISED BASED ON AVAILABLE FIELD INFORMATION RECORDED BY OTHERS DURING CONSTRUCTION OF THIS CONTRACT. THERE HAS BEEN NO VERIFICATION OF DIMENSIONS SHOWN ON THE CONSTRUCTION DRAWINGS OR THE ACCURACY/COMPLETENESS OF THE FIELD INFORMATION RECEIVED.

SIGNATURE — DATE 2/7/2023

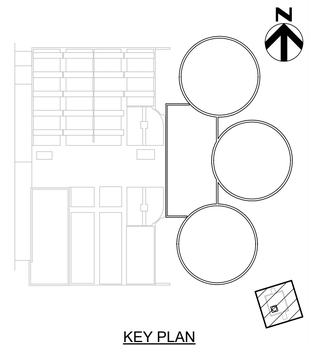

KEY PLAN

AS-BUILT REPLACEMENT SHEET

PROFESSIONAL CERTIFICATION

THIS DRAWING WAS ORIGINALLY APPROVED FOR CONSTRUCTION AND SEALED BY BRIAN M. BACLCHUNAS, A REGISTERED PROFESSIONAL ENGINEER IN THE STATE OF MARYLAND, NO. 200406

NOTICE TO CONTRACTORS

- PROJECT ELEVATIONS ARE BASED ON NAVD88 AND HOWARD COUNTY'S BENCHMARK SYSTEM
- PREVIOUS PROJECTS USED OTHER DATUMS
- APPLY THE FOLLOWING CONVERSIONS WHEN USING PREVIOUS CONTRACT DRAWINGS:
  - ADDITION NO. 6: SUBTRACT 0.80 FT
  - PRIOR ADDITIONS: SUBTRACT 1.04 FT

DEPARTMENT OF PUBLIC WORKS
HOWARD COUNTY, MARYLAND

CHIEF, BUREAU OF UTILITIES — DATE

DES: JRM
DRN: SLB
CHK: JRK
DATE: 12/2016

DATE	REV	DESCRIPTION
07/2019		RECORD DRAWING

PROCESS

DIGESTER GAS FLARE PLANS AND SECTIONS

LITTLE PATUXENT WATER RECLAMATION PLANT
8TH ADDITION
BIOSOLIDS PROCESSING FACILITIES - PHASE I

CAPITAL PROJECT S-6295
CONTRACT NO. 24-4935

ELECTION DISTRICT NO. 6
HOWARD COUNTY, MARYLAND

SCALE AS SHOWN

SHEET 231 OF 463

M-343

BIM 360://10054364 – Little Patuxent WRP 8th Addition/264591_300_D_V18.rvt
1/11/2022 3:16:54 PM

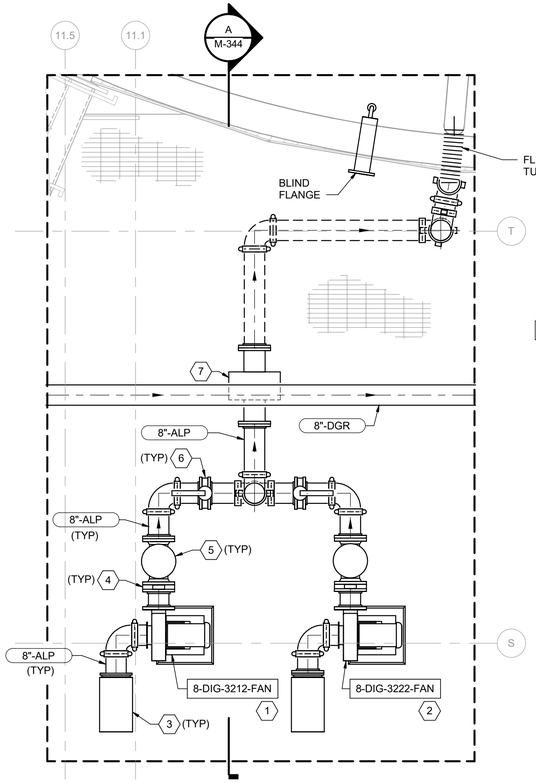

1 M-340 GAS STORAGE BLOWERS DETAIL
3/8" = 1'-0"

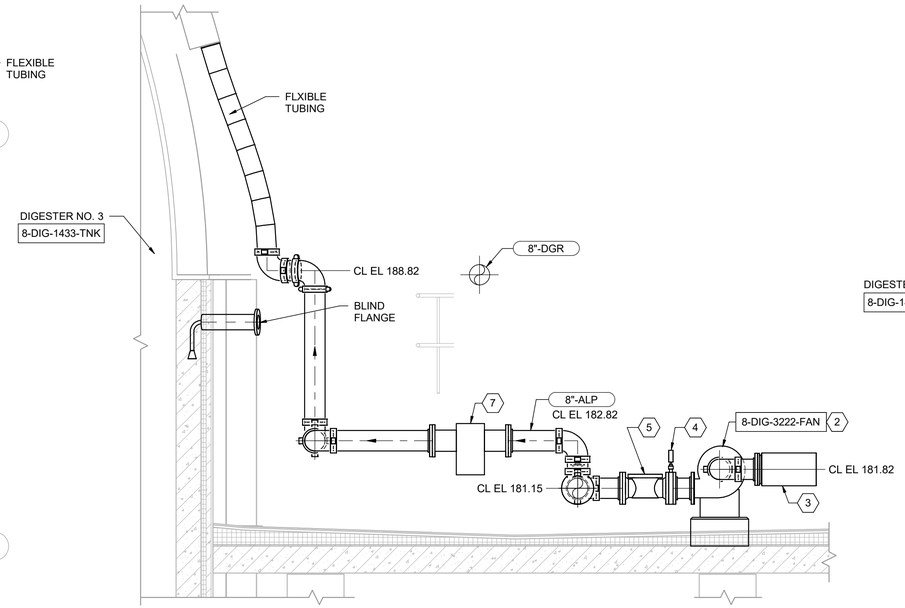

A M-344 SECTION
3/8" = 1'-0"

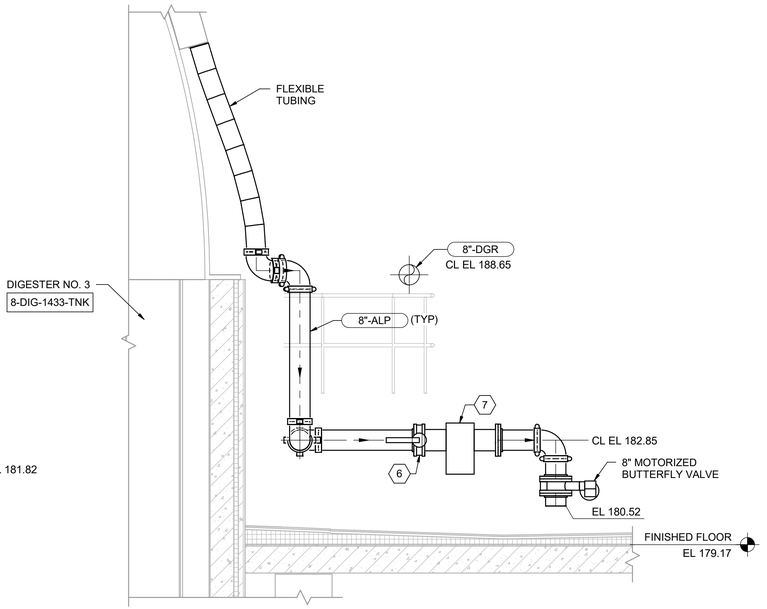

B M-340 SECTION
3/8" = 1'-0"

KEY NOTES (X)

1 GAS STORAGE FAN NO. 1
2 GAS STORAGE FAN NO. 2
3 INLET AIR FILTER
4 PRESSURE INDICATOR
5 8" CHECK VALVE
6 8" BUTTERFLY VALVE
7 FLAME ARRESTOR

THE DRAWINGS IN THIS SET ARE RECORD DRAWINGS. THEY ARE CONSTRUCTION CONTRACT DRAWINGS WHICH HAVE BEEN REVISED BASED ON AVAILABLE FIELD INFORMATION RECORDED BY OTHERS DURING CONSTRUCTION OF THIS CONTRACT. THERE HAS BEEN NO VERIFICATION OF DIMENSIONS SHOWN ON THE CONSTRUCTION DRAWINGS OR THE ACCURACY/COMPLETENESS OF THE FIELD INFORMATION RECEIVED.

SIGNATURE 2/7/2022 DATE

AS-BUILT REPLACEMENT SHEET

PROFESSIONAL CERTIFICATION

THIS DRAWING WAS ORIGINALLY APPROVED FOR CONSTRUCTION AND SEALED BY BRIAN M. BACLCHUNAS, A REGISTERED PROFESSIONAL ENGINEER IN THE STATE OF MARYLAND, NO. 200406

NOTICE TO CONTRACTORS

- PROJECT ELEVATIONS ARE BASED ON NAVD88 AND HOWARD COUNTY'S BENCHMARK SYSTEM
- PREVIOUS PROJECTS USED OTHER DATUMS
- APPLY THE FOLLOWING CONVERSIONS WHEN USING PREVIOUS CONTRACT DRAWINGS:
  - ADDITION NO. 6: SUBTRACT 0.80 FT
  - PRIOR ADDITIONS: SUBTRACT 1.04 FT

DEPARTMENT OF PUBLIC WORKS
HOWARD COUNTY, MARYLAND

CHIEF, BUREAU OF UTILITIES DATE

DES: JRM
DRN: SLB
CHK: JRK
DATE: 12/2016

DATE	REV	DESCRIPTION
07/2019		RECORD DRAWING

PROCESS

DIGESTER GAS FACILITIES DETAILS AND SECTIONS 1

LITTLE PATUXENT WATER RECLAMATION PLANT
8TH ADDITION
BIOSOLIDS PROCESSING FACILITIES - PHASE I

CAPITAL PROJECT S-6295
CONTRACT NO. 24-4935

ELECTION DISTRICT NO. 6
HOWARD COUNTY, MARYLAND

SCALE AS SHOWN

SHEET 232 OF 463

M-344

BIM 360://10054364 – Little Patuxent WRP 8th Addition/264591_300_D_V18.rvt
1/11/2022 3:16:59 PM

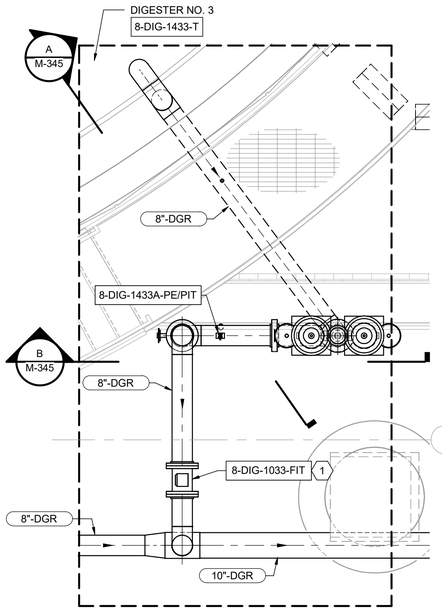

1 M-342 GAS PRESSURE/ VACUUM RELIEF VALVE DETAIL

3/8" = 1'-0"

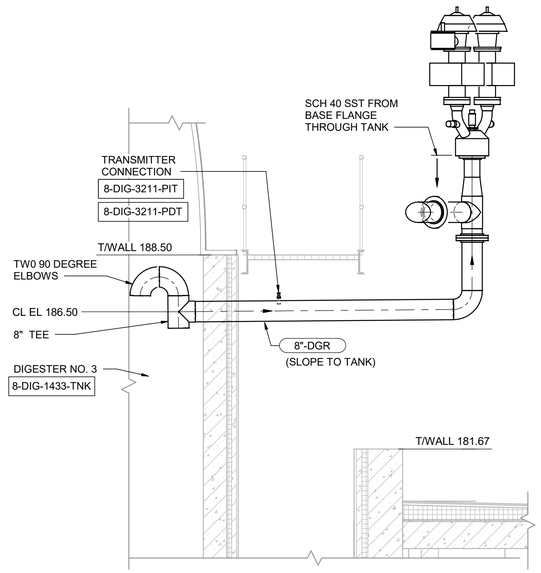

A M-345 SECTION

3/8" = 1'-0"

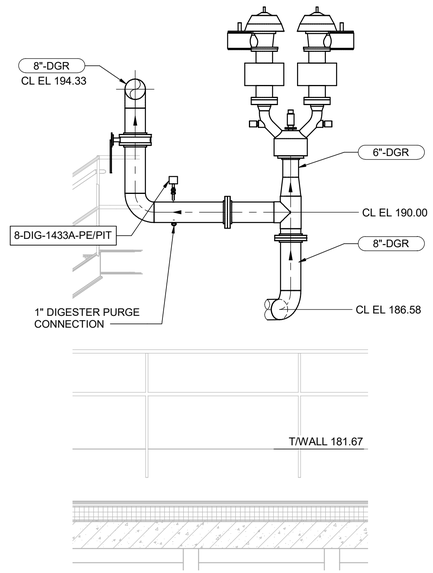

B M-345 SECTION

3/8" = 1'-0"

KEY NOTES ⬡ X

1 MASS FLOW METER WITH ISOLATION BALL VALVE, SEE DETAIL 5/M-903.

THE DRAWINGS IN THIS SET ARE RECORD DRAWINGS. THEY ARE CONSTRUCTION CONTRACT DRAWINGS WHICH HAVE BEEN REVISED BASED ON AVAILABLE FIELD INFORMATION RECORDED BY OTHERS DURING CONSTRUCTION OF THIS CONTRACT. THERE HAS BEEN NO VERIFICATION OF DIMENSIONS SHOWN ON THE CONSTRUCTION DRAWINGS OR THE ACCURACY/COMPLETENESS OF THE FIELD INFORMATION RECEIVED.

SIGNATURE 2/7/2022 DATE

AS-BUILT REPLACEMENT SHEET

PROFESSIONAL CERTIFICATION

THIS DRAWING WAS ORIGINALLY APPROVED FOR CONSTRUCTION AND SEALED BY BRIAN M. BACLCHUNAS, A REGISTERED PROFESSIONAL ENGINEER IN THE STATE OF MARYLAND, NO. 200406

NOTICE TO CONTRACTORS

- PROJECT ELEVATIONS ARE BASED ON NAVD88 AND HOWARD COUNTY'S BENCHMARK SYSTEM
- PREVIOUS PROJECTS USED OTHER DATUMS
- APPLY THE FOLLOWING CONVERSIONS WHEN USING PREVIOUS CONTRACT DRAWINGS:
  - ADDITION NO. 6: SUBTRACT 0.80 FT
  - PRIOR ADDITIONS: SUBTRACT 1.04 FT

DEPARTMENT OF PUBLIC WORKS
HOWARD COUNTY, MARYLAND

CHIEF, BUREAU OF UTILITIES DATE

DES: JRM
DRN: SLB
CHK: JRK
DATE: 12/2016

DATE	REV	DESCRIPTION
07/2019		RECORD DRAWING

PROCESS

DIGESTER GAS FACILITIES DETAILS AND SECTIONS 2

LITTLE PATUXENT WATER RECLAMATION PLANT
8TH ADDITION
BIOSOLIDS PROCESSING FACILITIES - PHASE I

CAPITAL PROJECT S-6295
CONTRACT NO. 24-4935

ELECTION DISTRICT NO. 6
HOWARD COUNTY, MARYLAND

SCALE AS SHOWN

SHEET 233 OF 463

M-345

BIM 360://10054364 – Little Patuxent WRP 8th Addition/264591_300_D_V18.rvt
1/11/2022 3:17:00 PM

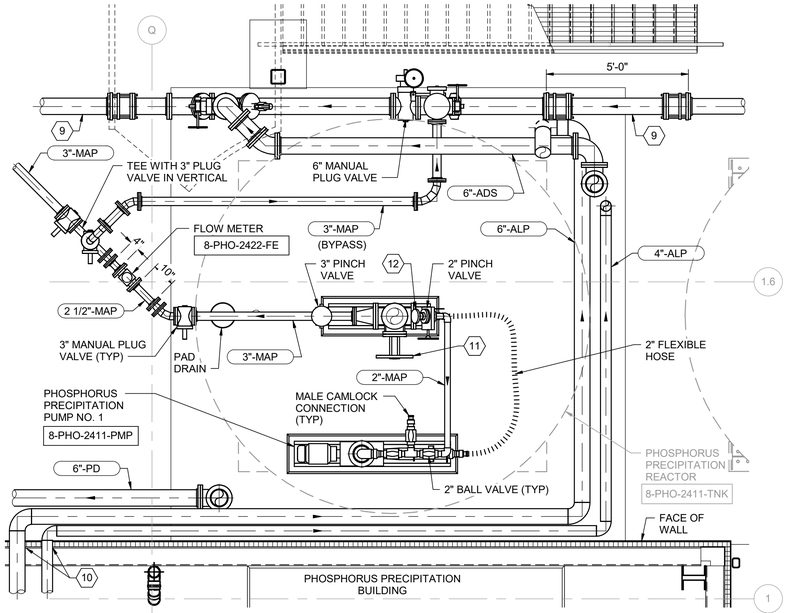

LOWER PLAN

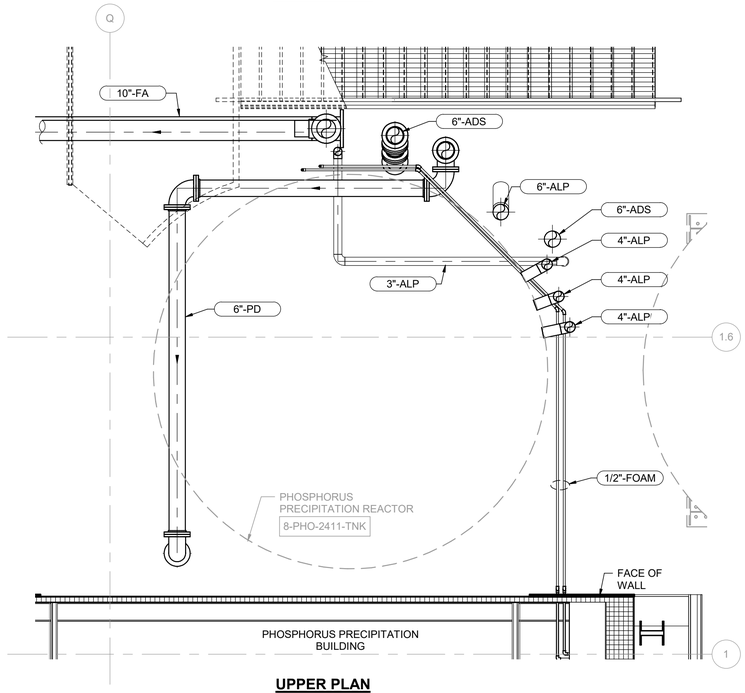

UPPER PLAN

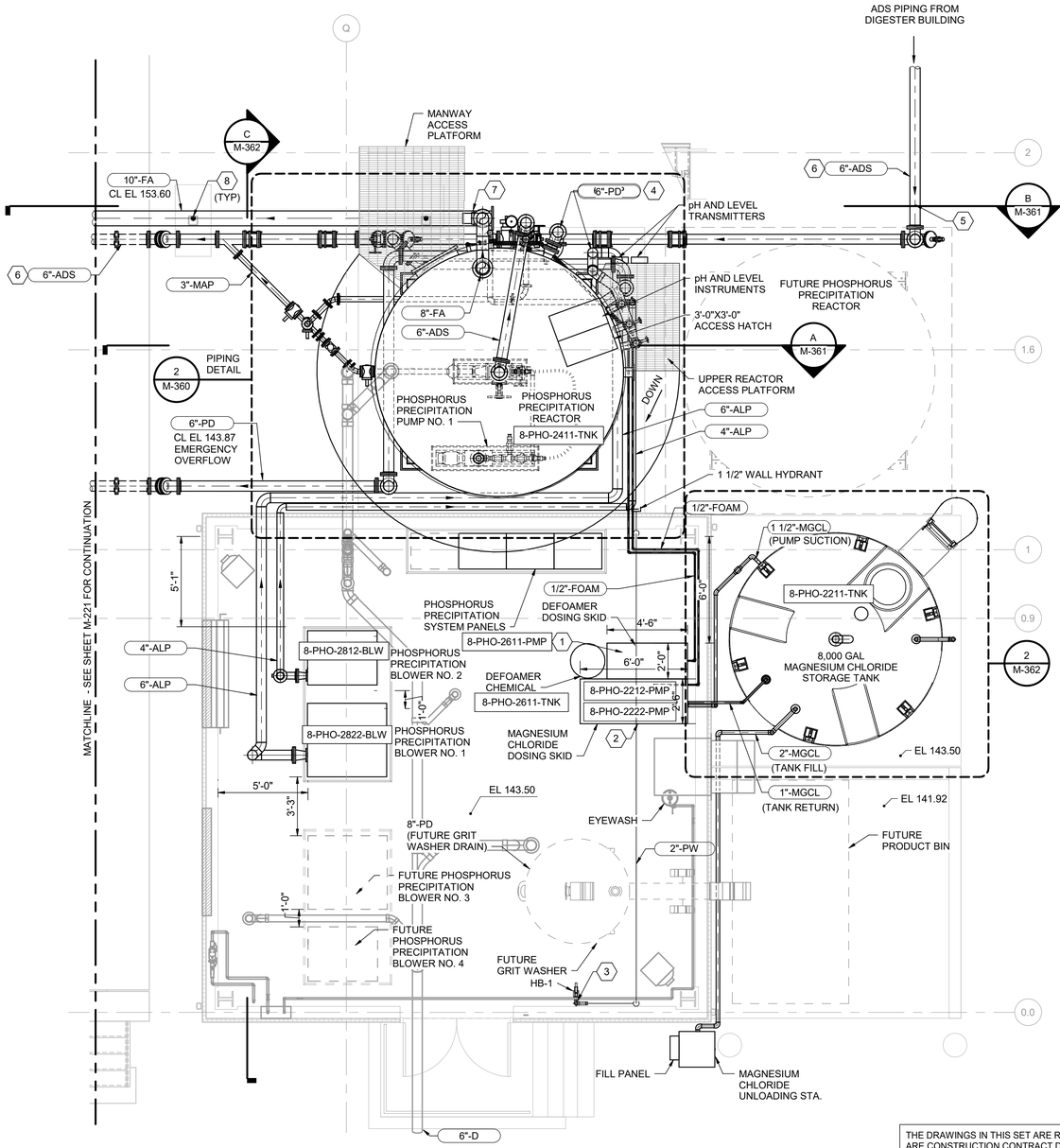

1 / - PLAN AT EL 143.00
1/4" = 1'-0"

2 / M-360 PIPING DETAIL
3/8" = 1'-0"

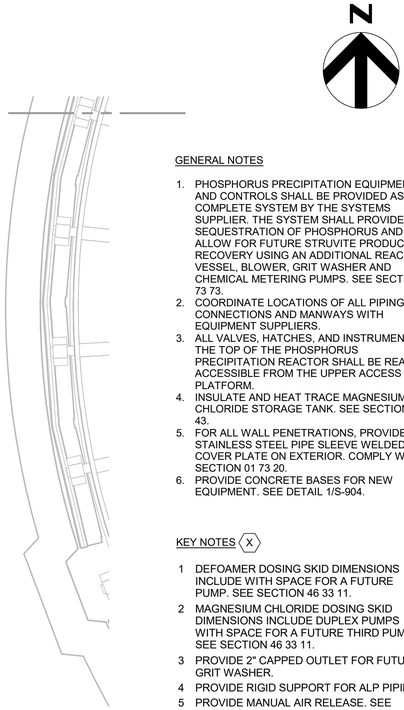

GENERAL NOTES

1. PHOSPHORUS PRECIPITATION EQUIPMENT AND CONTROLS SHALL BE PROVIDED AS A COMPLETE SYSTEM BY THE SYSTEMS SUPPLIER. THE SYSTEM SHALL PROVIDE SEQUESTRATION OF PHOSPHORUS AND ALLOW FOR FUTURE STRUVITE PRODUCT RECOVERY USING AN ADDITIONAL REACTOR VESSEL, BLOWER, GRIT WASHER AND CHEMICAL METERING PUMPS. SEE SECTION 46 73 73.
2. COORDINATE LOCATIONS OF ALL PIPING CONNECTIONS AND MANWAYS WITH EQUIPMENT SUPPLIERS.
3. ALL VALVES, HATCHES, AND INSTRUMENTS AT THE TOP OF THE PHOSPHORUS PRECIPITATION REACTOR SHALL BE READILY ACCESSIBLE FROM THE UPPER ACCESS PLATFORM.
4. INSULATE AND HEAT TRACE MAGNESIUM CHLORIDE STORAGE TANK. SEE SECTION 43 41 43.
5. FOR ALL WALL PENETRATIONS, PROVIDE STAINLESS STEEL PIPE SLEEVE WELDED TO COVER PLATE ON EXTERIOR. COMPLY WITH SECTION 01 73 20.
6. PROVIDE CONCRETE BASES FOR NEW EQUIPMENT. SEE DETAIL 1/S-904.

KEY NOTES (X)

1 DEFOAMER DOSING SKID DIMENSIONS INCLUDE WITH SPACE FOR A FUTURE PUMP. SEE SECTION 46 33 11.
2 MAGNESIUM CHLORIDE DOSING SKID DIMENSIONS INCLUDE DUPLEX PUMPS WITH SPACE FOR A FUTURE THIRD PUMP. SEE SECTION 46 33 11.
3 PROVIDE 2" CAPPED OUTLET FOR FUTURE GRIT WASHER.
4 PROVIDE RIGID SUPPORT FOR ALP PIPING.
5 PROVIDE MANUAL AIR RELEASE. SEE DETAIL 5/M-902.
6 INSTALL 6" ADS WITH 2% SLOPE TOWARD DIGESTED SOLIDS HOLDING TANK.
7 PROVIDE SUPPORT FOR 10" FA LINE FROM MANWAY ACCESS PLATFORM. COORDINATE SUPPORT WITH TANK MANUFACTURER.
8 PIPE SUPPORT, SEE DETAIL 4/S-909
9 ALLOW FOR DIFFERENTIAL SETTLEMENT OF REACTOR PAD. INSTALL TWO RESTRAINED FLANGE COUPLING ADAPTORS (WEDGE RESTRAINT TYPE, RAMAC OR EQUAL) AT 5 FOOT SPACING. SUPPORT PIPE NEAR EACH ADJACENT FLANGE.
10 PROVIDE FIXED SUPPORT FOR ALP PIPING NEAR WALL PENETRATION.
11 KNIFE GATE.
12 2" FLANGED CONNECTION TO PRECIPITATION REACTOR.

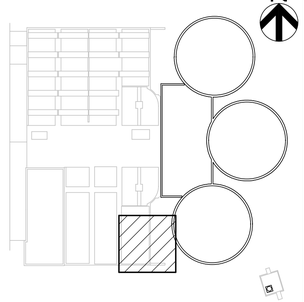

KEY PLAN

THE DRAWINGS IN THIS SET ARE RECORD DRAWINGS. THEY ARE CONSTRUCTION CONTRACT DRAWINGS WHICH HAVE BEEN REVISED BASED ON AVAILABLE FIELD INFORMATION RECORDED BY OTHERS DURING CONSTRUCTION OF THIS CONTRACT. THERE HAS BEEN NO VERIFICATION OF DIMENSIONS SHOWN ON THE CONSTRUCTION DRAWINGS OR THE ACCURACY/COMPLETENESS OF THE FIELD INFORMATION RECEIVED.

SIGNATURE 2/7/2023 DATE

AS-BUILT REPLACEMENT SHEET

PROFESSIONAL CERTIFICATION

THIS DRAWING WAS ORIGINALLY APPROVED FOR CONSTRUCTION AND SEALED BY BRIAN M. BACLCHUNAS, A REGISTERED PROFESSIONAL ENGINEER IN THE STATE OF MARYLAND, NO. 200406

NOTICE TO CONTRACTORS

- PROJECT ELEVATIONS ARE BASED ON NAVD88 AND HOWARD COUNTY'S BENCHMARK SYSTEM
- PREVIOUS PROJECTS USED OTHER DATUMS
- APPLY THE FOLLOWING CONVERSIONS WHEN USING PREVIOUS CONTRACT DRAWINGS:
  - ADDITION NO. 6: SUBTRACT 0.80 FT
  - PRIOR ADDITIONS: SUBTRACT 1.04 FT

DEPARTMENT OF PUBLIC WORKS
HOWARD COUNTY, MARYLAND

CHIEF, BUREAU OF UTILITIES DATE

DES: CJM
DRN: REE
CHK: JRK
DATE: 12/2016

DATE	REV	DESCRIPTION
07/2019		RECORD DRAWING

PROCESS

PHOSPHORUS PRECIPITATION BUILDING OVERALL PLAN

LITTLE PATUXENT WATER RECLAMATION PLANT
8TH ADDITION
BIOSOLIDS PROCESSING FACILITIES - PHASE I

CAPITAL PROJECT S-6295
CONTRACT NO. 24-4935

ELECTION DISTRICT NO. 6
HOWARD COUNTY, MARYLAND

SCALE AS SHOWN

SHEET 234 OF 463

M-360

BIM 360://10054364 – Little Patuxent WRP 8th Addition/264591_100_D_V18.rvt
1/11/2022 2:26:45 PM

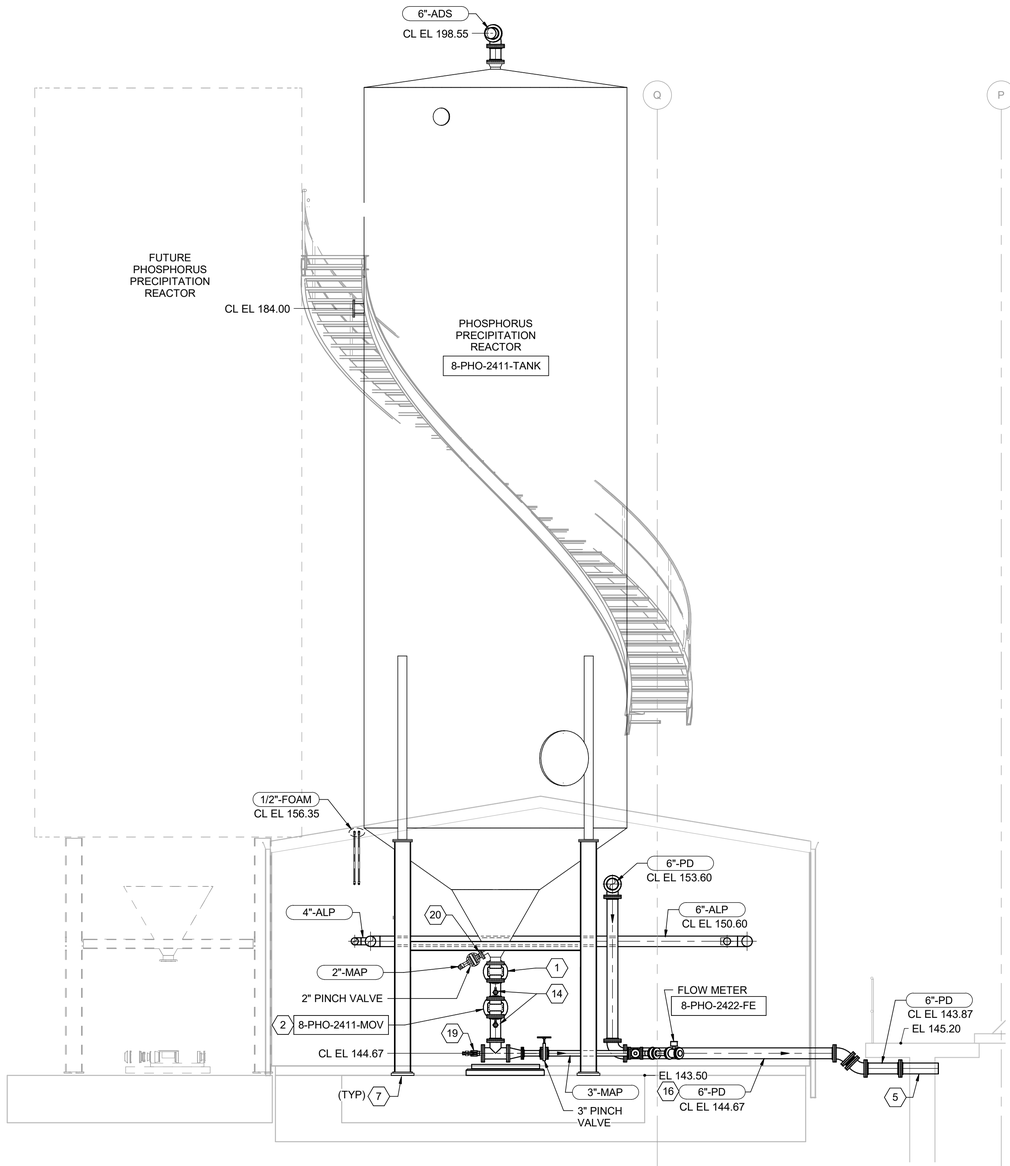

A M-360 SECTION
1/4" = 1'-0"

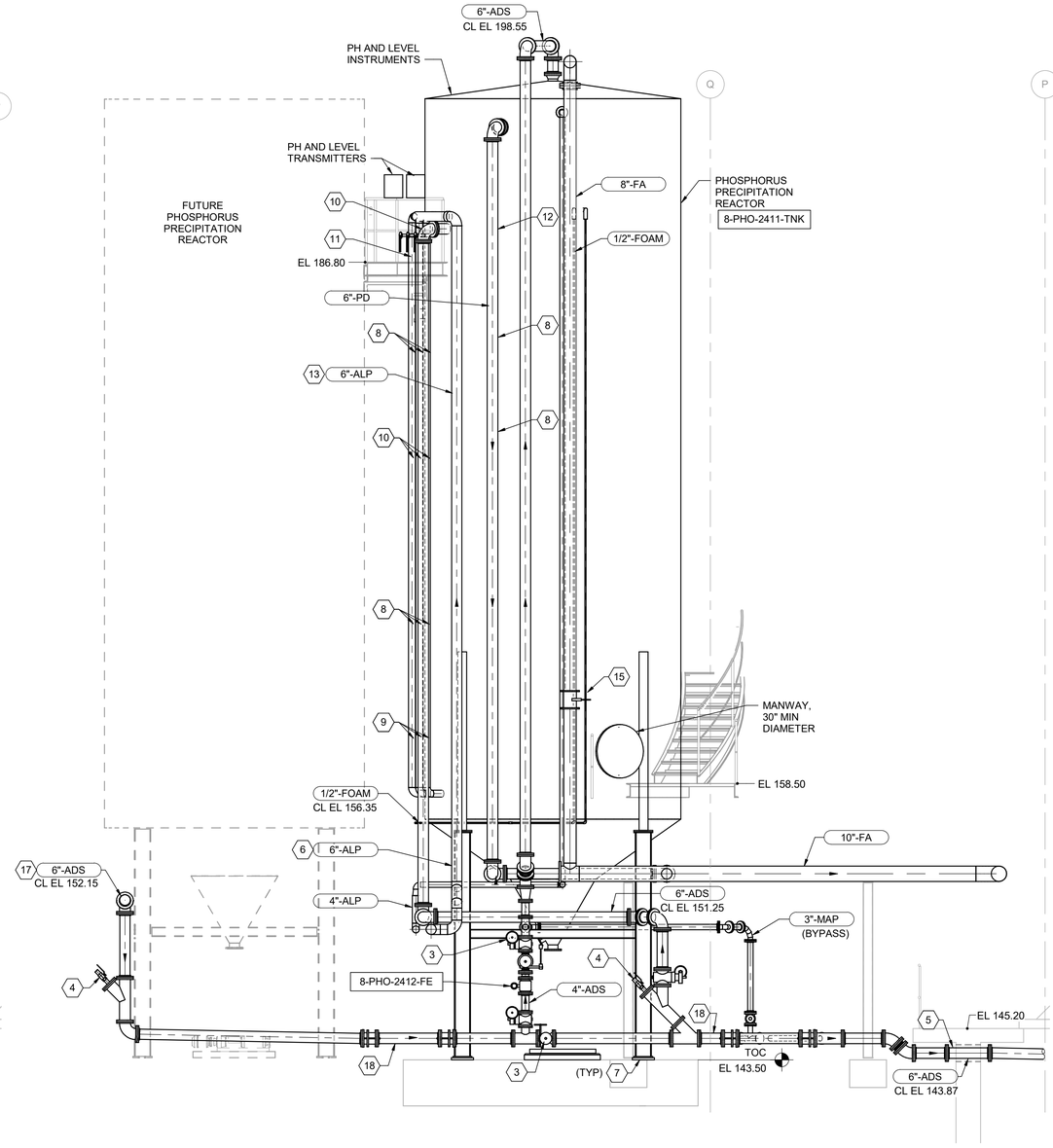

B M-360 SECTION
1/4" = 1'-0"

GENERAL NOTES

1. PHOSPHORUS PRECIPITATION EQUIPMENT AND CONTROLS SHALL BE PROVIDED AS A COMPLETE SYSTEM BY THE SYSTEMS SUPPLIER. THE SYSTEM SHALL PROVIDE SEQUESTRATION OF PHOSPHORUS AND ALLOW FOR FUTURE STRUVITE PRODUCT RECOVERY USING AN ADDITIONAL REACTOR VESSEL, BLOWER, GRIT WASHER AND CHEMICAL METERING PUMPS. SEE SECTION 46 73 73.
2. COORDINATE LOCATIONS OF ALL PIPING CONNECTIONS AND MANWAYS WITH EQUIPMENT SUPPLIERS.
3. ALL VALVES, HATCHES, AND INSTRUMENTS AT THE TOP OF THE PHOSPHORUS PRECIPITATION REACTOR SHALL BE READILY ACCESSIBLE FROM THE UPPER ACCESS PLATFORM.

KEY NOTES (X)

1 KNIFE GATE.
2 MOTORIZED KNIFE GATE.
3 PLUG VALVE.
4 FLUSHING CONNECTION, SEE DETAIL 4/M-902
5 WALL PENETRATION, SEE DETAIL 9/S-903.
6 PROVIDE RIGID SUPPORT FOR ALP PIPING.
7 COLUMNS SHALL BE SET ON 1" MIN NS GROUT.
8 PROVIDE GUIDE SUPPORTS FOR ALP PIPING AT MINIMUM 10 FT INTERVALS.
9 PROVIDE SUPPORT FOR 10" FA LINE FROM MANWAY ACCESS PLATFORM. COORDINATE SUPPORT WITH TANK MANUFACTURER.
10 EXPANSION JOINT, MINIMUM 1.5" AXIAL EXPANSION.
11 PROVIDE FIXED SUPPORT FOR ALP PIPING NEAR WALL PENETRATION.
12 EXPANSION JOINT, MINIMUM 1.0' AXIAL EXPANSION.
13 COORDINATE ALP PIPE SIZES WITH SYSTEM SUPPLIER'S APPROVED SUBMITTAL.
14 FLUSHING AND DRAIN CONNECTION. SEE DETAIL 1/M-902.
15 DAMPER OPERATOR SHALL BE ACCESSIBLE FROM PLATFORM.
16 SLOPE PIPE AT 2% SLOPE
17 INSTALL 6" ADS WITH 2% SLOPE TOWARD DIGESTED SOLIDS HOLDING TANK.
18 ALLOW FOR DIFFERENTIAL SETTLEMENT OF REACTOR PAD. INSTALL TWO RESTRAINED FLANGE COUPLING ADAPTORS (WEDGE RESTRAINT TYPE, RAMAC OR EQUAL) AT 5 FOOT SPACING. SUPPORT PIPE NEAR EACH ADJACENT FLANGE.
19 2" FLUSHING CONNECTION W/ MANUAL BALL VALVE AND MALE CAMLOCK FITTING.
20 2" FLANGED CONNECTION TO PRECIPITATION REACTOR.

THE DRAWINGS IN THIS SET ARE RECORD DRAWINGS. THEY ARE CONSTRUCTION CONTRACT DRAWINGS WHICH HAVE BEEN REVISED BASED ON AVAILABLE FIELD INFORMATION RECORDED BY OTHERS DURING CONSTRUCTION OF THIS CONTRACT. THERE HAS BEEN NO VERIFICATION OF DIMENSIONS SHOWN ON THE CONSTRUCTION DRAWINGS OR THE ACCURACY/COMPLETENESS OF THE FIELD INFORMATION RECEIVED.

SIGNATURE — DATE 2/7/2023

AS-BUILT REPLACEMENT SHEET

PROFESSIONAL CERTIFICATION
THIS DRAWING WAS ORIGINALLY APPROVED FOR CONSTRUCTION AND SEALED BY BRIAN M. BACLCHUNAS, A REGISTERED PROFESSIONAL ENGINEER IN THE STATE OF MARYLAND, NO. 200406

NOTICE TO CONTRACTORS
- PROJECT ELEVATIONS ARE BASED ON NAVD88 AND HOWARD COUNTY'S BENCHMARK SYSTEM
- PREVIOUS PROJECTS USED OTHER DATUMS
- APPLY THE FOLLOWING CONVERSIONS WHEN USING PREVIOUS CONTRACT DRAWINGS:
  - ADDITION NO. 6: SUBTRACT 0.80 FT
  - PRIOR ADDITIONS: SUBTRACT 1.04 FT

DEPARTMENT OF PUBLIC WORKS
HOWARD COUNTY, MARYLAND

CHIEF, BUREAU OF UTILITIES — DATE

DES: CJM
DRN: REE
CHK: JRK
DATE: 12/2016

DATE	REV	DESCRIPTION
07/2019		RECORD DRAWING

PROCESS

PHOSPHORUS PRECIPITATION BUILDING SECTIONS

LITTLE PATUXENT WATER RECLAMATION PLANT
8TH ADDITION
BIOSOLIDS PROCESSING FACILITIES - PHASE I

CAPITAL PROJECT S-6295
CONTRACT NO. 24-4935

ELECTION DISTRICT NO. 6
HOWARD COUNTY, MARYLAND

SCALE AS SHOWN

SHEET 235 OF 463

M-361

BIM 360://10054364 – Little Patuxent WRP 8th Addition/264591_100_D_V18.rvt
1/11/2022 2:26:49 PM

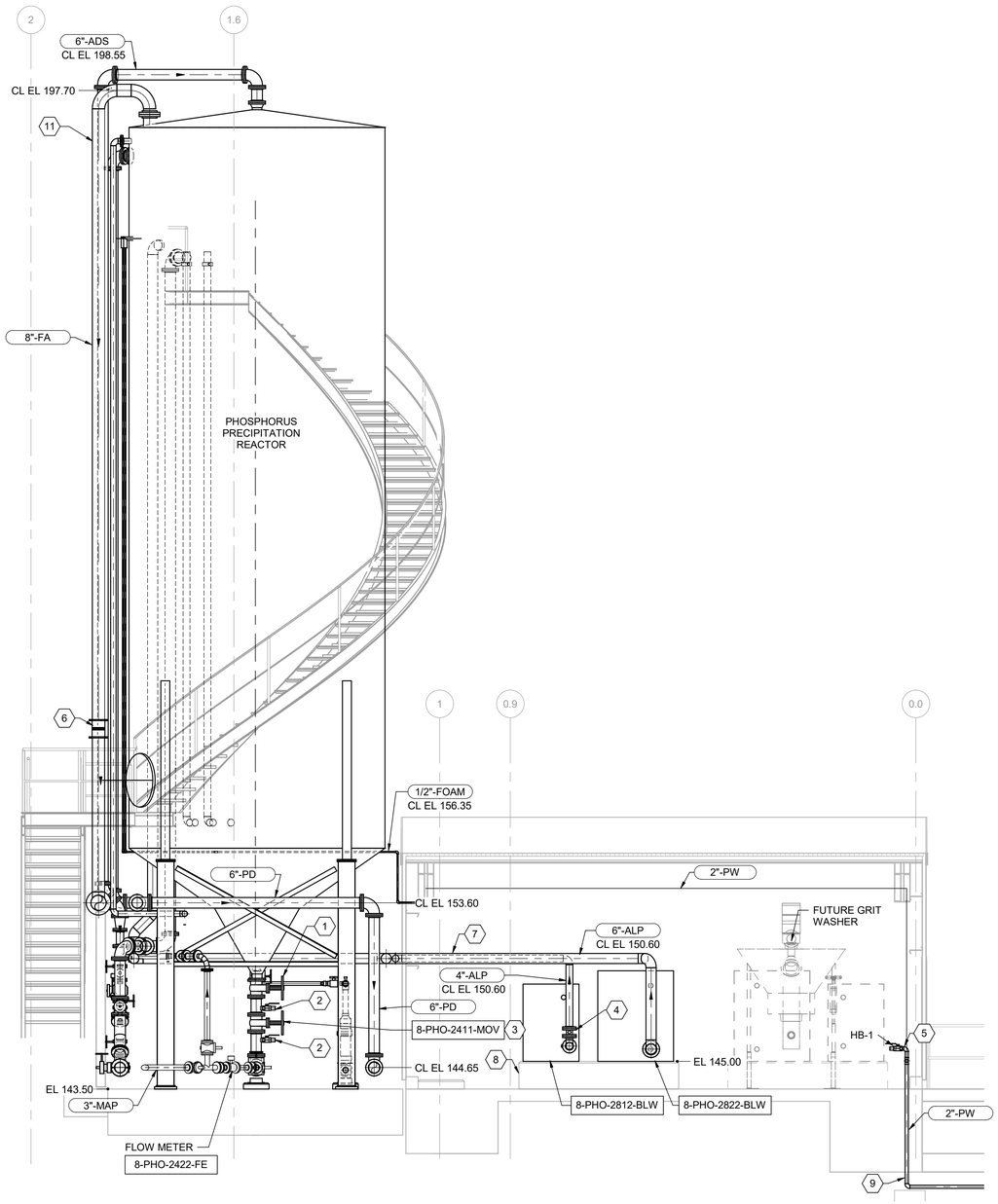

C M-360 SECTION
1/4" = 1'-0"

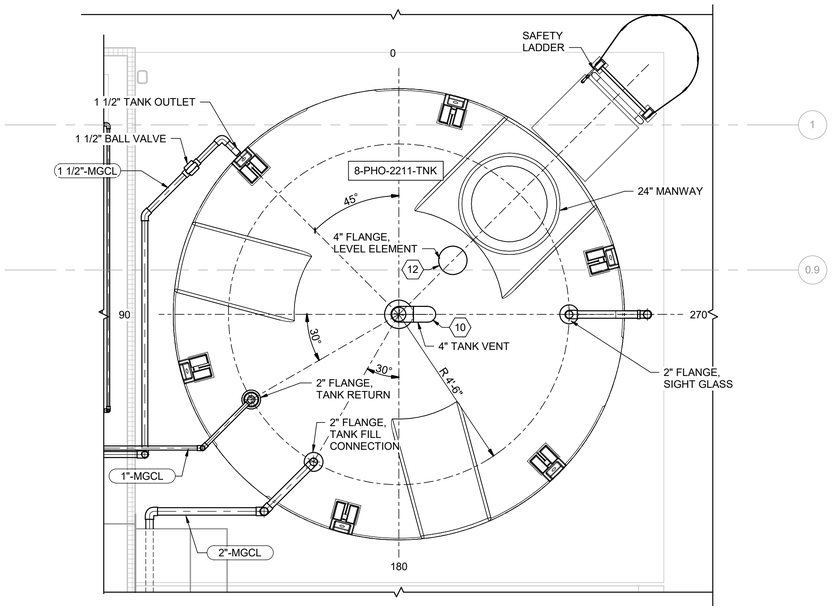

2 M-360 MAGNESIUM CHLORIDE TANK TOP PLAN
1/2" = 1'-0"

N

GENERAL NOTES

1. PHOSPHORUS PRECIPITATION EQUIPMENT AND CONTROLS SHALL BE PROVIDED AS A COMPLETE SYSTEM BY THE SYSTEMS SUPPLIER. THE SYSTEM SHALL PROVIDE SEQUESTRATION OF PHOSPHORUS AND ALLOW FOR FUTURE STRUVITE PRODUCT RECOVERY USING AN ADDITIONAL REACTOR VESSEL, BLOWER, GRIT WASHER AND CHEMICAL METERING PUMPS. SEE SECTION 46 73 73.
2. COORDINATE LOCATIONS OF ALL PIPING CONNECTIONS AND MANWAYS WITH EQUIPMENT SUPPLIERS
3. INSULATE AND HEAT TRACE MAGNESIUM CHLORIDE STORAGE TANK. SEE SECTION 43 41 43.

KEY NOTES (X)

1 KNIFE GATE.
2 FLUSHING CONNECTION.
3 MOTORIZED KNIFE GATE.
4 BUTTERFLY VALVE.
5 PROVIDE 2" CAPPED OUTLET FOR FUTURE GRIT WASHER.
6 DAMPER OPERATOR SHALL BE ACCESSIBLE FROM PLATFORM.
7 PROVIDE FIXED SUPPORT FOR ALP PIPING NEAR WALL PENETRATION.
8 CONCRETE EQUIPMENT BASE, SEE DETAIL 1/S-904.
9 ENCASE PIPE UNDER SLAB PER DETAIL 3/M-901.
10 PROVIDE INSECT SCREEN PER DETAIL 7/M-902.
11 CONNECT FA DUCTING TO COVER PER DETAIL 8/M-900.
12 LOCATE LEVEL ELEMENT FLANGE FOR ACCESSIBILITY FROM LADDER.

THE DRAWINGS IN THIS SET ARE RECORD DRAWINGS. THEY ARE CONSTRUCTION CONTRACT DRAWINGS WHICH HAVE BEEN REVISED BASED ON AVAILABLE FIELD INFORMATION RECORDED BY OTHERS DURING CONSTRUCTION OF THIS CONTRACT. THERE HAS BEEN NO VERIFICATION OF DIMENSIONS SHOWN ON THE CONSTRUCTION DRAWINGS OR THE ACCURACY/COMPLETENESS OF THE FIELD INFORMATION RECEIVED.

SIGNATURE — DATE 2/7/2023

AS-BUILT REPLACEMENT SHEET

PROFESSIONAL CERTIFICATION
THIS DRAWING WAS ORIGINALLY APPROVED FOR CONSTRUCTION AND SEALED BY BRIAN M. BACLCHUNAS, A REGISTERED PROFESSIONAL ENGINEER IN THE STATE OF MARYLAND, NO. 200406

NOTICE TO CONTRACTORS
- PROJECT ELEVATIONS ARE BASED ON NAVD88 AND HOWARD COUNTY'S BENCHMARK SYSTEM
- PREVIOUS PROJECTS USED OTHER DATUMS
- APPLY THE FOLLOWING CONVERSIONS WHEN USING PREVIOUS CONTRACT DRAWINGS:
  - ADDITION NO. 6: SUBTRACT 0.80 FT
  - PRIOR ADDITIONS: SUBTRACT 1.04 FT

DEPARTMENT OF PUBLIC WORKS
HOWARD COUNTY, MARYLAND

CHIEF, BUREAU OF UTILITIES — DATE

DES: CJM
DRN: REE
CHK: JRK
DATE: 12/2016

DATE	REV	DESCRIPTION
07/2019		RECORD DRAWING

PROCESS

PHOSPHORUS PRECIPITATION BUILDING SECTIONS AND DETAILS

LITTLE PATUXENT WATER RECLAMATION PLANT
8TH ADDITION
BIOSOLIDS PROCESSING FACILITIES - PHASE I

CAPITAL PROJECT S-6295
CONTRACT NO. 24-4935

ELECTION DISTRICT NO. 6
HOWARD COUNTY, MARYLAND

SCALE AS SHOWN

SHEET 236 OF 463

M-362

BIM 360://10054364 – Little Patuxent WRP 8th Addition/264591_100_D_V18.rvt
1/11/2022 2:26:54 PM

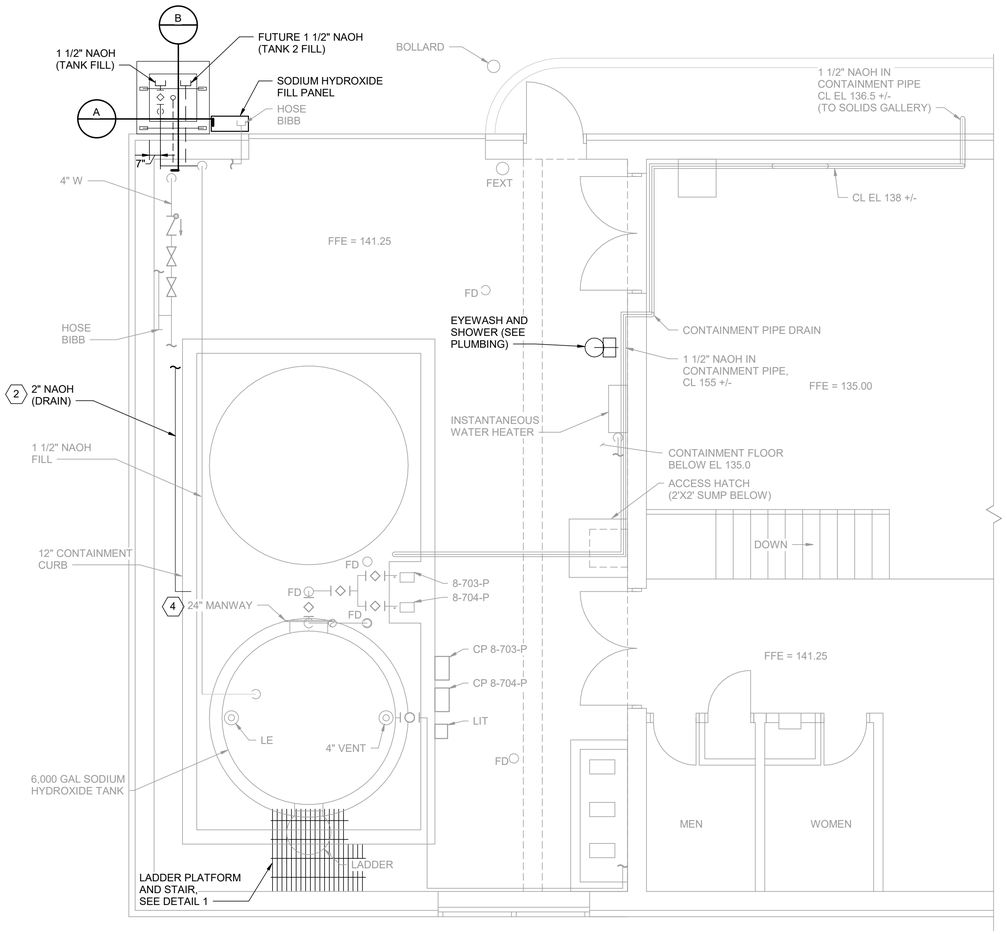

FILTER BUILDING - PARTIAL PLAN

1/4" = 1'-0"

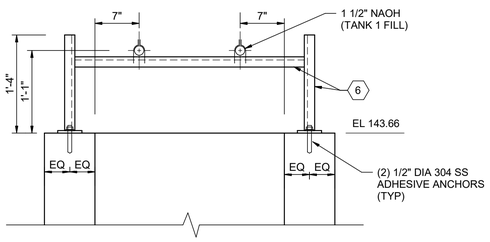

A SODIUM HYDROXIDE FILL STATION SECTION

1" = 1'-0"

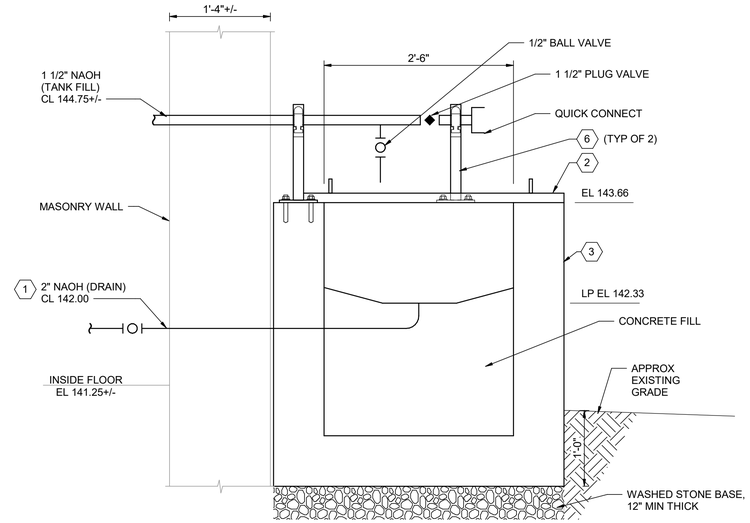

B SODIUM HYDROXIDE FILL STATION SECTION

1" = 1'-0"

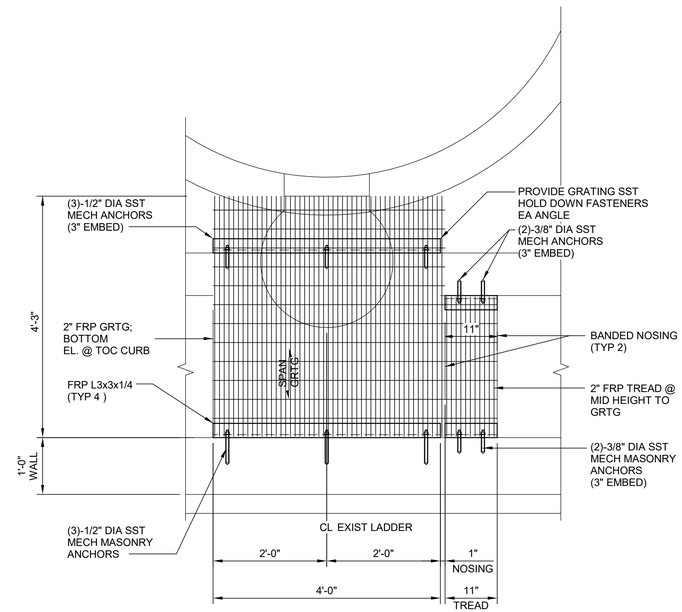

1 LADDER PLATFORM AND STAIR

3/4" = 1'-0"

N

KEY NOTES: (#)

1. SLOPE FILL AREA DRAIN AT 1% TOWARD CONTAINMENT. PENETRATE CONTAINMENT WALL AT 6" AFF, SEALED WATER-TIGHT, AND DIRECT DISCHARGE TO CONTAINMENT FLOOR DRAIN.
2. PROVIDE FRP PLATE COVER WITH TWO HANDLES FOR UNLOADING CONTAINMENT AREA. GROUT SUPPORTING SURFACE FOR EVEN CONTACT AND 1% SLOPE AWAY FROM BUILDING FOR DRAINAGE. COMPLY WITH SECTION 06 82 00.
3. PRECAST UNLOADING AREA CONTAINMENT, COMPLY WITH SECTION 33 05 15.
4. APPLY PROTECTIVE COATING TO CONTAINMENT AREA INCLUDING FLOOR SLAB, WALLS, TANK PAD WALLS, AND 1 FT WIDE PERIMETER ON TOP OF TANK PADS. ALSO APPLY COATING TO INTERIOR SURFACES AND TOPS OF WALLS OF THE FILL STATION. COMPLY WITH SECTION 09 96 00.
5. INSTALL NEW CAUTION SIGNAGE ABOVE FILL STATION TO MATCH EXISTING. SIGN SHALL HAVE "CAUTION" HEADER WITH LINES OF TEXT BELOW READING "CAUSTIC/SODIUM HYDROXIDE" AND "NaOH".
6. SUPPORTS IN CHEMICAL CONTAINMENT AREAS SHALL BE 304 SS OR FRP CHANNEL STRUT.

THE DRAWINGS IN THIS SET ARE RECORD DRAWINGS. THEY ARE CONSTRUCTION CONTRACT DRAWINGS WHICH HAVE BEEN REVISED BASED ON AVAILABLE FIELD INFORMATION RECORDED BY OTHERS DURING CONSTRUCTION OF THIS CONTRACT. THERE HAS BEEN NO VERIFICATION OF DIMENSIONS SHOWN ON THE CONSTRUCTION DRAWINGS OR THE ACCURACY/COMPLETENESS OF THE FIELD INFORMATION RECEIVED.

SIGNATURE — DATE 2/7/2023

AS-BUILT REPLACEMENT SHEET

PROFESSIONAL CERTIFICATION

THIS DRAWING WAS ORIGINALLY APPROVED FOR CONSTRUCTION AND SEALED BY BRIAN M. BACLCHUNAS, A REGISTERED PROFESSIONAL ENGINEER IN THE STATE OF MARYLAND, NO. 200406

NOTICE TO CONTRACTORS

- PROJECT ELEVATIONS ARE BASED ON NAVD88 AND HOWARD COUNTY'S BENCHMARK SYSTEM
- PREVIOUS PROJECTS USED OTHER DATUMS
- APPLY THE FOLLOWING CONVERSIONS WHEN USING PREVIOUS CONTRACT DRAWINGS:
  - ADDITION NO. 6: SUBTRACT 0.80 FT
  - PRIOR ADDITIONS: SUBTRACT 1.04 FT

DEPARTMENT OF PUBLIC WORKS
HOWARD COUNTY, MARYLAND

CHIEF, BUREAU OF UTILITIES — DATE

DES: CJM
DRN: REE
CHK: BMB
DATE: 12/2016

DATE	REV	DESCRIPTION
07/2019		RECORD DRAWING

PROCESS

FILTER BUILDING PLAN AND SECTIONS

LITTLE PATUXENT WATER RECLAMATION PLANT
8TH ADDITION
BIOSOLIDS PROCESSING FACILITIES - PHASE I

CAPITAL PROJECT S-6295
CONTRACT NO. 24-4935

ELECTION DISTRICT NO. 6
HOWARD COUNTY, MARYLAND

SCALE AS SHOWN

SHEET 237 OF 463

M-640

BIM 360://10054364 – Little Patuxent WRP 8th Addition/264591_100_D_V18.rvt
1/11/2022 2:26:56 PM

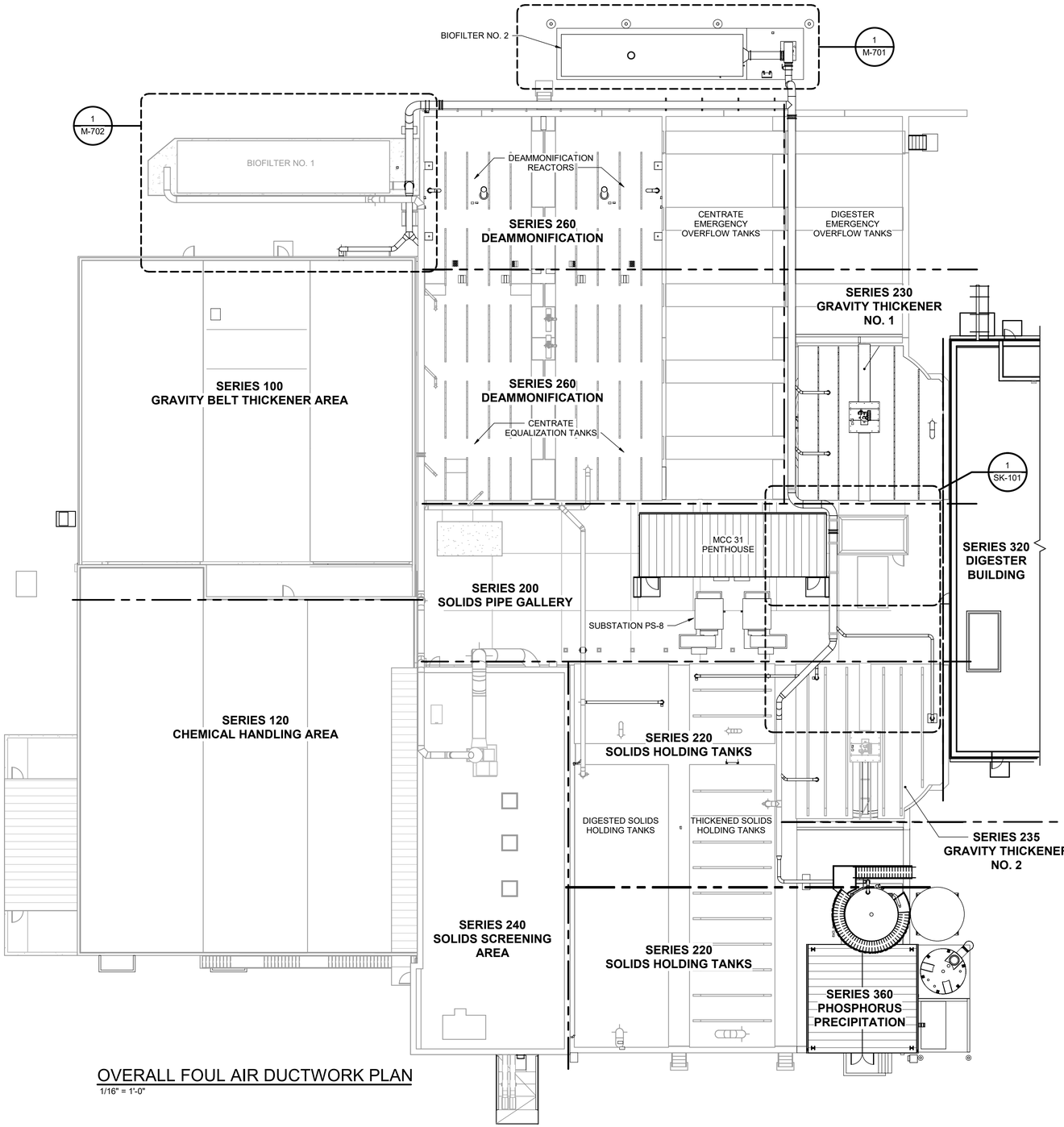

OVERALL FOUL AIR DUCTWORK PLAN

1/16" = 1'-0"

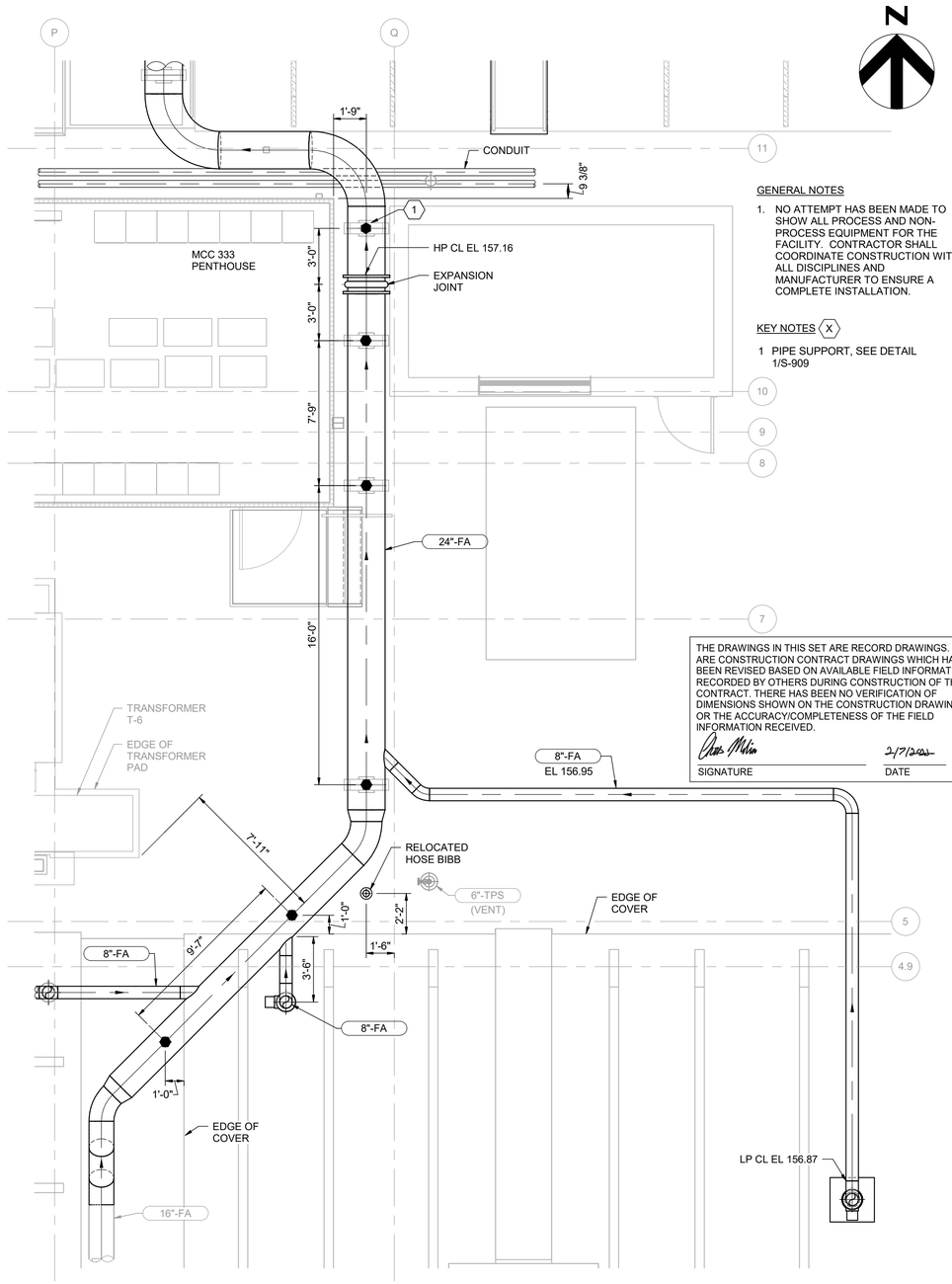

GENERAL NOTES

1. NO ATTEMPT HAS BEEN MADE TO SHOW ALL PROCESS AND NON-PROCESS EQUIPMENT FOR THE FACILITY. CONTRACTOR SHALL COORDINATE CONSTRUCTION WITH ALL DISCIPLINES AND MANUFACTURER TO ENSURE A COMPLETE INSTALLATION.

KEY NOTES (X)

1 PIPE SUPPORT, SEE DETAIL 1/S-909

THE DRAWINGS IN THIS SET ARE RECORD DRAWINGS. THEY ARE CONSTRUCTION CONTRACT DRAWINGS WHICH HAVE BEEN REVISED BASED ON AVAILABLE FIELD INFORMATION RECORDED BY OTHERS DURING CONSTRUCTION OF THIS CONTRACT. THERE HAS BEEN NO VERIFICATION OF DIMENSIONS SHOWN ON THE CONSTRUCTION DRAWINGS OR THE ACCURACY/COMPLETENESS OF THE FIELD INFORMATION RECEIVED.

SIGNATURE — DATE 2/7/2023

2 M-700 INSET DETAIL

1/4" = 1'-0"

AS-BUILT REPLACEMENT SHEET

PROFESSIONAL CERTIFICATION

THIS DRAWING WAS ORIGINALLY APPROVED FOR CONSTRUCTION AND SEALED BY BRIAN M. BACLCHUNAS, A REGISTERED PROFESSIONAL ENGINEER IN THE STATE OF MARYLAND, NO. 200406

NOTICE TO CONTRACTORS

- PROJECT ELEVATIONS ARE BASED ON NAVD88 AND HOWARD COUNTY'S BENCHMARK SYSTEM
- PREVIOUS PROJECTS USED OTHER DATUMS
- APPLY THE FOLLOWING CONVERSIONS WHEN USING PREVIOUS CONTRACT DRAWINGS:
  - ADDITION NO. 6: SUBTRACT 0.80 FT
  - PRIOR ADDITIONS: SUBTRACT 1.04 FT

DEPARTMENT OF PUBLIC WORKS
HOWARD COUNTY, MARYLAND

CHIEF, BUREAU OF UTILITIES — DATE

DES: JSG
DRN: SLB
CHK: JRK
DATE: 12/2016

DATE	REV	DESCRIPTION
07/2019		RECORD DRAWING

PROCESS

ODOR CONTROL SYSTEM
OVERALL FOUL AIR DUCTWORK PLAN

LITTLE PATUXENT WATER RECLAMATION PLANT
8TH ADDITION
BIOSOLIDS PROCESSING FACILITIES - PHASE I

CAPITAL PROJECT S-6295
CONTRACT NO. 24-4935

ELECTION DISTRICT NO. 6
HOWARD COUNTY, MARYLAND

SCALE AS SHOWN

SHEET 238 OF 463

M-700

BIM 360://10054364 – Little Patuxent WRP 8th Addition/264591_100_D_V18.rvt
1/11/2022 2:27:03 PM

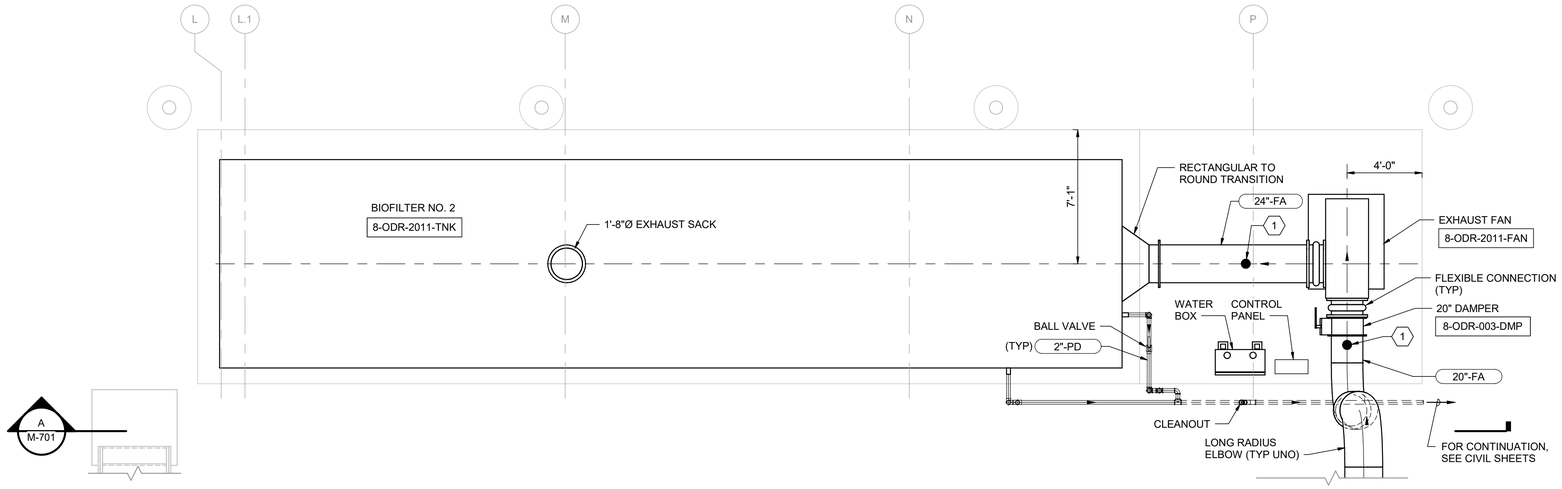

1 / M-260 PLAN AT EL 142.70

1/4" = 1'-0"

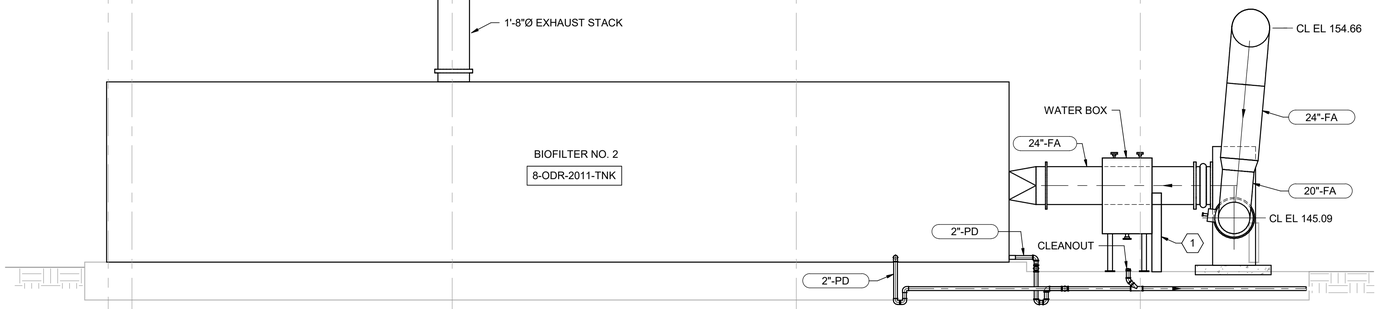

A / M-701 SECTION

1/4" = 1'-0"

N

GENERAL NOTES

1. NO ATTEMPT HAS BEEN MADE TO SHOW ALL PROCESS AND NON-PROCESS EQUIPMENT FOR THE FACILITY. CONTRACTOR SHALL COORDINATE CONSTRUCTION WITH ALL DISCIPLINES AND MANUFACTURER TO ENSURE A COMPLETE INSTALLATION.

KEY NOTES (X)

1 PIPE SUPPORT, SEE DETAIL 1/S-909

THE DRAWINGS IN THIS SET ARE RECORD DRAWINGS. THEY ARE CONSTRUCTION CONTRACT DRAWINGS WHICH HAVE BEEN REVISED BASED ON AVAILABLE FIELD INFORMATION RECORDED BY OTHERS DURING CONSTRUCTION OF THIS CONTRACT. THERE HAS BEEN NO VERIFICATION OF DIMENSIONS SHOWN ON THE CONSTRUCTION DRAWINGS OR THE ACCURACY/COMPLETENESS OF THE FIELD INFORMATION RECEIVED.

SIGNATURE — DATE 2/7/2023

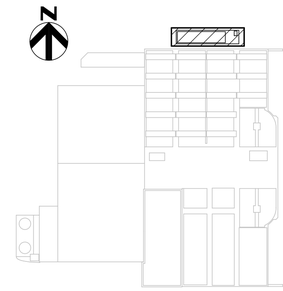

KEY PLAN

AS-BUILT REPLACEMENT SHEET

PROFESSIONAL CERTIFICATION

THIS DRAWING WAS ORIGINALLY APPROVED FOR CONSTRUCTION AND SEALED BY BRIAN M. BACLCHUNAS, A REGISTERED PROFESSIONAL ENGINEER IN THE STATE OF MARYLAND, NO. 200406

NOTICE TO CONTRACTORS

- PROJECT ELEVATIONS ARE BASED ON NAVD88 AND HOWARD COUNTY'S BENCHMARK SYSTEM
- PREVIOUS PROJECTS USED OTHER DATUMS
- APPLY THE FOLLOWING CONVERSIONS WHEN USING PREVIOUS CONTRACT DRAWINGS:
  - ADDITION NO. 6: SUBTRACT 0.80 FT
  - PRIOR ADDITIONS: SUBTRACT 1.04 FT

DEPARTMENT OF PUBLIC WORKS
HOWARD COUNTY, MARYLAND

CHIEF, BUREAU OF UTILITIES — DATE

DES: JSG
DRN: SLB
CHK: JRK
DATE: 12/2016

DATE	REV	DESCRIPTION
07/2019		RECORD DRAWING

PROCESS

ODOR CONTROL SYSTEM PLANS AND SECTIONS 1

LITTLE PATUXENT WATER RECLAMATION PLANT
8TH ADDITION
BIOSOLIDS PROCESSING FACILITIES - PHASE I

CAPITAL PROJECT S-6295
CONTRACT NO. 24-4935

ELECTION DISTRICT NO. 6
HOWARD COUNTY, MARYLAND

SCALE AS SHOWN

SHEET 239 OF 463

M-701

BIM 360://10054364 – Little Patuxent WRP 8th Addition/264591_100_D_V18.rvt
1/11/2022 2:27:06 PM

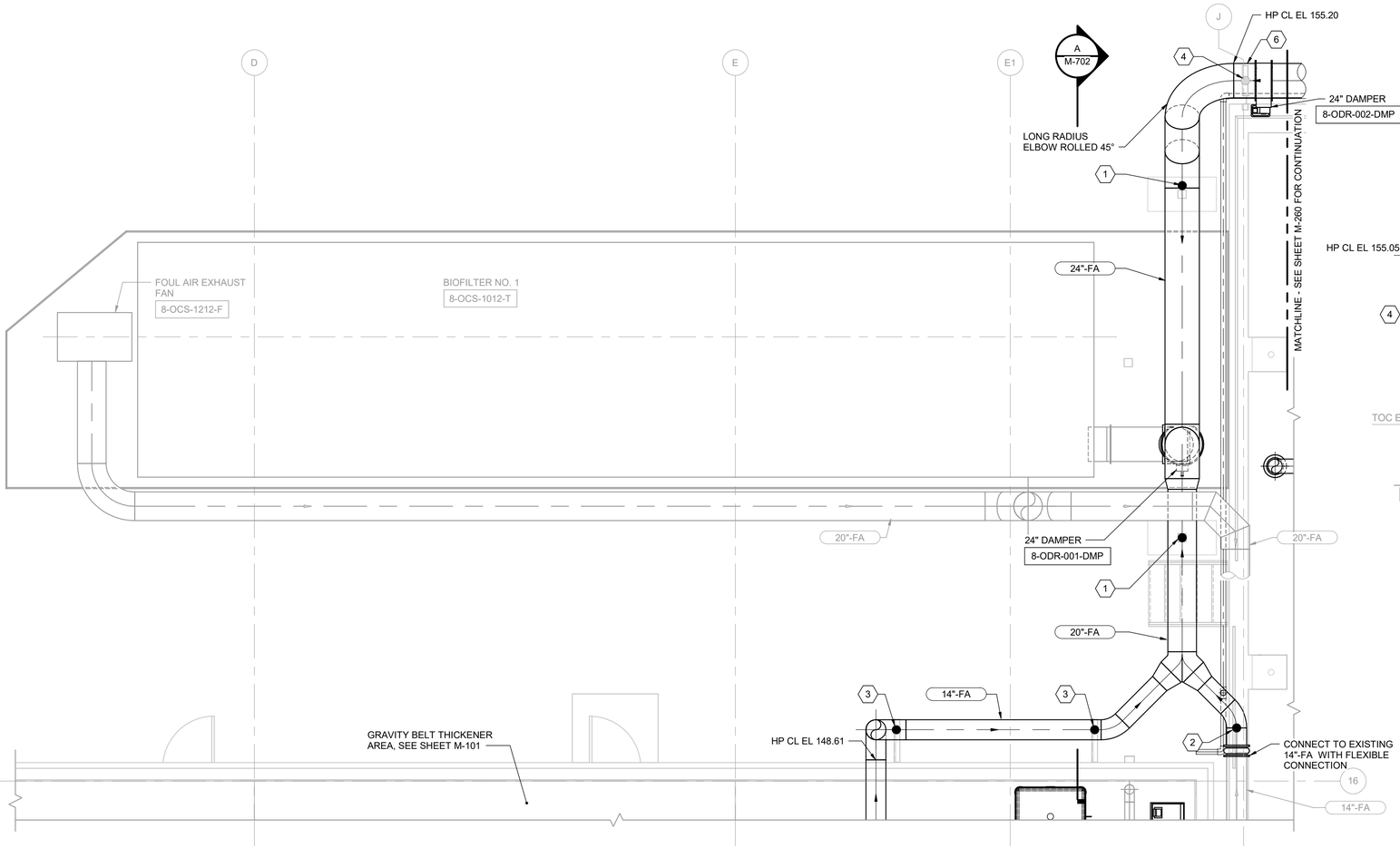

1 M-700 PLAN ABOVE EL 142.00
1/4" = 1'-0"

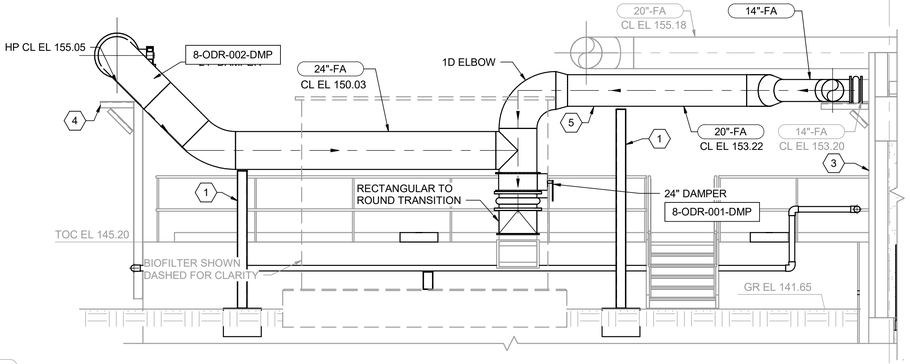

A M-702 SECTION
1/4" = 1'-0"

KEY NOTES (X)

1 PIPE SUPPORT, SEE DETAIL 4/S-909
2 PIPE SUPPORT, SEE DETAIL 3/S-909
3 EXISTING KNEE BRACE PIPE SUPPORT, VERIFY LOCATION AND ELEVATION, SEE DETAIL 5/S-909
4 EXISTING PIPE SUPPORT, MODIFY PER DETAIL 2/S-909
5 ADJUST ELEVATION AS REQUIRED IN ORDER TO REUSE SUPPORTS NOTED IN KEY NOTE 4.
6 ADJUST ELEVATION AS REQUIRED IN ORDER TO REUSE SUPPORTS NOTED IN KEY NOTE 5.

THE DRAWINGS IN THIS SET ARE RECORD DRAWINGS. THEY ARE CONSTRUCTION CONTRACT DRAWINGS WHICH HAVE BEEN REVISED BASED ON AVAILABLE FIELD INFORMATION RECORDED BY OTHERS DURING CONSTRUCTION OF THIS CONTRACT. THERE HAS BEEN NO VERIFICATION OF DIMENSIONS SHOWN ON THE CONSTRUCTION DRAWINGS OR THE ACCURACY/COMPLETENESS OF THE FIELD INFORMATION RECEIVED.

SIGNATURE 2/7/2023 DATE

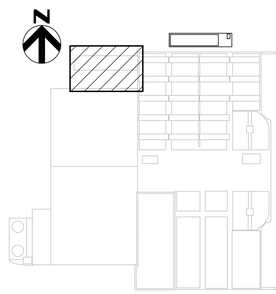

KEY PLAN

AS-BUILT REPLACEMENT SHEET

PROFESSIONAL CERTIFICATION

THIS DRAWING WAS ORIGINALLY APPROVED FOR CONSTRUCTION AND SEALED BY BRIAN M. BACLCHUNAS, A REGISTERED PROFESSIONAL ENGINEER IN THE STATE OF MARYLAND, NO. 200406

NOTICE TO CONTRACTORS

- PROJECT ELEVATIONS ARE BASED ON NAVD88 AND HOWARD COUNTY'S BENCHMARK SYSTEM
- PREVIOUS PROJECTS USED OTHER DATUMS
- APPLY THE FOLLOWING CONVERSIONS WHEN USING PREVIOUS CONTRACT DRAWINGS:
  - ADDITION NO. 6: SUBTRACT 0.80 FT
  - PRIOR ADDITIONS: SUBTRACT 1.04 FT

DEPARTMENT OF PUBLIC WORKS
HOWARD COUNTY, MARYLAND

CHIEF, BUREAU OF UTILITIES DATE

DES: JSG
DRN: SLB
CHK: JRK
DATE: 12/2016

DATE	REV	DESCRIPTION
07/2019		RECORD DRAWING

PROCESS

ODOR CONTROL SYSTEM PLANS AND SECTIONS 1

LITTLE PATUXENT WATER RECLAMATION PLANT
8TH ADDITION
BIOSOLIDS PROCESSING FACILITIES - PHASE I

CAPITAL PROJECT S-6295
CONTRACT NO. 24-4935

ELECTION DISTRICT NO. 6
HOWARD COUNTY, MARYLAND

SCALE AS SHOWN

SHEET 240 OF 463

M-702

BIM 360://10054364 – Little Patuxent WRP 8th Addition/264591_100_D_V18.rvt
1/11/2022 2:27:09 PM

ID	TAKE-OFF	Q (CFM)	DIAMETER (IN)
1	SCUM TANK	220	6
2	GBT NO. 1	600	10
3	GBT NO. 2	600	10
4	PRIMARY SLUDGE SCREEN HOPPER	100	4
5	DIGESTED SOLIDS STORAGE TANK NO. 1A	440	14
6	DIGESTED SOLIDS STORAGE TANK NO. 1B	440	8
7	DIGESTED SOLIDS STORAGE TANK NO. 2	980	14
8	GRAVITY THICKENER NO. 1A	670	8
9	GRAVITY THICKENER NO. 1B	670	8
10	GRAVITY THICKENER NO. 2A	450	8
11	GRAVITY THICKENER NO. 2B	450	8
12	GRAVITY THICKENER NO. 2C	450	8
13	THICKENED SOLIDS STORAGE TANK NO. 1A	440	8
14	THICKENED SOLIDS STORAGE TANK NO. 1B	440	8
15	THICKENED SOLIDS STORAGE TANK NO. 2A	980	16
16	AIR PREX NO. 1	500	8
17	AIR PREX NO. 2 (FUTURE)	500	8

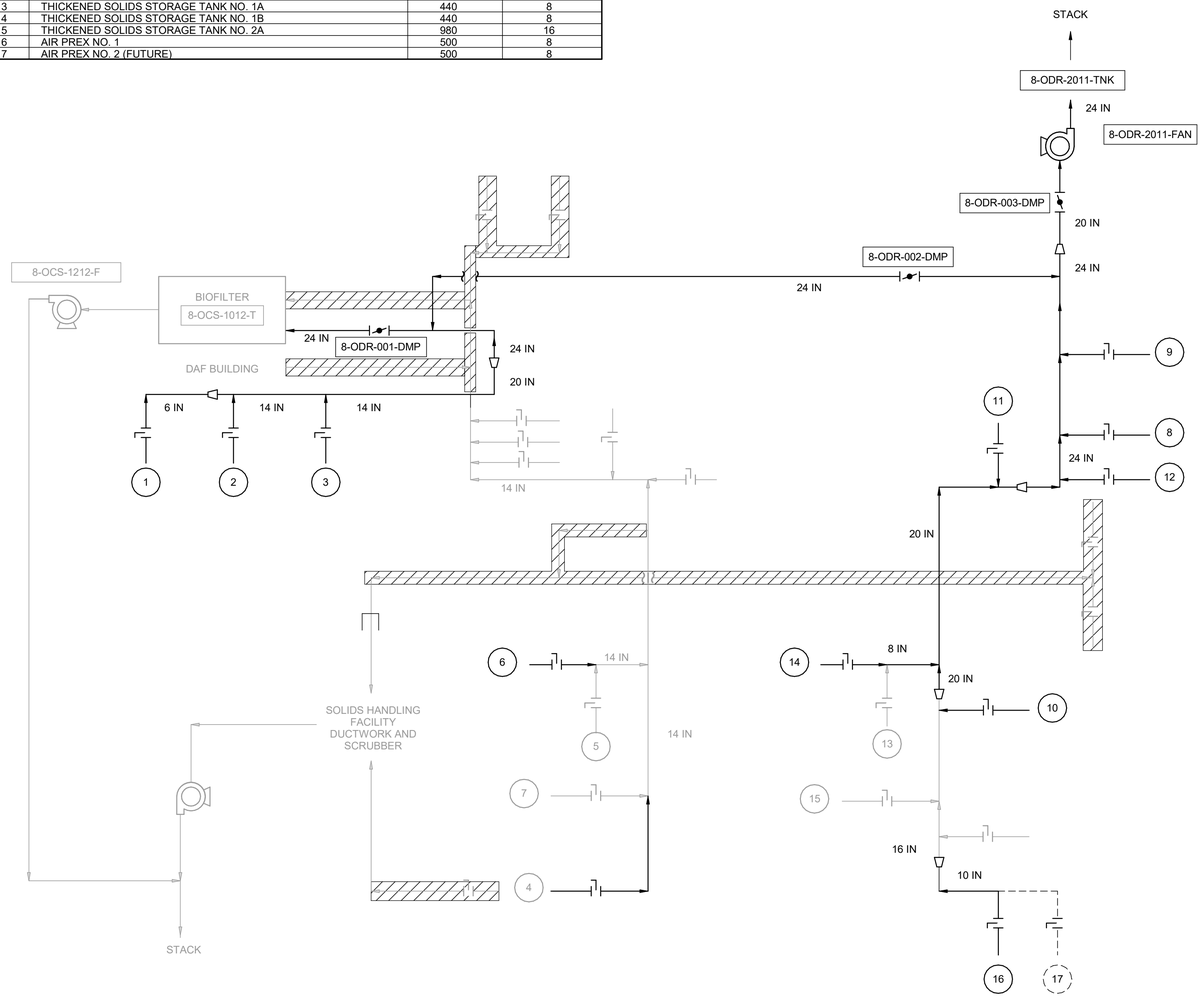

THE DRAWINGS IN THIS SET ARE RECORD DRAWINGS. THEY ARE CONSTRUCTION CONTRACT DRAWINGS WHICH HAVE BEEN REVISED BASED ON AVAILABLE FIELD INFORMATION RECORDED BY OTHERS DURING CONSTRUCTION OF THIS CONTRACT. THERE HAS BEEN NO VERIFICATION OF DIMENSIONS SHOWN ON THE CONSTRUCTION DRAWINGS OR THE ACCURACY/COMPLETENESS OF THE FIELD INFORMATION RECEIVED.

SIGNATURE — DATE 2/7/2023

AS-BUILT REPLACEMENT SHEET

PROFESSIONAL CERTIFICATION

THIS DRAWING WAS ORIGINALLY APPROVED FOR CONSTRUCTION AND SEALED BY BRIAN M. BACLCHUNAS, A REGISTERED PROFESSIONAL ENGINEER IN THE STATE OF MARYLAND, NO. 200406

NOTICE TO CONTRACTORS

- PROJECT ELEVATIONS ARE BASED ON NAVD88 AND HOWARD COUNTY'S BENCHMARK SYSTEM
- PREVIOUS PROJECTS USED OTHER DATUMS
- APPLY THE FOLLOWING CONVERSIONS WHEN USING PREVIOUS CONTRACT DRAWINGS:
  - ADDITION NO. 6: SUBTRACT 0.80 FT
  - PRIOR ADDITIONS: SUBTRACT 1.04 FT

DEPARTMENT OF PUBLIC WORKS
HOWARD COUNTY, MARYLAND

CHIEF, BUREAU OF UTILITIES — DATE

DES: JSG
DRN: REE
CHK: JRK
DATE: 12/2016

DATE	REV	DESCRIPTION
07/2019		RECORD DRAWING

PROCESS

BIOFILTER DUCTWORK SCHEMATIC

LITTLE PATUXENT WATER RECLAMATION PLANT
8TH ADDITION
BIOSOLIDS PROCESSING FACILITIES - PHASE I

CAPITAL PROJECT S-6295
CONTRACT NO. 24-4935

ELECTION DISTRICT NO. 6
HOWARD COUNTY, MARYLAND

SCALE AS SHOWN

SHEET 241 OF 463

M-703

BIM 360://10054364 – Little Patuxent WRP 8th Addition/264591_100_D_V18.rvt
1/11/2022 2:27:09 PM

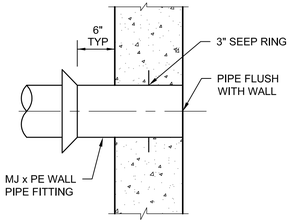

NOTES:
1. OPENING: TYPE E (EXISTING) OR TYPE F (NEW CONSTRUCTION).

1 - PIPE PENETRATION DETAIL

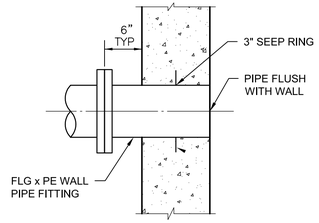

NOTES:
1. OPENING: TYPE E (EXISTING) OR TYPE F (NEW CONSTRUCTION).

2 - PIPE PENETRATION DETAIL

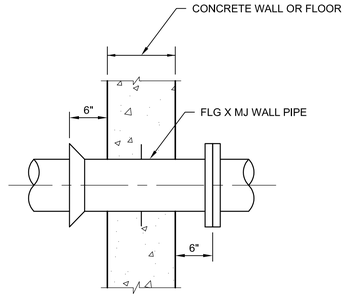

NOTES:
1. OPENING: TYPE E (EXISTING) OR TYPE F (NEW CONSTRUCTION).

3 - PIPE PENETRATION DETAIL

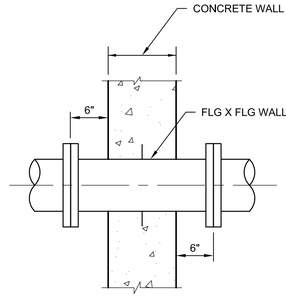

NOTES:
1. OPENING: TYPE E (EXISTING) OR TYPE F (NEW CONSTRUCTION).

4 - PIPE PENETRATION DETAIL

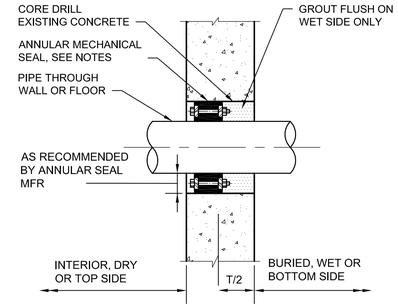

NOTES:
1. OPENING : TYPE H, SEAL: CATEGORY 1.
2. PROVIDE SINGLE ROW OF SEALS FOR PIPES LESS THAN 16" DIA. PROVIDE DOUBLE ROW OF SEALS FOR PIPES 16" DIA. AND LARGER.
3. USE TWO SEALS FOR WALLS THICKER THAN 8".

5 - PIPE PENETRATION DETAIL

GENERAL NOTES:
1. OPENINGS AND PENETRATIONS SHALL COMPLY WITH SECTION 01 73 20 AND DRAWING NOTES. REFER TO SPECIFICATION FOR OPENING TYPES AND SEAL CATEGORIES.
2. SEE STRUCTURAL DRAWINGS FOR ADDITIONAL DETAILS REGARDING CAST-IN WALL PIPES AND SLEEVES. REFER TO DETAIL 3/S-903 FOR NEW CONSTRUCTION AND DETAIL 9/S-903 FOR REHAB CONSTRUCTION.

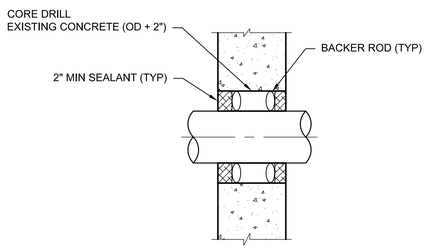

NOTES:
1. OPENING: TYPE H, SEAL : CATEGORY 4.

6 - PIPE PENETRATION DETAIL

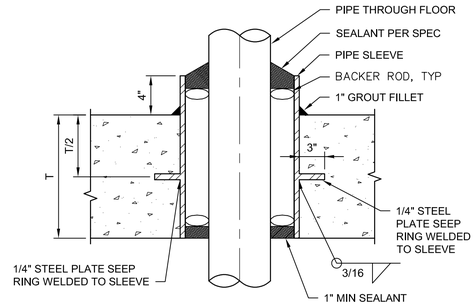

NOTES:
1. OPENING: TYPE C, SEAL : CATEGORY 4.

7 - PIPE PENETRATION DETAIL

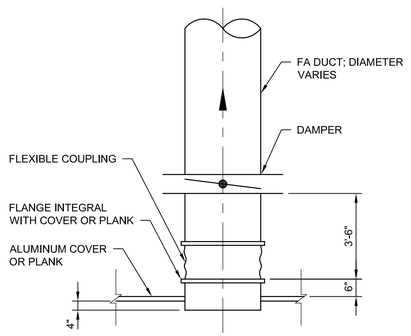

8 - FA CONNECTIONS (TO COVER OR PLANKS)

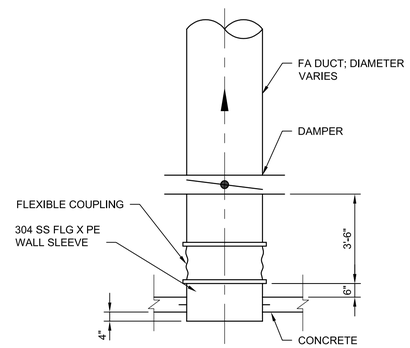

9 - FA CONNECTIONS (TO CONCRETE)

THE DRAWINGS IN THIS SET ARE RECORD DRAWINGS. THEY ARE CONSTRUCTION CONTRACT DRAWINGS WHICH HAVE BEEN REVISED BASED ON AVAILABLE FIELD INFORMATION RECORDED BY OTHERS DURING CONSTRUCTION OF THIS CONTRACT. THERE HAS BEEN NO VERIFICATION OF DIMENSIONS SHOWN ON THE CONSTRUCTION DRAWINGS OR THE ACCURACY/COMPLETENESS OF THE FIELD INFORMATION RECEIVED.

SIGNATURE 2/7/2023 DATE

AS-BUILT REPLACEMENT SHEET

PROFESSIONAL CERTIFICATION
THIS DRAWING WAS ORIGINALLY APPROVED FOR CONSTRUCTION AND SEALED BY BRYAN M. BALCHUNAS, A REGISTERED PROFESSIONAL ENGINEER IN THE STATE OF MARYLAND, NO. 200406.

NOTICE TO CONTRACTORS
- PROJECT ELEVATIONS ARE BASED ON NAVD88 AND HOWARD COUNTY'S BENCHMARK SYSTEM
- PREVIOUS PROJECTS USED OTHER DATUMS
- APPLY THE FOLLOWING CONVERSIONS WHEN USING PREVIOUS CONTRACT DRAWINGS:
  - ADDITION NO. 6: SUBTRACT 0.80 FT
  - PRIOR ADDITIONS: SUBTRACT 1.04 FT

DEPARTMENT OF PUBLIC WORKS
HOWARD COUNTY, MARYLAND

CHIEF, BUREAU OF UTILITIES DATE

DES: CJM
DRN: REE
CHK: M.W.
DATE: -/16

DATE	REV	DESCRIPTION
07/2019		RECORD DRAWINGS

PROCESS

MISCELLANEOUS DETAILS 1

LITTLE PATUXENT WATER RECLAMATION PLANT
8TH ADDITION
BIOSOLIDS PROCESSING FACILITIES – PHASE I

CAPITAL PROJECT S-6295
CONTRACT NO. 24-4935

ELECTION DISTRICT NO. 6
HOWARD COUNTY, MARYLAND

SCALE AS SHOWN

SHEET 242 OF 463

M-900

C:\pwworking\pitt\d1901391\M-900.dwg 01/11/22 15:33

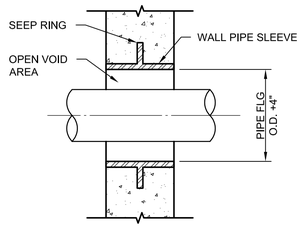

NOTES:
1. OPENING: TYPE C.

1 - PIPE PENETRATION DETAIL

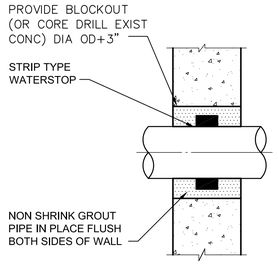

2 - PIPE PENETRATION DETAIL (GROUT IN PLACE)

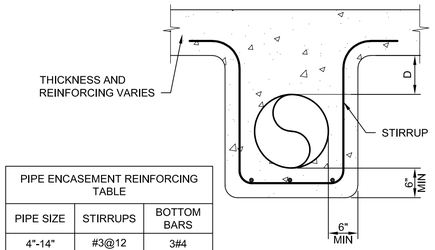

PIPE ENCASEMENT REINFORCING TABLE		
PIPE SIZE	STIRRUPS	BOTTOM BARS
4"-14"	#3@12	3#4
16"-20"	#3@12	4#4
24"-30"	#3@12	4#4
36"-48"	#4@8	5#4

NOTE:
FOR ALL UNDER SLAB PIPE ENCASEMENT WHERE "D" <= 3'-0".
IF GREATER, ENCASEMENT SHALL NOT BE LINKED TO STRUCTURE ABOVE (SEPARATE POUR).

3 - UNDERSLAB PIPE ENCASEMENT

GENERAL NOTES:
1. OPENINGS AND PENETRATIONS SHALL COMPLY WITH SECTION 01 73 20 AND DRAWING NOTES. REFER TO SPECIFICATION FOR OPENING TYPES AND SEAL CATEGORIES.
2. SEE STRUCTURAL DRAWINGS FOR ADDITIONAL DETAILS REGARDING CAST-IN WALL PIPES AND SLEEVES. REFER TO DETAIL 3/S-903 FOR NEW CONSTRUCTION AND DETAIL 9/S-903 FOR REHAB CONSTRUCTION.

THE DRAWINGS IN THIS SET ARE RECORD DRAWINGS. THEY ARE CONSTRUCTION CONTRACT DRAWINGS WHICH HAVE BEEN REVISED BASED ON AVAILABLE FIELD INFORMATION RECORDED BY OTHERS DURING CONSTRUCTION OF THIS CONTRACT. THERE HAS BEEN NO VERIFICATION OF DIMENSIONS SHOWN ON THE CONSTRUCTION DRAWINGS OR THE ACCURACY/COMPLETENESS OF THE FIELD INFORMATION RECEIVED.

SIGNATURE 2/7/2022 DATE

AS-BUILT REPLACEMENT SHEET

PROFESSIONAL CERTIFICATION
THIS DRAWING WAS ORIGINALLY APPROVED FOR CONSTRUCTION AND SEALED BY BRYAN M. BALCHUNAS, A REGISTERED PROFESSIONAL ENGINEER IN THE STATE OF MARYLAND, NO. 200406.

NOTICE TO CONTRACTORS
- PROJECT ELEVATIONS ARE BASED ON NAVD88 AND HOWARD COUNTY'S BENCHMARK SYSTEM
- PREVIOUS PROJECTS USED OTHER DATUMS
- APPLY THE FOLLOWING CONVERSIONS WHEN USING PREVIOUS CONTRACT DRAWINGS:
  - ADDITION NO. 6: SUBTRACT 0.80 FT
  - PRIOR ADDITIONS: SUBTRACT 1.04 FT

DEPARTMENT OF PUBLIC WORKS
HOWARD COUNTY, MARYLAND

CHIEF, BUREAU OF UTILITIES DATE

DES: CJM
DRN: REE
CHK: M.W.
DATE: -/16

DATE	REV	DESCRIPTION
07/2019		RECORD DRAWINGS

PROCESS

MISCELLANEOUS DETAILS 2

LITTLE PATUXENT WATER RECLAMATION PLANT
8TH ADDITION
BIOSOLIDS PROCESSING FACILITIES – PHASE I

CAPITAL PROJECT S-6295
CONTRACT NO. 24-4935

ELECTION DISTRICT NO. 6
HOWARD COUNTY, MARYLAND

SCALE AS SHOWN

SHEET 243 OF 463

M-901

C:\pwworking\pitt\d1901391\M-901.dwg 01/11/22 15:34

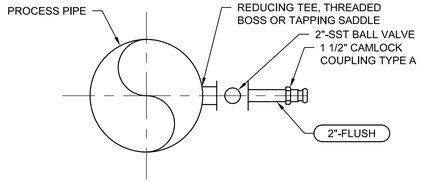

1 - FLUSHING CONNECTION 1

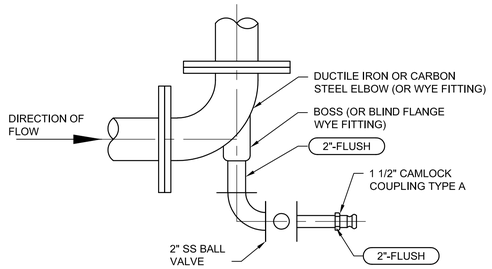

2 - FLUSHING CONNECTION 2

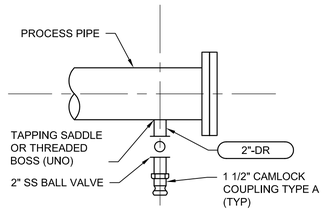

3 - DRAIN CONNECTION 1 DETAIL

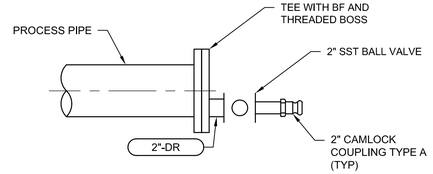

4 - DRAIN CONNECTION 2 DETAIL

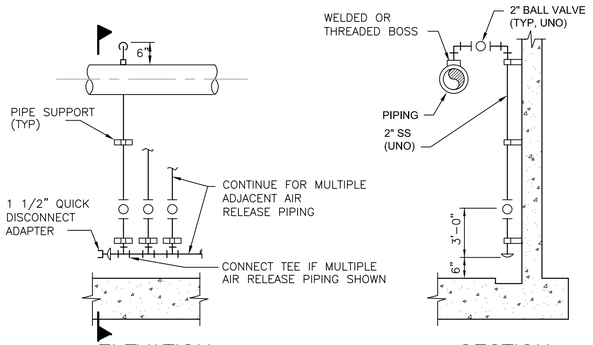

5 - MANUAL AIR RELEASE VALVE DETAIL

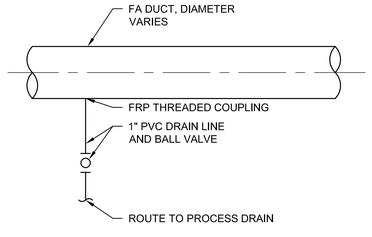

6 - FA CONDENSATION DRAIN

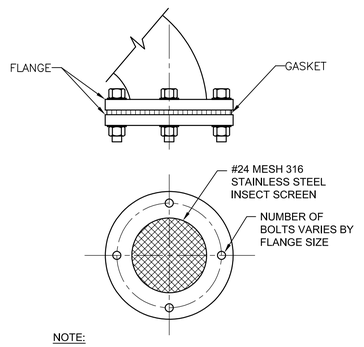

NOTE:

ALL NUTS, BOLTS, AND WASHERS SHALL BE 316 STAINLESS STEEL.

7 - INSECT SCREEN DETAIL

THE DRAWINGS IN THIS SET ARE RECORD DRAWINGS. THEY ARE CONSTRUCTION CONTRACT DRAWINGS WHICH HAVE BEEN REVISED BASED ON AVAILABLE FIELD INFORMATION RECORDED BY OTHERS DURING CONSTRUCTION OF THIS CONTRACT. THERE HAS BEEN NO VERIFICATION OF DIMENSIONS SHOWN ON THE CONSTRUCTION DRAWINGS OR THE ACCURACY/COMPLETENESS OF THE FIELD INFORMATION RECEIVED.

SIGNATURE — DATE 2/7/2023

AS-BUILT REPLACEMENT SHEET

PROFESSIONAL CERTIFICATION

THIS DRAWING WAS ORIGINALLY APPROVED FOR CONSTRUCTION AND SEALED BY BRYAN M. BALCHUNAS, A REGISTERED PROFESSIONAL ENGINEER IN THE STATE OF MARYLAND, NO. 200406.

NOTICE TO CONTRACTORS

- PROJECT ELEVATIONS ARE BASED ON NAVD88 AND HOWARD COUNTY'S BENCHMARK SYSTEM
- PREVIOUS PROJECTS USED OTHER DATUMS
- APPLY THE FOLLOWING CONVERSIONS WHEN USING PREVIOUS CONTRACT DRAWINGS:
  - ADDITION NO. 6: SUBTRACT 0.80 FT
  - PRIOR ADDITIONS: SUBTRACT 1.04 FT

DEPARTMENT OF PUBLIC WORKS
HOWARD COUNTY, MARYLAND

CHIEF, BUREAU OF UTILITIES — DATE

DES: CJM
DRN: REE
CHK: M.W.
DATE: –/16

DATE	REV	DESCRIPTION
07/2019		RECORD DRAWINGS

PROCESS

MISCELLANEOUS DETAILS 3

LITTLE PATUXENT WATER RECLAMATION PLANT
8TH ADDITION
BIOSOLIDS PROCESSING FACILITIES – PHASE I

CAPITAL PROJECT S-6295
CONTRACT NO. 24-4935

ELECTION DISTRICT NO. 6
HOWARD COUNTY, MARYLAND

SCALE AS SHOWN

SHEET 244 OF 463

M-902

C:\pwworking\pitt\d1901391\M-902.dwg 01/11/22_15:35

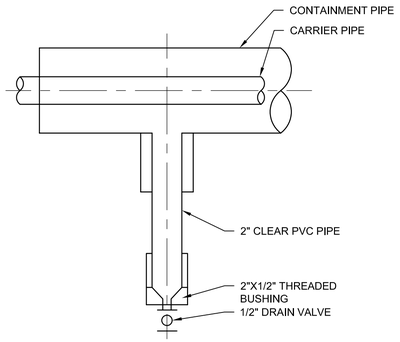

1 - CONTAINMENT PIPING LOW POINT DRAIN

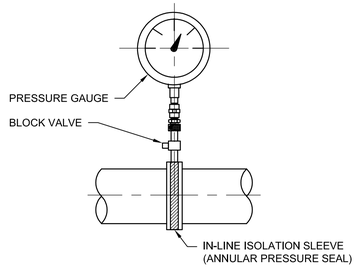

NOTES:

1. ANNULAR TYPE PRESSURE SENSOR ASSEMBLY TO BE FACTORY ASSEMBLED.

2 - PRESSURE INDICATOR WITH ANNULAR SEAL

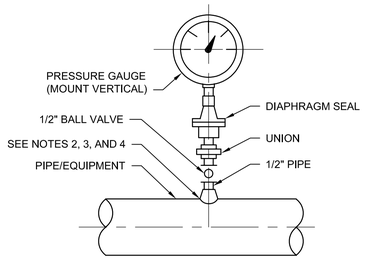

NOTES:

1. PIPE NIPPLES AND FITTINGS TO BE 316 STAINLESS STEEL.
2. FOR STEEL, GALVANIZED STEEL AND PVC 2½" AND SMALLER USE A BUSHING IN A TEE.
3. FOR DUCTILE IRON, ALL SIZES, USE PIPE SADDLE WITH BUSHING.
4. FOR STEEL AND STAINLESS STEEL PIPES 3" AND LARGER, USE A THRED-O-LET AS SHOWN.
5. NOT ALL REQUIRED COMPONENTS OR CONNECTIONS SHOWN; SEE SPECIFICATION SECTION 13422.

3 - PRESSURE INDICATOR

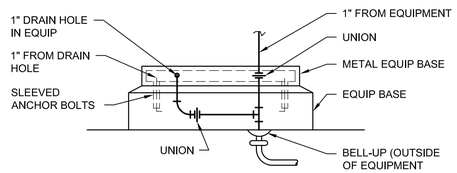

NOTE:

EQUIPMENT BASE DRAINAGE TO BE PROVIDED FOR ALL EQUIPMENT SUPPLIED WITH DRAINAGE TAPS OR CONNECTIONS.

5 - EQUIPMENT BASE DRAINAGE

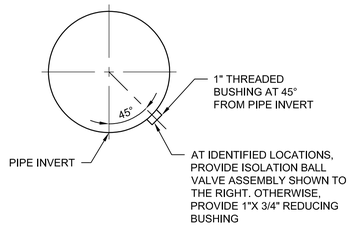

BUSHING LOCATION ON HORIZONTAL PIPE

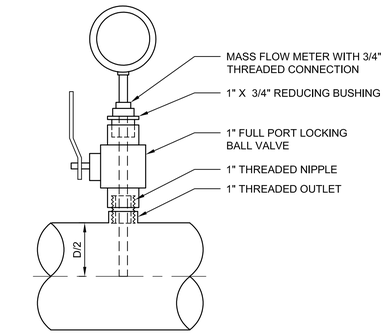

ISOLATION BALL VALVE ASSEMBLY - PROVIDE INSTALLATION DETAIL FOR FLOW METERS ON 8" PIPE (3 LOCATIONS)

5 - MASS FLOW METER DETAIL

THE DRAWINGS IN THIS SET ARE RECORD DRAWINGS. THEY ARE CONSTRUCTION CONTRACT DRAWINGS WHICH HAVE BEEN REVISED BASED ON AVAILABLE FIELD INFORMATION RECORDED BY OTHERS DURING CONSTRUCTION OF THIS CONTRACT. THERE HAS BEEN NO VERIFICATION OF DIMENSIONS SHOWN ON THE CONSTRUCTION DRAWINGS OR THE ACCURACY/COMPLETENESS OF THE FIELD INFORMATION RECEIVED.

SIGNATURE — DATE 2/7/2023

AS-BUILT REPLACEMENT SHEET

PROFESSIONAL CERTIFICATION
THIS DRAWING WAS ORIGINALLY APPROVED FOR CONSTRUCTION AND SEALED BY BRYAN M. BALCHUNAS, A REGISTERED PROFESSIONAL ENGINEER IN THE STATE OF MARYLAND, NO. 200406.

NOTICE TO CONTRACTORS
- PROJECT ELEVATIONS ARE BASED ON NAVD88 AND HOWARD COUNTY'S BENCHMARK SYSTEM
- PREVIOUS PROJECTS USED OTHER DATUMS
- APPLY THE FOLLOWING CONVERSIONS WHEN USING PREVIOUS CONTRACT DRAWINGS:
  - ADDITION NO. 6: SUBTRACT 0.80 FT
  - PRIOR ADDITIONS: SUBTRACT 1.04 FT

DEPARTMENT OF PUBLIC WORKS
HOWARD COUNTY, MARYLAND

CHIEF, BUREAU OF UTILITIES — DATE

DES: CJM
DRN: REE
CHK: M.W.
DATE: –/16

DATE	REV	DESCRIPTION
07/2019		RECORD DRAWINGS

PROCESS

MISCELLANEOUS DETAILS 4

LITTLE PATUXENT WATER RECLAMATION PLANT
8TH ADDITION
BIOSOLIDS PROCESSING FACILITIES – PHASE I

CAPITAL PROJECT S–6295
CONTRACT NO. 24–4935

ELECTION DISTRICT NO. 6
HOWARD COUNTY, MARYLAND

SCALE AS SHOWN

SHEET 245 OF 463

M-903

C:\pwworking\pitt\d1901391\M-903.dwg 01/11/22_15:37

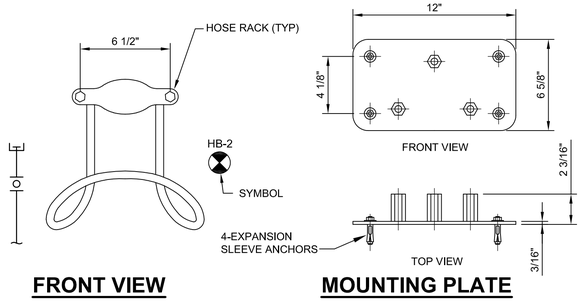

FRONT VIEW **MOUNTING PLATE**

NOTES:

1. FINISH AND GRIND ALL ROUGH EDGES.
2. 1" HOSE NOT SHOWN. PROVIDE 100 FT. LONG HOSE AT EACH LOCATION.

1 - HOSE RACK - 1 (FOR WALL MOUNTED LOCATIONS)

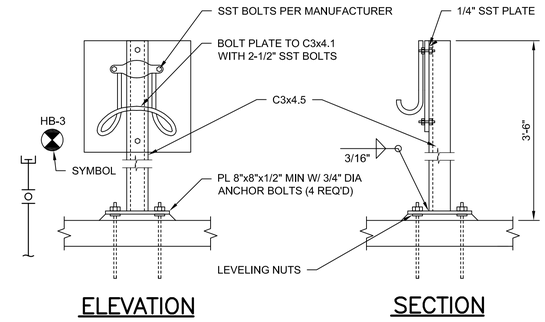

ELEVATION **SECTION**

NOTES:

1. 1" HOSE NOT SHOWN. PROVIDE 100 FT. LONG HOSE AT EACH LOCATION.

2 - HOSE RACK - 2 (FOR FLOOR MOUNTED LOCATIONS

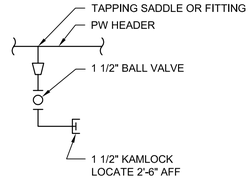

3 - HOSE BIBB

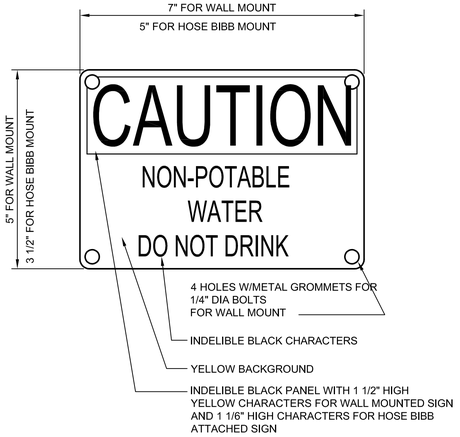

NOTES:

1. MATERIAL TO BE SIMI-RIGID BUTYRATE OR APPROVED EQUAL, AS MANUFACTURED BY W.H. BRADY CO., MILWAUKEE, WIS. 53201 OR EQUAL.
2. COLORS AND LETTER SIZES TO BE PER OSHA STANDARDS FOR CAUTION SIGNS.
3. PROVIDE AND INSTALL THIS SIGN AT ALL HOSE BIBB LOCATIONS DELIVERING NON-POTABLE WATER.
4. ATTACH TO HOSE BIBB WITH PLASTIC STRAPS AROUND VERTICAL RISER, OR SUSPEND FROM VALVE W/RETAINER CHAIN, AS DIRECTED BY OWNER.

4 - NON-POTABLE WATER SIGN STANDARD DETAIL

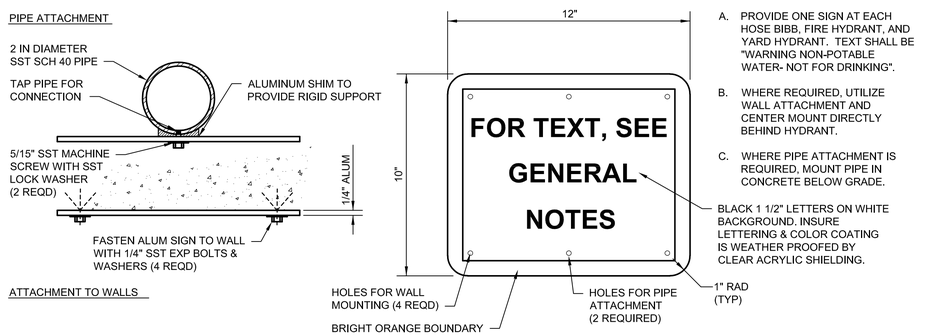

PLAN VIEWS **ELEVATION**

GENERAL NOTES:

A. PROVIDE ONE SIGN AT EACH HOSE BIBB, FIRE HYDRANT, AND YARD HYDRANT. TEXT SHALL BE "WARNING NON-POTABLE WATER- NOT FOR DRINKING".

B. WHERE REQUIRED, UTILIZE WALL ATTACHMENT AND CENTER MOUNT DIRECTLY BEHIND HYDRANT.

C. WHERE PIPE ATTACHMENT IS REQUIRED, MOUNT PIPE IN CONCRETE BELOW GRADE.

BLACK 1 1/2" LETTERS ON WHITE BACKGROUND. INSURE LETTERING & COLOR COATING IS WEATHER PROOFED BY CLEAR ACRYLIC SHIELDING.

5 - TYPICAL SIGN MOUNTING DETAIL

THE DRAWINGS IN THIS SET ARE RECORD DRAWINGS. THEY ARE CONSTRUCTION CONTRACT DRAWINGS WHICH HAVE BEEN REVISED BASED ON AVAILABLE FIELD INFORMATION RECORDED BY OTHERS DURING CONSTRUCTION OF THIS CONTRACT. THERE HAS BEEN NO VERIFICATION OF DIMENSIONS SHOWN ON THE CONSTRUCTION DRAWINGS OR THE ACCURACY/COMPLETENESS OF THE FIELD INFORMATION RECEIVED.

SIGNATURE 2/7/2022 DATE

AS-BUILT REPLACEMENT SHEET

PROFESSIONAL CERTIFICATION
THIS DRAWING WAS ORIGINALLY APPROVED FOR CONSTRUCTION AND SEALED BY BRYAN M. BALCHUNAS, A REGISTERED PROFESSIONAL ENGINEER IN THE STATE OF MARYLAND, NO. 200406.

NOTICE TO CONTRACTORS
- PROJECT ELEVATIONS ARE BASED ON NAVD88 AND HOWARD COUNTY'S BENCHMARK SYSTEM
- PREVIOUS PROJECTS USED OTHER DATUMS
- APPLY THE FOLLOWING CONVERSIONS WHEN USING PREVIOUS CONTRACT DRAWINGS:
  - ADDITION NO. 6: SUBTRACT 0.80 FT
  - PRIOR ADDITIONS: SUBTRACT 1.04 FT

DEPARTMENT OF PUBLIC WORKS
HOWARD COUNTY, MARYLAND

CHIEF, BUREAU OF UTILITIES DATE

DES: CJM
DRN: REE
CHK: M.W.
DATE: -/16

DATE	REV	DESCRIPTION
07/2019		RECORD DRAWINGS

PROCESS

MISCELLANEOUS DETAILS 5

LITTLE PATUXENT WATER RECLAMATION PLANT
8TH ADDITION
BIOSOLIDS PROCESSING FACILITIES – PHASE I

CAPITAL PROJECT S-6295
CONTRACT NO. 24-4935

ELECTION DISTRICT NO. 6
HOWARD COUNTY, MARYLAND

SCALE AS SHOWN

SHEET 246 OF 463

M-904

C:\pwworking\pitt\d1901391\M-904.dwg 01/11/22 15:38

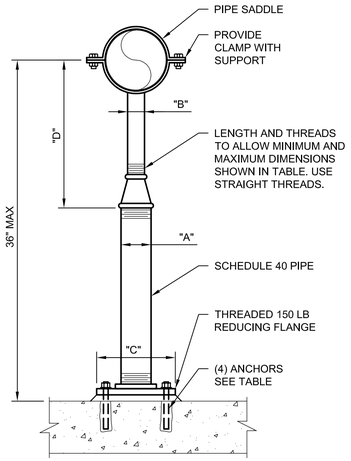

FLOOR PIPE SUPPORT SCHEDULE
DIMENSIONS IN INCHES

PIPE SIZE	"A"	"B"	"C"	"D"		ANCHORS	
				MINIMUM	MAXIMUM	DIA	EMBD
≤ 2 1/2	2 1/2	1 1/2	9	8	13	5/8	5
3	2 1/2	1 1/2	9	8 1/2	13 1/2	5/8	5
3 1/2	2 1/2	1 1/2	9	8 1/2	13 1/2	5/8	5
4	3	2 1/2	9	9 1/2	14	5/8	5
6	3	2 1/2	9	10 1/2	15 1/2	5/8	5
8	3	2 1/2	9	11 1/2	16 1/2	5/8	5
10	3	2 1/2	9	13 1/2	18 1/2	5/8	5
12	3	2 1/2	9	15	19 1/2	5/8	5
14	4	3	11	16 1/2	20 1/2	3/4	6 5/8
16	4	3	11	17 1/2	22 1/2	3/4	6 5/8
18	6	3 1/2	13 1/2	19 1/2	24	3/4	6 5/8
20	6	3 1/2	13 1/2	21	25 1/2	3/4	6 5/8
24	6	4	13 1/2	23 1/2	28 1/2	3/4	6 5/8
30	6	4	13 1/2	27	31 1/2	3/4	6 5/8
32	6	4	13 1/2	28 1/2	32 1/2	3/4	6 5/8
36	6	4	13 1/2	30 1/2	34 1/2	3/4	6 5/8

1 - ADJUSTABLE PIPE SUPPORT

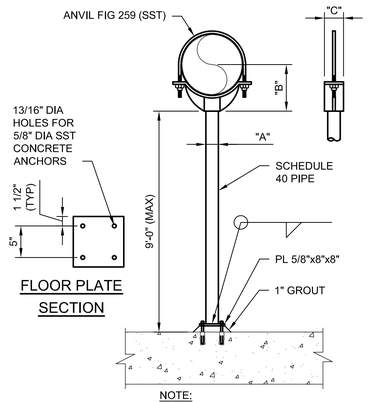

FLOOR PIPE SUPPORT SCHEDULE
DIMENSIONS IN INCHES

PIPE SIZE	"A"	"B"	"C"
4	3	4 3/16	3 5/8
5	3	4 13/16	3 5/8
6	3	5 7/16	3 5/8
8	3	6 15/16	3 5/8
10	3	8 7/16	3 5/8
12	3	9 15/16	3 5/8
14	4	10 1/2	6
16	4	11 1/2	6
18	6	13 1/2	6
20	6	14 1/2	6
22	6	15 1/2	6
24	6	17 1/2	6
26	6	18 1/2	6
30	6	20 5/8	6
32	6	21 5/8	6
36	6	23 5/8	6

NOTE:
1. THIS SUPPORT MAY REQUIRE 316 STAINLESS STEEL CONSTRUCTION. SEE PLANS FOR LOCATIONS.

2 - SADDLE PIPE SUPPORT

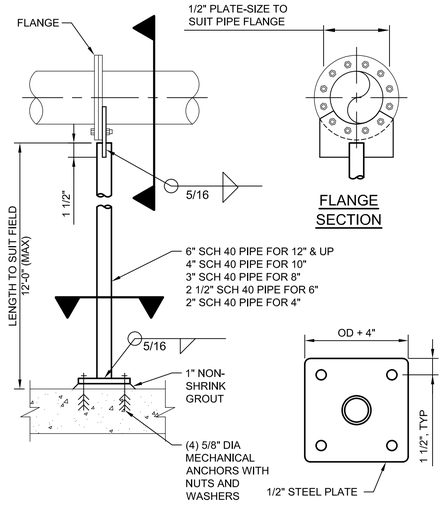

GENERAL NOTES:

1. NONE OF PIPE SUPPORTS SHOWN HERE ARE AXIAL THRUST RESTRAINTS, UNO.
2. ALL ANCHORS SHALL BE SST.

3 - FLANGED PIPE SUPPORT

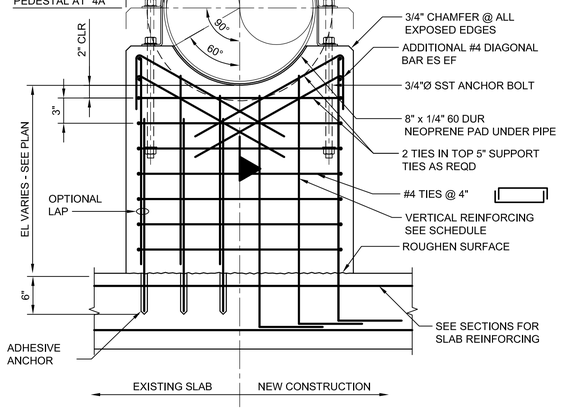

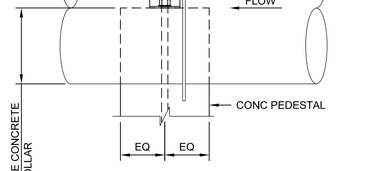

PIPE SIZE DIAMETER	PEDESTAL THICKNESS	VERTICAL REINFORCING @ EF	
		QUANTITY	BAR SIZE
6-12"	12"	3	#7
14-24"	16"	4	#7
30-48"	24"	6	#7

NOTES:

1. CONTRACTOR SHALL TEMPORARILY SUPPORT PIPE AT SPECIFIED ELEVATION AND POUR SUPPORT AROUND PIPE. DO NOT POUR PIPE SUPPORT WITHOUT PIPE IN PLACE.

4A - 4 - CONCRETE PEDESTAL PIPE SUPPORT DETAIL

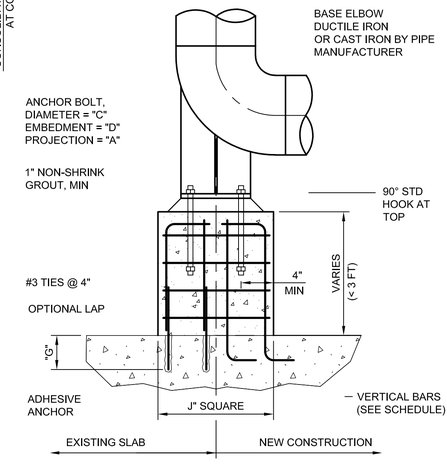

5 - BASE ELBOW - PIPE SUPPORT

PIPE SIZE	A	C	D	G	J	VERTICAL REINF	
						QTY	SIZE
8"	5X BOLT DIA (MIN)	1/8" LESS THAN BOLTS HOLE	8"	5"	12"	4	#6
10"			8"	5"	12"	4	#6
12"			10"	5"	14"	4	#6
14"			10"	5"	16"	8	#6
16"			10"	7 1/2"	16"	8	#6
18"			12"	7 1/2"	18"	8	#6
20"			12"	7 1/2"	20"	8	#7
24"			12"	7 1/2"	22"	8	#7
30"			14"	10"	26"	12	#7
36"			14"	10"	30"	12	#8
42"			16"	10"	34"	16	#8
48"			16"	10"	34"	16	#8
54"			18"	10"	34"	16	#8
60"			18"	10"	40"	20	#8

NOTE:

1. FOR TIE CONFIGURATION SEE TIE CONFIGURATION DETAIL BELOW.

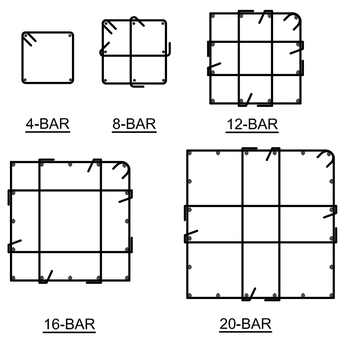

TIE CONFIGURATIONS

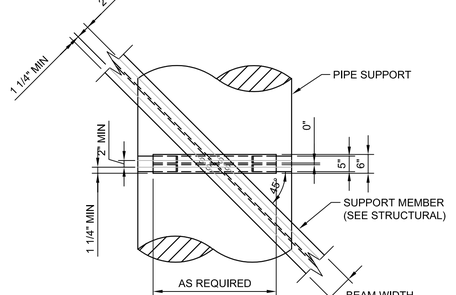

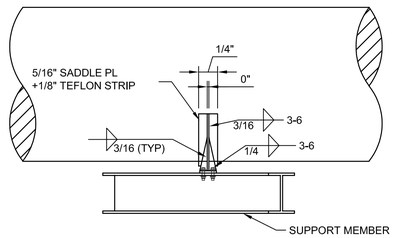

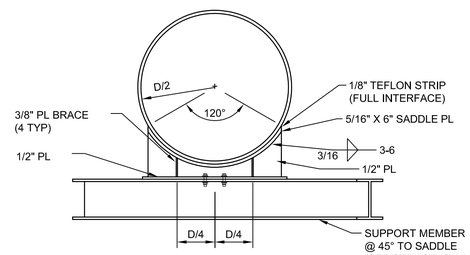

6 - PIPE SUPPORT (DIAGONAL BRACE)

THE DRAWINGS IN THIS SET ARE RECORD DRAWINGS. THEY ARE CONSTRUCTION CONTRACT DRAWINGS WHICH HAVE BEEN REVISED BASED ON AVAILABLE FIELD INFORMATION RECORDED BY OTHERS DURING CONSTRUCTION OF THIS CONTRACT. THERE HAS BEEN NO VERIFICATION OF DIMENSIONS SHOWN ON THE CONSTRUCTION DRAWINGS OR THE ACCURACY OR COMPLETENESS OF THE FIELD INFORMATION RECORDED.

SIGNATURE — DATE 2/7/2020

AS-BUILT REPLACEMENT SHEET

PROFESSIONAL CERTIFICATION
THIS DRAWING WAS ORIGINALLY APPROVED FOR CONSTRUCTION AND SEALED BY BRYAN M. BALCHUNAS, A REGISTERED PROFESSIONAL ENGINEER IN THE STATE OF MARYLAND, NO. 200406.

NOTICE TO CONTRACTORS
- PROJECT ELEVATIONS ARE BASED ON NAVD88 AND HOWARD COUNTY'S BENCHMARK SYSTEM
- PREVIOUS PROJECTS USED OTHER DATUMS
- APPLY THE FOLLOWING CONVERSIONS WHEN USING PREVIOUS CONTRACT DRAWINGS:
  - ADDITION NO. 6: SUBTRACT 0.80 FT.
  - PRIOR ADDITIONS: SUBTRACT 1.04 FT.

DEPARTMENT OF PUBLIC WORKS
HOWARD COUNTY, MARYLAND

CHIEF, BUREAU OF UTILITIES — DATE

DES: CJM
DRN: REE
CHK: M.W.
DATE: -/16

DATE	REV	DESCRIPTION
07/2019		RECORD DRAWINGS

PROCESS

PIPE SUPPORT DETAILS 1

LITTLE PATUXENT WATER RECLAMATION PLANT
8TH ADDITION
BIOSOLIDS PROCESSING FACILITIES – PHASE I

CAPITAL PROJECT S-6295
CONTRACT NO. 24-4935

ELECTION DISTRICT NO. 6
HOWARD COUNTY, MARYLAND

SCALE AS SHOWN

SHEET 247 OF 463

M-905

C:\pwworking\pitt\d1901391\M-905.dwg 01/11/22_15:40

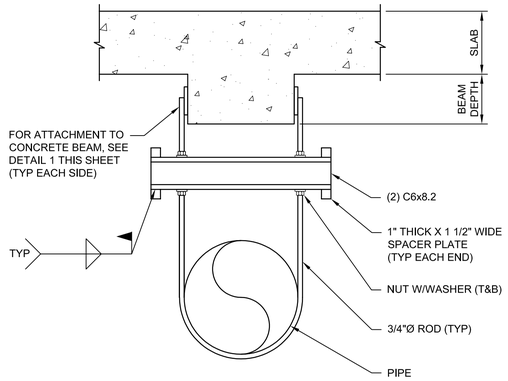

2 - PIPE SUPPORT DETAIL

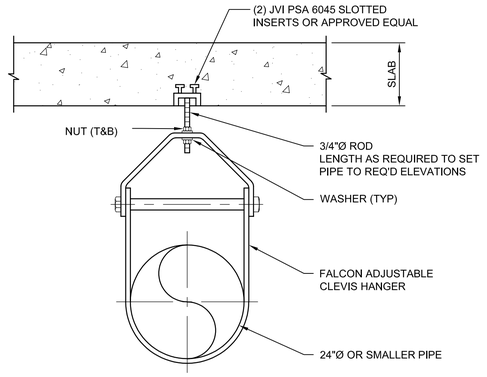

3 - PIPE SUPPORT DETAIL

GENERAL NOTES:

1. NONE OF PIPE SUPPORTS SHOWN HERE ARE AXIAL THRUST RESTRAINTS, UNO.
2. ALL ANCHORS SHALL BE SST.

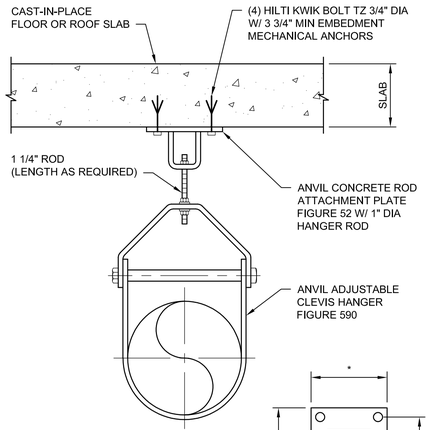

HANGER SCHEDULE		
PIPE DIA	ROD DIA	ANCHOR DIA
12"	7/8"	5/8"
14"	1"	3/4"
16"	1"	3/4"
18"	1"	3/4"
20"	1 1/4"	3/4"
24"	1 1/4"	7/8"

* DIMENSIONS VARY DEPENDING ON ROD DIAMETER UTILIZED, USE MANUFACTURER'S RECOMMENDED STANDARD UNIT.

CONCRETE ANCHOR PLATE PLAN

4 - PIPE SUPPORT DETAIL

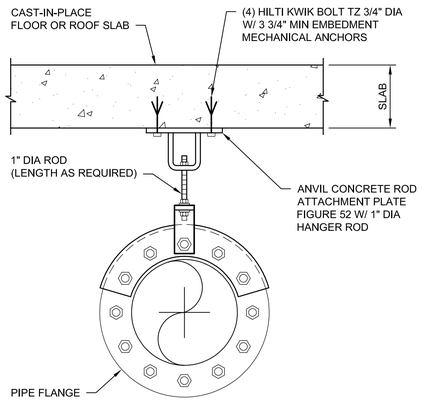

5 - PIPE SUPPORT DETAIL

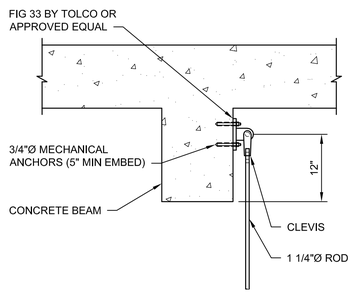

6 - PIPE HANGER DETAIL

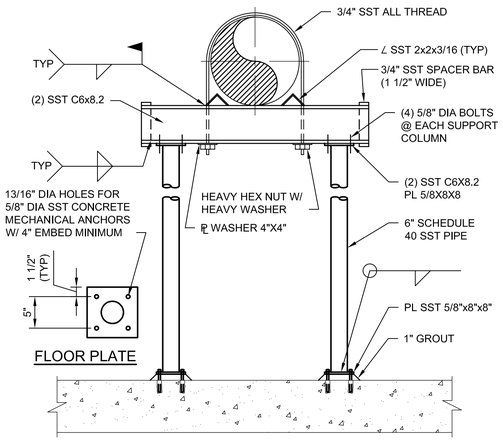

NOTE:

1. ALL MATERIAL IS 316 STAINLESS STEEL.

7 - PIPE SUPPORT DETAIL

THE DRAWINGS IN THIS SET ARE RECORD DRAWINGS. THEY ARE CONSTRUCTION CONTRACT DRAWINGS WHICH HAVE BEEN REVISED BASED ON AVAILABLE FIELD INFORMATION RECORDED BY OTHERS DURING CONSTRUCTION OF THIS CONTRACT. THERE HAS BEEN NO VERIFICATION OF DIMENSIONS SHOWN ON THE CONSTRUCTION DRAWINGS OR THE ACCURACY/COMPLETENESS OF THE FIELD INFORMATION RECEIVED.

SIGNATURE — DATE 2/7/2023

C:\pwworking\pit\d1901391\M-906.dwg 01/11/22_15:44

AS-BUILT REPLACEMENT SHEET

PROFESSIONAL CERTIFICATION
THIS DRAWING WAS ORIGINALLY APPROVED FOR CONSTRUCTION AND SEALED BY BRYAN M. BALCHUNAS, A REGISTERED PROFESSIONAL ENGINEER IN THE STATE OF MARYLAND, NO. 200406.

NOTICE TO CONTRACTORS
- PROJECT ELEVATIONS ARE BASED ON NAVD88 AND HOWARD COUNTY'S BENCHMARK SYSTEM
- PREVIOUS PROJECTS USED OTHER DATUMS
- APPLY THE FOLLOWING CONVERSIONS WHEN USING PREVIOUS CONTRACT DRAWINGS:
  - ADDITION NO. 6: SUBTRACT 0.80 FT
  - PRIOR ADDITIONS: SUBTRACT 1.04 FT

DEPARTMENT OF PUBLIC WORKS
HOWARD COUNTY, MARYLAND

CHIEF, BUREAU OF UTILITIES — DATE

DES: CJM
DRN: REE
CHK: M.W.
DATE: -/16

DATE	REV	DESCRIPTION
07/2019		RECORD DRAWINGS

PROCESS

PIPE SUPPORT DETAILS 2

LITTLE PATUXENT WATER RECLAMATION PLANT
8TH ADDITION
BIOSOLIDS PROCESSING FACILITIES – PHASE I

CAPITAL PROJECT S-6295
CONTRACT NO. 24-4935

ELECTION DISTRICT NO. 6
HOWARD COUNTY, MARYLAND

SCALE AS SHOWN

SHEET 248 OF 463

M-906

PIPE INSULATION AND HEAT TRACING SCHEDULE										
GENERAL						PIPE		INSULATION		
FACILITY	LOCATION	PIPE TAG	PROCESS FLUID	PURPOSE	HEAT TRACE (Y/N)	SIZE (IN)	MATERIAL	THICKNESS (IN)	TYPE	NOTES
PHOSPHORUS PRECIPITATION	OUTDOOR PIPING	MAP	STRUVITE PRECIPITATE	FREEZE PROTECTION	Y	Up to 3	SS	2	FIBERGLASS	
PHOSPHORUS PRECIPITATION	OUTDOOR PIPING	ADS	ANAEROBIC DIGESTER SLUDGE	FREEZE PROTECTION	Y	Up to 6	DIP	2	FIBERGLASS	
PHOSPHORUS PRECIPITATION	OUTDOOR PIPING	MGCL	MAGNESIUM CHLORIDE	FREEZE PROTECTION	Y	1.5, 1/2	PVC	1.5	FIBERGLASS	[3][4]
PHOSPHORUS PRECIPITATION	OUTDOOR PIPING	FOAM	DEFOAMER CHEMICAL	FREEZE PROTECTION	Y	1/2	PVC	1.5	FIBERGLASS	[3]
PHOSPHORUS PRECIPITATION	OUTDOOR PIPING	ALP	AIR	SAFETY	N	Up to 6	SS	2	FIBERGLASS	[1]
PHOSPHORUS PRECIPITATION	INTERIOR	ALP	AIR	SAFETY	N	Up to 6	SS	2	FIBERGLASS	
DIGESTER BUILDING	INTERIOR	HWS	HOT WATER SUPPLY	TEMPERATURE MAINTENANCE	N	Up to 8	STEEL	2	FIBERGLASS	
DIGESTER BUILDING	INTERIOR	HWR	HOT WATER RETURN	TEMPERATURE MAINTENANCE	N	Up to 8	STEEL	2	FIBERGLASS	
DIGESTER BUILDING	OUTDOOR PIPING	DGR	DIGESTER GAS RAW	MOISTURE	Y	8	SS	2	FIBERGLASS	[5]
FLARE	OUTDOOR PIPING	DGR	DIGESTER GAS RAW	MOISTURE	Y	8	SS	2	FIBERGLASS	
DIGESTER EMERGENCY OVERFLOW	OUTDOOR PIPING	ADS	DIGESTED SOLIDS	FREEZE PROTECTION	N	12	SS	2	FIBERGLASS	
DIGESTER HIGH OVERFLOW	OUTDOOR PIPING	ADS	DIGESTED SOLIDS	FREEZE PROTECTION	N	10	SS	2	FIBERGLASS	
DIGESTER NORMAL OVERFLOW	OUTDOOR PIPING	ADS	DIGESTED SOLIDS	FREEZE PROTECTION	Y	8	SS	2	FIBERGLASS	
DEAMMONIFICATION	OUTDOOR PIPING	DAA	AIR	SAFETY	N	Up to 8	SS	1	FIBERGLASS	[2]
PIPE GALLERY	INTERIOR	DAA	AIR	SAFETY	N	Up to 8	SS	1	FIBERGLASS	[1]
PIPE GALLERY	INTERIOR	HWS	HOT WATER SUPPLY	TEMPERATURE MAINTENANCE	N	2, 3	STEEL	1	FIBERGLASS	
PIPE GALLERY	INTERIOR	HWR	HOT WATER RETURN	TEMPERATURE MAINTENANCE	N	2, 3	STEEL	1	FIBERGLASS	
DIGESTER BUILDING	INTERIOR & OUTDOOR	GLC	GLYCOL CHILLER	TEMPERATURE MAINTENANCE	N	1.5	COPPER	1	FIBERGLASS	
ODOR CONTROL	OUTDOOR PIPING	PW	PROCESS WATER	FREEZE PROTECTION	Y	UP TO 2	PVC	1	FIBERGLASS	
DRYER BUILDING	INTERIOR	HWS	HOT WATER SUPPLY	TEMPERATURE MAINTENANCE						
DRYER BUILDING	INTERIOR	BS	DRIED BIOSOLIDS	SAFETY						
DRYER BUILDING	OUTDOOR									

NOTES:

1. INSULATION SHALL BE PROVIDED FOR EXPOSED PORTIONS OF THE PIPING SYSTEM LOCATED LESS THAN 8 FEET ABOVE FINISHED FLOOR OR GRADE.
2. INSULATION SHALL TERMINATE 3 FEET ABOVE THE WATER SURFACE AT TREATMENT PROCESSES.
3. WHERE CONTAINMENT PIPING IS REQUIRED, INSULATION AND HEAT TRACING SHALL BE PROVIDE ON THE OUTSIDE OF THE CONTAINMENT PIPING. PIPE SIZE INDICATES INTERIOR CARRIER PIPE DIAMETER.
4. CHEMICAL STORAGE TANK SHALL BE INSULATED AND HEAT TRACED. SEE SECTION 43 41 43.
5. DIGESTER GAS (DGR) HANDLING EQUIPMENT, DRAINS, AND APPURTENANCES SHALL BE HEAT TRACED AND INSULATED ALONG WITH CONNECTING PIPING.

THE DRAWINGS IN THIS SET ARE RECORD DRAWINGS. THEY ARE CONSTRUCTION CONTRACT DRAWINGS WHICH HAVE BEEN REVISED BASED ON AVAILABLE FIELD INFORMATION RECORDED BY OTHERS DURING CONSTRUCTION OF THIS CONTRACT. THERE HAS BEEN NO VERIFICATION OF DIMENSIONS SHOWN ON THE CONSTRUCTION DRAWINGS OR THE ACCURACY/COMPLETENESS OF THE FIELD INFORMATION RECEIVED.

SIGNATURE 2/7/2023 DATE

C:\pwworking\pitt\d1901391\M-908.dwg 01/11/22_15:45

AS-BUILT REPLACEMENT SHEET

PROFESSIONAL CERTIFICATION
THIS DRAWING WAS ORIGINALLY APPROVED FOR CONSTRUCTION AND SEALED BY BRYAN M. BALCHUNAS, A REGISTERED PROFESSIONAL ENGINEER IN THE STATE OF MARYLAND, NO. 200406.

NOTICE TO CONTRACTORS
- PROJECT ELEVATIONS ARE BASED ON NAVD88 AND HOWARD COUNTY'S BENCHMARK SYSTEM
- PREVIOUS PROJECTS USED OTHER DATUMS
- APPLY THE FOLLOWING CONVERSIONS WHEN USING PREVIOUS CONTRACT DRAWINGS:
  - ADDITION NO. 6: SUBTRACT 0.80 FT
  - PRIOR ADDITIONS: SUBTRACT 1.04 FT

DEPARTMENT OF PUBLIC WORKS
HOWARD COUNTY, MARYLAND

CHIEF, BUREAU OF UTILITIES DATE

DES: CJM
DRN: REE
CHK: M.W.
DATE: -/16

DATE	REV	DESCRIPTION
07/2019		RECORD DRAWINGS

PROCESS

PIPE INSULATION AND HEAT TRACE SCHEDULE

LITTLE PATUXENT WATER RECLAMATION PLANT
8TH ADDITION
BIOSOLIDS PROCESSING FACILITIES – PHASE I

CAPITAL PROJECT S-6295
CONTRACT NO. 24-4935

ELECTION DISTRICT NO. 6
HOWARD COUNTY, MARYLAND

SCALE AS SHOWN

SHEET 249 OF 463

M-908

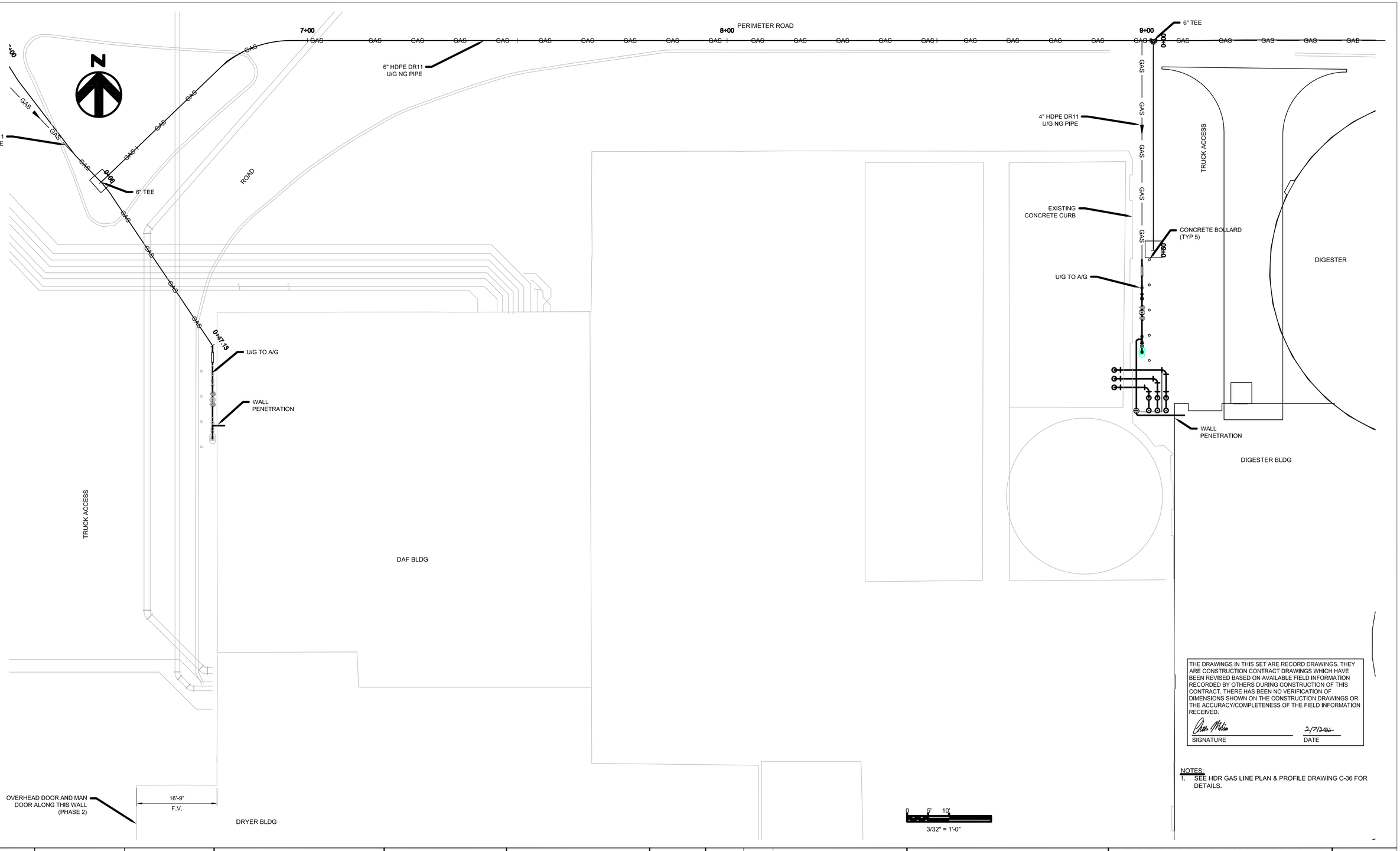

THE DRAWINGS IN THIS SET ARE RECORD DRAWINGS. THEY ARE CONSTRUCTION CONTRACT DRAWINGS WHICH HAVE BEEN REVISED BASED ON AVAILABLE FIELD INFORMATION RECORDED BY OTHERS DURING CONSTRUCTION OF THIS CONTRACT. THERE HAS BEEN NO VERIFICATION OF DIMENSIONS SHOWN ON THE CONSTRUCTION DRAWINGS OR THE ACCURACY/COMPLETENESS OF THE FIELD INFORMATION RECEIVED.

SIGNATURE — DATE 2/7/2023

NOTES:

1. SEE HDR GAS LINE PLAN & PROFILE DRAWING C-36 FOR DETAILS.

AS-BUILT REPLACEMENT SHEET

PROFESSIONAL CERTIFICATION
THIS DRAWING WAS ORIGINALLY APPROVED FOR CONSTRUCTION AND SEALED BY BRYAN M. BALCHUNAS, A REGISTERED PROFESSIONAL ENGINEER IN THE STATE OF MARYLAND, NO. 200406.

NOTICE TO CONTRACTORS
- PROJECT ELEVATIONS ARE BASED ON NAVD88 AND HOWARD COUNTY'S BENCHMARK SYSTEM
- PREVIOUS PROJECTS USED OTHER DATUMS
- APPLY THE FOLLOWING CONVERSIONS WHEN USING PREVIOUS CONTRACT DRAWINGS:
  - ADDITION NO. 6: SUBTRACT 0.80 FT
  - PRIOR ADDITIONS: SUBTRACT 1.04 FT

DEPARTMENT OF PUBLIC WORKS
HOWARD COUNTY, MARYLAND

CHIEF, BUREAU OF UTILITIES — DATE

DES: AD
DRN: LT
CHK: -
DATE:

DATE	REV	DESCRIPTION
07/2019		RECORD DRAWINGS

PROCESS

NATURAL GAS PIPE ROUTE
DRYER/DIGESTER BUILDING

LITTLE PATUXENT WATER RECLAMATION PLANT
8TH ADDITION
BIOSOLIDS PROCESSING FACILITIES – PHASE I

CAPITAL PROJECT S–6295
CONTRACT NO. 24–4935

ELECTION DISTRICT NO. 6
HOWARD COUNTY, MARYLAND

SCALE AS SHOWN

SHEET 250 OF 463

M-910

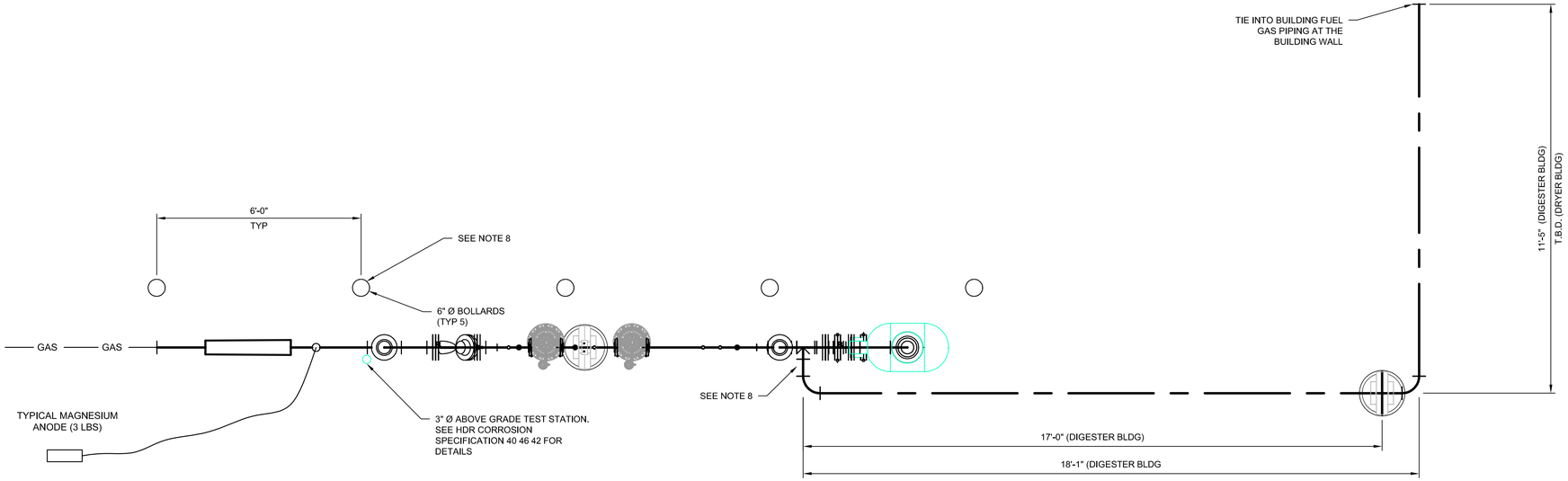

PLAN VIEW

SCALE: 1/2"=1'-0"

(TYP 2 PLCS)

NOTES:

1. SEE STRUCTURAL DRAWINGS FOR SUPPORT AND CONCRETE DETAILS.
2. PIPE COATING: FACTORY APPLIED 3M, "SCOTCHKOTE" FUSION BONDED EPOXY COATING OR FIELD APPLIED 3M "SCOTCHKOTE" LIQUID EPOXY COATING. NOMINAL DRY FILM THICKNESS ANTI-CORROSION COATING (25-35 mils).
3. CONTRACTOR SHALL COAT BURIED PIPE THAT EXTENDS ABOVE GRADE TO THE FLANGE ISOLATING KIT.
4. CONTRACTOR SHALL PAINT OVER THE ABOVE GRADE PIPING AS PER HDR SECTION 09 96 00.
5. BGE SHALL INSTALL PIPING AND FITTINGS FROM THE OFFSITE NATURAL GAS CONNECTION POINT TO THE NEW BGE METER. REFER BGE DRAWINGS FOR DESIGN DETAILS.
6. HOWARD CONTRACTOR TO INSTALL NATURAL GAS PIPE AND FITTINGS FROM DOWN STREAM OF THE NEW BGE METER.
7. CONTRACTOR TO INSTALL FISHER 1098-EGR WIDE OPEN MONITOR ARRANGEMENT THAT REQUIRES WIDE OPEN MONITOR TO BE UPSTREAM. CONTRACTOR SCOPE INCLUDES INSTALLING SENSING LINES (4D UPSTREAM & 10D DOWNSTREAM), AND NEEDLE VALVES FOR EACH REGULATOR. REFER MFG INSTALLATION MANUAL FOR DETAILS.
8. FOR DRYER BUILDING, INSTALL BOLLARDS AND PIPE TO BUILDING ON OPPOSITE SIDE OF METER ASSEMBLY.

THE DRAWINGS IN THIS SET ARE RECORD DRAWINGS. THEY ARE CONSTRUCTION CONTRACT DRAWINGS WHICH HAVE BEEN REVISED BASED ON AVAILABLE FIELD INFORMATION RECORDED BY OTHERS DURING CONSTRUCTION OF THIS CONTRACT. THERE HAS BEEN NO VERIFICATION OF DIMENSIONS SHOWN ON THE CONSTRUCTION DRAWINGS OR THE ACCURACY/COMPLETENESS OF THE FIELD INFORMATION RECEIVED.

SIGNATURE _____ DATE 2/7/2023

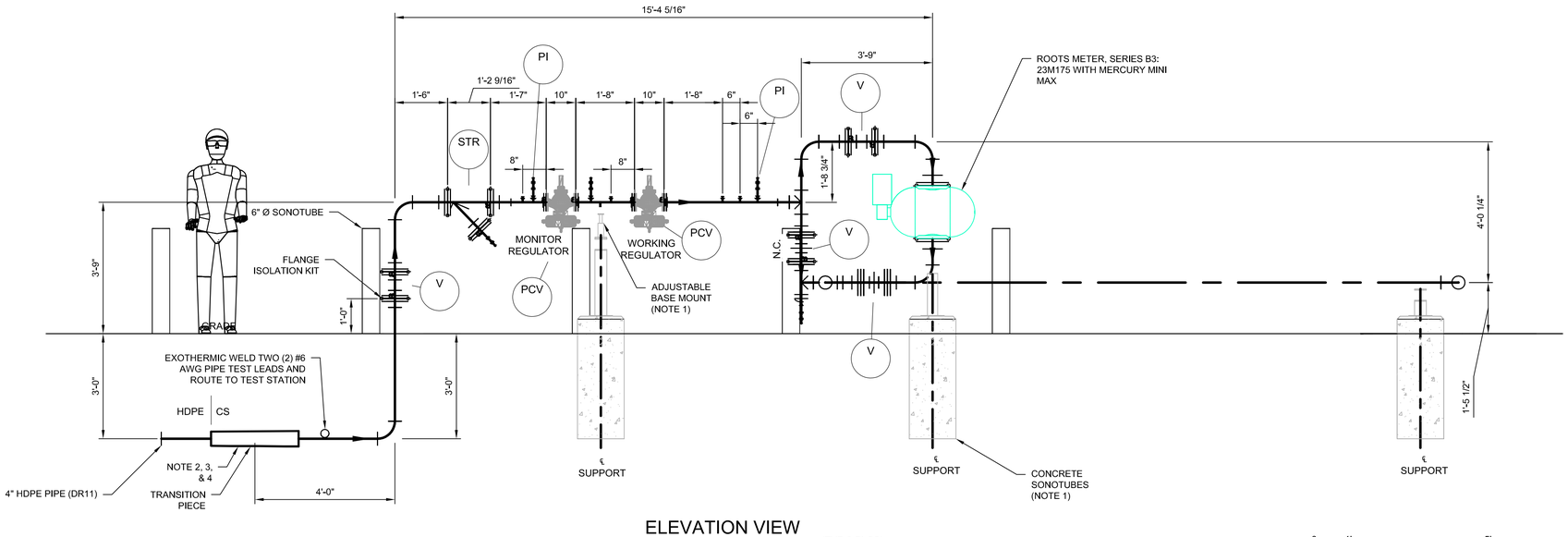

ELEVATION VIEW

SCALE: 1/2"=1'-0"

(TYP 2 PLCS)

0 1' 5'

1/2" = 1'-0"

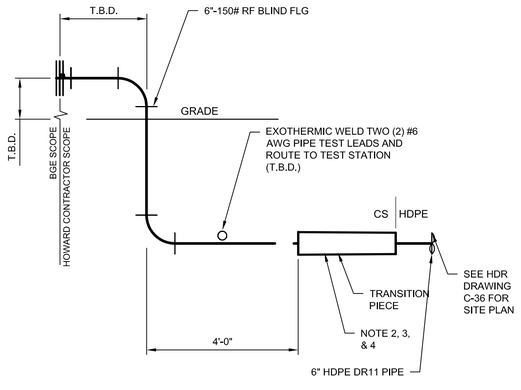

DETAIL 1

SCALE: 1/2"=1'-0"

BATTERY LIMIT DETAIL
(BGE/HOWARD CONTRACTOR)
(NOTE 5 & 6)

C:\pwworking\pitt\d1901391\M-911.dwg 01/11/22 15:48

AS-BUILT REPLACEMENT SHEET

PROFESSIONAL CERTIFICATION
THIS DRAWING WAS ORIGINALLY APPROVED FOR CONSTRUCTION AND SEALED BY BRYAN M. BALCHUNAS, A REGISTERED PROFESSIONAL ENGINEER IN THE STATE OF MARYLAND, NO. 200406.

NOTICE TO CONTRACTORS
- PROJECT ELEVATIONS ARE BASED ON NAVD88 AND HOWARD COUNTY'S BENCHMARK SYSTEM
- PREVIOUS PROJECTS USED OTHER DATUMS
- APPLY THE FOLLOWING CONVERSIONS WHEN USING PREVIOUS CONTRACT DRAWINGS:
  - ADDITION NO. 6: SUBTRACT 0.80 FT
  - PRIOR ADDITIONS: SUBTRACT 1.04 FT

DEPARTMENT OF PUBLIC WORKS
HOWARD COUNTY, MARYLAND

CHIEF, BUREAU OF UTILITIES DATE

DES: AD
DRN: LT
CHK:
DATE:

DATE	REV	DESCRIPTION
07/2019		RECORD DRAWINGS

PROCESS

NATURAL GAS PIPE ROUTE DRYER/DIGESTER BUILDING

LITTLE PATUXENT WATER RECLAMATION PLANT
8TH ADDITION
BIOSOLIDS PROCESSING FACILITIES – PHASE I

CAPITAL PROJECT S-6295
CONTRACT NO. 24-4935

ELECTION DISTRICT NO. 6
HOWARD COUNTY, MARYLAND

SCALE AS SHOWN

SHEET 251 OF 463

M-911

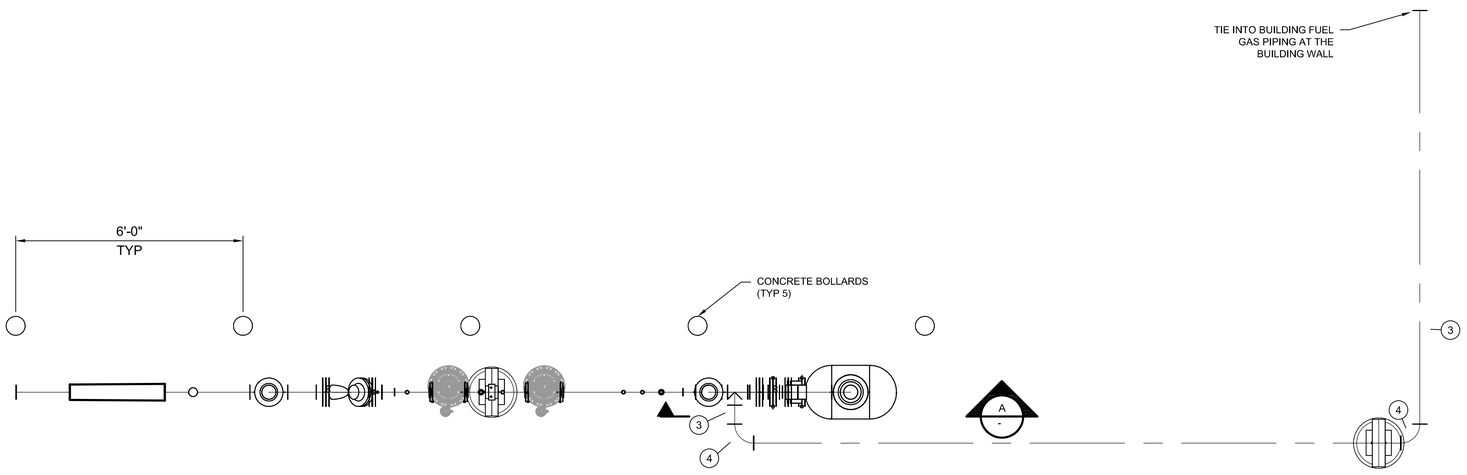

PLAN VIEW

SCALE: 1/2"=1'-0" (TYP 2 PLCS)

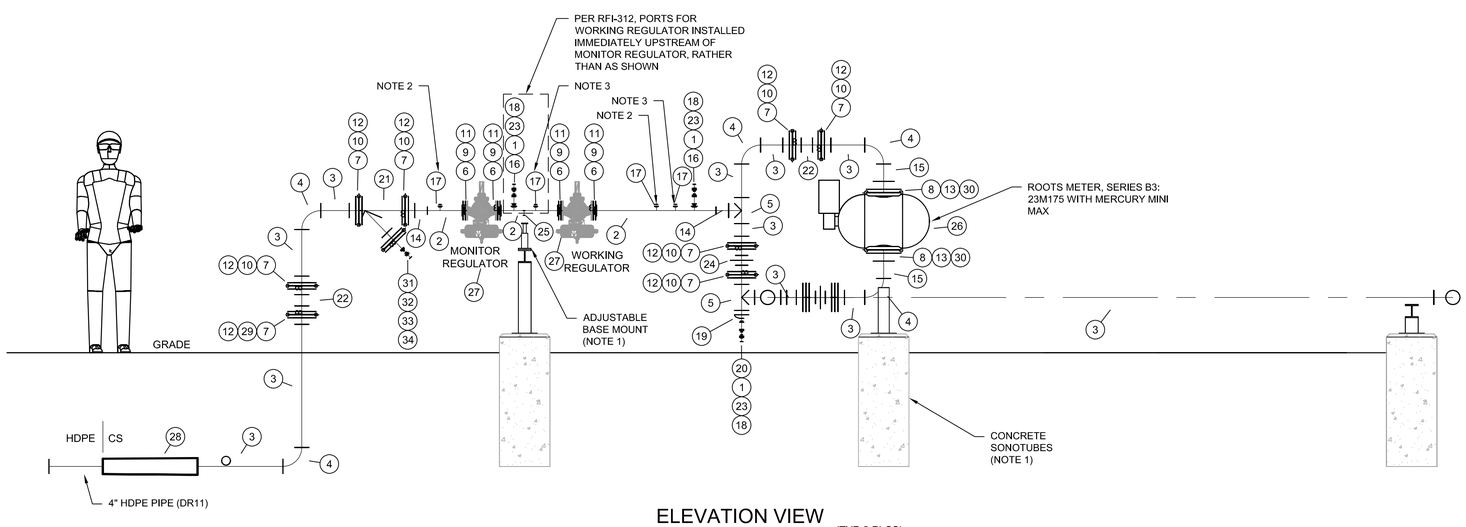

ELEVATION VIEW (TYP 2 PLCS)

SCALE: 1/2"=1'-0"

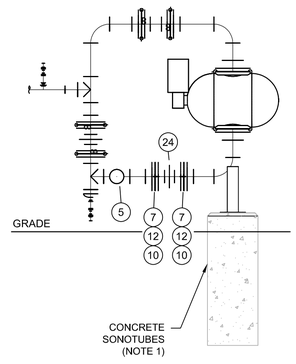

A - SECTION

SCALE: 1/2"=1'-0"

BILL OF MATERIAL

MARK	QTY	SIZE	DESCRIPTION	LENGTH
1	1	1/2"	PIPE, THD, S/80, ASTM A-53 GR B SMLS	9 1/16"
2	1	2"	PIPE, S/80, ASTM A-53 GR B SMLS	5'-9 1/2"
3	1	4"	PIPE, S/40, ASTM A-53 GR B SMLS	46'-6 13/16"
4	7	4"	ELL, 90 DEG LR S/40, ASTM A-234 GR WPB	
5	3	4"	TEE, STR S/40, ASTM A-234 GR B WPB	
6	4	2"	FLG, RFSW 150LB S/80 BORE, ASTM A-105	
7	10	4"	FLG, RFWN 150LB S/40 BORE, ASTM A-105	
8	2	6"	FLG, FFWN 150LB S/40 BORE, ASTM A-105	
9	4	2"	GASKET, 150#, SPIRAL WOUND, ASME B16.20, ASME B16.5, 0.175" THK, SS304 WITH FLEXIBLE GRAPHITE FILLER, SS304 INNER AND OUTER RING	
10	10	4"	GASKET, 150#, SPIRAL WOUND, ASME B16.20, ASME B16.5, 0.175" THK, SS304 WITH FLEXIBLE GRAPHITE FILLER, SS304 INNER AND OUTER RING	
11	4	5/8"	(4) 150# STUD BOLTS, ASTM A193 GR 7 Q-1:42:1508) NUTS, HVY HX, ASTM A194-2H8) NUTS, HVY HX, ASTM A194-2H	3 1/2"
12	10	5/8"	(8) 150# STUD BOLTS, ASTM A193 GR 7 Q-1:42:15016) NUTS, HVY HX, ASTM A194-2H16) NUTS, HVY HX, ASTM A194-2H	4"
13	2	6"	GASKET, 150#, SPIRAL WOUND, ASME B16.20, ASME B16.5, 0.175" THK, SS304 WITH FLEXIBLE GRAPHITE FILLER, SS304 INNER AND OUTER RING	
14	2	4"x2"	REDUCER, CONC S/40, ASTM A-234 GR B WPB	
15	2	6"x4"	REDUCER, CONC S/40, ASTM A-234 GR B WPB	
16	2	2"x1/2"	SOCKOLET, 3000LB, ASTM A-105	
17	4	2"x1/4"	SOCKOLET, 3000LB, ASTM A-105	
18	3	1/2"	PLUG, THD 3000LB, ASTM A-105	
19	1	4"	CAP, S/40, ASTM A-234 GR WPB	
20	1	1/2"	CPLG, HALF SW 3000LB FS, ASTM A-105	
21	1	4"	STRAINER, 150LB FLG.	
22	2	4"	VALVE, BALL-4", CLASS 150, RF, API6D W/ MONOGRAM, NAT. GAS SERVICE, F.O., W/ LEVEL OP. & LOCKING DEVEICE.	9"
23	3	1/2"	BALL VALVE, 800LB SW	1 3/4"
24	2	4"	PLUG VALVE, 150LB FLG.	9"
25	1	2"	U-BOLT	
26	1	6"	ROOTS METER, SERIES B3: 23M175, W/MERCURY MINIMAX	
27	2	2"	REGULATOR - FISHER 1098 EGR	
28	1	4"	WELDED TRANSITION PIECE (INTEGRIFUSE) SDR 11 OR APPROVED EQUIVALENT	
29	1	4"	ISOLATING KIT, 4"-150# CLASS, RF.	
30	2	3/4"	(8) 150# STUD BOLTS, ASTM A193 GR 7 Q-1:42:15016) NUTS, HVY HX, ASTM A194-2H16) NUTS, HVY HX, ASTM A194-2H	6"
31	1	1/2"	PIPE, THD, S/80, ASTM A-53 GR B SMLS	3 1/4"
32	1	4"	FLG, RF BLIND 150LB, ASTM A-105	
33	1	1/2"	PLUG, THD 3000LB, ASTM A-105	
34	1	1/2"	BALL VALVE, 800LB SW	1 3/4"

NOTES:
1. SEE STRUCTURAL DRAWINGS FOR SUPPORT AND CONCRETE DETAILS.
2. CONTRACTOR SCOPE INCLUDES INSTALLING 1/4" 3000# NEEDLE VALVES (UPSTREAM), 1/4" SS SEAMLESS TUBING 3000#, AND SWAGELOK FITTINGS FOR MONITOR REGULATOR. SEE MFG INSTALLATION MANUAL.
3. CONTRACTOR SCOPE INCLUDES INSTALLING 1/4" 3000# NEEDLE VALVES (UPSTREAM), 1/4" SS SEAMLESS TUBING 3000#, AND SWAGELOK FITTINGS FOR WORKING REGULATOR. SEE MFG INSTALLATION MANUAL.

THE DRAWINGS IN THIS SET ARE RECORD DRAWINGS. THEY ARE CONSTRUCTION CONTRACT DRAWINGS WHICH HAVE BEEN REVISED BASED ON AVAILABLE FIELD INFORMATION RECORDED BY OTHERS DURING CONSTRUCTION OF THIS CONTRACT. THERE HAS BEEN NO VERIFICATION OF DIMENSIONS SHOWN ON THE CONSTRUCTION DRAWINGS OR THE ACCURACY/COMPLETENESS OF THE FIELD INFORMATION RECEIVED.

SIGNATURE DATE

0 1' 5'

1/2" = 1'-0"

AS-BUILT REPLACEMENT SHEET

PROFESSIONAL CERTIFICATION
THIS DRAWING WAS ORIGINALLY APPROVED FOR CONSTRUCTION AND SEALED BY BRYAN M. BALCHUNAS, A REGISTERED PROFESSIONAL ENGINEER IN THE STATE OF MARYLAND, NO. 200406.

NOTICE TO CONTRACTORS
- PROJECT ELEVATIONS ARE BASED ON NAVD88 AND HOWARD COUNTY'S BENCHMARK SYSTEM
- PREVIOUS PROJECTS USED OTHER DATUMS
- APPLY THE FOLLOWING CONVERSIONS WHEN USING PREVIOUS CONTRACT DRAWINGS:
  - ADDITION NO. 6: SUBTRACT 0.80 FT
  - PRIOR ADDITIONS: SUBTRACT 1.04 FT

DEPARTMENT OF PUBLIC WORKS
HOWARD COUNTY, MARYLAND

CHIEF, BUREAU OF UTILITIES DATE

DES: AD
DRN: LT
CHK:
DATE:

DATE	REV	DESCRIPTION
07/2019		RECORD DRAWINGS

PROCESS

NATURAL GAS METER RUN DRYER/DIGESTER BUILDING BILL OF MATERIALS

LITTLE PATUXENT WATER RECLAMATION PLANT
8TH ADDITION
BIOSOLIDS PROCESSING FACILITIES – PHASE I

CAPITAL PROJECT S-6295
CONTRACT NO. 24-4935

ELECTION DISTRICT NO. 6
HOWARD COUNTY, MARYLAND

SCALE AS SHOWN

SHEET 252 OF 463

M-912

C:\pwworking\pitt\d1901391\M-912.dwg 01/11/22_15:49

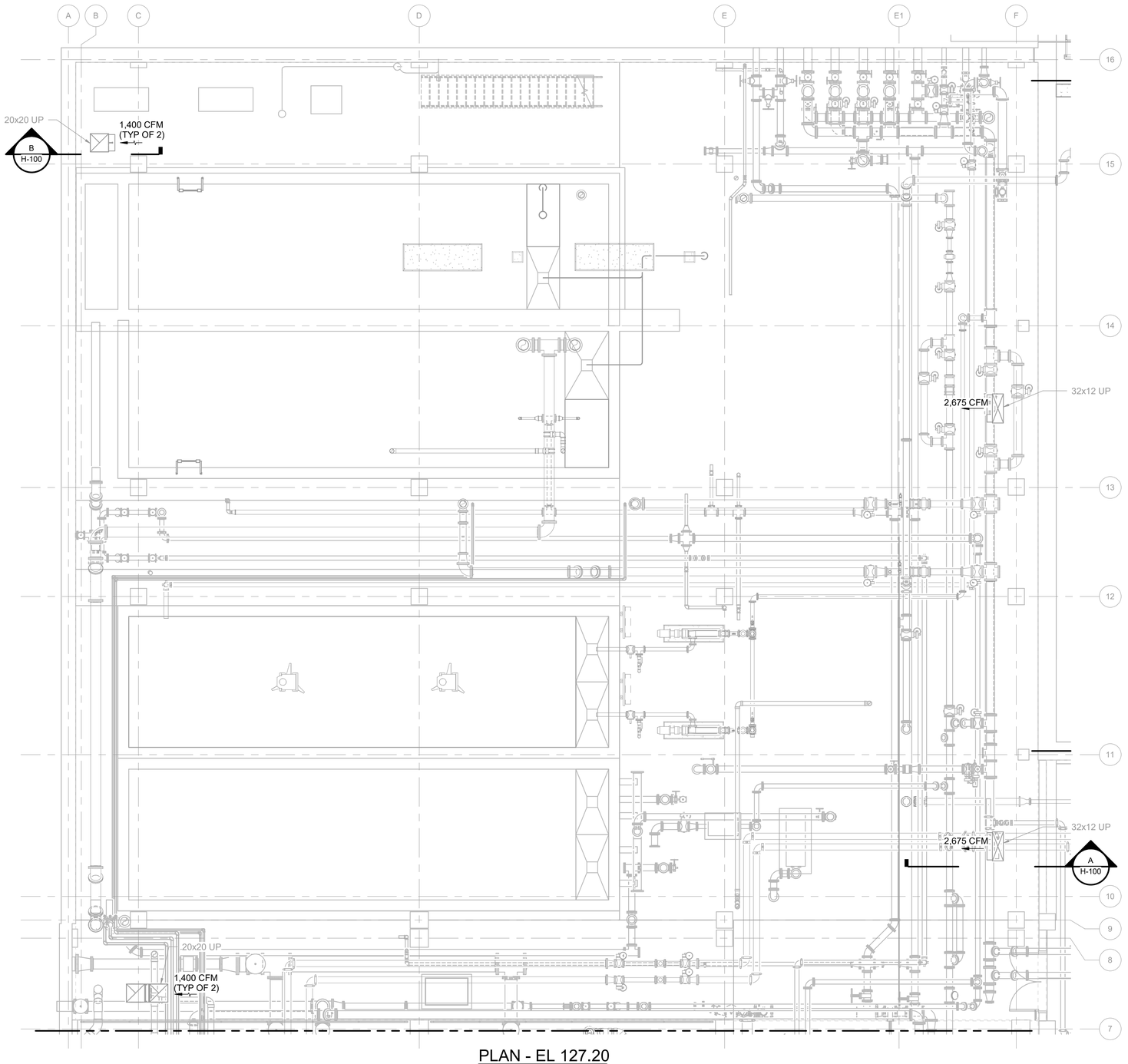

PLAN - EL 127.20

3/16" = 1'-0"

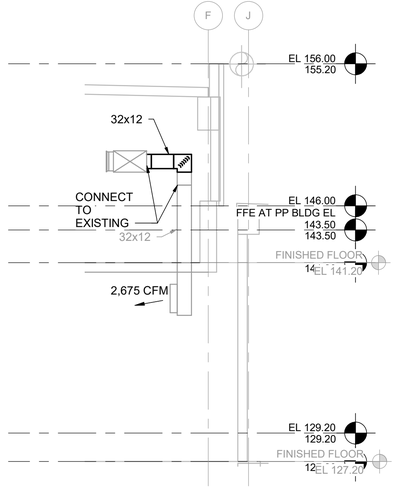

A - SECTION

3/16" = 1'-0"

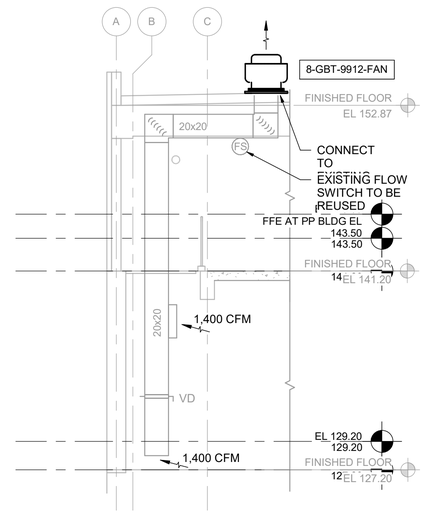

B - SECTION

3/16" = 1'-0"

THE DRAWINGS IN THIS SET ARE RECORD DRAWINGS. THEY ARE CONSTRUCTION CONTRACT DRAWINGS WHICH HAVE BEEN REVISED BASED ON AVAILABLE FIELD INFORMATION RECORDED BY OTHERS DURING CONSTRUCTION OF THIS CONTRACT. THERE HAS BEEN NO VERIFICATION OF DIMENSIONS SHOWN ON THE CONSTRUCTION DRAWINGS OR THE ACCURACY/COMPLETENESS OF THE FIELD INFORMATION RECEIVED.

SIGNATURE

2/7/2023

DATE

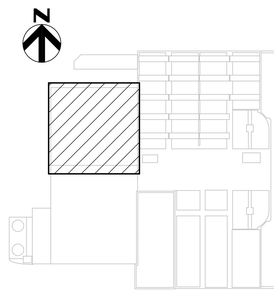

KEY PLAN

AS-BUILT REPLACEMENT SHEET

PROFESSIONAL CERTIFICATION

THIS DRAWING WAS ORIGINALLY APPROVED FOR CONSTRUCTION AND SEALED BY CHRISTOPHER S. WORK, A REGISTERED PROFESSIONAL ENGINEER IN THE STATE OF MARYLAND, NO. 50093.

NOTICE TO CONTRACTORS

- PROJECT ELEVATIONS ARE BASED ON NAVD88 AND HOWARD COUNTY'S BENCHMARK SYSTEM
- PREVIOUS PROJECTS USED OTHER DATUMS
- APPLY THE FOLLOWING CONVERSIONS WHEN USING PREVIOUS CONTRACT DRAWINGS:
  - ADDITION NO. 6: SUBTRACT 0.80 FT
  - PRIOR ADDITIONS: SUBTRACT 1.04 FT

DEPARTMENT OF PUBLIC WORKS
HOWARD COUNTY, MARYLAND

CHIEF, BUREAU OF UTILITIES DATE

DES: CSW

DRN: JCS

CHK: BRP

DATE: 09/2017

DATE	REV	DESCRIPTION
07/2019		RECORD DRAWING

HVAC

GRAVITY BELT THICKENER AREA
PLAN - EL 127.20

LITTLE PATUXENT WATER RECLAMATION PLANT
8TH ADDITION
BIOSOLIDS PROCESSING FACILITIES - PHASE I

CAPITAL PROJECT S-6295
CONTRACT NO. 24-4935

ELECTION DISTRICT NO. 6
HOWARD COUNTY, MARYLAND

SCALE
AS
SHOWN

SHEET
253 OF 463

H-100

BIM 360://10054364 – Little Patuxent WRP 8th Addition/264591_100_HP_V18.rvt
1/12/2022 8:30:43 AM

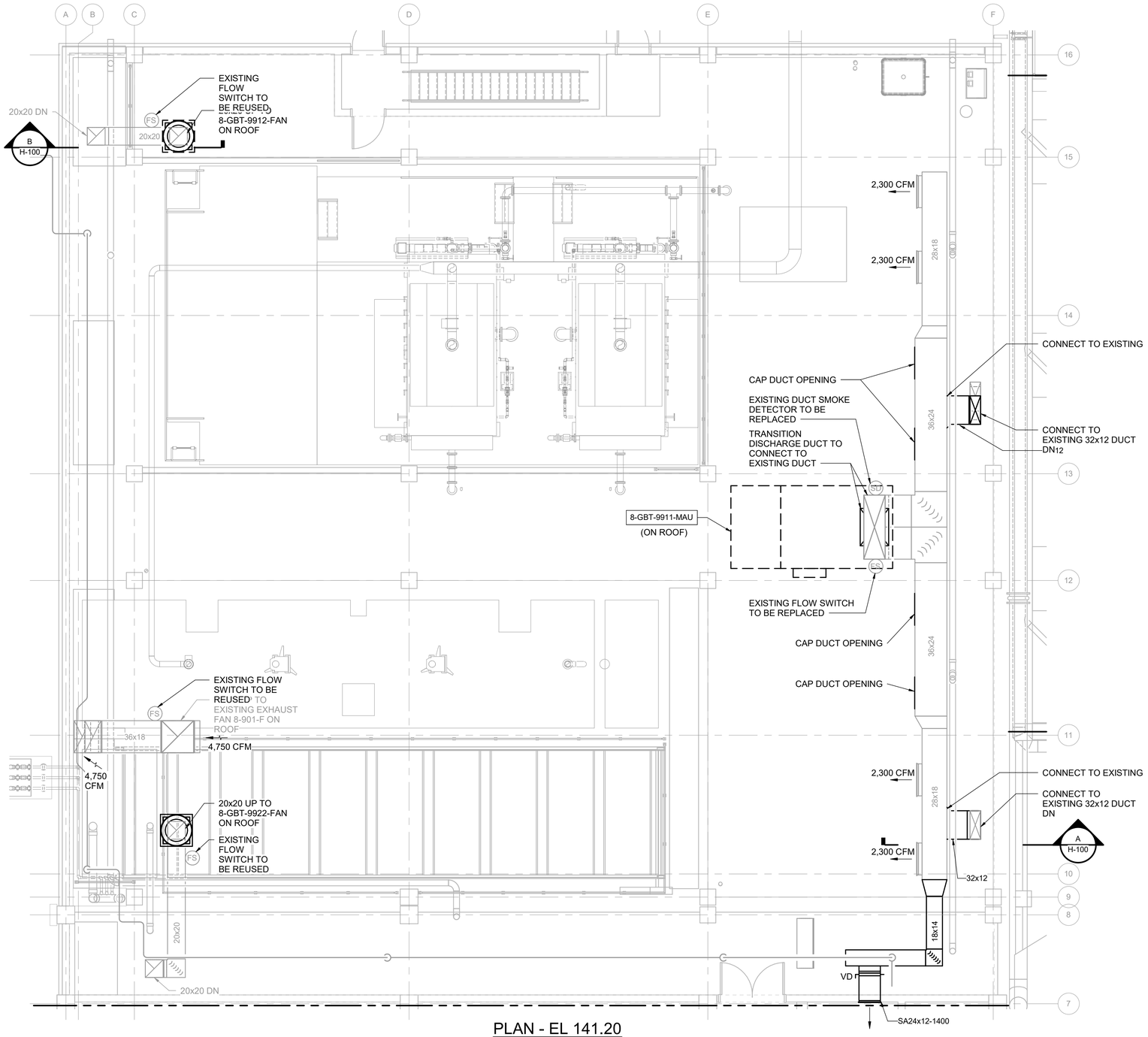

PLAN - EL 141.20

3/16" = 1'-0"

THE DRAWINGS IN THIS SET ARE RECORD DRAWINGS. THEY ARE CONSTRUCTION CONTRACT DRAWINGS WHICH HAVE BEEN REVISED BASED ON AVAILABLE FIELD INFORMATION RECORDED BY OTHERS DURING CONSTRUCTION OF THIS CONTRACT. THERE HAS BEEN NO VERIFICATION OF DIMENSIONS SHOWN ON THE CONSTRUCTION DRAWINGS OR THE ACCURACY/COMPLETENESS OF THE FIELD INFORMATION RECEIVED.

SIGNATURE — DATE 2/7/2023

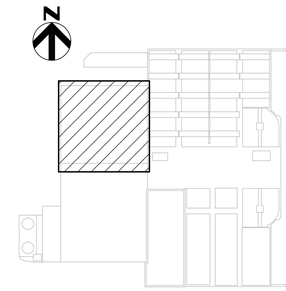

KEY PLAN

AS-BUILT REPLACEMENT SHEET

PROFESSIONAL CERTIFICATION

THIS DRAWING WAS ORIGINALLY APPROVED FOR CONSTRUCTION AND SEALED BY CHRISTOPHER S. WORK, A REGISTERED PROFESSIONAL ENGINEER IN THE STATE OF MARYLAND, NO. 50093.

NOTICE TO CONTRACTORS

- PROJECT ELEVATIONS ARE BASED ON NAVD88 AND HOWARD COUNTY'S BENCHMARK SYSTEM
- PREVIOUS PROJECTS USED OTHER DATUMS
- APPLY THE FOLLOWING CONVERSIONS WHEN USING PREVIOUS CONTRACT DRAWINGS:
  - ADDITION NO. 6: SUBTRACT 0.80 FT
  - PRIOR ADDITIONS: SUBTRACT 1.04 FT

DEPARTMENT OF PUBLIC WORKS
HOWARD COUNTY, MARYLAND

CHIEF, BUREAU OF UTILITIES — DATE

DES: CSW
DRN: JCS
CHK: BRP
DATE: 09/2017

DATE	REV	DESCRIPTION
07/2019		RECORD DRAWING

HVAC

GRAVITY BELT THICKENER AREA PLAN - EL 141.20

LITTLE PATUXENT WATER RECLAMATION PLANT
8TH ADDITION
BIOSOLIDS PROCESSING FACILITIES - PHASE I

CAPITAL PROJECT S-6295
CONTRACT NO. 24-4935

ELECTION DISTRICT NO. 6
HOWARD COUNTY, MARYLAND

SCALE AS SHOWN

SHEET 254 OF 463

H-101

BIM 360://10054364 – Little Patuxent WRP 8th Addition/264591_100_HP_V18.rvt
1/12/2022 8:30:47 AM

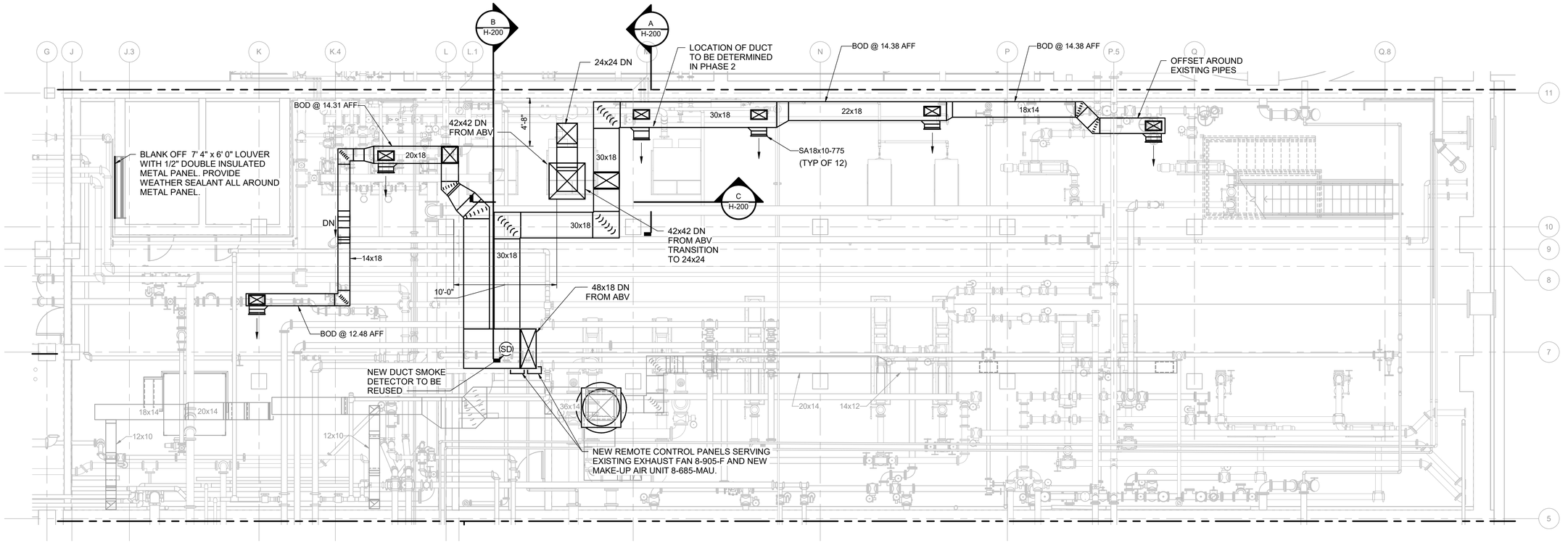

PLAN - EL 127.20

3/16" = 1'-0"

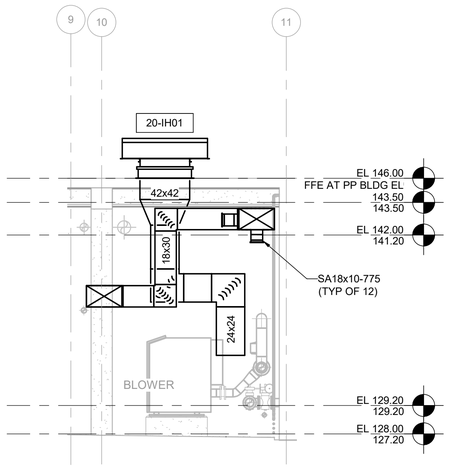

A - SECTION

3/16" = 1'-0"

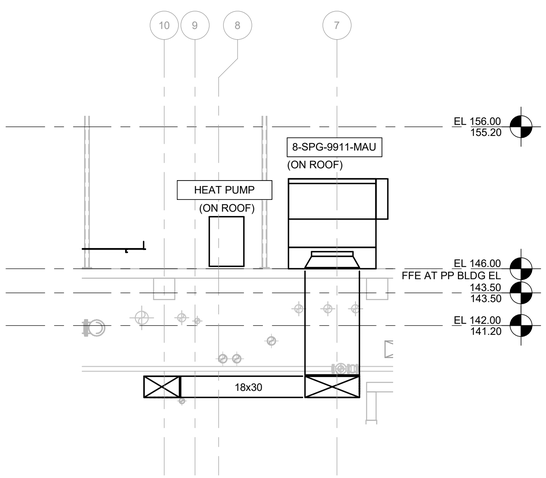

B - SECTION

3/16" = 1'-0"

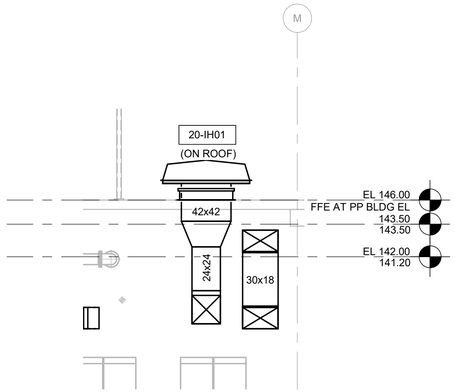

C - SECTION

3/16" = 1'-0"

THE DRAWINGS IN THIS SET ARE RECORD DRAWINGS. THEY ARE CONSTRUCTION CONTRACT DRAWINGS WHICH HAVE BEEN REVISED BASED ON AVAILABLE FIELD INFORMATION RECORDED BY OTHERS DURING CONSTRUCTION OF THIS CONTRACT. THERE HAS BEEN NO VERIFICATION OF DIMENSIONS SHOWN ON THE CONSTRUCTION DRAWINGS OR THE ACCURACY/COMPLETENESS OF THE FIELD INFORMATION RECEIVED.

SIGNATURE — DATE 2/7/2023

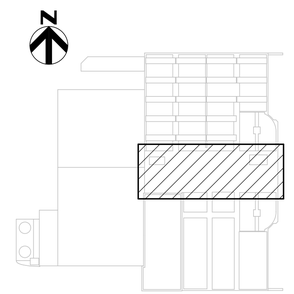

KEY PLAN

AS-BUILT REPLACEMENT SHEET

PROFESSIONAL CERTIFICATION

THIS DRAWING WAS ORIGINALLY APPROVED FOR CONSTRUCTION AND SEALED BY CHRISTOPHER S. WORK, A REGISTERED PROFESSIONAL ENGINEER IN THE STATE OF MARYLAND, NO. 50093.

NOTICE TO CONTRACTORS

- PROJECT ELEVATIONS ARE BASED ON NAVD88 AND HOWARD COUNTY'S BENCHMARK SYSTEM
- PREVIOUS PROJECTS USED OTHER DATUMS
- APPLY THE FOLLOWING CONVERSIONS WHEN USING PREVIOUS CONTRACT DRAWINGS:
  - ADDITION NO. 6: SUBTRACT 0.80 FT
  - PRIOR ADDITIONS: SUBTRACT 1.04 FT

DEPARTMENT OF PUBLIC WORKS
HOWARD COUNTY, MARYLAND

CHIEF, BUREAU OF UTILITIES — DATE

DES: CSW
DRN: JCS
CHK: BRP
DATE: 09/2017

DATE	REV	DESCRIPTION
07/2019		RECORD DRAWING

HVAC

SOLIDS PIPE GALLERY PLAN - EL 127.20

LITTLE PATUXENT WATER RECLAMATION PLANT
8TH ADDITION
BIOSOLIDS PROCESSING FACILITIES - PHASE I

CAPITAL PROJECT S-6295
CONTRACT NO. 24-4935

ELECTION DISTRICT NO. 6
HOWARD COUNTY, MARYLAND

SCALE AS SHOWN

SHEET 255 OF 463

H-200

BIM 360://10054364 – Little Patuxent WRP 8th Addition/264591_100_HP_V18.rvt
1/14/2022 9:38:35 AM

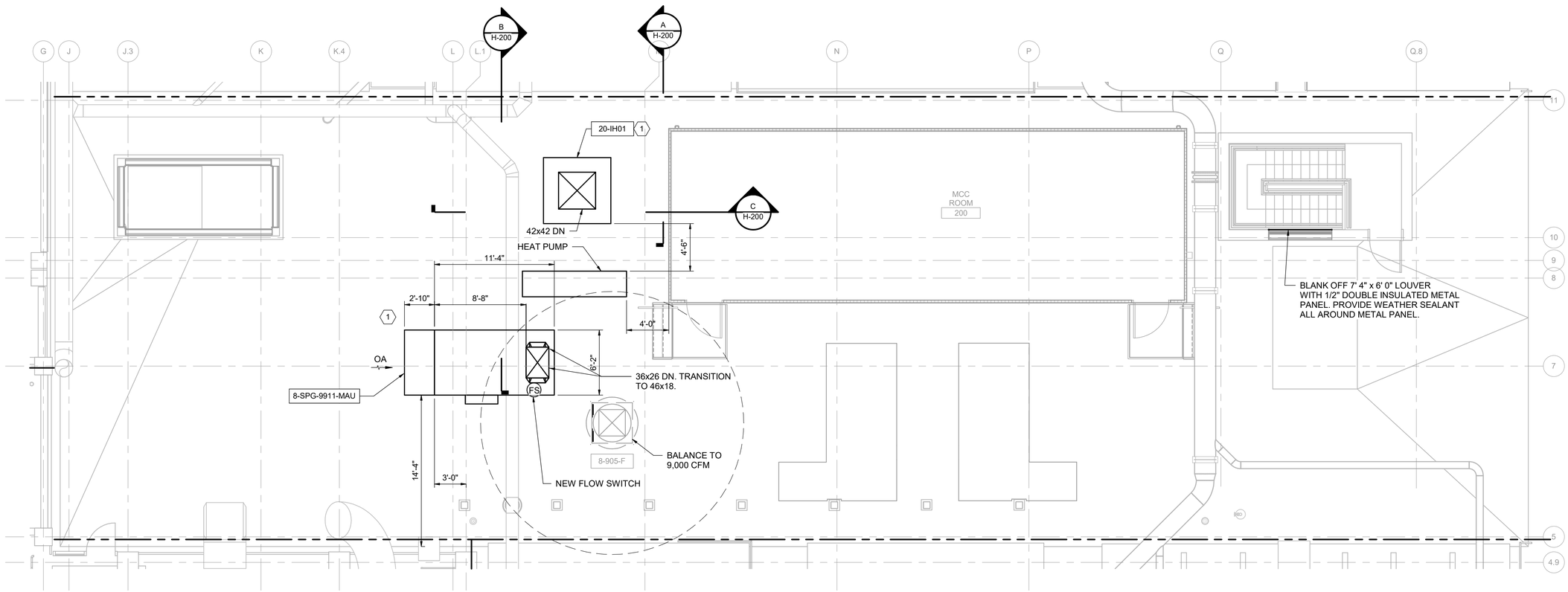

PLAN - EL 145.20

3/16" = 1'-0"

KEY NOTES ⟨X⟩

1 PROVIDE 18" HIGH CONCRETE EQUIPMENT CURB. SEE 3/S-902 FOR MORE INFORMATION.

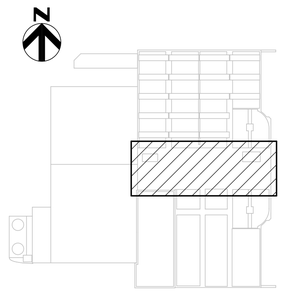

KEY PLAN

THE DRAWINGS IN THIS SET ARE RECORD DRAWINGS. THEY ARE CONSTRUCTION CONTRACT DRAWINGS WHICH HAVE BEEN REVISED BASED ON AVAILABLE FIELD INFORMATION RECORDED BY OTHERS DURING CONSTRUCTION OF THIS CONTRACT. THERE HAS BEEN NO VERIFICATION OF DIMENSIONS SHOWN ON THE CONSTRUCTION DRAWINGS OR THE ACCURACY/COMPLETENESS OF THE FIELD INFORMATION RECEIVED.

SIGNATURE 2/7/2023 DATE

AS-BUILT REPLACEMENT SHEET

PROFESSIONAL CERTIFICATION

THIS DRAWING WAS ORIGINALLY APPROVED FOR CONSTRUCTION AND SEALED BY CHRISTOPHER S. WORK, A REGISTERED PROFESSIONAL ENGINEER IN THE STATE OF MARYLAND, NO. 50093.

NOTICE TO CONTRACTORS

- PROJECT ELEVATIONS ARE BASED ON NAVD88 AND HOWARD COUNTY'S BENCHMARK SYSTEM
- PREVIOUS PROJECTS USED OTHER DATUMS
- APPLY THE FOLLOWING CONVERSIONS WHEN USING PREVIOUS CONTRACT DRAWINGS:
  - ADDITION NO. 6: SUBTRACT 0.80 FT
  - PRIOR ADDITIONS: SUBTRACT 1.04 FT

DEPARTMENT OF PUBLIC WORKS
HOWARD COUNTY, MARYLAND

CHIEF, BUREAU OF UTILITIES DATE

DES: CSW
DRN: JCS
CHK: BRP
DATE: 09/2017

DATE	REV	DESCRIPTION
07/2019		RECORD DRAWING

HVAC

SOLIDS PIPE GALLERY PLAN - EL 145.20

LITTLE PATUXENT WATER RECLAMATION PLANT
8TH ADDITION
BIOSOLIDS PROCESSING FACILITIES - PHASE I

CAPITAL PROJECT S-6295
CONTRACT NO. 24-4935

ELECTION DISTRICT NO. 6
HOWARD COUNTY, MARYLAND

SCALE AS SHOWN

SHEET 256 OF 463

H-201

BIM 360://10054364 – Little Patuxent WRP 8th Addition/264591_100_HP_V18.rvt
1/14/2022 9:40:15 AM

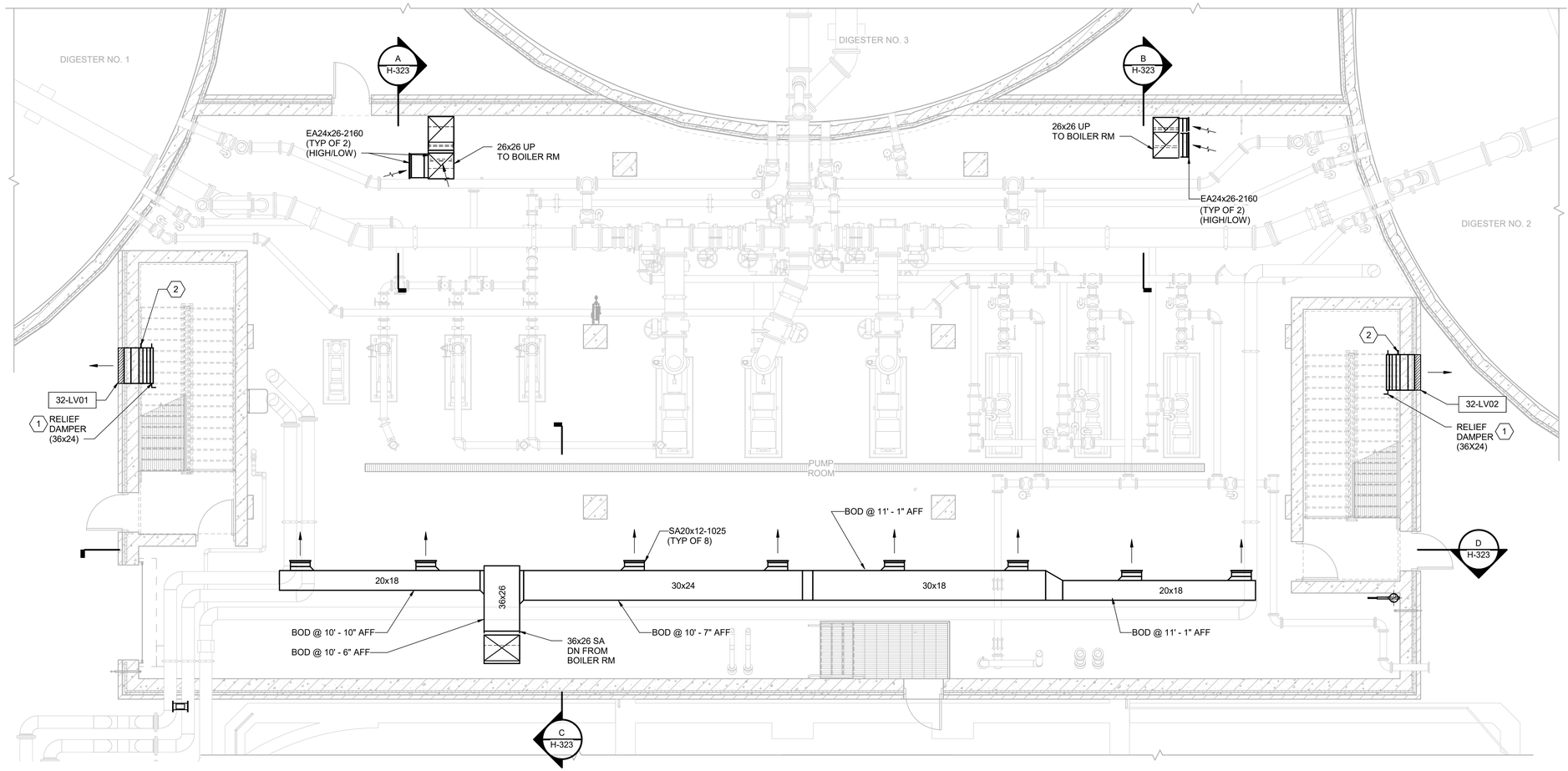

PLAN AT EL 143.50

3/16" = 1'-0"

N

KEY NOTES (X)

1 BAROMETRIC RELIEF DAMPER SHALL OPEN AT 0.1 IN.WC.

2 OUT OF PARTITION TYPE FIRE DAMPER.

THE DRAWINGS IN THIS SET ARE RECORD DRAWINGS. THEY ARE CONSTRUCTION CONTRACT DRAWINGS WHICH HAVE BEEN REVISED BASED ON AVAILABLE FIELD INFORMATION RECORDED BY OTHERS DURING CONSTRUCTION OF THIS CONTRACT. THERE HAS BEEN NO VERIFICATION OF DIMENSIONS SHOWN ON THE CONSTRUCTION DRAWINGS OR THE ACCURACY/COMPLETENESS OF THE FIELD INFORMATION RECEIVED.

SIGNATURE

2/7/2023
DATE

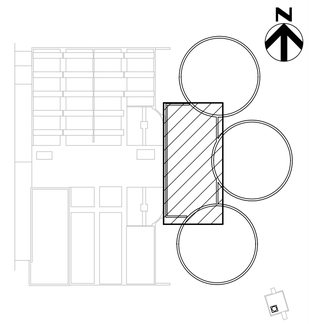

KEY PLAN

AS-BUILT REPLACEMENT SHEET

PROFESSIONAL CERTIFICATION

THIS DRAWING WAS ORIGINALLY APPROVED FOR CONSTRUCTION AND SEALED BY CHRISTOPHER S. WORK, A REGISTERED PROFESSIONAL ENGINEER IN THE STATE OF MARYLAND, NO. 50093.

NOTICE TO CONTRACTORS

- PROJECT ELEVATIONS ARE BASED ON NAVD88 AND HOWARD COUNTY'S BENCHMARK SYSTEM
- PREVIOUS PROJECTS USED OTHER DATUMS
- APPLY THE FOLLOWING CONVERSIONS WHEN USING PREVIOUS CONTRACT DRAWINGS:
  - ADDITION NO. 6: SUBTRACT 0.80 FT
  - PRIOR ADDITIONS: SUBTRACT 1.04 FT

DEPARTMENT OF PUBLIC WORKS
HOWARD COUNTY, MARYLAND

CHIEF, BUREAU OF UTILITIES DATE

DES: CSW

DRN: JCS

CHK: BRP

DATE: 08/2017

DATE	REV	DESCRIPTION
07/2019		RECORD DRAWING

HVAC

DIGESTER BUILDING PLAN - EL 143.50

LITTLE PATUXENT WATER RECLAMATION PLANT
8TH ADDITION
BIOSOLIDS PROCESSING FACILITIES - PHASE I

CAPITAL PROJECT S-6295
CONTRACT NO. 24-4935

ELECTION DISTRICT NO. 6
HOWARD COUNTY, MARYLAND

SCALE AS SHOWN

SHEET 257 OF 463

H-320

BIM 360://10054364 – Little Patuxent WRP 8th Addition/264591_300_HP_V18.rvt
1/12/2022 9:03:28 AM

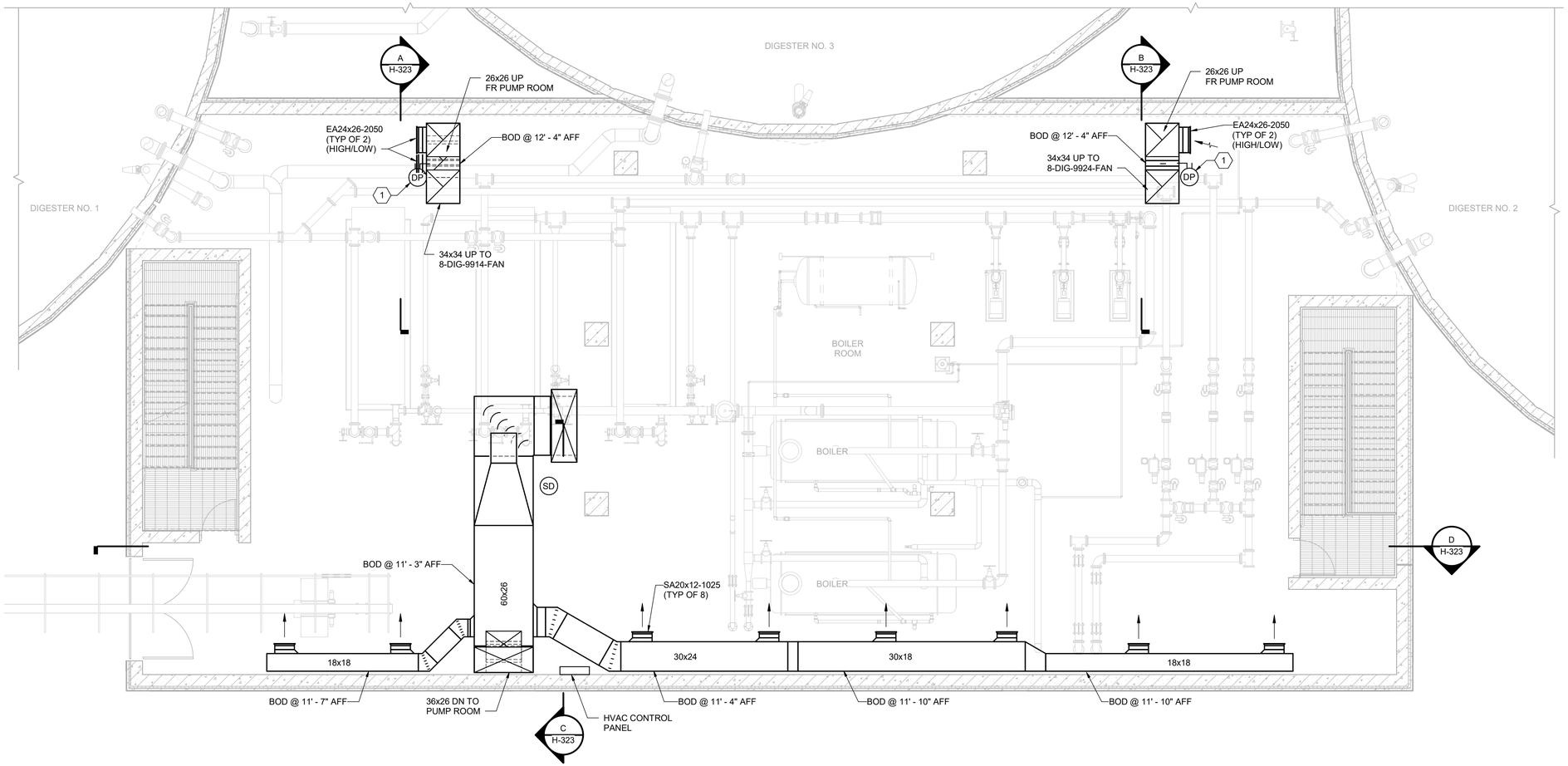

PLAN AT EL 161.67

3/16" = 1'-0"

N

KEY NOTES (X)

1 PROVIDE DIFFERENTIAL PRESSURE SWITCH FOR AIRFLOW MONITORING BY PCS SYSTEM. SEE ELECTRICAL DRAWINGS FOR 120 VOLT POWER CIRCUIT, CONTROL WIRING, AND ASSOCIATED CONDUITS.

THE DRAWINGS IN THIS SET ARE RECORD DRAWINGS. THEY ARE CONSTRUCTION CONTRACT DRAWINGS WHICH HAVE BEEN REVISED BASED ON AVAILABLE FIELD INFORMATION RECORDED BY OTHERS DURING CONSTRUCTION OF THIS CONTRACT. THERE HAS BEEN NO VERIFICATION OF DIMENSIONS SHOWN ON THE CONSTRUCTION DRAWINGS OR THE ACCURACY/COMPLETENESS OF THE FIELD INFORMATION RECEIVED.

SIGNATURE

2/7/2023
DATE

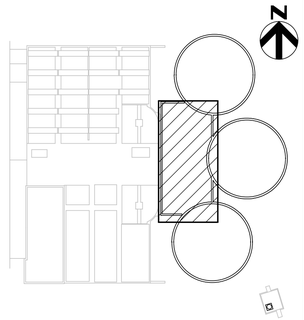

KEY PLAN

AS-BUILT REPLACEMENT SHEET

PROFESSIONAL CERTIFICATION

THIS DRAWING WAS ORIGINALLY APPROVED FOR CONSTRUCTION AND SEALED BY CHRISTOPHER S. WORK, A REGISTERED PROFESSIONAL ENGINEER IN THE STATE OF MARYLAND, NO. 50093.

NOTICE TO CONTRACTORS

- PROJECT ELEVATIONS ARE BASED ON NAVD88 AND HOWARD COUNTY'S BENCHMARK SYSTEM
- PREVIOUS PROJECTS USED OTHER DATUMS
- APPLY THE FOLLOWING CONVERSIONS WHEN USING PREVIOUS CONTRACT DRAWINGS:
  - ADDITION NO. 6: SUBTRACT 0.80 FT
  - PRIOR ADDITIONS: SUBTRACT 1.04 FT

DEPARTMENT OF PUBLIC WORKS
HOWARD COUNTY, MARYLAND

CHIEF, BUREAU OF UTILITIES DATE

DES: CSW
DRN: JCS
CHK: BRP
DATE: 08/2017

DATE	REV	DESCRIPTION
07/2019		RECORD DRAWING

HVAC

DIGESTER BUILDING PLAN - EL 161.67

LITTLE PATUXENT WATER RECLAMATION PLANT
8TH ADDITION
BIOSOLIDS PROCESSING FACILITIES - PHASE I

CAPITAL PROJECT S-6295
CONTRACT NO. 24-4935

ELECTION DISTRICT NO. 6
HOWARD COUNTY, MARYLAND

SCALE AS SHOWN

SHEET 258 OF 463

H-321

BIM 360://10054364 – Little Patuxent WRP 8th Addition/264591_300_HP_V18.rvt
1/12/2022 9:03:31 AM

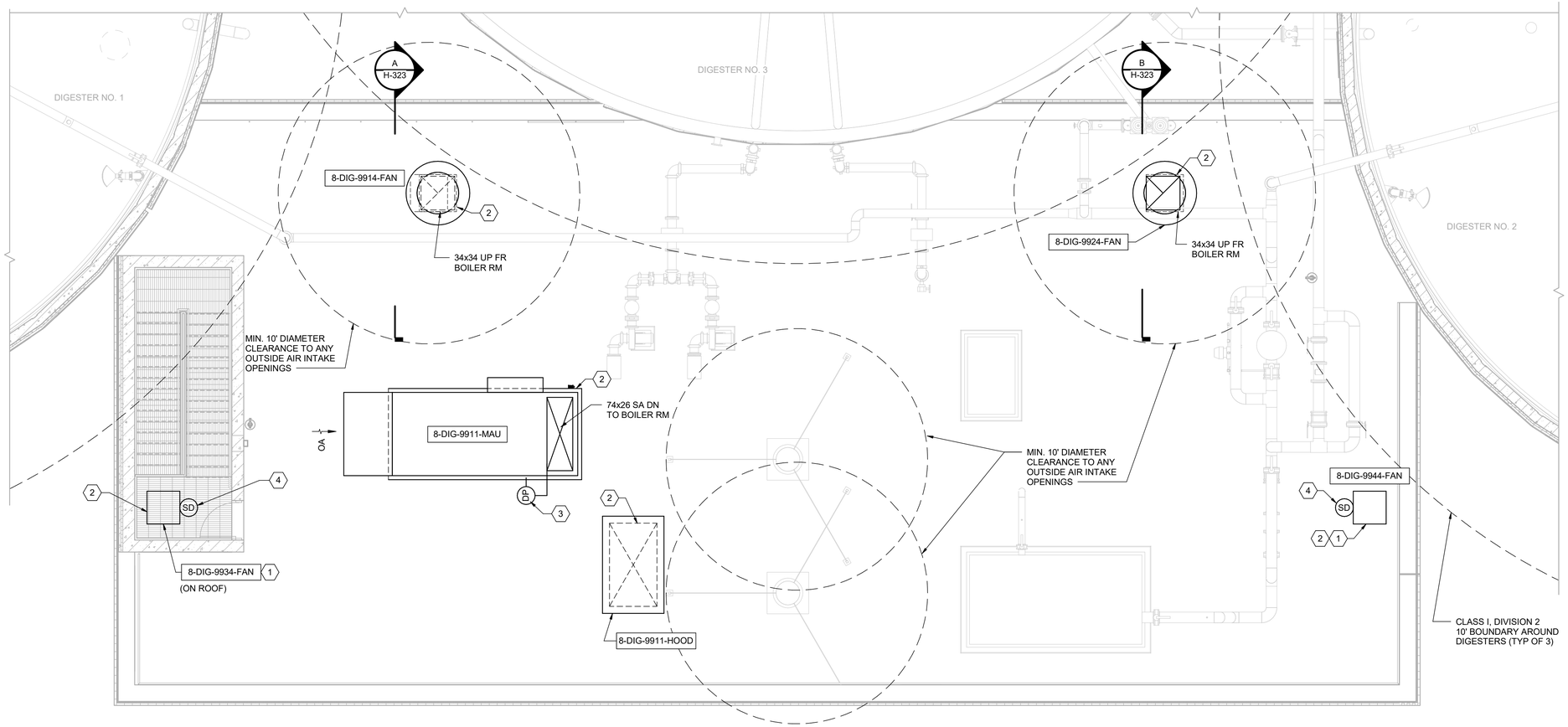

ROOF PLAN

3/16" = 1'-0"

KEY NOTES (X)

1. SEE ELECTRICAL DRAWINGS FOR SUPPLY FAN FLOW MONITORING.
2. PROVIDE 24" HIGH, 2" INSULATED, PRE-FABRICATED ALUMINUM ROOF CURB. PROVIDE A MINIMUM CURB HEIGHT OF 18" ABOVE ROOF MEMBRANE. PROVIDE BLOCKING BELOW ROOF CURB AS NECESSARY. SEE 7/A-903 FOR MORE INFORMATION.
3. PROVIDE DIFFERENTIAL PRESSURE SWITCH ON MAKE-UP AIR UNIT SUPPLY FAN FOR AIRFLOW MONITORING BY PCS SYSTEM. SEE ELECTRICAL DRAWINGS FOR 120 VOLT POWER CIRCUIT, CONTROL WIRING, AND ASSOCIATED CONDUITS.
4. PROVIDE DUCT SMOKE DETECTOR. DETECTOR SHALL BE TIED INTO THE FIRE ALARM CONTROL PANEL (FACP) AND SHALL SHUT DOWN VENTILATION SYSTEM UPON SMOKE DETECTION. SEE ELECTRICAL DRAWINGS FOR 120 VOLT POWER CIRCUIT.

THE DRAWINGS IN THIS SET ARE RECORD DRAWINGS. THEY ARE CONSTRUCTION CONTRACT DRAWINGS WHICH HAVE BEEN REVISED BASED ON AVAILABLE FIELD INFORMATION RECORDED BY OTHERS DURING CONSTRUCTION OF THIS CONTRACT. THERE HAS BEEN NO VERIFICATION OF DIMENSIONS SHOWN ON THE CONSTRUCTION DRAWINGS OR THE ACCURACY/COMPLETENESS OF THE FIELD INFORMATION RECEIVED.

SIGNATURE — DATE 2/7/2023

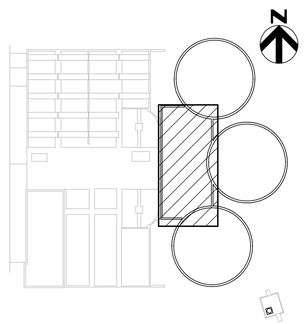

KEY PLAN

AS-BUILT REPLACEMENT SHEET

PROFESSIONAL CERTIFICATION

THIS DRAWING WAS ORIGINALLY APPROVED FOR CONSTRUCTION AND SEALED BY CHRISTOPHER S. WORK, A REGISTERED PROFESSIONAL ENGINEER IN THE STATE OF MARYLAND, NO. 50093.

NOTICE TO CONTRACTORS

- PROJECT ELEVATIONS ARE BASED ON NAVD88 AND HOWARD COUNTY'S BENCHMARK SYSTEM
- PREVIOUS PROJECTS USED OTHER DATUMS
- APPLY THE FOLLOWING CONVERSIONS WHEN USING PREVIOUS CONTRACT DRAWINGS:
  - ADDITION NO. 6: SUBTRACT 0.80 FT
  - PRIOR ADDITIONS: SUBTRACT 1.04 FT

DEPARTMENT OF PUBLIC WORKS
HOWARD COUNTY, MARYLAND

CHIEF, BUREAU OF UTILITIES — DATE

DES: CSW
DRN: JCS
CHK: BRP
DATE: 08/2017

DATE	REV	DESCRIPTION
07/2019		RECORD DRAWING

HVAC

DIGESTER BUILDING ROOF PLAN

LITTLE PATUXENT WATER RECLAMATION PLANT
8TH ADDITION
BIOSOLIDS PROCESSING FACILITIES - PHASE I

CAPITAL PROJECT S-6295
CONTRACT NO. 24-4935

ELECTION DISTRICT NO. 6
HOWARD COUNTY, MARYLAND

SCALE AS SHOWN

SHEET 259 OF 463

H-322

BIM 360://10054364 – Little Patuxent WRP 8th Addition/264591_300_HP_V18.rvt
1/12/2022 9:03:33 AM

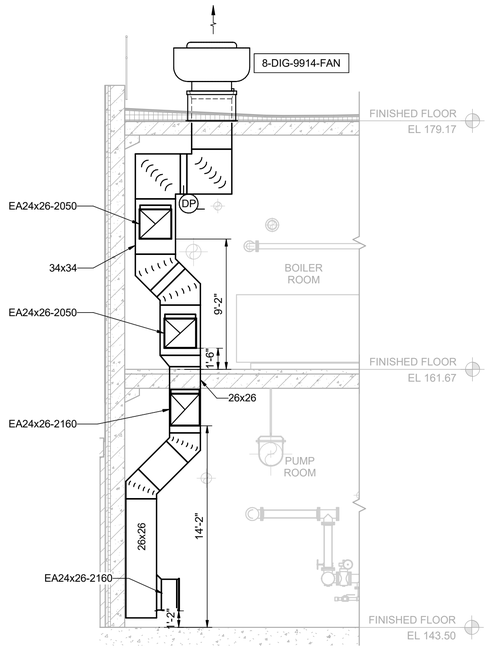

A H-320 SECTION
3/16" = 1'-0"

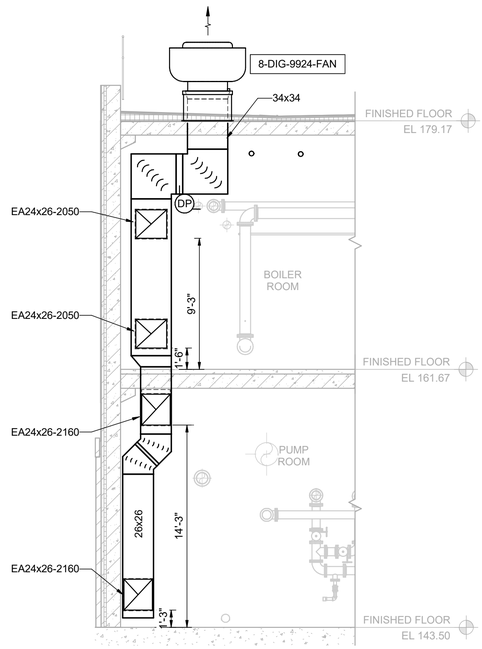

B H-320 SECTION
3/16" = 1'-0"

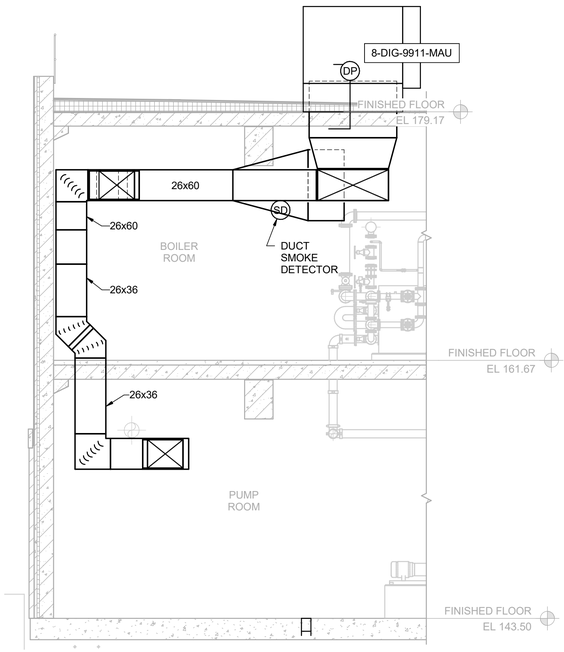

C H-320 SECTION
3/16" = 1'-0"

D H-320 SECTION
3/16" = 1'-0"

THE DRAWINGS IN THIS SET ARE RECORD DRAWINGS. THEY ARE CONSTRUCTION CONTRACT DRAWINGS WHICH HAVE BEEN REVISED BASED ON AVAILABLE FIELD INFORMATION RECORDED BY OTHERS DURING CONSTRUCTION OF THIS CONTRACT. THERE HAS BEEN NO VERIFICATION OF DIMENSIONS SHOWN ON THE CONSTRUCTION DRAWINGS OR THE ACCURACY/COMPLETENESS OF THE FIELD INFORMATION RECEIVED.

SIGNATURE _____ DATE 2/7/2023

AS-BUILT REPLACEMENT SHEET

PROFESSIONAL CERTIFICATION

THIS DRAWING WAS ORIGINALLY APPROVED FOR CONSTRUCTION AND SEALED BY CHRISTOPHER S. WORK, A REGISTERED PROFESSIONAL ENGINEER IN THE STATE OF MARYLAND, NO. 50093.

NOTICE TO CONTRACTORS

- PROJECT ELEVATIONS ARE BASED ON NAVD88 AND HOWARD COUNTY'S BENCHMARK SYSTEM
- PREVIOUS PROJECTS USED OTHER DATUMS
- APPLY THE FOLLOWING CONVERSIONS WHEN USING PREVIOUS CONTRACT DRAWINGS:
  - ADDITION NO. 6: SUBTRACT 0.80 FT
  - PRIOR ADDITIONS: SUBTRACT 1.04 FT

DEPARTMENT OF PUBLIC WORKS
HOWARD COUNTY, MARYLAND

CHIEF, BUREAU OF UTILITIES DATE

DES: CSW
DRN: JCS
CHK: BRP
DATE: 08/2017

DATE	REV	DESCRIPTION
07/2019		RECORD DRAWING

HVAC

DIGESTER BUILDING SECTIONS

LITTLE PATUXENT WATER RECLAMATION PLANT
8TH ADDITION
BIOSOLIDS PROCESSING FACILITIES - PHASE I

CAPITAL PROJECT S-6295
CONTRACT NO. 24-4935

ELECTION DISTRICT NO. 6
HOWARD COUNTY, MARYLAND

SCALE AS SHOWN

SHEET 260 OF 463

H-323

BIM 360://10054364 – Little Patuxent WRP 8th Addition/284591_300_HP_V18.rvt
1/12/2022 9:03:36 AM

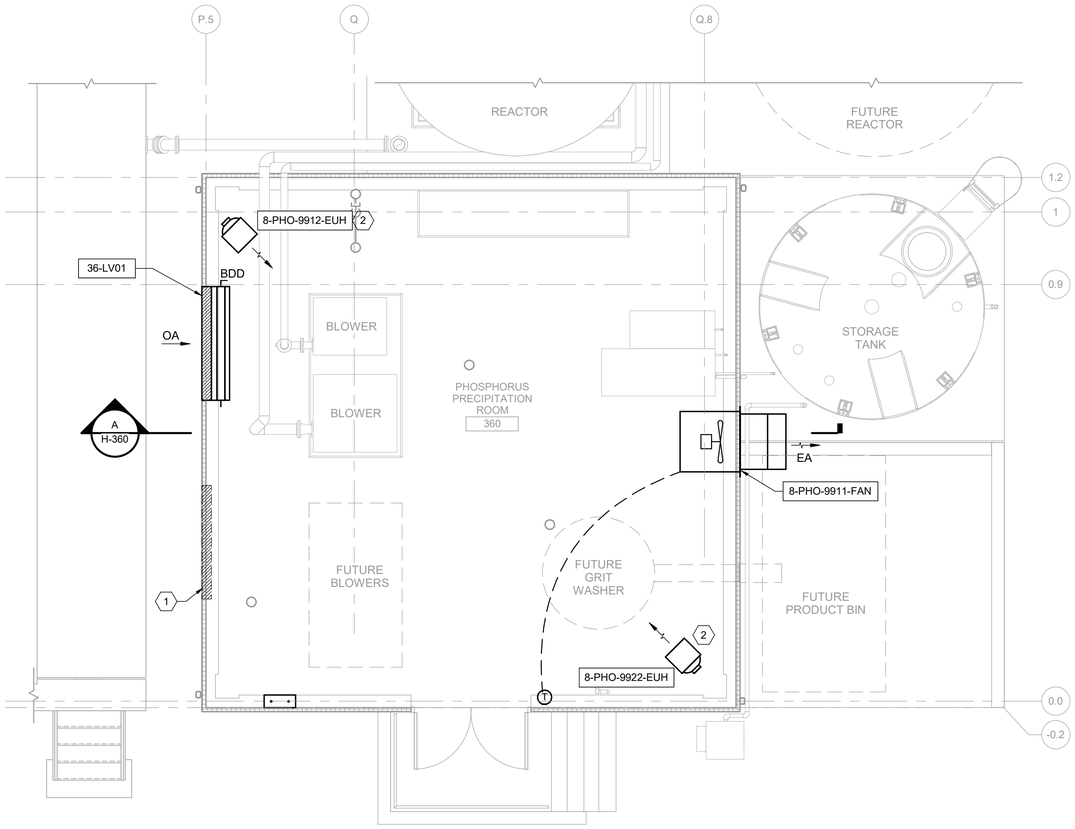

PARTIAL PLAN AT EL 143.50

1/4" = 1'-0"

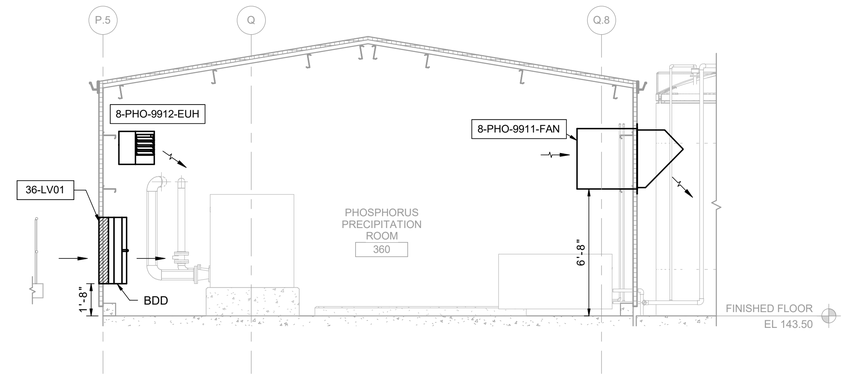

A - SECTION

1/4" = 1'-0"

N

KEY NOTES (X)

1 FUTURE SPACE FOR LOUVER AND ROOF MOUNTED FAN TO SERVE FUTURE BLOWERS.

2 PROVIDE INTEGRAL THERMOSTAT.

THE DRAWINGS IN THIS SET ARE RECORD DRAWINGS. THEY ARE CONSTRUCTION CONTRACT DRAWINGS WHICH HAVE BEEN REVISED BASED ON AVAILABLE FIELD INFORMATION RECORDED BY OTHERS DURING CONSTRUCTION OF THIS CONTRACT. THERE HAS BEEN NO VERIFICATION OF DIMENSIONS SHOWN ON THE CONSTRUCTION DRAWINGS OR THE ACCURACY/COMPLETENESS OF THE FIELD INFORMATION RECEIVED.

SIGNATURE — DATE 2/7/2023

N

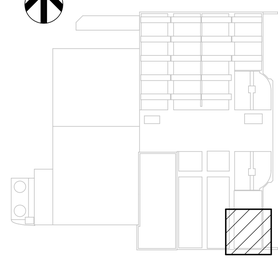

KEY PLAN

AS-BUILT REPLACEMENT SHEET

PROFESSIONAL CERTIFICATION

THIS DRAWING WAS ORIGINALLY APPROVED FOR CONSTRUCTION AND SEALED BY CHRISTOPHER S. WORK, A REGISTERED PROFESSIONAL ENGINEER IN THE STATE OF MARYLAND, NO. 50093.

NOTICE TO CONTRACTORS

- PROJECT ELEVATIONS ARE BASED ON NAVD88 AND HOWARD COUNTY'S BENCHMARK SYSTEM
- PREVIOUS PROJECTS USED OTHER DATUMS
- APPLY THE FOLLOWING CONVERSIONS WHEN USING PREVIOUS CONTRACT DRAWINGS:
  - ADDITION NO. 6: SUBTRACT 0.80 FT
  - PRIOR ADDITIONS: SUBTRACT 1.04 FT

DEPARTMENT OF PUBLIC WORKS
HOWARD COUNTY, MARYLAND

CHIEF, BUREAU OF UTILITIES — DATE

DES: CSW
DRN: JCS
CHK: BRP
DATE: 09/2017

DATE	REV	DESCRIPTION
07/2019		RECORD DRAWING

HVAC

PHOSPHORUS PRECIPITATION BUILDING PLAN AND SECTION

LITTLE PATUXENT WATER RECLAMATION PLANT
8TH ADDITION
BIOSOLIDS PROCESSING FACILITIES - PHASE I

CAPITAL PROJECT S-6295
CONTRACT NO. 24-4935

ELECTION DISTRICT NO. 6
HOWARD COUNTY, MARYLAND

SCALE AS SHOWN

SHEET 261 OF 463

H-360

BIM 360://10054364 – Little Patuxent WRP 8th Addition/264591_100_HP_V18.rvt
1/12/2022 8:30:55 AM

HVAC SYMBOLOGY

- 12x12 — RECTANGULAR DUCT
- 12ø — ROUND DUCT
- SUPPLY DUCT SECTION, RECTANGULAR
- RETURN DUCT SECTION, RECTANGULAR
- EXHAUST DUCT SECTION, RECTANGULAR
- 90° ELBOW TURNED UP, RECTANGULAR
- 90° ELBOW TURNED DOWN, RECTANGULAR
- 90° ELBOW TURNED UP, ROUND
- 90° ELBOW TURNED DOWN, ROUND
- TRANSITION - DOUBLE SIDED
- TRANSITION - ONE SIDED
- TRANSITION - RECTANGULAR TO ROUND DUCT
- STANDARD BRANCH - FOR SUPPLY AIR W/EXTRACTOR AND RETURN AIR W/O EXTRACTOR
- R — RECTANGULAR DUCT INCLINE - RISE OR DROP IN RESPECT TO THE AIR FLOW
- R — ROUND DUCT INCLINE - RISE OR DROP INRESPECT TO THE AIR FLOW
- ELBOW - W/TURNING VANE (RECTANGULAR)
- ELBOW - W/TURNING VANES (RECTANGULAR), SMOOTH RADIUS

- 24x18 — HIDDEN DUCT
- T 9'-10" / B 9'-0" / 18x10 — DUCT ELEVATION TAG ABOVE FINISH FLOOR
- PRESSURE/TEMPERATURE TEST PLUG (PETE PLUG OR EQUAL)
- SA — SOUND ATTENUATOR
- SUPPLY DIFFUSER (ROUND)
- SUPPLY AIR REGISTER OR GRILLE - W/DUCT-MOUNTED EXTRACTOR
- EXHAUST OR RETURN AIR REGISTER OR GRILLE

SIZE / SA12ø-250 / TAG — OR — FLOW RATE / SA-250 / 12ø

DIFFUSER, GRILLE OR REGISTER DESIGNATION TAG

- 12x12 — RETURN AIR GRILLE
- 12x12 — EXHAUST AIR GRILLE
- 12ø — SUPPLY DIFFUSER (NO ARROWS INDICATE 4-WAY)

- VD, BDD — VD = VOLUME DAMPER; BDD = BACKDRAFT DAMPER
- M — MOTOR OPERATED DAMPER
- 24x12 — FIRE DAMPER
- 24x12 — SMOKE DAMPER
- 24x12 — SMOKE AND FIRE DAMPER
- FLEXIBLE CONNECTION
- FLEXIBLE DUCT
- ACOUSTICAL LINING - DUCT DIMENSIONS FOR NET FREE AREA
- SD / SD — SPLITTER DAMPER
- AD PLAN / AD SECTION — ACCESS DOOR
- UC 3/4" — UNDERCUT DOOR 3/4"
- NEW CONNECTION TO EXISTING

ABBREVIATIONS

AD	ACCESS DOOR
ADJ	ADJUSTABLE
AFF	ABOVE FINISHED FLOOR
AFR	ABOVE FINISHED ROOF
AHU	AIR HANDLING UNIT
AI	ANALOG INPUT
ALT	ALTERNATIVE
AMB	AMBIENT
AO	ANALOG OUTPUT
APD	AIR PRESSURE DROP
ARF	ABOVE RAISED FLOOR
AV	AIR VALVE
AVG	AVERAGE
BAS	BUILDING AUTOMATION SYSTEM
BHP	BRAKE HORSE POWER
BDD	BACK DRAFT DAMPER
BOD	BOTTOM OF DUCT
BOE	BOTTOM OF EQUIPMENT
BOP	BOTTOM OF PIPE
BTUH	BRITISH THERMAL UNITS PER HOUR
CAV	CONSTANT AIR VOLUME
CFH	CUBIC FEET PER HOUR
CFM	CUBIC FEET PER MINUTE
CLG	CEILING, COOLING
CO	CLEAN OUT
CONN	CONNECTION
CONT	CONTINUOUS
CRAC	COMPUTER ROOM AIR CONDITIONER
CU	CONDENSING UNIT
DB	DRY BULB
dB	DECIBEL(S)
DDC	DIRECT DIGITAL CONTROL
DEG F	DEGREES FAHRENHEIT
DH	DEHUMIDIFIER
DIA	DIAMETER
DN	DOWN
DX	DIRECT EXPANSION
E	EXISTING
EA	EXAUST AIR
EAT	ENTERING AIR TEMPERATURE
EDH	ELECTRIC DUCT HEATER
EER	ENERGY EFFICIENCY RATIO
EF	EXHAUST FAN
EFF	EFFICIENCY
EMCS	ENERGY MANAGEMENT CONTROL SYSTEM
ESP	EXTERNAL STATIC PRESSURE
EWT	ENTERING WATER TEMPERATURE
F	FUTURE
FA	FREE AREA
FCP	FAN CONTROL PANEL
FCU	FAN COIL UNIT
FL	FILTER, FLOOR
FLA	FULL LOAD AMPS
FPB	FAN POWERED BOX
FPM	FEET PER MINUTE
GAL	GALLONS
GPH	GALLONS PER HOUR
GPM	GALLONS PER MINUTE
HP	HORSE POWER
HR	HOUR
HTG	HEATING
HVAC	HEATING, VENTILATION, & AIR CONDITIONING
HZ	HERTZ
IAQ	INDOOR AIR QUALITY
ID	INSIDE DIAMETER
IE	INVERT ELEVATION
IN	INCHES
I/O	INPUT/OUTPUT
I/P	CURRENT TO PNEUMATIC
KEF	KITCHEN EXHAUST FAN
KW	KILOWATT
LAT	LEAVING AIR TEMPERATURE
LB	POUNDS
LV	LOUVER
LWT	LEAVING WATER TEMPERATURE
MAU	MAKE-UP AIR UNIT
MAX	MAXIMUM
MBH	THOUSAND BTUH
MCC	MOTOR CONTROL CENTER
MISC	MISCELLANEOUS
MIN	MINIMUM, MINUTES
MFG	MANUFACTURING
MOD	MOTOR OPERATED DAMPER
NC	NORMALLY CLOSED, NOISE CRITERIA
NIC	NOT IN CONTRACT
NO	NORMALLY OPEN, NUMBER
NRC	NOISE REDUCTION COEFFICIENT
NTS	NOT TO SCALE
OA	OUTSIDE AIR
OD	OUTSIDE DIAMETER
OFCI	OWNER FURNISHED CONTRACTOR INSTALLED
OFOI	OWNER FURNISHED OWNER INSTALLED
OS&Y	OUTSIDE SCREW AND YOKE
PD	PRESSURE DROP
PH	PHASE
PLBG	PLUMBING
PPH	POUNDS PER HOUR
PSI	POUNDS PER SQUARE INCH
PSIA	POUNDS PER SQUARE INCH ABSOLUTE
PSIG	POUNDS PER SQUARE INCH GAUGE
QTY	QUANTITY
RA	RETURN AIR
REQD	REQUIRED
RH	RELATIVE HUMIDITY
RPM	REVOLUTIONS PER MINUTE
RTU	ROOFTOP UNIT
S	SIGNAL PORT
SA	SUPPLY AIR, SOUND ATTENUATOR
SCFM	STANDARD CUBIC FEET PER MINUTE
SF	SUPPLY FAN, SQUARE FEET
SP	STATIC PRESSURE
SQ	SQUARE
TCP	TEMPERATURE CONTROL PANEL
TD	TEMPERATURE DIFFERENTIAL
TEMP	TEMPERATURE, TEMPORARY
TES	THERMAL ENERGY STORAGE
TYP	TYPICAL
UNO	UNLESS NOTED OTHERWISE
UH	UNIT HEATER
V	VOLTS
VAV	VARIABLE AIR VOLUME
V&C	VALVE AND CAP
VFD	VARIABLE FREQUENCY DRIVE
VRF	VARIABLE REFRIGERANT FLOW
VTR	VENT THROUGH ROOF
W	WATTS
WB	WET BULB
WG	WATER GAUGE
WPD	WATER PRESSURE DROP

PIPING

- HWS — LOW TEMPERATURE HOT WATER SUPPLY
- HWR — LOW TEMPERATURE HOT WATER RETURN
- MTWS — MED. TEMPERATURE HOT WATER SUPPLY
- MTWS — MED. TEMPERATURE HOT WATER RETURN
- CHWS — CHILLED WATER SUPPLY
- CHWR — CHILLED WATER RETURN
- CWS — CONDENSER WATER SUPPLY
- CWR — CONDENSER WATER RETURN
- RL — REFRIGERANT LIQUID
- RS — REFRIGERANT SUCTION
- HGR — HOT-GAS REHEAT
- CD — CONDENSATE DRAIN
- MU — MAKEUP WATER

PIPING FITTINGS

- CONCENTRIC REDUCER
- ECCENTRIC REDUCER
- ELBOW, 90°
- ELBOW, 90° TURN DOWN
- ELBOW, 90° TURN UP
- ELBOW, 45° TURN DOWN
- ELBOW, 45° TURN UP
- TEE
- TEE, OUTLET UP
- TEE, OUTLET DOWN
- TEE, OUTLET UP W/ 90° TURN
- TEE, OUTLET DOWN W/ 90° TURN
- PIPE BREAK
- CAP
- BLIND FLANGE
- UNION
- FLOW ARROW

PIPING VALVES

- BALL VALVE
- GATE VALVE
- GLOBE VALVE
- CIRCUIT SETTER
- HOSE VALVE WITH CAP
- BUTTERFLY VALVE
- CHECK VALVE
- BALANCING VALVE
- CALIBRATED BALANCING VALVE
- M — PLUG VALVE
- S — SOLENOID VALVE
- SAFETY OR PRESSURE RELIEF, ANGLE VALVE
- SAFETY OR PRESSURE RELIEF, STRAIGHT THROUGH VALVE
- PRESSURE REDUCING VALVE (PRV)
- AUTOMATIC CONTROL VALVE, 2-WAY
- AUTOMATIC CONTROL VALVE, 3-WAY
- DOUBLE CHECK VALVE BACKFLOW PREVENTOR

PIPING SPECIALTIES

- PA — PIPE ANCHOR
- PG — PIPE GUIDE
- EXPANSION JOINT
- VENTURI
- PT — PRESSURE/TEMPERATURE PORT
- THERMOMETER
- THERMOWELL
- PRESSURE GAGE
- T — TEMPERATURE GAGE
- FLEXIBLE PIPE CONNECTION
- STRAINER
- BLIND FLANGE
- MANUAL AIR VENT
- A — AUTOMATIC AIR VENT

SCHEMATIC SYMBOLS

- M — MOTOR ACTUATOR
- F — FLOW SWITCH
- P — PRESSURE SENSOR
- ΔP — DIFFERENTIAL PRESSURE SENSOR
- CT — CURRENT TRANSMITTER
- T — TEMPERATURE TRANSMITTER
- TS — TEMPERATURE SWITCH
- TC — TEMPERATURE CONTROLLER
- FM — FLOW METER
- FLOW LIMITER
- FLOW MEASURING & BALANCING VALVE W/ 100% SHUT OFF

AIR FLOW SCHEMATIC AND TEMPERATURE CONTROL DIAGRAM SYMBOLOGY

- C/C — CHILLED WATER COOLING COIL
- H/C — HOT WATER HEATING COIL
- EP/R — DIRECT EVAPORATIVE COOLER
- D/X — DIRECT EXPANSION COOLING COIL
- EH/C — ELECTRIC HEATING COIL
- FB/C — FACE & BYPASS COIL
- GAS-FIRED DUCT FURNACE
- VFD — VFD (VARIABLE FREQUENCY DRIVE)
- CAV H/C — CONSTANT AIR VOLUME BOX WITH REHEAT COIL
- VAV H/C — VARIABLE AIR VOLUME BOX WITH REHEAT COIL

- EF — EXHAUST FAN
- SF — SUPPLY FAN
- GAS — GAS
- ELECT — ELECTRIC
- AI — ANALOG INPUT
- AO — ANALOG OUTPUT
- DI — DIGITAL INPUT
- DO — DIGITAL OUTPUT
- COMM — COMMUNICATION
- CT — CURRENT TRANSMITTER
- STARTER — MOTOR STARTER
- VFD — VARIABLE FREQUENCY DRIVE
- HP — DIRECT EXPANSION HEAT PUMP
- DX — DIRECT EXPANSION
- M — MOTOR
- T — THERMOSTAT
- H — HUMIDISTAT
- CO — CARBON MONOXIDE SENSOR
- NO2 — NITROGEN DIOXIDE SENSOR
- S — SMOKE DETECTOR
- NG — NATURAL GAS DETECTOR

- S — SMOKE/DUCT DETECTOR
- T — TEMPERATURE SENSOR
- FRZ — FREEZE STAT
- ΔP — FILTER SENSOR
- M — MOTORIZED OPPOSED BLADE DAMPER
- GRAVITY DAMPER
- CO2 — CO2 SENSOR
- LOUVER

GENERAL NOTES

1. PROVIDE AND INSTALL ALL MECHANICAL SYSTEMS IN ACCORDANCE WITH THE 2012 INTERNATIONAL MECHANICAL CODE AND ALL OTHER APPLICABLE STATE AND LOCAL CODES.
2. CONTRACT DOCUMENT DRAWINGS FOR MECHANICAL WORK (HVAC) ARE DIAGRAMMATIC AND ARE INTENDED TO CONVEY SCOPE AND GENERAL ARRANGEMENT ONLY. PLANS SHOULD NOT BE SCALED.
3. INSTALL ALL MECHANICAL EQUIPMENT AND APPURTENANCES IN ACCORDANCE WITH MANUFACTURERS' RECOMMENDATIONS.
4. VERIFY ALL CLEARANCES BEFORE FABRICATING AND INSTALLING WORK. COORDINATE WITH ALL OTHER TRADES.
5. DRAWINGS REFLECT DIMENSIONS OF DESIGN MFG. EQUIPMENT. ALLOWABLE ALTERNATES, WHILE EQUAL IN OUTPUT CAPACITY WILL BE THE RESPONSIBILITY OF THE CONTRACTOR TO MEET THE SPACE REQUIREMENTS AND PROVE EQUALITY WITH DESIGN MFG. EQUIPMENT.
6. TESTING, ADJUSTING, AND BALANCING AGENCY SHALL BE A MEMBER OF THE ASSOCIATED AIR BALANCE COUNCIL (AABC) OR THE NATIONAL ENVIRONMENTAL BALANCING BUREAU (NEBB). TESTING ADJUSTING AND BALANCING SHALL BE PERFORMED IN ACCORDANCE WITH THE AABC STANDARDS.
7. COORDINATE ALL EQUIPMENT CONNECTIONS WITH MANUFACTURER'S CERTIFIED DRAWINGS. COORDINATE AND PROVIDE ALL DUCT AND PIPING TRANSITIONS REQUIRED FOR FINAL EQUIPMENT CONNECTIONS TO FURNISHED EQUIPMENT. FIELD VERIFY AND COORDINATE ALL DUCT AND PIPING DIMENSIONS BEFORE FABRICATION.
8. ALL CONTROL WIRE AND CONDUIT SHALL COMPLY WITH THE INTERNATIONAL ELECTRICAL CODE (IEC) AND NFPA 70.
9. ALL MISCELLANEOUS STEEL REQUIRED TO ENSURE PROPER INSTALLATION AND AS SHOWN IN DETAILS FOR PIPING, DUCTWORK, AND EQUIPMENT (UNLESS OTHERWISE NOTED) SHALL BE FURNISHED AND INSTALLED BY THE MECHANICAL CONTRACTOR.
10. PROVIDE ACCESS PANELS FOR INSTALLATION IN DUCTWORK, WALLS AND CEILINGS, WHERE REQUIRED, TO SERVICE CONTROLS DEVICES, DAMPERS, VALVES, DUCTWORK, SMOKE DETECTORS, AND OTHER CONCEALED MECHANICAL EQUIPMENT. ACCESS PANEL INSTALLATION SHALL BE COORDINATED WITH PROCESS REQUIREMENTS, ARCHITECTURAL WORK TO MATCH MATERIALS AND FINISHES.
11. ALL DUCTWORK, PIPING, AND EQUIPMENT SUPPORTED FROM STRUCTURAL STEEL SHALL BE COORDINATED WITH ALL TRADES. ALL ATTACHMENTS TO STEEL BAR JOISTS, TRUSSES, OR JOIST GIRDERS SHALL BE AT PANEL POINTS OR AS SHOWN ON THE MECHANICAL AND STRUCTURAL DRAWINGS. PROVIDE BEAM CLAMPS MEETING MSS STANDARDS. WELDING TO STRUCTURAL MEMBERS SHALL NOT BE PERMITTED.
12. PROVIDE FLEXIBLE CONNECTIONS IN ALL DUCTWORK AND PIPING SYSTEMS CONNECTED TO FANS, PUMPS AND OTHER EQUIPMENT WHICH REQUIRE VIBRATION ISOLATION.
13. DUCTWORK SHALL BE FABRICATED AND INSTALLED PER LATEST SMACNA STANDARDS.
14. SEE SPECIFICATION SECTION 23 09 00 FOR INSTRUMENTATION AND CONTROL FOR HVAC SYSTEMS AND SEQUENCE OF OPERATIONS.

THE DRAWINGS IN THIS SET ARE RECORD DRAWINGS. THEY ARE CONSTRUCTION CONTRACT DRAWINGS WHICH HAVE BEEN REVISED BASED ON AVAILABLE FIELD INFORMATION RECORDED BY OTHERS DURING CONSTRUCTION OF THIS CONTRACT. THERE HAS BEEN NO VERIFICATION OF DIMENSIONS SHOWN ON THE CONSTRUCTION DRAWINGS OR THE ACCURACY/COMPLETENESS OF THE FIELD INFORMATION RECEIVED.

SIGNATURE — DATE 2/7/2023

HDR

AS-BUILT REPLACEMENT SHEET

PROFESSIONAL CERTIFICATION

THIS DRAWING WAS ORIGINALLY APPROVED FOR CONSTRUCTION AND SEALED BY CHRISTOPHER S. WORK, A REGISTERED PROFESSIONAL ENGINEER IN THE STATE OF MARYLAND, NO. 50093.

NOTICE TO CONTRACTORS

- PROJECT ELEVATIONS ARE BASED ON NAVD88 AND HOWARD COUNTY'S BENCHMARK SYSTEM
- PREVIOUS PROJECTS USED OTHER DATUMS
- APPLY THE FOLLOWING CONVERSIONS WHEN USING PREVIOUS CONTRACT DRAWINGS:
  - ADDITION NO. 6: SUBTRACT 0.80 FT
  - PRIOR ADDITIONS: SUBTRACT 1.04 FT

DEPARTMENT OF PUBLIC WORKS
HOWARD COUNTY, MARYLAND

CHIEF, BUREAU OF UTILITIES — DATE

DES: CSW
DRN: JCS
CHK: BRP
DATE: 08/2017

DATE	REV	DESCRIPTION
07/2019		RECORD DRAWING

HVAC

HVAC NOTES, LEGEND AND ABBREVIATIONS

LITTLE PATUXENT WATER RECLAMATION PLANT
8TH ADDITION
BIOSOLIDS PROCESSING FACILITIES - PHASE I

CAPITAL PROJECT S-6295
CONTRACT NO. 24-4935

ELECTION DISTRICT NO. 6
HOWARD COUNTY, MARYLAND

SCALE AS SHOWN

SHEET 262 OF 463

H-901

BIM 360://10054364 – Little Patuxent WRP 8th Addition/264591_300_HP_V18.rvt
1/12/2022 9:03:38 AM

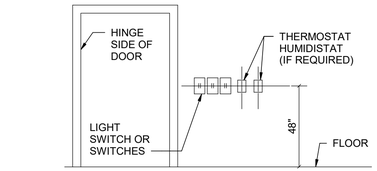

NOTES:

1. WHEN ABOVE MOUNTING PROCEDURE IS IMPOSSIBLE HINGE SIDE MOUNTING WILL BE PERMITTED WITH APPROX. 6" CLEARANCE FROM EDGE OF DOOR (IN OPEN POSITION) TO EDGE OF THERMOSTAT & LIGHT SWITCH. IF NEITHER INSTALLATION IS POSSIBLE, SWITCHES AND CONTROLS SHALL BE LOCATED AS DIRECTED BY ENGINEER. DO NOT INSTALL ABOVE DIMMER SWITCHES.

1 THERMOSTAT AND SWITCH MOUNTING DETAIL
NOT TO SCALE

NOTE:

INSTALL MANUAL VOLUME DAMPERS IN ALL LOW PRESSURE SUPPLY, RETURN AND EXHAUST DUCT BRANCHES.

INSTALL SPLITTER DAMPER IN ALL LOW PRESSURE SUPPLY, RETURN AND EXHAUST DUCT BRANCHES SERVING TWO OR MORE OUTLETS.

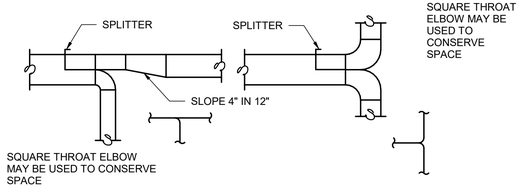

RECTANGULAR BRANCH TAKE-OFF

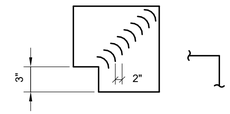

SQUARE THROAT ELBOW

RECTANGULAR TEE

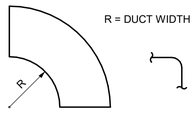

FULL RADIUS ELBOW

2 TYPICAL LOW PRESSURE DUCT CONNECTION
NOT TO SCALE

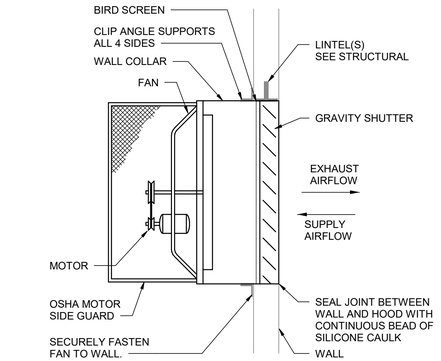

NOTES:

1. PROVIDE KNEE BRACES OR HANGER ROD SUPPORTS AS REQUIRED TO SUPPORT FAN.
2. PROVIDE ACCESS DOOR FOR MOTOR OPERATED DAMPER WITH INTERNALLY MOUNTED MOTOR.

3 TYPICAL WALL PROPELLER FAN DETAIL
NOT TO SCALE

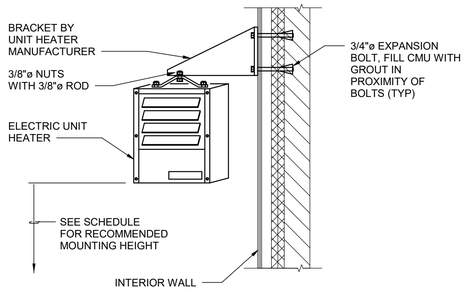

4 ELECTRIC UNIT HEATER DETAIL
NOT TO SCALE

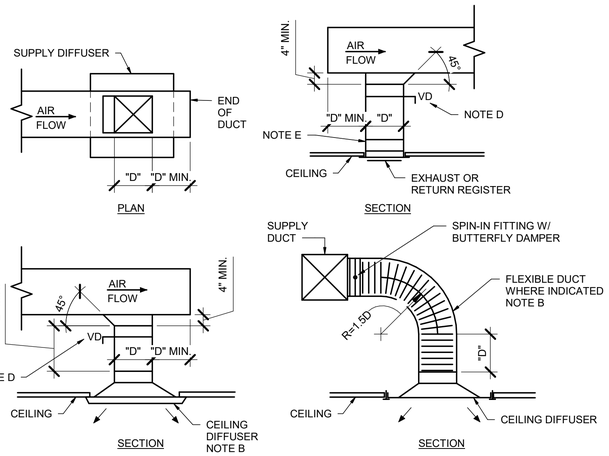

NOTES:

A. "D" IS THROAT DIA OR SIDE DIM. OF SQUARE CONN.

B. MIN. LENGTH OF STRAIGHT DUCT ABOVE CD IS "D".

C. ABOVE DETAILS ARE REPRESENTATIVE OF STANDARD DUCT CONNECTIONS. ONLY THESE DETAILS ARE NOT INTENDED TO SHOW ALL POSSIBLE DUCT CONNECTIONS.

D. BALANCING DAMPERS SHALL BE PROVIDED AT ALL TAKE-OFFS FOR BALANCING. DO NOT BALANCE AIR AT DIFFUSERS AND GRILLES.

E. ATTACH DUCT TO DIFFUSER NECK W/SHEET METAL SCREWS (4 MIN.) AND SEAL WITH CAULKING.

5 TYPICAL DUCT CONNECTION DETAILS
NOT TO SCALE

THE DRAWINGS IN THIS SET ARE RECORD DRAWINGS. THEY ARE CONSTRUCTION CONTRACT DRAWINGS WHICH HAVE BEEN REVISED BASED ON AVAILABLE FIELD INFORMATION RECORDED BY OTHERS DURING CONSTRUCTION OF THIS CONTRACT. THERE HAS BEEN NO VERIFICATION OF DIMENSIONS SHOWN ON THE CONSTRUCTION DRAWINGS OR THE ACCURACY/COMPLETENESS OF THE FIELD INFORMATION RECEIVED.

SIGNATURE — DATE 2/7/2023

AS-BUILT REPLACEMENT SHEET

PROFESSIONAL CERTIFICATION

THIS DRAWING WAS ORIGINALLY APPROVED FOR CONSTRUCTION AND SEALED BY CHRISTOPHER S. WORK, A REGISTERED PROFESSIONAL ENGINEER IN THE STATE OF MARYLAND, NO. 50093.

NOTICE TO CONTRACTORS

- PROJECT ELEVATIONS ARE BASED ON NAVD88 AND HOWARD COUNTY'S BENCHMARK SYSTEM
- PREVIOUS PROJECTS USED OTHER DATUMS
- APPLY THE FOLLOWING CONVERSIONS WHEN USING PREVIOUS CONTRACT DRAWINGS:
  - ADDITION NO. 6: SUBTRACT 0.80 FT
  - PRIOR ADDITIONS: SUBTRACT 1.04 FT

DEPARTMENT OF PUBLIC WORKS
HOWARD COUNTY, MARYLAND

CHIEF, BUREAU OF UTILITIES — DATE

DES: CSW
DRN: JCS
CHK: BRP
DATE: 08/2017

DATE	REV	DESCRIPTION
07/2019		RECORD DRAWING

HVAC

HVAC DETAILS

LITTLE PATUXENT WATER RECLAMATION PLANT
8TH ADDITION
BIOSOLIDS PROCESSING FACILITIES - PHASE I

CAPITAL PROJECT S-6295
CONTRACT NO. 24-4935

ELECTION DISTRICT NO. 6
HOWARD COUNTY, MARYLAND

SCALE AS SHOWN

SHEET 263 OF 463

H-902

BIM 360://10054364 – Little Patuxent WRP 8th Addition/264591_300_HP_V18.rvt
1/12/2022 9:03:38 AM

GAS MAKE-UP AIR UNIT SCHEDULE

MARK	LOCATION	ORIENTATION	AIRFLOW (CFM)	OUTSIDE AIR (CFM)	INPUT (BTU/H)	OUTPUT (BTU/H)	EAT (°F)	TEMP RISE (°F)	FAN DATA					ELECTRICAL DATA					BASIS OF DESIGN		NOTES
									TYPE	E.S.P. (IN. WG.)	T.S.P. (IN. WG.)	FAN RPM	HP	V	PH	HZ	DISC. BY	STARTER BY	MANUFACTURER	MODEL	
8-DIG-9911-MAU	ROOF	HORIZONTAL WITH BOTTOM DISCHARGE	16,400	16,400	1,400,000	1,120,000	14	57	BI-DW	1.50	2.55	1,184	10	460	3	60	DIV. 26	DIV. 26	ENGINEERED AIR	DJS140/O	

FAN SCHEDULE

MARK	SERVES	TYPE	AIRFLOW (CFM)	E.S.P. (IN. WG)	FAN (RPM)	MOTOR (RPM)	DRIVE	MAXIMUM SONES	ELECTRICAL DATA						WEIGHT (LBS)	BASIS OF DESIGN		NOTES
									HP	V	PH	HZ	DISC. BY	STARTER BY		MANUFACTURER	MODEL	
8-DIG-3212-FAN																Cincinnati Fan	PBS-15A	
8-DIG-3222-FAN																Cincinnati Fan	PBS-15A	
8-DIG-9914-FAN	GENERAL EXHAUST	UPBLAST CENTRIFUGAL	8,420	0.5	424	1,725	BELT	11.6	1 1/2	460	3	60	DIV. 26	DIV. 26	350	GREENHECK	CUBE-360-15	1
8-DIG-9924-FAN	GENERAL EXHAUST	UPBLAST CENTRIFUGAL	8,420	0.5	424	1,725	BELT	11.6	1 1/2	460	3	60	DIV. 26	DIV. 26	350	GREENHECK	CUBE-360-15	1
8-DIG-9934-FAN	STAIR PRESSURIZATION	ROOF MOUNTED CENTRIFUGAL	1,100	0.5	671	1,725	BELT	9.9	1/4	208	3	60	DIV. 26	DIV. 26	200	GREENHECK	RSF-100-4	
8-DIG-9944-FAN	STAIR PRESSURIZATION	ROOF MOUNTED CENTRIFUGAL	1,100	0.5	671	1,725	BELT	9.9	1/4	208	3	60	DIV. 26	DIV. 26	200	GREENHECK	RSF-100-4	
8-GBT-9912-FAN	GENERAL EXHAUST	UPBLAST CENTRIFUGAL	2,800	0.38	682	1,725	BELT	7.9	1/2	460	3	60	DIV. 26	DIV. 26	150	GREENHECK	CUBE-200-5	
8-GBT-9922-FAN	GENERAL EXHAUST	UPBLAST CENTRIFUGAL	2,800	0.38	682	1,725	BELT	7.9	1/2	460	3	60	DIV. 26	DIV. 26	150	GREENHECK	CUBE-200-5	
8-PH1-FAN		PROPELLER SIDEWALL	5,600	0.5	989	1,725	BELT	28.0	1 1/2	460	3	60	DIV. 26	DIV. 26	342	GREENHECK	SBE-EH30-15	

NOTES:
1. PROVIDE EXPLOSION PROOF FAN.

ELECTRIC UNIT HEATER SCHEDULE

MARK	LOCATION	TYPE	INPUT (KW)	TOT. CAP. (BTU/H)	AIRFLOW (CFM)	THROW (FT.)	TEMP RISE (°F)	ELECTRICAL DATA						MOUNTING HEIGHT AFF	WEIGHT (LBS)	BASIS OF DESIGN		NOTES
								FAN HP	TOTAL AMPS (A)	V	PH	HZ	DISC. BY			MANUFACTURER	MODEL	
8-PHO-9912-EUH	PHOSPHORUS PRECIPITATION RM 360	HORIZONTAL	5	17,100	530	14	30	1/40	6.5	480	3	60	DIV. 26	8' - 0"	60	MODINE	HER 50	
8-PHO-9922-EUH	PHOSPHORUS PRECIPITATION RM 360	HORIZONTAL	5	17,100	530	14	30	1/40	6.5	480	3	60	DIV. 26	8' - 0"	60	MODINE	HER 50	

LOUVER SCHEDULE

MARK	TYPE	AREA SERVED	AIRFLOW (CFM)	VELOCITY (FPM)	MIN. FREE AREA (SQ. FT.)	MAX PRESSURE LOSS (IN. W.G.)	SIZE (INCHES)			BASIS OF DESIGN		NOTES
							WIDTH	HEIGHT	DEPTH	MANUFACTURER	MODEL	
32-LV01	STATIONARY	32-SF01 RELIEF	1,100	438	2.53	0.04	36	24	6	GREENHECK	EHH-601	
32-LV02	STATIONARY	32-SF02 RELIEF	1,100	438	2.53	0.04	36	24	6	GREENHECK	EHH-601	
36-LV01	STATIONARY	36-EF01 VENTILATION	5,600	581	9.68	0.07	72	42	6	GREENHECK	EHH-601	

HOOD SCHEDULE

MARK	LOCATION	SYSTEM SERVED	AIRFLOW (CFM)	PRESSURE DROP (IN. WG.)	FREE AREA VELOCITY (FPM)	MATERIAL	THROAT SIZE (IN.)		OVERALL SIZE (L"xW"XH")	WEIGHT (LBS)	BASIS OF DESIGN		NOTES	Comments
							L	W			MANUFACTURER	MODEL		
20-IH01	SOLIDS PIPE GALLERY ROOF	BLOWER MAKE-UP AIR	2,877	0.009	235	ALUMINUM	42	42	72x74x30	115	GREENHECK	FGI		HOOD
8-DIG-9911-HOOD	DIGESTER BUILDING ROOF	BOILER COMBUSTION	1,953	0.001	70	ALUMINUM	84	48	98x62x34.75	275	GREENHECK	WIH		HOOD

DIFFUSER, REGISTER, AND GRILLE SCHEDULE

MARK	SERVES	TYPE	MOUNTING	MATERIAL	FINISH	NECK SIZE (IN.)	MAX APD (IN. WG.)	MAX NC AT PD SHOWN	BASIS OF DESIGN		NOTES
									MANUFACTURER	MODEL	
SA	SUPPLY AIR	DOUBLE DEFLECT REGISTER	DUCT	ALUMINUM	WHITE	SEE PLANS	0.1	30	PRICE	620DAL/S	1
EA	EXHAUST AIR	3/4" SPACING, 45° DEFLECTION	DUCT	ALUMINUM	WHITE	SEE PLANS	0.1	30	PRICE	630DAL/S	1

NOTES:
1. FACE SIZE SHALL BE MINIMUM 1-3/4", MAXIMUM 2-1/4" LARGER THAN NECK SIZE IN EACH DIMENSION.

MAKE-UP AIR UNIT SCHEDULE (ELECTRIC HEAT)

MARK	LOCATION	CONFIGURATION	SUPPLY			ELECTRIC HEATING			FAN DATA			ELECTRICAL DATA							BASIS OF DESIGN		NOTES
			AIRFLOW (CFM)	E.S.P. (IN. WG.)	T.S.P. (IN. WG.)	INPUT (KW)	E.A.T. (°F)	L.A.T. (°F)	TYPE	FAN RPM	HP	V	PH	HZ	MCA	MOCP	DISC. BY	STARTER BY	MANUFACTURER	MODEL	
8-GBT-9911-MAU	ROOF	HORIZONTAL WITH BOTTOM DISCHARGE	15,950	1.5	2.15	263	14	66	BAE-DW	911	10	460	3	60	349	400	DIV. 26	DIV. 26	ENGINEERED AIR	LM15/K/O	
8-SPG-9911-MAU	ROOF	HORIZONTAL WITH BOTTOM DISCHARGE	9,300	1.5	2.15	152	14	66	BAE-DW	1,056	5	460	3	60	203	225	DIV. 26	DIV. 26	ENGINEERED AIR	LM10/K/O	

THE DRAWINGS IN THIS SET ARE RECORD DRAWINGS. THEY ARE CONSTRUCTION CONTRACT DRAWINGS WHICH HAVE BEEN REVISED BASED ON AVAILABLE FIELD INFORMATION RECORDED BY OTHERS DURING CONSTRUCTION OF THIS CONTRACT. THERE HAS BEEN NO VERIFICATION OF DIMENSIONS SHOWN ON THE CONSTRUCTION DRAWINGS OR THE ACCURACY/COMPLETENESS OF THE FIELD INFORMATION RECEIVED.

SIGNATURE _____ DATE 2/7/2020

AS-BUILT REPLACEMENT SHEET

PROFESSIONAL CERTIFICATION

THIS DRAWING WAS ORIGINALLY APPROVED FOR CONSTRUCTION AND SEALED BY CHRISTOPHER S. WORK, A REGISTERED PROFESSIONAL ENGINEER IN THE STATE OF MARYLAND, NO. 50093.

NOTICE TO CONTRACTORS
- PROJECT ELEVATIONS ARE BASED ON NAVD88 AND HOWARD COUNTY'S BENCHMARK SYSTEM
- PREVIOUS PROJECTS USED OTHER DATUMS
- APPLY THE FOLLOWING CONVERSIONS WHEN USING PREVIOUS CONTRACT DRAWINGS:
  - ADDITION NO. 6: SUBTRACT 0.80 FT
  - PRIOR ADDITIONS: SUBTRACT 1.04 FT

DEPARTMENT OF PUBLIC WORKS
HOWARD COUNTY, MARYLAND

CHIEF, BUREAU OF UTILITIES DATE

DES: CSW
DRN: JCS
CHK: BRP
DATE: 08/2017

DATE	REV	DESCRIPTION
07/2019		RECORD DRAWING

HVAC

HVAC SCHEDULES

LITTLE PATUXENT WATER RECLAMATION PLANT
8TH ADDITION
BIOSOLIDS PROCESSING FACILITIES - PHASE I

CAPITAL PROJECT S-6295
CONTRACT NO. 24-4935

ELECTION DISTRICT NO. 6
HOWARD COUNTY, MARYLAND

SCALE AS SHOWN

SHEET 264 OF 463

H-903

BIM 360://10054364 – Little Patuxent WRP 8th Addition/264591_300_HP_V18.rvt
1/12/2022 9:03:44 AM

THE DRAWINGS IN THIS SET ARE RECORD DRAWINGS. THEY ARE CONSTRUCTION CONTRACT DRAWINGS WHICH HAVE BEEN REVISED BASED ON AVAILABLE FIELD INFORMATION RECORDED BY OTHERS DURING CONSTRUCTION OF THIS CONTRACT. THERE HAS BEEN NO VERIFICATION OF DIMENSIONS SHOWN ON THE CONSTRUCTION DRAWINGS OR THE ACCURACY/COMPLETENESS OF THE FIELD INFORMATION RECEIVED.

SIGNATURE 2/7/2023 DATE

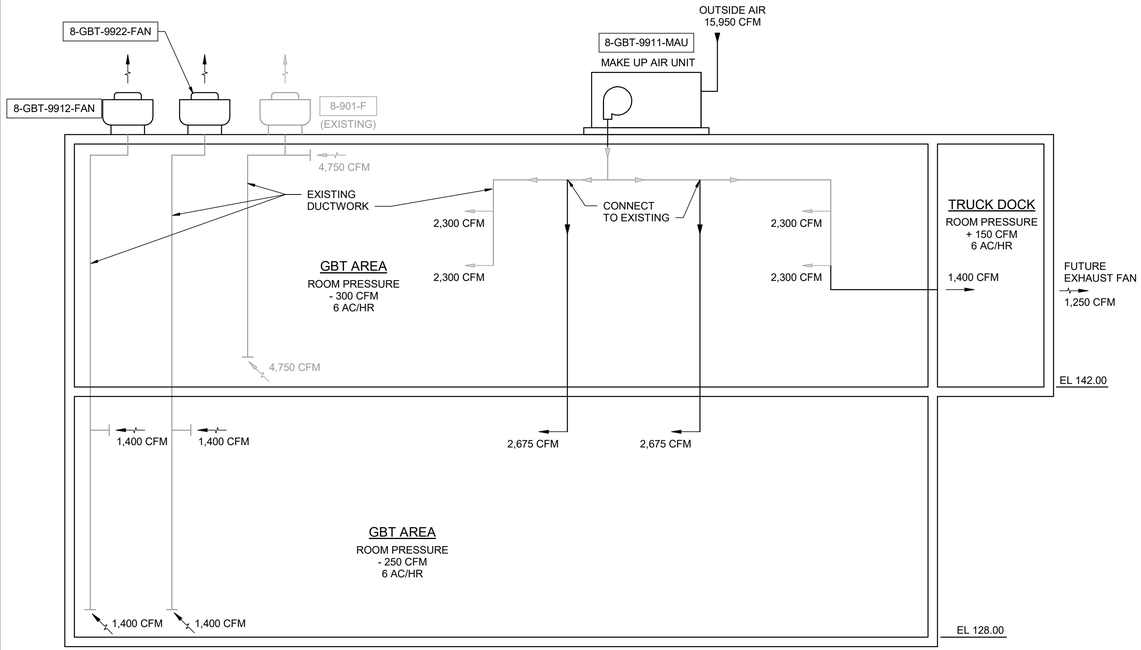

SERIES 100 - GBT AREA

NOT TO SCALE

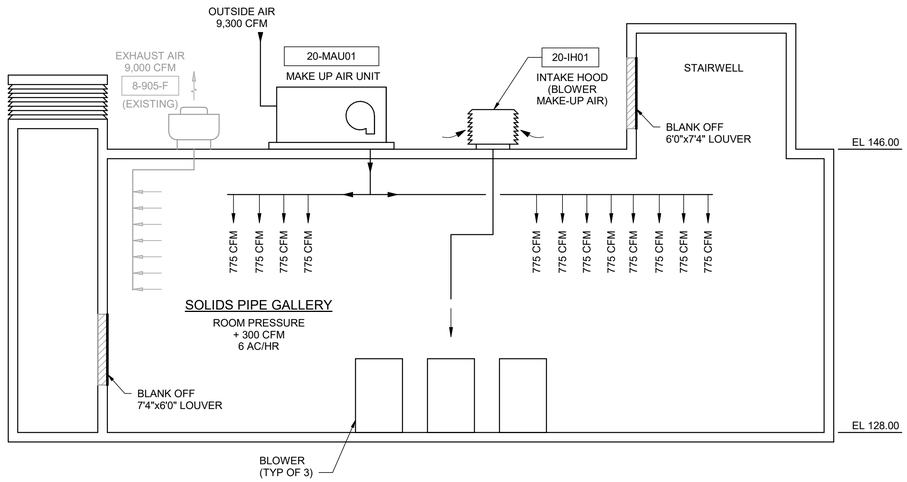

SERIES 200 - SOLIDS PIPE GALLERY

NOT TO SCALE

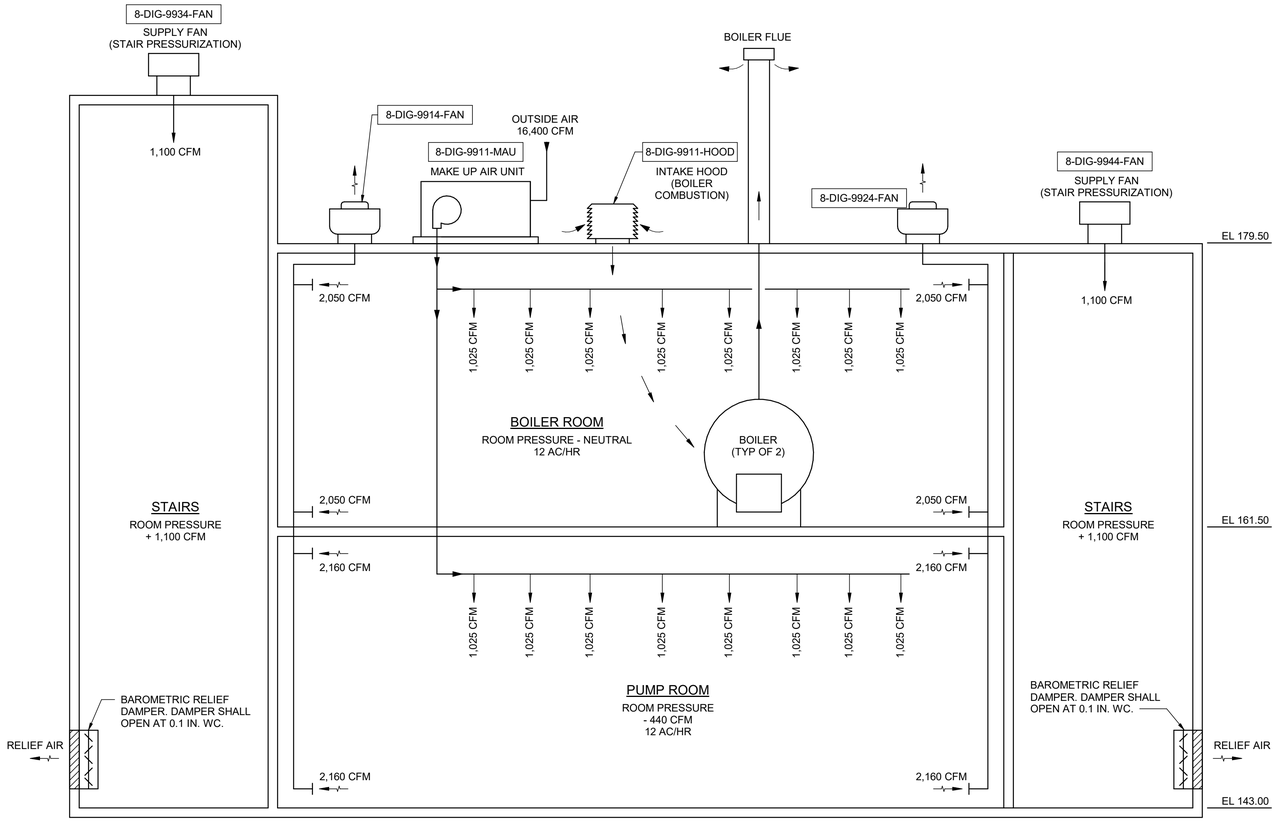

SERIES 320 - DIGESTER BUILDING

NOT TO SCALE

	HDR	AS-BUILT REPLACEMENT SHEET	PROFESSIONAL CERTIFICATION THIS DRAWING WAS ORIGINALLY APPROVED FOR CONSTRUCTION AND SEALED BY CHRISTOPHER S. WORK, A REGISTERED PROFESSIONAL ENGINEER IN THE STATE OF MARYLAND, NO. 50093.	NOTICE TO CONTRACTORS • PROJECT ELEVATIONS ARE BASED ON NAVD88 AND HOWARD COUNTY'S BENCHMARK SYSTEM • PREVIOUS PROJECTS USED OTHER DATUMS • APPLY THE FOLLOWING CONVERSIONS WHEN USING PREVIOUS CONTRACT DRAWINGS: - ADDITION NO. 6: SUBTRACT 0.80 FT - PRIOR ADDITIONS: SUBTRACT 1.04 FT	DEPARTMENT OF PUBLIC WORKS HOWARD COUNTY, MARYLAND CHIEF, BUREAU OF UTILITIES DATE	DES: CSW DRN: JCS CHK: BRP DATE: 08/2017	07/2019		RECORD DRAWING	HVAC HVAC AIRFLOW DIAGRAMS	LITTLE PATUXENT WATER RECLAMATION PLANT 8TH ADDITION BIOSOLIDS PROCESSING FACILITIES - PHASE I CAPITAL PROJECT S-6295 CONTRACT NO. 24-4935 ELECTION DISTRICT NO. 6 HOWARD COUNTY, MARYLAND	SCALE AS SHOWN SHEET 265 OF 463 H-904
						DATE	REV	DESCRIPTION		

BIM 360://10054364 – Little Patuxent WRP 8th Addition/264591_300_HP_V18.rvt
1/14/2022 9:43:43 AM

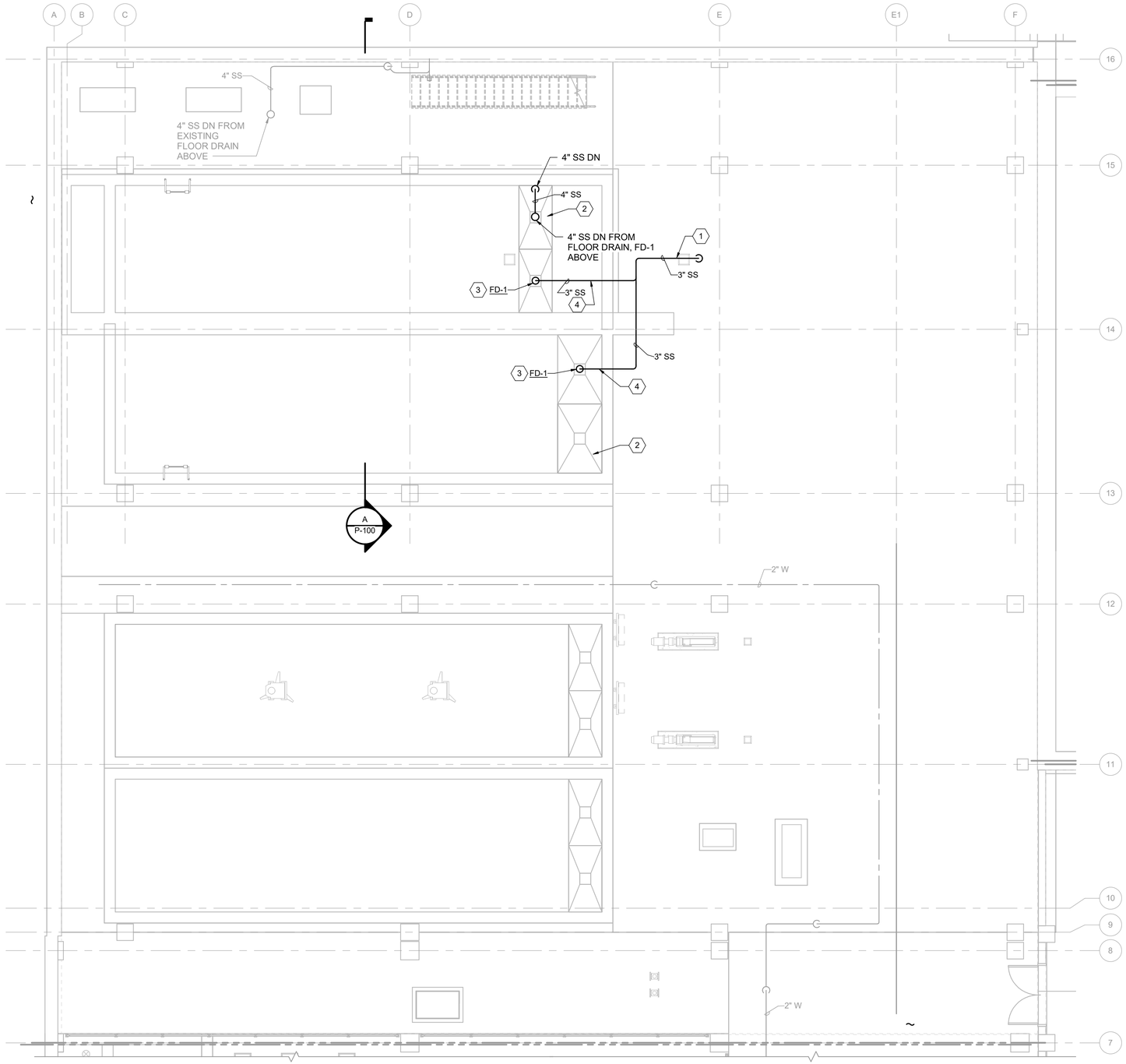

PARTIAL PLAN - EL 127.20

3/16" = 1'-0"

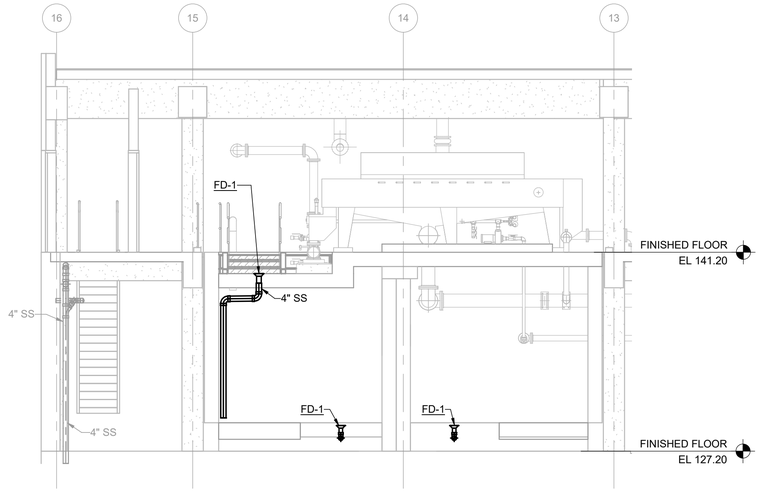

A - SECTION

3/16" = 1'-0"

KEY NOTES (X)

1 ROUTE DRAIN AND DISCHARGE TO EXISTING FLOOR DRAIN. SLOPE LINE AT 1/8" PER FOOT. PROVIDE PEDESTAL SUPPORTS AS NECESSARY.

2 SEE STRUCTURAL SHEET S-100 FOR SUMP GROUT FILL.

3 PROVIDE 3" FLOOR DRAIN AT BOTTOM OF SUMP AND FILL IN AROUND WITH CONCRETE GROUT.

4 PROVIDE 3" SANITARY LINE WITHIN EXISTING 6" PIPE. PROVIDE LINK SEAL AND GROUT.

THE DRAWINGS IN THIS SET ARE RECORD DRAWINGS. THEY ARE CONSTRUCTION CONTRACT DRAWINGS WHICH HAVE BEEN REVISED BASED ON AVAILABLE FIELD INFORMATION RECORDED BY OTHERS DURING CONSTRUCTION OF THIS CONTRACT. THERE HAS BEEN NO VERIFICATION OF DIMENSIONS SHOWN ON THE CONSTRUCTION DRAWINGS OR THE ACCURACY/COMPLETENESS OF THE FIELD INFORMATION RECEIVED.

SIGNATURE 2/7/2023 DATE

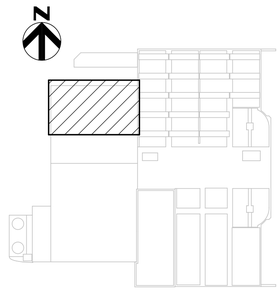

KEY PLAN

AS-BUILT REPLACEMENT SHEET

PROFESSIONAL CERTIFICATION

THIS DRAWING WAS ORIGINALLY APPROVED FOR CONSTRUCTION AND SEALED BY CHRISTOPHER S. WORK, A REGISTERED PROFESSIONAL ENGINEER IN THE STATE OF MARYLAND, NO. 50093.

NOTICE TO CONTRACTORS

- PROJECT ELEVATIONS ARE BASED ON NAVD88 AND HOWARD COUNTY'S BENCHMARK SYSTEM
- PREVIOUS PROJECTS USED OTHER DATUMS
- APPLY THE FOLLOWING CONVERSIONS WHEN USING PREVIOUS CONTRACT DRAWINGS:
  - ADDITION NO. 6: SUBTRACT 0.80 FT
  - PRIOR ADDITIONS: SUBTRACT 1.04 FT

DEPARTMENT OF PUBLIC WORKS
HOWARD COUNTY, MARYLAND

CHIEF, BUREAU OF UTILITIES DATE

DES: CSW
DRN: JCS
CHK: BRP
DATE: 09/2017

DATE	REV	DESCRIPTION
07/2019		RECORD DRAWING

PLUMBING

GRAVITY BELT THICKENER AREA PLAN - EL 127.20

LITTLE PATUXENT WATER RECLAMATION PLANT
8TH ADDITION
BIOSOLIDS PROCESSING FACILITIES - PHASE I

CAPITAL PROJECT S-6295
CONTRACT NO. 24-4935

ELECTION DISTRICT NO. 6
HOWARD COUNTY, MARYLAND

SCALE AS SHOWN

SHEET 266 OF 463

P-100

BIM 360://10054364 – Little Patuxent WRP 8th Addition/264591_100_HP_V18.rvt
1/12/2022 8:37:32 AM

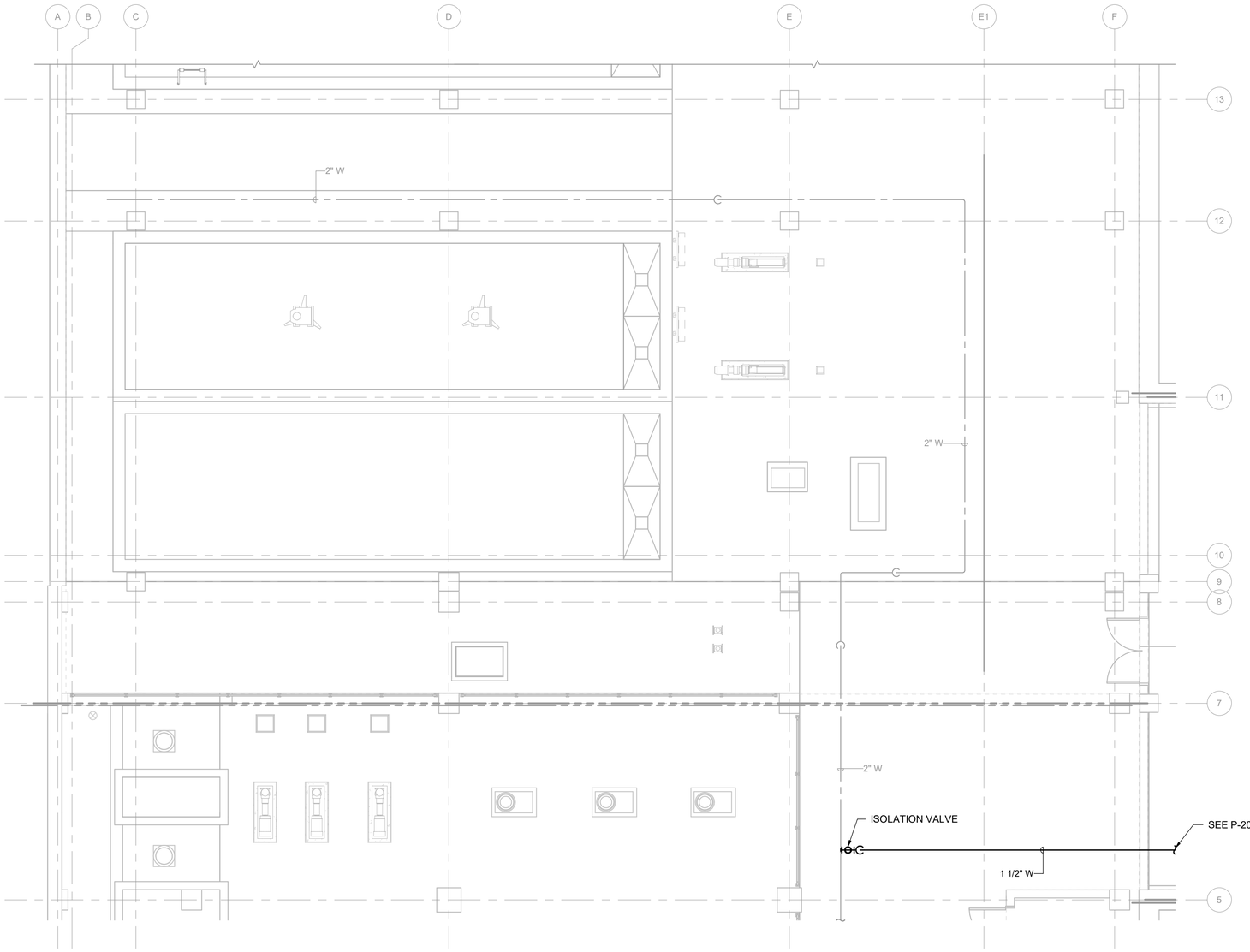

PARTIAL PLAN AT EL 127.20

3/16" = 1'-0"

THE DRAWINGS IN THIS SET ARE RECORD DRAWINGS. THEY ARE CONSTRUCTION CONTRACT DRAWINGS WHICH HAVE BEEN REVISED BASED ON AVAILABLE FIELD INFORMATION RECORDED BY OTHERS DURING CONSTRUCTION OF THIS CONTRACT. THERE HAS BEEN NO VERIFICATION OF DIMENSIONS SHOWN ON THE CONSTRUCTION DRAWINGS OR THE ACCURACY/COMPLETENESS OF THE FIELD INFORMATION RECEIVED.

SIGNATURE — DATE 2/7/2023

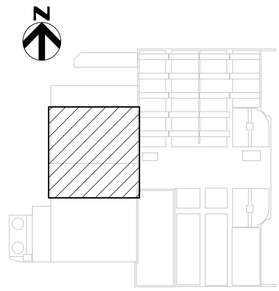

KEY PLAN

AS-BUILT REPLACEMENT SHEET

PROFESSIONAL CERTIFICATION

THIS DRAWING WAS ORIGINALLY APPROVED FOR CONSTRUCTION AND SEALED BY CHRISTOPHER S. WORK, A REGISTERED PROFESSIONAL ENGINEER IN THE STATE OF MARYLAND, NO. 50093.

NOTICE TO CONTRACTORS

- PROJECT ELEVATIONS ARE BASED ON NAVD88 AND HOWARD COUNTY'S BENCHMARK SYSTEM
- PREVIOUS PROJECTS USED OTHER DATUMS
- APPLY THE FOLLOWING CONVERSIONS WHEN USING PREVIOUS CONTRACT DRAWINGS:
  - ADDITION NO. 6: SUBTRACT 0.80 FT
  - PRIOR ADDITIONS: SUBTRACT 1.04 FT

DEPARTMENT OF PUBLIC WORKS
HOWARD COUNTY, MARYLAND

CHIEF, BUREAU OF UTILITIES — DATE

DES: CSW
DRN: JCS
CHK: BRP
DATE: 09/2017

DATE	REV	DESCRIPTION
07/2019		RECORD DRAWING

PLUMBING

GRAVITY BELT THICKENER AREA PLAN - EL 127.20

LITTLE PATUXENT WATER RECLAMATION PLANT
8TH ADDITION
BIOSOLIDS PROCESSING FACILITIES - PHASE I

CAPITAL PROJECT S-6295
CONTRACT NO. 24-4935

ELECTION DISTRICT NO. 6
HOWARD COUNTY, MARYLAND

SCALE AS SHOWN

SHEET 267 OF 463

P-101

BIM 360://10054364 – Little Patuxent WRP 8th Addition/264591_100_HP_V18.rvt
1/12/2022 8:37:33 AM

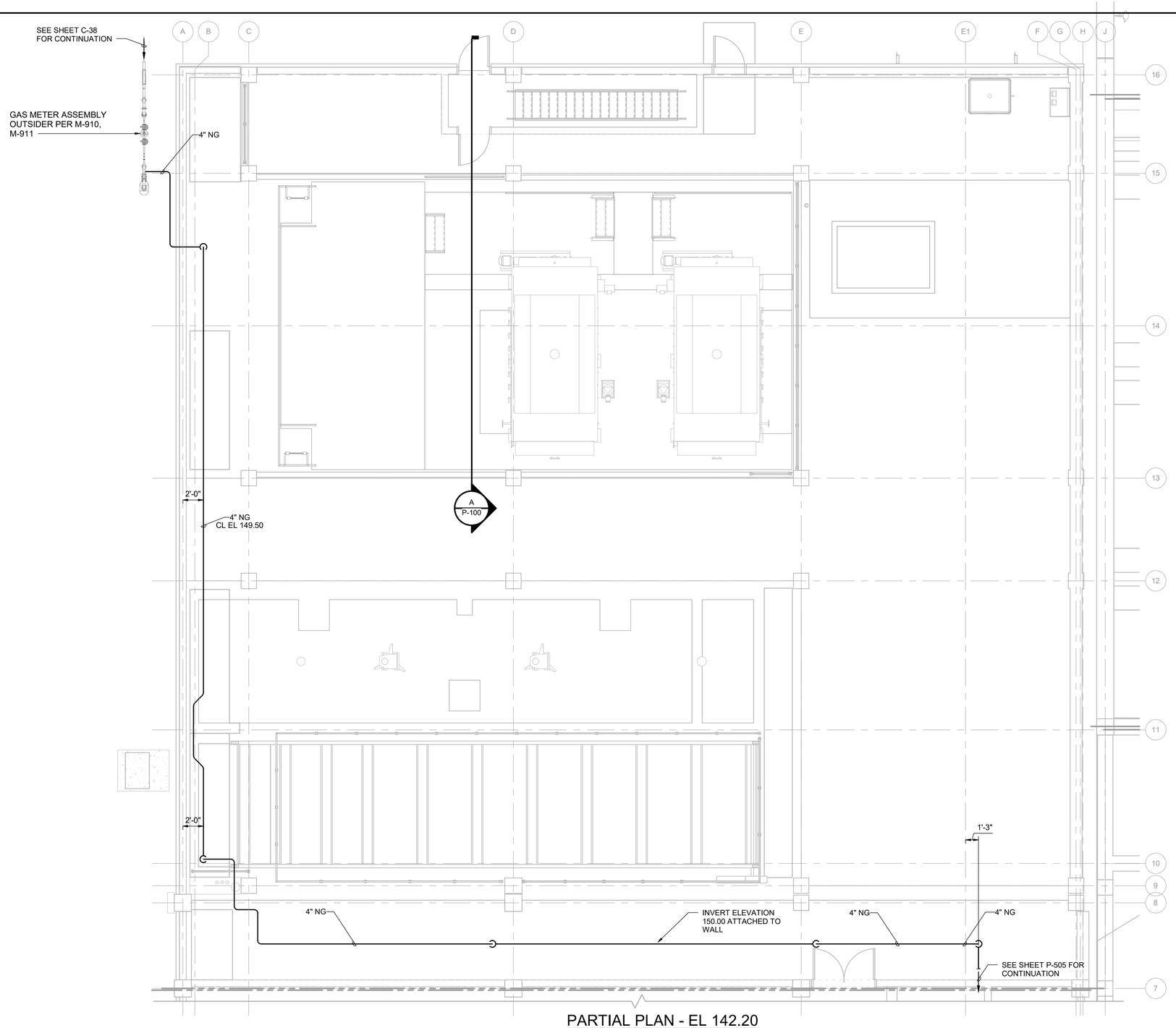

PARTIAL PLAN - EL 142.20

3/16" = 1'-0"

N

THE DRAWINGS IN THIS SET ARE RECORD DRAWINGS. THEY ARE CONSTRUCTION CONTRACT DRAWINGS WHICH HAVE BEEN REVISED BASED ON AVAILABLE FIELD INFORMATION RECORDED BY OTHERS DURING CONSTRUCTION OF THIS CONTRACT. THERE HAS BEEN NO VERIFICATION OF DIMENSIONS SHOWN ON THE CONSTRUCTION DRAWINGS OR THE ACCURACY/COMPLETENESS OF THE FIELD INFORMATION RECEIVED.

SIGNATURE

DATE

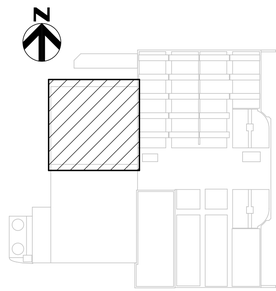

KEY PLAN

AS-BUILT REPLACEMENT SHEET

PROFESSIONAL CERTIFICATION

THIS DRAWING WAS ORIGINALLY APPROVED FOR CONSTRUCTION AND SEALED BY CHRISTOPHER S. WORK, A REGISTERED PROFESSIONAL ENGINEER IN THE STATE OF MARYLAND, NO. 50093.

NOTICE TO CONTRACTORS

- PROJECT ELEVATIONS ARE BASED ON NAVD88 AND HOWARD COUNTY'S BENCHMARK SYSTEM
- PREVIOUS PROJECTS USED OTHER DATUMS
- APPLY THE FOLLOWING CONVERSIONS WHEN USING PREVIOUS CONTRACT DRAWINGS:
  - ADDITION NO. 6: SUBTRACT 0.80 FT
  - PRIOR ADDITIONS: SUBTRACT 1.04 FT

DEPARTMENT OF PUBLIC WORKS
HOWARD COUNTY, MARYLAND

CHIEF, BUREAU OF UTILITIES DATE

DES: CSW

DRN: JCS

CHK: BRP

DATE: 09/2017

DATE	REV	DESCRIPTION
07/2019		RECORD DRAWING

PLUMBING

GRAVITY BELT THICKENER AREA
PLAN - EL 141.20

LITTLE PATUXENT WATER RECLAMATION PLANT
8TH ADDITION
BIOSOLIDS PROCESSING FACILITIES - PHASE I

CAPITAL PROJECT S-6295
CONTRACT NO. 24-4935

ELECTION DISTRICT NO. 6
HOWARD COUNTY, MARYLAND

SCALE
AS
SHOWN

SHEET
268 OF **463**

P-102

BIM 360://10054364 – Little Patuxent WRP 8th Addition/264591_100_HP_V18.rvt
1/12/2022 8:37:35 AM

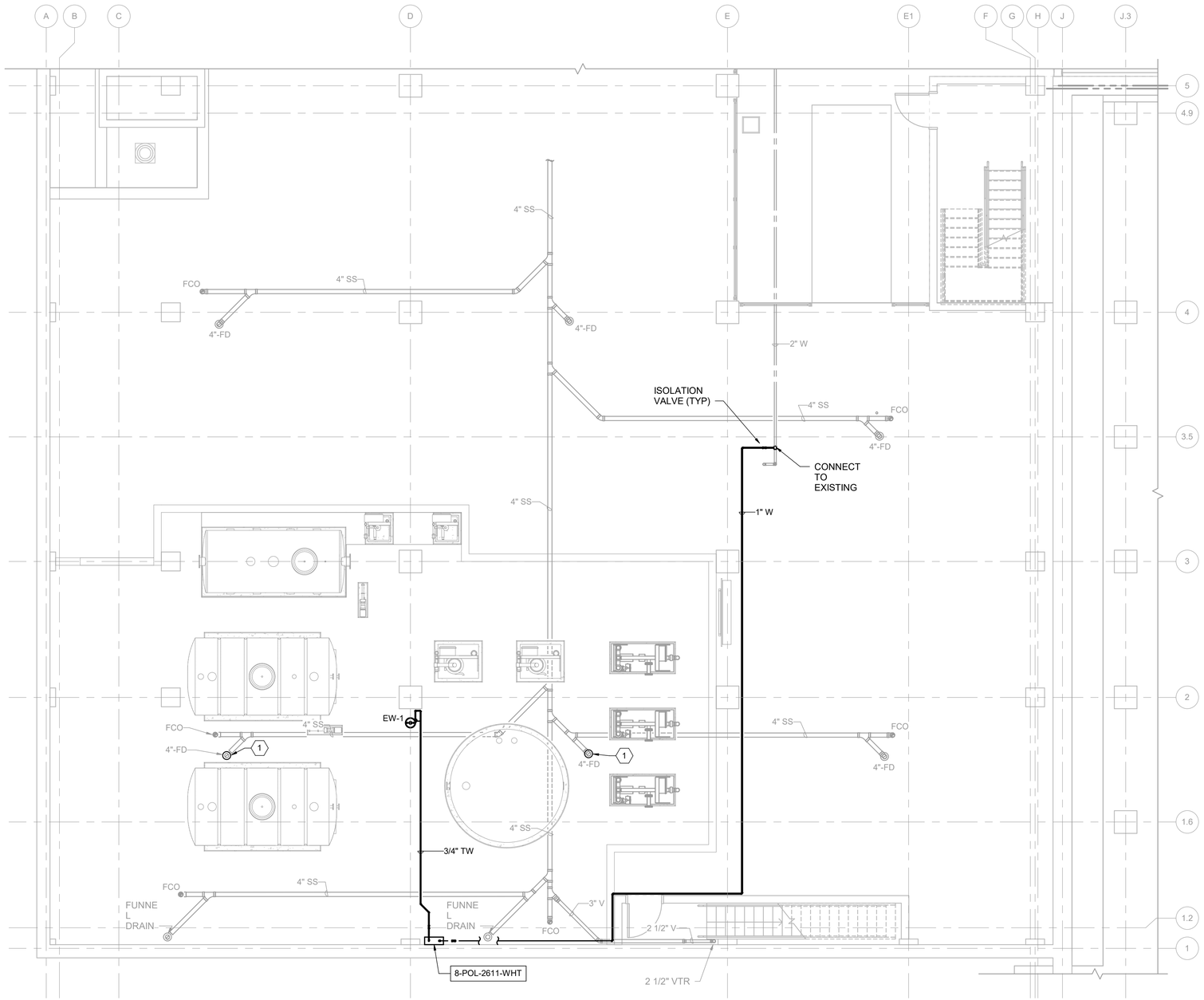

PLAN AT EL 129.20

3/16" = 1'-0"

KEY NOTES (X)

1. PROVIDE WATER TIGHT REMOVALBLE CAP ON FLOOR DRAINS INSIDE CONTAINMENT AREA.

INSTANTANEOUS WATER HEATER SCHEDULE .

MARK	LOCATION	SERVES	FLOW (GPM)	E.W.T. (°F)	L.W.T. (°F)	ELECTRICAL DATA						BASIS OF DESIGN		NOTES
						KW	AMPS	V	PH	HZ	DISC. BY	MANUFACTURER	MODEL	
8-POL-2611-WHT	CHEMICAL HANDLING AREA	TEPID WATER TO EW-1	3.0	40	75	18	22	460	3	60	DIV. 22	KELTECH	CLE183/480D	1

NOTES:
1. WATER HEATER SHALL BE RATED IN ACCORDANCE WITH ANSI Z358.1

THE DRAWINGS IN THIS SET ARE RECORD DRAWINGS. THEY ARE CONSTRUCTION CONTRACT DRAWINGS WHICH HAVE BEEN REVISED BASED ON AVAILABLE FIELD INFORMATION RECORDED BY OTHERS DURING CONSTRUCTION OF THIS CONTRACT. THERE HAS BEEN NO VERIFICATION OF DIMENSIONS SHOWN ON THE CONSTRUCTION DRAWINGS OR THE ACCURACY/COMPLETENESS OF THE FIELD INFORMATION RECEIVED.

SIGNATURE 2/7/2022 DATE

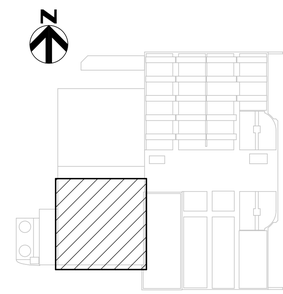

KEY PLAN

AS-BUILT REPLACEMENT SHEET

PROFESSIONAL CERTIFICATION

THIS DRAWING WAS ORIGINALLY APPROVED FOR CONSTRUCTION AND SEALED BY CHRISTOPHER S. WORK, A REGISTERED PROFESSIONAL ENGINEER IN THE STATE OF MARYLAND, NO. 50093.

NOTICE TO CONTRACTORS

- PROJECT ELEVATIONS ARE BASED ON NAVD88 AND HOWARD COUNTY'S BENCHMARK SYSTEM
- PREVIOUS PROJECTS USED OTHER DATUMS
- APPLY THE FOLLOWING CONVERSIONS WHEN USING PREVIOUS CONTRACT DRAWINGS:
  - ADDITION NO. 6: SUBTRACT 0.80 FT
  - PRIOR ADDITIONS: SUBTRACT 1.04 FT

DEPARTMENT OF PUBLIC WORKS
HOWARD COUNTY, MARYLAND

CHIEF, BUREAU OF UTILITIES DATE

DES: CSW
DRN: JCS
CHK: BRP
DATE: 09/2017

DATE	REV	DESCRIPTION
07/2019		RECORD DRAWING

PLUMBING

CHEMICAL HANDLING AREA PLAN EL 129.20

LITTLE PATUXENT WATER RECLAMATION PLANT
8TH ADDITION
BIOSOLIDS PROCESSING FACILITIES - PHASE I

CAPITAL PROJECT S-6295
CONTRACT NO. 24-4935

ELECTION DISTRICT NO. 6
HOWARD COUNTY, MARYLAND

SCALE AS SHOWN

SHEET 269 OF 463

P-120

BIM 360://10054364 – Little Patuxent WRP 8th Addition/264591_100_HP_V18.rvt
1/12/2022 8:37:37 AM

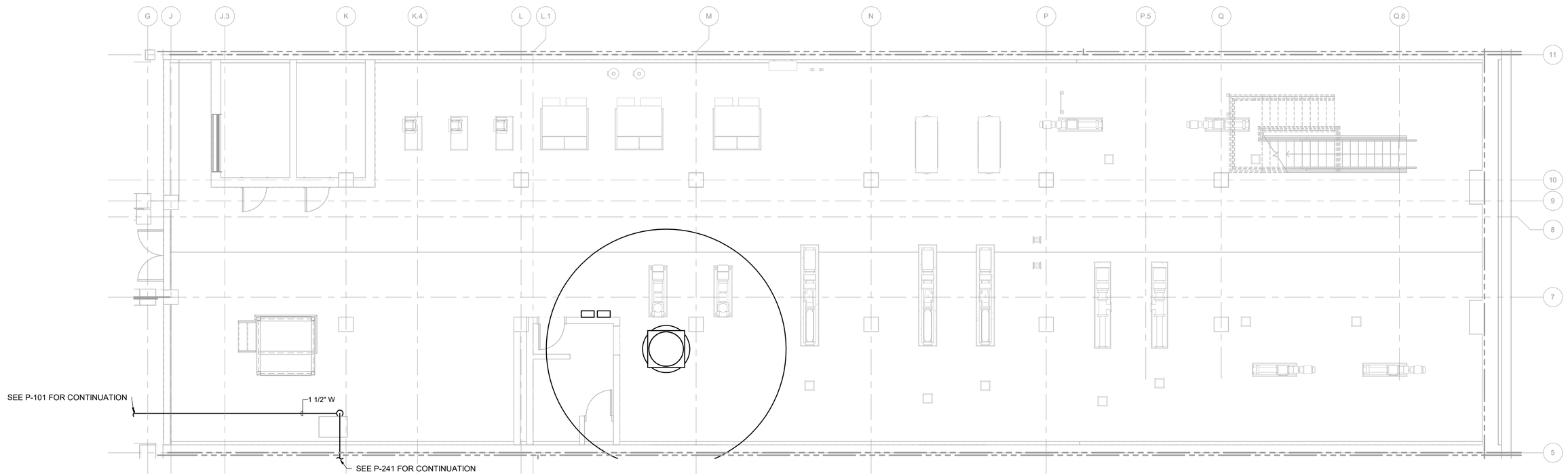

PLAN AT EL 127.20

3/16" = 1'-0"

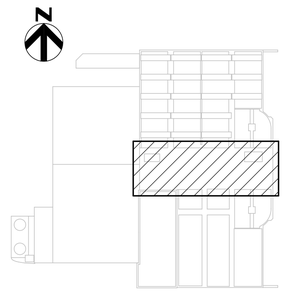

KEY PLAN

THE DRAWINGS IN THIS SET ARE RECORD DRAWINGS. THEY ARE CONSTRUCTION CONTRACT DRAWINGS WHICH HAVE BEEN REVISED BASED ON AVAILABLE FIELD INFORMATION RECORDED BY OTHERS DURING CONSTRUCTION OF THIS CONTRACT. THERE HAS BEEN NO VERIFICATION OF DIMENSIONS SHOWN ON THE CONSTRUCTION DRAWINGS OR THE ACCURACY/COMPLETENESS OF THE FIELD INFORMATION RECEIVED.

SIGNATURE — DATE 2/7/2022

AS-BUILT REPLACEMENT SHEET

PROFESSIONAL CERTIFICATION

THIS DRAWING WAS ORIGINALLY APPROVED FOR CONSTRUCTION AND SEALED BY CHRISTOPHER S. WORK, A REGISTERED PROFESSIONAL ENGINEER IN THE STATE OF MARYLAND, NO. 50093.

NOTICE TO CONTRACTORS

- PROJECT ELEVATIONS ARE BASED ON NAVD88 AND HOWARD COUNTY'S BENCHMARK SYSTEM
- PREVIOUS PROJECTS USED OTHER DATUMS
- APPLY THE FOLLOWING CONVERSIONS WHEN USING PREVIOUS CONTRACT DRAWINGS:
  - ADDITION NO. 6: SUBTRACT 0.80 FT
  - PRIOR ADDITIONS: SUBTRACT 1.04 FT

DEPARTMENT OF PUBLIC WORKS
HOWARD COUNTY, MARYLAND

CHIEF, BUREAU OF UTILITIES — DATE

DES: CSW
DRN: JCS
CHK: BRP
DATE: 09/2017

DATE	REV	DESCRIPTION
07/2019		RECORD DRAWING

PLUMBING

SOLIDS PIPE GALLERY PLAN - EL 127.20

LITTLE PATUXENT WATER RECLAMATION PLANT
8TH ADDITION
BIOSOLIDS PROCESSING FACILITIES - PHASE I

CAPITAL PROJECT S-6295
CONTRACT NO. 24-4935

ELECTION DISTRICT NO. 6
HOWARD COUNTY, MARYLAND

SCALE AS SHOWN

SHEET 270 OF 463

P-200

BIM 360://10054364 - Little Patuxent WRP 8th Addition/264591_100_HP_V18.rvt
1/12/2022 8:37:39 AM

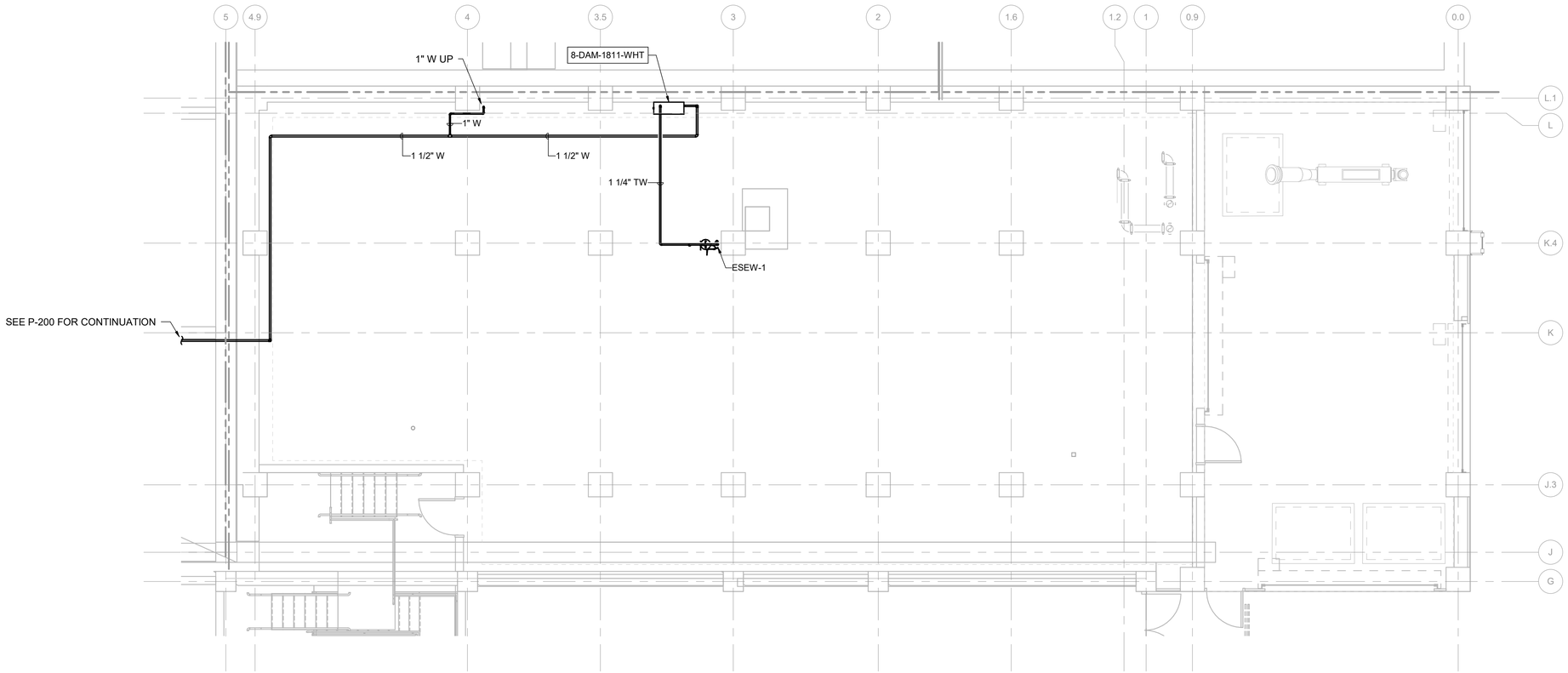

PLAN AT EL 141.20

3/16" = 1'-0"

. INSTANTANEOUS WATER HEATER SCHEDULE

MARK	LOCATION	SERVES	MIN. FLOW (GPM)	MAX. FLOW (GPM)	E.W.T. (°F)	L.W.T. (°F)	ELECTRICAL DATA						BASIS OF DESIGN		NOTES
							KW	AMPS	V	PH	HZ	DISC. BY	MANUFACTURER	MODEL	
8-DAM-1811-WHT	SOLID SCREENING AREA	TEPID WATER TO ESEW-1	3.0	23.0	32	72	108	132	460	3	60	DIV. 22	KELTECH	SNA-1083/460D-FDS-N4X	1,2

NOTES:
1. WATER HEATER SHALL BE RATED IN ACCORDANCE WITH ANSI Z358.1
2. PROVIDE WITH 1" STAINLESS STEEL ASME PRESSURE RELIEF VALVE AND 1-1/4" STAINLESS STEEL Y-STRAINER

THE DRAWINGS IN THIS SET ARE RECORD DRAWINGS. THEY ARE CONSTRUCTION CONTRACT DRAWINGS WHICH HAVE BEEN REVISED BASED ON AVAILABLE FIELD INFORMATION RECORDED BY OTHERS DURING CONSTRUCTION OF THIS CONTRACT. THERE HAS BEEN NO VERIFICATION OF DIMENSIONS SHOWN ON THE CONSTRUCTION DRAWINGS OR THE ACCURACY/COMPLETENESS OF THE FIELD INFORMATION RECEIVED.

SIGNATURE — DATE 2/7/2023

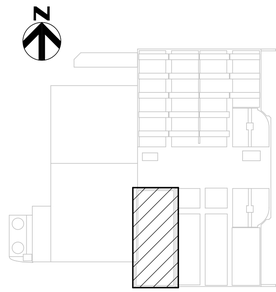

KEY PLAN

AS-BUILT REPLACEMENT SHEET

PROFESSIONAL CERTIFICATION

THIS DRAWING WAS ORIGINALLY APPROVED FOR CONSTRUCTION AND SEALED BY CHRISTOPHER S. WORK, A REGISTERED PROFESSIONAL ENGINEER IN THE STATE OF MARYLAND, NO. 50093.

NOTICE TO CONTRACTORS

- PROJECT ELEVATIONS ARE BASED ON NAVD88 AND HOWARD COUNTY'S BENCHMARK SYSTEM
- PREVIOUS PROJECTS USED OTHER DATUMS
- APPLY THE FOLLOWING CONVERSIONS WHEN USING PREVIOUS CONTRACT DRAWINGS:
  - ADDITION NO. 6: SUBTRACT 0.80 FT
  - PRIOR ADDITIONS: SUBTRACT 1.04 FT

DEPARTMENT OF PUBLIC WORKS
HOWARD COUNTY, MARYLAND

CHIEF, BUREAU OF UTILITIES — DATE

DES: CSW
DRN: JCS
CHK: BRP
DATE: 09/2017

DATE	REV	DESCRIPTION
07/2019		RECORD DRAWING

PLUMBING

SOLIDS SCREENING AREA PLAN - EL 141.20

LITTLE PATUXENT WATER RECLAMATION PLANT
8TH ADDITION
BIOSOLIDS PROCESSING FACILITIES - PHASE I

CAPITAL PROJECT S-6295
CONTRACT NO. 24-4935

ELECTION DISTRICT NO. 6
HOWARD COUNTY, MARYLAND

SCALE AS SHOWN

SHEET 271 OF 463

P-241

BIM 360://10054364 – Little Patuxent WRP 8th Addition/284591_100_HP_V18.rvt
1/12/2022 8:37:40 AM

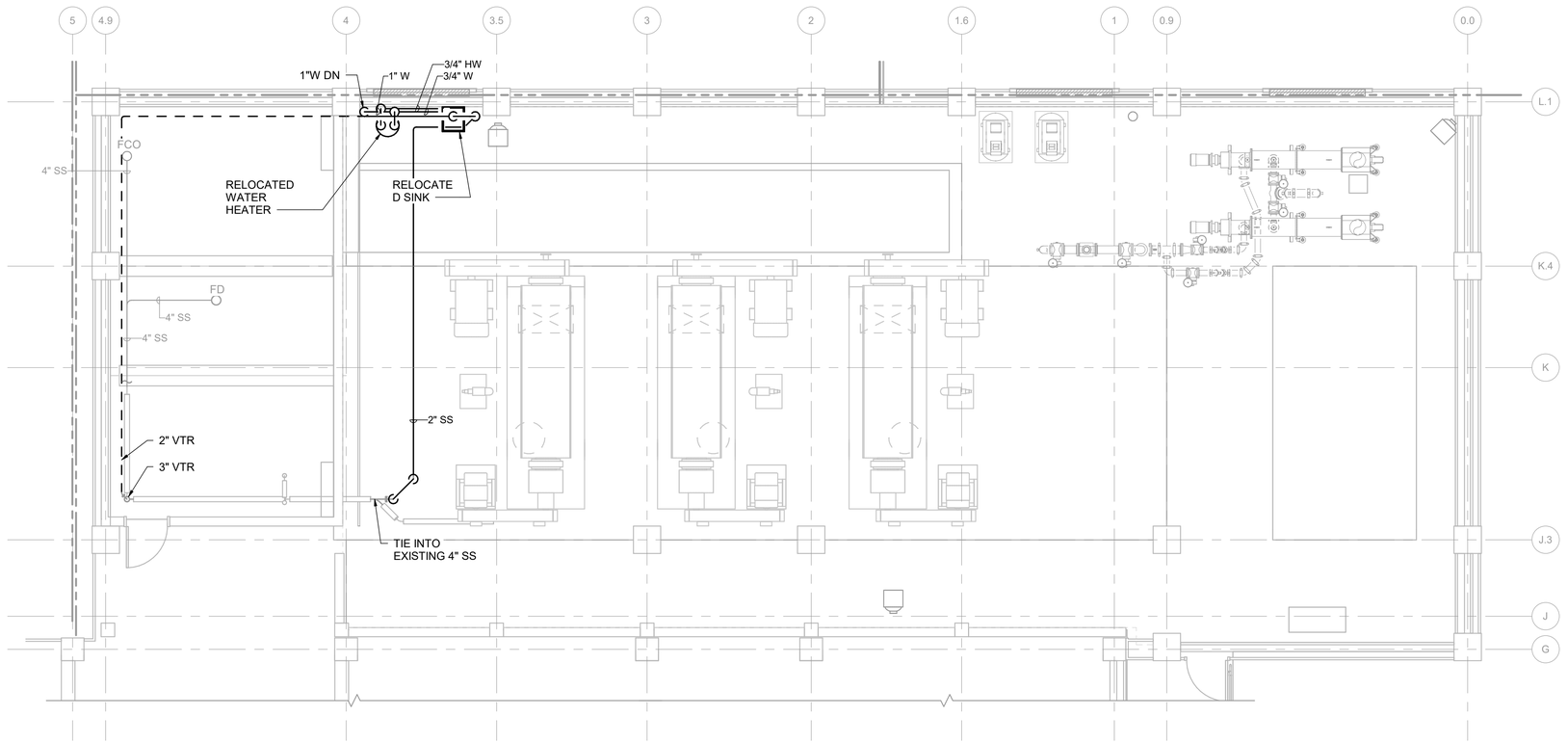

PLAN AT EL 166.20

3/16" = 1'-0"

THE DRAWINGS IN THIS SET ARE RECORD DRAWINGS. THEY ARE CONSTRUCTION CONTRACT DRAWINGS WHICH HAVE BEEN REVISED BASED ON AVAILABLE FIELD INFORMATION RECORDED BY OTHERS DURING CONSTRUCTION OF THIS CONTRACT. THERE HAS BEEN NO VERIFICATION OF DIMENSIONS SHOWN ON THE CONSTRUCTION DRAWINGS OR THE ACCURACY/COMPLETENESS OF THE FIELD INFORMATION RECEIVED.

SIGNATURE — DATE 2/7/2023

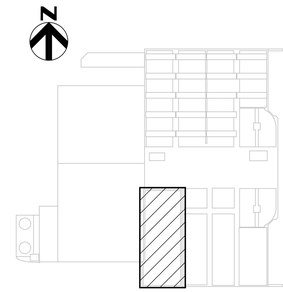

KEY PLAN

AS-BUILT REPLACEMENT SHEET

PROFESSIONAL CERTIFICATION

THIS DRAWING WAS ORIGINALLY APPROVED FOR CONSTRUCTION AND SEALED BY CHRISTOPHER S. WORK, A REGISTERED PROFESSIONAL ENGINEER IN THE STATE OF MARYLAND, NO. 50093.

NOTICE TO CONTRACTORS

- PROJECT ELEVATIONS ARE BASED ON NAVD88 AND HOWARD COUNTY'S BENCHMARK SYSTEM
- PREVIOUS PROJECTS USED OTHER DATUMS
- APPLY THE FOLLOWING CONVERSIONS WHEN USING PREVIOUS CONTRACT DRAWINGS:
  - ADDITION NO. 6: SUBTRACT 0.80 FT
  - PRIOR ADDITIONS: SUBTRACT 1.04 FT

DEPARTMENT OF PUBLIC WORKS
HOWARD COUNTY, MARYLAND

CHIEF, BUREAU OF UTILITIES — DATE

DES: CSW
DRN: JCS
CHK: BRP
DATE: 09/2017

DATE	REV	DESCRIPTION
07/2019		RECORD DRAWING

PLUMBING

SOLIDS SCREENING AREA PLAN - EL 166.20

LITTLE PATUXENT WATER RECLAMATION PLANT
8TH ADDITION
BIOSOLIDS PROCESSING FACILITIES - PHASE I

CAPITAL PROJECT S-6295
CONTRACT NO. 24-4935

ELECTION DISTRICT NO. 6
HOWARD COUNTY, MARYLAND

SCALE AS SHOWN

SHEET 272 OF 463

P-242

BIM 360://10054364 – Little Patuxent WRP 8th Addition/264591_100_HP_V18.rvt
1/12/2022 8:37:42 AM

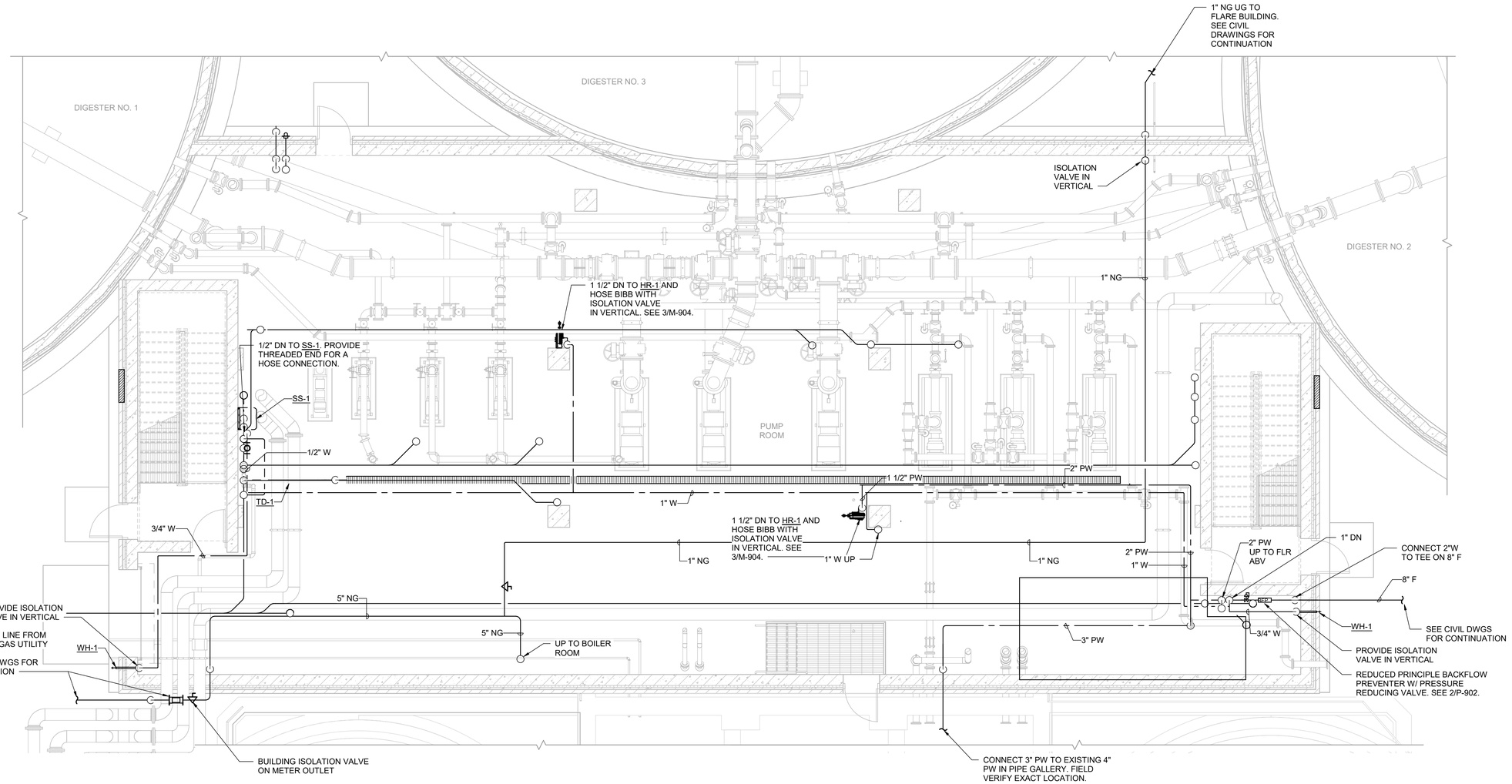

SUPPLY PLAN AT EL 143.50

3/16" = 1'-0"

THE DRAWINGS IN THIS SET ARE RECORD DRAWINGS. THEY ARE CONSTRUCTION CONTRACT DRAWINGS WHICH HAVE BEEN REVISED BASED ON AVAILABLE FIELD INFORMATION RECORDED BY OTHERS DURING CONSTRUCTION OF THIS CONTRACT. THERE HAS BEEN NO VERIFICATION OF DIMENSIONS SHOWN ON THE CONSTRUCTION DRAWINGS OR THE ACCURACY/COMPLETENESS OF THE FIELD INFORMATION RECEIVED.

SIGNATURE — DATE 2/7/2023

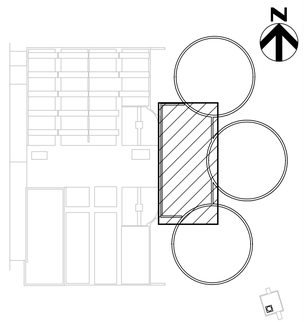

KEY PLAN

AS-BUILT REPLACEMENT SHEET

PROFESSIONAL CERTIFICATION

THIS DRAWING WAS ORIGINALLY APPROVED FOR CONSTRUCTION AND SEALED BY CHRISTOPHER S. WORK, A REGISTERED PROFESSIONAL ENGINEER IN THE STATE OF MARYLAND, NO. 50093.

NOTICE TO CONTRACTORS

- PROJECT ELEVATIONS ARE BASED ON NAVD88 AND HOWARD COUNTY'S BENCHMARK SYSTEM
- PREVIOUS PROJECTS USED OTHER DATUMS
- APPLY THE FOLLOWING CONVERSIONS WHEN USING PREVIOUS CONTRACT DRAWINGS:
  - ADDITION NO. 6: SUBTRACT 0.80 FT
  - PRIOR ADDITIONS: SUBTRACT 1.04 FT

DEPARTMENT OF PUBLIC WORKS
HOWARD COUNTY, MARYLAND

CHIEF, BUREAU OF UTILITIES — DATE

DES: CSW
DRN: JCS
CHK: BRP
DATE: 08/2017

DATE	REV	DESCRIPTION
07/2019		RECORD DRAWING

PLUMBING

DIGESTER BUILDING SUPPLY PLAN - EL 143.50

LITTLE PATUXENT WATER RECLAMATION PLANT
8TH ADDITION
BIOSOLIDS PROCESSING FACILITIES - PHASE I

CAPITAL PROJECT S-6295
CONTRACT NO. 24-4935

ELECTION DISTRICT NO. 6
HOWARD COUNTY, MARYLAND

SCALE AS SHOWN

SHEET 273 OF 463

P-320

BIM 360://10054364 – Little Patuxent WRP 8th Addition/264591_300_HP_V18.rvt
1/12/2022 9:07:46 AM

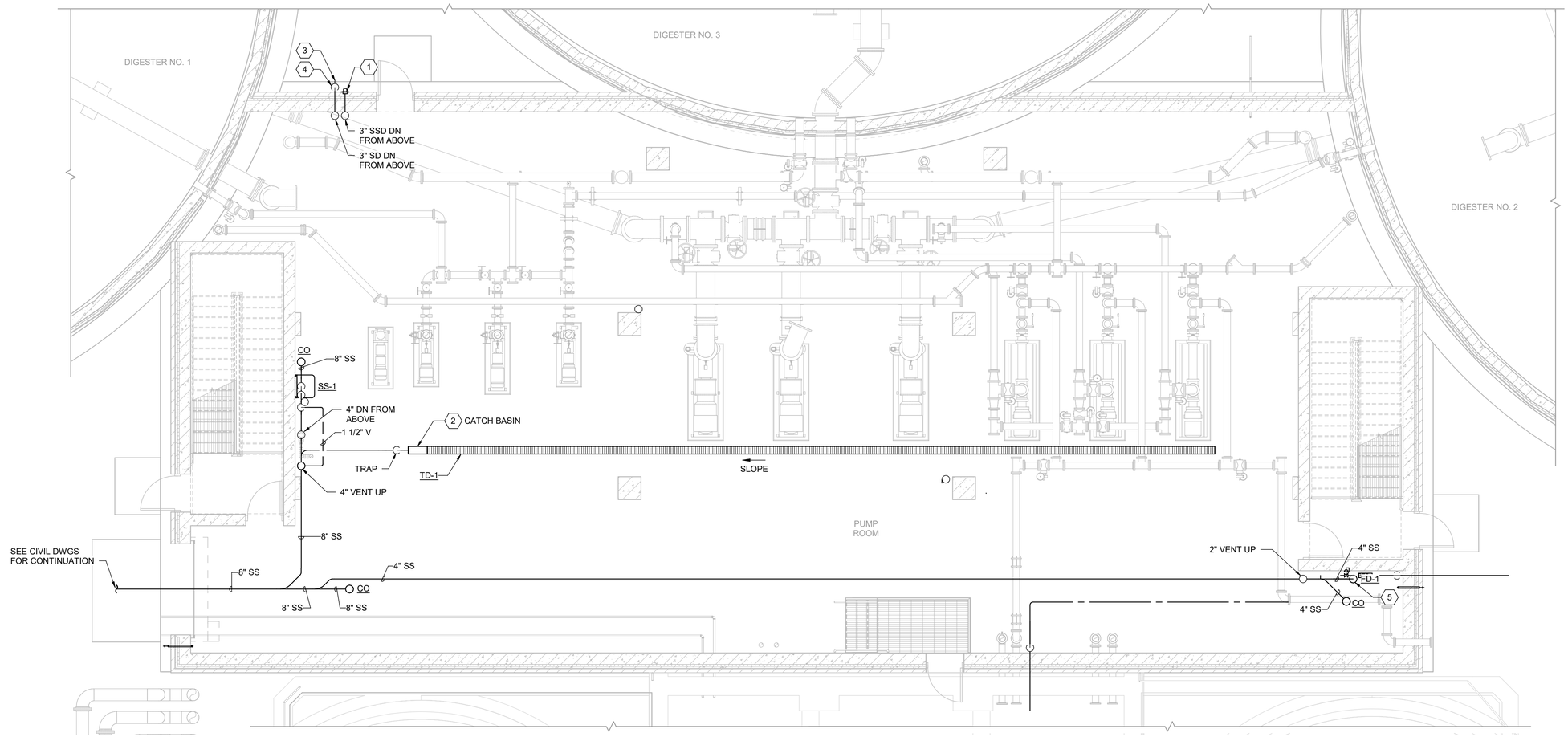

WASTE PLAN AT EL 143.50

3/16" = 1'-0"

KEY NOTES (X)

1 PROVIDE 3" DOWNSPOUT NOZZLE AT 24" ABOVE FINISH FLOOR LEVEL.

2 PROVIDE INLINE CATCH BASIN WITH SEDIMENT BUCKET AND 6" END OUTLET CONFIGURATION.

3 PRIMARY STORM DRAIN DISCHARGE INTO FLUME TRENCH. SEE CIVIL DRAWINGS FOR MORE INFORMATION.

4 EXPOSED STORM DRAIN SHALL BE DUCTILE IRON.

5 PROVIDE TRAP GUARD ON FLOOR DRAIN.

THE DRAWINGS IN THIS SET ARE RECORD DRAWINGS. THEY ARE CONSTRUCTION CONTRACT DRAWINGS WHICH HAVE BEEN REVISED BASED ON AVAILABLE FIELD INFORMATION RECORDED BY OTHERS DURING CONSTRUCTION OF THIS CONTRACT. THERE HAS BEEN NO VERIFICATION OF DIMENSIONS SHOWN ON THE CONSTRUCTION DRAWINGS OR THE ACCURACY/COMPLETENESS OF THE FIELD INFORMATION RECEIVED.

SIGNATURE — DATE 2/7/2023

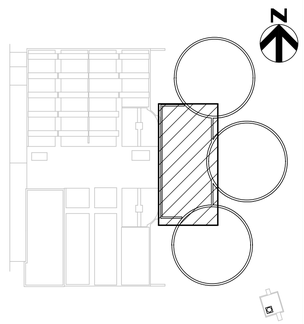

KEY PLAN

BIM 360://10054364 – Little Patuxent WRP 8th Addition/264591_300_HP_V18.rvt
1/12/2022 9:07:48 AM

AS-BUILT REPLACEMENT SHEET

PROFESSIONAL CERTIFICATION

THIS DRAWING WAS ORIGINALLY APPROVED FOR CONSTRUCTION AND SEALED BY CHRISTOPHER S. WORK, A REGISTERED PROFESSIONAL ENGINEER IN THE STATE OF MARYLAND, NO. 50093.

NOTICE TO CONTRACTORS

- PROJECT ELEVATIONS ARE BASED ON NAVD88 AND HOWARD COUNTY'S BENCHMARK SYSTEM
- PREVIOUS PROJECTS USED OTHER DATUMS
- APPLY THE FOLLOWING CONVERSIONS WHEN USING PREVIOUS CONTRACT DRAWINGS:
  - ADDITION NO. 6: SUBTRACT 0.80 FT
  - PRIOR ADDITIONS: SUBTRACT 1.04 FT

DEPARTMENT OF PUBLIC WORKS
HOWARD COUNTY, MARYLAND

CHIEF, BUREAU OF UTILITIES — DATE

DES: CSW
DRN: JCS
CHK: BRP
DATE: 08/2017

DATE	REV	DESCRIPTION
07/2019		RECORD DRAWING

PLUMBING

DIGESTER BUILDING WASTE PLAN - EL 143.50

LITTLE PATUXENT WATER RECLAMATION PLANT
8TH ADDITION
BIOSOLIDS PROCESSING FACILITIES - PHASE I

CAPITAL PROJECT S-6295
CONTRACT NO. 24-4935

ELECTION DISTRICT NO. 6
HOWARD COUNTY, MARYLAND

SCALE AS SHOWN

SHEET 274 OF 463

P-321

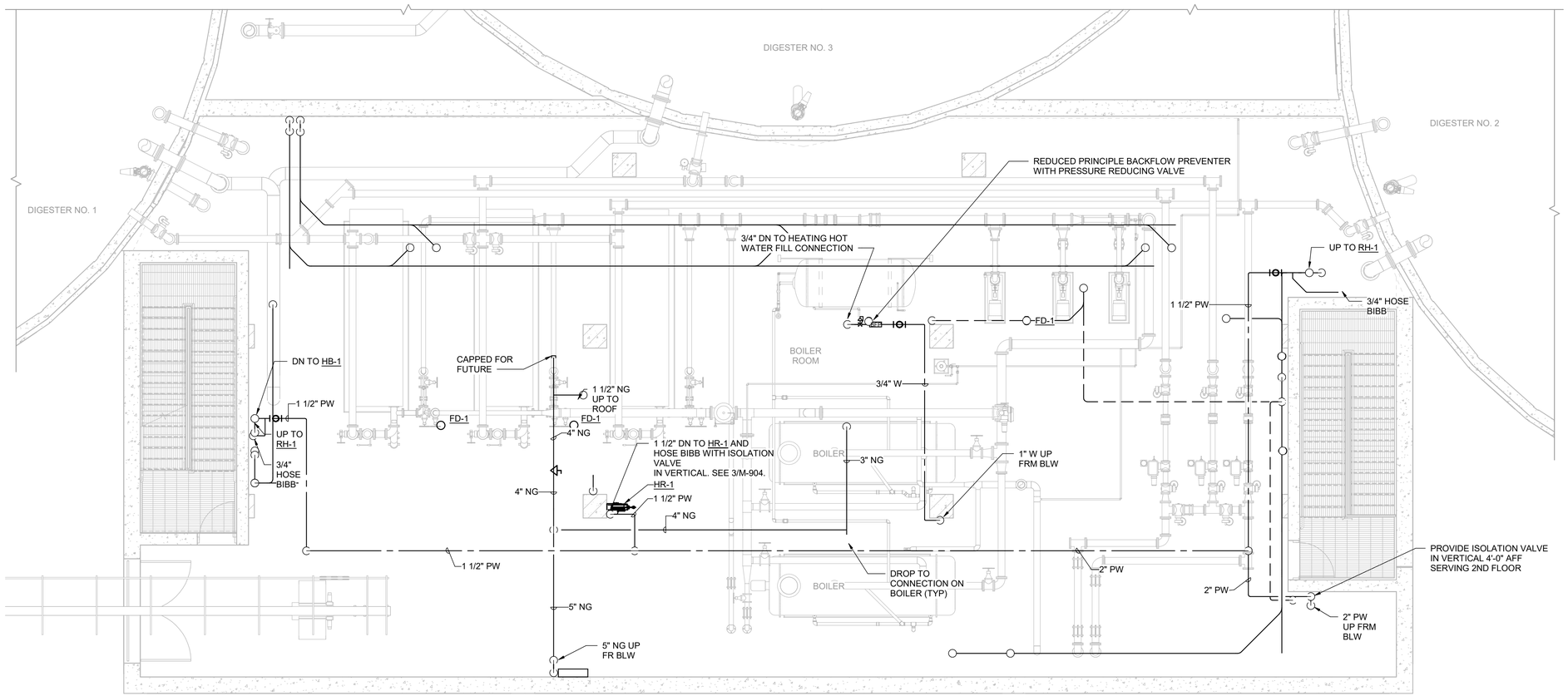

SUPPLY PLAN AT EL 161.67

3/16" = 1'-0"

THE DRAWINGS IN THIS SET ARE RECORD DRAWINGS. THEY ARE CONSTRUCTION CONTRACT DRAWINGS WHICH HAVE BEEN REVISED BASED ON AVAILABLE FIELD INFORMATION RECORDED BY OTHERS DURING CONSTRUCTION OF THIS CONTRACT. THERE HAS BEEN NO VERIFICATION OF DIMENSIONS SHOWN ON THE CONSTRUCTION DRAWINGS OR THE ACCURACY/COMPLETENESS OF THE FIELD INFORMATION RECEIVED.

SIGNATURE — DATE 2/7/2023

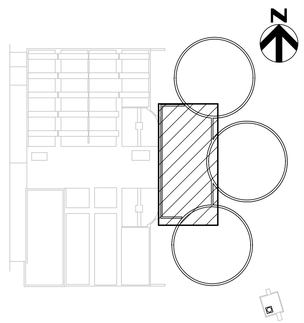

KEY PLAN

AS-BUILT REPLACEMENT SHEET

PROFESSIONAL CERTIFICATION

THIS DRAWING WAS ORIGINALLY APPROVED FOR CONSTRUCTION AND SEALED BY CHRISTOPHER S. WORK, A REGISTERED PROFESSIONAL ENGINEER IN THE STATE OF MARYLAND, NO. 50093.

NOTICE TO CONTRACTORS

- PROJECT ELEVATIONS ARE BASED ON NAVD88 AND HOWARD COUNTY'S BENCHMARK SYSTEM
- PREVIOUS PROJECTS USED OTHER DATUMS
- APPLY THE FOLLOWING CONVERSIONS WHEN USING PREVIOUS CONTRACT DRAWINGS:
  - ADDITION NO. 6: SUBTRACT 0.80 FT
  - PRIOR ADDITIONS: SUBTRACT 1.04 FT

DEPARTMENT OF PUBLIC WORKS
HOWARD COUNTY, MARYLAND

CHIEF, BUREAU OF UTILITIES — DATE

DES: CSW
DRN: JCS
CHK: BRP
DATE: 08/2017

DATE	REV	DESCRIPTION
07/2019		RECORD DRAWING

PLUMBING

DIGESTER BUILDING SUPPLY PLAN - EL 161.67

LITTLE PATUXENT WATER RECLAMATION PLANT
8TH ADDITION
BIOSOLIDS PROCESSING FACILITIES - PHASE I

CAPITAL PROJECT S-6295
CONTRACT NO. 24-4935

ELECTION DISTRICT NO. 6
HOWARD COUNTY, MARYLAND

SCALE AS SHOWN

SHEET 275 OF 463

P-322

BIM 360://10054364 – Little Patuxent WRP 8th Addition/264591_300_HP_V18.rvt
1/12/2022 9:07:51 AM

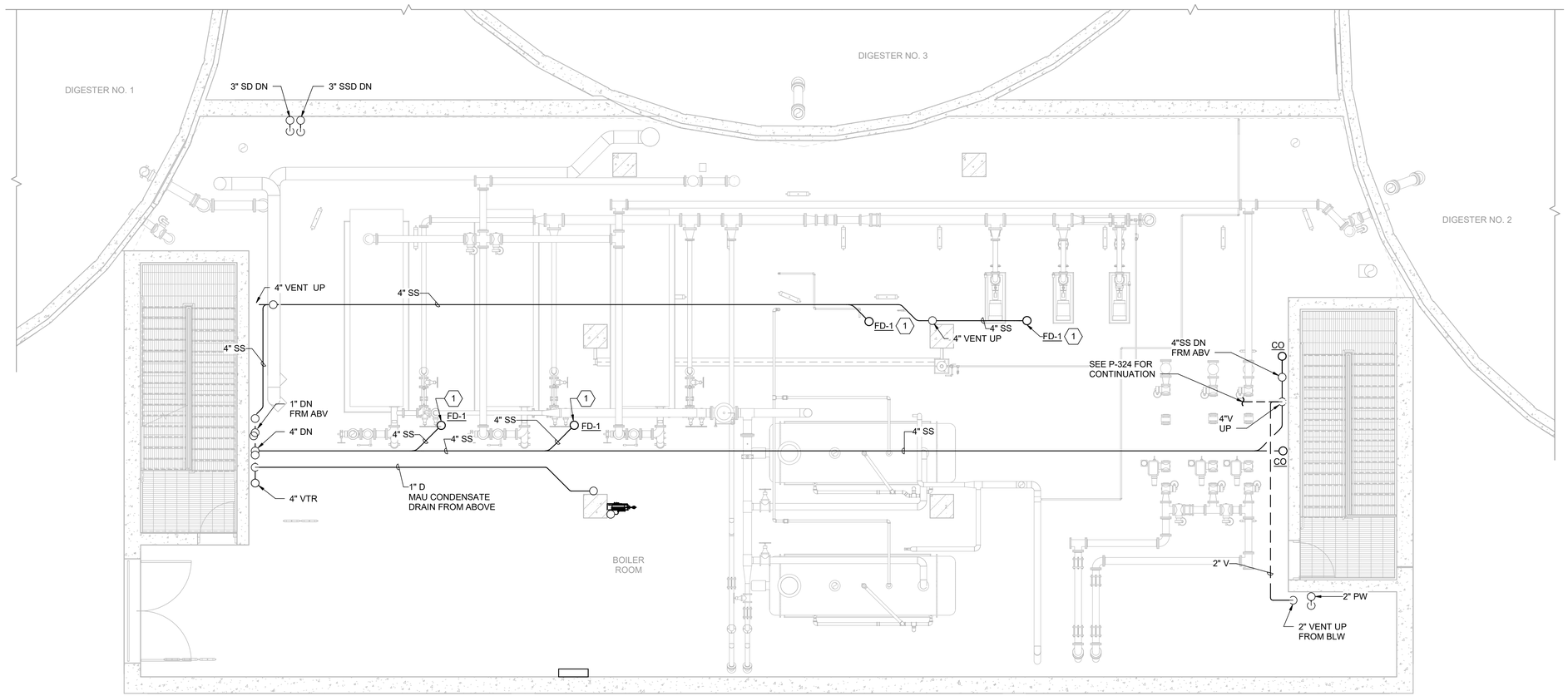

WASTE PLAN AT EL 161.67

3/16" = 1'-0"

KEY NOTES (X)

1 PROVIDE TRAP GUARD ON FLOOR DRAIN.

THE DRAWINGS IN THIS SET ARE RECORD DRAWINGS. THEY ARE CONSTRUCTION CONTRACT DRAWINGS WHICH HAVE BEEN REVISED BASED ON AVAILABLE FIELD INFORMATION RECORDED BY OTHERS DURING CONSTRUCTION OF THIS CONTRACT. THERE HAS BEEN NO VERIFICATION OF DIMENSIONS SHOWN ON THE CONSTRUCTION DRAWINGS OR THE ACCURACY/COMPLETENESS OF THE FIELD INFORMATION RECEIVED.

SIGNATURE

2/7/2023
DATE

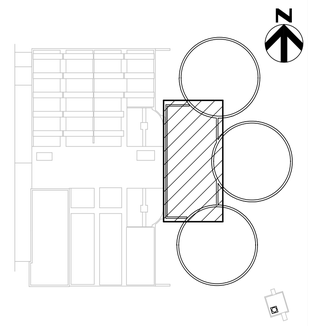

KEY PLAN

AS-BUILT REPLACEMENT SHEET

PROFESSIONAL CERTIFICATION

THIS DRAWING WAS ORIGINALLY APPROVED FOR CONSTRUCTION AND SEALED BY CHRISTOPHER S. WORK, A REGISTERED PROFESSIONAL ENGINEER IN THE STATE OF MARYLAND, NO. 50093.

NOTICE TO CONTRACTORS

- PROJECT ELEVATIONS ARE BASED ON NAVD88 AND HOWARD COUNTY'S BENCHMARK SYSTEM
- PREVIOUS PROJECTS USED OTHER DATUMS
- APPLY THE FOLLOWING CONVERSIONS WHEN USING PREVIOUS CONTRACT DRAWINGS:
  - ADDITION NO. 6: SUBTRACT 0.80 FT
  - PRIOR ADDITIONS: SUBTRACT 1.04 FT

DEPARTMENT OF PUBLIC WORKS
HOWARD COUNTY, MARYLAND

CHIEF, BUREAU OF UTILITIES DATE

DES: CSW
DRN: JCS
CHK: BRP
DATE: 08/2017

DATE	REV	DESCRIPTION
07/2019		RECORD DRAWING

PLUMBING

DIGESTER BUILDING WASTE PLAN - EL 161.67

LITTLE PATUXENT WATER RECLAMATION PLANT
8TH ADDITION
BIOSOLIDS PROCESSING FACILITIES - PHASE I

CAPITAL PROJECT S-6295
CONTRACT NO. 24-4935

ELECTION DISTRICT NO. 6
HOWARD COUNTY, MARYLAND

SCALE AS SHOWN

SHEET 276 OF 463

P-323

BIM 360://10054364 – Little Patuxent WRP 8th Addition/284591_300_HP_V18.rvt
1/12/2022 9:07:53 AM

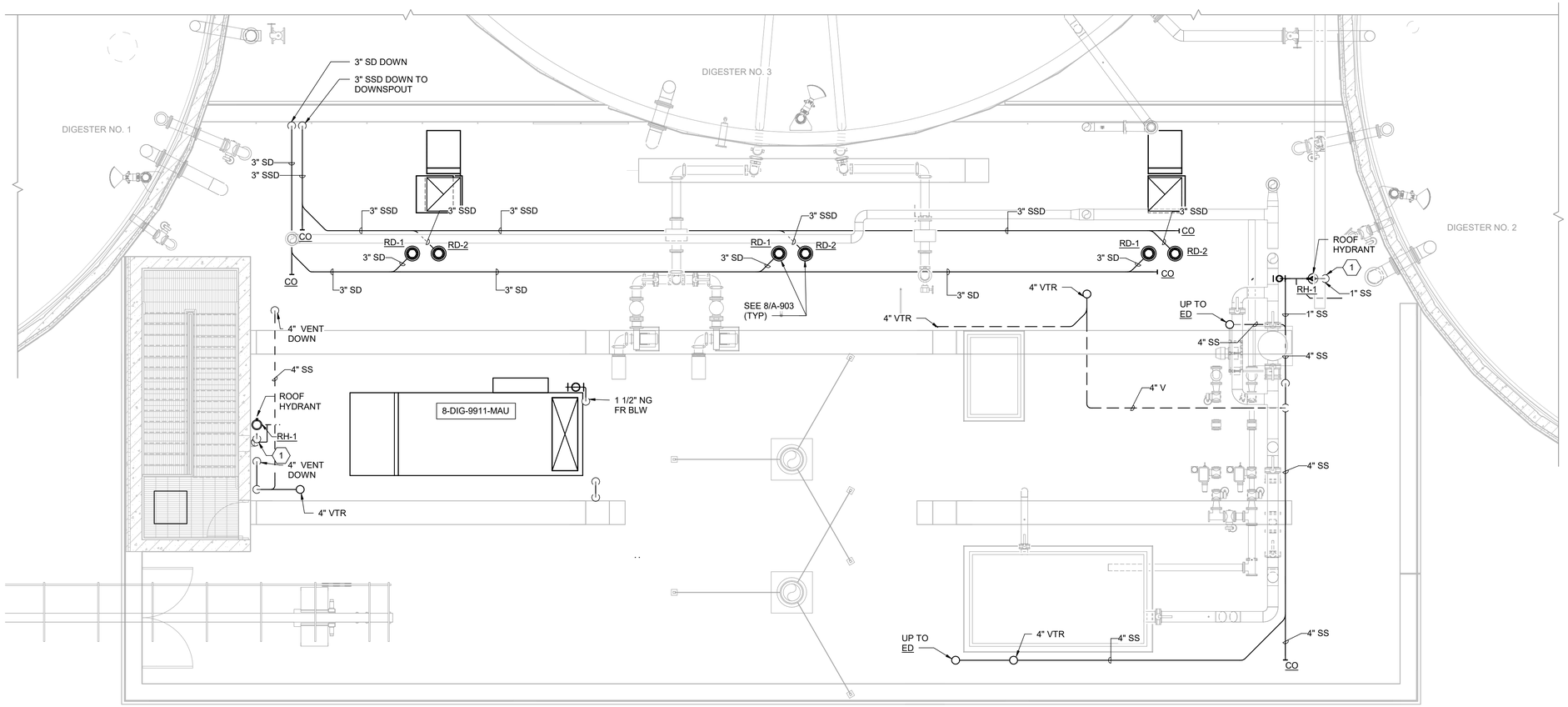

ROOF PLAN
3/16" = 1'-0"

KEY NOTES (X)

1 PROVIDE FUNNEL DRAIN WITH TRAP.

THE DRAWINGS IN THIS SET ARE RECORD DRAWINGS. THEY ARE CONSTRUCTION CONTRACT DRAWINGS WHICH HAVE BEEN REVISED BASED ON AVAILABLE FIELD INFORMATION RECORDED BY OTHERS DURING CONSTRUCTION OF THIS CONTRACT. THERE HAS BEEN NO VERIFICATION OF DIMENSIONS SHOWN ON THE CONSTRUCTION DRAWINGS OR THE ACCURACY/COMPLETENESS OF THE FIELD INFORMATION RECEIVED.

SIGNATURE — DATE 2/7/2023

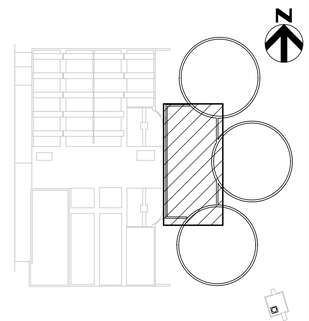

KEY PLAN

AS-BUILT REPLACEMENT SHEET

PROFESSIONAL CERTIFICATION

THIS DRAWING WAS ORIGINALLY APPROVED FOR CONSTRUCTION AND SEALED BY CHRISTOPHER S. WORK, A REGISTERED PROFESSIONAL ENGINEER IN THE STATE OF MARYLAND, NO. 50093.

NOTICE TO CONTRACTORS

- PROJECT ELEVATIONS ARE BASED ON NAVD88 AND HOWARD COUNTY'S BENCHMARK SYSTEM
- PREVIOUS PROJECTS USED OTHER DATUMS
- APPLY THE FOLLOWING CONVERSIONS WHEN USING PREVIOUS CONTRACT DRAWINGS:
  - ADDITION NO. 6: SUBTRACT 0.80 FT
  - PRIOR ADDITIONS: SUBTRACT 1.04 FT

DEPARTMENT OF PUBLIC WORKS
HOWARD COUNTY, MARYLAND

CHIEF, BUREAU OF UTILITIES — DATE

DES: CSW
DRN: JCS
CHK: BRP
DATE: 08/2017

DATE	REV	DESCRIPTION
07/2019		RECORD DRAWING

PLUMBING

DIGESTER BUILDING ROOF PLAN

LITTLE PATUXENT WATER RECLAMATION PLANT
8TH ADDITION
BIOSOLIDS PROCESSING FACILITIES - PHASE I

CAPITAL PROJECT S-6295
CONTRACT NO. 24-4935

ELECTION DISTRICT NO. 6
HOWARD COUNTY, MARYLAND

SCALE AS SHOWN

SHEET 277 OF 463

P-324

BIM 360://10054364 – Little Patuxent WRP 8th Addition/264591_300_HP_V18.rvt
1/12/2022 9:08:01 AM

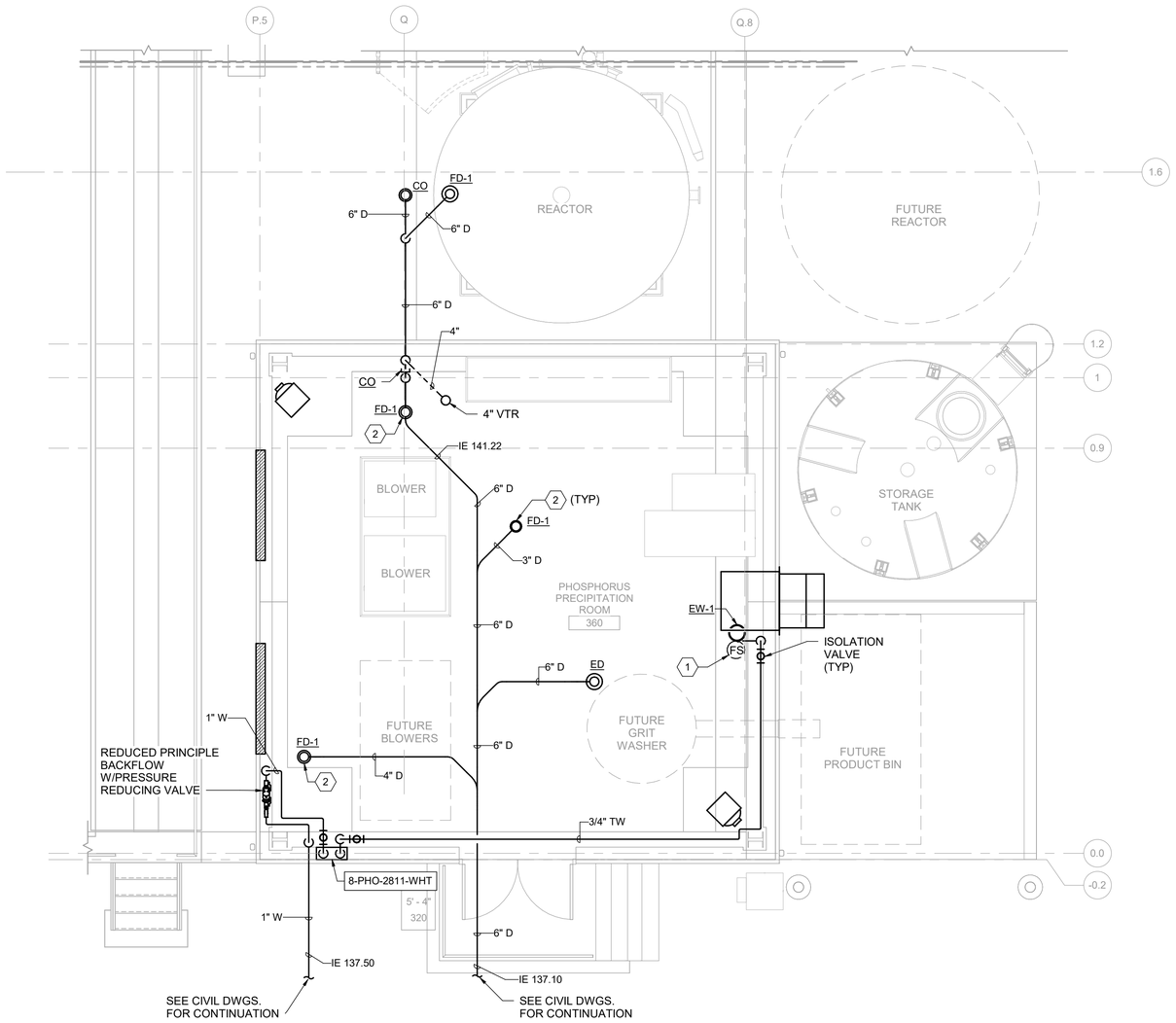

PARTIAL PLAN AT EL 143.50

1/4" = 1'-0"

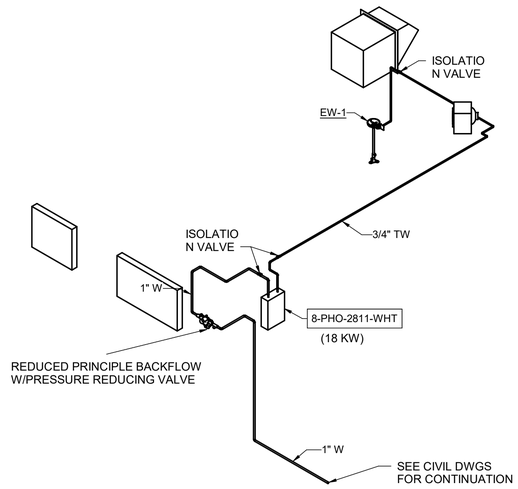

1 - SUPPLY RISER

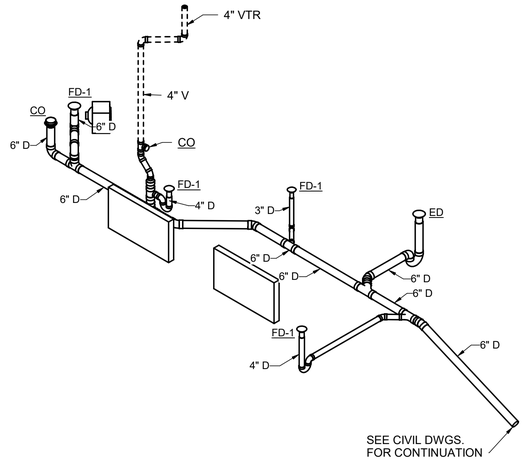

2 - WASTE & VENT RISERS

NOT TO SCALE

INSTANTANEOUS WATER HEATER SCHEDULE

MARK	LOCATION	SERVES	FLOW (GPM)	E.W.T. (°F)	L.W.T. (°F)	ELECTRICAL DATA						BASIS OF DESIGN		NOTES
						KW	AMPS	V	PH	HZ	DISC. BY	MANUFACTURER	MODEL	
8-PHO-2811-WHT	CHEMICAL HANDLING AREA	TEPID WATER TO EW-1	3.0	40	75	18	22	460	3	60	DIV. 22	KELTECH	CLE183/480D	1

NOTES:
1. WATER HEATER SHALL BE RATED IN ACCORDANCE WITH ANSI Z358.1

KEY NOTES (X)

1 PROVIDE FLOW SWITCH FOR WATER FLOW MONITORING BY PCS SYSTEM. UPON DETECTION OF FLOW A SIGNAL SHALL BE SENT TO THE PCS GENERATING AN ALARM. SEE ELECTRICAL DRAWINGS FOR 120 VOLT POWER CIRCUIT, CONTROL WIRING AND ASSOCIATED CONTROLS.

2 PROVIDE TRAP GUARD ON FLOOR DRAIN.

THE DRAWINGS IN THIS SET ARE RECORD DRAWINGS. THEY ARE CONSTRUCTION CONTRACT DRAWINGS WHICH HAVE BEEN REVISED BASED ON AVAILABLE FIELD INFORMATION RECORDED BY OTHERS DURING CONSTRUCTION OF THIS CONTRACT. THERE HAS BEEN NO VERIFICATION OF DIMENSIONS SHOWN ON THE CONSTRUCTION DRAWINGS OR THE ACCURACY/COMPLETENESS OF THE FIELD INFORMATION RECEIVED.

SIGNATURE — DATE 2/7/2025

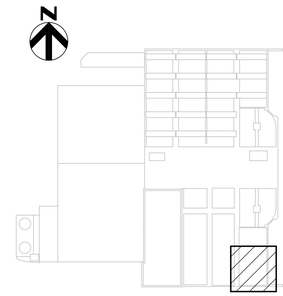

KEY PLAN

AS-BUILT REPLACEMENT SHEET

PROFESSIONAL CERTIFICATION

THIS DRAWING WAS ORIGINALLY APPROVED FOR CONSTRUCTION AND SEALED BY CHRISTOPHER S. WORK, A REGISTERED PROFESSIONAL ENGINEER IN THE STATE OF MARYLAND, NO. 50093.

NOTICE TO CONTRACTORS

- PROJECT ELEVATIONS ARE BASED ON NAVD88 AND HOWARD COUNTY'S BENCHMARK SYSTEM
- PREVIOUS PROJECTS USED OTHER DATUMS
- APPLY THE FOLLOWING CONVERSIONS WHEN USING PREVIOUS CONTRACT DRAWINGS:
  - ADDITION NO. 6: SUBTRACT 0.80 FT
  - PRIOR ADDITIONS: SUBTRACT 1.04 FT

DEPARTMENT OF PUBLIC WORKS
HOWARD COUNTY, MARYLAND

CHIEF, BUREAU OF UTILITIES — DATE

DES: CSW
DRN: JCS
CHK: BRP
DATE: 09/2017

DATE	REV	DESCRIPTION
07/2019		RECORD DRAWING

PLUMBING

PHOSPHORUS PRECIPITATION BUILDING PLAN AND RISER

LITTLE PATUXENT WATER RECLAMATION PLANT
8TH ADDITION
BIOSOLIDS PROCESSING FACILITIES - PHASE I

CAPITAL PROJECT S-6295
CONTRACT NO. 24-4935

ELECTION DISTRICT NO. 6
HOWARD COUNTY, MARYLAND

SCALE AS SHOWN

SHEET 278 OF 463

P-360

BIM 360://10054364 – Little Patuxent WRP 8th Addition/264591_100_HP_V18.rvt
1/12/2022 8:37:44 AM

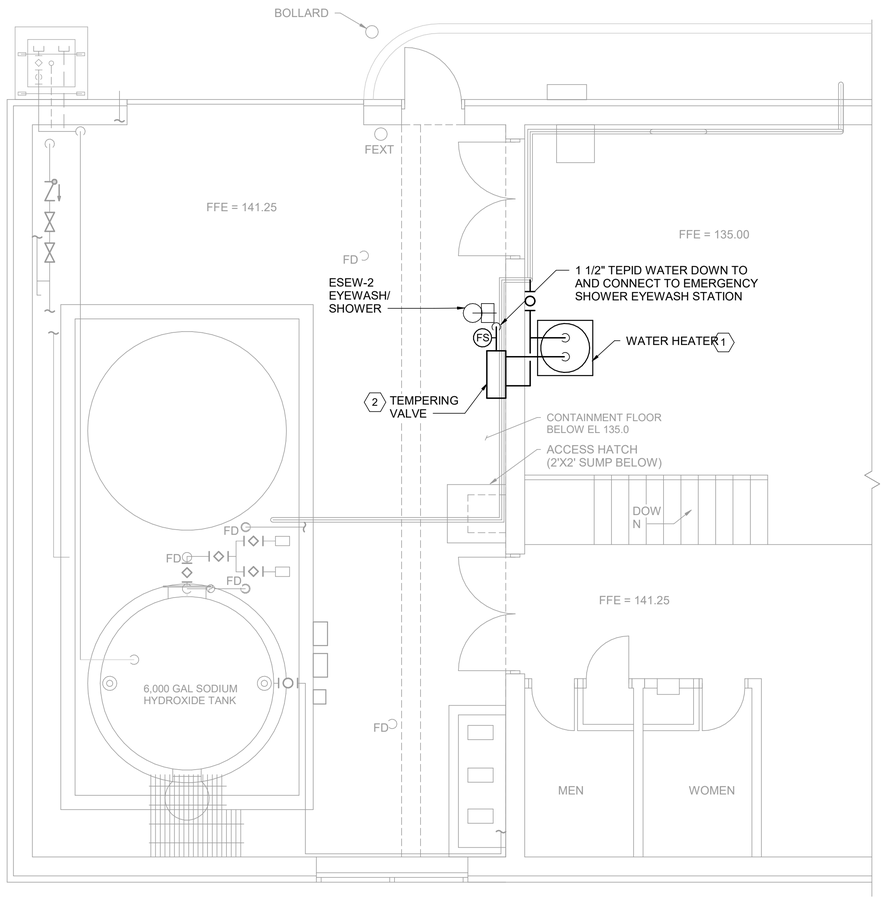

PARTIAL PLAN

1/4" = 1'-0"

N

KEY NOTES (X)

1. WATER HEATER IS HTP MODEL EVC100C2X045, 4.5 KW, 220V, 100 GAL CAPACITY.
2. TEMPERING VALVE IS GUARDIAN MODEL G3700LF

THE DRAWINGS IN THIS SET ARE RECORD DRAWINGS. THEY ARE CONSTRUCTION CONTRACT DRAWINGS WHICH HAVE BEEN REVISED BASED ON AVAILABLE FIELD INFORMATION RECORDED BY OTHERS DURING CONSTRUCTION OF THIS CONTRACT. THERE HAS BEEN NO VERIFICATION OF DIMENSIONS SHOWN ON THE CONSTRUCTION DRAWINGS OR THE ACCURACY/COMPLETENESS OF THE FIELD INFORMATION RECEIVED.

SIGNATURE — DATE 2/7/2023

AS-BUILT REPLACEMENT SHEET

PROFESSIONAL CERTIFICATION

THIS DRAWING WAS ORIGINALLY APPROVED FOR CONSTRUCTION AND SEALED BY CHRISTOPHER S. WORK, A REGISTERED PROFESSIONAL ENGINEER IN THE STATE OF MARYLAND, NO. 50093.

NOTICE TO CONTRACTORS

- PROJECT ELEVATIONS ARE BASED ON NAVD88 AND HOWARD COUNTY'S BENCHMARK SYSTEM
- PREVIOUS PROJECTS USED OTHER DATUMS
- APPLY THE FOLLOWING CONVERSIONS WHEN USING PREVIOUS CONTRACT DRAWINGS:
  - ADDITION NO. 6: SUBTRACT 0.80 FT
  - PRIOR ADDITIONS: SUBTRACT 1.04 FT

DEPARTMENT OF PUBLIC WORKS
HOWARD COUNTY, MARYLAND

CHIEF, BUREAU OF UTILITIES — DATE

DES: CSW
DRN: JCS
CHK: BRP
DATE: 09/2017

DATE	REV	DESCRIPTION
07/2019		RECORD DRAWING

PLUMBING

FILTER BUILDING PARTIAL PLAN

LITTLE PATUXENT WATER RECLAMATION PLANT
8TH ADDITION
BIOSOLIDS PROCESSING FACILITIES - PHASE I

CAPITAL PROJECT S-6295
CONTRACT NO. 24-4935

ELECTION DISTRICT NO. 6
HOWARD COUNTY, MARYLAND

SCALE AS SHOWN

SHEET 279 OF 463

P-640

BIM 360://10054364 – Little Patuxent WRP 8th Addition/264591_100_HP_V18.rvt
1/12/2022 8:37:45 AM

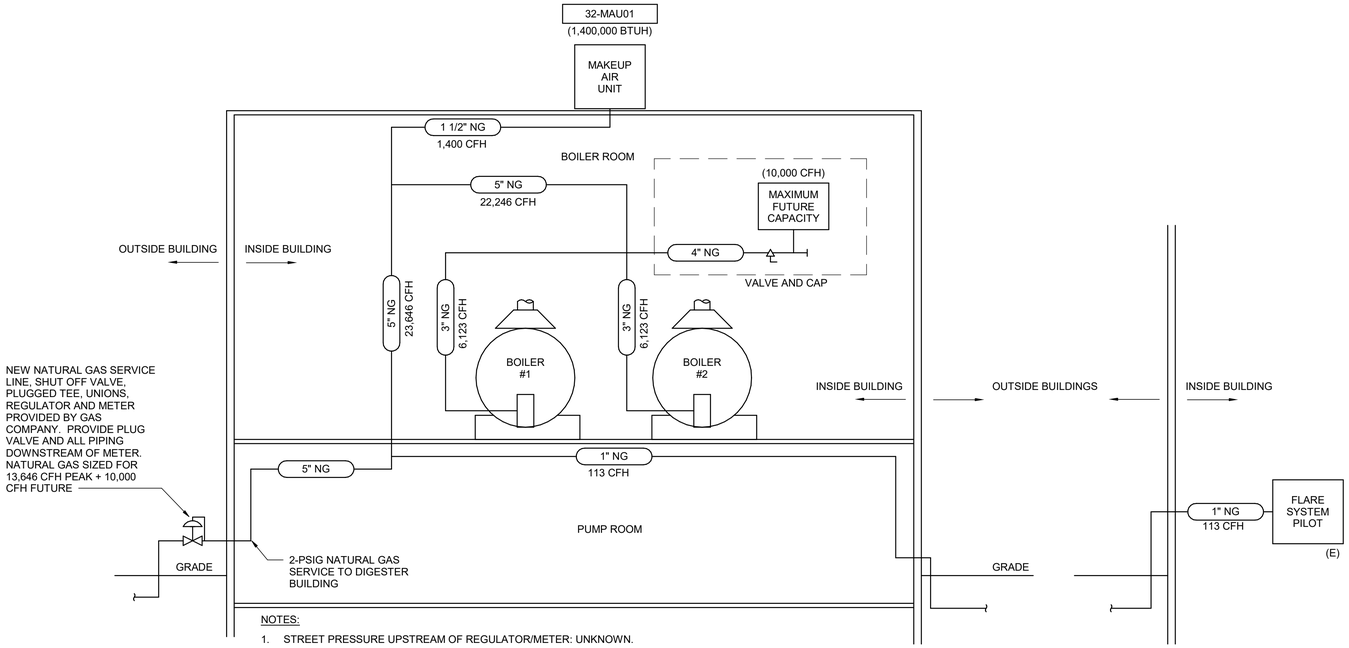

NOTES:

1. STREET PRESSURE UPSTREAM OF REGULATOR/METER: UNKNOWN.
2. GAS REGULATOR SERVING BUILDING SET AT 2 PSIG. PIPING IN BUILDING SHALL BE SCHEDULE 40 BLACK STEEL.
3. SIZING BASED ON TOTAL EQUIVALENT LENGTH OF PIPE TO FARTHEST APPLIANCE (FLARE PILOT) 800 FEET WITH PRESSURE AT METER 2 PSIG AND PRESSURE AT FARTHEST APPLIANCE 1.5 PSIG (TO APPLIANCE REGULATOR).
4. PROVIDE CONNECTIONS AT EACH BOILER AND APPLIANCE FOR PRIMARY BURNERS AND PILOTS INCLUDING ALL ISOLATION VALVES, STRAINERS, AND APPLIANCE REGULATOR PROVIDING PRESSURE REQUIRED BY BOILER MANUFACTURER'S INSTALLATION INSTRUCTIONS.

1 NATURAL GAS PIPING SCHEMATIC
NOT TO SCALE

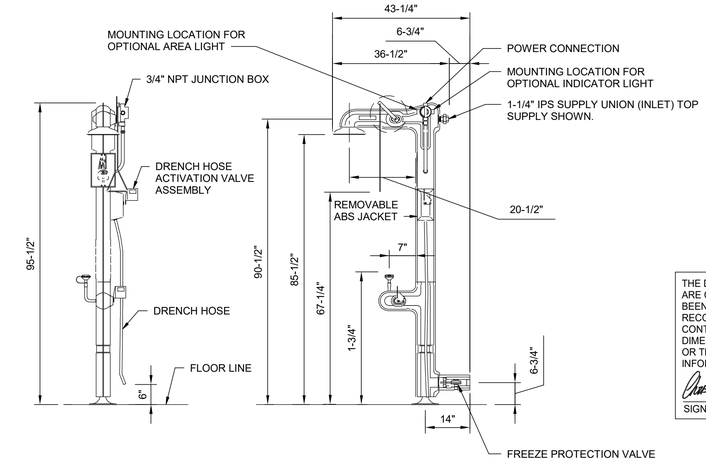

NOTES:

1. DIMENSIONS MAY VARY BY ± 1/2 INCH.
2. TO COMPLY WITH ANSI Z358.1-2009 FOR EMERGENCY EYEWASH OR EYE/FACE WASH AND SHOWER EQUIPMENT:
   A. UNIT SHALL BE INSTALLED IN ACCORDANCE WITH MANUFACTURER'S INSTRUCTIONS AND ACCEPTABLE PLUMBING PRACTICES.
   B. EYEWASH OR EYE/FACE WASH SHALL BE POSITIONED WITH NOZZLES NOT LESS THEN 33 IN. AND NO GREATER THAN 45 IN. FROM SURFACE ON WHICH USER STANDS AND 6 IN. MINIMUM FROM WALL OR NEAREST OBSTRUCTION.
   C. SHOWER SHALL BE POSITIONED SO THAT SHOWER HEAD IS NOT LESS THAN 82 IN. NOR MORE THAN 96 IN. FROM SURFACE ON WHICH USER STANDS.
   D. SHOWER SPRAY PATTERN SHALL HAVE A MINIMUM DIAMETER OF 20 IN. AT 60 IN. ABOVE SURFACE ON WHICH USER STANDS, AND CENTER OF SPRAY PATTERN SHALL BE LOCATED AT LEAST 16 IN. FROM ANY OBSTRUCTION.
3. DO NOT USE REGULAR PIPE SEALANT. IF NECESSARY USE DOW CORNING 832 SEALANT PLACING 5 SMALL BEADS ON THE MALE THREADS, JUST ABOVE THE FIRST THREAD.

2 FREEZE PROOF EMERGENCY EYEWASH AND SHOWER HEAD DETAIL
NOT TO SCALE

THE DRAWINGS IN THIS SET ARE RECORD DRAWINGS. THEY ARE CONSTRUCTION CONTRACT DRAWINGS WHICH HAVE BEEN REVISED BASED ON AVAILABLE FIELD INFORMATION RECORDED BY OTHERS DURING CONSTRUCTION OF THIS CONTRACT. THERE HAS BEEN NO VERIFICATION OF DIMENSIONS SHOWN ON THE CONSTRUCTION DRAWINGS OR THE ACCURACY/COMPLETENESS OF THE FIELD INFORMATION RECEIVED.

SIGNATURE — DATE 2/7/2022

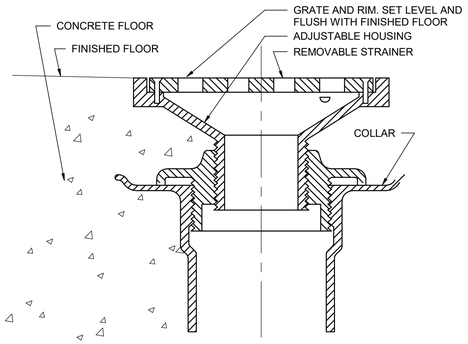

3 FLOOR DRAIN DETAIL
NOT TO SCALE

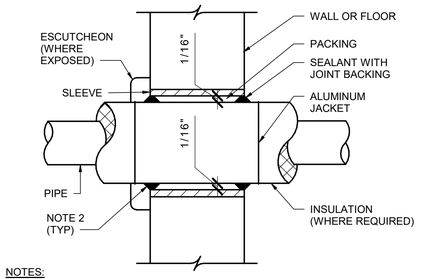

NOTES:

1. THIS DETAIL IS FOR NONFIRE-RATED CONSTRUCTION. PIPE PENETRATIONS IN FIRE-RATED CONSTRUCTION SHALL BE FIRESTOPPED WITH A UL-CLASSIFIED SYSTEM.
2. AT INSULATED WALLS PROVIDE PACKING AND SEALANT AT ANNULAR SPACE.

4 TYPICAL PIPE PENETRATION THROUGH WALLS AND FLOORS
NOT TO SCALE

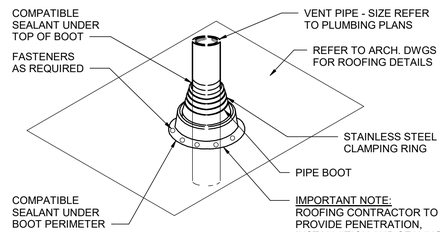

5 VENT THRU ROOF DETAIL
NOT TO SCALE

NOTES:

1. FINISH AND GRIND ALL ROUGH EDGES.
2. 1" HOSE NOT SHOWN. PROVIDE 50 FT. LONG HOSE AT EACH LOCATION.
3. PROVIDE HOSE AND HOSE RACK FOR EACH HOSE BIBB (HB-1, HB-2).

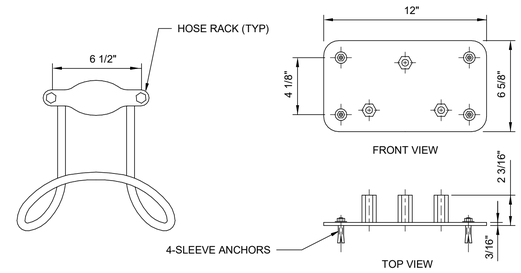

FRONT VIEW — MOUNTING PLATE

6 HOSE BIBB HOSE RACK DETAIL
NOT TO SCALE

BIM 360://10054364 – Little Patuxent WRP 8th Addition/264591_300_HP_V18.rvt
1/12/2022 9:08:02 AM

AS-BUILT REPLACEMENT SHEET

PROFESSIONAL CERTIFICATION

THIS DRAWING WAS ORIGINALLY APPROVED FOR CONSTRUCTION AND SEALED BY CHRISTOPHER S. WORK, A REGISTERED PROFESSIONAL ENGINEER IN THE STATE OF MARYLAND, NO. 50093.

NOTICE TO CONTRACTORS

- PROJECT ELEVATIONS ARE BASED ON NAVD88 AND HOWARD COUNTY'S BENCHMARK SYSTEM
- PREVIOUS PROJECTS USED OTHER DATUMS
- APPLY THE FOLLOWING CONVERSIONS WHEN USING PREVIOUS CONTRACT DRAWINGS:
  - ADDITION NO. 6: SUBTRACT 0.80 FT
  - PRIOR ADDITIONS: SUBTRACT 1.04 FT

DEPARTMENT OF PUBLIC WORKS
HOWARD COUNTY, MARYLAND

CHIEF, BUREAU OF UTILITIES — DATE

DES: CSW
DRN: JCS
CHK: BRP
DATE: 08/2017

DATE	REV	DESCRIPTION
07/2019		RECORD DRAWING

PLUMBING

PLUMBING DETAILS 1

LITTLE PATUXENT WATER RECLAMATION PLANT
8TH ADDITION
BIOSOLIDS PROCESSING FACILITIES - PHASE I

CAPITAL PROJECT S-6295
CONTRACT NO. 24-4935

ELECTION DISTRICT NO. 6
HOWARD COUNTY, MARYLAND

SCALE AS SHOWN

SHEET 280 OF 463

P-901

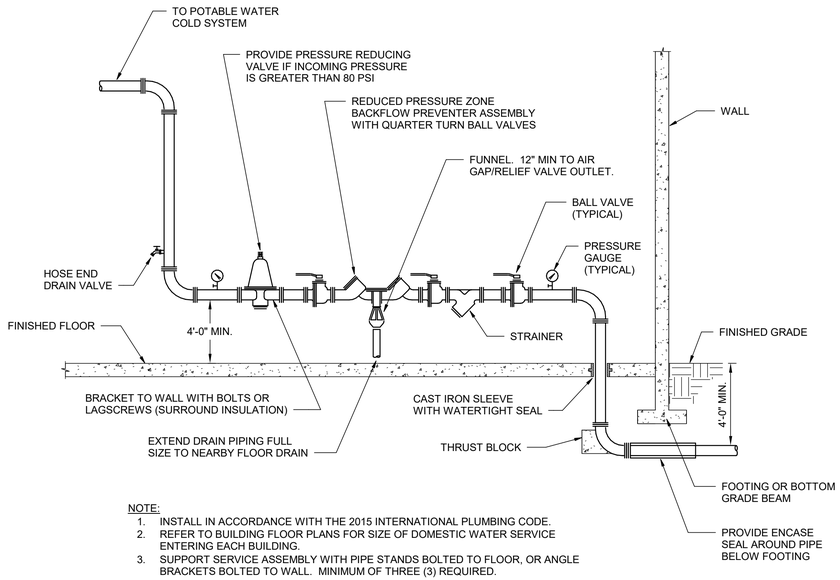

NOTE:
1. INSTALL IN ACCORDANCE WITH THE 2015 INTERNATIONAL PLUMBING CODE.
2. REFER TO BUILDING FLOOR PLANS FOR SIZE OF DOMESTIC WATER SERVICE ENTERING EACH BUILDING.
3. SUPPORT SERVICE ASSEMBLY WITH PIPE STANDS BOLTED TO FLOOR, OR ANGLE BRACKETS BOLTED TO WALL. MINIMUM OF THREE (3) REQUIRED.

1 / - TYPICAL DOMESTIC WATER SERVICE ENTRANCE RISER DETAIL
NOT TO SCALE

THE DRAWINGS IN THIS SET ARE RECORD DRAWINGS. THEY ARE CONSTRUCTION CONTRACT DRAWINGS WHICH HAVE BEEN REVISED BASED ON AVAILABLE FIELD INFORMATION RECORDED BY OTHERS DURING CONSTRUCTION OF THIS CONTRACT. THERE HAS BEEN NO VERIFICATION OF DIMENSIONS SHOWN ON THE CONSTRUCTION DRAWINGS OR THE ACCURACY/COMPLETENESS OF THE FIELD INFORMATION RECEIVED.

SIGNATURE — DATE 2/7/2023

AS-BUILT REPLACEMENT SHEET

PROFESSIONAL CERTIFICATION
THIS DRAWING WAS ORIGINALLY APPROVED FOR CONSTRUCTION AND SEALED BY CHRISTOPHER S. WORK, A REGISTERED PROFESSIONAL ENGINEER IN THE STATE OF MARYLAND, NO. 50093.

NOTICE TO CONTRACTORS
- PROJECT ELEVATIONS ARE BASED ON NAVD88 AND HOWARD COUNTY'S BENCHMARK SYSTEM
- PREVIOUS PROJECTS USED OTHER DATUMS
- APPLY THE FOLLOWING CONVERSIONS WHEN USING PREVIOUS CONTRACT DRAWINGS:
  - ADDITION NO. 6: SUBTRACT 0.80 FT
  - PRIOR ADDITIONS: SUBTRACT 1.04 FT

DEPARTMENT OF PUBLIC WORKS
HOWARD COUNTY, MARYLAND

CHIEF, BUREAU OF UTILITIES — DATE

DES: CSW
DRN: JCS
CHK: BRP
DATE: 08/2017

DATE	REV	DESCRIPTION
07/2019		RECORD DRAWING

PLUMBING

PLUMBING DETAILS 2

LITTLE PATUXENT WATER RECLAMATION PLANT
8TH ADDITION
BIOSOLIDS PROCESSING FACILITIES - PHASE I

CAPITAL PROJECT S-6295
CONTRACT NO. 24-4935

ELECTION DISTRICT NO. 6
HOWARD COUNTY, MARYLAND

SCALE AS SHOWN

SHEET 281 OF 463

P-902

BIM 360://10054364 – Little Patuxent WRP 8th Addition/264591_300_HP_V18.rvt
1/12/2022 9:08:02 AM

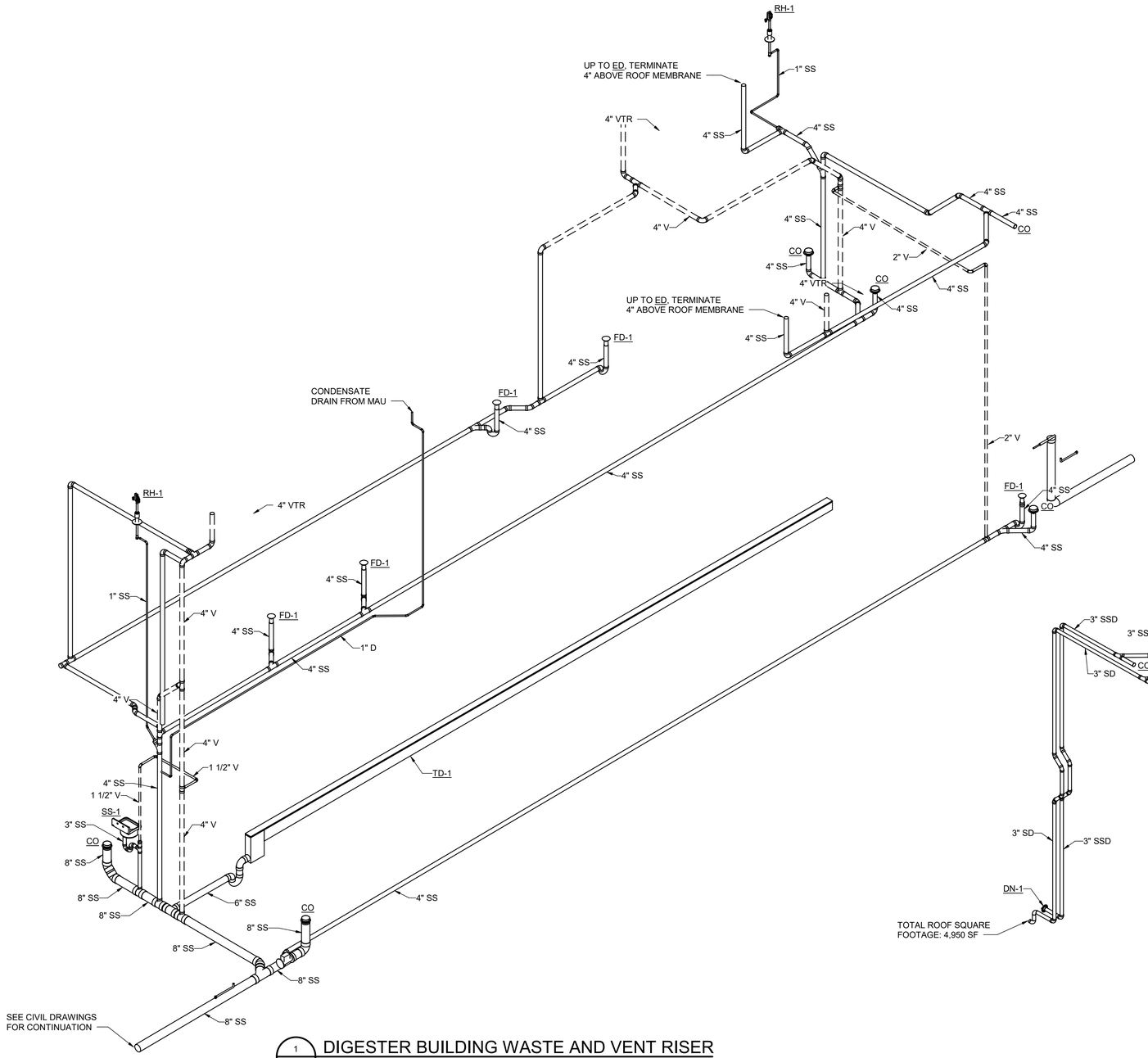

1 - DIGESTER BUILDING WASTE AND VENT RISER
NOT TO SCALE

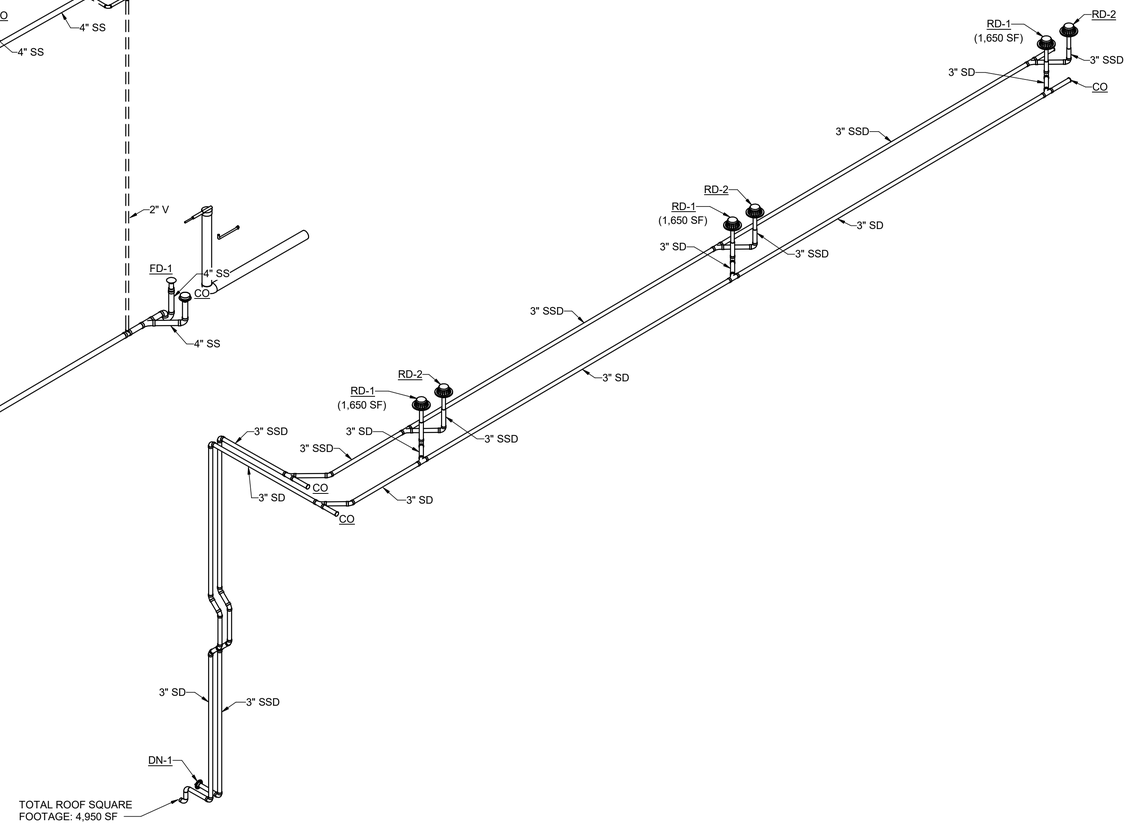

2 - DIGESTER BUILDING STORM DRAIN RISER
NOT TO SCALE

THE DRAWINGS IN THIS SET ARE RECORD DRAWINGS. THEY ARE CONSTRUCTION CONTRACT DRAWINGS WHICH HAVE BEEN REVISED BASED ON AVAILABLE FIELD INFORMATION RECORDED BY OTHERS DURING CONSTRUCTION OF THIS CONTRACT. THERE HAS BEEN NO VERIFICATION OF DIMENSIONS SHOWN ON THE CONSTRUCTION DRAWINGS OR THE ACCURACY/COMPLETENESS OF THE FIELD INFORMATION RECEIVED.

SIGNATURE — DATE 2/7/2022

AS-BUILT REPLACEMENT SHEET

PROFESSIONAL CERTIFICATION

THIS DRAWING WAS ORIGINALLY APPROVED FOR CONSTRUCTION AND SEALED BY CHRISTOPHER S. WORK, A REGISTERED PROFESSIONAL ENGINEER IN THE STATE OF MARYLAND, NO. 50093.

NOTICE TO CONTRACTORS

- PROJECT ELEVATIONS ARE BASED ON NAVD88 AND HOWARD COUNTY'S BENCHMARK SYSTEM
- PREVIOUS PROJECTS USED OTHER DATUMS
- APPLY THE FOLLOWING CONVERSIONS WHEN USING PREVIOUS CONTRACT DRAWINGS:
  - ADDITION NO. 6: SUBTRACT 0.80 FT
  - PRIOR ADDITIONS: SUBTRACT 1.04 FT

DEPARTMENT OF PUBLIC WORKS
HOWARD COUNTY, MARYLAND

CHIEF, BUREAU OF UTILITIES — DATE

DES: CSW
DRN: JCS
CHK: BRP
DATE: 08/2017

DATE	REV	DESCRIPTION
07/2019		RECORD DRAWING

PLUMBING

PLUMBING RISERS 1

LITTLE PATUXENT WATER RECLAMATION PLANT
8TH ADDITION
BIOSOLIDS PROCESSING FACILITIES - PHASE I

CAPITAL PROJECT S-6295
CONTRACT NO. 24-4935

ELECTION DISTRICT NO. 6
HOWARD COUNTY, MARYLAND

SCALE AS SHOWN

SHEET 282 OF 463

P-903

BIM 360://10054364 – Little Patuxent WRP 8th Addition/264591_300_HP_V18.rvt
1/12/2022 9:08:04 AM

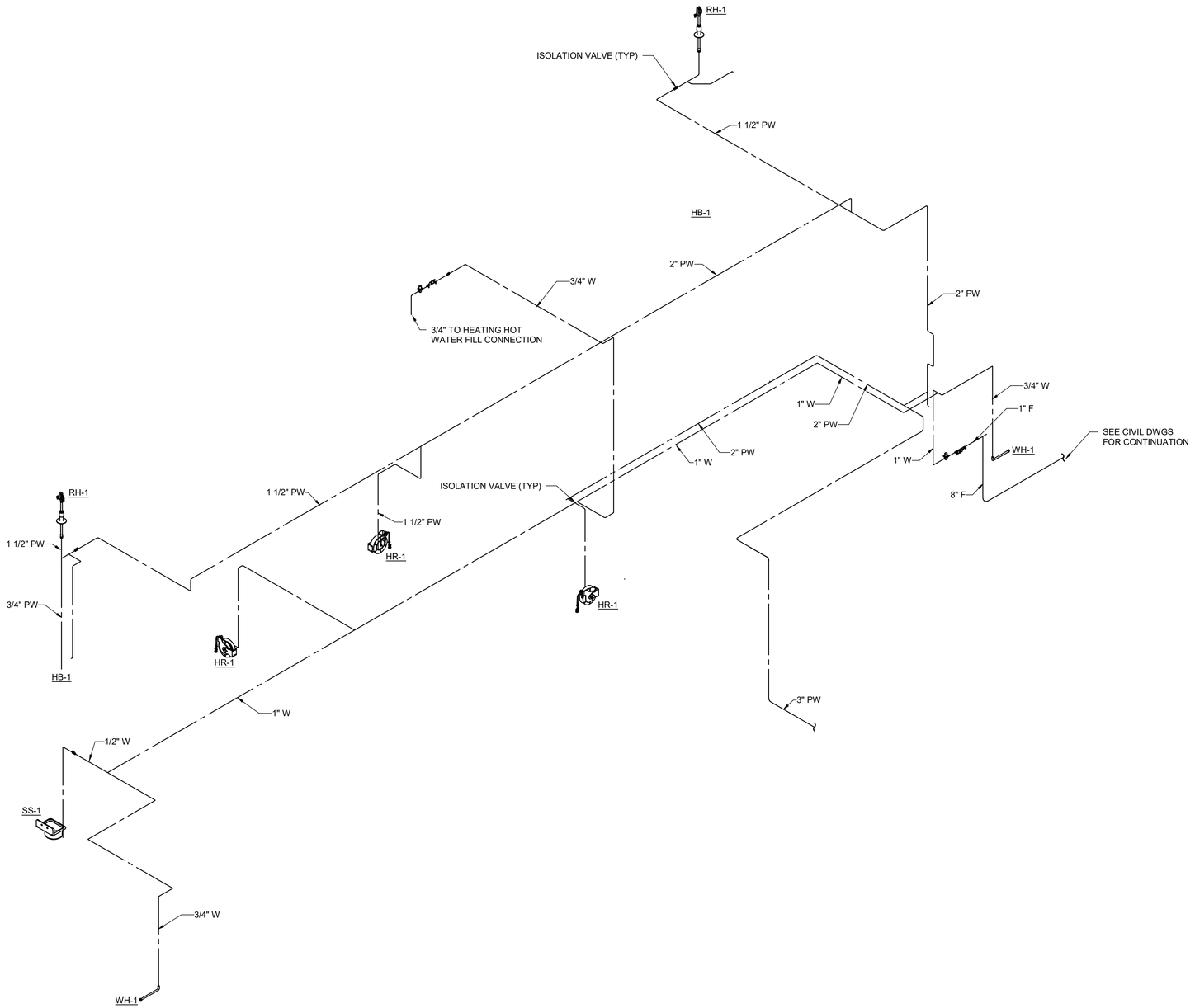

1 / - DIGESTER CONTROL BUILDING SUPPLY RISER
NOT TO SCALE

THE DRAWINGS IN THIS SET ARE RECORD DRAWINGS. THEY ARE CONSTRUCTION CONTRACT DRAWINGS WHICH HAVE BEEN REVISED BASED ON AVAILABLE FIELD INFORMATION RECORDED BY OTHERS DURING CONSTRUCTION OF THIS CONTRACT. THERE HAS BEEN NO VERIFICATION OF DIMENSIONS SHOWN ON THE CONSTRUCTION DRAWINGS OR THE ACCURACY/COMPLETENESS OF THE FIELD INFORMATION RECEIVED.

SIGNATURE _____ DATE 2/7/2022

AS-BUILT REPLACEMENT SHEET

PROFESSIONAL CERTIFICATION

THIS DRAWING WAS ORIGINALLY APPROVED FOR CONSTRUCTION AND SEALED BY CHRISTOPHER S. WORK, A REGISTERED PROFESSIONAL ENGINEER IN THE STATE OF MARYLAND, NO. 50093.

NOTICE TO CONTRACTORS

- PROJECT ELEVATIONS ARE BASED ON NAVD88 AND HOWARD COUNTY'S BENCHMARK SYSTEM
- PREVIOUS PROJECTS USED OTHER DATUMS
- APPLY THE FOLLOWING CONVERSIONS WHEN USING PREVIOUS CONTRACT DRAWINGS:
  - ADDITION NO. 6: SUBTRACT 0.80 FT
  - PRIOR ADDITIONS: SUBTRACT 1.04 FT

DEPARTMENT OF PUBLIC WORKS
HOWARD COUNTY, MARYLAND

CHIEF, BUREAU OF UTILITIES DATE

DES: CSW
DRN: JCS
CHK: BRP
DATE: 08/2017

DATE	REV	DESCRIPTION
07/2019		RECORD DRAWING

PLUMBING

PLUMBING RISERS 2

LITTLE PATUXENT WATER RECLAMATION PLANT
8TH ADDITION
BIOSOLIDS PROCESSING FACILITIES - PHASE I

CAPITAL PROJECT S-6295
CONTRACT NO. 24-4935

ELECTION DISTRICT NO. 6
HOWARD COUNTY, MARYLAND

SCALE AS SHOWN

SHEET 283 OF 463

P-904

BIM 360://10054364 – Little Patuxent WRP 8th Addition/264591_300_HP_V18.rvt
1/12/2022 9:08:04 AM

NFPA 13 SPRINKLER SYSTEM SCHEDULE (WET PIPE)					
AREA	NFPA 13 HAZARD OCCUPANCY	MIN. DENSITY (GPM/SF)	MINIMUM HYDRAULIC DESIGN AREA (SF)	HOSE (GPM)	DURATION (MIN.)
PUMP ROOM, BOILER ROOM	ORDINARY HAZARD (GROUP 2)	0.20	1500	250	60

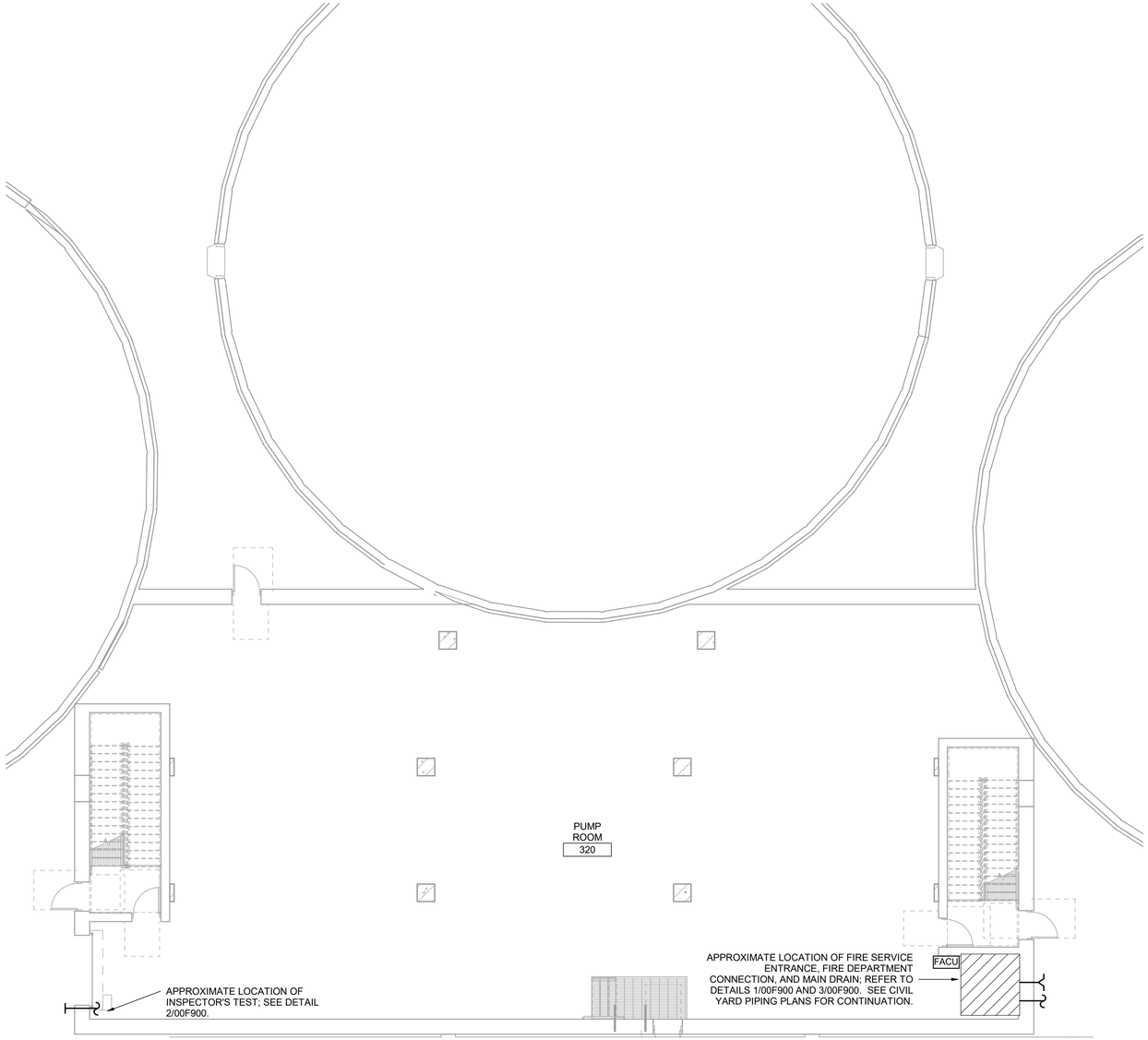

FIRST FLOOR FIRE SUPPRESSION PLAN

1/8" = 1'-0"

FIRE ALARM LEGEND

FACU **FIRE ALARM CONTROL UNIT**

NFPA 13 HAZARD OCCUPANCY LEGEND

☐ ORDINARY HAZARD (GROUP 2)

GENERAL FIRE ALARM NOTES:

1. A FIRE ALARM SYSTEM WILL BE PROVIDED FOR THE DIGESTER BUILDING (GROUP F-1 OCCUPANCY) IN ACCORDANCE WITH IBC §907.2.4. THE FIRE ALARM SYSTEM IS A DELEGATED DESIGN WITH PERFORMANCE SPECIFICATIONS. PROVIDE A COMPLETE AND CODE COMPLIANT FIRE ALARM SYSTEM MEETING THE REQUIREMENTS OF ALL APPLICABLE LOCAL AND NATIONAL CODES. THIS PLAN TO BE READ IN CONJUNCTION WITH THE FIRE ALARM SYSTEM SPECIFICATION, 28 31 00.

2. THE DIGESTER BUILDING'S AUTOMATIC SPRINKLER SYSTEM SHALL BE MONITORED BY A LISTED FIRE ALARM CONTROL UNIT (FACU). PER IBC § 903.4, THE FACU IS REQUIRED TO OPERATE SUCH THAT "ALARM, SUPERVISORY AND TROUBLE SIGNALS SHALL BE DISTINCTLY DIFFERENT AND SHALL BE AUTOMATICALLY TRANSMITTED TO AN APPROVED SUPERVISING STATION OR, WHERE APPROVED BY THE FIRE CODE OFFICIAL, SHALL SOUND AN AUDIBLE SIGNAL AT A CONSTANTLY ATTENDED LOCATION." ADDITIONALLY, PER §903.4.1, THE "ALARM, SUPERVISORY AND TROUBLE SIGNALS SHALL BE DISTINCTLY DIFFERENT AND SHALL BE AUTOMATICALLY TRANSMITTED TO AN APPROVED SUPERVISING STATION OR, WHERE APPROVED BY THE FIRE CODE OFFICIAL, SHALL SOUND AN AUDIBLE SIGNAL AT A CONSTANTLY ATTENDED LOCATION." FINALLY, PER §903.4.2 "AN APPROVED AUDIBLE DEVICE, LOCATED ON THE EXTERIOR OF THE BUILDING IN AN APPROVED LOCATION, SHALL BE CONNECTED TO EACH AUTOMATIC SPRINKLER SYSTEM. SUCH SPRINKLER WATERFLOW ALARM DEVICES SHALL BE ACTIVATED BY WATER FLOW EQUIVALENT TO THE FLOW OF A SINGLE SPRINKLER OF THE SMALLEST ORIFICE SIZE INSTALLED IN THE SYSTEM. WHERE A FIRE ALARM SYSTEM IS INSTALLED, ACTUATION OF THE AUTOMATIC SPRINKLER SYSTEM SHALL ACTUATE THE BUILDING FIRE ALARM SYSTEM."

3. THE DIGESTER BUILDING FIRE ALARM CONTROL UNIT (FACU) SHALL MONITOR THE DUCT DETECTOR(S) PROVIDED BY THE MECHANICAL CONTRACTOR AS PART OF THE AHU PACKAGE(S). REFER TO HVAC DRAWING H-321 FOR SMOKE DUCT DETECTOR LOCATIONS. COORDINATE SHUTDOWN OF UNITS AS NEEDED TO MEET CODE.

4. THE DIGESTER BUILDING FIRE ALARM CONTROL UNIT (FACU) SHALL PROVIDE POINT ADDRESSABLE SIGNAL ANNUNCIATION (ALARM, TROUBLE, & SUPERVISORY SIGNALS BY DEVICE/MODULE ADDRESS) TO THE ADMINISTRATION BUILDING FACU VIA A DEDICATED FIRE ALARM NETWORK USING FIBER OPTIC CABLES BEING RUN BETWEEN BUILDINGS.

5. THE FACU IN THE DIGESTER BUILDING WILL PROVIDE DRY CONTACT TYPE RELAY OUTPUTS FOR ANCILLARY REPORTING OF 2 FIRE ALARM SYSTEM SIGNALS TO THE PLANT CONTROL SYSTEM (PCS) / SCADA SYSTEM IN THE DIGESTER BUILDING; 'FIRE ALARM' AND 'FA TROUBLE OR SUPERVISORY CONDITION'. THE PCS / SCADA PANEL IS EXPECTED TO BE LOCATED ON THE DIGESTER BUILDING 2ND FLOOR.

6. A FACU SHALL ALSO BE PROVIDED IN THE ADMINISTRATION BUILDING SHALL BE PROVIDED AS FOLLOWS:
   A. THE ADMINISTRATION BUILDING FACU SHALL SERVE AS THE GLOBAL FIRE ALARM NETWORK ANNUNCIATOR FOR A LOCATION MANNED 24 HOURS-A-DAY / 7 DAYS-A-WEEK IN AN NFPA 72 PROPRIETARY SUPERVISING STATION CONFIGURATION FOR EMERGENCY SERVICES NOTIFICATION. THE ADMINISTRATION BUILDING FACU SHALL PROVIDE POINT ADDRESSABLE SIGNAL ANNUNCIATION (ALARM, TROUBLE, & SUPERVISORY SIGNALS BY DEVICE/MODULE ADDRESS) OF ALL EVENTS ON THE FIRE ALARM NETWORK.
   B. THE ADMINISTRATION BUILDING FACU WILL BE LOCATED IN THE CONTROL ROOM. THE CONTRACTOR SHALL CONDUCT NECESSARY SITE INVESTIGATION AND COORDINATE THE FINAL LOCATION OF THE ADMINISTRATION BUILDING FACU PANEL WITH THE OWNER. THE ADMINISTRATION BUILDING FACU AND DIGESTER BUILDING FACU SHALL BE NETWORKED USING MULTI-MODE FIBER OPTIC CABLE BEING INSTALLED BY OTHERS BETWEEN PATCH PANELS IN THOSE RESPECTIVE BUILDINGS. REFER TO THE CONTRACT DOCUMENTS FOR THE FIBER NETWORK DIAGRAM (I-904) AND OVERALL ELECTRICAL SITE PLAN (E-3).
   C. THE ADMINISTRATION BUILDING FACU SHALL BE FULLY CAPABLE OF ADDING A DACT (DIGITAL ALARM COMMUNICATOR TRANSMITTER) IN THE FUTURE. THE DACT WOULD ONLY BE REQUIRED IN THE EVENT THAT THE AHJ REQUIRES HOWARD COUNTY LPWRP TO PROVIDE AUTOMATIC EMERGENCY SERVICES NOTIFICATION VIA A CENTRAL STATION SERVICE CONFIGURATION (INSTEAD OF A PROPRIETARY SUPERVISING STATION CONFIGURATION).

7. EACH OF THE FACU'S DESCRIBED ABOVE SHALL BE PROVIDED WITH THE FOLLOWING:
   A. IN EACH BUILDING (DIGESTER BUILDING AND ADMINISTRATION BUILDING), THE CONTRACTOR SHALL PROVIDE FIBER OPTIC PATCH CABLES BETWEEN THE FIBER PATCH PANEL(S) AND RESPECTIVE FACU'S AND/OR PROVIDE REMOTE FACU'S AT FIBER PATCH PANEL LOCATIONS; FINAL CONFIGURATION SHALL BE AS DETERMINED BY FIRE ALARM SYSTEM DESIGNER, ETC. THE LOCATION OF THE FIBER PATCH PANEL FOR THE DIGESTER BUILDING IS THE MCC PENTHOUSE BEING BUILT ABOVE THE SOLIDS PIPE GALLERY. THE FIBER PATCH PANEL FOR THE ADMINISTRATION BUILDING IS IN THE CONTROL ROOM.
   B. PROVIDE FIBER-TO-COPPER MODULES IN THE FACU'S OR REMOTE FACU'S, AS NEEDED FOR NETWORK FUNCTIONALITY.

GENERAL FIRE SUPPRESSION NOTES:

1. THE FIRE SPRINKLER SYSTEM IS A DELEGATED DESIGN WITH PERFORMANCE SPECIFICATIONS. PROVIDE A CODE COMPLIANT SPRINKLER SYSTEM MEETING THE REQUIREMENTS OF ALL APPLICABLE LOCAL AND NATIONAL CODES. THIS PLAN TO BE READ IN CONJUNCTION WITH THE FIRE PROTECTION SYSTEMS SPECIFICATION, 21 05 00.

2. NOTE THAT THE CEILING HEIGHTS AND CONFIGURATIONS, AS WELL AS EQUIPMENT HUNG FROM CEILINGS, WITHIN EACH AREA. CONTRACTOR SHALL REFER TO ARCHITECTURAL PRINTS AND COORDINATE AS REQUIRED AND SHALL INCORPORATE ALL NEEDED ACCOMMODATIONS INTO FIRE SPRINKLER SYSTEM DESIGN.

3. INTERMEDIATE TEMPERATURE CLASSIFICATION SPRINKLER HEADS SHALL BE PROVIDED IN ALL MECHANICAL AND PROCESS ROOMS (BOILER ROOM, PUMP ROOM, ETC.).

4. ALL SPRINKLER HEADS SHALL BE PROVIDED WITH GUARDS IN MECHANICAL AND PROCESS ROOMS (BOILER ROOM, PUMP ROOM, ETC.).

5. SPRINKLER HEADS SHALL BE HYDRAULICALLY CALCULATED IN ACCORDANCE WITH NFPA 13, 2013.

6. PROVIDE THRUST RESTRAINT ON FIRE PROTECTION WATER SERVICE IN ACCORDANCE WITH NFPA 24.

7. A HYDRANT FLOW TEST WAS PERFORMED BY THE HOWARD COUNTY DEPARTMENT OF PUBLIC WORKS ON JULY 8, 2016 USING EXISTING HYDRANTS NEARBY THIS PLANNED BUILDING SITE AND THE RESULTS WERE 92 PSI STATIC PRESSURE AND 42 PSI RESIDUAL PRESSURE WITH 1,643 GPM FLOWING. THE CONTRACTOR SHALL BE RESPONSIBLE TO CONDUCT A HYDRANT FLOW TEST IN ACCORDANCE WITH NFPA 291 TO VERIFY THE AVAILABLE PRESSURE & FLOW OF THE WATER SUPPLY. THE CONTRACTOR SHALL THEN DESIGN FIRE SPRINKLER SYSTEM USING STATIC PRESSURE AND RESIDUAL PRESSURE/FLOWS AS DETERMINED DURING THEIR TESTING. THE SPRINKLER SYSTEM SHALL BE HYDRAULICALLY DESIGNED TO WORK WITHOUT ADDITION OF A FIRE PUMP BY INCREASING PIPE SIZES, SPRINKLER HEAD K-FACTORS, REDUCED HEAD SPACING, AND SO FORTH AS NECESSARY.

THE DRAWINGS IN THIS SET ARE RECORD DRAWINGS. THEY ARE CONSTRUCTION CONTRACT DRAWINGS WHICH HAVE BEEN REVISED BASED ON AVAILABLE FIELD INFORMATION RECORDED BY OTHERS DURING CONSTRUCTION OF THIS CONTRACT. THERE HAS BEEN NO VERIFICATION OF DIMENSIONS SHOWN ON THE CONSTRUCTION DRAWINGS OR THE ACCURACY/COMPLETENESS OF THE FIELD INFORMATION RECEIVED.

SIGNATURE — DATE 2/7/2023

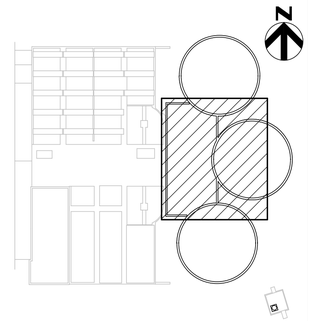

KEY PLAN

AS-BUILT REPLACEMENT SHEET

PROFESSIONAL CERTIFICATION

THIS DRAWING WAS ORIGINALLY APPROVED FOR CONSTRUCTION AND SEALED BY ZACHARY J. SACHSENMAIER, A REGISTERED PROFESSIONAL ENGINEER IN THE STATE OF MARYLAND, NO. 42646.

NOTICE TO CONTRACTORS

- PROJECT ELEVATIONS ARE BASED ON NAVD88 AND HOWARD COUNTY'S BENCHMARK SYSTEM
- PREVIOUS PROJECTS USED OTHER DATUMS
- APPLY THE FOLLOWING CONVERSIONS WHEN USING PREVIOUS CONTRACT DRAWINGS:
  - ADDITION NO. 6: SUBTRACT 0.80 FT
  - PRIOR ADDITIONS: SUBTRACT 1.04 FT

DEPARTMENT OF PUBLIC WORKS
HOWARD COUNTY, MARYLAND

CHIEF, BUREAU OF UTILITIES — DATE

DES: MS
DRN: TF
CHK: ZS
DATE: 12/2016

DATE	REV	DESCRIPTION
07/2019		RECORD DRAWING

FIRE PROTECTION

DIGESTER BUILDING FIRST FLOOR FIRE SUPPRESSION AND FIRE ALARM PLAN

LITTLE PATUXENT WATER RECLAMATION PLANT
8TH ADDITION
BIOSOLIDS PROCESSING FACILITIES - PHASE I

CAPITAL PROJECT S-6295
CONTRACT NO. 24-4935

ELECTION DISTRICT NO. 6
HOWARD COUNTY, MARYLAND

SCALE AS SHOWN

SHEET 284 OF 463

F-320

BIM 360://10054364 – Little Patuxent WRP 8th Addition/264591_100_A_V18.rvt
1/11/2022 9:39:33 AM

NFPA 13 SPRINKLER SYSTEM SCHEDULE (WET PIPE)					
AREA	NFPA 13 HAZARD OCCUPANCY	MIN. DENSITY (GPM/SF)	MINIMUM HYDRAULIC DESIGN AREA (SF)	HOSE (GPM)	DURATION (MIN.)
PUMP ROOM, BOILER ROOM	ORDINARY HAZARD (GROUP 2)	0.20	1500	250	60

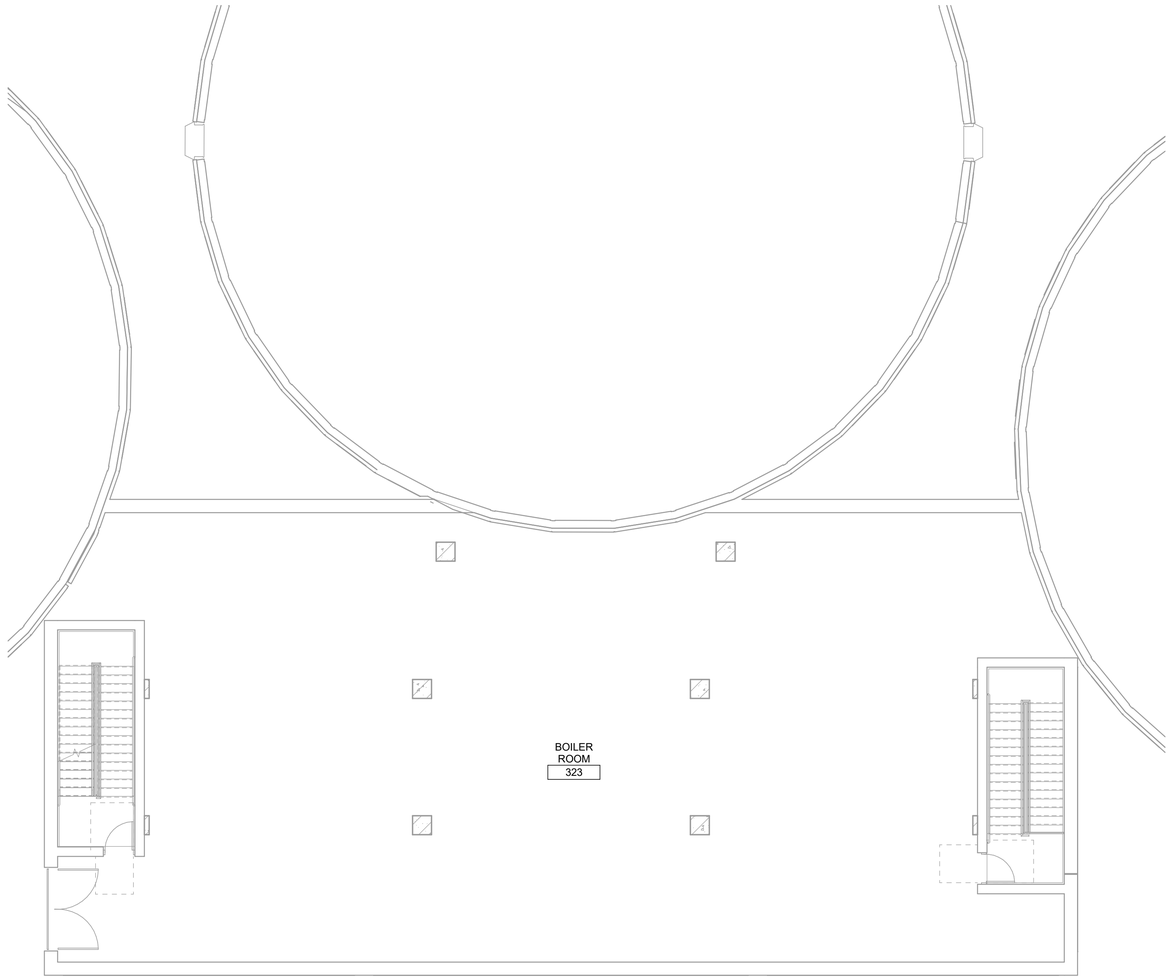

NFPA 13 HAZARD OCCUPANCY LEGEND

☐ ORDINARY HAZARD (GROUP 2)

SECOND FLOOR FIRE SUPPRESSION PLAN

1/8" = 1'-0"

THE DRAWINGS IN THIS SET ARE RECORD DRAWINGS. THEY ARE CONSTRUCTION CONTRACT DRAWINGS WHICH HAVE BEEN REVISED BASED ON AVAILABLE FIELD INFORMATION RECORDED BY OTHERS DURING CONSTRUCTION OF THIS CONTRACT. THERE HAS BEEN NO VERIFICATION OF DIMENSIONS SHOWN ON THE CONSTRUCTION DRAWINGS OR THE ACCURACY/COMPLETENESS OF THE FIELD INFORMATION RECEIVED.

SIGNATURE 2/7/2023 DATE

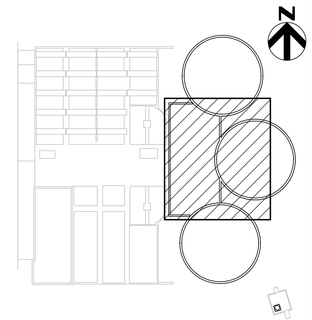

KEY PLAN

AS-BUILT REPLACEMENT SHEET

PROFESSIONAL CERTIFICATION

THIS DRAWING WAS ORIGINALLY APPROVED FOR CONSTRUCTION AND SEALED BY ZACHARY J. SACHSENMAIER, A REGISTERED PROFESSIONAL ENGINEER IN THE STATE OF MARYLAND, NO. 42646.

NOTICE TO CONTRACTORS

- PROJECT ELEVATIONS ARE BASED ON NAVD88 AND HOWARD COUNTY'S BENCHMARK SYSTEM
- PREVIOUS PROJECTS USED OTHER DATUMS
- APPLY THE FOLLOWING CONVERSIONS WHEN USING PREVIOUS CONTRACT DRAWINGS:
  - ADDITION NO. 6: SUBTRACT 0.80 FT
  - PRIOR ADDITIONS: SUBTRACT 1.04 FT

DEPARTMENT OF PUBLIC WORKS
HOWARD COUNTY, MARYLAND

CHIEF, BUREAU OF UTILITIES DATE

DES: MS
DRN: TF
CHK: ZS
DATE: 12/2016

DATE	REV	DESCRIPTION
07/2019		RECORD DRAWING

FIRE PROTECTION

DIGESTER BUILDING SECOND FLOOR FIRE SUPPRESSION AND FIRE ALARM PLAN

LITTLE PATUXENT WATER RECLAMATION PLANT
8TH ADDITION
BIOSOLIDS PROCESSING FACILITIES - PHASE I

CAPITAL PROJECT S-6295
CONTRACT NO. 24-4935

ELECTION DISTRICT NO. 6
HOWARD COUNTY, MARYLAND

SCALE AS SHOWN

SHEET 285 OF 463

F-321

BIM 360://10054364 – Little Patuxent WRP 8th Addition/264591_100_A_V18.rvt
1/11/2022 9:39:34 AM

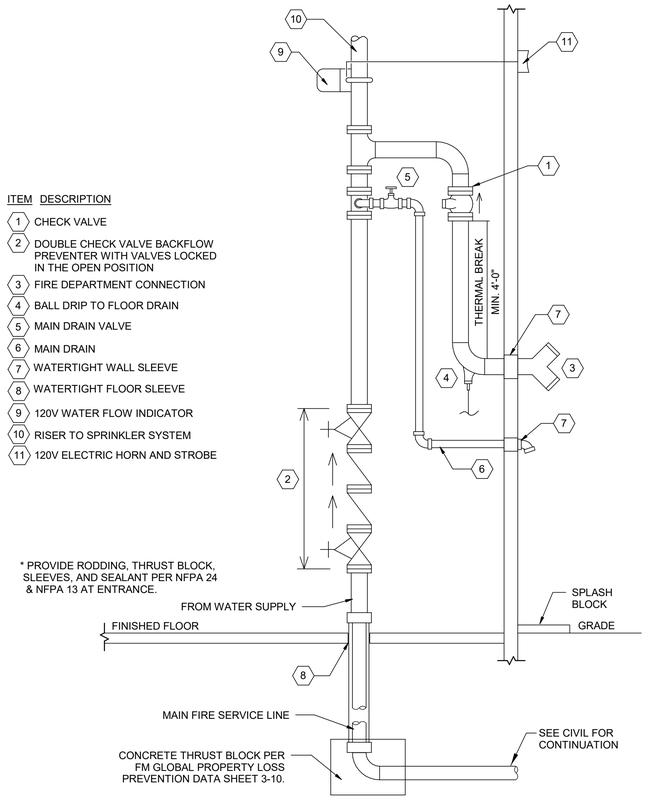

1 WATER SUPPLY RISER DETAIL
NOT TO SCALE

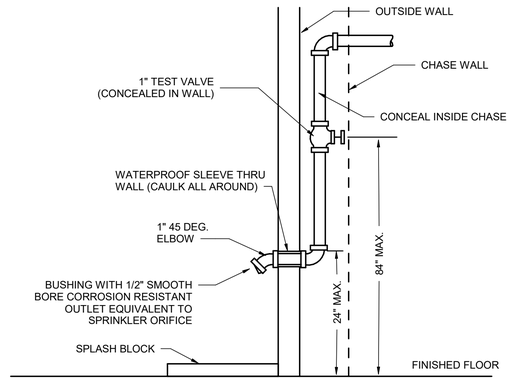

2 INSPECTOR'S TEST CONNECTION DETAIL
NOT TO SCALE

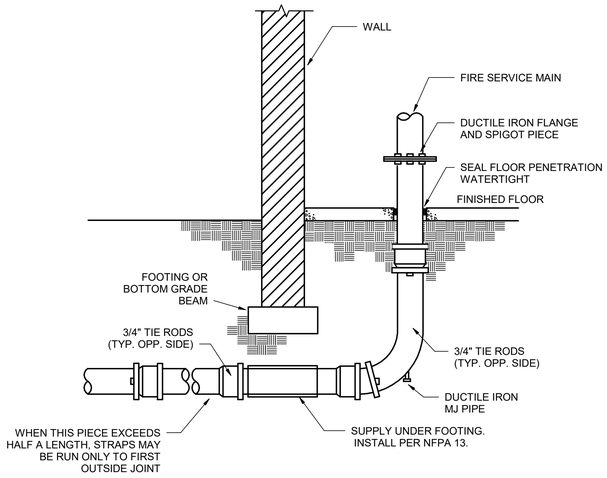

3 WATER MAIN BUILDING ENTRANCE DETAIL
NOT TO SCALE

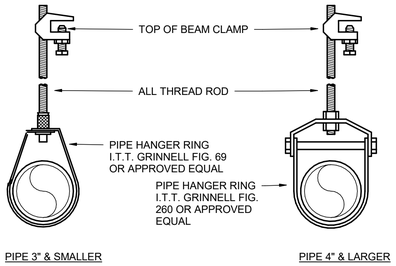

4 TOP BEAM CLAMP PIPE HANGER DETAIL
NOT TO SCALE

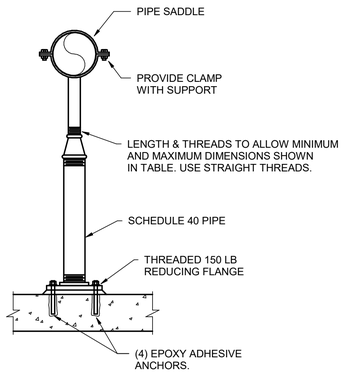

5 FLOOR PIPE SUPPORT DETAIL
NOT TO SCALE

THE DRAWINGS IN THIS SET ARE RECORD DRAWINGS. THEY ARE CONSTRUCTION CONTRACT DRAWINGS WHICH HAVE BEEN REVISED BASED ON AVAILABLE FIELD INFORMATION RECORDED BY OTHERS DURING CONSTRUCTION OF THIS CONTRACT. THERE HAS BEEN NO VERIFICATION OF DIMENSIONS SHOWN ON THE CONSTRUCTION DRAWINGS OR THE ACCURACY/COMPLETENESS OF THE FIELD INFORMATION RECEIVED.

SIGNATURE _____ DATE 2/7/2023

HDR

AS-BUILT REPLACEMENT SHEET

PROFESSIONAL CERTIFICATION
THIS DRAWING WAS ORIGINALLY APPROVED FOR CONSTRUCTION AND SEALED BY ZACHARY J. SACHSENMAIER, A REGISTERED PROFESSIONAL ENGINEER IN THE STATE OF MARYLAND, NO. 42646.

NOTICE TO CONTRACTORS
- PROJECT ELEVATIONS ARE BASED ON NAVD88 AND HOWARD COUNTY'S BENCHMARK SYSTEM
- PREVIOUS PROJECTS USED OTHER DATUMS
- APPLY THE FOLLOWING CONVERSIONS WHEN USING PREVIOUS CONTRACT DRAWINGS:
  - ADDITION NO. 6: SUBTRACT 0.80 FT
  - PRIOR ADDITIONS: SUBTRACT 1.04 FT

DEPARTMENT OF PUBLIC WORKS
HOWARD COUNTY, MARYLAND

CHIEF, BUREAU OF UTILITIES DATE

DES: MS
DRN: TF
CHK: ZS
DATE: 12/2016

DATE	REV	DESCRIPTION
07/2019		RECORD DRAWING

FIRE PROTECTION

FIRE SUPPRESION DETAILS

LITTLE PATUXENT WATER RECLAMATION PLANT
8TH ADDITION
BIOSOLIDS PROCESSING FACILITIES - PHASE I

CAPITAL PROJECT S-6295
CONTRACT NO. 24-4935

ELECTION DISTRICT NO. 6
HOWARD COUNTY, MARYLAND

SCALE AS SHOWN

SHEET **286** OF **463**

F-900

BIM 360://10054364 – Little Patuxent WRP 8th Addition/264591_100_A_V18.rvt
1/11/2022 9:39:35 AM

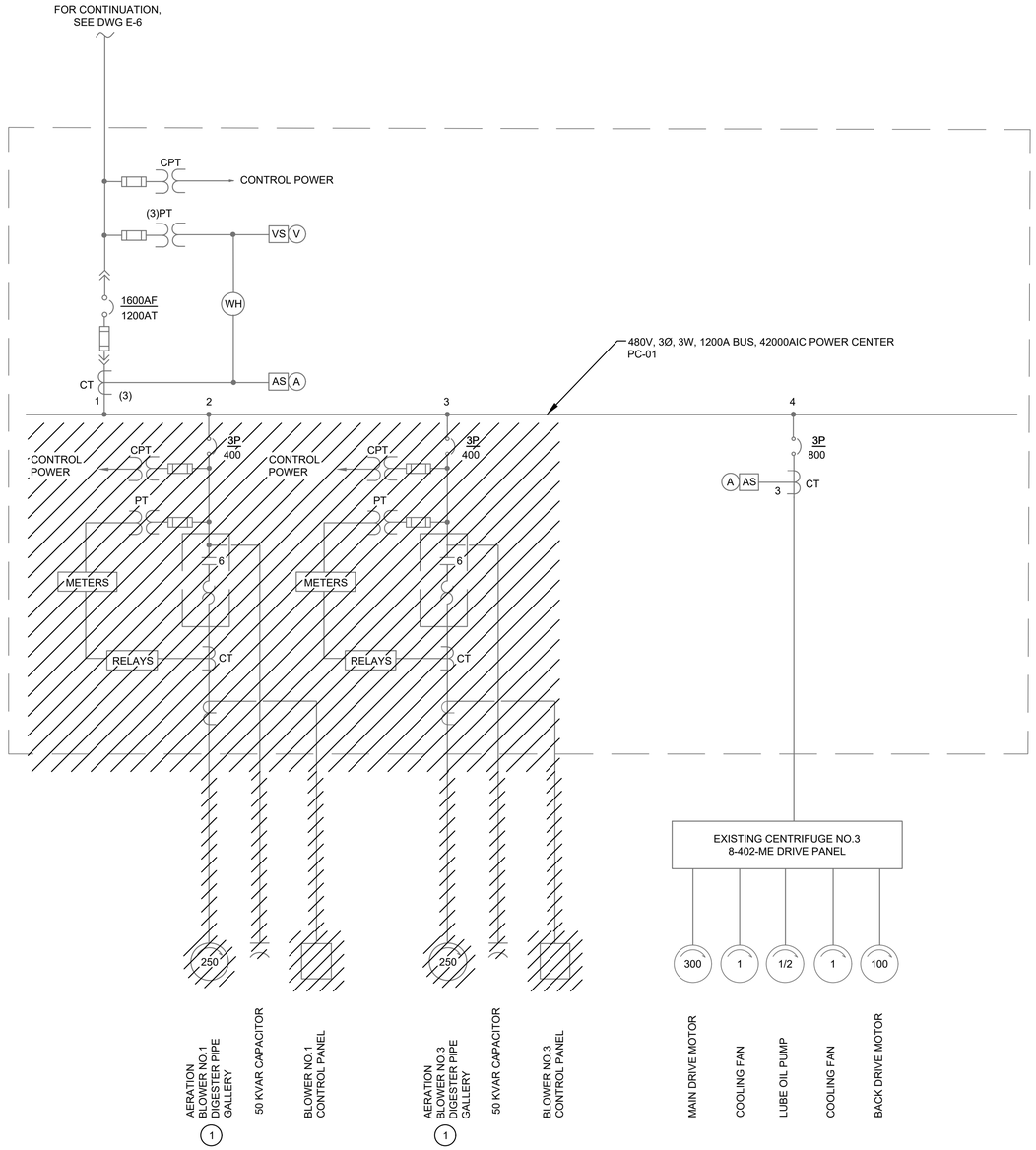

CHEMICAL HANDLING AREA - EXISTING SWITCHBOARD PC-1 - ONE LINE DIAGRAM - DEMOLITION

SCALE: NONE

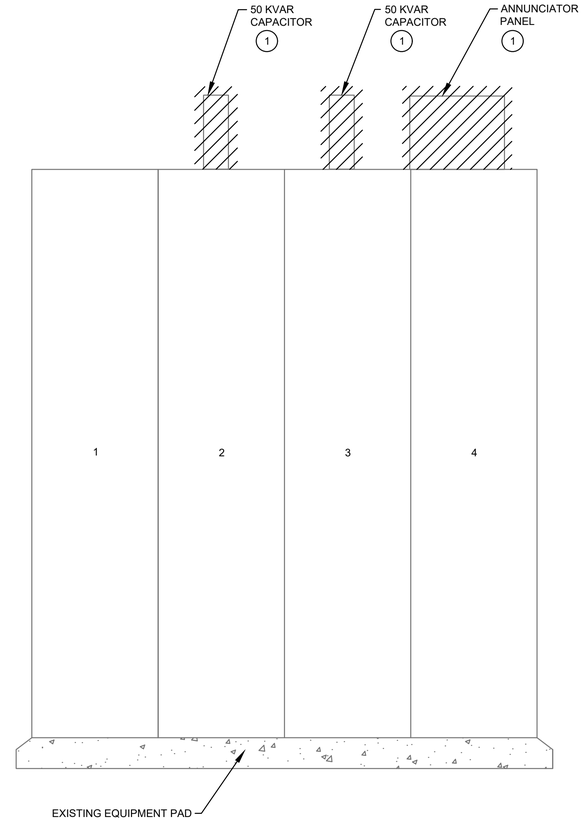

CHEMICAL HANDLING AREA - EXISTING SWITCHBOARD PC-1 - ELEVATION - DEMOLITION

SCALE: NONE

GENERAL NOTES:

1. FOR SYMBOLS AND ABBREVIATIONS, SEE DRAWING E-1.
2. FOR CONSTRUCTION SEQUENCE, SEE DRAWING E-2.
3. FOR EXISTING SWITCHBOARD PC-1 LOCATION, SEE DRAWING EX-19.
4. PERFORM DEMOLITION WORK PER GENERAL DEMOLITION SHEETS. DISCONNECT AND REMOVE ALL ELECTRICAL CONNECTIONS TO EQUIPMENT IMPACTED BY DEMOLITION WORK, FROM EQUIPMENT BACK TO CORRESPONDING MCC, POWER CENTER, PANELBOARD OR I/O CABINET AS APPLICABLE. DEMOLITION SHALL BE COMPLETE AND SHALL INCLUDE WIRING, CONDUIT, PULL BOXES, JUNCTION BOXES, ETC. ASSOCIATED WITH THE EQUIPMENT BEING DEMOLISHED UNLESS NOTED OTHERWISE WITH THE EXCEPTION OF CONDUITS EMBEDDED IN SLAB WHICH SHALL BE CUT FLUSH, CAPPED AND ABANDONED IN PLACE.

DRAWING NOTES:

(1) DISCONNECT AND REMOVE EXISTING AERATION BLOWERS 1, 3 INCLUDING BLOWER MOTOR, CONNECTIONS, CABLE AND CONDUIT, MOTOR STARTER, CIRCUIT BREAKER, POWER FACTOR CORRECTION CAPACITORS, ANNUNCIATION PANEL AS INDICATED.

THE DRAWINGS IN THIS SET ARE RECORD DRAWINGS. THEY ARE CONSTRUCTION CONTRACT DRAWINGS WHICH HAVE BEEN REVISED BASED ON AVAILABLE FIELD INFORMATION RECORDED BY OTHERS DURING CONSTRUCTION OF THIS CONTRACT. THERE HAS BEEN NO VERIFICATION OF DIMENSIONS SHOWN ON THE CONSTRUCTION DRAWINGS OR THE ACCURACY/COMPLETENESS OF THE FIELD INFORMATION RECEIVED.

SIGNATURE — DATE 2/7/2025

SHAH & ASSOCIATES

AS-BUILT REPLACEMENT SHEET

PROFESSIONAL CERTIFICATION
THIS DRAWING WAS ORIGINALLY APPROVED FOR CONSTRUCTION AND SEALED BY KANAIYALAL R. SHAH, A REGISTERED PROFESSIONAL ENGINEER IN THE STATE OF MARYLAND, NO. 11084.

NOTICE TO CONTRACTORS
- PROJECT ELEVATIONS ARE BASED ON NAVD88 AND HOWARD COUNTY'S BENCHMARK SYSTEM
- PREVIOUS PROJECTS USED OTHER DATUMS
- APPLY THE FOLLOWING CONVERSIONS WHEN USING PREVIOUS CONTRACT DRAWINGS:
  - ADDITION NO. 6: SUBTRACT 0.80 FT
  - PRIOR ADDITIONS: SUBTRACT 1.04 FT

DEPARTMENT OF PUBLIC WORKS
HOWARD COUNTY, MARYLAND

CHIEF, BUREAU OF UTILITIES — DATE

DES: SR
DRN: VVS
CHK: KRS
DATE: 10/2016

DATE	REV	DESCRIPTION
07/2019		RECORD DRAWING

ELECTRICAL

CHEMICAL HANDLING AREA
EXISTING SWITCHBOARD PC-1
ONE LINE DIAGRAM & ELEVATION
DEMOLITION

LITTLE PATUXENT WATER RECLAMATION PLANT
8TH ADDITION
BIOSOLIDS PROCESSING FACILITIES – PHASE I

CAPITAL PROJECT S-6295
CONTRACT NO. 24-4935

ELECTION DISTRICT NO. 6
HOWARD COUNTY, MARYLAND

SCALE AS SHOWN

SHEET 287 OF 463

EX-3

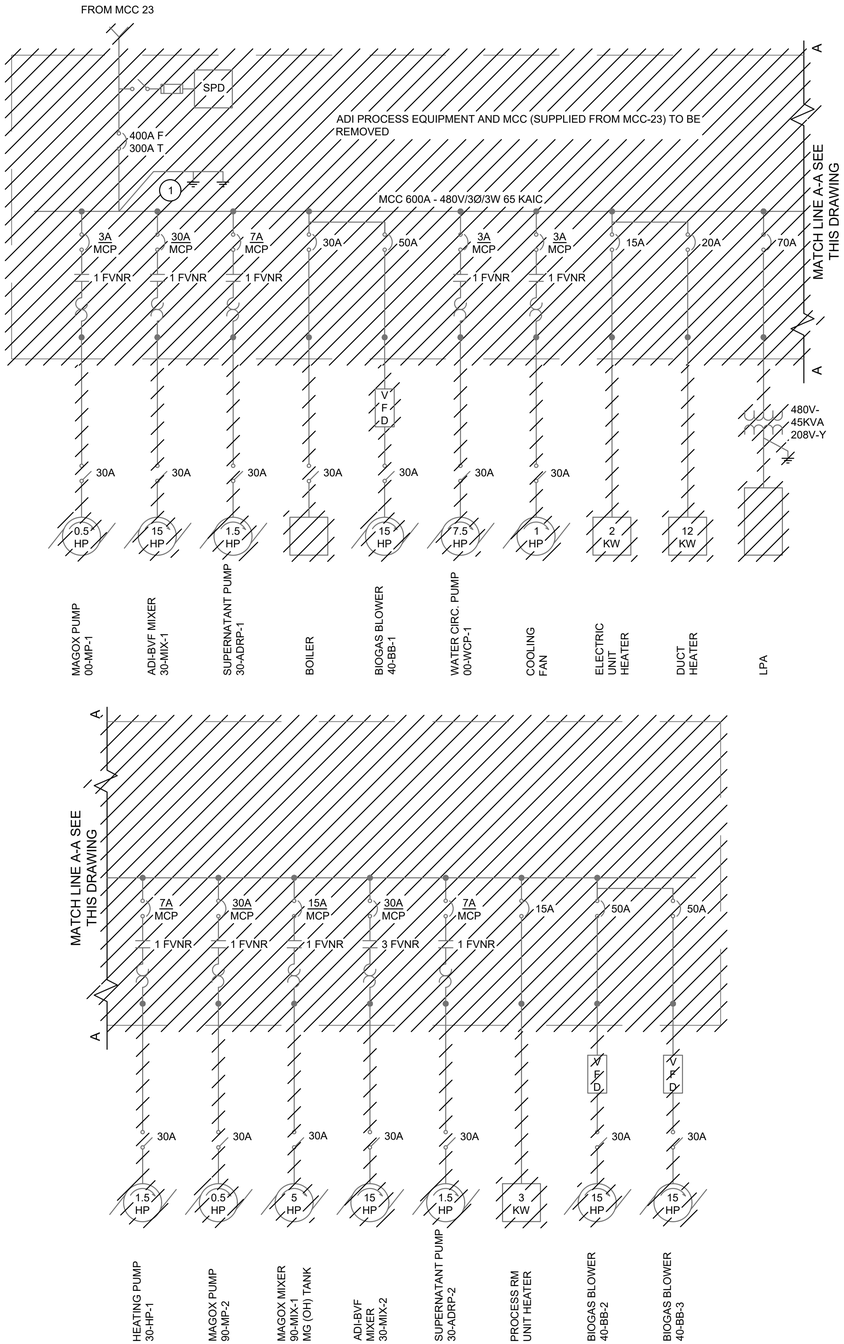

EXISTING MCC - ADI BUILDING - ONE LINE - DEMOLITION

SCALE: NONE

EXISTING MCC - ADI BUILDING - ONE LINE - DEMOLITION

SCALE: NONE

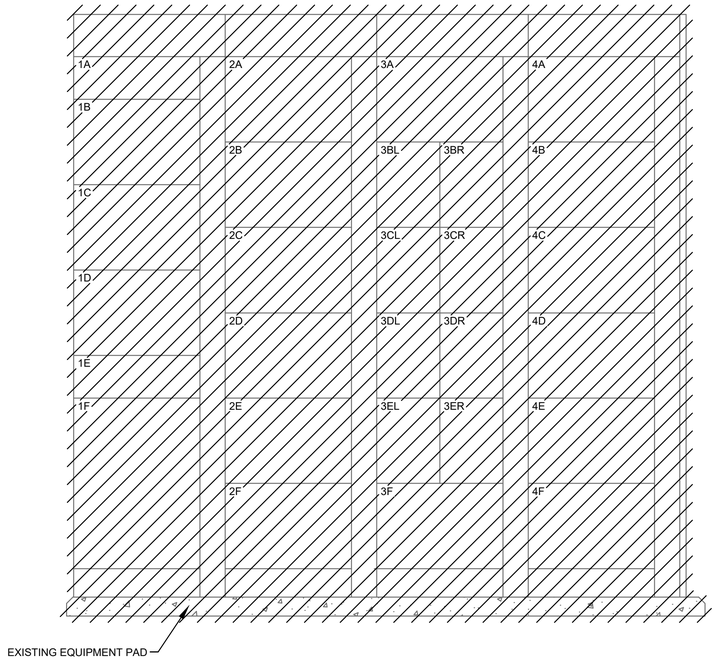

EXISTING MCC - ADI BUILDING - ELEVATION - DEMOLITION (1)

SCALE: NONE

GENERAL NOTES:

1. FOR SYMBOLS AND ABBREVIATIONS, SEE DRAWING E-1.
2. FOR CONSTRUCTION SEQUENCE, SEE DRAWING E-2.
3. PERFORM DEMOLITION WORK PER GENERAL DEMOLITION SHEETS. DISCONNECT AND REMOVE ALL ELECTRICAL CONNECTIONS TO EQUIPMENT IMPACTED BY DEMOLITION WORK, FROM EQUIPMENT BACK TO CORRESPONDING MCC, POWER CENTER, PANELBOARD OR I/O CABINET AS APPLICABLE. DEMOLITION SHALL BE COMPLETE AND SHALL INCLUDE WIRING, CONDUIT, PULL BOXES, JUNCTION BOXES, ETC. ASSOCIATED WITH THE EQUIPMENT BEING DEMOLISHED UNLESS NOTED OTHERWISE WITH THE EXCEPTION OF CONDUITS EMBEDDED IN SLAB WHICH SHALL BE CUT FLUSH, CAPPED AND ABANDONED IN PLACE.

DRAWING NOTES:

(1) MCC-ADI IS LOCATED IN THE EXISTING DIGESTER BUILDING THAT WILL BE COMPLETELY DEMOLISHED. FOR OVERALL DEMOLITION OF THE MCC AND OTHER EQUIPMENT, SEE GENERAL DEMOLITION SHEETS.

THE DRAWINGS IN THIS SET ARE RECORD DRAWINGS. THEY ARE CONSTRUCTION CONTRACT DRAWINGS WHICH HAVE BEEN REVISED BASED ON AVAILABLE FIELD INFORMATION RECORDED BY OTHERS DURING CONSTRUCTION OF THIS CONTRACT. THERE HAS BEEN NO VERIFICATION OF DIMENSIONS SHOWN ON THE CONSTRUCTION DRAWINGS OR THE ACCURACY/COMPLETENESS OF THE FIELD INFORMATION RECEIVED.

SIGNATURE — DATE 2/7/2020

SHAH & ASSOCIATES

AS-BUILT REPLACEMENT SHEET

PROFESSIONAL CERTIFICATION

THIS DRAWING WAS ORIGINALLY APPROVED FOR CONSTRUCTION AND SEALED BY KANAIYALAL R. SHAH, A REGISTERED PROFESSIONAL ENGINEER IN THE STATE OF MARYLAND, NO. 11084.

NOTICE TO CONTRACTORS

- PROJECT ELEVATIONS ARE BASED ON NAVD88 AND HOWARD COUNTY'S BENCHMARK SYSTEM
- PREVIOUS PROJECTS USED OTHER DATUMS
- APPLY THE FOLLOWING CONVERSIONS WHEN USING PREVIOUS CONTRACT DRAWINGS:
  - ADDITION NO. 6: SUBTRACT 0.80 FT
  - PRIOR ADDITIONS: SUBTRACT 1.04 FT

DEPARTMENT OF PUBLIC WORKS
HOWARD COUNTY, MARYLAND

CHIEF, BUREAU OF UTILITIES — DATE

DES: SR
DRN: XMZ
CHK: KRS
DATE: 10/2016

DATE	REV	DESCRIPTION
07/2019		RECORD DRAWING

ELECTRICAL

EXISTING MCC-ADI BUILDING
ONE LINE & ELEVATION
DEMOLITION

LITTLE PATUXENT WATER RECLAMATION PLANT
8TH ADDITION
BIOSOLIDS PROCESSING FACILITIES – PHASE I

CAPITAL PROJECT S-6295
CONTRACT NO. 24-4935

ELECTION DISTRICT NO. 6
HOWARD COUNTY, MARYLAND

SCALE AS SHOWN

SHEET 288 OF 463

EX-4

DRAWING NOTES:

1. DEMOLISH CABLE AND CONDUIT BACK TO THE SOURCE.
2. DEMOLISH THE FEEDERS FROM MCC-9/MCC-10 UP TO THE DISCONNECT SWITCHES. RUN NEW WIRE AND CONDUIT FROM MCC-31 TO THE DISCONNECT SWITCHES TO FEED THE PANELS, MAU AND EXHAUST FAN. FOR UPDATED ONE LINE DIAGRAM AND CABLE AND CONDUIT SCHEDULE, SEE DRAWINGS E-8, E-9 & E-907 RESPECTIVELY.

GENERAL NOTES (CONTINUED):

5. PERFORM DEMOLITION WORK PER GENERAL DEMOLITION SHEETS. DISCONNECT AND REMOVE ALL ELECTRICAL CONNECTIONS TO EQUIPMENT IMPACTED BY DEMOLITION WORK, FROM EQUIPMENT BACK TO CORRESPONDING MCC, POWER CENTER, PANELBOARD OR I/O CABINET AS APPLICABLE. DEMOLITION SHALL BE COMPLETE AND SHALL INCLUDE WIRING, CONDUIT, PULL BOXES, JUNCTION BOXES, ETC. ASSOCIATED WITH THE EQUIPMENT BEING DEMOLISHED UNLESS NOTED OTHERWISE WITH THE EXCEPTION OF CONDUITS EMBEDDED IN SLAB WHICH SHALL BE CUT FLUSH, CAPPED AND ABANDONED IN PLACE.

GENERAL NOTES:

1. FOR SYMBOLS AND ABBREVIATIONS, SEE DRAWING E-1.
2. FOR CONSTRUCTION SEQUENCE, SEE DRAWING E-2.
3. FOR EXISTING MCC-9 LOCATION, SEE DRAWING EX-19.

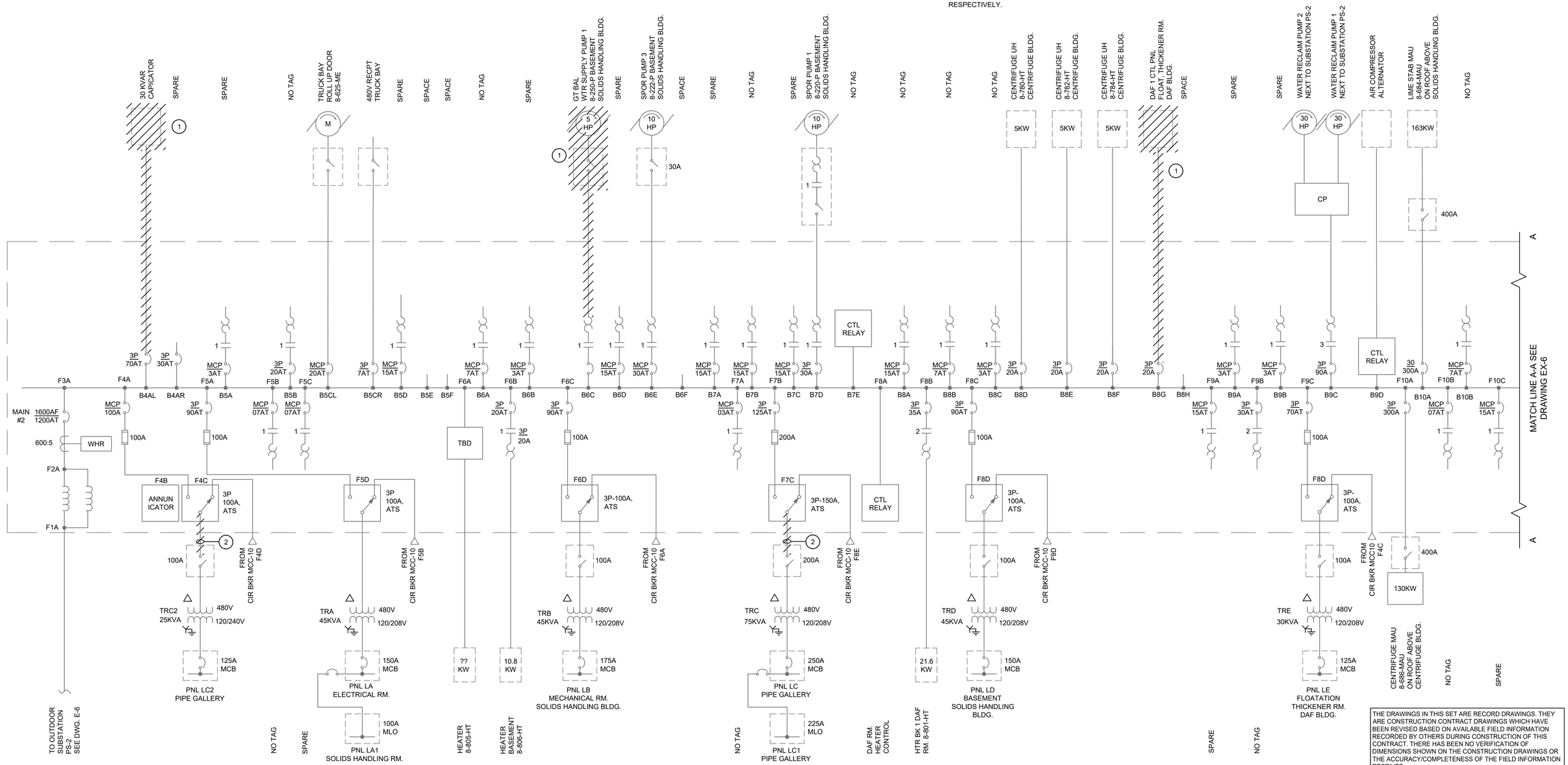

THE DRAWINGS IN THIS SET ARE RECORD DRAWINGS. THEY ARE CONSTRUCTION CONTRACT DRAWINGS WHICH HAVE BEEN REVISED BASED ON AVAILABLE FIELD INFORMATION RECORDED BY OTHERS DURING CONSTRUCTION OF THIS CONTRACT. THERE HAS BEEN NO VERIFICATION OF DIMENSIONS SHOWN ON THE CONSTRUCTION DRAWINGS OR THE ACCURACY/COMPLETENESS OF THE FIELD INFORMATION RECEIVED.

SIGNATURE — DATE 2/7/2020

CHEMICAL HANDLING AREA - EXISTING MCC-9 - ONE LINE DIAGRAM - DEMOLITION I

SCALE: NONE

SHAH & ASSOCIATES

AS-BUILT REPLACEMENT SHEET

PROFESSIONAL CERTIFICATION
THIS DRAWING WAS ORIGINALLY APPROVED FOR CONSTRUCTION AND SEALED BY KANAIYALAL R. SHAH, A REGISTERED PROFESSIONAL ENGINEER IN THE STATE OF MARYLAND, NO. 11084.

NOTICE TO CONTRACTORS
- PROJECT ELEVATIONS ARE BASED ON NAVD88 AND HOWARD COUNTY'S BENCHMARK SYSTEM
- PREVIOUS PROJECTS USED OTHER DATUMS
- APPLY THE FOLLOWING CONVERSIONS WHEN USING PREVIOUS CONTRACT DRAWINGS:
  - ADDITION NO. 6: SUBTRACT 0.80 FT
  - PRIOR ADDITIONS: SUBTRACT 1.04 FT

DEPARTMENT OF PUBLIC WORKS
HOWARD COUNTY, MARYLAND

CHIEF, BUREAU OF UTILITIES DATE

DES: SR
DRN: XMZ
CHK: KRS
DATE: 10/2016

DATE	REV	DESCRIPTION
07/2019		RECORD DRAWING

ELECTRICAL

CHEMICAL HANDLING AREA
EXISTING MCC-9
ONE LINE DIAGRAM - DEMOLITION I

LITTLE PATUXENT WATER RECLAMATION PLANT
8TH ADDITION
BIOSOLIDS PROCESSING FACILITIES – PHASE I

CAPITAL PROJECT S-6295
CONTRACT NO. 24-4935

ELECTION DISTRICT NO. 6
HOWARD COUNTY, MARYLAND

SCALE AS SHOWN

SHEET 289 OF 463

EX-5

DRAWING NOTES:

1. NOT USED.
2. DEMOLISH CABLE AND CONDUIT BACK TO THE SOURCE.
3. EXISTING 8-902-F & 8-904-F WILL BE DEMOLISHED AND REPLACE WITH NEW FAN.
4. RELOCATE THE DISCONNECT SWITCH TO THE NEW LOCATION SHOWN ON DRAWING E-244B. EXTEND WIRE AND CONDUIT TO THE NEW DISCONNECT SWITCH AND THE NEW WATER HEATER LOCATION.

GENERAL NOTES:

1. FOR SYMBOLS AND ABBREVIATIONS, SEE DRAWING E-1.
2. FOR CONSTRUCTION SEQUENCE, SEE DRAWING E-2.
3. FOR EXISTING MCC-9 LOCATION, SEE DRAWING EX-19.
4. EXISTING FAN 8-903-F TO BE DEMOLISHED. DEMOLISH CABLE AND CONDUIT BACK TO THE SOURCE.

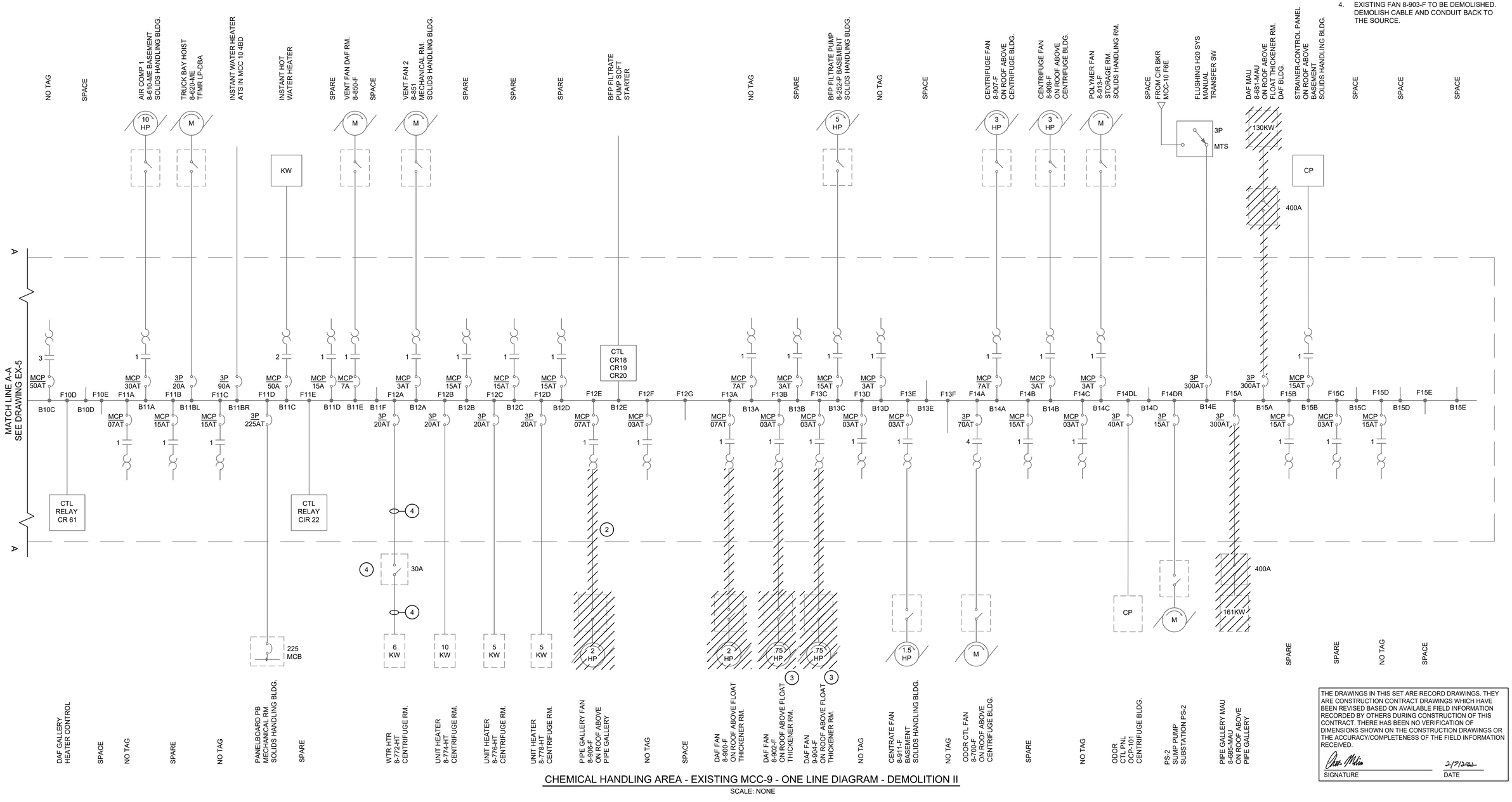

CHEMICAL HANDLING AREA - EXISTING MCC-9 - ONE LINE DIAGRAM - DEMOLITION II

SCALE: NONE

THE DRAWINGS IN THIS SET ARE RECORD DRAWINGS. THEY ARE CONSTRUCTION CONTRACT DRAWINGS WHICH HAVE BEEN REVISED BASED ON AVAILABLE FIELD INFORMATION RECORDED BY OTHERS DURING CONSTRUCTION OF THIS CONTRACT. THERE HAS BEEN NO VERIFICATION OF DIMENSIONS SHOWN ON THE CONSTRUCTION DRAWINGS OR THE ACCURACY/COMPLETENESS OF THE FIELD INFORMATION RECEIVED.

SIGNATURE — DATE 2/7/2020

SHAH & ASSOCIATES

AS-BUILT REPLACEMENT SHEET

PROFESSIONAL CERTIFICATION
THIS DRAWING WAS ORIGINALLY APPROVED FOR CONSTRUCTION AND SEALED BY KANAIYALAL R. SHAH, A REGISTERED PROFESSIONAL ENGINEER IN THE STATE OF MARYLAND, NO. 11084.

NOTICE TO CONTRACTORS
- PROJECT ELEVATIONS ARE BASED ON NAVD88 AND HOWARD COUNTY'S BENCHMARK SYSTEM
- PREVIOUS PROJECTS USED OTHER DATUMS
- APPLY THE FOLLOWING CONVERSIONS WHEN USING PREVIOUS CONTRACT DRAWINGS:
  - ADDITION NO. 6: SUBTRACT 0.80 FT.
  - PRIOR ADDITIONS: SUBTRACT 1.04 FT.

DEPARTMENT OF PUBLIC WORKS
HOWARD COUNTY, MARYLAND

CHIEF, BUREAU OF UTILITIES — DATE

DES:	SR
DRN:	XMZ
CHK:	KRS
DATE:	10/2016

DATE	REV	DESCRIPTION
07/2019		RECORD DRAWING

ELECTRICAL

CHEMICAL HANDLING AREA
EXISTING MCC-9
ONE LINE DIAGRAM - DEMOLITION II

LITTLE PATUXENT WATER RECLAMATION PLANT
8TH ADDITION
BIOSOLIDS PROCESSING FACILITIES – PHASE I

CAPITAL PROJECT S-6295
CONTRACT NO. 24-4935

ELECTION DISTRICT NO. 6
HOWARD COUNTY, MARYLAND

SCALE AS SHOWN

SHEET 290 OF 463

EX-6

GENERAL NOTES:

1. FOR SYMBOLS AND ABBREVIATIONS, SEE DRAWING E-1.
2. FOR CONSTRUCTION SEQUENCE, SEE DRAWING E-2.
3. FOR EXISTING MCC-10 LOCATION, SEE DRAWING EX-19.
4. PERFORM DEMOLITION WORK PER GENERAL DEMOLITION SHEETS. DISCONNECT AND REMOVE ALL ELECTRICAL CONNECTIONS TO EQUIPMENT IMPACTED BY DEMOLITION WORK, FROM EQUIPMENT BACK TO CORRESPONDING MCC, POWER CENTER, PANELBOARD OR I/O CABINET AS APPLICABLE. DEMOLITION SHALL BE COMPLETE AND SHALL INCLUDE WIRING, CONDUIT, PULL BOXES, JUNCTION BOXES, ETC. ASSOCIATED WITH THE EQUIPMENT BEING DEMOLISHED UNLESS NOTED OTHERWISE WITH THE EXCEPTION OF CONDUITS EMBEDDED IN SLAB WHICH SHALL BE CUT FLUSH, CAPPED AND ABANDONED IN PLACE.

DRAWING NOTES:

1. DEMOLISH CABLE AND CONDUIT BACK TO THE SOURCE.
2. DEMOLISH THE FEEDERS FROM MCC-9/MCC-10 UP TO THE DISCONNECT SWITCHES. RUN NEW WIRE AND CONDUIT FROM MCC-31 TO THE DISCONNECT SWITCHES TO FEED THE PANELS, MAU AND EXHAUST FAN. FOR UPDATED ONE LINE DIAGRAM AND CABLE AND CONDUIT SCHEDULE, SEE DRAWINGS E-8, E-9 & E-907 RESPECTIVELY.

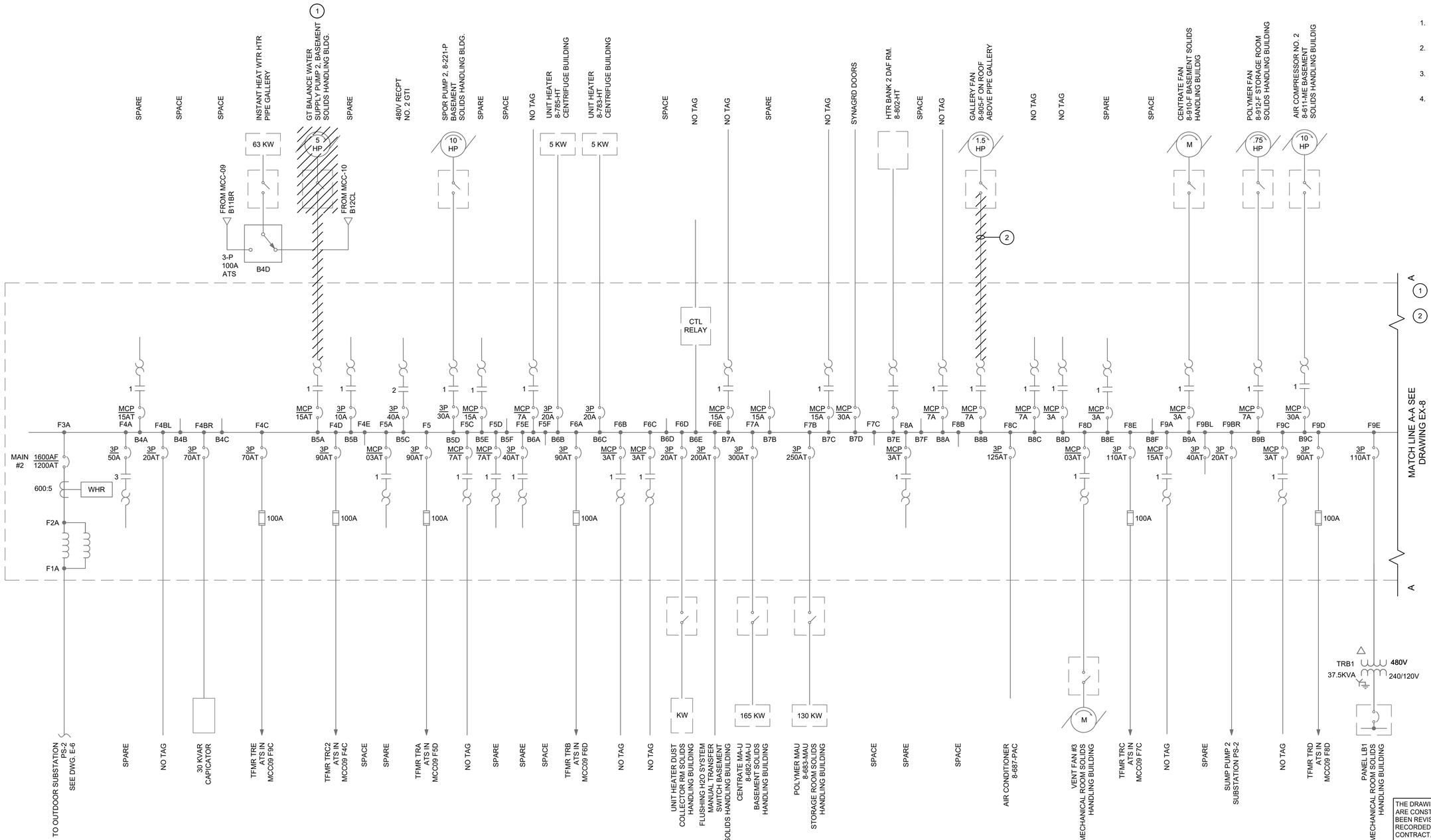

THE DRAWINGS IN THIS SET ARE RECORD DRAWINGS. THEY ARE CONSTRUCTION CONTRACT DRAWINGS WHICH HAVE BEEN REVISED BASED ON AVAILABLE FIELD INFORMATION RECORDED BY OTHERS DURING CONSTRUCTION OF THIS CONTRACT. THERE HAS BEEN NO VERIFICATION OF DIMENSIONS SHOWN ON THE CONSTRUCTION DRAWINGS OR THE ACCURACY/COMPLETENESS OF THE FIELD INFORMATION RECEIVED.

SIGNATURE _____ DATE 2/7/2020

CHEMICAL HANDLING AREA - EXISTING MCC-10 - ONE LINE DIAGRAM - DEMOLITION I

SCALE: NONE

SHAH & ASSOCIATES

AS-BUILT REPLACEMENT SHEET

PROFESSIONAL CERTIFICATION
THIS DRAWING WAS ORIGINALLY APPROVED FOR CONSTRUCTION AND SEALED BY KANAIYALAL R. SHAH, A REGISTERED PROFESSIONAL ENGINEER IN THE STATE OF MARYLAND, NO. 11084.

NOTICE TO CONTRACTORS
- PROJECT ELEVATIONS ARE BASED ON NAVD88 AND HOWARD COUNTY'S BENCHMARK SYSTEM
- PREVIOUS PROJECTS USED OTHER DATUMS
- APPLY THE FOLLOWING CONVERSIONS WHEN USING PREVIOUS CONTRACT DRAWINGS:
  - ADDITION NO. 6: SUBTRACT 0.80 FT.
  - PRIOR ADDITIONS: SUBTRACT 1.04 FT

DEPARTMENT OF PUBLIC WORKS
HOWARD COUNTY, MARYLAND

CHIEF, BUREAU OF UTILITIES DATE

DES: SR
DRN: VVS
CHK: KRS
DATE: 10/2016

DATE	REV	DESCRIPTION
07/2019		RECORD DRAWING

ELECTRICAL

CHEMICAL HANDLING AREA
EXISTING MCC-10
ONE LINE DIAGRAM
DEMOLITION I

LITTLE PATUXENT WATER RECLAMATION PLANT
8TH ADDITION
BIOSOLIDS PROCESSING FACILITIES – PHASE I

CAPITAL PROJECT S-6295
CONTRACT NO. 24-4935

ELECTION DISTRICT NO. 6
HOWARD COUNTY, MARYLAND

SCALE AS SHOWN

SHEET 291 OF 463

EX-7

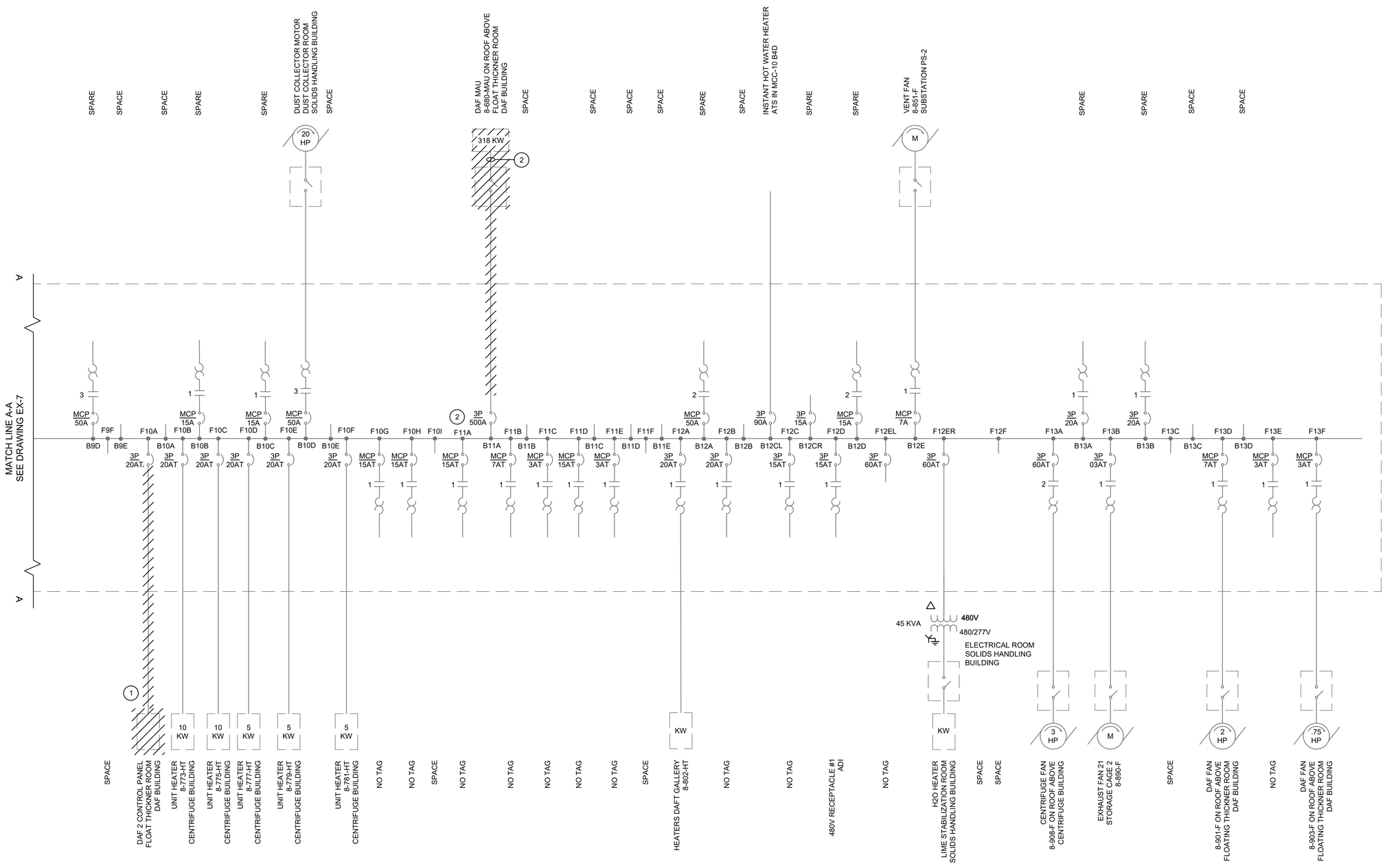
MATCH LINE A-A
SEE DRAWING EX-7
A
A
SPARE
SPACE
SPACE
SPARE
SPARE
DUST COLLECTOR MOTOR
DUST COLLECTOR ROOM
SOLIDS HANDLING BUILDING
SPACE
DAF MAU
8-680-MAU ON ROOF ABOVE
FLOAT THICKNER ROOM
DAF BUILDING
SPACE
SPACE
SPACE
SPACE
SPACE
INSTANT HOT WATER HEATER
ATS IN MCC-10 B4D
SPARE
SPARE
VENT FAN
8-851-F
SUBSTATION PS-2
SPARE
SPACE
SPACE
SPACE
20 HP
318 KW
2
M
MCP 50A
MCP 15A
MCP 15A
MCP 50A
3P 500A
MCP 50A
3P 90A
3P 15A
MCP 15A
MCP 7A
MCP 50A
3P 20A
3P 20A
B9D
B9E
B10A
B10B
B10C
B10D
B10E
B11A
B11B
B11C
B11D
B11E
B12A
B12B
B12CL
B12CR
B12D
B12E
B13A
B13B
B13C
B13D
B13E
B13F
F9F
F10A
F10B
F10C
F10D
F10E
F10F
F10G
F10H
F10I
F11A
F11B
F11C
F11D
F11E
F11F
F12A
F12B
F12C
F12D
F12EL
F12ER
F12F
F13A
F13B
F13C
F13D
F13E
F13F
3P 20AT
3P 20AT
3P 20AT
3P 20AT
3P 20AT
3P 20AT
3P 20AT
MCP 15AT
MCP 15AT
MCP 15AT
MCP 7AT
MCP 3AT
MCP 15AT
MCP 3AT
3P 20AT
3P 20AT
3P 15AT
3P 15AT
3P 60AT
3P 60AT
3P 60AT
3P 03AT
MCP 7AT
MCP 3AT
MCP 3AT
1
2
3
1
1
3
2
2
1
1
1

DRAWING NOTES:

1. FOR SUBMERSIBLE MIXER DEMOLITION AND LOCATION WORK DETAIL, REFER TO X-220 AND X-221 DRAWING.
2. SUBMERSIBLE MIXER TO BE RELOCATED. FOR NEW LOCATION, SEE DRAWINGS E-222 AND E-223. FOR MORE DETAILS. CABLE AND CONDUIT TO BE REMOVED BACK TO SOURCE.

GENERAL NOTES (CONTINUED):

5. PERFORM DEMOLITION WORK PER GENERAL DEMOLITION SHEETS. DISCONNECT AND REMOVE ALL ELECTRICAL CONNECTIONS TO EQUIPMENT IMPACTED BY DEMOLITION WORK, FROM EQUIPMENT BACK TO CORRESPONDING MCC, POWER CENTER, PANELBOARD OR I/O CABINET AS APPLICABLE. DEMOLITION SHALL BE COMPLETE AND SHALL INCLUDE WIRING, CONDUIT, PULL BOXES, JUNCTION BOXES, ETC. ASSOCIATED WITH THE EQUIPMENT BEING DEMOLISHED UNLESS NOTED OTHERWISE WITH THE EXCEPTION OF CONDUITS EMBEDDED IN SLAB WHICH SHALL BE CUT FLUSH, CAPPED AND ABANDONED IN PLACE.

GENERAL NOTES:

1. FOR SYMBOLS AND ABBREVIATIONS, SEE DRAWING E-1.
2. FOR CONSTRUCTION SEQUENCE, SEE DRAWING E-2.
3. FOR EXISTING MCC-15 LOCATION, SEE DRAWING EX-19.
4. FOR EQUIPMENT DEMOLITION, SEE GENERAL DEMOLITION SHEET.

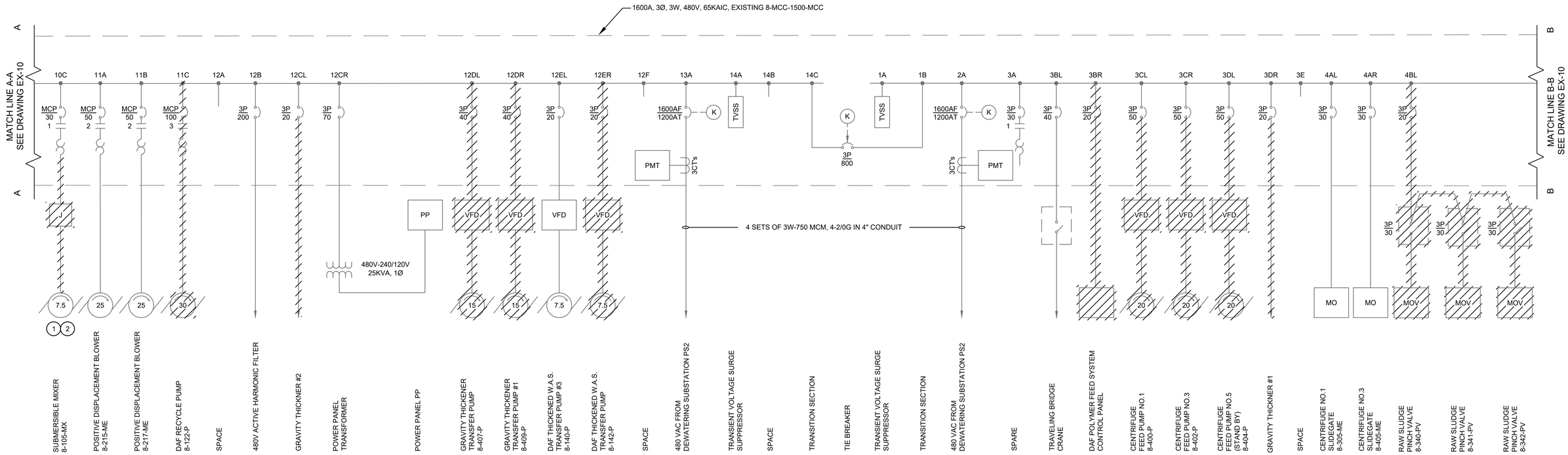

CHEMICAL HANDLING AREA - EXISTING 8-MCC-1500-MCC - ONE LINE DIAGRAM - DEMOLITION I

SCALE: NONE

THE DRAWINGS IN THIS SET ARE RECORD DRAWINGS. THEY ARE CONSTRUCTION CONTRACT DRAWINGS WHICH HAVE BEEN REVISED BASED ON AVAILABLE FIELD INFORMATION RECORDED BY OTHERS DURING CONSTRUCTION OF THIS CONTRACT. THERE HAS BEEN NO VERIFICATION OF DIMENSIONS SHOWN ON THE CONSTRUCTION DRAWINGS OR THE ACCURACY/COMPLETENESS OF THE FIELD INFORMATION RECEIVED.

SIGNATURE _____ DATE 2/7/2020

SHAH & ASSOCIATES

AS-BUILT REPLACEMENT SHEET

PROFESSIONAL CERTIFICATION
THIS DRAWING WAS ORIGINALLY APPROVED FOR CONSTRUCTION AND SEALED BY KANAIYALAL R. SHAH, A REGISTERED PROFESSIONAL ENGINEER IN THE STATE OF MARYLAND, NO. 11084.

NOTICE TO CONTRACTORS
- PROJECT ELEVATIONS ARE BASED ON NAVD88 AND HOWARD COUNTY'S BENCHMARK SYSTEM
- PREVIOUS PROJECTS USED OTHER DATUMS
- APPLY THE FOLLOWING CONVERSIONS WHEN USING PREVIOUS CONTRACT DRAWINGS:
  - ADDITION NO. 6: SUBTRACT 0.80 FT.
  - PRIOR ADDITIONS: SUBTRACT 1.04 FT.

DEPARTMENT OF PUBLIC WORKS
HOWARD COUNTY, MARYLAND

CHIEF, BUREAU OF UTILITIES DATE

DES:	SR
DRN:	VVS
CHK:	KRS
DATE:	10/2016

DATE	REV	DESCRIPTION
07/2019		RECORD DRAWING

ELECTRICAL

CHEMICAL HANDLING AREA
EXISTING MCC-15
ONE LINE DIAGRAM
DEMOLITION I

LITTLE PATUXENT WATER RECLAMATION PLANT
8TH ADDITION
BIOSOLIDS PROCESSING FACILITIES – PHASE I

CAPITAL PROJECT S-6295
CONTRACT NO. 24-4935

ELECTION DISTRICT NO. 6
HOWARD COUNTY, MARYLAND

SCALE AS SHOWN

SHEET 293 OF 463

EX-9

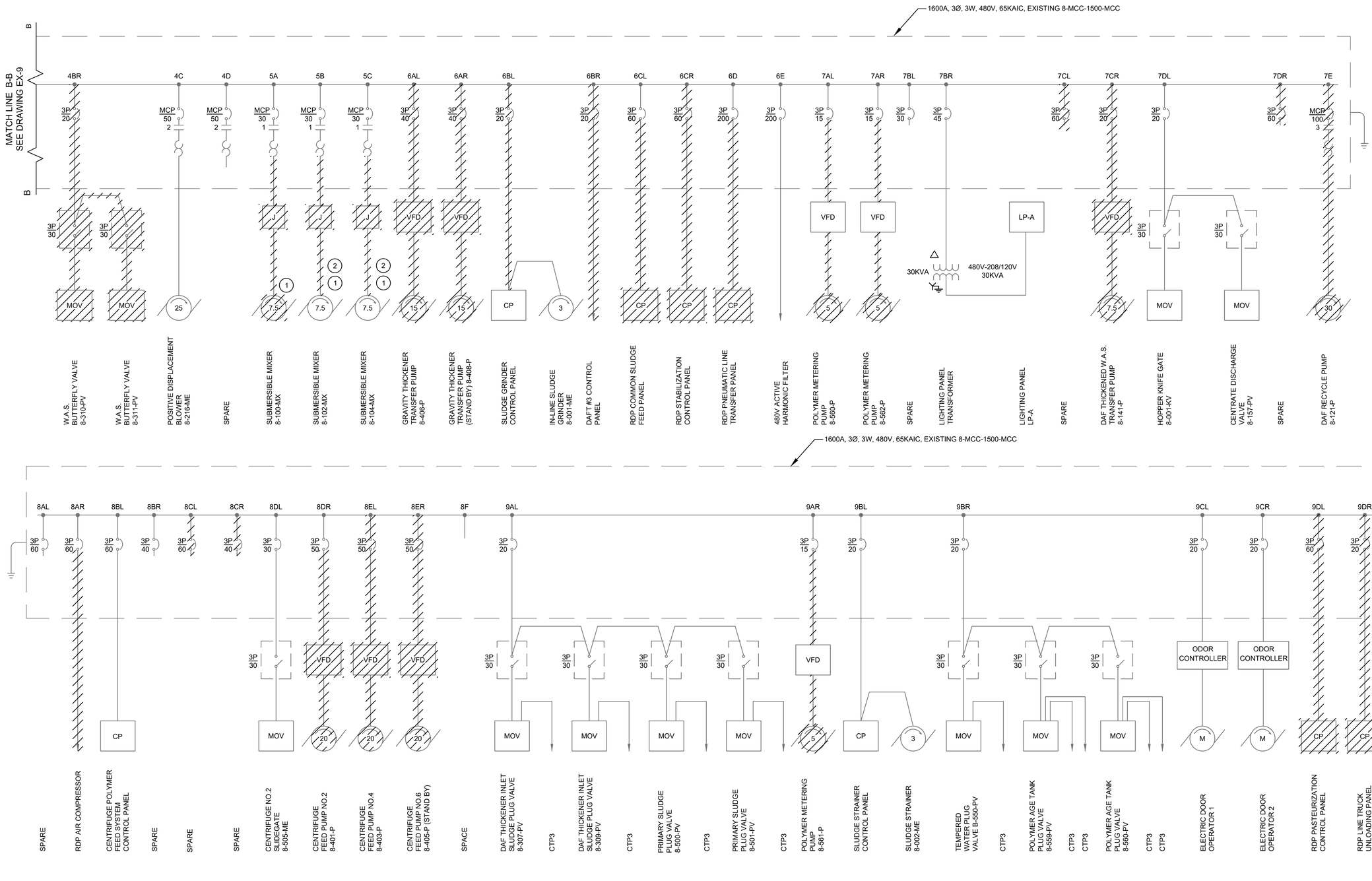

GENERAL NOTES:

1. FOR SYMBOLS AND ABBREVIATIONS, SEE DRAWING E-1.
2. FOR CONSTRUCTION SEQUENCE, SEE DRAWING E-2.
3. FOR EXISTING 8-MCC-1500-MCC LOCATION, SEE DRAWING EX-19.
4. FOR EQUIPMENT DEMOLITION, SEE GENERAL DEMOLITION SHEET.
5. PERFORM DEMOLITION WORK PER GENERAL DEMOLITION SHEETS. DISCONNECT AND REMOVE ALL ELECTRICAL CONNECTIONS TO EQUIPMENT IMPACTED BY DEMOLITION WORK, FROM EQUIPMENT BACK TO CORRESPONDING MCC, POWER CENTER, PANELBOARD OR I/O CABINET AS APPLICABLE. DEMOLITION SHALL BE COMPLETE AND SHALL INCLUDE WIRING, CONDUIT, PULL BOXES, JUNCTION BOXES, ETC. ASSOCIATED WITH THE EQUIPMENT BEING DEMOLISHED UNLESS NOTED OTHERWISE WITH THE EXCEPTION OF CONDUITS EMBEDDED IN SLAB WHICH SHALL BE CUT FLUSH, CAPPED AND ABANDONED IN PLACE.

DRAWING NOTES:

(1) FOR SUBMERSIBLE MIXER DEMOLITION AND RELOCATION WORK DETAIL, REFER TO X-220 AND X-221 DRAWINGS.

(2) SUBMERSIBLE MIXER TO BE RELOCATED FOR NEW LOCATION, SEE DRAWINGS E-222 AND E-223. FOR MORE DETAILS. CABLE AND CONDUIT TO BE REMOVED BACK TO SOURCE.

CHEMICAL HANDLING AREA - EXISTING 8-MCC-1500-MCC - ONE LINE DIAGRAM - DEMOLITION II

SCALE: NONE

THE DRAWINGS IN THIS SET ARE RECORD DRAWINGS. THEY ARE CONSTRUCTION CONTRACT DRAWINGS WHICH HAVE BEEN REVISED BASED ON AVAILABLE FIELD INFORMATION RECORDED BY OTHERS DURING CONSTRUCTION OF THIS CONTRACT. THERE HAS BEEN NO VERIFICATION OF DIMENSIONS SHOWN ON THE CONSTRUCTION DRAWINGS OR THE ACCURACY/COMPLETENESS OF THE FIELD INFORMATION RECEIVED.

SIGNATURE — DATE 2/7/2023

SHAH & ASSOCIATES

AS-BUILT REPLACEMENT SHEET

PROFESSIONAL CERTIFICATION
THIS DRAWING WAS ORIGINALLY APPROVED FOR CONSTRUCTION AND SEALED BY KANAIYALAL R. SHAH, A REGISTERED PROFESSIONAL ENGINEER IN THE STATE OF MARYLAND, NO. 11084.

NOTICE TO CONTRACTORS
- PROJECT ELEVATIONS ARE BASED ON NAVD88 AND HOWARD COUNTY'S BENCHMARK SYSTEM
- PREVIOUS PROJECTS USED OTHER DATUMS
- APPLY THE FOLLOWING CONVERSIONS WHEN USING PREVIOUS CONTRACT DRAWINGS:
  - ADDITION NO. 6: SUBTRACT 0.80 FT
  - PRIOR ADDITIONS: SUBTRACT 1.04 FT

DEPARTMENT OF PUBLIC WORKS
HOWARD COUNTY, MARYLAND

CHIEF, BUREAU OF UTILITIES — DATE

DES: SR
DRN: VVS
CHK: KRS
DATE: 10/2016

DATE	REV	DESCRIPTION
07/2019		RECORD DRAWING

ELECTRICAL

CHEMICAL HANDLING AREA
EXISTING MCC-15
ONE LINE DIAGRAM
DEMOLITION II

LITTLE PATUXENT WATER RECLAMATION PLANT
8TH ADDITION
BIOSOLIDS PROCESSING FACILITIES – PHASE I

CAPITAL PROJECT S-6295
CONTRACT NO. 24-4935

ELECTION DISTRICT NO. 6
HOWARD COUNTY, MARYLAND

SCALE AS SHOWN

SHEET 294 OF 463

EX-10

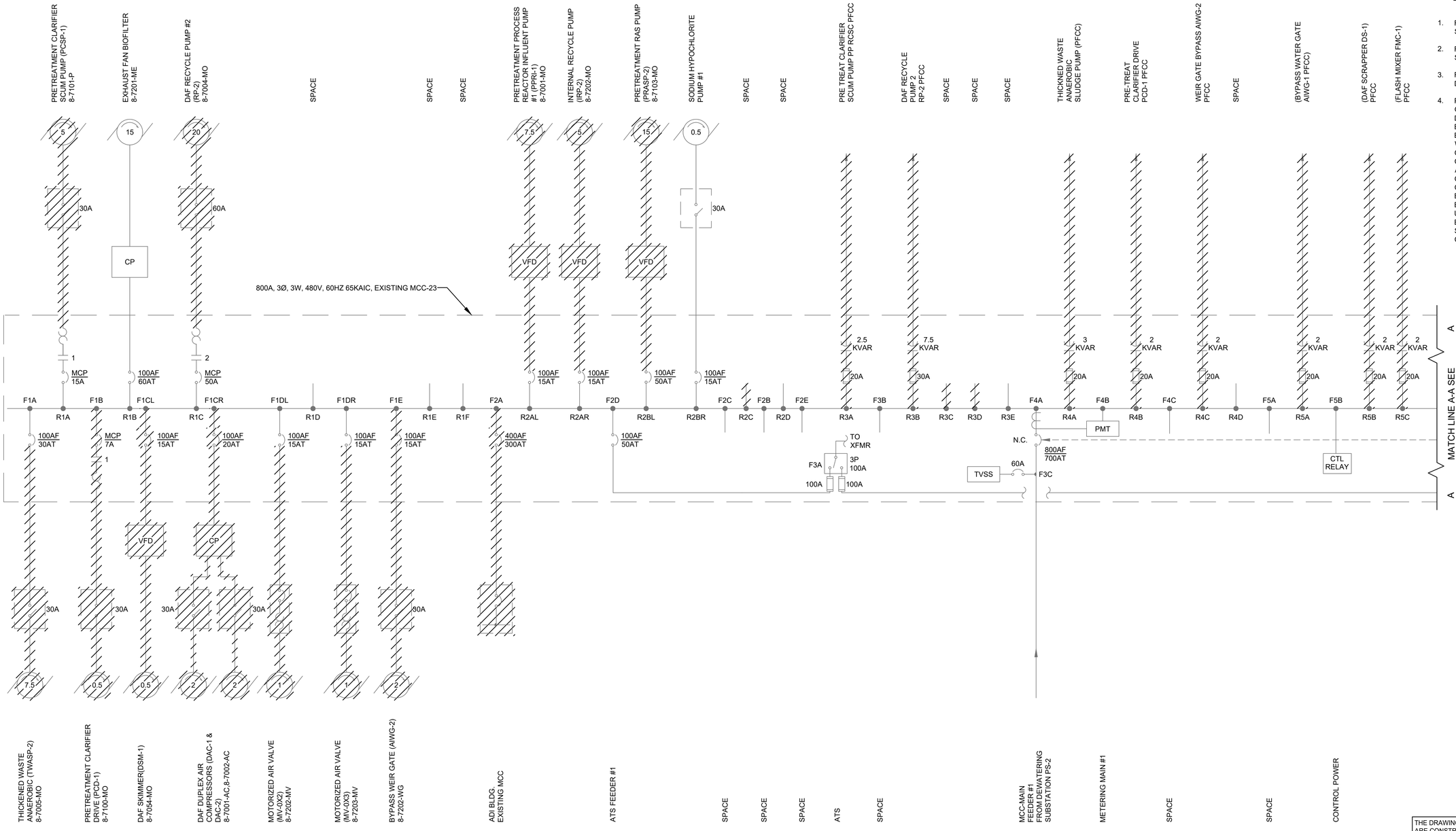

GENERAL NOTES:

1. FOR SYMBOLS AND ABBREVIATIONS, SEE DRAWING E-1.
2. FOR CONSTRUCTION SEQUENCE, SEE DRAWING E-2.
3. FOR EXISTING MCC-23 LOCATION, SEE DRAWING EX-19.
4. PERFORM DEMOLITION WORK PER GENERAL DEMOLITION SHEETS. DISCONNECT AND REMOVE ALL ELECTRICAL CONNECTIONS TO EQUIPMENT IMPACTED BY DEMOLITION WORK, FROM EQUIPMENT BACK TO CORRESPONDING MCC, POWER CENTER, PANELBOARD OR I/O CABINET AS APPLICABLE. DEMOLITION SHALL BE COMPLETE AND SHALL INCLUDE WIRING, CONDUIT, PULL BOXES, JUNCTION BOXES, ETC. ASSOCIATED WITH THE EQUIPMENT BEING DEMOLISHED UNLESS NOTED OTHERWISE WITH THE EXCEPTION OF CONDUITS EMBEDDED IN SLAB WHICH SHALL BE CUT FLUSH, CAPPED AND ABANDONED IN PLACE.

CHEMICAL HANDLING AREA - EXISTING MCC-23 - ONE LINE DIAGRAM - DEMOLITION I

SCALE: NONE

THE DRAWINGS IN THIS SET ARE RECORD DRAWINGS. THEY ARE CONSTRUCTION CONTRACT DRAWINGS WHICH HAVE BEEN REVISED BASED ON AVAILABLE FIELD INFORMATION RECORDED BY OTHERS DURING CONSTRUCTION OF THIS CONTRACT. THERE HAS BEEN NO VERIFICATION OF DIMENSIONS SHOWN ON THE CONSTRUCTION DRAWINGS OR THE ACCURACY/COMPLETENESS OF THE FIELD INFORMATION RECEIVED.

SIGNATURE — DATE 2/7/2020

SHAH & ASSOCIATES

AS-BUILT REPLACEMENT SHEET

PROFESSIONAL CERTIFICATION
THIS DRAWING WAS ORIGINALLY APPROVED FOR CONSTRUCTION AND SEALED BY KANAIYALAL R. SHAH, A REGISTERED PROFESSIONAL ENGINEER IN THE STATE OF MARYLAND, NO. 11084.

NOTICE TO CONTRACTORS
- PROJECT ELEVATIONS ARE BASED ON NAVD88 AND HOWARD COUNTY'S BENCHMARK SYSTEM
- PREVIOUS PROJECTS USED OTHER DATUMS
- APPLY THE FOLLOWING CONVERSIONS WHEN USING PREVIOUS CONTRACT DRAWINGS:
  - ADDITION NO. 6: SUBTRACT 0.80 FT
  - PRIOR ADDITIONS: SUBTRACT 1.04 FT

DEPARTMENT OF PUBLIC WORKS
HOWARD COUNTY, MARYLAND

CHIEF, BUREAU OF UTILITIES DATE

DES: SR
DRN: VVS
CHK: KRS
DATE: 10/2016

DATE	REV	DESCRIPTION
07/2019		RECORD DRAWING

ELECTRICAL

CHEMICAL HANDLING AREA
EXISTING MCC-23
ONE LINE DIAGRAM
DEMOLITION I

LITTLE PATUXENT WATER RECLAMATION PLANT
8TH ADDITION
BIOSOLIDS PROCESSING FACILITIES – PHASE I

CAPITAL PROJECT S–6295
CONTRACT NO. 24–4935

ELECTION DISTRICT NO. 6
HOWARD COUNTY, MARYLAND

SCALE AS SHOWN

SHEET 295 OF 463

EX-11

GENERAL NOTES:

1. FOR SYMBOLS AND ABBREVIATIONS, SEE DRAWING E-1.
2. FOR CONSTRUCTION SEQUENCE, SEE DRAWING E-2.
3. FOR EXISTING MCC-23 LOCATION, SEE DRAWING EX-19.
4. PERFORM DEMOLITION WORK PER GENERAL DEMOLITION SHEETS. DISCONNECT AND REMOVE ALL ELECTRICAL CONNECTIONS TO EQUIPMENT IMPACTED BY DEMOLITION WORK, FROM EQUIPMENT BACK TO CORRESPONDING MCC, POWER CENTER, PANELBOARD OR I/O CABINET AS APPLICABLE. DEMOLITION SHALL BE COMPLETE AND SHALL INCLUDE WIRING, CONDUIT, PULL BOXES, JUNCTION BOXES, ETC. ASSOCIATED WITH THE EQUIPMENT BEING DEMOLISHED UNLESS NOTED OTHERWISE WITH THE EXCEPTION OF CONDUITS EMBEDDED IN SLAB WHICH SHALL BE CUT FLUSH, CAPPED AND ABANDONED IN PLACE.

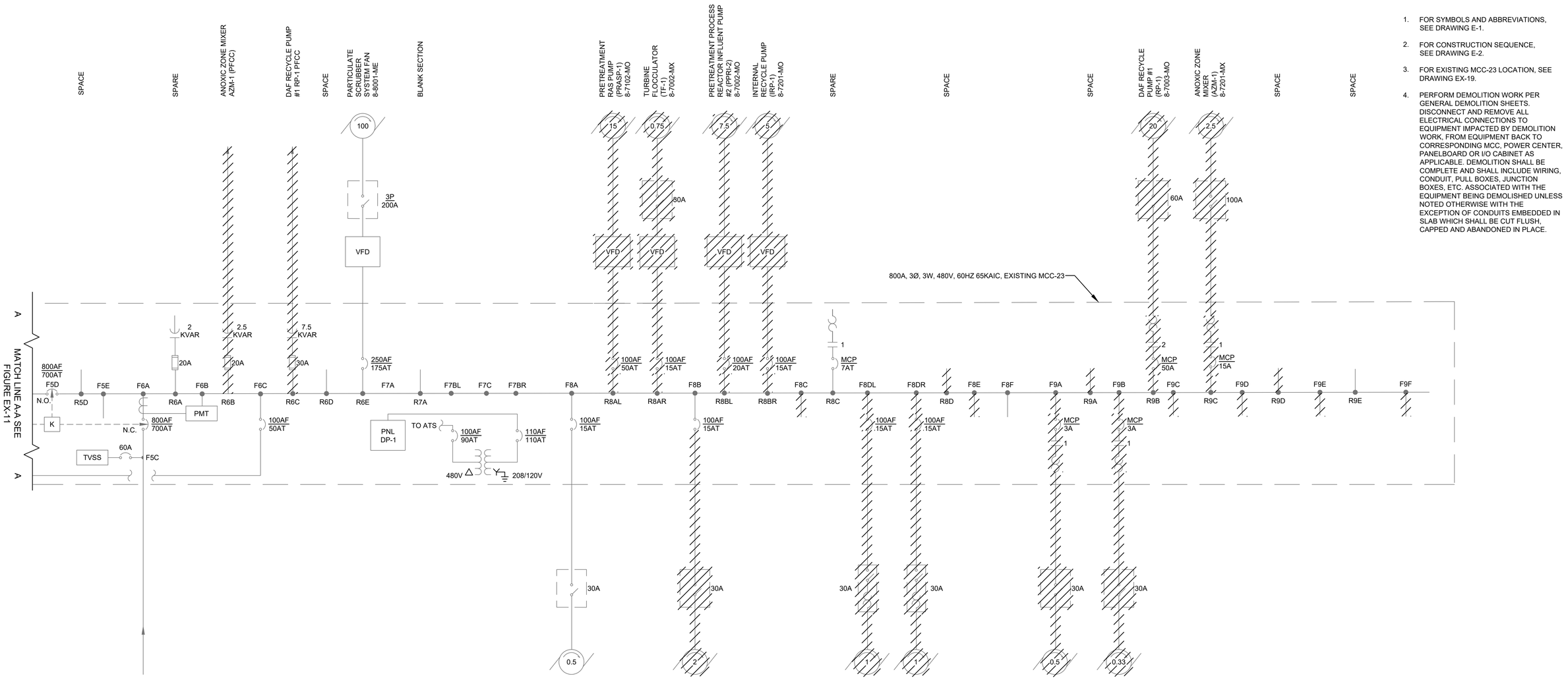

CHEMICAL HANDLING AREA - EXISTING MCC 23 - ONE LINE DIAGRAM - DEMOLITION II

SCALE: NONE

THE DRAWINGS IN THIS SET ARE RECORD DRAWINGS. THEY ARE CONSTRUCTION CONTRACT DRAWINGS WHICH HAVE BEEN REVISED BASED ON AVAILABLE FIELD INFORMATION RECORDED BY OTHERS DURING CONSTRUCTION OF THIS CONTRACT. THERE HAS BEEN NO VERIFICATION OF DIMENSIONS SHOWN ON THE CONSTRUCTION DRAWINGS OR THE ACCURACY/COMPLETENESS OF THE FIELD INFORMATION RECEIVED.

SIGNATURE — DATE 2/7/2023

SHAH & ASSOCIATES

AS-BUILT REPLACEMENT SHEET

PROFESSIONAL CERTIFICATION
THIS DRAWING WAS ORIGINALLY APPROVED FOR CONSTRUCTION AND SEALED BY KANAIYALAL R. SHAH, A REGISTERED PROFESSIONAL ENGINEER IN THE STATE OF MARYLAND, NO. 11084.

NOTICE TO CONTRACTORS
- PROJECT ELEVATIONS ARE BASED ON NAVD88 AND HOWARD COUNTY'S BENCHMARK SYSTEM
- PREVIOUS PROJECTS USED OTHER DATUMS
- APPLY THE FOLLOWING CONVERSIONS WHEN USING PREVIOUS CONTRACT DRAWINGS:
  - ADDITION NO. 6: SUBTRACT 0.80 FT
  - PRIOR ADDITIONS: SUBTRACT 1.04 FT

DEPARTMENT OF PUBLIC WORKS
HOWARD COUNTY, MARYLAND

CHIEF, BUREAU OF UTILITIES — DATE

DES: SR
DRN: VVS
CHK: KRS
DATE: 10/2016

DATE	REV	DESCRIPTION
07/2019		RECORD DRAWING

ELECTRICAL

CHEMICAL HANDLING AREA
EXISTING MCC-23
ONE LINE DIAGRAM
DEMOLITION II

LITTLE PATUXENT WATER RECLAMATION PLANT
8TH ADDITION
BIOSOLIDS PROCESSING FACILITIES – PHASE I

CAPITAL PROJECT S-6295
CONTRACT NO. 24-4935

ELECTION DISTRICT NO. 6
HOWARD COUNTY, MARYLAND

SCALE AS SHOWN

SHEET 296 OF 463

EX-12

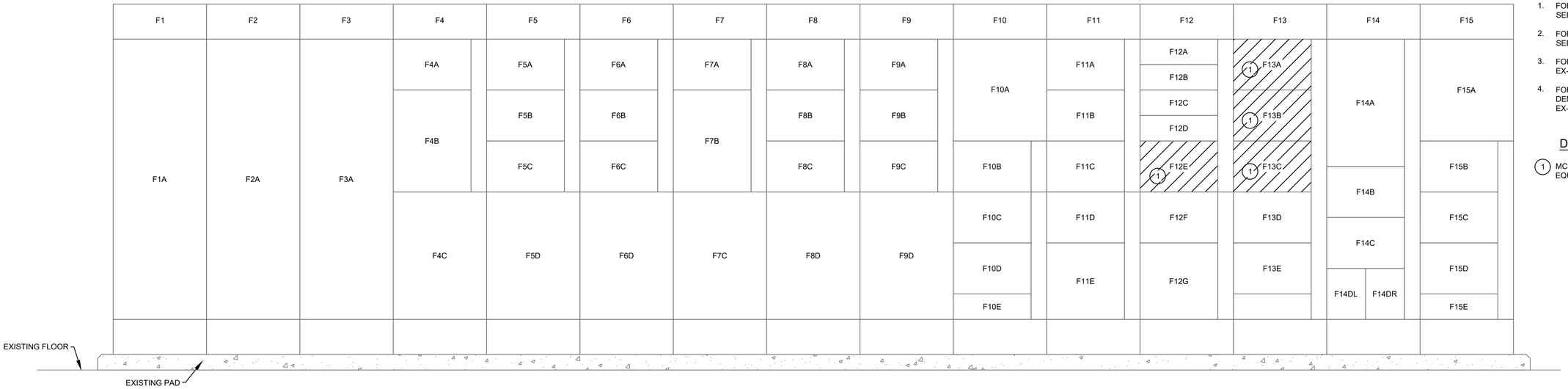

CHEMICAL HANDLING AREA - EXISTING MCC-9 FRONT ELEVATION - DEMOLITION

SCALE: NONE

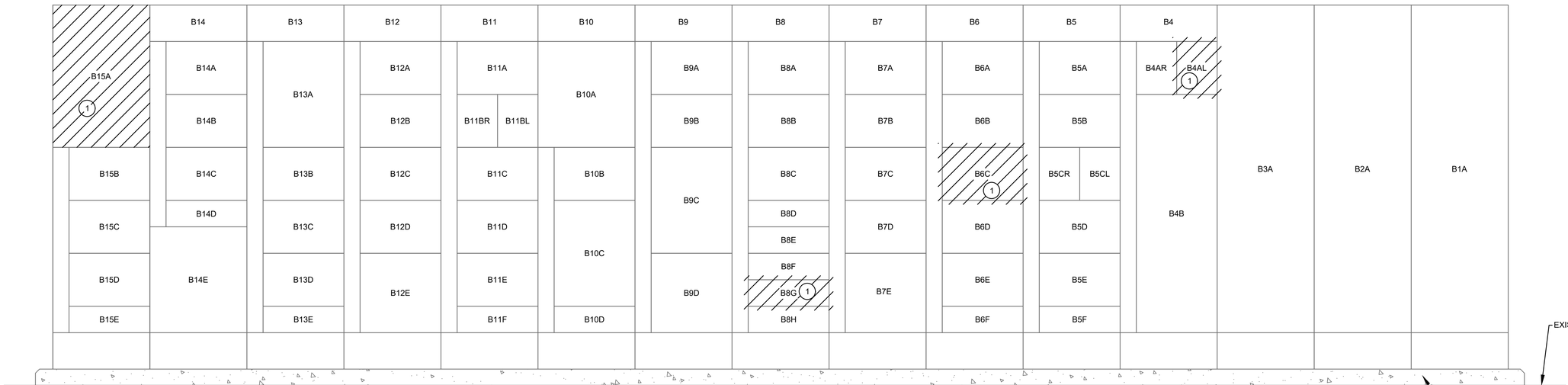

CHEMICAL HANDLING AREA- EXISTING MCC-9 REAR ELEVATION - DEMOLITION

SCALE: NONE

GENERAL NOTES:

1. FOR SYMBOLS AND ABBREVIATIONS, SEE DRAWING E-1.
2. FOR CONSTRUCTION SEQUENCE, SEE DRAWING E-2.
3. FOR EXISTING MCC-9 LOCATION, SEE DRAWING EX-19.
4. FOR EXISTING MCC-9 ONE LINE DIAGRAM DEMOLITION WORK, SEE DRAWINGS EX-5 AND EX-6.

DRAWING NOTES:

(1) MCC BUCKET TO REMAIN SPARE AFTER EQUIPMENT CONNECTION IS REMOVED.

THE DRAWINGS IN THIS SET ARE RECORD DRAWINGS. THEY ARE CONSTRUCTION CONTRACT DRAWINGS WHICH HAVE BEEN REVISED BASED ON AVAILABLE FIELD INFORMATION RECORDED BY OTHERS DURING CONSTRUCTION OF THIS CONTRACT. THERE HAS BEEN NO VERIFICATION OF DIMENSIONS SHOWN ON THE CONSTRUCTION DRAWINGS OR THE ACCURACY/COMPLETENESS OF THE FIELD INFORMATION RECEIVED.

SIGNATURE — DATE 2/7/2023

SHAH & ASSOCIATES

AS-BUILT REPLACEMENT SHEET

PROFESSIONAL CERTIFICATION
THIS DRAWING WAS ORIGINALLY APPROVED FOR CONSTRUCTION AND SEALED BY KANAIYALAL R. SHAH, A REGISTERED PROFESSIONAL ENGINEER IN THE STATE OF MARYLAND, NO. 11084.

NOTICE TO CONTRACTORS
- PROJECT ELEVATIONS ARE BASED ON NAVD88 AND HOWARD COUNTY'S BENCHMARK SYSTEM
- PREVIOUS PROJECTS USED OTHER DATUMS
- APPLY THE FOLLOWING CONVERSIONS WHEN USING PREVIOUS CONTRACT DRAWINGS:
  - ADDITION NO. 6: SUBTRACT 0.80 FT
  - PRIOR ADDITIONS: SUBTRACT 1.04 FT

DEPARTMENT OF PUBLIC WORKS
HOWARD COUNTY, MARYLAND

CHIEF, BUREAU OF UTILITIES — DATE

DES: SR
DRN: XMZ
CHK: KRS
DATE: 10/2016

DATE	REV	DESCRIPTION
07/2019		RECORD DRAWING

ELECTRICAL

CHEMICAL HANDLING AREA
EXISTING MCC-9
ELEVATION - DEMOLITION

LITTLE PATUXENT WATER RECLAMATION PLANT
8TH ADDITION
BIOSOLIDS PROCESSING FACILITIES – PHASE I

CAPITAL PROJECT S-6295
CONTRACT NO. 24-4935

ELECTION DISTRICT NO. 6
HOWARD COUNTY, MARYLAND

SCALE AS SHOWN

SHEET 297 OF 463

EX-13

GENERAL NOTES:

1. FOR SYMBOLS AND ABBREVIATIONS, SEE DRAWING E-1.
2. FOR CONSTRUCTION SEQUENCE, SEE DRAWING E-2.
3. FOR EXISTING MCC-10 LOCATION, SEE DRAWING EX-19.
4. FOR EXISTING MCC-10 ONE LINE DIAGRAM DEMOLITION WORK, SEE DRAWINGS EX-7 AND EX-8.

DRAWING NOTES:

(1) MCC BUCKET TO REMAIN SPARE AFTER EQUIPMENT CONNECTION IS REMOVED.

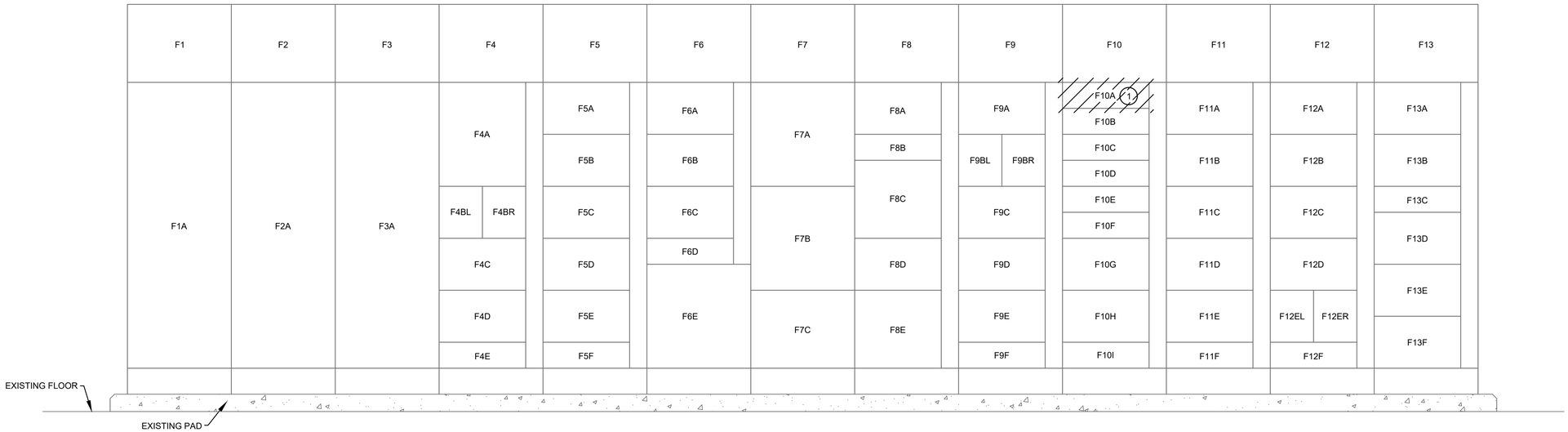

CHEMICAL HANDLING AREA - EXISTING MCC-10 FRONT ELEVATION - DEMOLITION

SCALE: NONE

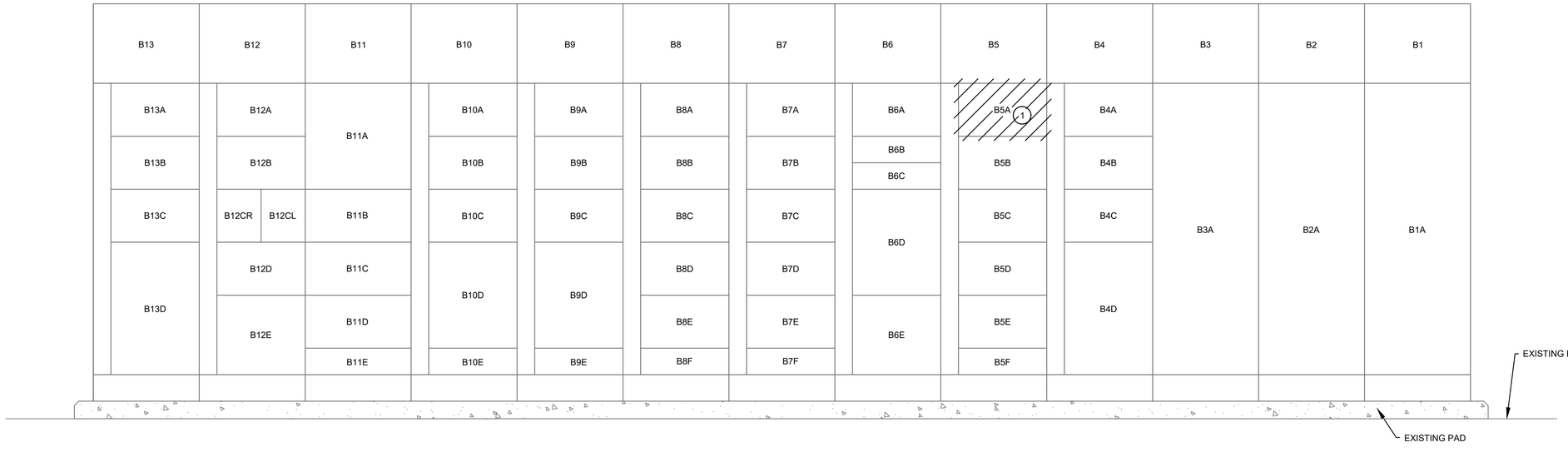

CHEMICAL HANDLING AREA - EXISTING MCC-10 REAR ELEVATION - DEMOLITION

SCALE: NONE

THE DRAWINGS IN THIS SET ARE RECORD DRAWINGS. THEY ARE CONSTRUCTION CONTRACT DRAWINGS WHICH HAVE BEEN REVISED BASED ON AVAILABLE FIELD INFORMATION RECORDED BY OTHERS DURING CONSTRUCTION OF THIS CONTRACT. THERE HAS BEEN NO VERIFICATION OF DIMENSIONS SHOWN ON THE CONSTRUCTION DRAWINGS OR THE ACCURACY/COMPLETENESS OF THE FIELD INFORMATION RECEIVED.

SIGNATURE _____ DATE 2/7/2020

SHAH & ASSOCIATES

AS-BUILT REPLACEMENT SHEET

PROFESSIONAL CERTIFICATION
THIS DRAWING WAS ORIGINALLY APPROVED FOR CONSTRUCTION AND SEALED BY KANAIYALAL R. SHAH, A REGISTERED PROFESSIONAL ENGINEER IN THE STATE OF MARYLAND, NO. 11084.

NOTICE TO CONTRACTORS
- PROJECT ELEVATIONS ARE BASED ON NAVD88 AND HOWARD COUNTY'S BENCHMARK SYSTEM
- PREVIOUS PROJECTS USED OTHER DATUMS
- APPLY THE FOLLOWING CONVERSIONS WHEN USING PREVIOUS CONTRACT DRAWINGS:
  - ADDITION NO. 6: SUBTRACT 0.80 FT
  - PRIOR ADDITIONS: SUBTRACT 1.04 FT

DEPARTMENT OF PUBLIC WORKS
HOWARD COUNTY, MARYLAND

CHIEF, BUREAU OF UTILITIES DATE

DES: SR
DRN: XMZ
CHK: KRS
DATE: 10/2016

DATE	REV	DESCRIPTION
07/2019		RECORD DRAWING

ELECTRICAL

CHEMICAL HANDLING AREA
EXISTING MCC-10
ELEVATION - DEMOLITION

LITTLE PATUXENT WATER RECLAMATION PLANT
8TH ADDITION
BIOSOLIDS PROCESSING FACILITIES – PHASE I

CAPITAL PROJECT S-6295
CONTRACT NO. 24-4935

ELECTION DISTRICT NO. 6
HOWARD COUNTY, MARYLAND

SCALE AS SHOWN

SHEET 298 OF 463

EX-14

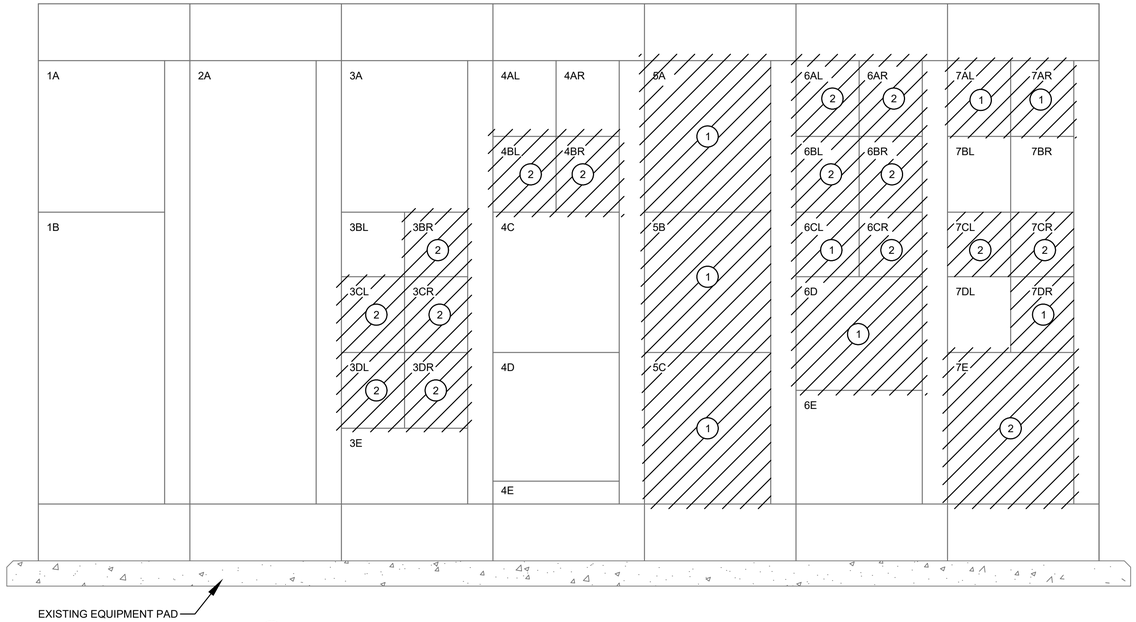

1 CHEMICAL HANDLING AREA - EXISTING 8-MCC-1500-MCC FRONT ELEVATION - DEMOLITION

SCALE: NONE

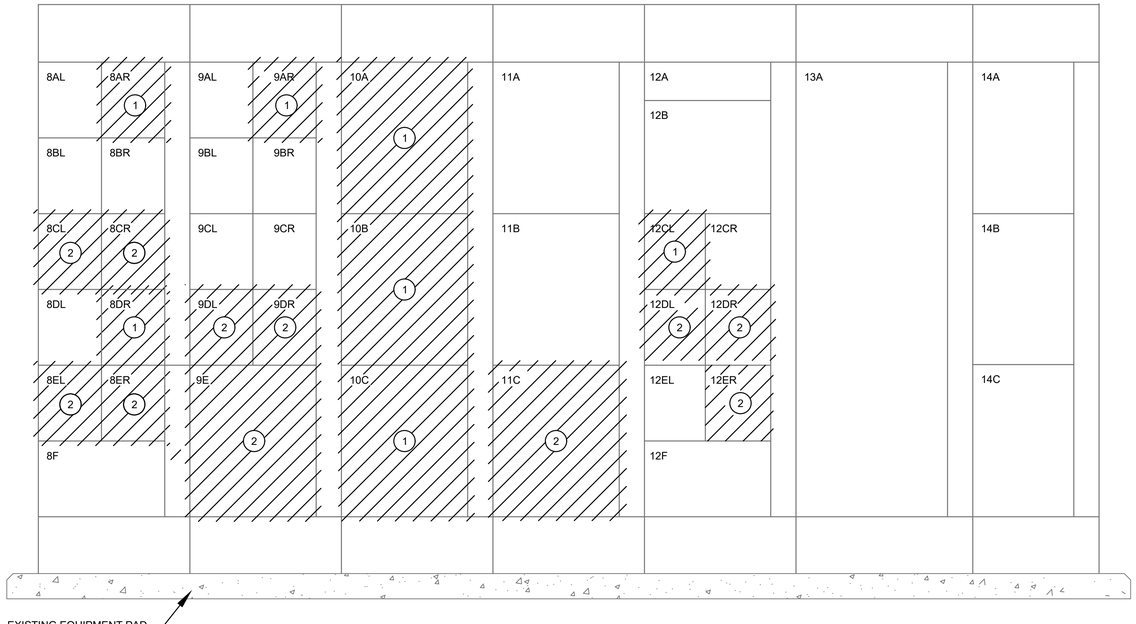

1 CHEMICAL HANDLING AREA - EXISTING 8-MCC-1500-MCC REAR ELEVATION - DEMOLITION

SCALE: NONE

GENERAL NOTES:

1. FOR SYMBOLS AND ABBREVIATIONS, SEE DRAWING E-1.
2. FOR CONSTRUCTION SEQUENCE, SEE DRAWING E-2.
3. FOR EXISTING 8-MCC-1500-MCC ONE LINE DIAGRAM, SEE DRAWINGS EX-9 AND EX-10.
4. FOR EXISTING 8-MCC-1500-MCC LOCATION, SEE DRAWING EX-19.
5. FOR 8-MCC-1500-MCC ONE LINE DIAGRAM EXISTING AND MODIFICATION, SEE DRAWINGS E-15 AND E-16.
6. FOR 8-MCC-1500-MCC ELEVATION, EXISTING AND MODIFICATION, SEE DRAWING E-19.
7. PERFORM DEMOLITION WORK PER GENERAL DEMOLITION SHEETS. DISCONNECT AND REMOVE ALL ELECTRICAL CONNECTIONS TO EQUIPMENT IMPACTED BY DEMOLITION WORK, FROM EQUIPMENT BACK TO CORRESPONDING MCC, POWER CENTER, PANELBOARD OR I/O CABINET AS APPLICABLE. DEMOLITION SHALL BE COMPLETE AND SHALL INCLUDE WIRING, CONDUIT, PULL BOXES, JUNCTION BOXES, ETC. ASSOCIATED WITH THE EQUIPMENT BEING DEMOLISHED UNLESS NOTED OTHERWISE WITH THE EXCEPTION OF CONDUITS EMBEDDED IN SLAB WHICH SHALL BE CUT FLUSH, CAPPED AND ABANDONED IN PLACE.

DRAWING NOTES:

1. DEMOLITION HATCH ON THIS DRAWING REPRESENTS ONLY THE REMOVAL OF CABLE UPTO THE BREAKER OR STARTER IN THE MCC CUBICLE. UNLESS NOTED OTHERWISE.
2. DEMOLITION HATCH INCLUDES THE MCC CUBICLE AND THE CABLE.

THE DRAWINGS IN THIS SET ARE RECORD DRAWINGS. THEY ARE CONSTRUCTION CONTRACT DRAWINGS WHICH HAVE BEEN REVISED BASED ON AVAILABLE FIELD INFORMATION RECORDED BY OTHERS DURING CONSTRUCTION OF THIS CONTRACT. THERE HAS BEEN NO VERIFICATION OF DIMENSIONS SHOWN ON THE CONSTRUCTION DRAWINGS OR THE ACCURACY/COMPLETENESS OF THE FIELD INFORMATION RECEIVED.

SIGNATURE _____ DATE 2/7/2020

SHAH & ASSOCIATES

AS-BUILT REPLACEMENT SHEET

PROFESSIONAL CERTIFICATION
THIS DRAWING WAS ORIGINALLY APPROVED FOR CONSTRUCTION AND SEALED BY KANAIYALAL R. SHAH, A REGISTERED PROFESSIONAL ENGINEER IN THE STATE OF MARYLAND, NO. 11084.

NOTICE TO CONTRACTORS
- PROJECT ELEVATIONS ARE BASED ON NAVD88 AND HOWARD COUNTY'S BENCHMARK SYSTEM
- PREVIOUS PROJECTS USED OTHER DATUMS
- APPLY THE FOLLOWING CONVERSIONS WHEN USING PREVIOUS CONTRACT DRAWINGS:
  - ADDITION NO. 6: SUBTRACT 0.80 FT
  - PRIOR ADDITIONS: SUBTRACT 1.04 FT

DEPARTMENT OF PUBLIC WORKS
HOWARD COUNTY, MARYLAND

CHIEF, BUREAU OF UTILITIES DATE

DES:	SR
DRN:	VVS
CHK:	KRS
DATE:	10/2016

DATE	REV	DESCRIPTION
07/2019		RECORD DRAWING

ELECTRICAL

CHEMICAL HANDLING AREA
EXISTING MCC-15
ELEVATION - DEMOLITION

LITTLE PATUXENT WATER RECLAMATION PLANT
8TH ADDITION
BIOSOLIDS PROCESSING FACILITIES – PHASE I

CAPITAL PROJECT S–6295
CONTRACT NO. 24–4935

ELECTION DISTRICT NO. 6
HOWARD COUNTY, MARYLAND

SCALE AS SHOWN

SHEET 299 OF 463

EX-15

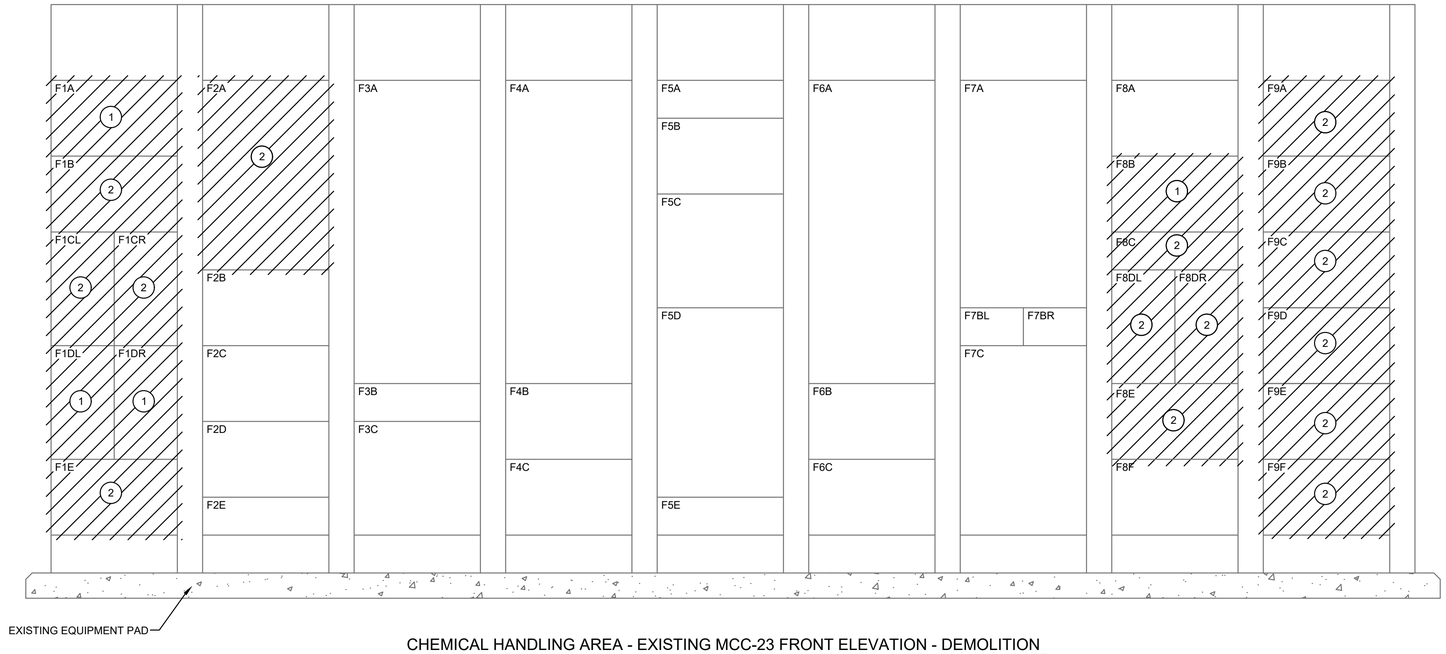

CHEMICAL HANDLING AREA - EXISTING MCC-23 FRONT ELEVATION - DEMOLITION

SCALE: NONE

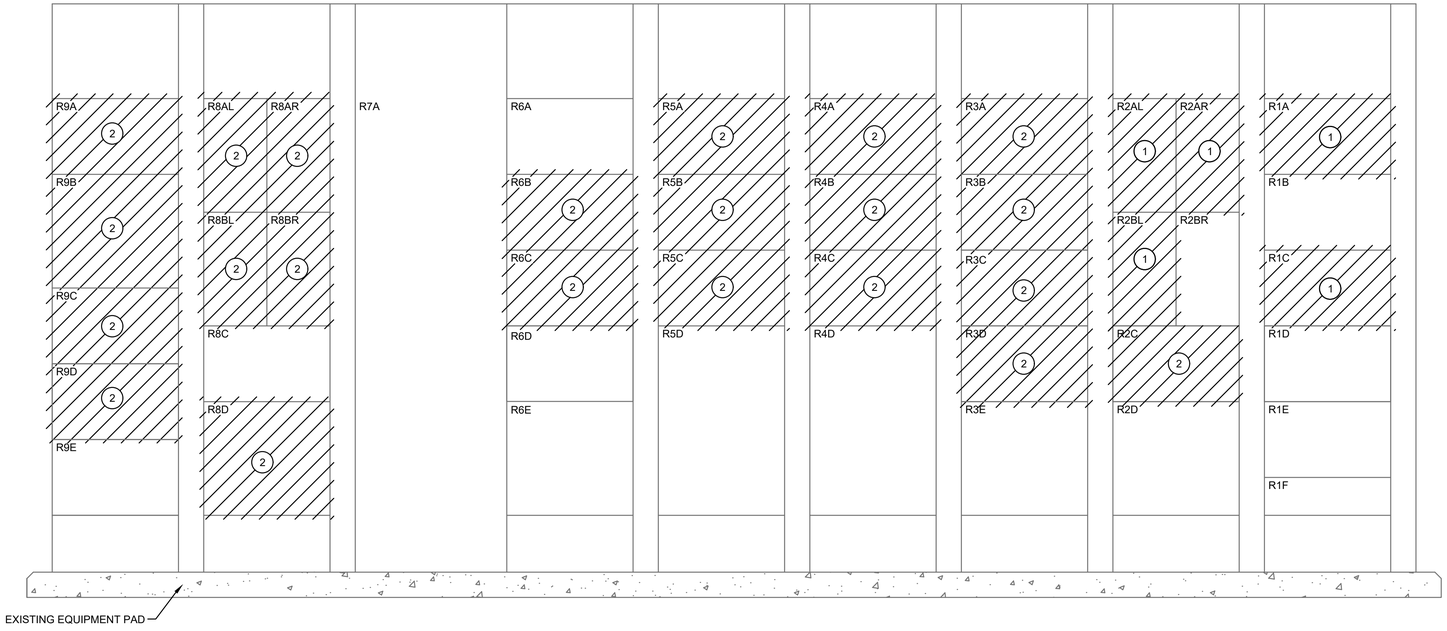

CHEMICAL HANDLING AREA - EXISTING MCC-23 REAR ELEVATION - DEMOLITION

SCALE: NONE

GENERAL NOTES:

1. FOR SYMBOLS AND ABBREVIATIONS, SEE DRAWING E-1.
2. FOR CONSTRUCTION SEQUENCE, SEE DRAWING E-2.
3. FOR MCC-23 ONE LINE DIAGRAM, EXISTING AND MODIFICATION, SEE DRAWINGS E-15 AND E-16.
4. FOR EXISTING MCC-23 LOCATION, SEE DRAWING EX-19.
5. PERFORM DEMOLITION WORK PER GENERAL DEMOLITION SHEETS. DISCONNECT AND REMOVE ALL ELECTRICAL CONNECTIONS TO EQUIPMENT IMPACTED BY DEMOLITION WORK, FROM EQUIPMENT BACK TO CORRESPONDING MCC, POWER CENTER, PANELBOARD OR I/O CABINET AS APPLICABLE. DEMOLITION SHALL BE COMPLETE AND SHALL INCLUDE WIRING, CONDUIT, PULL BOXES, JUNCTION BOXES, ETC. ASSOCIATED WITH THE EQUIPMENT BEING DEMOLISHED UNLESS NOTED OTHERWISE WITH THE EXCEPTION OF CONDUITS EMBEDDED IN SLAB WHICH SHALL BE CUT FLUSH, CAPPED AND ABANDONED IN PLACE.

DRAWING NOTES:

(1) DEMOLITION HATCH ON THIS DRAWING REPRESENTS ONLY THE REMOVAL OF CABLE UPTO THE BREAKER OR STARTER IN THE MCC CUBICLE. UNLESS NOTED OTHERWISE.

(2) DEMOLITION HATCH INCLUDES THE MCC CUBICLE AND THE CABLE.

THE DRAWINGS IN THIS SET ARE RECORD DRAWINGS. THEY ARE CONSTRUCTION CONTRACT DRAWINGS WHICH HAVE BEEN REVISED BASED ON AVAILABLE FIELD INFORMATION RECORDED BY OTHERS DURING CONSTRUCTION OF THIS CONTRACT. THERE HAS BEEN NO VERIFICATION OF DIMENSIONS SHOWN ON THE CONSTRUCTION DRAWINGS OR THE ACCURACY/COMPLETENESS OF THE FIELD INFORMATION RECEIVED.

SIGNATURE — DATE 2/7/2020

SHAH & ASSOCIATES

AS-BUILT REPLACEMENT SHEET

PROFESSIONAL CERTIFICATION
THIS DRAWING WAS ORIGINALLY APPROVED FOR CONSTRUCTION AND SEALED BY KANAIYALAL R. SHAH, A REGISTERED PROFESSIONAL ENGINEER IN THE STATE OF MARYLAND, NO. 11084.

NOTICE TO CONTRACTORS
- PROJECT ELEVATIONS ARE BASED ON NAVD88 AND HOWARD COUNTY'S BENCHMARK SYSTEM
- PREVIOUS PROJECTS USED OTHER DATUMS
- APPLY THE FOLLOWING CONVERSIONS WHEN USING PREVIOUS CONTRACT DRAWINGS:
  - ADDITION NO. 6: SUBTRACT 0.80 FT.
  - PRIOR ADDITIONS: SUBTRACT 1.04 FT.

DEPARTMENT OF PUBLIC WORKS
HOWARD COUNTY, MARYLAND

CHIEF, BUREAU OF UTILITIES — DATE

DES: SR
DRN: VVS
CHK: KRS
DATE: 10/2016

DATE	REV	DESCRIPTION
07/2019		RECORD DRAWING

ELECTRICAL

CHEMICAL HANDLING AREA
EXISTING MCC-23
ELEVATION - DEMOLITION

LITTLE PATUXENT WATER RECLAMATION PLANT
8TH ADDITION
BIOSOLIDS PROCESSING FACILITIES – PHASE I

CAPITAL PROJECT S-6295
CONTRACT NO. 24-4935

ELECTION DISTRICT NO. 6
HOWARD COUNTY, MARYLAND

SCALE AS SHOWN

SHEET 300 OF 463

EX-16

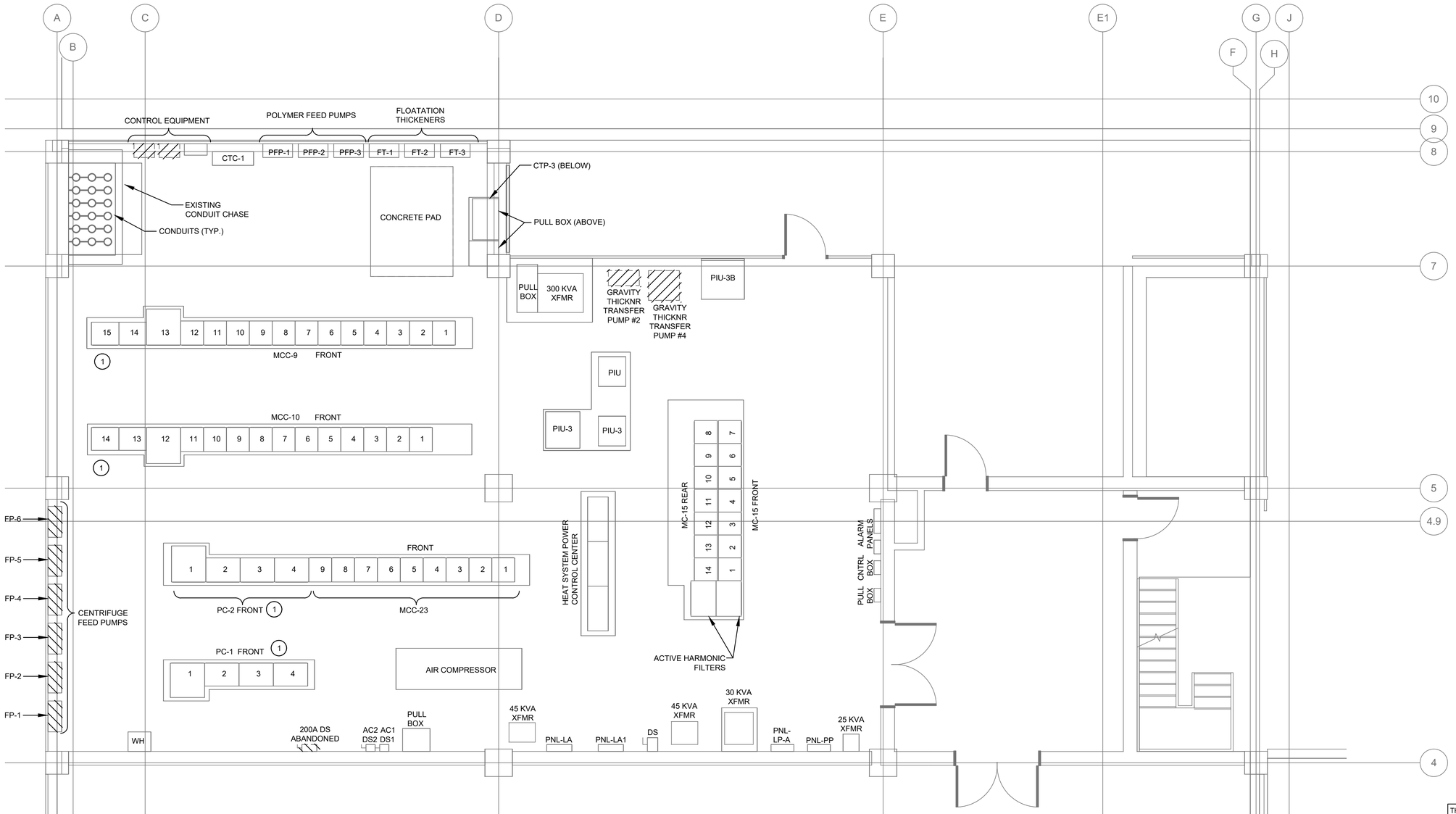

GENERAL NOTES:

1. FOR SYMBOLS AND ABBREVIATIONS, SEE DRAWING E-1.
2. FOR CONSTRUCTION SEQUENCE, SEE DRAWING E-2.
3. FOR PROCESS MECHANICAL EQUIPMENT ASSOCIATED WITH EQUIPMENT SHOWN TO BE DEMOLISHED ON THIS DRAWING, SEE GENERAL DEMOLITION SHEETS.
4. DEMOLITION SHALL BE COMPLETE AND SHALL INCLUDE, WIRING, CONDUIT, ETC. UNLESS OTHERWISE INDICATED, WITH THE EXCEPTION OF CONDUITS EMBEDDED IN SLAB WHICH SHALL BE CUT FLUSH, CAPPED AND ABANDONED IN PLACE.

DRAWING NOTES:

(1) EXISTING EQUIPMENT WILL BE DEMOLISHED IN PHASE II DURING DRYER BUILDING CONSTRUCTION.

GRAPHIC SCALE

0 4 8 12

SCALE: 1/4" = 1'-0"

NOTE: IF DRAWING IS A REDUCTION GRAPHIC SCALE MUST BE USED.

CHEMICAL HANDLING AREA - ELECTRICAL ROOM - EXISTING AND DEMOLITION

SCALE: 1/4" = 1'-0"

THE DRAWINGS IN THIS SET ARE RECORD DRAWINGS. THEY ARE CONSTRUCTION CONTRACT DRAWINGS WHICH HAVE BEEN REVISED BASED ON AVAILABLE FIELD INFORMATION RECORDED BY OTHERS DURING CONSTRUCTION OF THIS CONTRACT. THERE HAS BEEN NO VERIFICATION OF DIMENSIONS SHOWN ON THE CONSTRUCTION DRAWINGS OR THE ACCURACY/COMPLETENESS OF THE FIELD INFORMATION RECEIVED.

SIGNATURE — DATE 2/7/2020

SHAH & ASSOCIATES

AS-BUILT REPLACEMENT SHEET

PROFESSIONAL CERTIFICATION
THIS DRAWING WAS ORIGINALLY APPROVED FOR CONSTRUCTION AND SEALED BY KANAIYALAL R. SHAH, A REGISTERED PROFESSIONAL ENGINEER IN THE STATE OF MARYLAND, NO. 11084.

NOTICE TO CONTRACTORS
- PROJECT ELEVATIONS ARE BASED ON NAVD88 AND HOWARD COUNTY'S BENCHMARK SYSTEM
- PREVIOUS PROJECTS USED OTHER DATUMS
- APPLY THE FOLLOWING CONVERSIONS WHEN USING PREVIOUS CONTRACT DRAWINGS:
  - ADDITION NO. 6: SUBTRACT 0.80 FT
  - PRIOR ADDITIONS: SUBTRACT 1.04 FT

DEPARTMENT OF PUBLIC WORKS
HOWARD COUNTY, MARYLAND

CHIEF, BUREAU OF UTILITIES DATE

DES: SR
DRN: DMG
CHK: KRS
DATE: 10/2016

DATE	REV	DESCRIPTION
07/2019		RECORD DRAWING

ELECTRICAL

CHEMICAL HANDLING AREA
ELECTRICAL ROOM
EXISTING AND DEMOLITION

LITTLE PATUXENT WATER RECLAMATION PLANT
8TH ADDITION
BIOSOLIDS PROCESSING FACILITIES – PHASE I

CAPITAL PROJECT S-6295
CONTRACT NO. 24-4935

ELECTION DISTRICT NO. 6
HOWARD COUNTY, MARYLAND

SCALE AS SHOWN

SHEET 301 OF 463

EX-19

SYMBOL	DESCRIPTION
J OR J	JUNCTION BOX
	CONVENIENCE RECEPTACLE - 120V, 1∅, DUPLEX UNLESS SPECIFIED OTHERWISE WP-WEATHERPROOF TL-TWIST LOCK CRE-CORROSION RESISTANT
	CIRCUIT BREAKER
	FUSE
400AF 400AT	CIRCUIT BREAKER, AMPERE FRAME AND AMPERE TRIP RATING SHOWN, 3 POLE UNLESS INDICATED OTHERWISE.
225A , 1200A	FUSE FIXED, DRAW OUT - (RATING INDICATED)
	DRAWOUT CIRCUIT BREAKER, LOW VOLTAGE
52	DRAWOUT CIRCUIT BREAKER
	GROUND
27	UNDER VOLTAGE RELAY
120V or 120/240V 15 KVA 1 PH	PHASE AND RATING INDICATED AS APPLICABLE CONTROL POWER TRANSFORMER, SECONDARY VOLTAGES,
GFR 25A 0.1	PICK-UP SETTING TIME CURRENT CHARACTERISTIC GROUND FAULT RELAY WITH CT
KX	KIRK KEY INTERLOCK
(3)	CURRENT TRANSFORMER, NUMBER INDICATED
A	INDICATING LIGHT - LETTER INDICATES COLOR A - AMBER G - GREEN B - BLUE R - RED C - CLEAR W - WHITE
	EMH - ELECTRICAL MANHOLE
PB	PULL BOX
	COMBINATION STARTER WITH DISCONNECT SWITCH
X X	SUBSTATION FENCE
	EXISTING CONDITION TO REMAIN UNLESS INDICATED OTHERWISE
	EXISTING CONDITION TO BE REMOVED.
	NEW WORK, AS NOTED.
	CABLE TERMINATION
	CONDUCTORS CONNECTED
	LIGHTNING ARRESTER
	POTENTIAL TRANSFORMER
	DELTA CONNECTED
AIT	ANALYSIS INDICATING TRANSMITTER
SV	SOLENOID VALVE
PSH	PRESSURE SWITCH
	SPLICE

SYMBOL	DESCRIPTION
	WYE CONNECTION - UNGROUNDED, GROUNDED
	POWER TRANSFORMER
A	AMMETER
AS	AMMETER SWITCH
V	VOLTMETER
K	KEY INTERLOCK - MECHANICAL
E	ELECTRICAL INTERLOCK
	PANELBOARD RATING AS INDICATED
M	ELECTRIC MOTOR
M OR 5	INDUCTION MOTOR, HORSEPOWER INDICATED
	SINGLE RECEPTACLE, 120V, 20A W/GFCI WP- WEATHERPROOF
S M	MANUAL MOTOR STARTING SWITCH
S	SINGLE POLE SWITCH
	CONDUIT DOWN OR AWAY
	CONDUIT UP OR TOWARD VIEWER
	CONDUIT, STUBBED AND CAPPED AS SHOWN
E	UNDERGROUND ELECTRIC
	PUSH BUTTON
J 30	NONFUSED DISCONNECT SWITCH, SIZE INDICATED, 3-POLE, 30 AMPS AND NEMA 4X ENCLOSURE UNLESS INDICATED OTHERWISE.
30/20 F J 30/20	FUSED DISCONNECT SWITCH, SIZE INDICATED (30/20, 30 = SWITCH RATING: 20 = FUSE RATING) 3 POLE AND NEMA 4X ENCLOSURE UNLESS INDICATED OTHERWISE.
	CAPACITOR
1	MAGNETIC STARTER FVNR WITH NEMA SIZE INDICATED
MCP 15AT	MOTOR CIRCUIT PROTECTOR, MAXIMUM TRIP SETTING INDICATED
	DRY CONTACTS - N.O., N.C.
V	ACTUATED VALVE
SPD	SURGE PROTECTION DEVICE
TVSS	TRANSIENT VOLTAGE SURGE SUPPRESSOR
PMT	MICROPROCESSOR BASED POWER MONITOR
PQM	POWER QUALITY METER
VFD	VARIABLE FREQUENCY DRIVE
FACP	FIRE ALARM CONTROL PANEL
FATP	FIRE ALARM TERMINAL PANEL
N1 N2 L	AUTOMATIC TRANSFER SWITCH
	DUCT BANK, NEW WORK
	DUCT BANK, EXISTING

ABBREVIATION	DESCRIPTION
A	AMMETER, AMPERE, AMBER
AC	ALTERNATING CURRENT
ACU, A/C	AIR CONDITIONING UNIT
AE/AIT	ANALYSIS INDICATOR/TRANSMITTER
AF	AMPERE FRAME
AFD	ADJUSTABLE FREQUENCY DRIVE
AFF	ABOVE FINISHED FLOOR
AHU	AIR HANDLING UNIT
AIC	AMPERES INTERRUPTING CURRENT
AL	ALARM, ALUMINUM
A-M	AUTOMATIC-MANUAL
AS	AMMETER SWITCH, AMPERE SENSOR
AT	AMPERE TRIP
ATS	AUTOMATIC TRANSFER SWITCH
AUX.	AUXILIARY
AWG	AMERICAN WIRE GAUGE
BKR.	CIRCUIT BREAKER
BLDG.	BUILDING
BV	BALL VALVE
C	CONDUIT, CONTACTOR
CB	CIRCUIT BREAKER
C/C	CENTER-TO-CENTER
CKT	CIRCUIT
CL	CLOSE
CLF	CURRENT LIMITING FUSE
CMU	CONCRETE MASONRY UNIT
COL.	COLUMN
COMM.	COMMUNICATIONS
CONN.	CONNECTION
CP	CONTROL PANEL
CPT	CONTROL POWER TRANSFORMER
CR	CONTROL RELAY
CS	CONTROL SWITCH/BREAKER
	CONTROL SWITCH
CT	CURRENT TRANSFORMER
CU	COPPER
CV	CONE VALVE
DB	DUCT BANK
DC	DIRECT CURRENT
DEAMM	DEAMMONIFICATION
DIA.	DIAMETER
DM	DAMPER MOTOR
DN	DOWN
DP	DISTRIBUTION PANEL
DPCS	DIGITAL PROCESS CONTROL SYSTEM
DPST	DOUBLE POLE SINGLE THROW
DS	DISCONNECT SWITCH
DWG	DRAWING
EA	EACH
EC	EXISTING CABLE
EF	EXHAUST FAN
EL., ELEV.	ELEVATION
ELECT.	ELECTRICAL
EMH	ELECTRIC MANHOLE
EM, EMERG	EMERGENCY
EO	ELECTRIC OPERATOR
ETM	ELAPSED TIME METER
EX, EXIST	EXISTING
F	FUSE
FA	FRAME AMPERES, FIRE ALARM CIRCUIT
FCV	FLOW CONTROL VALVE
FDR	FEEDER, FEEDER
	DISCHARGE RESISTOR
FE/FIT	FLOW INDICATOR/TRANSMITTER
FO	FIBER OPTIC
FSH	FLOW SWITCH - HIGH FLOW
FSL	FLOW SWITCH - LOW FLOW
FU	FUSE BLOCK
FVNR	FULL VOLTAGE NON-REVERSING
G	GREEN, GROUND
GALV	GALVANIZED
GFI	GROUND FAULT INTERRUPTER

ABBREVIATION	DESCRIPTION
GFR	GROUND FAULT RELAY
GND, GD	GROUND
GS	GROUND FAULT SENSOR
GV	GATE VALVE
HCU	HARMONIC CORRECTION UNIT
H, HTR.	HEATER
HH	HANDHOLE
H-O-A	HAND-OFF-AUTOMATIC
HP	HORSEPOWER
HVAC	HEATING, VENTILATING AND AIR CONDITIONING
HZ	HERTZ
I/O	INPUT/OUTPUT
J, J.B., J-BOX	JUNCTION BOX
K	KEY INTERLOCK
KA	KILOAMPERES
KAIC	THOUSANDS OF AMPERES INTERRUPTING CURRENT
KCMIL	THOUSANDS OF CIRCULAR MILS
KV	KILOVOLTS
KVA	KILOVOLT-AMPERES
KW	KILOWATTS
KWH	KILOWATT-HOUR METER
LA	LIGHTNING ARRESTER
LBS	LOAD BREAK SWITCH
L.C.	LOCKED CLOSED
LCP	LOCAL CONTROL PANEL
LE/LIT	LEVEL INDICATOR/TRANSMITTER
LIS	LOAD INTERRUPTER SWITCH
L.O.	LOCKED OPEN, LOCKOUT
L-O-R	LOCAL-OFF-REMOTE
L-R	LOCAL-REMOTE
LS	LIMIT SWITCH
LSH	LEVEL SWITCH - HIGH LEVEL
LSL	LEVEL SWITCH - LOW LEVEL
LV	LOW VOLTAGE
LOH	LUBE OIL HEATER
LP	LIGHTING PANEL
LTG.	LIGHTING
M	MAIN CONTACTOR (ON ST EXCITER)
MAX.	MAXIMUM
MCB	MAIN CIRCUIT BREAKER
MCC	MOTOR CONTROL CENTER
MCM	THOUSANDS OF CIRCULAR MILS
MCP	MOTOR CIRCUIT PROTECTOR, MANUFACTURER'S CONTROL PANEL
MDP	MAIN DISTRIBUTION PANEL
MECH	MECHANICAL
MFG.	MANUFACTURING
MFR.	MULTI-FUNCTION RELAY
MH	MANHOLE, MONORAIL HOIST
MIN.	MINIMUM
MLO	MAIN LUGS ONLY
MM	MICROPROCESSOR BASED METER
MOCB	MAIN OIL CIRCUIT BREAKER
MOD	MOTOR OPERATED DAMPER
MR	MICROPROCESSOR BASED PROTECTIVE RELAYING DEVICE
MR-B	MICROPROCESSOR BASED BACK-UP PROTECTIVE RELAYING
MV	MEDIUM VOLTAGE
MVA	MEGAVOLT-AMPERES
NEC	NATIONAL ELECTRICAL CODE
N/A	NOT APPLICABLE
N.C.	NORMALLY CLOSED
NEMA	NATIONAL ELECTRICAL MANUFACTURER'S ASSOCIATION

ABBREVIATION	DESCRIPTION
NFPA	NATIONAL FIRE PROTECTION ASSOCIATION
N.O.	NORMALLY OPEN
No., #	NUMBER
O.C.	ON CENTER
OCB	OIL CIRCUIT BREAKER
OH	OVERHEAD
OHP	OVERHEAD POLE
OL	MOTOR OVERLOAD HEATING ELEMENT
OP	OPEN
OPS	OPERATOR'S STATION
OSHA	OCCUPATIONAL SAFETY AND HEALTH ADMINISTRATION
P	POLE, POLES OR PUMP
PB	PULL BOX, PUSH-BUTTON
PC	POWER CONDITIONER
PCB	POWER CIRCUIT BREAKER
PIT	PRESSURE INDICATING TRANSMITTER
PLC	PROGRAMMABLE LOGIC CONTROLLER
PMT	POWER MONITOR
PQM	POWER QUALITY METER
PSH	PRESSURE SWITCH
PT	POTENTIAL TRANSFORMER
PVC	POLYVINYL CHLORIDE
RECEPT.	RECEPTACLE
RES	RESISTOR
RIO	REMOTE I/O
RMS	ROOT MEAN SQUARE
RVNR	REDUCED VOLTAGE, NON-REVERSING
S	SPARE
SEC.	SECONDS
SPD	SURGE PROTECTION DEVICE
STA.	STATION
SUB	SUBSTATION
SWGR	SWITCHGEAR
SYS.	SYSTEM
TBD	TO BE DETERMINED
TCB	TIE CIRCUIT BREAKER
TEMP.	TEMPORARY, TEMPERATURE
TOL	THERMAL OVERLOAD
TSP	TWISTED SHIELDED PAIR
TR	TIMING RELAY
TSH	TEMPERATURE SWITCH - HIGH TEMP.
TSL	TEMPERATURE SWITCH - LOW TEMP.
TVSS	TRANSIENT VOLTAGE SURGE SUPPRESSOR
TYP.	TYPICAL
UH	UNIT HEATER
UL	UNDERWRITERS' LABORATORY
UON	UNLESS OTHERWISE NOTED
UPS	UNINTERRUPTIBLE POWER SUPPLY
USS	UNIT SUBSTATION
V	VOLTS, VOLTAGE
VFD	VARIABLE FREQUENCY DRIVE
W	WATTS, WIRE, WHITE
WH	WATER HEATER
WP	WEATHERPROOF
XFMR	TRANSFORMER
XFER	TRANSFER
Z	IMPEDANCE
#16 TCC	16 AWG THERMOCOUPLE CABLES
#16 TSP	16 AWG TWISTED SHIELDED PAIR CABLES
3P	THREE POLE

THE DRAWINGS IN THIS SET ARE RECORD DRAWINGS. THEY ARE CONSTRUCTION CONTRACT DRAWINGS WHICH HAVE BEEN REVISED BASED ON AVAILABLE FIELD INFORMATION RECORDED BY OTHERS DURING CONSTRUCTION OF THIS CONTRACT. THERE HAS BEEN NO VERIFICATION OF DIMENSIONS SHOWN ON THE CONSTRUCTION DRAWINGS OR THE ACCURACY/COMPLETENESS OF THE FIELD INFORMATION RECEIVED.

SIGNATURE 2/7/2020 DATE

S&A SHAH & ASSOCIATES

HDR

AS-BUILT REPLACEMENT SHEET

PROFESSIONAL CERTIFICATION
THIS DRAWING WAS ORIGINALLY APPROVED FOR CONSTRUCTION AND SEALED BY KANAIYALAL R. SHAH, A REGISTERED PROFESSIONAL ENGINEER IN THE STATE OF MARYLAND, NO. 11084.

NOTICE TO CONTRACTORS
- PROJECT ELEVATIONS ARE BASED ON NAVD88 AND HOWARD COUNTY'S BENCHMARK SYSTEM
- PREVIOUS PROJECTS USED OTHER DATUMS
- APPLY THE FOLLOWING CONVERSIONS WHEN USING PREVIOUS CONTRACT DRAWINGS:
  - ADDITION NO. 6: SUBTRACT 0.80 FT
  - PRIOR ADDITIONS: SUBTRACT 1.04 FT

DEPARTMENT OF PUBLIC WORKS
HOWARD COUNTY, MARYLAND

CHIEF, BUREAU OF UTILITIES DATE

DES: SR
DRN: DMG
CHK: KRS
DATE: 10/2016

DATE	REV	DESCRIPTION
07/2019		RECORD DRAWING

ELECTRICAL

SYMBOLS AND ABBREVIATIONS

LITTLE PATUXENT WATER RECLAMATION PLANT
8TH ADDITION
BIOSOLIDS PROCESSING FACILITIES – PHASE I

CAPITAL PROJECT S–6295
CONTRACT NO. 24–4935

ELECTION DISTRICT NO. 6
HOWARD COUNTY, MARYLAND

SCALE AS SHOWN

SHEET 302 OF 463

E-1

PROPOSED SUGGESTED ELECTRICAL CONSTRUCTION SEQUENCES:

A. INSTALLATION OF NEW SUBSTATION PS-8 AND MV FEEDERS

SEE DRAWINGS E-24, E-26A AND E-31.

B. INSTALLATION OF NEW MCC 31 AND FEEDERS:

1. INSTALL NEW MCC 31 INSIDE NEW ENCLOSURE ON THE PIPE GALLERY ROOF.
2. INSTALL/EXTEND NEW CONDUIT FROM NEW PS-8 TO BOTH MAIN BREAKERS OF MCC 31.
3. PULL NEW CABLES.
4. TEST CABLES.
5. TERMINATE AT BOTH NEW SUBSTATION PS-8 AND MCC MAIN BREAKERS.
6. ENERGIZE NEW MCC 31 FROM NEW PS-8.
7. VERIFY OPERATION OF NEW MCC 31.
8. ADD NEW LOADS AS SHOWN FROM NEW MCC 31 BY INSTALLING NEW CONDUITS, CABLES ETC. AND TERMINATING AND ENERGIZING FROM NEW MCC 31.

THE DRAWINGS IN THIS SET ARE RECORD DRAWINGS. THEY ARE CONSTRUCTION CONTRACT DRAWINGS WHICH HAVE BEEN REVISED BASED ON AVAILABLE FIELD INFORMATION RECORDED BY OTHERS DURING CONSTRUCTION OF THIS CONTRACT. THERE HAS BEEN NO VERIFICATION OF DIMENSIONS SHOWN ON THE CONSTRUCTION DRAWINGS OR THE ACCURACY/COMPLETENESS OF THE FIELD INFORMATION RECEIVED.

SIGNATURE 2/7/2023 DATE

SHAH & ASSOCIATES

HDR

AS-BUILT REPLACEMENT SHEET

PROFESSIONAL CERTIFICATION
THIS DRAWING WAS ORIGINALLY APPROVED FOR CONSTRUCTION AND SEALED BY KANAIYALAL R. SHAH, A REGISTERED PROFESSIONAL ENGINEER IN THE STATE OF MARYLAND, NO. 11084.

NOTICE TO CONTRACTORS
- PROJECT ELEVATIONS ARE BASED ON NAVD88 AND HOWARD COUNTY'S BENCHMARK SYSTEM
- PREVIOUS PROJECTS USED OTHER DATUMS
- APPLY THE FOLLOWING CONVERSIONS WHEN USING PREVIOUS CONTRACT DRAWINGS:
  - ADDITION NO. 6: SUBTRACT 0.80 FT.
  - PRIOR ADDITIONS: SUBTRACT 1.04 FT.

DEPARTMENT OF PUBLIC WORKS
HOWARD COUNTY, MARYLAND

CHIEF, BUREAU OF UTILITIES DATE

DES: SR
DRN: AJS
CHK: KRS
DATE: 10/2016

DATE	REV	DESCRIPTION
07/2019		RECORD DRAWING

ELECTRICAL

CONSTRUCTION SEQUENCE

LITTLE PATUXENT WATER RECLAMATION PLANT
8TH ADDITION
BIOSOLIDS PROCESSING FACILITIES – PHASE I

CAPITAL PROJECT S-6295
CONTRACT NO. 24-4935

ELECTION DISTRICT NO. 6
HOWARD COUNTY, MARYLAND

SCALE AS SHOWN

SHEET **303** OF **463**

E-2

1/12/22

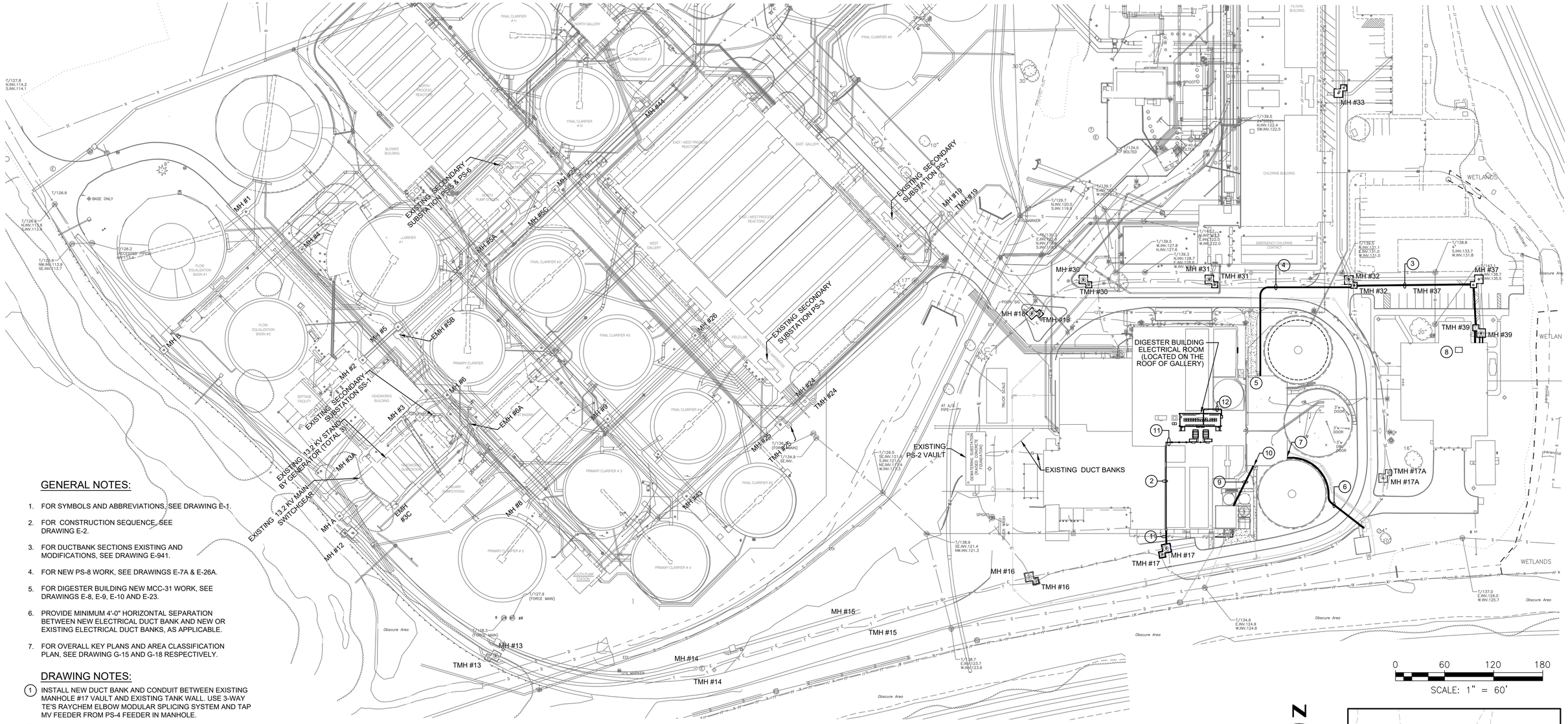

GENERAL NOTES:

1. FOR SYMBOLS AND ABBREVIATIONS, SEE DRAWING E-1.
2. FOR CONSTRUCTION SEQUENCE, SEE DRAWING E-2.
3. FOR DUCTBANK SECTIONS EXISTING AND MODIFICATIONS, SEE DRAWING E-941.
4. FOR NEW PS-8 WORK, SEE DRAWINGS E-7A & E-26A.
5. FOR DIGESTER BUILDING NEW MCC-31 WORK, SEE DRAWINGS E-8, E-9, E-10 AND E-23.
6. PROVIDE MINIMUM 4'-0" HORIZONTAL SEPARATION BETWEEN NEW ELECTRICAL DUCT BANK AND NEW OR EXISTING ELECTRICAL DUCT BANKS, AS APPLICABLE.
7. FOR OVERALL KEY PLANS AND AREA CLASSIFICATION PLAN, SEE DRAWING G-15 AND G-18 RESPECTIVELY.

DRAWING NOTES:

(1) INSTALL NEW DUCT BANK AND CONDUIT BETWEEN EXISTING MANHOLE #17 VAULT AND EXISTING TANK WALL. USE 3-WAY TE'S RAYCHEM ELBOW MODULAR SPLICING SYSTEM AND TAP MV FEEDER FROM PS-4 FEEDER IN MANHOLE.

(2) INSTALL TWO 4" PVC COATED RIGID CONDUITS AND PULL BOXES AS REQUIRED TO ROUTE FEEDERS TO PS-8 PRIMARY SWITCHES ON THE PIPE GALLERY ROOF.

(3) INSTALL NEW DUCT BANKS PARALLEL TO EXISTING TELEPHONE DUCT BANK TO ROUTE FIBER OPTIC CABLE BETWEEN ADMINISTRATION BUILDING CONTROL ROOM AND DIGESTER AREA PLC CABINET IN DIGESTER BUILDING MCC ROOM VIA TELEPHONE MANHOLES TMH#39, TMH#37 AND TMH#32. CORE DRILL MANHOLES AS REQUIRED.

(4) TO EXTEND THE FIBER OPTIC CABLE FROM ADMINISTRATION BUILDING CONTROL ROOM TO DRYER BUILDING CONTROL ROOM IN PHASE 2 OF CONSTRUCTION, ADD TWO ADDITIONAL SPARE CONDUITS IN THE COMMUNICATION DUCTBANK HEADED TO THE DIGESTER BUILDING FROM MH-32 (NOW SIX-WAY DUCTBANK). A PORTION OF THE DUCTBANK LEAVING THE DIGESTER BUILDING AND HEADING NORTH IS ALREADY INSTALLED OUT FROM UNDER THE BUILDING SLAB. THE NEW SPARES WILL DEVIATE FROM THE DUCTBANK AT THIS POINT AND TURN UP AT THE DIGESTER BUILDING NORTH WALL AND TERMINATE IN A BOX ABOVE GRADE. CORE DRILL MANHOLE AS REQUIRED.

DRAWING NOTES (CONT'D):

(5) INSTALL 2" CONDUIT IN THE SLAB OF DIGESTER BUILDING AT EL 143.5 AND ROUTE TO DIGESTER AREA NETWORK PLC CABINET IN THE DIGESTER BUILDING MCC-31 ROOM VIA THE PIPE GALLERY CEILING.

(6) INSTALL NEW DUCT BANK FROM THE GAS FLARE CONTROL PANEL LOCATION SHOWN ON CIVIL PLANS TO THE CORRESPONDING POWER AND CONTROL CABINET IN THE DIGESTER BUILDING MCC ROOM.

(7) INSTALL 2" CONDUIT FOR POWER, 2" CONDUIT FOR FIBER OPTIC CABLE AND TWO 2" CONDUITS SPARE THRU THE DIGESTER BUILDING SLAB AT EL 143.5 AND ROUTE TO THE CORRESPONDING 120V PANEL AND PLC CABINET IN THE DIGESTER BUILDING MCC ROOM.

DRAWING NOTES (CONT'D):

(8) INSTALL AND ROUTE TWO 2" CONDUITS INSIDE THE ADMINISTRATION BUILDING FOR FIBER OPTIC CABLE TO THE ADMINISTRATION BUILDING NETWORK INTERFACE PANEL.

(9) INSTALL NEW DUCTBANK BETWEEN DIGESTER BUILDING AND PHOSPHORUS PRECIPITATION BUILDING.

(10) THE POWER AND CONTROL CONDUITS FROM THE DIGESTER BUILDING ELECTRICAL ROOM TO THE PHOSPHORUS PRECIPITATION BUILDING SHALL BE ROUTED AS FOLLOWS;

a) VIA THE PIPE GALLERY CEILING TO THE DIGESTER BUILDING.
b) THRU THE DIGESTER BUILDING FLOOR SLAB AT EL. 143.5
c) VIA NEW DUCT BANK IN BETWEEN THE DIGESTER BUILDING AND THE PHOSPHORUS PRECIPITATION BUILDING

DRAWING NOTES (CONT'D):

(11) PROVIDE AND INSTALL OVERHEAD CONDUITS ON SUPPORT STRUCTURE TO ROUTE THE MV FEEDERS TO PS-8 PRIMARY VACUUM BREAKER SWITCHGEAR ON THE PIPE GALLERY ROOF. USE EXISTING PROCESS PIPE SUPPORT AND MODIFY THE SUPPORT AS NEEDED.

(12) CONDUITS FROM THE DIGESTER BUILDING ELECTRICAL ROOM TO THE GENERATOR CONNECTION BOX SHALL BE RUN AS FOLLOWS:

a) OVERHEAD FROM MCC-31 GENERATOR BREAKER CUBICLE TO THE NORTH WALL INSIDE THE 8-MCC-3100-MCC ENCLOSURE.
b) FROM THE BACK OF MCC ENCLOSURE, OVERHEAD TOWARDS THE DIGESTER BUILDING WEST WALL.
c) AT THE NORTH EAST CORNER OF THE STAIRCASE, DROP DOWN TO THE NEW LOCATION OF THE GENERATOR CONNECTION CABINET INSTALLED ON A CONCRETE BASE.
d) PROVIDE PAD MOUNTED GENERATOR CONNECTION BOX BY BERTHOLD ELECTRIC CO. OR APPROVED EQUAL.
e) PROVIDE PULL BOXES AND CONDUITS SLEEVES AS REQUIRED.

THE DRAWINGS IN THIS SET ARE RECORD DRAWINGS. THEY ARE CONSTRUCTION CONTRACT DRAWINGS WHICH HAVE BEEN REVISED BASED ON AVAILABLE FIELD INFORMATION RECORDED BY OTHERS DURING CONSTRUCTION OF THIS CONTRACT. THERE HAS BEEN NO VERIFICATION OF DIMENSIONS SHOWN ON THE CONSTRUCTION DRAWINGS OR THE ACCURACY/COMPLETENESS OF THE FIELD INFORMATION RECEIVED.

SIGNATURE _____ DATE 2/7/2020

KEYMAP

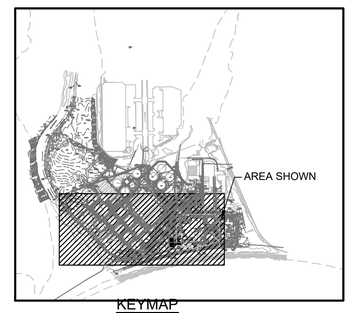

SHAH & ASSOCIATES

HDR

AS-BUILT REPLACEMENT SHEET

PROFESSIONAL CERTIFICATION
THIS DRAWING WAS ORIGINALLY APPROVED FOR CONSTRUCTION AND SEALED BY KANAIYALAL R. SHAH, A REGISTERED PROFESSIONAL ENGINEER IN THE STATE OF MARYLAND, NO. 11084.

NOTICE TO CONTRACTORS
- PROJECT ELEVATIONS ARE BASED ON NAVD88 AND HOWARD COUNTY'S BENCHMARK SYSTEM
- PREVIOUS PROJECTS USED OTHER DATUMS
- APPLY THE FOLLOWING CONVERSIONS WHEN USING PREVIOUS CONTRACT DRAWINGS:
  - ADDITION NO. 6: SUBTRACT 0.80 FT
  - PRIOR ADDITIONS: SUBTRACT 1.04 FT

DEPARTMENT OF PUBLIC WORKS
HOWARD COUNTY, MARYLAND

CHIEF, BUREAU OF UTILITIES DATE

DES:	SR
DRN:	DMG
CHK:	KRS
DATE:	10/2016

DATE	REV	DESCRIPTION
07/2019		RECORD DRAWING

ELECTRICAL

OVERALL ELECTRICAL SITE PLAN
EXISTING AND NEW WORK

LITTLE PATUXENT WATER RECLAMATION PLANT
8TH ADDITION
BIOSOLIDS PROCESSING FACILITIES – PHASE I

CAPITAL PROJECT S-6295
CONTRACT NO. 24-4935

ELECTION DISTRICT NO. 6
HOWARD COUNTY, MARYLAND

SCALE AS SHOWN

SHEET 304 OF 463

E-3

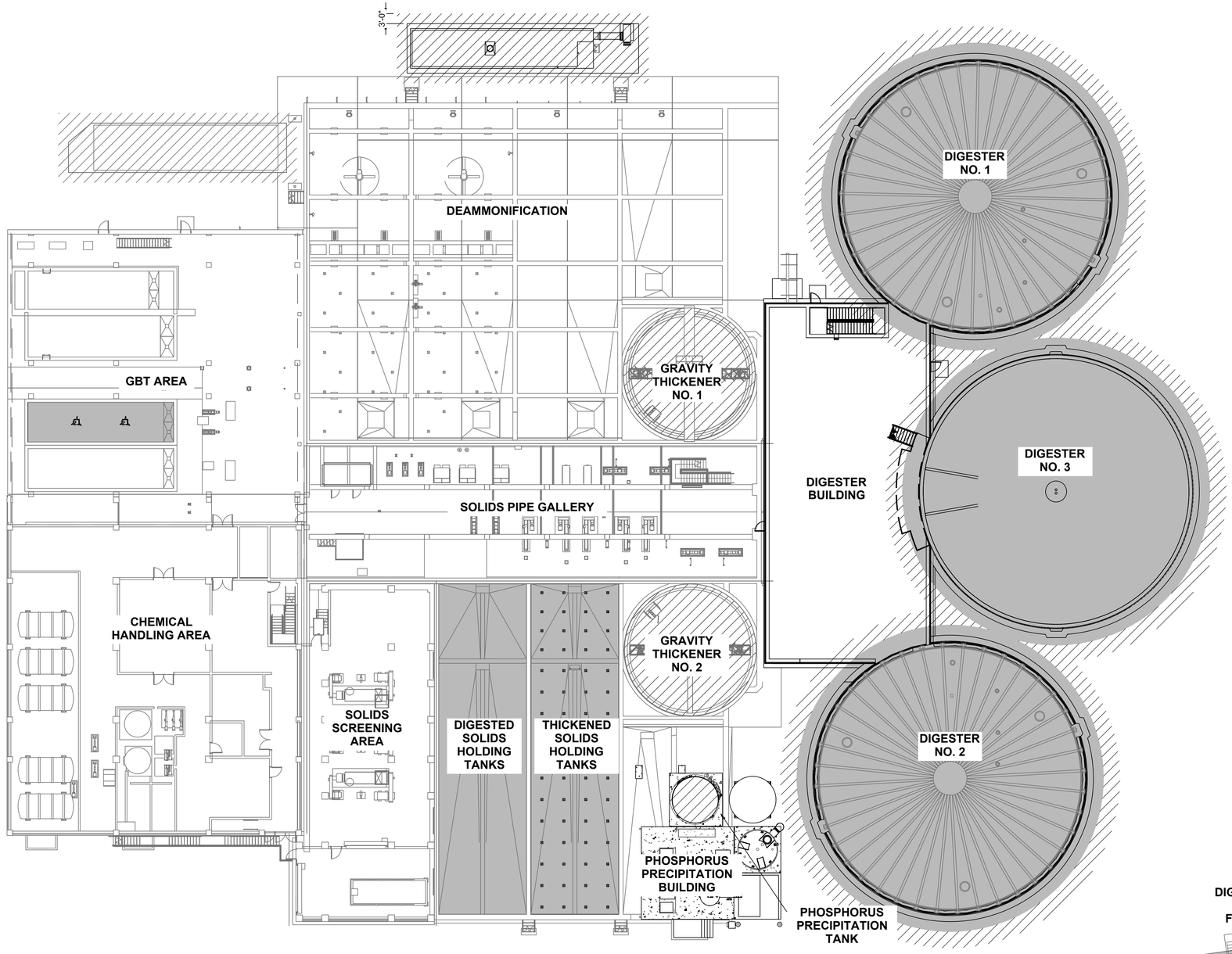

GENERAL NOTES:

1. AREA CLASSIFICATIONS PER NFPA-820 (2016)
2. ALL ODOR CONTROL EQUIPMENT AND PIPING IS CLASS I, DIVISION 2, GROUP D WITHIN 3 FT IN ALL DIRECTIONS PER NFPA 820 TABLE 4.2.2, ROW 20, LINE D AND FIGURE A.4.2(G).
3. FOR MORE DETAIL ON AREA CLASSIFICATION, SEE GENERAL DRAWINGS G-18 THRU G-26. WORK SHALL BE PERFORMERED IN ACCORDANCE WITH AREA CLASSIFICATION REQUIREMENTS. FOR ENCLOSURE AND CONDUIT TYPE, REFER TO SPECIFICATION SECTION 26 05 00.

LEGEND:

- CLASS I, DIVISION 1, GROUP D
- CLASS I, DIVISION 2, GROUP D
- UNCLASSIFIED

THE DRAWINGS IN THIS SET ARE RECORD DRAWINGS. THEY ARE CONSTRUCTION CONTRACT DRAWINGS WHICH HAVE BEEN REVISED BASED ON AVAILABLE FIELD INFORMATION RECORDED BY OTHERS DURING CONSTRUCTION OF THIS CONTRACT. THERE HAS BEEN NO VERIFICATION OF DIMENSIONS SHOWN ON THE CONSTRUCTION DRAWINGS OR THE ACCURACY/COMPLETENESS OF THE FIELD INFORMATION RECEIVED.

SIGNATURE _____ DATE 2/7/2020

SHAH & ASSOCIATES

AS-BUILT REPLACEMENT SHEET

PROFESSIONAL CERTIFICATION
THIS DRAWING WAS ORIGINALLY APPROVED FOR CONSTRUCTION AND SEALED BY KANAIYALAL R. SHAH, A REGISTERED PROFESSIONAL ENGINEER IN THE STATE OF MARYLAND, NO. 11084.

NOTICE TO CONTRACTORS
- PROJECT ELEVATIONS ARE BASED ON NAVD88 AND HOWARD COUNTY'S BENCHMARK SYSTEM
- PREVIOUS PROJECTS USED OTHER DATUMS
- APPLY THE FOLLOWING CONVERSIONS WHEN USING PREVIOUS CONTRACT DRAWINGS:
  - ADDITION NO. 6: SUBTRACT 0.80 FT.
  - PRIOR ADDITIONS: SUBTRACT 1.04 FT.

DEPARTMENT OF PUBLIC WORKS
HOWARD COUNTY, MARYLAND

CHIEF, BUREAU OF UTILITIES DATE

DES: SR
DRN: VVS
CHK: KRS
DATE: 1/2017

DATE	REV	DESCRIPTION
07/2019		RECORD DRAWING

ELECTRICAL

AREA CLASSIFICATION - OVERALL KEY PLAN

LITTLE PATUXENT WATER RECLAMATION PLANT
8TH ADDITION
BIOSOLIDS PROCESSING FACILITIES – PHASE I

CAPITAL PROJECT S-6295
CONTRACT NO. 24-4935

ELECTION DISTRICT NO. 6
HOWARD COUNTY, MARYLAND

SCALE AS SHOWN

SHEET 305 OF 463

E-3A

C:\rvt\2645911_100_D_V14_jseagle.rvt
1/23/2017 2:24:39 PM

GENERAL NOTES:

1. FOR SYMBOLS AND ABBREVIATIONS, SEE DRAWING E-1.
2. FOR CONSTRUCTION SEQUENCE, SEE DRAWING E-2.
3. FOR DUCT BANK SECTIONS EXISTING AND MODIFICATIONS, SEE DRAWING E-941.
4. NO NEW WORK IS SHOWN ON THIS DRAWING.

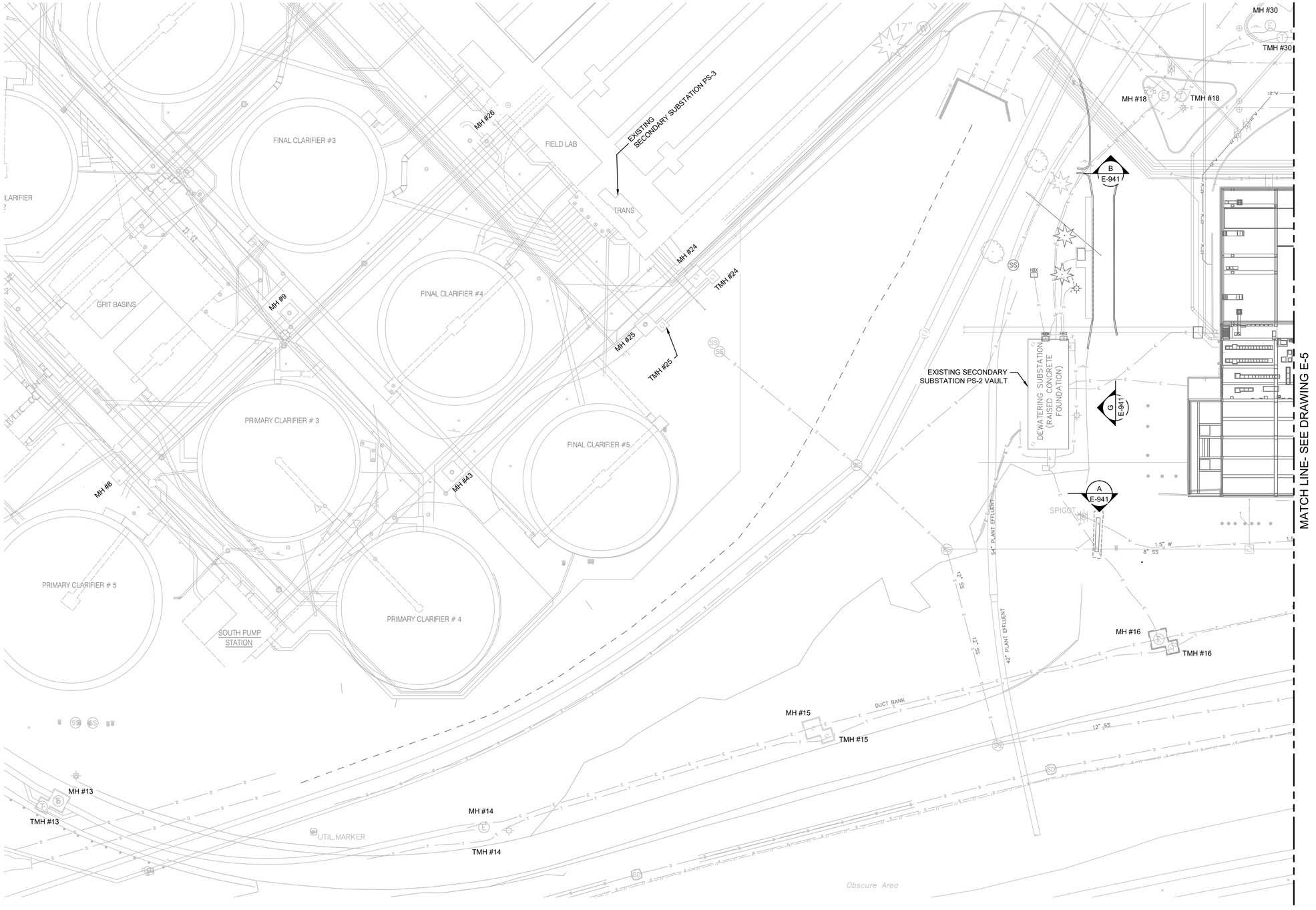

THE DRAWINGS IN THIS SET ARE RECORD DRAWINGS. THEY ARE CONSTRUCTION CONTRACT DRAWINGS WHICH HAVE BEEN REVISED BASED ON AVAILABLE FIELD INFORMATION RECORDED BY OTHERS DURING CONSTRUCTION OF THIS CONTRACT. THERE HAS BEEN NO VERIFICATION OF DIMENSIONS SHOWN ON THE CONSTRUCTION DRAWINGS OR THE ACCURACY/COMPLETENESS OF THE FIELD INFORMATION RECEIVED.

SIGNATURE _____ DATE 7/12/2019

N

0 30 60 90

SCALE: 1" = 30'

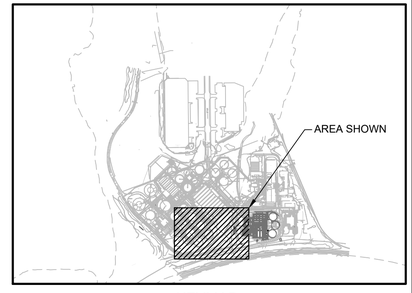

KEYMAP

SHAH & ASSOCIATES

HDR

AS-BUILT REPLACEMENT SHEET

PROFESSIONAL CERTIFICATION
THIS DRAWING WAS ORIGINALLY APPROVED FOR CONSTRUCTION AND SEALED BY KANAIYALAL R. SHAH, A REGISTERED PROFESSIONAL ENGINEER IN THE STATE OF MARYLAND, NO. 11084.

NOTICE TO CONTRACTORS
- PROJECT ELEVATIONS ARE BASED ON NAVD88 AND HOWARD COUNTY'S BENCHMARK SYSTEM
- PREVIOUS PROJECTS USED OTHER DATUMS
- APPLY THE FOLLOWING CONVERSIONS WHEN USING PREVIOUS CONTRACT DRAWINGS:
  - ADDITION NO. 6: SUBTRACT 0.80 FT
  - PRIOR ADDITIONS: SUBTRACT 1.04 FT

DEPARTMENT OF PUBLIC WORKS
HOWARD COUNTY, MARYLAND

CHIEF, BUREAU OF UTILITIES DATE

DES:	HFM
DRN:	AJS
CHK:	KRS
DATE:	10/2016

DATE	REV	DESCRIPTION
07/2019		RECORD DRAWING

ELECTRICAL

ELECTRICAL SITE PLAN I
EXISTING AND NEW WORK

LITTLE PATUXENT WATER RECLAMATION PLANT
8TH ADDITION
BIOSOLIDS PROCESSING FACILITIES – PHASE I

CAPITAL PROJECT S–6295
CONTRACT NO. 24–4935

ELECTION DISTRICT NO. 6
HOWARD COUNTY, MARYLAND

SCALE AS SHOWN

SHEET 306 OF 463

E-4

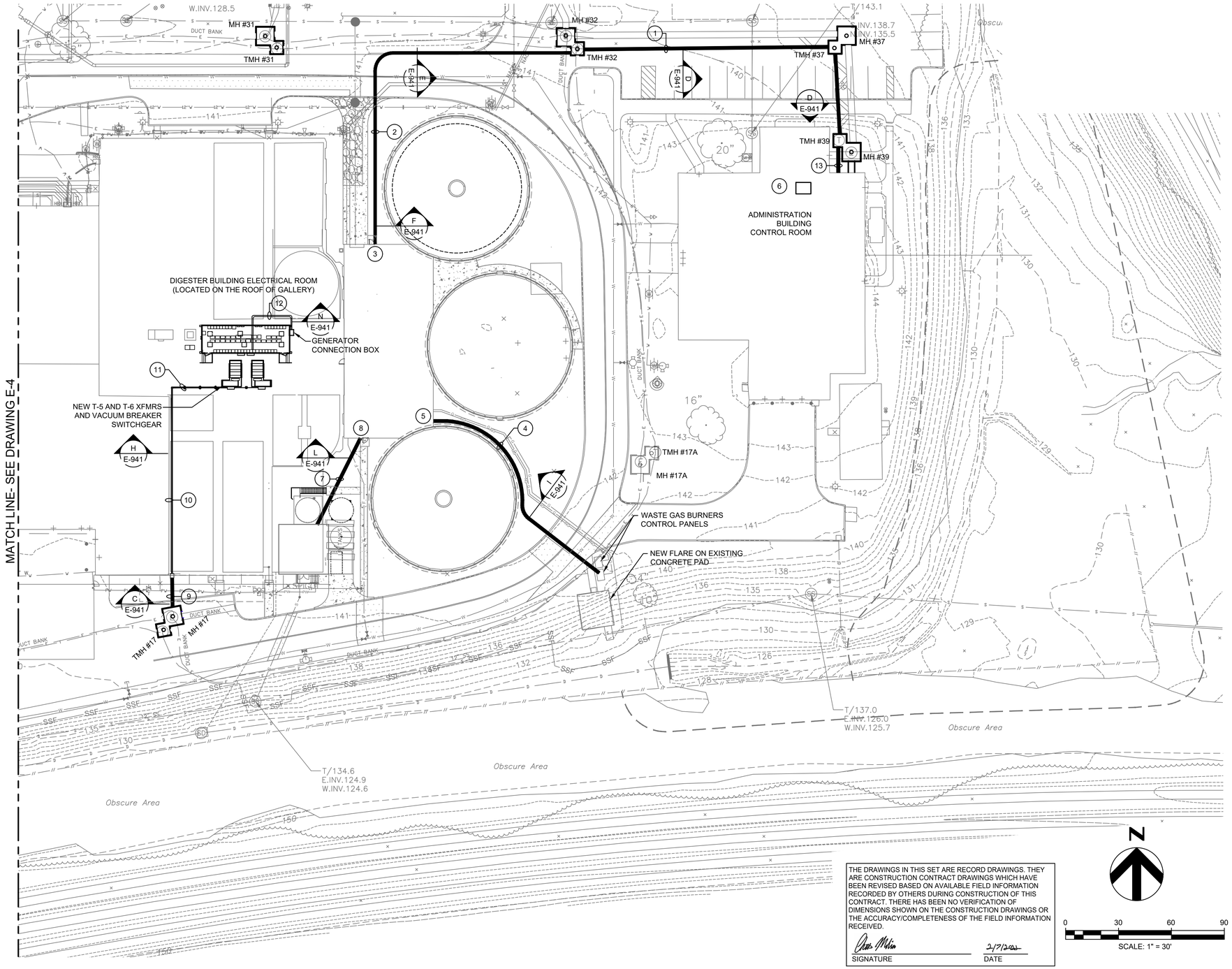

DRAWING NOTES (CONT'D):

9. INSTALL NEW DUCT BANK AND CONDUIT BETWEEN EXISTING MANHOLE #17 VAULT AND EXISTING TANK WALL. USE 3-WAY TE'S RAYCHEM ELBOW MODULAR SPLICING SYSTEM AND TAP MV FEEDER FROM PS-4 FEEDER IN MANHOLE.
10. INSTALL TWO 4" PVC COATED RIGID CONDUITS FOR MV FEEDERS. ROUTE ON THE TOP OF THE TANK AND INSTALL CONDUITS ON STRUTS ATTACHED TO THE TANK FLOOR.
11. PROVIDE AND INSTALL OVERHEAD CONDUITS ON SUPPORT STRUCTURES TO ROUTE THE MV FEEDERS TO PS-8 PRIMARY VACUUM BREAKER SWITCHGEAR ON THE PIPE GALLERY ROOF. USE EXISTING PROCESS PIPING CONDUIT SUPPORT AND MODIFY THE SUPPORT AS NEEDED.
12. CONDUITS FROM THE DIGESTER BUILDING ELECTRICAL ROOM TO THE GENERATOR CONNECTION BOX SHALL BE RUN AS FOLLOWS:
    a) OVERHEAD FROM MCC-31 GENERATOR BREAKER CUBICLE TO THE NORTH WALL INSIDE THE 8-MCC-3100-MCC ENCLOSURE.
    b) FROM THE BACK OF MCC ENCLOSURE, OVERHEAD TOWARDS THE DIGESTER BUILDING WEST WALL.
    c) AT THE NORTH EAST CORNER OF THE STAIRCASE, DROP DOWN TO THE NEW LOCATION OF THE GENERATOR CONNECTION CABINET INSTALLED ON A CONCRETE BASE.
    d) PROVIDE PAD MOUNTED GENERATOR CONNECTION BOX BY BERTHOLD ELECTRIC CO. OR APPROVED EQUAL.
    e) PROVIDE PULL BOXES AND CONDUITS SLEEVES AS REQUIRED.
13. UTILIZE THE NEW DUCT BANK AND PLACE PULL BOXES ON THE INSIDE AND OUTSIDE OF THE WALL WITH A NIPPLE BETWEEN THE BOXES AND RUN EXPOSED INSIDE THE BUILDING TO THE FIBER OPTIC PATCH PANEL

GENERAL NOTES:

1. FOR SYMBOLS AND ABBREVIATIONS, SEE DRAWING E-1.
2. FOR CONSTRUCTION SEQUENCE, SEE DRAWING E-2.
3. FOR DUCT BANK SECTIONS EXISTING AND MODIFICATIONS, SEE DRAWING E-941.
4. FOR NEW PS-8 WORK, SEE DRAWINGS E-7A & E-26A.
5. FOR DIGESTER BUILDING NEW MCC-31 WORK, SEE DRAWINGS E-8, E-10 AND E-23.
6. PROVIDE MINIMUM 4'-0" HORIZONTAL SEPARATION BETWEEN NEW ELECTRICAL DUCT BANK AND NEW OR EXISTING ELECTRICAL DUCT BANKS, AS APPLICABLE.

DRAWING NOTES:

1. INSTALL NEW DUCT BANKS PARALLEL TO EXISTING TELEPHONE DUCT BANK TO ROUTE FIBER OPTIC CABLE BETWEEN ADMINISTRATION BUILDING CONTROL ROOM AND DIGESTER AREA PLC CABINET IN DIGESTER BUILDING ELECTRICAL ROOM VIA TELEPHONE MANHOLES TMH#39, TMH#37 AND TMH#32. CORE DRILL MANHOLES AS REQUIRED.
2. TO EXTEND THE FIBER OPTIC CABLE FROM ADMINISTRATION BUILDING CONTROL ROOM TO DRYER BUILDING CONTROL ROOM IN PHASE 2 OF CONSTRUCTION, ADD TWO ADDITIONAL SPARE CONDUITS IN THE COMMUNICATION DUCTBANK HEADED TO THE DIGESTER BUILDING FROM MH-32 (NOW SIX-WAY DUCTBANK). A PORTION OF THE DUCTBANK LEAVING THE DIGESTER BUILDING AND HEADING NORTH IS ALREADY INSTALLED OUT FROM UNDER THE BUILDING SLAB. THE NEW SPARES WILL DEVIATE FROM THE DUCTBANK AT THIS POINT AND TURN UP AT THE DIGESTER BUILDING NORTH WALL AND TERMINATE IN A BOX ABOVE GRADE. CORE DRILL MANHOLE AS REQUIRED.
3. INSTALL 2" CONDUIT IN THE SLAB OF DIGESTER BUILDING AT EL 143.5 AND ROUTE TO DIGESTER AREA NETWORK PLC CABINET IN THE DIGESTER BUILDING ELECTRICAL ROOM VIA THE PIPE GALLERY CEILING.
4. INSTALL NEW DUCT BANK FROM THE GAS FLARE CONTROL PANEL LOCATION TO THE CORRESPONDING POWER AND CONTROL CABINET.
5. INSTALL 2" CONDUIT FOR POWER, 2" CONDUIT FROM FIBER OPTIC CABLE AND TWO 2" CONDUITS SPARE THRU THE DIGESTER BUILDING SLAB AT EL 143.5 AND ROUTE TO THE CORRESPONDING 120V PANEL AND PLC CABINET IN THE DIGESTER BUILDING ELECTRICAL ROOM.
6. INSTALL AND ROUTE TWO 2" CONDUITS INSIDE THE ADMINISTRATION BUILDING FOR FIBER OPTIC CABLE TO THE ADMINISTRATION BUILDING NETWORK INTERFACE PANEL.
7. INSTALL NEW DUCTBANK BETWEEN DIGESTER BUILDING AND PHOSPHORUS PRECIPITATION BUILDING.
8. THE POWER AND CONTROL CONDUITS FROM THE DIGESTER BUILDING ELECTRICAL ROOM TO THE PHOSPHORUS PRECIPITATION BUILDING SHALL BE ROUTED AS FOLLOWS;
    a) VIA THE PIPE GALLERY CEILING TO THE DIGESTER BUILDING.
    b) THRU THE DIGESTER BUILDING FLOOR SLAB AT EL. 143.5
    c) VIA NEW DUCT BANK IN BETWEEN THE DIGESTER BUILDING AND THE PHOSPHORUS PRECIPITATION BUILDING

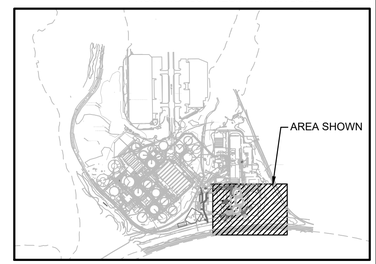

KEYMAP

THE DRAWINGS IN THIS SET ARE RECORD DRAWINGS. THEY ARE CONSTRUCTION CONTRACT DRAWINGS WHICH HAVE BEEN REVISED BASED ON AVAILABLE FIELD INFORMATION RECORDED BY OTHERS DURING CONSTRUCTION OF THIS CONTRACT. THERE HAS BEEN NO VERIFICATION OF DIMENSIONS SHOWN ON THE CONSTRUCTION DRAWINGS OR THE ACCURACY/COMPLETENESS OF THE FIELD INFORMATION RECEIVED.

SIGNATURE _____ DATE 2/7/2020

N

0 30 60 90

SCALE: 1" = 30'

SHAH & ASSOCIATES

HDR

AS-BUILT REPLACEMENT SHEET

PROFESSIONAL CERTIFICATION
THIS DRAWING WAS ORIGINALLY APPROVED FOR CONSTRUCTION AND SEALED BY KANAIYALAL R. SHAH, A REGISTERED PROFESSIONAL ENGINEER IN THE STATE OF MARYLAND, NO. 11084.

NOTICE TO CONTRACTORS
- PROJECT ELEVATIONS ARE BASED ON NAVD88 AND HOWARD COUNTY'S BENCHMARK SYSTEM
- PREVIOUS PROJECTS USED OTHER DATUMS
- APPLY THE FOLLOWING CONVERSIONS WHEN USING PREVIOUS CONTRACT DRAWINGS:
  - ADDITION NO. 6: SUBTRACT 0.80 FT
  - PRIOR ADDITIONS: SUBTRACT 1.04 FT

DEPARTMENT OF PUBLIC WORKS
HOWARD COUNTY, MARYLAND

CHIEF, BUREAU OF UTILITIES DATE

DES:	SR
DRN:	AJS
CHK:	KRS
DATE:	10/2016

DATE	REV	DESCRIPTION
07/2019		RECORD DRAWING

ELECTRICAL

ELECTRICAL SITE PLAN II
EXISTING AND NEW WORK

LITTLE PATUXENT WATER RECLAMATION PLANT
8TH ADDITION
BIOSOLIDS PROCESSING FACILITIES – PHASE I

CAPITAL PROJECT S–6295
CONTRACT NO. 24–4935

ELECTION DISTRICT NO. 6
HOWARD COUNTY, MARYLAND

SCALE AS SHOWN

SHEET 307 OF 463

E-5

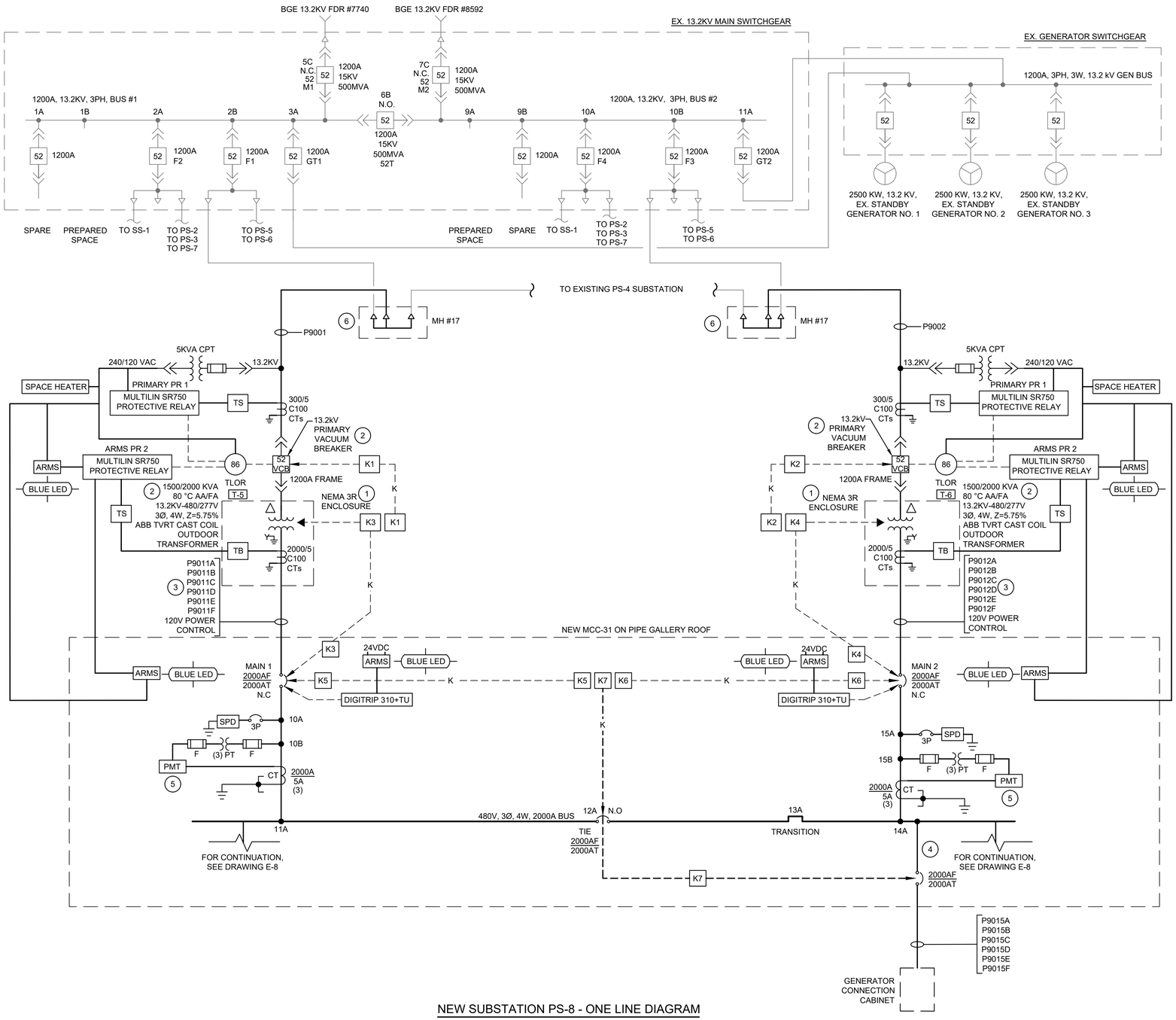

NEW SUBSTATION PS-8 - ONE LINE DIAGRAM

NO SCALE

KIRK KEY INTERLOCK PROCEDURE FOR SUBSTATION PS-8

THE FOLLOWING DESCRIBES THE KEY INTERLOCK SCHEMES AND OPERATION TO BE IMPLEMENTED AT SUBSTATION PS-8 AND MCC-31. THE KEY INTERLOCKS WILL PROVIDE A METHOD OF INSURING SAFETY WHEN TRANSFERRING POWER FROM ONE SOURCE TO ANOTHER, WHEN TRANSFERRING POWER TO THE PORTABLE GENERATOR AND WHEN ACCESSING THE TRANSFORMER ENCLOSURE AND OPERATING THE TAP CHARGER.

1. ACCESSING THE TRANSFORMER ENCLOSURE FOR TRANSFORMER T-5.
   - A. THE KIRK KEY INTERLOCK SHALL WORK IN SUCH A WAY THAT ACCESS TO THE TRANSFORMER ENCLOSURE WILL BE POSSIBLE ONLY WHEN TRANSFORMER IS DE-ENERGIZED FROM HIGH VOLTAGE AND LOW VOLTAGE SIDE.
   - B. THE TRANSFORMER ACCESS TO THE TAP CHANGER CAN BE ACCOMPLISHED ONLY WHEN BOTH THE PRIMARY VACUUM BREAKER AND THE MCC MAIN BREAKERS ARE OPEN AND KEYS FROM THE HIGH VOLTAGE AND LOW VOLTAGE SIDE ARE PRESENT.
   - C. OPEN PRIMARY VACUUM BREAKER AND REMOVE K1. PRIMARY VACUUM BREAKER IS NOW LOCKED OPEN.
   - D. OPEN MCC MAIN BREAKER 1 AND GET KEY K3. MCC MAIN BREAKER 1 IS NOW LOCKED OPEN.
   - E. FOLLOW STEPS 3. A AND B TO CLOSE THE TIE BREAKER TO PROVIDE POWER ON FEEDER #1.
   - F. USE BOTH KEYS K1 AND K3 TO OPEN THE TRANSFORMER ENCLOSURE. BOTH KEYS K1 AND K3 WILL BE KEPT AT THE TRANSFORMER ENCLOSURE UNTIL THE ENCLOSURE IS CLOSED AND LOCKED CLOSED.
   - G. ONCE OPERATION ON THE TRANSFORMER IS COMPLETED, CLOSE TRANSFORMER ENCLOSURE AND TAKE KEY K1 TO CLOSE THE PRIMARY VACUUM BREAKER AND LOCK CLOSED.
   - H. BEFORE CLOSING THE MAIN BREAKER AT THE MCC, TAKE VOLTAGE MEASUREMENT AT THE SECONDARY OF THE TRANSFORMER TO CONFIRM THE VOLTAGE LEVEL.
   - I. REMOVE KEY K3 FROM THE TRANSFORMER ENCLOSURE AND FOLLOW STEPS 3. C AND D BELOW TO GET THE KEY K5 FROM THE TIE BREAKER.
   - J. USE BOTH KEYS K3 AND K5 TO LOCK CLOSED THE MCC MAIN 1 BREAKER.
2. ACCESSING THE TRANSFORMER ENCLOSURE FOR TRANSFORMER T-6
   - A. THE KIRK KEY INTERLOCK SHALL WORK IN SUCH A WAY THAT ACCESS TO THE TRANSFORMER ENCLOSURE WILL BE POSSIBLE ONLY WHEN TRANSFORMER IS DE-ENERGIZED FROM HIGH VOLTAGE AND LOW VOLTAGE SIDE.
   - B. THE TRANSFORMER ACCESS TO THE TAP CHANGER CAN BE ACCOMPLISHED ONLY WHEN BOTH THE PRIMARY VACUUM BREAKER AND THE MCC MAIN BREAKERS ARE OPEN AND KEYS FROM THE HIGH VOLTAGE AND LOW VOLTAGE SIDE ARE PRESENT.
   - C. OPEN PRIMARY VACUUM BREAKER AND REMOVE KEY K2. PRIMARY VACUUM BREAKER IS NOW LOCKED OPEN.
   - D. OPEN MCC MAIN BREAKER 2 AND GET KEY K4. MCC MAIN BREAKER 2 IS NOW LOCKED OPEN.
   - E. FOLLOW STEPS 4. A AND B TO CLOSE THE TIE BREAKER TO PROVIDE POWER ON FEEDER #2.
   - F. USE BOTH KEYS K2 AND K4 TO OPEN THE TRANSFORMER ENCLOSURE. BOTH KEYS K2 AND K4 WILL BE KEPT AT THE TRANSFORMER ENCLOSURE UNTIL THE ENCLOSURE IS CLOSED AND LOCKED CLOSED.
   - G. ONCE OPERATION ON THE TRANSFORMER IS COMPLETED, CLOSE TRANSFORMER ENCLOSURE AND TAKE KEY K2 TO CLOSE THE PRIMARY VACUUM BREAKER AND LOCK CLOSED.
   - H. BEFORE CLOSING THE MAIN BREAKER AT THE MCC, TAKE VOLTAGE MEASUREMENT AT THE SECONDARY OF THE TRANSFORMER TO CONFIRM THE VOLTAGE LEVEL.
   - I. REMOVE KEY K4 FROM THE TRANSFORMER ENCLOSURE AND FOLLOW STEPS 4. C AND D BELOW TO GET THE KEY K6 FROM THE TIE BREAKER.
   - J. USE BOTH KEYS K4 AND K6 TO LOCK CLOSED THE MCC MAIN 2 BREAKER.
3. LOSS OF UTILITY POWER ON 480 V MAIN FEEDER #1 (MAIN FEEDER #2 STILL ENERGIZED)
   - A. ON LOSS OF POWER ON FEEDER #1, OPEN MAIN 1 BREAKER AND REMOVE KEY K5. MAIN BREAKER IS NOW LOCKED OPEN. 480 V MCC BUS #1 IS NOW DE-ENERGIZED.
   - B. INSERT KEY K5 IN TIE BREAKER. CLOSE TIE BREAKER AND LOCK CLOSED. THE ENTIRE MCC IS NOW ENERGIZED THROUGH MAIN BREAKER #2 AND THROUGH THE TIE BREAKER.
   - C. ONCE POWER HAS BEEN RESTORED TO MAIN FEEDER #1, OPEN THE TIE BREAKER AND REMOVE KEY K5. TIE BREAKER IS NOW LOCKED OPEN.
   - D. INSERT KEY K5 IN MAIN BREAKER #1. CLOSE BREAKER AND LOCK CLOSED.
4. LOSS OF UTILITY POWER ON 480 V MAIN FEEDER #2 (MAIN FEEDER #1 STILL ENERGIZED)
   - A. ON LOSS OF POWER ON FEEDER #2, OPEN MAIN 2 BREAKER AND REMOVE KEY K6. MAIN BREAKER IS NOW LOCKED OPEN. 480 V MCC BUS #2 IS NOW DE-ENERGIZED.
   - B. INSERT KEY K6 IN TIE BREAKER. CLOSE TIE BREAKER AND LOCK CLOSED. THE ENTIRE MCC IS NOW ENERGIZED THROUGH MAIN BREAKER #1 AND THROUGH THE TIE BREAKER.
   - C. ONCE POWER HAS BEEN RESTORED TO MAIN FEEDER #2, OPEN THE TIE BREAKER AND REMOVE KEY K6. TIE BREAKER IS NOW LOCKED OPEN.
   - D. INSERT KEY K6 IN MAIN BREAKER #2. CLOSE BREAKER AND LOCK CLOSED.
5. LOSS OF UTILITY POWER ON BOTH 480 V MAIN FEEDERS #1 AND #2.
   - A. ON LOSS OF POWER ON FEEDER #1, OPEN MAIN 1 BREAKER AND REMOVE KEY K5. MAIN BREAKER IS NOW LOCKED OPEN. 480 V MCC BUS #1 IS NOW DE-ENERGIZED.
   - B. INSERT KEY K5 IN TIE BREAKER. CLOSE TIE BREAKER AND LOCK CLOSED. THE ENTIRE MCC IS NOW ENERGIZED THROUGH MAIN BREAKER #2 AND THROUGH THE TIE BREAKER.
   - C. ON LOSS OF POWER ON FEEDER #2, OPEN MAIN 2 BREAKER AND REMOVE KEY K6. MAIN BREAKER IS NOW LOCKED OPEN. THE ENTIRE MCC IS NOW DE-ENERGIZED. NOTE: PROCEDURE IS THE SAME EVEN WHEN BOTH SOURCES LOSE POWER SIMULTANEOUSLY.
   - D. INSERT KEY IN TIE BREAKER (BREAKER IS ALREADY CLOSED). TURN KEY. ONCE BOTH KEYS K5 AND K6 ARE INSERTED, THE GENERATOR KEY K7 IS RELEASED. REMOVE KEY K7 (TIE BREAKER REMAINS CLOSED).
   - E. INSERT KEY K7 IN GENERATOR BREAKER. CLOSE BREAKER AND LOCK CLOSED. THE 480 V MCC IS NOW READY TO BE ENERGIZED BY THE PORTABLE GENERATOR.
6. RESTORATION OF UTILITY POWER ON BOTH 480 V MAIN FEEDERS #1 AND #2 (THE FOLLOWING IS WRITTEN BASED ON MAIN FEEDER #2 BEING RE-ENERGIZED FIRST, FOLLOWED BY MAIN FEEDER #1.)
   - A. ONCE POWER HAS BEEN RESTORED TO EITHER MAIN FEEDERS #1 OR #2, OPEN THE GENERATOR BREAKER AND REMOVE KEY K7. THE ENTIRE 480 V MCC IS NOW DE-ENERGIZED.
   - B. INSERT KEYS K7 IN THE TIE BREAKER. REMOVE KEY K6 (TIE BREAKER REMAINS CLOSED).
   - C. INSERT KEY K6 IN MAIN BREAKER #2. CLOSE BREAKER AND LOCK CLOSED. THE ENTIRE 480 V MCC IS NOW ENERGIZED THROUGH MAIN BREAKER #2 AND THE TIE BREAKER.
   - D. REMOVE KEY K5 FROM TIE BREAKER AND OPEN BREAKER. BREAKER IS NOW LOCKED OPEN. 480 V MCC BUS #1 IS NOW DE-ENERGIZED
   - E. INSERT KEY K5 IN MAIN BREAKER #1. CLOSE BREAKER AND LOCK CLOSED. THE ENTIRE 480 V MCC IS NOW ENERGIZED, WITH THE TIE BREAKER OPEN.

GENERAL NOTES:

1. FOR SYMBOLS AND ABBREVIATIONS, SEE DRAWING E-1.
2. FOR CONSTRUCTION SEQUENCE, SEE DRAWING E-2.
3. FOR OVERALL SITE PLAN AND UNDERGROUND DISTRIBUTION SITE PLAN, SEE DRAWING E-5.
4. FOR CABLE AND CONDUIT SCHEDULE, SEE DRAWINGS E-905 THRU E-913.

DRAWING NOTES:

1. PROVIDE KIRK BRAND KIRK KEY INTERLOCKS SUCH THAT INTERNAL ACCESS INTO THE TRANSFORMER ENCLOSURE AND OPERATION OF TAP CHANGER ARE PERMITTED ONLY WHEN TRANSFORMER IS DE-ENERGIZED FROM HV AND LV SIDES.
2. PROVIDE AND INSTALL NEW PRIMARY VACUUM BREAKER AND ABB TVRT CAST COIL TRANSFORMERS OUTDOOR. ON SOLIDS PIPE GALLERY ROOF.
3. ROUTE FEEDERS IN CONDUITS OVERHEAD.
4. GENERATOR BREAKER SHALL BE KEY INTERLOCKED AS SHOWN. ACCESS TO GENERATOR BREAKER SHALL BE AVAILABLE ONLY WHEN THE TWO 480V MCC MAIN BREAKERS ARE OPEN.
5. PROVIDE MICROPROCESSOR BASED MULTI-FUNCTION POWER QUALITY METER WITH ETHERNET COMMUNICATION CAPABILITY. PROVIDE POWER SUPPLY INPUT FUSES, CT AND PT TEST SWITCHES.
6. USE 3-WAY TE'S RAYCHEM ELBOW MODULAR SPLICING SYSTEM TO SPLICE CABLES.

THE DRAWINGS IN THIS SET ARE RECORD DRAWINGS. THEY ARE CONSTRUCTION CONTRACT DRAWINGS WHICH HAVE BEEN REVISED BASED ON AVAILABLE FIELD INFORMATION RECORDED BY OTHERS DURING CONSTRUCTION OF THIS CONTRACT. THERE HAS BEEN NO VERIFICATION OF DIMENSIONS SHOWN ON THE CONSTRUCTION DRAWINGS OR THE ACCURACY/COMPLETENESS OF THE FIELD INFORMATION RECEIVED.

SIGNATURE — DATE 2/7/2020

SHAH & ASSOCIATES

AS-BUILT REPLACEMENT SHEET

PROFESSIONAL CERTIFICATION
THIS DRAWING WAS ORIGINALLY APPROVED FOR CONSTRUCTION AND SEALED BY KANAIYALAL R. SHAH, A REGISTERED PROFESSIONAL ENGINEER IN THE STATE OF MARYLAND, NO. 11084.

NOTICE TO CONTRACTORS
- PROJECT ELEVATIONS ARE BASED ON NAVD88 AND HOWARD COUNTY'S BENCHMARK SYSTEM
- PREVIOUS PROJECTS USED OTHER DATUMS
- APPLY THE FOLLOWING CONVERSIONS WHEN USING PREVIOUS CONTRACT DRAWINGS:
  - ADDITION NO. 6: SUBTRACT 0.80 FT
  - PRIOR ADDITIONS: SUBTRACT 1.04 FT

DEPARTMENT OF PUBLIC WORKS
HOWARD COUNTY, MARYLAND

CHIEF, BUREAU OF UTILITIES — DATE

DES: SR
DRN: VVS
CHK: KRS
DATE: 10/2016

DATE	REV	DESCRIPTION
07/2019		RECORD DRAWING

ELECTRICAL

NEW SUBSTATION PS-8
ONE LINE DIAGRAM

LITTLE PATUXENT WATER RECLAMATION PLANT
8TH ADDITION
BIOSOLIDS PROCESSING FACILITIES – PHASE I

CAPITAL PROJECT S–6295
CONTRACT NO. 24–4935

ELECTION DISTRICT NO. 6
HOWARD COUNTY, MARYLAND

SCALE AS SHOWN

SHEET 308 OF 463

E-7A

DRAWING NOTES:

1. PROVIDE ACTIVE HARMONICS FILTER, SIZE PER HARMONIC SYSTEM STUDY, MOUNTED IN MCC ENCLOSURE, CONNECTED CLOSE TO THE MAINS ON THE LOAD SIDE AS SHOWN.
2. PROVIDE AND INSTALL NEW 250AF/250AT CIRCUIT BREAKER. PROVIDE NEW 3#300KCMIL AND 1#4AWG GND CABLE IN 3" CONDUIT. ROUTE THE 3" CONDUIT TO THE TEMPORARY SYNAGRO PANEL BY AVOIDING THE PHASE 2 DEMOLITION AREA. PROVIDE AND INSTALL 400A/3P SAFETY DISCONNECT SWITCH ADJACENT TO THE TEMPORARY SYNAGRO PANEL.

GENERAL NOTES (CONTINUED):

5. FOR CABLE AND CONDUIT SCHEDULE, SEE DRAWINGS E-905 THRU E-913.

GENERAL NOTES:

1. FOR SYMBOLS AND ABBREVIATIONS, SEE DRAWING E-1.
2. FOR CONSTRUCTION SEQUENCE, SEE DRAWING E-2.
3. FOR NEW 8-MCC-3100-MCC ELEVATION AND SCHEDULE, SEE DRAWINGS E-21, E-21A, E-22 AND E-22A.
4. FOR NEW 8-MCC-3100-MCC LOCATION, SEE DRAWING E-3.

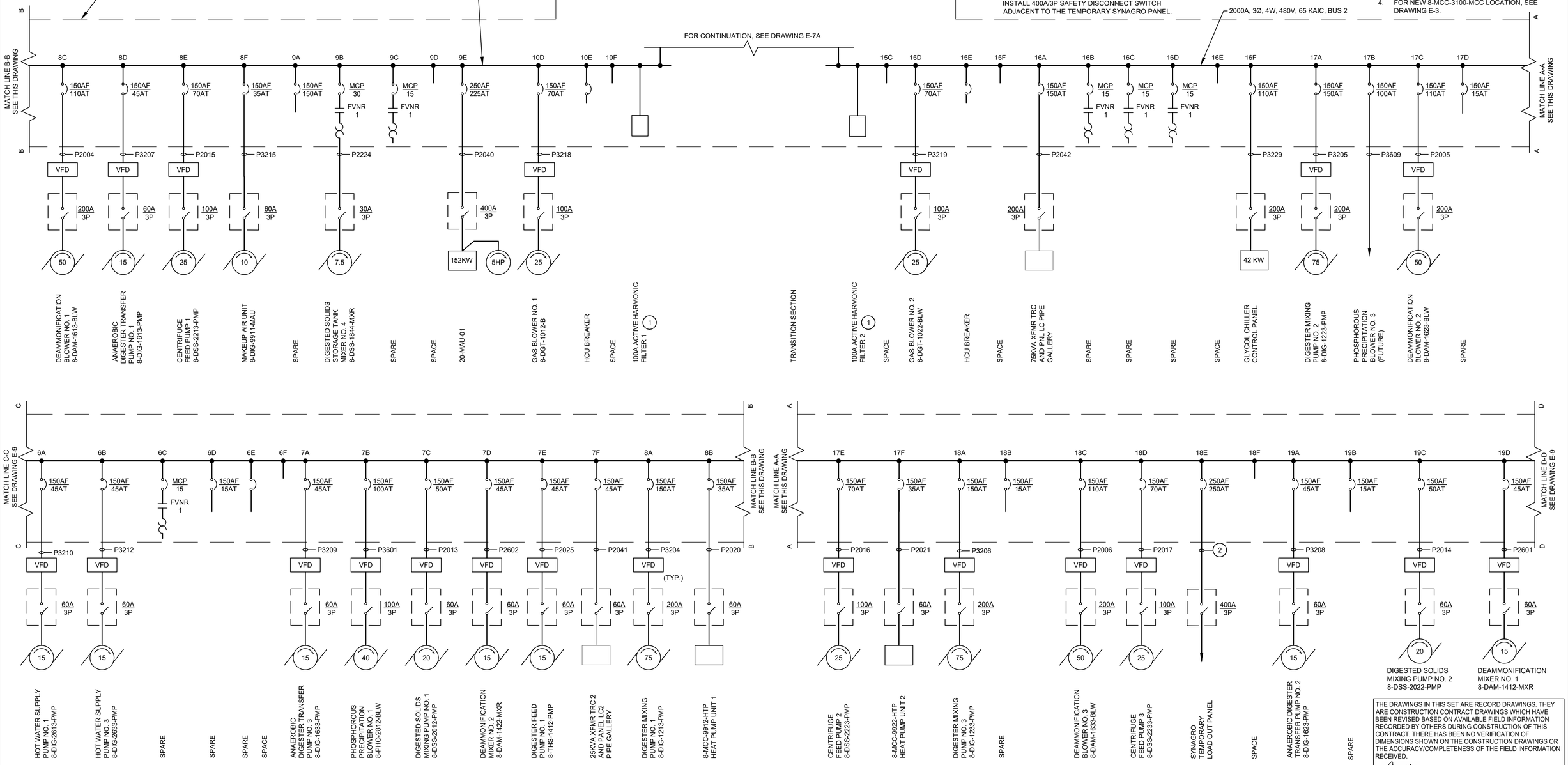

DIGESTER BUILDING - NEW 8-MCC-3100-MCC - ONE LINE DIAGRAM I

NO SCALE

THE DRAWINGS IN THIS SET ARE RECORD DRAWINGS. THEY ARE CONSTRUCTION CONTRACT DRAWINGS WHICH HAVE BEEN REVISED BASED ON AVAILABLE FIELD INFORMATION RECORDED BY OTHERS DURING CONSTRUCTION OF THIS CONTRACT. THERE HAS BEEN NO VERIFICATION OF DIMENSIONS SHOWN ON THE CONSTRUCTION DRAWINGS OR THE ACCURACY/COMPLETENESS OF THE FIELD INFORMATION RECEIVED.

SIGNATURE _____ DATE 2/7/2023

SHAH & ASSOCIATES

AS-BUILT REPLACEMENT SHEET

PROFESSIONAL CERTIFICATION

THIS DRAWING WAS ORIGINALLY APPROVED FOR CONSTRUCTION AND SEALED BY KANAIYALAL R. SHAH, A REGISTERED PROFESSIONAL ENGINEER IN THE STATE OF MARYLAND, NO. 11084.

NOTICE TO CONTRACTORS

- PROJECT ELEVATIONS ARE BASED ON NAVD88 AND HOWARD COUNTY'S BENCHMARK SYSTEM
- PREVIOUS PROJECTS USED OTHER DATUMS
- APPLY THE FOLLOWING CONVERSIONS WHEN USING PREVIOUS CONTRACT DRAWINGS:
  - ADDITION NO. 6: SUBTRACT 0.80 FT.
  - PRIOR ADDITIONS: SUBTRACT 1.04 FT.

DEPARTMENT OF PUBLIC WORKS
HOWARD COUNTY, MARYLAND

CHIEF, BUREAU OF UTILITIES DATE

DES:	SR
DRN:	XMZ
CHK:	KRS
DATE:	10/2016

DATE	REV	DESCRIPTION
07/2019		RECORD DRAWING

ELECTRICAL

DIGESTER BUILDING
NEW 8-MCC-3100-MCC
ONE LINE DIAGRAM I

LITTLE PATUXENT WATER RECLAMATION PLANT
8TH ADDITION
BIOSOLIDS PROCESSING FACILITIES – PHASE I

CAPITAL PROJECT S-6295
CONTRACT NO. 24-4935

ELECTION DISTRICT NO. 6
HOWARD COUNTY, MARYLAND

SCALE AS SHOWN

SHEET 309 OF 463

E-8

DRAWING NOTES:

1. EXTEND BUS CONNECTION BETWEEN SECTION 4 ON THE SOUTH WALL TO SECTION 29 ON THE NORTH WALL OVERHEAD THRU 4 #4/0 AWG, 1 #4G CABLE IN 2-1/2" CONDUIT.
2. EXTEND BUS CONNECTION BETWEEN SECTION 21 ON THE SOUTH WALL TO SECTION 25 ON THE NORTH WALL OVERHEAD THRU 4 #4/0 AWG, 1 #4G CABLE IN 2-1/2" CONDUIT.

GENERAL NOTES:

1. FOR SYMBOLS AND ABBREVIATIONS, SEE DRAWING E-1.
2. FOR CONSTRUCTION SEQUENCE, SEE DRAWING E-2.
3. FOR NEW 8-MCC-3100-MCC ELEVATION AND SCHEDULE, SEE DRAWINGS E-21, E-21A, E-22 AND E-22A.
4. FOR NEW 8-MCC-3100-MCC LOCATION, SEE DRAWING E-3.

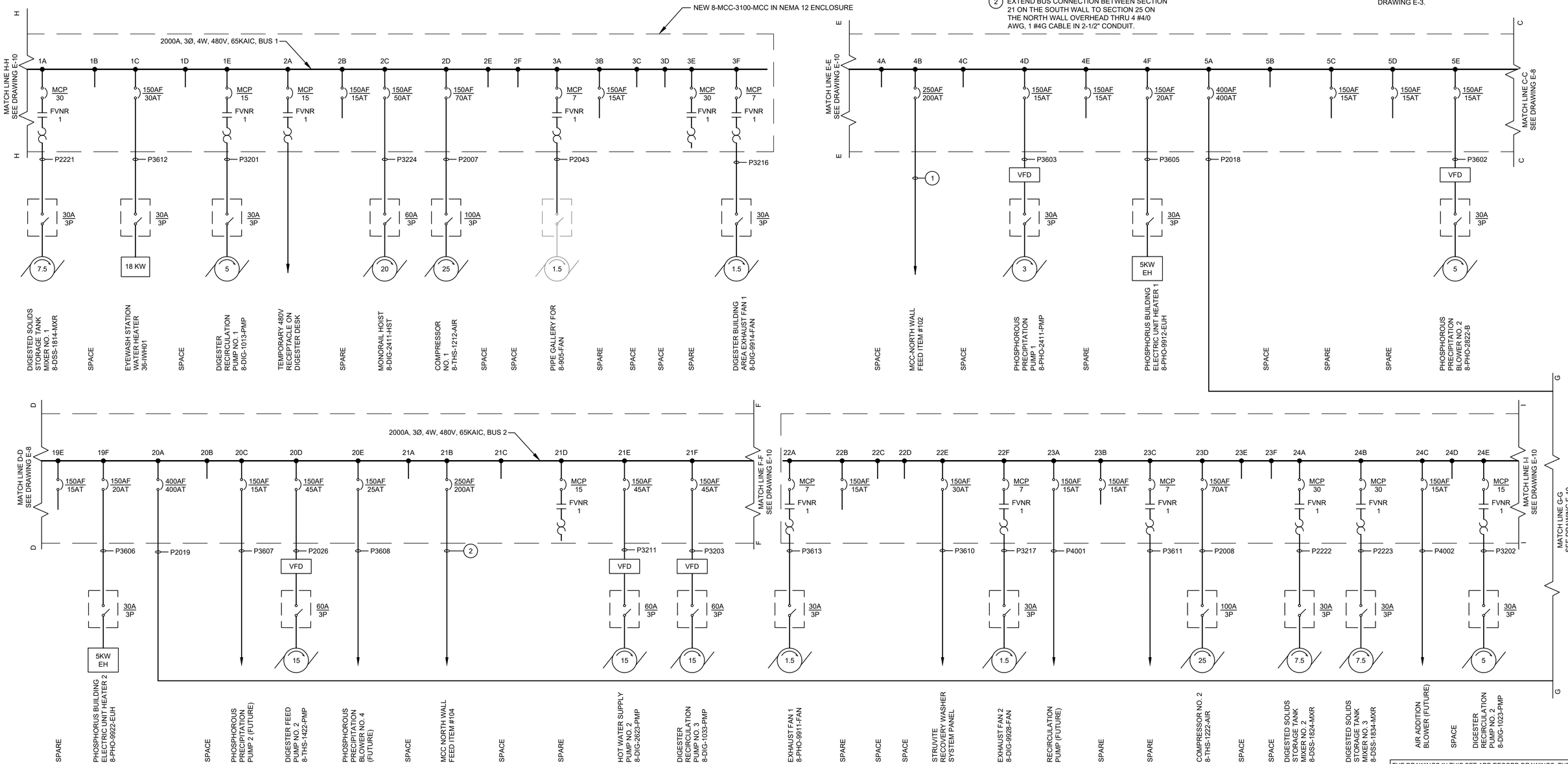

DIGESTER BUILDING - NEW 8-MCC-3100-MCC - ONE LINE DIAGRAM II

NO SCALE

THE DRAWINGS IN THIS SET ARE RECORD DRAWINGS. THEY ARE CONSTRUCTION CONTRACT DRAWINGS WHICH HAVE BEEN REVISED BASED ON AVAILABLE FIELD INFORMATION RECORDED BY OTHERS DURING CONSTRUCTION OF THIS CONTRACT. THERE HAS BEEN NO VERIFICATION OF DIMENSIONS SHOWN ON THE CONSTRUCTION DRAWINGS OR THE ACCURACY/COMPLETENESS OF THE FIELD INFORMATION RECEIVED.

SIGNATURE 2/7/2020 DATE

SHAH & ASSOCIATES

AS-BUILT REPLACEMENT SHEET

PROFESSIONAL CERTIFICATION

THIS DRAWING WAS ORIGINALLY APPROVED FOR CONSTRUCTION AND SEALED BY KANAIYALAL R. SHAH, A REGISTERED PROFESSIONAL ENGINEER IN THE STATE OF MARYLAND, NO. 11084.

NOTICE TO CONTRACTORS

- PROJECT ELEVATIONS ARE BASED ON NAVD88 AND HOWARD COUNTY'S BENCHMARK SYSTEM
- PREVIOUS PROJECTS USED OTHER DATUMS
- APPLY THE FOLLOWING CONVERSIONS WHEN USING PREVIOUS CONTRACT DRAWINGS:
  - ADDITION NO. 6: SUBTRACT 0.80 FT.
  - PRIOR ADDITIONS: SUBTRACT 1.04 FT.

DEPARTMENT OF PUBLIC WORKS
HOWARD COUNTY, MARYLAND

CHIEF, BUREAU OF UTILITIES DATE

DES:	SR
DRN:	XMZ
CHK:	KRS
DATE:	10/2016

DATE	REV	DESCRIPTION
07/2019		RECORD DRAWING

ELECTRICAL

DIGESTER BUILDING
NEW 8-MCC-3100-MCC
ONE LINE DIAGRAM II

LITTLE PATUXENT WATER RECLAMATION PLANT
8TH ADDITION
BIOSOLIDS PROCESSING FACILITIES – PHASE I

CAPITAL PROJECT S-6295
CONTRACT NO. 24-4935

ELECTION DISTRICT NO. 6
HOWARD COUNTY, MARYLAND

SCALE AS SHOWN

SHEET 310 OF 463

E-9

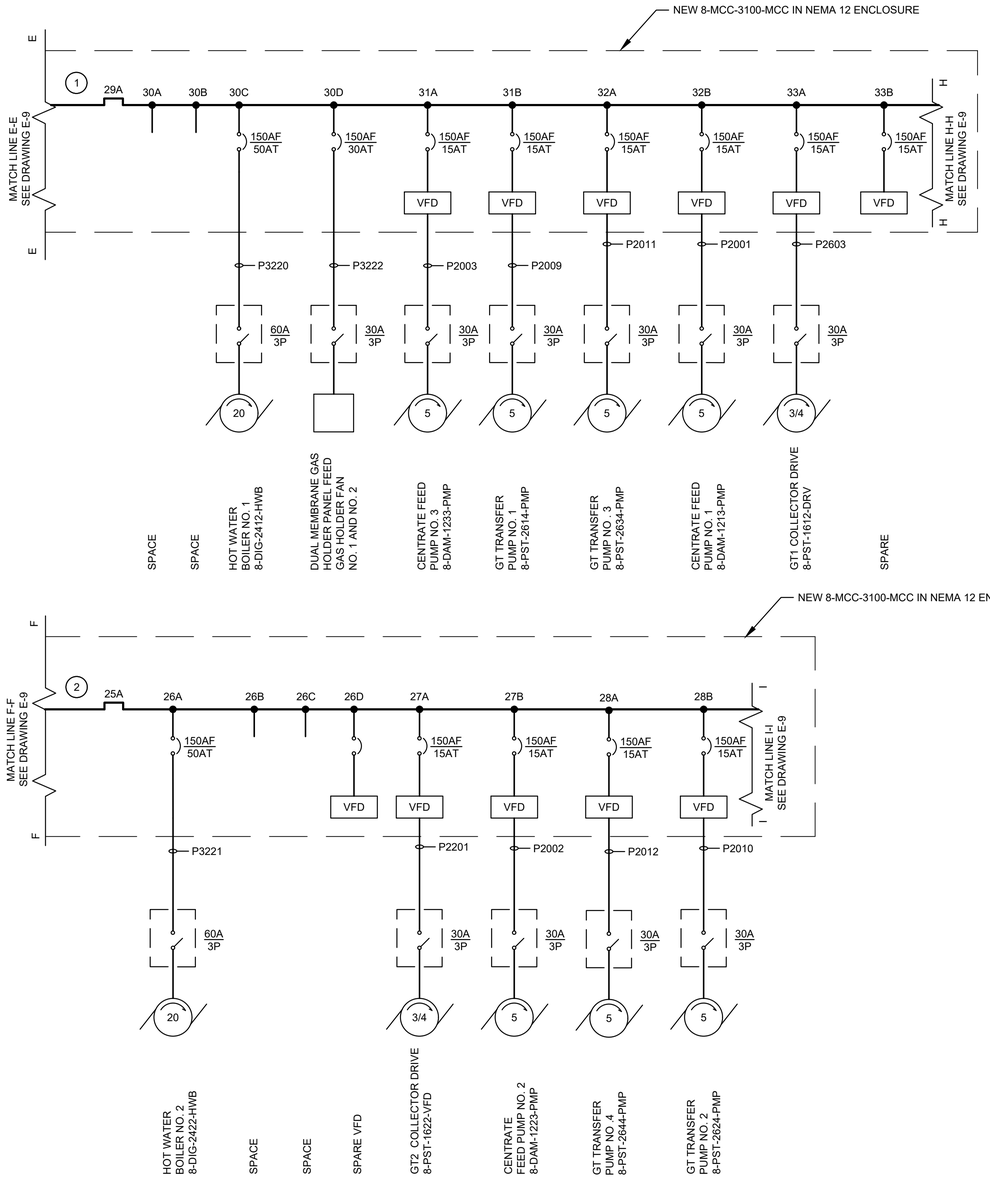

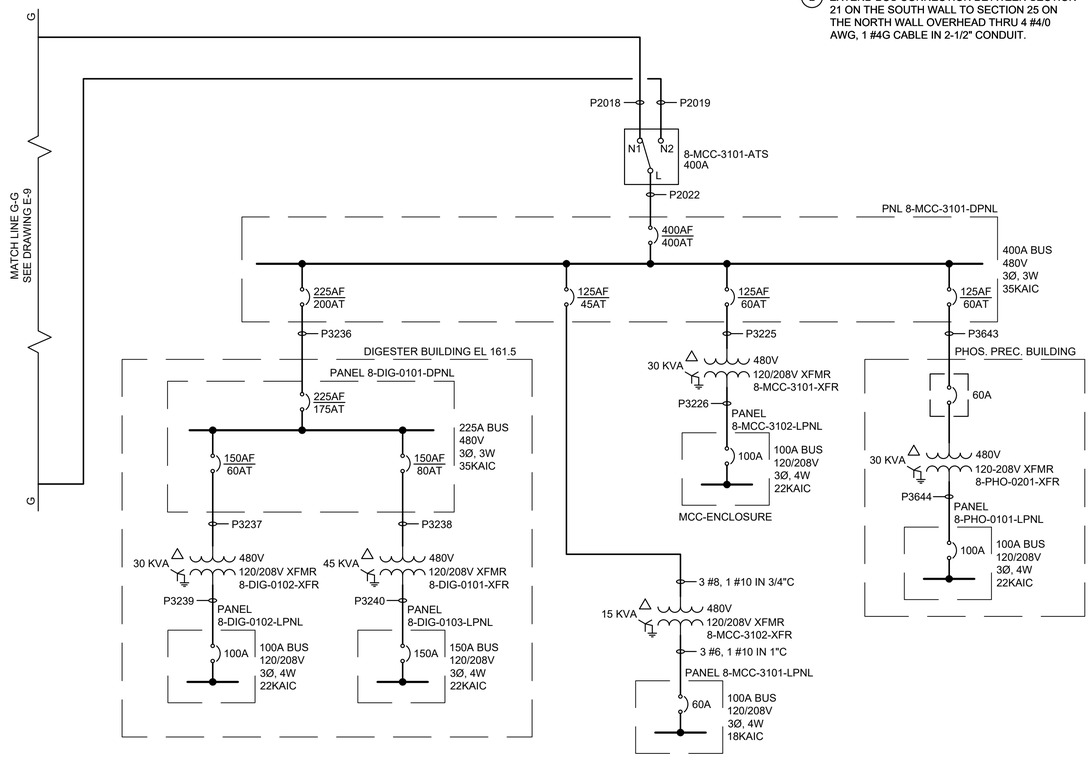

GENERAL NOTES:

1. FOR SYMBOLS AND ABBREVIATIONS, SEE DRAWING E-1.
2. FOR CONSTRUCTION SEQUENCE, SEE DRAWING E-2.
3. FOR NEW 8-MCC-3100-MCC ELEVATION AND SCHEDULE, SEE DRAWINGS E-21, E-21A, E-22 AND E-22A.
4. FOR NEW 8-MCC-3100-MCC LOCATION, SEE DRAWING E-3.
5. CONTRACTOR TO PROVIDE THE RIGHT TYPE OF BREAKERS BASED ON SHORT CIRCUIT AND COORDINATION STUDY FOR PROPER PROTECTIVE DEVICE COORDINATION.

DRAWING NOTES:

(1) EXTEND BUS CONNECTION BETWEEN SECTION 4 ON THE SOUTH WALL TO SECTION 29 ON THE NORTH WALL OVERHEAD THRU 4 #4/0 AWG, 1 #4G CABLE IN 2-1/2" CONDUIT.

(2) EXTEND BUS CONNECTION BETWEEN SECTION 21 ON THE SOUTH WALL TO SECTION 25 ON THE NORTH WALL OVERHEAD THRU 4 #4/0 AWG, 1 #4G CABLE IN 2-1/2" CONDUIT.

THE DRAWINGS IN THIS SET ARE RECORD DRAWINGS. THEY ARE CONSTRUCTION CONTRACT DRAWINGS WHICH HAVE BEEN REVISED BASED ON AVAILABLE FIELD INFORMATION RECORDED BY OTHERS DURING CONSTRUCTION OF THIS CONTRACT. THERE HAS BEEN NO VERIFICATION OF DIMENSIONS SHOWN ON THE CONSTRUCTION DRAWINGS OR THE ACCURACY/COMPLETENESS OF THE FIELD INFORMATION RECEIVED.

SIGNATURE — DATE 2/7/2020

DIGESTER BUILDING - NEW 8-MCC-3100-MCC - ONE LINE DIAGRAM III

NO SCALE

SHAH & ASSOCIATES

AS-BUILT REPLACEMENT SHEET

PROFESSIONAL CERTIFICATION
THIS DRAWING WAS ORIGINALLY APPROVED FOR CONSTRUCTION AND SEALED BY KANAIYALAL R. SHAH, A REGISTERED PROFESSIONAL ENGINEER IN THE STATE OF MARYLAND, NO. 11084.

NOTICE TO CONTRACTORS
- PROJECT ELEVATIONS ARE BASED ON NAVD88 AND HOWARD COUNTY'S BENCHMARK SYSTEM
- PREVIOUS PROJECTS USED OTHER DATUMS
- APPLY THE FOLLOWING CONVERSIONS WHEN USING PREVIOUS CONTRACT DRAWINGS:
  - ADDITION NO. 6: SUBTRACT 0.80 FT
  - PRIOR ADDITIONS: SUBTRACT 1.04 FT

DEPARTMENT OF PUBLIC WORKS
HOWARD COUNTY, MARYLAND

CHIEF, BUREAU OF UTILITIES DATE

DES: SR
DRN: XMZ
CHK: KRS
DATE: 10/2016

DATE	REV	DESCRIPTION
07/2019		RECORD DRAWING

ELECTRICAL

DIGESTER BUILDING
NEW 8-MCC-3100-MCC
ONE LINE DIAGRAM III

LITTLE PATUXENT WATER RECLAMATION PLANT
8TH ADDITION
BIOSOLIDS PROCESSING FACILITIES – PHASE I

CAPITAL PROJECT S-6295
CONTRACT NO. 24-4935

ELECTION DISTRICT NO. 6
HOWARD COUNTY, MARYLAND

SCALE AS SHOWN

SHEET 311 OF 463

E-10

GENERAL NOTES:

1. FOR SYMBOLS AND ABBREVIATIONS, SEE DRAWING E-1.
2. FOR CONSTRUCTION SEQUENCE, SEE DRAWING E-2.
3. FOR EXISTING SWITCHBOARD PC-2 LOCATION, SEE DRAWING EX-19.
4. FOR OVERALL ONE LINE DIAGRAM - EXISTING AND MODIFICATION, SEE DWG. E-6.
5. FOR CABLE AND CONDUIT SCHEDULE, SEE DRAWINGS E-905 THRU E-913.

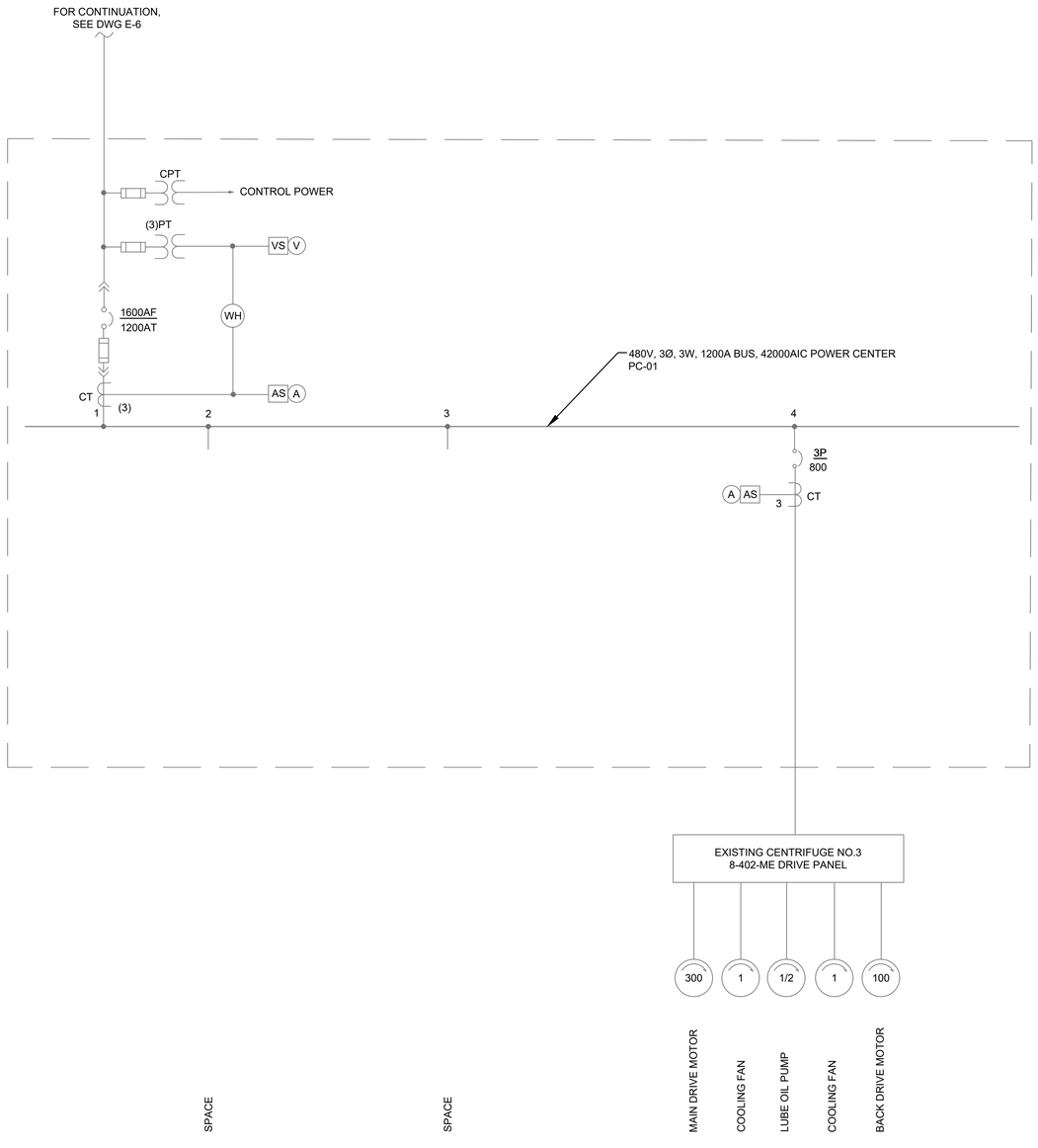

CHEMICAL HANDLING AREA - EXISTING SWITCHBOARD PC-1 - ONE LINE DIAGRAM - MODIFICATION

NO SCALE

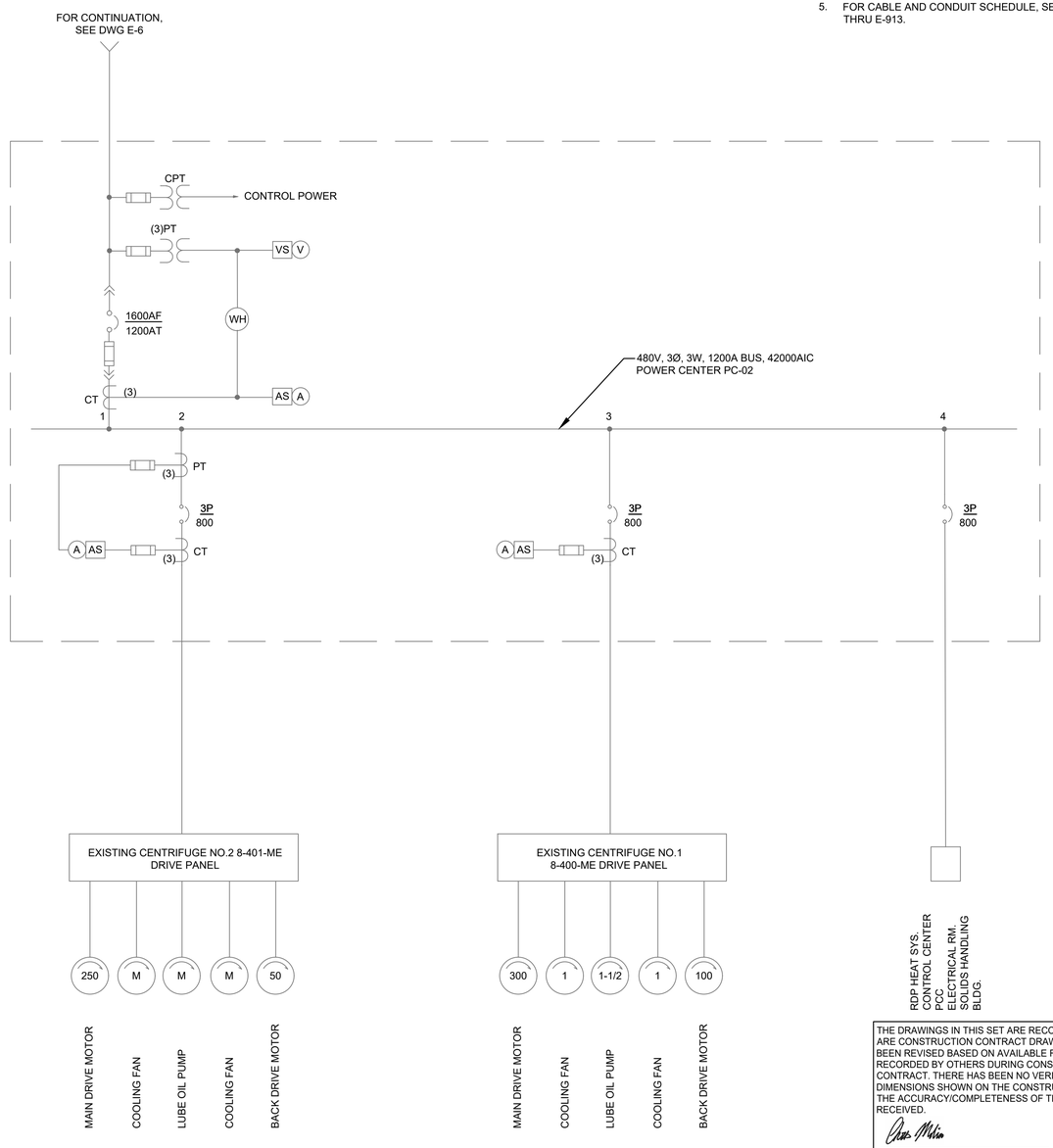

CHEMICAL HANDLING AREA - EXISTING SWITCHBOARD PC-2 - ONE LINE DIAGRAM - MODIFICATION

NO SCALE

THE DRAWINGS IN THIS SET ARE RECORD DRAWINGS. THEY ARE CONSTRUCTION CONTRACT DRAWINGS WHICH HAVE BEEN REVISED BASED ON AVAILABLE FIELD INFORMATION RECORDED BY OTHERS DURING CONSTRUCTION OF THIS CONTRACT. THERE HAS BEEN NO VERIFICATION OF DIMENSIONS SHOWN ON THE CONSTRUCTION DRAWINGS OR THE ACCURACY/COMPLETENESS OF THE FIELD INFORMATION RECEIVED.

SIGNATURE — DATE 2/7/2020

SHAH & ASSOCIATES

AS-BUILT REPLACEMENT SHEET

PROFESSIONAL CERTIFICATION
THIS DRAWING WAS ORIGINALLY APPROVED FOR CONSTRUCTION AND SEALED BY KANAIYALAL R. SHAH, A REGISTERED PROFESSIONAL ENGINEER IN THE STATE OF MARYLAND, NO. 11084.

NOTICE TO CONTRACTORS
- PROJECT ELEVATIONS ARE BASED ON NAVD88 AND HOWARD COUNTY'S BENCHMARK SYSTEM
- PREVIOUS PROJECTS USED OTHER DATUMS
- APPLY THE FOLLOWING CONVERSIONS WHEN USING PREVIOUS CONTRACT DRAWINGS:
  - ADDITION NO. 6: SUBTRACT 0.80 FT.
  - PRIOR ADDITIONS: SUBTRACT 1.04 FT.

DEPARTMENT OF PUBLIC WORKS
HOWARD COUNTY, MARYLAND

CHIEF, BUREAU OF UTILITIES — DATE

DES: SR
DRN: VVS
CHK: KRS
DATE: 10/2016

DATE	REV	DESCRIPTION
07/2019		RECORD DRAWING

ELECTRICAL

CHEMICAL HANDLING AREA
EXISTING SWITCHBOARD PC-1 AND PC-2 - ONE LINE DIAGRAM
EXISTING AND MODIFICATION

LITTLE PATUXENT WATER RECLAMATION PLANT
8TH ADDITION
BIOSOLIDS PROCESSING FACILITIES – PHASE I

CAPITAL PROJECT S-6295
CONTRACT NO. 24-4935

ELECTION DISTRICT NO. 6
HOWARD COUNTY, MARYLAND

SCALE AS SHOWN

SHEET 312 OF 463

E-12

GENERAL NOTES:

1. FOR SYMBOLS AND ABBREVIATIONS, SEE DRAWING E-1.
2. FOR CONSTRUCTION SEQUENCE, SEE DRAWING E-2.
3. FOR EXISTING 8-MCC-1500-MCC LOCATION, SEE DRAWING E-30.
4. FOR CABLE AND CONDUIT SCHEDULE, SEE DRAWINGS E-905 THRU E-913.

DRAWING NOTES:

(1) EXISTING RELOCATED GRINDER CONTROL PANEL.

(2) PROVIDE AND INSTALL NEW 150AF/150AT BREAKER AND PROVIDE AND INSTALL 3 #2/0 AWG AND 1 #6G CABLE IN 2 1/2" CONDUIT TO THE CONVEYOR MASTER CONTROL PANEL. FOR CONDUIT ROUTING, SEE DRAWING E-243.

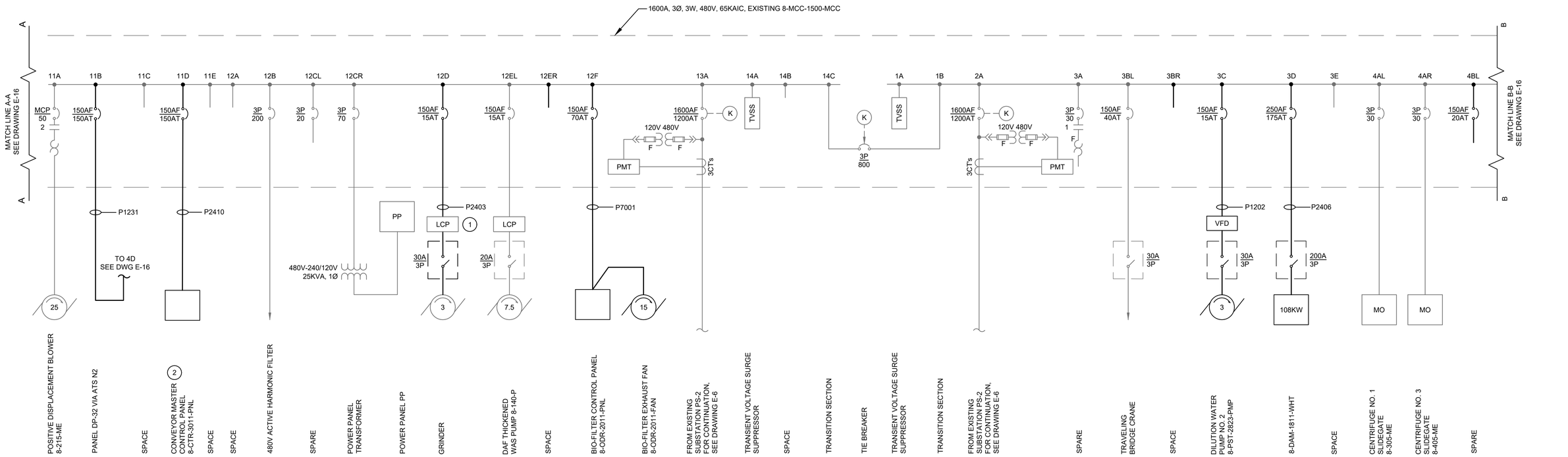

CHEMICAL HANDLING AREA - EXISTING 8-MCC-1500-MCC - ONE LINE DIAGRAM - EXISTING AND MODIFICATION I

NO SCALE

THE DRAWINGS IN THIS SET ARE RECORD DRAWINGS. THEY ARE CONSTRUCTION CONTRACT DRAWINGS WHICH HAVE BEEN REVISED BASED ON AVAILABLE FIELD INFORMATION RECORDED BY OTHERS DURING CONSTRUCTION OF THIS CONTRACT. THERE HAS BEEN NO VERIFICATION OF DIMENSIONS SHOWN ON THE CONSTRUCTION DRAWINGS OR THE ACCURACY/COMPLETENESS OF THE FIELD INFORMATION RECEIVED.

SIGNATURE _____ DATE 2/7/2020

SHAH & ASSOCIATES

HDR

AS-BUILT REPLACEMENT SHEET

PROFESSIONAL CERTIFICATION
THIS DRAWING WAS ORIGINALLY APPROVED FOR CONSTRUCTION AND SEALED BY KANAIYALAL R. SHAH, A REGISTERED PROFESSIONAL ENGINEER IN THE STATE OF MARYLAND, NO. 11084.

NOTICE TO CONTRACTORS
- PROJECT ELEVATIONS ARE BASED ON NAVD88 AND HOWARD COUNTY'S BENCHMARK SYSTEM
- PREVIOUS PROJECTS USED OTHER DATUMS
- APPLY THE FOLLOWING CONVERSIONS WHEN USING PREVIOUS CONTRACT DRAWINGS:
  - ADDITION NO. 6: SUBTRACT 0.80 FT
  - PRIOR ADDITIONS: SUBTRACT 1.04 FT

DEPARTMENT OF PUBLIC WORKS
HOWARD COUNTY, MARYLAND

CHIEF, BUREAU OF UTILITIES DATE

DES: SR
DRN: VVS
CHK: KRS
DATE: 10/2016

DATE	REV	DESCRIPTION
07/2019		RECORD DRAWING

ELECTRICAL

CHEMICAL HANDLING AREA EXISTING 8-MCC-1500-MCC - ONE LINE DIAGRAM EXISTING AND MODIFICATION I

LITTLE PATUXENT WATER RECLAMATION PLANT
8TH ADDITION
BIOSOLIDS PROCESSING FACILITIES – PHASE I

CAPITAL PROJECT S-6295
CONTRACT NO. 24-4935

ELECTION DISTRICT NO. 6
HOWARD COUNTY, MARYLAND

SCALE AS SHOWN

SHEET 313 OF 463

E-15

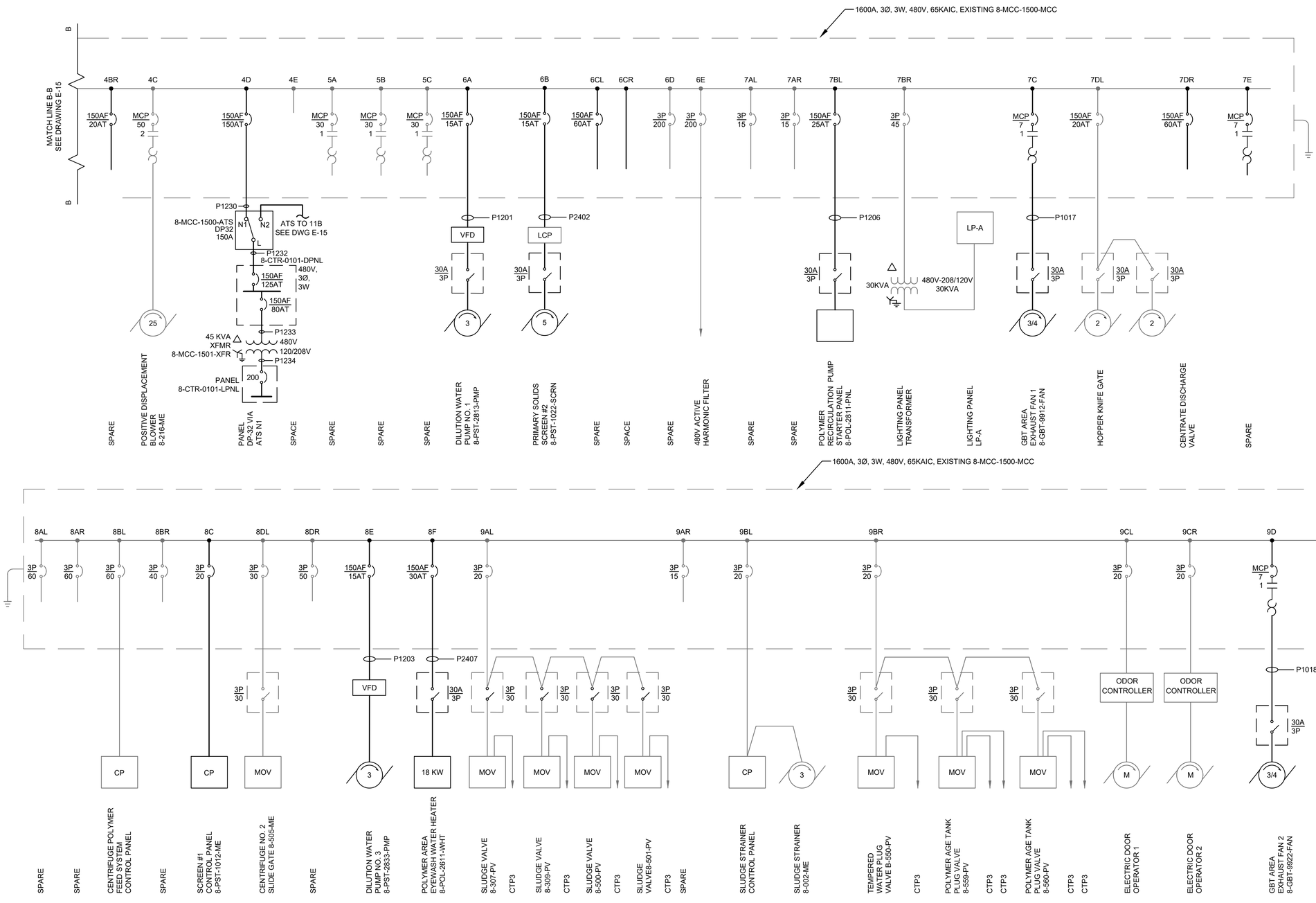

GENERAL NOTES:

1. FOR SYMBOLS AND ABBREVIATIONS, SEE DRAWING E-1.
2. FOR CONSTRUCTION SEQUENCE, SEE DRAWING E-2.
3. FOR EXISTING 8-MCC-1500-MCC LOCATION, SEE DRAWING E-30.
4. FOR CABLE AND CONDUIT SCHEDULE, SEE DRAWINGS E-905 THRU E-913.

THE DRAWINGS IN THIS SET ARE RECORD DRAWINGS. THEY ARE CONSTRUCTION CONTRACT DRAWINGS WHICH HAVE BEEN REVISED BASED ON AVAILABLE FIELD INFORMATION RECORDED BY OTHERS DURING CONSTRUCTION OF THIS CONTRACT. THERE HAS BEEN NO VERIFICATION OF DIMENSIONS SHOWN ON THE CONSTRUCTION DRAWINGS OR THE ACCURACY/COMPLETENESS OF THE FIELD INFORMATION RECEIVED.

SIGNATURE 2/7/2020 DATE

CHEMICAL HANDLING AREA - EXISTING 8-MCC-1500-MCC - ONE LINE DIAGRAM - EXISTING AND MODIFICATION II

NO SCALE

SHAH & ASSOCIATES

AS-BUILT REPLACEMENT SHEET

PROFESSIONAL CERTIFICATION
THIS DRAWING WAS ORIGINALLY APPROVED FOR CONSTRUCTION AND SEALED BY KANAIYALAL R. SHAH, A REGISTERED PROFESSIONAL ENGINEER IN THE STATE OF MARYLAND, NO. 11084.

NOTICE TO CONTRACTORS
- PROJECT ELEVATIONS ARE BASED ON NAVD88 AND HOWARD COUNTY'S BENCHMARK SYSTEM
- PREVIOUS PROJECTS USED OTHER DATUMS
- APPLY THE FOLLOWING CONVERSIONS WHEN USING PREVIOUS CONTRACT DRAWINGS:
  - ADDITION NO. 6: SUBTRACT 0.80 FT
  - PRIOR ADDITIONS: SUBTRACT 1.04 FT

DEPARTMENT OF PUBLIC WORKS
HOWARD COUNTY, MARYLAND

CHIEF, BUREAU OF UTILITIES DATE

DES:	SR
DRN:	VVS
CHK:	KRS
DATE:	10/2016

DATE	REV	DESCRIPTION
07/2019		RECORD DRAWING

ELECTRICAL

CHEMICAL HANDLING AREA EXISTING 8-MCC-1500-MCC - ONE LINE DIAGRAM EXISTING AND MODIFICATION II

LITTLE PATUXENT WATER RECLAMATION PLANT
8TH ADDITION
BIOSOLIDS PROCESSING FACILITIES – PHASE I

CAPITAL PROJECT S-6295
CONTRACT NO. 24-4935

ELECTION DISTRICT NO. 6
HOWARD COUNTY, MARYLAND

SCALE AS SHOWN

SHEET 314 OF 463

E-16

GENERAL NOTES:

1. FOR SYMBOLS AND ABBREVIATIONS, SEE DRAWING E-1.
2. FOR CONSTRUCTION SEQUENCE, SEE DRAWING E-2.
3. FOR EXISTING 8-MCC-2300-MCC LOCATION, SEE DRAWING E-30.

DRAWING NOTES:

(1) SCUM PUMP VFDS ARE 5 HP RATED.

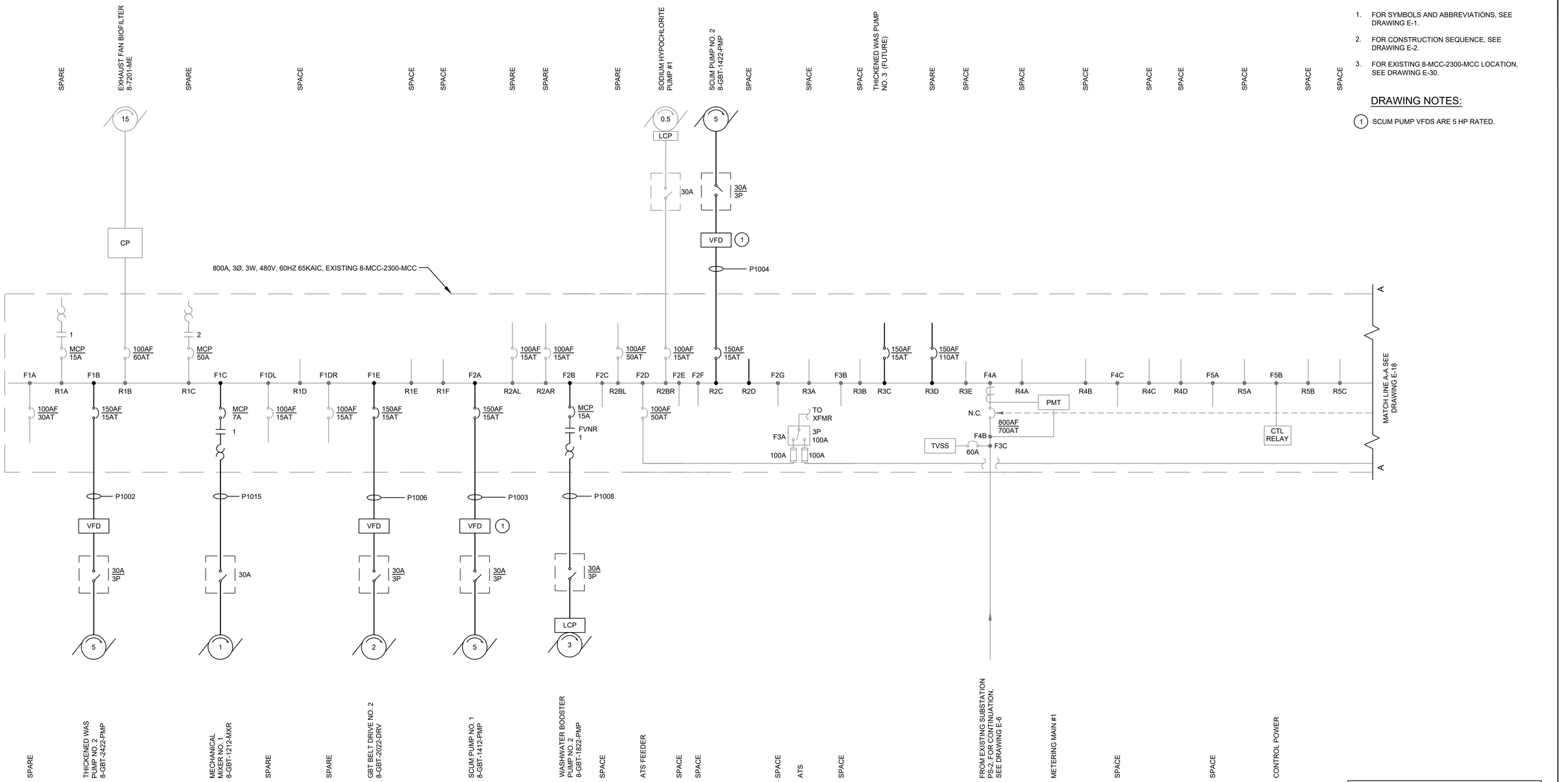

CHEMICAL HANDLING AREA - EXISTING 8-MCC-2300-MCC - ONE LINE DIAGRAM - EXISTING AND MODIFICATION I

NO SCALE

THE DRAWINGS IN THIS SET ARE RECORD DRAWINGS. THEY ARE CONSTRUCTION CONTRACT DRAWINGS WHICH HAVE BEEN REVISED BASED ON AVAILABLE FIELD INFORMATION RECORDED BY OTHERS DURING CONSTRUCTION OF THIS CONTRACT. THERE HAS BEEN NO VERIFICATION OF DIMENSIONS SHOWN ON THE CONSTRUCTION DRAWINGS OR THE ACCURACY/COMPLETENESS OF THE FIELD INFORMATION RECEIVED.

SIGNATURE — DATE 2/7/2020

SHAH & ASSOCIATES

AS-BUILT REPLACEMENT SHEET

PROFESSIONAL CERTIFICATION
THIS DRAWING WAS ORIGINALLY APPROVED FOR CONSTRUCTION AND SEALED BY KANAIYALAL R. SHAH, A REGISTERED PROFESSIONAL ENGINEER IN THE STATE OF MARYLAND, NO. 11084.

NOTICE TO CONTRACTORS
- PROJECT ELEVATIONS ARE BASED ON NAVD88 AND HOWARD COUNTY'S BENCHMARK SYSTEM
- PREVIOUS PROJECTS USED OTHER DATUMS
- APPLY THE FOLLOWING CONVERSIONS WHEN USING PREVIOUS CONTRACT DRAWINGS:
  - ADDITION NO. 6: SUBTRACT 0.80 FT
  - PRIOR ADDITIONS: SUBTRACT 1.04 FT

DEPARTMENT OF PUBLIC WORKS
HOWARD COUNTY, MARYLAND

CHIEF, BUREAU OF UTILITIES — DATE

DES:	SR
DRN:	VVS
CHK:	KRS
DATE:	10/2016

DATE	REV	DESCRIPTION
07/2019		RECORD DRAWING

ELECTRICAL

CHEMICAL HANDLING AREA
EXISTING 8-MCC-2300-MCC
ONE LINE DIAGRAM
EXISTING AND MODIFICATION I

LITTLE PATUXENT WATER RECLAMATION PLANT
8TH ADDITION
BIOSOLIDS PROCESSING FACILITIES – PHASE I

CAPITAL PROJECT S-6295
CONTRACT NO. 24-4935

ELECTION DISTRICT NO. 6
HOWARD COUNTY, MARYLAND

SCALE AS SHOWN

SHEET 315 OF 463

E-17

GENERAL NOTES:

1. FOR SYMBOLS AND ABBREVIATIONS, SEE DRAWING E-1.
2. FOR CONSTRUCTION SEQUENCE, SEE DRAWING E-2.
3. FOR EXISTING 8-MCC-2300-MCC LOCATION, SEE DRAWING E-30.
4. FOR CABLE AND CONDUIT SCHEDULE, SEE DRAWINGS E-905 AND E-906.

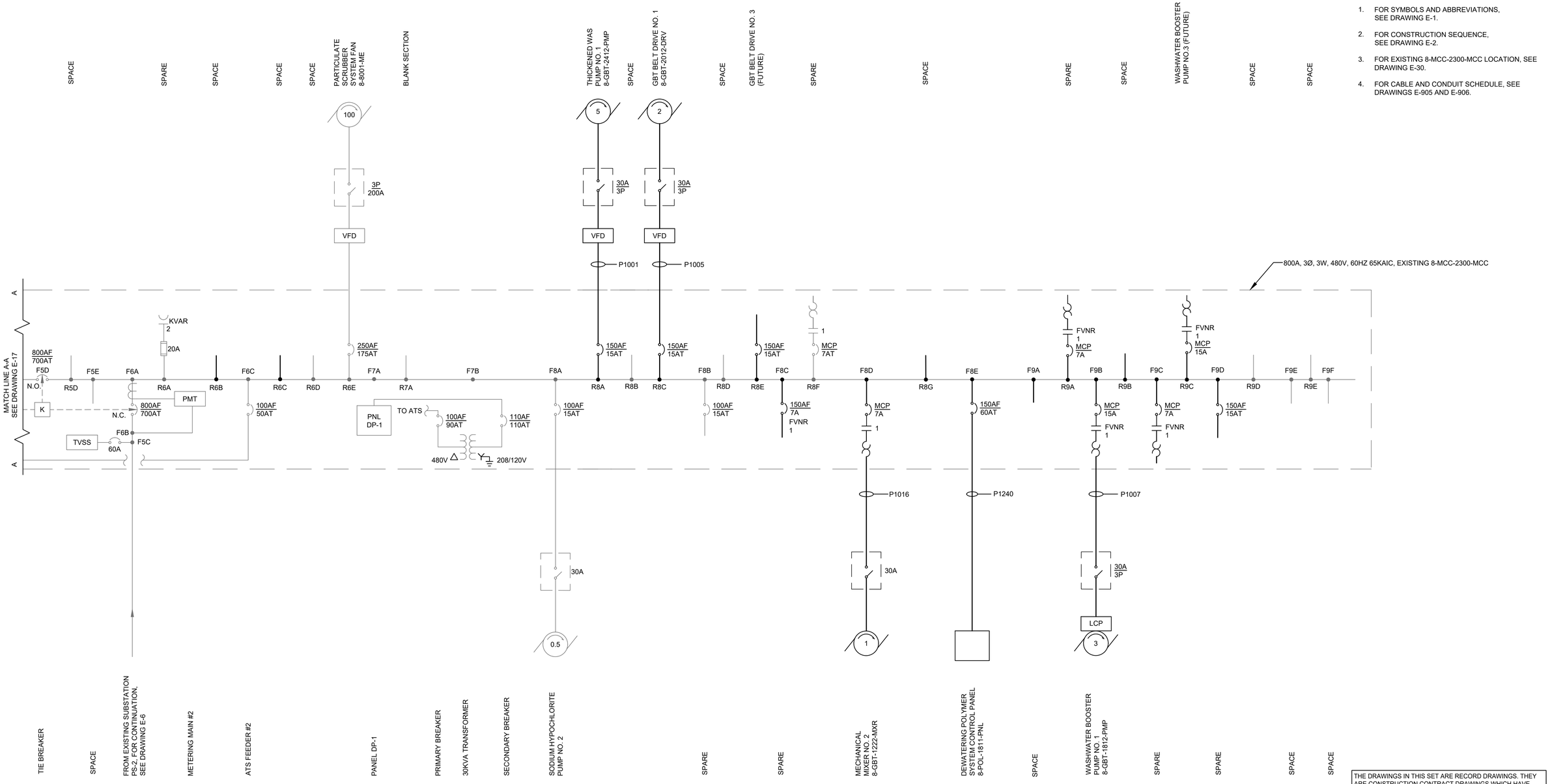

CHEMICAL HANDLING AREA - EXISTING 8-MCC 2300-MCC - ONE LINE DIAGRAM - EXISTING AND MODIFICATION II

NO SCALE

THE DRAWINGS IN THIS SET ARE RECORD DRAWINGS. THEY ARE CONSTRUCTION CONTRACT DRAWINGS WHICH HAVE BEEN REVISED BASED ON AVAILABLE FIELD INFORMATION RECORDED BY OTHERS DURING CONSTRUCTION OF THIS CONTRACT. THERE HAS BEEN NO VERIFICATION OF DIMENSIONS SHOWN ON THE CONSTRUCTION DRAWINGS OR THE ACCURACY/COMPLETENESS OF THE FIELD INFORMATION RECEIVED.

SIGNATURE _____ DATE 2/7/2020

SHAH & ASSOCIATES

AS-BUILT REPLACEMENT SHEET

PROFESSIONAL CERTIFICATION

THIS DRAWING WAS ORIGINALLY APPROVED FOR CONSTRUCTION AND SEALED BY KANAIYALAL R. SHAH, A REGISTERED PROFESSIONAL ENGINEER IN THE STATE OF MARYLAND, NO. 11084.

NOTICE TO CONTRACTORS

- PROJECT ELEVATIONS ARE BASED ON NAVD88 AND HOWARD COUNTY'S BENCHMARK SYSTEM
- PREVIOUS PROJECTS USED OTHER DATUMS
- APPLY THE FOLLOWING CONVERSIONS WHEN USING PREVIOUS CONTRACT DRAWINGS:
  - ADDITION NO. 6: SUBTRACT 0.80 FT
  - PRIOR ADDITIONS: SUBTRACT 1.04 FT

DEPARTMENT OF PUBLIC WORKS
HOWARD COUNTY, MARYLAND

CHIEF, BUREAU OF UTILITIES DATE

DES:	SR
DRN:	VVS
CHK:	KRS
DATE:	10/2016

DATE	REV	DESCRIPTION
07/2019		RECORD DRAWING

ELECTRICAL

CHEMICAL HANDLING AREA
EXISTING 8-MCC-2300-MCC
ONE LINE DIAGRAM
EXISTING AND MODIFICATION II

LITTLE PATUXENT WATER RECLAMATION PLANT
8TH ADDITION
BIOSOLIDS PROCESSING FACILITIES – PHASE I

CAPITAL PROJECT S-6295
CONTRACT NO. 24-4935

ELECTION DISTRICT NO. 6
HOWARD COUNTY, MARYLAND

SCALE AS SHOWN

SHEET 316 OF 463

E-18

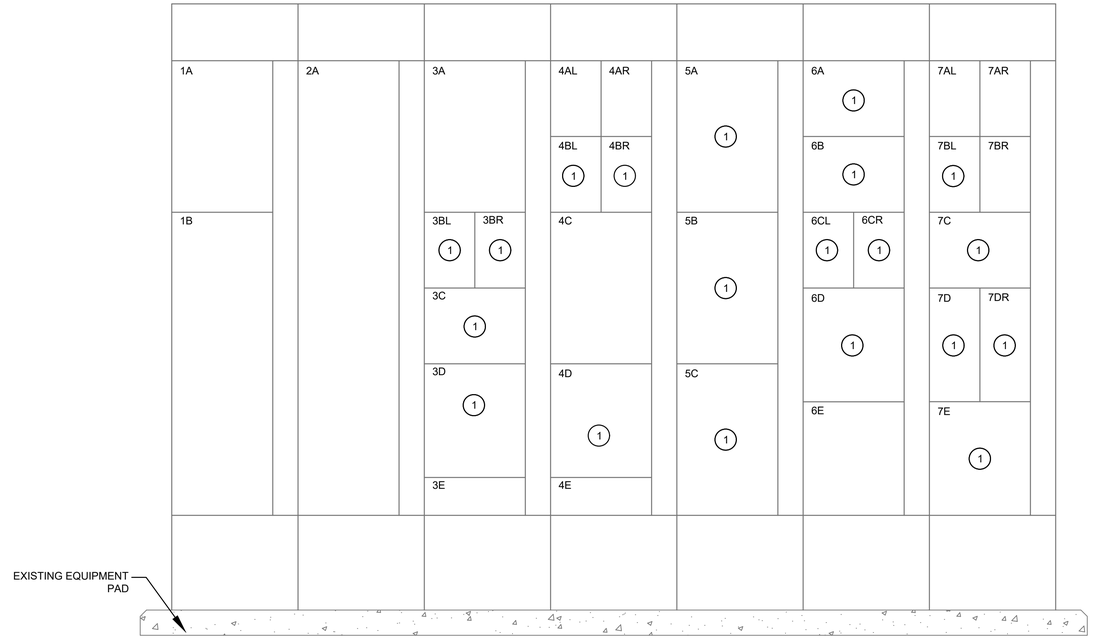

CHEMICAL HANDLING AREA - EXISTING 8-MCC-1500-MCC FRONT ELEVATION - EXISTING AND MODIFICATION

NO SCALE

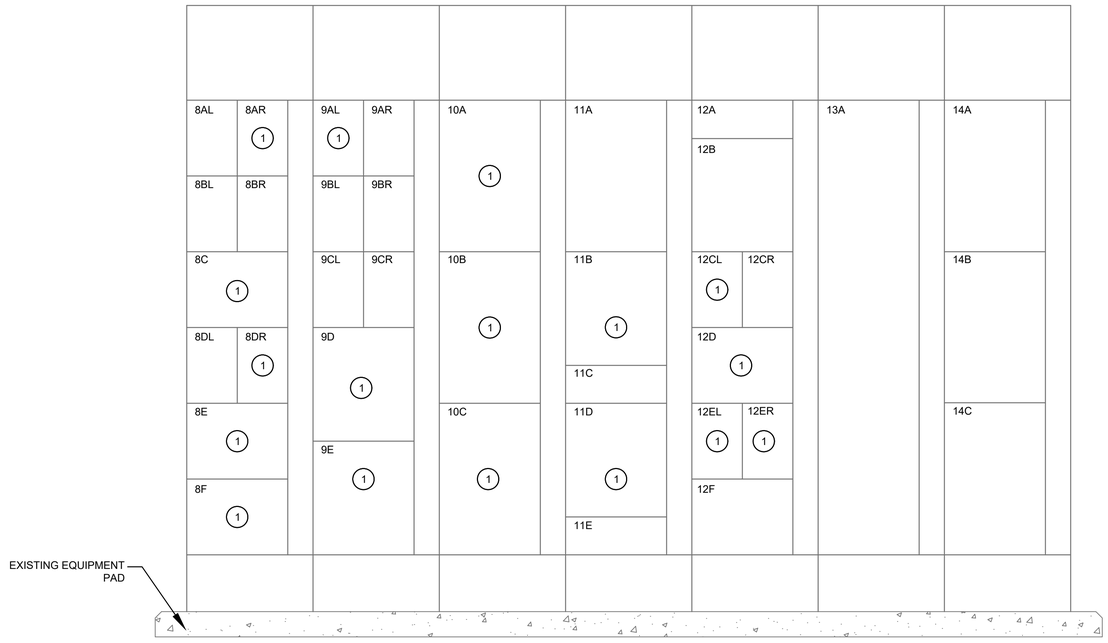

CHEMICAL HANDLING AREA - EXISTING 8-MCC-1500-MCC REAR ELEVATION - EXISTING AND MODIFICATION

NO SCALE

GENERAL NOTES:

1. FOR SYMBOLS AND ABBREVIATIONS, SEE DRAWING E-1.
2. FOR CONSTRUCTION SEQUENCE, SEE DRAWING E-2.
3. FOR EXISTING 8-MCC-1500-MCC ONE LINE DIAGRAM, SEE DRAWINGS E-15 AND E-16.
4. FOR EXISTING 8-MCC-1500-MCC LOCATION, SEE DRAWING E-30.

DRAWING NOTES:

(1) MCC BUCKET HAS BEEN MODIFIED. PROVIDE NAMEPLATE ACCORDINGLY.

THE DRAWINGS IN THIS SET ARE RECORD DRAWINGS. THEY ARE CONSTRUCTION CONTRACT DRAWINGS WHICH HAVE BEEN REVISED BASED ON AVAILABLE FIELD INFORMATION RECORDED BY OTHERS DURING CONSTRUCTION OF THIS CONTRACT. THERE HAS BEEN NO VERIFICATION OF DIMENSIONS SHOWN ON THE CONSTRUCTION DRAWINGS OR THE ACCURACY/COMPLETENESS OF THE FIELD INFORMATION RECEIVED.

SIGNATURE — DATE 2/7/2023

SHAH & ASSOCIATES

AS-BUILT REPLACEMENT SHEET

PROFESSIONAL CERTIFICATION

THIS DRAWING WAS ORIGINALLY APPROVED FOR CONSTRUCTION AND SEALED BY KANAIYALAL R. SHAH, A REGISTERED PROFESSIONAL ENGINEER IN THE STATE OF MARYLAND, NO. 11084.

NOTICE TO CONTRACTORS

- PROJECT ELEVATIONS ARE BASED ON NAVD88 AND HOWARD COUNTY'S BENCHMARK SYSTEM
- PREVIOUS PROJECTS USED OTHER DATUMS
- APPLY THE FOLLOWING CONVERSIONS WHEN USING PREVIOUS CONTRACT DRAWINGS:
  - ADDITION NO. 6: SUBTRACT 0.80 FT
  - PRIOR ADDITIONS: SUBTRACT 1.04 FT

DEPARTMENT OF PUBLIC WORKS
HOWARD COUNTY, MARYLAND

CHIEF, BUREAU OF UTILITIES — DATE

DES:	SR
DRN:	AJS
CHK:	KRS
DATE:	10/2016

DATE	REV	DESCRIPTION
07/2019		RECORD DRAWING

ELECTRICAL

CHEMICAL HANDLING AREA
EXISTING 8-MCC-1500-MCC ELEVATION
EXISTING AND MODIFICATION

LITTLE PATUXENT WATER RECLAMATION PLANT
8TH ADDITION
BIOSOLIDS PROCESSING FACILITIES – PHASE I

CAPITAL PROJECT S–6295
CONTRACT NO. 24–4935

ELECTION DISTRICT NO. 6
HOWARD COUNTY, MARYLAND

SCALE AS SHOWN

SHEET 317 OF 463

E-19

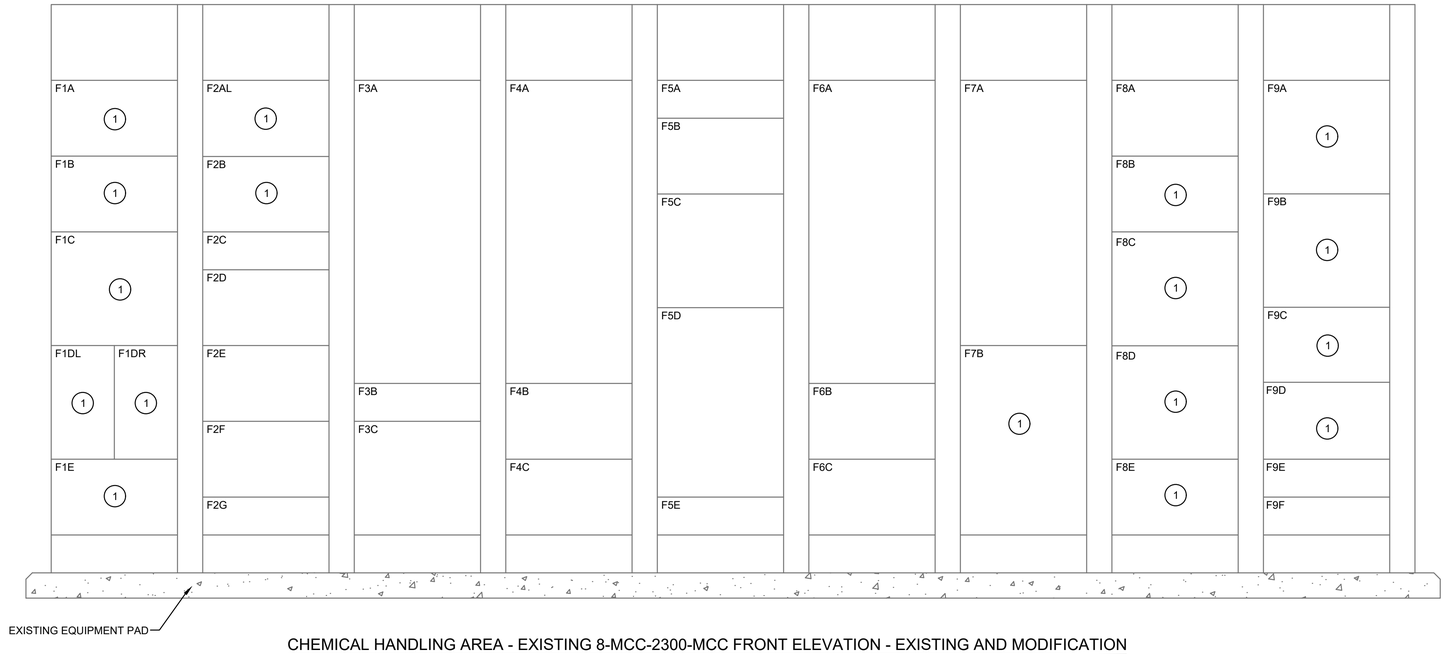

CHEMICAL HANDLING AREA - EXISTING 8-MCC-2300-MCC FRONT ELEVATION - EXISTING AND MODIFICATION

NO SCALE

CHEMICAL HANDLING AREA - EXISTING 8-MCC-2300-MCC REAR ELEVATION - EXISTING AND MODIFICATION

NO SCALE

GENERAL NOTES:

1. FOR SYMBOLS AND ABBREVIATIONS, SEE DRAWING E-1.
2. FOR CONSTRUCTION SEQUENCE, SEE DRAWING E-2.
3. FOR 8-MCC-2300-MCC ONE LINE DIAGRAM, EXISTING AND MODIFICATION, SEE DRAWINGS E-17 AND E-18.
4. FOR EXISTING 8-MCC-2300-MCC LOCATION, SEE DRAWING E-30.

DRAWING NOTES:

(1) MCC BUCKET HAS BEEN MODIFIED. PROVIDE NAMEPLATE ACCORDINGLY.

THE DRAWINGS IN THIS SET ARE RECORD DRAWINGS. THEY ARE CONSTRUCTION CONTRACT DRAWINGS WHICH HAVE BEEN REVISED BASED ON AVAILABLE FIELD INFORMATION RECORDED BY OTHERS DURING CONSTRUCTION OF THIS CONTRACT. THERE HAS BEEN NO VERIFICATION OF DIMENSIONS SHOWN ON THE CONSTRUCTION DRAWINGS OR THE ACCURACY/COMPLETENESS OF THE FIELD INFORMATION RECEIVED.

SIGNATURE 2/7/2020 DATE

SHAH & ASSOCIATES

AS-BUILT REPLACEMENT SHEET

PROFESSIONAL CERTIFICATION
THIS DRAWING WAS ORIGINALLY APPROVED FOR CONSTRUCTION AND SEALED BY KANAIYALAL R. SHAH, A REGISTERED PROFESSIONAL ENGINEER IN THE STATE OF MARYLAND, NO. 11084.

NOTICE TO CONTRACTORS
- PROJECT ELEVATIONS ARE BASED ON NAVD88 AND HOWARD COUNTY'S BENCHMARK SYSTEM
- PREVIOUS PROJECTS USED OTHER DATUMS
- APPLY THE FOLLOWING CONVERSIONS WHEN USING PREVIOUS CONTRACT DRAWINGS:
  - ADDITION NO. 6: SUBTRACT 0.80 FT.
  - PRIOR ADDITIONS: SUBTRACT 1.04 FT

DEPARTMENT OF PUBLIC WORKS
HOWARD COUNTY, MARYLAND

CHIEF, BUREAU OF UTILITIES DATE

DES: SR
DRN: VVS
CHK: KRS
DATE: 10/2016

DATE	REV	DESCRIPTION
07/2019		RECORD DRAWING

ELECTRICAL

CHEMICAL HANDLING AREA
EXISTING 8-MCC-2300-MCC ELEVATION
EXISTING AND MODIFICATION

LITTLE PATUXENT WATER RECLAMATION PLANT
8TH ADDITION
BIOSOLIDS PROCESSING FACILITIES – PHASE I

CAPITAL PROJECT S-6295
CONTRACT NO. 24-4935

ELECTION DISTRICT NO. 6
HOWARD COUNTY, MARYLAND

SCALE AS SHOWN

SHEET 318 OF 463

E-20

GENERAL NOTES:

1. FOR SYMBOLS AND ABBREVIATIONS, SEE DRAWING E-1.
2. FOR CONSTRUCTION SEQUENCE, SEE DRAWING E-2.
3. FOR NEW 8-MCC-3100-MCC ONE LINE DIAGRAM, SEE DRAWINGS E-7A, E-8, E-9 AND E-10.
4. FOR NEW 8-MCC-3100-MCC LOCATION, SEE DRAWING E-3.

4	5	6	7	8	9		10	11	12	13	14	
4A	5A ATS-400	6A HOT WATER SUPPLY PMP NO. 1 8-DIG-2613-PMP	7A ANAEROBIC DIGESTER XFER PMP NO. 3 8-DIG-1633-P	8A DIGESTER MIXING PUMP NO. 1 8-DIG-1213-PMP	9A SPARE		10A SPD	11A	12A	13A	14A	
4B MCC NORTH WALL FEED ITEM #102		6B HOT WATER SUPPLY PMP NO. 3 8-DIG-2633-PMP	7B PHOSPHORUS PRECIPITATION BLOWER NO. 1 8-CHE-2812-BLW	8B HEAT PUMP UNIT 1 8-MCC-9912 -HTP	9B DIGESTED SOLIDS STORAGE TANK MIXER NO. 4 8-DIG-1844-MX		10B METERING					
4C	5B	6C SPARE	7C DIGESTED SOLIDS MIXING PUMP NO. 1 8-DSS-2012-PMP	8C DEAMM BLOWER NO. 1 8-DAM-1613-BLW	9C SPARE		10C KEY INTERLOCK TRANSFER LOCK					
4D PHOSPHORUS PRECIPITATION PUMP NO. 1 8-PHO-2411-PMP	5C SPARE	6D SPARE	7D DEAMM MIXER NO. 2 8-CTR-1422-MX	8D ANAEROBIC DIGESTER XFER PMP NO. 1 8-DIG-1613-PMP	9D		10D GAS BLOWER NO. 1 8-DGT-1012-B					
4E SPARE	5D SPARE	6E SPARE	7E DIGESTER FEED PUMP NO. 1 8-THS-1412-PMP	8E CENTRIFUGE FEED PUMP NO. 1 8-DSS-2213-PMP	9E 20-MAU-01		10E HCU BREAKER					
4F 8-PH0-9912-EUH	5E PHOSPHORUS PRECIPITATION BLOWER NO. 2 8-CHE-2822-B	6F	7F TRANSFORMER TRC-2	8F 8-DIG-9911-MAU (32-MAU-01)			10F					

HCU

MAIN BREAKER 1 (K3 K5)

TIE BREAKER (K6 K5)

TRANSITION

MAIN BREAKER 2 (K4 K6)

FOR CONTINUATION, SEE THIS DRAWING

DIGESTER BUILDING - NEW 8-MCC-3100-MCC ELEVATION - SOUTH WALL

NO SCALE

	15		16	17	18	19	20	21
FOR CONTINUATION, SEE THIS DRAWING	15A SPD		16A TRANSFORMER TRC	17A DIGESTER MIXING PUMP NO. 2 8-DIG-1223-PMP	18A DIGESTER MIXING PUMP NO. 3 8-DIG-1233-PMP	19A ANAEROBIC DIGESTER XFER PMP NO. 2 8-DIG-1623-PMP	20A ATS 400	21A
	15B METERING		16B SPARE	17B PHOSPHORUS PRECIPITATION BLOWER NO. 3 (FUTURE)	18B SPARE	19B SPARE		21B MCC NORTH WALL FEED ITEM #104
	15C		16C SPARE	17C DEAMM BLOWER NO. 2 8-CTR-1623-B	18C DEAMM BLOWER NO. 3 8-DAM-1633-BLW	19C DIGESTED SOLIDS MIXING PUMP NO. 2 8-DIG-2022-PMP	20B	21C
	15D GAS BLOWER NO. 2 8-DGT-1022-B		16D SPARE	17D SPARE	18D CENTRIFUGE FEED PUMP NO. 3 8-DSS-2233-PMP	19D DEAMM MIXER NO. 1 8-DAM-1412-MXR	20C PHOSPHORUS PRECIPITATION PUMP NO. 2 (FUTURE)	21D SPARE
	15E HCU BREAKER		16E	17E CENTRIFUGE FEED PUMP NO. 2 8-DSS-2223-P	18E SYNAGRO TEMP LOAD OUT	19E SPARE	20D DIGESTER FEED PUMP NO. 2 8-THS-1422-PMP	21E HOT WATER SUPPLY PUMP NO. 2 8-DIG-2623-PMP
	15F		16F GLYCOL CHILLER CONTROL PANEL	17F HEAT PUMP UNIT 2 8-MCC-9922-HTP	18F BLANK	19F PHOSPHURUS PRECIPITATION ELECTRIC UNIT HEATER 8-PHO-9922-EUH	20E PHOSPHORUS PRECIPITATION BLOWER NO. 4 (FUTURE)	21F DIGESTER RECIRCULATION PUMP NO. 3 8-DIG-1033-P

GENERATOR CONNECTION CABINET K7

HCU

DIGESTER BUILDING - NEW 8-MCC-3100-MCC ELEVATION - SOUTH WALL

NO SCALE

THE DRAWINGS IN THIS SET ARE RECORD DRAWINGS. THEY ARE CONSTRUCTION CONTRACT DRAWINGS WHICH HAVE BEEN REVISED BASED ON AVAILABLE FIELD INFORMATION RECORDED BY OTHERS DURING CONSTRUCTION OF THIS CONTRACT. THERE HAS BEEN NO VERIFICATION OF DIMENSIONS SHOWN ON THE CONSTRUCTION DRAWINGS OR THE ACCURACY/COMPLETENESS OF THE FIELD INFORMATION RECEIVED.

SIGNATURE 2/7/2023 DATE

SHAH & ASSOCIATES

HDR

AS-BUILT REPLACEMENT SHEET

PROFESSIONAL CERTIFICATION

THIS DRAWING WAS ORIGINALLY APPROVED FOR CONSTRUCTION AND SEALED BY KANAIYALAL R. SHAH, A REGISTERED PROFESSIONAL ENGINEER IN THE STATE OF MARYLAND, NO. 11084.

NOTICE TO CONTRACTORS

- PROJECT ELEVATIONS ARE BASED ON NAVD88 AND HOWARD COUNTY'S BENCHMARK SYSTEM
- PREVIOUS PROJECTS USED OTHER DATUMS
- APPLY THE FOLLOWING CONVERSIONS WHEN USING PREVIOUS CONTRACT DRAWINGS:
  - ADDITION NO. 6: SUBTRACT 0.80 FT
  - PRIOR ADDITIONS: SUBTRACT 1.04 FT

DEPARTMENT OF PUBLIC WORKS
HOWARD COUNTY, MARYLAND

CHIEF, BUREAU OF UTILITIES DATE

DES: SR
DRN: XMZ
CHK: KRS
DATE: 10/2016

DATE	REV	DESCRIPTION
07/2019		RECORD DRAWING

ELECTRICAL

DIGESTER BUILDING
NEW 8-MCC-3100-MCC
ELEVATION

LITTLE PATUXENT WATER RECLAMATION PLANT
8TH ADDITION
BIOSOLIDS PROCESSING FACILITIES – PHASE I

CAPITAL PROJECT S–6295
CONTRACT NO. 24–4935

ELECTION DISTRICT NO. 6
HOWARD COUNTY, MARYLAND

SCALE AS SHOWN

SHEET 319 OF 463

E-21

GENERAL NOTES:

1. FOR SYMBOLS AND ABBREVIATIONS, SEE DRAWING E-1.
2. FOR CONSTRUCTION SEQUENCE, SEE DRAWING E-2.
3. FOR NEW 8-MCC-3100-MCC ONE LINE DIAGRAM, SEE DRAWINGS E-8 AND E-9.
4. FOR NEW 8-MCC-3100-MCC LOCATION, SEE DRAWING E-3.

29	30	31	32	33	1	2	3
29A INCOMING MAIN LUGS	30A	31A CENTRATE FEED PUMP NO. 3 VFD 8-DAM-1233-VFD	32A GT TRANSFER PUMP NO. 3 VFD 8-PST-2634-VFD	33A GT1 COLLECTOR DRIVE VFD 8-PST-1612-VFD	1A DIGESTED SOLIDS STORAGE TANK MIX NO. 1 8-DSS-1814-MXR	2A TEMPORARY 480V RECEPTACLE ON DIGESTER DECK	3A SPARE
	30B				1B	2B SPARE	3B SPARE
	30C HOT WATER BOILER NO. 1 8-DIG-2412-HWB				1C EYEWASH STATION WATER HEATER 36-IWH01	2C MONORAIL HOIST	3C
	30D DUAL MEMBRANE GAS HOLDER PANEL	31B GT TRANSFER PUMP NO. 1 VFD 8-PST-2614-VFD	32B CENTRATE FEED PUMP NO. 1 VFD 8-DAM-1213-VFD	33B SPARE VFD	1D	2D COMPRESSOR NO. 1 8-THS-1212-AIR	3D
	30E				1E DIGESTER RECIRC PUMP NO. 1 8-DIG-1013-PMP	2E	3E SPARE
	30F					2F	3F DIGESTER BUILDING AREA EXHAUST FAN 1 8-DIG-9914-FAN

22	23	24	28	27	26	25
22A EXHAUST FAN 1 8-PHO-9911-FAN	23A RECIRCULATION PUMP (FUTURE)	24A DIGESTED SOLIDS TANK MIXER NO. 2 8-DIG-1824-MX	28A GT TRANSFER PUMP NO. 4 VFD 8-PST-2644-VFD	27A GT2 COLLECTOR DRIVE VFD 8-PST-1622-VFD	26A HOT WATER BOILER NO. 2 8-DIG-2422-HWB	25A INCOMING MAIN LUGS
22B SPARE	23B SPARE	24B DIGESTED SOLIDS STORAGE TANK MIXER NO. 3 8-DIG-1834-MX			26B	
22C	23C SPARE				26C	
22D	23D COMPRESSOR NO. 2 8-TSS-1222-AC	24C AIR ADDITION BLOWER (FUTURE)	28B GT TRANSFER PUMP NO. 2 VFD 8-PST-2624-PMP	27B CENTRATE FEED PUMP NO. 2 VFD 8-DAM-1223-VFD	26D SPARE VFD	
22E STRUVITE RECOVERY WASHER SYSTEM PANEL	23E	24D				
22F EXHAUST FAN 2 8-DIG-9924-FAN	23F	24E DIGESTER RECIRC PUMP NO. 2 8-DIG-1023-PMP				

DIGESTER BUILDING - NEW 8-MCC-3100-MCC ELEVATION - NORTH WALL

NO SCALE

THE DRAWINGS IN THIS SET ARE RECORD DRAWINGS. THEY ARE CONSTRUCTION CONTRACT DRAWINGS WHICH HAVE BEEN REVISED BASED ON AVAILABLE FIELD INFORMATION RECORDED BY OTHERS DURING CONSTRUCTION OF THIS CONTRACT. THERE HAS BEEN NO VERIFICATION OF DIMENSIONS SHOWN ON THE CONSTRUCTION DRAWINGS OR THE ACCURACY/COMPLETENESS OF THE FIELD INFORMATION RECEIVED.

SIGNATURE _____ DATE 2/7/2023

SHAH & ASSOCIATES

AS-BUILT REPLACEMENT SHEET

PROFESSIONAL CERTIFICATION
THIS DRAWING WAS ORIGINALLY APPROVED FOR CONSTRUCTION AND SEALED BY KANAIYALAL R. SHAH, A REGISTERED PROFESSIONAL ENGINEER IN THE STATE OF MARYLAND, NO. 11084.

NOTICE TO CONTRACTORS
- PROJECT ELEVATIONS ARE BASED ON NAVD88 AND HOWARD COUNTY'S BENCHMARK SYSTEM
- PREVIOUS PROJECTS USED OTHER DATUMS
- APPLY THE FOLLOWING CONVERSIONS WHEN USING PREVIOUS CONTRACT DRAWINGS:
  - ADDITION NO. 6: SUBTRACT 0.80 FT
  - PRIOR ADDITIONS: SUBTRACT 1.04 FT

DEPARTMENT OF PUBLIC WORKS
HOWARD COUNTY, MARYLAND

CHIEF, BUREAU OF UTILITIES DATE

DES: SR
DRN: AJS
CHK: KRS
DATE: 10/2016

DATE	REV	DESCRIPTION
07/2019		RECORD DRAWING

ELECTRICAL

DIGESTER BUILDING
NEW 8-MCC-3100-MCC
ELEVATION

LITTLE PATUXENT WATER RECLAMATION PLANT
8TH ADDITION
BIOSOLIDS PROCESSING FACILITIES – PHASE I

CAPITAL PROJECT S–6295
CONTRACT NO. 24–4935

ELECTION DISTRICT NO. 6
HOWARD COUNTY, MARYLAND

SCALE AS SHOWN

SHEET 320 OF 463

E-21A

DRAWING NOTES:

1. NOT USED.
2. NOT USED.
3. NOT USED.

GENERAL NOTES:

1. FOR SYMBOLS AND ABBREVIATIONS, SEE DRAWING E-1.
2. FOR MCC-11 ELEVATION, SEE DRAWINGS E-21F AND E-21G.

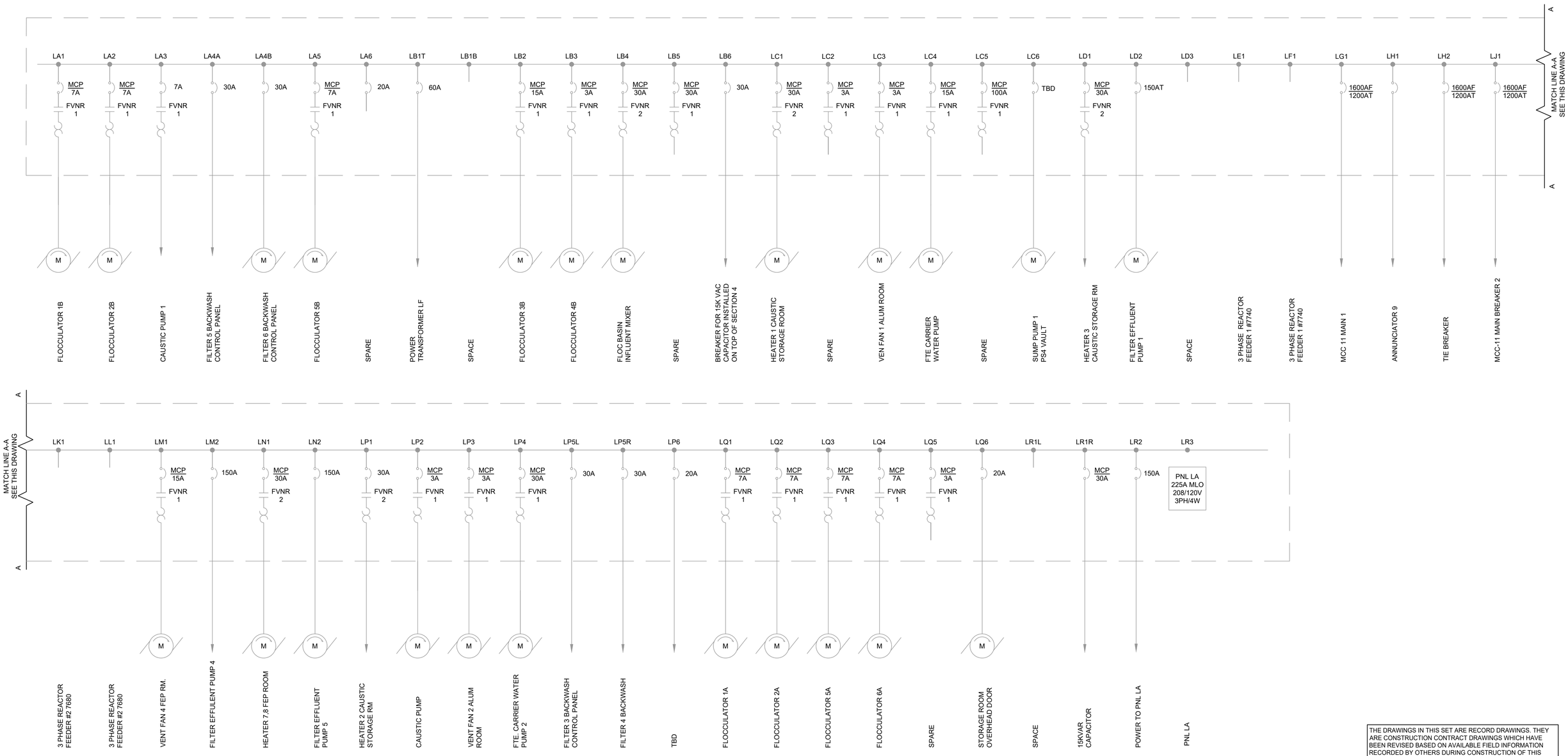

FILTER BUILDING - EXISTING MCC - 11 - ONE LINE DIAGRAM I (FRONT) - MODIFICATION

SCALE: NONE

THE DRAWINGS IN THIS SET ARE RECORD DRAWINGS. THEY ARE CONSTRUCTION CONTRACT DRAWINGS WHICH HAVE BEEN REVISED BASED ON AVAILABLE FIELD INFORMATION RECORDED BY OTHERS DURING CONSTRUCTION OF THIS CONTRACT. THERE HAS BEEN NO VERIFICATION OF DIMENSIONS SHOWN ON THE CONSTRUCTION DRAWINGS OR THE ACCURACY/COMPLETENESS OF THE FIELD INFORMATION RECEIVED.

SIGNATURE — DATE 2/7/2025

SHAH & ASSOCIATES

HDR

AS-BUILT REPLACEMENT SHEET

PROFESSIONAL CERTIFICATION

THIS DRAWING WAS ORIGINALLY APPROVED FOR CONSTRUCTION AND SEALED BY KANAIYALAL R. SHAH, A REGISTERED PROFESSIONAL ENGINEER IN THE STATE OF MARYLAND, NO. 11084.

NOTICE TO CONTRACTORS

- PROJECT ELEVATIONS ARE BASED ON NAVD88 AND HOWARD COUNTY'S BENCHMARK SYSTEM
- PREVIOUS PROJECTS USED OTHER DATUMS
- APPLY THE FOLLOWING CONVERSIONS WHEN USING PREVIOUS CONTRACT DRAWINGS:
  - ADDITION NO. 6: SUBTRACT 0.80 FT.
  - PRIOR ADDITIONS: SUBTRACT 1.04 FT.

DEPARTMENT OF PUBLIC WORKS
HOWARD COUNTY, MARYLAND

CHIEF, BUREAU OF UTILITIES — DATE

DES: HFM
DRN: CAV
CHK: KRS
DATE: 4/2017

DATE	REV	DESCRIPTION
07/2019		RECORD DRAWING

ELECTRICAL

FILTER BUILDING
EXISTING MCC - 11
ONE LINE DIAGRAM I (FRONT)
MODIFICATION

LITTLE PATUXENT WATER RECLAMATION PLANT
8TH ADDITION
BIOSOLIDS PROCESSING FACILITIES – PHASE I

CAPITAL PROJECT S-6295
CONTRACT NO. 24-4935

ELECTION DISTRICT NO. 6
HOWARD COUNTY, MARYLAND

SCALE AS SHOWN

SHEET 321 OF 463

E-21B

GENERAL NOTES:

1. FOR SYMBOLS AND ABBREVIATIONS, SEE DRAWING E-1.
2. FOR MCC-11 ELEVATION AND SCHEDULE, SEE DRAWINGS E-21F AND E-21G.

DRAWING NOTES:

(1) NOT USED.

(2) MODIFY SECTION LDD TO ACCOMODATE INLINE EYEWASH WATER HEATER.

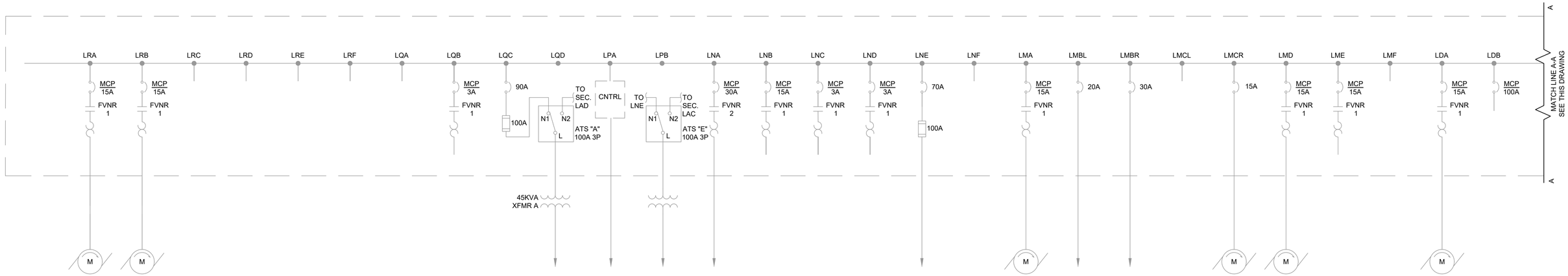

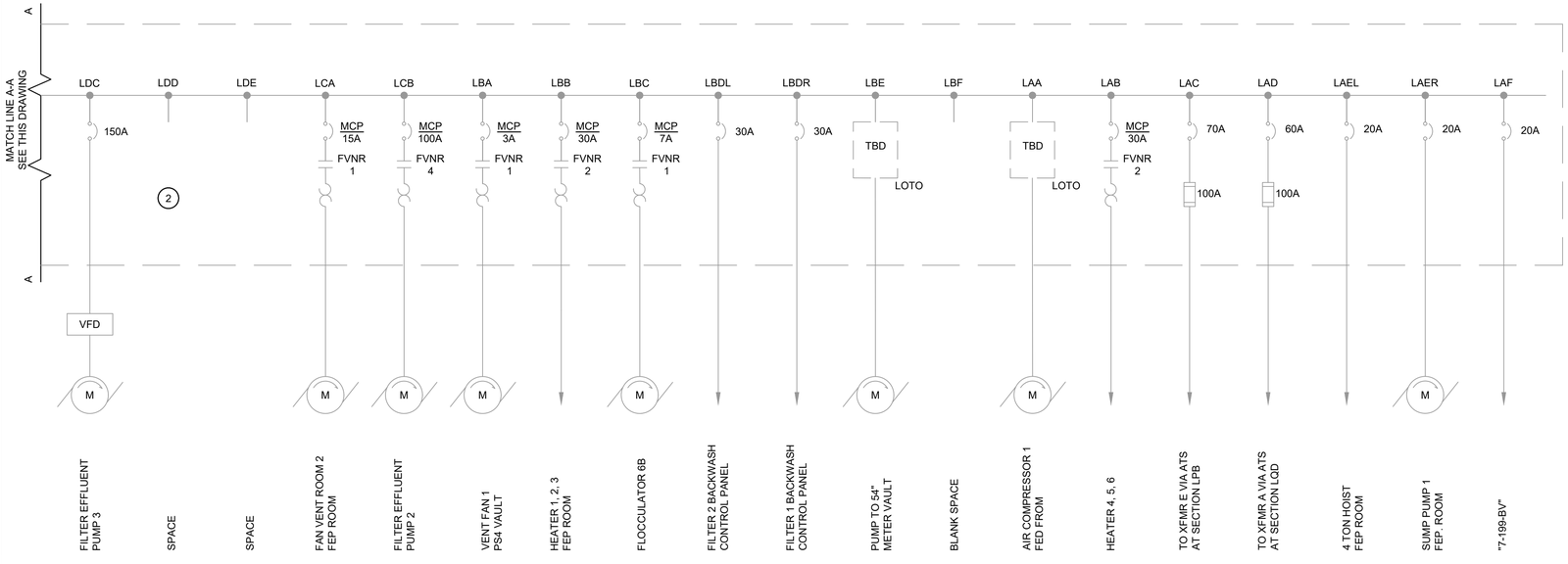

FILTER BUILDING - EXISTING MCC-11 - ONE LINE DIAGRAM II (REAR) - MODIFICATION

SCALE: NONE

THE DRAWINGS IN THIS SET ARE RECORD DRAWINGS. THEY ARE CONSTRUCTION CONTRACT DRAWINGS WHICH HAVE BEEN REVISED BASED ON AVAILABLE FIELD INFORMATION RECORDED BY OTHERS DURING CONSTRUCTION OF THIS CONTRACT. THERE HAS BEEN NO VERIFICATION OF DIMENSIONS SHOWN ON THE CONSTRUCTION DRAWINGS OR THE ACCURACY/COMPLETENESS OF THE FIELD INFORMATION RECEIVED.

SIGNATURE _____ DATE 2/7/2023

SHAH & ASSOCIATES

AS-BUILT REPLACEMENT SHEET

PROFESSIONAL CERTIFICATION
THIS DRAWING WAS ORIGINALLY APPROVED FOR CONSTRUCTION AND SEALED BY KANAIYALAL R. SHAH, A REGISTERED PROFESSIONAL ENGINEER IN THE STATE OF MARYLAND, NO. 11084.

NOTICE TO CONTRACTORS
- PROJECT ELEVATIONS ARE BASED ON NAVD88 AND HOWARD COUNTY'S BENCHMARK SYSTEM
- PREVIOUS PROJECTS USED OTHER DATUMS
- APPLY THE FOLLOWING CONVERSIONS WHEN USING PREVIOUS CONTRACT DRAWINGS:
  - ADDITION NO. 6: SUBTRACT 0.80 FT
  - PRIOR ADDITIONS: SUBTRACT 1.04 FT

DEPARTMENT OF PUBLIC WORKS HOWARD COUNTY, MARYLAND

CHIEF, BUREAU OF UTILITIES DATE

DES: HFM
DRN: CAV
CHK: KRS
DATE: 4/2017

DATE	REV	DESCRIPTION
07/2019		RECORD DRAWING

ELECTRICAL

FILTER BUILDING
EXISTING MCC-11
ONE LINE DIAGRAM II (REAR)
MODIFICATION

LITTLE PATUXENT WATER RECLAMATION PLANT
8TH ADDITION
BIOSOLIDS PROCESSING FACILITIES – PHASE I

CAPITAL PROJECT S-6295
CONTRACT NO. 24-4935

ELECTION DISTRICT NO. 6
HOWARD COUNTY, MARYLAND

SCALE AS SHOWN

SHEET 322 OF 463

E-21C

GENERAL NOTES:

1. FOR SYMBOLS AND ABBREVIATIONS, SEE DRAWING E-1.
2. FOR CABLE AND CONDUIT SCHEDULE, SEE DRAWING E-912A.

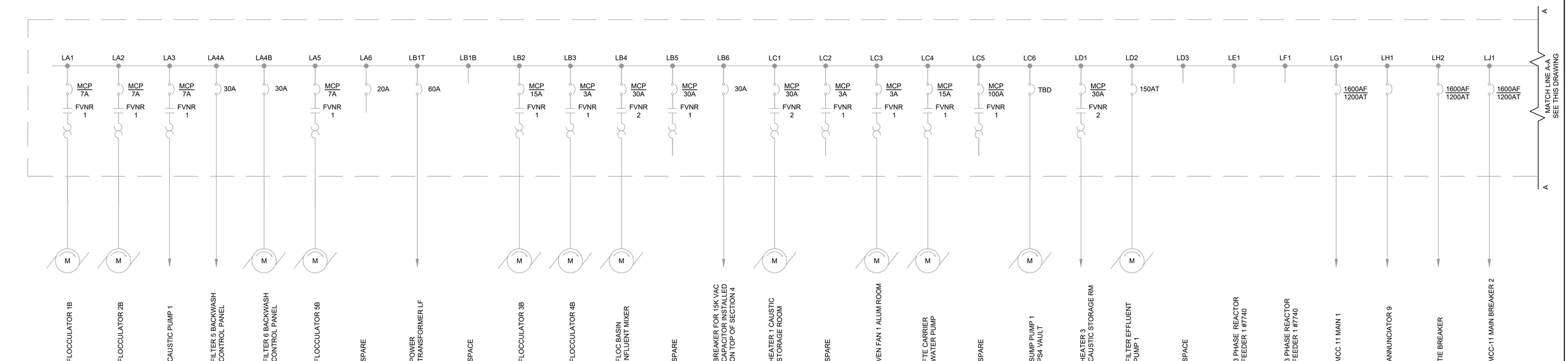

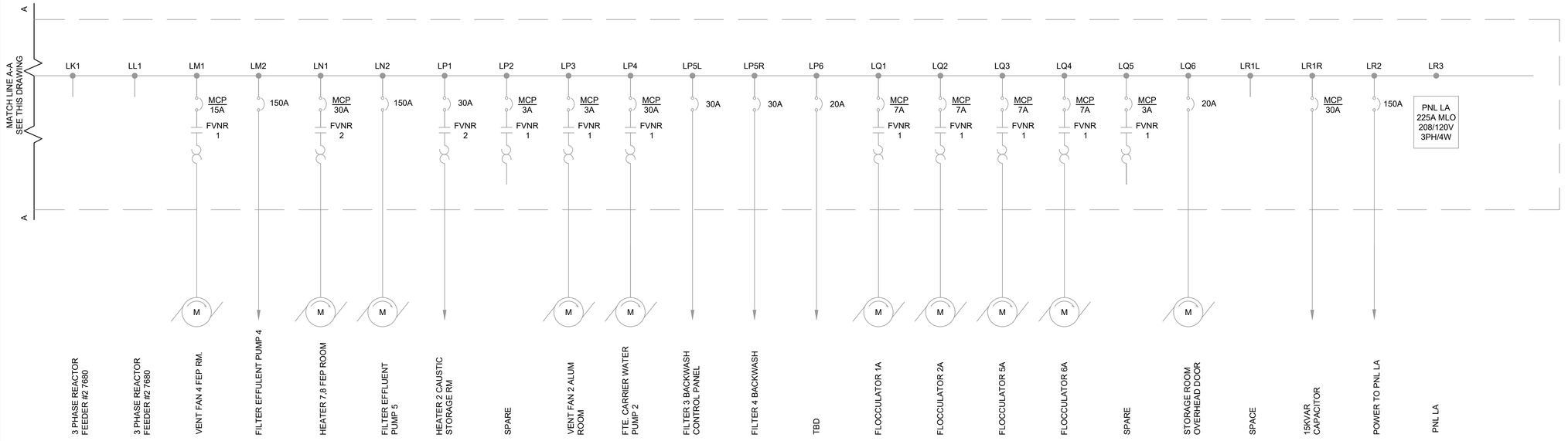

THE DRAWINGS IN THIS SET ARE RECORD DRAWINGS. THEY ARE CONSTRUCTION CONTRACT DRAWINGS WHICH HAVE BEEN REVISED BASED ON AVAILABLE FIELD INFORMATION RECORDED BY OTHERS DURING CONSTRUCTION OF THIS CONTRACT. THERE HAS BEEN NO VERIFICATION OF DIMENSIONS SHOWN ON THE CONSTRUCTION DRAWINGS OR THE ACCURACY/COMPLETENESS OF THE FIELD INFORMATION RECEIVED.

SIGNATURE — DATE 2/7/2020

FILTER BUILDING - EXISTING MCC - 11 - ONE LINE DIAGRAM I (FRONT) - MODIFICATION

SCALE: NONE

SHAH & ASSOCIATES

AS-BUILT REPLACEMENT SHEET

PROFESSIONAL CERTIFICATION
THIS DRAWING WAS ORIGINALLY APPROVED FOR CONSTRUCTION AND SEALED BY KANAIYALAL R. SHAH, A REGISTERED PROFESSIONAL ENGINEER IN THE STATE OF MARYLAND, NO. 11084.

NOTICE TO CONTRACTORS
- PROJECT ELEVATIONS ARE BASED ON NAVD88 AND HOWARD COUNTY'S BENCHMARK SYSTEM
- PREVIOUS PROJECTS USED OTHER DATUMS
- APPLY THE FOLLOWING CONVERSIONS WHEN USING PREVIOUS CONTRACT DRAWINGS:
  - ADDITION NO. 6: SUBTRACT 0.80 FT
  - PRIOR ADDITIONS: SUBTRACT 1.04 FT

DEPARTMENT OF PUBLIC WORKS
HOWARD COUNTY, MARYLAND

CHIEF, BUREAU OF UTILITIES — DATE

DES: HFM
DRN: CAV
CHK: KRS
DATE: 4/2017

DATE	REV	DESCRIPTION
07/2019		RECORD DRAWING

ELECTRICAL

FILTER BUILDING
EXISTING MCC - 11
ONE LINE DIAGRAM I (FRONT)
MODIFICATION

LITTLE PATUXENT WATER RECLAMATION PLANT
8TH ADDITION
BIOSOLIDS PROCESSING FACILITIES – PHASE I

CAPITAL PROJECT S–6295
CONTRACT NO. 24–4935

ELECTION DISTRICT NO. 6
HOWARD COUNTY, MARYLAND

SCALE AS SHOWN

SHEET 323 OF 463

E-21D

GENERAL NOTES:

1. FOR SYMBOLS AND ABBREVIATIONS, SEE DRAWING E-1.
2. FOR CABLE AND CONDUIT SCHEDULE, SEE DRAWING E-912A.

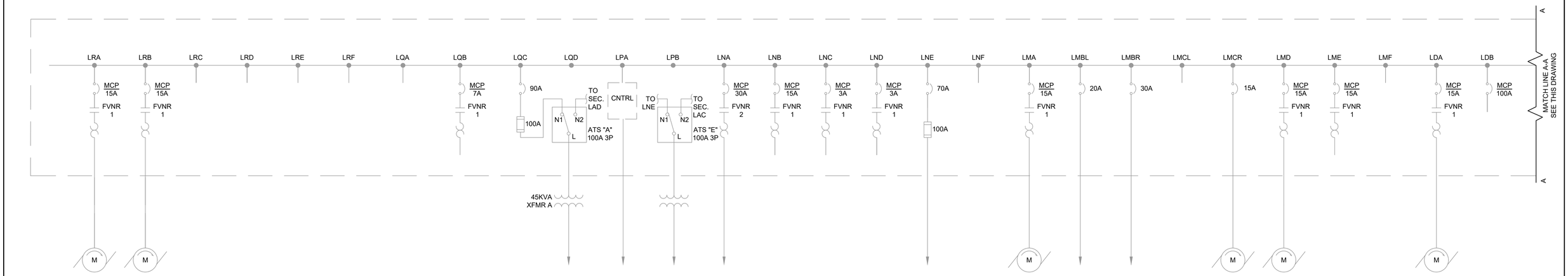

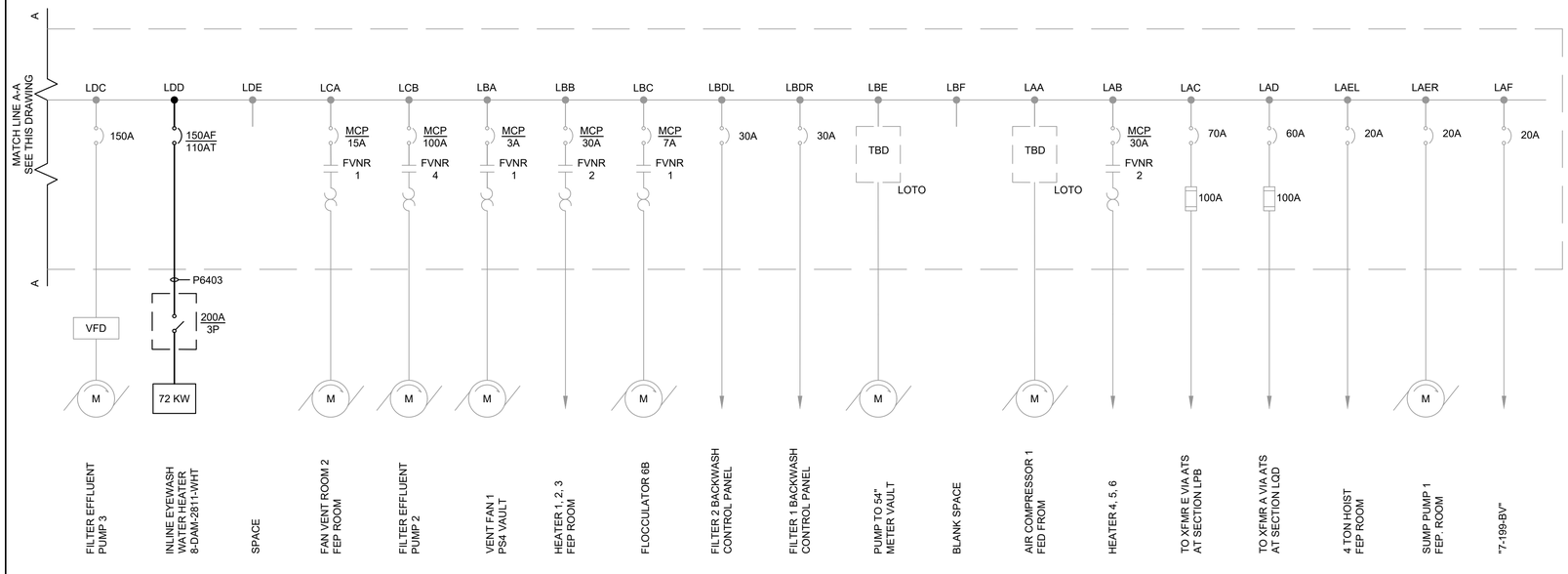

FILTER BUILDING - EXISTING MCC-11 - ONE LINE DIAGRAM II (REAR) - MODIFICATION

SCALE: NONE

THE DRAWINGS IN THIS SET ARE RECORD DRAWINGS. THEY ARE CONSTRUCTION CONTRACT DRAWINGS WHICH HAVE BEEN REVISED BASED ON AVAILABLE FIELD INFORMATION RECORDED BY OTHERS DURING CONSTRUCTION OF THIS CONTRACT. THERE HAS BEEN NO VERIFICATION OF DIMENSIONS SHOWN ON THE CONSTRUCTION DRAWINGS OR THE ACCURACY/COMPLETENESS OF THE FIELD INFORMATION RECEIVED.

SIGNATURE 2/7/2020 DATE

SHAH & ASSOCIATES

HDR

AS-BUILT REPLACEMENT SHEET

PROFESSIONAL CERTIFICATION
THIS DRAWING WAS ORIGINALLY APPROVED FOR CONSTRUCTION AND SEALED BY KANAIYALAL R. SHAH, A REGISTERED PROFESSIONAL ENGINEER IN THE STATE OF MARYLAND, NO. 11084.

NOTICE TO CONTRACTORS
- PROJECT ELEVATIONS ARE BASED ON NAVD88 AND HOWARD COUNTY'S BENCHMARK SYSTEM
- PREVIOUS PROJECTS USED OTHER DATUMS
- APPLY THE FOLLOWING CONVERSIONS WHEN USING PREVIOUS CONTRACT DRAWINGS:
  - ADDITION NO. 6: SUBTRACT 0.80 FT
  - PRIOR ADDITIONS: SUBTRACT 1.04 FT

DEPARTMENT OF PUBLIC WORKS
HOWARD COUNTY, MARYLAND

CHIEF, BUREAU OF UTILITIES DATE

DES: HFM
DRN: CAV
CHK: KRS
DATE: 4/2017

DATE	REV	DESCRIPTION
07/2019		RECORD DRAWING

ELECTRICAL

FILTER BUILDING
EXISTING MCC-11
ONE LINE DIAGRAM II (REAR)
MODIFICATION

LITTLE PATUXENT WATER RECLAMATION PLANT
8TH ADDITION
BIOSOLIDS PROCESSING FACILITIES – PHASE I

CAPITAL PROJECT S-6295
CONTRACT NO. 24-4935

ELECTION DISTRICT NO. 6
HOWARD COUNTY, MARYLAND

SCALE AS SHOWN

SHEET 324 OF 463

E-21E

GENERAL NOTES:

1. PROVIDE UPDATED NAME PLATE.

DRAWING NOTES:

(1) NOT USED.

(2) NOT USED.

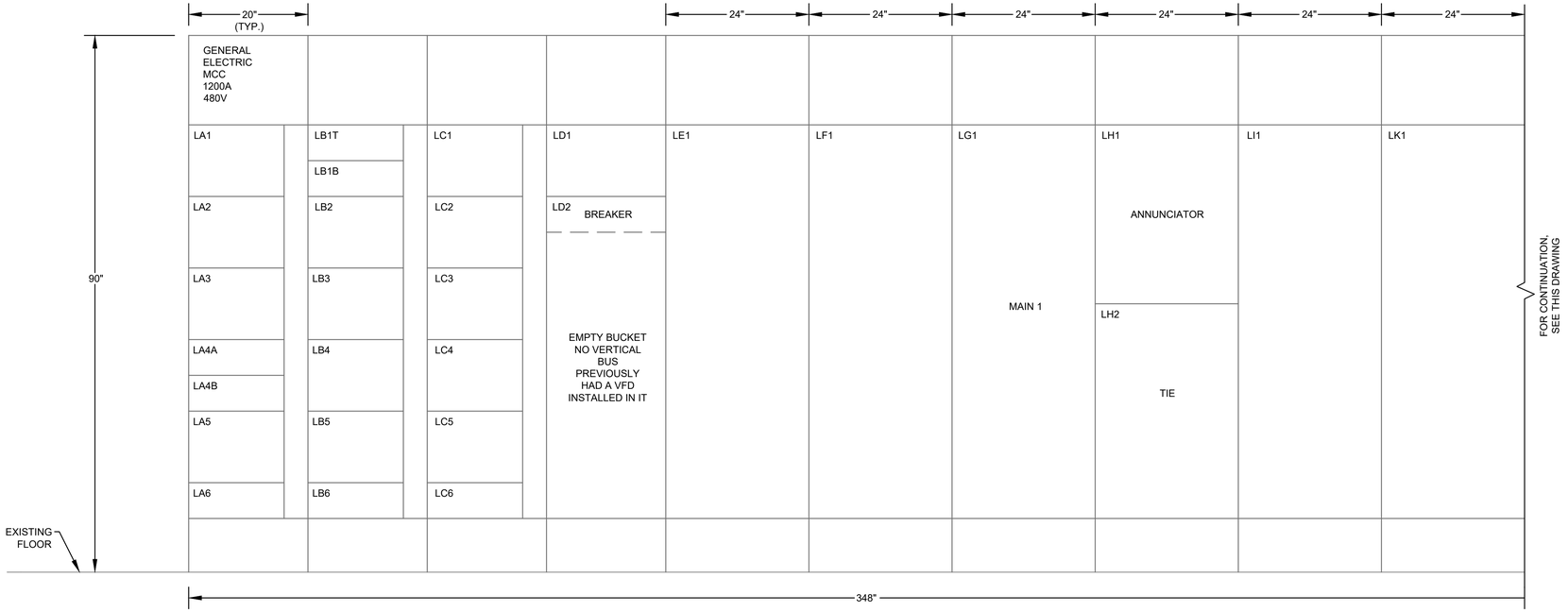

FILTER BUILDING - MCC-11 FRONT ELEVATION - MODIFICATION

SCALE: NONE

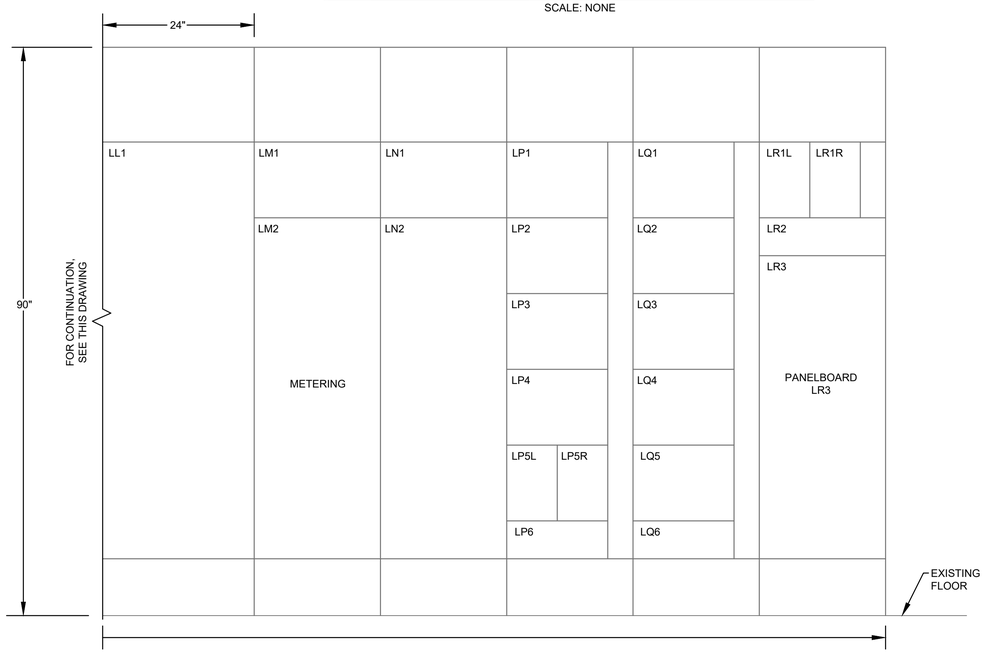

FILTER BUILDING - MCC-11 FRONT ELEVATION - MODIFICATION

SCALE: NONE

THE DRAWINGS IN THIS SET ARE RECORD DRAWINGS. THEY ARE CONSTRUCTION CONTRACT DRAWINGS WHICH HAVE BEEN REVISED BASED ON AVAILABLE FIELD INFORMATION RECORDED BY OTHERS DURING CONSTRUCTION OF THIS CONTRACT. THERE HAS BEEN NO VERIFICATION OF DIMENSIONS SHOWN ON THE CONSTRUCTION DRAWINGS OR THE ACCURACY/COMPLETENESS OF THE FIELD INFORMATION RECEIVED.

SIGNATURE _____ DATE 2/7/2020

SHAH & ASSOCIATES

AS-BUILT REPLACEMENT SHEET

PROFESSIONAL CERTIFICATION

THIS DRAWING WAS ORIGINALLY APPROVED FOR CONSTRUCTION AND SEALED BY KANAIYALAL R. SHAH, A REGISTERED PROFESSIONAL ENGINEER IN THE STATE OF MARYLAND, NO. 11084.

NOTICE TO CONTRACTORS

- PROJECT ELEVATIONS ARE BASED ON NAVD88 AND HOWARD COUNTY'S BENCHMARK SYSTEM
- PREVIOUS PROJECTS USED OTHER DATUMS
- APPLY THE FOLLOWING CONVERSIONS WHEN USING PREVIOUS CONTRACT DRAWINGS:
  - ADDITION NO. 6: SUBTRACT 0.80 FT
  - PRIOR ADDITIONS: SUBTRACT 1.04 FT

DEPARTMENT OF PUBLIC WORKS
HOWARD COUNTY, MARYLAND

CHIEF, BUREAU OF UTILITIES DATE

DES: SR
DRN: XMZ
CHK: KRS
DATE: 4/2017

DATE	REV	DESCRIPTION
07/2019		RECORD DRAWING

ELECTRICAL

FILTER BUILDING
MCC-11 FRONT ELEVATION
MODIFICATION

LITTLE PATUXENT WATER RECLAMATION PLANT
8TH ADDITION
BIOSOLIDS PROCESSING FACILITIES – PHASE I

CAPITAL PROJECT S-6295
CONTRACT NO. 24-4935

ELECTION DISTRICT NO. 6
HOWARD COUNTY, MARYLAND

SCALE AS SHOWN

SHEET 325 OF 463

E-21F

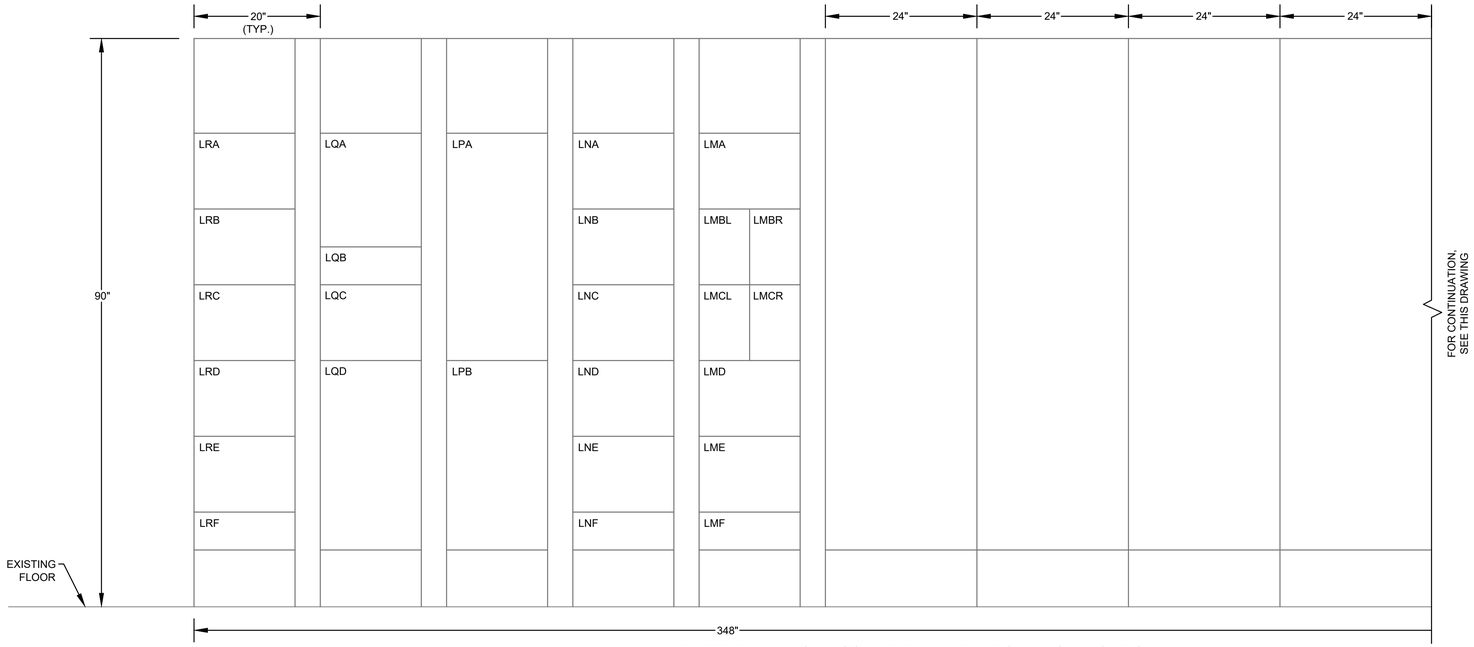

FILTER BUILDING - MCC-11 REAR ELEVATION - MODIFICATION

SCALE: NONE

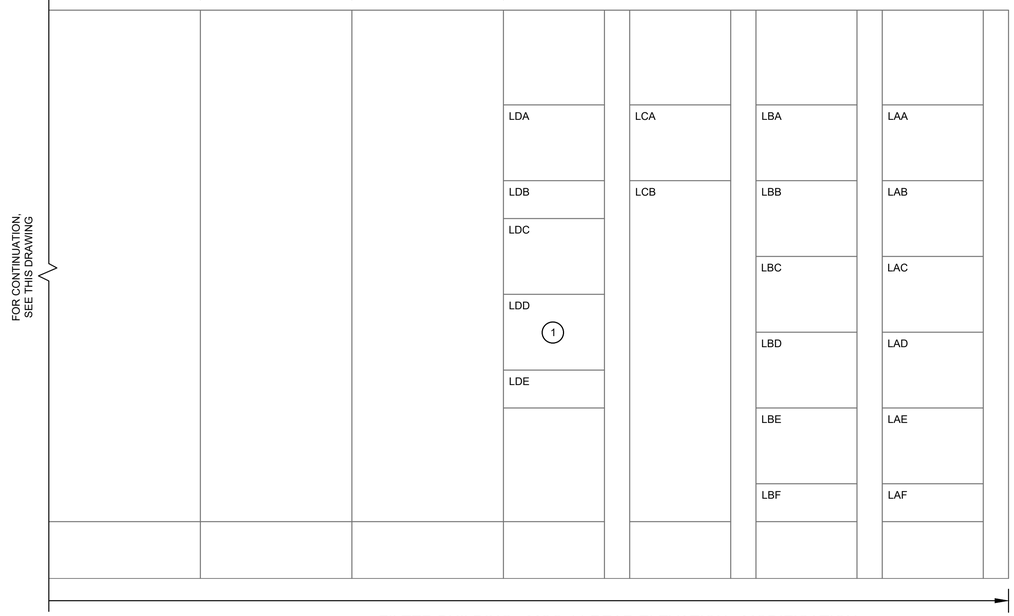

FILTER BUILDING - MCC-11 REAR ELEVATION - MODIFICATION

SCALE: NONE

GENERAL NOTES:

1. PROVIDE UPDATED NAME PLATE.

DRAWING NOTES:

(1) FOR CUBICLE MODIFICATION DETAILS, SEE ONE LINE DIAGRAM DRAWINGS E-21D AND E-21E.

THE DRAWINGS IN THIS SET ARE RECORD DRAWINGS. THEY ARE CONSTRUCTION CONTRACT DRAWINGS WHICH HAVE BEEN REVISED BASED ON AVAILABLE FIELD INFORMATION RECORDED BY OTHERS DURING CONSTRUCTION OF THIS CONTRACT. THERE HAS BEEN NO VERIFICATION OF DIMENSIONS SHOWN ON THE CONSTRUCTION DRAWINGS OR THE ACCURACY/COMPLETENESS OF THE FIELD INFORMATION RECEIVED.

SIGNATURE _____ DATE 2/7/2020

S&A SHAH & ASSOCIATES

HDR

AS-BUILT REPLACEMENT SHEET

PROFESSIONAL CERTIFICATION

THIS DRAWING WAS ORIGINALLY APPROVED FOR CONSTRUCTION AND SEALED BY KANAIYALAL R. SHAH, A REGISTERED PROFESSIONAL ENGINEER IN THE STATE OF MARYLAND, NO. 11084.

NOTICE TO CONTRACTORS

- PROJECT ELEVATIONS ARE BASED ON NAVD88 AND HOWARD COUNTY'S BENCHMARK SYSTEM
- PREVIOUS PROJECTS USED OTHER DATUMS
- APPLY THE FOLLOWING CONVERSIONS WHEN USING PREVIOUS CONTRACT DRAWINGS:
  - ADDITION NO. 6: SUBTRACT 0.80 FT
  - PRIOR ADDITIONS: SUBTRACT 1.04 FT

DEPARTMENT OF PUBLIC WORKS
HOWARD COUNTY, MARYLAND

CHIEF, BUREAU OF UTILITIES DATE

DES: SR
DRN: XMZ
CHK: KRS
DATE: 4/2017

DATE	REV	DESCRIPTION
07/2019		RECORD DRAWING

ELECTRICAL

FILTER BUILDING
MCC-11 REAR ELEVATION
MODIFICATION

LITTLE PATUXENT WATER RECLAMATION PLANT
8TH ADDITION
BIOSOLIDS PROCESSING FACILITIES – PHASE I

CAPITAL PROJECT S–6295
CONTRACT NO. 24–4935

ELECTION DISTRICT NO. 6
HOWARD COUNTY, MARYLAND

SCALE AS SHOWN

SHEET 326 OF 463

E-21G

DIGESTER BUILDING NEW MOTOR CONTROL CENTER 8-MCC-3100-MCC SCHEDULE

BUS - HORIZONTAL : 2000A , VERTICAL : 600A

VOLTS : 480V , PHASE : 3, WIRES : 4+G, MIN. KAIC : 65, ENCLOSURE : NEMA 12 , LOCATION : DIGESTER BUILDING MCC ROOM ON ROOF OF PIPE GALLERY

UNIT NO.	NAMEPLATE DATA	DEVICE	LOAD			CB OR MP			NEMA STARTER		REMARKS
			HP	KVA	AMP	P	FA	TA	TYPE	SIZE	
1A	DIGESTED SOLIDS STORAGE TANK MIXER NO.1 8-DSS-1814-MXR	COMB./STARTER	7.5	-	-	3	MCP	30	FVNR	1	-
1B	SPACE	-	-	-	-	-	-	-	-	-	-
1C	EYEWASH STATION WATER HEATER 36-IWH01	CIRCUIT BREAKER	-	18 KW	-	3	150	30	-	-	-
1D	SPACE	-	-	-	-	-	-	-	-	-	-
1E	DIGESTER RECIRCULATION PUMP NO. 1 8-DIG-1013-PMP	COMB./STARTER	5	-	-	3	MCP	15	FVNR	1	-
2A	TEMPORARY 480V RECEPTACLE ON DIGESTER DESK	COMB./STARTER	-	-	-	3	MCP	15	FVNR	1	-
2B	SPARE	CIRCUIT BREAKER	-	-	-	3	150	15	-	-	-
2C	MONORAIL HOIST 8-DIG-2411-HST	CIRCUIT BREAKER	20	-	-	3	MCP	50	-	-	-
2D	COMPRESSOR NO. 1 8-THS-1212-AIR	CIRCUIT BREAKER	25	-	-	3	MCP	70	-	-	-
2E	SPACE	-	-	-	-	-	-	-	-	-	-
2F	SPACE	-	-	-	-	-	-	-	-	-	-
3A	PIPE GALLERY FAN 8-905-F	COMB./STARTER	1.5	-	-	3	MCP	7	FVNR	1	-
3B	SPARE	CIRCUIT BREAKER	-	-	-	3	150	15	-	-	-
3C	SPACE	-	-	-	-	-	-	-	-	-	-
3D	SPACE	-	-	-	-	-	-	-	-		-
3E	SPARE	COMB./STARTER	7.5	-	-	3	MCP	30	FVNR	1	-
3F	DIGESTER BUILDING AREA EXHAUST FAN 1 8-DIG-9914-FAN	COMB./STARTER	1.5	-	-	3	MCP	7	FVNR	1	-
4A	SPACE	-	-	-	-	-	-	-	-	-	-
4B	MCC - NORTH WALL	CIRCUIT BREAKER	-	-	-	3	250	200	-	-	-
4C	SPACE	-	-	-	-	-	-	-	-	-	-
4D	PHOSPHOROUS PRECIPITATION PUMP NO. 1 8-PHO-2411-PMP	CIRCUIT BREAKER	3	-	-	3	150	15	-	-	VFD
4E	SPARE	CIRCUIT BREAKER	-	-	-	3	150	15	-	-	-
4F	PHOSPHOROUS BLDG ELECTRIC UNIT HEATER 1 8-PHO-9912-EUH	CIRCUIT BREAKER	-	5	-	3	150	20	-	-	-
5A	ATS NORMAL 8-MCC-3101-ATS	CIRCUIT BREAKER	-	-	-	3	400	400	-	-	-
5B	SPACE	-	-	-	-	-	-	-	-	-	-
5C	SPARE	CIRCUIT BREAKER	-	-	-	3	150	15	-	-	-
5D	SPARE	CIRCUIT BREAKER	-	-	-	3	150	15	-	-	-
5E	PHOSPHOROUS PRECIPITATION BLOWER NO. 4 (FUTURE)	CIRCUIT BREAKER	-	-	-	3	150	25	-	-	-
6A	HOT WATER SUPPLY PUMP NO. 1 8-DIG-2613-PMP	CIRCUIT BREAKER	15	-	-	3	150	45	-	-	VFD
6B	HOT WATER SUPPLY PUMP NO. 3 8-DIG-2633-PMP	CIRCUIT BREAKER	15	-	-	3	150	45	-	-	VFD
6C	SPARE	COMB./STARTER	-	-	-	3	MCP	15	FVNR	1	-
6D	SPARE	CIRCUIT BREAKER	-	-	-	3	150	15	-	-	-
6E	SPACE	-	-	-	-	-	-	-	-	-	-
6F	SPACE	-	-	-	-	-	-	-	-	-	-
7A	DIGESTER TRANSFER PUMP NO. 3 8-DIG-1633-PMP	CIRCUIT BREAKER	15	-	-	3	150	45	-	-	VFD
7B	DIGESTER TRANSFER PUMP NO. 2 8-PHO-2812-BLW	CIRCUIT BREAKER	40	-	-	3	150	100	-	-	VFD
7C	DIGESTED SOLIDS MIXING PUMP NO. 1 8-DSS-2012-PMP	CIRCUIT BREAKER	20	-	-	3	150	50	-	-	VFD
7D	DEAMMONIFICATION MIXER NO. 2 8-DAM-1422-MXR	CIRCUIT BREAKER	15	-	-	3	150	45	-	-	VFD
7E	DIGESTER FEED PUMP NO. 1 8-THS-1412-PMP	CIRCUIT BREAKER	15	-	-	3	150	45	-	-	VFD
7F	25KVA XFMR TRC 2 AND PANEL LC2 PIPE GALLERY	CIRCUIT BREAKER	-	25	-	3	150	45	-	-	-
8A	DIGESTER MIXING PUMP NO. 1 8-DIG-1213-PMP	CIRCUIT BREAKER	75	-	-	3	150	150	-	-	VFD

DIGESTER BUILDING NEW MOTOR CONTROL CENTER 8-MCC-3100-MCC SCHEDULE

BUS - HORIZONTAL : 2000A , VERTICAL : 600A

VOLTS : 480V , PHASE : 3, WIRES : 4+G, MIN. KAIC : 65, ENCLOSURE : NEMA 12 , LOCATION : DIGESTER BUILDING MCC ROOM ON ROOF OF PIPE GALLERY

UNIT NO.	NAMEPLATE DATA	DEVICE	LOAD			CB OR MP			NEMA STARTER		REMARKS
			HP	KVA	AMP	P	FA	TA	TYPE	SIZE	
8B	OUTDOOR HEAT PUMP UNIT 1 8-MCC-9912-HTP	CIRCUIT BREAKER	-	-	-	3	150	35	-	-	-
8C	DEAMMONIFICATION BLOWER NO. 1 8-DAM-1613-BLW	CIRCUIT BREAKER	50	-	-	3	150	110	-	-	VFD
8D	DIGESTER TRANSFER PUMP NO. 1 8-DIG-1613-PMP	CIRCUIT BREAKER	15	-	-	3	150	45	-	-	VFD
8E	CENTRIFUGE FEED PUMP 1 8-DSS-2213-PMP	CIRCUIT BREAKER	25	-	30	3	150	70	-	-	VFD
8F	MAKEUP AIR UNIT 8-DIG-9911-MAU	CIRCUIT BREAKER	10	-	-	3	150	35	-	-	-
9A	SPARE	CIRCUIT BREAKER	-	-	-	-	150	150	-	-	-
9B	DIGESTED SOLIDS STORAGE TANK MIXER NO. 4 8-DSS-1844-MXR	COMB./STARTER	7.5	-	-	3	MCP	30	FVNR	1	-
9C	SPARE	COMB./STARTER	-	-	-	3	MCP	15	FVNR	1	-
9D	SPACE	-	-	-	-	-	-	-	-	-	-
9E	20-MAU-01	CIRCUIT BREAKER	-	152	-	3	250	225	-	-	-
	HARMONIC CORRECTION UNIT		-	-	-	-	-	-	-	-	-
10A	SPD	CIRCUIT BREAKER	-	-	-	-	-	-	-	-	-
10B	PMT	-	-	-			-	-	-	-	-
10C	KEY INTERLOCK TRANSFER LOCK	-	-	-	-	-	-	-	-	-	-
10D	GAS BLOWER NO. 1 8-DGT-1012-BLW	CIRCUIT BREAKER	25	-	-	3	150	70	-	-	VFD
10E	HCU BREAKER	CIRCUIT BREAKER	-	-	-	-	-	-	-	-	-
10F	SPACE	-	-	-	-	-	-	-	-	-	-
11A	MAIN BREAKER 1	CIRCUIT BREAKER	-	-	-	3	2000	1600	-	-	-
12A	TIE BREAKER	CIRCUIT BREAKER	-	-	-	3	2000	1600	-	-	-
13A	TRANSITION SECTION	-	-	-	-	-	-	-	-	-	-
14A	MAIN BREAKER 2	CIRCUIT BREAKER	-	-	-	3	2000	1600	-	-	-
	GENERATOR BREAKER	CIRCUIT BREAKER	-	-	-	3	2000	2000	-	-	-
15A	SPD	CIRCUIT BREAKER	-	-	-	-	-	-	-	-	-
15B	PMT	-	-	-	-	-	-	-	-	-	-
15C	SPACE	-	-	-	-	-	-	-	-	-	-
15D	GAS BLOWER NO. 2 8-DGT-1022-BLW	CIRCUIT BREAKER	25	-	-	3	150	70	-	-	VFD
15E	HCU BREAKER	CIRCUIT BREAKER	-	-	-	-	-	-	-	-	-
15F	SPACE	-	-	-	-	-	-	-	-	-	-
	HARMONIC CORRECTION UNIT										
16A	75KVA XFMR TRC AND PANEL LC PIPE GALLERY	CIRCUIT BREAKER	-	75	-	3	150	150	-	-	-
16B	SPARE	COMB./STARTER	-	-	-	3	MCP	15	FVNR	1	-
16C	SPARE	COMB./STARTER	-	-	-	3	MCP	15	FVNR	1	-
16D	SPARE	COMB./STARTER	-	-	-	-	MCP	15	FVNR	1	-
16E	SPACE	-	-	-	-	-	-	-	-	-	-
16F	GLYCOL CHILLER CONTROL PANEL	CIRCUIT BREAKER	-	-	-	3	150	110	-	-	VFD
17A	DIGESTER MIXING PUMP NO. 2 8-DIG-1223-PMP	CIRCUIT BREAKER	75	-	-	3	150	150	-	-	VFD
17B	PHOSPHOROUS PRECIPITATION BLOWER NO. 3 (FUTURE)	CIRCUIT BREAKER	-	-	-	3	150	100	-	-	-
17C	DEAMMONIFICATION BLOWER NO. 2 8-DAM-1623-BLW	CIRCUIT BREAKER	50	-	-	3	150	110	-	-	VFD
17D	SPARE	CIRCUIT BREAKER	-	-	-	3	150	15	-	-	-
17E	CENTRIFUGE FEED PUMP NO. 2 8-DSS-2223-PMP	CIRCUIT BREAKER	25	-	-	3	150	70	-	-	VFD
17F	OUTDOOR HEAT PUMP UNIT 2 8-MCC-9922-HTP	CIRCUIT BREAKER	-	-	-	3	150	35	-	-	-

GENERAL NOTES:

1. FOR SYMBOLS AND ABBREVIATIONS, SEE DRAWING E-1.
2. FOR CONSTRUCTION SEQUENCE, SEE DRAWING E-2.
3. FOR NEW 8-MCC-3100-MCC LOCATION, SEE DRAWING E-3.
4. FOR NEW 8-MCC-3100-MCC ELEVATION, SEE DRAWING E-21.

THE DRAWINGS IN THIS SET ARE RECORD DRAWINGS. THEY ARE CONSTRUCTION CONTRACT DRAWINGS WHICH HAVE BEEN REVISED BASED ON AVAILABLE FIELD INFORMATION RECORDED BY OTHERS DURING CONSTRUCTION OF THIS CONTRACT. THERE HAS BEEN NO VERIFICATION OF DIMENSIONS SHOWN ON THE CONSTRUCTION DRAWINGS OR THE ACCURACY/COMPLETENESS OF THE FIELD INFORMATION RECEIVED.

SIGNATURE _____ DATE 2/7/2020

SHAH & ASSOCIATES

AS-BUILT REPLACEMENT SHEET

PROFESSIONAL CERTIFICATION
THIS DRAWING WAS ORIGINALLY APPROVED FOR CONSTRUCTION AND SEALED BY KANAIYALAL R. SHAH, A REGISTERED PROFESSIONAL ENGINEER IN THE STATE OF MARYLAND, NO. 11084.

NOTICE TO CONTRACTORS
- PROJECT ELEVATIONS ARE BASED ON NAVD88 AND HOWARD COUNTY'S BENCHMARK SYSTEM
- PREVIOUS PROJECTS USED OTHER DATUMS
- APPLY THE FOLLOWING CONVERSIONS WHEN USING PREVIOUS CONTRACT DRAWINGS:
  - ADDITION NO. 6: SUBTRACT 0.80 FT
  - PRIOR ADDITIONS: SUBTRACT 1.04 FT

DEPARTMENT OF PUBLIC WORKS
HOWARD COUNTY, MARYLAND

CHIEF, BUREAU OF UTILITIES DATE

DES: SR
DRN: AJS
CHK: KRS
DATE: 10/2016

DATE	REV	DESCRIPTION
07/2019		RECORD DRAWING

ELECTRICAL

DIGESTER BUILDING
NEW 8-MCC-3100-MCC
SCHEDULE I

LITTLE PATUXENT WATER RECLAMATION PLANT
8TH ADDITION
BIOSOLIDS PROCESSING FACILITIES – PHASE I

CAPITAL PROJECT S-6295
CONTRACT NO. 24-4935

ELECTION DISTRICT NO. 6
HOWARD COUNTY, MARYLAND

SCALE AS SHOWN

SHEET 327 OF 463

E-22

DIGESTER BUILDING NEW MOTOR CONTROL CENTER 8-MCC-3100-MCC SCHEDULE

BUS - HORIZONTAL : 2000A , VERTICAL : 600A

VOLTS : 480V , PHASE : 3, WIRES : 4+G, MIN. KAIC : 65, ENCLOSURE : NEMA 12 , LOCATION : DIGESTER BUILDING MCC ROOM ON ROOF OF PIPE GALLERY

UNIT NO.	NAMEPLATE DATA	DEVICE	LOAD			CB OR MP			NEMA STARTER		REMARKS
			HP	KVA	AMP	P	FA	TA	TYPE	SIZE	
18A	DIGESTER MIXING PUMP NO. 3 8-DIG-1233-PMP	CIRCUIT BREAKER	75	-	-	3	150	150	-	-	VFD
18B	SPARE	CIRCUIT BREAKER	-	-	-	3	150	15	-	-	-
18C	DEAMMONIFICATION BLOWER NO. 3 8-DAM-1633-BLW	CIRCUIT BREAKER	50	-	-	3	150	110	-	-	VFD
18D	CENTRIFUGE FEED PUMPS 8-DSS-2233-PMP	CIRCUIT BREAKER	-	-	-	3	150	70	-	-	-
18E	SYNAGRO TEMPORARY LOAD OUT	CIRCUIT BREAKER	-	-	-	3	250	250	-	-	-
18F	SPACE	-	-	-	-	-	-	-	-	-	-
19A	DIGESTER TRANSFER PUMP NO. 2 8-DIG-1623-PMP	CIRCUIT BREAKER	15	-	-	3	150	45	-	-	VFD
19B	SPARE	CIRCUIT BREAKER	-	-	-	3	150	15	-	-	-
19C	DIGESTED SOLIDS MIXING PUMP NO. 2 8-DSS-2022-PMP	CIRCUIT BREAKER	20	-	-	3	150	50	-	-	VFD
19D	DEMONIFICATION MIXER NO. 1 8-DAM-1412-MXR	CIRCUIT BREAKER	15	-	-	3	150	45	-	-	VFD
19E	SPARE	CIRCUIT BREAKER	-	-	-	3	150	15	-	-	-
19F	PHOSPHOROUS BLDG ELECTRIC UNIT HEATER 2 8-PHO-9922-EUH	CIRCUIT BREAKER	-	5	-	3	150	20	-	-	-
20A	ATS EMERGENCY 8-MCC-3101-ATS	CIRCUIT BREAKER	-	-	-	3	400	400	-	-	-
20B	SPACE	-	-	-	-	-	-	-	-	-	-
20C	PHOSPHOROUS PRECIPITATION PUMP 2 (FUTURE)	CIRCUIT BREAKER	-	-	-	3	150	15	-	-	-
20D	DIGESTER FEED PUMP NO. 2 8-THS-1422-PMP	CIRCUIT BREAKER	15	-	-	3	150	45	-	-	VFD
20E	PHOSPHOROUS PRECIPITATION BLOWER NO. 2 8-PHO-2822-BLW	CIRCUIT BREAKER	5	-	-	3	150	15	-	-	VFD
21A	SPACE	-	-	-	-	-	-	-	-	-	-
21B	MCC - NORTH WALL FEED ITEM #104	CIRCUIT BREAKER	-	-	-	3	250	200	-	-	-
21C	SPACE	-	-	-	-	-	-	-	-	-	-
21D	SPARE	COMB/STARTER	-	-	-	3	MCP	15	FVNR	1	
21E	HOT WATER SUPPLY PUMP NO. 2 8-DIG-2623-PMP	CIRCUIT BREAKER	15	-	-	3	150	45	-	-	VFD
21F	DIGESTER RECIRCULATION PUMP NO. 3 8-DIG-1033-PMP	CIRCUIT BREAKER	15	-	-	3	150	45	-	-	VFD
22A	EXHAUST FAN 1 8-PHO-9911-FAN	COMB/STARTER	1.5	-	-	3	MCP	7	FVNR	1	-
22B	SPARE	CIRCUIT BREAKER	-	-	-	3	150	15	-	-	-
22C	SPACE	-	-	-	-	-	-	-	-	-	-
22D	SPACE	-	-	-	-	-	-	-	-	-	-
22E	STRUVITE RECOVERY WASHER SYSTEM PANEL	CIRCUIT BREAKER	-	-	-	3	150	30	-	-	-
22F	EXHAUST FAN 2 8-DIG-9924-FAN	COMB./STARTER	1.5	-	-	3	MCP	7	FVNR	1	-
23A	RECIRCULATION PUMP	CIRCUIT BREAKER	5	-	-	3	150	15	-	-	VFD
23B	SPARE	CIRCUIT BREAKER	-	-	-	3	150	15	-	-	-
23C	SPARE	COMB./STARTER	-	-	-	3	MCP	7	FVNR	1	-
23D	COMPRESSOR NO. 2 8-THS-1222-AIR	CIRCUIT BREAKER	25	-	-	3	150	70	-	-	-
23E	SPACE	-	-	-	-	-	-	-	-	-	-
23F	SPACE	-	-	-	-	-	-	-	-	-	-
24A	DIGESTED SOLIDS STORAGE TANK MIXER NO. 2 8-DSS-1824-MXR	COMB./STARTER	7.5	-	-	3	MCP	30	FVNR	1	-
24B	DIGESTED SOLIDS STORAGE TANK MIXER NO. 3 8-DSS-1834-MXR	COMB./STARTER	7.5	5	-	3	MCP	30	FVNR	1	-
24C	AIR ADDITION BLOWER	CIRCUIT BREAKER	2	-	-	3	150	15	-	-	VFD
24D	SPACE	-	-	-	-	-	-	-	-	-	-
24E	DIGESTER CIRCULATION PUMP NO. 2 8-DIG-1023-PMP	COMB./STARTER	5	-	-	3	MCP	15	FVNR	1	-
25A	INCOMING MAIN LUGS										

DIGESTER BUILDING NEW MOTOR CONTROL CENTER 8-MCC-3100-MCC SCHEDULE

BUS - HORIZONTAL : 2000A , VERTICAL : 600A

VOLTS : 480V , PHASE : 3, WIRES : 4+G, MIN. KAIC : 65, ENCLOSURE : NEMA 12 , LOCATION : DIGESTER BUILDING MCC ROOM ON ROOF OF PIPE GALLERY

UNIT NO.	NAMEPLATE DATA	DEVICE	LOAD			CB OR MP			NEMA STARTER		REMARKS
			HP	KVA	AMP	P	FA	TA	TYPE	SIZE	
26A	HOT WATER BOILER NO. 2 8-DIG-2422-HWB	CIRCUIT BREAKER	20	-	-	3	150	50	-	-	-
26B	SPACE	-	-	-	-	-	-	-	-	-	-
26C	SPACE	-	-	-	-	-	-	-	-	-	-
26D	SPARE	CIRCUIT BREAKER	-	-	-	-	-	-	-	-	VFD
27A	GT2 COLLECTOR DRIVE 2 8-PST-1622-VFD	CIRCUIT BREAKER	3/4	-	-	3	150	15	-	-	VFD
27B	CENTRATE FEED PUMP NO. 2 8-DAM-1223-PMP	CIRCUIT BREAKER	5	-	-	3	150	15	-	-	VFD
28A	GT TRANSFER PUMP NO. 4 8-PST-2644-PMP	CIRCUIT BREAKER	5	-	-	3	150	15	-	-	VFD
28B	GT TRANSFER PUMP NO. 2 8-PST-2624-PMP	CIRCUIT BREAKER	5	-	-	3	150	15	-	-	VFD
29A	INCOMING MAIN LUGS										
30A	SPACE	-	-	-	-	-	-	-	-	-	-
30B	SPACE	-	-	-	-	-	-	-	-	-	-
30C	HOT WATER BOILER NO. 1 8-DIG-2412-HWB	CIRCUIT BREAKER	20	-	-	3	150	50	-	-	-
30D	DUAL MEMBRANE GAS HOLDER PANEL	CIRCUIT BREAKER	-	-	-	3	150	30	-	-	-
31A	CENTRATE FEED PUMP NO. 3 8-DAM-1233-PMP	CIRCUIT BREAKER	5	-	-	3	150	15	-	-	VFD
31B	GT TRANSFER PUMP NO. 1 8-PST-2614-PMP	CIRCUIT BREAKER	5	-	-	3	150	15	-	-	VFD
32A	GT TRANSFER PUMP NO. 3 8-PST-2634-PMP	CIRCUIT BREAKER	5	-	-	3	150	15	-	-	VFD
32B	CENTRATE FEED PUMP NO. 1 8-DAM-1213-PMP	CIRCUIT BREAKER	5	-	-	3	150	15	-	-	VFD
33A	GT1 COLLECTOR DRIVE 8-PST-1612-DRV	CIRCUIT BREAKER	3/4	-	-	3	150	15	-	-	VFD
33B	SPARE	CIRCUIT BREAKER	-	-	-	3	150	15	-	-	VFD

GENERAL NOTES:

1. FOR SYMBOLS AND ABBREVIATIONS, SEE DRAWING E-1.
2. FOR CONSTRUCTION SEQUENCE, SEE DRAWING E-2.
3. FOR NEW 8-MCC-3100-MCC LOCATION, SEE DRAWING E-3.
4. FOR NEW 8-MCC-3100-MCC ELEVATION, SEE DRAWING E-21.

THE DRAWINGS IN THIS SET ARE RECORD DRAWINGS. THEY ARE CONSTRUCTION CONTRACT DRAWINGS WHICH HAVE BEEN REVISED BASED ON AVAILABLE FIELD INFORMATION RECORDED BY OTHERS DURING CONSTRUCTION OF THIS CONTRACT. THERE HAS BEEN NO VERIFICATION OF DIMENSIONS SHOWN ON THE CONSTRUCTION DRAWINGS OR THE ACCURACY/COMPLETENESS OF THE FIELD INFORMATION RECEIVED.

SIGNATURE _____ DATE 2/7/2020

SHAH & ASSOCIATES

AS-BUILT REPLACEMENT SHEET

PROFESSIONAL CERTIFICATION
THIS DRAWING WAS ORIGINALLY APPROVED FOR CONSTRUCTION AND SEALED BY KANAIYALAL R. SHAH, A REGISTERED PROFESSIONAL ENGINEER IN THE STATE OF MARYLAND, NO. 11084.

NOTICE TO CONTRACTORS
- PROJECT ELEVATIONS ARE BASED ON NAVD88 AND HOWARD COUNTY'S BENCHMARK SYSTEM
- PREVIOUS PROJECTS USED OTHER DATUMS
- APPLY THE FOLLOWING CONVERSIONS WHEN USING PREVIOUS CONTRACT DRAWINGS:
  - ADDITION NO. 6: SUBTRACT 0.80 FT
  - PRIOR ADDITIONS: SUBTRACT 1.04 FT

DEPARTMENT OF PUBLIC WORKS
HOWARD COUNTY, MARYLAND

CHIEF, BUREAU OF UTILITIES DATE

DES: SR
DRN: AJS
CHK: KRS
DATE: 10/2016

DATE	REV	DESCRIPTION
07/2019		RECORD DRAWING

ELECTRICAL

DIGESTER BUILDING
NEW 8-MCC-3100-MCC
SCHEDULE II

LITTLE PATUXENT WATER RECLAMATION PLANT
8TH ADDITION
BIOSOLIDS PROCESSING FACILITIES – PHASE I

CAPITAL PROJECT S–6295
CONTRACT NO. 24–4935

ELECTION DISTRICT NO. 6
HOWARD COUNTY, MARYLAND

SCALE AS SHOWN

SHEET 328 OF 463

E-22A

GENERAL NOTES:

1. FOR SYMBOLS, LEGEND AND ABBREVIATIONS, SEE DRAWING E-1
2. FOR CONSTRUCTION SEQUENCE, SEE DRAWING E-2.
3. FOR NEW 8-MCC-3100-MCC ONE LINE DIAGRAM, SEE DRAWINGS E-8, E-9 AND E-10.
4. FOR NEW 8-MCC-3100-MCC ELEVATION AND SCHEDULE, SEE DRAWINGS E-21, E-21A AND E-22, E-22A.
5. FOR NEW 8-MCC-3100-MCC ENCLOSURE LIGHTING PLAN, SEE DRAWING E-25.
6. FOR PANELBOARD SCHEDULE, SEE DRAWINGS E-901 THRU E-904.
7. FOR CABLE AND CONDUIT SCHEDULE, SEE DRAWINGS E-905 THRU E-913, E-918 AND E-919.
8. THE 8-MCC-3100-MCC MODULAR ENCLOSURE IS NOT PART OF THE DECEMBER, 2016 BUILDING PERMIT APPLICATION.

DRAWING NOTES:

(1) PROVIDE AND INSTALL NEW EQUIPMENT CONNECTIONS AS INDICATED.

(2) PROVIDE AND INSTALL PRE-ENGINEERED WEATHERPROOF METAL BUILDING FOR NEW MOTOR CONTROL CENTERS, VFDs, PANELBOARD, ATS ETC. INCLUDING COMPLETE WITH ALL ACCESSORIES, APPURTENANCES, ANCHORAGES, INSTALLATION AND OTHER SERVICES AS INDICATED. FOR MORE DETAIL, REFER TO SPECIFICATION SECTION 13 34 20 PRE-ENGINEERED METAL BUILDING.

(3) EQUIPMENT TO BE INSTALLED ON STEEL CHANNEL.

(4) VFDS TO BE INSTALLED INSIDE MCC CUBICLE.

(5) EXTEND BUS CONNECTION BETWEEN SECTION 4 ON THE SOUTH WALL TO SECTION 29 ON THE NORTH WALL OVERHEAD THRU 3 #4/0 AWG, 1 #4G CABLE IN 2-1/2" CONDUIT.

DRAWING NOTES (CONT'D):

(6) EXTEND BUS CONNECTION BETWEEN SECTION 21 ON THE SOUTH WALL TO SECTION 25 ON THE NORTH WALL OVERHEAD THRU 3 #4/0 AWG, 1 #4G CABLE IN 2-1/2" CONDUIT.

(7) THE 8-MCC-3100-MCC LAYOUT AND THE ELECTRICAL ROOM LAYOUT AND DIMENSIONS ARE BASED ON EATON'S MCCs, VFDs, AND PREFAB IPA ENCLOSURE. THE OVERALL ROOM DIMENSION OF THE ELECTRICAL ROOM TO BE PROVIDED SHALL MATCH WITH THE DIMENSIONS SHOWN ON THIS DRAWING.

(8) PROVIDE AND INSTALL CONDUIT AND CABLE OVERHEAD FOR GENERATOR CONNECTION FROM GENERATOR BREAKER IN THE MCC TO THE NORTH WALL OF THE 8-MCC-3100-MCC ENCLOSURE TO BE ROUTED TO THE GENERATOR CONNECTION CABINET AS DESCRIBED ON DWG E-31.

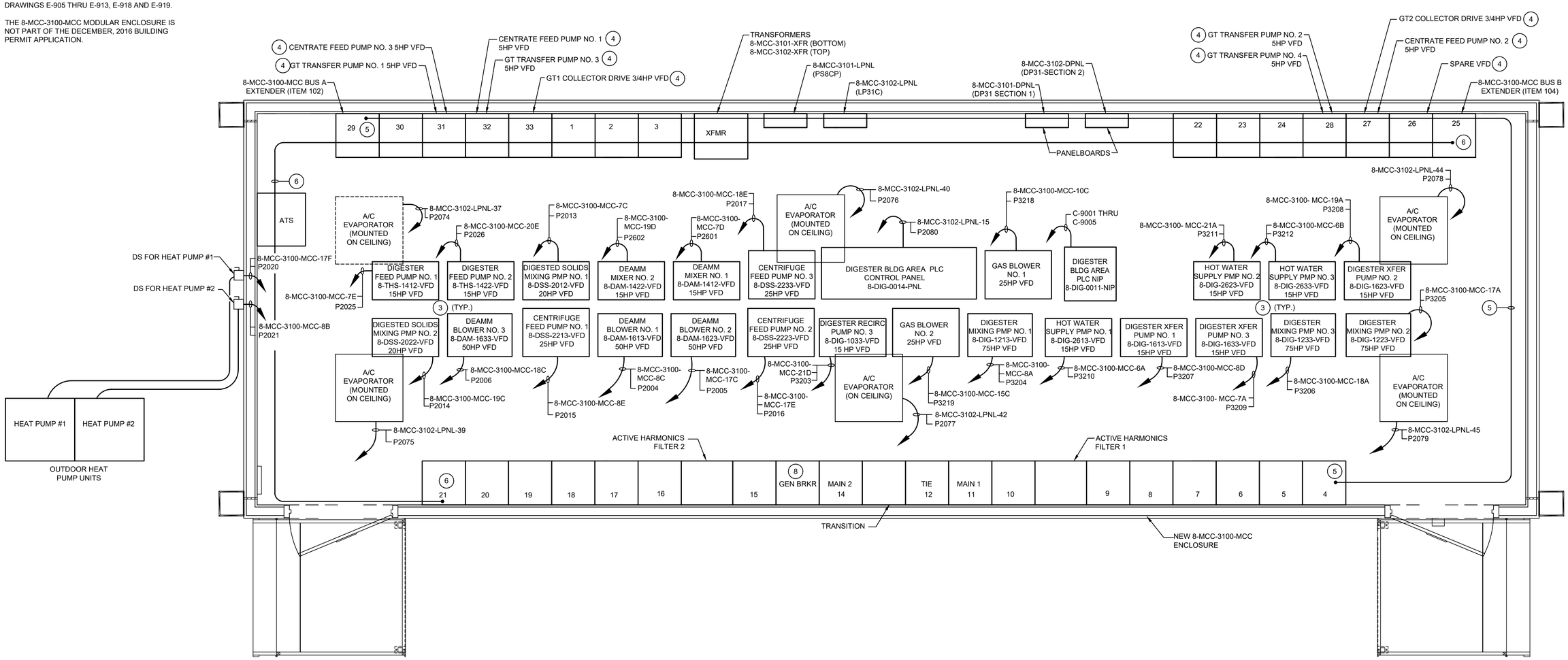

THE DRAWINGS IN THIS SET ARE RECORD DRAWINGS. THEY ARE CONSTRUCTION CONTRACT DRAWINGS WHICH HAVE BEEN REVISED BASED ON AVAILABLE FIELD INFORMATION RECORDED BY OTHERS DURING CONSTRUCTION OF THIS CONTRACT. THERE HAS BEEN NO VERIFICATION OF DIMENSIONS SHOWN ON THE CONSTRUCTION DRAWINGS OR THE ACCURACY/COMPLETENESS OF THE FIELD INFORMATION RECEIVED.

SIGNATURE _____ DATE 2/7/2020

DIGESTER BUILDING - ELECTRICAL ROOM LAYOUT (1) (2) (7)

SCALE: 1/2" = 1'-0"

0 2 4 6

SCALE: 1/2" = 1'-0"

SHAH & ASSOCIATES

AS-BUILT REPLACEMENT SHEET

PROFESSIONAL CERTIFICATION
THIS DRAWING WAS ORIGINALLY APPROVED FOR CONSTRUCTION AND SEALED BY KANAIYALAL R. SHAH, A REGISTERED PROFESSIONAL ENGINEER IN THE STATE OF MARYLAND, NO. 11084.

NOTICE TO CONTRACTORS
- PROJECT ELEVATIONS ARE BASED ON NAVD88 AND HOWARD COUNTY'S BENCHMARK SYSTEM
- PREVIOUS PROJECTS USED OTHER DATUMS
- APPLY THE FOLLOWING CONVERSIONS WHEN USING PREVIOUS CONTRACT DRAWINGS:
  - ADDITION NO. 6: SUBTRACT 0.80 FT.
  - PRIOR ADDITIONS: SUBTRACT 1.04 FT

DEPARTMENT OF PUBLIC WORKS
HOWARD COUNTY, MARYLAND

CHIEF, BUREAU OF UTILITIES DATE

DES: SR
DRN: XMZ
CHK: KRS
DATE: 10/2016

DATE	REV	DESCRIPTION
07/2019		RECORD DRAWING

ELECTRICAL

DIGESTER BUILDING
ELECTRICAL ROOM
LAYOUT

LITTLE PATUXENT WATER RECLAMATION PLANT
8TH ADDITION
BIOSOLIDS PROCESSING FACILITIES – PHASE I

CAPITAL PROJECT S-6295
CONTRACT NO. 24-4935

ELECTION DISTRICT NO. 6
HOWARD COUNTY, MARYLAND

SCALE AS SHOWN

SHEET 329 OF **463**

E-23

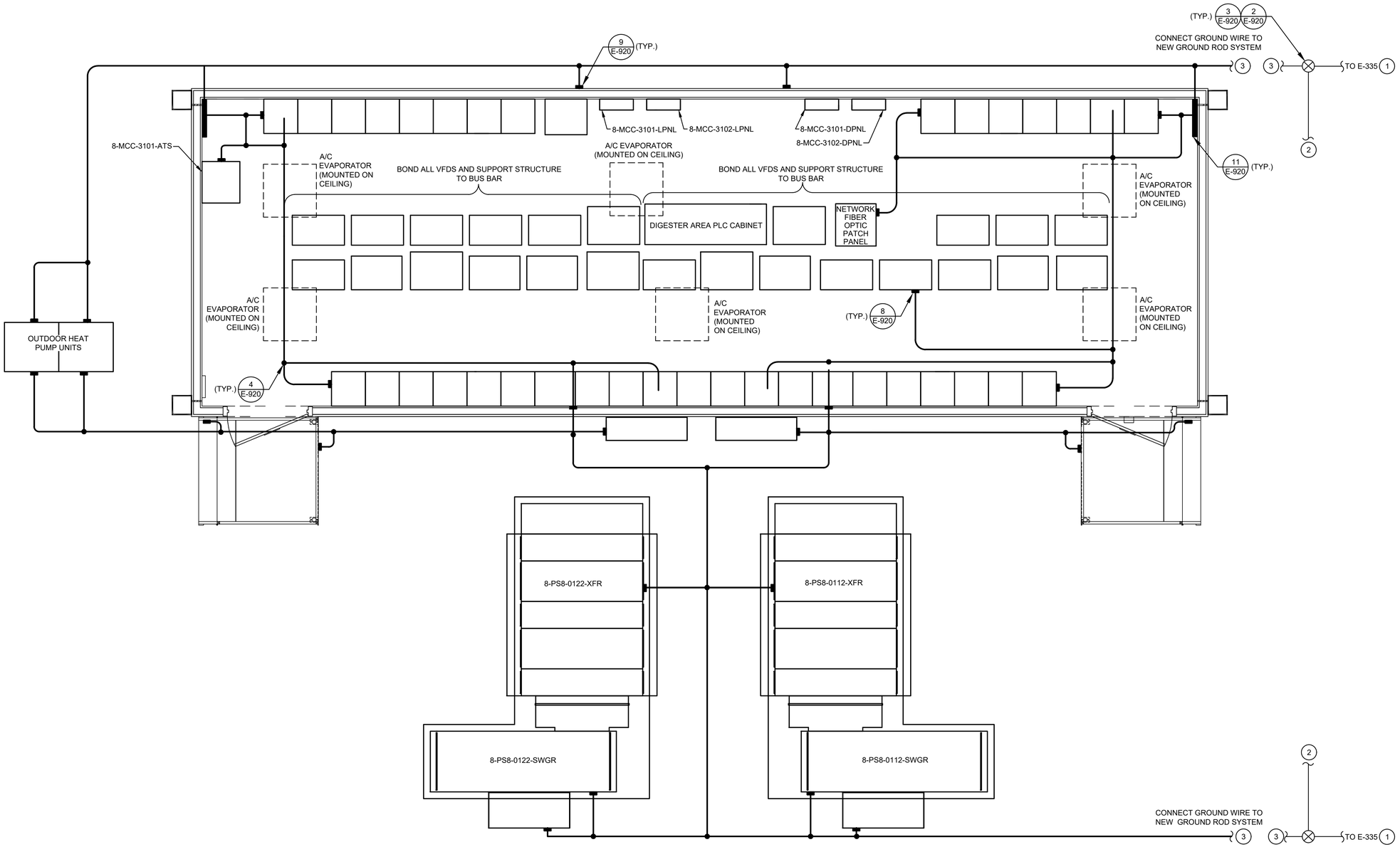

N

GENERAL NOTES:

1. FOR SYMBOLS, LEGEND AND ABBREVIATIONS, SEE DRAWING E-1.
2. NOT ALL BONDS TO GROUND ARE SHOWN. CONTRACTOR TO PROVIDE BONDING TO ALL STRUCTURAL SUPPORTS METAL ENCLOSURES, PIPING, ETC. AS REQUIRED.
3. PROVIDE COPPER-CLAD GROUND RODS IN INDICATED LOCATIONS.
4. FOR GROUNDING DETAILS, SEE DRAWING E-920.
5. THE 8-MCC-3100-MCC MODULAR ENCLOSURE IS NOT PART OF THE DECEMBER, 2016 BUILDING PERMIT APPLICATION.

DRAWING NOTES:

1. IN LIEU OF DELTA, GROUNDING CONDUCTORS ARE CONNECTED TO DIGESTER BUILDING GROUND GRID, SEE DRAWING E-335. SEE NOTE 4
2. INTERCONNECT THE TWO DELTA GROUNDING SYSTEMS.
3. RUN THE GROUNDING CONDUCTOR FROM THE GOUND SYSTEM TO THE EQUIPMENT LOCATED ON THE ROOF. SEE NOTE 4
4. MEASURE GROUNDING SYSTEM RESISTANCE AND PROVIDE TEST RESULTS TO THE ENGINEER FOR APPROVAL.

THE DRAWINGS IN THIS SET ARE RECORD DRAWINGS. THEY ARE CONSTRUCTION CONTRACT DRAWINGS WHICH HAVE BEEN REVISED BASED ON AVAILABLE FIELD INFORMATION RECORDED BY OTHERS DURING CONSTRUCTION OF THIS CONTRACT. THERE HAS BEEN NO VERIFICATION OF DIMENSIONS SHOWN ON THE CONSTRUCTION DRAWINGS OR THE ACCURACY/COMPLETENESS OF THE FIELD INFORMATION RECEIVED.

SIGNATURE — DATE 2/7/2020

0 2 4 6 8

SCALE: 3/8" = 1'-0"

DIGESTER BUILDING - NEW 8-MCC-3100-MCC ROOM AND PS-8 - GROUNDING PLAN (4)

SCALE: 3/8" = 1'-0"

SHAH & ASSOCIATES

HDR

AS-BUILT REPLACEMENT SHEET

PROFESSIONAL CERTIFICATION
THIS DRAWING WAS ORIGINALLY APPROVED FOR CONSTRUCTION AND SEALED BY KANAIYALAL R. SHAH, A REGISTERED PROFESSIONAL ENGINEER IN THE STATE OF MARYLAND, NO. 11084.

NOTICE TO CONTRACTORS
- PROJECT ELEVATIONS ARE BASED ON NAVD88 AND HOWARD COUNTY'S BENCHMARK SYSTEM
- PREVIOUS PROJECTS USED OTHER DATUMS
- APPLY THE FOLLOWING CONVERSIONS WHEN USING PREVIOUS CONTRACT DRAWINGS:
  - ADDITION NO. 6: SUBTRACT 0.80 FT
  - PRIOR ADDITIONS: SUBTRACT 1.04 FT

DEPARTMENT OF PUBLIC WORKS
HOWARD COUNTY, MARYLAND

CHIEF, BUREAU OF UTILITIES — DATE

DES:	SR
DRN:	XMZ
CHK:	KRS
DATE:	10/2016

DATE	REV	DESCRIPTION
07/2019		RECORD DRAWING

ELECTRICAL

DIGESTER BUILDING
NEW 8-MCC-3100-MCC ROOM
AND PS-8 GROUNDING PLAN

LITTLE PATUXENT WATER RECLAMATION PLANT
8TH ADDITION
BIOSOLIDS PROCESSING FACILITIES – PHASE I

CAPITAL PROJECT S–6295
CONTRACT NO. 24–4935

ELECTION DISTRICT NO. 6
HOWARD COUNTY, MARYLAND

SCALE AS SHOWN

SHEET 330 OF 463

E-24

GENERAL NOTES:

1. FOR SYMBOLS, LEGEND AND ABBREVIATIONS, SEE DRAWING E-1
2. FOR CONSTRUCTION SEQUENCE, SEE DRAWING E-2.
3. FOR LIGHTING FIXTURE SCHEDULE AND DETAIL, SEE DRAWING E-921 UNLESS NOTED OTHERWISE.
4. FOR PANELBOARD SCHEDULE, SEE DRAWINGS E-901 THRU E-904.
5. FOR CABLE AND CONDUIT SCHEDULE, SEE DRAWING E-905 THRU E-913.

DRAWING NOTES:

(1) CONNECT EXIT SIGNS AND EMERGENCY LIGHTS AHEAD OF SWITCH.

(2) 4' ENCLOSED AND GASKETED LED LUMINAIRE WITH ACRYLIC FROSTED DEEP LENS, HOLOPHANE CATALOG NUMBER EMS4LED4LIMACD.

(3) CONNECT VIA PHOTOCELL.

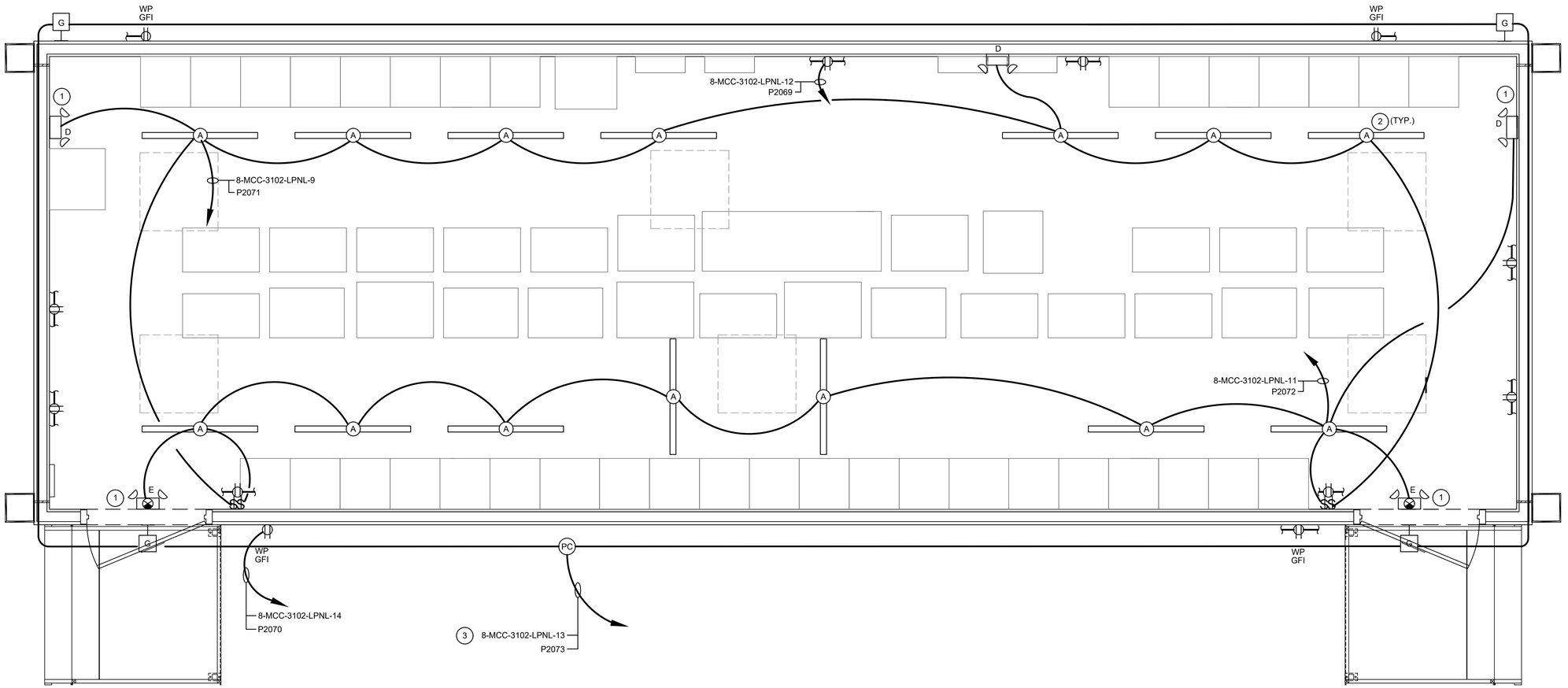

0 2 4 6

SCALE: 1/2" = 1'-0"

DIGESTER BUILDING - NEW 8-MCC-3100-MCC ROOM - LIGHTING PLAN

SCALE: 1/2" = 1'-0"

THE DRAWINGS IN THIS SET ARE RECORD DRAWINGS. THEY ARE CONSTRUCTION CONTRACT DRAWINGS WHICH HAVE BEEN REVISED BASED ON AVAILABLE FIELD INFORMATION RECORDED BY OTHERS DURING CONSTRUCTION OF THIS CONTRACT. THERE HAS BEEN NO VERIFICATION OF DIMENSIONS SHOWN ON THE CONSTRUCTION DRAWINGS OR THE ACCURACY/COMPLETENESS OF THE FIELD INFORMATION RECEIVED.

SIGNATURE 2/7/2023 DATE

SHAH & ASSOCIATES

AS-BUILT REPLACEMENT SHEET

PROFESSIONAL CERTIFICATION
THIS DRAWING WAS ORIGINALLY APPROVED FOR CONSTRUCTION AND SEALED BY KANAIYALAL R. SHAH, A REGISTERED PROFESSIONAL ENGINEER IN THE STATE OF MARYLAND, NO. 11084.

NOTICE TO CONTRACTORS
- PROJECT ELEVATIONS ARE BASED ON NAVD88 AND HOWARD COUNTY'S BENCHMARK SYSTEM
- PREVIOUS PROJECTS USED OTHER DATUMS
- APPLY THE FOLLOWING CONVERSIONS WHEN USING PREVIOUS CONTRACT DRAWINGS:
  - ADDITION NO. 6: SUBTRACT 0.80 FT
  - PRIOR ADDITIONS: SUBTRACT 1.04 FT

DEPARTMENT OF PUBLIC WORKS
HOWARD COUNTY, MARYLAND

CHIEF, BUREAU OF UTILITIES DATE

DES: SR
DRN: XMZ
CHK: KRS
DATE: 10/2016

DATE	REV	DESCRIPTION
07/2019		RECORD DRAWING

ELECTRICAL

DIGESTER BUILDING
NEW 8-MCC-3100-MCC ROOM
LIGHTING PLAN

LITTLE PATUXENT WATER RECLAMATION PLANT
8TH ADDITION
BIOSOLIDS PROCESSING FACILITIES – PHASE I

CAPITAL PROJECT S-6295
CONTRACT NO. 24-4935

ELECTION DISTRICT NO. 6
HOWARD COUNTY, MARYLAND

SCALE AS SHOWN

SHEET 331 OF 463

E-25

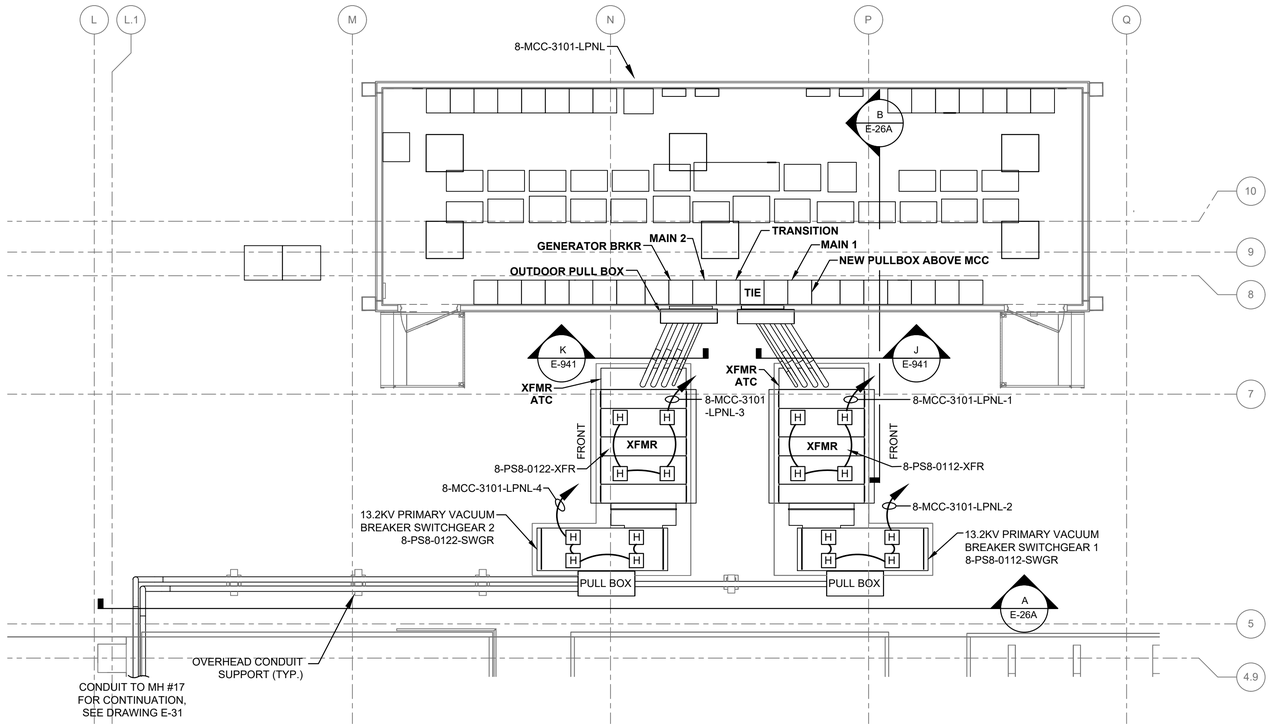

NEW SUBSTATION PS-8 PLAN

SCALE: 3/16" = 1'-0"

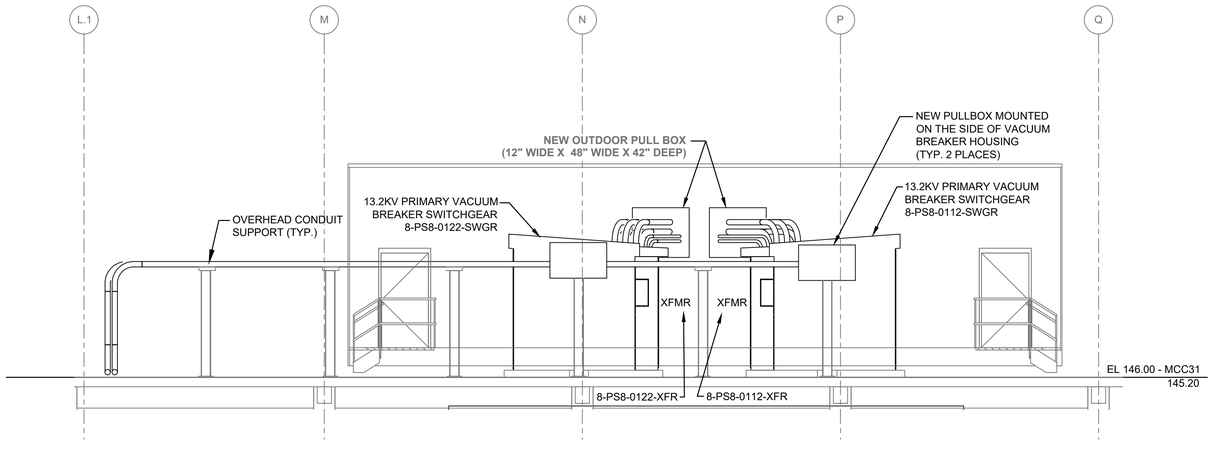

A E-26A ELEVATION

SCALE: 3/16" = 1'-0"

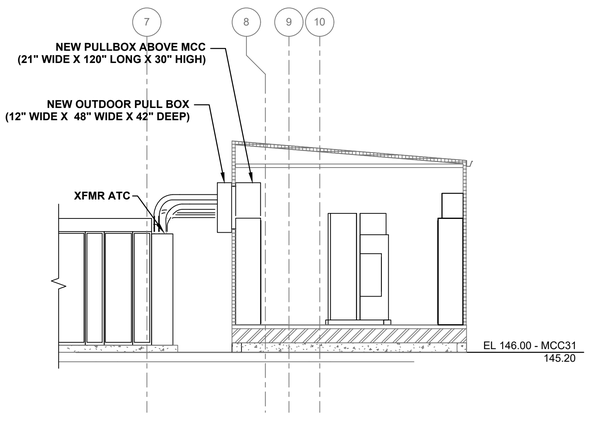

B E-26A SECTION

SCALE: 3/16" = 1'-0"

N

GENERAL NOTES:

1. FOR SYMBOLS, LEGEND AND ABBREVIATIONS, SEE DRAWING E-1
2. FOR CONSTRUCTION SEQUENCE, SEE DRAWING E-2.
3. FOR NEW 8-MCC-3100-MCC ONE LINE DIAGRAM, SEE DRAWINGS E-8 , E-9 AND E-10.
4. FOR NEW 8-MCC-3100-MCC ELEVATION AND SCHEDULE, SEE DRAWINGS E-21, E-22 AND E-22A.
5. FOR PS-8 AND 8-MCC-3100-MCC LOCATION, SEE DRAWING E-3.
6. THIS DRAWING DEPICTS THE GENERAL ROUTING INTENTION FOR FEEDERS FROM NEW PS-8 TO 8-MCC-3100-MCC. CONTRACTOR SHALL FOLLOW ALL THE REQUIREMENTS OF THE NEC FOR ROUTING. FOLLOWING ARE GENERAL DIRECTIONS:
   a. FROM MH #17 TO THE TANK, ROUTE FEEDERS VIA 4 WAY DUCT BANK.
   b. PROVIDE PULL BOX AT THE SIDE WALL OF THE TANK, SIZE PER NEC.
   c. FROM THE PULL BOX, RUN CONDUIT AT TANK LEVEL ON STRUT SUPPORT MOUNTED ON THE TANK FLOOR.
   d. PROVIDE PULL BOXES AS NEEDED AS NOT TO EXCEED MORE THAN THREE 90° BENDS.
   e. USE CONDUIT SLEEVES AND EXPANSION JOINT CONDUIT BODIES AS REQUIRED.
   f. AT THE END OF THE EAST OUTSIDE WALL OF THE CENTRIFUGE BUILDING, ROUTE CONDUIT UP THE WALL AND TO OVERHEAD CONDUIT SUPPORTS.
   g. RUN CONDUIT ON OVERHEAD SUPPORTS TO PRIMARY VACUUM BREAKER SWITCHGEAR. MODIFY AND USE EXISTING PROCESS PIPING CONDUIT SUPPORT.
   h. THE EXPOSED CONDUIT FOR THE MEDIUM VOLTAGE FEEDERS SHALL BE PVC COATED STAINLESS STEEL.
7. THE SPACE HEATER CIRCUITS FOR THE 13.2KV PRIMARY VACUUM BREAKER SWITCHGEAR AND THE TRANSFORMER SHALL BE PROVIDED FROM PANEL 8-MCC-3101-LPNL LOCATED INSIDE THE 8-MCC-3100-MCC ENCLOSURE.

THE DRAWINGS IN THIS SET ARE RECORD DRAWINGS. THEY ARE CONSTRUCTION CONTRACT DRAWINGS WHICH HAVE BEEN REVISED BASED ON AVAILABLE FIELD INFORMATION RECORDED BY OTHERS DURING CONSTRUCTION OF THIS CONTRACT. THERE HAS BEEN NO VERIFICATION OF DIMENSIONS SHOWN ON THE CONSTRUCTION DRAWINGS OR THE ACCURACY/COMPLETENESS OF THE FIELD INFORMATION RECEIVED.

SIGNATURE _____ DATE 2/7/2020

0 4 8 12 16

SCALE: 3/16" = 1'-0"

SHAH & ASSOCIATES

AS-BUILT REPLACEMENT SHEET

PROFESSIONAL CERTIFICATION
THIS DRAWING WAS ORIGINALLY APPROVED FOR CONSTRUCTION AND SEALED BY KANAIYALAL R. SHAH, A REGISTERED PROFESSIONAL ENGINEER IN THE STATE OF MARYLAND, NO. 11084.

NOTICE TO CONTRACTORS
- PROJECT ELEVATIONS ARE BASED ON NAVD88 AND HOWARD COUNTY'S BENCHMARK SYSTEM
- PREVIOUS PROJECTS USED OTHER DATUMS
- APPLY THE FOLLOWING CONVERSIONS WHEN USING PREVIOUS CONTRACT DRAWINGS:
  – ADDITION NO. 6: SUBTRACT 0.80 FT
  – PRIOR ADDITIONS: SUBTRACT 1.04 FT

DEPARTMENT OF PUBLIC WORKS
HOWARD COUNTY, MARYLAND

CHIEF, BUREAU OF UTILITIES DATE

DES: HFM
DRN: DMG
CHK: KRS
DATE: 10/2016

DATE	REV	DESCRIPTION
07/2019		RECORD DRAWING

ELECTRICAL

NEW SUBSTATION PS-8 PLAN

LITTLE PATUXENT WATER RECLAMATION PLANT
8TH ADDITION
BIOSOLIDS PROCESSING FACILITIES – PHASE I

CAPITAL PROJECT S–6295
CONTRACT NO. 24–4935

ELECTION DISTRICT NO. 6
HOWARD COUNTY, MARYLAND

SCALE AS SHOWN

SHEET 332 OF **463**

E-26A

GENERAL NOTES:

1. FOR SYMBOLS AND ABBREVIATIONS, SEE DRAWING E-1.
2. FOR CONSTRUCTION SEQUENCE, SEE DRAWING E-2.

DRAWING NOTE:

1. EXISTING EQUIPMENT WILL BE DEMOLISHED IN PHASE II DURING DRYER BUILDING CONSTRUCTION.
2. INSTALL NEW EQUIPMENT ON UNISTRUT SUPPORT.
3. INSTALL NEW EQUIPMENT AS SHOWN.
4. NEW CONDUITS WITH NEW SET OF CABLES SHALL BE RUN FROM PS-2 TO 8-MCC-1500-MCC, 8-MCC-2300-MCC, PC-1 AND PC-2 ALONG THE EXISTING CONDUIT CHASE. MAKE THE NECESSARY MODIFICATION TO EXPAND THE CONDUIT CHASE TO ACCOMMODATE NEW CONDUITS.
5. THESE VFD's HAVE BEEN RELOCATED FROM THE WEST WALL TO THE SOUTH WALL.

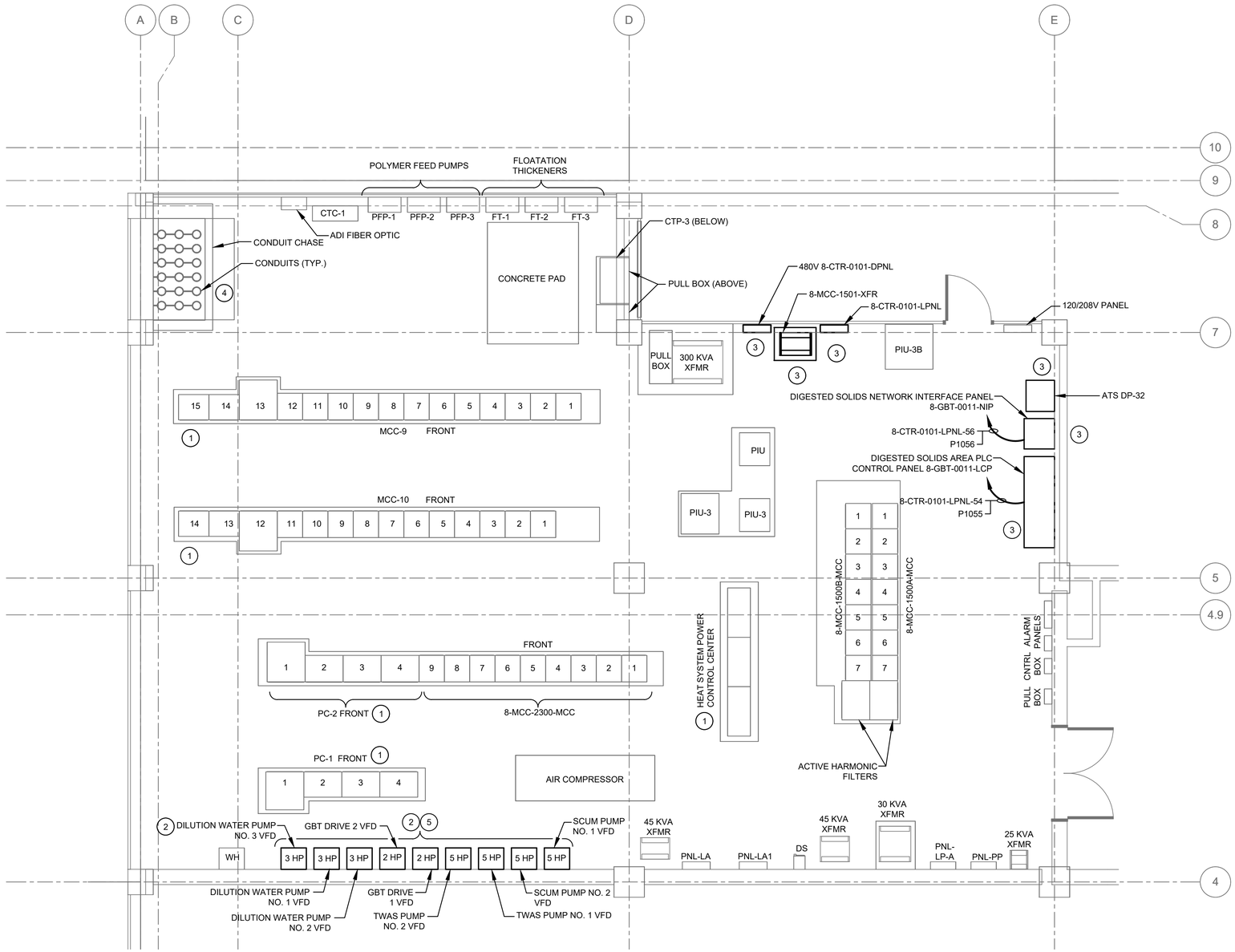

GRAPHIC SCALE

0 4 8 12

SCALE: 1/4" = 1'-0"

CHEMICAL HANDLING AREA - ELECTRICAL ROOM - EXISTING AND MODIFICATION

SCALE: 1/4" = 1'-0"

THE DRAWINGS IN THIS SET ARE RECORD DRAWINGS. THEY ARE CONSTRUCTION CONTRACT DRAWINGS WHICH HAVE BEEN REVISED BASED ON AVAILABLE FIELD INFORMATION RECORDED BY OTHERS DURING CONSTRUCTION OF THIS CONTRACT. THERE HAS BEEN NO VERIFICATION OF DIMENSIONS SHOWN ON THE CONSTRUCTION DRAWINGS OR THE ACCURACY/COMPLETENESS OF THE FIELD INFORMATION RECEIVED.

SIGNATURE _____ DATE 2/7/2020

SHAH & ASSOCIATES

HDR

AS-BUILT REPLACEMENT SHEET

PROFESSIONAL CERTIFICATION
THIS DRAWING WAS ORIGINALLY APPROVED FOR CONSTRUCTION AND SEALED BY KANAIYALAL R. SHAH, A REGISTERED PROFESSIONAL ENGINEER IN THE STATE OF MARYLAND, NO. 11084.

NOTICE TO CONTRACTORS
- PROJECT ELEVATIONS ARE BASED ON NAVD88 AND HOWARD COUNTY'S BENCHMARK SYSTEM
- PREVIOUS PROJECTS USED OTHER DATUMS
- APPLY THE FOLLOWING CONVERSIONS WHEN USING PREVIOUS CONTRACT DRAWINGS:
  - ADDITION NO. 6: SUBTRACT 0.80 FT.
  - PRIOR ADDITIONS: SUBTRACT 1.04 FT.

DEPARTMENT OF PUBLIC WORKS
HOWARD COUNTY, MARYLAND

CHIEF, BUREAU OF UTILITIES DATE

DES: SR
DRN: DMG
CHK: KRS
DATE: 10/2016

DATE	REV	DESCRIPTION
07/2019		RECORD DRAWING

ELECTRICAL

CHEMICAL HANDLING AREA
ELECTRICAL ROOM
EXISTING AND MODIFICATION

LITTLE PATUXENT WATER RECLAMATION PLANT
8TH ADDITION
BIOSOLIDS PROCESSING FACILITIES – PHASE I

CAPITAL PROJECT S-6295
CONTRACT NO. 24-4935

ELECTION DISTRICT NO. 6
HOWARD COUNTY, MARYLAND

SCALE AS SHOWN

SHEET 333 OF 463

E-30

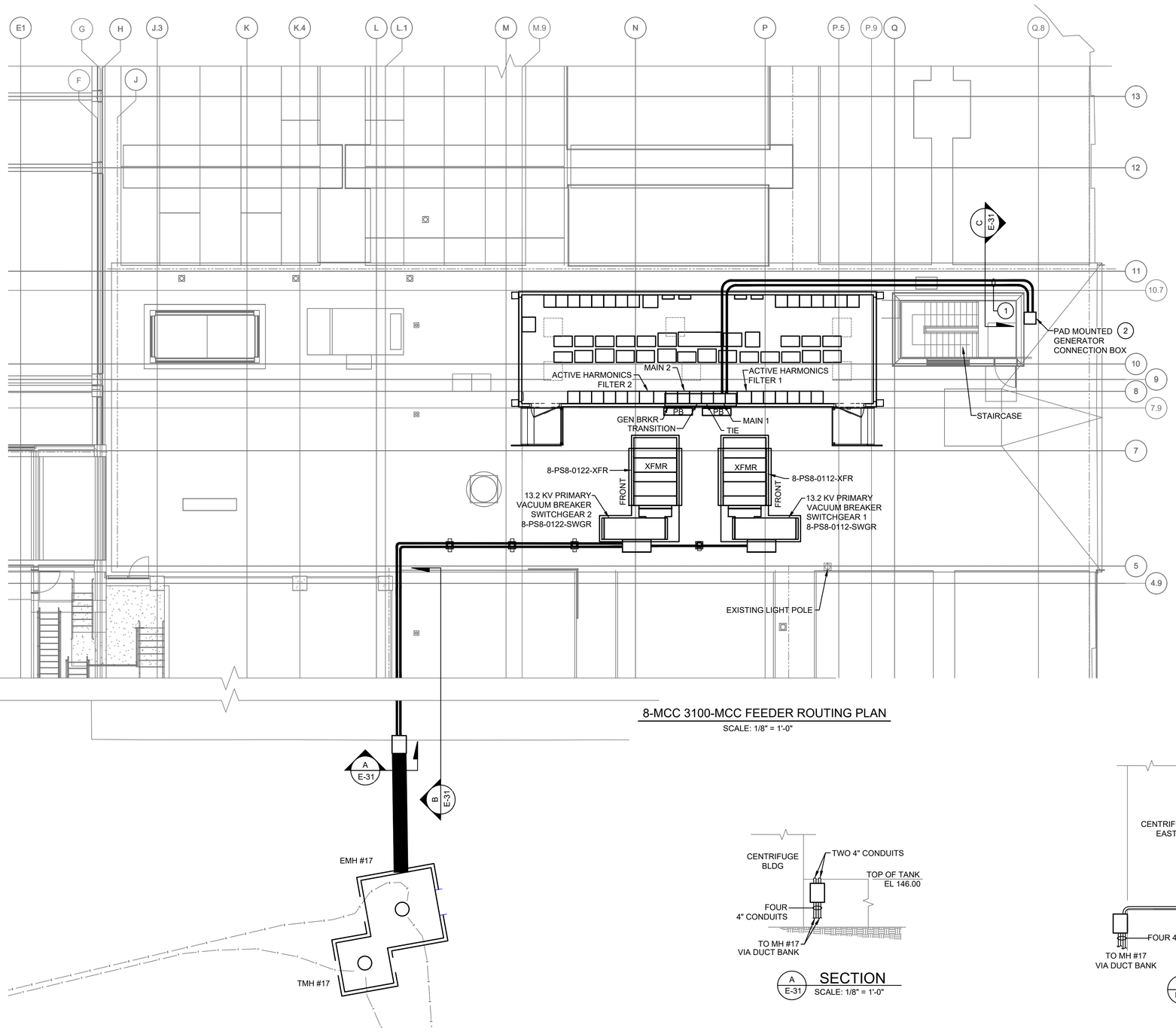

8-MCC 3100-MCC FEEDER ROUTING PLAN

SCALE: 1/8" = 1'-0"

C E-31 SECTION

SCALE: 1-1/2" = 1'-0"

A E-31 SECTION

SCALE: 1/8" = 1'-0"

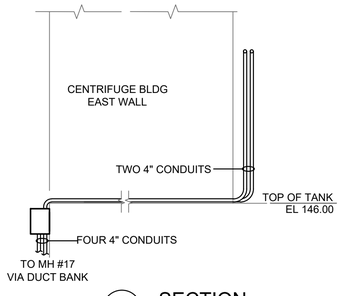

B E-31 SECTION

SCALE: 1/8" = 1'-0"

DRAWING NOTES (CONTINUED):

(2) PROVIDE AND INSTALL A GENERATOR CONNECTION BOX. ENCLOSURE SHALL BE NEMA-3R STAINLESS STEEL AND MANUFACTURED BY BERTHOLD ELECTRIC COMPANY OF CHICAGO, IL OR APPROVED EQUAL.

GENERAL NOTES:

1. FOR SYMBOLS, LEGEND AND ABBREVIATIONS, SEE DRAWING E-1
2. FOR CONSTRUCTION SEQUENCE, SEE DRAWING E-2.
3. FOR NEW 8-MCC-3100-MCC ONE LINE DIAGRAM, SEE DRAWINGS E-8 , E-9 AND E-10.
4. FOR NEW 8-MCC-3100-MCC ELEVATION AND SCHEDULE, SEE DRAWINGS E-21, E-22 AND E-22A.
5. FOR PS-8 AND 8-MCC-3100-MCC LOCATION, SEE DRAWING E-3.
6. THIS DRAWING DEPICTS THE GENERAL ROUTING INTENTION FOR FEEDERS FROM NEW PS-8 TO 8-MCC-3100-MCC. CONTRACTOR SHALL FOLLOW ALL THE REQUIREMENTS OF THE NEC FOR ROUTING. FOLLOWING ARE GENERAL DIRECTIONS:
   a. FROM MH #17 TO THE TANK, ROUTE FEEDERS VIA 4 WAY DUCT BANK.
   b. PROVIDE PULL BOX AT THE SIDE WALL OF THE TANK, SIZE PER NEC.
   c. FROM THE PULL BOX, RUN CONDUIT AT TANK LEVEL ON STAINLESS STRUT SUPPORT MOUNTED ON THE TANK FLOOR.
   d. PROVIDE PULL BOXES AS NEEDED AS NOT TO EXCEED MORE THAN THREE 90° BENDS.
   e. USE CONDUIT SLEEVES AND EXPANSION JOINT CONDUIT BODIES AS REQUIRED.
   f. AT THE END OF THE EAST OUTSIDE WALL OF THE CENTRIFUGE BUILDING, ROUTE CONDUIT UP THE WALL AND TO OVERHEAD CONDUIT SUPPORTS.
   g. RUN CONDUIT ON OVERHEAD SUPPORTS TO PRIMARY VACUUM BREAKER SWITCHGEAR.
   h. THE EXPOSED CONDUIT FOR MEDIUM VOLTAGE FEEDERS SHALL BE PVC COATED STAINLESS STEEL.
7. THE 8-MCC-3100-MCC MODULAR ENCLOSURE WAS NOT PART OF THE DECEMBER, 2016 BUILDING PERMIT APPLICATION.

DRAWING NOTES:

(1) CONDUITS FROM THE DIGESTER BUILDING ELECTRICAL ROOM TO THE GENERATOR CONNECTION BOX SHALL BE RUN AS FOLLOWS:

a. OVERHEAD FROM MCC-31 GENERATOR BREAKER CUBICLE TO THE NORTH WALL INSIDE THE 8-MCC-3100-MCC ENCLOSURE.

b. FROM THE BACK OF MCC ENCLOSURE, OVERHEAD TOWARDS THE DIGESTER BUILDING WEST WALL.

c. AT THE NORTH EAST CORNER OF THE STAIRCASE, DROP DOWN TO THE NEW LOCATION OF THE GENERATOR CONNECTION CABINET INSTALLED ON A CONCRETE BASE.

d. PROVIDE PAD MOUNTED GENERATOR CONNECTION BOX BY BERTHOLD ELECTRIC CO. OR APPROVED EQUAL.

e. PROVIDE PULL BOXES AND CONDUITS SLEEVES AS REQUIRED.

THE DRAWINGS IN THIS SET ARE RECORD DRAWINGS. THEY ARE CONSTRUCTION CONTRACT DRAWINGS WHICH HAVE BEEN REVISED BASED ON AVAILABLE FIELD INFORMATION RECORDED BY OTHERS DURING CONSTRUCTION OF THIS CONTRACT. THERE HAS BEEN NO VERIFICATION OF DIMENSIONS SHOWN ON THE CONSTRUCTION DRAWINGS OR THE ACCURACY/COMPLETENESS OF THE FIELD INFORMATION RECEIVED.

SIGNATURE _____ DATE 2/7/2020

GRAPHIC SCALE

0 8 16 24

SCALE: 1/8" = 1'-0"

SHAH & ASSOCIATES

AS-BUILT REPLACEMENT SHEET

PROFESSIONAL CERTIFICATION
THIS DRAWING WAS ORIGINALLY APPROVED FOR CONSTRUCTION AND SEALED BY KANAIYALAL R. SHAH, A REGISTERED PROFESSIONAL ENGINEER IN THE STATE OF MARYLAND, NO. 11084.

NOTICE TO CONTRACTORS
- PROJECT ELEVATIONS ARE BASED ON NAVD88 AND HOWARD COUNTY'S BENCHMARK SYSTEM
- PREVIOUS PROJECTS USED OTHER DATUMS
- APPLY THE FOLLOWING CONVERSIONS WHEN USING PREVIOUS CONTRACT DRAWINGS:
  – ADDITION NO. 6: SUBTRACT 0.80 FT
  – PRIOR ADDITIONS: SUBTRACT 1.04 FT

DEPARTMENT OF PUBLIC WORKS
HOWARD COUNTY, MARYLAND

CHIEF, BUREAU OF UTILITIES DATE

DES: HFM
DRN: AJS
CHK: KRS
DATE: 10/2016

DATE	REV	DESCRIPTION
07/2019		RECORD DRAWING

ELECTRICAL

8-MCC-3100-MCC FEEDER ROUTING PLAN

LITTLE PATUXENT WATER RECLAMATION PLANT
8TH ADDITION
BIOSOLIDS PROCESSING FACILITIES – PHASE I

CAPITAL PROJECT S-6295
CONTRACT NO. 24-4935

ELECTION DISTRICT NO. 6
HOWARD COUNTY, MARYLAND

SCALE AS SHOWN

SHEET 334 OF 463

E-31

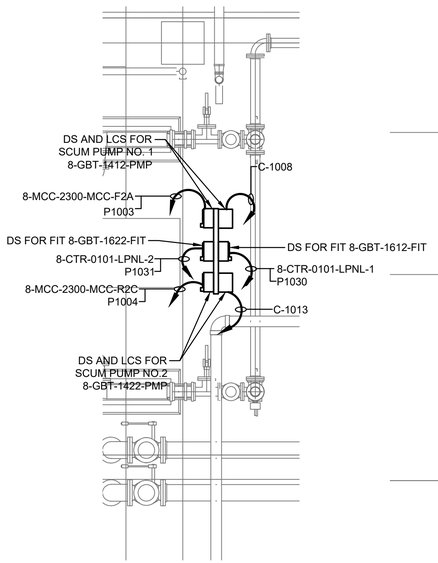

DETAIL 1
NONE

GRAPHIC SCALE

0 4 8 12 16

SCALE: 3/16" = 1'-0"

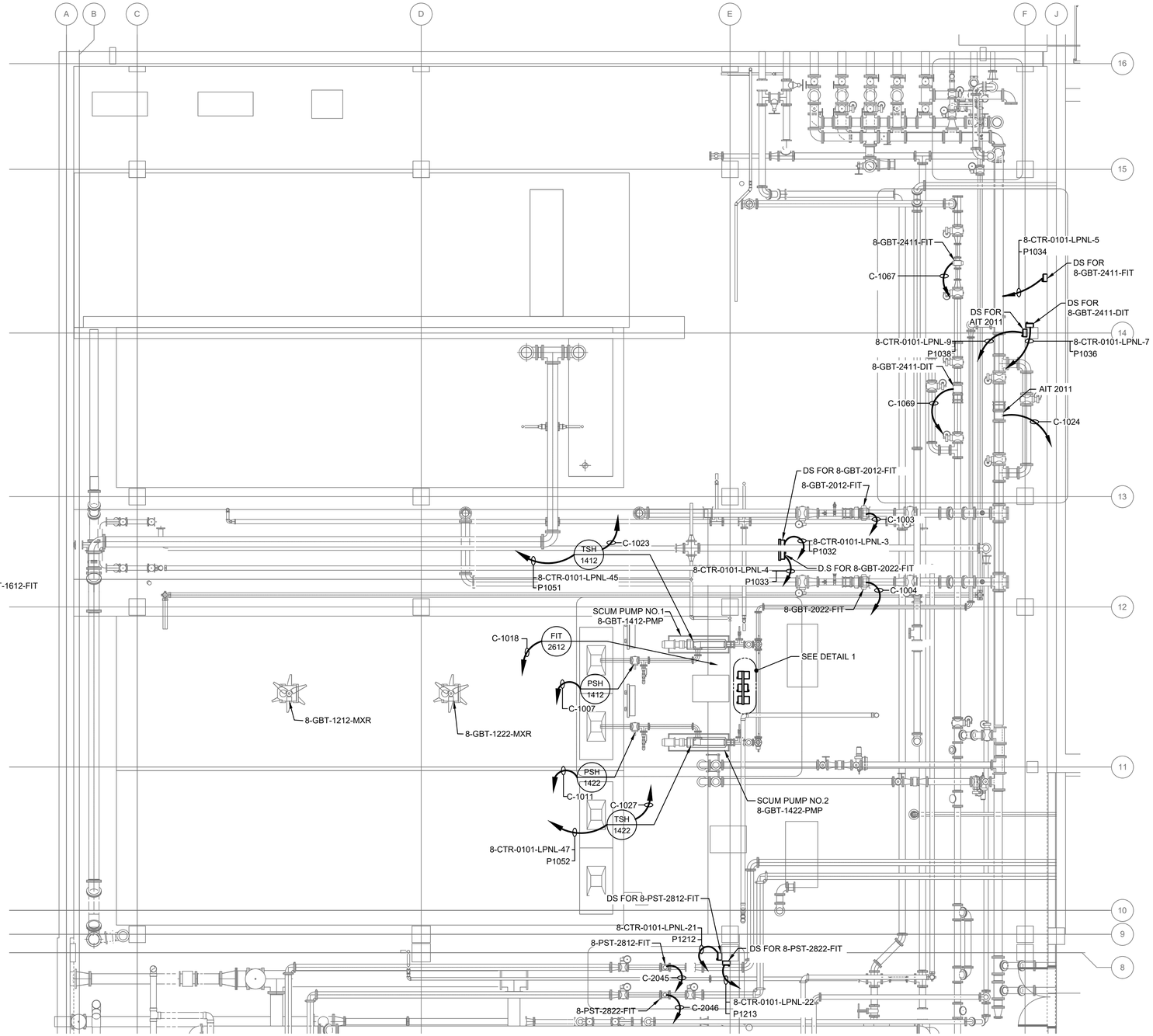

GRAVITY BELT THICKENER AREA - AT EL 128.00 ELECTRICAL AND I &C PLAN

3/16" = 1'-0"

GENERAL NOTES:

1. FOR SYMBOLS AND ABBREVIATIONS, SEE DRAWING E-1.
2. FOR CONSTRUCTION SEQUENCE, SEE DRAWING E-2.
3. FOR 8-MCC-2300-MCC ONE LINE DIAGRAM, SEE DRAWINGS E-17 AND E-18.
4. FOR PANELBOARD SCHEDULE, SEE DRAWINGS E-901 THRU E-904.
5. FOR CABLE AND CONDUIT SCHEDULE, SEE DRAWINGS E-905 THRU E-913, E-918 AND E-919.
6. LOCATION OF EQUIPMENT IE. MOTORS, VALVES, UNIT HEATERS, EXHAUST FANS, ETC. IS FOR REFERENCE ONLY. FOR EXACT LOCATION OF EQUIPMENT, REFER TO MECHANICAL, HVAC AND PLUMBING DRAWINGS.
7. DRAWINGS ARE INTENDED TO DEPICT DESIGN INTENT; CONTRACTOR TO REFER TO SPECIFICATIONS, P&IDS, AND STANDARD DETAILS FOR FURTHER INSTALLATION REQUIREMENTS.
8. NOT ALL INSTRUMENTATION EQUIPMENT ARE SHOWN ON THIS PLAN, REFER TO PROCESS AND P&ID DRAWINGS. THE DISCONNECT SWITCHES SHOWN FOR THE INSTRUMENTS; I.E., FITS, AITS, LITS, PITS, TITS, ETC. ARE 20A SNAP SWITCHES.

THE DRAWINGS IN THIS SET ARE RECORD DRAWINGS. THEY ARE CONSTRUCTION CONTRACT DRAWINGS WHICH HAVE BEEN REVISED BASED ON AVAILABLE FIELD INFORMATION RECORDED BY OTHERS DURING CONSTRUCTION OF THIS CONTRACT. THERE HAS BEEN NO VERIFICATION OF DIMENSIONS SHOWN ON THE CONSTRUCTION DRAWINGS OR THE ACCURACY/COMPLETENESS OF THE FIELD INFORMATION RECEIVED.

SIGNATURE — DATE 2/7/2020

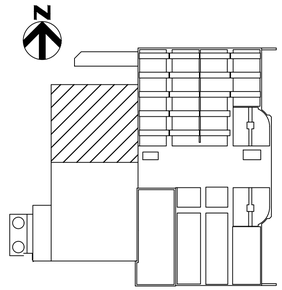

KEY PLAN

SHAH & ASSOCIATES

AS-BUILT REPLACEMENT SHEET

PROFESSIONAL CERTIFICATION
THIS DRAWING WAS ORIGINALLY APPROVED FOR CONSTRUCTION AND SEALED BY KANAIYALAL R. SHAH, A REGISTERED PROFESSIONAL ENGINEER IN THE STATE OF MARYLAND, NO. 11084.

NOTICE TO CONTRACTORS
- PROJECT ELEVATIONS ARE BASED ON NAVD88 AND HOWARD COUNTY'S BENCHMARK SYSTEM
- PREVIOUS PROJECTS USED OTHER DATUMS
- APPLY THE FOLLOWING CONVERSIONS WHEN USING PREVIOUS CONTRACT DRAWINGS:
  - ADDITION NO. 6: SUBTRACT 0.80 FT
  - PRIOR ADDITIONS: SUBTRACT 1.04 FT

DEPARTMENT OF PUBLIC WORKS
HOWARD COUNTY, MARYLAND

CHIEF, BUREAU OF UTILITIES — DATE

DES: SR
DRN: AJS
CHK: KRS
DATE: 10/2016

DATE	REV	DESCRIPTION
07/2019		RECORD DRAWING

ELECTRICAL

GRAVITY BELT THICKENING AREA
AT EL128.00
ELECTRICAL AND I&C PLAN

LITTLE PATUXENT WATER RECLAMATION PLANT
8TH ADDITION
BIOSOLIDS PROCESSING FACILITIES – PHASE I

CAPITAL PROJECT S–6295
CONTRACT NO. 24–4935

ELECTION DISTRICT NO. 6
HOWARD COUNTY, MARYLAND

SCALE AS SHOWN

SHEET 335 OF 463

E-101

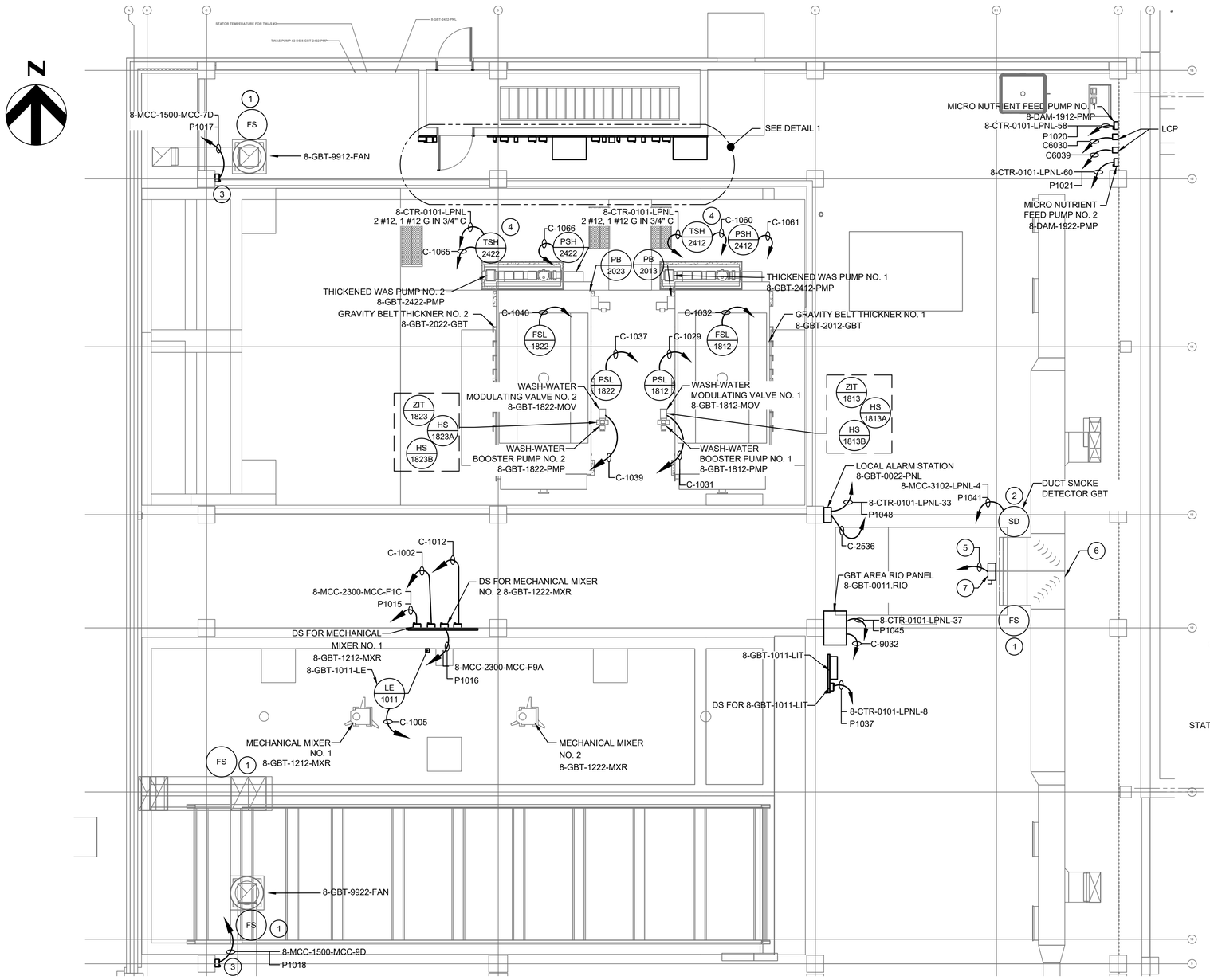

DRAWING NOTES (CONTINUED):

5. NEW 10-MAU01 POWER FEEDER CONSISTING OF TWO (2) SETS OF 3-350KCMIL THWN CU WIRES AND 1-#3 AWG THWN GND WIRE EACH. EACH SET IN A DEDICATED 3" RIGID ALUMINUM CONDUIT. CONDUITS WILL BE ROUTED FROM 10-MAU01 LOCATION TO A LOCATION NEAR NEW MCC-9 TO BE INSTALLED IN CONSTRUCTION PHASE 2. THEN, CONDUIT INSTALLATION WILL BE COMPLETED. IF INSTALLED ABOVE ROOF, CONDUITS SHALL NOT BE AT LESS THAN 3-1/2" FROM ROOF SURFACE.
6. PROJECTION OF NEW 10-MAU01 FOOTPRINT TO BE ROOF TOP INSTALLED.
7. PROVIDE A HEAVY DUTY, 3 POLE, 600V, 400A, NON-FUSIBLE DISCONNECT SWITCH IN A NEMA 4X ENCLOSURE, TO BE INSTALLED AT ROOF NEXT TO NEW 10-MAU01.

GENERAL NOTES:

1. FOR SYMBOLS AND ABBREVIATIONS, SEE DRAWING E-1.
2. FOR CONSTRUCTION SEQUENCE, SEE DRAWING E-2.
3. FOR 8-MCC-2300-MCC ONE LINE DIAGRAM, SEE DRAWINGS E-14 AND E-15.
4. FOR PANELBOARD SCHEDULE, SEE DRAWINGS E-901 THRU E-904.
5. FOR CABLE AND CONDUIT SCHEDULE, SEE DRAWINGS E-905 THRU E-913, E-918 AND E-919.
6. LOCATION OF EQUIPMENT I.E. MOTORS, VALVES, UNIT HEATERS, EXHAUST FANS, ETC. IS FOR REFERENCE ONLY. FOR EXACT LOCATION OF EQUIPMENT, REFER TO MECHANICAL, HVAC AND PLUMBING DRAWINGS.
7. DRAWINGS ARE INTENDED TO DEPICT DESIGN INTENT; CONTRACTOR TO REFER TO SPECIFICATIONS, P&IDS, AND STANDARD DETAILS FOR FURTHER INSTALLATION REQUIREMENTS.
8. NOT ALL INSTRUMENTATION EQUIPMENT ARE SHOWN ON THIS PLAN, REFER TO PROCESS AND P&ID DRAWINGS. THE DISCONNECT SWITCHES SHOWN FOR THE INSTRUMENTS; I.E., FITS, AITS, LITS, PITS, TITS, ETC. ARE 20A SNAP SWITCHES.

DRAWING NOTES:

1. EXISTING FLOW SWITCH TO BE REUSED.
2. EXISTING DUCT SMOKE DETECTOR TO BE REUSED.
3. DISCONNECT SWITCH FOR EXHAUST FAN 8-GBT-9912-FAN AND 8-GBT-9922-FAN TO BE MOUNTED ON THE ROOF NEXT TO THE MOTORS.
4. PROVIDE 20A, 1P BREAKER FROM PANEL 8-CTR-0101-LPNL AND 2 #12, 1 #12G CABLES IN 3/4" CONDUIT.

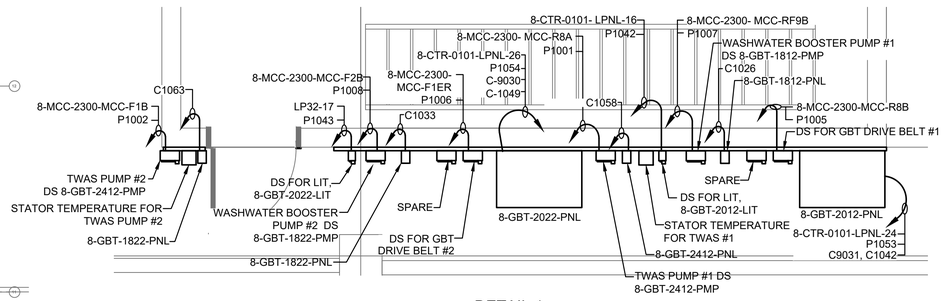

DETAIL 1

NONE

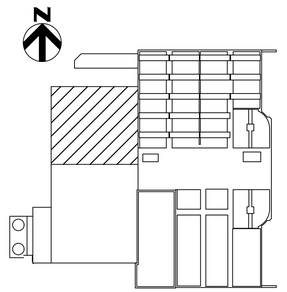

KEY PLAN

THE DRAWINGS IN THIS SET ARE RECORD DRAWINGS. THEY ARE CONSTRUCTION CONTRACT DRAWINGS WHICH HAVE BEEN REVISED BASED ON AVAILABLE FIELD INFORMATION RECORDED BY OTHERS DURING CONSTRUCTION OF THIS CONTRACT. THERE HAS BEEN NO VERIFICATION OF DIMENSIONS SHOWN ON THE CONSTRUCTION DRAWINGS OR THE ACCURACY/COMPLETENESS OF THE FIELD INFORMATION RECEIVED.

SIGNATURE _____ DATE 2/7/2020

GRAPHIC SCALE

0 4 8 12 16

SCALE: 3/16" = 1'-0"

GRAVITY BELT THICKENING AREA - AT EL 142.00 ELECTRICAL AND I &C PLAN

SCALE: 3/16" = 1'-0"

SHAH & ASSOCIATES

AS-BUILT REPLACEMENT SHEET

PROFESSIONAL CERTIFICATION

THIS DRAWING WAS ORIGINALLY APPROVED FOR CONSTRUCTION AND SEALED BY KANAIYALAL R. SHAH, A REGISTERED PROFESSIONAL ENGINEER IN THE STATE OF MARYLAND, NO. 11084.

NOTICE TO CONTRACTORS

- PROJECT ELEVATIONS ARE BASED ON NAVD88 AND HOWARD COUNTY'S BENCHMARK SYSTEM
- PREVIOUS PROJECTS USED OTHER DATUMS
- APPLY THE FOLLOWING CONVERSIONS WHEN USING PREVIOUS CONTRACT DRAWINGS:
  - ADDITION NO. 6: SUBTRACT 0.80 FT
  - PRIOR ADDITIONS: SUBTRACT 1.04 FT

DEPARTMENT OF PUBLIC WORKS
HOWARD COUNTY, MARYLAND

CHIEF, BUREAU OF UTILITIES DATE

DES: SR
DRN: AJS
CHK: KRS
DATE: 10/2016

DATE	REV	DESCRIPTION
07/2019		RECORD DRAWING

ELECTRICAL

GRAVITY BELT THICKENER AREA
AT EL142.00
ELECTRICAL AND I&C PLAN

LITTLE PATUXENT WATER RECLAMATION PLANT
8TH ADDITION
BIOSOLIDS PROCESSING FACILITIES – PHASE I

CAPITAL PROJECT S-6295
CONTRACT NO. 24-4935

ELECTION DISTRICT NO. 6
HOWARD COUNTY, MARYLAND

SCALE AS SHOWN

SHEET 336 OF 463

E-102

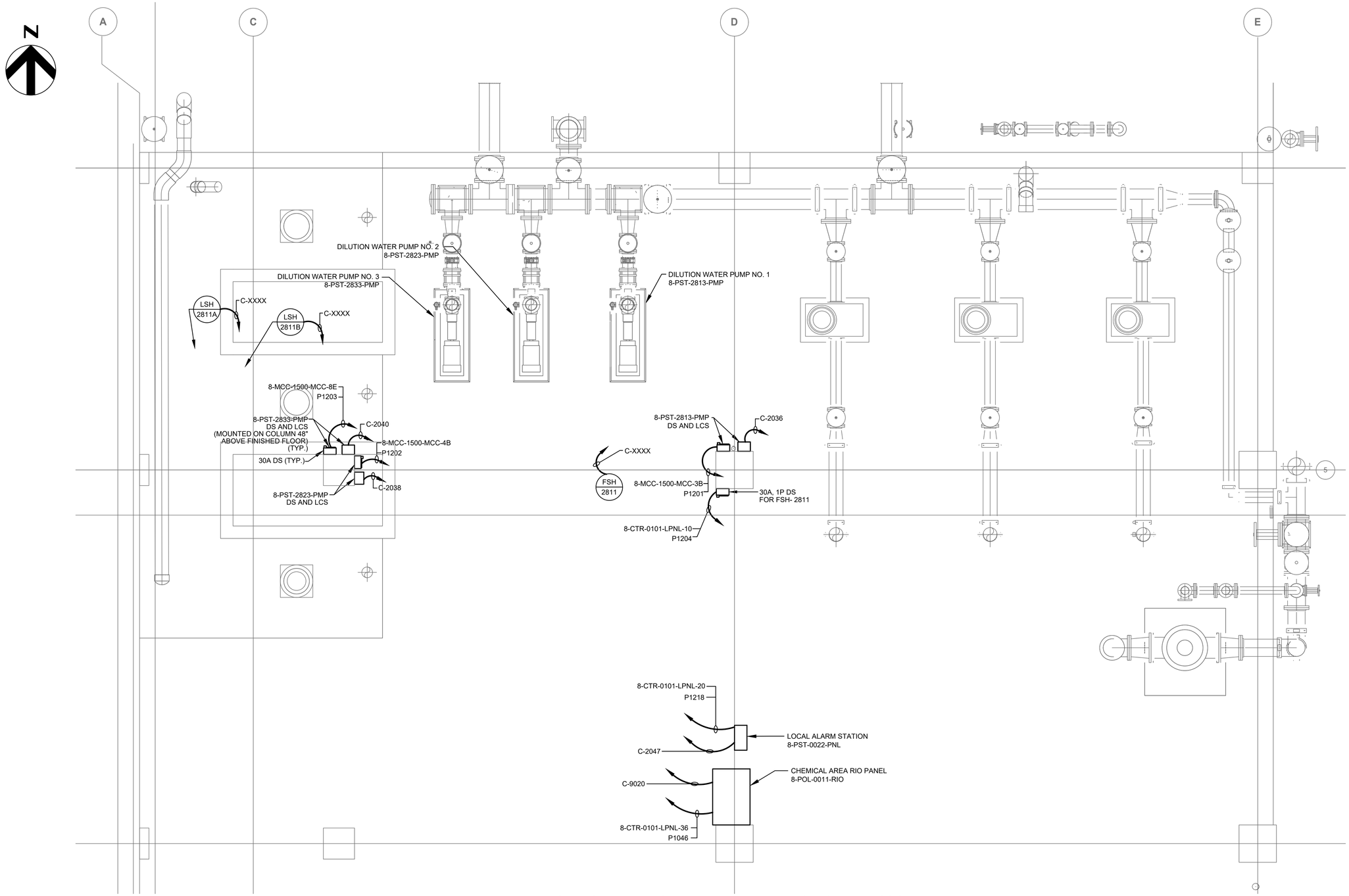

CHEMICAL HANDLING AREA - AT EL 130.00 - ELECTRICAL AND I &C OVERALL PLAN

SCALE: 3/8" = 1'-0"

GENERAL NOTES:

1. FOR SYMBOLS AND ABBREVIATIONS, SEE DRAWING E-1.
2. FOR CONSTRUCTION SEQUENCE, SEE DRAWING E-2.
3. FOR 8-MCC-1500-MCC ONE LINE DIAGRAM EXISTING AND MODIFICATION, SEE DRAWINGS E-15 AND E-16.
4. FOR PANELBOARD SCHEDULES, SEE DRAWINGS E-901 THRU E-904.
5. FOR CABLE AND CONDUIT SCHEDULE, SEE DRAWINGS E-905 THRU E-913.
6. LOCATION OF EQUIPMENT IE. MOTORS, VALVES, UNIT HEATERS, EXHAUST FANS, ETC. IS FOR REFERENCE ONLY. FOR EXACT LOCATION OF EQUIPMENT, REFER TO MECHANICAL, HVAC AND PLUMBING DRAWINGS.
7. DRAWINGS ARE INTENDED TO DEPICT DESIGN INTENT; CONTRACTOR TO REFER TO SPECIFICATIONS, P&IDS, AND STANDARD DETAILS FOR FURTHER INSTALLATION REQUIREMENTS.
8. NOT ALL INSTRUMENTATION EQUIPMENT ARE SHOWN ON THIS PLAN, REFER TO PROCESS AND P&ID DRAWINGS.

THE DRAWINGS IN THIS SET ARE RECORD DRAWINGS. THEY ARE CONSTRUCTION CONTRACT DRAWINGS WHICH HAVE BEEN REVISED BASED ON AVAILABLE FIELD INFORMATION RECORDED BY OTHERS DURING CONSTRUCTION OF THIS CONTRACT. THERE HAS BEEN NO VERIFICATION OF DIMENSIONS SHOWN ON THE CONSTRUCTION DRAWINGS OR THE ACCURACY/COMPLETENESS OF THE FIELD INFORMATION RECEIVED.

SIGNATURE — DATE 2/7/2023

GRAPHIC SCALE

0 2 4 6 8

SCALE: 3/8" = 1'-0"

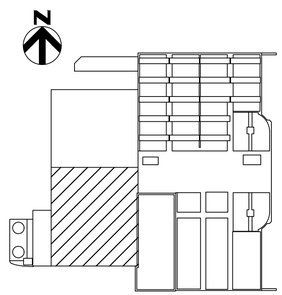

KEY PLAN

SHAH & ASSOCIATES

HDR

AS-BUILT REPLACEMENT SHEET

PROFESSIONAL CERTIFICATION
THIS DRAWING WAS ORIGINALLY APPROVED FOR CONSTRUCTION AND SEALED BY KANAIYALAL R. SHAH, A REGISTERED PROFESSIONAL ENGINEER IN THE STATE OF MARYLAND, NO. 11084.

NOTICE TO CONTRACTORS
- PROJECT ELEVATIONS ARE BASED ON NAVD88 AND HOWARD COUNTY'S BENCHMARK SYSTEM
- PREVIOUS PROJECTS USED OTHER DATUMS
- APPLY THE FOLLOWING CONVERSIONS WHEN USING PREVIOUS CONTRACT DRAWINGS:
  - ADDITION NO. 6: SUBTRACT 0.80 FT
  - PRIOR ADDITIONS: SUBTRACT 1.04 FT

DEPARTMENT OF PUBLIC WORKS
HOWARD COUNTY, MARYLAND

CHIEF, BUREAU OF UTILITIES — DATE

DES:	SR
DRN:	AJS
CHK:	KRS
DATE:	10/2016

DATE	REV	DESCRIPTION
07/2019		RECORD DRAWING

ELECTRICAL

CHEMICAL HANDLING AREA
AT EL. 130.00
ELECTRICAL AND I&C OVERALL PLAN

LITTLE PATUXENT WATER RECLAMATION PLANT
8TH ADDITION
BIOSOLIDS PROCESSING FACILITIES – PHASE I

CAPITAL PROJECT S–6295
CONTRACT NO. 24–4935

ELECTION DISTRICT NO. 6
HOWARD COUNTY, MARYLAND

SCALE AS SHOWN

SHEET 337 OF 463

E-120

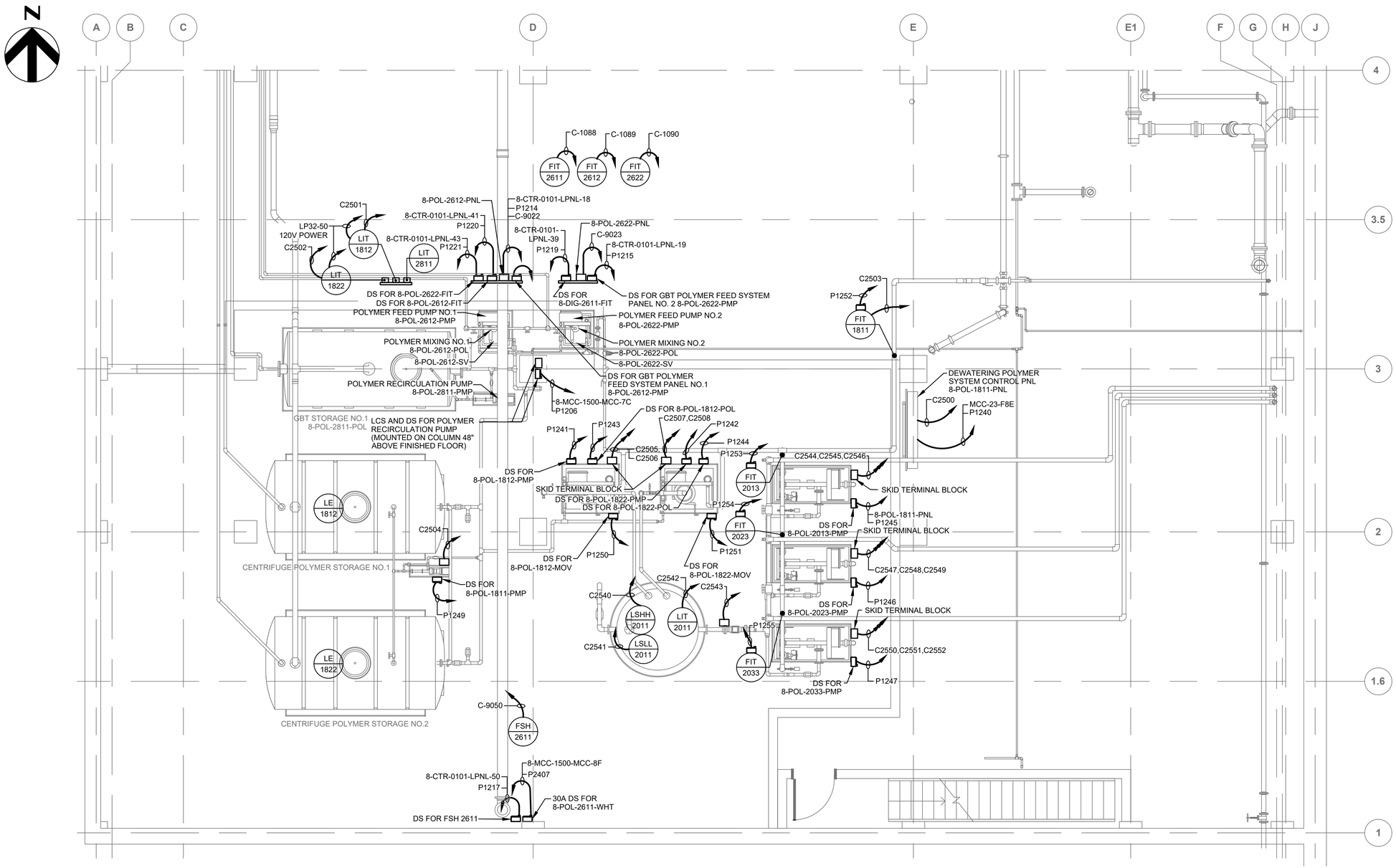

GENERAL NOTES:

1. FOR SYMBOLS AND ABBREVIATIONS, SEE DRAWING E-1.
2. FOR CONSTRUCTION SEQUENCE, SEE DRAWING E-2.
3. FOR PANELBOARD LOCATION, SEE DRAWING E-29.
4. FOR PANELBOARDS SCHEDULES, SEE DRAWINGS E-901 THRU E-904.
5. FOR CABLE AND CONDUIT SCHEDULE, SEE DRAWINGS E-905 THRU E-913, E-918 AND E-919.
6. LOCATION OF EQUIPMENT IE. MOTORS, VALVES, UNIT HEATERS, EXHAUST FANS, ETC. IS FOR REFERENCE ONLY. FOR EXACT LOCATION OF EQUIPMENT, REFER TO MECHANICAL, HVAC AND PLUMBING DRAWINGS.
7. DRAWINGS ARE INTENDED TO DEPICT DESIGN INTENT; CONTRACTOR TO REFER TO SPECIFICATIONS, P&IDS, AND STANDARD DETAILS FOR FURTHER INSTALLATION REQUIREMENTS.
8. NOT ALL INSTRUMENTATION EQUIPMENT ARE SHOWN ON THIS PLAN, REFER TO PROCESS AND P&ID DRAWINGS. THE DISCONNECT SWITCHES SHOWN FOR THE INSTRUMENTS; I.E., FITS, AITS, LITS, PITS, TITS, ETC. ARE 20A SNAP SWITCHES.

GRAPHIC SCALE

0 4 8 12

SCALE: 1/4" = 1'-0"

POLYMER SYSTEM - EL 129.20 - ELECTRICAL AND I &C PLAN

SCALE: 1/4" = 1'-0"

THE DRAWINGS IN THIS SET ARE RECORD DRAWINGS. THEY ARE CONSTRUCTION CONTRACT DRAWINGS WHICH HAVE BEEN REVISED BASED ON AVAILABLE FIELD INFORMATION RECORDED BY OTHERS DURING CONSTRUCTION OF THIS CONTRACT. THERE HAS BEEN NO VERIFICATION OF DIMENSIONS SHOWN ON THE CONSTRUCTION DRAWINGS OR THE ACCURACY/COMPLETENESS OF THE FIELD INFORMATION RECEIVED.

SIGNATURE _____ DATE 2/7/2020

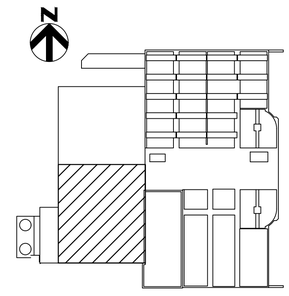

KEY PLAN

SHAH & ASSOCIATES

HDR

AS-BUILT REPLACEMENT SHEET

PROFESSIONAL CERTIFICATION

THIS DRAWING WAS ORIGINALLY APPROVED FOR CONSTRUCTION AND SEALED BY KANAIYALAL R. SHAH, A REGISTERED PROFESSIONAL ENGINEER IN THE STATE OF MARYLAND, NO. 11084.

NOTICE TO CONTRACTORS

- PROJECT ELEVATIONS ARE BASED ON NAVD88 AND HOWARD COUNTY'S BENCHMARK SYSTEM
- PREVIOUS PROJECTS USED OTHER DATUMS
- APPLY THE FOLLOWING CONVERSIONS WHEN USING PREVIOUS CONTRACT DRAWINGS:
  - ADDITION NO. 6: SUBTRACT 0.80 FT
  - PRIOR ADDITIONS: SUBTRACT 1.04 FT

DEPARTMENT OF PUBLIC WORKS
HOWARD COUNTY, MARYLAND

CHIEF, BUREAU OF UTILITIES DATE

DES:	SR
DRN:	AJS
CHK:	KRS
DATE:	10/2016

DATE	REV	DESCRIPTION
07/2019		RECORD DRAWING

ELECTRICAL

POLYMER SYSTEM - EL 129.20
ELECTRICAL AND I&C OVERALL PLAN

LITTLE PATUXENT WATER RECLAMATION PLANT
8TH ADDITION
BIOSOLIDS PROCESSING FACILITIES – PHASE I

CAPITAL PROJECT S-6295
CONTRACT NO. 24-4935

ELECTION DISTRICT NO. 6
HOWARD COUNTY, MARYLAND

SCALE AS SHOWN

SHEET 338 OF 463

E-122

SLUDGE THICKENING AREA
PLC CONTROL PANEL
8-GBT-0012-PNL

C-1028 — WASHWATER BOOSTER PUMP NO.1 STARTER 8-GBT-1812-MCC
- C-1026 — LCS
- 3 — M

C-1035 — WASHWATER BOOSTER PUMP NO.2 STARTER 8-GBT-1822-MCC
- C-1033 — LCS
- 3 — M

C-1001 — MIXER 1 STARTER 8-GBT-1212-MCC
C-1006 — MIXER 2 STARTER 8-GBT-1222-MCC
C-1019
C-1016
C-1017
C-1002
C-1012
- 3 — M
- LCS — PB — 1 — ESTOP
- LCS
- 3 — M

SCUM HOLDING TANK MIXERS AND LCS

SLUDGE THICKENING AREA
PLC CONTROL PANEL
8-GBT-0012-PNL

C-1009 — SCUM PUMP NO.1 VFD 8-GBT-1412-VFD
- C-1007 — PSH 1412
- 3 — M — LCS
- C-1008 — 20A — TSH 1412
- C-1023 — LP32

C-1014 — SCUM PUMP NO.2 VFD 8-GBT-1422-VFD
- C-1011 — PSH 1422
- 3 — M — LCS
- C-1013 — 20A — TSH 1422
- C-1027 — LP32

C-1056 — TWAS PUMP NO.1 VFD 8-GBT-2412-VFD
- C-1058
- 3 — M — LCS
- C-1060 — 20A — TSH 2412 — LP32
- C-1061 — PSH 2412

REFERENCE SHEET I-101, 102

GENERAL NOTES

1. SEE POWER ONE-LINE DIAGRAMS AND CONDUIT AND WIRE SCHEDULES FOR DRIVE, STARTER, AND MOTOR POWER CONDUIT AND WIRE REQUIREMENTS

KEY NOTES (X)

1 E-STOP PUSHBUTTON STOPS BOTH MIXERS AND SCUM PUMPS.
2 WIRNG AND CONDUIT PER MANUFACTURERS INSTRUCTIONS AND SHOP DRAWINGS.
3 INCLUDE 2#14 FOR MOTOR HEATER AND 2#14 FOR DISCONNECT SWITCH AUXILARY CONTACT, IN 3/4" CONDUIT, FROM CONTROLLER (VFD OR STARTER) TO MOTOR AS INDICATED IN SCHEMATIC DIAGRAM. TYPICAL FOR MOTORS.
4 SEE PANEL SCHEDULES FOR INSTRUMENT POWER CIRCUIT NUMBER, TYPICAL.

SLUDGE THICKENING AREA
PLC CONTROL PANEL
8-GBT-0012-PNL

C-1057 — TWAS PUMP NO.2 VFD 8-GBT-2412-VFD
- C-1063
- 3 — M — LCS
- C-1065 — 20A — TSH 2422 — LP32
- C-1066 — PSH 2422

DIGESTED SOLIDS AREA
NETWORK INTERFACE PANEL
8-GBT-0011-NIP

SEE SHEET E-913

JUNCTION BOX

C-9031 — GBT NO. 1 CONTROL PANEL 8-GBT-2012-PNL
C-1042 — GBT NO. 1 BELT DRIVE VFD
- 2
- PB 2012 — SSA 2012 — ZSA 2012A — ZSA 2012B
- M

C-9030 — GBT NO. 2 CONTROL PANEL 8-GBT-2022-PNL
C-1049 — GBT NO. 2 BELT DRIVE VFD
- 2
- PB 2022 — SSA 2022 — ZSA 2022A — ZSA 2022B
- M

GBT AREA RIO PANEL
8-GBT-0011-RIO

REFERENCE SHEET I-101,102

C-1003 — 20A — FIT 2012 — 4 LP32 — WAS FLOW
C-1004 — 20A — FIT 2022 — LP32
C-1005 — LIT 1011 — SCUM TANK LEVEL
C-2536 — GBT AREA LAS 8-GBT-0022-PNL

GBT AREA RIO PANEL
8-GBT-0011-RIO

REFERENCE SHEET I-101,102

C-1015 — PT 1412 — SCUM PUMP DISCHARGE PRESSURE
C-1010 — PT 1422
C-1018 — 20A — FIT 1612 — LP32 — SCUM FLOW
C-1021 — 20A — FIT 1622 — LP32
C-1024 — 20A — AIT 2011 — LP32 — WAS/SC SOLIDS DENSITY
C-1029 — PT 1812
C-1030 — C-1031 — ZIT 1812 — HS 1812A — HS 1812B — WASH WATER NO.1 MODULATING VALVE
C-1032 — FSL 1812
C-1037 — PIT 1822
C-1038 — C-1039 — ZIT 1822 — HS 1822A — HS 1822B — WASH WATER NO.2 MODULATING VALVE
C-1040 — FSL 1822
C-1045 — 20A — LIT 2013 — LP32
C-1051 — 20A — LIT 2023 — LP32
C-1067 — 20A — FIT 2413 — LP32 — TWAS FLOW
C-1069 — 20A — AIT 2413 — LP32 — TWAS SOLIDS DENSITY

THE DRAWINGS IN THIS SET ARE RECORD DRAWINGS. THEY ARE CONSTRUCTION CONTRACT DRAWINGS WHICH HAVE BEEN REVISED BASED ON AVAILABLE FIELD INFORMATION RECORDED BY OTHERS DURING CONSTRUCTION OF THIS CONTRACT. THERE HAS BEEN NO VERIFICATION OF DIMENSIONS SHOWN ON THE CONSTRUCTION DRAWINGS OR THE ACCURACY/COMPLETENESS OF THE FIELD INFORMATION RECEIVED.

SIGNATURE — DATE 2/7/2022

AS-BUILT REPLACEMENT SHEET

PROFESSIONAL CERTIFICATION

THIS DRAWING WAS ORIGINALLY APPROVED FOR CONSTRUCTION AND SEALED BY ROBERT L. ANDERSON, A REGISTERED PROFESSIONAL ENGINEER IN THE STATE OF MARYLAND, NO. 37997.

NOTICE TO CONTRACTORS

- PROJECT ELEVATIONS ARE BASED ON NAVD88 AND HOWARD COUNTY'S BENCHMARK SYSTEM
- PREVIOUS PROJECTS USED OTHER DATUMS
- APPLY THE FOLLOWING CONVERSIONS WHEN USING PREVIOUS CONTRACT DRAWINGS:
  - ADDITION NO. 6: SUBTRACT 0.80 FT
  - PRIOR ADDITIONS: SUBTRACT 1.04 FT

DEPARTMENT OF PUBLIC WORKS
HOWARD COUNTY, MARYLAND

CHIEF, BUREAU OF UTILITIES — DATE

DES: WAC
DRN: WAC
CHK: RLA
DATE: 12/2016

DATE	REV	DESCRIPTION
07/2019		RECORD DRAWING

ELECTRICAL

TWAS SYSTEM INSTRUMENT ONE-LINE DIAGRAM

LITTLE PATUXENT WATER RECLAMATION PLANT
8TH ADDITION
BIOSOLIDS PROCESSING FACILITIES - PHASE I

CAPITAL PROJECT S-6295
CONTRACT NO. 24-4935

ELECTION DISTRICT NO. 6
HOWARD COUNTY, MARYLAND

SCALE AS SHOWN

SHEET 339 OF 463

E-130

BIM 360://10054364 – Little Patuxent WRP 8th Addition/264591_E-HDR_V18.rvt
1/12/2022 9:33:00 AM

POLYMER AREA RIO
8-POL-0011-RIO

REFERENCE SHEET I-103

C-9050 — 20A — FSH 2611 — LP-32

C-9052 — C-9022

POLYMER FEED PUMP NO.1
8-GBT-2612-PNL

C-1076 — C-1078 — C-1077

1 — M — MC — POLYMER BLEND MICRO-CONTROLLER

PI/PDS 2612

SV — DW

M — 1

C-9023 — C-9053

POLYMER FEED PUMP NO.2
8-GBT-2622-PNL

C-1083 — C-1085 — C-1084

1 — M — MC — POLYMER BLEND MICRO-CONTROLLER

PI/PDS 2622

SV — DW

M — 1

C-1088 — 20A — FIT 2601 — LP32 — NPW FLOW

C-1089 — 20A — FIT 2612 — LP32 — POLYS FLOW

C-1090 — 20A — FIT 2622 — LP32 — POLYS FLOW

GENERAL NOTES

1. SEE POWER ONE-LINE DIAGRAMS AND CONDUIT AND WIRE SCHEDULES FOR DRIVE, STARTER, AND MOTOR POWER CONDUIT AND WIRE REQUIREMENTS

KEY NOTES (X)

1 WIRNG AND CONDUIT PER MANUFACTURERS INSTRUCTIONS AND SHOP DRAWINGS.

2 INCLUDE 2#14 FOR MOTOR HEATER AND 2#14 FOR DISCONNECT SWITCH AUXILARY CONTACT, IN 3/4" CONDUIT, FROM CONTROLLER (VFD OR STARTER) TO MOTOR AS INDICATED IN SCHEMATIC DIAGRAM. TYPICAL FOR MOTORS.

3 SEE PANEL SCHEDULES FOR INSTRUMENT POWER CIRCUIT NUMBER, TYPICAL.

SLUDGE THICKENING AREA
PLC CONTROL PANEL
8-GBT-0012-PNL

C-2035 — DILUTION WATER PUMP NO.1 VFD
8-PST-2813-VFD

C-2036 — 2 — M — LCS

C-2037 — DILUTION WATER PUMP NO.2 VFD
8-PST-2823-VFD

C-2038 — 2 — M — LCS

C-2039 — DILUTION WATER PUMP NO.3 VFD
8-PST-2833-VFD

C-2040 — 2 — M — LCS

POLYMER AREA RIO
8-POL-0011-RIO

REFERENCE SHEET I-204

C-2042 — LSH 2811A — SPOR DRYWELL SUMP HIGH LEVEL (BY OTHERS)

C-2044 — LSH 2811B — SPOR DRYWELL SUMP HIGH HIGH LEVEL (BY OTHERS)

C-2051 — 20A — FSH 2811 — LP-32

C-2045 — 20A — FIT 2812 — 3 LP32

C-2046 — 20A — FIT 2822 — LP32

DILUTION WATER FLOW

C-2047 — LOCAL ALARM STATION
8-PST-1011-LAS

C-2043 — POLYMER FILL LCP
8-POL-0811-PNL

C-2048 — C-2041 — PRECIRC PMP STRT
8-POL-2811-LCP

DIGESTED SOLIDS AREA
NETWORK INTERFACE PANEL
8-GBT-0011-NIP

C-2500

POLYMER SYSTEM CONTROL PANEL
8-POL-1811-PNL

C-2501 — LIT 1812

C-2502 — LIT 1822

C-2503 — 20A — FIT 1811 — LP-XX

C-2504 — M — POLYMER RECIRC PUMP
8-POL-1812-PMP

C-2505 — C-2506 — SKID TERMINAL BLOCK

M — POLYMER METERING PUMP
8-POL-1812-PMP

M — ACT.CHAMBER MIXER
8-POL-1812-POL

PSH 1812 — M — 8-POL-1812-MOV

C-2507 — C-2508 — SKID TERMINAL BLOCK

M — NEAT POLYMER METERING PUMP
8-POL-1822-PMP

M — ACT.CHAMBER MIXER
8-POL-1822-POL

PSH 1822 — M — 8-POL-1822-MOV

C-2540 — LSHH 2011

C-2541 — LSLL 2011

C-2542 — LIT 2011

C-2544 — C-2545 — C-2546 — SKID TERMINAL BLOCK

M — POLYMER SOLUTION METERING PUMP
8-POL-2013-PMP

S — 20A — FIT 2013 — PSH 2013 — LP-XX
8-POL-020-VLV

C-2547 — C-2548 — C-2549 — SKID TERMINAL BLOCK

M — POLYMER SOLUTION METERING PUMP
8-POL-2023-PMP

S — 20A — FIT 2023 — PSH 2023 — LP-XX
8-POL-021-VLV

C-2550 — C-2551 — C-2552 — SKID TERMINAL BLOCK

M — POLYMER SOLUTION METERING PUMP
8-POL-2033-PMP

S — 20A — FIT 2033 — PSH 2033 — LP-XX
8-POL-022-VLV

THE DRAWINGS IN THIS SET ARE RECORD DRAWINGS. THEY ARE CONSTRUCTION CONTRACT DRAWINGS WHICH HAVE BEEN REVISED BASED ON AVAILABLE FIELD INFORMATION RECORDED BY OTHERS DURING CONSTRUCTION OF THIS CONTRACT. THERE HAS BEEN NO VERIFICATION OF DIMENSIONS SHOWN ON THE CONSTRUCTION DRAWINGS OR THE ACCURACY/COMPLETENESS OF THE FIELD INFORMATION RECEIVED.

SIGNATURE — DATE 2/7/2023

HDR

AS-BUILT REPLACEMENT SHEET

PROFESSIONAL CERTIFICATION

THIS DRAWING WAS ORIGINALLY APPROVED FOR CONSTRUCTION AND SEALED BY ROBERT L. ANDERSON, A REGISTERED PROFESSIONAL ENGINEER IN THE STATE OF MARYLAND, NO. 37997.

NOTICE TO CONTRACTORS

- PROJECT ELEVATIONS ARE BASED ON NAVD88 AND HOWARD COUNTY'S BENCHMARK SYSTEM
- PREVIOUS PROJECTS USED OTHER DATUMS
- APPLY THE FOLLOWING CONVERSIONS WHEN USING PREVIOUS CONTRACT DRAWINGS:
  - ADDITION NO. 6: SUBTRACT 0.80 FT
  - PRIOR ADDITIONS: SUBTRACT 1.04 FT

DEPARTMENT OF PUBLIC WORKS
HOWARD COUNTY, MARYLAND

CHIEF, BUREAU OF UTILITIES — DATE

DES: WAC
DRN: WAC
CHK: RLA
DATE: 12/2016

DATE	REV	DESCRIPTION
07/2019		RECORD DRAWING

ELECTRICAL

POLYMER INSTRUMENT ONE LINE DIAGRAM

LITTLE PATUXENT WATER RECLAMATION PLANT
8TH ADDITION
BIOSOLIDS PROCESSING FACILITIES - PHASE I

CAPITAL PROJECT S-6295
CONTRACT NO. 24-4935

ELECTION DISTRICT NO. 6
HOWARD COUNTY, MARYLAND

SCALE AS SHOWN

SHEET 340 OF 463

E-131

BIM 360://10054364 – Little Patuxent WRP 8th Addition/264591_E-HDR_V18.rvt
1/12/2022 9:33:03 AM

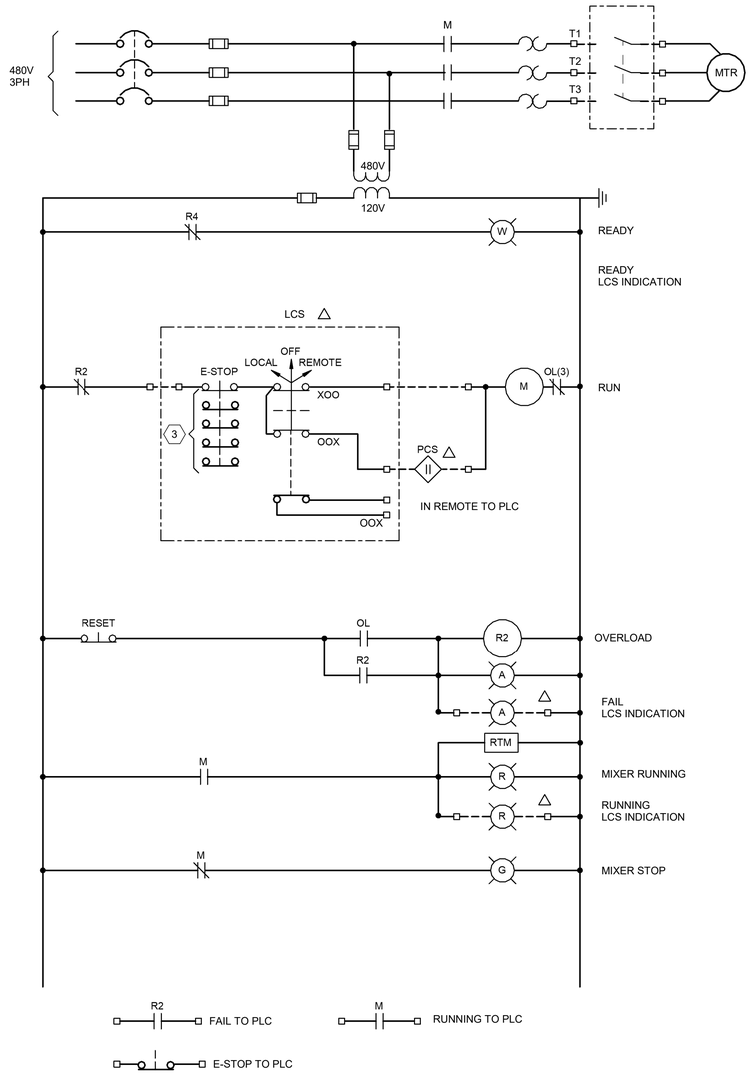

SCUM TANK MIXER SCHEMATIC

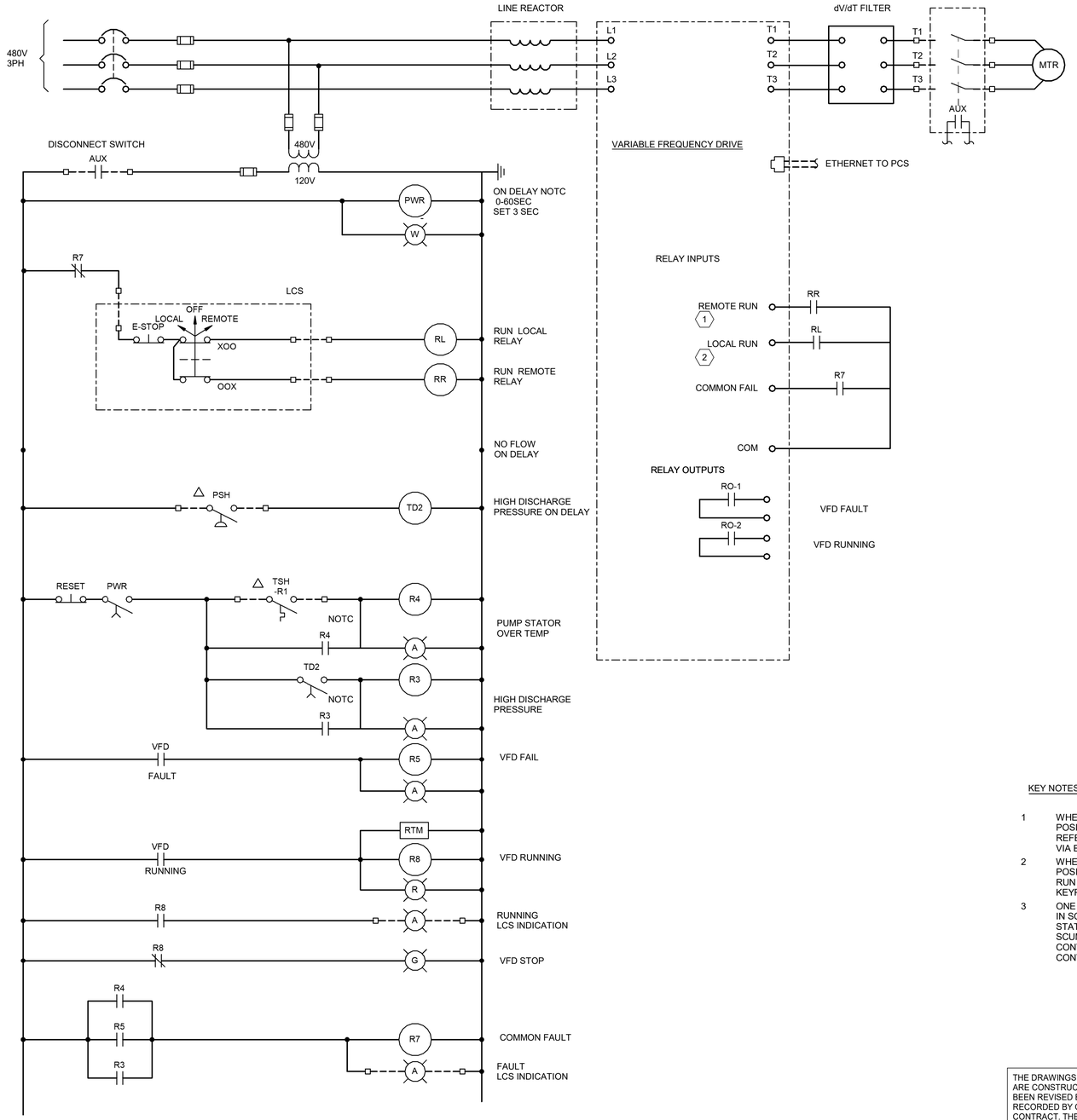

TYPICAL SCUM FEED PUMP VFD SCHEMATIC

KEY NOTES (X)

1. WHEN LOR SWITCH IS IN THE REMOTE POSITION VFD STOP/START AND SPEED REFERENCE SHALL BE COMMUNICATED VIA ETHERNET.
2. WHEN LOR SWITCH IS IN THE LOCAL POSITION THE VFD SHALL START AND RUN AT A SPEED ENTERED AT THE VFD KEYPAD.
3. ONE MULTI-STACK E-STOP PUSHBUTTON IN SCUM SYSTEM LOCAL CONTROL STATION WILL STOP BOTH MIXERS AND SCUM PUMPS. WIRE FROM SEPARATE CONTACTS TO EACH MOTOR CONTROLLER.

THE DRAWINGS IN THIS SET ARE RECORD DRAWINGS. THEY ARE CONSTRUCTION CONTRACT DRAWINGS WHICH HAVE BEEN REVISED BASED ON AVAILABLE FIELD INFORMATION RECORDED BY OTHERS DURING CONSTRUCTION OF THIS CONTRACT. THERE HAS BEEN NO VERIFICATION OF DIMENSIONS SHOWN ON THE CONSTRUCTION DRAWINGS OR THE ACCURACY/COMPLETENESS OF THE FIELD INFORMATION RECEIVED.

SIGNATURE — DATE 2/7/2023

AS-BUILT REPLACEMENT SHEET

PROFESSIONAL CERTIFICATION

THIS DRAWING WAS ORIGINALLY APPROVED FOR CONSTRUCTION AND SEALED BY ROBERT L. ANDERSON, A REGISTERED PROFESSIONAL ENGINEER IN THE STATE OF MARYLAND, NO. 37997.

NOTICE TO CONTRACTORS

- PROJECT ELEVATIONS ARE BASED ON NAVD88 AND HOWARD COUNTY'S BENCHMARK SYSTEM
- PREVIOUS PROJECTS USED OTHER DATUMS
- APPLY THE FOLLOWING CONVERSIONS WHEN USING PREVIOUS CONTRACT DRAWINGS:
  - ADDITION NO. 6: SUBTRACT 0.80 FT
  - PRIOR ADDITIONS: SUBTRACT 1.04 FT

DEPARTMENT OF PUBLIC WORKS
HOWARD COUNTY, MARYLAND

CHIEF, BUREAU OF UTILITIES — DATE

DES: WAC
DRN: WAC
CHK: RLA
DATE: 12/2016

DATE	REV	DESCRIPTION
07/2019		RECORD DRAWING

ELECTRICAL

WAS AND SCUM PUMP SCHEMATIC DIAGRAM

LITTLE PATUXENT WATER RECLAMATION PLANT
8TH ADDITION
BIOSOLIDS PROCESSING FACILITIES - PHASE I

CAPITAL PROJECT S-6295
CONTRACT NO. 24-4935

ELECTION DISTRICT NO. 6
HOWARD COUNTY, MARYLAND

SCALE AS SHOWN

SHEET 341 OF 463

E-132

BIM 360://10054364 – Little Patuxent WRP 8th Addition/264591_E-HDR_V18.rvt
1/12/2022 9:33:05 AM

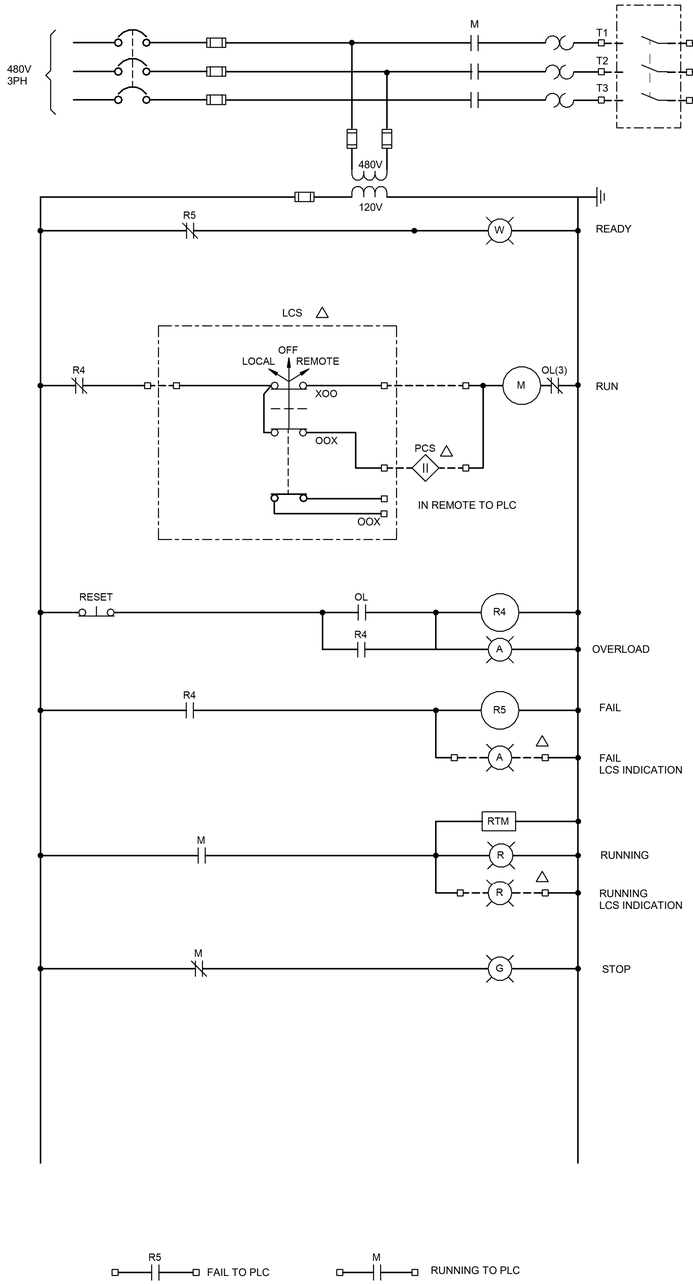

WASHWATER PUMP SCHEMATIC

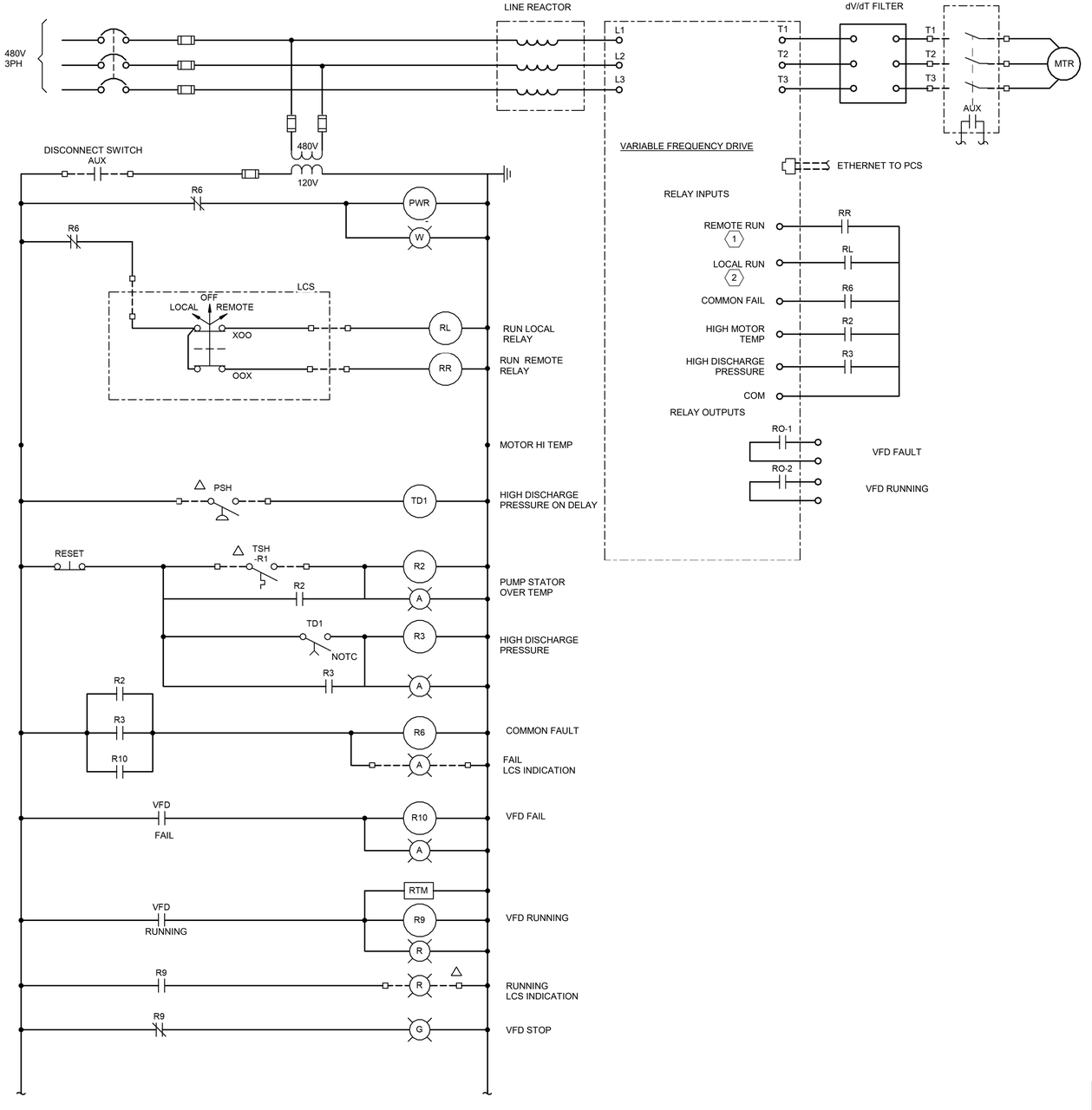

TYPICAL TWAS PUMP VFD SCHEMATIC

KEY NOTES (X)

1. WHEN LOR SWITCH IS IN THE REMOTE POSITION VFD STOP/START AND SPEED REFERENCE SHALL BE COMMUNICATED VIA ETHERNET.
2. WHEN LOR SWITCH IS IN THE LOCAL POSITION THE VFD SHALL START AND RUN AT A SPEED ENTERED AT THE VFD KEYPAD.

THE DRAWINGS IN THIS SET ARE RECORD DRAWINGS. THEY ARE CONSTRUCTION CONTRACT DRAWINGS WHICH HAVE BEEN REVISED BASED ON AVAILABLE FIELD INFORMATION RECORDED BY OTHERS DURING CONSTRUCTION OF THIS CONTRACT. THERE HAS BEEN NO VERIFICATION OF DIMENSIONS SHOWN ON THE CONSTRUCTION DRAWINGS OR THE ACCURACY/COMPLETENESS OF THE FIELD INFORMATION RECEIVED.

SIGNATURE — DATE 2/7/2023

AS-BUILT REPLACEMENT SHEET

PROFESSIONAL CERTIFICATION

THIS DRAWING WAS ORIGINALLY APPROVED FOR CONSTRUCTION AND SEALED BY ROBERT L. ANDERSON, A REGISTERED PROFESSIONAL ENGINEER IN THE STATE OF MARYLAND, NO. 37997.

NOTICE TO CONTRACTORS

- PROJECT ELEVATIONS ARE BASED ON NAVD88 AND HOWARD COUNTY'S BENCHMARK SYSTEM
- PREVIOUS PROJECTS USED OTHER DATUMS
- APPLY THE FOLLOWING CONVERSIONS WHEN USING PREVIOUS CONTRACT DRAWINGS:
  - ADDITION NO. 6: SUBTRACT 0.80 FT
  - PRIOR ADDITIONS: SUBTRACT 1.04 FT

DEPARTMENT OF PUBLIC WORKS
HOWARD COUNTY, MARYLAND

CHIEF, BUREAU OF UTILITIES — DATE

DES: WAC
DRN: WAC
CHK: RLA
DATE: 12/2016

DATE	REV	DESCRIPTION
07/2019		RECORD DRAWING

ELECTRICAL

TWAS AND WASHWATER PUMP SCHEMATIC DIAGRAMS

LITTLE PATUXENT WATER RECLAMATION PLANT
8TH ADDITION
BIOSOLIDS PROCESSING FACILITIES - PHASE I

CAPITAL PROJECT S-6295
CONTRACT NO. 24-4935

ELECTION DISTRICT NO. 6
HOWARD COUNTY, MARYLAND

SCALE AS SHOWN

SHEET 342 OF 463

E-133

BIM 360://10054364 – Little Patuxent WRP 8th Addition/264591_E-HDR_V18.rvt
1/12/2022 9:33:06 AM

DRAWING NOTES CONTINUED:

(6) CONDUITS FROM THE DIGESTER BUILDING ELECTRICAL ROOM TO THE DIGESTER BUILDING EQUIPMENT SHALL BE RUN AS FOLLOWS:

A. FROM MCC AND VFD TO A PULL BOX UNDER THE SOLIDS PIPE GALLERY ROOF.

B. FROM THE PULL BOX UNDER THE PIPE GALLERY ROOF TO A SECOND PULL BOX CLOSE TO THE EXISTING STAIR CASE IN THE SOLIDS PIPE GALLERY.

C. FROM PULL BOX TO THE DIGESTER BUILDING THRU THE EAST WALL AS DEPICTED ON DWGS E-201 AND E-321.

D. RUN THE 41 POWER CONDUITS THROUGH THE EXISTING 36" SLEEVE USING 2 IN SPACING BETWEEN CONDUITS. RUN THE CONTROL AND FIBER CONDUITS THROUGH THE EXISTING 24" SLEEVE USING 2 IN SPACING BETWEEN CONDUITS.

(7) RELOCATE MAU-685 CONTROL PANEL EXTEND CONDUIT AND CABLE FROM THE SOURCE TO THE NEW LOCATION

DRAWING NOTES:

(1) FOR POWER, INSTRUMENTATION AND CONTROL WORK IN THIS AREA REFER TO DRAWING E-267.

(2) EXISTING DUCT SMOKE DETECTOR TO BE REUSED . EXTEND EXISTING CONDUIT AND WIRE TO NEW LOCATION.

(3) EXISTING FLOW SWITCH TO BE REUSED FOR 8-685-MAU AT EL.145.20. EXTEND EXISTING CONDUIT AND WIRE TO NEW LOCATION.

(4) RELOCATED MAKE UP AIR UNIT SHALL BE REFED FROM MCC-9.

(5) PULL BOX TO RECEIVE CONDUITS FROM MCC. ON TOP OF PIPE GALLERY. SIZE PULL BOX AS REQUIRED PER NEC.

GENERAL NOTES CONTINUED:

8. FOR PANELBOARD SCHEDULE, SEE DRAWINGS E-901 THRU E-904.

GENERAL NOTES:

1. FOR SYMBOLS AND ABBREVIATIONS, SEE DRAWING E-1.
2. FOR CONSTRUCTION SEQUENCE, SEE DRAWING E-2.
3. FOR NEW 8-MCC-3100-MCC ONE LINE DIAGRAM, SEE DRAWINGS E-8 AND E-9.
4. FOR CABLE AND CONDUIT SCHEDULE, SEE DRAWINGS E-905 THRU E-913, E-918 AND E-919.
5. LOCATION OF EQUIPMENT I.E. MOTORS, VALVES, UNIT HEATERS, EXHAUST FANS, ETC. IS FOR REFERENCE ONLY. FOR EXACT LOCATION OF EQUIPMENT, REFER TO MECHANICAL, HVAC AND PLUMBING DRAWINGS.
6. DRAWINGS ARE INTENDED TO DEPICT DESIGN INTENT; CONTRACTOR TO REFER TO SPECIFICATIONS, P&IDS, AND STANDARD DETAILS FOR FURTHER INSTALLATION REQUIREMENTS.
7. NOT ALL INSTRUMENTATION EQUIPMENT ARE SHOWN ON THIS PLAN, REFER TO PROCESS AND P&ID DRAWINGS. THE DISCONNECT SWITCHES SHOWN FOR THE INSTRUMENTS; I.E., FITS, AITS, LITS, PITS, TITS, ETC. ARE 20A SNAP SWITCHES.

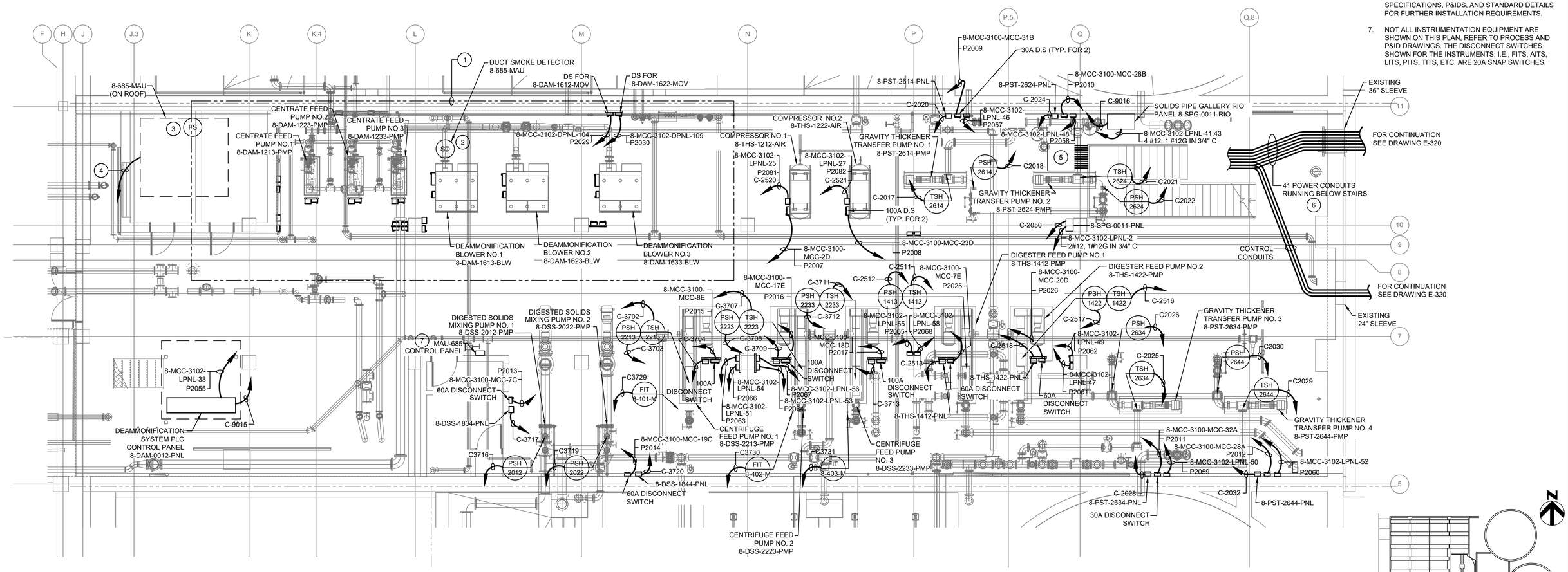

SOLIDS PIPE GALLERY - LOWER LEVEL - ELECTRICAL AND I&C PLAN

SCALE: 3/16" = 1'-0"

GRAPHIC SCALE

0 4 8 12 16

SCALE: 3/16" = 1'-0"

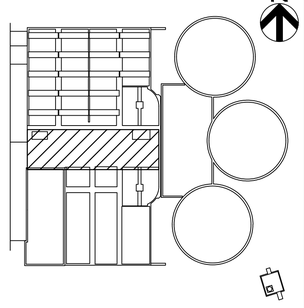

KEY PLAN

THE DRAWINGS IN THIS SET ARE RECORD DRAWINGS. THEY ARE CONSTRUCTION CONTRACT DRAWINGS WHICH HAVE BEEN REVISED BASED ON AVAILABLE FIELD INFORMATION RECORDED BY OTHERS DURING CONSTRUCTION OF THIS CONTRACT. THERE HAS BEEN NO VERIFICATION OF DIMENSIONS SHOWN ON THE CONSTRUCTION DRAWINGS OR THE ACCURACY/COMPLETENESS OF THE FIELD INFORMATION RECEIVED.

SIGNATURE — DATE 2/7/2020

SHAH & ASSOCIATES

HDR

AS-BUILT REPLACEMENT SHEET

PROFESSIONAL CERTIFICATION

THIS DRAWING WAS ORIGINALLY APPROVED FOR CONSTRUCTION AND SEALED BY KANAIYALAL R. SHAH, A REGISTERED PROFESSIONAL ENGINEER IN THE STATE OF MARYLAND, NO. 11084.

NOTICE TO CONTRACTORS

- PROJECT ELEVATIONS ARE BASED ON NAVD88 AND HOWARD COUNTY'S BENCHMARK SYSTEM
- PREVIOUS PROJECTS USED OTHER DATUMS
- APPLY THE FOLLOWING CONVERSIONS WHEN USING PREVIOUS CONTRACT DRAWINGS:
  - ADDITION NO. 6: SUBTRACT 0.80 FT.
  - PRIOR ADDITIONS: SUBTRACT 1.04 FT.

DEPARTMENT OF PUBLIC WORKS
HOWARD COUNTY, MARYLAND

CHIEF, BUREAU OF UTILITIES — DATE

DES: SR
DRN: AJS
CHK: KRS
DATE: 10/2016

DATE	REV	DESCRIPTION
07/2019		RECORD DRAWING

ELECTRICAL

SOLIDS PIPE GALLERY
LOWER LEVEL
ELECTRICAL AND I&C PLAN

LITTLE PATUXENT WATER RECLAMATION PLANT
8TH ADDITION
BIOSOLIDS PROCESSING FACILITIES – PHASE I

CAPITAL PROJECT S-6295
CONTRACT NO. 24-4935

ELECTION DISTRICT NO. 6
HOWARD COUNTY, MARYLAND

SCALE AS SHOWN

SHEET 343 OF 463

E-201

GENERAL NOTES CONTINUED:

8. NOT ALL INSTRUMENTATION EQUIPMENT ARE SHOWN ON THIS PLAN, REFER TO PROCESS AND P&ID DRAWINGS. THE DISCONNECT SWITCHES SHOWN FOR THE INSTRUMENT; i.e., FITS, AITS, LITS, PITS, TITS, ETC. ARE 20A SNAP SWITCHES.

GENERAL NOTES:

1. FOR SYMBOLS AND ABBREVIATIONS, SEE DRAWING E-1.
2. FOR CONSTRUCTION SEQUENCE, SEE DRAWING E-2.
3. FOR NEW 8-MCC-3100-MCC ONE LINE DIAGRAM, SEE DRAWINGS E-8 AND E-9.
4. FOR PANELBOARD SCHEDULE, SEE DRAWINGS E-901 THRU E-904.
5. FOR CABLE AND CONDUIT SCHEDULE, SEE DRAWINGS E-905 THRU E-913, E-918 AND E-919.
6. LOCATION OF EQUIPMENT IE. MOTORS, VALVES, UNIT HEATERS, EXHAUST FANS, ETC. IS FOR REFERENCE ONLY. FOR EXACT LOCATION OF EQUIPMENT, REFER TO MECHANICAL, HVAC AND PLUMBING DRAWINGS.
7. DRAWINGS ARE INTENDED TO DEPICT DESIGN INTENT; CONTRACTOR TO REFER TO SPECIFICATIONS, P&IDS, AND STANDARD DETAILS FOR FURTHER INSTALLATION REQUIREMENTS.

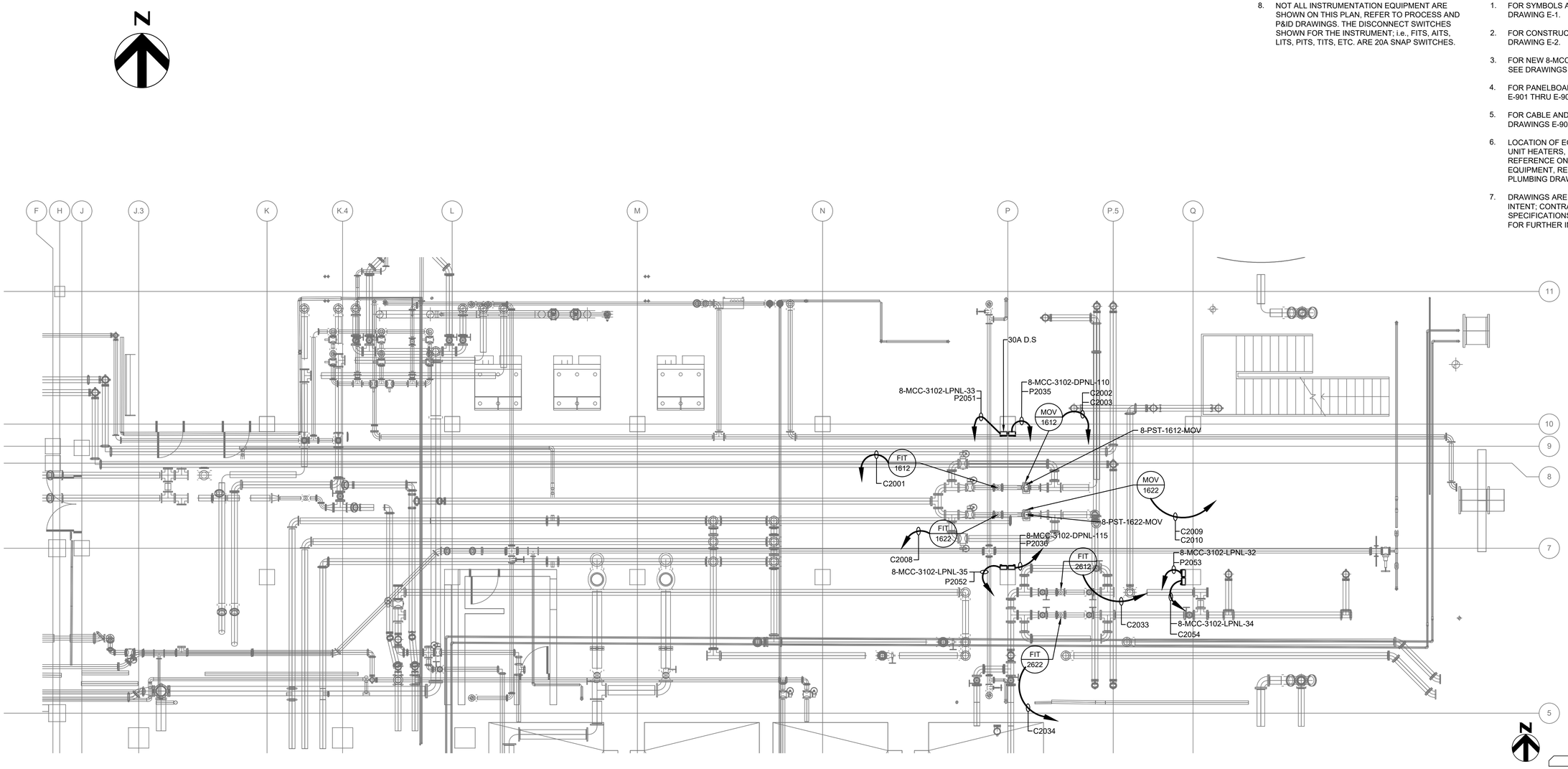

SOLIDS PIPE GALLERY - UPPER LEVEL - ELECTRICAL AND I&C PLAN

SCALE: 3/16" = 1'-0"

GRAPHIC SCALE

0 4 8 12 16

SCALE: 3/16" = 1'-0"

THE DRAWINGS IN THIS SET ARE RECORD DRAWINGS. THEY ARE CONSTRUCTION CONTRACT DRAWINGS WHICH HAVE BEEN REVISED BASED ON AVAILABLE FIELD INFORMATION RECORDED BY OTHERS DURING CONSTRUCTION OF THIS CONTRACT. THERE HAS BEEN NO VERIFICATION OF DIMENSIONS SHOWN ON THE CONSTRUCTION DRAWINGS OR THE ACCURACY/COMPLETENESS OF THE FIELD INFORMATION RECEIVED.

SIGNATURE — DATE 2/7/2020

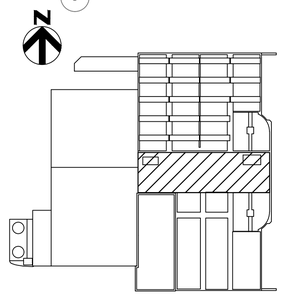

KEY PLAN

SHAH & ASSOCIATES

HDR

AS-BUILT REPLACEMENT SHEET

PROFESSIONAL CERTIFICATION
THIS DRAWING WAS ORIGINALLY APPROVED FOR CONSTRUCTION AND SEALED BY KANAIYALAL R. SHAH, A REGISTERED PROFESSIONAL ENGINEER IN THE STATE OF MARYLAND, NO. 11084.

NOTICE TO CONTRACTORS
- PROJECT ELEVATIONS ARE BASED ON NAVD88 AND HOWARD COUNTY'S BENCHMARK SYSTEM
- PREVIOUS PROJECTS USED OTHER DATUMS
- APPLY THE FOLLOWING CONVERSIONS WHEN USING PREVIOUS CONTRACT DRAWINGS:
  - ADDITION NO. 6: SUBTRACT 0.80 FT
  - PRIOR ADDITIONS: SUBTRACT 1.04 FT

DEPARTMENT OF PUBLIC WORKS
HOWARD COUNTY, MARYLAND

CHIEF, BUREAU OF UTILITIES DATE

DES: SR
DRN: AJS
CHK: KRS
DATE: 10/2016

DATE	REV	DESCRIPTION
07/2019		RECORD DRAWING

ELECTRICAL

SOLIDS PIPE GALLERY
UPPER LEVEL
ELECTRICAL AND I&C PLAN

LITTLE PATUXENT WATER RECLAMATION PLANT
8TH ADDITION
BIOSOLIDS PROCESSING FACILITIES – PHASE I

CAPITAL PROJECT S-6295
CONTRACT NO. 24-4935

ELECTION DISTRICT NO. 6
HOWARD COUNTY, MARYLAND

SCALE AS SHOWN

SHEET 344 OF 463

E-202

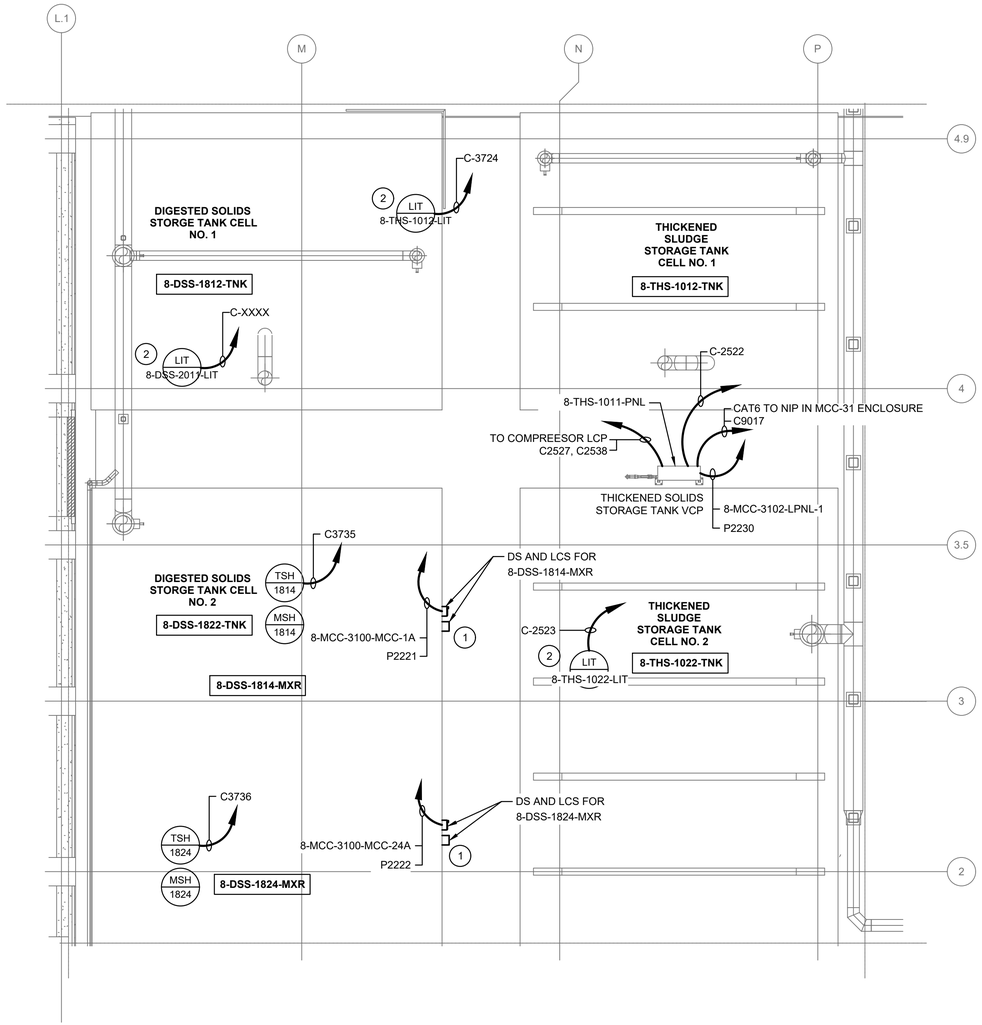

TOP PARTIAL PLAN AT EL 146.00 - ELECTRICAL AND I & C PLAN

SCALE: 3/16" = 1'-0"

GRAPHIC SCALE

0 4 8 12 16

SCALE: 3/16" = 1'-0"

GENERAL NOTES:

1. FOR SYMBOLS AND ABBREVIATIONS, SEE DRAWING E-1.
2. FOR CONSTRUCTION SEQUENCE, SEE DRAWING E-2.
3. FOR NEW 8-MCC-3100-MCC ONE LINE DIAGRAM, SEE DRAWINGS E-8 AND E-9.
4. FOR PANELBOARD SCHEDULE, SEE DRAWINGS E-901 THRU E-904.
5. FOR CABLE AND CONDUIT SCHEDULE, SEE DRAWINGS E-905 THRU E-913, E-918 AND E-919.
6. LOCATION OF EQUIPMENT IE. MOTORS, VALVES, UNIT HEATERS, EXHAUST FANS, ETC. IS FOR REFERENCE ONLY. FOR EXACT LOCATION OF EQUIPMENT, REFER TO MECHANICAL, HVAC AND PLUMBING DRAWINGS.
7. DRAWINGS ARE INTENDED TO DEPICT DESIGN INTENT; CONTRACTOR TO REFER TO SPECIFICATIONS, P&IDS, AND STANDARD DETAILS FOR FURTHER INSTALLATION REQUIREMENTS.
8. NOT ALL INSTRUMENTATION EQUIPMENT ARE SHOWN ON THIS PLAN, REFER TO PROCESS AND P&ID DRAWINGS. THE DISCONNECT SWITCHES SHOWN FOR THE INSTRUMENTS; I.E., FITS, AITS, LITS, PITS, TITS, ETC. ARE 20A SNAP SWITCHES.
9. FOR AREA CLASSIFICATION, SEE GENERAL DRAWING G-18. WORK SHALL BE PERFORMED IN ACCORDANCE WITH AREA CLASSIFICATION REQUIREMENTS. FOR ENCLOSURE AND CONDUIT TYPE, REFER TO SPECIFICATION SECTION 26 05 00.

DRAWING NOTES:

1. RELOCATED SUBMERSIBLE MIXER. FOR DETAIL ON SUBMERSIBLE MIXER CONTROL SEE P&ID.
2. LIT SHOWN ON THIS PLAN ARE PRESSURE BASED AND LOCATED IN THE GALLERY.

THE DRAWINGS IN THIS SET ARE RECORD DRAWINGS. THEY ARE CONSTRUCTION CONTRACT DRAWINGS WHICH HAVE BEEN REVISED BASED ON AVAILABLE FIELD INFORMATION RECORDED BY OTHERS DURING CONSTRUCTION OF THIS CONTRACT. THERE HAS BEEN NO VERIFICATION OF DIMENSIONS SHOWN ON THE CONSTRUCTION DRAWINGS OR THE ACCURACY/COMPLETENESS OF THE FIELD INFORMATION RECEIVED.

SIGNATURE 2/7/2020 DATE

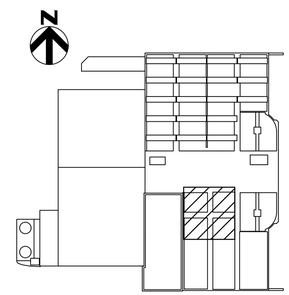

KEY PLAN

SHAH & ASSOCIATES

HDR

AS-BUILT REPLACEMENT SHEET

PROFESSIONAL CERTIFICATION
THIS DRAWING WAS ORIGINALLY APPROVED FOR CONSTRUCTION AND SEALED BY KANAIYALAL R. SHAH, A REGISTERED PROFESSIONAL ENGINEER IN THE STATE OF MARYLAND, NO. 11084.

NOTICE TO CONTRACTORS
- PROJECT ELEVATIONS ARE BASED ON NAVD88 AND HOWARD COUNTY'S BENCHMARK SYSTEM
- PREVIOUS PROJECTS USED OTHER DATUMS
- APPLY THE FOLLOWING CONVERSIONS WHEN USING PREVIOUS CONTRACT DRAWINGS:
  - ADDITION NO. 6: SUBTRACT 0.80 FT
  - PRIOR ADDITIONS: SUBTRACT 1.04 FT

DEPARTMENT OF PUBLIC WORKS
HOWARD COUNTY, MARYLAND

CHIEF, BUREAU OF UTILITIES DATE

DES:	SR
DRN:	AJS
CHK:	KRS
DATE:	10/2016

DATE	REV	DESCRIPTION
07/2019		RECORD DRAWING

ELECTRICAL

SOLIDS HOLDING TANKS TOP PARTIAL PLAN 1 AT EL 146.00
ELECTRICAL AND I&C PLAN

LITTLE PATUXENT WATER RECLAMATION PLANT
8TH ADDITION
BIOSOLIDS PROCESSING FACILITIES – PHASE I

CAPITAL PROJECT S–6295
CONTRACT NO. 24–4935

ELECTION DISTRICT NO. 6
HOWARD COUNTY, MARYLAND

SCALE AS SHOWN

SHEET 345 OF 463

E-222

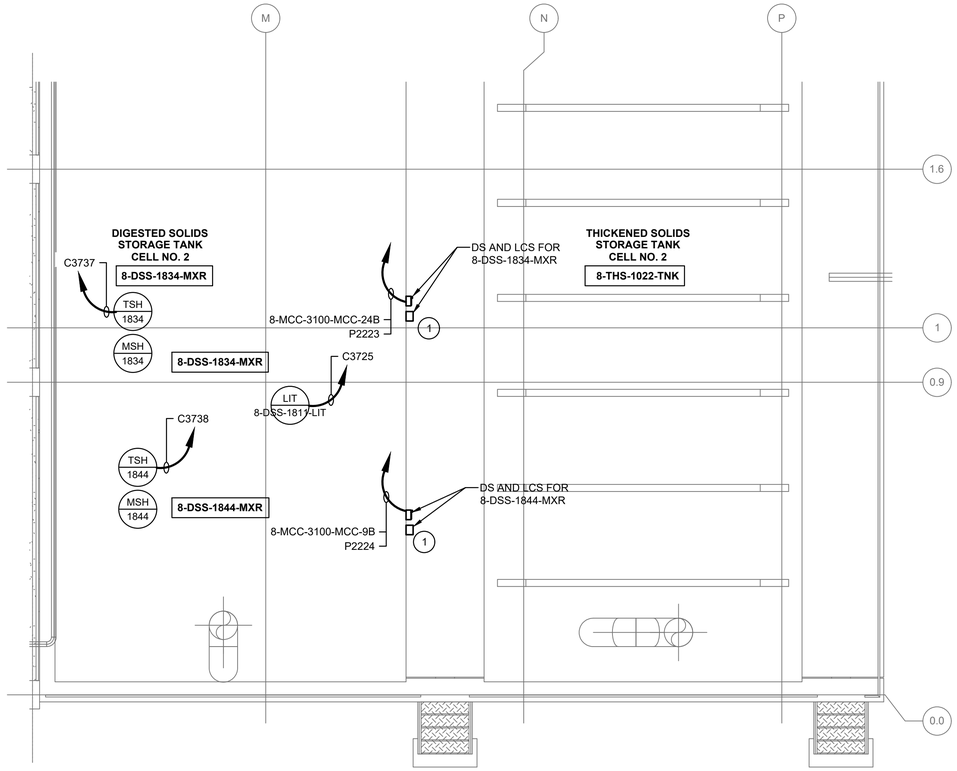

PARTIAL COVER PLAN AT EL 146.00 - ELECTRICAL AND I & C PLAN

SCALE: 3/16" = 1'-0"

GENERAL NOTES:

1. FOR SYMBOLS AND ABBREVIATIONS, SEE DRAWING E-1.
2. FOR CONSTRUCTION SEQUENCE, SEE DRAWING E-2.
3. FOR NEW 8-MCC-3100-MCC ONE LINE DIAGRAM, SEE DRAWINGS E-8 AND E-9.
4. FOR PANELBOARD SCHEDULE, SEE DRAWINGS E-901 THRU E-904.
5. FOR CABLE AND CONDUIT SCHEDULE, SEE DRAWINGS E-905 THRU E-913, E-918 AND E-919.
6. LOCATION OF EQUIPMENT IE. MOTORS, VALVES, UNIT HEATERS, EXHAUST FANS, ETC. IS FOR REFERENCE ONLY. FOR EXACT LOCATION OF EQUIPMENT, REFER TO MECHANICAL, HVAC AND PLUMBING DRAWINGS.
7. DRAWINGS ARE INTENDED TO DEPICT DESIGN INTENT; CONTRACTOR TO REFER TO SPECIFICATIONS, P&IDS, AND STANDARD DETAILS FOR FURTHER INSTALLATION REQUIREMENTS.
8. NOT ALL INSTRUMENTATION EQUIPMENT ARE SHOWN ON THIS PLAN, REFER TO PROCESS AND P&ID DRAWINGS. THE DISCONNECT SWITCHES SHOWN FOR THE INSTRUMENTS: I.E., FITS, AITS, LITS, PITS, TITS, ETC. ARE 20A SNAP SWITCHES.
9. FOR AREA CLASSIFICATION, SEE GENERAL DRAWING G-18. WORK SHALL BE PERFORMED IN ACCORDANCE WITH AREA CLASSIFICATION REQUIREMENTS. FOR ENCLOSURE AND CONDUIT TYPE, REFER TO SPECIFICATION SECTION 26 05 00.

DRAWING NOTES:

(1) RELOCATED SUBMERSIBLE MIXER. FOR DETAIL ON SUBMERSIBLE MIXER CONTROL SEE P&ID.

THE DRAWINGS IN THIS SET ARE RECORD DRAWINGS. THEY ARE CONSTRUCTION CONTRACT DRAWINGS WHICH HAVE BEEN REVISED BASED ON AVAILABLE FIELD INFORMATION RECORDED BY OTHERS DURING CONSTRUCTION OF THIS CONTRACT. THERE HAS BEEN NO VERIFICATION OF DIMENSIONS SHOWN ON THE CONSTRUCTION DRAWINGS OR THE ACCURACY/COMPLETENESS OF THE FIELD INFORMATION RECEIVED.

SIGNATURE _____ DATE 2/7/2020

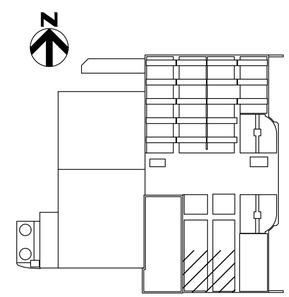

KEY PLAN

GRAPHIC SCALE

0 4 8 12 16

SCALE: 3/16" = 1'-0"

SHAH & ASSOCIATES

HDR

AS-BUILT REPLACEMENT SHEET

PROFESSIONAL CERTIFICATION
THIS DRAWING WAS ORIGINALLY APPROVED FOR CONSTRUCTION AND SEALED BY KANAIYALAL R. SHAH, A REGISTERED PROFESSIONAL ENGINEER IN THE STATE OF MARYLAND, NO. 11084.

NOTICE TO CONTRACTORS
- PROJECT ELEVATIONS ARE BASED ON NAVD88 AND HOWARD COUNTY'S BENCHMARK SYSTEM
- PREVIOUS PROJECTS USED OTHER DATUMS
- APPLY THE FOLLOWING CONVERSIONS WHEN USING PREVIOUS CONTRACT DRAWINGS:
  - ADDITION NO. 6: SUBTRACT 0.80 FT
  - PRIOR ADDITIONS: SUBTRACT 1.04 FT

DEPARTMENT OF PUBLIC WORKS
HOWARD COUNTY, MARYLAND

CHIEF, BUREAU OF UTILITIES DATE

DES: SR
DRN: AJS
CHK: KRS
DATE: 10/2016

DATE	REV	DESCRIPTION
07/2019		RECORD DRAWING

ELECTRICAL

SOLIDS HOLDING TANKS TOP PARTIAL PLAN 2 AT EL 146.00
ELECTRICAL AND I&C PLAN

LITTLE PATUXENT WATER RECLAMATION PLANT
8TH ADDITION
BIOSOLIDS PROCESSING FACILITIES – PHASE I

CAPITAL PROJECT S–6295
CONTRACT NO. 24–4935

ELECTION DISTRICT NO. 6
HOWARD COUNTY, MARYLAND

SCALE AS SHOWN

SHEET 346 OF 463

E-223

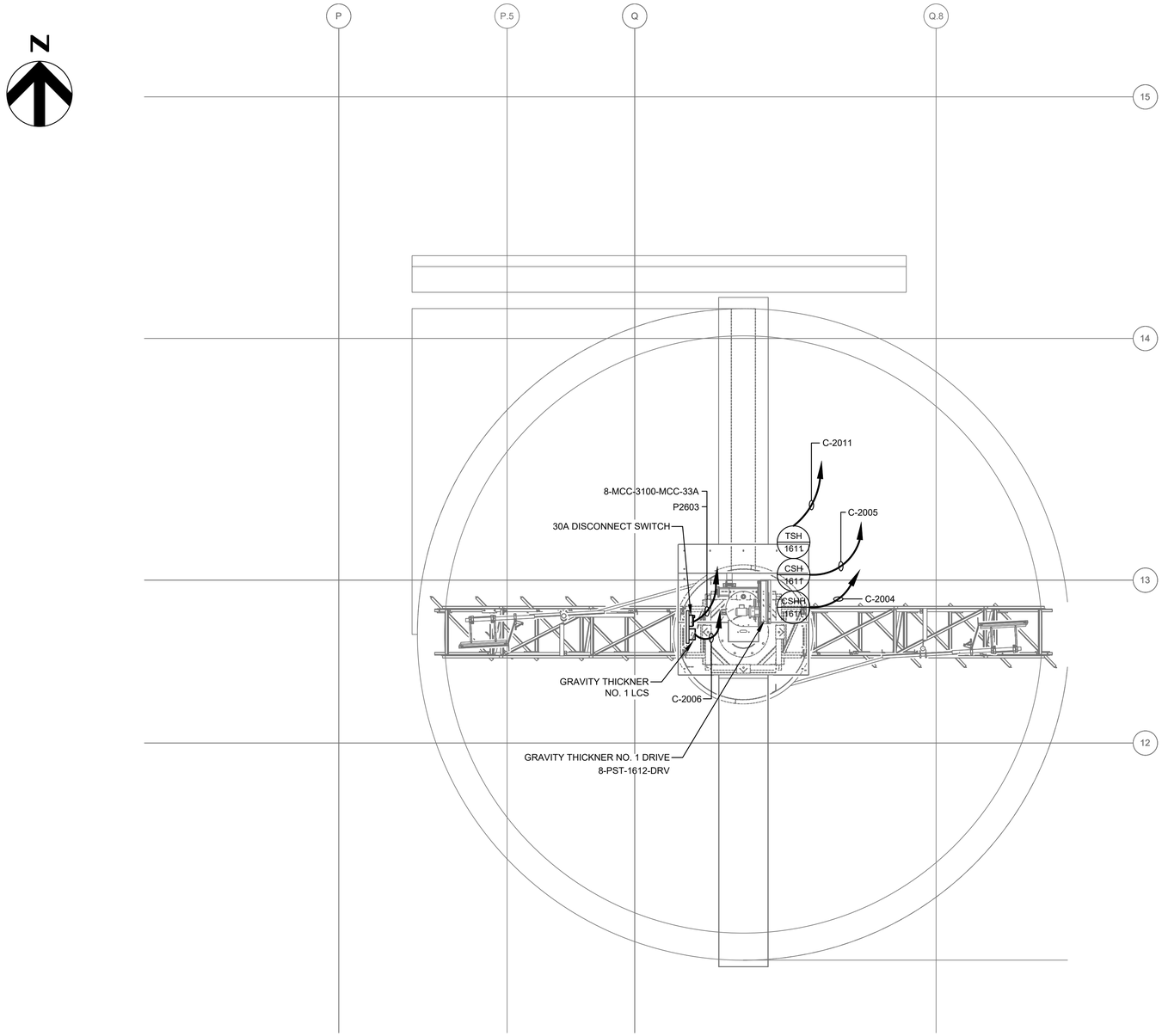

GRAPHIC SCALE

0 4 8 12

SCALE: 1/4" = 1'-0"

GRAVITY THICKENER NO. 1 EL 146.00 - ELECTRICAL AND I&C PLAN

SCALE: 1/4" = 1'-0"

GENERAL NOTES:

1. FOR SYMBOLS AND ABBREVIATIONS, SEE DRAWING E-1.
2. FOR CONSTRUCTION SEQUENCE, SEE DRAWING E-2.
3. FOR NEW 8-MCC-3100-MCC ONE LINE DIAGRAM, SEE DRAWINGS E-8 AND E-9.
4. FOR CABLE AND CONDUIT SCHEDULE, SEE DRAWINGS E-905 THRU E-913.
5. LOCATION OF EQUIPMENT IE. MOTORS, VALVES, UNIT HEATERS, EXHAUST FANS, ETC. IS FOR REFERENCE ONLY. FOR EXACT LOCATION OF EQUIPMENT, REFER TO MECHANICAL, HVAC AND PLUMBING DRAWINGS.
6. DRAWINGS ARE INTENDED TO DEPICT DESIGN INTENT; CONTRACTOR TO REFER TO SPECIFICATIONS, P&IDS, AND STANDARD DETAILS FOR FURTHER INSTALLATION REQUIREMENTS.
7. NOT ALL INSTRUMENTATION EQUIPMENT ARE SHOWN ON THIS PLAN, REFER TO PROCESS AND P&ID DRAWINGS.
8. FOR AREA CLASSIFICATION, SEE GENERAL DRAWING G-18. WORK SHALL BE PERFORMED IN ACCORDANCE WITH AREA CLASSIFICATION REQUIREMENTS. FOR ENCLOSURE AND CONDUIT TYPE, REFER TO SPECIFICATION SECTION 26 05 00.

THE DRAWINGS IN THIS SET ARE RECORD DRAWINGS. THEY ARE CONSTRUCTION CONTRACT DRAWINGS WHICH HAVE BEEN REVISED BASED ON AVAILABLE FIELD INFORMATION RECORDED BY OTHERS DURING CONSTRUCTION OF THIS CONTRACT. THERE HAS BEEN NO VERIFICATION OF DIMENSIONS SHOWN ON THE CONSTRUCTION DRAWINGS OR THE ACCURACY/COMPLETENESS OF THE FIELD INFORMATION RECEIVED.

SIGNATURE 2/7/2020 DATE

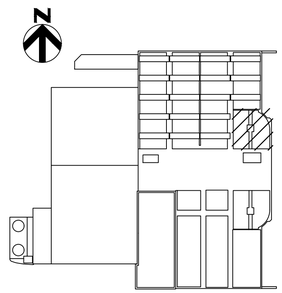

KEY PLAN

SHAH & ASSOCIATES

AS-BUILT REPLACEMENT SHEET

PROFESSIONAL CERTIFICATION
THIS DRAWING WAS ORIGINALLY APPROVED FOR CONSTRUCTION AND SEALED BY KANAYALAL R. SHAH, A REGISTERED PROFESSIONAL ENGINEER IN THE STATE OF MARYLAND, NO. 11084.

NOTICE TO CONTRACTORS
- PROJECT ELEVATIONS ARE BASED ON NAVD88 AND HOWARD COUNTY'S BENCHMARK SYSTEM
- PREVIOUS PROJECTS USED OTHER DATUMS
- APPLY THE FOLLOWING CONVERSIONS WHEN USING PREVIOUS CONTRACT DRAWINGS:
  - ADDITION NO. 6: SUBTRACT 0.80 FT
  - PRIOR ADDITIONS: SUBTRACT 1.04 FT

DEPARTMENT OF PUBLIC WORKS
HOWARD COUNTY, MARYLAND

CHIEF, BUREAU OF UTILITIES DATE

DES:	SR
DRN:	AJS
CHK:	KRS
DATE:	10/2016

DATE	REV	DESCRIPTION
07/2019		RECORD DRAWING

ELECTRICAL

GRAVITY THICKENER NO. 1
EL 146.00
ELECTRICAL AND I&C PLAN

LITTLE PATUXENT WATER RECLAMATION PLANT
8TH ADDITION
BIOSOLIDS PROCESSING FACILITIES – PHASE I

CAPITAL PROJECT S-6295
CONTRACT NO. 24-4935

ELECTION DISTRICT NO. 6
HOWARD COUNTY, MARYLAND

SCALE AS SHOWN

SHEET 347 OF 463

E-231

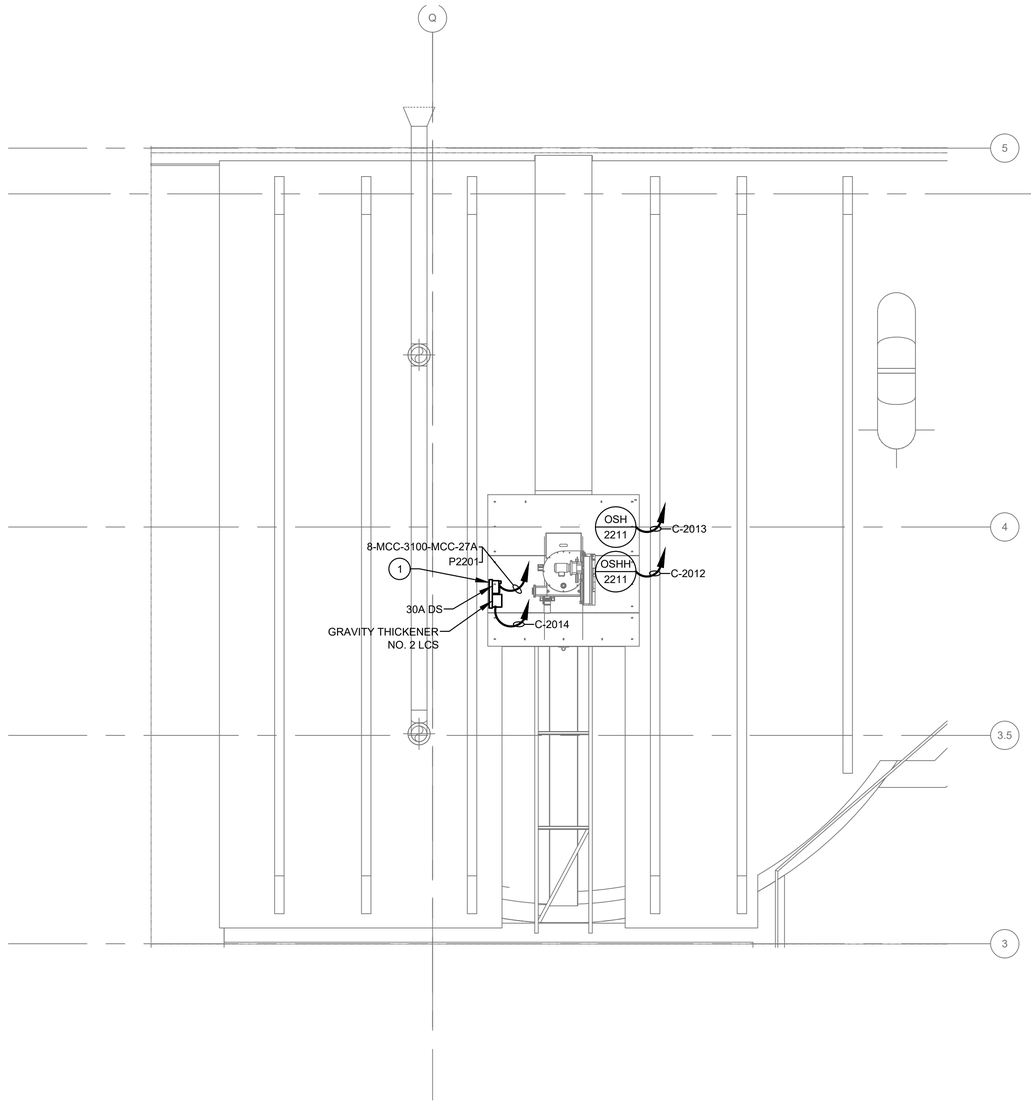

GENERAL NOTES:

1. FOR SYMBOLS AND ABBREVIATIONS, SEE DRAWING E-1.
2. FOR CONSTRUCTION SEQUENCE, SEE DRAWING E-2.
3. FOR NEW 8-MCC-3100-MCC ONE LINE DIAGRAM, SEE DRAWINGS E-8 AND E-9.
4. FOR PANELBOARD SCHEDULES, SEE DRAWINGS E-901 THRU E-904.
5. FOR CABLE AND CONDUIT SCHEDULE, SEE DRAWINGS E-905 THRU E-913, E-918 AND E-919.
6. DRAWINGS ARE INTENDED TO DEPICT DESIGN INTENT; CONTRACTOR TO REFER TO SPECIFICATIONS, P&IDS, AND STANDARD DETAILS FOR FURTHER INSTALLATION REQUIREMENTS.
7. LOCATION OF EQUIPMENT IE. MOTORS, VALVES, UNIT HEATERS, EXHAUST FANS, ETC. IS FOR REFERENCE ONLY. FOR EXACT LOCATION OF EQUIPMENT, REFER TO MECHANICAL, HVAC AND PLUMBING DRAWINGS.
8. NOT ALL INSTRUMENTATION EQUIPMENT ARE SHOWN ON THIS PLAN, REFER TO PROCESS AND P&ID DRAWINGS. THE DISCONNECT SWITCHES SHOWN FOR THE INSTRUMENTS; i.e., FITS, AITS, LITS, PITS, TITS, ETC. ARE 20A SNAP SWITCHES.
9. FOR AREA CLASSIFICATION, SEE GENERAL DRAWING G-18. WORK SHALL BE PERFORMED IN ACCORDANCE WITH AREA CLASSIFICATION REQUIREMENTS. FOR ENCLOSURE AND CONDUIT TYPE, REFER TO SPECIFICATION SECTION 26 05 00.

DRAWING NOTES:

(1) INSTALL GRAVITY THICKNER NO. 2 DISCONNECT SWITCH AND LOCAL CONTROL STATION ON UNISTRUT SUPPORT SIMILAR TO GRAVITY THICKNER NO. 1.

GRAPHIC SCALE

0 4 8 12

SCALE: 1/4" = 1'-0"

GRAVITY THICKENER NO. 2 - ELECTRICAL AND I & C PLAN

SCALE: 1/4" = 1'-0"

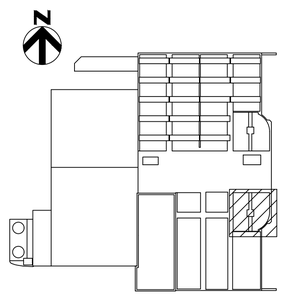

THE DRAWINGS IN THIS SET ARE RECORD DRAWINGS. THEY ARE CONSTRUCTION CONTRACT DRAWINGS WHICH HAVE BEEN REVISED BASED ON AVAILABLE FIELD INFORMATION RECORDED BY OTHERS DURING CONSTRUCTION OF THIS CONTRACT. THERE HAS BEEN NO VERIFICATION OF DIMENSIONS SHOWN ON THE CONSTRUCTION DRAWINGS OR THE ACCURACY/COMPLETENESS OF THE FIELD INFORMATION RECEIVED.

SIGNATURE _____ DATE 2/7/2020

SHAH & ASSOCIATES

AS-BUILT REPLACEMENT SHEET

PROFESSIONAL CERTIFICATION
THIS DRAWING WAS ORIGINALLY APPROVED FOR CONSTRUCTION AND SEALED BY KANAIYALAL R. SHAH, A REGISTERED PROFESSIONAL ENGINEER IN THE STATE OF MARYLAND, NO. 11084.

NOTICE TO CONTRACTORS
- PROJECT ELEVATIONS ARE BASED ON NAVD88 AND HOWARD COUNTY'S BENCHMARK SYSTEM
- PREVIOUS PROJECTS USED OTHER DATUMS
- APPLY THE FOLLOWING CONVERSIONS WHEN USING PREVIOUS CONTRACT DRAWINGS:
  - ADDITION NO. 6: SUBTRACT 0.80 FT
  - PRIOR ADDITIONS: SUBTRACT 1.04 FT

DEPARTMENT OF PUBLIC WORKS
HOWARD COUNTY, MARYLAND

CHIEF, BUREAU OF UTILITIES DATE

DES:	SR
DRN:	AJS
CHK:	KRS
DATE:	10/2016

DATE	REV	DESCRIPTION
07/2019		RECORD DRAWING

ELECTRICAL

GRAVITY THICKENER NO. 2
ELECTRICAL AND I&C PLAN

LITTLE PATUXENT WATER RECLAMATION PLANT
8TH ADDITION
BIOSOLIDS PROCESSING FACILITIES – PHASE I

CAPITAL PROJECT S-6295
CONTRACT NO. 24-4935

ELECTION DISTRICT NO. 6
HOWARD COUNTY, MARYLAND

SCALE AS SHOWN

SHEET 348 OF 463

E-235

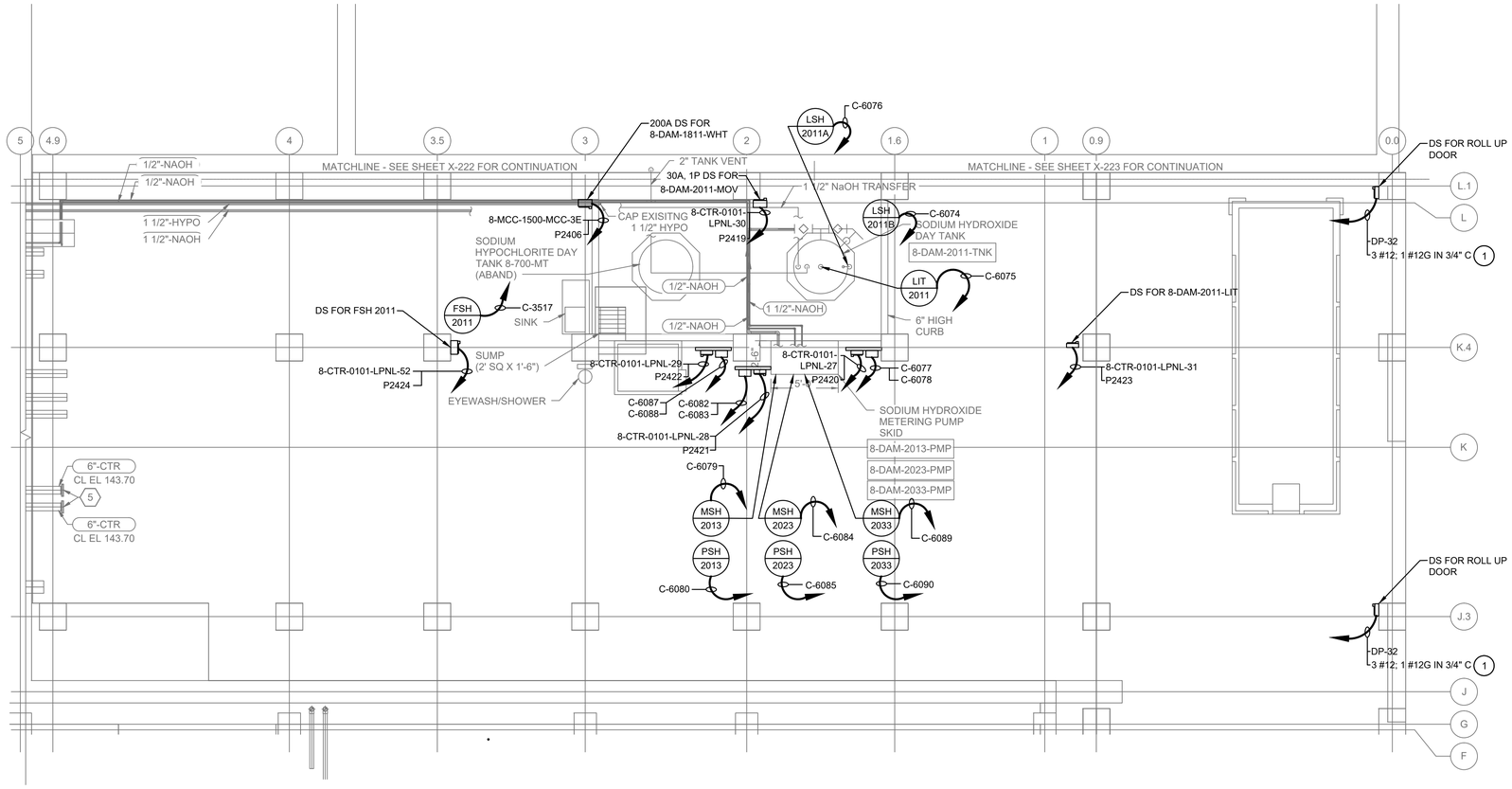

GENERAL NOTES:

1. FOR SYMBOLS AND ABBREVIATIONS, SEE DRAWING E-1.
2. FOR CONSTRUCTION SEQUENCE, SEE DRAWING E-2.
3. FOR PANELBOARD SCHEDULE, SEE DRAWINGS E-901 THRU E-904.
4. FOR CABLE AND CONDUIT SCHEDULE, SEE DRAWINGS E-905 THRU E-913, E-918 AND E-919.
5. LOCATION OF EQUIPMENT IE. MOTORS, VALVES, UNIT HEATERS, EXHAUST FANS, ETC. IS FOR REFERENCE ONLY. FOR EXACT LOCATION OF EQUIPMENT, REFER TO MECHANICAL, HVAC AND PLUMBING DRAWINGS.
6. DRAWINGS ARE INTENDED TO DEPICT DESIGN INTENT; CONTRACTOR TO REFER TO SPECIFICATIONS, P&IDS, AND STANDARD DETAILS FOR FURTHER INSTALLATION REQUIREMENTS.
7. NOT ALL INSTRUMENTATION EQUIPMENT ARE SHOWN ON THIS PLAN, REFER TO PROCESS AND P&ID DRAWINGS. THE DISCONNECT SWITCHES SHOWN FOR THE INSTRUMENTS; I.E., FITS, AITS, LITS, PITS, TITS, ETC. ARE 20A SNAP SWITCHES.

DRAWING NOTE:

(1) SINGLE 3/4" CONDUIT BACK TO PANEL DP-32.

THE DRAWINGS IN THIS SET ARE RECORD DRAWINGS. THEY ARE CONSTRUCTION CONTRACT DRAWINGS WHICH HAVE BEEN REVISED BASED ON AVAILABLE FIELD INFORMATION RECORDED BY OTHERS DURING CONSTRUCTION OF THIS CONTRACT. THERE HAS BEEN NO VERIFICATION OF DIMENSIONS SHOWN ON THE CONSTRUCTION DRAWINGS OR THE ACCURACY/COMPLETENESS OF THE FIELD INFORMATION RECEIVED.

SIGNATURE — DATE 2/7/2020

GRAPHIC SCALE

0 4 8 12 16

SCALE: 3/16" = 1'-0"

CENTRIFUGE BUILDING AT EL 142.00 - ELECTRICAL AND I&C PLAN

SCALE: 3/16" = 1'-0"

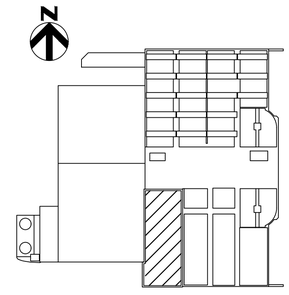

KEY PLAN

SHAH & ASSOCIATES

AS-BUILT REPLACEMENT SHEET

PROFESSIONAL CERTIFICATION
THIS DRAWING WAS ORIGINALLY APPROVED FOR CONSTRUCTION AND SEALED BY KANAIYALAL R. SHAH, A REGISTERED PROFESSIONAL ENGINEER IN THE STATE OF MARYLAND, NO. 11084.

NOTICE TO CONTRACTORS
- PROJECT ELEVATIONS ARE BASED ON NAVD88 AND HOWARD COUNTY'S BENCHMARK SYSTEM
- PREVIOUS PROJECTS USED OTHER DATUMS
- APPLY THE FOLLOWING CONVERSIONS WHEN USING PREVIOUS CONTRACT DRAWINGS:
  - ADDITION NO. 6: SUBTRACT 0.80 FT
  - PRIOR ADDITIONS: SUBTRACT 1.04 FT

DEPARTMENT OF PUBLIC WORKS
HOWARD COUNTY, MARYLAND

CHIEF, BUREAU OF UTILITIES — DATE

DES: SR
DRN: AJS
CHK: KRS
DATE: 10/2016

DATE	REV	DESCRIPTION
07/2019		RECORD DRAWING

ELECTRICAL

CENTRIFUGE BUILDING
AT EL 142.00
ELECTRICAL AND I&C PLAN

LITTLE PATUXENT WATER RECLAMATION PLANT
8TH ADDITION
BIOSOLIDS PROCESSING FACILITIES – PHASE I

CAPITAL PROJECT S-6295
CONTRACT NO. 24-4935

ELECTION DISTRICT NO. 6
HOWARD COUNTY, MARYLAND

SCALE AS SHOWN

SHEET 349 OF 463

E-240

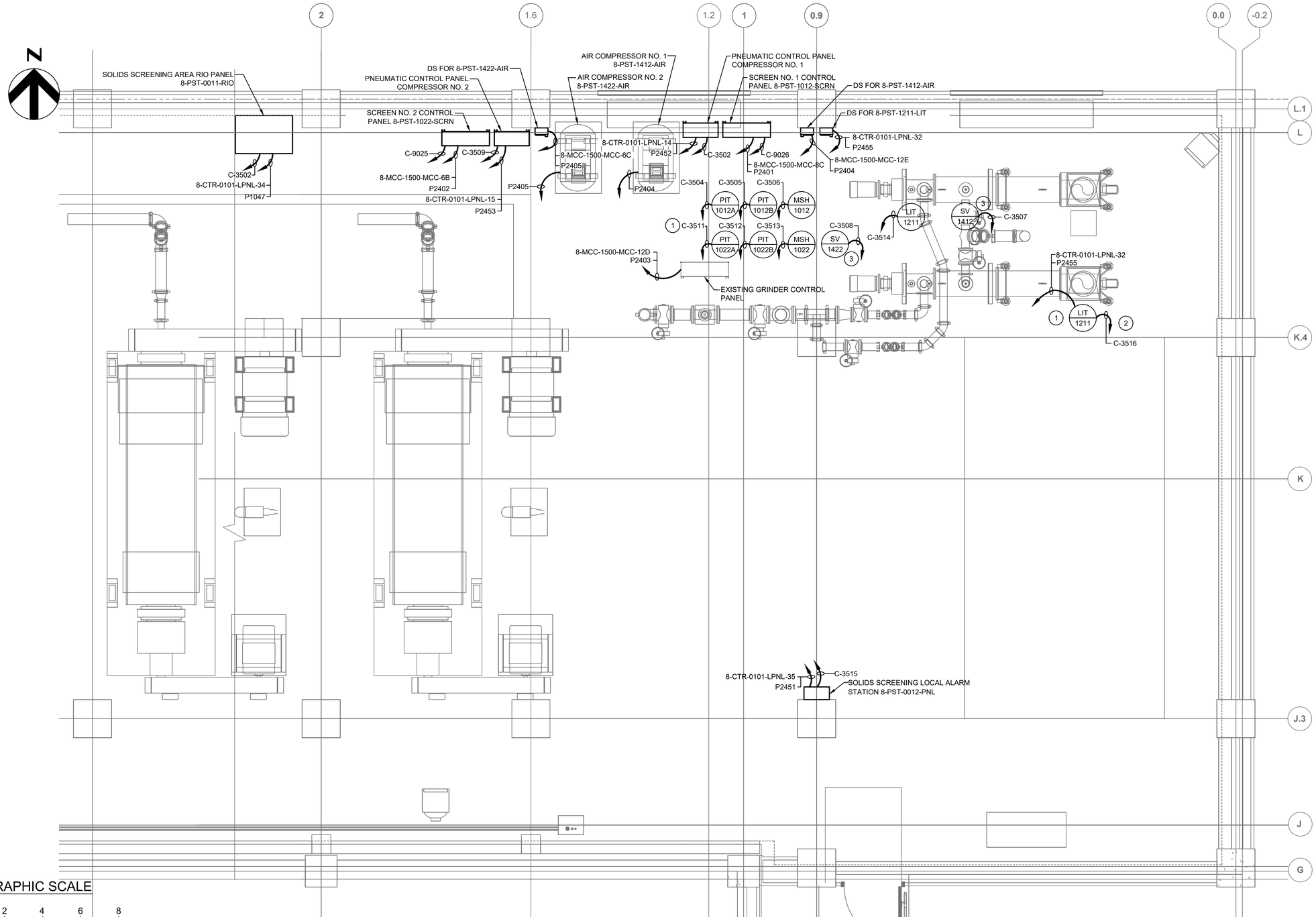

GENERAL NOTES:

1. FOR SYMBOLS AND ABBREVIATIONS, SEE DRAWING E-1.
2. FOR CONSTRUCTION SEQUENCE, SEE DRAWING E-2.
3. FOR 8-MCC-1500-MCC ONE LINE DIAGRAM EXISTING AND MODIFICATION, SEE DRAWINGS E-15 AND E-16.
4. FOR NEW PANELBOARD SCHEDULES, SEE DRAWINGS E-901 THRU E-904.
5. FOR CABLE AND CONDUIT SCHEDULE, SEE DRAWINGS E-905 THRU E-913, E-918 AND E-919.
6. LOCATION OF EQUIPMENT IE. MOTORS, VALVES, UNIT HEATERS, EXHAUST FANS, ETC. IS FOR REFERENCE ONLY. FOR EXACT LOCATION OF EQUIPMENT, REFER TO MECHANICAL, HVAC AND PLUMBING DRAWINGS.
7. DRAWINGS ARE INTENDED TO DEPICT DESIGN INTENT; CONTRACTOR TO REFER TO SPECIFICATIONS, P&IDS, AND STANDARD DETAILS FOR FURTHER INSTALLATION REQUIREMENTS.
8. NOT ALL INSTRUMENTATION EQUIPMENT ARE SHOWN ON THIS PLAN, REFER TO PROCESS AND P&ID DRAWINGS. THE DISCONNECT SWITCHES SHOWN FOR THE INSTRUMENTS; I.E., FITS, AITS, LITS, PITS, TITS, ETC. ARE 20A SNAP SWITCHES.

DRAWING NOTES:

1. FOR LOCATION OF INSTRUMENTATION EQUIPMENT SHOWN ON THIS DRAWING REFER TO PROCESS DRAWING M-242.
2. 8-PST-1211-LIT LOCATED IN HOPPER BELOW AT EL. 156.00. SEE DRAWING M-244.
3. LOCATED INSIDE CORRESPONDING PNEUMATIC CONTROL PANEL.

THE DRAWINGS IN THIS SET ARE RECORD DRAWINGS. THEY ARE CONSTRUCTION CONTRACT DRAWINGS WHICH HAVE BEEN REVISED BASED ON AVAILABLE FIELD INFORMATION RECORDED BY OTHERS DURING CONSTRUCTION OF THIS CONTRACT. THERE HAS BEEN NO VERIFICATION OF DIMENSIONS SHOWN ON THE CONSTRUCTION DRAWINGS OR THE ACCURACY/COMPLETENESS OF THE FIELD INFORMATION RECEIVED.

SIGNATURE _____ DATE 2/7/2020

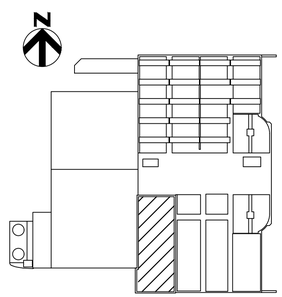

KEY PLAN

GRAPHIC SCALE

0 2 4 6 8

SCALE: 3/8" = 1'-0"

CENTRIFUGE BUILDING AT EL 167.00 - ELECTRICAL AND I&C PLAN

SCALE: 3/8" = 1'-0"

SHAH & ASSOCIATES

AS-BUILT REPLACEMENT SHEET

PROFESSIONAL CERTIFICATION

THIS DRAWING WAS ORIGINALLY APPROVED FOR CONSTRUCTION AND SEALED BY KANAIYALAL R. SHAH, A REGISTERED PROFESSIONAL ENGINEER IN THE STATE OF MARYLAND, NO. 11084.

NOTICE TO CONTRACTORS

- PROJECT ELEVATIONS ARE BASED ON NAVD88 AND HOWARD COUNTY'S BENCHMARK SYSTEM
- PREVIOUS PROJECTS USED OTHER DATUMS
- APPLY THE FOLLOWING CONVERSIONS WHEN USING PREVIOUS CONTRACT DRAWINGS:
  - ADDITION NO. 6: SUBTRACT 0.80 FT
  - PRIOR ADDITIONS: SUBTRACT 1.04 FT

DEPARTMENT OF PUBLIC WORKS
HOWARD COUNTY, MARYLAND

CHIEF, BUREAU OF UTILITIES DATE

DES:	SR
DRN:	AJS
CHK:	KRS
DATE:	10/2016

DATE	REV	DESCRIPTION
07/2019		RECORD DRAWING

ELECTRICAL

CENTRIFUGE BUILDING
AT EL 167.00
ELECTRICAL AND I&C PLAN

LITTLE PATUXENT WATER RECLAMATION PLANT
8TH ADDITION
BIOSOLIDS PROCESSING FACILITIES – PHASE I

CAPITAL PROJECT S-6295
CONTRACT NO. 24-4935

ELECTION DISTRICT NO. 6
HOWARD COUNTY, MARYLAND

SCALE AS SHOWN

SHEET 350 OF 463

E-242

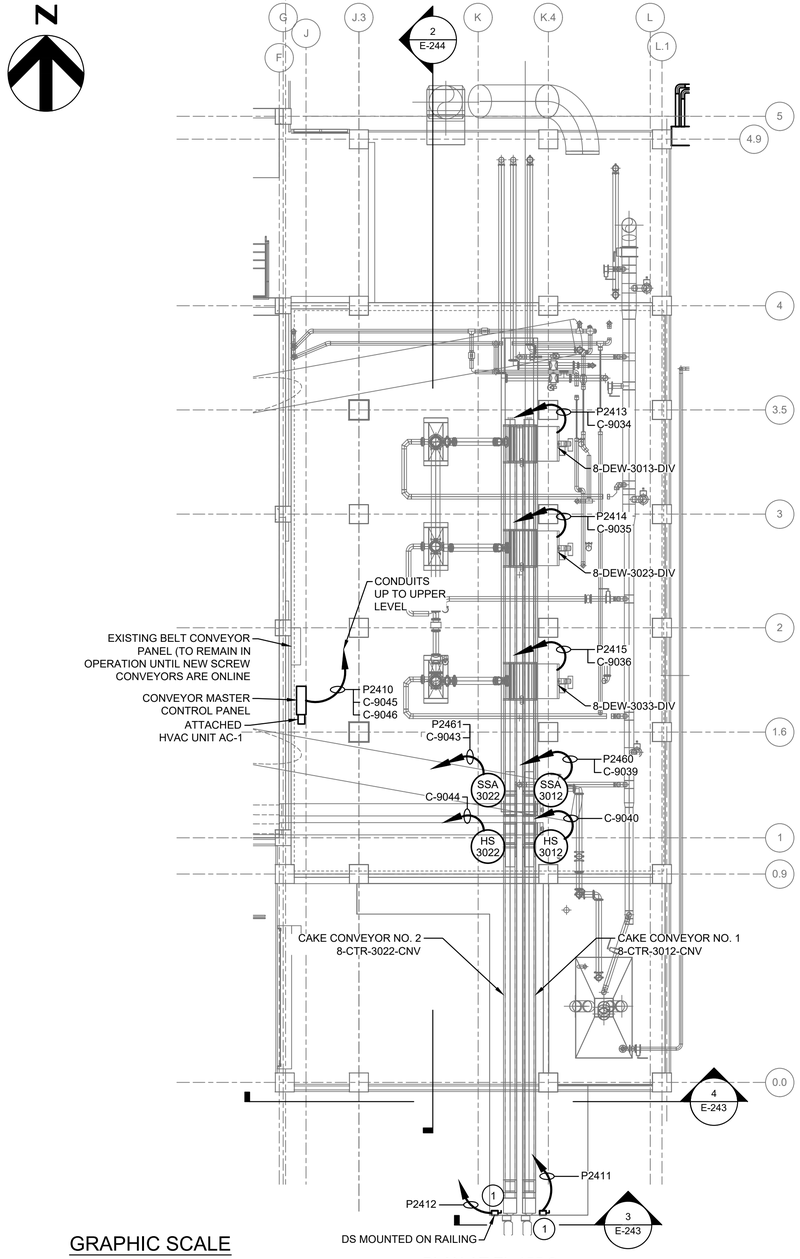

PLAN AT EL 155.2

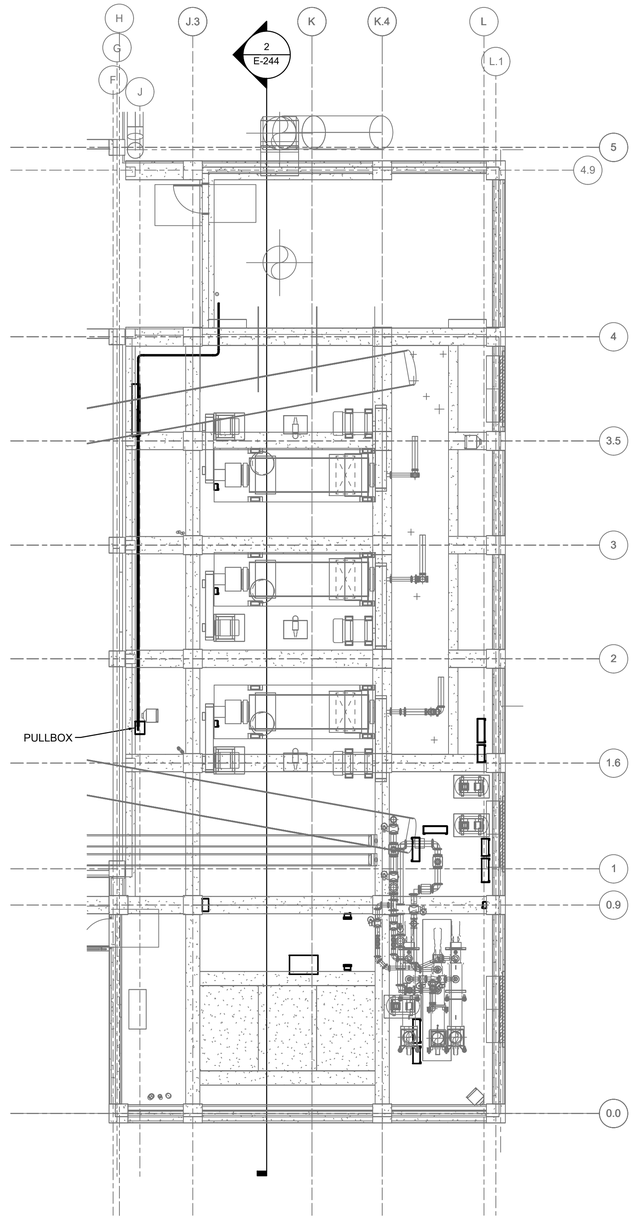

PLAN AT EL 166.20

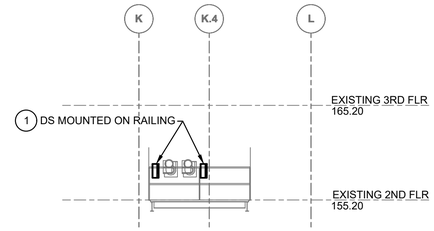

3 E-243 SECTION - EXISTING AND MODIFICATION

SCALE: 1/8" = 1'-0"

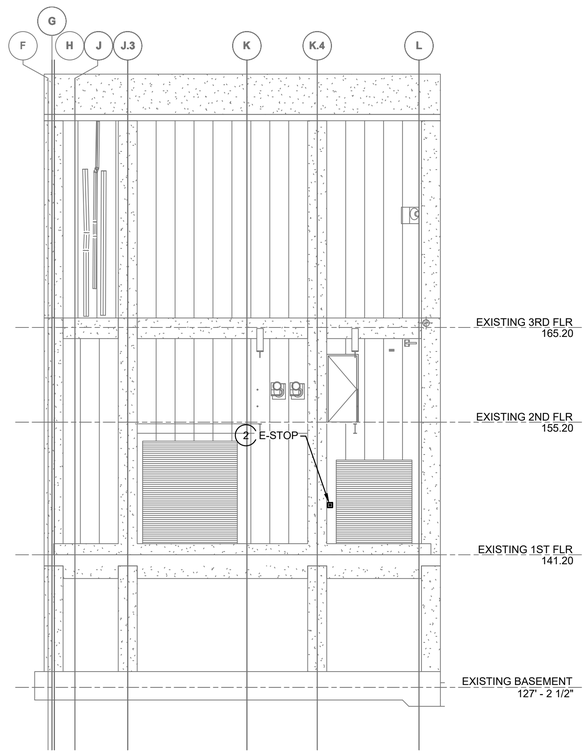

4 E-243 SECTION - EXISTING AND MODIFICATION

SCALE: 1/8" = 1'-0"

GENERAL NOTES:

1. FOR SYMBOLS AND ABBREVIATIONS, SEE DRAWING E-1.
2. FOR 8-MCC-1500-MCC ONE LINE DIAGRAM, SEE DRAWING E-16.
3. FOR CABLE AND CONDUIT SCHEDULE, SEE DRAWINGS E908 AND E-919.
4. FOR INSTRUMENT RISER ONE LINE DIAGRAM, SEE DRAWING E-632.
5. FOR EQUIPMENT LOCATION, SEE PROCESS DRAWINGS.
6. DRAWINGS ARE INTENDED TO DEPICT DESIGN INTENT, CONTRACTOR TO REFER TO SPECIFICATIONS, P&IDs AND STANDARD DETAILS FOR FURTHER INSTALLATION REQUIREMENTS.
7. NOT ALL INSTRUMENTATION EQUIPMENT ARE SHOWN ON THIS PLAN, REFER TO PROCESS AND P&ID DRAWINGS. THE DISCONNECT SWITCHES SHOWN FOR THE INSTRUMENTS; I.E., FITS, AITS, LITS, PITS, TITS, ETC. ARE 20A SNAP SWITCHES.

DRAWING NOTES:

1. PROVIDE AND INSTALL 30A/3P SAFETY DISCONNECT SWITCH IN A NEMA 4X STAINLESS STEEL ENCLOSURE.
2. PROVIDE AND INSTALL E-STOP FOR CONVEYORS IN A NEMA 4X STAINLESS STEEL BOX. FOR MORE DETAILS, SEE CONVEYOR SPECIFICATIONS.

THE DRAWINGS IN THIS SET ARE RECORD DRAWINGS. THEY ARE CONSTRUCTION CONTRACT DRAWINGS WHICH HAVE BEEN REVISED BASED ON AVAILABLE FIELD INFORMATION RECORDED BY OTHERS DURING CONSTRUCTION OF THIS CONTRACT. THERE HAS BEEN NO VERIFICATION OF DIMENSIONS SHOWN ON THE CONSTRUCTION DRAWINGS OR THE ACCURACY/COMPLETENESS OF THE FIELD INFORMATION RECEIVED.

SIGNATURE _____ DATE 2/7/2020

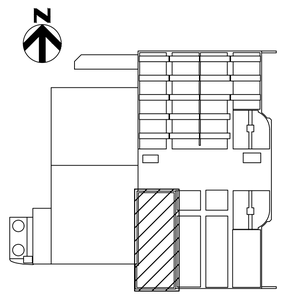

KEY PLAN

GRAPHIC SCALE

0 8 16 24

SCALE: 1/8" = 1'-0"

DEWATERING AND DRYING AREA - ELECTRICAL AND I & C PLAN

SCALE: 1/8" = 1'-0"

SHAH & ASSOCIATES

AS-BUILT REPLACEMENT SHEET

PROFESSIONAL CERTIFICATION

THIS DRAWING WAS ORIGINALLY APPROVED FOR CONSTRUCTION AND SEALED BY KANAIYALAL R. SHAH, A REGISTERED PROFESSIONAL ENGINEER IN THE STATE OF MARYLAND, NO. 11084.

NOTICE TO CONTRACTORS

- PROJECT ELEVATIONS ARE BASED ON NAVD88 AND HOWARD COUNTY'S BENCHMARK SYSTEM
- PREVIOUS PROJECTS USED OTHER DATUMS
- APPLY THE FOLLOWING CONVERSIONS WHEN USING PREVIOUS CONTRACT DRAWINGS:
  - ADDITION NO. 6: SUBTRACT 0.80 FT
  - PRIOR ADDITIONS: SUBTRACT 1.04 FT

DEPARTMENT OF PUBLIC WORKS
HOWARD COUNTY, MARYLAND

CHIEF, BUREAU OF UTILITIES DATE

DES:	SR
DRN:	AJS
CHK:	KRS
DATE:	10/2016

DATE	REV	DESCRIPTION
07/2019		RECORD DRAWING

ELECTRICAL

DEWATERING AND DRYING AREA
ELECTRICAL AND I&C PLAN

LITTLE PATUXENT WATER RECLAMATION PLANT
8TH ADDITION
BIOSOLIDS PROCESSING FACILITIES – PHASE I

CAPITAL PROJECT S-6295
CONTRACT NO. 24-4935

ELECTION DISTRICT NO. 6
HOWARD COUNTY, MARYLAND

SCALE AS SHOWN

SHEET 351 OF 463

E-243

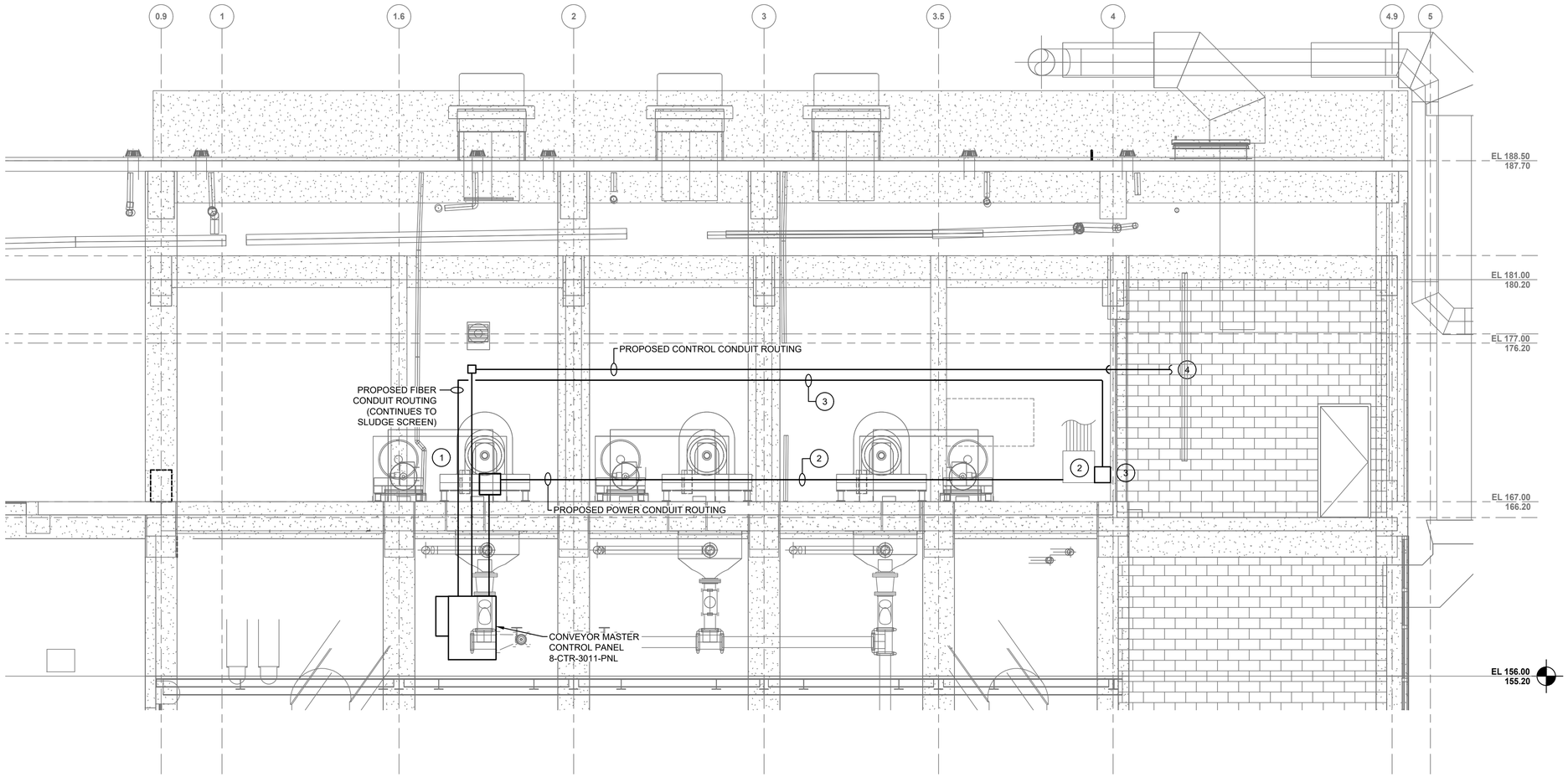

GENERAL NOTES:

1. FOR SYMBOLS AND ABBREVIATIONS, SEE DRAWING E-1.
2. FOR MCC-15 ONE LINE DIAGRAM, SEE DRAWING E-16.
3. FOR CABLE AND CONDUIT SCHEDULE, SEE DRAWINGS E908 AND E-919.
4. FOR INSTRUMENT RISER ONE LINE DIAGRAM, SEE DRAWING E-632.
5. FOR EQUIPMENT LOCATION, SEE PROCESS DRAWINGS.
6. DRAWINGS ARE INTENDED TO DEPICT DESIGN INTENT, CONTRACTOR TO REFER TO SPECIFICATIONS, P&IDs AND STANDARD DETAILS FOR FURTHER INSTALLATION REQUIREMENTS.

DRAWING NOTES:

1. THIS DRAWING IS SHOWING THE GENERAL CONDUIT ROUTING FOR CONDUITS FROM THE CONVEYOR MASTER CONTROL PANEL TO THE CHEMICAL HANDLING ELECTRICAL ROOM AND TO THE CENTRIFUGE BUILDING CONTROL ROOM. CONTRACTOR SHALL FIELD VERIFY FOR EXACT LOCATION OF CORE DRILL IN TO THE UPPER FLOOR.
2. THE CONDUITS FOR THE 480V POWER AND THE FIBER OPTIC CABLE GOING BACK TO THE CHEMICAL HANDLING AREA ELECTRICAL ROOM SHALL RUN PARALLEL TO THE EXISTING CONDUITS RUNNING TO THE ELECTRICAL ROOM VIA THE LIME BUILDING FROM THE EXISTING PULL BOX IN THE CENTRIFUGE BUILDING UPPER FLOOR BACK TO THE ELECTRICAL ROOM. DURING THE DEMOLITION OF THE LIME BUILDING, THE CONTRACTOR SHALL PROTECT THESE CONDUITS IN PLACE.
3. THE FIBER OPTIC CABLE SHALL BE TERMINATED IN A PULL BOX AS IT ENTERS THE ELECTRICAL ROOM. THIS CABLE SHALL BE CONNECTED TO THE DIGESTED SOLIDS AREA PLC PANEL ONCE THE PANEL IS INSTALLED IN PHASE 1.
4. THE 3/4" CONDUIT SHALL BE ROUTED TO THE CENTRIFUGE CONTROL ROOM AND BRANCH OUT TO BE CONNECTED TO EACH OF THE THREE CENTRIFUGE CONTROL PANELS.

THE DRAWINGS IN THIS SET ARE RECORD DRAWINGS. THEY ARE CONSTRUCTION CONTRACT DRAWINGS WHICH HAVE BEEN REVISED BASED ON AVAILABLE FIELD INFORMATION RECORDED BY OTHERS DURING CONSTRUCTION OF THIS CONTRACT. THERE HAS BEEN NO VERIFICATION OF DIMENSIONS SHOWN ON THE CONSTRUCTION DRAWINGS OR THE ACCURACY/COMPLETENESS OF THE FIELD INFORMATION RECEIVED.

SIGNATURE — DATE 2/7/2020

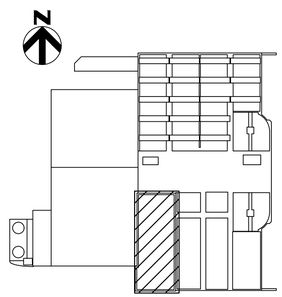

KEY PLAN

GRAPHIC SCALE

0 4 8 12

SCALE: 1/4" = 1'-0"

2 / E-243 SECTION
SCALE: 1/4" = 1'-0"

SHAH & ASSOCIATES

HDR

AS-BUILT REPLACEMENT SHEET

PROFESSIONAL CERTIFICATION
THIS DRAWING WAS ORIGINALLY APPROVED FOR CONSTRUCTION AND SEALED BY KANAIYALAL R. SHAH, A REGISTERED PROFESSIONAL ENGINEER IN THE STATE OF MARYLAND, NO. 11084.

NOTICE TO CONTRACTORS
- PROJECT ELEVATIONS ARE BASED ON NAVD88 AND HOWARD COUNTY'S BENCHMARK SYSTEM
- PREVIOUS PROJECTS USED OTHER DATUMS
- APPLY THE FOLLOWING CONVERSIONS WHEN USING PREVIOUS CONTRACT DRAWINGS:
  - ADDITION NO. 6: SUBTRACT 0.80 FT.
  - PRIOR ADDITIONS: SUBTRACT 1.04 FT.

DEPARTMENT OF PUBLIC WORKS
HOWARD COUNTY, MARYLAND

CHIEF, BUREAU OF UTILITIES — DATE

DES:	SR
DRN:	AJS
CHK:	KRS
DATE:	10/2016

DATE	REV	DESCRIPTION
07/2019		RECORD DRAWING

ELECTRICAL

DEWATERING AND DRYING AREA
ELECTRICAL AND I&C SECTION

LITTLE PATUXENT WATER RECLAMATION PLANT
8TH ADDITION
BIOSOLIDS PROCESSING FACILITIES – PHASE I

CAPITAL PROJECT S-6295
CONTRACT NO. 24-4935

ELECTION DISTRICT NO. 6
HOWARD COUNTY, MARYLAND

SCALE AS SHOWN

SHEET 352 OF 463

E-244

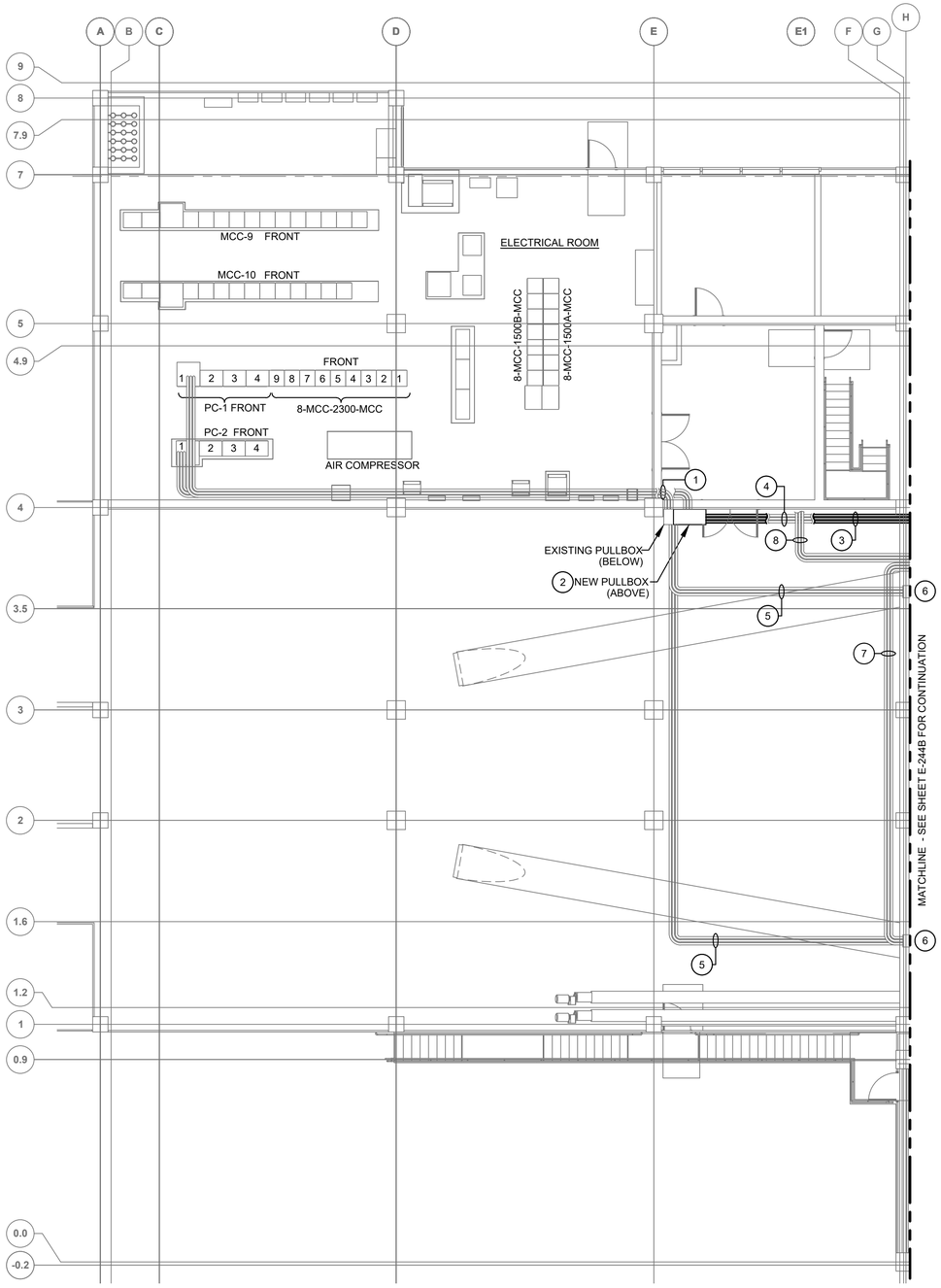

DEWATERING AND DRYING AREA - CONDUIT REROUTING PLAN

SCALE: 1/8" = 1'-0"

GRAPHIC SCALE

0 8 16 24

SCALE: 1/8" = 1'-0"

GENERAL NOTES:

1. FOR SYMBOLS AND ABBREVIATIONS, SEE DRAWING E-1.
2. FOR CONSTRUCTION SEQUENCE, SEE DRAWING E-2.
3. FOR PC-1 AND PC-2 ONE LINE DIAGRAM, SEE DRAWING E-12.
4. DRAWINGS ARE INTENDED TO DEPICT DESIGN INTENT, CONTRACTOR SHALL FIELD VERIFY AND ALSO REFER TO SPECIFICATIONS, P&IDS AND STANDARD DETAILS FOR FURTHER INSTALLATION REQUIREMENTS.

DRAWING NOTES:

1. ONCE CENTRIFUGES ARE SHUTDOWN, PULL THE WIRES FOR CENTRIFUGE #1 AND #3 BACK TO PC-1 AND PC-2.
2. CUT THE CONDUIT AT THE WALL INSIDE THE LIME STABILIZATION ROOM AND INSTALL NEW PULL BOX TO REROUTE CENTRIFUGE #1 AND #3 FEEDERS.
3. INSTALL (6) 3" CONDUITS ALONG THE WALL PARALLEL TO THE FEEDERS TO CENTRIFUGE #2 TO PENETRATE THE WALL AND ENTER THE PULL BOX INSTALLED IN THE CENTRIFUGE ROOM.
4. KEEP EXISTING CONDUITS FOR CENTRIFUGE #2.
5. ABANDON IN PLACE THE EXISTING CONDUITS AND PULL BOXES IN THE LIME STABILIZATION ROOM FOR CENTRIFUGE #1 AND #3. THESE SHALL BE DEMOLISHED DURING PHASE 2 DEMOLITION OF THE BUILDING.
6. DEMOLISH THE (6) 3" CONDUITS FOR CENTRIFUGES #1 AND #3 THAT WERE RUNNING FROM PC-1 AND PC-2 TO THE CENTRIFUGES VIA THE CONVEYOR ROOM.
7. EXACT NUMBER OF CONDUITS IS NOT REPRESENTED. CONTRACTOR SHALL FIELD VERIFY AND IDENTIFY THE SOURCE AND DESTINATION OF EACH CONDUIT THAT IS NOT ASSOCIATED WITH THE LIME STABILIZATION SYSTEM AND THAT NEEDS TO BE REROUTED BETWEEN THE CONVEYOR ROOM, THE CENTRIFUGE BUILDING AND THE ELECTRICAL ROOM.
8. EXACT NUMBER OF CONDUITS ARE NOT REPRESENTED. CONTRACTOR SHALL PROTECT CONDUITS IN PLACE DURING PHASE 2 DEMOLITION WORK.

THE DRAWINGS IN THIS SET ARE RECORD DRAWINGS. THEY ARE CONSTRUCTION CONTRACT DRAWINGS WHICH HAVE BEEN REVISED BASED ON AVAILABLE FIELD INFORMATION RECORDED BY OTHERS DURING CONSTRUCTION OF THIS CONTRACT. THERE HAS BEEN NO VERIFICATION OF DIMENSIONS SHOWN ON THE CONSTRUCTION DRAWINGS OR THE ACCURACY/COMPLETENESS OF THE FIELD INFORMATION RECEIVED.

SIGNATURE — DATE 2/7/2020

SHAH & ASSOCIATES

AS-BUILT REPLACEMENT SHEET

PROFESSIONAL CERTIFICATION
THIS DRAWING WAS ORIGINALLY APPROVED FOR CONSTRUCTION AND SEALED BY KANAIYALAL R. SHAH, A REGISTERED PROFESSIONAL ENGINEER IN THE STATE OF MARYLAND, NO. 11084.

NOTICE TO CONTRACTORS
- PROJECT ELEVATIONS ARE BASED ON NAVD88 AND HOWARD COUNTY'S BENCHMARK SYSTEM
- PREVIOUS PROJECTS USED OTHER DATUMS
- APPLY THE FOLLOWING CONVERSIONS WHEN USING PREVIOUS CONTRACT DRAWINGS:
  - ADDITION NO. 6: SUBTRACT 0.80 FT
  - PRIOR ADDITIONS: SUBTRACT 1.04 FT

DEPARTMENT OF PUBLIC WORKS
HOWARD COUNTY, MARYLAND

CHIEF, BUREAU OF UTILITIES — DATE

DES: SR
DRN: DMG
CHK: KRS
DATE: 10/2016

DATE	REV	DESCRIPTION
07/2019		RECORD DRAWING

ELECTRICAL

DEWATERING AND DRYING AREA
CONDUIT REROUTING PLAN

LITTLE PATUXENT WATER RECLAMATION PLANT
8TH ADDITION
BIOSOLIDS PROCESSING FACILITIES – PHASE I

CAPITAL PROJECT S-6295
CONTRACT NO. 24-4935

ELECTION DISTRICT NO. 6
HOWARD COUNTY, MARYLAND

SCALE AS SHOWN

SHEET 353 OF 463

E-244A

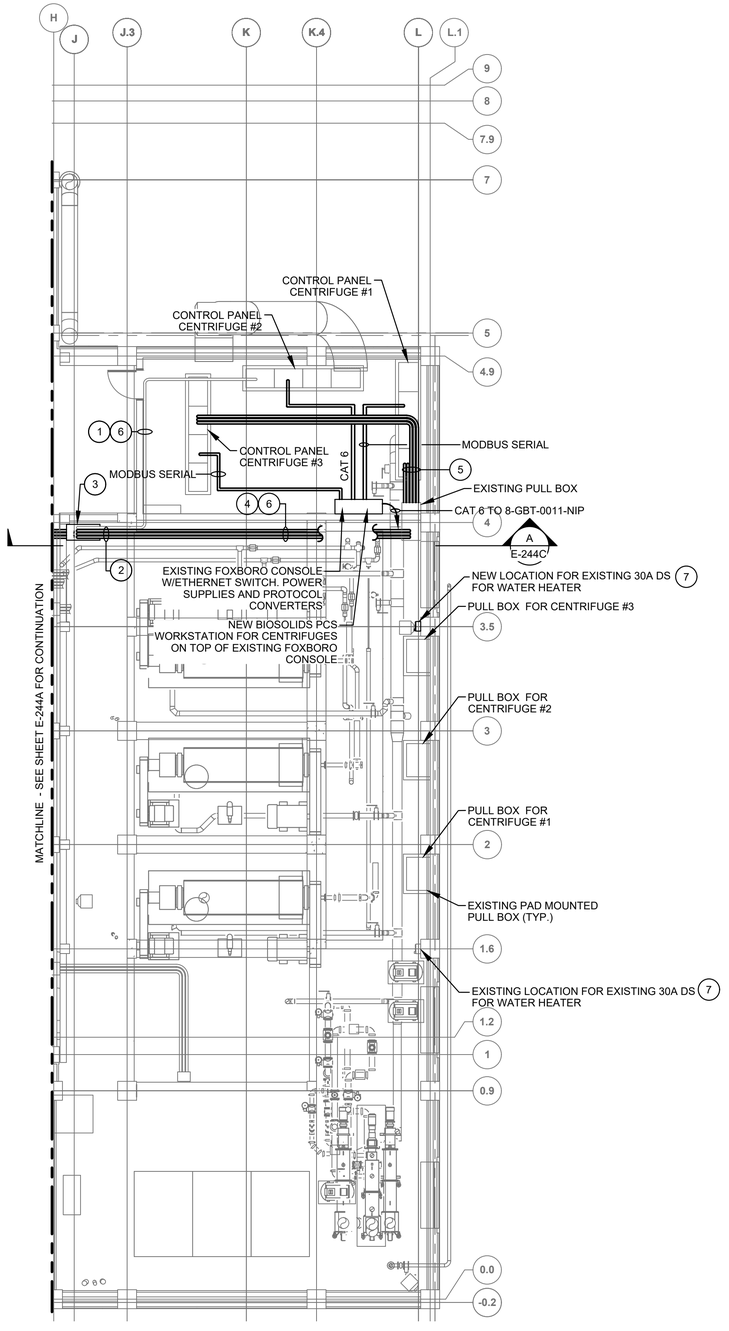

CENTRIFUGE BUILDING - CONDUIT REROUTING PLAN

SCALE: 1/8" = 1'-0"

GENERAL NOTES:

1. FOR SYMBOLS AND ABBREVIATIONS, SEE DRAWING E-1.
2. FOR CONSTRUCTION SEQUENCE, SEE DRAWING E-2.
3. FOR PC-1 AND PC-2 ONE LINE DIAGRAM, SEE DRAWING E-12.
4. DRAWINGS ARE INTENDED TO DEPICT DESIGN INTENT, CONTRACTOR SHALL FIELD VERIFY AND ALSO REFER TO SPECIFICATIONS, P&IDS AND STANDARD DETAILS FOR FURTHER INSTALLATION REQUIREMENTS.

DRAWING NOTES:

1. FOR CENTRIFUGE #2, PULL THE WIRES FROM THE CENTRIFUGE #2 CONTROL PANEL BACK TO THE EXISTING PULL BOX AT THE WALL IN THE CENTRIFUGE BUILDING.
2. CUT THE CONDUITS ON TOP OF THE EXISTING PULL BOX JUST ENOUGH TO MAKE SPACE FOR THE NEW PULL BOX. ONCE PULL BOX IS INSTALLED, INSTALL NEW CONDUIT AS NECESSARY TO RECONNECT THE CENTRIFUGE #2 CONDUITS.
3. INSTALL NEW PULL BOX IN THE CENTRIFUGE BUILDING TO ACCOMMODATE THE CONDUITS FOR THE FEEDERS OF ALL THREE CENTRIFUGES.
4. FOR CENTRIFUGES #1 AND #3, INSTALL NEW CONDUITS FROM THE NEW PULL BOX TO THE EXISTING PULL BOX LOCATED ON TOP OF THE CONTROL ROOM.
5. INSTALL NEW CONDUITS FROM THE EXISTING PULL BOX TO THE CENTRIFUGE CONTROL PANEL #1 AND #3.
6. PULL THE EXISTING WIRES VIA THE NEW ROUTE IN EXISTING AND NEW CONDUITS FOR CENTRIFUGES #1, #2 AND #3 AND TEST THE CABLES.
7. RELOCATE THE EXISTING ELECTRIC WATER HEATER DISCONNECT SWITCH. EXTEND THE WIRE AND CONDUIT TO NEW LOCATION. SEE PLUMBING DRAWINGS FOR WATER HEATER LOCATION.

GRAPHIC SCALE

0 8 16 24

SCALE: 1/8" = 1'-0"

THE DRAWINGS IN THIS SET ARE RECORD DRAWINGS. THEY ARE CONSTRUCTION CONTRACT DRAWINGS WHICH HAVE BEEN REVISED BASED ON AVAILABLE FIELD INFORMATION RECORDED BY OTHERS DURING CONSTRUCTION OF THIS CONTRACT. THERE HAS BEEN NO VERIFICATION OF DIMENSIONS SHOWN ON THE CONSTRUCTION DRAWINGS OR THE ACCURACY/COMPLETENESS OF THE FIELD INFORMATION RECEIVED.

SIGNATURE 2/7/2020 DATE

SHAH & ASSOCIATES

HDR

AS-BUILT REPLACEMENT SHEET

PROFESSIONAL CERTIFICATION

THIS DRAWING WAS ORIGINALLY APPROVED FOR CONSTRUCTION AND SEALED BY KANAIYALAL R. SHAH, A REGISTERED PROFESSIONAL ENGINEER IN THE STATE OF MARYLAND, NO. 11084.

NOTICE TO CONTRACTORS

- PROJECT ELEVATIONS ARE BASED ON NAVD88 AND HOWARD COUNTY'S BENCHMARK SYSTEM
- PREVIOUS PROJECTS USED OTHER DATUMS
- APPLY THE FOLLOWING CONVERSIONS WHEN USING PREVIOUS CONTRACT DRAWINGS:
  - ADDITION NO. 6: SUBTRACT 0.80 FT
  - PRIOR ADDITIONS: SUBTRACT 1.04 FT

DEPARTMENT OF PUBLIC WORKS
HOWARD COUNTY, MARYLAND

CHIEF, BUREAU OF UTILITIES DATE

DES: SR
DRN: DMG
CHK: KRS
DATE: 10/2016

DATE	REV	DESCRIPTION
07/2019		RECORD DRAWING

ELECTRICAL

CENTRIFUGE BUILDING
CONDUIT REROUTING PLAN

LITTLE PATUXENT WATER RECLAMATION PLANT
8TH ADDITION
BIOSOLIDS PROCESSING FACILITIES – PHASE I

CAPITAL PROJECT S-6295
CONTRACT NO. 24-4935

ELECTION DISTRICT NO. 6
HOWARD COUNTY, MARYLAND

SCALE AS SHOWN

SHEET 354 OF 463

E-244B

GENERAL NOTES:

1. FOR SYMBOLS AND ABBREVIATIONS, SEE DRAWING E-1.
2. FOR CONSTRUCTION SEQUENCE, SEE DRAWING E-2.
3. FOR PC-1 AND PC-2 ONE LINE DIAGRAM, SEE DRAWING E-12.
4. DRAWINGS ARE INTENDED TO DEPICT DESIGN INTENT, CONTRACTOR SHALL FIELD VERIFY AND ALSO REFER TO SPECIFICATIONS, P&IDS AND STANDARD DETAILS FOR FURTHER INSTALLATION REQUIREMENTS.

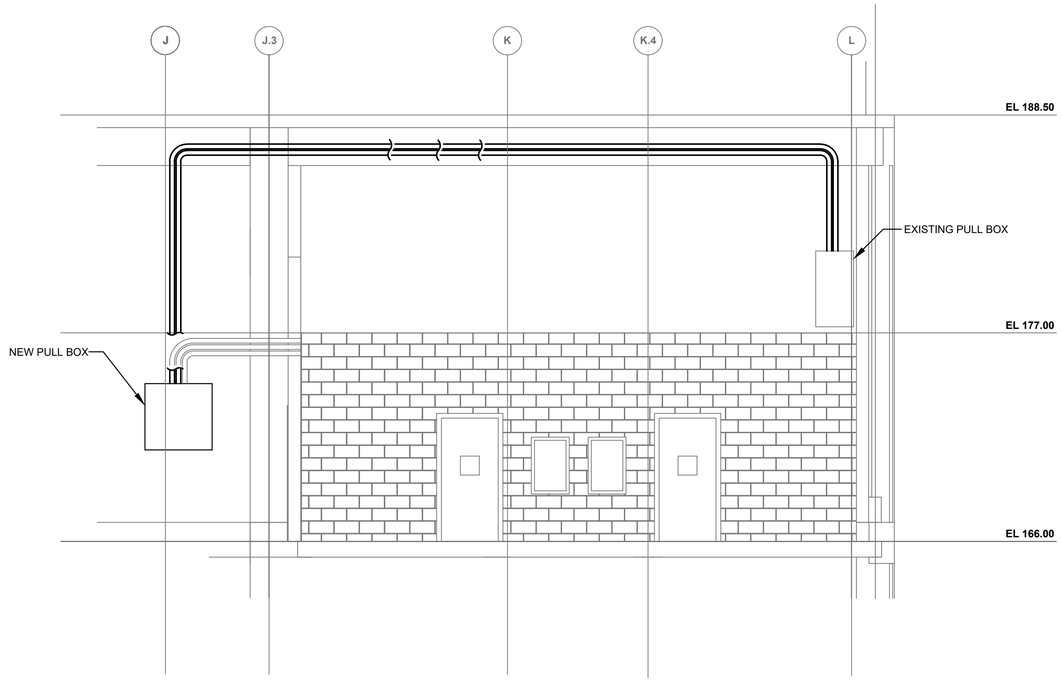

A / E-244B CENTRIFUGE BUILDING - SECTION
SCALE: 1/4" = 1'-0"

GRAPHIC SCALE
0 4 8 12
SCALE: 1/4" = 1'-0"

THE DRAWINGS IN THIS SET ARE RECORD DRAWINGS. THEY ARE CONSTRUCTION CONTRACT DRAWINGS WHICH HAVE BEEN REVISED BASED ON AVAILABLE FIELD INFORMATION RECORDED BY OTHERS DURING CONSTRUCTION OF THIS CONTRACT. THERE HAS BEEN NO VERIFICATION OF DIMENSIONS SHOWN ON THE CONSTRUCTION DRAWINGS OR THE ACCURACY/COMPLETENESS OF THE FIELD INFORMATION RECEIVED.

SIGNATURE 2/7/2020 DATE

S&A SHAH & ASSOCIATES | HDR

AS-BUILT REPLACEMENT SHEET

PROFESSIONAL CERTIFICATION
THIS DRAWING WAS ORIGINALLY APPROVED FOR CONSTRUCTION AND SEALED BY KANAIYALAL R. SHAH, A REGISTERED PROFESSIONAL ENGINEER IN THE STATE OF MARYLAND, NO. 11084.

NOTICE TO CONTRACTORS
- PROJECT ELEVATIONS ARE BASED ON NAVD88 AND HOWARD COUNTY'S BENCHMARK SYSTEM
- PREVIOUS PROJECTS USED OTHER DATUMS
- APPLY THE FOLLOWING CONVERSIONS WHEN USING PREVIOUS CONTRACT DRAWINGS:
  - ADDITION NO. 6: SUBTRACT 0.80 FT.
  - PRIOR ADDITIONS: SUBTRACT 1.04 FT

DEPARTMENT OF PUBLIC WORKS
HOWARD COUNTY, MARYLAND

CHIEF, BUREAU OF UTILITIES DATE

DES:	SR
DRN:	DMG
CHK:	KRS
DATE:	10/2016

DATE	REV	DESCRIPTION
07/2019		RECORD DRAWING

ELECTRICAL

CENTRIFUGE BUILDING SECTION

LITTLE PATUXENT WATER RECLAMATION PLANT
8TH ADDITION
BIOSOLIDS PROCESSING FACILITIES – PHASE I

CAPITAL PROJECT S-6295
CONTRACT NO. 24-4935

ELECTION DISTRICT NO. 6
HOWARD COUNTY, MARYLAND

SCALE AS SHOWN

SHEET 355 OF 463

E-244C

N

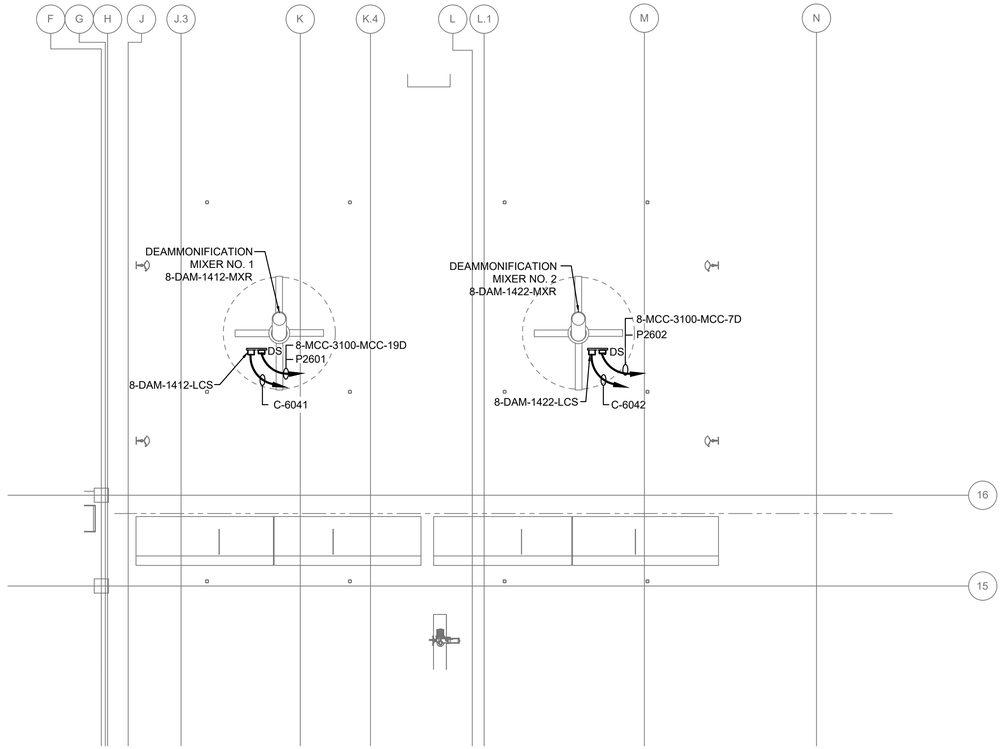

DEAMMONIFICATION REACTORS - UPPER LEVEL - ELECTRICAL AND I&C PLAN

SCALE: 1/8" = 1'-0"

GENERAL NOTES:

1. FOR SYMBOLS AND ABBREVIATIONS, SEE DRAWING E-1.
2. FOR CONSTRUCTION SEQUENCE, SEE DRAWING E-2.
3. FOR NEW 8-MCC-3100-MCC ONE LINE DIAGRAM, SEE DRAWINGS E-8 AND E-9.
4. FOR CABLE AND CONDUIT SCHEDULE, SEE DRAWINGS E-905 THRU E-913.
5. LOCATION OF EQUIPMENT IE. MOTORS, VALVES, UNIT HEATERS, EXHAUST FANS, ETC. IS FOR REFERENCE ONLY. FOR EXACT LOCATION OF EQUIPMENT, REFER TO MECHANICAL, HVAC AND PLUMBING DRAWINGS.
6. DRAWINGS ARE INTENDED TO DEPICT DESIGN INTENT; CONTRACTOR TO REFER TO SPECIFICATIONS, P&IDS, AND STANDARD DETAILS FOR FURTHER INSTALLATION REQUIREMENTS.
7. NOT ALL INSTRUMENTATION EQUIPMENT ARE SHOWN ON THIS PLAN, REFER TO PROCESS AND P&ID DRAWINGS.

GRAPHIC SCALE

0 8 16 24

SCALE: 1/8" = 1'-0"

THE DRAWINGS IN THIS SET ARE RECORD DRAWINGS. THEY ARE CONSTRUCTION CONTRACT DRAWINGS WHICH HAVE BEEN REVISED BASED ON AVAILABLE FIELD INFORMATION RECORDED BY OTHERS DURING CONSTRUCTION OF THIS CONTRACT. THERE HAS BEEN NO VERIFICATION OF DIMENSIONS SHOWN ON THE CONSTRUCTION DRAWINGS OR THE ACCURACY/COMPLETENESS OF THE FIELD INFORMATION RECEIVED.

SIGNATURE _____ DATE 2/7/2023

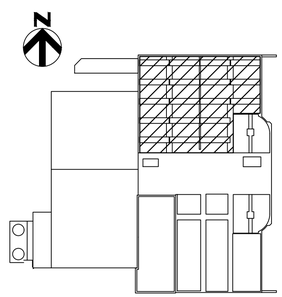

KEY PLAN

SHAH & ASSOCIATES

HDR

AS-BUILT REPLACEMENT SHEET

PROFESSIONAL CERTIFICATION

THIS DRAWING WAS ORIGINALLY APPROVED FOR CONSTRUCTION AND SEALED BY KANAIYALAL R. SHAH, A REGISTERED PROFESSIONAL ENGINEER IN THE STATE OF MARYLAND, NO. 11084.

NOTICE TO CONTRACTORS

- PROJECT ELEVATIONS ARE BASED ON NAVD88 AND HOWARD COUNTY'S BENCHMARK SYSTEM
- PREVIOUS PROJECTS USED OTHER DATUMS
- APPLY THE FOLLOWING CONVERSIONS WHEN USING PREVIOUS CONTRACT DRAWINGS:
  - ADDITION NO. 6: SUBTRACT 0.80 FT
  - PRIOR ADDITIONS: SUBTRACT 1.04 FT

DEPARTMENT OF PUBLIC WORKS
HOWARD COUNTY, MARYLAND

CHIEF, BUREAU OF UTILITIES DATE

DES:	SR
DRN:	AJS
CHK:	KRS
DATE:	10/2016

DATE	REV	DESCRIPTION
07/2019		RECORD DRAWING

ELECTRICAL

DEAMMONIFICATION REACTORS
UPPER LEVEL
ELECTRICAL AND I&C PLAN

LITTLE PATUXENT WATER RECLAMATION PLANT
8TH ADDITION
BIOSOLIDS PROCESSING FACILITIES – PHASE I

CAPITAL PROJECT S-6295
CONTRACT NO. 24-4935

ELECTION DISTRICT NO. 6
HOWARD COUNTY, MARYLAND

SCALE AS SHOWN

SHEET 356 OF 463

E-260

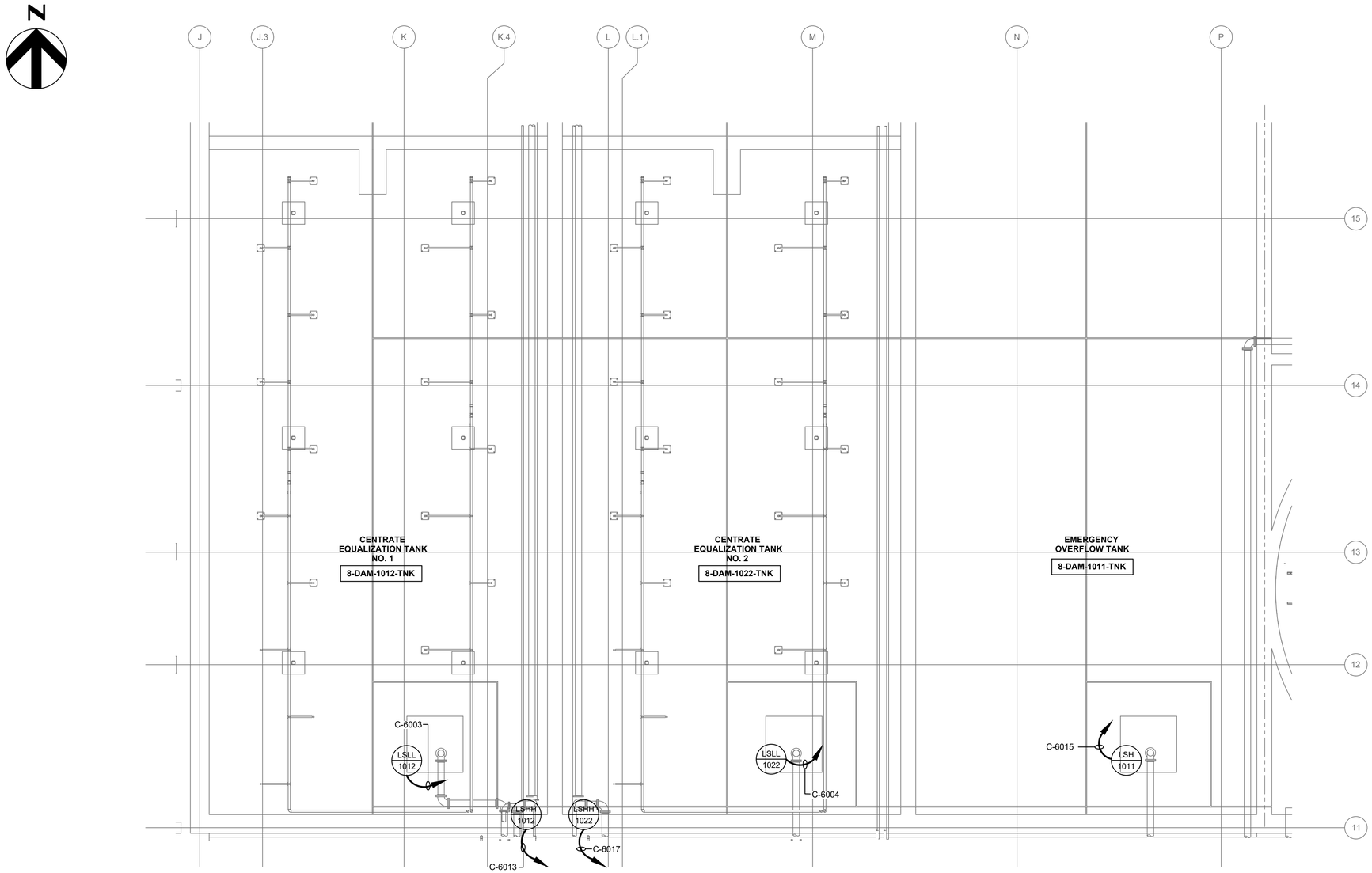

GENERAL NOTES:

1. FOR SYMBOLS AND ABBREVIATIONS, SEE DRAWING E-1.
2. FOR CONSTRUCTION SEQUENCE, SEE DRAWING E-2.
3. FOR NEW 8-MCC-3100-MCC ONE LINE DIAGRAM, SEE DRAWINGS E-16 AND E-17.
4. FOR PANELBOARD SCHEDULE, SEE DRAWINGS E-901 THRU E-904.
5. FOR CABLE AND CONDUIT SCHEDULE, SEE DRAWINGS E-905 THRU E-913, E-918 AND E-919.
6. LOCATION OF EQUIPMENT IE. MOTORS, VALVES, UNIT HEATERS, EXHAUST FANS, ETC. IS FOR REFERENCE ONLY. FOR EXACT LOCATION OF EQUIPMENT, REFER TO MECHANICAL, HVAC AND PLUMBING DRAWINGS.
7. DRAWINGS ARE INTENDED TO DEPICT DESIGN INTENT; CONTRACTOR TO REFER TO SPECIFICATIONS, P&IDS, AND STANDARD DETAILS FOR FURTHER INSTALLATION REQUIREMENTS.
8. NOT ALL INSTRUMENTATION EQUIPMENT ARE SHOWN ON THIS PLAN, REFER TO PROCESS AND P&ID DRAWINGS. THE DISCONNECT SWITCHES SHOWN FOR THE INSTRUMENTS; I.E., FITS, AITS, LITS, PITS, TITS, ETC. ARE 20A SNAP SWITCHES.

GRAPHIC SCALE

0 4 8 12 16

SCALE: 3/16" = 1'-0"

CENTRATE EQUALIZATION TANKS EL 128 - ELECTRICAL AND I&C PLAN

SCALE: 3/16" = 1'-0"

THE DRAWINGS IN THIS SET ARE RECORD DRAWINGS. THEY ARE CONSTRUCTION CONTRACT DRAWINGS WHICH HAVE BEEN REVISED BASED ON AVAILABLE FIELD INFORMATION RECORDED BY OTHERS DURING CONSTRUCTION OF THIS CONTRACT. THERE HAS BEEN NO VERIFICATION OF DIMENSIONS SHOWN ON THE CONSTRUCTION DRAWINGS OR THE ACCURACY/COMPLETENESS OF THE FIELD INFORMATION RECEIVED.

SIGNATURE — DATE 2/7/2020

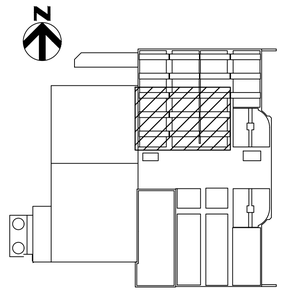

KEY PLAN

SHAH & ASSOCIATES

AS-BUILT REPLACEMENT SHEET

PROFESSIONAL CERTIFICATION
THIS DRAWING WAS ORIGINALLY APPROVED FOR CONSTRUCTION AND SEALED BY KANAIYALAL R. SHAH, A REGISTERED PROFESSIONAL ENGINEER IN THE STATE OF MARYLAND, NO. 11084.

NOTICE TO CONTRACTORS
- PROJECT ELEVATIONS ARE BASED ON NAVD88 AND HOWARD COUNTY'S BENCHMARK SYSTEM
- PREVIOUS PROJECTS USED OTHER DATUMS
- APPLY THE FOLLOWING CONVERSIONS WHEN USING PREVIOUS CONTRACT DRAWINGS:
  - ADDITION NO. 6: SUBTRACT 0.80 FT.
  - PRIOR ADDITIONS: SUBTRACT 1.04 FT.

DEPARTMENT OF PUBLIC WORKS
HOWARD COUNTY, MARYLAND

CHIEF, BUREAU OF UTILITIES — DATE

DES: SR
DRN: AJS
CHK: KRS
DATE: 10/2016

DATE	REV	DESCRIPTION
07/2019		RECORD DRAWING

ELECTRICAL

CENTRATE EQUALIZATION TANKS
EL 128 - ELECTRICAL AND I&C PLAN

LITTLE PATUXENT WATER RECLAMATION PLANT
8TH ADDITION
BIOSOLIDS PROCESSING FACILITIES – PHASE I

CAPITAL PROJECT S-6295
CONTRACT NO. 24-4935

ELECTION DISTRICT NO. 6
HOWARD COUNTY, MARYLAND

SCALE AS SHOWN

SHEET 357 OF 463

E-261

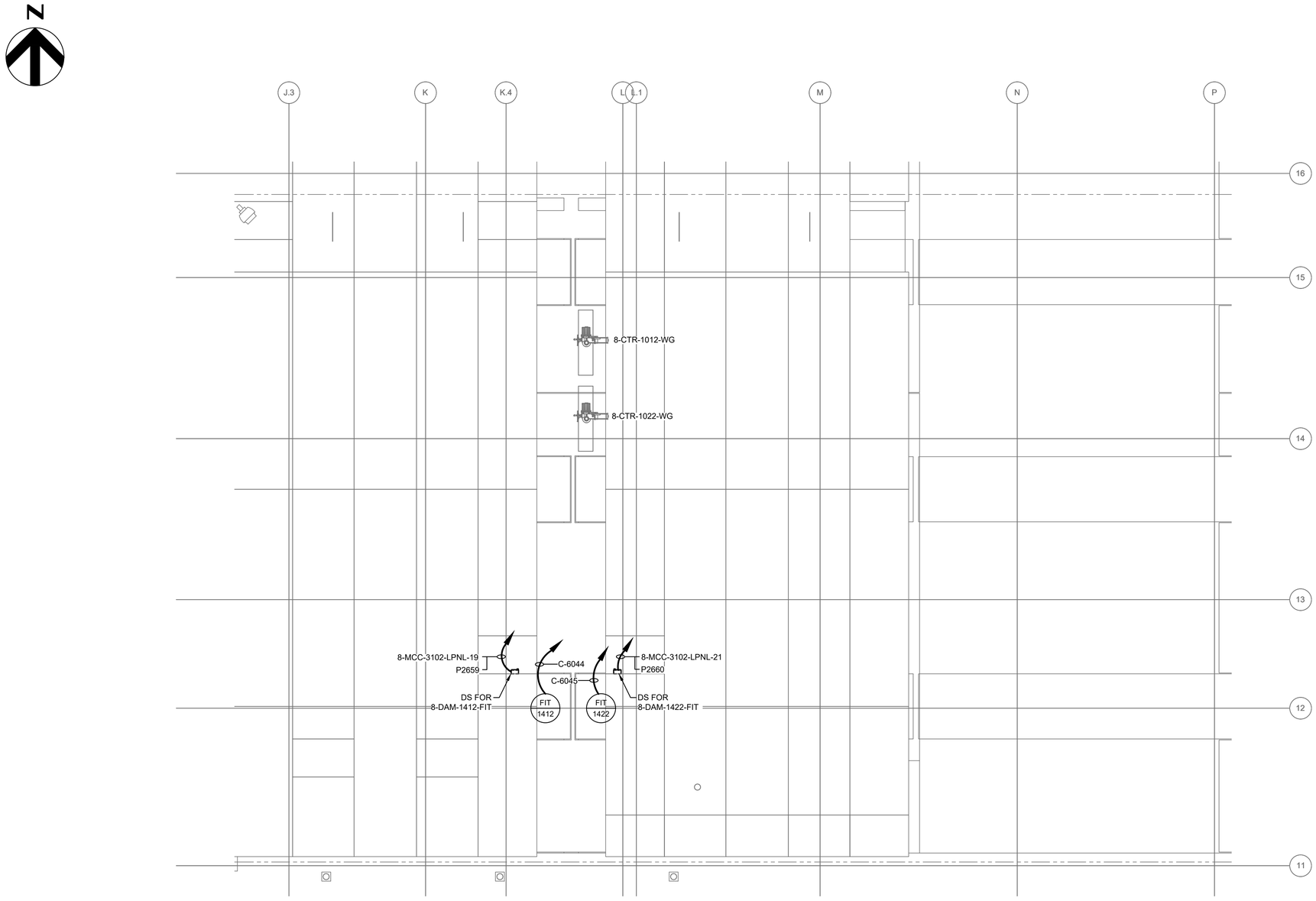

GENERAL NOTES:

1. FOR SYMBOLS AND ABBREVIATIONS, SEE DRAWING E-1.
2. FOR CONSTRUCTION SEQUENCE, SEE DRAWING E-2.
3. FOR PANELBOARD SCHEDULE, SEE DRAWINGS E-901 THRU E-904.
4. FOR CABLE AND CONDUIT SCHEDULE, SEE DRAWINGS E-905 THRU E-913.
5. LOCATION OF EQUIPMENT IE. MOTORS, VALVES, UNIT HEATERS, EXHAUST FANS, ETC. IS FOR REFERENCE ONLY. FOR EXACT LOCATION OF EQUIPMENT, REFER TO MECHANICAL, HVAC AND PLUMBING DRAWINGS.
6. DRAWINGS ARE INTENDED TO DEPICT DESIGN INTENT; CONTRACTOR TO REFER TO SPECIFICATIONS, P&IDS, AND STANDARD DETAILS FOR FURTHER INSTALLATION REQUIREMENTS.
7. NOT ALL INSTRUMENTATION EQUIPMENT ARE SHOWN ON THIS PLAN, REFER TO PROCESS AND P&ID DRAWINGS.

GRAPHIC SCALE

0 4 8 12 16

SCALE: 3/16" = 1'-0"

CENTRATE EQUALIZATION TANKS EL 146.00 - ELECTRICAL AND I&C PLAN

SCALE: 3/16" = 1'-0"

THE DRAWINGS IN THIS SET ARE RECORD DRAWINGS. THEY ARE CONSTRUCTION CONTRACT DRAWINGS WHICH HAVE BEEN REVISED BASED ON AVAILABLE FIELD INFORMATION RECORDED BY OTHERS DURING CONSTRUCTION OF THIS CONTRACT. THERE HAS BEEN NO VERIFICATION OF DIMENSIONS SHOWN ON THE CONSTRUCTION DRAWINGS OR THE ACCURACY/COMPLETENESS OF THE FIELD INFORMATION RECEIVED.

SIGNATURE _____ DATE 2/7/2020

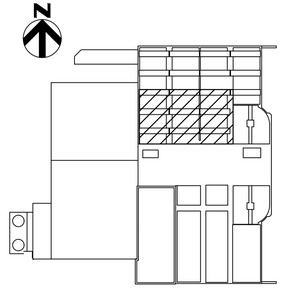

KEY PLAN

SHAH & ASSOCIATES

HDR

AS-BUILT REPLACEMENT SHEET

PROFESSIONAL CERTIFICATION

THIS DRAWING WAS ORIGINALLY APPROVED FOR CONSTRUCTION AND SEALED BY KANAIYALAL R. SHAH, A REGISTERED PROFESSIONAL ENGINEER IN THE STATE OF MARYLAND, NO. 11084.

NOTICE TO CONTRACTORS

- PROJECT ELEVATIONS ARE BASED ON NAVD88 AND HOWARD COUNTY'S BENCHMARK SYSTEM
- PREVIOUS PROJECTS USED OTHER DATUMS
- APPLY THE FOLLOWING CONVERSIONS WHEN USING PREVIOUS CONTRACT DRAWINGS:
  - ADDITION NO. 6: SUBTRACT 0.80 FT
  - PRIOR ADDITIONS: SUBTRACT 1.04 FT

DEPARTMENT OF PUBLIC WORKS
HOWARD COUNTY, MARYLAND

CHIEF, BUREAU OF UTILITIES DATE

DES:	SR
DRN:	AJS
CHK:	KRS
DATE:	10/2016

DATE	REV	DESCRIPTION
07/2019		RECORD DRAWING

ELECTRICAL

CENTRATE EQUALIZATION TANKS
EL 146.00 - ELECTRICAL AND I&C PLAN

LITTLE PATUXENT WATER RECLAMATION PLANT
8TH ADDITION
BIOSOLIDS PROCESSING FACILITIES – PHASE I

CAPITAL PROJECT S–6295
CONTRACT NO. 24–4935

ELECTION DISTRICT NO. 6
HOWARD COUNTY, MARYLAND

SCALE AS SHOWN

SHEET 358 OF 463

E-263

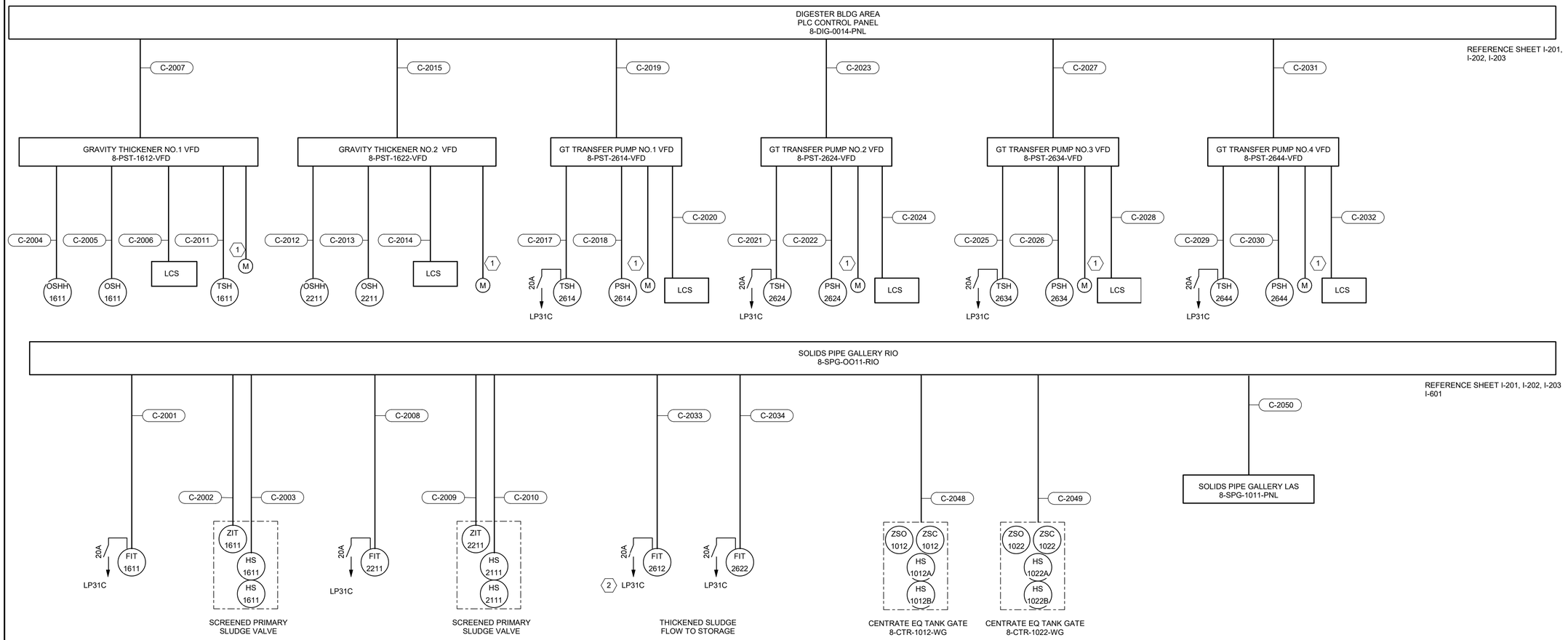

GENERAL NOTES

1. SEE POWER ONE-LINE DIAGRAMS AND CONDUIT AND WIRE SCHEDULES FOR DRIVE, STARTER, AND MOTOR POWER CONDUIT AND WIRE REQUIREMENTS

KEY NOTES ⟨X⟩

1 INCLUDE 2#14 FOR MOTOR HEATER AND 2#14 FOR DISCONNECT SWITCH AUXILARY CONTACT, IN 3/4" CONDUIT, FROM CONTROLLER (VFD OR STARTER) TO MOTOR AS INDICATED IN SCHEMATIC DIAGRAM. TYPICAL FOR MOTORS.

2 SEE PANEL SCHEDULES FOR INSTRUMENT POWER CIRCUIT NUMBER, TYPICAL.

THE DRAWINGS IN THIS SET ARE RECORD DRAWINGS. THEY ARE CONSTRUCTION CONTRACT DRAWINGS WHICH HAVE BEEN REVISED BASED ON AVAILABLE FIELD INFORMATION RECORDED BY OTHERS DURING CONSTRUCTION OF THIS CONTRACT. THERE HAS BEEN NO VERIFICATION OF DIMENSIONS SHOWN ON THE CONSTRUCTION DRAWINGS OR THE ACCURACY/COMPLETENESS OF THE FIELD INFORMATION RECEIVED.

SIGNATURE 2/7/2023 DATE

AS-BUILT REPLACEMENT SHEET

PROFESSIONAL CERTIFICATION

THIS DRAWING WAS ORIGINALLY APPROVED FOR CONSTRUCTION AND SEALED BY ROBERT L. ANDERSON, A REGISTERED PROFESSIONAL ENGINEER IN THE STATE OF MARYLAND, NO. 37997.

NOTICE TO CONTRACTORS

- PROJECT ELEVATIONS ARE BASED ON NAVD88 AND HOWARD COUNTY'S BENCHMARK SYSTEM
- PREVIOUS PROJECTS USED OTHER DATUMS
- APPLY THE FOLLOWING CONVERSIONS WHEN USING PREVIOUS CONTRACT DRAWINGS:
  - ADDITION NO. 6: SUBTRACT 0.80 FT
  - PRIOR ADDITIONS: SUBTRACT 1.04 FT

DEPARTMENT OF PUBLIC WORKS
HOWARD COUNTY, MARYLAND

CHIEF, BUREAU OF UTILITIES DATE

DES: WAC
DRN: WAC
CHK: RLA
DATE: 12/2016

DATE	REV	DESCRIPTION
07/2019		RECORD DRAWING

ELECTRICAL

GRAVITY THICKENERS INSTRUMENT ONE-LINE

LITTLE PATUXENT WATER RECLAMATION PLANT
8TH ADDITION
BIOSOLIDS PROCESSING FACILITIES - PHASE I

CAPITAL PROJECT S-6295
CONTRACT NO. 24-4935

ELECTION DISTRICT NO. 6
HOWARD COUNTY, MARYLAND

SCALE AS SHOWN

SHEET 323 OF 463

E-264

BIM 360://10054364 – Little Patuxent WRP 8th Addition/284591_E-HDR_V18.rvt
1/12/2022 9:33:09 AM

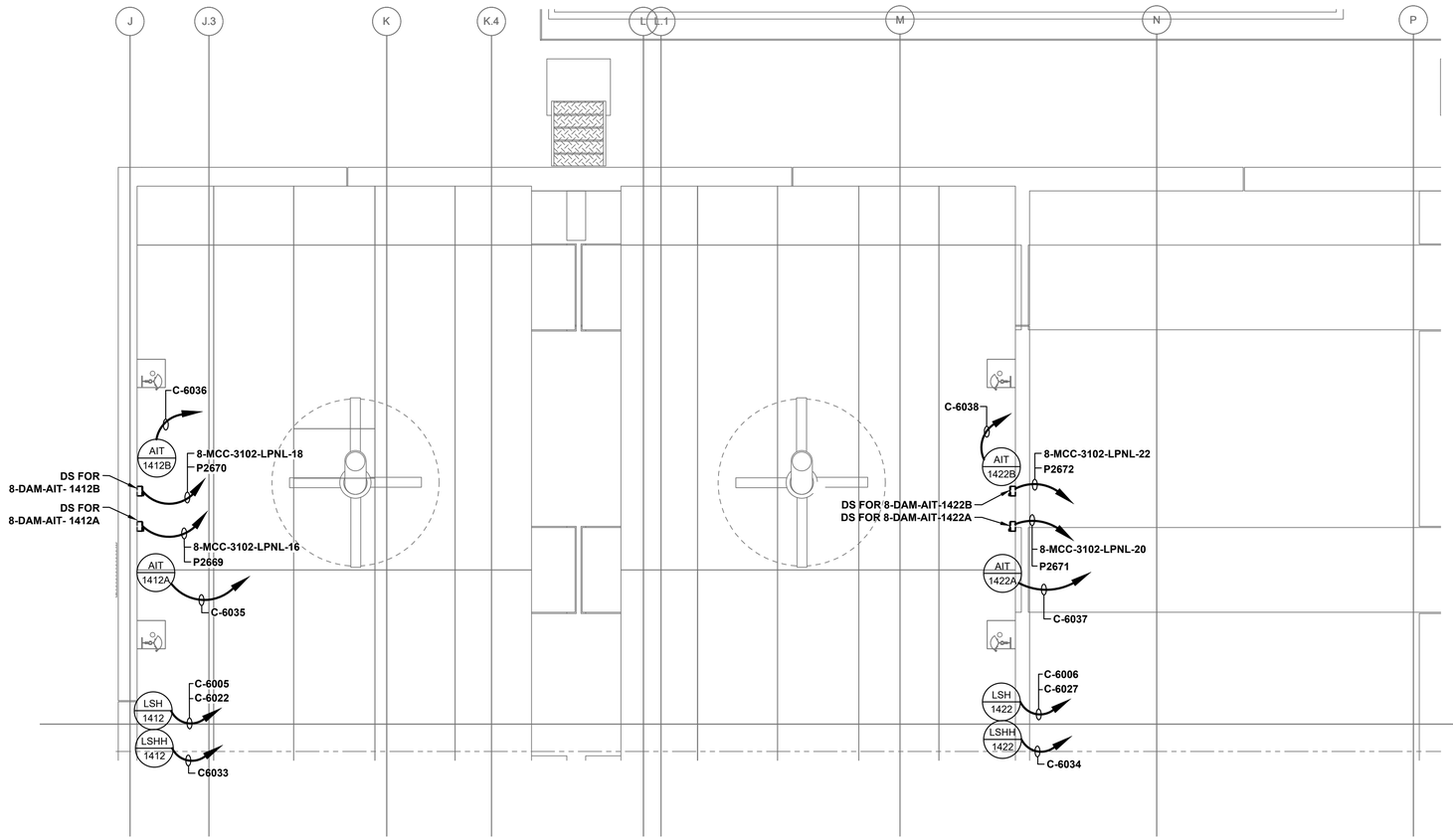

GENERAL NOTES:

1. FOR SYMBOLS AND ABBREVIATIONS, SEE DRAWING E-1.
2. FOR CONSTRUCTION SEQUENCE, SEE DRAWING E-2.
3. FOR NEW 8-MCC-3100-MCC ONE LINE DIAGRAM, SEE DRAWINGS E-8 AND E-9.
4. FOR PANELBOARD SCHEDULE, SEE DRAWINGS E-901 THRU E-904.
5. FOR CABLE AND CONDUIT SCHEDULE, SEE DRAWINGS E-905 THRU E-913, E-918 AND E-919.
6. LOCATION OF EQUIPMENT IE. MOTORS, VALVES, UNIT HEATERS, EXHAUST FANS, ETC. IS FOR REFERENCE ONLY. FOR EXACT LOCATION OF EQUIPMENT, REFER TO MECHANICAL, HVAC AND PLUMBING DRAWINGS.
7. DRAWINGS ARE INTENDED TO DEPICT DESIGN INTENT; CONTRACTOR TO REFER TO SPECIFICATIONS, P&IDS, AND STANDARD DETAILS FOR FURTHER INSTALLATION REQUIREMENTS.
8. NOT ALL INSTRUMENTATION EQUIPMENT ARE SHOWN ON THIS PLAN, REFER TO PROCESS AND P&ID DRAWINGS. THE DISCONNECT SWITCHES SHOWN FOR THE INSTRUMENTS; i.e., FITS, AITS, LITS, PITS, TITS, ETC. ARE 20A SNAP SWITCHES.

GRAPHIC SCALE

0 4 8 12 16

SCALE: 3/16" = 1'-0"

DEAMMONIFICATION REACTORS EL 146.00 - ELECTRICAL AND I&C PLAN

SCALE: 3/16" = 1'-0"

THE DRAWINGS IN THIS SET ARE RECORD DRAWINGS. THEY ARE CONSTRUCTION CONTRACT DRAWINGS WHICH HAVE BEEN REVISED BASED ON AVAILABLE FIELD INFORMATION RECORDED BY OTHERS DURING CONSTRUCTION OF THIS CONTRACT. THERE HAS BEEN NO VERIFICATION OF DIMENSIONS SHOWN ON THE CONSTRUCTION DRAWINGS OR THE ACCURACY/COMPLETENESS OF THE FIELD INFORMATION RECEIVED.

SIGNATURE _____ DATE 2/7/2020

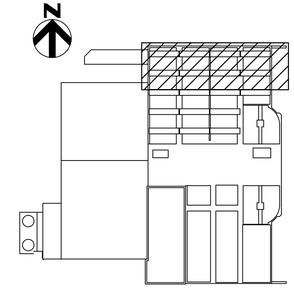

KEY PLAN

SHAH & ASSOCIATES

AS-BUILT REPLACEMENT SHEET

PROFESSIONAL CERTIFICATION
THIS DRAWING WAS ORIGINALLY APPROVED FOR CONSTRUCTION AND SEALED BY KANAIYALAL R. SHAH, A REGISTERED PROFESSIONAL ENGINEER IN THE STATE OF MARYLAND, NO. 11084.

NOTICE TO CONTRACTORS
- PROJECT ELEVATIONS ARE BASED ON NAVD88 AND HOWARD COUNTY'S BENCHMARK SYSTEM
- PREVIOUS PROJECTS USED OTHER DATUMS
- APPLY THE FOLLOWING CONVERSIONS WHEN USING PREVIOUS CONTRACT DRAWINGS:
  - ADDITION NO. 6: SUBTRACT 0.80 FT
  - PRIOR ADDITIONS: SUBTRACT 1.04 FT

DEPARTMENT OF PUBLIC WORKS
HOWARD COUNTY, MARYLAND

CHIEF, BUREAU OF UTILITIES DATE

DES: SR
DRN: AJS
CHK: KRS
DATE: 10/2016

DATE	REV	DESCRIPTION
07/2019		RECORD DRAWING

ELECTRICAL

DEAMMONIFICATION REACTORS
EL 146.00
ELECTRICAL AND I&C PLAN

LITTLE PATUXENT WATER RECLAMATION PLANT
8TH ADDITION
BIOSOLIDS PROCESSING FACILITIES – PHASE I

CAPITAL PROJECT S-6295
CONTRACT NO. 24-4935

ELECTION DISTRICT NO. 6
HOWARD COUNTY, MARYLAND

SCALE AS SHOWN

SHEET 360 OF 463

E-266

GENERAL NOTES:

1. FOR SYMBOLS AND ABBREVIATIONS, SEE DRAWING E-1.
2. FOR CONSTRUCTION SEQUENCE, SEE DRAWING E-2.
3. FOR NEW 8-MCC-3100-MCC ONE LINE DIAGRAM, SEE DRAWINGS E-8 AND E-9.
4. FOR PANELBOARD SCHEDULES, SEE DRAWINGS E-901 THRU E-904.
5. FOR CABLE AND CONDUIT SCHEDULE, SEE DRAWINGS E-905 THRU E-913, E-918 AND E-919.
6. LOCATION OF EQUIPMENT I.E. MOTORS, VALVES, UNIT HEATERS, EXHAUST FANS, ETC. IS FOR REFERENCE ONLY. FOR EXACT LOCATION OF EQUIPMENT, REFER TO MECHANICAL, HVAC AND PLUMBING DRAWINGS.
7. DRAWINGS ARE INTENDED TO DEPICT DESIGN INTENT; CONTRACTOR TO REFER TO SPECIFICATIONS, P&IDS, AND STANDARD DETAILS FOR FURTHER INSTALLATION REQUIREMENTS.
8. NOT ALL INSTRUMENTATION EQUIPMENT ARE SHOWN ON THIS PLAN, REFER TO PROCESS AND P&ID DRAWINGS. THE DISCONNECT SWITCHES SHOWN FOR THE INSTRUMENTS; I.E., FITS, AITS, LITS, PITS, TITS, ETC. ARE 20A SNAP SWITCHES.

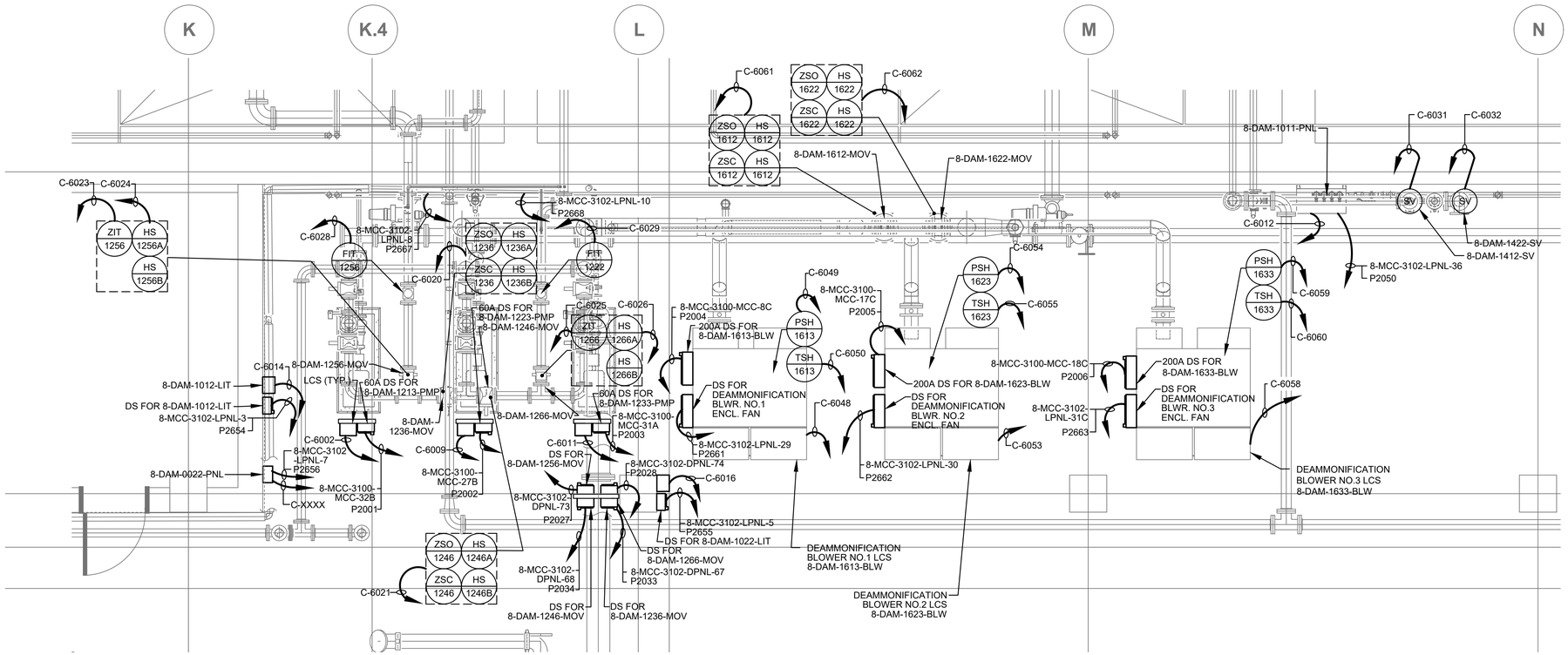

DEAMMONIFICATION REACTORS PARTIAL PLAN - ELECTRICAL AND I&C PLAN

SCALE: 3/8" = 1'-0"

GRAPHIC SCALE

0 2 4 6 8

SCALE: 3/8" = 1'-0"

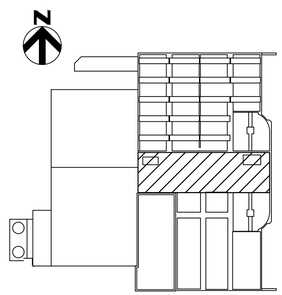

KEY PLAN

THE DRAWINGS IN THIS SET ARE RECORD DRAWINGS. THEY ARE CONSTRUCTION CONTRACT DRAWINGS WHICH HAVE BEEN REVISED BASED ON AVAILABLE FIELD INFORMATION RECORDED BY OTHERS DURING CONSTRUCTION OF THIS CONTRACT. THERE HAS BEEN NO VERIFICATION OF DIMENSIONS SHOWN ON THE CONSTRUCTION DRAWINGS OR THE ACCURACY/COMPLETENESS OF THE FIELD INFORMATION RECEIVED.

SIGNATURE _____ DATE 2/7/2020

SHAH & ASSOCIATES

AS-BUILT REPLACEMENT SHEET

PROFESSIONAL CERTIFICATION
THIS DRAWING WAS ORIGINALLY APPROVED FOR CONSTRUCTION AND SEALED BY KANAIYALAL R. SHAH, A REGISTERED PROFESSIONAL ENGINEER IN THE STATE OF MARYLAND, NO. 11084.

NOTICE TO CONTRACTORS
- PROJECT ELEVATIONS ARE BASED ON NAVD88 AND HOWARD COUNTY'S BENCHMARK SYSTEM
- PREVIOUS PROJECTS USED OTHER DATUMS
- APPLY THE FOLLOWING CONVERSIONS WHEN USING PREVIOUS CONTRACT DRAWINGS:
  - ADDITION NO. 6: SUBTRACT 0.80 FT
  - PRIOR ADDITIONS: SUBTRACT 1.04 FT

DEPARTMENT OF PUBLIC WORKS
HOWARD COUNTY, MARYLAND

CHIEF, BUREAU OF UTILITIES DATE

DES: SR
DRN: AJS
CHK: KRS
DATE: 10/2016

DATE	REV	DESCRIPTION
07/2019		RECORD DRAWING

ELECTRICAL

DEAMMONIFICATION REACTORS
PARTIAL PLANS
ELECTRICAL AND I&C PLAN

LITTLE PATUXENT WATER RECLAMATION PLANT
8TH ADDITION
BIOSOLIDS PROCESSING FACILITIES – PHASE I

CAPITAL PROJECT S–6295
CONTRACT NO. 24–4935

ELECTION DISTRICT NO. 6
HOWARD COUNTY, MARYLAND

SCALE AS SHOWN

SHEET 361 OF 463

E-267

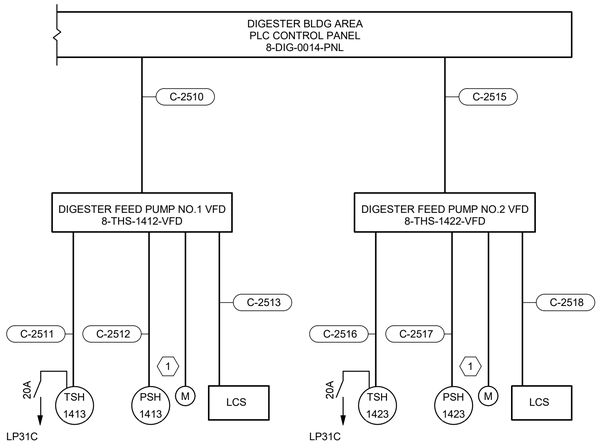

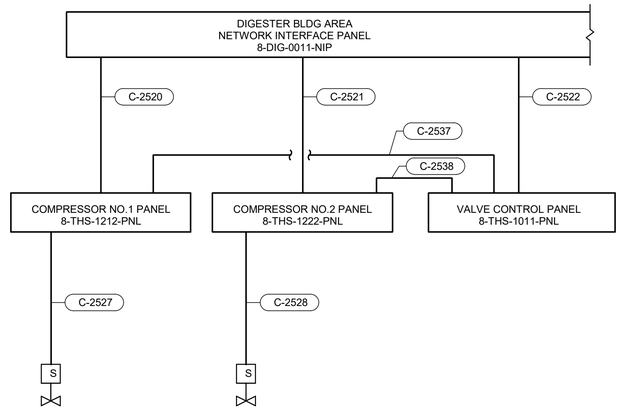

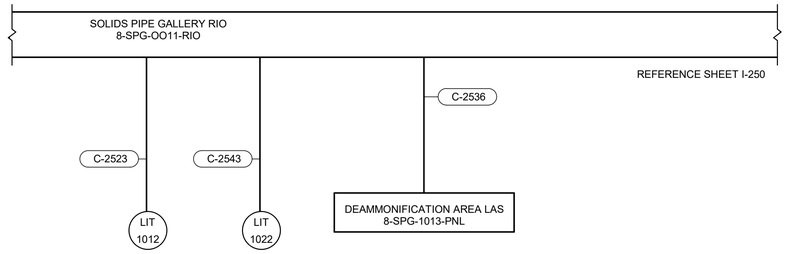

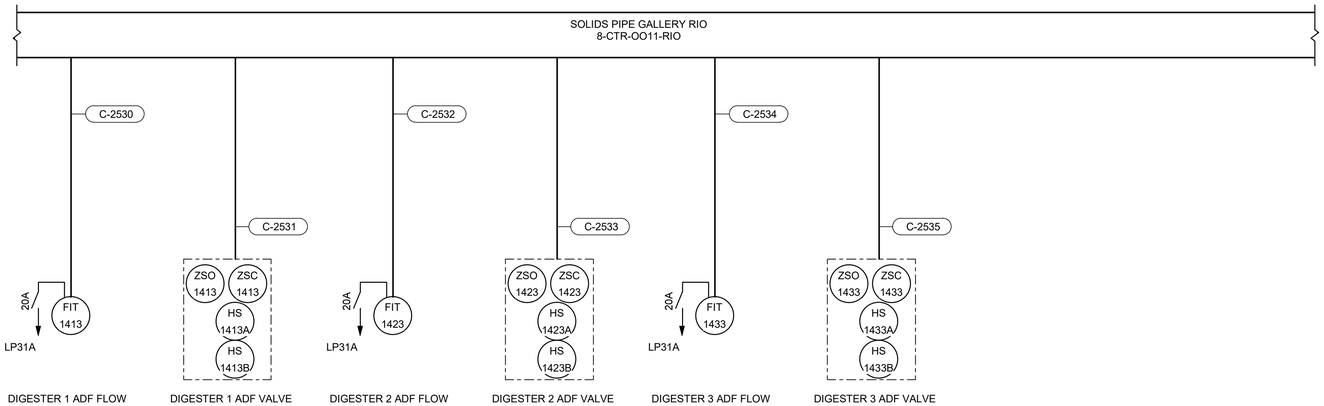

GENERAL NOTES

1. SEE POWER ONE-LINE DIAGRAMS AND CONDUIT AND WIRE SCHEDULES FOR DRIVE, STARTER, AND MOTOR POWER CONDUIT AND WIRE REQUIREMENTS

KEY NOTES (X)

1 INCLUDE 2#14 FOR MOTOR HEATER AND 2#14 FOR DISCONNECT SWITCH AUXILARY CONTACT, IN 3/4" CONDUIT, FROM CONTROLLER (VFD OR STARTER) TO MOTOR AS INDICATED IN SCHEMATIC DIAGRAM. TYPICAL FOR MOTORS.

THE DRAWINGS IN THIS SET ARE RECORD DRAWINGS. THEY ARE CONSTRUCTION CONTRACT DRAWINGS WHICH HAVE BEEN REVISED BASED ON AVAILABLE FIELD INFORMATION RECORDED BY OTHERS DURING CONSTRUCTION OF THIS CONTRACT. THERE HAS BEEN NO VERIFICATION OF DIMENSIONS SHOWN ON THE CONSTRUCTION DRAWINGS OR THE ACCURACY/COMPLETENESS OF THE FIELD INFORMATION RECEIVED.

SIGNATURE 2/7/2023 DATE

AS-BUILT REPLACEMENT SHEET

PROFESSIONAL CERTIFICATION

THIS DRAWING WAS ORIGINALLY APPROVED FOR CONSTRUCTION AND SEALED BY ROBERT L. ANDERSON, A REGISTERED PROFESSIONAL ENGINEER IN THE STATE OF MARYLAND, NO. 37997.

NOTICE TO CONTRACTORS

- PROJECT ELEVATIONS ARE BASED ON NAVD88 AND HOWARD COUNTY'S BENCHMARK SYSTEM
- PREVIOUS PROJECTS USED OTHER DATUMS
- APPLY THE FOLLOWING CONVERSIONS WHEN USING PREVIOUS CONTRACT DRAWINGS:
  - ADDITION NO. 6: SUBTRACT 0.80 FT
  - PRIOR ADDITIONS: SUBTRACT 1.04 FT

DEPARTMENT OF PUBLIC WORKS
HOWARD COUNTY, MARYLAND

CHIEF, BUREAU OF UTILITIES DATE

DES: WAC
DRN: WAC
CHK: RLA
DATE: 12/2016

DATE	REV	DESCRIPTION
07/2019		RECORD DRAWING

ELECTRICAL

THICKENED SLUDGE STORAGE INSTRUMENT ONE-LINE DIAGRAM

LITTLE PATUXENT WATER RECLAMATION PLANT
8TH ADDITION
BIOSOLIDS PROCESSING FACILITIES - PHASE I

CAPITAL PROJECT S-6295
CONTRACT NO. 24-4935

ELECTION DISTRICT NO. 6
HOWARD COUNTY, MARYLAND

SCALE AS SHOWN

SHEET 362 OF 463

E-268

BIM 360://10054364 – Little Patuxent WRP 8th Addition/264591_E-HDR_V18.rvt
1/12/2022 9:33:10 AM

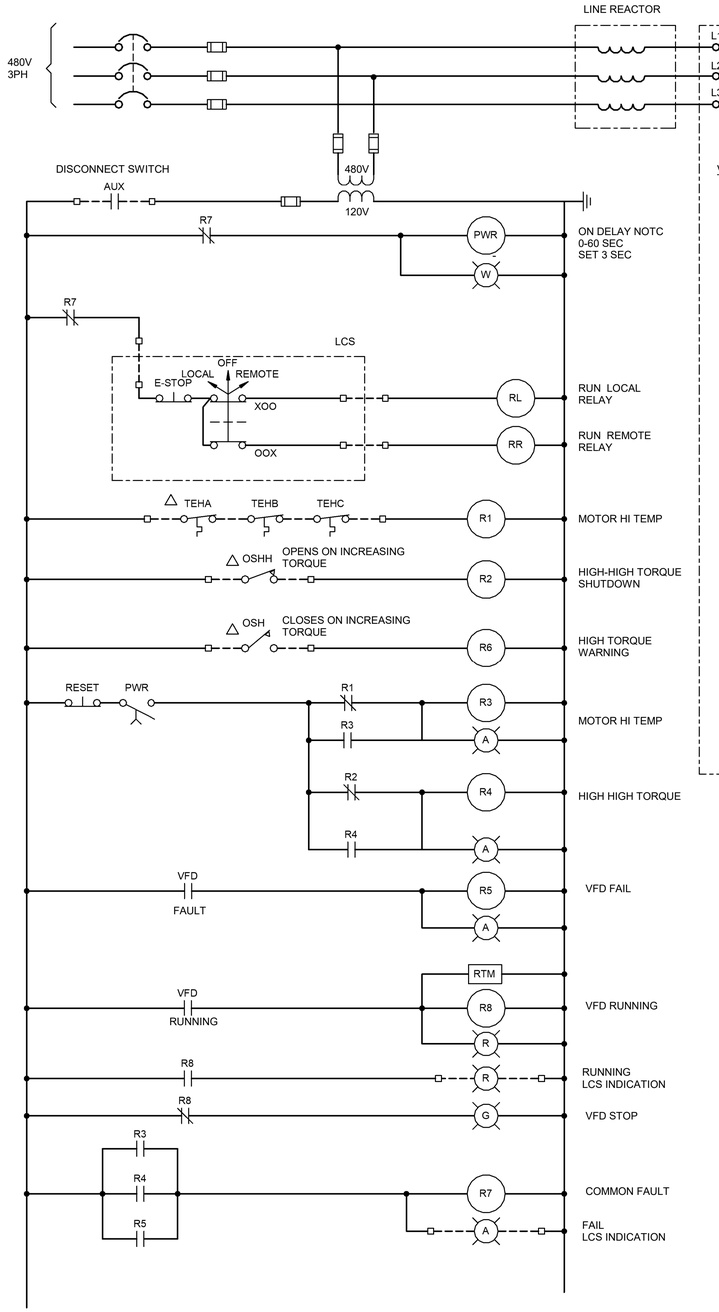

TYPICAL GRAVITY THICKENER VFD SCHEMATIC

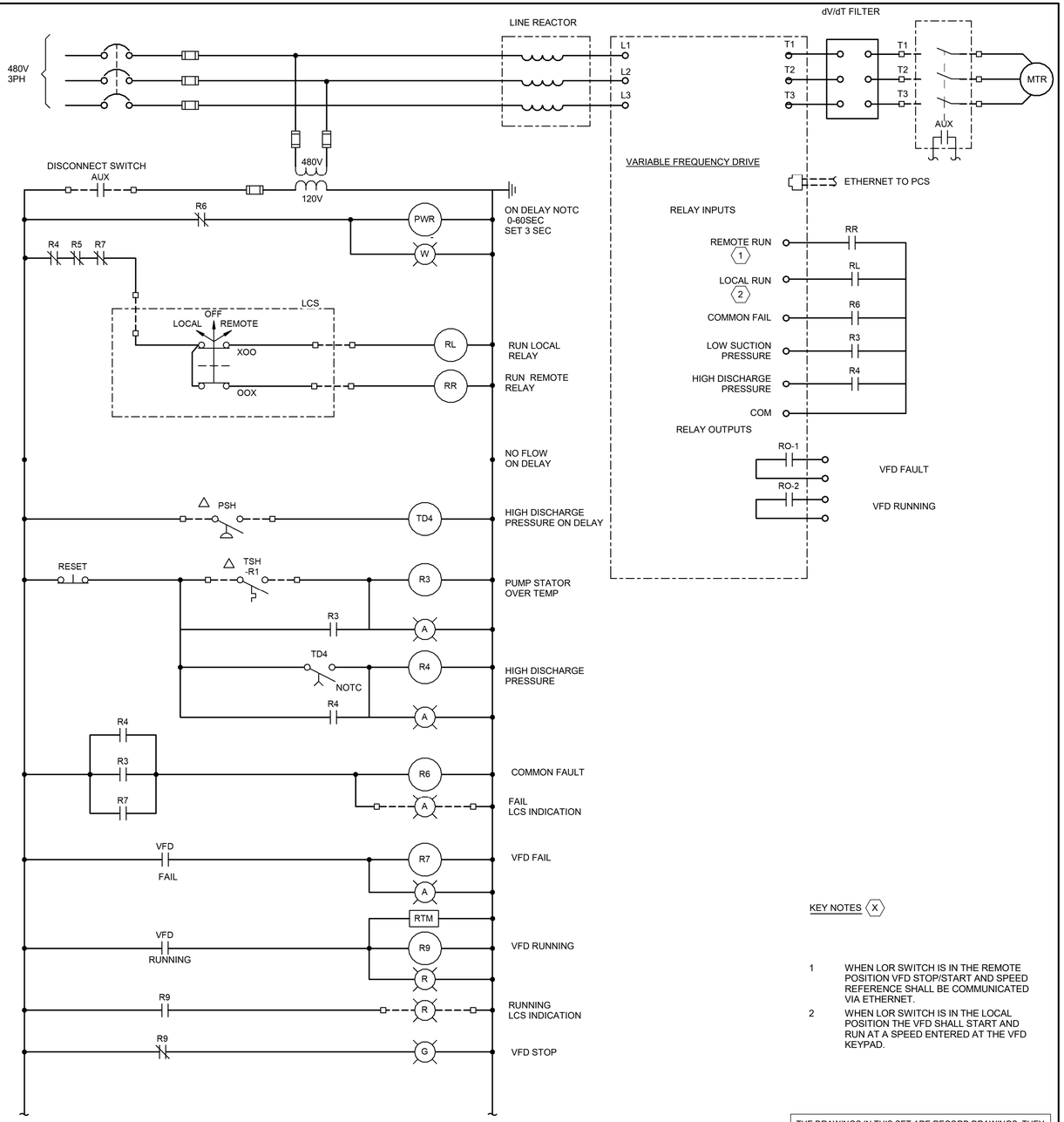

TYPICAL GRAVITY THICKENER TRANSFER PUMP VFD SCHEMATIC

KEY NOTES (X)

1. WHEN LOR SWITCH IS IN THE REMOTE POSITION VFD STOP/START AND SPEED REFERENCE SHALL BE COMMUNICATED VIA ETHERNET.
2. WHEN LOR SWITCH IS IN THE LOCAL POSITION THE VFD SHALL START AND RUN AT A SPEED ENTERED AT THE VFD KEYPAD.

THE DRAWINGS IN THIS SET ARE RECORD DRAWINGS. THEY ARE CONSTRUCTION CONTRACT DRAWINGS WHICH HAVE BEEN REVISED BASED ON AVAILABLE FIELD INFORMATION RECORDED BY OTHERS DURING CONSTRUCTION OF THIS CONTRACT. THERE HAS BEEN NO VERIFICATION OF DIMENSIONS SHOWN ON THE CONSTRUCTION DRAWINGS OR THE ACCURACY/COMPLETENESS OF THE FIELD INFORMATION RECEIVED.

SIGNATURE _____ DATE 2/7/2023

AS-BUILT REPLACEMENT SHEET

PROFESSIONAL CERTIFICATION

THIS DRAWING WAS ORIGINALLY APPROVED FOR CONSTRUCTION AND SEALED BY ROBERT L. ANDERSON, A REGISTERED PROFESSIONAL ENGINEER IN THE STATE OF MARYLAND, NO. 37997.

NOTICE TO CONTRACTORS

- PROJECT ELEVATIONS ARE BASED ON NAVD88 AND HOWARD COUNTY'S BENCHMARK SYSTEM
- PREVIOUS PROJECTS USED OTHER DATUMS
- APPLY THE FOLLOWING CONVERSIONS WHEN USING PREVIOUS CONTRACT DRAWINGS:
  - ADDITION NO. 6: SUBTRACT 0.80 FT
  - PRIOR ADDITIONS: SUBTRACT 1.04 FT

DEPARTMENT OF PUBLIC WORKS
HOWARD COUNTY, MARYLAND

CHIEF, BUREAU OF UTILITIES DATE

DES: WAC
DRN: WAC
CHK: RLA
DATE: 12/2016

DATE	REV	DESCRIPTION
07/2019		RECORD DRAWING

ELECTRICAL

GRAVITY THICKENER SCHEMATIC DIAGRAMS

LITTLE PATUXENT WATER RECLAMATION PLANT
8TH ADDITION
BIOSOLIDS PROCESSING FACILITIES - PHASE I

CAPITAL PROJECT S-6295
CONTRACT NO. 24-4935

ELECTION DISTRICT NO. 6
HOWARD COUNTY, MARYLAND

SCALE AS SHOWN

SHEET 363 OF 463

E-269

BIM 360://100543364 – Little Patuxent WRP 8th Addition/264591_E-HDR_V18.rvt
1/12/2022 9:33:12 AM

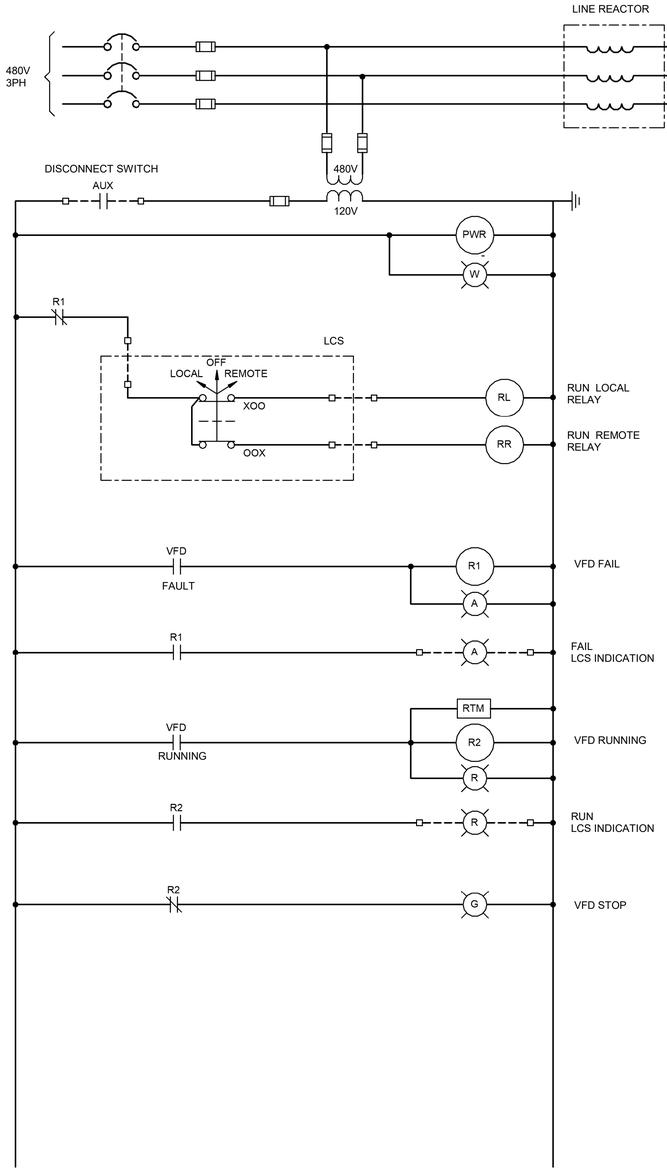

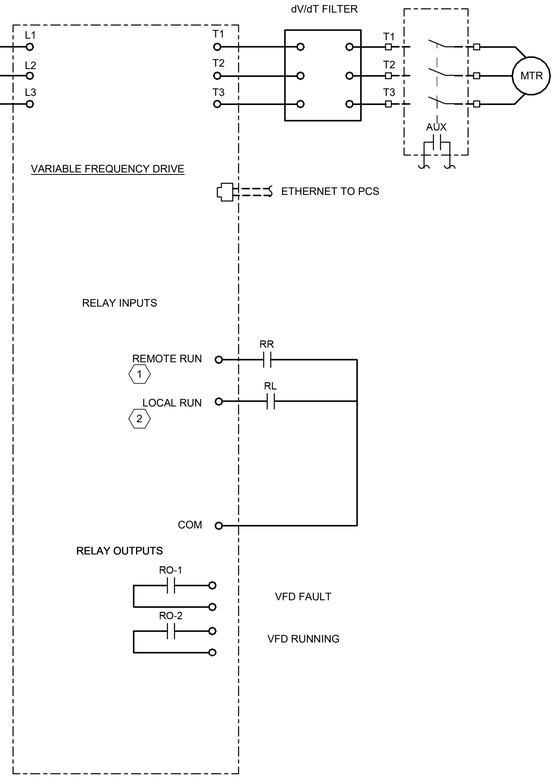

TYPICAL DILUTION WATER PUMP VFD SCHEMATIC

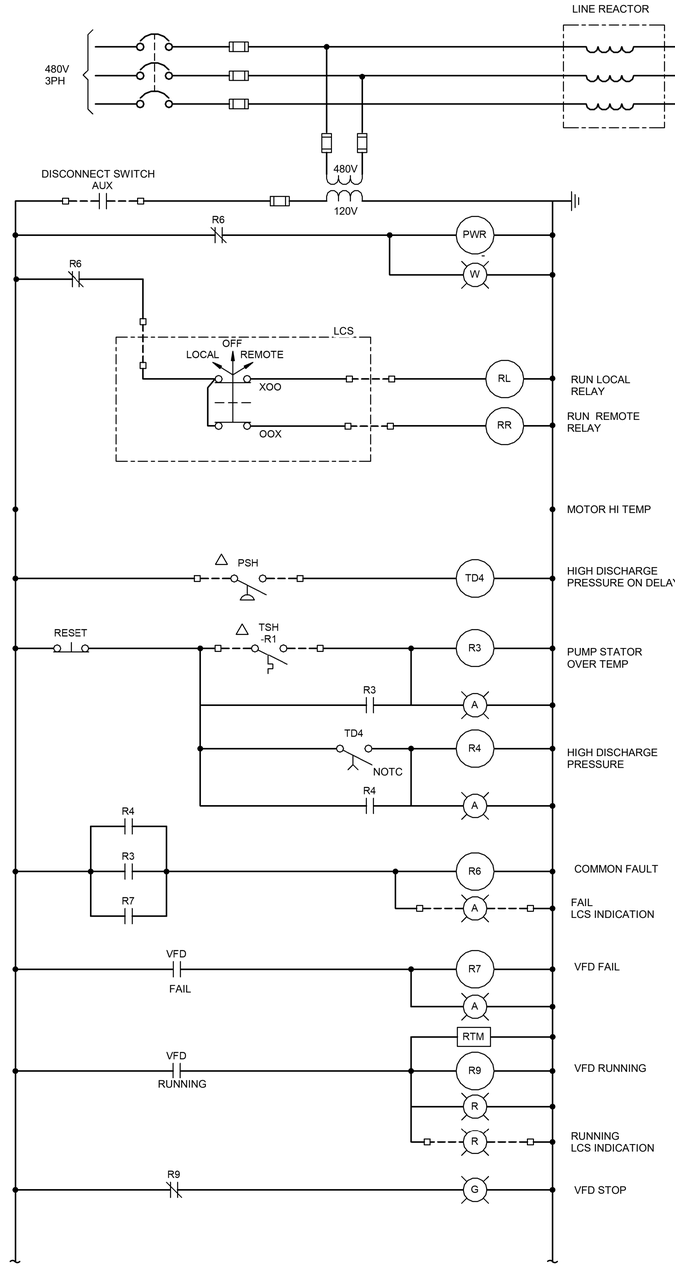

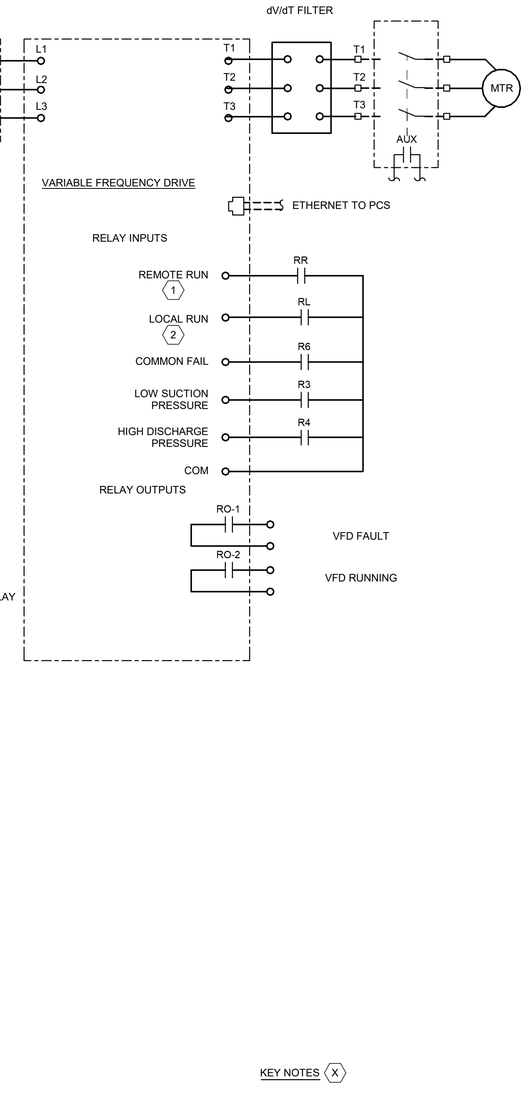

TYPICAL DIGESTER FEED PUMP VFD SCHEMATIC

KEY NOTES (X)

1 WHEN LOR SWITCH IS IN THE REMOTE POSITION VFD STOP/START AND SPEED REFERENCE SHALL BE COMMUNICATED VIA ETHERNET.

2 WHEN LOR SWITCH IS IN THE LOCAL POSITION THE VFD SHALL START AND RUN AT A SPEED ENTERED AT THE VFD KEYPAD.

THE DRAWINGS IN THIS SET ARE RECORD DRAWINGS. THEY ARE CONSTRUCTION CONTRACT DRAWINGS WHICH HAVE BEEN REVISED BASED ON AVAILABLE FIELD INFORMATION RECORDED BY OTHERS DURING CONSTRUCTION OF THIS CONTRACT. THERE HAS BEEN NO VERIFICATION OF DIMENSIONS SHOWN ON THE CONSTRUCTION DRAWINGS OR THE ACCURACY/COMPLETENESS OF THE FIELD INFORMATION RECEIVED.

SIGNATURE 2/7/2023 DATE

AS-BUILT REPLACEMENT SHEET

PROFESSIONAL CERTIFICATION

THIS DRAWING WAS ORIGINALLY APPROVED FOR CONSTRUCTION AND SEALED BY ROBERT L. ANDERSON, A REGISTERED PROFESSIONAL ENGINEER IN THE STATE OF MARYLAND, NO. 37997.

NOTICE TO CONTRACTORS

- PROJECT ELEVATIONS ARE BASED ON NAVD88 AND HOWARD COUNTY'S BENCHMARK SYSTEM
- PREVIOUS PROJECTS USED OTHER DATUMS
- APPLY THE FOLLOWING CONVERSIONS WHEN USING PREVIOUS CONTRACT DRAWINGS:
  - ADDITION NO. 6: SUBTRACT 0.80 FT
  - PRIOR ADDITIONS: SUBTRACT 1.04 FT

DEPARTMENT OF PUBLIC WORKS
HOWARD COUNTY, MARYLAND

CHIEF, BUREAU OF UTILITIES DATE

DES: WAC
DRN: WAC
CHK: RLA
DATE: 12/2016

DATE	REV	DESCRIPTION
07/2019		RECORD DRAWING

ELECTRICAL

DILUTION WATER AND DIGESTER FEED SCHEMATIC DIAGRAMS

LITTLE PATUXENT WATER RECLAMATION PLANT
8TH ADDITION
BIOSOLIDS PROCESSING FACILITIES - PHASE I

CAPITAL PROJECT S-6295
CONTRACT NO. 24-4935

ELECTION DISTRICT NO. 6
HOWARD COUNTY, MARYLAND

SCALE AS SHOWN

SHEET 364 OF 463

E-270

BIM 360://10054364 – Little Patuxent WRP 8th Addition/264591_E-HDR_V18.rvt
1/12/2022 9:33:14 AM

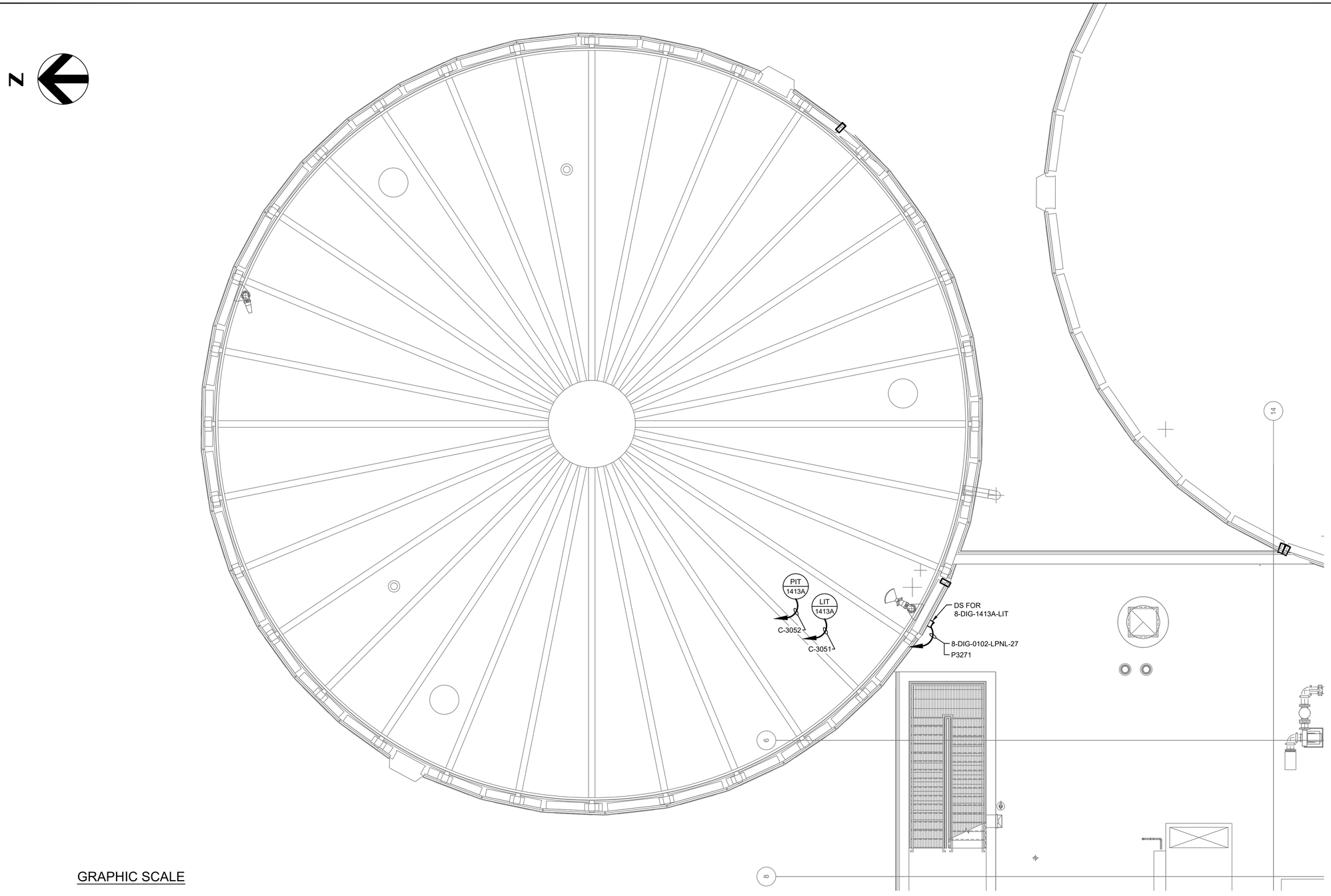

GENERAL NOTES:

1. FOR SYMBOLS AND ABBREVIATIONS, SEE DRAWING E-1.
2. FOR CONSTRUCTION SEQUENCE, SEE DRAWING E-2.
3. DRAWINGS ARE INTENDED TO DEPICT DESIGN INTENT; CONTRACTOR TO REFER TO SPECIFICATIONS, P&IDS, AND STANDARD DETAILS FOR FURTHER INSTALLATION REQUIREMENTS.
4. LOCATION OF EQUIPMENT IE. MOTORS, VALVES, UNIT HEATERS, EXHAUST FANS, ETC. IS FOR REFERENCE ONLY. FOR EXACT LOCATION OF EQUIPMENT, REFER TO MECHANICAL, HVAC AND PLUMBING DRAWINGS.
5. FOR PANELBOARD SCHEDULE AND CABLE AND CONDUIT SCHEDULE, SEE DRAWINGS E-901 THRU E-904.
6. FOR CABLE AND CONDUIT SCHEDULES, SEE DRAWINGS E-905 THRU E-913, E-918 AND E-919.
7. NOT ALL INSTRUMENTATION EQUIPMENT ARE SHOWN ON THIS PLAN, REFER TO PROCESS AND P&ID DRAWINGS. THE DISCONNECT SWITCHES SHOWN FOR THE INSTRUMENTS; I.E., FITS, AITS, LITS, PITS, TITS, ETC. ARE 20A SNAP SWITCHES.
8. FOR AREA CLASSIFICATION, SEE GENERAL DRAWING G-18. WORK SHALL BE PERFORMED IN ACCORDANCE WITH AREA CLASSIFICATION REQUIREMENTS. FOR ENCLOSURE AND CONDUIT TYPE, REFER TO SPECIFICATION SECTION 26 05 00.

THE DRAWINGS IN THIS SET ARE RECORD DRAWINGS. THEY ARE CONSTRUCTION CONTRACT DRAWINGS WHICH HAVE BEEN REVISED BASED ON AVAILABLE FIELD INFORMATION RECORDED BY OTHERS DURING CONSTRUCTION OF THIS CONTRACT. THERE HAS BEEN NO VERIFICATION OF DIMENSIONS SHOWN ON THE CONSTRUCTION DRAWINGS OR THE ACCURACY/COMPLETENESS OF THE FIELD INFORMATION RECEIVED.

SIGNATURE — DATE 2/7/2020

GRAPHIC SCALE

0 4 8 12 16

SCALE: 3/16" = 1'-0"

ANAEROBIC DIGESTERS TANK PLAN UPPER - ELECTRICAL AND I&C PLAN

SCALE: 3/16" = 1'-0"

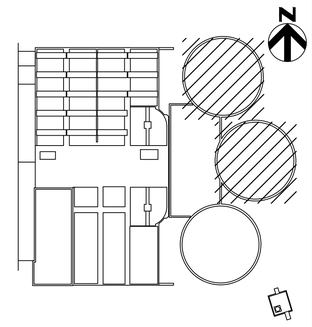

KEY PLAN

SHAH & ASSOCIATES

AS-BUILT REPLACEMENT SHEET

PROFESSIONAL CERTIFICATION

THIS DRAWING WAS ORIGINALLY APPROVED FOR CONSTRUCTION AND SEALED BY KANAIYALAL R. SHAH, A REGISTERED PROFESSIONAL ENGINEER IN THE STATE OF MARYLAND, NO. 11084.

NOTICE TO CONTRACTORS

- PROJECT ELEVATIONS ARE BASED ON NAVD88 AND HOWARD COUNTY'S BENCHMARK SYSTEM
- PREVIOUS PROJECTS USED OTHER DATUMS
- APPLY THE FOLLOWING CONVERSIONS WHEN USING PREVIOUS CONTRACT DRAWINGS:
  - ADDITION NO. 6: SUBTRACT 0.80 FT.
  - PRIOR ADDITIONS: SUBTRACT 1.04 FT

DEPARTMENT OF PUBLIC WORKS
HOWARD COUNTY, MARYLAND

CHIEF, BUREAU OF UTILITIES — DATE

DES:	SR
DRN:	AJS
CHK:	KRS
DATE:	10/2016

DATE	REV	DESCRIPTION
07/2019		RECORD DRAWING

ELECTRICAL

ANAEROBIC DIGESTERS TANK PLAN UPPER ELECTRICAL AND I&C PLAN

LITTLE PATUXENT WATER RECLAMATION PLANT
8TH ADDITION
BIOSOLIDS PROCESSING FACILITIES – PHASE I

CAPITAL PROJECT S-6295
CONTRACT NO. 24-4935

ELECTION DISTRICT NO. 6
HOWARD COUNTY, MARYLAND

SCALE AS SHOWN

SHEET 365 OF 463

E-301

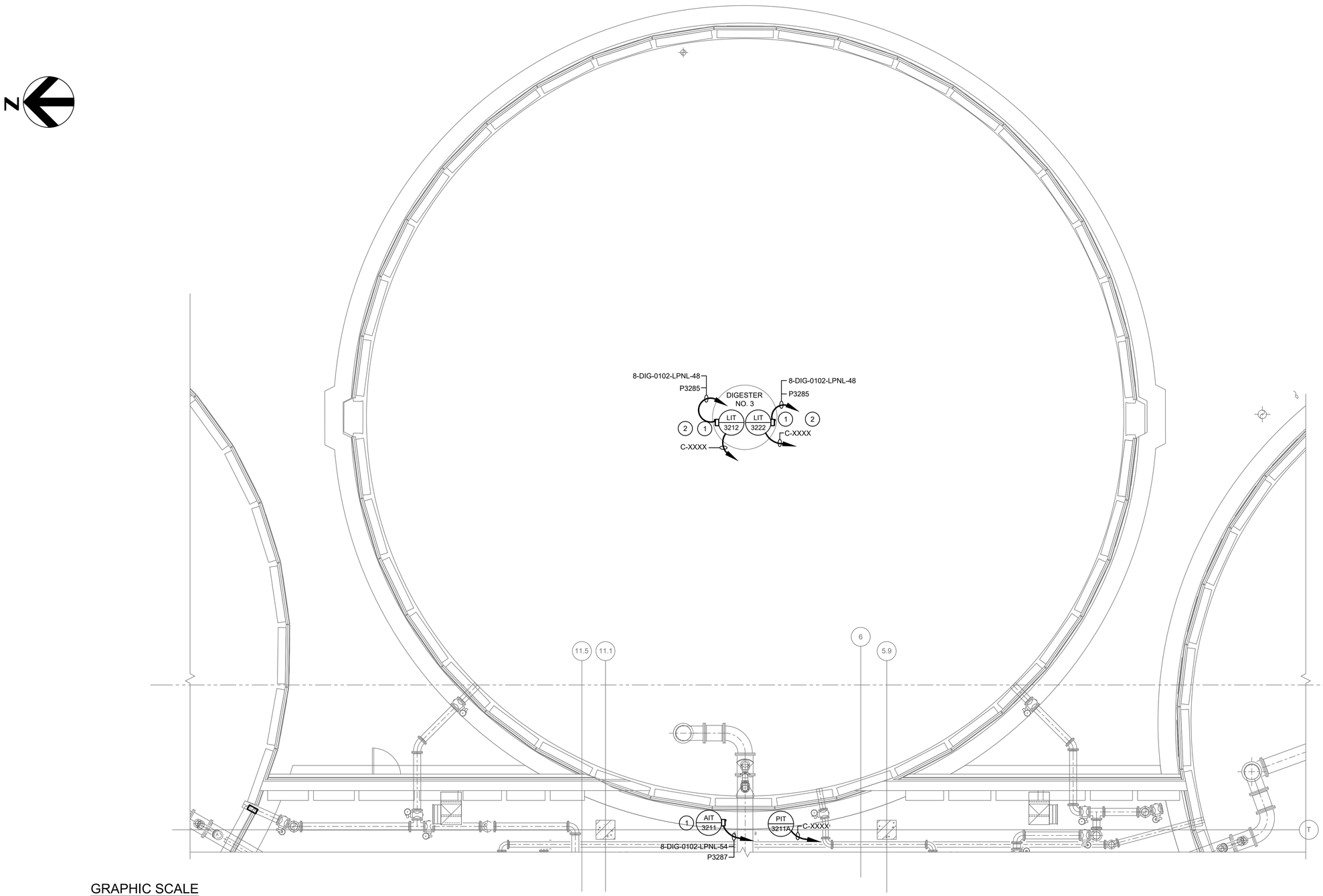

GENERAL NOTES:

1. FOR SYMBOLS AND ABBREVIATIONS, SEE DRAWING E-1.
2. FOR CONSTRUCTION SEQUENCE, SEE DRAWING E-2.
3. DRAWINGS ARE INTENDED TO DEPICT DESIGN INTENT; CONTRACTOR TO REFER TO SPECIFICATIONS, P&IDS, AND STANDARD DETAILS FOR FURTHER INSTALLATION REQUIREMENTS.
4. LOCATION OF EQUIPMENT IE. MOTORS, VALVES, UNIT HEATERS, EXHAUST FANS, ETC. IS FOR REFERENCE ONLY. FOR EXACT LOCATION OF EQUIPMENT, REFER TO MECHANICAL, HVAC AND PLUMBING DRAWINGS.
5. FOR PANELBOARD SCHEDULE, SEE DRAWINGS E-901 THRU E-904.
6. FOR CABLE AND CONDUIT SCHEDULES, SEE DRAWINGS E-905 THRU E-913, E-918 AND E-919.
7. NOT ALL INSTRUMENTATION EQUIPMENT ARE SHOWN ON THIS PLAN, REFER TO PROCESS AND P&ID DRAWINGS. THE DISCONNECT SWITCHES SHOWN FOR THE INSTRUMENTS; I.E., FITS, AITS, LITS, PITS, TITS, ETC. ARE 20A SNAP SWITCHES.
8. FOR AREA CLASSIFICATION, SEE GENERAL DRAWING G-18. WORK SHALL BE PERFORMED IN ACCORDANCE WITH AREA CLASSIFICATION REQUIREMENTS. FOR ENCLOSURE AND CONDUIT TYPE, REFER TO SPECIFICATION SECTION 26 05 00.

DRAWING NOTES:

(1) SWITCH LOCATION SHOWN SYMBOLICALLY ONLY. LOCATE SWITCHES NEXT TO TRANSMITTERS.

(2) USE NON-METALIC SUNLIGHT RESISTANT LIQUID TIGHT FLEXIBLE CONDUIT RATED FOR CLASS 1 DIV 1 LOCATIONS. COORDINATE THE FASTENING OF THE CONDUIT WITH WESTECH.

THE DRAWINGS IN THIS SET ARE RECORD DRAWINGS. THEY ARE CONSTRUCTION CONTRACT DRAWINGS WHICH HAVE BEEN REVISED BASED ON AVAILABLE FIELD INFORMATION RECORDED BY OTHERS DURING CONSTRUCTION OF THIS CONTRACT. THERE HAS BEEN NO VERIFICATION OF DIMENSIONS SHOWN ON THE CONSTRUCTION DRAWINGS OR THE ACCURACY/COMPLETENESS OF THE FIELD INFORMATION RECEIVED.

SIGNATURE 2/7/2023 DATE

GRAPHIC SCALE

0 4 8 12 16

SCALE: 3/16" = 1'-0"

ANAEROBIC DIGESTERS - TANK PLAN UPPER - ELECTRICAL AND I&C PLAN

SCALE: 3/16" = 1'-0"

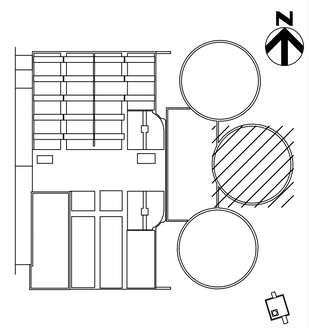

KEY PLAN

SHAH & ASSOCIATES

AS-BUILT REPLACEMENT SHEET

PROFESSIONAL CERTIFICATION

THIS DRAWING WAS ORIGINALLY APPROVED FOR CONSTRUCTION AND SEALED BY KANAIYALAL R. SHAH, A REGISTERED PROFESSIONAL ENGINEER IN THE STATE OF MARYLAND, NO. 11084.

NOTICE TO CONTRACTORS

- PROJECT ELEVATIONS ARE BASED ON NAVD88 AND HOWARD COUNTY'S BENCHMARK SYSTEM
- PREVIOUS PROJECTS USED OTHER DATUMS
- APPLY THE FOLLOWING CONVERSIONS WHEN USING PREVIOUS CONTRACT DRAWINGS:
  - ADDITION NO. 6: SUBTRACT 0.80 FT.
  - PRIOR ADDITIONS: SUBTRACT 1.04 FT

DEPARTMENT OF PUBLIC WORKS
HOWARD COUNTY, MARYLAND

CHIEF, BUREAU OF UTILITIES DATE

DES:	SR
DRN:	AJS
CHK:	KRS
DATE:	10/2016

DATE	REV	DESCRIPTION
07/2019		RECORD DRAWING

ELECTRICAL

ANAEROBIC DIGESTERS
TANK PLAN UPPER
ELECTRICAL AND I&C PLAN

LITTLE PATUXENT WATER RECLAMATION PLANT
8TH ADDITION
BIOSOLIDS PROCESSING FACILITIES – PHASE I

CAPITAL PROJECT S-6295
CONTRACT NO. 24-4935

ELECTION DISTRICT NO. 6
HOWARD COUNTY, MARYLAND

SCALE AS SHOWN

SHEET 366 OF 463

E-303

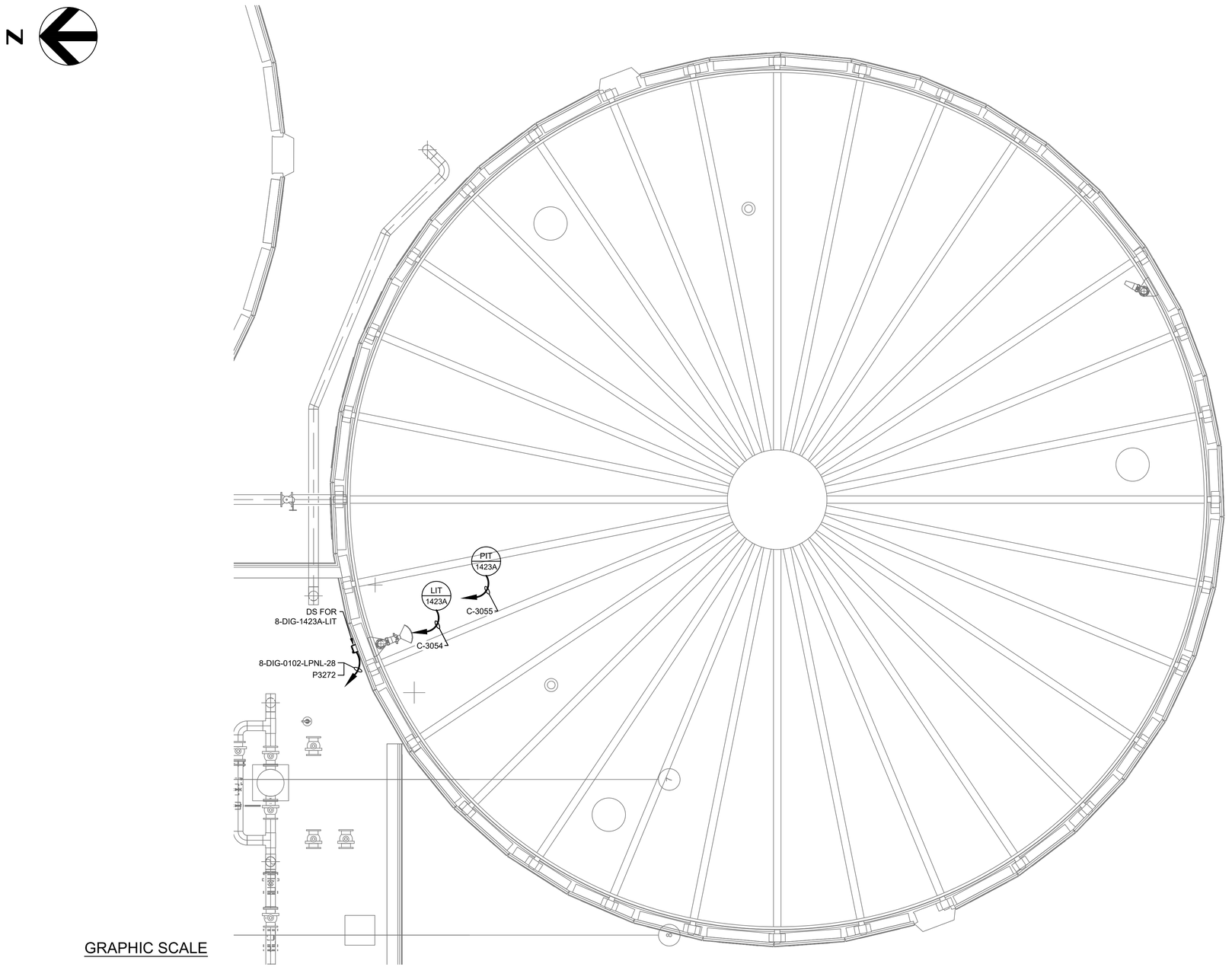

GRAPHIC SCALE

0 4 8 12 16

SCALE: 3/16" = 1'-0"

ANAEROBIC DIGESTERS TANK PLAN UPPER - ELECTRICAL AND I&C PLAN

SCALE: 3/16" = 1'-0"

GENERAL NOTES:

1. FOR SYMBOLS AND ABBREVIATIONS, SEE DRAWING E-1.
2. FOR CONSTRUCTION SEQUENCE, SEE DRAWING E-2.
3. DRAWINGS ARE INTENDED TO DEPICT DESIGN INTENT; CONTRACTOR TO REFER TO SPECIFICATIONS, P&IDS, AND STANDARD DETAILS FOR FURTHER INSTALLATION REQUIREMENTS.
4. LOCATION OF EQUIPMENT IE. MOTORS, VALVES, UNIT HEATERS, EXHAUST FANS, ETC. IS FOR REFERENCE ONLY. FOR EXACT LOCATION OF EQUIPMENT, REFER TO MECHANICAL, HVAC AND PLUMBING DRAWINGS.
5. FOR PANELBOARD SCHEDULE AND CABLE AND CONDUIT SCHEDULE, SEE DRAWINGS E-901 THRU E-904.
6. FOR CABLE AND CONDUIT SCHEDULES, SEE DRAWINGS E-905 THRU E-913, E-918 AND E-919.
7. NOT ALL INSTRUMENTATION EQUIPMENT ARE SHOWN ON THIS PLAN, REFER TO PROCESS AND P&ID DRAWINGS. THE DISCONNECT SWITCHES SHOWN FOR THE INSTRUMENTS; I.E., FITS, AITS, LITS, PITS, TITS, ETC. ARE 20A SNAP SWITCHES.
8. FOR AREA CLASSIFICATION, SEE GENERAL DRAWING G-18. WORK SHALL BE PERFORMED IN ACCORDANCE WITH AREA CLASSIFICATION REQUIREMENTS. FOR ENCLOSURE AND CONDUIT TYPE, REFER TO SPECIFICATION SECTION 26 05 00.

THE DRAWINGS IN THIS SET ARE RECORD DRAWINGS. THEY ARE CONSTRUCTION CONTRACT DRAWINGS WHICH HAVE BEEN REVISED BASED ON AVAILABLE FIELD INFORMATION RECORDED BY OTHERS DURING CONSTRUCTION OF THIS CONTRACT. THERE HAS BEEN NO VERIFICATION OF DIMENSIONS SHOWN ON THE CONSTRUCTION DRAWINGS OR THE ACCURACY/COMPLETENESS OF THE FIELD INFORMATION RECEIVED.

SIGNATURE _____ DATE 2/7/2020

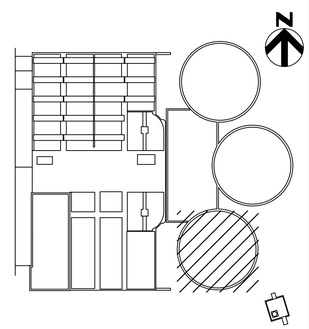

KEY PLAN

SHAH & ASSOCIATES

AS-BUILT REPLACEMENT SHEET

PROFESSIONAL CERTIFICATION
THIS DRAWING WAS ORIGINALLY APPROVED FOR CONSTRUCTION AND SEALED BY KANAIYALAL R. SHAH, A REGISTERED PROFESSIONAL ENGINEER IN THE STATE OF MARYLAND, NO. 11084.

NOTICE TO CONTRACTORS
- PROJECT ELEVATIONS ARE BASED ON NAVD88 AND HOWARD COUNTY'S BENCHMARK SYSTEM
- PREVIOUS PROJECTS USED OTHER DATUMS
- APPLY THE FOLLOWING CONVERSIONS WHEN USING PREVIOUS CONTRACT DRAWINGS:
  - ADDITION NO. 6: SUBTRACT 0.80 FT
  - PRIOR ADDITIONS: SUBTRACT 1.04 FT

DEPARTMENT OF PUBLIC WORKS
HOWARD COUNTY, MARYLAND

CHIEF, BUREAU OF UTILITIES DATE

DES: SR
DRN: AJS
CHK: KRS
DATE: 10/2016

DATE	REV	DESCRIPTION
07/2019		RECORD DRAWING

ELECTRICAL

ANAEROBIC DIGESTERS TANK PLAN UPPER ELECTRICAL AND I&C PLAN

LITTLE PATUXENT WATER RECLAMATION PLANT
8TH ADDITION
BIOSOLIDS PROCESSING FACILITIES – PHASE I

CAPITAL PROJECT S–6295
CONTRACT NO. 24–4935

ELECTION DISTRICT NO. 6
HOWARD COUNTY, MARYLAND

SCALE AS SHOWN

SHEET 367 OF 463

E-305

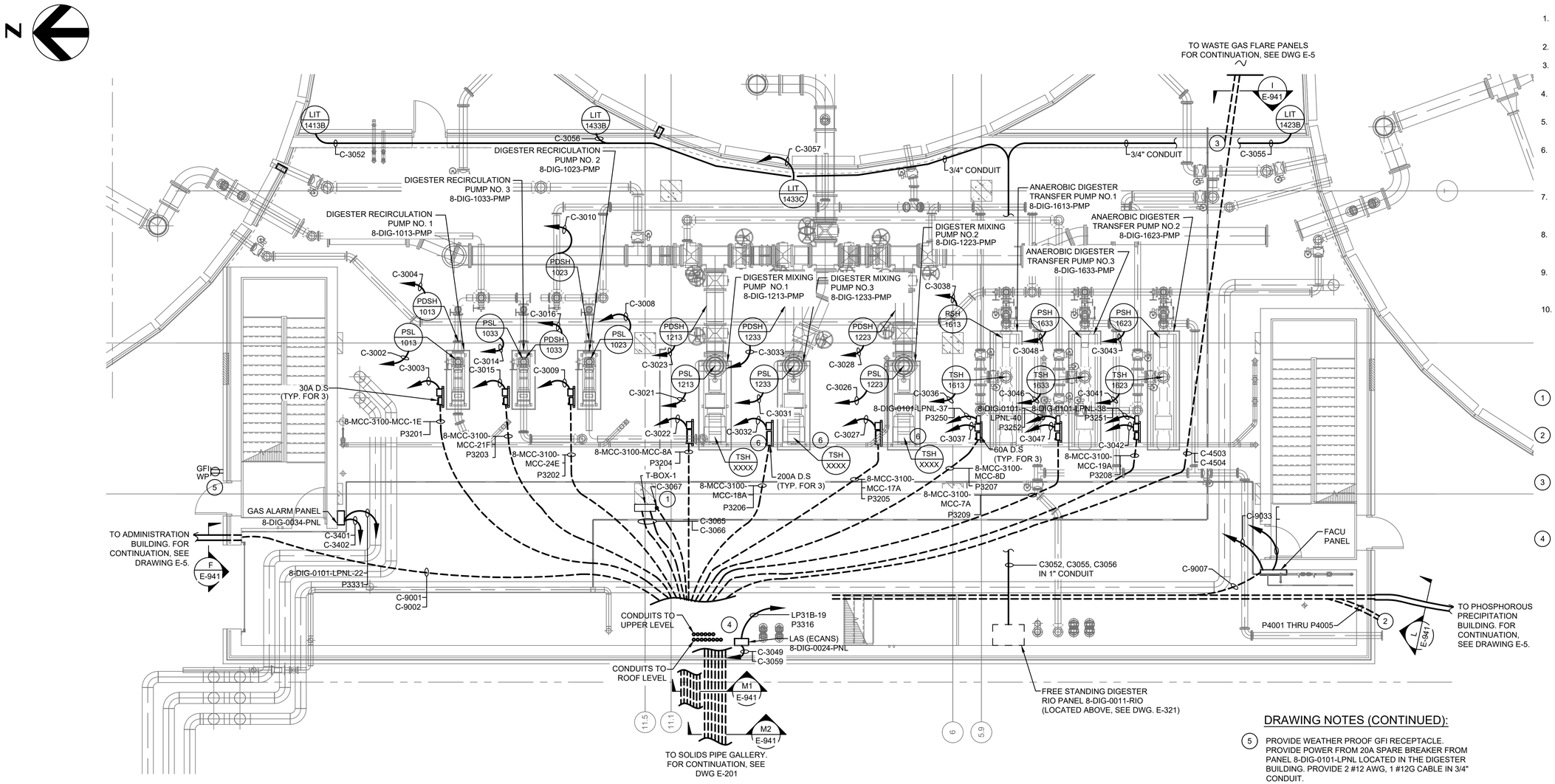

GENERAL NOTES:

1. FOR SYMBOLS AND ABBREVIATIONS, SEE DRAWING E-1.
2. FOR CONSTRUCTION SEQUENCE, SEE DRAWING E-2.
3. FOR NEW 8-MCC-3100-MCC ONE LINE DIAGRAM, SEE DRAWINGS E-8 AND E-9.
4. FOR PANELBOARD SCHEDULES, SEE DRAWINGS E-901 THRU E-904.
5. FOR CABLE AND CONDUIT SCHEDULE, SEE DRAWINGS E-905 THRU E-913, E-918 AND E-919.
6. DRAWINGS ARE INTENDED TO DEPICT DESIGN INTENT; CONTRACTOR TO REFER TO SPECIFICATIONS, PAIDS, AND STANDARD DETAILS FOR FURTHER INSTALLATION REQUIREMENTS.
7. LOCATION OF EQUIPMENT, INSTRUMENTATION EQUIPMENTS, VALVES, ETC. IS APPROXIMATE. REFER TO PROCESS DRAWINGS FOR EXACT LOCATION.
8. NOT ALL INSTRUMENTATION EQUIPMENT ARE SHOWN ON THIS PLAN, REFER TO PROCESS AND P&ID DRAWINGS.
9. THE DISCONNECT SWITCHES SHOWN FOR THE INSTRUMENTS, I. E., FITS, AITS, LITS, PITS, TITS, ETC ARE 20A SNAP SWITCHES.
10. FOR AREA CLASSIFICATION, SEE GENERAL DRAWING G-18. WORK SHALL BE PERFORMED IN ACCORDANCE WITH AREA CLASSIFICATION REQUIREMENTS. FOR ENCLOSURE AND CONDUIT TYPE, REFER TO SPECIFICATION SECTION 26 05 00.

DRAWING NOTES:

1. TO UPPER LEVEL TERMINAL BOX T-BOX-2. T-BOX-1 AND T-BOX-2 SHALL BE NEMA 4X STAINLESS STEEL TERMINAL BOXES AND SIZE AS REQUIRED.
2. PROVIDE CONDUIT STUB UPS FOR FUTURE HYDROGEN SULFIDE REMOVAL SYSTEM AT THE SOUTH EDGE OF THE DIGESTER BUILDING AS SHOWN.
3. ROUTE POWER AND CONTROL CONDUITS FROM THE WASTE GAS FLARE PANELS TO PANEL 8-DIG-0103-LPNL AND RIO PANEL AT THE UPPER LEVEL OF DIGESTER BUILDING AND TO PLC PANEL IN THE DIGESTER BUILDING ELECTRICAL ROOM.
4. CONDUITS FROM THE DIGESTER BUILDING ELECTRICAL ROOM TO THE DIGESTER BUILDING EQUIPMENT SHALL BE RUN AS FOLLOWS:
   - A. FROM MCC AND VFD TO A PULL BOX UNDER THE SOLIDS PIPE GALLERY ROOF.
   - B. FROM THE PULL BOX UNDER THE PIPE GALLERY ROOF TO A SECOND PULL BOX CLOSE TO THE EXISTING STAIR CASE IN THE SOLIDS PIPE GALLERY.
   - C. FROM PULL BOX TO THE DIGESTER BUILDING THRU THE EAST WALL AS DEPICTED ON DWGS E-201 AND E-321.
   - D. UNDER FIRST FLOOR SLAB OR ENCASED IN CONCRETE FOR EQUIPMENT ON THE FIRST FLOOR.
   - E. ALONG THE WEST WALL AND UNDER SECOND FLOOR SLAB FOR EQUIPMENT ON THE SECOND FLOOR.
   - F. ALONG THE WEST WALL AND UNDER THE ROOF SLAB FOR EQUIPMENT ON THE ROOF.

DRAWING NOTES (CONTINUED):

5. PROVIDE WEATHER PROOF GFI RECEPTACLE. PROVIDE POWER FROM 20A SPARE BREAKER FROM PANEL 8-DIG-0101-LPNL LOCATED IN THE DIGESTER BUILDING. PROVIDE 2 #12 AWG, 1 #12G CABLE IN 3/4" CONDUIT.
6. PROVIDE 20A, 1P BREAKER FROM 8-DIG-0101-LPNL AND 2 #12, 1 #12G CABLES IN 3/4" CONDUIT.

DIGESTER BUILDING AT EL 143.50 ELECTRICAL AND I&C PLAN

SCALE: 3/16" = 1'-0"

GRAPHIC SCALE

0 4 8 12 16

SCALE: 3/16" = 1'-0"

THE DRAWINGS IN THIS SET ARE RECORD DRAWINGS. THEY ARE CONSTRUCTION CONTRACT DRAWINGS WHICH HAVE BEEN REVISED BASED ON AVAILABLE FIELD INFORMATION RECORDED BY OTHERS DURING CONSTRUCTION OF THIS CONTRACT. THERE HAS BEEN NO VERIFICATION OF DIMENSIONS SHOWN ON THE CONSTRUCTION DRAWINGS OR THE ACCURACY/COMPLETENESS OF THE FIELD INFORMATION RECEIVED.

SIGNATURE _____ DATE 2/7/2020

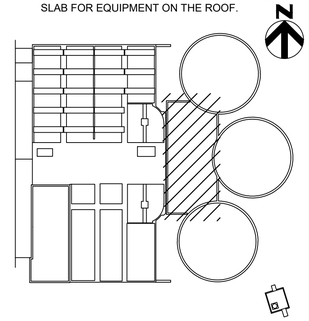

KEY PLAN

SHAH & ASSOCIATES

AS-BUILT REPLACEMENT SHEET

PROFESSIONAL CERTIFICATION
THIS DRAWING WAS ORIGINALLY APPROVED FOR CONSTRUCTION AND SEALED BY KANAIYALAL R. SHAH, A REGISTERED PROFESSIONAL ENGINEER IN THE STATE OF MARYLAND, NO. 11084.

NOTICE TO CONTRACTORS
- PROJECT ELEVATIONS ARE BASED ON NAVD88 AND HOWARD COUNTY'S BENCHMARK SYSTEM
- PREVIOUS PROJECTS USED OTHER DATUMS
- APPLY THE FOLLOWING CONVERSIONS WHEN USING PREVIOUS CONTRACT DRAWINGS:
  - ADDITION NO. 6: SUBTRACT 0.80 FT
  - PRIOR ADDITIONS: SUBTRACT 1.04 FT

DEPARTMENT OF PUBLIC WORKS
HOWARD COUNTY, MARYLAND

CHIEF, BUREAU OF UTILITIES DATE

DES: SR
DRN: XMZ
CHK: KRS
DATE: 10/2016

DATE	REV	DESCRIPTION
07/2019		RECORD DRAWING

ELECTRICAL

DIGESTER BUILDING AT EL143.50 ELECTRICAL AND I&C PLAN

LITTLE PATUXENT WATER RECLAMATION PLANT
8TH ADDITION
BIOSOLIDS PROCESSING FACILITIES – PHASE I

CAPITAL PROJECT S–6295
CONTRACT NO. 24–4935

ELECTION DISTRICT NO. 6
HOWARD COUNTY, MARYLAND

SCALE AS SHOWN

SHEET 368 OF 463

E-320

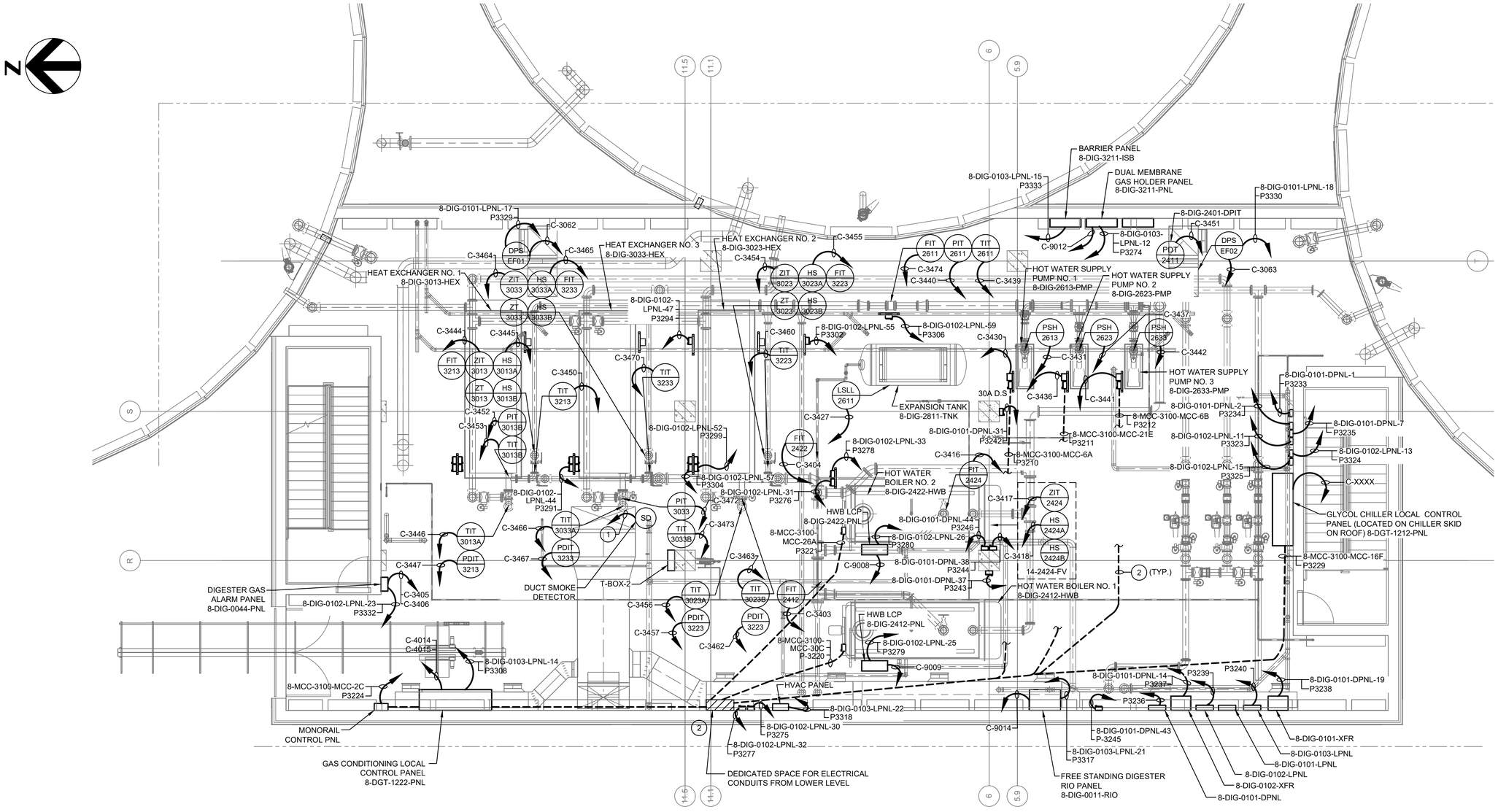

GENERAL NOTES:

1. FOR SYMBOLS AND ABBREVIATIONS, SEE DRAWING E-1.
2. FOR CONSTRUCTION SEQUENCE, SEE DRAWING E-2.
3. FOR 8-MCC-3100-MCC ONE LINE DIAGRAM, SEE DRAWINGS E-8 AND E-9.
4. FOR CABLE AND CONDUIT SCHEDULE, SEE DRAWINGS E-905 THRU E-913, E-918 AND E-919.
5. DRAWINGS ARE INTENDED TO DEPICT DESIGN INTENT; CONTRACTOR TO REFER TO SPECIFICATIONS, P&IDS, AND STANDARD DETAILS FOR FURTHER INSTALLATION REQUIREMENTS.
6. LOCATION OF EQUIPMENT, INSTRUMENTATION EQUIPMENT, VALVES, ETC. IS APPROXIMATE. REFER TO PROCESS DRAWINGS FOR EXACT LOCATION.
7. NOT ALL INSTRUMENTATION EQUIPMENT ARE SHOWN ON THIS PLAN, REFER TO PROCESS AND P&ID DRAWINGS.
8. THE DISCONNECT SWITCHES SHOWN FOR THE INSTRUMENTS, I. E., FITS, AITS, LITS, PITS, TITS, ETC ARE 20A SNAP SWITCHES.
9. FOR PANELBOARD SCHEDULE, SEE DRAWINGS E-901 THRU E-904.

DRAWING NOTES:

1. SMOKE DETECTORS ARE FED FROM FACU PANEL.
2. CONDUITS FROM THE DIGESTER BUILDING ELECTRICAL ROOM TO THE DIGESTER BUILDING EQUIPMENT SHALL BE RUN AS FOLLOWS:
   - A. FROM MCC AND VFD TO A PULL BOX UNDER THE SOLIDS PIPE GALLERY ROOF.
   - B. FROM THE PULL BOX UNDER THE PIPE GALLERY ROOF TO A SECOND PULL BOX CLOSE TO THE EXISTING STAIR CASE IN THE SOLIDS PIPE GALLERY.
   - C. FROM PULL BOX TO THE DIGESTER BUILDING THRU THE EAST WALL AS DEPICTED ON DWGS E-201 AND E-321.
   - D. UNDER FIRST FLOOR SLAB OR ENCASED IN CONCRETE FOR EQUIPMENT ON THE FIRST FLOOR.
   - E. ALONG THE WEST WALL AND UNDER SECOND FLOOR SLAB FOR EQUIPMENT ON THE SECOND FLOOR.
   - F. ALONG THE WEST WALL AND UNDER THE ROOF SLAB FOR EQUIPMENT ON THE ROOF.

GRAPHIC SCALE

0 4 8 12 16

SCALE: 3/16" = 1'-0"

DIGESTER BUILDING AT EL 161.50 - ELECTRICAL AND I &C PLAN

SCALE: 3/16" = 1'-0"

THE DRAWINGS IN THIS SET ARE RECORD DRAWINGS. THEY ARE CONSTRUCTION CONTRACT DRAWINGS WHICH HAVE BEEN REVISED BASED ON AVAILABLE FIELD INFORMATION RECORDED BY OTHERS DURING CONSTRUCTION OF THIS CONTRACT. THERE HAS BEEN NO VERIFICATION OF DIMENSIONS SHOWN ON THE CONSTRUCTION DRAWINGS OR THE ACCURACY/COMPLETENESS OF THE FIELD INFORMATION RECEIVED.

SIGNATURE _____ DATE 2/7/2025

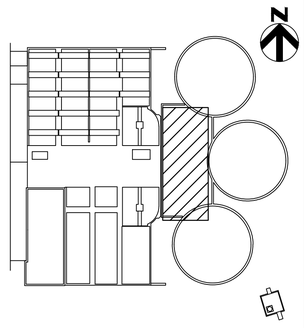

KEY PLAN

SHAH & ASSOCIATES

HDR

AS-BUILT REPLACEMENT SHEET

PROFESSIONAL CERTIFICATION

THIS DRAWING WAS ORIGINALLY APPROVED FOR CONSTRUCTION AND SEALED BY KANAIYALAL R. SHAH, A REGISTERED PROFESSIONAL ENGINEER IN THE STATE OF MARYLAND, NO. 11084.

NOTICE TO CONTRACTORS

- PROJECT ELEVATIONS ARE BASED ON NAVD88 AND HOWARD COUNTY'S BENCHMARK SYSTEM
- PREVIOUS PROJECTS USED OTHER DATUMS
- APPLY THE FOLLOWING CONVERSIONS WHEN USING PREVIOUS CONTRACT DRAWINGS:
  - ADDITION NO. 6: SUBTRACT 0.80 FT
  - PRIOR ADDITIONS: SUBTRACT 1.04 FT

DEPARTMENT OF PUBLIC WORKS
HOWARD COUNTY, MARYLAND

CHIEF, BUREAU OF UTILITIES DATE

DES: SR
DRN: AJS
CHK: KRS
DATE: 10/2016

DATE	REV	DESCRIPTION
07/2019		RECORD DRAWING

ELECTRICAL

DIGESTER BUILDING
AT EL161.50
ELECTRICAL AND I&C PLAN

LITTLE PATUXENT WATER RECLAMATION PLANT
8TH ADDITION
BIOSOLIDS PROCESSING FACILITIES – PHASE I

CAPITAL PROJECT S-6295
CONTRACT NO. 24-4935

ELECTION DISTRICT NO. 6
HOWARD COUNTY, MARYLAND

SCALE AS SHOWN

SHEET 369 OF 463

E-321

GENERAL NOTES:

1. FOR SYMBOLS AND ABBREVIATIONS, SEE DRAWING E-1.
2. FOR CONSTRUCTION SEQUENCE, SEE DRAWING E-2.
3. FOR 8-MCC-3100-MCC ONE LINE DIAGRAM, SEE DRAWINGS E-8 AND E-9.
4. FOR PANELBOARD SCHEDULE, SEE DRAWINGS E-901 THRU E-904.
5. FOR CABLE AND CONDUIT SCHEDULE, SEE DRAWINGS E-905 THRU E-913.
6. DRAWINGS ARE INTENDED TO DEPICT DESIGN INTENT; CONTRACTOR TO REFER TO SPECIFICATIONS, P&IDS, AND STANDARD DETAILS FOR FURTHER INSTALLATION REQUIREMENTS.
7. LOCATION OF EQUIPMENT, INSTRUMENTATION EQUIPMENT, VALVES, ETC. IS APPROXIMATE. REFER TO PROCESS DRAWINGS FOR EXACT LOCATION.
8. NOT ALL INSTRUMENTATION EQUIPMENT ARE SHOWN ON THIS PLAN, REFER TO PROCESS AND P&ID DRAWINGS. THE DISCONNECT SWITCHES SHOWN FOR THE INSTRUMENTS; I.E., FITS, AITS, LITS, PITS, TITS, ETC. ARE 20A SNAP SWITCHES.

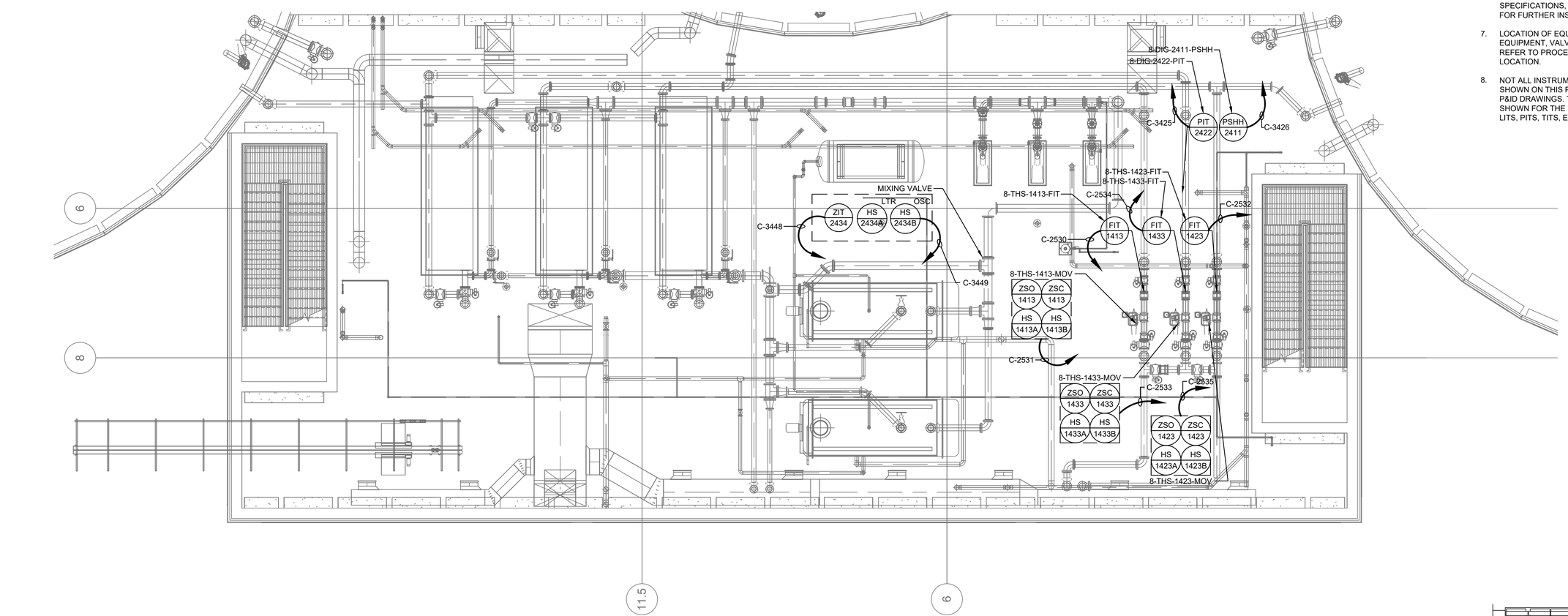

DIGESTER BUILDING BOILER ROOM PLAN AT EL 170.00 - ELECTRICAL AND I&C PLAN

SCALE: 3/16" = 1'-0"

GRAPHIC SCALE

0 4 8 12 16

SCALE: 3/16" = 1'-0"

THE DRAWINGS IN THIS SET ARE RECORD DRAWINGS. THEY ARE CONSTRUCTION CONTRACT DRAWINGS WHICH HAVE BEEN REVISED BASED ON AVAILABLE FIELD INFORMATION RECORDED BY OTHERS DURING CONSTRUCTION OF THIS CONTRACT. THERE HAS BEEN NO VERIFICATION OF DIMENSIONS SHOWN ON THE CONSTRUCTION DRAWINGS OR THE ACCURACY/COMPLETENESS OF THE FIELD INFORMATION RECEIVED.

SIGNATURE DATE 2/7/2020

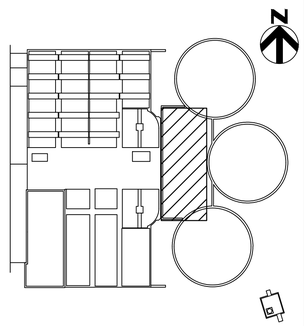

KEY PLAN

SHAH & ASSOCIATES

HDR

AS-BUILT REPLACEMENT SHEET

PROFESSIONAL CERTIFICATION
THIS DRAWING WAS ORIGINALLY APPROVED FOR CONSTRUCTION AND SEALED BY KANAIYALAL R. SHAH, A REGISTERED PROFESSIONAL ENGINEER IN THE STATE OF MARYLAND, NO. 11084.

NOTICE TO CONTRACTORS
- PROJECT ELEVATIONS ARE BASED ON NAVD88 AND HOWARD COUNTY'S BENCHMARK SYSTEM
- PREVIOUS PROJECTS USED OTHER DATUMS
- APPLY THE FOLLOWING CONVERSIONS WHEN USING PREVIOUS CONTRACT DRAWINGS:
  - ADDITION NO. 6: SUBTRACT 0.80 FT
  - PRIOR ADDITIONS: SUBTRACT 1.04 FT

DEPARTMENT OF PUBLIC WORKS
HOWARD COUNTY, MARYLAND

CHIEF, BUREAU OF UTILITIES DATE

DES:	SR
DRN:	XMZ
CHK:	KRS
DATE:	10/2016

DATE	REV	DESCRIPTION
07/2019		RECORD DRAWING

ELECTRICAL

DIGESTER BUILDING BOILER ROOM PLAN AT EL 170.00 ELECTRICAL AND I&C PLAN

LITTLE PATUXENT WATER RECLAMATION PLANT
8TH ADDITION
BIOSOLIDS PROCESSING FACILITIES – PHASE I

CAPITAL PROJECT S–6295
CONTRACT NO. 24–4935

ELECTION DISTRICT NO. 6
HOWARD COUNTY, MARYLAND

SCALE AS SHOWN

SHEET 370 OF 463

E-322

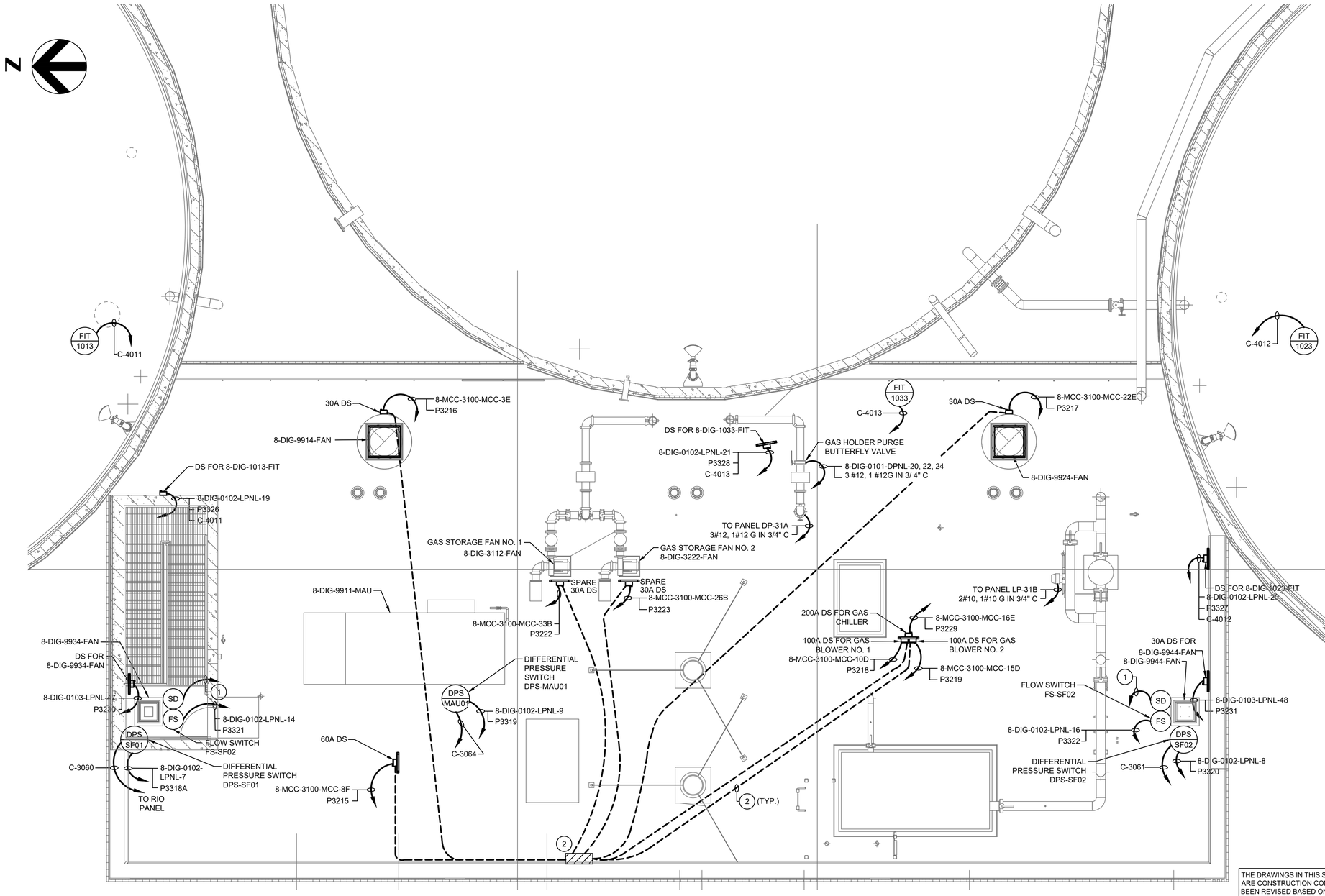

GRAPHIC SCALE

0 4 8 12 16

SCALE: 3/16" = 1'-0"

DIGESTER GAS FACILITIES ROOF - ELECTRICAL AND I&C PLAN

SCALE: 3/16" = 1'-0"

GENERAL NOTES:

1. FOR SYMBOLS AND ABBREVIATIONS, SEE DRAWING E-1.
2. FOR CONSTRUCTION SEQUENCE, SEE DRAWING E-2.
3. FOR NEW 8-MCC-3100-MCC LOCATION, SEE DRAWING E-3.
4. FOR NEW 8-MCC-3100-MCC ONE LINE DIAGRAM, SEE DRAWINGS E-8 AND E-9.
5. FOR CABLE AND CONDUIT SCHEDULE, SEE DRAWINGS E-905 THRU E-913, E-918 AND E-919.
6. NOT ALL INSTRUMENTATION EQUIPMENT ARE SHOWN ON THIS PLAN, REFER TO PROCESS AND P&ID DRAWINGS. THE DISCONNECT SWITCHES SHOWN FOR THE INSTRUMENTS; i.e., FITS, AITS, LITS, PITS, TITS, ETC. ARE 20A SNAP SWITCHES.
7. DRAWINGS ARE INTENDED TO DEPICT DESIGN INTENT; CONTRACTOR TO REFER TO SPECIFICATIONS, P&IDS, AND STANDARD DETAILS FOR FURTHER INSTALLATION REQUIREMENTS.
8. LOCATION OF EQUIPMENT IE. MOTORS, VALVES, UNIT HEATERS, EXHAUST FANS, ETC. IS FOR REFERENCE ONLY. FOR EXACT LOCATION OF EQUIPMENT, REFER TO MECHANICAL, HVAC AND PLUMBING DRAWINGS.
9. FOR PANELBOARD SCHEDULES, SEE DRAWINGS E-901 THRU E-904.
10. FOR AREA CLASSIFICATION, SEE GENERAL DRAWING G-18. WORK SHALL BE PERFORMED IN ACCORDANCE WITH AREA CLASSIFICATION REQUIREMENTS. FOR ENCLOSURE AND CONDUIT TYPE, REFER TO SPECIFICATION SECTION 26 05 00.

DRAWING NOTES:

(1) SMOKE DETECTORS ARE FED FROM FACU PANEL.

(2) CONDUITS FROM THE DIGESTER BUILDING ELECTRICAL ROOM TO THE DIGESTER BUILDING EQUIPMENT SHALL BE RUN AS FOLLOWS:

A. FROM MCC AND VFD TO A PULL BOX UNDER THE SOLIDS PIPE GALLERY ROOF.

B. FROM THE PULL BOX UNDER THE PIPE GALLERY ROOF TO A SECOND PULL BOX CLOSE TO THE EXISTING STAIR CASE IN THE SOLIDS PIPE GALLERY.

C. FROM PULL BOX TO THE DIGESTER BUILDING THRU THE EAST WALL AS DEPICTED ON DWGS E-201 AND E-321.

D. UNDER FIRST FLOOR SLAB OR ENCASED IN CONCRETE FOR EQUIPMENT ON THE FIRST FLOOR.

E. ALONG THE WEST WALL AND UNDER SECOND FLOOR SLAB FOR EQUIPMENT ON THE SECOND FLOOR.

F. ALONG THE WEST WALL AND UNDER THE ROOF SLAB FOR EQUIPMENT ON THE ROOF.

THE DRAWINGS IN THIS SET ARE RECORD DRAWINGS. THEY ARE CONSTRUCTION CONTRACT DRAWINGS WHICH HAVE BEEN REVISED BASED ON AVAILABLE FIELD INFORMATION RECORDED BY OTHERS DURING CONSTRUCTION OF THIS CONTRACT. THERE HAS BEEN NO VERIFICATION OF DIMENSIONS SHOWN ON THE CONSTRUCTION DRAWINGS OR THE ACCURACY/COMPLETENESS OF THE FIELD INFORMATION RECEIVED.

SIGNATURE — DATE 2/7/2020

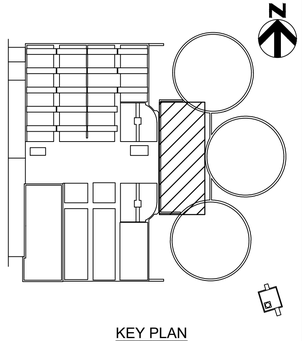

KEY PLAN

SHAH & ASSOCIATES

AS-BUILT REPLACEMENT SHEET

PROFESSIONAL CERTIFICATION
THIS DRAWING WAS ORIGINALLY APPROVED FOR CONSTRUCTION AND SEALED BY KANAIYALAL R. SHAH, A REGISTERED PROFESSIONAL ENGINEER IN THE STATE OF MARYLAND, NO. 11084.

NOTICE TO CONTRACTORS
- PROJECT ELEVATIONS ARE BASED ON NAVD88 AND HOWARD COUNTY'S BENCHMARK SYSTEM
- PREVIOUS PROJECTS USED OTHER DATUMS
- APPLY THE FOLLOWING CONVERSIONS WHEN USING PREVIOUS CONTRACT DRAWINGS:
  - ADDITION NO. 6: SUBTRACT 0.80 FT
  - PRIOR ADDITIONS: SUBTRACT 1.04 FT

DEPARTMENT OF PUBLIC WORKS
HOWARD COUNTY, MARYLAND

CHIEF, BUREAU OF UTILITIES DATE

DES: SR
DRN: AJS
CHK: KRS
DATE: 10/2016

DATE	REV	DESCRIPTION
07/2019		RECORD DRAWING

ELECTRICAL

DIGESTER GAS FACILITIES ROOF
ELECTRICAL AND I&C PLAN

LITTLE PATUXENT WATER RECLAMATION PLANT
8TH ADDITION
BIOSOLIDS PROCESSING FACILITIES – PHASE I

CAPITAL PROJECT S–6295
CONTRACT NO. 24–4935

ELECTION DISTRICT NO. 6
HOWARD COUNTY, MARYLAND

SCALE AS SHOWN

SHEET 371 OF 463

E-323

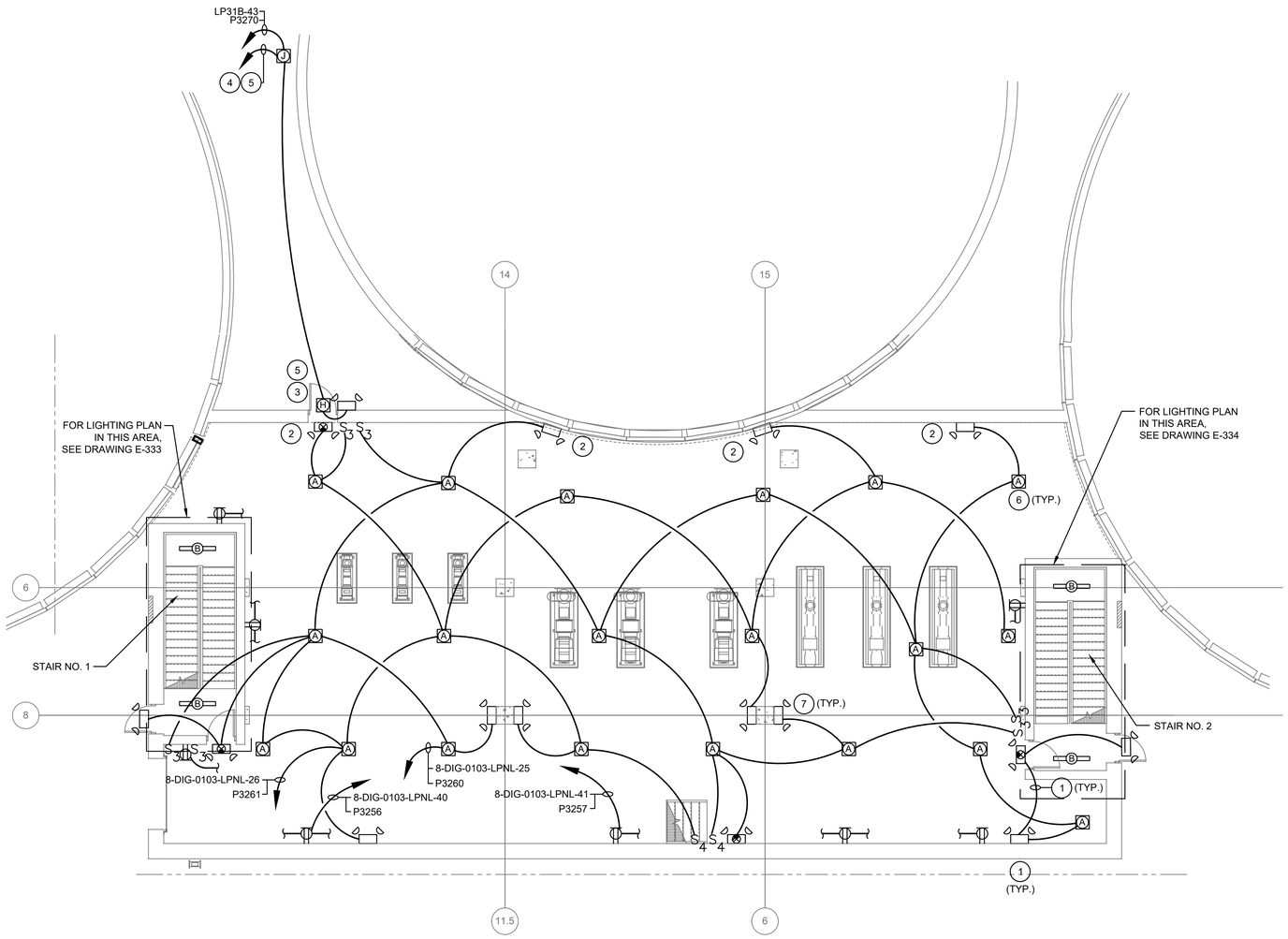

GENERAL NOTES:

1. FOR SYMBOLS, LEGEND AND ABBREVIATIONS, SEE DRAWING E-1.
2. FOR CONSTRUCTION SEQUENCE, SEE DRAWING E-2.
3. FOR LIGHTING FIXTURE SCHEDULE AND DETAIL, SEE DRAWING E-921.
4. FOR PANELBOARD SCHEDULE, SEE DRAWINGS E-901 THRU E-904.
5. FOR CABLE AND CONDUIT SCHEDULE, SEE DRAWINGS E-905 THRU E-913.
6. FOR AREA CLASSIFICATION, SEE GENERAL DRAWINGS G-18 THRU G-26. WORK SHALL BE PERFORMED IN ACCORDANCE WITH AREA CLASSIFICATION REQUIREMENTS. FOR ENCLOSURE AND CONDUIT TYPE, REFER TO SPECIFICATION SECTION 26 05 00.

DRAWING NOTES:

1. CONNECT EXIT SIGN AND EMERGENCY LIGHT AHEAD OF SWITCH.
2. TYPE D & E LIGHT FIXTURES DO NOT NEED TO BE EXPLOSION PROOF.
3. INSTALL LIGHT ON THE WALL ABOVE THE DOOR.
4. MOUNT LIGHT ON 12' POLE TO ILLUMINATE THE WALKWAY BETWEEN THE DIGESTER TANKS.
5. LIGHTS SHALL BE CONTROLLED BY A PHOTOCELL INSTALLED OUTSIDE THE CLASSIFIED AREA. RECOMMENDED LOCATION FOR PHOTOCELL IS ON TOP OF THE WEST END OF THE DIGESTER BUILDING STAIR NO. 1. SEE DRAWING E-332 FOR PHOTOCELL LOCATION.
6. TYPE A FIXTURES ARE MOUNTED 16.5 FEET ABOVE FINISHED FLOOR.
7. TYPE D AND E FIXTURES ARE TO BE LOCATED 8 FEET ABOVE FINISHED FLOOR.

GRAPHIC SCALE

0 8 16 24

SCALE: 1/8" = 1'-0"

DIGESTER BUILDING AT EL 143.5 - LIGHTING PLAN

SCALE: 1/8" = 1'-0"

THE DRAWINGS IN THIS SET ARE RECORD DRAWINGS. THEY ARE CONSTRUCTION CONTRACT DRAWINGS WHICH HAVE BEEN REVISED BASED ON AVAILABLE FIELD INFORMATION RECORDED BY OTHERS DURING CONSTRUCTION OF THIS CONTRACT. THERE HAS BEEN NO VERIFICATION OF DIMENSIONS SHOWN ON THE CONSTRUCTION DRAWINGS OR THE ACCURACY/COMPLETENESS OF THE FIELD INFORMATION RECEIVED.

SIGNATURE — DATE 2/7/2025

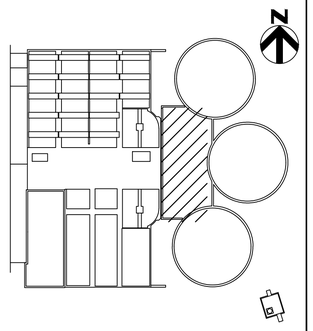

KEY PLAN

S&A SHAH & ASSOCIATES

HDR

AS-BUILT REPLACEMENT SHEET

PROFESSIONAL CERTIFICATION

THIS DRAWING WAS ORIGINALLY APPROVED FOR CONSTRUCTION AND SEALED BY KANAIYALAL R. SHAH, A REGISTERED PROFESSIONAL ENGINEER IN THE STATE OF MARYLAND, NO. 11084.

NOTICE TO CONTRACTORS

- PROJECT ELEVATIONS ARE BASED ON NAVD88 AND HOWARD COUNTY'S BENCHMARK SYSTEM
- PREVIOUS PROJECTS USED OTHER DATUMS
- APPLY THE FOLLOWING CONVERSIONS WHEN USING PREVIOUS CONTRACT DRAWINGS:
  - ADDITION NO. 6: SUBTRACT 0.80 FT
  - PRIOR ADDITIONS: SUBTRACT 1.04 FT

DEPARTMENT OF PUBLIC WORKS
HOWARD COUNTY, MARYLAND

CHIEF, BUREAU OF UTILITIES — DATE

DES:	SR
DRN:	XMZ
CHK:	KRS
DATE:	10/2016

DATE	REV	DESCRIPTION
07/2019		RECORD DRAWING

ELECTRICAL

DIGESTER BUILDING
AT EL 143.5
LIGHTING PLAN

LITTLE PATUXENT WATER RECLAMATION PLANT
8TH ADDITION
BIOSOLIDS PROCESSING FACILITIES – PHASE I

CAPITAL PROJECT S-6295
CONTRACT NO. 24-4935

ELECTION DISTRICT NO. 6
HOWARD COUNTY, MARYLAND

SCALE AS SHOWN

SHEET 372 OF 463

E-330

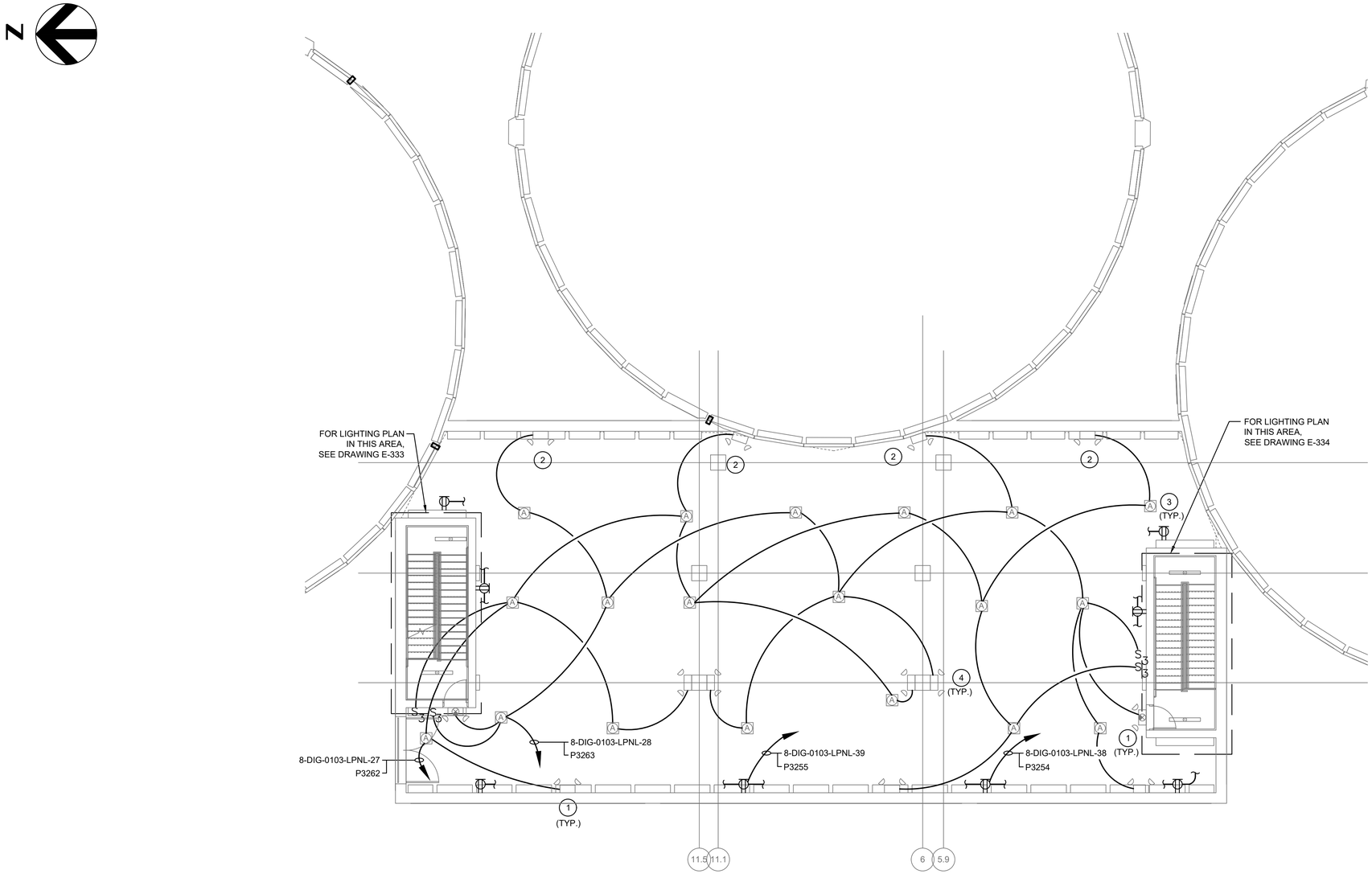

GENERAL NOTES:

1. FOR SYMBOLS, LEGEND AND ABBREVIATIONS, SEE DRAWING E-1.
2. FOR CONSTRUCTION SEQUENCE, SEE DRAWING E-2.
3. FOR LIGHTING FIXTURE SCHEDULE AND DETAIL, SEE DRAWING E-921.
4. FOR PANELBOARD SCHEDULE, SEE DRAWINGS E-901 THRU E-904.
5. FOR CABLE AND CONDUIT SCHEDULE, SEE DRAWINGS E-905 THRU E-913.

DRAWING NOTES:

1. CONNECT EXIT SIGN AND EMERGENCY LIGHT AHEAD OF SWITCH.
2. TYPE D & E LIGHT FIXTURES DO NOT NEED TO BE EXPLOSION PROOF.
3. TYPE A FIXTURES ARE MOUNTED 16.5 FEET ABOVE FINISHED FLOOR.
4. TYPE D AND E FIXTURES ARE TO BE LOCATED 8 FEET ABOVE FINISHED FLOOR.

GRAPHIC SCALE

0 8 16 24

SCALE: 1/8" = 1'-0"

DIGESTER BUILDING AT EL 161.5 - LIGHTING PLAN

SCALE: 1/8" = 1'-0"

THE DRAWINGS IN THIS SET ARE RECORD DRAWINGS. THEY ARE CONSTRUCTION CONTRACT DRAWINGS WHICH HAVE BEEN REVISED BASED ON AVAILABLE FIELD INFORMATION RECORDED BY OTHERS DURING CONSTRUCTION OF THIS CONTRACT. THERE HAS BEEN NO VERIFICATION OF DIMENSIONS SHOWN ON THE CONSTRUCTION DRAWINGS OR THE ACCURACY/COMPLETENESS OF THE FIELD INFORMATION RECEIVED.

SIGNATURE 2/7/2020 DATE

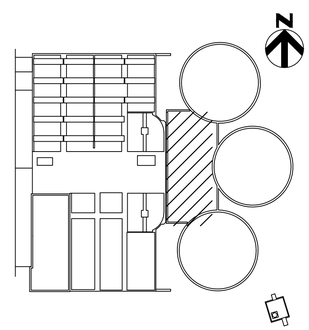

KEY PLAN

SHAH & ASSOCIATES

HDR

AS-BUILT REPLACEMENT SHEET

PROFESSIONAL CERTIFICATION
THIS DRAWING WAS ORIGINALLY APPROVED FOR CONSTRUCTION AND SEALED BY KANAIYALAL R. SHAH, A REGISTERED PROFESSIONAL ENGINEER IN THE STATE OF MARYLAND, NO. 11084.

NOTICE TO CONTRACTORS
- PROJECT ELEVATIONS ARE BASED ON NAVD88 AND HOWARD COUNTY'S BENCHMARK SYSTEM
- PREVIOUS PROJECTS USED OTHER DATUMS
- APPLY THE FOLLOWING CONVERSIONS WHEN USING PREVIOUS CONTRACT DRAWINGS:
  - ADDITION NO. 6: SUBTRACT 0.80 FT
  - PRIOR ADDITIONS: SUBTRACT 1.04 FT

DEPARTMENT OF PUBLIC WORKS
HOWARD COUNTY, MARYLAND

CHIEF, BUREAU OF UTILITIES DATE

DES:	SR
DRN:	AJS
CHK:	KRS
DATE:	10/2016

DATE	REV	DESCRIPTION
07/2019		RECORD DRAWING

ELECTRICAL

DIGESTER BUILDING AT EL 161.5 LIGHTING PLAN

LITTLE PATUXENT WATER RECLAMATION PLANT
8TH ADDITION
BIOSOLIDS PROCESSING FACILITIES – PHASE I

CAPITAL PROJECT S-6295
CONTRACT NO. 24-4935

ELECTION DISTRICT NO. 6
HOWARD COUNTY, MARYLAND

SCALE AS SHOWN

SHEET 373 OF 463

E-331

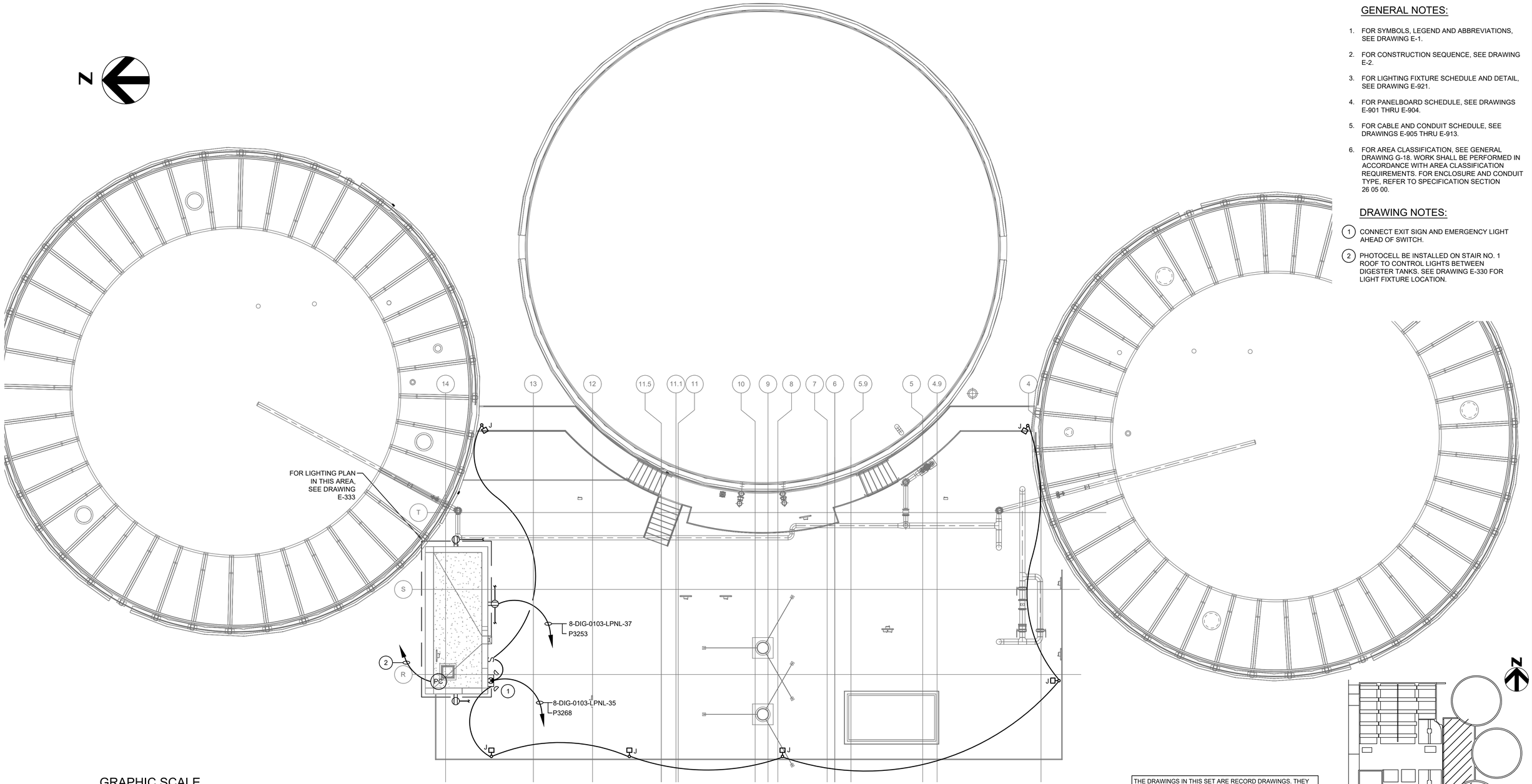

GENERAL NOTES:

1. FOR SYMBOLS, LEGEND AND ABBREVIATIONS, SEE DRAWING E-1.
2. FOR CONSTRUCTION SEQUENCE, SEE DRAWING E-2.
3. FOR LIGHTING FIXTURE SCHEDULE AND DETAIL, SEE DRAWING E-921.
4. FOR PANELBOARD SCHEDULE, SEE DRAWINGS E-901 THRU E-904.
5. FOR CABLE AND CONDUIT SCHEDULE, SEE DRAWINGS E-905 THRU E-913.
6. FOR AREA CLASSIFICATION, SEE GENERAL DRAWING G-18. WORK SHALL BE PERFORMED IN ACCORDANCE WITH AREA CLASSIFICATION REQUIREMENTS. FOR ENCLOSURE AND CONDUIT TYPE, REFER TO SPECIFICATION SECTION 26 05 00.

DRAWING NOTES:

1. CONNECT EXIT SIGN AND EMERGENCY LIGHT AHEAD OF SWITCH.
2. PHOTOCELL BE INSTALLED ON STAIR NO. 1 ROOF TO CONTROL LIGHTS BETWEEN DIGESTER TANKS. SEE DRAWING E-330 FOR LIGHT FIXTURE LOCATION.

GRAPHIC SCALE

0 8 16 24

SCALE: 1/8" = 1'-0"

DIGESTER BUILDING ROOF - LIGHTING PLAN

SCALE: 1/8" = 1'-0"

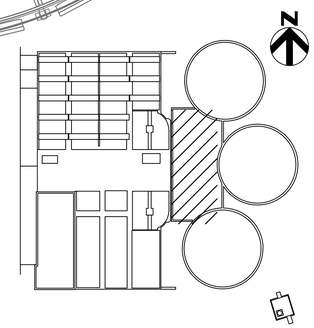

KEY PLAN

THE DRAWINGS IN THIS SET ARE RECORD DRAWINGS. THEY ARE CONSTRUCTION CONTRACT DRAWINGS WHICH HAVE BEEN REVISED BASED ON AVAILABLE FIELD INFORMATION RECORDED BY OTHERS DURING CONSTRUCTION OF THIS CONTRACT. THERE HAS BEEN NO VERIFICATION OF DIMENSIONS SHOWN ON THE CONSTRUCTION DRAWINGS OR THE ACCURACY/COMPLETENESS OF THE FIELD INFORMATION RECEIVED.

SIGNATURE _____ DATE 2/7/2020

SHAH & ASSOCIATES

AS-BUILT REPLACEMENT SHEET

PROFESSIONAL CERTIFICATION
THIS DRAWING WAS ORIGINALLY APPROVED FOR CONSTRUCTION AND SEALED BY KANAIYALAL R. SHAH, A REGISTERED PROFESSIONAL ENGINEER IN THE STATE OF MARYLAND, NO. 11084.

NOTICE TO CONTRACTORS
- PROJECT ELEVATIONS ARE BASED ON NAVD88 AND HOWARD COUNTY'S BENCHMARK SYSTEM
- PREVIOUS PROJECTS USED OTHER DATUMS
- APPLY THE FOLLOWING CONVERSIONS WHEN USING PREVIOUS CONTRACT DRAWINGS:
  - ADDITION NO. 6: SUBTRACT 0.80 FT
  - PRIOR ADDITIONS: SUBTRACT 1.04 FT

DEPARTMENT OF PUBLIC WORKS
HOWARD COUNTY, MARYLAND

CHIEF, BUREAU OF UTILITIES DATE

DES: SR
DRN: XMZ
CHK: KRS
DATE: 10/2016

DATE	REV	DESCRIPTION
07/2019		RECORD DRAWING

ELECTRICAL

DIGESTER BUILDING ROOF LIGHTING PLAN

LITTLE PATUXENT WATER RECLAMATION PLANT
8TH ADDITION
BIOSOLIDS PROCESSING FACILITIES – PHASE I

CAPITAL PROJECT S-6295
CONTRACT NO. 24-4935

ELECTION DISTRICT NO. 6
HOWARD COUNTY, MARYLAND

SCALE AS SHOWN

SHEET 374 OF 463

E-332

DRAWING NOTES:

(1) CONNECT EXIT SIGN AND EMERGENCY LIGHT AHEAD OF SWITCH.

GENERAL NOTES:

1. FOR SYMBOLS, LEGEND AND ABBREVIATIONS, SEE DRAWING E-1.
2. FOR CONSTRUCTION SEQUENCE, SEE DRAWING E-2.
3. FOR LIGHTING FIXTURE SCHEDULE AND DETAIL, SEE DRAWING E-921.
4. FOR PANELBOARD SCHEDULE, SEE DRAWINGS E-901 THRU E-904.
5. FOR CABLE AND CONDUIT SCHEDULE, SEE DRAWINGS E-905 THRU E-913.

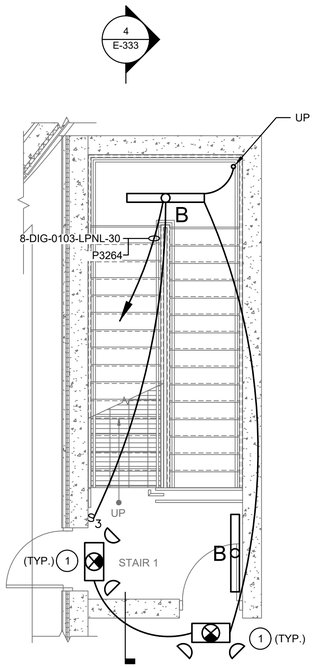

1 E-333 STAIR #1 - ENLARGED PLAN @ 143.50
SCALE: NONE

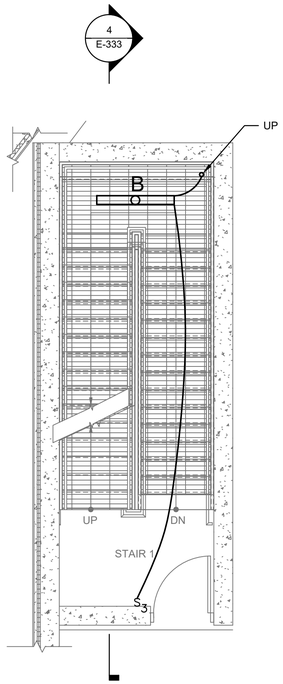

2 E-333 STAIR #1 - ENLARGED PLAN @ 161.50
SCALE: NONE

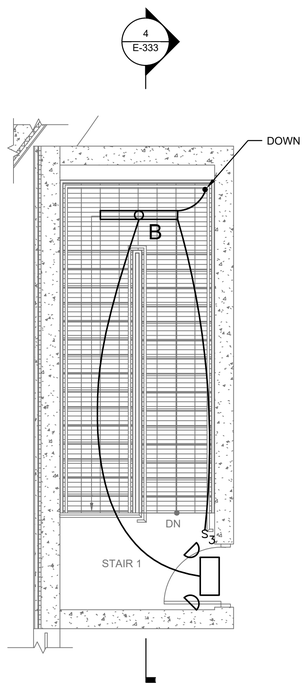

3 E-333 STAIR #1 - ENLARGED PLAN @ 179.00
SCALE: NONE

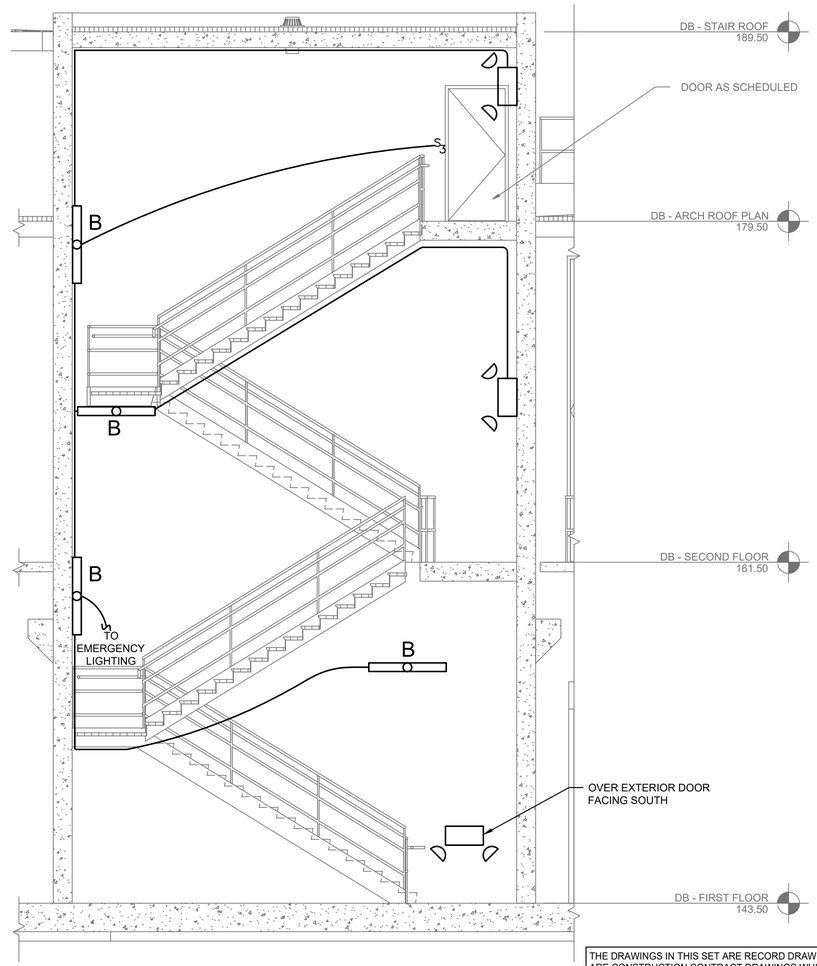

4 E-333 STAIR #1 SECTION
SCALE: NONE

THE DRAWINGS IN THIS SET ARE RECORD DRAWINGS. THEY ARE CONSTRUCTION CONTRACT DRAWINGS WHICH HAVE BEEN REVISED BASED ON AVAILABLE FIELD INFORMATION RECORDED BY OTHERS DURING CONSTRUCTION OF THIS CONTRACT. THERE HAS BEEN NO VERIFICATION OF DIMENSIONS SHOWN ON THE CONSTRUCTION DRAWINGS OR THE ACCURACY/COMPLETENESS OF THE FIELD INFORMATION RECEIVED.

SIGNATURE _____ DATE 2/7/2020

SHAH & ASSOCIATES

AS-BUILT REPLACEMENT SHEET

PROFESSIONAL CERTIFICATION
THIS DRAWING WAS ORIGINALLY APPROVED FOR CONSTRUCTION AND SEALED BY KANAIYALAL R. SHAH, A REGISTERED PROFESSIONAL ENGINEER IN THE STATE OF MARYLAND, NO. 11084.

NOTICE TO CONTRACTORS
- PROJECT ELEVATIONS ARE BASED ON NAVD88 AND HOWARD COUNTY'S BENCHMARK SYSTEM
- PREVIOUS PROJECTS USED OTHER DATUMS
- APPLY THE FOLLOWING CONVERSIONS WHEN USING PREVIOUS CONTRACT DRAWINGS:
  - ADDITION NO. 6: SUBTRACT 0.80 FT
  - PRIOR ADDITIONS: SUBTRACT 1.04 FT

DEPARTMENT OF PUBLIC WORKS
HOWARD COUNTY, MARYLAND

CHIEF, BUREAU OF UTILITIES DATE

DES: SR
DRN: AJS
CHK: KRS
DATE: 10/2016

DATE	REV	DESCRIPTION
07/2019		RECORD DRAWING

ELECTRICAL

DIGESTER BUILDING STAIR #1
LIGHTING PLAN

LITTLE PATUXENT WATER RECLAMATION PLANT
8TH ADDITION
BIOSOLIDS PROCESSING FACILITIES – PHASE I

CAPITAL PROJECT S-6295
CONTRACT NO. 24-4935

ELECTION DISTRICT NO. 6
HOWARD COUNTY, MARYLAND

SCALE AS SHOWN

SHEET 375 OF **463**

E-333

DRAWING NOTES:

1. CONNECT EXIT SIGN AND EMERGENCY LIGHT AHEAD OF SWITCH.

GENERAL NOTES:

1. FOR SYMBOLS, LEGEND AND ABBREVIATIONS, SEE DRAWING E-1.
2. FOR CONSTRUCTION SEQUENCE, SEE DRAWING E-2.
3. FOR LIGHTING FIXTURE SCHEDULE AND DETAIL, SEE DRAWING E-921.
4. FOR PANELBOARD SCHEDULE, SEE DRAWINGS E-901 THRU E-904.
5. FOR CABLE AND CONDUIT SCHEDULE, SEE DRAWINGS E-905 THRU E-913.

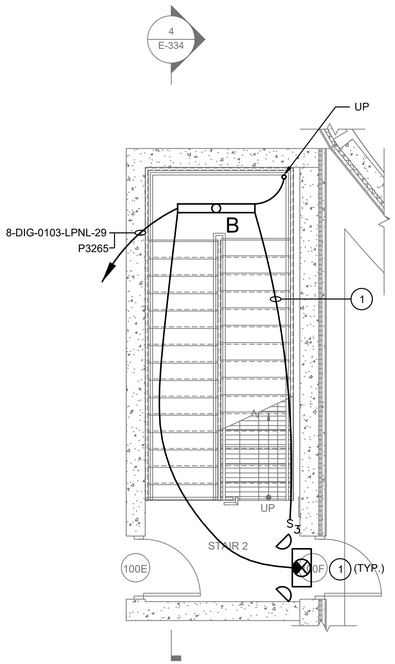

1 / E-334 STAIR #2 - ENLARGED PLAN @ 143.50
SCALE: NONE

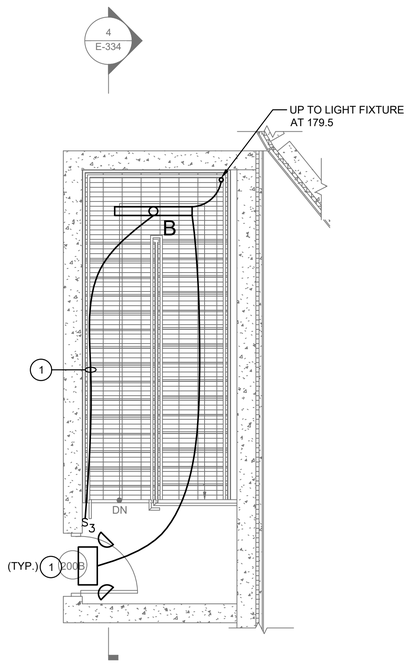

2 / E-334 STAIR #2 - ENLARGED PLAN @ 161.50
SCALE: NONE

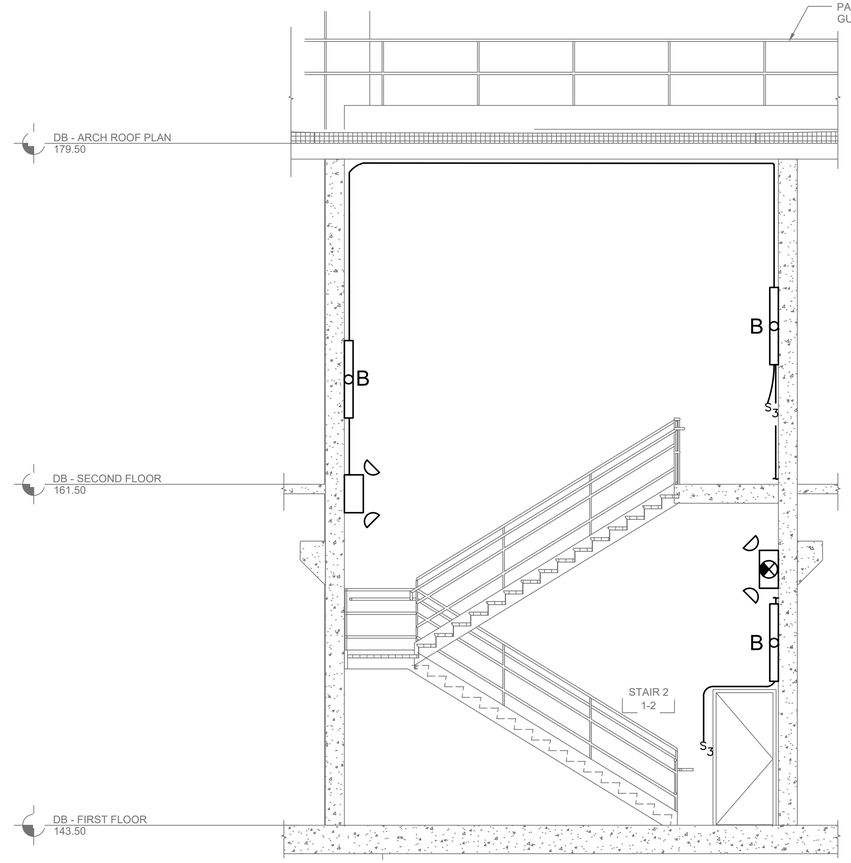

3 / E-334 STAIR #2 SECTION
SCALE: NONE

THE DRAWINGS IN THIS SET ARE RECORD DRAWINGS. THEY ARE CONSTRUCTION CONTRACT DRAWINGS WHICH HAVE BEEN REVISED BASED ON AVAILABLE FIELD INFORMATION RECORDED BY OTHERS DURING CONSTRUCTION OF THIS CONTRACT. THERE HAS BEEN NO VERIFICATION OF DIMENSIONS SHOWN ON THE CONSTRUCTION DRAWINGS OR THE ACCURACY/COMPLETENESS OF THE FIELD INFORMATION RECEIVED.

SIGNATURE _____ DATE 2/7/2020

SHAH & ASSOCIATES

AS-BUILT REPLACEMENT SHEET

PROFESSIONAL CERTIFICATION
THIS DRAWING WAS ORIGINALLY APPROVED FOR CONSTRUCTION AND SEALED BY KANAIYALAL R. SHAH, A REGISTERED PROFESSIONAL ENGINEER IN THE STATE OF MARYLAND, NO. 11084.

NOTICE TO CONTRACTORS
- PROJECT ELEVATIONS ARE BASED ON NAVD88 AND HOWARD COUNTY'S BENCHMARK SYSTEM
- PREVIOUS PROJECTS USED OTHER DATUMS
- APPLY THE FOLLOWING CONVERSIONS WHEN USING PREVIOUS CONTRACT DRAWINGS:
  - ADDITION NO. 6: SUBTRACT 0.80 FT
  - PRIOR ADDITIONS: SUBTRACT 1.04 FT

DEPARTMENT OF PUBLIC WORKS
HOWARD COUNTY, MARYLAND

CHIEF, BUREAU OF UTILITIES DATE

DES:	SR
DRN:	AJS
CHK:	KRS
DATE:	10/2016

DATE	REV	DESCRIPTION
07/2019		RECORD DRAWING

ELECTRICAL

DIGESTER BUILDING STAIR #2
LIGHTING PLAN

LITTLE PATUXENT WATER RECLAMATION PLANT
8TH ADDITION
BIOSOLIDS PROCESSING FACILITIES – PHASE I

CAPITAL PROJECT S-6295
CONTRACT NO. 24-4935

ELECTION DISTRICT NO. 6
HOWARD COUNTY, MARYLAND

SCALE AS SHOWN

SHEET 376 OF 463

E-334

GENERAL NOTES:

1. FOR SYMBOLS, LEGEND AND ABBREVIATIONS, SEE DRAWING E-1.
2. NOT ALL BONDS TO GROUND ARE SHOWN. CONTRACTOR TO PROVIDE BONDING TO ALL STRUCTURAL SUPPORTS METAL ENCLOSURES, PIPING, ETC. AS REQUIRED.
3. PERFORM WORK-PER CLASS 1 DIV 1 CLASSIFICATION REQUIREMENTS.
4. ALL NEW GROUND CONDUCTOR SHALL BE 4/0 AWG STRANDED COPPER AND BURIED TO A DEPTH OF MIN. 18" BELOW GRADE.
5. PROVIDE COPPER-CLAD GROUND RODS IN INDICATED LOCATIONS.
6. FOR GROUNDING DETAILS, SEE DRAWING E-920.
7. NOT ALL INSTRUMENTATION EQUIPMENT ARE SHOWN ON THIS PLAN, REFER TO PROCESS AND P&ID DRAWINGS.
8. FOR AREA CLASSIFICATION, SEE GENERAL DRAWINGS G-18 THRU G-26. WORK SHALL BE PERFORMED IN ACCORDANCE WITH AREA CLASSIFICATION REQUIREMENTS. FOR ENCLOSURE AND CONDUIT TYPE, REFER TO SPECIFICATION SECTION 26 05 00.
9. THE PHOSPHORUS PRECIPITATION BUILDING IS NOT PART OF THE DECEMBER, 2016 BUILDING PERMIT APPLICATION. A SEPARATE BUILDING PERMIT APPLICATION WILL BE SUBMITTED AT A LATER DATE.

DRAWING NOTES:

(1) 56' FIBERGLASS MAST WITH A 1/2" X 12" COPPER AIR TERMINAL INSTALLED ON THE DIGESTER #3 TANK.

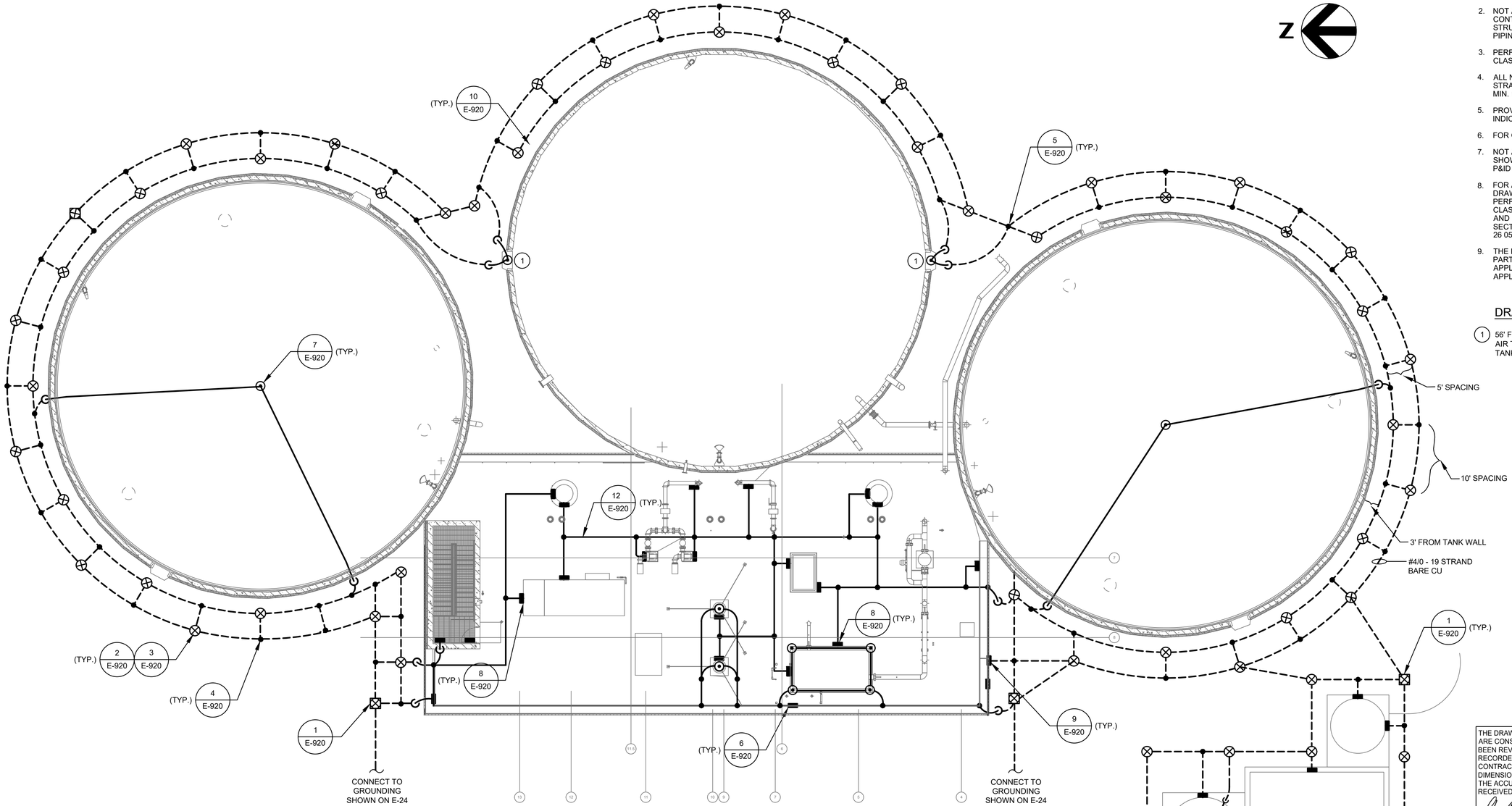

THE DRAWINGS IN THIS SET ARE RECORD DRAWINGS. THEY ARE CONSTRUCTION CONTRACT DRAWINGS WHICH HAVE BEEN REVISED BASED ON AVAILABLE FIELD INFORMATION RECORDED BY OTHERS DURING CONSTRUCTION OF THIS CONTRACT. THERE HAS BEEN NO VERIFICATION OF DIMENSIONS SHOWN ON THE CONSTRUCTION DRAWINGS OR THE ACCURACY/COMPLETENESS OF THE FIELD INFORMATION RECEIVED.

SIGNATURE 2/7/2023 DATE

DIGESTER BUILDING AND PHOSPHORUS PRECIPITATION BUILDING - GROUNDING AND LIGHTNING PROTECTION PLAN

SCALE: 3/32" = 1'-0"

0 8 16 24 32

SCALE: 3/32" = 1'-0"

SHAH & ASSOCIATES

AS-BUILT REPLACEMENT SHEET

PROFESSIONAL CERTIFICATION
THIS DRAWING WAS ORIGINALLY APPROVED FOR CONSTRUCTION AND SEALED BY KANAIYALAL R. SHAH, A REGISTERED PROFESSIONAL ENGINEER IN THE STATE OF MARYLAND, NO. 11084.

NOTICE TO CONTRACTORS
- PROJECT ELEVATIONS ARE BASED ON NAVD88 AND HOWARD COUNTY'S BENCHMARK SYSTEM
- PREVIOUS PROJECTS USED OTHER DATUMS
- APPLY THE FOLLOWING CONVERSIONS WHEN USING PREVIOUS CONTRACT DRAWINGS:
  - ADDITION NO. 6: SUBTRACT 0.80 FT
  - PRIOR ADDITIONS: SUBTRACT 1.04 FT

DEPARTMENT OF PUBLIC WORKS
HOWARD COUNTY, MARYLAND

CHIEF, BUREAU OF UTILITIES DATE

DES:	SR
DRN:	XMZ
CHK:	KRS
DATE:	10/2016

DATE	REV	DESCRIPTION
07/2019		RECORD DRAWING

ELECTRICAL

DIGESTER BUILDING AND PHOSPHORUS PRECIPITATION BUILDING - GROUNDING AND LIGHTNING PROTECTION PLAN

LITTLE PATUXENT WATER RECLAMATION PLANT
8TH ADDITION
BIOSOLIDS PROCESSING FACILITIES – PHASE I

CAPITAL PROJECT S–6295
CONTRACT NO. 24–4935

ELECTION DISTRICT NO. 6
HOWARD COUNTY, MARYLAND

SCALE AS SHOWN

SHEET 377 OF 463

E-335

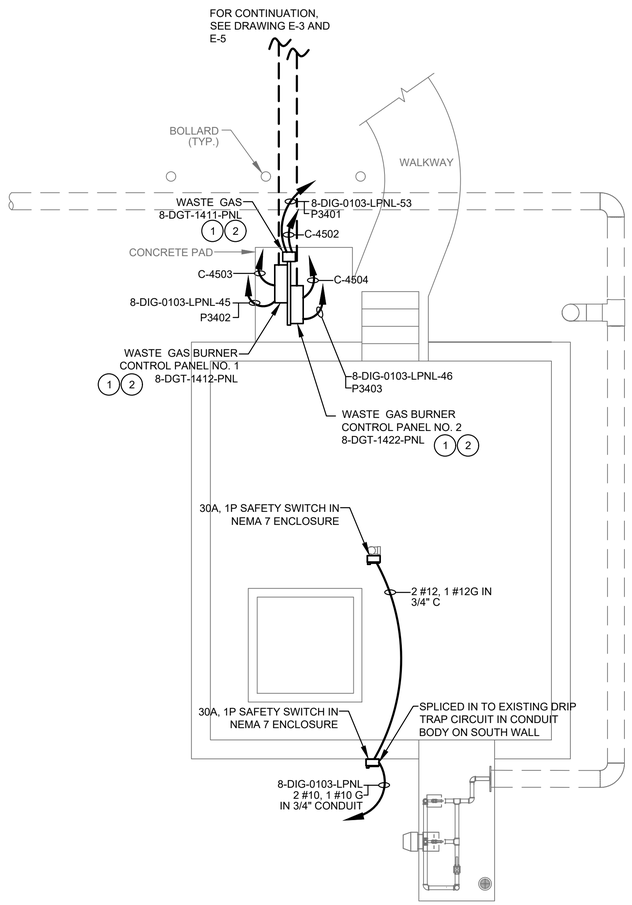

DIGESTER GAS FLARE -ELECTRICAL AND I&C PLAN

SCALE: 1/4" = 1'-0"

GRAPHIC SCALE

0 4 8 12

SCALE: 1/4" = 1'-0"

GENERAL NOTES:

1. FOR SYMBOLS AND ABBREVIATIONS, SEE DRAWING E-1.
2. FOR CONSTRUCTION SEQUENCE, SEE DRAWING E-2.
3. FOR CABLE AND CONDUIT SCHEDULES, SEE DRAWINGS E-905 THRU E-913, E-918 AND E-919.
4. FOR PANELBOARD SCHEDULE, SEE DRAWINGS E-901 THRU E-904.
5. DRAWINGS ARE INTENDED TO DEPICT DESIGN INTENT; CONTRACTOR TO REFER TO SPECIFICATIONS, P&IDS, AND STANDARD DETAILS FOR FURTHER INSTALLATION REQUIREMENTS.
6. LOCATION OF EQUIPMENT IE. MOTORS, VALVES, UNIT HEATERS, EXHAUST FANS, ETC. IS FOR REFERENCE ONLY. FOR EXACT LOCATION OF EQUIPMENT, REFER TO MECHANICAL, HVAC AND PLUMBING DRAWINGS.
7. NOT ALL INSTRUMENTATION EQUIPMENT ARE SHOWN ON THIS PLAN, REFER TO PROCESS AND P&ID DRAWINGS. THE DISCONNECT SWITCHES SHOWN FOR THE INSTRUMENTS; I.E., FITS, AITS, LITS, PITS, TITS, ETC. ARE 20A SNAP SWITCHES.
8. FOR AREA CLASSIFICATION, SEE GENERAL DRAWINGS G-18 THRU G-26. WORK SHALL BE PERFORMED IN ACCORDANCE WITH AREA CLASSIFICATION REQUIREMENTS. FOR ENCLOSURE AND CONDUIT TYPE, REFER TO SPECIFICATION SECTION 26 05 00.

DRAWING NOTES:

1. PANELS SHALL BE RACK MOUNTED, OUTSIDE THE HAZARDOUS AREA AT A MINIMUM 15 FEET FROM THE FLARE STACK.
2. FOR DUCT BANK ROUTING TO PANELS, SEE DRAWING E-5.

THE DRAWINGS IN THIS SET ARE RECORD DRAWINGS. THEY ARE CONSTRUCTION CONTRACT DRAWINGS WHICH HAVE BEEN REVISED BASED ON AVAILABLE FIELD INFORMATION RECORDED BY OTHERS DURING CONSTRUCTION OF THIS CONTRACT. THERE HAS BEEN NO VERIFICATION OF DIMENSIONS SHOWN ON THE CONSTRUCTION DRAWINGS OR THE ACCURACY/COMPLETENESS OF THE FIELD INFORMATION RECEIVED.

SIGNATURE _____ DATE 2/7/2020

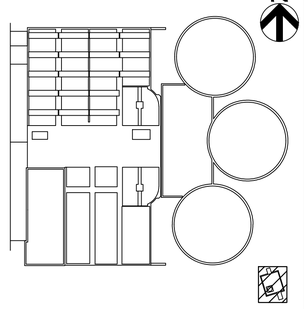

KEY PLAN

SHAH & ASSOCIATES

AS-BUILT REPLACEMENT SHEET

PROFESSIONAL CERTIFICATION
THIS DRAWING WAS ORIGINALLY APPROVED FOR CONSTRUCTION AND SEALED BY KANAIYALAL R. SHAH, A REGISTERED PROFESSIONAL ENGINEER IN THE STATE OF MARYLAND, NO. 11084.

NOTICE TO CONTRACTORS
- PROJECT ELEVATIONS ARE BASED ON NAVD88 AND HOWARD COUNTY'S BENCHMARK SYSTEM
- PREVIOUS PROJECTS USED OTHER DATUMS
- APPLY THE FOLLOWING CONVERSIONS WHEN USING PREVIOUS CONTRACT DRAWINGS:
  - ADDITION NO. 6: SUBTRACT 0.80 FT
  - PRIOR ADDITIONS: SUBTRACT 1.04 FT

DEPARTMENT OF PUBLIC WORKS
HOWARD COUNTY, MARYLAND

CHIEF, BUREAU OF UTILITIES DATE

DES: SR
DRN: AJS
CHK: KRS
DATE: 10/2016

DATE	REV	DESCRIPTION
07/2019		RECORD DRAWING

ELECTRICAL

DIGESTER GAS FLARE
ELECTRICAL AND I&C PLAN

LITTLE PATUXENT WATER RECLAMATION PLANT
8TH ADDITION
BIOSOLIDS PROCESSING FACILITIES – PHASE I

CAPITAL PROJECT S–6295
CONTRACT NO. 24–4935

ELECTION DISTRICT NO. 6
HOWARD COUNTY, MARYLAND

SCALE AS SHOWN

SHEET 378 OF 463

E-342

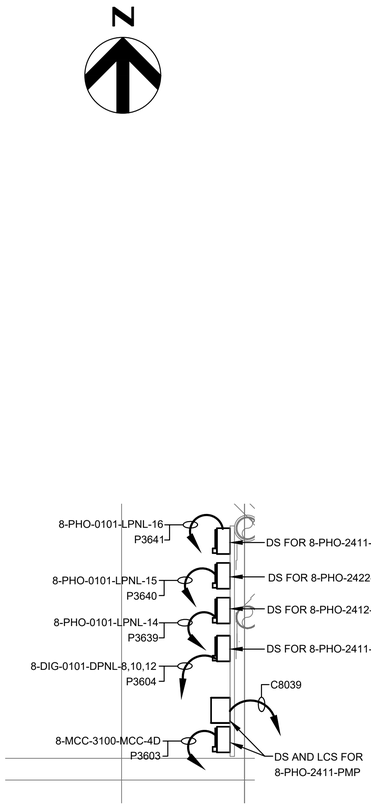

PARTIAL PLAN

1/2" = 1'-0"

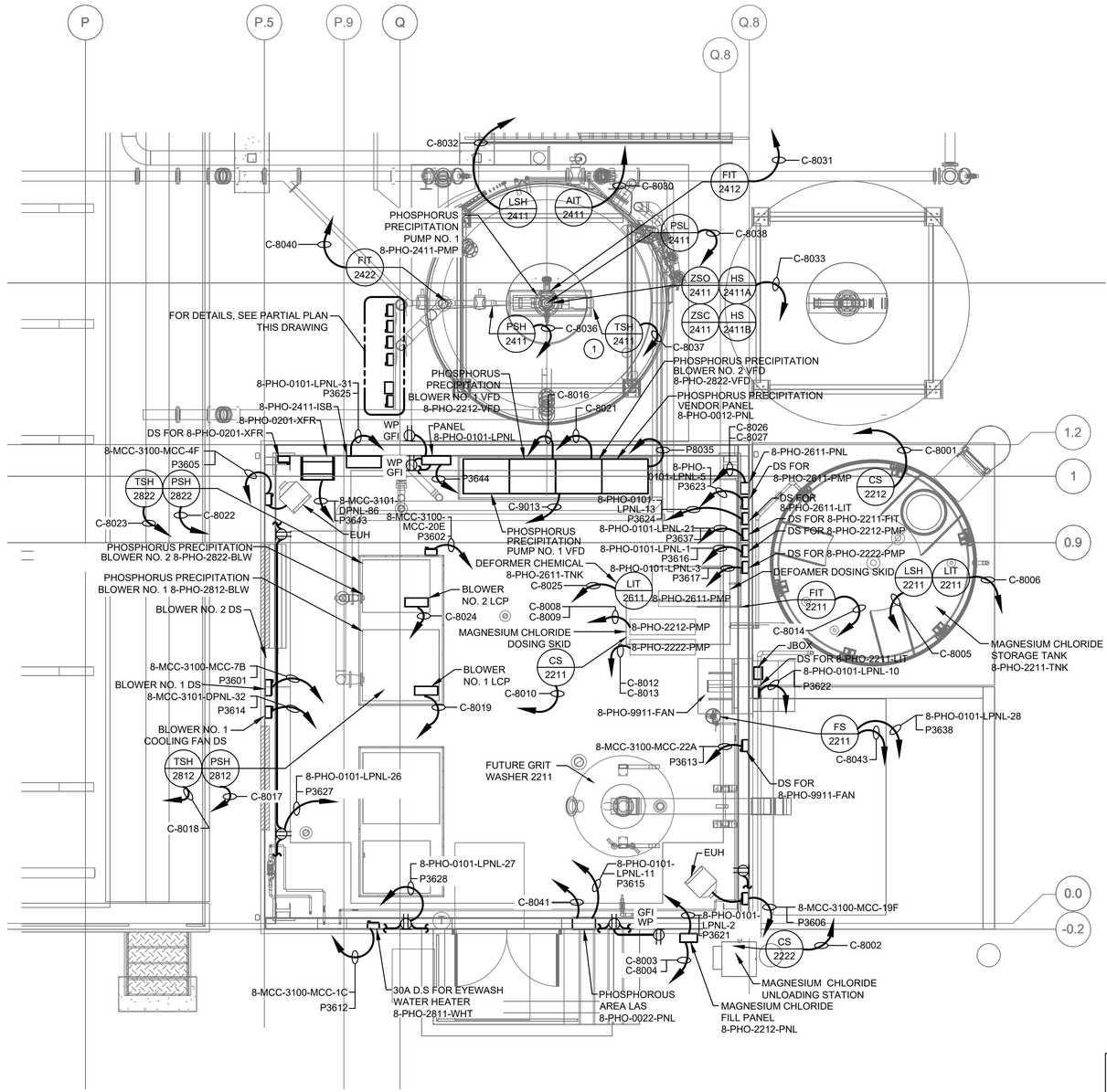

PHOSPHORUS PRECIPITATION BLDG - OVERALL - ELECTRICAL AND I&C PLAN

1/4" = 1'-0"

GENERAL NOTES:

1. FOR SYMBOLS AND ABBREVIATIONS, SEE DRAWING E-1.
2. FOR CONSTRUCTION SEQUENCE, SEE DRAWING E-2.
3. FOR NEW 8-MCC-3100-MCC ONE LINE DIAGRAM, SEE DRAWINGS E-16 AND E-17.
4. FOR CABLE AND CONDUIT SCHEDULE, SEE DRAWINGS E-905 THRU E-912, E-918 AND E-919.
5. DRAWINGS ARE INTENDED TO DEPICT DESIGN INTENT; CONTRACTOR TO REFER TO SPECIFICATIONS, P&IDS, AND STANDARD DETAILS FOR FURTHER INSTALLATION REQUIREMENTS.
6. LOCATION OF EQUIPMENT IE. MOTORS, VALVES, UNIT HEATERS, EXHAUST FANS, ETC. IS FOR REFERENCE ONLY. FOR EXACT LOCATION OF EQUIPMENT, REFER TO MECHANICAL, HVAC AND PLUMBING DRAWINGS.
7. PIPE HEAT TRACE CIRCUITS ARE NOT SHOWN ON THIS PLAN. SEE PANELBOARD SCHEDULE FOR CIRCUITS AND REFER TO HEAT TRACE SPECIFICATION. SECTION FOR MORE DETAIL.
8. NOT ALL INSTRUMENTATION EQUIPMENT ARE SHOWN ON THIS PLAN. REFER TO PROCESS AND P&ID DRAWINGS. THE DISCONNECT SWITCHES SHOWN FOR THE INSTRUMENTS; I.E., FITS, AITS, LITS, PITS, TITS, ETC. ARE 20A SNAP SWITCHES.
9. FOR PANELBOARD SCHEDULE, SEE DRAWINGS E-901 THRU E-904.

DRAWING NOTES:

(1) PROVIDE 20A, 1P BREAKER FROM PANEL 8-PHO-0101-LPNL AND 2 #12, 1 #12G CABLES IN 3/4" CONDUIT.

GRAPHIC SCALE

0 4 8 12

SCALE: 1/4" = 1'-0"

0 2 4 6

SCALE: 1/2" = 1'-0"

THE DRAWINGS IN THIS SET ARE RECORD DRAWINGS. THEY ARE CONSTRUCTION CONTRACT DRAWINGS WHICH HAVE BEEN REVISED BASED ON AVAILABLE FIELD INFORMATION RECORDED BY OTHERS DURING CONSTRUCTION OF THIS CONTRACT. THERE HAS BEEN NO VERIFICATION OF DIMENSIONS SHOWN ON THE CONSTRUCTION DRAWINGS OR THE ACCURACY/COMPLETENESS OF THE FIELD INFORMATION RECEIVED.

SIGNATURE _____ DATE 2/7/2020

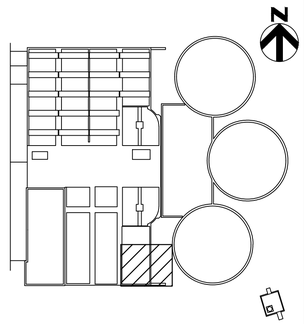

KEY PLAN

SHAH & ASSOCIATES

AS-BUILT REPLACEMENT SHEET

PROFESSIONAL CERTIFICATION

THIS DRAWING WAS ORIGINALLY APPROVED FOR CONSTRUCTION AND SEALED BY KANAIYALAL R. SHAH, A REGISTERED PROFESSIONAL ENGINEER IN THE STATE OF MARYLAND, NO. 11084.

NOTICE TO CONTRACTORS

- PROJECT ELEVATIONS ARE BASED ON NAVD88 AND HOWARD COUNTY'S BENCHMARK SYSTEM
- PREVIOUS PROJECTS USED OTHER DATUMS
- APPLY THE FOLLOWING CONVERSIONS WHEN USING PREVIOUS CONTRACT DRAWINGS:
  - ADDITION NO. 6: SUBTRACT 0.80 FT
  - PRIOR ADDITIONS: SUBTRACT 1.04 FT

DEPARTMENT OF PUBLIC WORKS
HOWARD COUNTY, MARYLAND

CHIEF, BUREAU OF UTILITIES DATE

DES: SR
DRN: XMZ
CHK: KRS
DATE: 10/2016

DATE	REV	DESCRIPTION
07/2019		RECORD DRAWING

ELECTRICAL

PHOSPHORUS PRECIPITATION BLDG
OVERALL
ELECTRICAL AND I&C PLAN

LITTLE PATUXENT WATER RECLAMATION PLANT
8TH ADDITION
BIOSOLIDS PROCESSING FACILITIES – PHASE I

CAPITAL PROJECT S-6295
CONTRACT NO. 24-4935

ELECTION DISTRICT NO. 6
HOWARD COUNTY, MARYLAND

SCALE AS SHOWN

SHEET 379 OF 463

E-361

N

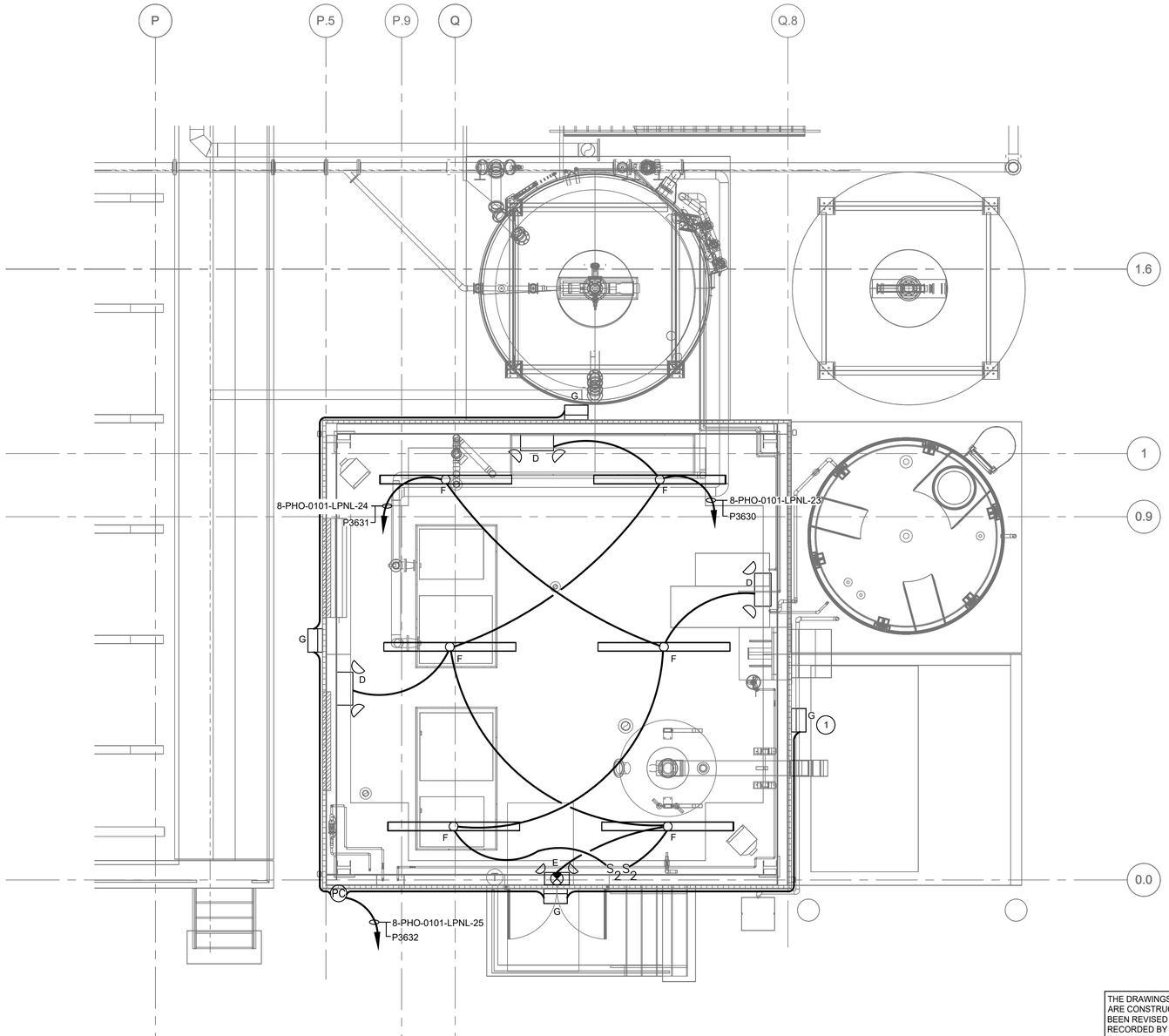

GENERAL NOTES:

1. FOR SYMBOLS AND ABBREVIATIONS, SEE DRAWING E-1.
2. FOR CONSTRUCTION SEQUENCE, SEE DRAWING E-2.
3. FOR LIGHTING FIXTURE SCHEDULE AND DETAIL, SEE DRAWING E-921.
4. FOR PANELBOARD SCHEDULE, SEE DRAWINGS E-901 THRU E-904.
5. FOR CABLE AND CONDUIT SCHEDULE, SEE DRAWINGS E-905 THRU E-913.

DRAWING NOTES:

(1) CONNECT VIA PHOTOCELL.

GRAPHIC SCALE

0 4 8 12

SCALE: 1/4" = 1'-0"

PHOSPHORUS PRECIPITATION BLDG - LOWER AND UPPER LEVEL - LIGHTING PLAN

SCALE: 1/4" = 1'-0"

THE DRAWINGS IN THIS SET ARE RECORD DRAWINGS. THEY ARE CONSTRUCTION CONTRACT DRAWINGS WHICH HAVE BEEN REVISED BASED ON AVAILABLE FIELD INFORMATION RECORDED BY OTHERS DURING CONSTRUCTION OF THIS CONTRACT. THERE HAS BEEN NO VERIFICATION OF DIMENSIONS SHOWN ON THE CONSTRUCTION DRAWINGS OR THE ACCURACY/COMPLETENESS OF THE FIELD INFORMATION RECEIVED.

SIGNATURE — DATE 2/7/2020

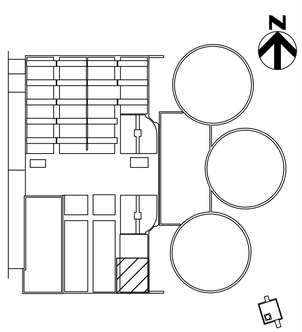

KEY PLAN

SHAH & ASSOCIATES

HDR

AS-BUILT REPLACEMENT SHEET

PROFESSIONAL CERTIFICATION
THIS DRAWING WAS ORIGINALLY APPROVED FOR CONSTRUCTION AND SEALED BY KANAIYALAL R. SHAH, A REGISTERED PROFESSIONAL ENGINEER IN THE STATE OF MARYLAND, NO. 11084.

NOTICE TO CONTRACTORS
- PROJECT ELEVATIONS ARE BASED ON NAVD88 AND HOWARD COUNTY'S BENCHMARK SYSTEM
- PREVIOUS PROJECTS USED OTHER DATUMS
- APPLY THE FOLLOWING CONVERSIONS WHEN USING PREVIOUS CONTRACT DRAWINGS:
  - ADDITION NO. 6: SUBTRACT 0.80 FT
  - PRIOR ADDITIONS: SUBTRACT 1.04 FT

DEPARTMENT OF PUBLIC WORKS
HOWARD COUNTY, MARYLAND

CHIEF, BUREAU OF UTILITIES — DATE

DES: SR
DRN: XMZ
CHK: KRS
DATE: 10/2016

DATE	REV	DESCRIPTION
07/2019		RECORD DRAWING

ELECTRICAL

PHOSPHORUS PRECIPITATION BLDG
LOWER AND UPPER LEVEL
LIGHTING PLAN

LITTLE PATUXENT WATER RECLAMATION PLANT
8TH ADDITION
BIOSOLIDS PROCESSING FACILITIES – PHASE I

CAPITAL PROJECT S-6295
CONTRACT NO. 24-4935

ELECTION DISTRICT NO. 6
HOWARD COUNTY, MARYLAND

SCALE AS SHOWN

SHEET 380 OF 463

E-362

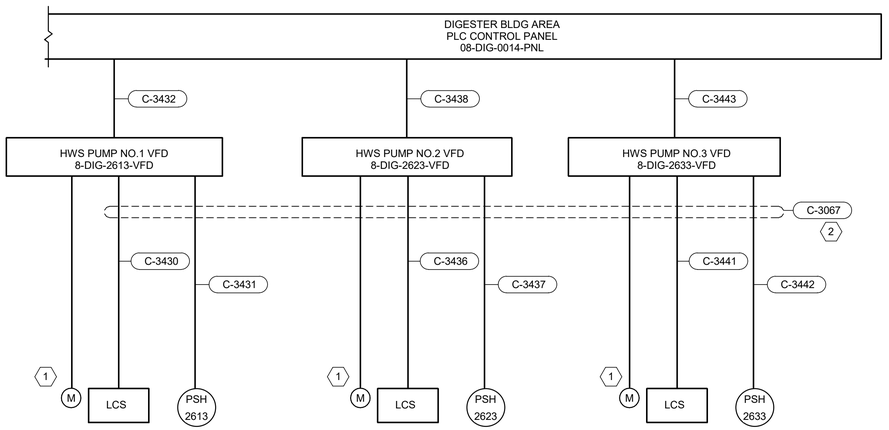

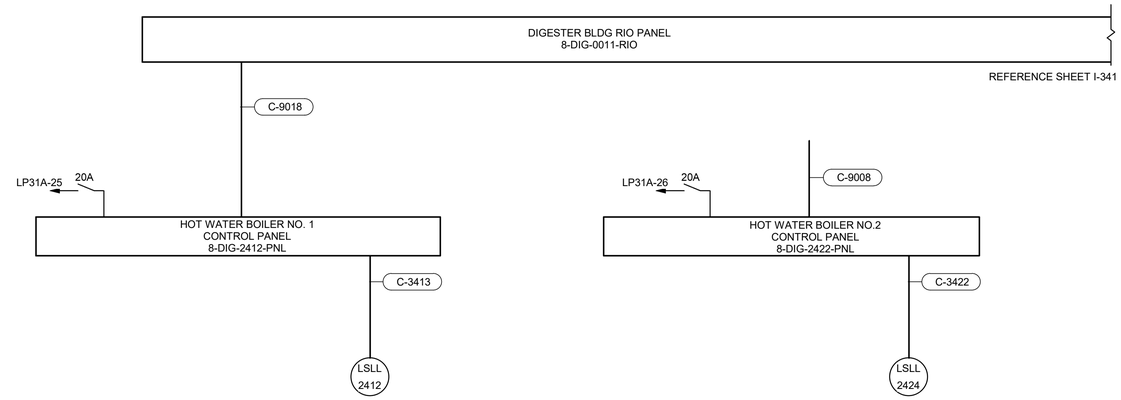

GENERAL NOTES

1. SEE POWER ONE-LINE DIAGRAMS AND CONDUIT AND WIRE SCHEDULES FOR DRIVE, STARTER, AND MOTOR POWER CONDUIT AND WIRE REQUIREMENTS

KEY NOTES ⬡ X

1 INCLUDE 2#14 FOR MOTOR HEATER AND 2#14 FOR DISCONNECT SWITCH AUXILARY CONTACT, IN 3/4" CONDUIT, FROM CONTROLLER (VFD OR STARTER) TO MOTOR AS INDICATED IN SCHEMATIC DIAGRAM. TYPICAL FOR MOTORS.

2 COMBINE SIGNAL CIRCUITS FROM FIELD EQUIPMENT TO STARTER/VFD INTO ONE CONDUIT FOR ROUTING BETWEEN BUILDINGS. PROVIDE JUNCTION BOXES AS NECESSARY, AT BOTH ENDS, TO JOIN AND SEPARATE CIRCUITS. JUNCTION BOXES NOT SHOWN. DO NOT INCLUDE POWER CIRCUITS WHICH ARE ROUTED SEPARATELY.

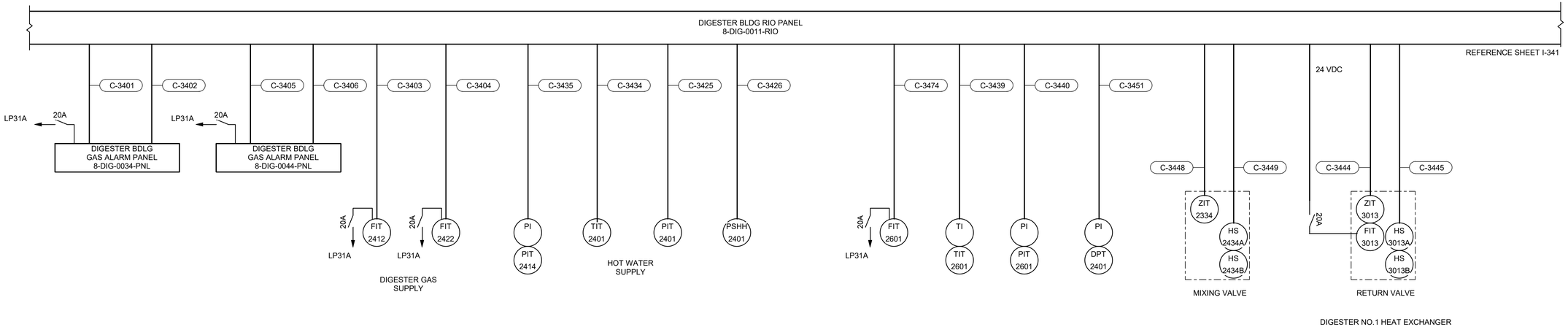

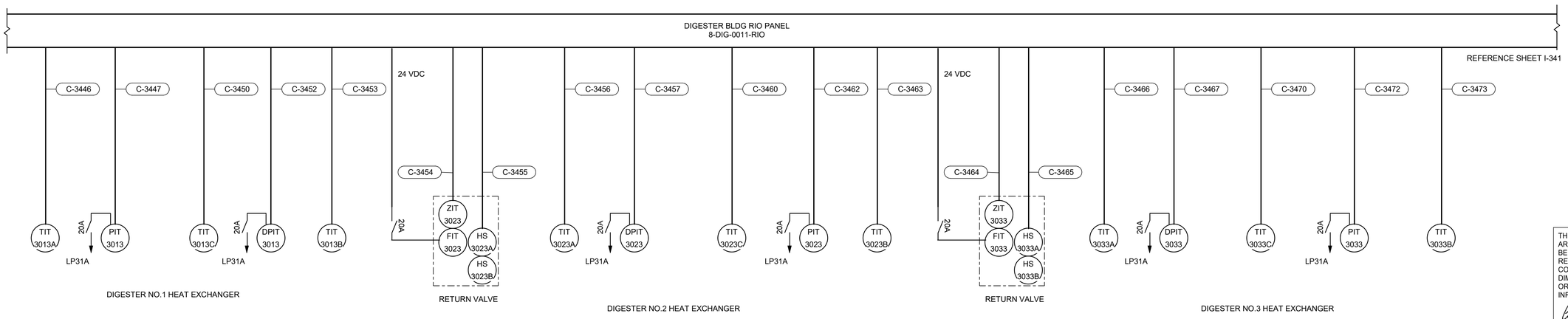

THE DRAWINGS IN THIS SET ARE RECORD DRAWINGS. THEY ARE CONSTRUCTION CONTRACT DRAWINGS WHICH HAVE BEEN REVISED BASED ON AVAILABLE FIELD INFORMATION RECORDED BY OTHERS DURING CONSTRUCTION OF THIS CONTRACT. THERE HAS BEEN NO VERIFICATION OF DIMENSIONS SHOWN ON THE CONSTRUCTION DRAWINGS OR THE ACCURACY/COMPLETENESS OF THE FIELD INFORMATION RECEIVED.

SIGNATURE 2/7/2022 DATE

AS-BUILT REPLACEMENT SHEET

PROFESSIONAL CERTIFICATION

THIS DRAWING WAS ORIGINALLY APPROVED FOR CONSTRUCTION AND SEALED BY ROBERT L. ANDERSON, A REGISTERED PROFESSIONAL ENGINEER IN THE STATE OF MARYLAND, NO. 37997.

NOTICE TO CONTRACTORS

- PROJECT ELEVATIONS ARE BASED ON NAVD88 AND HOWARD COUNTY'S BENCHMARK SYSTEM
- PREVIOUS PROJECTS USED OTHER DATUMS
- APPLY THE FOLLOWING CONVERSIONS WHEN USING PREVIOUS CONTRACT DRAWINGS:
  - ADDITION NO. 6: SUBTRACT 0.80 FT
  - PRIOR ADDITIONS: SUBTRACT 1.04 FT

DEPARTMENT OF PUBLIC WORKS
HOWARD COUNTY, MARYLAND

CHIEF, BUREAU OF UTILITIES DATE

DES: WAC
DRN: WAC
CHK: RLA
DATE: 12/2016

DATE	REV	DESCRIPTION
07/2019		RECORD DRAWING

ELECTRICAL

DIGESTER HEATING SYSTEM INSTRUMENT ONE-LINE DIAGRAM

LITTLE PATUXENT WATER RECLAMATION PLANT
8TH ADDITION
BIOSOLIDS PROCESSING FACILITIES - PHASE I

CAPITAL PROJECT S-6295
CONTRACT NO. 24-4935

ELECTION DISTRICT NO. 6
HOWARD COUNTY, MARYLAND

SCALE AS SHOWN

SHEET 348 OF 463

E-379

BIM 360://10054364 – Little Patuxent WRP 8th Addition/265491_E-HDR_V18.rvt
1/12/2022 9:33:17 AM

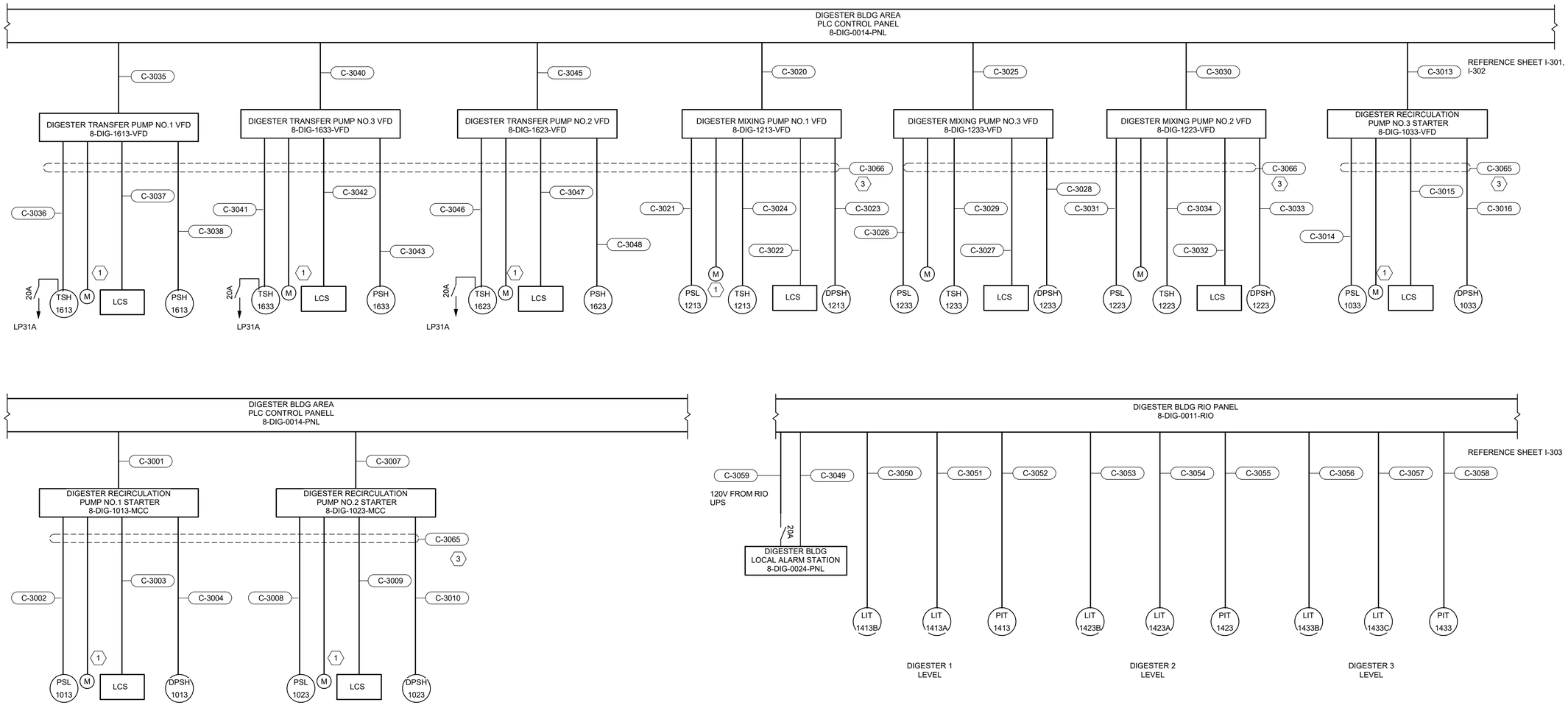

GENERAL NOTES

1. SEE POWER ONE-LINE DIAGRAMS AND CONDUIT AND WIRE SCHEDULES FOR DRIVE, STARTER, AND MOTOR POWER CONDUIT AND WIRE REQUIREMENTS

KEY NOTES (X)

1 INCLUDE 2#14 FOR MOTOR HEATER AND 2#14 FOR DISCONNECT SWITCH AUXILARY CONTACT, IN 3/4" CONDUIT, FROM CONTROLLER (VFD OR STARTER) TO MOTOR AS INDICATED IN SCHEMATIC DIAGRAM. TYPICAL FOR MOTORS.

2 SEE PANEL SCHEDULES FOR INSTRUMENT POWER CIRCUIT NUMBER, TYPICAL.

3 COMBINE SIGNAL CIRCUITS FROM FIELD EQUIPMENT TO STARTER/VFD INTO ONE CONDUIT FOR ROUTING BETWEEN BUILDINGS. PROVIDE JUNCTION BOXES AS NECESSARY, AT BOTH ENDS, TO JOIN AND SEPARATE CIRCUITS. JUNCTION BOXES NOT SHOWN. DO NOT INCLUDE POWER CIRCUITS WHICH ARE ROUTED SEPARATELY.

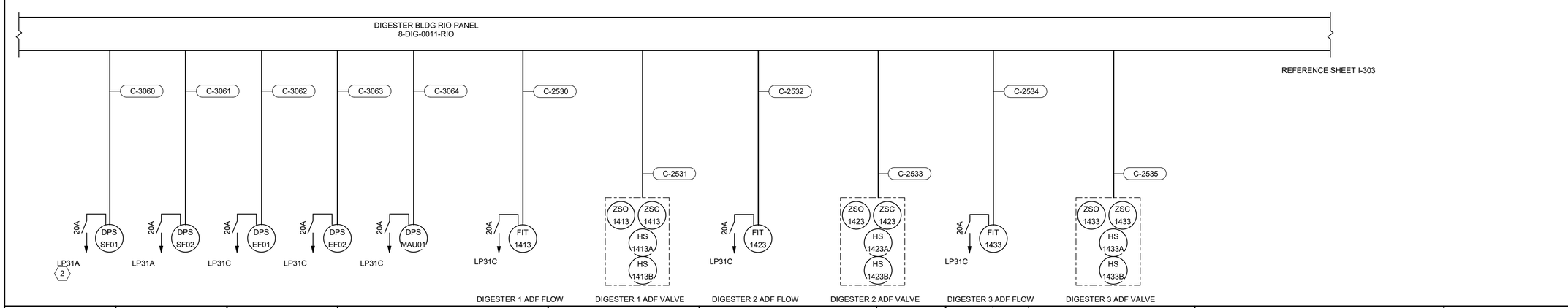

THE DRAWINGS IN THIS SET ARE RECORD DRAWINGS. THEY ARE CONSTRUCTION CONTRACT DRAWINGS WHICH HAVE BEEN REVISED BASED ON AVAILABLE FIELD INFORMATION RECORDED BY OTHERS DURING CONSTRUCTION OF THIS CONTRACT. THERE HAS BEEN NO VERIFICATION OF DIMENSIONS SHOWN ON THE CONSTRUCTION DRAWINGS OR THE ACCURACY/COMPLETENESS OF THE FIELD INFORMATION RECEIVED.

SIGNATURE — DATE 2/7/2023

AS-BUILT REPLACEMENT SHEET

PROFESSIONAL CERTIFICATION

THIS DRAWING WAS ORIGINALLY APPROVED FOR CONSTRUCTION AND SEALED BY ROBERT L. ANDERSON, A REGISTERED PROFESSIONAL ENGINEER IN THE STATE OF MARYLAND, NO. 37997.

NOTICE TO CONTRACTORS

- PROJECT ELEVATIONS ARE BASED ON NAVD88 AND HOWARD COUNTY'S BENCHMARK SYSTEM
- PREVIOUS PROJECTS USED OTHER DATUMS
- APPLY THE FOLLOWING CONVERSIONS WHEN USING PREVIOUS CONTRACT DRAWINGS:
  - ADDITION NO. 6: SUBTRACT 0.80 FT
  - PRIOR ADDITIONS: SUBTRACT 1.04 FT

DEPARTMENT OF PUBLIC WORKS
HOWARD COUNTY, MARYLAND

CHIEF, BUREAU OF UTILITIES — DATE

DES: WAC
DRN: WAC
CHK: RLA
DATE: 12/2016

DATE	REV	DESCRIPTION
07/2019		RECORD DRAWING

ELECTRICAL

DIGESTER BUILDING INSTRUMENT ONELINE DIAGRAM

LITTLE PATUXENT WATER RECLAMATION PLANT
8TH ADDITION
BIOSOLIDS PROCESSING FACILITIES - PHASE I

CAPITAL PROJECT S-6295
CONTRACT NO. 24-4935

ELECTION DISTRICT NO. 6
HOWARD COUNTY, MARYLAND

SCALE AS SHOWN

SHEET 382 OF 463

E-380

BIM 360://10054364 – Little Patuxent WRP 8th Addition/284591_E-HDR_V18.rvt
1/12/2022 9:33:20 AM

SOLIDS SCREENING AREA RIO
8-PST-0011-RIO

C-3500 — 20A — FIT 1011 — LP31D — PRIMARY SLUDGE FLOW

C-3514 — PIT 1011 — PRIMARY SLUDGE SUCTION PRESSURE

C-3516 — LIT 1211 — HOPPER LEVEL

C-3517 — 20A — FSH 2011 — LPXX

C-3515 — SOLIDS SCREENING LOCAL ALARM STATION 8-PST-0012-PNL

DIGESTED SOLIDS AREA
NETWORK INTERFACE PANEL
8-GBT-0011-NIP

SEE SHEET E-913

REFERENCE SHEET I-350

JUNCTION BOX

C-9026 — PRIMARY SOLIDS SCREENS NO.1 LCP

C-3502 — CMPR 1 — AIR COMPRESSOR 8-PST-1412-AIR

C-3503 — OSH 1012

C-3504 — PIT 1012A

C-3505 — PIT 1012B

C-3506 — MSH 1012

C-3507 — S

C-9025 — PRIMARY SOLIDS SCREENS NO.2 LCP

C-3509 — CMPR 2 — AIR COMPRESSOR 8-PST-1422-AIR

C-3510 — OSH 1022

C-3511 — PIT 1022A

C-3512 — PIT 1022B

C-3513 — MSH 1022

C-3508 — S

GENERAL NOTES

1. SEE POWER ONE-LINE DIAGRAMS AND CONDUIT AND WIRE SCHEDULES FOR DRIVE, STARTER, AND MOTOR POWER CONDUIT AND WIRE REQUIREMENTS

KEY NOTES (X)

1 INCLUDE 2#14 FOR MOTOR HEATER AND 2#14 FOR DISCONNECT SWITCH AUXILARY CONTACT, IN 3/4" CONDUIT, FROM CONTROLLER (VFD OR STARTER) TO MOTOR AS INDICATED IN SCHEMATIC DIAGRAM. TYPICAL FOR MOTORS.

2 SEE PANEL SCHEDULES FOR INSTRUMENT POWER CIRCUIT NUMBER, TYPICAL.

DIGESTER BLDG AREA
PLC CONTROL PANEL
8-DIG-0014-PNL

C-3701 — CENTRIFUGE FEED PUMP NO.1 VFD

C-3702 — TSH 2213

C-3703 — PSH 2213 — (1) — M

C-3704 — LCS

C-3706 — CENTRIFUGE FEED PUMP NO.2 VFD

C-3707 — TSH 2223

C-3708 — PSH 2223 — (1) — M

C-3709 — LCS

C-3710 — CENTRIFUGE FEED PUMP NO.3 VFD

C-3711 — TSH 2233

C-3712 — PSH 2233 — M

C-3713 — LCS

C-3715 — CELL 1 MIXING PUMP NO.1 VFD 8-DIG-2012-VFD

C-3716 — PSH 2012

C-3721 — PSL 2012 — (1) — M

C-3717 — LCS

C-3718 — CELL 1 MIXING PUMP NO.2 VFD 8DIG-2022-VFD

C-3719 — PSH 2022

C-3722 — PSL 2022 — (1) — M

C-3720 — LCS

SOLIDS PIPE GALLERY AREA RIO
8-SPG-0011-RIO

REFERENCE SHEET I-375

C-3724 — 20A — LIT 2011 — LP31C — (2) — DIGESTED SOLIDS STORAGE CELL 1 LEVEL

C-3725 — 20A — LIT 1811 — LP31C — DIGESTED SOLIDS STORAGE CELL 2 LEVEL

C-3729 — 20A — FIT 2213 — LP31C

SOLIDS PIPE GALLERY AREA RIO
8-SPG-0011-RIO

REFERENCE SHEET I-375

C-3730 — 20A — FIT 2213 — LP31C

C-3731 — 20A — FIT 2213 — LP31C

CELL 2 MIXER 1 LCS
8-DIG-1814MX

C-3735 — TSH 1814 — MSH 1814 — M

CELL 2 MIXER 2LCS
8-DIG-1824MX

C-3736 — TSH 1824 — MSH 1824 — M

CELL 2 MIXER 3 LCS
8-DIG-1834MX

C-3737 — TSH 1834 — MSH 1834 — M

CELL 2 MIXER 4 LCS
8-DIG-1844MX

C-3738 — TSH 1844 — MSH 1844 — M

THE DRAWINGS IN THIS SET ARE RECORD DRAWINGS. THEY ARE CONSTRUCTION CONTRACT DRAWINGS WHICH HAVE BEEN REVISED BASED ON AVAILABLE FIELD INFORMATION RECORDED BY OTHERS DURING CONSTRUCTION OF THIS CONTRACT. THERE HAS BEEN NO VERIFICATION OF DIMENSIONS SHOWN ON THE CONSTRUCTION DRAWINGS OR THE ACCURACY/COMPLETENESS OF THE FIELD INFORMATION RECEIVED.

SIGNATURE — DATE 2/7/2022

AS-BUILT REPLACEMENT SHEET

PROFESSIONAL CERTIFICATION

THIS DRAWING WAS ORIGINALLY APPROVED FOR CONSTRUCTION AND SEALED BY ROBERT L. ANDERSON, A REGISTERED PROFESSIONAL ENGINEER IN THE STATE OF MARYLAND, NO. 37997.

NOTICE TO CONTRACTORS

- PROJECT ELEVATIONS ARE BASED ON NAVD88 AND HOWARD COUNTY'S BENCHMARK SYSTEM
- PREVIOUS PROJECTS USED OTHER DATUMS
- APPLY THE FOLLOWING CONVERSIONS WHEN USING PREVIOUS CONTRACT DRAWINGS:
  - ADDITION NO. 6: SUBTRACT 0.80 FT
  - PRIOR ADDITIONS: SUBTRACT 1.04 FT

DEPARTMENT OF PUBLIC WORKS
HOWARD COUNTY, MARYLAND

CHIEF, BUREAU OF UTILITIES — DATE

DES: WAC
DRN: WAC
CHK: RLA
DATE: 12/2016

DATE	REV	DESCRIPTION
07/2019		RECORD DRAWING

ELECTRICAL

PRIMARY SCREENS AND DIGESTED SLUDGE STORAGE INSTRUMENT ONE LINE DIAGRAM

LITTLE PATUXENT WATER RECLAMATION PLANT
8TH ADDITION
BIOSOLIDS PROCESSING FACILITIES - PHASE I

CAPITAL PROJECT S-6295
CONTRACT NO. 24-4935

ELECTION DISTRICT NO. 6
HOWARD COUNTY, MARYLAND

SCALE AS SHOWN

SHEET 383 OF 463

E-381

BIM 360://10054364 – Little Patuxent WRP 8th Addition/264591_E-HDR_V18.rvt
1/12/2022 9:33:23 AM

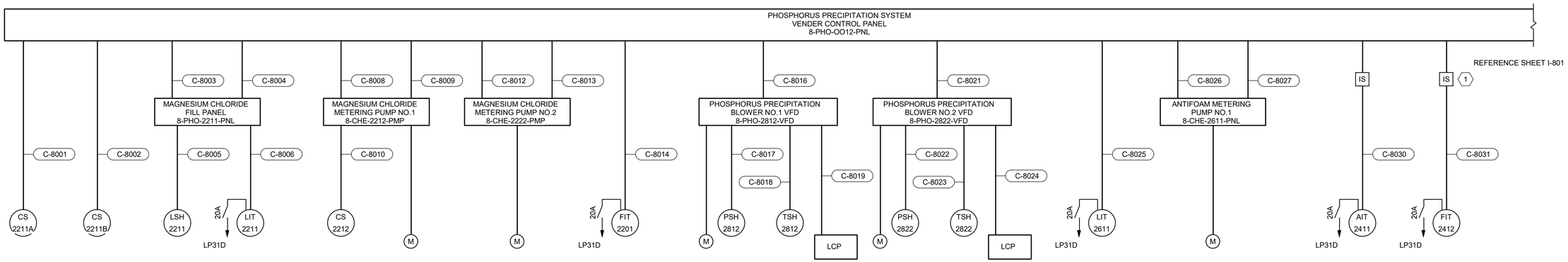

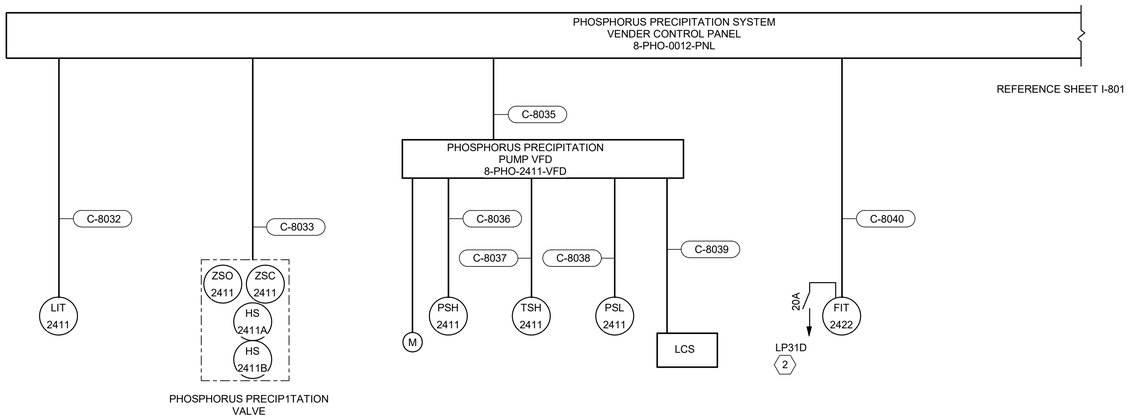

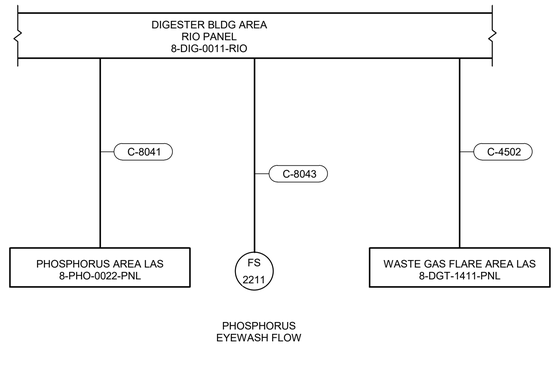

KEY NOTES (X)

1 ROUTE FIELD WIRING THROUGH INSTRINSICALLY SAFE PANEL. WIRING TO THE DEVICE IN HAZAROUD SPACE SHALL BE INTRINSICALLY SAFE. TYPICAL FOR IS.

2 SEE PANEL SCHEDULES FOR INSTRUMENT POWER CIRCUIT NUMBER, TYPICAL.

THE DRAWINGS IN THIS SET ARE RECORD DRAWINGS. THEY ARE CONSTRUCTION CONTRACT DRAWINGS WHICH HAVE BEEN REVISED BASED ON AVAILABLE FIELD INFORMATION RECORDED BY OTHERS DURING CONSTRUCTION OF THIS CONTRACT. THERE HAS BEEN NO VERIFICATION OF DIMENSIONS SHOWN ON THE CONSTRUCTION DRAWINGS OR THE ACCURACY/COMPLETENESS OF THE FIELD INFORMATION RECEIVED.

SIGNATURE 2/7/2023 DATE

AS-BUILT REPLACEMENT SHEET

PROFESSIONAL CERTIFICATION

THIS DRAWING WAS ORIGINALLY APPROVED FOR CONSTRUCTION AND SEALED BY ROBERT L. ANDERSON, A REGISTERED PROFESSIONAL ENGINEER IN THE STATE OF MARYLAND, NO. 37997.

NOTICE TO CONTRACTORS

- PROJECT ELEVATIONS ARE BASED ON NAVD88 AND HOWARD COUNTY'S BENCHMARK SYSTEM
- PREVIOUS PROJECTS USED OTHER DATUMS
- APPLY THE FOLLOWING CONVERSIONS WHEN USING PREVIOUS CONTRACT DRAWINGS:
  - ADDITION NO. 6: SUBTRACT 0.80 FT
  - PRIOR ADDITIONS: SUBTRACT 1.04 FT

DEPARTMENT OF PUBLIC WORKS
HOWARD COUNTY, MARYLAND

CHIEF, BUREAU OF UTILITIES DATE

DES: WAC
DRN: WAC
CHK: RLA
DATE: 12/2016

DATE	REV	DESCRIPTION
07/2019		RECORD DRAWING

ELECTRICAL

PHOSHORUS INSTRUMENT ONE-LINE DIAGRAM

LITTLE PATUXENT WATER RECLAMATION PLANT
8TH ADDITION
BIOSOLIDS PROCESSING FACILITIES - PHASE I

CAPITAL PROJECT S-6295
CONTRACT NO. 24-4935

ELECTION DISTRICT NO. 6
HOWARD COUNTY, MARYLAND

SCALE AS SHOWN

SHEET 384 OF 463

E-382

BIM 360://10054364 – Little Patuxent WRP 8th Addition/264591_E-HDR_V18.rvt
1/12/2022 9:33:25 AM

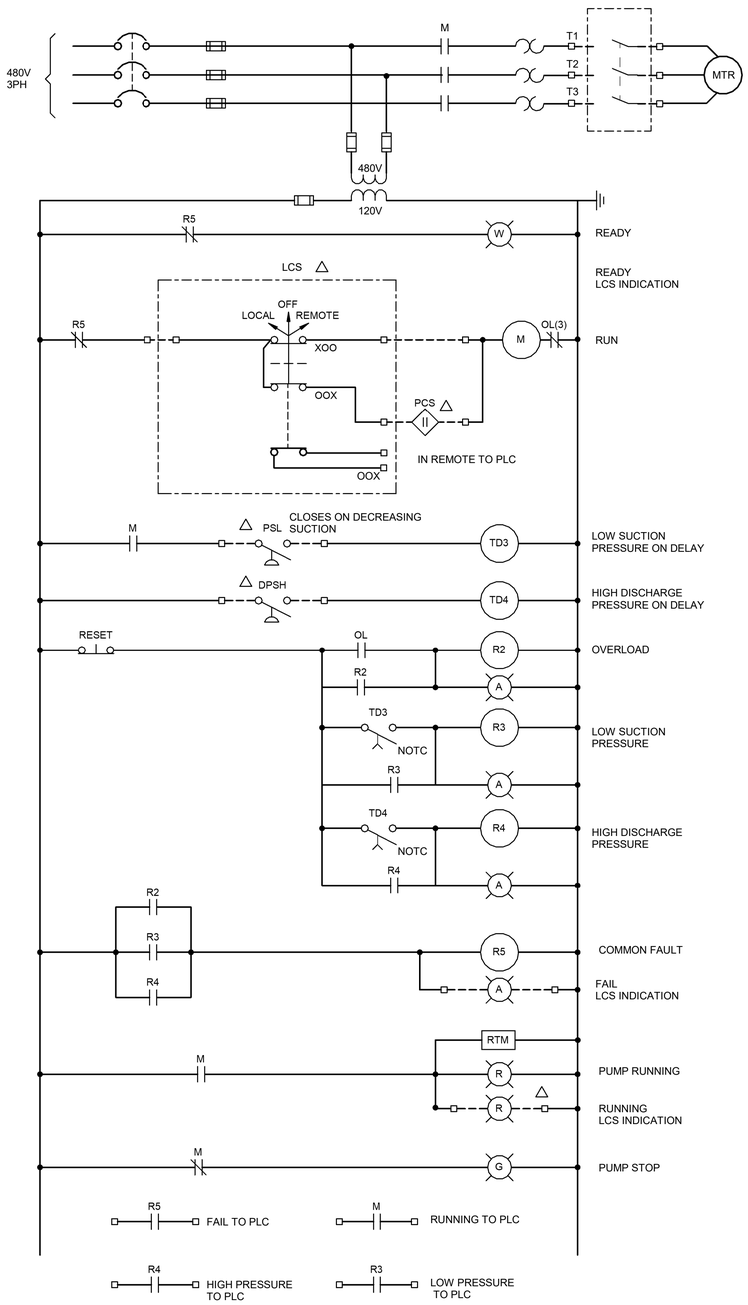

DIGESTER RECIRCULATION PUMP 1 AND 2 SCHEMATIC

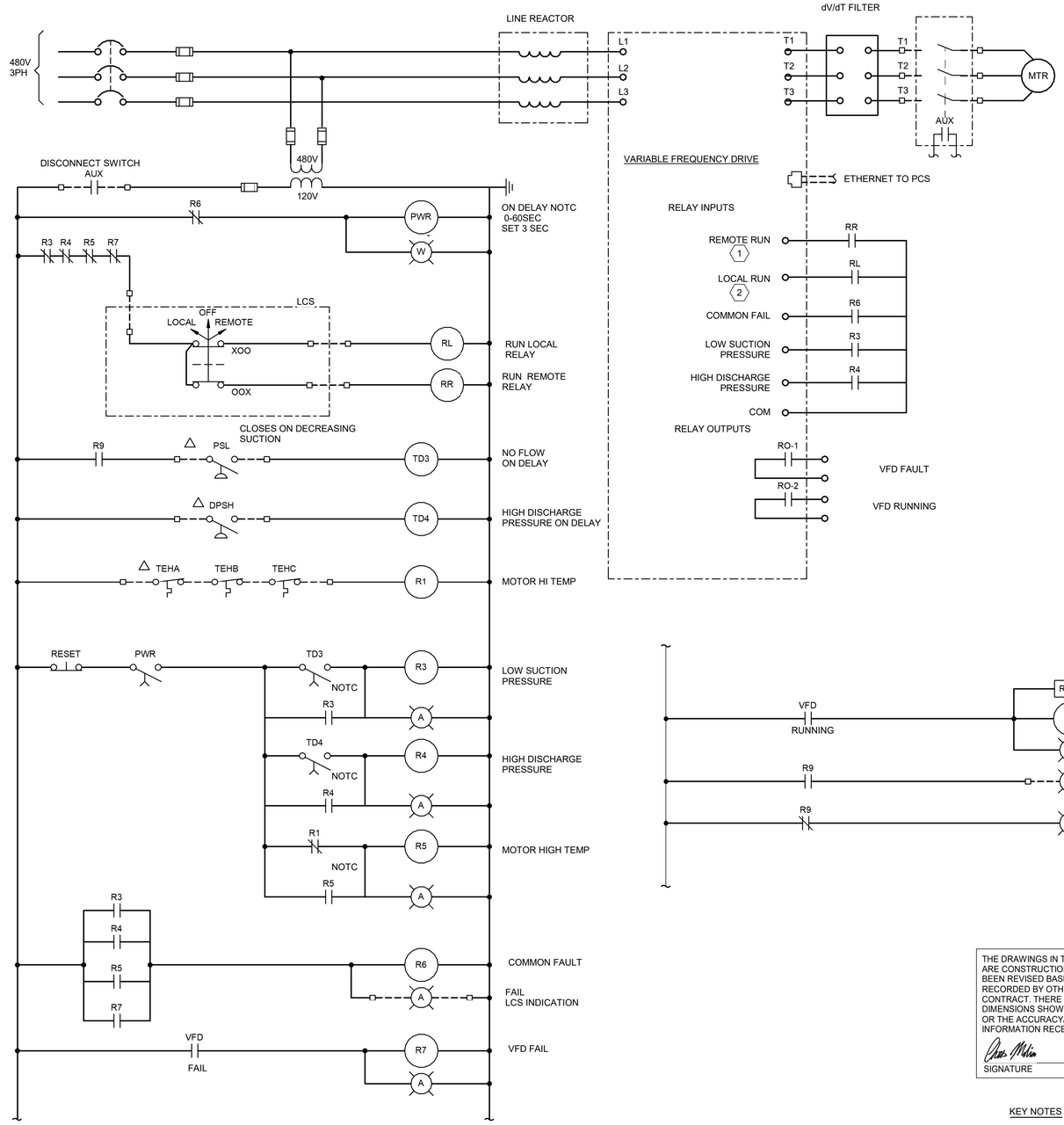

TYPICAL DIGESTER MIXING PUMP SCHEMATIC

THE DRAWINGS IN THIS SET ARE RECORD DRAWINGS. THEY ARE CONSTRUCTION CONTRACT DRAWINGS WHICH HAVE BEEN REVISED BASED ON AVAILABLE FIELD INFORMATION RECORDED BY OTHERS DURING CONSTRUCTION OF THIS CONTRACT. THERE HAS BEEN NO VERIFICATION OF DIMENSIONS SHOWN ON THE CONSTRUCTION DRAWINGS OR THE ACCURACY/COMPLETENESS OF THE FIELD INFORMATION RECEIVED.

SIGNATURE _____ DATE 2/7/2020

KEY NOTES (X)

1 WHEN LOR SWITCH IS IN THE REMOTE POSITION VFD STOP/START AND SPEED REFERENCE SHALL BE COMMUNICATED VIA ETHERNET.

2 WHEN LOR SWITCH IS IN THE LOCAL POSITION THE VFD SHALL START AND RUN AT A SPEED ENTERED AT THE VFD KEYPAD.

AS-BUILT REPLACEMENT SHEET

PROFESSIONAL CERTIFICATION

THIS DRAWING WAS ORIGINALLY APPROVED FOR CONSTRUCTION AND SEALED BY ROBERT L. ANDERSON, A REGISTERED PROFESSIONAL ENGINEER IN THE STATE OF MARYLAND, NO. 37997.

NOTICE TO CONTRACTORS

- PROJECT ELEVATIONS ARE BASED ON NAVD88 AND HOWARD COUNTY'S BENCHMARK SYSTEM
- PREVIOUS PROJECTS USED OTHER DATUMS
- APPLY THE FOLLOWING CONVERSIONS WHEN USING PREVIOUS CONTRACT DRAWINGS:
  - ADDITION NO. 6: SUBTRACT 0.80 FT
  - PRIOR ADDITIONS: SUBTRACT 1.04 FT

DEPARTMENT OF PUBLIC WORKS
HOWARD COUNTY, MARYLAND

CHIEF, BUREAU OF UTILITIES DATE

DES: WAC
DRN: WAC
CHK: RLA
DATE: 12/2016

DATE	REV	DESCRIPTION
07/2019		RECORD DRAWING

ELECTRICAL

DIGESTER MIXING AND RECIRCULATION SCHEMATIC DIAGRAM

LITTLE PATUXENT WATER RECLAMATION PLANT
8TH ADDITION
BIOSOLIDS PROCESSING FACILITIES - PHASE I

CAPITAL PROJECT S-6295
CONTRACT NO. 24-4935

ELECTION DISTRICT NO. 6
HOWARD COUNTY, MARYLAND

SCALE AS SHOWN

SHEET 385 OF 463

E-383

BIM 360://10054364 – Little Patuxent WRP 8th Addition/284591_E-HDR_V18.rvt
1/12/2022 9:33:27 AM

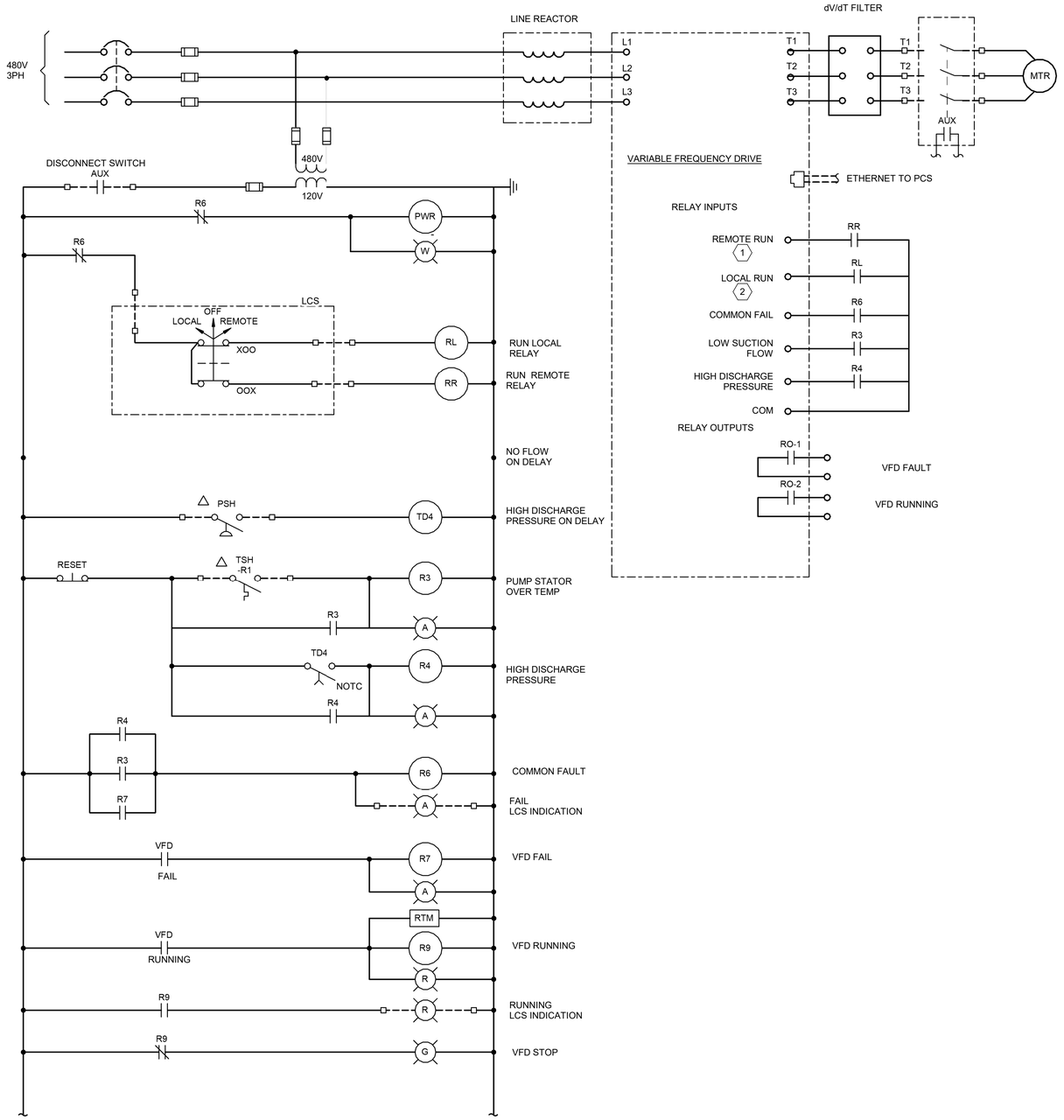

TYPICAL ANEROBIC DIGESTER TRANSFER PUMP VFD SCHEMATIC

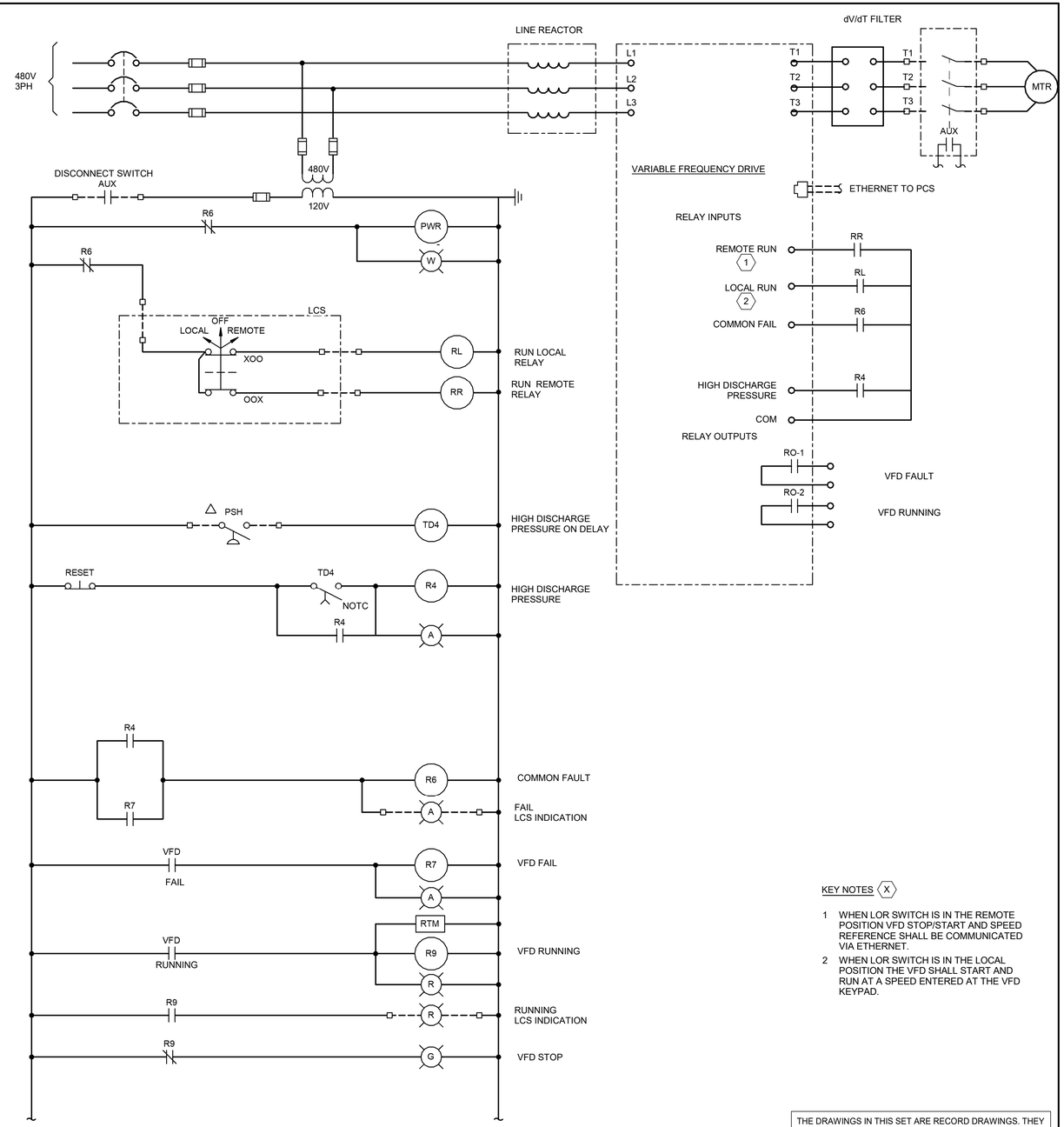

TYPICAL HOT WATER SUPPLY PUMP VFD SCHEMATIC

KEY NOTES (X)

1 WHEN LOR SWITCH IS IN THE REMOTE POSITION VFD STOP/START AND SPEED REFERENCE SHALL BE COMMUNICATED VIA ETHERNET.

2 WHEN LOR SWITCH IS IN THE LOCAL POSITION THE VFD SHALL START AND RUN AT A SPEED ENTERED AT THE VFD KEYPAD.

THE DRAWINGS IN THIS SET ARE RECORD DRAWINGS. THEY ARE CONSTRUCTION CONTRACT DRAWINGS WHICH HAVE BEEN REVISED BASED ON AVAILABLE FIELD INFORMATION RECORDED BY OTHERS DURING CONSTRUCTION OF THIS CONTRACT. THERE HAS BEEN NO VERIFICATION OF DIMENSIONS SHOWN ON THE CONSTRUCTION DRAWINGS OR THE ACCURACY/COMPLETENESS OF THE FIELD INFORMATION RECEIVED.

SIGNATURE 2/7/2023 DATE

AS-BUILT REPLACEMENT SHEET

PROFESSIONAL CERTIFICATION

THIS DRAWING WAS ORIGINALLY APPROVED FOR CONSTRUCTION AND SEALED BY ROBERT L. ANDERSON, A REGISTERED PROFESSIONAL ENGINEER IN THE STATE OF MARYLAND, NO. 37997.

NOTICE TO CONTRACTORS

- PROJECT ELEVATIONS ARE BASED ON NAVD88 AND HOWARD COUNTY'S BENCHMARK SYSTEM
- PREVIOUS PROJECTS USED OTHER DATUMS
- APPLY THE FOLLOWING CONVERSIONS WHEN USING PREVIOUS CONTRACT DRAWINGS:
  - ADDITION NO. 6: SUBTRACT 0.80 FT
  - PRIOR ADDITIONS: SUBTRACT 1.04 FT

DEPARTMENT OF PUBLIC WORKS
HOWARD COUNTY, MARYLAND

CHIEF, BUREAU OF UTILITIES DATE

DES: WAC
DRN: WAC
CHK: RLA
DATE: 12/2016

DATE	REV	DESCRIPTION
07/2019		RECORD DRAWING

ELECTRICAL

DIGESTER TRANSFER AND HOT WATER SUPPLY PUMP SCHEMATIC DIAGRAM

LITTLE PATUXENT WATER RECLAMATION PLANT
8TH ADDITION
BIOSOLIDS PROCESSING FACILITIES - PHASE I

CAPITAL PROJECT S-6295
CONTRACT NO. 24-4935

ELECTION DISTRICT NO. 6
HOWARD COUNTY, MARYLAND

SCALE AS SHOWN

SHEET 386 OF 463

E-384

BIM 360://10054364 – Little Patuxent WRP 8th Addition/284591_E-HDR_V18.rvt
1/12/2022 9:33:29 AM

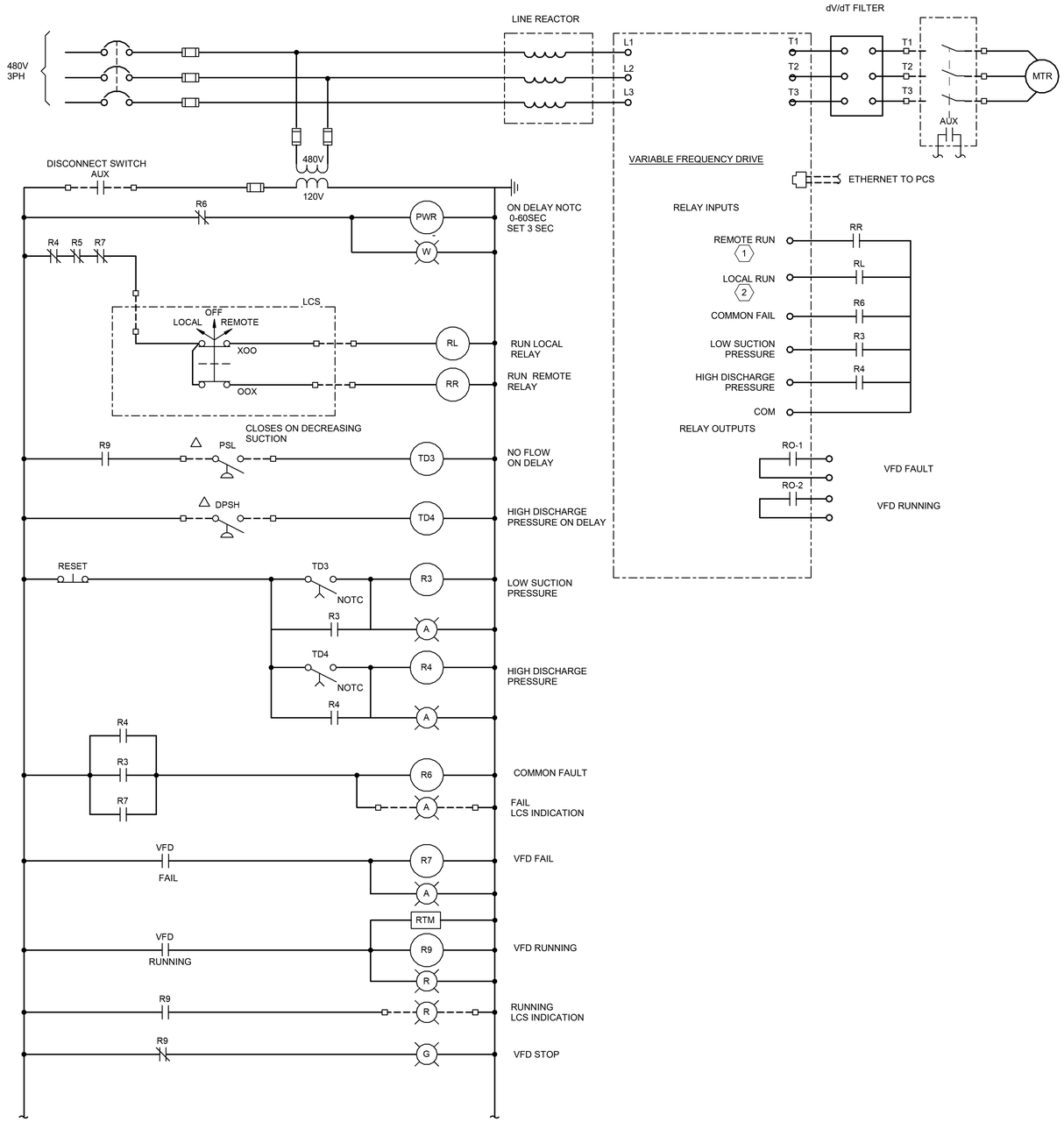

KEY NOTES (X)

1. WHEN LOR SWITCH IS IN THE REMOTE POSITION VFD STOP/START AND SPEED REFERENCE SHALL BE COMMUNICATED VIA ETHERNET.
2. WHEN LOR SWITCH IS IN THE LOCAL POSITION THE VFD SHALL START AND RUN AT A SPEED ENTERED AT THE VFD KEYPAD.

DIGESTER RECIRCULATION PUMP 3 SCHEMATIC

THE DRAWINGS IN THIS SET ARE RECORD DRAWINGS. THEY ARE CONSTRUCTION CONTRACT DRAWINGS WHICH HAVE BEEN REVISED BASED ON AVAILABLE FIELD INFORMATION RECORDED BY OTHERS DURING CONSTRUCTION OF THIS CONTRACT. THERE HAS BEEN NO VERIFICATION OF DIMENSIONS SHOWN ON THE CONSTRUCTION DRAWINGS OR THE ACCURACY/COMPLETENESS OF THE FIELD INFORMATION RECEIVED.

SIGNATURE — DATE 2/7/2023

AS-BUILT REPLACEMENT SHEET

PROFESSIONAL CERTIFICATION

THIS DRAWING WAS ORIGINALLY APPROVED FOR CONSTRUCTION AND SEALED BY ROBERT L. ANDERSON, A REGISTERED PROFESSIONAL ENGINEER IN THE STATE OF MARYLAND, NO. 37997.

NOTICE TO CONTRACTORS

- PROJECT ELEVATIONS ARE BASED ON NAVD88 AND HOWARD COUNTY'S BENCHMARK SYSTEM
- PREVIOUS PROJECTS USED OTHER DATUMS
- APPLY THE FOLLOWING CONVERSIONS WHEN USING PREVIOUS CONTRACT DRAWINGS:
  - ADDITION NO. 6: SUBTRACT 0.80 FT
  - PRIOR ADDITIONS: SUBTRACT 1.04 FT

DEPARTMENT OF PUBLIC WORKS
HOWARD COUNTY, MARYLAND

CHIEF, BUREAU OF UTILITIES — DATE

DES: WAC
DRN: WAC
CHK: RLA
DATE: 12/2016

DATE	REV	DESCRIPTION
07/2019		RECORD DRAWING

ELECTRICAL

RECIRCULATION PUMP 3 SCHEMATIC

LITTLE PATUXENT WATER RECLAMATION PLANT
8TH ADDITION
BIOSOLIDS PROCESSING FACILITIES - PHASE I

CAPITAL PROJECT S-6295
CONTRACT NO. 24-4935

ELECTION DISTRICT NO. 6
HOWARD COUNTY, MARYLAND

SCALE AS SHOWN

SHEET 387 OF 463

E-385

BIM 360://10054364 – Little Patuxent WRP 8th Addition/284591_E-HDR_V18.rvt
1/12/2022 9:33:31 AM

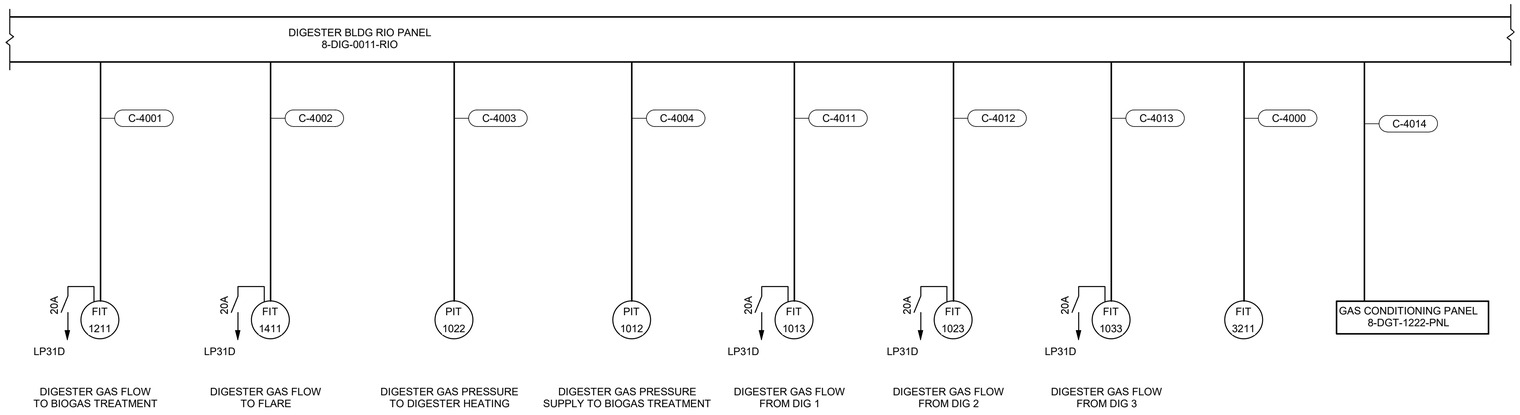

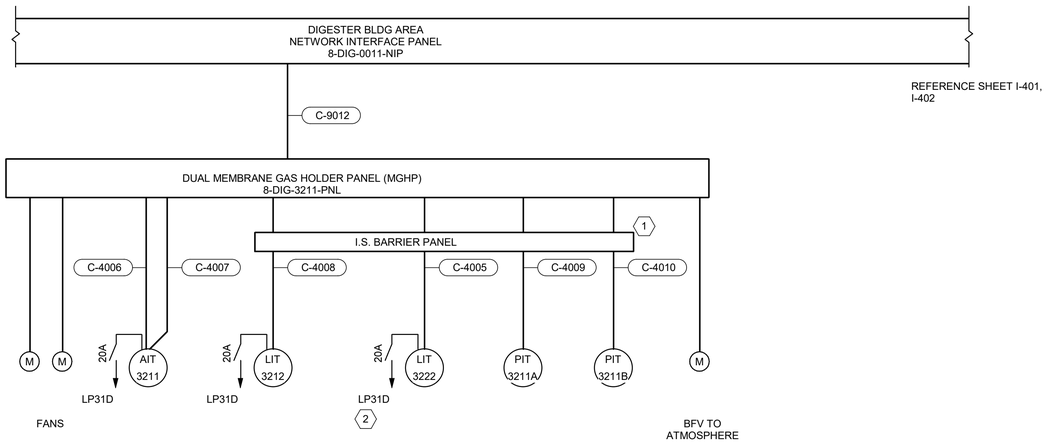

GENERAL NOTES

1. SEE POWER ONE-LINE DIAGRAMS AND CONDUIT AND WIRE SCHEDULES FOR DRIVE, STARTER, AND MOTOR POWER CONDUIT AND WIRE REQUIREMENTS

KEY NOTES (X)

1 ROUTE FIELD WIRING THROUGH INSTRINSICALLY SAFE PANEL. WIRING TO THE DEVICE IN HAZAROUD SPACE SHALL BE INTRINSICALLY SAFE. TYPICAL FOR IS.

2 SEE PANEL SCHEDULES FOR INSTRUMENT POWER CIRCUIT NUMBER, TYPICAL.

THE DRAWINGS IN THIS SET ARE RECORD DRAWINGS. THEY ARE CONSTRUCTION CONTRACT DRAWINGS WHICH HAVE BEEN REVISED BASED ON AVAILABLE FIELD INFORMATION RECORDED BY OTHERS DURING CONSTRUCTION OF THIS CONTRACT. THERE HAS BEEN NO VERIFICATION OF DIMENSIONS SHOWN ON THE CONSTRUCTION DRAWINGS OR THE ACCURACY/COMPLETENESS OF THE FIELD INFORMATION RECEIVED.

SIGNATURE _____ DATE 2/7/2023

AS-BUILT REPLACEMENT SHEET

PROFESSIONAL CERTIFICATION

THIS DRAWING WAS ORIGINALLY APPROVED FOR CONSTRUCTION AND SEALED BY ROBERT L. ANDERSON, A REGISTERED PROFESSIONAL ENGINEER IN THE STATE OF MARYLAND, NO. 37997.

NOTICE TO CONTRACTORS

- PROJECT ELEVATIONS ARE BASED ON NAVD88 AND HOWARD COUNTY'S BENCHMARK SYSTEM
- PREVIOUS PROJECTS USED OTHER DATUMS
- APPLY THE FOLLOWING CONVERSIONS WHEN USING PREVIOUS CONTRACT DRAWINGS:
  - ADDITION NO. 6: SUBTRACT 0.80 FT
  - PRIOR ADDITIONS: SUBTRACT 1.04 FT

CHIEF, BUREAU OF UTILITIES DATE

DEPARTMENT OF PUBLIC WORKS
HOWARD COUNTY, MARYLAND

DES: WAC
DRN: WAC
CHK: RLA
DATE: 12/2016

DATE	REV	DESCRIPTION
07/2019		RECORD DRAWING

ELECTRICAL

DIGESTER GAS INSTRUMENT ONE LINE DIAGRAM

LITTLE PATUXENT WATER RECLAMATION PLANT
8TH ADDITION
BIOSOLIDS PROCESSING FACILITIES - PHASE I

CAPITAL PROJECT S-6295
CONTRACT NO. 24-4935

ELECTION DISTRICT NO. 6
HOWARD COUNTY, MARYLAND

SCALE AS SHOWN

SHEET 388 OF 463

E-431

BIM 360://10054364 – Little Patuxent WRP 8th Addition/264591_E-HDR_V18.rvt
1/12/2022 9:33:33 AM

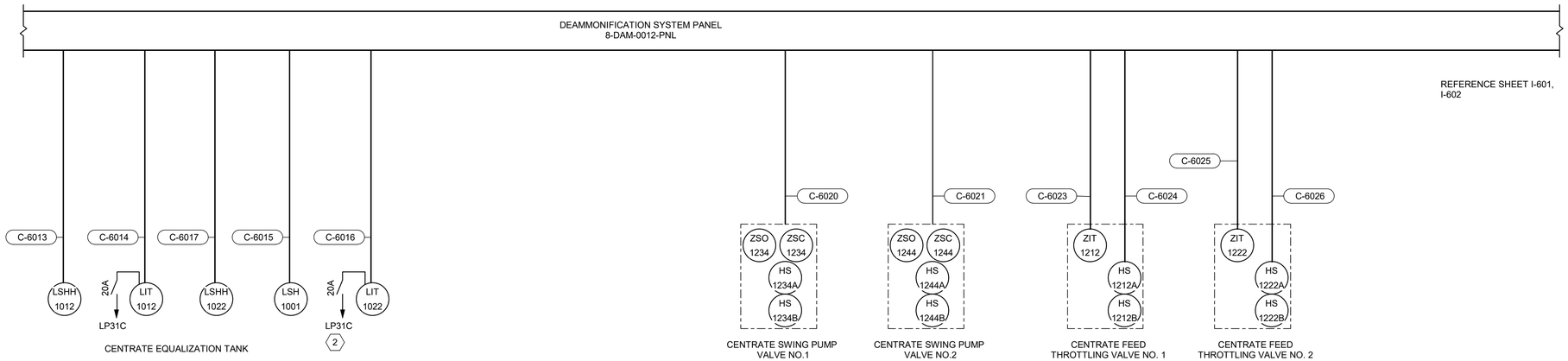

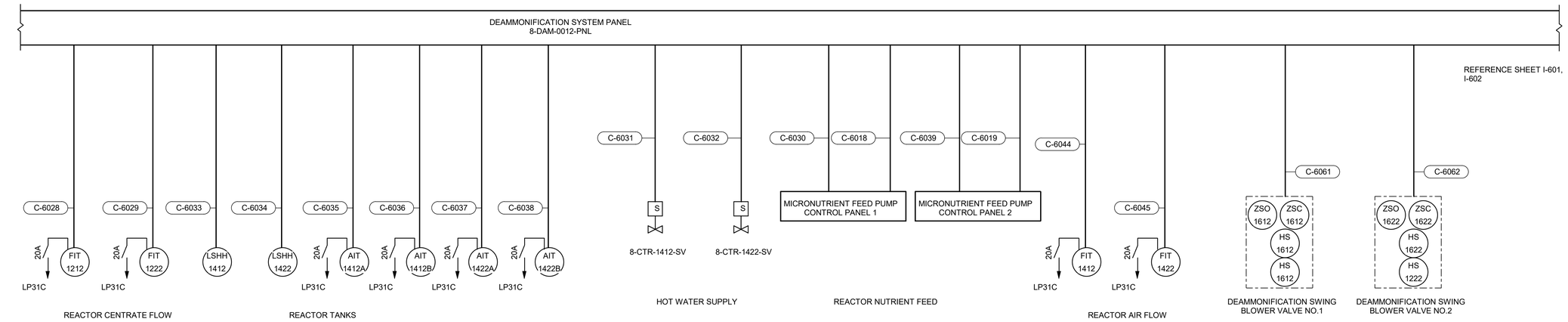

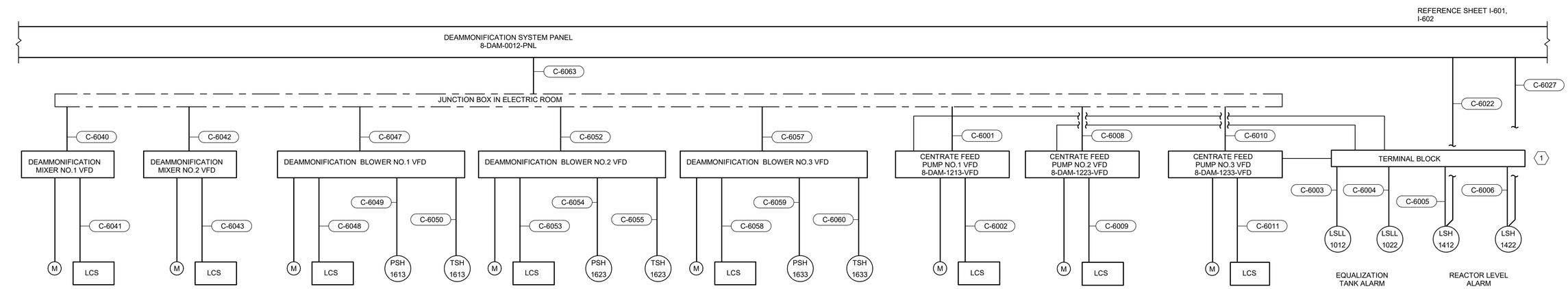

GENERAL NOTES

1. SEE POWER ONE-LINE DIAGRAMS AND CONDUIT AND WIRE SCHEDULES FOR DRIVE, STARTER, AND MOTOR POWER CONDUIT AND WIRE REQUIREMENTS

KEY NOTES (X)

1 PROVIDE INTERPOSING RELAYS IN TERMINAL BLOCK ENCLOSURE TO ALLOW SIGNALS TO BE PARALLELED TO EACH CENTRATE FEED PUMP VFD.

2 SEE PANEL SCHEDULES FOR INSTRUMENT POWER CIRCUIT NUMBER, TYPICAL.

THE DRAWINGS IN THIS SET ARE RECORD DRAWINGS. THEY ARE CONSTRUCTION CONTRACT DRAWINGS WHICH HAVE BEEN REVISED BASED ON AVAILABLE FIELD INFORMATION RECORDED BY OTHERS DURING CONSTRUCTION OF THIS CONTRACT. THERE HAS BEEN NO VERIFICATION OF DIMENSIONS SHOWN ON THE CONSTRUCTION DRAWINGS OR THE ACCURACY/COMPLETENESS OF THE FIELD INFORMATION RECEIVED.

SIGNATURE — DATE 2/7/2023

AS-BUILT REPLACEMENT SHEET

PROFESSIONAL CERTIFICATION

THIS DRAWING WAS ORIGINALLY APPROVED FOR CONSTRUCTION AND SEALED BY ROBERT L. ANDERSON, A REGISTERED PROFESSIONAL ENGINEER IN THE STATE OF MARYLAND, NO. 37997.

NOTICE TO CONTRACTORS

- PROJECT ELEVATIONS ARE BASED ON NAVD88 AND HOWARD COUNTY'S BENCHMARK SYSTEM
- PREVIOUS PROJECTS USED OTHER DATUMS
- APPLY THE FOLLOWING CONVERSIONS WHEN USING PREVIOUS CONTRACT DRAWINGS:
  - ADDITION NO. 6: SUBTRACT 0.80 FT
  - PRIOR ADDITIONS: SUBTRACT 1.04 FT

DEPARTMENT OF PUBLIC WORKS
HOWARD COUNTY, MARYLAND

CHIEF, BUREAU OF UTILITIES — DATE

DES: WAC
DRN: WAC
CHK: RLA
DATE: 12/2016

DATE	REV	DESCRIPTION
07/2019		RECORD DRAWING

ELECTRICAL

DEAMMONIFICATION SYSTEM INSTRUMENT ONE LINE DIAGRAMS

LITTLE PATUXENT WATER RECLAMATION PLANT
8TH ADDITION
BIOSOLIDS PROCESSING FACILITIES - PHASE I

CAPITAL PROJECT S-6295
CONTRACT NO. 24-4935

ELECTION DISTRICT NO. 6
HOWARD COUNTY, MARYLAND

SCALE AS SHOWN

SHEET 389 OF 463

E-631

BIM 360://10054364 – Little Patuxent WRP 8th Addition/264591_E-HDR_V18.rvt
1/12/2022 9:33:36 AM

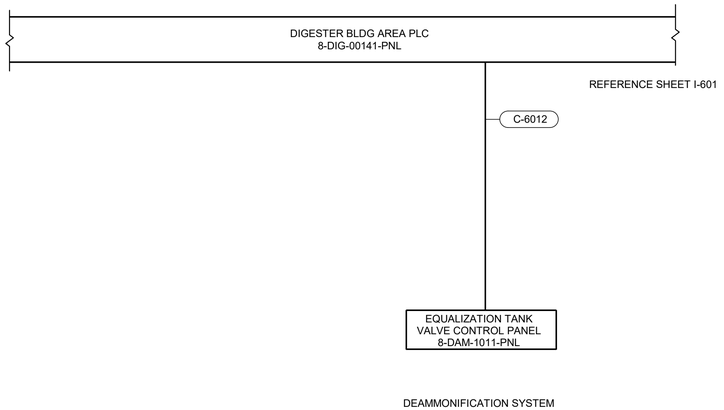

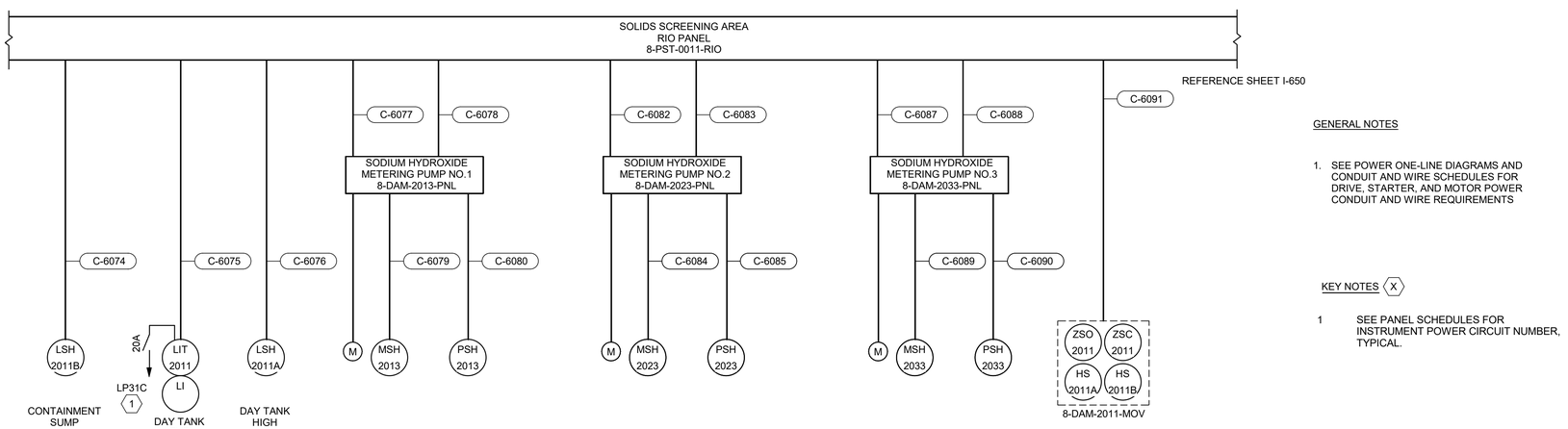

GENERAL NOTES

1. SEE POWER ONE-LINE DIAGRAMS AND CONDUIT AND WIRE SCHEDULES FOR DRIVE, STARTER, AND MOTOR POWER CONDUIT AND WIRE REQUIREMENTS

KEY NOTES ⟨X⟩

1 SEE PANEL SCHEDULES FOR INSTRUMENT POWER CIRCUIT NUMBER, TYPICAL.

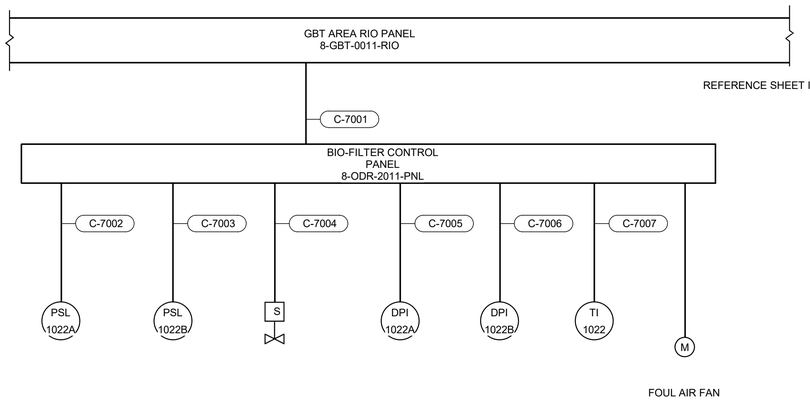

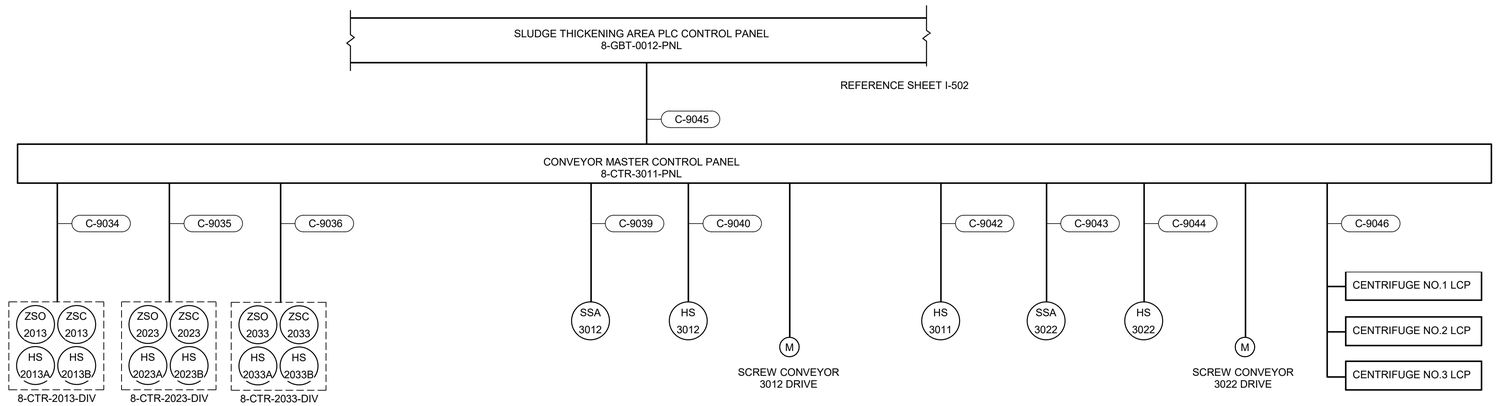

THE DRAWINGS IN THIS SET ARE RECORD DRAWINGS. THEY ARE CONSTRUCTION CONTRACT DRAWINGS WHICH HAVE BEEN REVISED BASED ON AVAILABLE FIELD INFORMATION RECORDED BY OTHERS DURING CONSTRUCTION OF THIS CONTRACT. THERE HAS BEEN NO VERIFICATION OF DIMENSIONS SHOWN ON THE CONSTRUCTION DRAWINGS OR THE ACCURACY/COMPLETENESS OF THE FIELD INFORMATION RECEIVED.

SIGNATURE 2/7/2022 DATE

AS-BUILT REPLACEMENT SHEET

PROFESSIONAL CERTIFICATION

THIS DRAWING WAS ORIGINALLY APPROVED FOR CONSTRUCTION AND SEALED BY ROBERT L. ANDERSON, A REGISTERED PROFESSIONAL ENGINEER IN THE STATE OF MARYLAND, NO. 37997.

NOTICE TO CONTRACTORS

- PROJECT ELEVATIONS ARE BASED ON NAVD88 AND HOWARD COUNTY'S BENCHMARK SYSTEM
- PREVIOUS PROJECTS USED OTHER DATUMS
- APPLY THE FOLLOWING CONVERSIONS WHEN USING PREVIOUS CONTRACT DRAWINGS:
  - ADDITION NO. 6: SUBTRACT 0.80 FT
  - PRIOR ADDITIONS: SUBTRACT 1.04 FT

DEPARTMENT OF PUBLIC WORKS
HOWARD COUNTY, MARYLAND

CHIEF, BUREAU OF UTILITIES DATE

DES: WAC
DRN: WAC
CHK: RLA
DATE: 12/2016

DATE	REV	DESCRIPTION
07/2019		RECORD DRAWING

ELECTRICAL

PRIMARY SCREENS AND BIOFILTER INSTRUMENT ONELINE DIAGRAM

LITTLE PATUXENT WATER RECLAMATION PLANT
8TH ADDITION
BIOSOLIDS PROCESSING FACILITIES - PHASE I

CAPITAL PROJECT S-6295
CONTRACT NO. 24-4935

ELECTION DISTRICT NO. 6
HOWARD COUNTY, MARYLAND

SCALE AS SHOWN

SHEET 390 OF 463

E-632

BIM 360://10054364 – Little Patuxent WRP 8th Addition/264591_E-HDR_V18.rvt
1/12/2022 9:33:38 AM

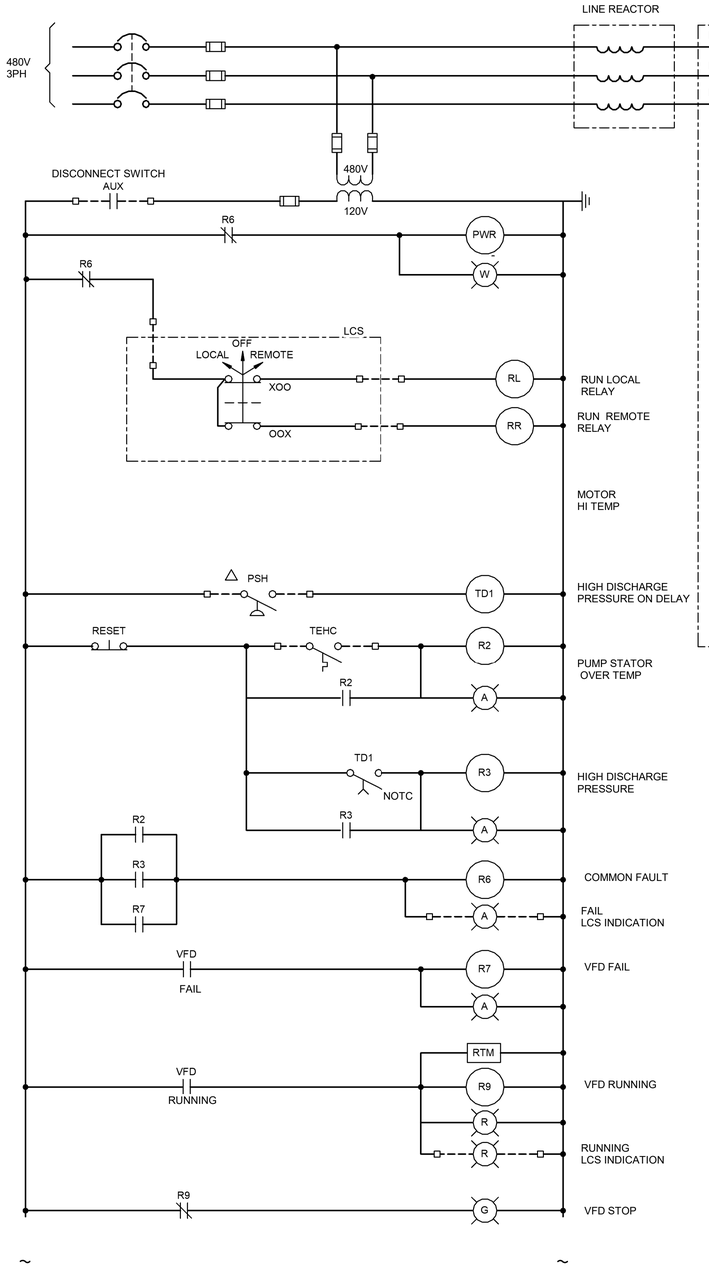

TYPICAL CENTRIFUGE FEED PUMP VFD SCHEMATIC

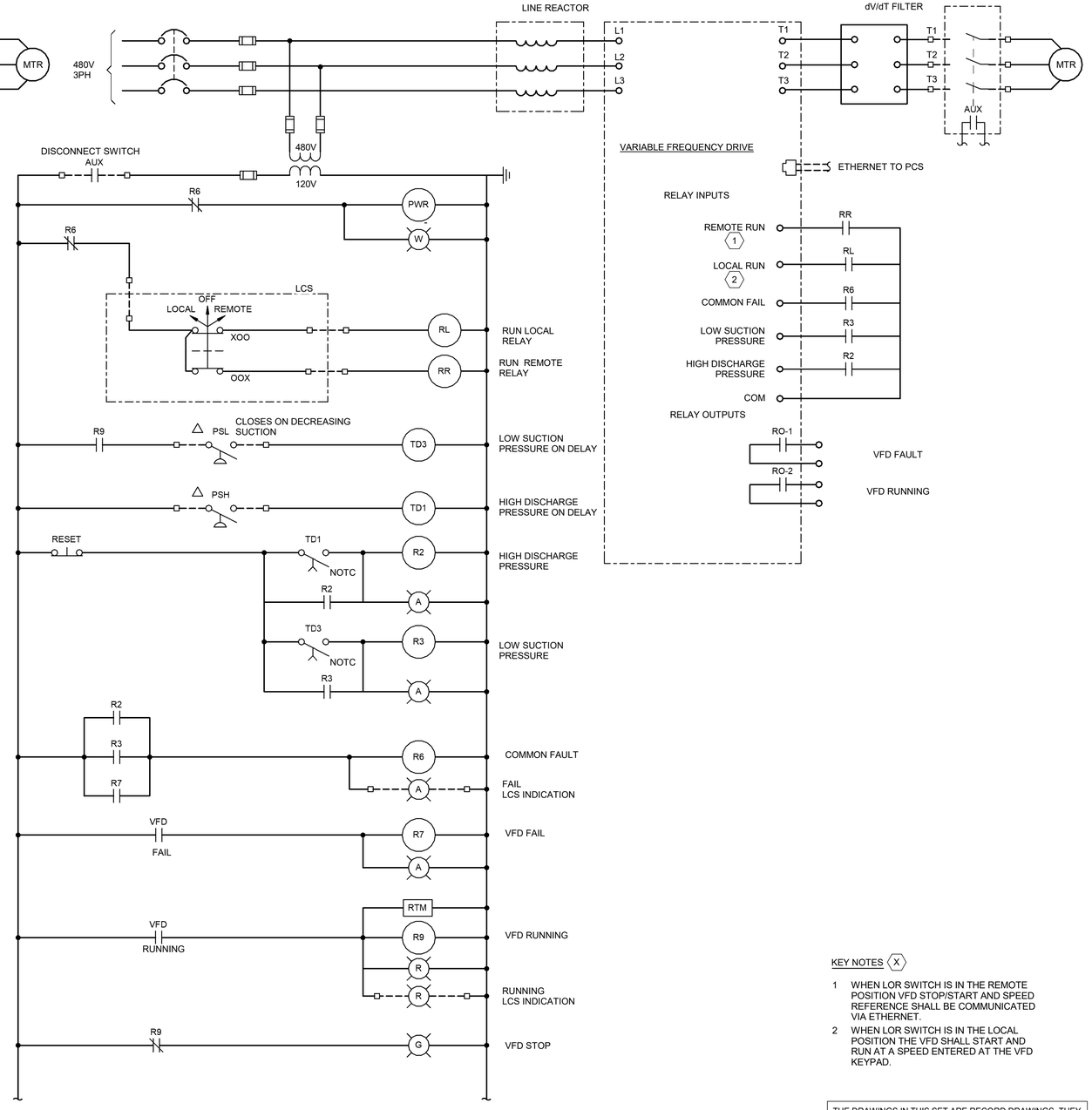

TYPICAL DIGESTED SOLIDS MIXING PUMP VFD SCHEMATIC

KEY NOTES (X)

1 WHEN LOR SWITCH IS IN THE REMOTE POSITION VFD STOP/START AND SPEED REFERENCE SHALL BE COMMUNICATED VIA ETHERNET.

2 WHEN LOR SWITCH IS IN THE LOCAL POSITION THE VFD SHALL START AND RUN AT A SPEED ENTERED AT THE VFD KEYPAD.

THE DRAWINGS IN THIS SET ARE RECORD DRAWINGS. THEY ARE CONSTRUCTION CONTRACT DRAWINGS WHICH HAVE BEEN REVISED BASED ON AVAILABLE FIELD INFORMATION RECORDED BY OTHERS DURING CONSTRUCTION OF THIS CONTRACT. THERE HAS BEEN NO VERIFICATION OF DIMENSIONS SHOWN ON THE CONSTRUCTION DRAWINGS OR THE ACCURACY/COMPLETENESS OF THE FIELD INFORMATION RECEIVED.

SIGNATURE 2/7/2023 DATE

AS-BUILT REPLACEMENT SHEET

PROFESSIONAL CERTIFICATION

THIS DRAWING WAS ORIGINALLY APPROVED FOR CONSTRUCTION AND SEALED BY ROBERT L. ANDERSON, A REGISTERED PROFESSIONAL ENGINEER IN THE STATE OF MARYLAND, NO. 37997.

NOTICE TO CONTRACTORS

- PROJECT ELEVATIONS ARE BASED ON NAVD88 AND HOWARD COUNTY'S BENCHMARK SYSTEM
- PREVIOUS PROJECTS USED OTHER DATUMS
- APPLY THE FOLLOWING CONVERSIONS WHEN USING PREVIOUS CONTRACT DRAWINGS:
  - ADDITION NO. 6: SUBTRACT 0.80 FT
  - PRIOR ADDITIONS: SUBTRACT 1.04 FT

DEPARTMENT OF PUBLIC WORKS
HOWARD COUNTY, MARYLAND

CHIEF, BUREAU OF UTILITIES DATE

DES: WAC
DRN: WAC
CHK: RLA
DATE: 12/2016

DATE	REV	DESCRIPTION
07/2019		RECORD DRAWING

ELECTRICAL

CENTRIFUGE FEED AND SOLIDS STORAGE MIXING PUMP SCHEMATIC DIAGRAM

LITTLE PATUXENT WATER RECLAMATION PLANT
8TH ADDITION
BIOSOLIDS PROCESSING FACILITIES - PHASE I

CAPITAL PROJECT S-6295
CONTRACT NO. 24-4935

ELECTION DISTRICT NO. 6
HOWARD COUNTY, MARYLAND

SCALE AS SHOWN

SHEET 391 OF 463

E-633

BIM 360://10054364 – Little Patuxent WRP 8th Addition/264591_E-HDR_V18.rvt
1/12/2022 9:33:40 AM

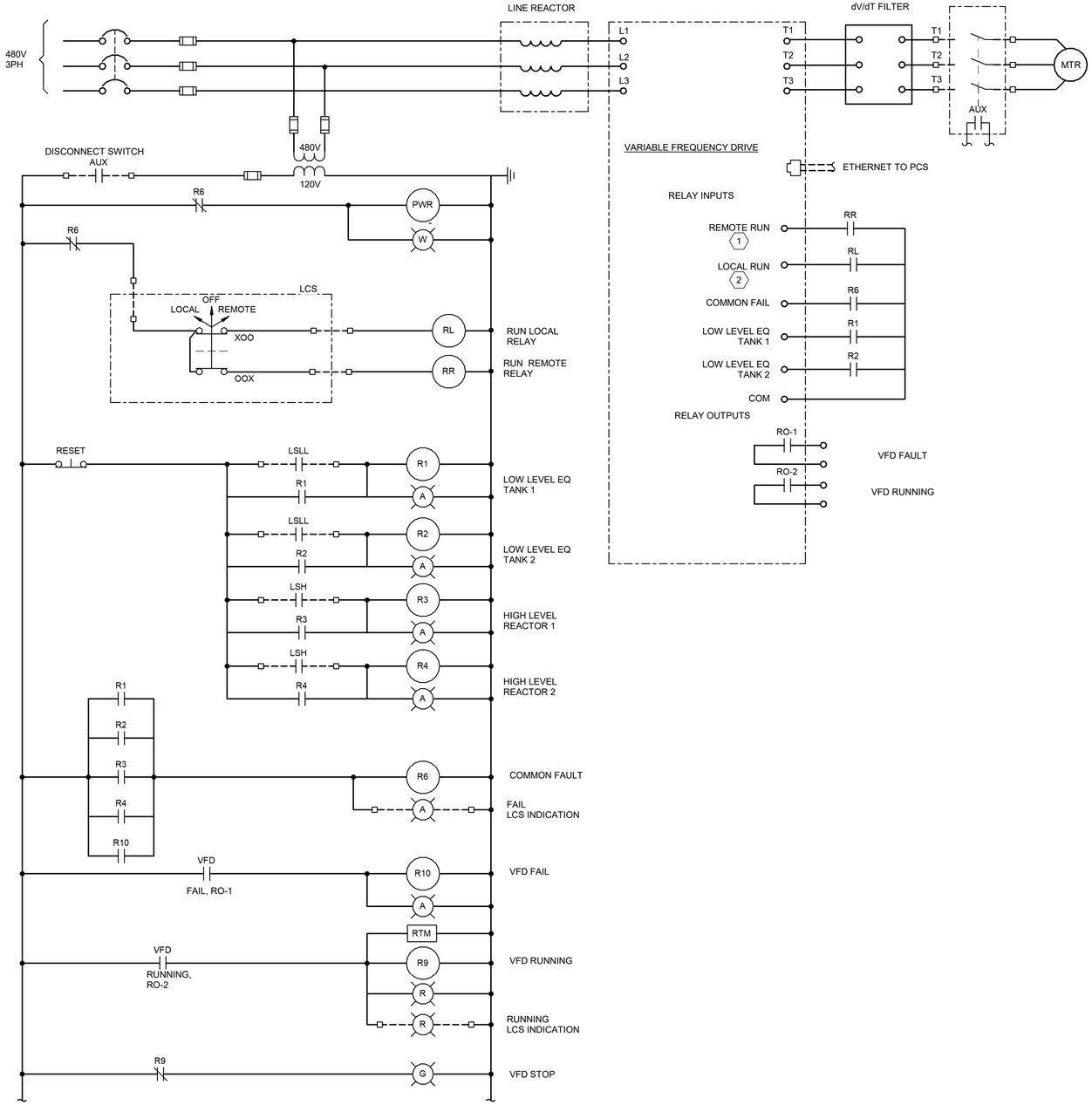

TYPICAL CENTRATE PUMP VFD SCHEMATIC

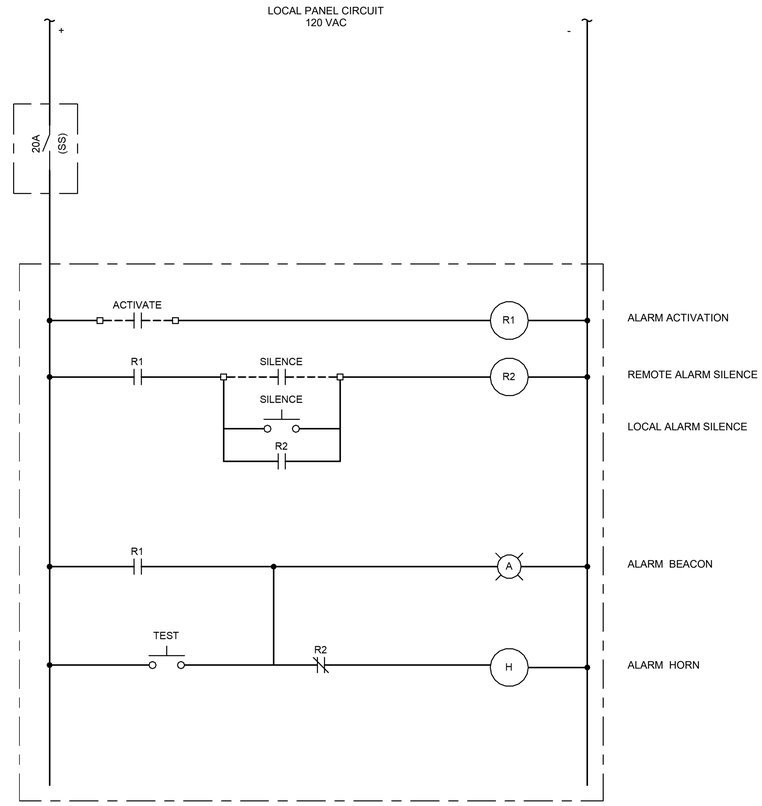

TYPICAL LOCAL ALARM STATION SCHEMATIC

KEY NOTES (X)

1. WHEN LOR SWITCH IS IN THE REMOTE POSITION VFD STOP/START AND SPEED REFERENCE SHALL BE COMMUNICATED VIA ETHERNET.
2. WHEN LOR SWITCH IS IN THE LOCAL POSITION THE VFD SHALL START AND RUN AT A SPEED ENTERED AT THE VFD KEYPAD.

THE DRAWINGS IN THIS SET ARE RECORD DRAWINGS. THEY ARE CONSTRUCTION CONTRACT DRAWINGS WHICH HAVE BEEN REVISED BASED ON AVAILABLE FIELD INFORMATION RECORDED BY OTHERS DURING CONSTRUCTION OF THIS CONTRACT. THERE HAS BEEN NO VERIFICATION OF DIMENSIONS SHOWN ON THE CONSTRUCTION DRAWINGS OR THE ACCURACY/COMPLETENESS OF THE FIELD INFORMATION RECEIVED.

SIGNATURE — DATE 2/7/2023

AS-BUILT REPLACEMENT SHEET

PROFESSIONAL CERTIFICATION

THIS DRAWING WAS ORIGINALLY APPROVED FOR CONSTRUCTION AND SEALED BY ROBERT L. ANDERSON, A REGISTERED PROFESSIONAL ENGINEER IN THE STATE OF MARYLAND, NO. 37997.

NOTICE TO CONTRACTORS

- PROJECT ELEVATIONS ARE BASED ON NAVD88 AND HOWARD COUNTY'S BENCHMARK SYSTEM
- PREVIOUS PROJECTS USED OTHER DATUMS
- APPLY THE FOLLOWING CONVERSIONS WHEN USING PREVIOUS CONTRACT DRAWINGS:
  - ADDITION NO. 6: SUBTRACT 0.80 FT
  - PRIOR ADDITIONS: SUBTRACT 1.04 FT

DEPARTMENT OF PUBLIC WORKS
HOWARD COUNTY, MARYLAND

CHIEF, BUREAU OF UTILITIES — DATE

DES: WAC
DRN: WAC
CHK: RLA
DATE: 12/2016

DATE	REV	DESCRIPTION
07/2019		RECORD DRAWING

ELECTRICAL

CENTRATE FEED PUMP AND LOCAL ALARM STATION SCHEMATIC DIAGRAM

LITTLE PATUXENT WATER RECLAMATION PLANT
8TH ADDITION
BIOSOLIDS PROCESSING FACILITIES - PHASE I

CAPITAL PROJECT S-6295
CONTRACT NO. 24-4935

ELECTION DISTRICT NO. 6
HOWARD COUNTY, MARYLAND

SCALE AS SHOWN

SHEET 392 OF 463

E-634

BIM 360://10054364 – Little Patuxent WRP 8th Addition/264591_E-HDR_V18.rvt
1/12/2022 9:33:42 AM

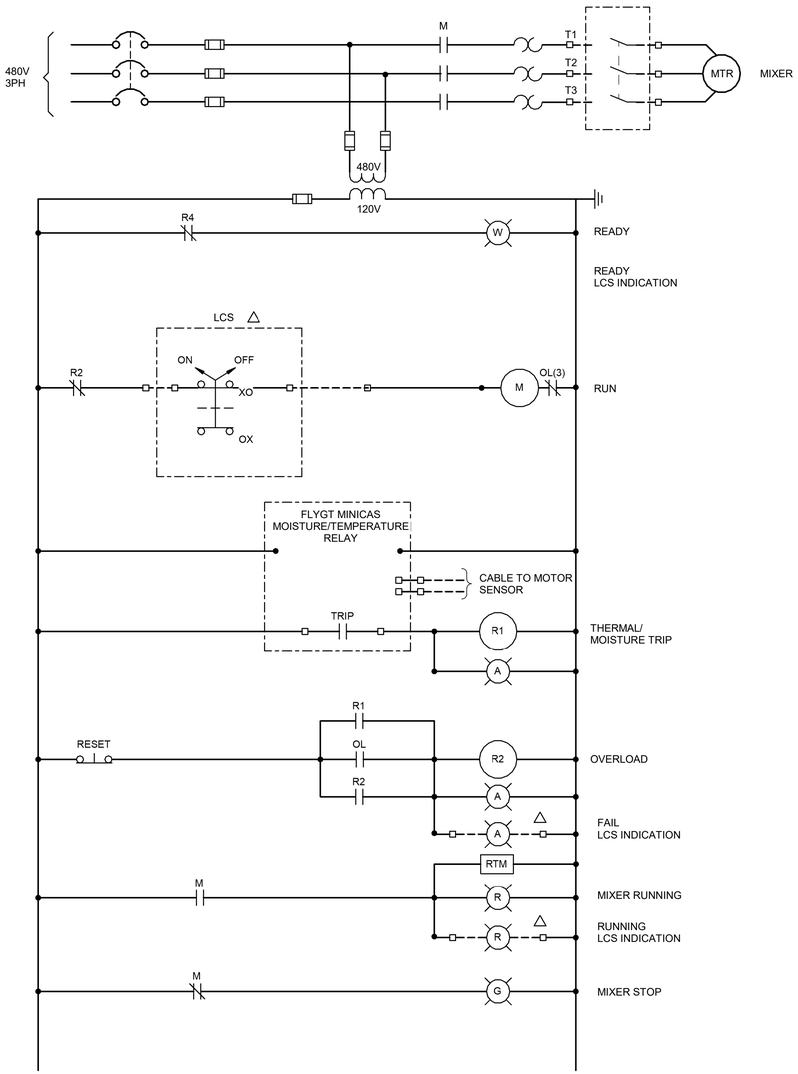

DIGESTED SOLIDS CELL 2 MIXER SCHEMATIC

THE DRAWINGS IN THIS SET ARE RECORD DRAWINGS. THEY ARE CONSTRUCTION CONTRACT DRAWINGS WHICH HAVE BEEN REVISED BASED ON AVAILABLE FIELD INFORMATION RECORDED BY OTHERS DURING CONSTRUCTION OF THIS CONTRACT. THERE HAS BEEN NO VERIFICATION OF DIMENSIONS SHOWN ON THE CONSTRUCTION DRAWINGS OR THE ACCURACY/COMPLETENESS OF THE FIELD INFORMATION RECEIVED.

SIGNATURE — DATE 2/7/2023

AS-BUILT REPLACEMENT SHEET

PROFESSIONAL CERTIFICATION

THIS DRAWING WAS ORIGINALLY APPROVED FOR CONSTRUCTION AND SEALED BY ROBERT L. ANDERSON, A REGISTERED PROFESSIONAL ENGINEER IN THE STATE OF MARYLAND, NO. 37997.

NOTICE TO CONTRACTORS

- PROJECT ELEVATIONS ARE BASED ON NAVD88 AND HOWARD COUNTY'S BENCHMARK SYSTEM
- PREVIOUS PROJECTS USED OTHER DATUMS
- APPLY THE FOLLOWING CONVERSIONS WHEN USING PREVIOUS CONTRACT DRAWINGS:
  - ADDITION NO. 6: SUBTRACT 0.80 FT
  - PRIOR ADDITIONS: SUBTRACT 1.04 FT

DEPARTMENT OF PUBLIC WORKS
HOWARD COUNTY, MARYLAND

CHIEF, BUREAU OF UTILITIES — DATE

DES: WAC
DRN: WAC
CHK: RLA
DATE: 12/2016

DATE	REV	DESCRIPTION
07/2019		RECORD DRAWING

ELECTRICAL

DIGESTED SOLIDS CELL 2 MIXER SCHEMATIC

LITTLE PATUXENT WATER RECLAMATION PLANT
8TH ADDITION
BIOSOLIDS PROCESSING FACILITIES - PHASE I

CAPITAL PROJECT S-6295
CONTRACT NO. 24-4935

ELECTION DISTRICT NO. 6
HOWARD COUNTY, MARYLAND

SCALE
AS
SHOWN

SHEET
359A OF **463**

E-635

BIM 360://10054364 – Little Patuxent WRP 8th Addition/284591_E-HDR_V18.rvt
1/12/2022 9:33:43 AM

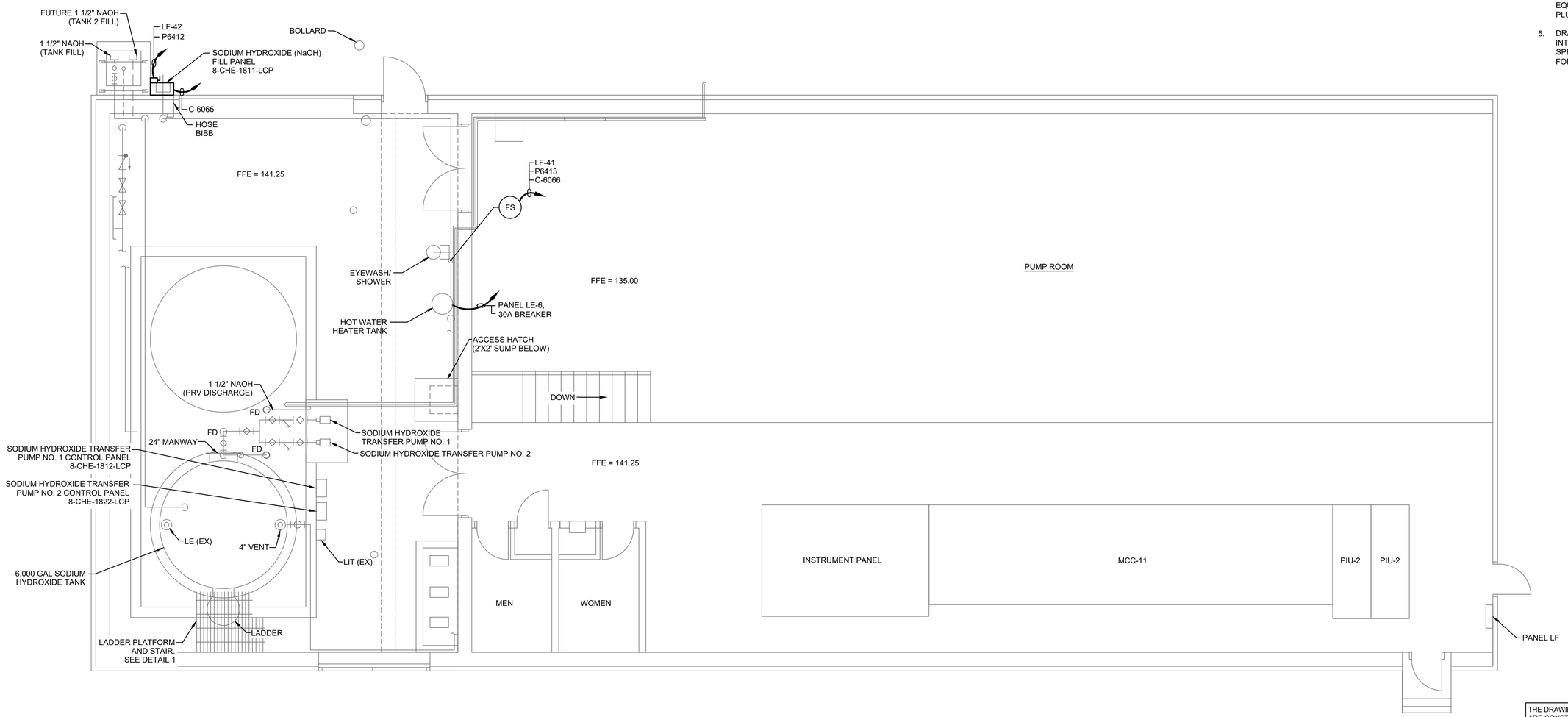

GENERAL NOTES:

1. FOR SYMBOLS AND ABBREVIATIONS, SEE DRAWING E-1.
2. FOR MCC-11 ONE LINE DIAGRAM EXISTING AND MODIFICATION, SEE DRAWINGS E-21B, E-21C, E-21D AND E-21E.
3. FOR PANELBOARD AND CABLE & CONDUIT SCHEDULE, SEE DRAWING E-912A.
4. LOCATION OF EQUIPMENT IE. MOTORS, VALVES, UNIT HEATERS, EXHAUST FANS, ETC. IS FOR REFERENCE ONLY. FOR EXACT LOCATION OF EQUIPMENT, REFER TO MECHANICAL, HVAC AND PLUMBING DRAWINGS.
5. DRAWINGS ARE INTENDED TO DEPICT DESIGN INTENT; CONTRACTOR TO REFER TO SPECIFICATIONS, P&IDS, AND STANDARD DETAILS FOR FURTHER INSTALLATION REQUIREMENTS.

FILTER BUILDING - ELECTRICAL AND I & C PLAN

SCALE: 1/4" = 1'-0"

THE DRAWINGS IN THIS SET ARE RECORD DRAWINGS. THEY ARE CONSTRUCTION CONTRACT DRAWINGS WHICH HAVE BEEN REVISED BASED ON AVAILABLE FIELD INFORMATION RECORDED BY OTHERS DURING CONSTRUCTION OF THIS CONTRACT. THERE HAS BEEN NO VERIFICATION OF DIMENSIONS SHOWN ON THE CONSTRUCTION DRAWINGS OR THE ACCURACY/COMPLETENESS OF THE FIELD INFORMATION RECEIVED.

SIGNATURE _____ DATE 2/7/2020

0 4 8 12

SCALE: 1/4" = 1'-0"

SHAH & ASSOCIATES

AS-BUILT REPLACEMENT SHEET

PROFESSIONAL CERTIFICATION
THIS DRAWING WAS ORIGINALLY APPROVED FOR CONSTRUCTION AND SEALED BY KANAIYALAL R. SHAH, A REGISTERED PROFESSIONAL ENGINEER IN THE STATE OF MARYLAND, NO. 11084.

NOTICE TO CONTRACTORS
- PROJECT ELEVATIONS ARE BASED ON NAVD88 AND HOWARD COUNTY'S BENCHMARK SYSTEM
- PREVIOUS PROJECTS USED OTHER DATUMS
- APPLY THE FOLLOWING CONVERSIONS WHEN USING PREVIOUS CONTRACT DRAWINGS:
  - ADDITION NO. 6: SUBTRACT 0.80 FT
  - PRIOR ADDITIONS: SUBTRACT 1.04 FT

DEPARTMENT OF PUBLIC WORKS
HOWARD COUNTY, MARYLAND

CHIEF, BUREAU OF UTILITIES DATE

DES:	HFM
DRN:	AJS
CHK:	KRS
DATE:	4/2017

DATE	REV	DESCRIPTION
07/2019		RECORD DRAWING

ELECTRICAL

FILTER BUILDING
ELECTRICAL AND I & C PLAN

LITTLE PATUXENT WATER RECLAMATION PLANT
8TH ADDITION
BIOSOLIDS PROCESSING FACILITIES – PHASE I

CAPITAL PROJECT S–6295
CONTRACT NO. 24–4935

ELECTION DISTRICT NO. 6
HOWARD COUNTY, MARYLAND

SCALE AS SHOWN

SHEET 394 OF 463

E-640

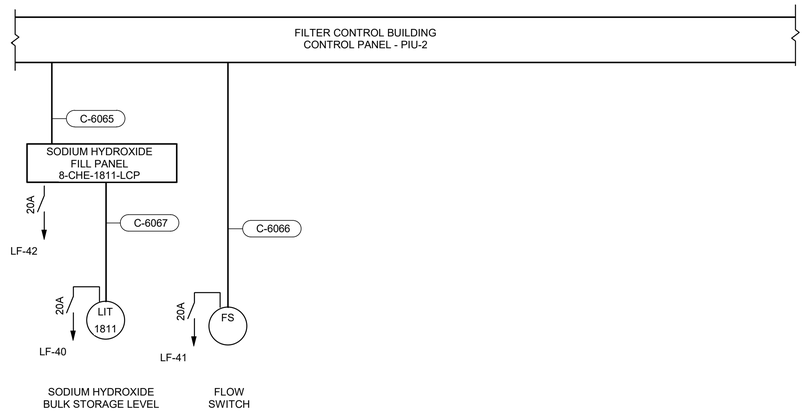

CONDUCTOR AND CONDUIT SCHEDULE
CONTROL CONDUITS

DWG MARK	CONDUCTOR	CONDUIT SIZE METAL	PVC	FLEX	DWG MARK	CONDUCTOR	CONDUIT SIZE METAL	PVC	FLEX
C-6065	1#16 TSP	3/4"	3/4"	3/4"					
C-6066	2#14 & #14G	3/4"	3/4"	3/4"					
C-6067	1#16 TSP	3/4"	3/4"	3/4"					

THE DRAWINGS IN THIS SET ARE RECORD DRAWINGS. THEY ARE CONSTRUCTION CONTRACT DRAWINGS WHICH HAVE BEEN REVISED BASED ON AVAILABLE FIELD INFORMATION RECORDED BY OTHERS DURING CONSTRUCTION OF THIS CONTRACT. THERE HAS BEEN NO VERIFICATION OF DIMENSIONS SHOWN ON THE CONSTRUCTION DRAWINGS OR THE ACCURACY/COMPLETENESS OF THE FIELD INFORMATION RECEIVED.

SIGNATURE 2/7/2023 DATE

AS-BUILT REPLACEMENT SHEET

PROFESSIONAL CERTIFICATION

THIS DRAWING WAS ORIGINALLY APPROVED FOR CONSTRUCTION AND SEALED BY ROBERT L. ANDERSON, A REGISTERED PROFESSIONAL ENGINEER IN THE STATE OF MARYLAND, NO. 37997.

NOTICE TO CONTRACTORS

- PROJECT ELEVATIONS ARE BASED ON NAVD88 AND HOWARD COUNTY'S BENCHMARK SYSTEM
- PREVIOUS PROJECTS USED OTHER DATUMS
- APPLY THE FOLLOWING CONVERSIONS WHEN USING PREVIOUS CONTRACT DRAWINGS:
  - ADDITION NO. 6: SUBTRACT 0.80 FT
  - PRIOR ADDITIONS: SUBTRACT 1.04 FT

DEPARTMENT OF PUBLIC WORKS
HOWARD COUNTY, MARYLAND

CHIEF, BUREAU OF UTILITIES DATE

DES: WAC
DRN: WAC
CHK: RLA
DATE: 12/2016

DATE	REV	DESCRIPTION
07/2019		RECORD DRAWING

ELECTRICAL

FILTER BUILDING, SCHEMATIC AND INSTRUMENT ONE LINE DIAGRAM

LITTLE PATUXENT WATER RECLAMATION PLANT
8TH ADDITION
BIOSOLIDS PROCESSING FACILITIES - PHASE I

CAPITAL PROJECT S-6295
CONTRACT NO. 24-4935

ELECTION DISTRICT NO. 6
HOWARD COUNTY, MARYLAND

SCALE AS SHOWN

SHEET 359C OF 463

E-641

BIM 360://10054364 – Little Patuxent WRP 8th Addition/264591_E-HDR_V18.rvt
1/12/2022 9:33:45 AM

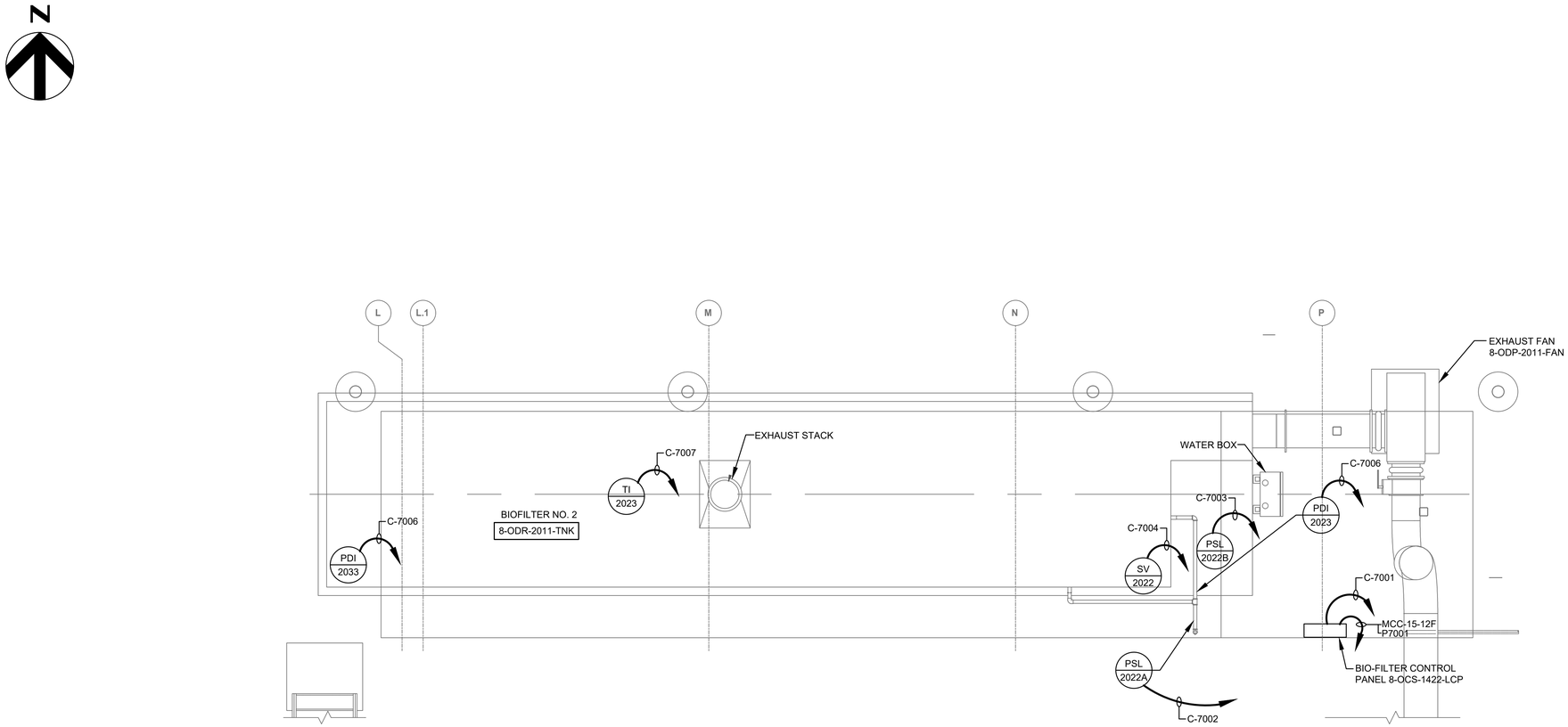

ODOR CONTROL SYSTEM - ELECTRICAL AND I&C PLAN

SCALE: 1/4" = 1'-0"

GENERAL NOTES:

1. FOR SYMBOLS AND ABBREVIATIONS, SEE DRAWING E-1.
2. FOR CONSTRUCTION SEQUENCE, SEE DRAWING E-2.
3. FOR MCC-15 ONE LINE DIAGRAM, SEE DRAWINGS E-15 AND E-16.
4. FOR CABLE AND CONDUIT SCHEDULES, SEE DRAWINGS E-905 THRU E-913, E-918 AND E-919.
5. DRAWINGS ARE INTENDED TO DEPICT DESIGN INTENT; CONTRACTOR TO REFER TO SPECIFICATIONS, P&IDS, AND STANDARD DETAILS FOR FURTHER INSTALLATION REQUIREMENTS.
6. LOCATION OF EQUIPMENT IE. MOTORS, VALVES, UNIT HEATERS, EXHAUST FANS, ETC. IS FOR REFERENCE ONLY. FOR EXACT LOCATION OF EQUIPMENT, REFER TO MECHANICAL, HVAC AND PLUMBING DRAWINGS.
7. NOT ALL INSTRUMENTATION EQUIPMENT ARE SHOWN ON THIS PLAN, REFER TO PROCESS AND P&ID DRAWINGS. THE DISCONNECT SWITCHES SHOWN FOR THE INSTRUMENTS; i.e., FITS, AITS, LITS, PITS, TITS, ETC. ARE 20A SNAP SWITCHES.
8. ALL CIRCUITS, POWER AND CONTROL WILL BE ROUTED FIRST TO THE BIOFILTER CONTROL PANEL, 8-OSC-1422-LCP. THE CONTRACTOR SHALL ROUTE THE CIRCUITS FROM THE CONTROL PANEL TO THE INDIVIDUAL DEVICES ON THE FILTER ACCORDING TO MANUFACTURER'S REQUIREMENT.
9. FOR AREA CLASSIFICATION, SEE GENERAL DRAWING G-18. WORK SHALL BE PERFORMED IN ACCORDANCE WITH AREA CLASSIFICATION REQUIREMENTS. FOR ENCLOSURE AND CONDUIT TYPE, REFER TO SPECIFICATION SECTION 26 05 00.

GRAPHIC SCALE

0 4 8 12

SCALE: 1/4" = 1'-0"

THE DRAWINGS IN THIS SET ARE RECORD DRAWINGS. THEY ARE CONSTRUCTION CONTRACT DRAWINGS WHICH HAVE BEEN REVISED BASED ON AVAILABLE FIELD INFORMATION RECORDED BY OTHERS DURING CONSTRUCTION OF THIS CONTRACT. THERE HAS BEEN NO VERIFICATION OF DIMENSIONS SHOWN ON THE CONSTRUCTION DRAWINGS OR THE ACCURACY/COMPLETENESS OF THE FIELD INFORMATION RECEIVED.

SIGNATURE — DATE 2/7/2023

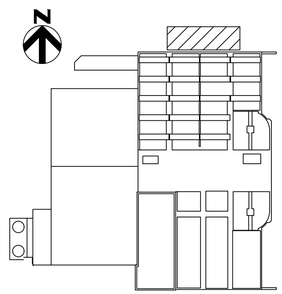

KEY PLAN

SHAH & ASSOCIATES

HDR

AS-BUILT REPLACEMENT SHEET

PROFESSIONAL CERTIFICATION

THIS DRAWING WAS ORIGINALLY APPROVED FOR CONSTRUCTION AND SEALED BY KANAIYALAL R. SHAH, A REGISTERED PROFESSIONAL ENGINEER IN THE STATE OF MARYLAND, NO. 11084.

NOTICE TO CONTRACTORS

- PROJECT ELEVATIONS ARE BASED ON NAVD88 AND HOWARD COUNTY'S BENCHMARK SYSTEM
- PREVIOUS PROJECTS USED OTHER DATUMS
- APPLY THE FOLLOWING CONVERSIONS WHEN USING PREVIOUS CONTRACT DRAWINGS:
  - ADDITION NO. 6: SUBTRACT 0.80 FT.
  - PRIOR ADDITIONS: SUBTRACT 1.04 FT.

DEPARTMENT OF PUBLIC WORKS
HOWARD COUNTY, MARYLAND

CHIEF, BUREAU OF UTILITIES — DATE

DES:	SR
DRN:	AJS
CHK:	KRS
DATE:	10/2016

DATE	REV	DESCRIPTION
07/2019		RECORD DRAWING

ELECTRICAL

ODOR CONTROL SYSTEM
ELECTRICAL AND I&C PLAN

LITTLE PATUXENT WATER RECLAMATION PLANT
8TH ADDITION
BIOSOLIDS PROCESSING FACILITIES – PHASE I

CAPITAL PROJECT S-6295
CONTRACT NO. 24-4935

ELECTION DISTRICT NO. 6
HOWARD COUNTY, MARYLAND

SCALE AS SHOWN

SHEET 396 OF 463

E-701

GENERAL NOTES:

1. FOR SYMBOLS AND ABBREVIATIONS, SEE DRAWING E-1.
2. FOR CONSTRUCTION SEQUENCE, SEE DRAWING E-2.

PANELBOARD SCHEDULE

PANEL : 8-CTR-0101-DPNL , BUS AMPS : 150A VOLTS : 480 VAC , PHASE : 3 , WIRES : 3 , MAIN CB: 125A , CKT'S : 60

MOUNTING: SURFACE , ENCLOSURE : NEMA 12 , LOCATION : ELECTRICAL ROOM AT CHEMICAL HANDLING AREA, INT. CURRENT : 22 KA, RMS AIC

LOAD NAME	VA			FA	TA	P	SNOP	BUS A B C	SNOP	P	TA	FA	VA			LOAD NAME
	ØA	ØB	ØC										ØA	ØB	ØC	
SPARE	-	-	-	100	20	3	1		2	3	20	100	-	-	-	SPARE
	-	-	-	-	-	-	3		4	-	-	-	-	-	-	
	-	-	-	-	-	-	5		6	-	-	-	-	-	-	
SPARE	300	-	-	100	20	3	7		8	3	20	100	300	-	-	SPARE
	-	300	-	-	-	-	9		10	-	-	-	-	300	-	
	-	-	300	-	-	-	11		12	-	-	-	-	-	300	
SPARE	-	-	-	100	20	3	13		14	3	20	100	300	-	-	SPARE
	-	-	-	-	-	-	15		16	-	-	-	-	300	-	
	-	-	-	-	-	-	17		18	-	-	-	-	-	300	
SPARE	300	-	-	100	20	3	19		20	3	20	100	-	-	-	CENTRIFUGE ROLL-UP DOOR
	-	300	-	-	-	-	21		22	-	-	-	-	-	-	
	-	-	300	-	-	-	23		24	-	-	-	-	-	-	
CENTRIFUGE ROLL-UP DOOR	-	-	-	100	20	3	25		26	3	20	100	300	-	-	CENTRATE FEED MOV-2
	-	-	-	-	-	-	27		28	-	-	-	-	300	-	
	-	-	-	-	-	-	29		30	-	-	-	-	-	300	
SPARE	-	-	-	100	20	3	31		32	3	20	100	300	-	-	AERATION SYSTEM MOV-2
	-	-	-	-	-	-	33		34	-	-	-	-	300	-	
	-	-	-	-	-	-	35		36	-	-	-	-	-	300	
SPARE	-	-	-	100	20	3	37		38	3	80	100	15000	-	-	TRANSFORMER 8-MCC-1501-XFR
	-	-	-	-	-	-	39		40	-	-	-	-	15000	-	
	-	-	-	-	-	-	41		42	-	-	-	-	-	15000	
WASHWATER MODULATING VALVE NO.1 8-GBT-1812-MOV	300	-	-	100	20	3	43		44	3	20	100	300	-	-	WASHWATER MODULATING VALVE NO.2 8-GBT-1822-MOV
	-	300	-	-	-	-	45		46	-	-	-	-	300	-	
	-	-	300	-	-	-	47		48	-	-	-	-	-	300	
WASHWATER MODULATING VALVE NO.3 (FUTURE) 8-GBT-1832-FV	-	-	-	100	20	3	49		50	3	20	100	-	-	-	SCREENING AREA ROLL UP DOOR
	-	-	-	-	-	-	51		52	-	-	-	-	-	-	
	-	-	-	-	-	-	53		54	-	-	-	-	-	-	
SPARE	-	-	-	100	20	3	55		56	3	20	100	-	-	-	SCREENING AREA ROLL UP DOOR
	-	-	-	-	-	-	57		58	-	-	-	-	-	-	
	-	-	-	-	-	-	59		60	-	-	-	-	-	-	
SUB TOTAL PER PHASE	-	-	-										-	-	-	
TOTAL LOAD PER PHASE	-	-	-													

PANELBOARD SCHEDULE

PANEL : 8-DIG-0101-DPNL , BUS AMPS : 225A VOLTS : 480 VAC , PHASE : 3 , WIRES : 3 , MAIN CB: 200A , CKT'S : 60

MOUNTING: SURFACE , ENCLOSURE : NEMA 4X , LOCATION : SECOND FLOOR - DIGESTER BUILDING , INT. CURRENT : 35 KA, RMS AIC

LOAD NAME	VA			FA	TA	P	SNOP	BUS A B C	SNOP	P	TA	FA	VA			LOAD NAME
	ØA	ØB	ØC										ØA	ØB	ØC	
8-THS-1413-MOV	300	-	-	100	20	3	1		2	3	20	100	300	-	-	8-THS-1423-MOV
	-	300	-	-	-	-	3		4	-	-	-	-	300	-	
	-	-	300	-	-	-	5		6	-	-	-	-	-	300	
8-THS-1433-MOV	300	-	-	100	20	3	7		8	3	20	100	-	-	-	8-CHE-2411-MOV
	-	300	-	-	-	-	9		10	-	-	-	-	-	-	
	-	-	300	-	-	-	11		12	-	-	-	-	-	-	
SPARE	-	-	-	100	20	3	13		14	3	60	100	10000	-	-	TRANSFORMER 8-DIG-0102-XFR
	-	-	-	-	-	-	15		16	-	-	-	-	10000	-	
	-	-	-	-	-	-	17		18	-	-	-	-	-	10000	
TRANSFORMER 8-DIG-0101-XFR	15000	-	-	100	80	3	19		20	3	20	100	-	-	-	GAS HOLDER PURGE BUTTERFLY VALVE
	-	15000	-	-	-	-	21		22	-	-	-	-	-	-	
	-	-	15000	-	-	-	23		24	-	-	-	-	-	-	
SPARE	-	-	-	100	20	3	25		26	3	20	100	-	-	-	SPARE
	-	-	-	-	-	-	27		28	-	-	-	-	-	-	
	-	-	-	-	-	-	29		30	-	-	-	-	-	-	
MIXING VALVE	300	-	-	100	20	3	31		32	3	20	100	-	-	-	SPARE
	-	300	-	-	-	-	33		34	-	-	-	-	-	-	
	-	-	300	-	-	-	35		36	-	-	-	-	-	-	
FEED WATER CONTROL VALVE 14-2414-FV	300	-	-	100	20	3	37		38	3	20	100	300	-	-	FEED WATER CONTROL VALVE 14-2424-FV
	-	300	-	-	-	-	39		40	-	-	-	-	300	-	
	-	-	300	-	-	-	41		42	-	-	-	-	-	300	
FEED WATER CONTROL VALVE 14-2434-FV	300	-	-	100	20	3	43		44	3	20	100	300	-	-	FEED WATER CONTROL VALVE 14-2444-FV
	-	300	-	-	-	-	45		46	-	-	-	-	300	-	
	-	-	300	-	-	-	47		48	-	-	-	-	-	300	
8-DGT-012-VLV	300	-	-	100	20	3	49		50	3	20	100	-	-	-	SPARE
	-	300	-	-	-	-	51		52	-	-	-	-	-	-	
	-	-	300	-	-	-	53		54	-	-	-	-	-	-	
SPARE	-	-	-	100	20	3	55		56	3	20	100	-	-	-	SPARE
	-	-	-	-	-	-	57		58	-	-	-	-	-	-	
	-	-	-	-	-	-	59		60	-	-	-	-	-	-	
SUB TOTAL PER PHASE	17104	17104	17104										11200	11200	11200	
TOTAL LOAD PER PHASE	28304	28304	28304													

THE DRAWINGS IN THIS SET ARE RECORD DRAWINGS. THEY ARE CONSTRUCTION CONTRACT DRAWINGS WHICH HAVE BEEN REVISED BASED ON AVAILABLE FIELD INFORMATION RECORDED BY OTHERS DURING CONSTRUCTION OF THIS CONTRACT. THERE HAS BEEN NO VERIFICATION OF DIMENSIONS SHOWN ON THE CONSTRUCTION DRAWINGS OR THE ACCURACY/COMPLETENESS OF THE FIELD INFORMATION RECEIVED.

SIGNATURE _____ DATE 2/7/2020

SHAH & ASSOCIATES

HDR

AS-BUILT REPLACEMENT SHEET

PROFESSIONAL CERTIFICATION
THIS DRAWING WAS ORIGINALLY APPROVED FOR CONSTRUCTION AND SEALED BY KANAIYALAL R. SHAH, A REGISTERED PROFESSIONAL ENGINEER IN THE STATE OF MARYLAND, NO. 11084.

NOTICE TO CONTRACTORS
- PROJECT ELEVATIONS ARE BASED ON NAVD88 AND HOWARD COUNTY'S BENCHMARK SYSTEM
- PREVIOUS PROJECTS USED OTHER DATUMS
- APPLY THE FOLLOWING CONVERSIONS WHEN USING PREVIOUS CONTRACT DRAWINGS:
  - ADDITION NO. 6: SUBTRACT 0.80 FT
  - PRIOR ADDITIONS: SUBTRACT 1.04 FT

DEPARTMENT OF PUBLIC WORKS
HOWARD COUNTY, MARYLAND

CHIEF, BUREAU OF UTILITIES DATE

DES: SR
DRN: XMZ
CHK: KRS
DATE: 10/2016

DATE	REV	DESCRIPTION
07/2019		RECORD DRAWING

ELECTRICAL

PANELBOARDS SCHEDULE - I

LITTLE PATUXENT WATER RECLAMATION PLANT
8TH ADDITION
BIOSOLIDS PROCESSING FACILITIES – PHASE I

CAPITAL PROJECT S–6295
CONTRACT NO. 24–4935

ELECTION DISTRICT NO. 6
HOWARD COUNTY, MARYLAND

SCALE AS SHOWN

SHEET 397 OF 463

E-901

PANELBOARD SCHEDULE

PANEL : 8-MCC-3101-LPNL , BUS AMPS : 100A VOLTS : 120/208 VAC , PHASE : 3 , WIRES : 4 , MAIN CB: 60A , CKT'S : 30
MOUNTING: SURFACE , ENCLOSURE : NEMA 12 , LOCATION : MCC-31 ENCLOSURE , INT. CURRENT : 22 KA, RMS AIC

LOAD NAME	VA ØA	VA ØB	VA ØC	FA	TA	P	SNOP	BUS A B C	SNOP	P	TA	FA	VA ØA	VA ØB	VA ØC	LOAD NAME
TRANSFORMER SPACE HEATER	600	-	-	100	20	1	1	A	2	1	20	100	600	-	-	LOAD INTERRUPTER SWITCH 1 HEATER
TRANSFORMER SPACE HEATER	-	600	-	100	20	1	3	B	4	1	20	100	-	600	-	LOAD INTERRUPTER SWITCH 2 HEATER
SPARE	-	-	-	100	20	1	5	C	6	2	30	100	-	-	500	TRANSFORMER T5 FAN CONTROL
SPARE	-	-	-	100	20	1	7	A	8	-	-	-	500	-	-	
SPARE	-	-	-	100	40	2	9	B	10	2	30	100	-	500	-	TRANSFORMER T6 FAN CONTROL
	-	-	-	-	-	-	11	C	12	-	-	-	-	-	500	
SPARE	-	-	-	100	20	1	13	A	14	1	20	100	-	-	-	SPARE
SPARE	-	-	-	100	20	1	15	B	16	1	20	100	-	-	-	SPARE
SPARE	-	-	-	100	20	1	17	C	18	1	20	100	-	-	-	SPARE
SPARE	-	-	-	100	20	1	19	A	20	1	20	100	-	-	-	SPARE
SPARE	-	-	-	100	20	1	21	B	22	1	20	100	-	-	-	SPARE
SPARE	-	-	-	100	20	1	23	C	24	1	20	100	-	-	-	SPARE
SPARE	-	-	-	100	20	1	25	A	26	1	20	100	-	-	-	SPARE
SPARE	-	-	-	100	20	1	27	B	28	1	20	100	-	-	-	SPARE
SPARE	-	-	-	100	20	1	29	C	30	1	20	100	-	-	-	SPARE
SUB TOTAL PER PHASE	-	-	-										-	-	-	
TOTAL LOAD PER PHASE	-	-	-													

PANELBOARD SCHEDULE

PANEL : 8-DIG-0102-LPNL , BUS AMPS : 100A VOLTS : 120/208 VAC , PHASE : 3 , WIRES : 4 + GROUND , MAIN CB: 100A , CKT'S : 60

MOUNTING: SURFACE , ENCLOSURE : NEMA 4X , LOCATION : SECOND FLOOR-DIGESTER BLDG. , INT. CURRENT : 22 KA, RMS AIC

LOAD NAME	VA ØA	VA ØB	VA ØC	FA	TA	P	SNOP	BUS A B C	SNOP	P	TA	FA	VA ØA	VA ØB	VA ØC	LOAD NAME
DIGESTER BUILDING OUTDOOR HEAT TRACE	1250	-	-	100	20	1	1	A	2	1	20	100	125	-	-	DIGESTER GAS FLARE HEAT TRACE
DIGESTER EMERGENCY OVERFLOW PIPE HEAT TRACE	-	750	-	100	20	1	3	B	4	1	20	100	-	250	-	DIGESTER HIGH OVERFLOW PIPE HEAT TRACE
DIGESTER NORMAL OVERFLOW PIPE HEAT TRACE	-	-	150	100	20	1	5	C	6	1	20	100	-	-	1176	OVERHEAD DOOR DIGESTER BUILDING
DPS-SF01	100	-	-	100	20	1	7	A	8	1	20	100	100	-	-	DPS-SF02
DPS-MAU01	-	100	-	100	20	1	9	B	10	1	20	100	-	-	-	FIT-1022 ROOF
8-THS-1413-FIT	-	-	100	100	20	1	11	C	12	1	20	100	-	-	-	SPARE
8-THS-1423-FIT	100	-	-	100	20	1	13	A	14	1	20	100	50	-	-	FLOW SWITCH SF01
8-THS-1433-FIT	-	100	-	100	20	1	15	B	16	1	20	100	-	-	-	FIT-1012
DPS-EF01	-	-	100	100	20	1	17	C	18	1	20	100	-	-	100	DPS-EF02
8-DIG-1013-FIT	100	-	-	100	20	1	19	A	20	1	20	100	100	-	-	8-DIG-1023-FIT
8-DIG-1033-FIT	-	100	-	100	20	1	21	B	22	1	20	100	-	500	-	GAS ALARM PANEL 8-DIG-1012-PNL
GAS ALARM PANEL 8-DIG-1022-PNL	-	-	500	100	20	1	23	C	24	1	20	100	-	-	-	SPARE
SPARE	-	-	-	100	20	1	25	A	26	1	20	100	-	-	-	SPARE
DIGESTER NO. 1 LIT-1413A	-	100	-	100	20	1	27	B	28	1	20	100	-	100	-	DIGESTER NO. 2 8-DIG-1423A-LIT
DIGESTER NO. 3 LIT-1433A	-	-	100	100	20	1	29	C	30	1	20	100	-	-	100	DIGESTER GAS FIT-2412
DIGESTER GAS FIT-2422	100	-	-	100	20	1	31	A	32	1	20	100	100	-	-	POTABLE WATER FIT-2414
POTABLE WATER FIT-2424	-	100	-	100	20	1	33	B	34	1	20	100	-	100	-	HOT WATER SERVICE FLOW METER
SPARE	-	-	-	100	20	1	35	C	36	1	20	100	-	-	-	SPARE
8-DIG-1613-TSH	100	-	-	100	20	1	37	A	38	1	20	100	100	-	-	8-DIG-1623-TSH
TREATED DIGESTER BIOGAS TO DRYER FIT-XXXX	-	100	-	100	20	1	39	B	40	1	20	100	-	100	-	8-DIG-1633-TSH
SPARE	-	-	-	100	20	1	41	C	42	1	20	100	-	-	100	SPARE
SPARE	-	-	-	100	20	1	43	A	44	1	20	100	100	-	-	DIGESTER SLUDGE INLET PRESSURE PIT-3023A
SPARE	-	-	-	100	20	1	45	B	46	1	20	100	-	100	-	8-DIG-3212-LIT
SPARE	-	-	-	100	20	1	47	C	48	1	20	100	-	-	100	8-DIG-3222-LIT
SUB TOTAL PER PHASE	-	-	-										-	-	-	
TOTAL LOAD PER PHASE	-	-	-													

PANELBOARD SCHEDULE

PANEL : 8-DIG-0101-LPNL , BUS AMPS : 100A VOLTS : 120/208 VAC , PHASE : 3 , WIRES : 4 + GROUND , MAIN CB: MLO , CKT'S : 42

MOUNTING: SURFACE , ENCLOSURE : NEMA 4X , LOCATION : SECOND FLOOR-DIGESTER BLDG. , INT. CURRENT : 22 KA, RMS AIC

LOAD NAME	VA ØA	VA ØB	VA ØC	FA	TA	P	SNOP	BUS A B C	SNOP	P	TA	FA	VA ØA	VA ØB	VA ØC	LOAD NAME
SPARE	-	-	-	100	20	1	49	A	50	1	20	100	-	-	-	SPARE
SPARE	-	-	-	100	20	1	51	B	52	1	20	100	-	-	-	DIG. SLUDGE INLET PRESSURE PIT-3033A
SPARE	-	-	-	100	20	1	53	C	54	1	20	100	-	-	-	AIT-3211
GAS ANALYSIS MODULE 4	-	-	-	100	20	1	55	A	56	1	20	100	-	-	-	SPARE
SLUDGE OUTLET PRESS PIT-3033B	-	-	-	100	20	1	57	B	58	1	20	100	-	-	-	SPARE
DIG. GAS FIT-2601	-	-	-	100	20	1	59	C	60	1	20	100	-	-	-	SPARE
SPARE	-	-	-	100	20	1	61	A	62	1	20	100	-	-	-	SPARE
SPARE	-	-	-	100	20	1	63	B	64	1	20	100	-	-	-	SPARE
SPARE	-	-	-	100	20	1	65	C	66	1	20	100	-	-	-	SPARE
SPARE	-	-	-	100	20	1	67	A	68	1	20	100	-	-	-	SPARE
SPARE	-	-	-	100	20	1	69	B	70	1	20	100	-	-	-	SPARE
SPARE	-	-	-	100	20	1	71	C	72	1	20	100	-	-	-	SPARE
SPARE	-	-	-	100	20	1	73	A	74	1	20	100	-	-	-	SPARE
SPARE	-	-	-	100	20	1	75	B	76	1	20	100	-	-	-	SPARE
SPARE	-	-	-	100	20	1	77	C	78	1	20	100	-	-	-	SPARE
SPARE	-	-	-	100	20	1	79	A	80	1	20	100	-	-	-	SPARE
SPARE	-	-	-	100	20	1	81	B	82	1	20	100	-	-	-	SPARE
SPARE	-	-	-	100	20	1	83	C	84	1	20	100	-	-	-	SPARE
SPARE	-	-	-	100	20	1	85	A	86	1	20	100	-	-	-	SPARE
SPARE	-	-	-	100	20	1	87	B	88	1	20	100	-	-	-	SPARE
SPARE	-	-	-	100	20	1	89	C	90	1	20	100	-	-	-	SPARE
SPARE	-	-	-	100	20	1	91	A	92	1	20	100	-	-	-	SPARE
SPARE	-	-	-	100	20	1	93	B	94	1	20	100	-	-	-	SPARE
SPARE	-	-	-	100	20	1	95	C	96	1	20	100	-	-	-	SPARE
SPARE	-	-	-	100	20	1	97	A	98	1	20	100	-	-	-	SPARE
SPARE	-	-	-	100	20	1	99	B	100	1	20	100	-	-	-	SPARE
SPARE	-	-	-	100	20	1	101	C	102	1	20	100	-	-	-	SPARE
SUB TOTAL PER PHASE	-	-	-										-	-	-	
TOTAL LOAD PER PHASE	-	-	-													

GENERAL NOTES:

1. FOR SYMBOLS AND ABBREVIATIONS, SEE DRAWING E-1.
2. FOR CONSTRUCTION SEQUENCE, SEE DRAWING E-2.
3. PROVIDE GFI CIRCUIT BREAKERS FOR HEAT TRACE CIRCUITS SHOWN ON THE PANELBOARDS.

DRAWING NOTES:

(1) FOR POLYMER FILL PANEL 8-CTR-1811-LCP LOCATION, SEE DRAWINGS M-101 & M-125.

THE DRAWINGS IN THIS SET ARE RECORD DRAWINGS. THEY ARE CONSTRUCTION CONTRACT DRAWINGS WHICH HAVE BEEN REVISED BASED ON AVAILABLE FIELD INFORMATION RECORDED BY OTHERS DURING CONSTRUCTION OF THIS CONTRACT. THERE HAS BEEN NO VERIFICATION OF DIMENSIONS SHOWN ON THE CONSTRUCTION DRAWINGS OR THE ACCURACY/COMPLETENESS OF THE FIELD INFORMATION RECEIVED.

SIGNATURE _____ DATE 2/7/2020

SHAH & ASSOCIATES

AS-BUILT REPLACEMENT SHEET

PROFESSIONAL CERTIFICATION
THIS DRAWING WAS ORIGINALLY APPROVED FOR CONSTRUCTION AND SEALED BY KANAIYALAL R. SHAH, A REGISTERED PROFESSIONAL ENGINEER IN THE STATE OF MARYLAND, NO. 11084.

NOTICE TO CONTRACTORS
- PROJECT ELEVATIONS ARE BASED ON NAVD88 AND HOWARD COUNTY'S BENCHMARK SYSTEM
- PREVIOUS PROJECTS USED OTHER DATUMS
- APPLY THE FOLLOWING CONVERSIONS WHEN USING PREVIOUS CONTRACT DRAWINGS:
  - ADDITION NO. 6: SUBTRACT 0.80 FT
  - PRIOR ADDITIONS: SUBTRACT 1.04 FT

DEPARTMENT OF PUBLIC WORKS
HOWARD COUNTY, MARYLAND

CHIEF, BUREAU OF UTILITIES DATE

DES: SR
DRN: XMZ
CHK: KRS
DATE: 10/2016

DATE	REV	DESCRIPTION
07/2019		RECORD DRAWING

ELECTRICAL

PANELBOARD SCHEDULE - II

LITTLE PATUXENT WATER RECLAMATION PLANT
8TH ADDITION
BIOSOLIDS PROCESSING FACILITIES – PHASE I

CAPITAL PROJECT S-6295
CONTRACT NO. 24-4935

ELECTION DISTRICT NO. 6
HOWARD COUNTY, MARYLAND

SCALE AS SHOWN

SHEET 398 OF 463

E-902

GENERAL NOTES:

1. FOR SYMBOLS AND ABBREVIATIONS, SEE DRAWING E-1.
2. FOR CONSTRUCTION SEQUENCE, SEE DRAWING E-2.

PANELBOARD SCHEDULE

PANEL : 8-MCC-3101-DPNL , BUS AMPS : 400A VOLTS : 480 VAC , PHASE : 3 , WIRES : 3 , MAIN CB: 400A , CKT'S : 60

MOUNTING: SURFACE , ENCLOSURE : NEMA 12 , LOCATION : MCC-31 ENCLOSURE , INT. CURRENT : 35 KA, RMS AIC

LOAD NAME	VA ØA	VA ØB	VA ØC	FA	TA	P	SNOP	BUS A B C	SNOP	P	TA	FA	VA ØA	VA ØB	VA ØC	LOAD NAME
SPARE	-	-	-	100	20	3	1		2	3	20	100	500	-	-	CONTROL PANEL SPACE HEATER
	-	-	-	-	-	-	3		4	-	-	-	-	500	-	
	-	-	-	-	-	-	5		6	-	-	-	-	-	500	
SPARE	-	-	-	100	20	3	7		8	3	20	100	500	-	-	WATER BOX SPACE HEATER
	-	-	-	-	-	-	9		10	-	-	-	-	500	-	
	-	-	-	-	-	-	11		12	-	-	-	-	-	500	
SPARE	-	-	-	100	20	3	13		14	3	20	100	102.58	-	-	SCREEN PRIMARY SLUDGE VALVE
	-	-	-	-	-	-	15		16	-	-	-	-	102.58	-	
	-	-	-	-	-	-	17		18	-	-	-	-	-	102.58	
SCREEN PRIMARY SLUDGE VALVE	77.71	-	-	100	20	3	19		20	3	20	100	102.58	-	-	BALANCE WATER PINCH MOV-2
	-	77.71	-	-	-	-	21		22	-	-	-	-	102.58	-	
	-	-	77.71	-	-	-	23		24	-	-	-	-	-	102.58	
BALANCE WATER PINCH MOV-1	77.71	-	-	100	20	3	25		26	3	20	100	46.63	-	-	DEAMMONIFICATION HW SUPPLY VALVE 2
	-	77.71	-	-	-	-	27		28	-	-	-	-	46.63	-	
	-	-	77.71	-	-	-	29		30	-	-	-	-	-	46.63	
DEAMMONIFICATION HW SUPPLY VALVE 1	77.71	-	-	100	20	3	31		32	3	20	100	-	-	-	PHOSPHORUS PRECIPITATION BLOWER #1 COOLING FAN
	-	77.71	-	-	-	-	33		34	-	-	-	-	-	-	
	-	-	77.71	-	-	-	35		36	-	-	-	-	-	-	
AIWG-1 8-7201-WG	-	-	-	100	20	3	37		38	3	20	100	-	-	-	AIWG-2 8-7202-WG
	-	-	-	-	-	-	39		40	-	-	-	-	-	-	
	-	-	-	-	-	-	41		42	-	-	-	-	-	-	
SPARE	-	-	-	100	20	3	43		44	3	20	100	-	-	-	DP-31A
	-	-	-	-	-	-	45		46	-	-	-	-	-	-	
	-	-	-	-	-	-	47		48	-	-	-	-	-	-	
SPARE	-	-	-	100	20	3	49		50	3	20	100	100	-	-	MOTORIZED VALVE
	-	-	-	-	-	-	51		52	-	-	-	-	100	-	
	-	-	-	-	-	-	53		54	-	-	-	-	-	100	
MOTORIZED VALVE	100	-	-	100	20	3	55		56	-	-	-	-	-	-	SPARE
	-	100	-	-	-	-	57		58	-	-	-	-	-	-	
	-	-	100	-	-	-	59		60	-	-	-	-	-	-	
SUB TOTAL PER PHASE	-	-	-										1430	1430	1430	
TOTAL LOAD PER PHASE SECTION 1	-	-	-													
TOTAL LOAD PER PHASE SECTION 2	-	-	-													

PANELBOARD SCHEDULE

PANEL : 8-MCC-3102-DPNL , BUS AMPS :400A VOLTS : 480 VAC , PHASE : 3 , WIRES : 3 , MAIN : MLO , CKT'S : 60

MOUNTING: SURFACE , ENCLOSURE : NEMA 12 , LOCATION : MCC-31 ENCLOSURE , INT. CURRENT : 35 KA, RMS AIC

LOAD NAME	VA ØA	VA ØB	VA ØC	FA	TA	P	SNOP	BUS A B C	SNOP	P	TA	FA	VA ØA	VA ØB	VA ØC	LOAD NAME
DEAMMONIFICATION AIR O/C CONTROL VALVE-1	77.71	-	-	100	20	3	61		62	3	20	100	77.71	-	-	DEAMMONIFICATION AIR O/C CONTROL VALVE-2
	-	77.71	-	-	-	-	63		64	-	-	-	-	77.71	-	
	-	-	77.71	-	-	-	65		66	-	-	-	-	-	77.71	
CENTRATE SWING PUMP VALVE NO.1 8-DAM-1256-MOV	77.71	-	-	100	20	3	67		68	3	20	100	77.71	-	-	CENTRATE SWING PUMP VALVE NO.2 8-CTR-1244-PV
	-	77.71	-	-	-	-	69		70	-	-	-	-	77.71	-	
	-	-	77.71	-	-	-	71		72	-	-	-	-	-	77.71	
CENTRATE FEED THROTTLING VALVE-1 8-DAM-1256-MOV	77.71	-	-	100	20	3	73		74	3	20	100	77.71	-	-	CENTRATE FEED THROTTLING VALVE-2 8-DAM-1266-MOV
	-	77.71	-	-	-	-	75		76	-	-	-	-	77.71	-	
	-	-	77.71	-	-	-	77		78	-	-	-	-	-	77.71	
DIGESTER BUILDING PANEL DP31A	35005	-	-	225	200	3	79		80	3	60	125	10000	-	-	TRANSFORMER FOR PANEL 8-MCC-3102-LPNL
	-	35005	-	-	-	-	81		82	-	-	-	-	10000	-	
	-	-	35005	-	-	-	83		84	-	-	-	-	-	10000	
TRANSFORMER FOR PANEL PS8CP	5000	-	-	125	45	3	85		86	3	60	125	10000	-	-	PHOSPOHORUS PRECIPITATION BLDG PANEL LP31D
	-	5000	-	-	-	-	87		88	-	-	-	-	10000	-	
	-	-	5000	-	-	-	89		90	-	-	-	-	-	10000	
SPARE	-	-	-	100	20	3	91		92	3	20	100	-	-	-	SPARE
	-	-	-	-	-	-	93		94	-	-	-	-	-	-	
	-	-	-	-	-	-	95		96	-	-	-	-	-	-	
SPARE	-	-	-	100	20	3	97		98	3	20	100	-	-	-	SPARE
	-	-	-	-	-	-	99		100	-	-	-	-	-	-	
	-	-	-	-	-	-	101		102	-	-	-	-	-	-	
SPARE	-	-	-	100	20	3	103		104	3	20	100	100	-	-	DEMMONIFICATION SWING BLOWER CONTROL VALVE 8-DAM-1612-MOV
	-	-	-	-	-	-	105		106	-	-	-	-	100	-	
	-	-	-	-	-	-	107		108	-	-	-	-	-	100	
DEMMONIFICATION SWING BLOWER CONTROL VALVE 8-DAM-1622-MOV	100	-	-	100	20	3	109		110	3	20	100	100	-	-	8-PST-1612-MOV
	-	100	-	-	-	-	111		112	-	-	-	-	100	-	
	-	-	100	-	-	-	113		114	-	-	-	-	-	100	
8-PST-1622-MOV	100	-	-	100	20	3	115		116	3	20	100	-	-	-	SPARE
	-	100	-	-	-	-	117		118	-	-	-	-	-	-	
	-	-	100	-	-	-	119		120	-	-	-	-	-	-	
SUB TOTAL PER PHASE	-	-	-										20433	20433	20433	
TOTAL LOAD PER PHASE	-	-	-													

THE DRAWINGS IN THIS SET ARE RECORD DRAWINGS. THEY ARE CONSTRUCTION CONTRACT DRAWINGS WHICH HAVE BEEN REVISED BASED ON AVAILABLE FIELD INFORMATION RECORDED BY OTHERS DURING CONSTRUCTION OF THIS CONTRACT. THERE HAS BEEN NO VERIFICATION OF DIMENSIONS SHOWN ON THE CONSTRUCTION DRAWINGS OR THE ACCURACY/COMPLETENESS OF THE FIELD INFORMATION RECEIVED.

SIGNATURE _____ DATE 2/7/2023

SHAH & ASSOCIATES

HDR

AS-BUILT REPLACEMENT SHEET

PROFESSIONAL CERTIFICATION
THIS DRAWING WAS ORIGINALLY APPROVED FOR CONSTRUCTION AND SEALED BY KANAIYALAL R. SHAH, A REGISTERED PROFESSIONAL ENGINEER IN THE STATE OF MARYLAND, NO. 11084.

NOTICE TO CONTRACTORS
- PROJECT ELEVATIONS ARE BASED ON NAVD88 AND HOWARD COUNTY'S BENCHMARK SYSTEM
- PREVIOUS PROJECTS USED OTHER DATUMS
- APPLY THE FOLLOWING CONVERSIONS WHEN USING PREVIOUS CONTRACT DRAWINGS:
  - ADDITION NO. 6: SUBTRACT 0.80 FT
  - PRIOR ADDITIONS: SUBTRACT 1.04 FT

DEPARTMENT OF PUBLIC WORKS
HOWARD COUNTY, MARYLAND

CHIEF, BUREAU OF UTILITIES DATE

DES: SR
DRN: AJS
CHK: KRS
DATE: 10/2016

DATE	REV	DESCRIPTION
07/2019		RECORD DRAWING

ELECTRICAL

PANELBOARDS SCHEDULE - III

LITTLE PATUXENT WATER RECLAMATION PLANT
8TH ADDITION
BIOSOLIDS PROCESSING FACILITIES – PHASE I

CAPITAL PROJECT S-6295
CONTRACT NO. 24-4935

ELECTION DISTRICT NO. 6
HOWARD COUNTY, MARYLAND

SCALE AS SHOWN

SHEET 399 OF 463

E-903

GENERAL NOTES:

1. FOR SYMBOLS AND ABBREVIATIONS, SEE DRAWING E-1.
2. FOR CONSTRUCTION SEQUENCE, SEE DRAWING E-2.
3. EQUIPMENT LOADS SHOWN ON PANEL BOARD SHALL BE COORDINATED WITH PROCESS DISCIPLINE.
4. PROVIDE GFI CIRCUIT BREAKERS FOR HEAT TRACE CIRCUITS SHOWN ON THE PANELBOARDS.

PANELBOARD SCHEDULE

PANEL : 8-CTR-0101-LPNL, BUS AMPS : 200A VOLTS : 120/208 VAC , PHASE : 3 , WIRES : 4 , MAIN CB: 200A , CKT'S : 60

MOUNTING: SURFACE , ENCLOSURE : NEMA 12 , LOCATION : ELECTRICAL ROOM-SOLIDS HANDLING BLDG, INT. CURRENT : 22 KA, RMS AIC

LOAD NAME	VA ØA	VA ØB	VA ØC	FA	TA	P	SNOP	BUS A	BUS B	BUS C	SNOP	P	TA	FA	VA ØA	VA ØB	VA ØC	LOAD NAME
8-GBT-1612-FIT	100	-	-	100	20	1	1				2	1	20	100	100	-	-	8-GBT-1622-FIT
8-GBT-2012-FIT	-	100	-	100	20	1	3				4	1	20	100	-	100	-	8-GBT-2022-FIT
8-GBT-2411-FIT	-	-	100	100	20	1	5				6	1	20	100	-	-	100	DILUTION WATER FROM DENITE EFFLUENT FIT-XXXX
8-GBT-2411-DIT	100	-	-	100	20	1	7				8	1	20	100	100	-	-	SCUM HOLDING TANK 8-GBT-1011-LIT
8" WAS AIT-2011	-	100	-	100	20	1	9				10	1	20	100	-	100	-	FSH-2811
SPARE	-	-	100	100	20	1	11				12	1	20	100	-	-	100	DILLUTED WATER HOPPER LIT
PRIMARY SLUDGE SCREEN FIT	100	-	-	100	20	1	13				14	1	20	100	1600	-	-	PNEUMATIC CONTROL PANEL COMPRESSOR NO.1
PNEUMATIC CONTROL PANEL COMPRESSOR NO.2	-	1400	-	100	20	1	15				16	1	20	100	-	100	-	8-GBT-2012-LIT
8-GBT-2022-LIT	-	-	100	100	20	1	17				18	1	20	100	-	-	1176	GBT POLYMER FEED SYSTEM PANEL NO. 1 8-POL-2612-PNL
GBT POLYMER FEED SYSTEM PANEL NO. 2 8-POL-2622-PNL	1176	-	-	100	20	1	19				20	1	20	100	500	-	-	LOCAL ALARM STATION 8-PST-0022-PNL
8-PST-2612-FIT	-	100	-	100	20	1	21				22	1	20	100	-	100	-	8-PST-2822-FIT
SPACE	-	-	-	100	20	1	23				24	1	20	100	-	-	-	GBT 1 LOCAL CONTROL PANEL
POLYMER FILL PANEL (1) 8-CTR-1811-LCP	-	-	-	100	20	1	25				26	1	20	100	-	-	-	GBT 2 LOCAL CONTROL PANEL
SODIUM HYDROXIDE METERING PUMP NO.1 8-DAM-2013-PMP	-	1176	-	100	20	1	27				28	1	20	100	-	1176	-	SODIUM HYDROXIDE METERING PUMP NO.2 8-DAM-2023-PMP
SODIUM HYDROXIDE METERING PUMP NO.3 8-DAM-2033-PMP	-	-	1176	100	20	1	29				30	1	20	100	-	-	-	8-DAM-2011-MOV
8-DAM-2011-LIT	100	-	-	100	20	1	31				32	1	20	100	100	-	-	8-PST-1211-LIT
LOCAL ALARM STATION 8-GBT-0022-PNL	-	500	-	100	20	1	33				34	1	20	100	-	1600	-	SOLIDS SCREENING AREA RIO PANEL 8-PST-0011-RIO
LOCAL ALARM STATION SCREENING AREA 8-PST-0012-PNL	-	-	500	100	20	1	35				36	1	20	100	-	-	1600	CHEMICAL AREA RIO 8-POL-0011-RIO
GBT AREA RIO PANEL 8-GBT-0011-RIO	1600	-	-	100	20	1	37				38	1	20	100	-	-	-	SPACE
8-DIG-2611-FIT	-	100	-	100	20	1	39				40	1	20	100	-	500	-	SPARE
8-POL-2612-FIT	-	-	100	100	20	1	41				42	1	20	100	-	-	1667	BIO-FILTER HEAT TRACE NO.1
8-POL-2622-FIT	100	-	-	100	20	1	43				44	1	20	100	1667	-	-	BIO-FILTER HEAT TRACE NO.2
TSH-1412	-	100	-	100	20	1	45				46	1	20	100	-	1667	-	BIO-FILTER HEAT TRACE NO.3
TSH-1422	-	-	100	100	20	1	47				48	1	20	100	-	-	-	SPARE
TSH-2422	100	-	-	100	20	1	49				50	1	20	100	-	-	-	FSH-2611
TSH-2412	-	100	-	100	20	1	51				52	1	20	100	-	-	-	FSH-2011
SPACE	-	-	-	-	-	1	53				54	1	20	100	-	-	-	8-GBT-0011-PNL AREA PLC CABINET RIO NIP
SPACE	-	-	-	-	-	1	55				56	1	15	100	-	-	-	FIBER OPTIC PATCH PANEL 8-GBT-0011-NIP
SPACE	-	-	-	-	-	1	57				58	1	20	100	-	-	-	MICRO NUTRIENT FEED PUMP 1
SPACE	-	-	-	-	-	1	59				60	1	20	100	-	-	-	MICRO NUTRIENT FEED PUMP 2
SUB TOTAL PER PHASE	-	-	-												-	-	-	
TOTAL LOAD PER PHASE	-	-	-															

PANELBOARD SCHEDULE

PANEL : 8-DIG-0103-PNL , BUS AMPS : 150A VOLTS : 120/208 VAC , PHASE : 3 , WIRES : 4 + GROUND , MAIN CB: 150A , CKT'S : 60

MOUNTING: SURFACE , ENCLOSURE : NEMA 4X , LOCATION : SECOND FLOOR-DIGESTER BLDG., INT. CURRENT : 18 KA, RMS AIC

LOAD NAME	VA ØA	VA ØB	VA ØC	FA	TA	P	SNOP	BUS A	BUS B	BUS C	SNOP	P	TA	FA	VA ØA	VA ØB	VA ØC	LOAD NAME
OVERHEAD DOOR	-	-	-	100	20	1	1				2	1	20	100	-	-	-	ROOF DRIPTRAP
	-	-	-	100	20	1	3				4	1	20	100	-	-	-	WASTE FLARE DRIP
	-	-	-	100	20	1	5				6	1	20	100	-	-	-	SPARE
8-CTR-1013-LAS	-	-	-	100	20	1	7				8	1	20	100	-	-	-	SPARE
SPARE	-	-	-	100	20	1	9				10	1	20	100	-	-	-	SPARE
SPARE	-	-	-	100	20	1	11				12	1	20	100	-	-	1200	DUAL MEMBRANE GAS HOLDER PANEL 8-DIG-3211-PNL
GLYCOL CHILLER CONTROL PANEL	1600	-	-	100	20	1	13				14	1	20	100	1200	-	-	GAS CONDITIONING PANEL 8-DGT-1222-LCP
8-DIG-3201-ISB	-	1200	-	100	20	1	15				16	1	20	100	-	-	-	SPARE
SPARE	-	-	-	100	20	1	17				18	1	20	100	-	-	1600	FACU PANEL
LAS (ECANS) 8-DIG-0024-PNL	1600	-	-	100	20	1	19				20	1	20	100	1600	-	-	FREE STANDING DIGESTER RIO 8-DIG-0011-RIO
FREE STANDING DIGESTER RIO 8-DIG-0011-RIO	-	1600	-	100	20	1	21				22	1	20	100	-	1600	-	HVAC CONTROL PANEL
SPARE	-	-	-	100	20	1	23				24	1	20	100	-	-	-	SPARE
DIGESTER BLDG LIGHTING	1300	-	-	100	20	1	25				26	1	20	100	1300	-	-	DIGESTER BLDG LIGHTING
DIGESTER BLDG LIGHTING	-	1300	-	100	20	1	27				28	1	20	100	-	1300	-	DIGESTER BLDG LIGHTING
DIGESTER BLDG LIGHTING	-	-	1300	100	20	1	29				30	1	20	100	-	-	1300	DIGESTER BLDG LIGHTING
DIGESTER BLDG LIGHTING	1300	-	-	100	20	1	31				32	1	20	100	1300	-	-	DIGESTER BLDG LIGHTING
DIGESTER BLDG LIGHTING	-	1300	-	100	20	1	33				34	1	20	100	-	1300	-	DIGESTER BLDG LIGHTING
DIGESTER BLDG LIGHTING	-	-	1300	100	20	1	35				36	1	20	100	-	-	1300	DIGESTER BLDG LIGHTING
DIGESTER BUILDING RECEPTACLES	720	-	-	100	20	1	37				38	1	20	100	720	-	-	DIGESTER BUILDING RECEPTACLES
DIGESTER BUILDING RECEPTACLES	-	720	-	100	20	1	39				40	1	20	100	-	720	-	DIGESTER BUILDING RECEPTACLES
DIGESTER BUILDING RECEPTACLES	-	-	720	100	20	1	41				42	1	20	100	-	-	720	DIGESTER BUILDING RECEPTACLES
DIGESTER BUILDING OUTDOOR LIGHTS	120	-	-	100	20	1	43				44	1	20	100	-	-	-	SPARE
8-DGT-1012-LCP	-	1200	-	100	20	1	45				46	1	20	100	-	1200	-	8-DGT-1022-LCP
32-SF01	-	-	-	100	20	3	47				48	3	20	100	-	-	-	32-SF02
SPARE	-	-	-	-	-	-	49				50	-	-	-	-	-	-	SPARE
SPARE	-	-	-	-	-	-	51				52	-	-	-	-	-	-	SPARE
8-DGT-1411-PNL	-	-	200	100	20	1	53				54	1	20	100	-	-	-	SPARE
SPACE	-	-	-	-	-	-	55				56	-	-	-	-	-	-	SPARE
SPACE	-	-	-	-	-	-	57				58	-	-	-	-	-	-	SPARE
SPACE	-	-	-	-	-	-	59				60	-	-	-	-	-	-	SPARE
SUB TOTAL PER PHASE	-	-	-												-	-	-	
TOTAL LOAD PER PHASE	-	-	-															

THE DRAWINGS IN THIS SET ARE RECORD DRAWINGS. THEY ARE CONSTRUCTION CONTRACT DRAWINGS WHICH HAVE BEEN REVISED BASED ON AVAILABLE FIELD INFORMATION RECORDED BY OTHERS DURING CONSTRUCTION OF THIS CONTRACT. THERE HAS BEEN NO VERIFICATION OF DIMENSIONS SHOWN ON THE CONSTRUCTION DRAWINGS OR THE ACCURACY/COMPLETENESS OF THE FIELD INFORMATION RECEIVED.

SIGNATURE _____ DATE 2/7/2020

SHAH & ASSOCIATES

HDR

AS-BUILT REPLACEMENT SHEET

PROFESSIONAL CERTIFICATION
THIS DRAWING WAS ORIGINALLY APPROVED FOR CONSTRUCTION AND SEALED BY KANAIYALAL R. SHAH, A REGISTERED PROFESSIONAL ENGINEER IN THE STATE OF MARYLAND, NO. 11084.

NOTICE TO CONTRACTORS
- PROJECT ELEVATIONS ARE BASED ON NAVD88 AND HOWARD COUNTY'S BENCHMARK SYSTEM
- PREVIOUS PROJECTS USED OTHER DATUMS
- APPLY THE FOLLOWING CONVERSIONS WHEN USING PREVIOUS CONTRACT DRAWINGS:
  - ADDITION NO. 6: SUBTRACT 0.80 FT.
  - PRIOR ADDITIONS: SUBTRACT 1.04 FT.

DEPARTMENT OF PUBLIC WORKS
HOWARD COUNTY, MARYLAND

CHIEF, BUREAU OF UTILITIES DATE

DES: SR
DRN: XMZ
CHK: KRS
DATE: 10/2016

DATE	REV	DESCRIPTION
07/2019		RECORD DRAWING

ELECTRICAL

PANELBOARD SCHEDULE - IV

LITTLE PATUXENT WATER RECLAMATION PLANT
8TH ADDITION
BIOSOLIDS PROCESSING FACILITIES – PHASE I

CAPITAL PROJECT S-6295
CONTRACT NO. 24-4935

ELECTION DISTRICT NO. 6
HOWARD COUNTY, MARYLAND

SCALE AS SHOWN

SHEET 400 OF 463

E-903A

DRAWING NOTES:

(1) TO BE COORDINATED WITH CNP.

GENERAL NOTES:

1. FOR SYMBOLS AND ABBREVIATIONS, SEE DRAWING E-1.
2. FOR CONSTRUCTION SEQUENCE, SEE DRAWING E-2.
3. EQUIPMENT LOADS SHOWN ON PANEL BOARD SHALL BE COORDINATED WITH PROCESS DISCIPLINE.
4. PROVIDE GFI CIRCUIT BREAKER FOR HEAT TRACE CIRCUIT SHOWN ON THE PANELBOARDS.

PANELBOARD SCHEDULE

PANEL : 8-MCC-3102-LPNL , BUS AMPS : 100A VOLTS : 120/208 V, PHASE : 3 , WIRES : 4 + GROUND , MAIN CB: 100A , CKT'S : 72

MOUNTING: SURFACE , ENCLOSURE : NEMA 12 , LOCATION : DIGESTER BLDG MCC ENCLOSURE , INT. CURRENT : 22 KA, RMS AIC

LOAD NAME	VA ØA	VA ØB	VA ØC	FA	TA	P	SNOP	BUS A B C	SNOP	P	TA	FA	VA ØA	VA ØB	VA ØC	LOAD NAME
VALVE CONTROL PANEL (VCP) 8-THS-1011-PNL	1600	-	-	100	20	1	1		2	1	20	100	500	-	-	8-CTR-1011-LAS
CE TANKS 8-DAM-1012-LIT	-	100	-	100	20	1	3		4	1	20	100	-	100	-	DUCT SMOKE DETECTOR-GBT
CE TANKS 8-DAM-1022-LIT	-	-	100	100	20	1	5		6	1	20	100	-	-	-	SPARE
8-CTR-1013-LAS	-	-	-	100	20	1	7		8	1	20	100	100	-	-	8-DAM-1212-FIT
SPARE	-	15	-	100	20	1	9		10	1	20	100	-	100	-	8-DAM-1222-FIT
8-MCC-3100-MCC ENCLOSURE LIGHTING INDOOR	-	-	500	100	20	1	11		12	1	20	100	-	-	1260	NIP
SPARE	500	-	-	100	20	1	13		14	1	20	100	900	-	-	8-MCC-3100-MCC ENCLOSURE T-STAT
DIGESTER AREA PLC CABINET 8-DIG-0011-LCP	-	1600	-	100	20	1	15		16	1	20	100	-	100	-	8-DAM-AIT-1412A
MNFP CONTROL PANEL NO. 2	-	-	1600	100	20	1	17		18	1	20	100	-	-	100	8-DAM-AIT-1412B
8-DAM-1412-FIT	100	-	-	100	20	1	19		20	1	20	100	100	-	-	8-DAM-AIT-1422A
8-DAM-1422-FIT	-	100	-	100	20	1	21		22	1	20	100	-	100	-	8-DAM-AIT-1422B
LIT-8-310-L	-	-				1	23		24	1	20	100	-	-	-	LIT-8-221-L
COMPRESSOR CONTROL PANEL 2 8-THS-1222-PNL	-	-	-	100	20	1	25		26	1	20	100	-	-	-	LIT-8-220-L
COMPRESSOR CONTROL PANEL 1 8-THS-1212-PNL	-	-	-	100	20	1	27		28	1	20	100	-	-	-	SPARE
DEAMMONIFICATION BLWR. NO.1 ENCL. FAN	-	-	190	100	20	1	29		30	1	20	100	-	-	190	DEAMMONIFICATION BLWR. NO.2 ENCL. FAN
DEAMMONIFICATION BLWR. NO. 2 ENCL. FAN	190	-	-	100	20	1	31		32	1	20	100	100	-	-	8-PST-2612-FIT
FIT-1611	-	100	-	100	20	1	33		34	1	20	100	-	100	-	8-PST-2622-FIT
FIT-2211	-	-	100	100	20	1	35		36	1	20	100	-	-	1600	VALVE CONTROL PANEL 8-DAM-1011-PNL
SPARE	-	-	-	100	15	1	37		38	1	20	100	1600	-	-	DEAMMONIFICATION SYTEM PLC CONTROL PANEL 8-DAM-0012-PNL
SPARE	-	-	-	100	20	1	39		40	1	15	100	-	-	-	SPARE
SOLIDS PIPE GALLERY RIO PANEL 8-SPG-0011-RIO	-	-	1600	100	20	1	41		42	1	-	-	-	-	-	SPACE
SOLIDS PIPE GALLERY RIO PANEL 8-SPG-0011-RIO	1600	-	-	100	20	1	43		44	1	-	-	-	-	-	SPACE
SPARE	-	-	-	100	15	1	45		46	1	20	100	-	100	-	8-PST-2614-TSH
THS-1413	-	-	-	100	20	1	47		48	1	20	100	-	-	100	8-PST-2624-TSH
TSH-1423	-	-	-	100	20	1	49		50	1	20	100	100	-	-	8-PST-2634-TSH
8-DSS-2213-TSH	-	100	-	100	20	1	51		52	1	20	100	-	100	-	8-PST-2644-TSH
8-DSS-2223-TSH	-	-	100	100	20	1	53		54	1	20	100	-	-	100	FIT-8-401-M
8-DSS-2233-TSH	100	-	-	100	20	1	55		56	1	20	100	100	-	-	FIT-8-402-M
CENTRATE EQ TANK 1 LEVEL LIT-1012	-	-	-	100	20	1	57		58	1	20	100	-	100	-	FIT-8-403-M
AC-1&2	-	-	-	100	20	1	59		60	1	20	100	-	-	-	CENTRIFUGE EQ TANK 1 LEVEL LIT-1012
AC-1&2	-	-	-	100	20	1	61		62	1	20	100	-	-	-	CENTRATE EQ TANK 2 LEVEL LIT-1022
AC-3&4	-	-	-	100	20	1	63		64	1	20	100	-	-	-	8-MCC-3100-MCC ENCLOSURE RECEPTACLES INDOOR
AC-3&4	-	-	-	100	20	1	65		66	1	20	100	-	-	-	8-MCC-3100-MCC ENCLOSURE RECEPTACLES OUTDOOR
SPARE	-	-	-	100	20	1	67		68	1	20	100	-	-	-	AC-5&6
SPARE	-	-	-	100	15	1	69		70	1	20	100	-	-	-	AC-5&6
SPARE	-	-	-	100	15	1	71		72	1	20	100	-	-	-	SPARE
SUB TOTAL PER PHASE	-	-	-										-	-	-	
TOTAL LOAD PER PHASE	-	-	-													

PANELBOARD SCHEDULE

PANEL : 8-PHO-0101-LPNL, BUS AMPS: 100A VOLTS : 120/208 VAC , PHASE : 3 , WIRES : 4 + GROUND , MAIN CB: 100A , CKT'S : 42

MOUNTING: SURFACE , ENCLOSURE : NEMA 4X , LOCATION : PHOSPHOROUS PRECIPITATION BUILDING, INT. CURRENT : 22 KA, RMS AIC

LOAD NAME	VA ØA	VA ØB	VA ØC	FA	TA	P	SNOP	BUS A B C	SNOP	P	TA	FA	VA ØA	VA ØB	VA ØC	LOAD NAME
MAGNESIUM METERING PUMP-1 8-PHO-2212-PMP	250	-	-	100	20	1	1		2	1	20	100	1600	-	-	MGCL FILL PANEL 8-PHO-2212-PNL
MAGNESIUM METERING PUMP-2 8-PHO-2222-PMP	-	250	-	100	20	1	3		4	1	20	100	-	250	-	MAGNESIUM METERING PUMP-3 FUTURE
ANTIFOAM METERING PUMP-1 8-PHO-2611-PMP	-	-	110	100	20	1	5		6	1	20	100	-	-	110	ANTIFOAM METERING PUMP-2 FUTURE
ADS PIPE HEAT TRACE (HT-PPF-C)	50	-	-	100	30	1	7		8	1	20	100	1400	-	-	MGCL STORAGE TANK HEAT TRACE (1)
MAGNESIUM DISCHARGE FIT	-	100	-	100	20	1	9		10	1	20	100	-	100	-	MGCL STORAGE TANK 8-PHO-2211-LIT
LOCAL ALARM STATION 8-PHO-0022-PNL	-	-	100	100	20	1	11		12	1	20	100	-	-	-	SPARE
8-PHO-2611-LIT	100	-	-	100	20	1	13		14	1	20	100	100	-	-	PHOSPHORUS PREC. DISCHARGE 8-PHO-2412-FIT
PHOSPHORUS PREC. REACTOR 8-PHO-2422-FIT	-	100	-	100	20	1	15		16	1	20	100	-	100	-	PHOSPHORUS PREC. REACTOR 8-PHO-2411-AIT
MAP PIPE HEAT TRACE (HT-PPF-A)	-	-	100	100	20	1	17		18	1	20	100	-	-	500	ADS PIPE HEAT TRACE (HT-PPF-B)
SPARE	-	-	-	100	20	1	19		20	1	20	100	-	-	-	SPARE
8-PHO-2211-FIT	-	100	-	100	20	1	21		22	1	20	100	-	-	-	SPARE
PHOSPHORUS PRECIPITATION BUILDING LIGHTING	-	-	500	100	20	1	23		24	1	20	100	-	-	500	PHOSPHORUS PRECIPITATION BUILDING LIGHTING
PHOSPHORUS PRECIPITATION BLDG. OUTDOOR LIGHTING	500	-	-	100	20	1	25		26	1	20	100	720	-	-	PHOSPHORUS PRECIPITATION BUILDING RECEPTACLE
PHOSPHORUS PRECIPITATION BUILDING RECEPTACLE	-	720	-	100	20	1	27		28	1	20	100	-	100	-	FLOW SWITCH 8-PHO-2211-FS
MGCL PIPE HEAT TRACE	-	-	150	100	20	1	29		30	1	20	100	-	-	150	FOAM PIPE HEAT TRACE (HT-PPF-H)
8-PHO-2411-ISB	1200	-	-	100	20	1	31		32	1	20	100	-	-	-	SPARE
SPARE	-	-	-	100	20	1	33		34	1	20	100	-	-	-	SPARE
SPARE	-	-	-	100	20	1	35		36	1	20	100	-	-	-	SPARE
SPACE	-	-	-	-	-	-	37		38	-	-	-	-	-	-	SPACE
SPACE	-	-	-	-	-	-	39		40	-	-	-	-	-	-	SPACE
SPACE	-	-	-	-	-	-	41		42	-	-	-	-	-	-	SPACE
SUB TOTAL PER PHASE	2100	1270	960										3820	550	1260	
TOTAL LOAD PER PHASE	5920	1820	2220													

THE DRAWINGS IN THIS SET ARE RECORD DRAWINGS. THEY ARE CONSTRUCTION CONTRACT DRAWINGS WHICH HAVE BEEN REVISED BASED ON AVAILABLE FIELD INFORMATION RECORDED BY OTHERS DURING CONSTRUCTION OF THIS CONTRACT. THERE HAS BEEN NO VERIFICATION OF DIMENSIONS SHOWN ON THE CONSTRUCTION DRAWINGS OR THE ACCURACY/COMPLETENESS OF THE FIELD INFORMATION RECEIVED.

SIGNATURE 2/7/2023 DATE

SHAH & ASSOCIATES

AS-BUILT REPLACEMENT SHEET

PROFESSIONAL CERTIFICATION
THIS DRAWING WAS ORIGINALLY APPROVED FOR CONSTRUCTION AND SEALED BY KANAIYALAL R. SHAH, A REGISTERED PROFESSIONAL ENGINEER IN THE STATE OF MARYLAND, NO. 11084.

NOTICE TO CONTRACTORS
- PROJECT ELEVATIONS ARE BASED ON NAVD88 AND HOWARD COUNTY'S BENCHMARK SYSTEM
- PREVIOUS PROJECTS USED OTHER DATUMS
- APPLY THE FOLLOWING CONVERSIONS WHEN USING PREVIOUS CONTRACT DRAWINGS:
  - ADDITION NO. 6: SUBTRACT 0.80 FT
  - PRIOR ADDITIONS: SUBTRACT 1.04 FT

DEPARTMENT OF PUBLIC WORKS
HOWARD COUNTY, MARYLAND

CHIEF, BUREAU OF UTILITIES DATE

DES: SR
DRN: XMZ
CHK: KRS
DATE: 10/2016

DATE	REV	DESCRIPTION
07/2019		RECORD DRAWING

ELECTRICAL

PANELBOARD SCHEDULE - V

LITTLE PATUXENT WATER RECLAMATION PLANT
8TH ADDITION
BIOSOLIDS PROCESSING FACILITIES – PHASE I

CAPITAL PROJECT S-6295
CONTRACT NO. 24-4935

ELECTION DISTRICT NO. 6
HOWARD COUNTY, MARYLAND

SCALE AS SHOWN

SHEET 401 OF 463

E-904

CABLE AND CONDUIT SCHEDULE

CONDUIT		CABLE		FROM	TO	REMARKS
FEEDER NUMBER	SIZE	QTY	SIZE			
P1001	3/4"	3	#12	EXISTING 8-MCC-2300-MCC	THICKENED WAS PUMP NO.1 8-GBT-2412-PMP	480V POWER
		1	#12			GROUND
P1002	3/4"	3	#12	EXISTING 8-MCC-2300-MCC	THICKENED WAS PUMP NO.2 8-GBT-2422-PMP	480V POWER
		1	#12			GROUND
P1003	3/4"	3	#10	EXISTING 8-MCC-2300-MCC	SCUM PUMP NO.1 8-GBT-1412-PMP	480V POWER
		1	#12			GROUND
P1004	3/4"	3	#10	EXISTING 8-MCC-2300-MCC	SCUM PUMP NO.2 8-GBT-1422-PMP	480V POWER
		1	#12			GROUND
P1005	3/4"	3	#12	EXISTING 8-MCC-2300-MCC	GBT BELT DRIVE NO.1 8-GBT-2012-DRV	480V POWER
		1	#12			GROUND
P1006	3/4"	3	#12	EXISTING 8-MCC-2300-MCC	GBT BELT DRIVE NO.2 8-GBT-2022-DRV	480V POWER
		1	#12			GROUND
P1007	3/4"	3	#12	EXISTING 8-MCC-2300-MCC	WASHWATER BOOSTER PUMP NO.1 8-GBT-1812-PMP	480V POWER
		1	#12			GROUND
P1008	3/4"	3	#12	EXISTING 8-MCC-2300-MCC	WASHWATER BOOSTER PUMP NO.2 8-GBT-1822-PMP	480V POWER
		1	#12			GROUND
P1009	3/4"	3	#12	8-CTR-0101-DPNL	WASHWATER NO.1 MODULATING VALVE NO.1 8-GBT-1812-MOV	480V POWER
		1	#12			GROUND
P1010	3/4"	3	#12	8-CTR-0101-DPNL	WASHWATER NO. 2 MODULATING VALVE NO.2 8-GBT-1822-MOV	480V POWER
		1	#12			GROUND
P1011	-	-	-	-	NOT USED	-
		-	-			-
P1012	-	-	-	-	NOT USED	-
		-	-			-
P1013	-	-	-	-	NOT USED	-
		-	-			-
P1014	-	-	-	-	-	-
		-	-			-
P1015	3/4"	3	#12	EXISTING 8-MCC-2300-MCC	MECHANICAL MIXER NO.1 8-GBT-1212-MXR	480V POWER
		1	#12			GROUND
P1016	3/4"	3	#12	EXISTING 8-MCC-2300-MCC	MECHANICAL MIXER NO.2 8-GBT-1222-MXR	480V POWER
		1	#12			GROUND
P1017	3/4"	3	#12	EXISTING 8-MCC-1500-MCC	EXHAUST FAN 1 8-GBT-9912-FAN	480V POWER
		1	#12			GROUND
P1018	3/4"	3	#12	EXISTING 8-MCC-1500-MCC	EXHAUST FAN 2 8-GBT-9922-FAN	480V POWER
		1	#12			GROUND
P1019	3/4"	3	#12	EXISTING 8-MCC-1500-MCC	HVAC DAF FAN NO.3	480V POWER
		1	#12			GROUND
P1020	3/4"	2	#12	8-CTR-0101-LPNL	MICRO NUTRIENT PUMP NO.1 8-DAM-1912-PMP	120V POWER
		1	#12			GROUND
P1021	3/4"	2	#12	8-CTR-0101-LPNL	MICRO NUTRIENT PUMP NO.2 8-DAM-1922-PMP	120V POWER
		1	#12			GROUND
P1030	3/4"	2	#12	8-CTR-0101-LPNL	SCUM PUMP 1 8-GBT-1612-FIT	120V POWER
		1	#12			GROUND
P1031	3/4"	2	#12	8-CTR-0101-LPNL	SCUM PUMP 2 8-GBT-1622-FIT	120V POWER
		1	#12			GROUND
P1032	3/4"	2	#12	8-CTR-0101-LPNL	8-GBT-2012-FIT	120V POWER
		1	#12			GROUND
P1033	3/4"	2	#12	8-CTR-0101-LPNL	8-GBT-2022-FIT	120V POWER
		1	#12			GROUND
P1034	3/4"	2	#12	8-CTR-0101-LPNL	TWAS PUMP 1 8-GBT-2411-FIT	120V POWER
		1	#12			GROUND

CABLE AND CONDUIT SCHEDULE

CONDUIT		CABLE		FROM	TO	REMARKS
FEEDER NUMBER	SIZE	QTY	SIZE			
P1035	3/4"	2	#12	8-CTR-0101-LPNL	DILUTION WATER FROM DENITE EFFULENT FIT-XXXX	120V POWER
		1	#12			GROUND
P1036	3/4"	2	#12	8-CTR-0101-LPNL	8-GBT-2411-DIT	120V POWER
		1	#12			GROUND
P1037	3/4"	2	#12	8-CTR-0101-LPNL	SCUM HOLDING TANK 8-GBT-1011-LIT	120V POWER
		1	#12			GROUND
P1038	3/4"	2	#12	8-CTR-0101-LPNL	8" WAS AIT-2011	120V POWER
		1	#12			GROUND
P1039	-	-	-	-	NOT USED	-
		-	-			-
P1040	3/4"	2	#12	8-CTR-0101-LPNL	DUCT SMOKE DETECTOR	120V POWER
		1	#12			GROUND
P1041	3/4"	2	#12	8-CTR-0101-LPNL	DUCT SMOKE DETECTOR GBT	120V POWER
		1	#12			GROUND
P1042	3/4"	2	#12	8-CTR-0101-LPNL	TWAS RECEIVING TANK NO.1 8-GBT-2012-LIT	120V POWER
		1	#12			GROUND
P1043	3/4"	2	#12	8-CTR-0101-LPNL	TWAS RECEIVING TANK NO.2 8-GBT-2022-LIT	120V POWER
		1	#12			GROUND
P1044	3/4"	2	#12	8-CTR-0101-LPNL	LOCAL ALARM STATION	120V POWER
		1	#12			GROUND
P1045	3/4"	4	#12	8-CTR-0101-LPNL	GBT AREA RIO PANEL 8-GBT-0011-RIO	120V POWER
		1	#12			GROUND
P1046	3/4"	4	#12	8-CTR-0101-LPNL	CHEMICAL AREA RIO 8-POL-0011-RIO	120V POWER
		1	#12			GROUND
P1047	3/4"	4	#12	8-CTR-0101-LPNL	SOLIDS SCREENING AREA RIO PANEL 8-PST-0011-RIO	120V POWER
		1	#12			GROUND
P1048	3/4"	2	#12	8-CTR-0101-LPNL	LOCAL ALARM STATION 8-GBT-0022-PNL	120V POWER
		1	#12			GROUND
P1049	-	-	-	-	NOT USED	-
		-	-			-
P1050	3/4"	2	#12	8-CTR-0101-LPNL	8-CTR-1011-LAS	120V POWER
		1	#12			GROUND
P1051	3/4"	2	#12	8-CTR-0101-LPNL	TSH-1412	120V POWER
		1	#12			GROUND
P1052	3/4"	2	#12	8-CTR-0101-LPNL	TSH-1422	120V POWER
		1	#12			GROUND
P1053	3/4"	2	#10	8-CTR-0101-LPNL	GBT NO. 1 LOCAL CONTROL PANEL	120V POWER
		1	#12			GROUND
P1054	3/4"	2	#10	8-CTR-0101-LPNL	GBT NO. 2 LOCAL CONTROL PANEL	120V POWER
		1	#12			GROUND
P1055	3/4"	2	#12	8-CTR-0101-LPNL	8-GBT-0011-PNL PLC CABINET	120V POWER
		1	#12			GROUND
P1056	3/4"	2	#8	8-CTR-0101-LPNL	FIBER OPTIC PATCH PANEL 8-GBT-0011-NIP	120V POWER
		1	#10			GROUND

GENERAL NOTES:

1. FOR SYMBOLS AND ABBREVIATIONS, SEE DRAWING E-1.
2. FOR CONSTRUCTION SEQUENCE, SEE DRAWING E-2.
3. FOR EQUIPMENT FED THROUGH VFDs, PROVIDE VFD CABLES BETWEEN EQUIPMENT AND VFD.

THE DRAWINGS IN THIS SET ARE RECORD DRAWINGS. THEY ARE CONSTRUCTION CONTRACT DRAWINGS WHICH HAVE BEEN REVISED BASED ON AVAILABLE FIELD INFORMATION RECORDED BY OTHERS DURING CONSTRUCTION OF THIS CONTRACT. THERE HAS BEEN NO VERIFICATION OF DIMENSIONS SHOWN ON THE CONSTRUCTION DRAWINGS OR THE ACCURACY/COMPLETENESS OF THE FIELD INFORMATION RECEIVED.

SIGNATURE _____ DATE 2/7/2020

SHAH & ASSOCIATES

HDR

AS-BUILT REPLACEMENT SHEET

PROFESSIONAL CERTIFICATION
THIS DRAWING WAS ORIGINALLY APPROVED FOR CONSTRUCTION AND SEALED BY KANAIYALAL R. SHAH, A REGISTERED PROFESSIONAL ENGINEER IN THE STATE OF MARYLAND, NO. 11084.

NOTICE TO CONTRACTORS
- PROJECT ELEVATIONS ARE BASED ON NAVD88 AND HOWARD COUNTY'S BENCHMARK SYSTEM
- PREVIOUS PROJECTS USED OTHER DATUMS
- APPLY THE FOLLOWING CONVERSIONS WHEN USING PREVIOUS CONTRACT DRAWINGS:
  - ADDITION NO. 6: SUBTRACT 0.80 FT
  - PRIOR ADDITIONS: SUBTRACT 1.04 FT

DEPARTMENT OF PUBLIC WORKS
HOWARD COUNTY, MARYLAND

CHIEF, BUREAU OF UTILITIES DATE

DES: SR
DRN: XMZ
CHK: KRS
DATE: 10/2016

DATE	REV	DESCRIPTION
07/2019		RECORD DRAWING

ELECTRICAL

CABLE AND CONDUIT SCHEDULE - I

LITTLE PATUXENT WATER RECLAMATION PLANT
8TH ADDITION
BIOSOLIDS PROCESSING FACILITIES – PHASE I

CAPITAL PROJECT S-6295
CONTRACT NO. 24-4935

ELECTION DISTRICT NO. 6
HOWARD COUNTY, MARYLAND

SCALE AS SHOWN

SHEET 402 OF 463

E-905

CABLE AND CONDUIT SCHEDULE

CONDUIT		CABLE		FROM	TO	REMARKS
FEEDER NUMBER	SIZE	QTY	SIZE			
P1201	1"	3	#12	EXISTING 8-MCC-1500-MCC	DILUTION WATER PUMP NO. 1 8-PST-2813-PMP	480V POWER
		1	#12			GROUND
P1202	1"	3	#12	EXISTING 8-MCC-1500-MCC	DILUTION WATER PUMP NO. 2 8-PST-2823-PMP	480V POWER
		1	#12			GROUND
P1203	1"	3	#12	EXISTING 8-MCC-1500-MCC	DILUTION WATER PUMP NO. 3 8-PST-2833-PMP	480V POWER
		1	#12			GROUND
P1204	3/4"	2	#12	8-CTR-0101-LPNL	FSH-2811	120V POWER
		1	#12			GROUND
P1205	-	-	-	-	NOT USED	-
		-	-			-
P1206	3/4"	3	#8	EXISTING 8-MCC-1500-MCC	RECIRCULATION PUMP STARTER PANEL 8-POL-2811-PNL	480V POWER
		1	#10			GROUND
P1207	-	-	-	-	NOT USED	-
		-	-			-
P1211	3/4"	2	#12	8-CTR-0101-LPNL	LIT IN FILTER BUILDING	120V POWER
		1	#12			GROUND
P1212	3/4"	2	#12	8-CTR-0101-LPNL	8-PST-2812-FIT	120V POWER
		1	#12			GROUND
P1213	3/4"	2	#12	8-CTR-0101-LPNL	8-PST-2822-FIT	120V POWER
		1	#12			GROUND
P1214	3/4"	2	#12	8-CTR-0101-LPNL	POLYMER FEED SYSTEM PANEL NO.1 8-POL-2612-PNL	120V POWER
		1	#12			GROUND
P1215	3/4"	2	#12	8-CTR-0101-LPNL	POLYMER FEED SYSTEM PANEL NO.2 8-POL-2622-PNL	120V POWER
		1	#12			GROUND
P1216	3/4"	2	#12	8-CTR-0101-LPNL	POLYMER FILL PANEL 8-CTR-1811-LCP (1)	120V POWER
		1	#12			GROUND
P1217	3/4"	2	#12	8-CTR-0101-LPNL	FSH-2611	120V POWER
		1	#12			GROUND
P1218	3/4"	2	#12	8-CTR-0101-LPNL	LOCAL ALARM STATION 8-PST-0022-PNL	120V POWER
		1	#12			GROUND
P1219	3/4"	2	#12	8-CTR-0101-LPNL	8-DIG-2611-FIT	120V POWER
		1	#12			GROUND
P1220	3/4"	2	#12	8-CTR-0101-LPNL	8-POL-2612-FIT	120V POWER
		1	#12			GROUND
P1221	3/4"	2	#12	8-CTR-0101-LPNL	8-POL-2622-FIT	120V POWER
		1	#12			GROUND
P1230	1-1/2"	3	#2/0	EXISTING 8-MCC-1500-MCC	8-MCC-1501-ATS N1	480V POWER
		1	#6			GROUND
P1231	1-1/2"	3	#2/0	EXISTING 8-MCC-1500-MCC	8-MCC-1501-ATS N2	480V POWER
		1	#6			GROUND
P1232	1-1/2"	3	#2/0	8-MCC-1501-ATS	8-CTR-0101-DPNL	480V POWER
		1	#6			GROUND
P1233	1-1/4"	3	#2	8-CTR-0101-DPNL	8-MCC-1501-XFR	480V POWER
		1	#8			GROUND
P1234	2"	4	#3/0	8-MCC-1501-XFR	8-CTR-0101-LPNL	208V POWER
		1	#6			GROUND

CABLE AND CONDUIT SCHEDULE

CONDUIT		CABLE		FROM	TO	REMARKS
FEEDER NUMBER	SIZE	QTY	SIZE			
P2001	1-1/2"	3	#10	8-MCC-3100-MCC	CENTRATE FEED PUMP NO. 1 8-DAM-1213-PMP	480V POWER
		1	#12			GROUND
P2002	1-1/2"	3	#10	8-MCC-3100-MCC	CENTRATE FEED PUMP NO. 2 8-DAM-1223-PMP	480V POWER
		1	#12			GROUND
P2003	1-1/2"	3	#10	8-MCC-3100-MCC	CENTRATE FEED PUMP NO. 3 8-DAM-1233-PMP	480V POWER
		1	#12			GROUND
P2004	2"	3	#2	8-MCC-3100-MCC	DEAMMONIFICATION BLOWER NO. 1 8-DAM-1613-BLW	480V POWER
		1	#6			GROUND
P2005	2"	3	#2	8-MCC-3100-MCC	DEAMMONIFICATION BLOWER NO. 2 8-DAM-1623-BLW	480V POWER
		1	#6			GROUND
P2006	2"	3	#2	8-MCC-3100-MCC	DEAMMONIFICATION BLOWER NO. 3 8-DAM-1633-BLW	480V POWER
		1	#6			GROUND
P2007	1"	3	#4	8-MCC-3100-MCC	AIR COMPRESSOR NO.1 8-THS-1212-AIR	480V POWER
		1	#8			GROUND
P2008	1"	3	#4	8-MCC-3100-MCC	AIR COMPRESSOR NO.2 8-THS-1222-AC	480V POWER
		1	#8			GROUND
P2009	1-1/2"	3	#10	8-MCC-3100-MCC	GRAVITY THICKENER TRANSFER PUMP NO.1 8-PST-2614-PMP	480V POWER
		1	#12			GROUND
P2010	1-1/2"	3	#10	8-MCC-3100-MCC	GRAVITY THICKENER TRANSFER PUMP NO.2 8-PST-2624-PMP	480V POWER
		1	#12			GROUND
P2011	1-1/2"	3	#10	8-MCC-3100-MCC	GRAVITY THICKENER TRANSFER PUMP NO.3 8-PST-2634-PMP	480V POWER
		1	#12			GROUND
P2012	1-1/2"	3	#10	8-MCC-3100-MCC	GRAVITY THICKENER TRANSFER PUMP NO.4 8-PST-2644-PMP	480V POWER
		1	#12			GROUND
P2013	1-1/2"	3	#6	8-MCC-3100-MCC	DIGESTED SOLIDS MIXING PUMP NO. 1 8-DSS-2012-PMP	480V POWER
		1	#10			GROUND
P2014	1-1/2"	3	#6	8-MCC-3100-MCC	DIGESTED SOLIDS MIXING PUMP NO. 2 8-DSS-2022-PMP	480V POWER
		1	#10			GROUND
P2015	1-1/2"	3	#4	8-MCC-3100-MCC	CENTRIFUGE FEED PUMP NO. 1 8-DSS-2213-PMP	480V POWER
		1	#8			GROUND
P2016	1-1/2"	3	#4	8-MCC-3100-MCC	CENTRIFUGE FEED PUMP NO. 2 8-DSS-2223-PMP	480V POWER
		1	#8			GROUND
P2017	1-1/2"	3	#4	8-MCC-3100-MCC	CENTRIFUGE FEED PUMP NO. 3 8-DSS-2233-PMP	480V POWER
		1	#8			GROUND
P2018 A&B	2"	3	#4/0	8-MCC-3100-MCC	8-MCC-3101-ATS N1	480V POWER
		1	#3			GROUND
P2019 A&B	2"	3	#4/0	8-MCC-3100-MCC	8-MCC-3101-ATS N2	480V POWER
		1	#3			GROUND
P2020	3/4"	3	#8	8-MCC-3100-MCC	HEAT PUMP UNIT 1 8-MCC-9912-HTP	480V POWER
		1	#10			GROUND
P2021	3/4"	3	#8	8-MCC-3100-MCC	HEAT PUMP UNIT 2 8-MCC-9922-HTP	480V POWER
		1	#10			GROUND
P2022 A&B	2"	3	#4/0	8-MCC-3101-ATS	8-MCC-3101-DPNL	480V POWER
		1	#3			GROUND
P2023	1"	3	#4	8-MCC-3101-DPNL	45KVA TRANSFORMER LP-31	480V POWER
		1	#8			GROUND
P2024	2"	4	#1/0	45KVA TRANSFORMER LP-31	PANEL LP-31	208V POWER
		1	#6			GROUND
P2025	1-1/2"	3	#8	8-MCC-3100-MCC	DIGESTER FEED PUMP NO. 1 8-THS-1412-PMP	480V POWER
		1	#10			GROUND

GENERAL NOTES:

1. FOR SYMBOLS AND ABBREVIATIONS, SEE DRAWING E-1.
2. FOR CONSTRUCTION SEQUENCE, SEE DRAWING E-2.
3. FOR EQUIPMENT FED THROUGH VFDs, PROVIDE VFD CABLES BETWEEN EQUIPMENT AND VFD.

DRAWING NOTES:

(1) FOR POLYMER FILL PANEL 8-CTR-1811-LCP LOCATION, SEE DRAWINGS M-101 & M-125.

THE DRAWINGS IN THIS SET ARE RECORD DRAWINGS. THEY ARE CONSTRUCTION CONTRACT DRAWINGS WHICH HAVE BEEN REVISED BASED ON AVAILABLE FIELD INFORMATION RECORDED BY OTHERS DURING CONSTRUCTION OF THIS CONTRACT. THERE HAS BEEN NO VERIFICATION OF DIMENSIONS SHOWN ON THE CONSTRUCTION DRAWINGS OR THE ACCURACY/COMPLETENESS OF THE FIELD INFORMATION RECEIVED.

SIGNATURE — DATE 2/7/2020

SHAH & ASSOCIATES

AS-BUILT REPLACEMENT SHEET

PROFESSIONAL CERTIFICATION
THIS DRAWING WAS ORIGINALLY APPROVED FOR CONSTRUCTION AND SEALED BY KANAIYALAL R. SHAH, A REGISTERED PROFESSIONAL ENGINEER IN THE STATE OF MARYLAND, NO. 11084.

NOTICE TO CONTRACTORS
- PROJECT ELEVATIONS ARE BASED ON NAVD88 AND HOWARD COUNTY'S BENCHMARK SYSTEM
- PREVIOUS PROJECTS USED OTHER DATUMS
- APPLY THE FOLLOWING CONVERSIONS WHEN USING PREVIOUS CONTRACT DRAWINGS:
  - ADDITION NO. 6: SUBTRACT 0.80 FT
  - PRIOR ADDITIONS: SUBTRACT 1.04 FT

DEPARTMENT OF PUBLIC WORKS
HOWARD COUNTY, MARYLAND

CHIEF, BUREAU OF UTILITIES — DATE

DES: SR
DRN: AJS
CHK: KRS
DATE: 10/2016

DATE	REV	DESCRIPTION
07/2019		RECORD DRAWING

ELECTRICAL

CABLE AND CONDUIT SCHEDULE - II

LITTLE PATUXENT WATER RECLAMATION PLANT
8TH ADDITION
BIOSOLIDS PROCESSING FACILITIES – PHASE I

CAPITAL PROJECT S-6295
CONTRACT NO. 24-4935

ELECTION DISTRICT NO. 6
HOWARD COUNTY, MARYLAND

SCALE AS SHOWN

SHEET 403 OF 463

E-906

GENERAL NOTES:

1. FOR SYMBOLS AND ABBREVIATIONS, SEE DRAWING E-1.
2. FOR CONSTRUCTION SEQUENCE, SEE DRAWING E-2.
3. FOR EQUIPMENT FED THROUGH VFDs, PROVIDE VFD CABLES BETWEEN EQUIPMENT AND VFD.

CABLE AND CONDUIT SCHEDULE

CONDUIT		CABLE		FROM	T0	REMARKS
FEEDER NUMBER	SIZE	QTY	SIZE			
P1235 THRU P1239	-	-	-	NOT USED	-	-
		-	-			-
P1240	1-1/4"	3	#4	EXISTING MCC-23	DEWATERING POLYMER SYSTEM CONTROL PANEL; 8-POL-1811-PNL	480V POWER
		1	#8			GROUND
P1241	3/4"	3	#12	DEWATERING POLYMER SYSTEM CONTROL PANEL 8-POL-1811-PNL	NEAT POLYMER METERING PUMP NO.1, 8-POL-1812-PMP	480V POWER
		1	#12			GROUND
P1242	3/4"	3	#12	DEWATERING POLYMER SYSTEM CONTROL PANEL 8-POL-1811-PNL	NEAT POLYMER METERING PUMP NO.2, 8-POL-1822-PMP	480V POWER
		1	#12			GROUND
P1243	3/4"	3	#12	DEWATERING POLYMER SYSTEM CONTROL PANEL 8-POL-1811-PNL	ACTIVATION CHAMBER MIXER, 8-POL-1812-POL	480V POWER
		1	#12			GROUND
P1244	3/4"	3	#12	DEWATERING POLYMER SYSTEM CONTROL PANEL 8-POL-1811-PNL	ACTIVATION CHAMBER MIXER, 8-POL-1822-POL	480V POWER
		1	#12			GROUND
P1245	3/4"	3	#12	DEWATERING POLYMER SYSTEM CONTROL PANEL 8-POL-1811-PNL	POLYMER SOLUTION METERING PUMP NO.1, 8-POL-2013-PMP	480V POWER
		1	#12			GROUND
P1246	-	-	-	-	NOT USED	-
		-	-			-
P1247	3/4"	3	#12	DEWATERING POLYMER SYSTEM CONTROL PANEL 8-POL-1811-PNL	POLYMER SOLUTION METERING PUMP NO.3, 8-POL-2033-PMP	480V POWER
		1	#12			GROUND
P1248	3/4"	3	#12	DEWATERING POLYMER SYSTEM CONTROL PANEL 8-POL-1811-PNL	8-POL-2211-MOV	480V POWER
		1	#12			GROUND
P1249	3/4"	3	#12	DEWATERING POLYMER SYSTEM CONTROL PANEL 8-POL-1811-PNL	POLYMER RECIRCULATION PUMP NO. 2, 8-POL-1811-PMP	480V POWER
		1	#12			GROUND
P1250	3/4"	3	#12	DEWATERING POLYMER SYSTEM CONTROL PANEL 8-POL-1811-PNL	8-POL-1812-MOV	480V POWER
		1	#12			GROUND
P1251	3/4"	3	#12	DEWATERING POLYMER SYSTEM CONTROL PANEL 8-POL-1811-PNL	8-POL-1822-MOV	480V POWER
		1	#12			GROUND
P1252	3/4"	2	#12	DEWATERING POLYMER SYSTEM CONTROL PANEL 8-POL-1811-PNL	FIT-1811	120V POWER
		1	#12			GROUND
P1253	3/4"	2	#12	DEWATERING POLYMER SYSTEM CONTROL PANEL 8-POL-1811-PNL	FIT-2013	120V POWER
		1	#12			GROUND
P1254	3/4"	2	#12	DEWATERING POLYMER SYSTEM CONTROL PANEL 8-POL-1811-PNL	FIT-2023	120V POWER
		1	#12			GROUND
P1255	3/4"	2	#12	DEWATERING POLYMER SYSTEM CONTROL PANEL 8-POL-1811-PNL	FIT-2033	120V POWER
		1	#12			GROUND

CABLE AND CONDUIT SCHEDULE

CONDUIT		CABLE		FROM	TO	REMARKS
FEEDER NUMBER	SIZE	QTY	SIZE			
P2026	1-1/2"	3	#8	8-MCC-3100-MCC	DIGESTER FEED PUMP NO.2 8-THS-1422-PMP	480V POWER
		1	#10			GROUND
P2027	3/4"	3	#12	8-MCC-3102-DPNL	CENTRATE FEED THROTTLING VALVE NO.1 8-DAM-1256-MOV	480V POWER
		1	#12			GROUND
P2028	3/4"	3	#12	8-MCC-3102-DPNL	CENTRATE FEED THROTTLING VALVE NO.2 8-DAM-1266-MOV	480V POWER
		1	#12			GROUND
P2029	3/4"	3	#12	8-MCC-3102-DPNL	DEAMMONIFICATION SWING BLOWER CONTROL VALVE NO.1 8-DAM-1612-MOV	480V POWER
		1	#12			GROUND
P2030	3/4"	3	#12	8-MCC-3102-DPNL	DEAMMONIFICATION SWING BLOWER CONTROL VALVE NO.2 8-DAM-1622-MOV	480V POWER
		1	#12			GROUND
P2031	3/4"	3	#12	8-MCC-3102-DPNL	DEAMMONIFICATION HW SUPPLY VALVE 1	480V POWER
		1	#12			GROUND
P2032	3/4"	3	#12	8-MCC-3102-DPNL	DEAMMONIFICATION HW SUPPLY VALVE 2	480V POWER
		1	#12			GROUND
P2033	3/4"	3	#12	8-MCC-3102-DPNL	CENTRATE SWING PUMP VALVE NO.1 8-DAM-1236-MOV	480V POWER
		1	#12			GROUND
P2034	3/4"	3	#12	8-MCC-3102-DPNL	CENTRATE SWING PUMP VALVE NO.2 8-DAM-1246-MOV	480V POWER
		1	#12			GROUND
P2035	3/4"	3	#12	8-MCC-3102-DPNL	SCREENED PRIMARY SLUDGE MODULATING VALVE NO.2 8-PST-1612-MOV	480V POWER
		1	#12			GROUND
P2036	3/4"	3	#12	8-MCC-3101-DPNL	SCREENED PRIMARY SLUDGE MODULATING VALVE NO.2 8-PST-1622-MOV	480V POWER
		1	#12			GROUND
P2037				NOT USED		
P2038				NOT USED		
P2039				NOT USED		
P2040	3"	3	#250 KCMIL	8-MCC-3100-MCC	20-MAU-01	480V POWER
		1	#4			GROUND
P2041	3/4"	3	#8	8-MCC-3100-MCC	25KVA XFMR AND PANEL LC2 PIPE GALLERY	480V POWER
		1	#10			GROUND
P2042	2"	3	#2/0	8-MCC-3100-MCC	75KVA XFMR AND PANEL LC PIPE GALLERY	480V POWER
		1	#6			GROUND
P2043	3/4"	3	#12	8-MCC-3100-MCC	PIPE GALLERY FAN 8-905-F	480V POWER
		1	#12			GROUND
P2050	3/4"	2	#10	8-MCC-3102-LPNL	VALVE CONTROL PANEL 8-DAM-1011-PNL	120V POWER
		1	#12			GROUND
P2051	3/4"	2	#12	8-MCC-3102-LPNL	8-PST-1612-FIT	120V POWER
		1	#12			GROUND
P2052	3/4"	2	#12	8-MCC-3102-LPNL	8-PST-1622-FIT	120V POWER
		1	#12			GROUND
P2053	3/4"	2	#12	8-MCC-3102-LPNL	8-PST-2612-FIT	120V POWER
		1	#12			GROUND
P2054	3/4"	2	#12	8-MCC-3102-LPNL	8-PST-2622-FIT	120V POWER
		1	#12			GROUND
P2055	3/4"	2	#10	8-MCC-3102-LPNL	DEAMMONIFICATION SYSTEM PLC CONTROL PANEL 8-DAM-0012-PNL	120V POWER
		1	#12			GROUND
P2056	3/4"	4	#12	8-MCC-3102-LPNL	SOLIDS PIPE GALLERY RIO PANEL	120V POWER
		1	#12			GROUND
P2057	3/4"	2	#12	8-MCC-3102-LPNL	8-PST-2614-TSH	120V POWER
		1	#12			GROUND

CABLE AND CONDUIT SCHEDULE

CONDUIT		CABLE		FROM	TO	REMARKS
FEEDER NUMBER	SIZE	QTY	SIZE			
P2058	3/4"	2	#12	8-MCC-3102-LPNL	8-PST-2624-TSH	120V POWER
		1	#12			GROUND
P2059	3/4"	2	#12	8-MCC-3102-LPNL	8-PST-2634-TSH	120V POWER
		1	#12			GROUND
P2060	3/4"	2	#12	8-MCC-3102-LPNL	8-PST-2644-TSH	120V POWER
		1	#12			GROUND
P2061	3/4"	2	#12	8-MCC-3102-LPNL	8-TSH-1412-TSH	120V POWER
		1	#12			GROUND
P2062	3/4"	2	#12	8-MCC-3102-LPNL	8-TSH-1422-TSH	120V POWER
		1	#12			GROUND
P2063	3/4"	2	#12	8-MCC-3102-LPNL	8-DSS-2213-TSH	120V POWER
		1	#12			GROUND
P2064	3/4"	2	#12	8-MCC-3102-LPNL	8-DSS-2223-TSH	120V POWER
		1	#12			GROUND
P2065	3/4"	2	#12	8-MCC-3102-LPNL	8-DSS-2233-TSH	120V POWER
		1	#12			GROUND
P2066	3/4"	2	#12	8-MCC-3102-LPNL	FIT-8-401M	120V POWER
		1	#12			GROUND
P2067	3/4"	2	#12	8-MCC-3102-LPNL	FIT-8-402M	120V POWER
		1	#12			GROUND
P2068	3/4"	2	#12	8-MCC-3102-LPNL	FIT-8-403M	120V POWER
		1	#12			GROUND
P2069	3/4"	2	#12	8-MCC-3102-LPNL	8-MCC-3100-MCC ENCLOSURE RECEPTACLE INDOOR	120V POWER
		1	#12			GROUND
P2070	3/4"	2	#12	8-MCC-3102-LPNL	8-MCC-3100-MCC ENCLOSURE RECEPTACLE OUTDOOR	120V POWER
		1	#12			GROUND
P2071	3/4"	2	#12	8-MCC-3102-LPNL	8-MCC-3100-MCC ENCLOSURE LIGHTING INDOOR	120V POWER
		1	#12			GROUND
P2072	3/4"	2	#12	8-MCC-3102-LPNL	8-MCC-3100-MCC ENCLOSURE LIGHTING INDOOR	120V POWER
		1	#12			GROUND
P2073	3/4"	2	#12	8-MCC-3102-LPNL	8-MCC-3100-MCC ENCLOSURE LIGHTING OUTDOOR	120V POWER
		1	#12			GROUND
P2074	3/4"	2	#12	8-MCC-3102-LPNL	8-MCC-3100-MCC ROOM A/C EVAPORATOR	120V POWER
		1	#12			GROUND
P2075	3/4"	2	#12	8-MCC-3102-LPNL	8-MCC-3100-MCC ROOM A/C EVAPORATOR	120V POWER
		1	#12			GROUND
P2076	3/4"	2	#12	8-MCC-3102-LPNL	8-MCC-3100-MCC ROOM A/C EVAPORATOR	120V POWER
		1	#12			GROUND
P2077	3/4"	2	#12	8-MCC-3102-LPNL	8-MCC-3100-MCC ROOM A/C EVAPORATOR	120V POWER
		1	#12			GROUND
P2078	3/4"	2	#12	8-MCC-3102-LPNL	8-MCC-3100-MCC ROOM A/C EVAPORATOR	120V POWER
		1	#12			GROUND
P2079	3/4"	2	#12	8-MCC-3102-LPNL	8-MCC-3100-MCC ROOM A/C EVAPORATOR	120V POWER
		1	#12			GROUND
P2080	3/4"	2	#12	8-MCC-3102-LPNL	DIGESTER BLDG AREA PLC 8-DIG-0011-LCP	120V POWER
		1	#12			GROUND
P2081	3/4"	2	#12	8-MCC-3102-LPNL	COMPRESSOR CONTROL PANEL 1 8-THS-1212-PNL	120V POWER
		1	#12			GROUND
P2082	3/4"	2	#12	8-MCC-3102-LPNL	COMPRESSOR CONTROL PANEL 2 8-THS-1222-PNL	120V POWER
		1	#12			GROUND
P2083	3/4"	2	#12	8-MCC-3102-LPNL	8-DIG-0011-NIP	120V POWER
		1	#12			GROUND

GENERAL NOTES:

1. FOR SYMBOLS AND ABBREVIATIONS, SEE DRAWING E-1.
2. FOR CONSTRUCTION SEQUENCE, SEE DRAWING E-2.
3. FOR EQUIPMENT FED THROUGH VFDs, PROVIDE VFD CABLES BETWEEN EQUIPMENT AND VFD.

THE DRAWINGS IN THIS SET ARE RECORD DRAWINGS. THEY ARE CONSTRUCTION CONTRACT DRAWINGS WHICH HAVE BEEN REVISED BASED ON AVAILABLE FIELD INFORMATION RECORDED BY OTHERS DURING CONSTRUCTION OF THIS CONTRACT. THERE HAS BEEN NO VERIFICATION OF DIMENSIONS SHOWN ON THE CONSTRUCTION DRAWINGS OR THE ACCURACY/COMPLETENESS OF THE FIELD INFORMATION RECEIVED.

SIGNATURE _____ DATE 2/7/2020

SHAH & ASSOCIATES

AS-BUILT REPLACEMENT SHEET

PROFESSIONAL CERTIFICATION
THIS DRAWING WAS ORIGINALLY APPROVED FOR CONSTRUCTION AND SEALED BY KANAIYALAL R. SHAH, A REGISTERED PROFESSIONAL ENGINEER IN THE STATE OF MARYLAND, NO. 11084.

NOTICE TO CONTRACTORS
- PROJECT ELEVATIONS ARE BASED ON NAVD88 AND HOWARD COUNTY'S BENCHMARK SYSTEM
- PREVIOUS PROJECTS USED OTHER DATUMS
- APPLY THE FOLLOWING CONVERSIONS WHEN USING PREVIOUS CONTRACT DRAWINGS:
  - ADDITION NO. 6: SUBTRACT 0.80 FT
  - PRIOR ADDITIONS: SUBTRACT 1.04 FT

DEPARTMENT OF PUBLIC WORKS
HOWARD COUNTY, MARYLAND

CHIEF, BUREAU OF UTILITIES DATE

DES: SR
DRN: XMZ
CHK: KRS
DATE: 10/2016

DATE	REV	DESCRIPTION
07/2019		RECORD DRAWING

ELECTRICAL

CABLE AND CONDUIT SCHEDULE - III

LITTLE PATUXENT WATER RECLAMATION PLANT
8TH ADDITION
BIOSOLIDS PROCESSING FACILITIES – PHASE I

CAPITAL PROJECT S-6295
CONTRACT NO. 24-4935

ELECTION DISTRICT NO. 6
HOWARD COUNTY, MARYLAND

SCALE AS SHOWN

SHEET 405 OF 463

E-907

CABLE AND CONDUIT SCHEDULE

CONDUIT		CABLE		FROM	TO	REMARKS
FEEDER NUMBER	SIZE	QTY	SIZE			
P2201	1"	3	#12	8-MCC-3100-MCC	GRAVITY THICKENER NO. 2 DRIVE 8-PST-1622-VFD	480V POWER
		1	#12			GROUND
P2221	3/4"	3	#12	8-MCC-3100-MCC	DIGESTED SOLIDS MIXER NO. 1 8-DSS-1814-MXR	480V POWER
		1	#12			GROUND
P2222	3/4"	3	#12	8-MCC-3100-MCC	DIGESTED SOLIDS MIXER NO. 2 8-DSS-1824-MXR	480V POWER
		1	#12			GROUND
P2223	3/4"	3	#12	8-MCC-3100-MCC	DIGESTED SOLIDS MIXER NO. 3 8-DSS-1834-MXR	480V POWER
		1	#12			GROUND
P2224	3/4"	3	#12	8-MCC-3100-MCC	DIGESTED SOLIDS MIXER NO. 4 8-DSS-1844-MXR	480V POWER
		1	#12			GROUND
P2230	3/4"	2	#12	8-MCC-3102-LPNL	8-THS-1011-PNL	120V POWER
		1	#12			GROUND
P2401	3/4"	3	#12	EXISTING 8-MCC-1500-MCC	EXISTING PRIMARY SOLIDS SCREEN #1 VIA LCP 8-PST-1012-SCRN	480V POWER
		1	#12			GROUND
P2402	3/4"	3	#12	EXISTING 8-MCC-1500-MCC	PRIMARY SOLIDS SCREEN #2 VIA LCP 8-PST-1022-SCRN	480V POWER
		1	#12			GROUND
P2403	3/4"	3	#12	EXISTING 8-MCC-1500-MCC	EX. GRINDER VIA EX. CONTROL PANEL	480V POWER
		1	#12			GROUND
P2404	3/4"	3	#12	EXISTING 8-MCC-1500-MCC	COMPRESSOR NO.1 8-PST-1412-AIR	480V POWER
		1	#12			GROUND
P2405	3/4"	3	#12	EXISTING 8-MCC-1500-MCC	COMPRESSOR NO.2 8-PST-1422-AIR	480V POWER
		1	#12			GROUND
P2406	2-1/2"	3	#2/0	EXISTING 8-MCC-1500-MCC	8-DAM-1811-WHT	480V POWER
		1	#6			GROUND
P2407	3/4"	3	#8	EXISTING 8-MCC-1500-MCC	EYEWASH WATER HEATER 8-POL-2611-WHT	480V POWER
		1	#10			GROUND
P2419	3/4"	2	#12	8-CTR-0101-LPNL	8-DAM-2011-PMP	120V POWER
		1	#12			GROUND
P2420	3/4"	2	#12	8-CTR-0101-LPNL	SODIUM HYDROXIDE METERING PUMP NO.1 8-DAM-2013-PMP	120V POWER
		1	#12			GROUND
P2421	3/4"	2	#12	8-CTR-0101-LPNL	SODIUM HYDROXIDE METERING PUMP NO.2 8-DAM-2023-PMP	120V POWER
		1	#12			GROUND
P2422	3/4"	2	#12	8-CTR-0101-LPNL	SODIUM HYDROXIDE METERING PUMP NO.3 8-DAM-2033-PMP	120V POWER
		1	#12			GROUND
P2423	3/4"	2	#12	8-CTR-0101-LPNL	8-DAM-2011-LIT	120V POWER
		1	#12			GROUND
P2424	3/4"	2	#12	8-CTR-0101-LPNL	FSH-2011	120V POWER
		1	#12			GROUND

CABLE AND CONDUIT SCHEDULE

CONDUIT		CABLE		FROM	TO	REMARKS
FEEDER NUMBER	SIZE	QTY	SIZE			
P2450	3/4"	2	#10	8-CTR-0101-LPNL	PRIMARY SLUDGE SCREEN FIT	120V POWER
		1	#10			GROUND
P2451	3/4"	2	#10	8-CTR-0101-LPNL	PRIMARY SLUDGE SCREEN HOPPER LIT	120V POWER
		1	#10			GROUND
P2452	3/4"	2	#10	8-CTR-0101-LPNL	PNEUMATIC CONTROL PANEL COMPRESSOR NO. 1	120V POWER
		1	#10			GROUND
P2453	3/4"	2	#10	8-CTR-0101-LPNL	PNEUMATIC CONTROL PANEL COMPRESSOR NO. 2	120V POWER
		1	#10			GROUND
P2454	3/4"	2	#10	8-CTR-0101-LPNL	SCREENING AREA LOCAL ALARM STATION 8-PST-0012-PNL	120V POWER
		1	#10			GROUND
P2455	3/4"	2	#10	8-CTR-0101-LPNL	8-PST-1211-LIT	120V POWER
		1	#10			GROUND
P2410	2 1/2"	3	#2/0	EXISTING 8-MCC-1500-MCC	CONVEYOR MASTER CONTROL PANEL 8-CTR-3011-PNL	480V POWER
		1	#6			GROUND
P2411	3/4"	3	#10	CONVEYOR MASTER CONTROL PANEL	SCREW CONVEYOR 3012 DRIVE	480V POWER
		1	#12			GROUND
P2412	3/4"	3	#10	CONVEYOR MASTER CONTROL PANEL	SCREW CONVEYOR 3022 DRIVE	480V POWER
		1	#12			GROUND
P2413	3/4"	3	#12	CONVEYOR MASTER CONTROL PANEL	DIVERTER GATE NO. 1 8-DEW-3013-DIV	480V POWER
		1	#12			GROUND
P2414	3/4"	3	#12	CONVEYOR MASTER CONTROL PANEL	DIVERTER GATE NO. 2 8-DEW-3023-DIV	480V POWER
		1	#12			GROUND
P2415	3/4"	3	#12	CONVEYOR MASTER CONTROL PANEL	DIVERTER GATE NO. 3 8-DEW-3033-DIV	480V POWER
		1	#12			GROUND
P2460	3/4"	2	#12	CONVEYOR MASTER CONTROL PANEL	SSA 3012	120V POWER
		1	#12			GROUND
P2461	3/4"	2	#12	CONVEYOR MASTER CONTROL PANEL	SSA 3022	120V POWER
		1	#12			GROUND

GENERAL NOTES:

1. FOR SYMBOLS AND ABBREVIATIONS, SEE DRAWING E-1.
2. FOR CONSTRUCTION SEQUENCE, SEE DRAWING E-2.
3. CONTRACTOR TO RUN CONDUIT TO SOUTH EDGE OF DIGESTER BUILDING FOR FUTURE H2S REMOVAL SYSTEM.
4. FOR EQUIPMENT FED THROUGH VFDs, PROVIDE VFD CABLES BETWEEN EQUIPMENT AND VFD.

THE DRAWINGS IN THIS SET ARE RECORD DRAWINGS. THEY ARE CONSTRUCTION CONTRACT DRAWINGS WHICH HAVE BEEN REVISED BASED ON AVAILABLE FIELD INFORMATION RECORDED BY OTHERS DURING CONSTRUCTION OF THIS CONTRACT. THERE HAS BEEN NO VERIFICATION OF DIMENSIONS SHOWN ON THE CONSTRUCTION DRAWINGS OR THE ACCURACY/COMPLETENESS OF THE FIELD INFORMATION RECEIVED.

SIGNATURE _____ DATE 2/7/2020

SHAH & ASSOCIATES

AS-BUILT REPLACEMENT SHEET

PROFESSIONAL CERTIFICATION
THIS DRAWING WAS ORIGINALLY APPROVED FOR CONSTRUCTION AND SEALED BY KANAIYALAL R. SHAH, A REGISTERED PROFESSIONAL ENGINEER IN THE STATE OF MARYLAND, NO. 11084.

NOTICE TO CONTRACTORS
- PROJECT ELEVATIONS ARE BASED ON NAVD88 AND HOWARD COUNTY'S BENCHMARK SYSTEM
- PREVIOUS PROJECTS USED OTHER DATUMS
- APPLY THE FOLLOWING CONVERSIONS WHEN USING PREVIOUS CONTRACT DRAWINGS:
  - ADDITION NO. 6: SUBTRACT 0.80 FT
  - PRIOR ADDITIONS: SUBTRACT 1.04 FT

DEPARTMENT OF PUBLIC WORKS
HOWARD COUNTY, MARYLAND

CHIEF, BUREAU OF UTILITIES DATE

DES: SR
DRN: AJS
CHK: KRS
DATE: 10/2016

DATE	REV	DESCRIPTION
07/2019		RECORD DRAWING

ELECTRICAL

CABLE AND CONDUIT SCHEDULE - IV

LITTLE PATUXENT WATER RECLAMATION PLANT
8TH ADDITION
BIOSOLIDS PROCESSING FACILITIES – PHASE I

CAPITAL PROJECT S-6295
CONTRACT NO. 24-4935

ELECTION DISTRICT NO. 6
HOWARD COUNTY, MARYLAND

SCALE AS SHOWN

SHEET **406** OF **463**

E-908

CABLE AND CONDUIT SCHEDULE

CONDUIT		CABLE		FROM	TO	REMARKS
FEEDER NUMBER	SIZE	QTY	SIZE			
P2601	1-1/2"	3	#8	8-MCC-3100-MCC	DEAMMONIFICATION MIXER NO. 1 8-DAM-1412-MXR	480V POWER
		1	#12			GROUND
P2602	1-1/2"	3	#8	8-MCC-3100-MCC	DEAMMONIFICATION MIXER NO. 2 8-DAM-1422-MXR	480V POWER
		1	#12			GROUND
P2603	1"	3	#12	8-MCC-3100-MCC	GRAVITY THICKENER DRIVE NO.1 8-PST-1612-DRV	480V POWER
		1	#12			GROUND
P2604	-	-	-	-	NOT USED	-
		-	-			-
P2651	3/4"	2	#12	8-MCC-3102-LPNL	CENTRATE EQUALIZATION TANK 1 LIT	120V POWER
		1	#12			GROUND
P2652	3/4"	2	#12	8-MCC-3102-LPNL	CENTRATE EQUALIZATION TANK 2 LIT	120V POWER
		1	#12			GROUND
P2653	-	-	-	-	NOT USED	-
		-	-			-
P2654	3/4"	2	#10	8-MCC-3102-LPNL	CE TANKS 8-DAM-1012-LIT	120V POWER
		1	#10			GROUND
P2655	3/4"	2	#10	8-MCC-3102-LPNL	CE TANKS 8-DAM-1022-LIT	120V POWER
		1	#10			GROUND
P2656	3/4"	2	#10	8-MCC-3102-LPNL	8-DAM-0022-PNL	120V POWER
		1	#10			GROUND
P2657	3/4"	2	#10	8-MCC-3102-LPNL	MNFP CONTROL PANEL NO 1	120V POWER
		1	#10			GROUND
P2658	3/4"	2	#10	8-MCC-3102-LPNL	MNFP CONTROL PANEL NO 2	120V POWER
		1	#10			GROUND
P2659	3/4"	2	#10	8-MCC-3102-LPNL	8-DAM-1412-LIT	120V POWER
		1	#10			GROUND
P2660	3/4"	2	#10	8-MCC-3102-LPNL	8-DAM-1422-LIT	120V POWER
		1	#10			GROUND
P2661	3/4"	2	#12	8-MCC-3102-LPNL	DEAMMONIFICATION BLOWER NO. 1 ENCL. FAN	120V POWER
		1	#12			GROUND
P2662	3/4"	2	#12	8-MCC-3102-LPNL	DEAMMONIFICATION BLOWER NO. 2 ENCL. FAN	120V POWER
		1	#12			GROUND
P2663	3/4"	2	#12	8-MCC-3102-LPNL	DEAMMONIFICATION BLOWER NO. 3 ENCL. FAN	120V POWER
		1	#12			GROUND
P2664	3/4"	2	#12	8-MCC-3102-LPNL	CENTRATE EQ TANK1 LEVEL LIT-1012	120V POWER
		1	#12			GROUND
P2665	3/4"	2	#12	8-MCC-3102-LPNL	CENTRATE EQ TANK2 LEVEL LIT-1022	120V POWER
		1	#12			GROUND
P2666	-	-	-	-	NOT USED	-
		-	-			-
P2667	3/4"	2	#10	8-MCC-3102-LPNL	8-DAM-1212-FIT	120V POWER
		1	#10			GROUND
P2668	3/4"	2	#10	8-MCC-3102-LPNL	8-DAM-1222-FIT	120V POWER
		1	#10			GROUND
P2669	3/4"	2	#10	8-MCC-3102-LPNL	8-DAM-1412A-AIT	120V POWER
		1	#10			GROUND
P2670	3/4"	2	#10	8-MCC-3102-LPNL	8-DAM-1412B-AIT	120V POWER
		1	#10			GROUND
P2671	3/4"	2	#10	8-MCC-3102-LPNL	8-DAM-1422A-AIT	120V POWER
		1	#10			GROUND
P2672	3/4"	2	#10	8-MCC-3102-LPNL	8-DAM-1422B-AIT	120V POWER
		1	#10			GROUND
P2673	-	-	-	-	NOT USED	-
		-	-			-

CABLE AND CONDUIT SCHEDULE

CONDUIT		CABLE		FROM	TO	REMARKS
FEEDER NUMBER	SIZE	QTY	SIZE			
P3201	3/4"	3	#10	8-MCC-3100-MCC	DIGESTER RECIRCULATION PUMP NO. 1 8-DIG-1013-PMP	480V POWER
		1	#12			GROUND
P3202	3/4"	3	#10	8-MCC-3100-MCC	DIGESTER RECIRCULATION PUMP NO. 2 8-DIG-1023-PMP	480V POWER
		1	#12			GROUND
P3203	1-1/2"	3	#8	8-MCC-3100-MCC	DIGESTER RECIRCULATION PUMP NO. 3 8-DIG-1033-PMP	480V POWER
		1	#10			GROUND
P3204	2-1/2"	3	#1/0	8-MCC-3100-MCC	DIGESTER MIXING PUMP NO. 1 8-DIG-1213-PMP	480V POWER
		1	#6			GROUND
P3205	2-1/2"	3	#1/0	8-MCC-3100-MCC	DIGESTER MIXING PUMP NO. 2 8-DIG-1223-PMP	480V POWER
		1	#6			GROUND
P3206	2-1/2"	3	#1/0	8-MCC-3100-MCC	DIGESTER MIXING PUMP NO. 3 8-DIG-1233-PMP	480V POWER
		1	#6			GROUND
P3207	1-1/2"	3	#8	8-MCC-3100-MCC	ANAEROBIC DIGESTER TRANSFER PUMP NO. 1 8-DIG-1613-PMP	480V POWER
		1	#10			GROUND
P3208	1-1/2"	3	#8	8-MCC-3100-MCC	ANAEROBIC DIGESTER TRANSFER PUMP NO. 2 8-DIG-1623-PMP	480V POWER
		1	#10			GROUND
P3209	1-1/2"	3	#8	8-MCC-3100-MCC	ANAEROBIC DIGESTER TRANSFER PUMP NO. 3 8-DIG-1633-PMP	480V POWER
		1	#10			GROUND
P3210	1-1/2"	3	#8	8-MCC-3100-MCC	HOT WATER SERVICE PUMP NO. 1 8-DIG-2613-PMP	480V POWER
		1	#10			GROUND
P3211	1-1/2"	3	#8	8-MCC-3100-MCC	HOT WATER SERVICE PUMP NO. 2 8-DIG-2623-PMP	480V POWER
		1	#10			GROUND
P3212	1-1/2"	3	#8	8-MCC-3100-MCC	HOT WATER SERVICE PUMP NO. 3 8-DIG-2633-PMP	480V POWER
		1	#10			GROUND
P3213	-	-	-	-	NOT USED	-
		-	-			-
P3214	-	-	-	-	NOT USED	-
		-	-			-
P3215	3/4"	3	#8	8-MCC-3100-MCC	MAKEUP AIR UNIT 8-DIG-9911-MAU	480V POWER
		1	#10			GROUND
P3216	3/4"	3	#12	8-MCC-3100-MCC	EXHAUST FAN 1 8-DIG-9914-FAN	480V POWER
		1	#12			GROUND
P3217	3/4"	3	#12	8-MCC-3100-MCC	EXHAUST FAN 2 8-DIG-9924-FAN	480V POWER
		1	#12			GROUND
P3218	1-1/2"	3	#4	8-MCC-3100-MCC	GAS BLOWER NO.1 8-DGT-1012-BLW	480V POWER
		1	#8			GROUND
P3219	1-1/2"	3	#4	8-MCC-3100-MCC	GAS BLOWER NO.2 8-DGT-1022-BLW	480V POWER
		1	#8			GROUND
P3220	1"	3	#6	8-MCC-3100-MCC	HOT WATER BOILER NO. 1 8-DIG-2412-HWB	480V POWER
		1	#10			GROUND
P3221	1"	3	#6	8-MCC-3100-MCC	HOT WATER BOILER NO. 2 8-DIG-2422-HWB	480V POWER
		1	#10			GROUND
P3222	-	-	-	-	NOT USED	-
		-	-			-
P3223	-	-	-	-	NOT USED	-
		-	-			-
P3224	1"	3	#6	8-MCC-3100-MCC	MONORAIL HOIST 8-DIG-2411-HST	480V POWER
		1	#10			GROUND
P3225	1"	3	#4	8-MCC-3101-DPNL	8-MCC-3101-XFR	480V POWER
		1	#8			GROUND
P3226	1-1/4"	4	#2	8-MCC-3101-XFR	8-MCC-3102-LPNL	208V POWER, NEAUTRAL
		1	#8			GROUND
P3227	3/4"	3	#12	8-MCC-3101-DPNL	HOT WATER BOILER NO.1 GATE VALVE	480V POWER
		1	#12			GROUND
P3228	3/4"	3	#12	8-MCC-3101-DPNL	HOT WATER BOILER NO.2 GATE VALVE	480V POWER
		1	#12			GROUND

GENERAL NOTES:

1. FOR SYMBOLS AND ABBREVIATIONS, SEE DRAWING E-1.
2. FOR CONSTRUCTION SEQUENCE, SEE DRAWING E-2.
3. FOR EQUIPMENT FED THROUGH VFDs, PROVIDE VFD CABLES BETWEEN EQUIPMENT AND VFD.

THE DRAWINGS IN THIS SET ARE RECORD DRAWINGS. THEY ARE CONSTRUCTION CONTRACT DRAWINGS WHICH HAVE BEEN REVISED BASED ON AVAILABLE FIELD INFORMATION RECORDED BY OTHERS DURING CONSTRUCTION OF THIS CONTRACT. THERE HAS BEEN NO VERIFICATION OF DIMENSIONS SHOWN ON THE CONSTRUCTION DRAWINGS OR THE ACCURACY/COMPLETENESS OF THE FIELD INFORMATION RECEIVED.

SIGNATURE _____ DATE 2/7/2020

SHAH & ASSOCIATES

AS-BUILT REPLACEMENT SHEET

PROFESSIONAL CERTIFICATION
THIS DRAWING WAS ORIGINALLY APPROVED FOR CONSTRUCTION AND SEALED BY KANAIYALAL R. SHAH, A REGISTERED PROFESSIONAL ENGINEER IN THE STATE OF MARYLAND, NO. 11084.

NOTICE TO CONTRACTORS
- PROJECT ELEVATIONS ARE BASED ON NAVD88 AND HOWARD COUNTY'S BENCHMARK SYSTEM
- PREVIOUS PROJECTS USED OTHER DATUMS
- APPLY THE FOLLOWING CONVERSIONS WHEN USING PREVIOUS CONTRACT DRAWINGS:
  - ADDITION NO. 6: SUBTRACT 0.80 FT
  - PRIOR ADDITIONS: SUBTRACT 1.04 FT

DEPARTMENT OF PUBLIC WORKS
HOWARD COUNTY, MARYLAND

CHIEF, BUREAU OF UTILITIES DATE

DES: SR
DRN: XMZ
CHK: KRS
DATE: 10/2016

DATE	REV	DESCRIPTION
07/2019		RECORD DRAWING

ELECTRICAL

CABLE AND CONDUIT SCHEDULE - V

LITTLE PATUXENT WATER RECLAMATION PLANT
8TH ADDITION
BIOSOLIDS PROCESSING FACILITIES – PHASE I

CAPITAL PROJECT S-6295
CONTRACT NO. 24-4935

ELECTION DISTRICT NO. 6
HOWARD COUNTY, MARYLAND

SCALE AS SHOWN

SHEET 407 OF 463

E-909

CABLE AND CONDUIT SCHEDULE

CONDUIT		CABLE		FROM	TO	REMARKS
FEEDER NUMBER	SIZE	QTY	SIZE			
P3229	1-1/2"	3	#2	8-MCC-3100-MCC	GAS CHILLER CONTROL PANEL TO GLYCOL CHILLER	480V POWER
		1	#6			GROUND
P3230	3/4"	3	#12	8-DIG-0103-LPNL	8-DIG-9934-FAN	208V POWER
		1	#12			GROUND
P3231	3/4"	3	#12	8-DIG-0103-LPNL	8-DIG-9944-FAN	208V POWER
		1	#12			GROUND
P3232	-	-	-	-	NOT USED	-
		-	-			-
P3233	3/4"	3	#12	8-DIG-0101-DPNL	8-THS-1413-MOV	480V POWER
		1	#12			GROUND
P3234	3/4"	3	#12	8-DIG-0101-DPNL	8-THS-1423-MOV	480V POWER
		1	#12			GROUND
P3235	3/4"	3	#12	8-DIG-0101-DPNL	8-THS-1433-MOV	480V POWER
		1	#12			GROUND
P3236	2-1/2"	3	#4/0	8-MCC-3101-DPNL	8-DIG-0101-DPNL	480V POWER
		1	#4			GROUND
P3237	1"	3	#4	8-DIG-0101-DPNL	8-DIG-0102-XFR	480V POWER
		1	#10			GROUND
P3238	1-1/4"	3	#2	8-DIG-0101-DPNL	8-DIG-0101-XFR	480V POWER
		1	#8			GROUND
P3239	1-1/2"	4	#1	8-DIG-0102-XFR	8-DIG-0102-LPNL	208V POWER
		1	#8			GROUND
P3240	2"	4	#3/0	8-DIG-0101-XFR	8-DIG-0103-LPNL	208V POWER
		1	#6			GROUND
P3241	-	-	-	-	NOT USED	-
		-	-			-
P3242	3/4"	3	#12	8-DIG-0101-DPNL	MIXING VALVE	480V POWER
		1	#12			GROUND
P3243	3/4"	3	#12	8-DIG-0101-DPNL	14-2414-FV	480V POWER
		1	#12			GROUND
P3244	3/4"	3	#12	8-DIG-0101-DPNL	14-2424-FV	480V POWER
		1	#12			GROUND
P3245	3/4"	3	#12	8-DIG-0101-DPNL	14-2434-FV	480V POWER
		1	#12			GROUND
P3246	3/4"	3	#12	8-DIG-0101-DPNL	14-2444-FV	480V POWER
		1	#12			GROUND
P3247	3/4"	3	#12	8-DIG-0101-DPNL	8-DGT-012-VLV	480V POWER
		1	#12			GROUND
P3248	-	-	-	-	NOT USED	-
		-	-			-
P3249	-	-	-	-	NOT USED	-
		-	-			-
P3250	3/4"	2	#12	8-DIG-0102-LPNL	8-DIG-1613-TSH	120V POWER
		1	#12			GROUND
P3251	3/4"	2	#12	8-DIG-0102-LPNL	8-DIG-1623-TSH	120V POWER
		1	#12			GROUND
P3252	3/4"	2	#12	8-DIG-0102-LPNL	8-DIG-1633-TSH	120V POWER
		1	#12			GROUND
P3253	3/4"	2	#10	8-DIG-0103-LPNL	DIGESTER BUILDING RECEPTACLES	120V POWER
		1	#10			GROUND
P3254	3/4"	2	#10	8-DIG-0103-LPNL	DIGESTER BUILDING RECEPTACLES	120V POWER
		1	#10			GROUND
P3255	3/4"	2	#10	8-DIG-0103-LPNL	DIGESTER BUILDING RECEPTACLES	120V POWER
		1	#10			GROUND
P3256	3/4"	2	#10	8-DIG-0103-LPNL	DIGESTER BUILDING RECEPTACLES	120V POWER
		1	#10			GROUND

CABLE AND CONDUIT SCHEDULE

CONDUIT		CABLE		FROM	TO	REMARKS
FEEDER NUMBER	SIZE	QTY	SIZE			
P3257	3/4"	2	#10	8-DIG-0103-LPNL	DIGESTER BUILDING RECEPTACLES	120V POWER
		1	#10			GROUND
P3258	3/4"	2	#10	8-DIG-0103-LPNL	DIGESTER BUILDING RECEPTACLES	120V POWER
		1	#10			GROUND
P3259	3/4"	2	#10	8-DIG-0103-LPNL	DIGESTER BUILDING RECEPTACLES	120V POWER
		1	#10			GROUND
P3260	3/4"	2	#10	8-DIG-0103-LPNL	DIGESTER BUILDING LIGHTING	120V POWER
		1	#10			GROUND
P3261	3/4"	2	#10	8-DIG-0103-LPNL	DIGESTER BUILDING LIGHTING	120V POWER
		1	#10			GROUND
P3262	3/4"	2	#10	8-DIG-0103-LPNL	DIGESTER BUILDING LIGHTING	120V POWER
		1	#10			GROUND
P3263	3/4"	2	#10	8-DIG-0103-LPNL	DIGESTER BUILDING LIGHTING	120V POWER
		1	#10			GROUND
P3264	3/4"	2	#10	8-DIG-0103-LPNL	DIGESTER BUILDING LIGHTING	120V POWER
		1	#10			GROUND
P3265	3/4"	2	#10	8-DIG-0103-LPNL	DIGESTER BUILDING LIGHTING	120V POWER
		1	#10			GROUND
P3266	3/4"	2	#10	8-DIG-0103-LPNL	DIGESTER BUILDING EXTERIOR LIGHTING	120V POWER
		1	#10			GROUND
P3267	3/4"	2	#10	8-DIG-0103-LPNL	DIGESTER BUILDING LIGHTING	120V POWER
		1	#10			GROUND
P3268	3/4"	2	#10	8-DIG-0103-LPNL	DIGESTER BUILDING LIGHTING	120V POWER
		1	#10			GROUND
P3269	3/4"	2	#10	8-DIG-0103-LPNL	DIGESTER BUILDING LIGHTING	120V POWER
		1	#10			GROUND
P3270	3/4"	2	#10	8-DIG-0103-LPNL	DIGESTER BUILDING LIGHTING OUTDOOR	120V POWER
		1	#10			GROUND
P3271	3/4"	2	#10	8-DIG-0102-LPNL	8-DIG-1413A-LIT	120V POWER
		1	#10			GROUND
P3272	3/4"	2	#10	8-DIG-0102-LPNL	8-DIG-1423A-LIT	120V POWER
		1	#10			GROUND
P3273	3/4"	2	#10	8-DIG-0102-LPNL	8-DIG-1433A-LIT	120V POWER
		1	#10			GROUND
P3274	3/4"	2	#10	8-DIG-0102-LPNL	DUAL MEMBRANE GAS HOLDER PANEL 8-DIG-3211-PNL	120V POWER
		1	#10			GROUND
P3275	3/4"	2	#10	8-DIG-0102-LPNL	DIGESTER GAS FIT-2412	120V POWER
		1	#10			GROUND
P3276	3/4"	2	#10	8-DIG-0102-LPNL	DIGESTER GAS FIT-2422	120V POWER
		1	#10			GROUND
P3277	3/4"	2	#10	8-DIG-0102-LPNL	POTABLE WATER FIT-2414	120V POWER
		1	#10			GROUND
P3278	3/4"	2	#10	8-DIG-0102-LPNL	POTABLE WATER FIT-2424	120V POWER
		1	#10			GROUND
P3279	3/4"	2	#12	8-DIG-0102-LPNL	HOT WATER BOILER NO.1 CONTROL PANEL	120V POWER
		1	#12			GROUND
P3280	3/4"	2	#12	8-DIG-0102-LPNL	HOT WATER BOILER NO.2 CONTROL PANEL	120V POWER
		1	#12			GROUND
P3281	3/4"	2	#12	8-DIG-0102-LPNL	HOT WATER SERVICE FLOW METER	120V POWER
		1	#12			GROUND
P3282	-	-	-	-	NOT USED	-
		-	-			-
P3283	-	-	-	-	NOT USED	-
		-	-			-
P3284	3/4"	2	#12	8-DIG-0102-LPNL	8-DIG-3212-LIT	120V POWER
		1	#12			GROUND

GENERAL NOTES:

1. FOR SYMBOLS AND ABBREVIATIONS, SEE DRAWING E-1.
2. FOR CONSTRUCTION SEQUENCE, SEE DRAWING E-2.
3. FOR EQUIPMENT FED THROUGH VFDs, PROVIDE VFD CABLES BETWEEN EQUIPMENT AND VFD.

THE DRAWINGS IN THIS SET ARE RECORD DRAWINGS. THEY ARE CONSTRUCTION CONTRACT DRAWINGS WHICH HAVE BEEN REVISED BASED ON AVAILABLE FIELD INFORMATION RECORDED BY OTHERS DURING CONSTRUCTION OF THIS CONTRACT. THERE HAS BEEN NO VERIFICATION OF DIMENSIONS SHOWN ON THE CONSTRUCTION DRAWINGS OR THE ACCURACY/COMPLETENESS OF THE FIELD INFORMATION RECEIVED.

SIGNATURE _____ DATE 2/7/2020

SHAH & ASSOCIATES

AS-BUILT REPLACEMENT SHEET

PROFESSIONAL CERTIFICATION
THIS DRAWING WAS ORIGINALLY APPROVED FOR CONSTRUCTION AND SEALED BY KANAIYALAL R. SHAH, A REGISTERED PROFESSIONAL ENGINEER IN THE STATE OF MARYLAND, NO. 11084.

NOTICE TO CONTRACTORS
- PROJECT ELEVATIONS ARE BASED ON NAVD88 AND HOWARD COUNTY'S BENCHMARK SYSTEM
- PREVIOUS PROJECTS USED OTHER DATUMS
- APPLY THE FOLLOWING CONVERSIONS WHEN USING PREVIOUS CONTRACT DRAWINGS:
  - ADDITION NO. 6: SUBTRACT 0.80 FT
  - PRIOR ADDITIONS: SUBTRACT 1.04 FT

DEPARTMENT OF PUBLIC WORKS
HOWARD COUNTY, MARYLAND

CHIEF, BUREAU OF UTILITIES DATE

DES: SR
DRN: AJS
CHK: KRS
DATE: 10/2016

DATE	REV	DESCRIPTION
07/2019		RECORD DRAWING

ELECTRICAL

CABLE AND CONDUIT SCHEDULE - VI

LITTLE PATUXENT WATER RECLAMATION PLANT
8TH ADDITION
BIOSOLIDS PROCESSING FACILITIES – PHASE I

CAPITAL PROJECT S-6295
CONTRACT NO. 24-4935

ELECTION DISTRICT NO. 6
HOWARD COUNTY, MARYLAND

SCALE AS SHOWN

SHEET 408 OF 463

E-910

CABLE AND CONDUIT SCHEDULE

CONDUIT		CABLE		FROM	T0	REMARKS
FEEDER NUMBER	SIZE	QTY	SIZE			
P3285	3/4"	2	#12	8-DIG-0102-LPNL	8-DIG-3212-LIT	120V POWER
		1	#12			GROUND
P3286	3/4"	2	#12	8-DIG-0102-LPNL	DIGESTER BIOGAS TO TREATMENT FIT-1012	120V POWER
		1	#12			GROUND
P3287	3/4"	2	#12	8-DIG-0102-LPNL	8-DIG-3211-AIT	120V POWER
		1	#12			GROUND
P3288	-	-	-	-	NOT USED	-
		-	-			-
P3289	-	-	-	-	NOT USED	-
		-	-			-
P3290	-	-	-	-	NOT USED	-
		-	-			-
P3291	3/4"	2	#10	8-DIG-0102-LPNL	DIGESTER SLUDGE INLET PRESSURE PIT-3023A	120V POWER
		1	#10			GROUND
P3292	-		-	-	NOT USED	-
		-	-			-
P3293	-	-	-	-	NOT USED	-
		-	-			-
P3294	-	-	-	-	NOT USED	-
		-	-			-
P3295	-	-	-	-	NOT USED	-
		-	-			-
P3296	-	-	-	-	NOT USED	-
		-	-			-
P3297	-	-	-	-	NOT USED	-
		-	-			-
P3298	-	-	-	-	NOT USED	-
		-	-			-
P3299	3/4"	2	#10	8-DIG-0102-LPNL	DIGESTER SLUDGE INLET PRESSURE PIT 3033A	120V POWER
		1	#10			GROUND
P3300	-	-	-	-	NOT USED	-
		-	-			-
P3301	-	-	-	-	NOT USED	-
		-	-			-
P3302	-	-	-	-	NOT USED	-
		-	-			-
P3303	-	-	-	-	NOT USED	-
		-	-			-
P3304	3/4"	2	#10	8-DIG-0102-LPNL	SLUDGE OUTLET PRESSURE PIT 3033B	120V POWER
		1	#10			GROUND
P3305	-	-	-	-	NOT USED	-
		-	-			-
P3306	3/4"	2	#10	8-DIG-0102-LPNL	DIGESTER GAS FIT-2601	120V POWER
		1	#10			GROUND
P3307	-	-	-	-	NOT USED	-
		-	-			-
P3308	3/4"	2	#10	8-DIG-0103-LPNL	GAS CONDITIONING LOCAL CONTROL PANEL 8-DGT-1222-PNL	120V POWER
		1	#10			GROUND
P3309	3/4"	2	#10	8-DIG-0102-LPNL	DIGESTER BLDG OUTDOOR HEAT TRACE	120V POWER
		1	#10			GROUND
P3310	3/4"	2	#8	8-DIG-0102-LPNL	DIGESTER GAS FLARE HEAT TRACE	120V POWER
		1	#10			GROUND
P3311	3/4"	2	#8	8-DIG-0102-LPNL	DIGESTER EMERGENCY OVERFLOW PIPE HEAT TRACE	120V POWER
		1	#10			GROUND
P3312	3/4"	2	#8	8-DIG-0102-LPNL	DIGESTER HIGH OVERFLOW PIPE HEAT TRACE	120V POWER
		1	#10			GROUND

CABLE AND CONDUIT SCHEDULE

CONDUIT		CABLE		FROM	T0	REMARKS
FEEDER NUMBER	SIZE	QTY	SIZE			
P3313	3/4"	2	#8	8-DIG-0102-LPNL	DIGESTER NORMAL OVERFLOW PIPE HEAT TRACE	120V POWER
		1	#10			GROUND
P3314	3/4"	2	#8	8-DIG-0102-LPNL	OVERHEAD DOOR DIGESTER BLDG	120V POWER
		1	#10			GROUND
P3315	3/4"	2	#12	8-DIG-0103-LPNL	FACU PANEL	120V POWER
		1	#12			GROUND
P3316	3/4"	2	#12	8-DIG-0103-LPNL	LAS (ECANS) 8-DIG-0024-PNL	120V POWER
		1	#12			GROUND
P3317	3/4"	2	#8	8-DIG-0103-LPNL	FREE STANDING DIGESTER RIO PANEL 8-DIG-0011-RIO	120V POWER
		1	#10			GROUND
P3318	3/4"	2	#12	8-DIG-0103-LPNL	HVAC CONTROL PANEL	120V POWER
		1	#12			GROUND
P3318A	3/4"	2	#12	8-DIG-0102-LPNL	DIFFERENTIAL PRESSURE SWITCH DPS-SF01	120V POWER
		1	#12			GROUND
P3319	3/4"	2	#12	8-DIG-0102-LPNL	DIFFERENTIAL PRESSURE SWITCH DPS-MAU01	120V POWER
		1	#12			GROUND
P3320	3/4"	2	#12	8-DIG-0102-LPNL	DIFFERENTIAL PRESSURE SWITCH DPS-SF02	120V POWER
		1	#12			GROUND
P3321	3/4"	2	#12	8-DIG-0102-LPNL	FLOW SWITCH FS-SF01	120V POWER
		1	#12			GROUND
P3322	3/4"	2	#12	8-DIG-0102-LPNL	FLOW SWITCH FS-SF02	120V POWER
		1	#12			GROUND
P3323	3/4"	2	#12	8-DIG-0102-LPNL	8-THS-1413-FIT	120V POWER
		1	#12			GROUND
P3324	3/4"	2	#12	8-DIG-0102-LPNL	8-THS-1423-FIT	120V POWER
		1	#12			GROUND
P3325	3/4"	2	#12	8-DIG-0102-LPNL	8-THS-1433-FIT	120V POWER
		1	#12			GROUND
P3326	3/4"	2	#12	8-DIG-0102-LPNL	8-DIG-1013-FIT	120V POWER
		1	#12			GROUND
P3327	3/4"	2	#12	8-DIG-0102-LPNL	8-DIG-1023-FIT	120V POWER
		1	#12			GROUND
P3328	3/4"	2	#12	8-DIG-0102-LPNL	8-DIG-1033-FIT	120V POWER
		1	#12			GROUND
P3329	3/4"	2	#12	8-DIG-0102-LPNL	DIFFERENTIAL PRESSURE SWITCH DPS-EF01	120V POWER
		1	#12			GROUND
P3330	3/4"	2	#12	8-DIG-0102-LPNL	DIFFERENTIAL PRESSURE SWITCH DPS-EF02	120V POWER
		1	#12			GROUND
P3331	3/4"	2	#12	8-DIG-0102-LPNL	DIGESTER GAS ALARM PANEL 8-DIG-0034-PNL	120V POWER
		1	#12			GROUND
P3332	3/4"	2	#12	8-DIG-0102-LPNL	DIGESTER GAS ALARM PANEL 8-DIG-0022-PNL	120V POWER
		1	#12			GROUND
P3333	3/4"	2	#12	8-DIG-0103-LPNL	8-DIG-3211-ISB	120V POWER
		1	#12			GROUND
P3401	3/4"	2	#10	8-MCC-3102-LPNL	WASTE GAS FLARE 8-DGT-1411-PNL	120V POWER
		1	#10			GROUND
P3402	3/4"	2	#10	8-MCC-3102-LPNL	WASTE GAS BURNER CP 8-DGT-1412-PNL	120V POWER
		1	#10			GROUND
P3403	3/4"	2	#10	8-MCC-3102-LPNL	WASTE GAS BURNER CP 8-DGT-1422-PNL	120V POWER
		1	#10			GROUND

GENERAL NOTES:

1. FOR SYMBOLS AND ABBREVIATIONS, SEE DRAWING E-1.
2. FOR CONSTRUCTION SEQUENCE, SEE DRAWING E-2.
3. FOR EQUIPMENT FED THROUGH VFDs, PROVIDE VFD CABLES BETWEEN EQUIPMENT AND VFD.

THE DRAWINGS IN THIS SET ARE RECORD DRAWINGS. THEY ARE CONSTRUCTION CONTRACT DRAWINGS WHICH HAVE BEEN REVISED BASED ON AVAILABLE FIELD INFORMATION RECORDED BY OTHERS DURING CONSTRUCTION OF THIS CONTRACT. THERE HAS BEEN NO VERIFICATION OF DIMENSIONS SHOWN ON THE CONSTRUCTION DRAWINGS OR THE ACCURACY/COMPLETENESS OF THE FIELD INFORMATION RECEIVED.

SIGNATURE _____ DATE 2/7/2023

SHAH & ASSOCIATES

HDR

AS-BUILT REPLACEMENT SHEET

PROFESSIONAL CERTIFICATION
THIS DRAWING WAS ORIGINALLY APPROVED FOR CONSTRUCTION AND SEALED BY KANAIYALAL R. SHAH, A REGISTERED PROFESSIONAL ENGINEER IN THE STATE OF MARYLAND, NO. 11084.

NOTICE TO CONTRACTORS
- PROJECT ELEVATIONS ARE BASED ON NAVD88 AND HOWARD COUNTY'S BENCHMARK SYSTEM
- PREVIOUS PROJECTS USED OTHER DATUMS
- APPLY THE FOLLOWING CONVERSIONS WHEN USING PREVIOUS CONTRACT DRAWINGS:
  - ADDITION NO. 6: SUBTRACT 0.80 FT
  - PRIOR ADDITIONS: SUBTRACT 1.04 FT

DEPARTMENT OF PUBLIC WORKS
HOWARD COUNTY, MARYLAND

CHIEF, BUREAU OF UTILITIES DATE

DES: SR
DRN: AJS
CHK: KRS
DATE: 10/2016

DATE	REV	DESCRIPTION
07/2019		RECORD DRAWING

ELECTRICAL

CABLE AND CONDUIT SCHEDULE - VII

LITTLE PATUXENT WATER RECLAMATION PLANT
8TH ADDITION
BIOSOLIDS PROCESSING FACILITIES – PHASE I

CAPITAL PROJECT S–6295
CONTRACT NO. 24–4935

ELECTION DISTRICT NO. 6
HOWARD COUNTY, MARYLAND

SCALE AS SHOWN

SHEET 409 OF 463

E-911

CABLE AND CONDUIT SCHEDULE

CONDUIT		CABLE		FROM	TO	REMARKS
FEEDER NUMBER	SIZE	QTY	SIZE			
P3601	2"	3	#2	8-MCC-3100-MCC	PHOSPHORUS PRECIPITATION BLOWER NO. 1 8-PHO-2812-BLW	480V POWER
		1	#8			GROUND
P3602	1-1/2"	3	#8	8-MCC-3100-MCC	PHOSPHORUS PRECIPITATION BLOWER NO. 2 8-PHO-2822-BLW	480V POWER
		1	#10			GROUND
P3603	1"	3	#12	8-MCC-3100-MCC	PHOSPHORUS PRECIPITATION PUMP NO. 1 8-PHO-2411-PMP	480V POWER
		1	#12			GROUND
P3604	3/4"	3	#10	8-DIG-0101-DPNL	PHOSPHORUS PRECIPITATION VALVE 8-PHO-2411-MOV	480V POWER
		1	#10			GROUND
P3605	3/4"	3	#10	8-MCC-3100-MCC	ELECTRIC UNIT HEATER 8-PHO-9912-EUH	480V POWER
		1	#12			GROUND
P3606	3/4"	3	#10	8-MCC-3100-MCC	ELECTRIC UNIT HEATER 8-PHO-9922-EUH	480V POWER
		1	#12			GROUND
(2) P3607 (1)	1"	-	-	8-MCC-3100-MCC	PHOSPHORUS PRECIPITATION PUMP NO. 2 (FUTURE)	480V POWER
		-	-			GROUND
(3) P3608 (1)	1-1/2"	-	-	8-MCC-3100-MCC	PHOSPHORUS PRECIPITATION BLOWER NO. 4 (FUTURE)	480V POWER
		-	-			GROUND
(4) P3609 (1)	2"	-	-	8-MCC-3100-MCC	PHOSPHORUS PRECIPITATION BLOWER NO. 3 (FUTURE)	480V POWER
		-	-			GROUND
(5) P3610 (1)	1"	-	-	8-MCC-3100-MCC	STRUVITE RECOVERY WASHER SYSTEM PANEL (FUTURE)	480V POWER
		-	-			GROUND
(5) P3611 (1)	1"	-	-	8-MCC-3100-MCC	STRUVITE RECOVERY WASHER SCREW CONVEYOR (FUTURE)	480V POWER
		-	-			GROUND
P3612	1-1/2"	3	#8	8-MCC-3100-MCC	EYE WASH WATER HEATER 8-PHO-2811-WHT	480V POWER
		1	#10			GROUND
P3613	3/4"	3	#10	8-MCC-3100-MCC	EXHAUST FAN 1 8-PHO-9911-FAN	480V POWER
		1	#10			GROUND
P3614	3/4"	3	#10	8-MCC-3101-DPNL	PHOSPHORUS PRECIPITATION BLOWER NO.1 COOLING FAN	480V POWER
		1	#10			GROUND
P3615	3/4"	2	#12	8-PHO-0101-LPNL	PHOSPHORUS AREA LAS 8-PHO-0022-PNL	120V POWER
		1	#12			GROUND
P3616	3/4"	2	#10	8-PHO-0101-LPNL	MAGNESIUM METERING PUMP 8-PHO-2212-PMP	120V POWER
		1	#10			GROUND
P3617	3/4"	2	#10	8-PHO-0101-LPNL	MAGNESIUM METERING PUMP 8-PHO-2222-PMP	120V POWER
		1	#10			GROUND
P3618	3/4"	2	#10	8-PHO-0101-LPNL	MAGNESIUM DISCHARGE FIT	120V POWER
		1	#10			GROUND
P3619	3/4"	2	#12	8-PHO-0101-LPNL	FOAM PIPE HEAT TRACE FROM BLDG. TO REACTOR	120V POWER
		1	#12			GROUND
P3620	3/4"	2	#12	8-PHO-0101-LPNL	MGCL STORAGE TANK HEAT TRACE	120V POWER
		1	#12			GROUND
P3621	3/4"	2	#10	8-PHO-0101-LPNL	MGCL FILL PANEL 8-PHO-2212-PNL	120V POWER
		1	#10			GROUND
P3622	3/4"	2	#10	8-PHO-0101-LPNL	MGCL STORAGE TANK LIT 8-PHO-2211-LIT	120V POWER
		1	#10			GROUND
P3623	3/4"	2	#10	8-PHO-0101-LPNL	ANTIFOAM METERING PUMP 8-PHO-2611-PMP	120V POWER
		1	#10			GROUND
P3624	3/4"	2	#10	8-PHO-0101-LPNL	ANTIFOAM CHEMICAL STORAGE TANK 8-PHO-2611-LIT	120V POWER
		1	#10			GROUND
P3625	3/4"	2	#12	8-PHO-0101-LPNL	8-PHO-2411-ISB	120V POWER
		1	#12			GROUND
P3626	-	-	-	-	NOT USED	-
		-	-			-
P3627	3/4"	2	#10	8-PHO-0101-LPNL	PHOSPHOROUS PRECIPITATION BUILDING RECEPTACLE	120V POWER
		1	#10			GROUND
P3628	3/4"	2	#10	8-PHO-0101-LPNL	PHOSPHOROUS PRECIPITATION BUILDING RECEPTACLE	120V POWER
		1	#10			GROUND

CABLE AND CONDUIT SCHEDULE

CONDUIT		CABLE		FROM	TO	REMARKS
FEEDER NUMBER	SIZE	QTY	SIZE			
P3629	3/4"	2	#10	8-PHO-0101-LPNL	PHOSPHOROUS PRECIPITATION BUILDING RECEPTACLE	120V POWER
		1	#10			GROUND
P3630	3/4"	2	#10	8-PHO-0101-LPNL	PHOSPHOROUS PRECIPITATION BUILDING LIGHTING	120V POWER
		1	#10			GROUND
P3631	3/4"	2	#10	8-PHO-0101-LPNL	PHOSPHOROUS PRECIPITATION BUILDING LIGHTING	120V POWER
		1	#10			GROUND
P3632	3/4"	2	#10	8-PHO-0101-LPNL	PHOSPHOROUS PRECIPITATION OUTDOOR LIGHTING	120V POWER
		1	#10			GROUND
P3633	3/4"	2	#10	8-PHO-0101-LPNL	MGCL PIPE HEAT TRACE FROM TANK TO BLDG.	120V POWER
		1	#10			GROUND
P3634	3/4"	2	#10	8-PHO-0101-LPNL	MGCL PIPE HEAT TRACE FROM BLDG TO REACTOR	120V POWER
		1	#10			GROUND
P3635	3/4"	2	#10	8-PHO-0101-LPNL	MAP PIPE HEAT TRACE	120V POWER
		1	#10			GROUND
P3636	3/4"	2	#10	8-PHO-0101-LPNL	ADS PIPE HEAT TRACE	120V POWER
		1	#10			GROUND
P3637	3/4"	2	#10	8-PHO-0101-LPNL	8-PHO-2211-FIT	120V POWER
		1	#10			GROUND
P3638	3/4"	2	#12	8-PHO-0101-LPNL	8-PHO-2211-FS	120V POWER
		1	#12			GROUND
P3639	3/4"	2	#10	8-PHO-0101-LPNL	PHOSPHOROUS PRECIPITATION DISCHARGE 8-PHO-2411-FIT	120V POWER
		1	#10			GROUND
P3640	3/4"	2	#10	8-PHO-0101-LPNL	PHOSPHOROUS PRECIPITATION REACTOR 8-PHO-2412-FIT	120V POWER
		1	#10			GROUND
P3641	3/4"	2	#10	8-PHO-0101-LPNL	PHOSPHOROUS PRECIPITATION REACTOR 8-PHO-2411-AIT	120V POWER
		1	#10			GROUND
P3641	-	-	-	-	NOT USED	-
		-	-			-
P3643	1"	3	#4	8-MCC-3101-DPNL	8-PHO-0201-XFR	480V POWER
		1	#8			GROUND
P3644	1-1/4"	3	#2	8-PHO-0201-XFR	8-PHO-0101-LPNL	208V POWER
		1	#8			GROUND
P4001	1-1/2"	-	-	8-MCC-3100-MCC	RECIRCULATION PUMP (NOTE 3)	480V POWER
		-	-			GROUND
P4002	1-1/2"	-	-	8-MCC-3100-MCC	AIR ADDITION BLOWER (NOTE 3)	480V POWER
		-	-			GROUND
P4003	1"	-	-	8-MCC-3101-DPNL	NUTRIENT METERING PUMP (NOTE 3)	480V POWER
		-	-			GROUND
P4004	1-1/2"	-	-	8-MCC-3101-DPNL	WATER BOX SPACE HEATER (NOTE 3)	480V POWER
		-	-			GROUND
P4005	1-1/2"	-	-	8-MCC-3101-DPNL	CONTROL PANEL SPACE HEATER (NOTE 3)	480V POWER
		-	-			GROUND
P7001	1-1/2"	3	#4	8-MCC-1500-MCC	BIO-FILTER CP 8-ODR-2011-PNL	480V POWER
		1	#8			GROUND
P7002	3/4"	2	#10	8-CTR-0101-LPNL	HEAT TRACE NO.1	120V POWER
		1	#10			GROUND
P7003	3/4"	2	#10	8-CTR-0101-LPNL	HEAT TRACE NO.2	120V POWER
		1	#10			GROUND
P7004	3/4"	2	#10	8-CTR-0101-LPNL	HEAT TRACE NO.3	120V POWER
		1	#10			GROUND
P7005	3/4"	2	#10	8-CTR-0101-LPNL	BIOFILTER EXHAUST TEMPERATURE INDICATION TIT-1022	120V POWER
		1	#10			GROUND

GENERAL NOTES:

1. FOR SYMBOLS AND ABBREVIATIONS, SEE DRAWING E-1.
2. FOR CONSTRUCTION SEQUENCE, SEE DRAWING E-2.
3. CONTRACTOR TO RUN CONDUIT TO SOUTH EDGE OF DIGESTER BUILDING FOR FUTURE H2S REMOVAL SYSTEM.
4. FOR EQUIPMENT FED THROUGH VFDs, PROVIDE VFD CABLES BETWEEN EQUIPMENT AND VFD.

DRAWING NOTES:

(1) CONTRACTOR TO RUN CONDUITS UPTO FUTURE LOCATION OF EQUIPMENT SHOWN IN PROCESS MECHANICAL PLAN.

(2) P3607 - FOR PHOSPHORUS PRECIPITATION PUMP NO. 2 CAN BE TERMINATED IN A BOX SO THAT IT CAN BE EXTENDED TO THE FUTURE REACTOR TANK PAD SIMILAR TO PUMP NO. 1

(3) P3608 - FOR PHOSPHORUS PRECIPITATION BLOWER NO. 4 SHOULD BE SIMILAR TO BLOWER NO. 2.

(4) P3609 - FOR PHOSPHORUS PRECIPITATION BLOWER NO. 3 SHOULD BE SIMILAR TO BLOWER NO. 1.

(5) P3610 - FOR FUTURE STRUVITE RECOVERY WASHER CAN BE TERMINATED IN A BOX NEAR THE FUTURE EQUIPMENT SO THEY CAN BE EXTENDED TO THE EQUIPMENT AS NEEDED.

THE DRAWINGS IN THIS SET ARE RECORD DRAWINGS. THEY ARE CONSTRUCTION CONTRACT DRAWINGS WHICH HAVE BEEN REVISED BASED ON AVAILABLE FIELD INFORMATION RECORDED BY OTHERS DURING CONSTRUCTION OF THIS CONTRACT. THERE HAS BEEN NO VERIFICATION OF DIMENSIONS SHOWN ON THE CONSTRUCTION DRAWINGS OR THE ACCURACY/COMPLETENESS OF THE FIELD INFORMATION RECEIVED.

SIGNATURE _____ DATE 2/7/2020

SHAH & ASSOCIATES

AS-BUILT REPLACEMENT SHEET

PROFESSIONAL CERTIFICATION
THIS DRAWING WAS ORIGINALLY APPROVED FOR CONSTRUCTION AND SEALED BY KANAIYALAL R. SHAH, A REGISTERED PROFESSIONAL ENGINEER IN THE STATE OF MARYLAND, NO. 11084.

NOTICE TO CONTRACTORS
- PROJECT ELEVATIONS ARE BASED ON NAVD88 AND HOWARD COUNTY'S BENCHMARK SYSTEM
- PREVIOUS PROJECTS USED OTHER DATUMS
- APPLY THE FOLLOWING CONVERSIONS WHEN USING PREVIOUS CONTRACT DRAWINGS:
  - ADDITION NO. 6: SUBTRACT 0.80 FT
  - PRIOR ADDITIONS: SUBTRACT 1.04 FT

DEPARTMENT OF PUBLIC WORKS
HOWARD COUNTY, MARYLAND

CHIEF, BUREAU OF UTILITIES DATE

DES: SR
DRN: XMZ
CHK: KRS
DATE: 10/2016

DATE	REV	DESCRIPTION
07/2019		RECORD DRAWING

ELECTRICAL

CABLE AND CONDUIT SCHEDULE - VIII

LITTLE PATUXENT WATER RECLAMATION PLANT
8TH ADDITION
BIOSOLIDS PROCESSING FACILITIES – PHASE I

CAPITAL PROJECT S-6295
CONTRACT NO. 24-4935

ELECTION DISTRICT NO. 6
HOWARD COUNTY, MARYLAND

SCALE AS SHOWN

SHEET 410 OF 463

E-912

GENERAL NOTES:

1. FOR SYMBOLS AND ABBREVIATIONS, SEE DRAWING E-1.
2. FOR MCC-11 ONE LINE DIAGRAMS, SEE DRAWINGS E-21B, E-21C, E-21D AND E-21E.
3. FOR FILTER BUILDING ELECTRICAL AND I&C PLAN DRAWINGS, SEE DRAWING E-640.

PANELBOARD SCHEDULE

PANEL : LF , BUS AMPS : 100A VOLTS : 120/208 VAC , PHASE : 3 , WIRES : 4 + GROUND , MAIN CB: 100A , CKT'S : 42

MOUNTING: SURFACE , ENCLOSURE : NEMA 12 , LOCATION : ELECTRICAL ROOM FILTER BUILDING, INT. CURRENT : 10 KA, RMS AIC

LOAD NAME	VA ØA	VA ØB	VA ØC	FA	TA	P	SNOP	BUS A	BUS B	BUS C	SNOP	P	TA	FA	VA ØA	VA ØB	VA ØC	LOAD NAME
SPACE - DO NOT USE	-	-	-	-	-	1	1				2							
SPACE - DO NOT USE	-	-	-	-	-	1	3				4	3	100	100	-	-	-	MAIN BREAKER
SPACE - DO NOT USE	-	-	-	-	-	1	5				6							
CAUSTIC PUMP	-	-	-	100	20	2	7				8	2	20	100	-	-	-	FILTER 6 LIGHTING
							9				10							
CAUSTIC PUMP	-	-	-	100	20	2	11				12	2	20	100	-	-	-	FILTER 5 LIGHTING
							13				14							
RECEPTACLE FILTER 5 AND 6	-	-	-	100	20	1	15				16	1	20	100	-	-	-	BUBBLER FLOCCULATOR 4A
RECEPTACLE FILTER 5 AND 6	-	-	-	100	20	1	17				18	1	20	100	-	-	-	LIGHTING CONTACTOR
FILTER 6 TURBIDIMETER	-	-	-	100	20	1	19				20	1	20	100	-	-	-	BUBBLER FLOCCULATOR 3A
FILTER 5 TURBIDIMETER	-	-	-	100	20	1	21				22	1	20	100	-	-	-	SPARE
BUBBLER 6 FLOCCULATOR	-	-	-	100	20	1	23				24	1	20	100	-	-	-	INSTRUMENTATION
BUBBLER 5 FLOCCULATOR	-	-	-	100	20	1	25				26	1	20	100	-	-	-	NEW CONTROL STATION
EMERGENCY LIGHTING	-	-	-	100	20	1	27				28	1	20	100	-	-	-	LOAD - UNKNOWN
LOAD - UNKNOWN	-	-	-	100	20	1	29				30	1	20	100	-	-	-	LOAD - UNKNOWN
LOAD - UNKNOWN	-	-	-	100	20	1	31				32	1	20	100	-	-	-	LOAD - UNKNOWN
LOAD - UNKNOWN	-	-	-	100	20	1	33				34	1	20	100	-	-	-	LOAD - UNKNOWN
LOAD - UNKNOWN	-	-	-	100	20	1	35				36	1	20	100	-	-	-	LOAD - UNKNOWN
LOAD - UNKNOWN	-	-	-	100	20	2	37				38	1	20	100	-	-	-	LOAD - UNKNOWN
							39				40	1	20	100	-	-	-	SPARE
FLOW SWITCH	-	-	-	100	20	1	41				42	1	20	100	-	-	-	NaOH FILL PANEL
SUB TOTAL PER PHASE	-	-	-												-	-	-	
TOTAL LOAD PER PHASE	-	-	-															

CONTINUOUS LOAD = - VA

25% SPARE + OTHER LOAD = - VA

TOTAL LOAD = - VA

TOTAL LOAD (AMPS) = - A

CABLE AND CONDUIT SCHEDULE

CONDUIT FEEDER NUMBER	CONDUIT SIZE	CABLE QTY	CABLE SIZE	FROM	TO	REMARKS
P6401	-	-	-	-	NOT USED	-
		-	-			-
P6402	-	-	-	-	NOT USED	-
		-	-			-
P6403	-	-	-	PANEL E	HOT WATER HEATER TANK	240V POWER
		-	-			GROUND
P6411	-	-	-	-	NOT USED	-
		-	-			-
P6412	3/4"	2	#12	EXISTING PANEL LF	SODIUM HYDROXIDE FILL PANEL	120V POWER
		1	#12			GROUND
P6413	3/4"	2	#12	EXISTING PANEL LF	FLOW SWITCH	120V POWER
		1	#12			GROUND

THE DRAWINGS IN THIS SET ARE RECORD DRAWINGS. THEY ARE CONSTRUCTION CONTRACT DRAWINGS WHICH HAVE BEEN REVISED BASED ON AVAILABLE FIELD INFORMATION RECORDED BY OTHERS DURING CONSTRUCTION OF THIS CONTRACT. THERE HAS BEEN NO VERIFICATION OF DIMENSIONS SHOWN ON THE CONSTRUCTION DRAWINGS OR THE ACCURACY/COMPLETENESS OF THE FIELD INFORMATION RECEIVED.

SIGNATURE 2/7/2023 DATE

SHAH & ASSOCIATES

HDR

AS-BUILT REPLACEMENT SHEET

PROFESSIONAL CERTIFICATION
THIS DRAWING WAS ORIGINALLY APPROVED FOR CONSTRUCTION AND SEALED BY KANAIYALAL R. SHAH, A REGISTERED PROFESSIONAL ENGINEER IN THE STATE OF MARYLAND, NO. 11084.

NOTICE TO CONTRACTORS
- PROJECT ELEVATIONS ARE BASED ON NAVD88 AND HOWARD COUNTY'S BENCHMARK SYSTEM
- PREVIOUS PROJECTS USED OTHER DATUMS
- APPLY THE FOLLOWING CONVERSIONS WHEN USING PREVIOUS CONTRACT DRAWINGS:
  - ADDITION NO. 6: SUBTRACT 0.80 FT
  - PRIOR ADDITIONS: SUBTRACT 1.04 FT

DEPARTMENT OF PUBLIC WORKS
HOWARD COUNTY, MARYLAND

CHIEF, BUREAU OF UTILITIES DATE

DES: SR
DRN: VVS
CHK: KRS
DATE: 4/2017

DATE	REV	DESCRIPTION
07/2019		RECORD DRAWING

ELECTRICAL

FILTER BUILDING
PANEL BOARD AND
CABLE AND CONDUIT SCHEDULE

LITTLE PATUXENT WATER RECLAMATION PLANT
8TH ADDITION
BIOSOLIDS PROCESSING FACILITIES – PHASE I

CAPITAL PROJECT S-6295
CONTRACT NO. 24-4935

ELECTION DISTRICT NO. 6
HOWARD COUNTY, MARYLAND

SCALE AS SHOWN

SHEET 411 OF 463

E-912A

CABLE AND CONDUIT SCHEDULE

CONDUIT		CABLE		FROM	T0	REMARKS
FEEDER NUMBER	SIZE	QTY	SIZE			
P9001	4"	3-1/C	#2 AWG	SPLICE IN EX. MH #17 WITH EXISTING MV CABLE	NEW SUBSTATION PS-8, PRIMARY MV VACUUM BREAKER	15KV POWER
		1	#6 AWG			GROUND
P9002	4"	3-1/C	#2 AWG	SPLICE IN EX. MH #17 WITH EXISTING MV CABLE	NEW SUBSTATION PS-8, PRIMARY MV VACUUM BREAKER	15KV POWER
		1	#6 AWG			GROUND
P9003	6"	1-3/C	500 MCM	NOT USED	-	15KV POWER
		1	4/0 AWG			GROUND
P9004	6"	1-3/C	500 MCM	NOT USED	-	15KV POWER
		1	4/0 AWG			GROUND
P9005A	4"	3	750 MCM	NOT USED	-	480V POWER
		1	4/0 AWG			GROUND
P9005B	4"	3	750 MCM	NOT USED	-	480V POWER
		1	4/0 AWG			GROUND
P9005C	4"	3	750 MCM	NOT USED	-	480V POWER
		1	4/0 AWG			GROUND
P9005D	4"	3	750 MCM	NOT USED	-	480V POWER
		1	4/0 AWG			GROUND
P9006A	4"	3	750 MCM	NOT USED	-	480V POWER
		1	4/0 AWG			GROUND
P9006B	4"	3	750 MCM	NOT USED	-	480V POWER
		1	4/0 AWG			GROUND
P9006C	4"	3	750 MCM	NOT USED	-	480V POWER
		1	4/0 AWG			GROUND
P9006D	4"	3	750 MCM	NOT USED	-	480V POWER
		1	4/0 AWG			GROUND
P9007A	4"	3	750 MCM	NOT USED	-	480V POWER
		1	2/0 AWG			GROUND
P9007B	4"	3	750 MCM	NOT USED	-	480V POWER
		1	2/0 AWG			GROUND
P9007C	4"	3	750 MCM	NOT USED	-	480V POWER
		1	2/0 AWG			GROUND
P9007D	4"	3	750 MCM	NOT USED	-	480V POWER
		1	2/0 AWG			GROUND
P9007E	4"	3	750 MCM	NOT USED	-	480V POWER
		1	2/0 AWG			GROUND
P9008A	4"	3	750 MCM	NOT USED	-	480V POWER
		1	2/0 AWG			GROUND
P9008B	4"	3	750 MCM	NOT USED	-	480V POWER
		1	2/0 AWG			GROUND
P9008C	4"	3	750 MCM	NOT USED	-	480V POWER
		1	2/0 AWG			GROUND
P9008D	4"	3	750 MCM	NOT USED	-	480V POWER
		1	2/0 AWG			GROUND
P9008E	4"	3	750 MCM	NOT USED	-	480V POWER
		1	2/0 AWG			GROUND
P9009A	4"	3	500 MCM	NOT USED	-	480V POWER
		1	4/0 AWG			GROUND
P9009B	4"	3	500 MCM	NOT USED	-	480V POWER
		1	4/0 AWG			GROUND
P9009C	4"	3	500 MCM	NOT USED	-	480V POWER
		1	4/0 AWG			GROUND
P9010A	4"	3	500 MCM	NOT USED	-	480V POWER
		1	4/0 AWG			GROUND
P9010B	4"	3	500 MCM	NOT USED	-	480V POWER
		1	4/0 AWG			GROUND

CABLE AND CONDUIT SCHEDULE

CONDUIT		CABLE		FROM	T0	REMARKS
FEEDER NUMBER	SIZE	QTY	SIZE			
P9010C	4"	3	500 MCM	NOT USED	-	480V POWER
		1	4/0 AWG			GROUND
P9011A	4"	4	500 MCM	NEW SUBSTATION PS-8, A BUS	8-MCC-3100-MCC, A BUS	480V POWER, NEUTRAL
		1	250 MCM			GROUND
P9011B	4"	4	500 MCM	NEW SUBSTATION PS-8, A BUS	8-MCC-3100-MCC, A BUS	480V POWER, NEUTRAL
		1	250 MCM			GROUND
P9011C	4"	4	500 MCM	NEW SUBSTATION PS-8, A BUS	8-MCC-3100-MCC, A BUS	480V POWER, NEUTRAL
		1	250 MCM			GROUND
P9011D	4"	4	500 MCM	NEW SUBSTATION PS-8, A BUS	8-MCC-3100-MCC, A BUS	480V POWER, NEUTRAL
		1	250 MCM			GROUND
P9011E	4"	4	500 MCM	NEW SUBSTATION PS-8, A BUS	8-MCC-3100-MCC, A BUS	480V POWER, NEUTRAL
		1	250 MCM			GROUND
P9011F	4"	4	500 MCM	NEW SUBSTATION PS-8, A BUS	8-MCC-3100-MCC, A BUS	480V POWER, NEUTRAL
		1	250 MCM			GROUND
P9012A	4"	4	500 MCM	NEW SUBSTATION PS-8, B BUS	8-MCC-3100-MCC, B BUS	480V POWER, NEUTRAL
		1	250 MCM			GROUND
P9012B	4"	4	500 MCM	NEW SUBSTATION PS-8, B BUS	8-MCC-3100-MCC, B BUS	480V POWER, NEUTRAL
		1	250 MCM			GROUND
P9012C	4"	4	500 MCM	NEW SUBSTATION PS-8, B BUS	8-MCC-3100-MCC, B BUS	480V POWER, NEUTRAL
		1	250 MCM			GROUND
P9012D	4"	4	500 MCM	NEW SUBSTATION PS-8, B BUS	8-MCC-3100-MCC, B BUS	480V POWER, NEUTRAL
		1	250 MCM			GROUND
P9012E	4"	4	500 MCM	NEW SUBSTATION PS-8, B BUS	8-MCC-3100-MCC, B BUS	480V POWER, NEUTRAL
		1	250 MCM			GROUND
P9012F	4"	4	500 MCM	NEW SUBSTATION PS-8, B BUS	8-MCC-3100-MCC, B BUS	480V POWER, NEUTRAL
		1	250 MCM			GROUND
P9013A	4"	3	500 MCM	NOT USED	-	480V POWER
		1	4/0 AWG			GROUND
P9013B	4"	3	750 MCM	NOT USED	-	480V POWER
		1	4/0 AWG			GROUND
P9013C	4"	3	750 MCM	NOT USED	-	480V POWER
		1	4/0 AWG			GROUND
P9014A	4"	3	750 MCM	NOT USED	-	480V POWER
		1	4/0 AWG			GROUND
P9014B	4"	3	750 MCM	NOT USED	-	480V POWER
		1	4/0 AWG			GROUND
P9014C	4"	3	750 MCM	NOT USED	-	480V POWER
		1	4/0 AWG			GROUND
P9014D	4"	3	750 MCM	NOT USED	-	480V POWER
		1	4/0 AWG			GROUND
P9015A	4"	4	500 MCM	8-MCC-3100-MCC GENERATOR BKR	GENERATOR CONNECTION CABINET	480V POWER, NEUTRAL
		1	250 MCM			GROUND
P9015B	4"	4	500 MCM	8-MCC-3100-MCC GENERATOR BKR	GENERATOR CONNECTION CABINET	480V POWER, NEUTRAL
		1	250 MCM			GROUND
P9015C	4"	4	500 MCM	8-MCC-3100-MCC GENERATOR BKR	GENERATOR CONNECTION CABINET	480V POWER, NEUTRAL
		1	250 MCM			GROUND
P9015D	4"	4	500 MCM	8-MCC-3100-MCC GENERATOR BKR	GENERATOR CONNECTION CABINET	480V POWER, NEUTRAL
		1	250 MCM			GROUND
P9015E	4"	4	500 MCM	8-MCC-3100-MCC GENERATOR BKR	GENERATOR CONNECTION CABINET	480V POWER, NEUTRAL
		1	250 MCM			GROUND
P9015F	4"	4	500 MCM	8-MCC-3100-MCC GENERATOR BKR	GENERATOR CONNECTION CABINET	480V POWER, NEUTRAL
		1	250 MCM			GROUND

GENERAL NOTES:

1. FOR SYMBOLS AND ABBREVIATIONS, SEE DRAWING E-1.
2. FOR CONSTRUCTION SEQUENCE, SEE DRAWING E-2.
3. FOR EQUIPMENT FED THROUGH VFDs, PROVIDE VFD CABLES BETWEEN EQUIPMENT AND VFD.

THE DRAWINGS IN THIS SET ARE RECORD DRAWINGS. THEY ARE CONSTRUCTION CONTRACT DRAWINGS WHICH HAVE BEEN REVISED BASED ON AVAILABLE FIELD INFORMATION RECORDED BY OTHERS DURING CONSTRUCTION OF THIS CONTRACT. THERE HAS BEEN NO VERIFICATION OF DIMENSIONS SHOWN ON THE CONSTRUCTION DRAWINGS OR THE ACCURACY/COMPLETENESS OF THE FIELD INFORMATION RECEIVED.

SIGNATURE _____ DATE 2/7/2023

SHAH & ASSOCIATES

AS-BUILT REPLACEMENT SHEET

PROFESSIONAL CERTIFICATION
THIS DRAWING WAS ORIGINALLY APPROVED FOR CONSTRUCTION AND SEALED BY KANAIYALAL R. SHAH, A REGISTERED PROFESSIONAL ENGINEER IN THE STATE OF MARYLAND, NO. 11084.

NOTICE TO CONTRACTORS
- PROJECT ELEVATIONS ARE BASED ON NAVD88 AND HOWARD COUNTY'S BENCHMARK SYSTEM
- PREVIOUS PROJECTS USED OTHER DATUMS
- APPLY THE FOLLOWING CONVERSIONS WHEN USING PREVIOUS CONTRACT DRAWINGS:
  - ADDITION NO. 6: SUBTRACT 0.80 FT
  - PRIOR ADDITIONS: SUBTRACT 1.04 FT

DEPARTMENT OF PUBLIC WORKS
HOWARD COUNTY, MARYLAND

CHIEF, BUREAU OF UTILITIES DATE

DES: SR
DRN: AJS
CHK: KRS
DATE: 10/2016

DATE	REV	DESCRIPTION
07/2019		RECORD DRAWING

ELECTRICAL

CABLE AND CONDUIT SCHEDULE - IX

LITTLE PATUXENT WATER RECLAMATION PLANT
8TH ADDITION
BIOSOLIDS PROCESSING FACILITIES – PHASE I

CAPITAL PROJECT S-6295
CONTRACT NO. 24-4935

ELECTION DISTRICT NO. 6
HOWARD COUNTY, MARYLAND

SCALE AS SHOWN

SHEET 412 OF 463

E-913

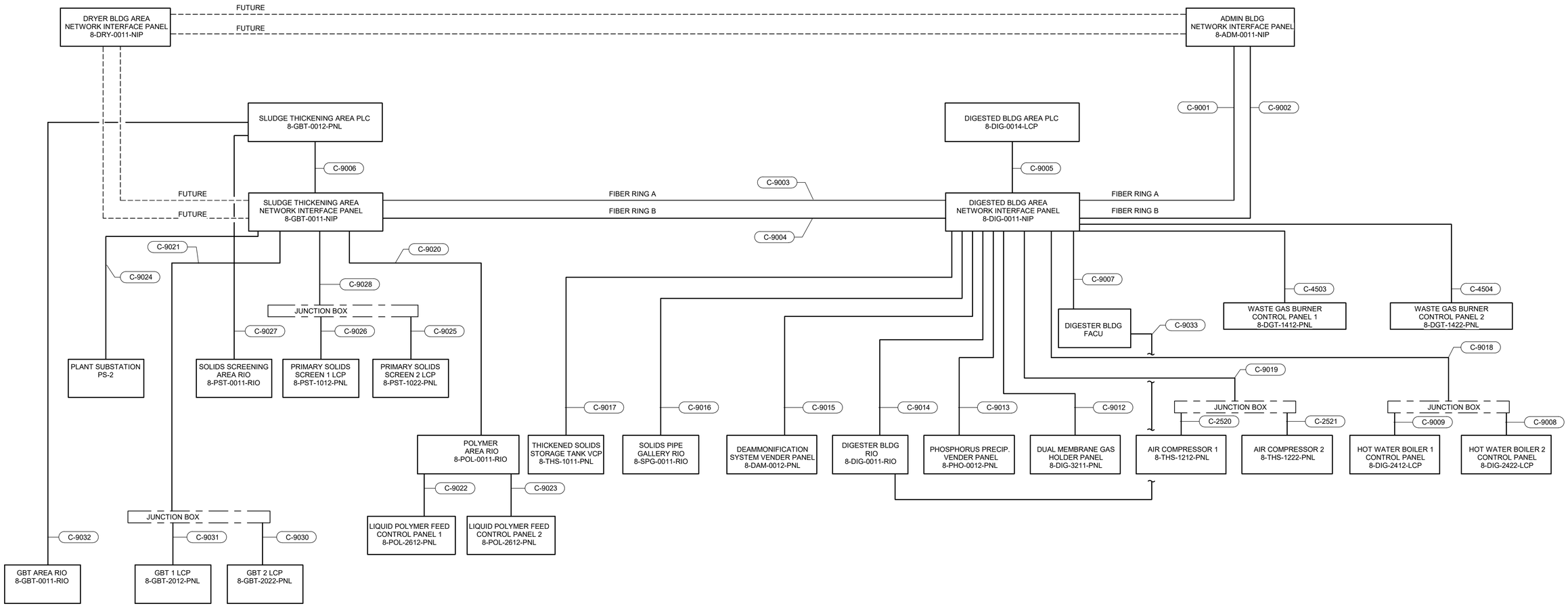

THE DRAWINGS IN THIS SET ARE RECORD DRAWINGS. THEY ARE CONSTRUCTION CONTRACT DRAWINGS WHICH HAVE BEEN REVISED BASED ON AVAILABLE FIELD INFORMATION RECORDED BY OTHERS DURING CONSTRUCTION OF THIS CONTRACT. THERE HAS BEEN NO VERIFICATION OF DIMENSIONS SHOWN ON THE CONSTRUCTION DRAWINGS OR THE ACCURACY/COMPLETENESS OF THE FIELD INFORMATION RECEIVED.

SIGNATURE

2/7/2023
DATE

AS-BUILT REPLACEMENT SHEET

PROFESSIONAL CERTIFICATION

THIS DRAWING WAS ORIGINALLY APPROVED FOR CONSTRUCTION AND SEALED BY ROBERT L. ANDERSON, A REGISTERED PROFESSIONAL ENGINEER IN THE STATE OF MARYLAND, NO. 37997.

NOTICE TO CONTRACTORS

- PROJECT ELEVATIONS ARE BASED ON NAVD88 AND HOWARD COUNTY'S BENCHMARK SYSTEM
- PREVIOUS PROJECTS USED OTHER DATUMS
- APPLY THE FOLLOWING CONVERSIONS WHEN USING PREVIOUS CONTRACT DRAWINGS:
  - ADDITION NO. 6: SUBTRACT 0.80 FT
  - PRIOR ADDITIONS: SUBTRACT 1.04 FT

DEPARTMENT OF PUBLIC WORKS
HOWARD COUNTY, MARYLAND

CHIEF, BUREAU OF UTILITIES DATE

DES: WAC
DRN: WAC
CHK: RLA
DATE: 12/2016

DATE	REV	DESCRIPTION
07/2019		RECORD DRAWING

ELECTRICAL

COMMUNICATIONS NETWORK ONE LINE DIAGRAM

LITTLE PATUXENT WATER RECLAMATION PLANT
8TH ADDITION
BIOSOLIDS PROCESSING FACILITIES - PHASE I

CAPITAL PROJECT S-6295
CONTRACT NO. 24-4935

ELECTION DISTRICT NO. 6
HOWARD COUNTY, MARYLAND

SCALE AS SHOWN

SHEET 413 OF 463

E-917

BIM 360://10054364 - Little Patuxent WRP 8th Addition/264591_E-HDR_V18.rvt
1/12/2022 9:33:46 AM

DWG MARK	CONDUCTOR	CONDUIT SIZE METAL	PVC	FLEX
C-1001	10#14 & #14G	3/4"	3/4"	3/4"
C-1002	18#14 & #14G	1"	1"	1"
C-1003	1#16 TSP	3/4"	3/4"	3/4"
C-1004	1#16 TSP	3/4"	3/4"	3/4"
C-1005	1#16 TSP	3/4"	3/4"	3/4"
C-1006	8#14 & #14G	3/4"	3/4"	3/4"
C-1007	2#14 & #14G	3/4"	3/4"	3/4"
C-1008	10#14 & #14G	3/4"	3/4"	3/4"
C-1009	CAT 6	3/4"	3/4"	3/4"
C-1010	1#16 TSP			
C-1011	2#14 & #14G	3/4"	3/4"	3/4"
C-1012	10#14 & #14G			
C-1013	10#14 & #14G	3/4"	3/4"	3/4"
C-1014	CAT 6	3/4"	3/4"	3/4"
C-1015	1#16 TSP	3/4"	3/4"	3/4"
C-1016	2#14	3/4"	3/4"	3/4"
C-1017	2#14	3/4"	3/4"	3/4"
C-1018	1#16 TSP	3/4"	3/4"	3/4"
C-1019	2#14	3/4"	3/4"	3/4"
C-1020	1#16 TSP	3/4"	3/4"	3/4"
C-1021	1#16 TSP	3/4"	3/4"	3/4"
C-1022	4#14 & #14G	3/4"	3/4"	3/4"
C-1023	2#14 & #14G	3/4"	3/4"	3/4"
C-1024	1#16 TSP	3/4"	3/4"	3/4"
C-1025				
C-1026	10#14 & #14G	3/4"	3/4"	3/4"
C-1027	2#14 & #14G	3/4"	3/4"	3/4"
C-1028	10#14 & #14G	3/4"	3/4"	3/4"
C-1029	1#16 TSP	3/4"	3/4"	3/4"
C-1030				
C-1031	5#14 & #14G	3/4"	3/4"	3/4"
C-1032	2#14 & #14G	3/4"	3/4"	3/4"
C-1033	10#14 & #14G	3/4"	3/4"	3/4"
C-1034				
C-1035	10#14 & #14G	3/4"	3/4"	3/4"
C-1036				
C-1037	1#16 TSP	3/4"	3/4"	3/4"
C-1038				
C-1039	5#14 & #14G	3/4"	3/4"	3/4"
C-1040	2#14 & #14G	3/4"	3/4"	3/4"
C-1041				
C-1042	PER MFG	1"	1"	1"
C-1043				
C-1044				
C-1045	1#16 TSP	3/4"	3/4"	3/4"
C-1046				
C-1047				
C-1048				
C-1049	PER MFG	1"	1"	1"
C-1050				
C-1051	1#16 TSP	3/4"	3/4"	3/4"
C-1052				
C-1053				
C-1054				
C-1055				
C-1056	CAT 6	3/4"	3/4"	3/4"
C-1057	CAT 6	3/4"	3/4"	3/4"
C-1058	10#14 & #14G	3/4"	3/4"	3/4"
C-1059				
C-1060	2#14 & #14G	3/4"	3/4"	3/4"
C-1061	2#14 & #14G	3/4"	3/4"	3/4"
C-1062				
C-1063	10#14 & #14G	3/4"	3/4"	3/4"
C-1064				
C-1065	2#14 & #14G	3/4"	3/4"	3/4"
C-1066	2#14 & #14G	3/4"	3/4"	3/4"
C-1067	1#16 TSP	3/4"	3/4"	3/4"
C-1068				
C-1069	1#16 TSP	3/4"	3/4"	3/4"
C-1070				
C-1071				
C-1072				

DWG MARK	CONDUCTOR	CONDUIT SIZE METAL	PVC	FLEX
C-1073				
C-1074				
C-1075				
C-1076	10#14 & #14G	3/4"	3/4"	3/4"
C-1077	1#16 TSP	3/4"	3/4"	3/4"
C-1078	2#14 & #14G	3/4"	3/4"	3/4"
C-1079				
C-1080				
C-1081				
C-1082				
C-1083	10#14 & #14G	3/4"	3/4"	3/4"
C-1084	1#16 TSP	3/4"	3/4"	3/4"
C-1085	2#14 & #14G	3/4"	3/4"	3/4"
C-1086				
C-1087				
C-1088	1#16 TSP	3/4"	3/4"	3/4"
C-1089	1#16 TSP	3/4"	3/4"	3/4"
C-1090	1#16 TSP	3/4"	3/4"	3/4"
C-2000				
C-2001	1#16 TSP	3/4"	3/4"	3/4"
C-2002	1#16 TSP	3/4"	3/4"	3/4"
C-2003	5#14 & #14G	3/4"	3/4"	3/4"
C-2004	2#14 & #14G	3/4"	3/4"	3/4"
C-2005	2#14 & #14G	3/4"	3/4"	3/4"
C-2006	10#14 & #14G	3/4"	3/4"	3/4"
C-2007	CAT 6	3/4"	3/4"	3/4"
C-2008	1#16 TSP	3/4"	3/4"	3/4"
C-2009	1#16 TSP	3/4"	3/4"	3/4"
C-2010	5#14 & #14G	3/4"	3/4"	3/4"
C-2011	2#14 & #14G	3/4"	3/4"	3/4"
C-2012	2#14 & #14G	3/4"	3/4"	3/4"
C-2013	2#14 & #14G	3/4"	3/4"	3/4"
C-2014	10#14 & #14G	3/4"	3/4"	3/4"
C-2015	CAT 6	3/4"	3/4"	3/4"
C-2016				
C-2017	2#14 & #14G	3/4"	3/4"	3/4"
C-2018	2#14 & #14G	3/4"	3/4"	3/4"
C-2019	CAT 6	3/4"	3/4"	3/4"
C-2020	10#14 & #14G	3/4"	3/4"	3/4"
C-2021	2#14 & #14G	3/4"	3/4"	3/4"
C-2022	2#14 & #14G	3/4"	3/4"	3/4"
C-2023	CAT 6	3/4"	3/4"	3/4"
C-2024	10#14 & #14G	3/4"	3/4"	3/4"
C-2025	2#14 & #14G	3/4"	3/4"	3/4"
C-2026	2#14 & #14G	3/4"	3/4"	3/4"
C-2027	CAT 6	3/4"	3/4"	3/4"
C-2028	10#14 & #14G	3/4"	3/4"	3/4"
C-2029	2#14 & #14G	3/4"	3/4"	3/4"
C-2030	2#14 & #14G	3/4"	3/4"	3/4"
C-2031	CAT 6	3/4"	3/4"	3/4"
C-2032	10#14 & #14G	3/4"	3/4"	3/4"
C-2033	1#16 TSP	3/4"	3/4"	3/4"
C-2034	1#16 TSP	3/4"	3/4"	3/4"
C-2035	CAT 6	3/4"	3/4"	3/4"
C-2036	10#14 & #14G	3/4"	3/4"	3/4"
C-2037	CAT 6	3/4"	3/4"	3/4"
C-2038	10#14 & #14G	3/4"	3/4"	3/4"
C-2039	CAT 6	3/4"	3/4"	3/4"
C-2040	10#14 & #14G	3/4"	3/4"	3/4"
C-2041	10#14	3/4"	3/4"	3/4"
C-2042	2#14 & #14G	3/4"	3/4"	3/4"
C-2043	1#16 TSP	3/4"	3/4"	3/4"
C-2044	2#14 & #14G	3/4"	3/4"	3/4"
C-2045	1#16 TSP	3/4"	3/4"	3/4"
C-2046	1#16 TSP	3/4"	3/4"	3/4"
C-2047	4#14 & #14G	3/4"	3/4"	3/4"
C-2048	8#14 & #14G	3/4"	3/4"	3/4"
C-2049	10#14 & #14G	3/4"	3/4"	3/4"
C-2050	4#14 & #14G	3/4"	3/4"	3/4"
C-2051	2#14	3/4"	3/4"	3/4"

CONDUCTOR AND CONDUIT SCHEDULE
CONTROL CONDUITS

DWG MARK	CONDUCTOR	CONDUIT SIZE METAL	PVC	FLEX
C-2101	CAT 6	3/4"	3/4"	3/4"
C-2500	CAT 6	3/4"	3/4"	3/4"
C-2501	1#16 TSP	3/4"	3/4"	3/4"
C-2502	1#16 TSP	3/4"	3/4"	3/4"
C-2503	1#16 TSP	3/4"	3/4"	3/4"
C-2504	3#12 & #12G	3/4"	3/4"	3/4"
C-2505	6#12 & 2#12G	3/4"	3/4"	3/4"
C-2506	12#14	3/4"	3/4"	3/4"
C-2507	6#12 & 2#12G	3/4"	3/4"	3/4"
C-2508	12#14	3/4"	3/4"	3/4"
C-2509				
C-2510	CAT 6	3/4"	3/4"	3/4"
C-2511	1#16 TSP	3/4"	3/4"	3/4"
C-2512	2#14 & #14G	3/4"	3/4"	3/4"
C-2513	10#14 & #14G	3/4"	3/4"	3/4"
C-2514				
C-2515	CAT 6	3/4"	3/4"	3/4"
C-2516	2#14 & #14G	3/4"	3/4"	3/4"
C-2517	2#14 & #14G	3/4"	3/4"	3/4"
C-2518	10#14 & #14G	3/4"	3/4"	3/4"
C-2519				
C-2520	CAT 6	3/4"	3/4"	3/4"
C-2521	CAT 6	3/4"	3/4"	3/4"
C-2522	CAT 6	3/4"	3/4"	3/4"
C-2523	1#16 TSP	3/4"	3/4"	3/4"
C-2524				
C-2525	-			
C-2526	-			
C-2527	2#14 & #14G	3/4"	3/4"	3/4"
C-2528	2#14 & #14G	3/4"	3/4"	3/4"
C-2529				
C-2530	1#16 TSP	3/4"	3/4"	3/4"
C-2531	8#14 & #14G	3/4"	3/4"	3/4"
C-2532	1#16 TSP	3/4"	3/4"	3/4"
C-2533	8#14 & #14G	3/4"	3/4"	3/4"
C-2534	1#16 TSP	3/4"	3/4"	3/4"
C-2535	8#14 & #14G	3/4"	3/4"	3/4"
C-2536	12#14 & #14G	3/4"	3/4"	3/4"
C-2537	CAT 6	3/4"	3/4"	3/4"
C-2538	CAT 6	3/4"	3/4"	3/4"
C-2539				
C-2540	2#14 & #14G	3/4"	3/4"	3/4"
C-2541	2#14 & #14G	3/4"	3/4"	3/4"
C-2542	1#16 TSP	3/4"	3/4"	3/4"
C-2543	1#16 TSP	3/4"	3/4"	3/4"
C-2544	3#12 & #12G	3/4"	3/4"	3/4"
C-2545	8#14 & #14G	3/4"	3/4"	3/4"
C-2546	1#16 TSP	3/4"	3/4"	3/4"
C-2547	3#12 & #12G	3/4"	3/4"	3/4"
C-2548	8#14 & #14G	3/4"	3/4"	3/4"
C-2549	1#16 TSP	3/4"	3/4"	3/4"
C-2550	3#12 & #12G	3/4"	3/4"	3/4"
C-2551	8#14 & #14G	3/4"	3/4"	3/4"
C-2552	1#16 TSP	3/4"	3/4"	3/4"
C-2553				
C-2554				
C-2555				
C-2556				
C-2557				
C-2558				
C-2559				
C-2560				

DWG MARK	CONDUCTOR	CONDUIT SIZE METAL	PVC	FLEX
C-3000				
C-3001	14#14 & #14G	3/4"	3/4"	3/4"
C-3002	2#14 & #14G	3/4"	3/4"	3/4"
C-3003	10#14 & #14G	3/4"	3/4"	3/4"
C-3004	2#14 & #14G	3/4"	3/4"	3/4"
C-3005				
C-3006				
C-3007	14#14 & #14G	3/4"	3/4"	3/4"
C-3008	2#14 & #14G	3/4"	3/4"	3/4"
C-3009	10#14 & #14G	3/4"	3/4"	3/4"
C-3010	2#14 & #14G	3/4"	3/4"	3/4"
C-3011				
C-3012				
C-3013	CAT 6	3/4"	3/4"	3/4"
C-3014	2#14 & #14G	3/4"	3/4"	3/4"
C-3015	10#14 & #14G	3/4"	3/4"	3/4"
C-3016	2#14 & #14G	3/4"	3/4"	3/4"
C-3017				
C-3018				
C-3019				
C-3020	CAT 6	3/4"	3/4"	3/4"
C-3021	2#14 & #14G	3/4"	3/4"	3/4"
C-3022	10#14 & #14G	3/4"	3/4"	3/4"
C-3023	2#14 & #14G	3/4"	3/4"	3/4"
C-3024	2#14 & #14G	3/4"	3/4"	3/4"
C-3025	CAT 6	3/4"	3/4"	3/4"
C-3026	2#14 & #14G	3/4"	3/4"	3/4"
C-3027	10#14 & #14G	3/4"	3/4"	3/4"
C-3028	2#14 & #14G	3/4"	3/4"	3/4"
C-3029	2#14 & #14G	3/4"	3/4"	3/4"
C-3030	CAT 6	3/4"	3/4"	3/4"
C-3031	2#14 & #14G	3/4"	3/4"	3/4"
C-3032	10#14 & #14G	3/4"	3/4"	3/4"
C-3033	2#14 & #14G	3/4"	3/4"	3/4"
C-3034	2#14 & #14G	3/4"	3/4"	3/4"
C-3035	CAT 6	3/4"	3/4"	3/4"
C-3036	2#14 & #14G	3/4"	3/4"	3/4"
C-3037	10#14 & #14G	3/4"	3/4"	3/4"
C-3038	2#14 & #14G	3/4"	3/4"	3/4"
C-3039				
C-3040	CAT 6	3/4"	3/4"	3/4"
C-3041	2#14 & #14G	3/4"	3/4"	3/4"
C-3042	10#14 & #14G	3/4"	3/4"	3/4"
C-3043	2#14 & #14G	3/4"	3/4"	3/4"
C-3044				
C-3045	CAT 6	3/4"	3/4"	3/4"
C-3046	2#14 & #14G	3/4"	3/4"	3/4"
C-3047	10#14 & #14G	3/4"	3/4"	3/4"
C-3048	2#14 & #14G	3/4"	3/4"	3/4"
C-3049	4#14 & #14G	3/4"	3/4"	3/4"
C-3050	1#16 TSP	3/4"	3/4"	3/4"
C-3051	1#16 TSP	3/4"	3/4"	3/4"
C-3052	1#16 TSP	3/4"	3/4"	3/4"
C-3053	1#16 TSP	3/4"	3/4"	3/4"
C-3054	1#16 TSP	3/4"	3/4"	3/4"
C-3055	1#16 TSP	3/4"	3/4"	3/4"
C-3056	1#16 TSP	3/4"	3/4"	3/4"
C-3057	1#16 TSP	3/4"	3/4"	3/4"
C-3058	1#16 TSP	3/4"	3/4"	3/4"
C-3059	2#12 & #12G	3/4"	3/4"	3/4"
C-3060	2#14 & #14G	3/4"	3/4"	3/4"
C-3061	2#14 & #14G	3/4"	3/4"	3/4"
C-3062	2#14 & #14G	3/4"	3/4"	3/4"
C-3063	2#14 & #14G	3/4"	3/4"	3/4"
C-3064	2#14 & #14G	3/4"	3/4"	3/4"
C-3065	85#14	2"	2"	2"
C-3066	62#14	2"	2"	2"
C-3067	42#14	2"	2"	2"

CONDUCTOR AND CONDUIT SCHEDULE
CONTROL CONDUITS

DWG MARK	CONDUCTOR	CONDUIT SIZE METAL	PVC	FLEX
C-3400				
C-3401	2#16 TSP	3/4"	3/4"	3/4"
C-3402	2#14	3/4"	3/4"	3/4"
C-3403	1#16 TSP	3/4"	3/4"	3/4"
C-3404	1#16 TSP	3/4"	3/4"	3/4"
C-3405	2#16 TSP	3/4"	3/4"	3/4"
C-3406	2#14	3/4"	3/4"	3/4"
C-3407				
C-3408				
C-3409				
C-3410				
C-3411				
C-3412				
C-3413	2#14 & #14G	3/4"	3/4"	3/4"
C-3414				
C-3415				
C-3416				
C-3417				
C-3418				
C-3419	1#16 TSP	3/4"	3/4"	3/4"
C-3420				
C-3421				
C-3422				
C-3423				
C-3424				
C-3425	1#16 TSP	3/4"	3/4"	3/4"
C-3426	2#14 & #14G	3/4"	3/4"	3/4"
C-3427	2#14 & #14G	3/4"	3/4"	3/4"
C-3428				
C-3429				
C-3430	10#14 & #14G	3/4"	3/4"	3/4"
C-3431	2#14 & #14G	3/4"	3/4"	3/4"
C-3432	CAT 6	3/4"	3/4"	3/4"
C-3433				
C-3434	1#16 TSP	3/4"	3/4"	3/4"
C-3435	1#16 TSP	3/4"	3/4"	3/4"
C-3436	10#14 & #14G	3/4"	3/4"	3/4"
C-3437	2#14 & #14G	3/4"	3/4"	3/4"
C-3438	CAT 6	3/4"	3/4"	3/4"
C-3439	1#16 TSP	3/4"	3/4"	3/4"
C-3440	1#16 TSP	3/4"	3/4"	3/4"
C-3441	10#14 & #14G	3/4"	3/4"	3/4"
C-3442	2#14 & #14G	3/4"	3/4"	3/4"
C-3443	CAT 6	3/4"	3/4"	3/4"
C-3444	2#16 TSP	3/4"	3/4"	3/4"
C-3445	5#14 & #14G	3/4"	3/4"	3/4"
C-3446	1#16 TSP	3/4"	3/4"	3/4"
C-3447	1#16 TSP	3/4"	3/4"	3/4"
C-3448	2#16 TSP	3/4"	3/4"	3/4"
C-3449	5#14 & #14G	3/4"	3/4"	3/4"
C-3450	1#16 TSP	3/4"	3/4"	3/4"
C-3451	1#16 TSP	3/4"	3/4"	3/4"
C-3452	1#16 TSP	3/4"	3/4"	3/4"
C-3453	1#16 TSP	3/4"	3/4"	3/4"
C-3454	2#16 TSP	3/4"	3/4"	3/4"
C-3455	5#14 & #14G	3/4"	3/4"	3/4"
C-3456	1#16 TSP	3/4"	3/4"	3/4"
C-3457	1#16 TSP	3/4"	3/4"	3/4"
C-3458				
C-3459				
C-3460	1#16 TSP	3/4"	3/4"	3/4"
C-3461				
C-3462	1#16 TSP	3/4"	3/4"	3/4"
C-3463	1#16 TSP	3/4"	3/4"	3/4"
C-3464	2#16 TSP	3/4"	3/4"	3/4"
C-3465	5#14 & #14G	3/4"	3/4"	3/4"
C-3466	1#16 TSP	3/4"	3/4"	3/4"
C-3467	1#16 TSP	3/4"	3/4"	3/4"
C-3468				
C-3469				
C-3470	1#16 TSP	3/4"	3/4"	3/4"
C-3471				
C-3472	1#16 TSP	3/4"	3/4"	3/4"

DWG MARK	CONDUCTOR	CONDUIT SIZE METAL	PVC	FLEX
C-3473	1#16 TSP	3/4"	3/4"	3/4"
C-3474	1#16 TSP	3/4"	3/4"	3/4"
C-3475				
C-3476				
C-3477				
C-3478				
C-3479				
C-3500	1#16 TSP	3/4"	3/4"	3/4"
C-3501				
C-3502	8#14 & #14G	3/4"	3/4"	3/4"
C-3503	2#14 & #14G	3/4"	3/4"	3/4"
C-3504	2#14 & #14G	3/4"	3/4"	3/4"
C-3505	2#14 & #14G	3/4"	3/4"	3/4"
C-3506	2#14 & #14G	3/4"	3/4"	3/4"
C-3507	2#14 & #14G	3/4"	3/4"	3/4"
C-3508	2#14 & #14G	3/4"	3/4"	3/4"
C-3509	8#14 & #14G	3/4"	3/4"	3/4"
C-3510	2#14 & #14G	3/4"	3/4"	3/4"
C-3511	2#14 & #14G	3/4"	3/4"	3/4"
C-3512	2#14 & #14G	3/4"	3/4"	3/4"
C-3513	2#14 & #14G	3/4"	3/4"	3/4"
C-3514	1#16 TSP	3/4"	3/4"	3/4"
C-3515	4#14 & #14G	3/4"	3/4"	3/4"
C-3516	1#16 TSP	3/4"	3/4"	3/4"
C-3517	2#14	3/4"	3/4"	3/4"
C-3518				
C-3519				
C-3520				
C-3700				
C-3701	CAT 6	3/4"	3/4"	3/4"
C-3702	2#14 & #14G	3/4"	3/4"	3/4"
C-3703	2#14 & #14G	3/4"	3/4"	3/4"
C-3704	10#14 & #14G	3/4"	3/4"	3/4"
C-3705				
C-3706	CAT 6	3/4"	3/4"	3/4"
C-3707	2#14 & #14G	3/4"	3/4"	3/4"
C-3708	2#14 & #14G	3/4"	3/4"	3/4"
C-3709	10#14 & #14G	3/4"	3/4"	3/4"
C-3710	CAT 6	3/4"	3/4"	3/4"
C-3711	2#14 & #14G	3/4"	3/4"	3/4"
C-3712	2#14 & #14G	3/4"	3/4"	3/4"
C-3713	10#14 & #14G	3/4"	3/4"	3/4"
C-3714				
C-3715	CAT 6	3/4"	3/4"	3/4"
C-3716	2#14 & #14G	3/4"	3/4"	3/4"
C-3717	10#14 & #14G	3/4"	3/4"	3/4"
C-3718	CAT 6	3/4"	3/4"	3/4"
C-3719	2#14 & #14G	3/4"	3/4"	3/4"
C-3720	10#14 & #14G	3/4"	3/4"	3/4"
C-3721	2#14 & #14G	3/4"	3/4"	3/4"
C-3722	2#14 & #14G	3/4"	3/4"	3/4"
C-3723				
C-3724	1#16 TSP	3/4"	3/4"	3/4"
C-3725	1#16 TSP	3/4"	3/4"	3/4"
C-3726	-			
C-3727	-			
C-3728	-			
C-3729	1#16 TSP	3/4"	3/4"	3/4"
C-3730	1#16 TSP	3/4"	3/4"	3/4"
C-3731	1#16 TSP	3/4"	3/4"	3/4"
C-3732				
C-3733				
C-3734				
C-3735	VENDER CABLE	3/4"	3/4"	3/4"
C-3736	VENDER CABLE	3/4"	3/4"	3/4"
C-3737	VENDER CABLE	3/4"	3/4"	3/4"
C-3738	VENDER CABLE	3/4"	3/4"	3/4"
C-3739				
C-3740				
C-3741				
C-3742				

GENERAL NOTES

1. WHERE A 1" CONDUIT IS SPECIFIED FOR FIBER OPTIC (FO) CABLES, LARGE RADIUS ELBOWS AND BENDS SHALL BE USED. MIN RADIUS FOR FITTINGS SHALL BE 12 INCHES.
2. FLEXIBLE CONDUIT SHALL NOT BE USED FOR FIBER OPTIC (FO) CABLES.

THE DRAWINGS IN THIS SET ARE RECORD DRAWINGS. THEY ARE CONSTRUCTION CONTRACT DRAWINGS WHICH HAVE BEEN REVISED BASED ON AVAILABLE FIELD INFORMATION RECORDED BY OTHERS DURING CONSTRUCTION OF THIS CONTRACT. THERE HAS BEEN NO VERIFICATION OF DIMENSIONS SHOWN ON THE CONSTRUCTION DRAWINGS OR THE ACCURACY/COMPLETENESS OF THE FIELD INFORMATION RECEIVED.

SIGNATURE _____ DATE 2/7/2023

BIM 360://10054364 – Little Patuxent WRP 8th Addition/264591_E-HDR_V16.rvt
1/12/2022 9:33:49 AM

AS-BUILT REPLACEMENT SHEET

PROFESSIONAL CERTIFICATION

THIS DRAWING WAS ORIGINALLY APPROVED FOR CONSTRUCTION AND SEALED BY ROBERT L. ANDERSON, A REGISTERED PROFESSIONAL ENGINEER IN THE STATE OF MARYLAND, NO. 37997.

NOTICE TO CONTRACTORS

- PROJECT ELEVATIONS ARE BASED ON NAVD88 AND HOWARD COUNTY'S BENCHMARK SYSTEM
- PREVIOUS PROJECTS USED OTHER DATUMS
- APPLY THE FOLLOWING CONVERSIONS WHEN USING PREVIOUS CONTRACT DRAWINGS:
  - ADDITION NO. 6: SUBTRACT 0.80 FT
  - PRIOR ADDITIONS: SUBTRACT 1.04 FT

DEPARTMENT OF PUBLIC WORKS
HOWARD COUNTY, MARYLAND

CHIEF, BUREAU OF UTILITIES DATE

DES: WAC
DRN: WAC
CHK: RLA
DATE: 12/2016

DATE	REV	DESCRIPTION
07/2019		RECORD DRAWING

ELECTRICAL

INSTRUMENT CONDUIT SCHEDULE I

LITTLE PATUXENT WATER RECLAMATION PLANT
8TH ADDITION
BIOSOLIDS PROCESSING FACILITIES - PHASE I

CAPITAL PROJECT S-6295
CONTRACT NO. 24-4935

ELECTION DISTRICT NO. 6
HOWARD COUNTY, MARYLAND

SCALE AS SHOWN

SHEET 414 OF 463

E-918

CONDUCTOR AND CONDUIT SCHEDULE
CONTROL CONDUITS

DWG MARK	CONDUCTOR	CONDUIT SIZE METAL	PVC	FLEX	DWG MARK	CONDUCTOR	CONDUIT SIZE METAL	PVC	FLEX
C-4000					C-6049	2#14 & #14G	3/4"	3/4"	3/4"
C-4001	1#16 TSP	3/4"	3/4"	3/4"	C-6050	2#14 & #14G	3/4"	3/4"	3/4"
C-4002	1#16 TSP	3/4"	3/4"	3/4"	C-6051				
C-4003	1#16 TSP	3/4"	3/4"	3/4"	C-6052	CAT 6	3/4"	3/4"	3/4"
C-4004	1#16 TSP	3/4"	3/4"	3/4"	C-6053	10#14 & #14G	3/4"	3/4"	3/4"
C-4005	1#16 TSP	3/4"	3/4"	3/4"	C-6054	2#14 & #14G	3/4"	3/4"	3/4"
C-4006	1#16 TSP	3/4"	3/4"	3/4"	C-6055	2#14 & #14G	3/4"	3/4"	3/4"
C-4007	2#14 & #14G	3/4"	3/4"	3/4"	C-6056				
C-4008	1#16 TSP	3/4"	3/4"	3/4"	C-6057	CAT 6	3/4"	3/4"	3/4"
C-4009	1#16 TSP	3/4"	3/4"	3/4"	C-6058	10#14 & #14G	3/4"	3/4"	3/4"
C-4010	1#16 TSP	3/4"	3/4"	3/4"	C-6059	2#14 & #14G	3/4"	3/4"	3/4"
C-4011	1#16 TSP	3/4"	3/4"	3/4"	C-6060	2#14 & #14G	3/4"	3/4"	3/4"
C-4012	1#16 TSP	3/4"	3/4"	3/4"	C-6061	8#14 & #14G	3/4"	3/4"	3/4"
C-4013	1#16 TSP	3/4"	3/4"	3/4"	C-6062	8#14 & #14G	3/4"	3/4"	3/4"
C-4014	10#14 & #14G	3/4"	3/4"	3/4"	C-6063	8 CAT 6	2"	2"	2"
C-4015	8#16 TSP	1-1/2'	1-1/2"	1-1/2"	C-6064				
					C-6065	1#16 TSP	3/4"	3/4"	3/4"
C-4500	6 STR FO	1-1/2'	1-1/2"	-	C-6066				
C-4501	4#14 & #14G	1-1/2'	1-1/2"	1-1/2"	C-6067	1#16 TSP	3/4"	3/4"	3/4"
C-4502	6#14 & #14G	1"	1"	1"	C-6068	8#14 & #14G	3/4"	3/4"	3/4"
C-4503	CAT 6	1"	1"	1"	C-6069	2#14 & #14G	3/4"	3/4"	3/4"
C-4504	CAT 6	1"	1"	1"	C-6070	8#14 & #14G	3/4"	3/4"	3/4"
					C-6071	2#14 & #14G	3/4"	3/4"	3/4"
C-6000					C-6072	2#14 & #14G	3/4"	3/4"	3/4"
C-6001	CAT 6	3/4"	3/4"	3/4"	C-6073				
C-6002	10#14 & #14G	3/4"	3/4"	3/4"	C-6074	2#14 & #14G	3/4"	3/4"	3/4"
C-6003	2#14 & #14G	3/4"	3/4"	3/4"	C-6075	1#16 TSP	3/4"	3/4"	3/4"
C-6004	2#14 & #14G	3/4"	3/4"	3/4"	C-6076	2#14 & #14G	3/4"	3/4"	3/4"
C-6005	2#14 & #14G	3/4"	3/4"	3/4"	C-6077	2#16 TSP	3/4"	3/4"	3/4"
C-6006	2#14 & #14G	3/4"	3/4"	3/4"	C-6078	10#14 & #14G	3/4"	3/4"	3/4"
C-6007					C-6079	2#14 & #14G	3/4"	3/4"	3/4"
C-6008	CAT 6	3/4"	3/4"	3/4"	C-6080	2#14 & #14G	3/4"	3/4"	3/4"
C-6009	10#14 & #14G	3/4"	3/4"	3/4"	C-6081				
C-6010	CAT 6	3/4"	3/4"	3/4"	C-6082	2#16 TSP	3/4"	3/4"	3/4"
C-6011	10#14 & #14G	3/4"	3/4"	3/4"	C-6083	10#14 & #14G	3/4"	3/4"	3/4"
C-6012	CAT 6	3/4"	3/4"	3/4"	C-6084	2#14 & #14G	3/4"	3/4"	3/4"
C-6013	2#14 & #14G	3/4"	3/4"	3/4"	C-6085	2#14 & #14G	3/4"	3/4"	3/4"
C-6014	1#16 TSP	3/4"	3/4"	3/4"	C-6086				
C-6015	2#14 & #14G	3/4"	3/4"	3/4"	C-6087	2#16 TSP	3/4"	3/4"	3/4"
C-6016	1#16 TSP	3/4"	3/4"	3/4"	C-6088	10#14 & #14G	3/4"	3/4"	3/4"
C-6017	2#14 & #14G	3/4"	3/4"	3/4"	C-6089	2#14 & #14G	3/4"	3/4"	3/4"
C-6018	4#16 TSP	1"	1"	1"	C-6090	2#14 & #14G	3/4"	3/4"	3/4"
C-6019	4#16 TSP	1"	1"	1"	C-6091	10#14 & #14G	3/4"	3/4"	3/4"
C-6020	8#14 & #14G	3/4"	3/4"	3/4"	C-6092				
C-6021	8#14 & #14G	3/4"	3/4"	3/4"	C-6093				
C-6022	2#24	3/4"	3/4"	3/4"	C-6094				
C-6023	1#16 TSP	3/4"	3/4"	3/4"	C-6095				
C-6024	5#14 & #14G	3/4"	3/4"	3/4"					
C-6025	1#16 TSP	3/4"	3/4"	3/4"					
C-6026	5#14 & #14G	3/4"	3/4"	3/4"					
C-6027	2#24	3/4"	3/4"	3/4"					
C-6028	1#16 TSP	3/4"	3/4"	3/4"					
C-6029	1#16 TSP	3/4"	3/4"	3/4"					
C-6030	10#14 & #14G	3/4"	3/4"	3/4"					
C-6031	2#14 & #14G	3/4"	3/4"	3/4"					
C-6032	2#14 & #14G	3/4"	3/4"	3/4"					
C-6033	2#14 & #14G	3/4"	3/4"	3/4"					
C-6034	2#14 & #14G	3/4"	3/4"	3/4"					
C-6035	1#16 TSP	3/4"	3/4"	3/4"					
C-6036	2#16 TSP	3/4"	3/4"	3/4"					
C 6037	1#16 TSP	3/4"	3/4"	3/4"					
C-6038	2#16 TSP	3/4"	3/4"	3/4"					
C-6039	10#14 & #14G	3/4"	3/4"	3/4"					
C-6040	CAT 6	3/4"	3/4"	3/4"					
C-6041	10#14 & #14G	3/4"	3/4"	3/4"					
C-6042	CAT 6	3/4"	3/4"	3/4"					
C-6043	10#14 & #14G	3/4"	3/4"	3/4"					
C-6044	1#16 TSP	3/4"	3/4"	3/4"					
C-6045	1#16 TSP	3/4"	3/4"	3/4"					
C-6046									
C-6047	CAT 6	3/4"	3/4"	3/4"					
C-6048	10#14 & #14G	3/4"	3/4"	3/4"					

CONDUCTOR AND CONDUIT SCHEDULE
CONTROL CONDUITS

DWG MARK	CONDUCTOR	CONDUIT SIZE METAL	PVC	FLEX	DWG MARK	CONDUCTOR	CONDUIT SIZE METAL	PVC	FLEX
					C-9000				
C-7001	14#14 & #14G	1"	1"	1"	C-9001	24 STR FO	2"	2"	-
C-7002	2#14 & #14G	3/4"	3/4"	3/4"	C-9002	24 STR FO	2"	2"	-
C-7003	1#16 TSP	3/4"	3/4"	3/4"	C-9003	24 STR FO	2"	2"	-
C-7004	2#14 & #14G	3/4"	3/4"	3/4"	C-9004	24 STR FO	2"	2"	-
C-7005	2#14 & #14G	3/4"	3/4"	3/4"	C-9005	CAT 6	3/4"	3/4"	3/4"
C-7006	2#14 & #14G	3/4"	3/4"	3/4"	C-9006	CAT 6	3/4"	3/4"	3/4"
C-7007	2#14 & #14G	3/4"	3/4"	3/4"	C-9007	6 STR FO	1"	1"	-
C-7008					C-9008	6 STR FO	1"	1"	-
C-7009					C-9009	6 STR FO	1"	1"	-
C-7010					C-9010	6 STR FO	1"	1"	-
					C-9011	6 STR FO	1"	1"	-
					C-9012	6 STR FO	1"	1"	-
C-8000					C-9013	6 STR FO	1"	1"	-
C-8001	2#14 & #14G	3/4"	3/4"	3/4"	C-9014	6 STR FO	1"	1"	-
C-8002	2#14 & #14G	3/4"	3/4"	3/4"	C-9015	6 STR FO	1"	1"	-
C-8003	2#14 & #14G	3/4"	3/4"	3/4"	C-9016	6 STR FO	1"	1"	-
C-8004	1#16 TSP	3/4"	3/4"	3/4"	C-9017	6 STR FO	1"	1"	-
C-8005	2#14 & #14G	3/4"	3/4"	3/4"	C-9018	3-6 STR FO	1-1/2"	1-1/2"	-
C-8006	1#16 TSP	3/4"	3/4"	3/4"	C-9019	3-6 STR FO	1-1/2"	1-1/2"	-
C-8007					C-9020	6 STR FO	1"	1"	-
C-8008	10#14 & #14G	3/4"	3/4"	3/4"	C-9021	3-6 STR FO	1-1/2"	1-1/2"	-
C-8009	2#16 TSP	3/4"	3/4"	3/4"	C-9022	12#14 & #14G	3/4"	3/4"	3/4"
C-8010	2#14 & #14G	3/4"	3/4"	3/4"	C-9023	12#14 & #14G	3/4"	3/4"	3/4"
C-8011					C-9024	6 STR FO	1"	1"	-
C-8012	10#14 & #14G	3/4"	3/4"	3/4"	C-9025	6 STR FO	1"	1"	-
C-8013	2#16 TSP	3/4"	3/4"	3/4"	C-9026	6 STR FO	1"	1"	-
C-8014	1#16 TSP	3/4"	3/4"	3/4"	C-9027	6 STR FO	1"	1"	-
C-8015					C-9028	3-6 STR FO	1-1/2"	1-1/2"	-
C-8016	CAT 6	3/4"	3/4"	3/4"	C-9029				
C-8017	2#14 & #14G	3/4"	3/4"	3/4"	C-9030	6 STR FO	1"	1"	-
C-8018	2#14 & #14G	3/4"	3/4"	3/4"	C-9031	6 STR FO	1"	1"	-
C-8019	10#14 & #14G	3/4"	3/4"	3/4"	C-9032	6 STR FO	1"	1"	-
C-8020					C-9033	6#14	3/4"	3/4"	3/4"
C-8021	CAT 6	3/4"	3/4"	3/4"	C-9034	8#14 & #14G	3/4"	3/4"	3/4"
C-8022	2#14 & #14G	3/4"	3/4"	3/4"	C-9035	8#14 & #14G	3/4"	3/4"	3/4"
C-8023	2#14 & #14G	3/4"	3/4"	3/4"	C-9036	8#14 & #14G	3/4"	3/4"	3/4"
C-8024	10#14 & #14G	3/4"	3/4"	3/4"	C-9037				
C-8025	1#16 TSP	3/4"	3/4"	3/4"	C-9038				
C-8026	10#14 & #14G	3/4"	3/4"	3/4"	C-9039	4#14 & #14G	3/4"	3/4"	3/4"
C-8027	2#16 TSP	3/4"	3/4"	3/4"	C-9040	2#14	3/4"	3/4"	3/4"
C-8028					C-9041				
C-8029					C-9042	10#14	3/4"	3/4"	3/4"
C-8030	1#16 TSP	3/4"	3/4"	3/4"	C-9043	4#14 & #14G	3/4"	3/4"	3/4"
C-8031	1#16 TSP	3/4"	3/4"	3/4"	C-9044	2#14	3/4"	3/4"	3/4"
C-8032	1#16 TSP	3/4"	3/4"	3/4"	C-9045	6 STR FO	1"	1"	-
C-8033	10#14 & #14G	3/4"	3/4"	3/4"	C-9046	8#14	3/4"	3/4"	3/4"
C-8034					C-9047				
C-8035	CAT 6	3/4"	3/4"	3/4"	C-9048				
C-8036	2#14 & #14G	3/4"	3/4"	3/4"	C-9049				
C-8037	2#14 & #14G	3/4"	3/4"	3/4"	C-9050	2#14	3/4"	3/4"	3/4"
C-8038	2#14 & #14G	3/4"	3/4"	3/4"	C-9051				
C-8039	10#14 & #14G	3/4"	3/4"	3/4"	C-9052	2#16 TSP	3/4"	3/4"	3/4"
C-8040	1#16 TSP	3/4"	3/4"	3/4"	C-9053	2#16 TSP	3/4"	3/4"	3/4"
C-8041	4#14 & #14G	3/4"	3/4"	3/4"					
C-8042	2#14 & #14G	3/4"	3/4"	3/4"					
C-8043	2#14 & #14G	3/4"	3/4"	3/4"					
C-8044									
C-8045									
C-8046									
C-8047									
C 8048									
C-8049									
C-8050									
C-8051									
C-8052									
C-8053									
C-8054									
C-8055									
C-8056									
C-8057									
C-8058									

CONDUCTOR AND CONDUIT SCHEDULE
CONTROL CONDUITS

DWG MARK	CONDUCTOR	CONDUIT SIZE METAL	PVC	FLEX	DWG MARK	CONDUCTOR	CONDUIT SIZE METAL	PVC	FLEX

GENERAL NOTES

1. WHERE A 1" CONDUIT IS SPECIFIED FOR FIBER OPTIC (FO) CABLES, LARGE RADIUS ELBOWS AND BENDS SHALL BE USED. MIN RADIUS FOR FITTINGS SHALL BE 12 INCHES.
2. FLEXIBLE CONDUIT SHALL NOT BE USED FOR FIBER OPTIC (FO) CABLES

THE DRAWINGS IN THIS SET ARE RECORD DRAWINGS. THEY ARE CONSTRUCTION CONTRACT DRAWINGS WHICH HAVE BEEN REVISED BASED ON AVAILABLE FIELD INFORMATION RECORDED BY OTHERS DURING CONSTRUCTION OF THIS CONTRACT. THERE HAS BEEN NO VERIFICATION OF DIMENSIONS SHOWN ON THE CONSTRUCTION DRAWINGS OR THE ACCURACY/COMPLETENESS OF THE FIELD INFORMATION RECEIVED.

SIGNATURE — DATE 2/7/2023

AS-BUILT REPLACEMENT SHEET

PROFESSIONAL CERTIFICATION

THIS DRAWING WAS ORIGINALLY APPROVED FOR CONSTRUCTION AND SEALED BY ROBERT L. ANDERSON, A REGISTERED PROFESSIONAL ENGINEER IN THE STATE OF MARYLAND, NO. 37997.

NOTICE TO CONTRACTORS

- PROJECT ELEVATIONS ARE BASED ON NAVD88 AND HOWARD COUNTY'S BENCHMARK SYSTEM
- PREVIOUS PROJECTS USED OTHER DATUMS
- APPLY THE FOLLOWING CONVERSIONS WHEN USING PREVIOUS CONTRACT DRAWINGS:
  - ADDITION NO. 6: SUBTRACT 0.80 FT
  - PRIOR ADDITIONS: SUBTRACT 1.04 FT

DEPARTMENT OF PUBLIC WORKS
HOWARD COUNTY, MARYLAND

CHIEF, BUREAU OF UTILITIES — DATE

DES: WAC
DRN: WAC
CHK: RLA
DATE: 12/2016

DATE	REV	DESCRIPTION
07/2019		RECORD DRAWING

ELECTRICAL

INSTRUMENT CONDUIT SCHEDULE II

LITTLE PATUXENT WATER RECLAMATION PLANT
8TH ADDITION
BIOSOLIDS PROCESSING FACILITIES - PHASE I

CAPITAL PROJECT S-6295
CONTRACT NO. 24-4935

ELECTION DISTRICT NO. 6
HOWARD COUNTY, MARYLAND

SCALE AS SHOWN

SHEET 415 OF 463

E-919

BIM 360://10054364 – Little Patuxent WRP 8th Addition/264591_E-HDR_V18.rvt
1/12/2022 9:33:51 AM

GENERAL NOTES:

1. FOR SYMBOLS AND ABBREVIATIONS, SEE DRAWING E-1.

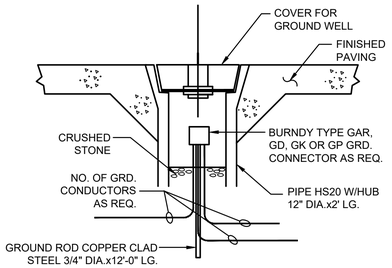

1 E-920 **TEST WELL DETAIL**
SCALE: NONE

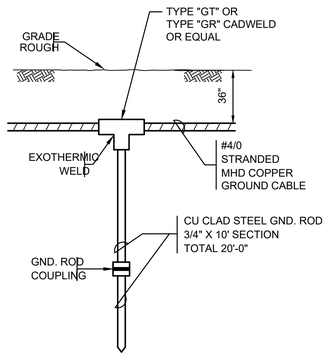

2 E-920 **GROUND ROD DETAIL**
SCALE: NONE

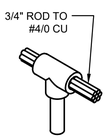

3 E-920 **CABLE TO GROUND ROD DETAIL**
SCALE: NONE

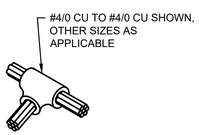

4 E-920 **CABLE CROSS CONNECTION DETAIL**
SCALE: NONE

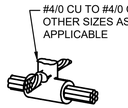

5 E-920 **CABLE TEE CONNECTION DETAIL**
SCALE: NONE

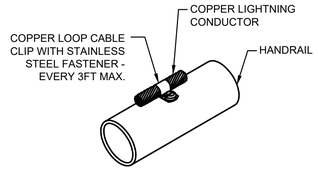

6 E-920 **CABLE TO HANDRAIL DETAIL**
SCALE: NONE

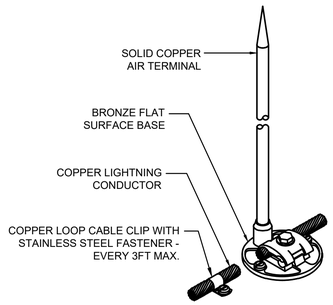

7 E-920 **AIR FLASK DETAIL**
SCALE: NONE

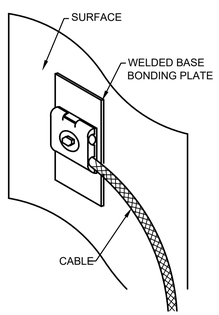

8 E-920 **BOND TO EQUIPMENT DETAIL**
SCALE: NONE

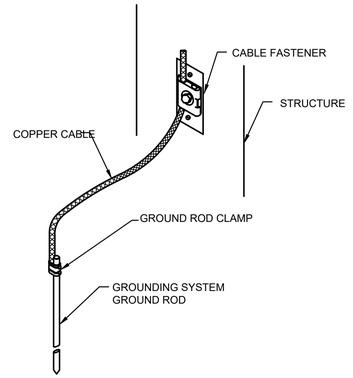

9 E-920 **BOND TO STRUCTURE DETAIL**
SCALE: NONE

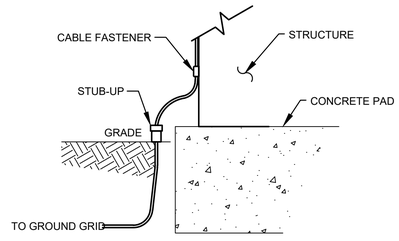

10 E-920 **STUB-UP GROUNDING DETAIL**
SCALE: NONE

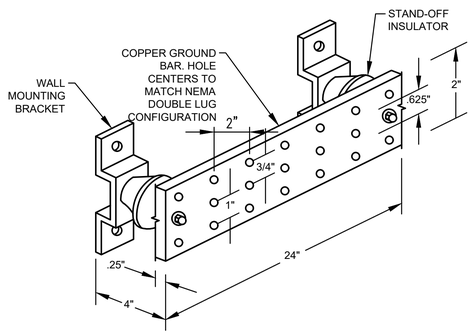

11 E-920 **GROUND BAR DETAIL**
SCALE: NONE

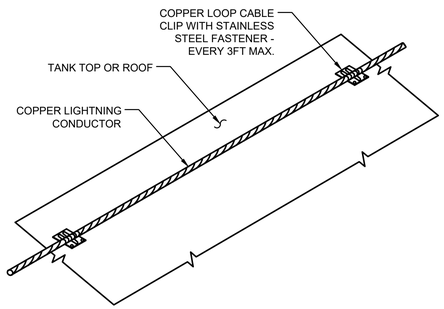

12 E-920 **CABLE MOUNTED TO ROOF DETAIL**
SCALE: NONE

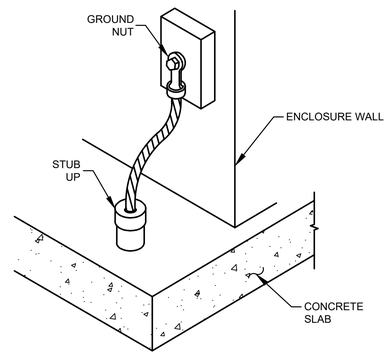

13 E-920 **CABLE MOUNTED TO ROOF DETAIL**
SCALE: NONE

THE DRAWINGS IN THIS SET ARE RECORD DRAWINGS. THEY ARE CONSTRUCTION CONTRACT DRAWINGS WHICH HAVE BEEN REVISED BASED ON AVAILABLE FIELD INFORMATION RECORDED BY OTHERS DURING CONSTRUCTION OF THIS CONTRACT. THERE HAS BEEN NO VERIFICATION OF DIMENSIONS SHOWN ON THE CONSTRUCTION DRAWINGS OR THE ACCURACY/COMPLETENESS OF THE FIELD INFORMATION RECEIVED.

SIGNATURE 2/7/2023 DATE

SHAH & ASSOCIATES | HDR

AS-BUILT REPLACEMENT SHEET

PROFESSIONAL CERTIFICATION
THIS DRAWING WAS ORIGINALLY APPROVED FOR CONSTRUCTION AND SEALED BY KANAIYALAL R. SHAH, A REGISTERED PROFESSIONAL ENGINEER IN THE STATE OF MARYLAND, NO. 11084.

NOTICE TO CONTRACTORS
- PROJECT ELEVATIONS ARE BASED ON NAVD88 AND HOWARD COUNTY'S BENCHMARK SYSTEM
- PREVIOUS PROJECTS USED OTHER DATUMS
- APPLY THE FOLLOWING CONVERSIONS WHEN USING PREVIOUS CONTRACT DRAWINGS:
  - ADDITION NO. 6: SUBTRACT 0.80 FT
  - PRIOR ADDITIONS: SUBTRACT 1.04 FT

DEPARTMENT OF PUBLIC WORKS
HOWARD COUNTY, MARYLAND

CHIEF, BUREAU OF UTILITIES DATE

DES: SR
DRN: DMG
CHK: KRS
DATE: 10/2016

DATE	REV	DESCRIPTION
07/2019		RECORD DRAWING

ELECTRICAL

GROUNDING AND LIGHTNING PROTECTION DETAILS

LITTLE PATUXENT WATER RECLAMATION PLANT
8TH ADDITION
BIOSOLIDS PROCESSING FACILITIES – PHASE I

CAPITAL PROJECT S-6295
CONTRACT NO. 24-4935

ELECTION DISTRICT NO. 6
HOWARD COUNTY, MARYLAND

SCALE AS SHOWN

SHEET **416** OF **463**

E-920

LIGHTING FIXTURE SCHEDULE

FIXTURE TYPE	MOUNTING HEIGHT	CABLE		VOLTS	DESCRIPTIONS WITH CATALOG NO.	REMARKS
		WATTAGE	LAMP			
A	16.5' AFF	125	LED	120	DIE CAST ALUMINUM HOUSING WITH DOUBLE FIXTURE AND 2 LED MODULES PER FIXTURES, HOUSING SHALL BE CORROSION RESISTANT PROTECTED WITH A POLYESTER POWDER COAT WITH PASSIVATION LAYER FINISH. PENDANT MOUNTED, DAYLIGHT SENSORS FOR ENERGY SAVINGS, IT SHALL BE IP66 RATED. GE CAT #ABR1-1-2T-47-1-X-N-23-N-R.	SEE DETAIL A
B	SEE LIGHTING PLAN	53	LED	120	MARINE GRADE EXTRUDED ALUMINUM FRAME WITH CAST ALUMINUM ENDCAPS., GASKETING TO PREVENT WATER AND DUST INFILTRATION.WHITE POLYESTER POWDER COAT FINISH. PENDANT MOUNTED. NEW STAR CAT #VIC4N-L2-50-RW-12-WH-PM.	SEE DETAIL B
C	SEE LIGHTING PLAN	55	LED	120	COPPER-FREE CAST ALUMINUM HOUSING. 6500 LUMENS, ANGLED STANCHION 1-1/2" THREADED MOUNTED, TYPE V MEDIUM 70° FWHM3 OPTICS AND LENS GUARD. LDPI CAT #LE300-PS-V1-X5-M-G.	SEE DETAIL C
D	8' AFF	20	LED	120	NEMA 4X HARSH ENVIRONMENT, EMERGENCY LIGHT DIE CAST ALUMINUM BACK PLATE WITH INTERNAL THERMOPLASTIC HOUSING. LIGHTALARMS CAT #2 V12N2/LD10-M-D.	SEE DETAIL D
E	8' AFF	1.2	LED	120	SEVERE AND HARSH ENVIRONMENTS LED EXIT SIGN WITH SELF-TESTING. NEMA 4X WITH SEALED MAINTENANCE-FREE BATTERIES. SINGLE FACE. LIGHTALARMS CAT # XVE-1R-D-4X OR APPROVED EQUAL.	SEE DETAIL E
E1	SEE LIGHTING PLAN	1.2	LED	120	SEVERE AND HARSH ENVIRONMENTS LED EXIT SIGN WITH SELF-TESTING. NEMA 4X WITH SEALED MAINTENANCE-FREE BATTERIES. DOUBLE FACE. LIGHTALARMS CAT # XVE-2R-D-4X OR APPROVED EQUAL.	SEE DETAIL E1
F	SEE LIGHTING PLAN	69	LED	120	FULLY ENCLOSED & GASKETED INDUSTRIAL FIXTURE RESISTS DUST, BUGS, AND MOSITURE. IP65,66,67 RATED. 8000 NOMINAL LUMENS. WITH FROSTED, RIBBED, IMPACT-RESISTANT ACRYLIC SHIELDING AND PENDANT MOUNTED. WILLIAMS CAT# 96-8-L80-840-HIAFR-DRV-120V.	SEE DETAIL F
G	SEE LIGHTING PLAN	104	LED	120	DIE-CAST ALUMINUM ENCLOSURE WITH INTEGRAL DIE-CAST ALUMINUM HEATSINK AND LED SOURCE PROVIDE PASSIVE THERMAL MANAGEMENT. SUPER DURABLE POLYESTER POWDER COAT FINISH.SURFACE MOUNTED. LUMINAIIRE IS IP65 RATED. WILLIAMS CAT #VWM-V-L10-740-TL-BLK-SDGL-PC-120V.	SEE DETAIL G
H	SEE LIGHTING PLAN	55	LED	120	EXPLOSION PROOF, DUST – IGNITION PROOF LED LUMINAIRE. CROUSE – HINDS BY EATON CCL 1090006 OR APPROVED EQUAL.	SEE DETAIL H
J	SEE LIGHTING PLAN	55	LED	120	EXPLOSION PROOF, DUST – IGNITION PROOF LED LUMINAIRE. CROUSE – HINDS BY EATON CCL 1090006 – CCL 1076003 POLE MOUNTED OR APPROVED EQUAL.	SEE DETAIL J

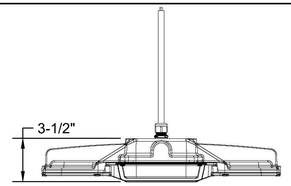

SIDE VIEW

TYPE "A"

TYPE "B"

25° ANGLED
STANCHION MOUNT

TYPE "C"

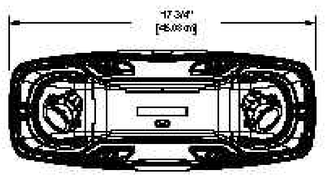

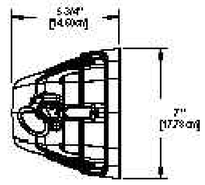

TYPE "D"

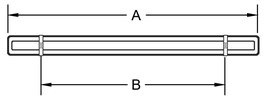

BACK VIEW

TYPE "F"

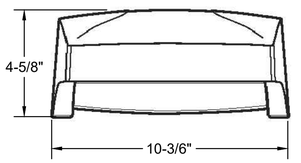

FRONT VIEW

TYPE "G"

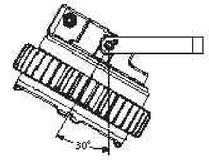

Wall Mount

TYPE "H"

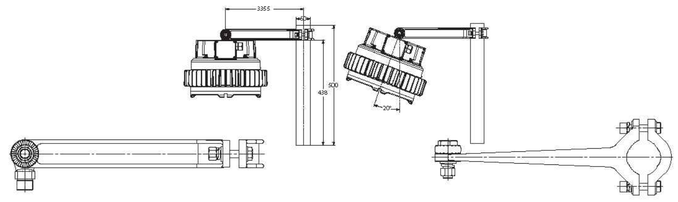

POLE MOUNT

TYPE "J"

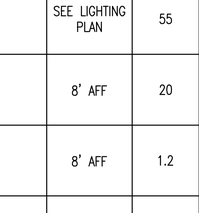

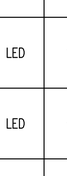

DOUBLE FACE

3 7/8"

TYPE "E"

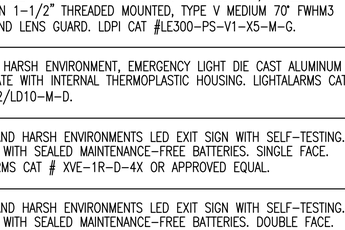

SINGLE FACE

SEVERE XV SERIES
COMBO UNIT SEALED

TYPE "E1"

GENERAL NOTES:

1. FOR SYMBOLS AND ABBREVIATIONS, SEE DRAWING E-1.

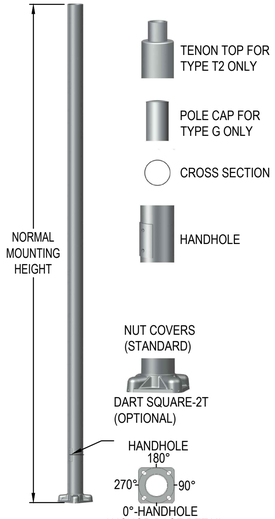

ANCHOR BASE DETAIL
12' ROUND NON-TAPERED ALUMINUM POLE

THE DRAWINGS IN THIS SET ARE RECORD DRAWINGS. THEY ARE CONSTRUCTION CONTRACT DRAWINGS WHICH HAVE BEEN REVISED BASED ON AVAILABLE FIELD INFORMATION RECORDED BY OTHERS DURING CONSTRUCTION OF THIS CONTRACT. THERE HAS BEEN NO VERIFICATION OF DIMENSIONS SHOWN ON THE CONSTRUCTION DRAWINGS OR THE ACCURACY/COMPLETENESS OF THE FIELD INFORMATION RECEIVED.

SIGNATURE

DATE

SHAH & ASSOCIATES

AS-BUILT REPLACEMENT SHEET

PROFESSIONAL CERTIFICATION

THIS DRAWING WAS ORIGINALLY APPROVED FOR CONSTRUCTION AND SEALED BY KANAIYALAL R. SHAH, A REGISTERED PROFESSIONAL ENGINEER IN THE STATE OF MARYLAND, NO. 11084.

NOTICE TO CONTRACTORS

- PROJECT ELEVATIONS ARE BASED ON NAVD88 AND HOWARD COUNTY'S BENCHMARK SYSTEM
- PREVIOUS PROJECTS USED OTHER DATUMS
- APPLY THE FOLLOWING CONVERSIONS WHEN USING PREVIOUS CONTRACT DRAWINGS:
  - ADDITION NO. 6: SUBTRACT 0.80 FT.
  - PRIOR ADDITIONS: SUBTRACT 1.04 FT

DEPARTMENT OF PUBLIC WORKS
HOWARD COUNTY, MARYLAND

CHIEF, BUREAU OF UTILITIES DATE

DES:	SR
DRN:	XMZ
CHK:	KRS
DATE:	10/2016

DATE	REV	DESCRIPTION
07/2019		RECORD DRAWING

ELECTRICAL

LIGHTING FIXTURE AND DETAILS

LITTLE PATUXENT WATER RECLAMATION PLANT
8TH ADDITION
BIOSOLIDS PROCESSING FACILITIES – PHASE I

CAPITAL PROJECT S-6295
CONTRACT NO. 24-4935

ELECTION DISTRICT NO. 6
HOWARD COUNTY, MARYLAND

SCALE AS SHOWN

SHEET 417 OF 463

E-921

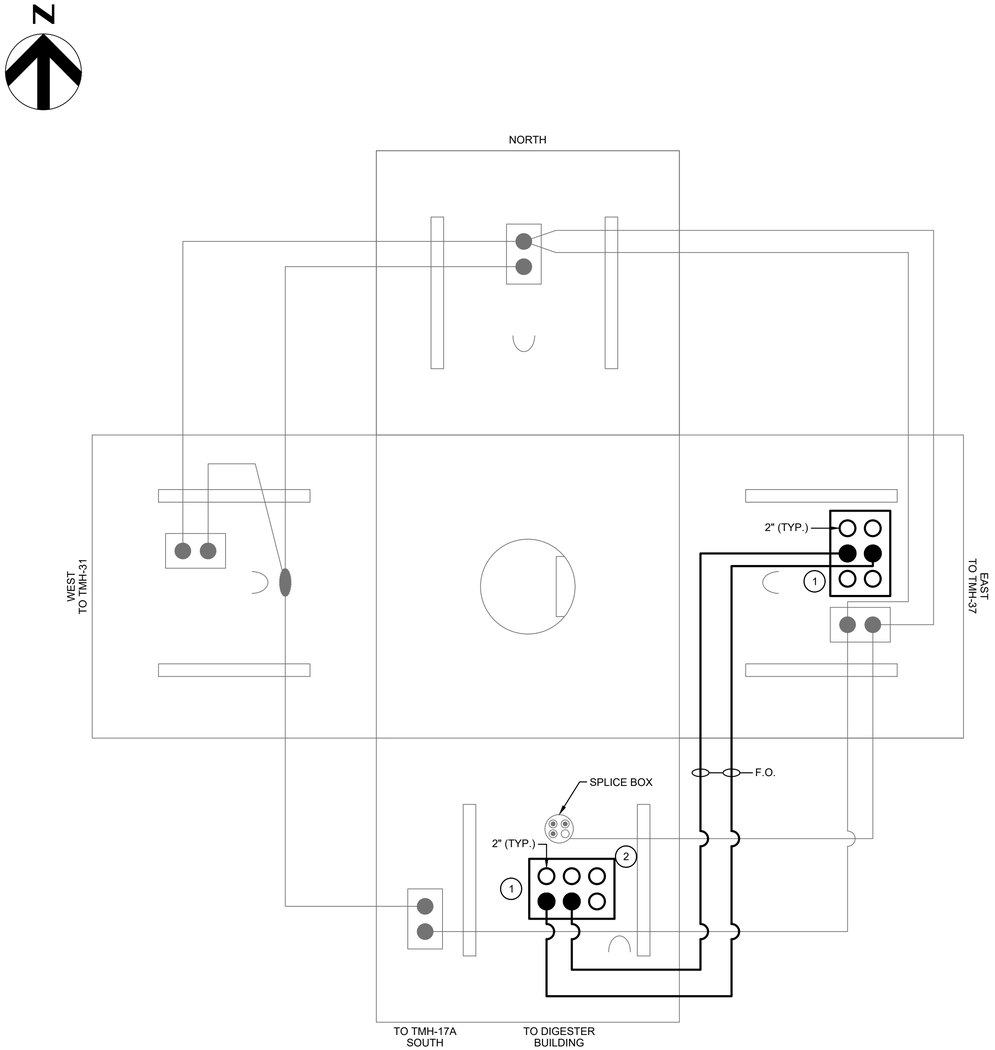

TMH-32
SCALE: NONE

GENERAL NOTES:

1. FOR SYMBOLS AND ABBREVIATIONS, SEE DRAWING E-1.
2. FOR CONSTRUCTION SEQUENCE, SEE DRAWING E-2.
3. FOR OVERALL ELECTRICAL SITE PLAN, SEE DRAWING E-3.

DRAWING NOTES:

(1) CORE DRILL MANHOLE AND PROVIDE DUCTS AS SHOWN FOR FIBER OPTIC ROUTING.

(2) TO EXTEND THE FIBER OPTIC CABLE FROM ADMINSTRATION BUILDING CONTROL ROOM TO DRYER BUILDING CONTROL ROOM IN PHASE 2 OF CONSTRUCTION, ADD TWO ADDITIONAL SPARE CONDUITS IN THE COMMUNICATION DUCTBANK HEADED TO THE DIGESTER BUILDNG FROM MH-32 (NOW SIX-WAY DUCTBANK). A PORTION OF THE DUCTBANK LEAVING THE DIGESTER BUILDING AND HEADING NORTH IS ALREADY INSTALLED OUT FROM UNDER THE BUILDING SLAB. THE NEW SPARES WILL DEVIATE FROM THE DUCTBANK AT THIS POINT AND TURN UP AT THE DIGESTER BUILDING NORTH WALL AND TERMINATE IN A BOX ABOVE GRADE. CORE DRILL MANHOLE AS REQUIRED.

LEGEND:

F.O. - FIBER OPTIC CABLE

THE DRAWINGS IN THIS SET ARE RECORD DRAWINGS. THEY ARE CONSTRUCTION CONTRACT DRAWINGS WHICH HAVE BEEN REVISED BASED ON AVAILABLE FIELD INFORMATION RECORDED BY OTHERS DURING CONSTRUCTION OF THIS CONTRACT. THERE HAS BEEN NO VERIFICATION OF DIMENSIONS SHOWN ON THE CONSTRUCTION DRAWINGS OR THE ACCURACY/COMPLETENESS OF THE FIELD INFORMATION RECEIVED.

SIGNATURE _____ DATE 2/7/2020

SHAH & ASSOCIATES

AS-BUILT REPLACEMENT SHEET

PROFESSIONAL CERTIFICATION
THIS DRAWING WAS ORIGINALLY APPROVED FOR CONSTRUCTION AND SEALED BY KANAIYALAL R. SHAH, A REGISTERED PROFESSIONAL ENGINEER IN THE STATE OF MARYLAND, NO. 11084.

NOTICE TO CONTRACTORS
- PROJECT ELEVATIONS ARE BASED ON NAVD88 AND HOWARD COUNTY'S BENCHMARK SYSTEM
- PREVIOUS PROJECTS USED OTHER DATUMS
- APPLY THE FOLLOWING CONVERSIONS WHEN USING PREVIOUS CONTRACT DRAWINGS:
  - ADDITION NO. 6: SUBTRACT 0.80 FT
  - PRIOR ADDITIONS: SUBTRACT 1.04 FT

DEPARTMENT OF PUBLIC WORKS
HOWARD COUNTY, MARYLAND

CHIEF, BUREAU OF UTILITIES DATE

DES: SR
DRN: AJS
CHK: KRS
DATE: 10/2016

DATE	REV	DESCRIPTION
07/2019		RECORD DRAWING

ELECTRICAL

TELEPHONE MANHOLES
TMH-32
EXISTING AND NEW WORK

LITTLE PATUXENT WATER RECLAMATION PLANT
8TH ADDITION
BIOSOLIDS PROCESSING FACILITIES – PHASE I

CAPITAL PROJECT S-6295
CONTRACT NO. 24-4935

ELECTION DISTRICT NO. 6
HOWARD COUNTY, MARYLAND

SCALE AS SHOWN

SHEET 418 OF 463

E-926

GENERAL NOTES:

1. FOR SYMBOLS AND ABBREVIATIONS, SEE DRAWING E-1.
2. FOR CONSTRUCTION SEQUENCE, SEE DRAWING E-2.
3. FOR OVERALL ELECTRICAL SITE PLAN, SEE DRAWING E-3.

DRAWING NOTES:

(1) CORE DRILL MANHOLE AND PROVIDE DUCTS AS SHOWN FOR FIBER OPTIC ROUTING.

LEGEND:

F.O. - FIBER OPTIC CABLE

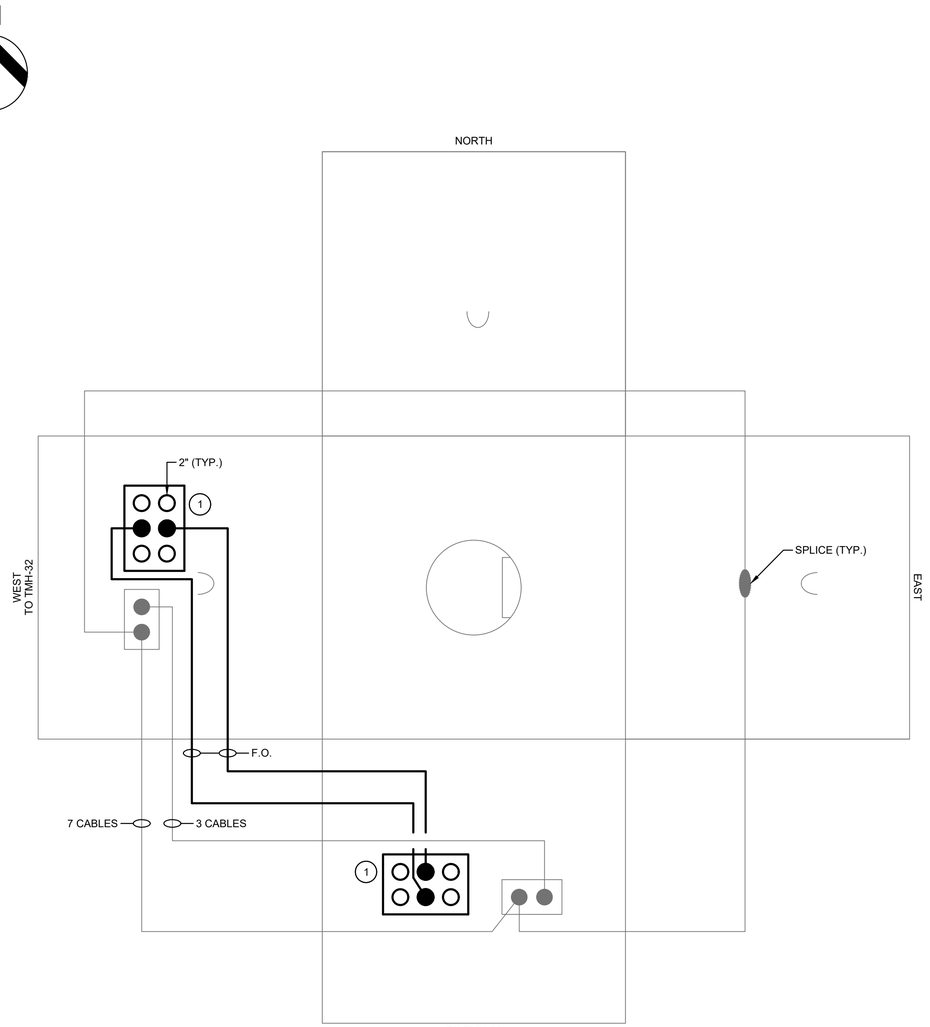

TMH-37
SCALE: NONE

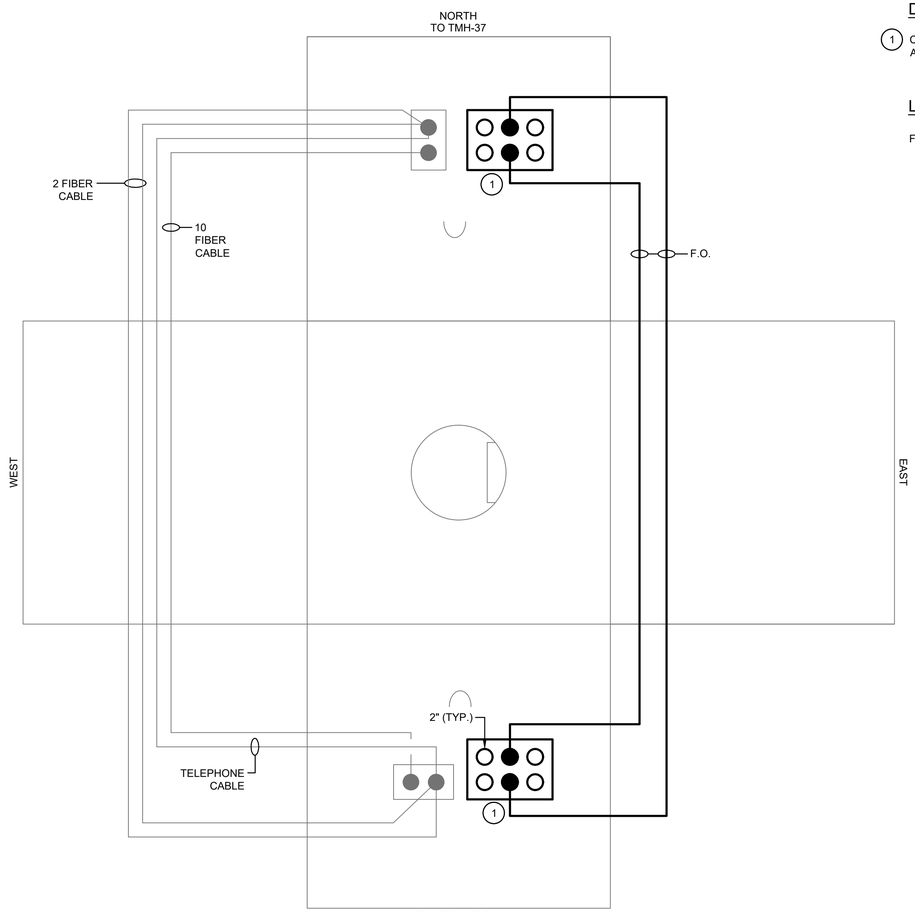

TMH-39
SCALE: NONE

THE DRAWINGS IN THIS SET ARE RECORD DRAWINGS. THEY ARE CONSTRUCTION CONTRACT DRAWINGS WHICH HAVE BEEN REVISED BASED ON AVAILABLE FIELD INFORMATION RECORDED BY OTHERS DURING CONSTRUCTION OF THIS CONTRACT. THERE HAS BEEN NO VERIFICATION OF DIMENSIONS SHOWN ON THE CONSTRUCTION DRAWINGS OR THE ACCURACY/COMPLETENESS OF THE FIELD INFORMATION RECEIVED.

SIGNATURE _____ DATE 2/7/2020

SHAH & ASSOCIATES

AS-BUILT REPLACEMENT SHEET

PROFESSIONAL CERTIFICATION
THIS DRAWING WAS ORIGINALLY APPROVED FOR CONSTRUCTION AND SEALED BY KANAIYALAL R. SHAH, A REGISTERED PROFESSIONAL ENGINEER IN THE STATE OF MARYLAND, NO. 11084.

NOTICE TO CONTRACTORS
- PROJECT ELEVATIONS ARE BASED ON NAVD88 AND HOWARD COUNTY'S BENCHMARK SYSTEM
- PREVIOUS PROJECTS USED OTHER DATUMS
- APPLY THE FOLLOWING CONVERSIONS WHEN USING PREVIOUS CONTRACT DRAWINGS:
  - ADDITION NO. 6: SUBTRACT 0.80 FT
  - PRIOR ADDITIONS: SUBTRACT 1.04 FT

DEPARTMENT OF PUBLIC WORKS
HOWARD COUNTY, MARYLAND

CHIEF, BUREAU OF UTILITIES DATE

DES: SR
DRN: AJS
CHK: KRS
DATE: 10/2016

DATE	REV	DESCRIPTION
07/2019		RECORD DRAWING

ELECTRICAL

TELEPHONE MANHOLES
TMH-37 AND TMH-39
EXISTING AND NEW WORK

LITTLE PATUXENT WATER RECLAMATION PLANT
8TH ADDITION
BIOSOLIDS PROCESSING FACILITIES – PHASE I

CAPITAL PROJECT S-6295
CONTRACT NO. 24-4935

ELECTION DISTRICT NO. 6
HOWARD COUNTY, MARYLAND

SCALE AS SHOWN

SHEET 419 OF 463

E-928

GENERAL NOTES:

1. FOR SYMBOLS AND ABBREVIATIONS, SEE DRAWING E-1.
2. FOR CONSTRUCTION SEQUENCE, SEE DRAWING E-2.
3. FOR CABLE AND CONDUIT SCHEDULE, SEE DRAWINGS E-905 THRU E-912.

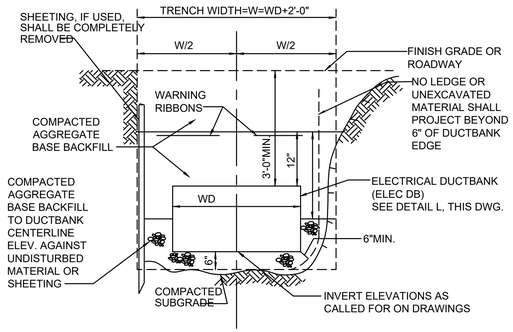

DUCT BANK TRENCH SECTION

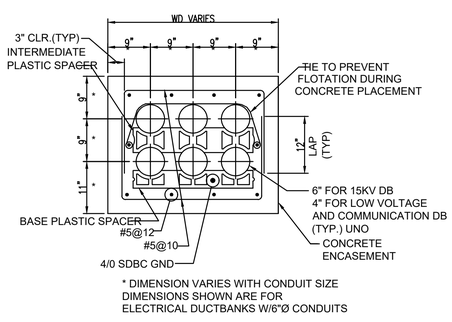

DUCT BANK SECTION

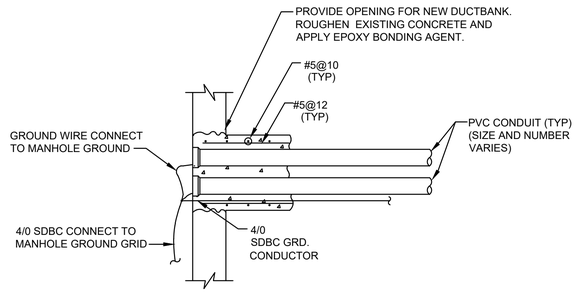

TYPICAL DUCT BANK ENTRY INTO EXISTING MANHOLE/WALL

THE DRAWINGS IN THIS SET ARE RECORD DRAWINGS. THEY ARE CONSTRUCTION CONTRACT DRAWINGS WHICH HAVE BEEN REVISED BASED ON AVAILABLE FIELD INFORMATION RECORDED BY OTHERS DURING CONSTRUCTION OF THIS CONTRACT. THERE HAS BEEN NO VERIFICATION OF DIMENSIONS SHOWN ON THE CONSTRUCTION DRAWINGS OR THE ACCURACY/COMPLETENESS OF THE FIELD INFORMATION RECEIVED.

SIGNATURE — DATE 2/7/2023

SHAH & ASSOCIATES

AS-BUILT REPLACEMENT SHEET

PROFESSIONAL CERTIFICATION
THIS DRAWING WAS ORIGINALLY APPROVED FOR CONSTRUCTION AND SEALED BY KANAIYALAL R. SHAH, A REGISTERED PROFESSIONAL ENGINEER IN THE STATE OF MARYLAND, NO. 11084.

NOTICE TO CONTRACTORS
- PROJECT ELEVATIONS ARE BASED ON NAVD88 AND HOWARD COUNTY'S BENCHMARK SYSTEM
- PREVIOUS PROJECTS USED OTHER DATUMS
- APPLY THE FOLLOWING CONVERSIONS WHEN USING PREVIOUS CONTRACT DRAWINGS:
  - ADDITION NO. 6: SUBTRACT 0.80 FT.
  - PRIOR ADDITIONS: SUBTRACT 1.04 FT.

DEPARTMENT OF PUBLIC WORKS
HOWARD COUNTY, MARYLAND

CHIEF, BUREAU OF UTILITIES — DATE

DES: SR
DRN: DMG
CHK: KRS
DATE: 10/2016

DATE	REV	DESCRIPTION
07/2019		RECORD DRAWING

ELECTRICAL

DUCT BANK SECTIONS
EXISTING AND DEMOLITION

LITTLE PATUXENT WATER RECLAMATION PLANT
8TH ADDITION
BIOSOLIDS PROCESSING FACILITIES – PHASE I

CAPITAL PROJECT S-6295
CONTRACT NO. 24-4935

ELECTION DISTRICT NO. 6
HOWARD COUNTY, MARYLAND

SCALE AS SHOWN

SHEET **420** OF **463**

E-940

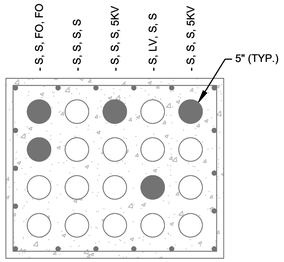

A / E-4 DUCT BANK SECTION
SCALE: NONE

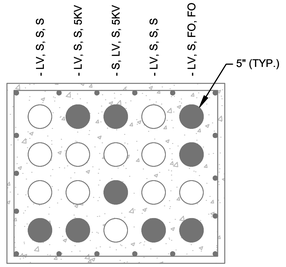

B / E-4 DUCT BANK SECTION
SCALE: NONE

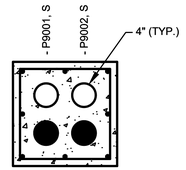

C / E-5 DUCT BANK SECTION
SCALE: NONE

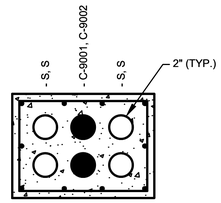

D / E-5 DUCT BANK SECTION
SCALE: NONE

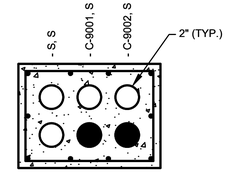

E / E-5 DUCT BANK SECTION
SCALE: NONE

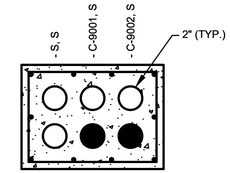

F / E-5 DUCT BANK SECTION
SCALE: NONE

GENERAL NOTES:

1. FOR SYMBOLS AND ABBREVIATIONS, SEE DRAWING E-1.
2. FOR CONSTRUCTION SEQUENCE, SEE DRAWING E-2.
3. FOR OVERALL ELECTRICAL SITE PLAN, SEE DRAWING E-3.
4. FOR CABLE AND CONDUIT SCHEDULE, SEE DRAWINGS E-905 THRU E-919.

DRAWING NOTES:

(1) RUN C9007, C9012 AND C9014 FROM FIELD EQUIPMENT TO A PULL BOX IN DIGESTER BUILDING RUN IN SINGLE CONDUIT FROM PULL BOX ABOVE TO NETWORK INTERFACE PANEL.

(2) RUN THE 41 POWER CONDUITS THROUGH THE EXISTING 36" SLEEVE USING 2 IN SPACING BETWEEN CONDUITS. RUN THE CONTROL AND FIBER CONDUITS THROUGH THE EXISTING 24" SLEEVE USING 2 IN SPACING BETWEEN CONDUITS.

(3) C4052 ROUTED TO RIO PANEL IN DIGESTER BUILDING VIA C3067.

(4) C8041 AND C8043 ROUTED TO DIGESTER BUILDING VIA C3067.

LEGEND:

F.O. - FIBER OPTIC CABLE

S - SPARE

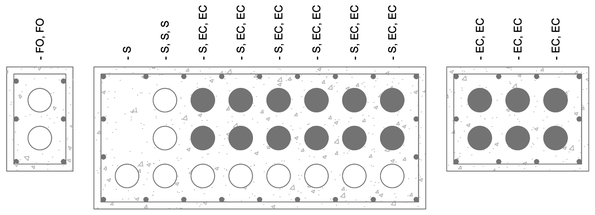

G / E-4 DUCT BANK SECTION
SCALE: NONE

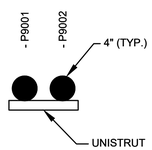

H / E-5 CONDUIT SECTION
SCALE: NONE

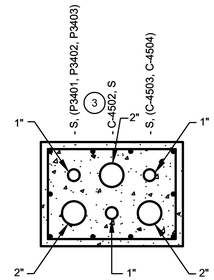

I / E-5 DUCT BANK SECTION
SCALE: NONE

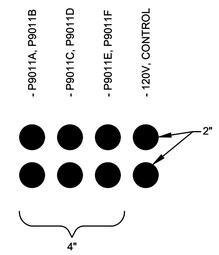

J / E-26A OVERHEAD CONDUIT SECTION
SCALE: NONE

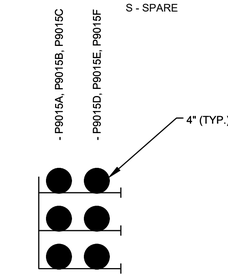

N / E-320 CONDUIT SECTION
SCALE: NONE

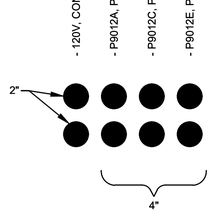

K / E-26A OVERHEAD CONDUIT SECTION
SCALE: NONE

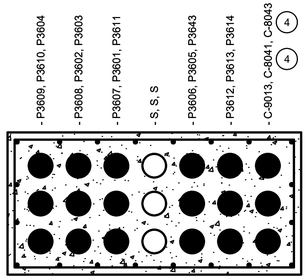

L / E-320 DUCT BANK SECTION
SCALE: NONE

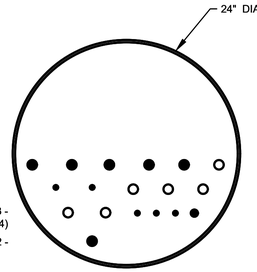

2 M1 / E-320 WALL CROSSING CONTROL CONDUITS SECTION
SCALE: NONE

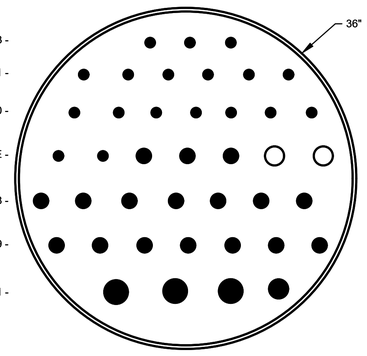

2 M2 / E-320 WALL CROSSING POWER CONDUITS SECTION
SCALE: NONE

THE DRAWINGS IN THIS SET ARE RECORD DRAWINGS. THEY ARE CONSTRUCTION CONTRACT DRAWINGS WHICH HAVE BEEN REVISED BASED ON AVAILABLE FIELD INFORMATION RECORDED BY OTHERS DURING CONSTRUCTION OF THIS CONTRACT. THERE HAS BEEN NO VERIFICATION OF DIMENSIONS SHOWN ON THE CONSTRUCTION DRAWINGS OR THE ACCURACY/COMPLETENESS OF THE FIELD INFORMATION RECEIVED.

SIGNATURE _____ DATE 2/7/2020

SHAH & ASSOCIATES

AS-BUILT REPLACEMENT SHEET

PROFESSIONAL CERTIFICATION
THIS DRAWING WAS ORIGINALLY APPROVED FOR CONSTRUCTION AND SEALED BY KANAIYALAL R. SHAH, A REGISTERED PROFESSIONAL ENGINEER IN THE STATE OF MARYLAND, NO. 11084.

NOTICE TO CONTRACTORS
- PROJECT ELEVATIONS ARE BASED ON NAVD88 AND HOWARD COUNTY'S BENCHMARK SYSTEM
- PREVIOUS PROJECTS USED OTHER DATUMS
- APPLY THE FOLLOWING CONVERSIONS WHEN USING PREVIOUS CONTRACT DRAWINGS:
  - ADDITION NO. 6: SUBTRACT 0.80 FT
  - PRIOR ADDITIONS: SUBTRACT 1.04 FT

DEPARTMENT OF PUBLIC WORKS
HOWARD COUNTY, MARYLAND

CHIEF, BUREAU OF UTILITIES DATE

DES: SR
DRN: DMG
CHK: KRS
DATE: 10/2016

DATE	REV	DESCRIPTION
07/2019		RECORD DRAWING

ELECTRICAL

DUCT BANK SECTIONS
EXISTING AND MODIFICATION

LITTLE PATUXENT WATER RECLAMATION PLANT
8TH ADDITION
BIOSOLIDS PROCESSING FACILITIES – PHASE I

CAPITAL PROJECT S-6295
CONTRACT NO. 24-4935

ELECTION DISTRICT NO. 6
HOWARD COUNTY, MARYLAND

SCALE AS SHOWN

SHEET 421 OF 463

E-941

PRIMARY ELEMENT SYMBOLOGY

- ULTRASONIC LEVEL TRANSMITTER
- RADAR TYPE LEVEL TRANSMITTER
- FI — ROTOMETER
- U — SONIC OR ULTRASONIC FLOWMETER
- DM — SUSPENDED SOLIDS DENSITY FLOWMETER
- M — MAGNETIC FLOWMETER
- TD — MASS DISPERSION FLOWMETER
- FLUME
- WEIR
- PROPELLER OR TURBINE METER
- VENTURI TUBE
- FLOAT SWITCH
- FG — SIGHT FLOW GLASS
- DIAPHRAGM SEAL
- PITOT TUBE
- INLINE SEAL

LINE TYPES

- MAIN PROCESS LINE
- SECONDARY PROCESS LINE
- AUXILIARY PROCESS LINE
- DIRECTION OF FLOW
- PNEUMATIC SIGNAL
- ELECTRICAL SIGNAL
- HYDRAULIC SIGNAL
- O — O — SOFTWARE OR DATA LINK
- SIGNAL CONNECTION
- CROSSOVER - NO CONNECTION
- X — X — CAPILLARY
- E — E — ETHERNET
- FO — FO — FIBER OPTIC
- D — D — DEVICENET

CROSS REFERENCE SYMBOLOGY

- Y-3 X — CONTINUATION TO SHEET Y-3
- X Y-3 — CONTINUATION FROM SHEET Y-3

X= DENOTES LETTER DESIGNATION TO MATCH ARROW ON CONNECTED DRAWINGS

INSTRUMENT SYMBOLOGY

- LOCALLY MOUNTED FIELD INSTRUMENTATION
- MOUNTED ON PANEL FRONT
- MOUNTED INSIDE PANEL
- XXX — FRONT PANEL MOUNTED ON AUXILIARY PANEL (SUBSCRIPT INDICATES PANEL)
- MOUNTED INSIDE AUXILIARY PANEL
- XXX — PILOT LIGHT
- INSTRUMENT FUNCTIONS SHARING COMMON HOUSING
- I — - MCC INTERLOCK - PLC LOGIC FUNTION
- SHARED DISPLAY, SHARED CONTROL, FIELD MOUNTED
- HMI OR OIT FUNCTION (HMI - WONDERWARE, OIT - PANELVIEW)
- PROGRAMMABLE LOGIC CONTROL, INPUT/OUTPUT
- SP, PID, PV, CO — PROGRAMMABLE LOGIC CONTROL, PDO FUNCTION (PV - PROCESS VARIABLE, SP - SETPOINT, CO - CONTROL OUTPUT)

ACTUATOR SYMBOLOGY

- X — OPERATOR ABBREVIATIONS: M = MOTOR, P = PNEUMATIC, S = SOLENOID
- FLOAT OPERATOR
- SPRING-OPPOSED SINGLE-ACTING PNEUMATIC CYLINDER
- DOUBLE-ACTING PNEUMATIC CYLINDER
- PNEUMATIC DIAPHRAGM
- PNEUMATIC DIAPHRAGM WITH POSITIONER

TYPES OF POWER SUPPLY

A	PLANT COMPRESSED AIR
IA	INSTRUMENTATION AIR
AC	ELECTRIC SUPPLY
NG	NATURAL GAS
HYD	HYDRAULIC
120VAC	120VAC POWER
480VAC	480VAC POWER

INSTRUMENT IDENTIFICATION LETTERS

	FIRST LETTER		SUCCEEDING LETTERS		
	MEASURED OR INITIATING VARIABLE	MODIFIER	READOUT OR PASSIVE FUNCTION	OUTPUT FUNCTION	MODIFIER
A	ANALYZER		ALARM		IN AUTO
B	BURNER, COMBUSTION		BUTTON	CLOSE STOP DECREASABLE	IN REMOTE
C	CONDUCTIVITY			CONTROL	CLOSE, CLOSED
D	DENSITY	DIFFERENTIAL		OPEN, START, INCREASABLE	
E	VOLTAGE		SENSOR (PRIMARY ELEMENT)		
F	FLOW	RATIO (FRACTION)			FAULT
G	GAUGE		GLASS, VIEWING DEVICE		
H	HAND				HIGH
I	CURRENT (ELECTRICAL)		INDICATE		
J	POWER	SCAN	SCAN		
K	TIME	TIME; RATE OF CHANGE		CONTROL STATION	READY
L	LEVEL, LEAK		LIGHT		LOW
M	MOTOR, METERING, MOISTURE	MOMENTARY			MIDDLE, INTERMEDIATE
N	INTRUSION		ISOLATE	ISOLATOR	
O	TORQUE		ORIFICE, RESTRICTION		OPEN, OPENED
P	PRESSURE, VACUUM, PUSH		POINT (TEST) CONNECTION		
Q	QUANTITY	INTEGRATE, TOTALIZE			REQUIRED
R	RADIATION		RECORD		RUN, RUNNING
S	SPEED, SOLENOID	SAFETY		SWITCH	STOP, STOPPED
T	TEMPERATURE			TRANSMIT	
U	MULTIVARIABLE		MULTIFUNCTION	MULTIFUNCTION	MULTIFUNCTION
V	VIBRATION			VALVE, DAMPER, LOUVER	
W	WEIGHT		WELL		
X	TEST STATE	X AXIS	UNCLASSIFIED	UNCLASSIFIED	UNCLASSIFIED
Y	EVENT, STATE	Y AXIS		RELAY, COMPUTE, CONVERT	
Z	POSITION	Z AXIS		DRIVER, ACTUATOR, UNCLASSIFIED FINAL CONTROL ELEMENT	

MISCELLANEOUS INSTRUMENTATION ABBREVIATIONS

AI	ANALOG INPUT
AO	ANALOG OUTPUT
CO	CARBON MONOXIDE
COMB	COMBUSTIBLES
CW	CHAIN WHEEL
DI	DIGITAL INPUT
DO	DIGITAL OUTPUT DOWNWARD OPENING WEIR GATE
DWG	E/P VOLTAGE TO PNEUMATIC
H2S	HYDROGEN SULFIDE
HW	HAND WHEEL
I/O	INPUT/OUTPUT
I/P	CURRENT TO PNEUMATIC
LEL	LOWER EXPLOSIVE LIMIT
LO	LOCKED OPEN
O2	OXYGEN
OIT	OPERATOR INTERFACE TERMINAL
P&ID	PROCESS AND INSTRUMENTATION DIAGRAM
SS	SUSPENDED SOLIDS (ANALYZER MODIFIER)
RIO	REMOTE INPUT OUTPUT
RTD	RESISTANCE TEMPERATURE DEVICE
TC	THERMOCOUPLE
TCJ	THERMOCOUPLE, TYPE J
VFD	VARIABLE FREQUENCY DRIVE
LCS	LOCAL CONTROL STATION
MCC	MOTOR CONTROL CENTER
LAS	LOCAL ALARM STATION
GAS	GAS ALARM STATION

- △ DISCRETE INPUT (DI) ▽ DISCRETE OUTPUT (DO)
- ▲ ANALOG INPUT (AI) ▼ ANALOG OUTPUT (AO)

THE DRAWINGS IN THIS SET ARE RECORD DRAWINGS. THEY ARE CONSTRUCTION CONTRACT DRAWINGS WHICH HAVE BEEN REVISED BASED ON AVAILABLE FIELD INFORMATION RECORDED BY OTHERS DURING CONSTRUCTION OF THIS CONTRACT. THERE HAS BEEN NO VERIFICATION OF DIMENSIONS SHOWN ON THE CONSTRUCTION DRAWINGS OR THE ACCURACY/COMPLETENESS OF THE FIELD INFORMATION RECEIVED.

SIGNATURE _____ DATE 2/7/2023

CONTROL SWITCH NOTATION ABBREVIATIONS

XXX / XXXX

ACK	ACKNOWLEDGE
ESTOP	EMERGENCY STOP
FAIL	FAILURE
FOR	FORWARD-OFF-REVERSE
FR	FORWARD-REVERSE
FS	FAST-SLOW
HA	HAND-AUTO
HOA	HAND-OFF-AUTO
HOR	HAND-OFF-REMOTE
LL	LEAD-LAG
LOR	LOCAL-OFF-REMOTE
LR	LOCAL-REMOTE
LS	LEAD-STANDBY
MA	MANUAL-AUTO
OAC	OPEN-AUTO-CLOSE
OC	OPEN-CLOSE
OO	ON-OFF
OSC	OPEN-STOP-CLOSE
RJ	RUN-JOG
SIL	SILENCE
SS	START-STOP
OCA	OPEN-CLOSE-AUTO

VALVES

- BALL VALVE
- V PORT BALL VALVE
- BUTTERFLY VALVE
- CONE VALVE
- CHECK VALVE
- DOUBLE-DISK CHECK VALVE
- BALL CHECK VALVE
- DIAPHRAGM VALVE
- GATE VALVE
- GATE VALVE-NORMALLY CLOSED
- GLOBE VALVE
- KNIFE GATE VALVE
- NEEDLE VALVE
- PINCH VALVE
- PLUG VALVE
- PLUG VALVE-NORMALLY CLOSED
- THREE-WAY BALL VALVE
- THREE-WAY PLUG VALVE
- PRESSURE-REDUCING VALVE
- PRESSURE-REGULATING VALVE
- THREE-WAY CONTROL VALVE
- OR OR — PRESSURE-RELIEF VALVE
- X — AIR-RELEASE VACUUM VALVE, A = AIR RELEASE, VAC = VACUUM
- BASKET STRAINER
- MALE CONNECTION
- FLAME ARRESTOR
- FLAME CHECK
- PULSATION DAMPENER
- PRESSURE SUSTAINING VALVE
- STRAINER
- DAMPER

MISCELLANEOUS SYMBOLOGY

- ROTARY LOBE PUMP
- GEAR PUMP
- CENTRIFUGAL PUMP
- SUBMERSIBLE PUMP
- PROGRESSIVE CAVITY PUMP
- AIR LIFT PUMP
- SCREEN PRESS
- CHEMICAL FEED PUMP
- M — MOTOR
- SIDE CHANNEL BLOWER
- POSITIVE DISPLACEMENT BLOWER
- BLOWER
- SILENCER
- M — COMPRESSOR
- STATIC MIXER
- M — MIXER
- FILTER SEPARATOR WITH AUTO DRAIN
- AIR FILTER
- MULTI STAGE MICROFILTER
- HEAT EXCHANGER
- ◆ INSTRUMENTS/EQUIPMENT SUPPLIED BY EQUIPMENT VENDOR
- ▲ INSTRUMENTS/EQUIPMENT SUPPLIED BY ELECTRICAL CONTRACTOR

PROCESS ABBREVIATIONS

NOTES:

1. SEE GENERAL DRAWINGS FOR PROCESS ABBREVIATIONS.

GENERAL NOTES:

1. THIS IS A STANDARD INSTRUMENTATION SYMBOLOGY AND ABBREVIATIONS SHEET. LISTING OF SYMBOLS AND ABBREVIATIONS DOES NOT IMPLY ALL SYMBOLS AND ABBREVIATIONS HAVE BEEN USED ON THIS PROJECT.
2. SEE PROCESS, MECHANICAL AND PLUMBING LEGEND SHEET FOR MISCELLANEOUS PIPING SYMBOLS.
3. SCREENING OR SHADING OF WORK IS USED TO INDICATE EXISTING COMPONENTS OR TO DE-EMPHASIZE PROPOSED IMPROVEMENTS TO HIGHLIGHT SELECTED TRADE WORK. REFER TO CONTEXT OF EACH SHEET FOR USAGE.
4. VALVE SYMBOLS SHOWN HERE ARE APPLICABLE ONLY TO INSTRUMENTATION DIAGRAMS. SEE PROCESS, MECHANICAL AND PLUMBING LEGEND SHEET FOR VALVE SYMBOLS USED ELSEWHERE ON THE SHEETS.

HDR

AS-BUILT REPLACEMENT SHEET

PROFESSIONAL CERTIFICATION

THIS DRAWING WAS ORIGINALLY APPROVED FOR CONSTRUCTION AND SEALED BY BILLY J. FOX, A REGISTERED PROFESSIONAL ENGINEER IN THE STATE OF MARYLAND, NO. 46603.

NOTICE TO CONTRACTORS

- PROJECT ELEVATIONS ARE BASED ON NAVD88 AND HOWARD COUNTY'S BENCHMARK SYSTEM
- PREVIOUS PROJECTS USED OTHER DATUMS
- APPLY THE FOLLOWING CONVERSIONS WHEN USING PREVIOUS CONTRACT DRAWINGS:
  - ADDITION NO. 6: SUBTRACT 0.80 FT
  - PRIOR ADDITIONS: SUBTRACT 1.04 FT

DEPARTMENT OF PUBLIC WORKS
HOWARD COUNTY, MARYLAND

CHIEF, BUREAU OF UTILITIES DATE

DES: LH
DRN: LH
CHK: BF
DATE: 12/2016

DATE	REV	DESCRIPTION
07/2019		RECORD DRAWING

INSTRUMENTATION & CONTROLS

LEGEND AND SYMBOLS 1

LITTLE PATUXENT WATER RECLAMATION PLANT
8TH ADDITION
BIOSOLIDS PROCESSING FACILITIES - PHASE I

CAPITAL PROJECT S-6295
CONTRACT NO. 24-4935

ELECTION DISTRICT NO. 6
HOWARD COUNTY, MARYLAND

SCALE AS SHOWN

SHEET 422 OF 463

I-001

BIM 360://10054364 – Little Patuxent WRP 8th Addition/264591_Y_Ph1_V18.rvt
1/12/2022 10:07:31 AM

SCADA HMI

PCS 8-GBT-0011-RIO

EXISTING WAS PUMP (TYP. OF 8): RUN COMMAND, IN REMOTE, RUN STATUS, FAIL, SPEED INDICATION, SPEED CONTROL

WAS/ SCUM: SOLIDS DENSITY

LOCAL ALARM STATION: ACTIVATE, SILENCE

SCUM HOLDING TANK: LEVEL

8-GBT-0012-PNL

SCUM TANK MIXER (TYP. OF 2): RUN COMMAND, IN REMOTE, RUN STATUS, FAIL

8-GBT-0011-RIO

WASTE ACTIVATED SLUDGE (TYP. OF 2): FLOW

8-GBT-0012-PNL

SCUM PUMP (TYP.OF 2): RUN COMMAND, IN REMOTE, RUN STATUS, FAIL, SPEED INDICATION, SPEED CONTROL

8-GBT-0011-RIO

SCUM PUMP DISCHARGE (TYP.OF 2): DISCHARGE FLOW

UP. XXX

480 VAC

WAS PUMP: YA XXXX FAIL, YI XXXX RUN, SC XXXX, HS XXXX LOR, SI XXXX, LCP VFD

(TYP. OF 8)

EAST PUMP GALLERY

WAS FROM FC NOS. 6,7,8,9

WAS PUMP NO. 1 PMP-XXXX

WAS PUMP NO. 2 PMP-XXXX

4"-WAS

8"-WAS

NORTH PUMP GALLERY

WAS FROM FC NOS. 10,11,12

WAS PUMP NO.5 PMP-XXXX

WAS PUMP NO.6 PMP-XXXX

AUX NORTH PUMP GALLERY

WAS FROM FC NOS. 13

WAS PUMP NO.7 PMP-XXXX

WAS PUMP NO.8 PMP-XXXX

WEST PUMP GALLERY

WAS FROM FC NOS. 2,3,4,5

WAS PUMP NO. 3 PMP-XXXX

WAS PUMP NO. 4 PMP-XXXX

120VAC

FIT XXXX, FE XXXX

PI XXXX, PSH XXXX

120 VAC

GBT AREA LOCAL ALARM STATION: PB 0022A SILENCE, YA 0022 ALARM, PB 0022B TEST

8-GBT-0022-PNL

SCUM HOLDING TANK MIXER: YA 1212B FAIL, YI 1212B RUN, YA 1212 HI TEMP, YA 1212 OL

8-GBT-1212-MCC (TYP. OF 2)

SCUM PUMP: YA 1412B FAIL, YI 1412B RUN, SC 1412, SI 1412

8-GBT-1412-VFD (TYP. OF 2)

PB 8-1212 E-STOP

DT 2011

FIT 2012, FE 2012

8-GBT-016-VLV, 8-GBT-017-VLV, 8-GBT-018-VLV

8-GBT-001-VLV, 8-GBT-002-VLV

6"-WAS

8"-WAS/SC

I-102

TO GRAVITY BELT THICKENING SYSTEM

LIT 1011

FIT 2022, FE 2022

8-GBT-003-VLV, 8-GBT-004-VLV, 8-GBT-005-VLV

YA 1212A FAIL, YI 1212A RUN, HS 1212 LOR

8-GBT-1212-PNL (TYP. OF 2)

YA 1412A FAIL, YI 1412A RUN, HS 1412 LOR

8-GBT-1412-PNL (TYP. OF 2)

8-GBT-011-VLV

FIT 1612, FE 1612

8-GBT-010-VLV

FIT 1622, FE 1622

8-GBT-015-VLV

8-GBT-014-VLV

6"-FA

SCUM MIXER NO.1 8-GBT-1212-MXR

SCUM MIXER NO.2 8-GBT-1222-MXR

1 LE 1011

8-GBT-008-VLV

3"-SC

2"-DR

TSH 1412, PI 1412, PSH 1412

8-GBT-009-VLV

SCUM PUMP NO.1 8-GBT-1412-PMP

SCUM FROM FINAL CLARIFIERS

4"-SC

OVERFLOW TO ROCESS DRAIN

SCUM HOLDING TANK 8-GBT-1011-TNK

8-GBT-012-VLV

TSH 1422, PI 1422, PSH 1422

8-GBT-013-VLV

SCUM PUMP NO.2 8-GBT-1422-PMP

GENERAL NOTES

1. SEE SHEET I-001 FOR PROCESS CONTROL SYSTEM ABBREVIATIONS,SYMBOLS AND NOTES.
2. SEE SHEET I-904 AND I-905 FOR SCADA NETWORK ARCHITECTURE DIAGRAM.
3. REFERENCE SPECIFICATION 40 90 05 FOR CONTROL DESCRIPTIONS.
4. REFERENCE SPECIFICATION 40 91 10 FOR INSTRUMENT SCHEDULE.
5. REFERENCE SPECIFICATION 40 94 43 FOR PLC I/O SCHEDULE.
6. INSTRUMENTATION AND CONTROL EQUIPMENT SHALL BE SUITABLE FOR INSTALLATION IN HAZARDOUS AS DEFINED ON SHEET 00G-06, HAZARDOUS AREA PLAN.
7. MAJOR FUNCTIONS FOR PACKAGED EQUIPMENT VENDOR SUPPLIED CONTROL PANELS ARE SHOWN. ACTUAL EQUIPMENT VENDOR PANELS MAY OFFER ADDITIONAL FUNCTIONALITY.
8. SEE INSTRUMENT SCHEDULE FOR COMPLETE TAG NUMBER.

KEY NOTES

1 LEVEL SENSOR LE-1011 SHALL BE RATED FOR THE AREA CLASSIFICATION.

THE DRAWINGS IN THIS SET ARE RECORD DRAWINGS. THEY ARE CONSTRUCTION CONTRACT DRAWINGS WHICH HAVE BEEN REVISED BASED ON AVAILABLE FIELD INFORMATION RECORDED BY OTHERS DURING CONSTRUCTION OF THIS CONTRACT. THERE HAS BEEN NO VERIFICATION OF DIMENSIONS SHOWN ON THE CONSTRUCTION DRAWINGS OR THE ACCURACY/COMPLETENESS OF THE FIELD INFORMATION RECEIVED.

SIGNATURE — DATE 2/7/2020

AS-BUILT REPLACEMENT SHEET

PROFESSIONAL CERTIFICATION

THIS DRAWING WAS ORIGINALLY APPROVED FOR CONSTRUCTION AND SEALED BY BILLY J. FOX, A REGISTERED PROFESSIONAL ENGINEER IN THE STATE OF MARYLAND, NO. 46603.

NOTICE TO CONTRACTORS

- PROJECT ELEVATIONS ARE BASED ON NAVD88 AND HOWARD COUNTY'S BENCHMARK SYSTEM
- PREVIOUS PROJECTS USED OTHER DATUMS
- APPLY THE FOLLOWING CONVERSIONS WHEN USING PREVIOUS CONTRACT DRAWINGS:
  - ADDITION NO. 6: SUBTRACT 0.80 FT
  - PRIOR ADDITIONS: SUBTRACT 1.04 FT

DEPARTMENT OF PUBLIC WORKS
HOWARD COUNTY, MARYLAND

CHIEF, BUREAU OF UTILITIES — DATE

DES: LH
DRN: LH
CHK: BF
DATE: 12/2016

DATE	REV	DESCRIPTION
07/2019		RECORD DRAWING

INSTRUMENTATION & CONTROLS

SCUM TANK
UP No. 08.01.01

LITTLE PATUXENT WATER RECLAMATION PLANT
8TH ADDITION
BIOSOLIDS PROCESSING FACILITIES - PHASE I

CAPITAL PROJECT S-6295
CONTRACT NO. 24-4935

ELECTION DISTRICT NO. 6
HOWARD COUNTY, MARYLAND

SCALE AS SHOWN

SHEET 423 OF 463

I-101

BIM 360://10054364 – Little Patuxent WRP 8th Addition/264591_Y_Ph1_V18.rvt
1/12/2022 10:07:34 AM

SCADA HMI

PCS 8-GBT-0011-RIO

UPS
- UPS FAULT
- ON UPS POWER

8-GBT-0012-PNL

WASH WATER BOOSTER PUMP (TYP. OF 2)
- RUN COMMAND
- IN REMOTE
- RUN STATUS
- FAIL

8-GBT-0011-RIO
- DISCHARGE PRESSURE

WASH WATER (TYP. OF 2)
- LOW FLOW

8-GBT-0012-PNL

GRAVITY BELT THICKENER (TYP. OF 2)
- RUN COMMAND
- IN REMOTE
- RUN STATUS
- FAIL
- SPEED INDICATION
- SPEED CONTROL
- ESTOP

8-GBT-0011-RIO

DISCHARGE HOPPER (TYP. OF 2)
- LEVEL

WASH WATER VALVE (TYP. OF 2)
- POSITION CONTROL
- POSITION INDICATION
- IN REMOTE

8-GBT-0012-PNL

THICKENED WAS PUMP (TYP. OF 2)
- RUN COMMAND
- IN REMOTE
- RUN STATUS
- FAIL
- SPEED INDICATION
- SPEED CONTROL
- HIGH DISCHARGE PRESSURE

8-GBT-0011-RIO

THICKENED WAS
- DISCHARGE FLOW

THICKENED WAS
- SOLIDS DENSITY

480 VAC
WASH WATER BOOSTER PUMP
YA 1812B FAIL YI 1812B RUN
FVNR
8-GBT-1812-MCC (TYP. OF 2)

120 VAC
GRAVITY BELT THICKENER LCP
OIT YA 2012 FAIL YI 2012 RUN
PLC
HS 2012 LOR
8-GBT-2012-PNL (TYP. OF 2)

480 VAC
GRAVITY THICKENER DRIVE
YA 2012B FAIL YI 2012B RUN
SI 2012
SC 2012
8-GBT-2012-VFD (TYP. OF 2)

480 VAC
THICKENED WAS PUMP
YA 2422B FAIL YI 2422B RUN SC 2422
SI 2422
I
8-GBT-2422-VFD (TYP. OF 2)

1 UPS

I-103 1-1/4"-PLYS
FROM POLYMER BLEND/FEED UNITS

I-101 8"-WAS/ SC
WAS/SCUM

I-103 1-1/4"-PLYS
POLYMER BLEND/FEED UNITS

I-101 8"-WAS/ SCUM

4" PW EXISTING

PB 2012 E-STOP
BELT DRIVE No.1 8-GBT-2012-DRV
M SSA 2012 ZSA 2012A ZSA 2012B
LIT 2012 120VAC
LE 2012
GRAVITY BELT THICKENER NO.1
8-GBT-2012-GBT
2"-DR
1-1/2"-PW
FSL 1812
10"-PD
6"-FA
6"-TWAS
1-1/2"-PW

PB 2023 E-STOP
BELT DRIVE No.2 8-GBT-2022-DRV
M SSA 2022 ZSA 2022A ZSA 2022B
LIT 2022 120VAC
LE 2022
GRAVITY BELT THICKENER NO.2
8-GBT-2022-GBT
2"-DR
10"-PD

YA 2422A FAIL YI 2422A RUN
HS 2422 LOR
8-GBT-2422-PNL (TYP. OF 2)

6"-FA
10"-PD
6"-FA
I-70X
TO ODOR CONTROL

FILTRATE TO PLANT DRAIN

PI 1812A
PI 1812B
PIT 1812
ZIT 1812
HS 1812A OSC
HS 1812B L/R
480 VAC
M
WASH WATER BOOSTER PUMP NO.1
8-GBT-1812-PMP
WASH WATER NO. 1 MODULATING VALVE
8-GBT-1812-MOV
2"-PW
2"-DR

PI 1822A
PI 1822B
PIT 1822
ZIT 1822 OSC
HS 1822A L/R
HS 1822B
480 VAC
M
WASH WATER BOOSTER PUMP NO.2
8-GBT-1822-PMP
WASH WATER NO. 2 MODULATING VALVE
8-GBT-1822-MOV
FSL 1822
2"-PW
2"-DR

120 VAC
TSH 2412
PI 2412
PSH 2412
8-GBT-020-VLV
M
THICKENED WAS PUMP NO.1
8-GBT-2412-PMP
8-GBT-021-VLV
2"-DR

120 VAC
TSH 2422
PI 2422
PSH 2422
8-GBT-022-VLV
M
THICKENED WAS PUMP NO.2
8-GBT-2422-PMP
2"-DR
8-GBT-023-VLV
8-GBT-026-VLV
3"-TWAS
M
120VAC
FIT 2411
FE 2411
8-GBT-027-VLV
DT 2411
8-GBT-019-VLV
8-GBT-024-VLV
DM
8-GBT-025-VLV
6"-TWAS
I-250
TO THICKENED SLUDGE STORAGE TANKS

GENERAL NOTES

1. SEE SHEET I-001 FOR PROCESS CONTROL SYSTEM ABBREVIATIONS,SYMBOLS AND NOTES.
2. SEE SHEET I-904 AND I-905 FOR SCADA NETWORK ARCHITECTURE DIAGRAM.
3. REFERENCE SPECIFICATION 40 90 05 FOR CONTROL DESCRIPTIONS.
4. REFERENCE SPECIFICATION 40 91 10 FOR INSTRUMENT SCHEDULE.
5. REFERENCE SPECIFICATION 40 94 43 FOR PLC I/O SCHEDULE.
6. INSTRUMENTATION AND CONTROL EQUIPMENT SHALL BE SUITABLE FOR INSTALLATION IN HAZARDOUS AS DEFINED ON SHEET 00G-06, HAZARDOUS AREA PLAN.
7. MAJOR FUNCTIONS FOR PACKAGED EQUIPMENT VENDOR SUPPLIED CONTROL PANELS ARE SHOWN. ACTUAL EQUIPMENT VENDOR PANELS MAY OFFER ADDITIONAL FUNCTIONALITY.
8. SEE INSTRUMENT SCHEDULE FOR COMPLETE TAG NUMBER.

KEY NOTES

1 UPS IS LOCATED WITHIN RIO PANEL

THE DRAWINGS IN THIS SET ARE RECORD DRAWINGS. THEY ARE CONSTRUCTION CONTRACT DRAWINGS WHICH HAVE BEEN REVISED BASED ON AVAILABLE FIELD INFORMATION RECORDED BY OTHERS DURING CONSTRUCTION OF THIS CONTRACT. THERE HAS BEEN NO VERIFICATION OF DIMENSIONS SHOWN ON THE CONSTRUCTION DRAWINGS OR THE ACCURACY/COMPLETENESS OF THE FIELD INFORMATION RECEIVED.

SIGNATURE 2/7/2020 DATE

HDR

AS-BUILT REPLACEMENT SHEET

PROFESSIONAL CERTIFICATION

THIS DRAWING WAS ORIGINALLY APPROVED FOR CONSTRUCTION AND SEALED BY BILLY J. FOX, A REGISTERED PROFESSIONAL ENGINEER IN THE STATE OF MARYLAND, NO. 46603.

NOTICE TO CONTRACTORS

- PROJECT ELEVATIONS ARE BASED ON NAVD88 AND HOWARD COUNTY'S BENCHMARK SYSTEM
- PREVIOUS PROJECTS USED OTHER DATUMS
- APPLY THE FOLLOWING CONVERSIONS WHEN USING PREVIOUS CONTRACT DRAWINGS:
  - ADDITION NO. 6: SUBTRACT 0.80 FT
  - PRIOR ADDITIONS: SUBTRACT 1.04 FT

DEPARTMENT OF PUBLIC WORKS
HOWARD COUNTY, MARYLAND

CHIEF, BUREAU OF UTILITIES DATE

DES: LH
DRN: LH
CHK: LH
DATE: 12/2016

DATE	REV	DESCRIPTION
07/2019		RECORD DRAWING

INSTRUMENTATION & CONTROLS

GRAVITY BELT THICKENING SYSTEM
UP No. 08.01.02

LITTLE PATUXENT WATER RECLAMATION PLANT
8TH ADDITION
BIOSOLIDS PROCESSING FACILITIES - PHASE I

CAPITAL PROJECT S-6295
CONTRACT NO. 24-4935

ELECTION DISTRICT NO. 6
HOWARD COUNTY, MARYLAND

SCALE AS SHOWN

SHEET 424 OF 463

I-102

BIM 360://10054364 – Little Patuxent WRP 8th Addition/264591_Y_Phi1_V18.rvt
1/12/2022 10:07:38 AM

SCADA HMI

PCS 8-POL-0011-RIO

POLYMER STORAGE TANK NO.1: EYE WASH ACTIVATED; LEVEL; HIGH LEVEL

POLYMER STORAGE TANK NO.2: LEVEL; HIGH LEVEL

GBT POLYMER STORAGE TANK NO.1: LEVEL; HIGH LEVEL

RECIRCULATION PUMP STARTER: RUN COMMAND; IN AUTO; RUN STATUS; FAIL

POLYMER FEED SYSTEM (TYP. OF 2): SPEED CONTROL; RUN STATUS; LOSS OF WATER FLOW; RUN COMMAND

DILUTION WATER: FLOW

POLYMER: FLOW

POLYMER: FLOW

120 VAC

GBT POLYMER LOCAL CONTROL PANEL

POLYMER BLEND MICRO-CONTROLLER (MC) (1)

HS 2612 LOR; YI 2612 RUN; SI 2612 SPEED

8-POL-2612-PNL (TYPICAL OF 2) (1)

120VAC

FIT 2601

FE 2601

PI 2601A

PI 2601B

NPW

1-1/2"-CW

1"-NPW

M

120 VAC

YA 5012 BEACON

POLYMER FILL STATION CONTROL PANEL

CENTRIFUGE POLYMER STORAGE TANK NO.1: LI 1812; YA 1812

CENTRIFUGE POLYMER STORAGE TANK NO.2: LI 1822; YA 1822

GBT POLYMER STORAGE TANK NO.1: LI 2811; YA 2811

YA 5012 HORN

PB 5012 SILENCE

I

8-POL-0811-PNL

FROM I-526 EMULSION POLYMER STORAGE TANK NO. 1

VENT (2)

CALIBRATION COLUMN

M

POLYMER FEED PUMP No. 1

8-POL-2612-PMP

1"-POLY

PDS 2612

MIX CHAMBER PRESSURE GAUGE/SWITCH

PI 2612B

POLYMER BLENDING UNIT No.1

8-POL-2612-POL

1-1/4"POLYS

1"-POLYS

120VAC

FIT 2612

FE 2612

1-1/4"-POLYS

I-102

POLYMER SOLUTION TO GBT FEED

PI 2612A

OVERPRESSURE TO DRAIN

ROTAMETER FOR DILUTION WATER 8-POL-2612A-FI

FI

FLUSH (TO DRAIN)

S

1"-NPW

DILUTION WATER SOLENOID VALVE No. 1

8-POL-2612-SV

1-1/4"-POLYS

EYE WASH STATION

TW

120 VAC

FSH 2611

480VAC

RECIRCULATION PUMP STARTER PANEL

HOA 2811; YA 2811A RUN; YA 2811B RUN; QI 2811 ETM

YI 2811A FAIL; HS 2811 E-STOP; YI 2811B READY; PB 2811 RESET

8-POL-2811-PNL

1"-POLY

POLYMER RECIRCULATION PUMP

8-POL-2811-PMP

LIT 2811

LE 2811

4" VENT

GBT BULK POLYMER STORAGE TANK

8-POL-2811-TNK

2"-POLY

1-1/4"-POLY

DR

2"-PD

D

TO PLANT DRAIN

FROM POLYMER FILL STATION

I-526 A

FROM DEWATERING POLYMER SYSTEM

VENT (2)

CALIBRATION COLUMN

M

POLYMER FEED PUMP No. 2

8-POL-2622-PMP

1"-POLY

PDS 2622

MIX CHAMBER PRESSURE GAUGE/SWITCH

PI 2622B

POLYMER BLENDING UNIT No.2

8-POL-2622-POL

1-1/4"-POLYS

1"-POLYS

120VAC

FIT 2622

FE 2622

I-102

POLYMER SOLUTION TO GBT FEED

PI 2622A

OVERPRESSURE TO DRAIN

ROTAMETER FOR DILUTION WATER 8-POL-2622B-FI

FI

FLUSH (TO DRAIN)

S

1"-NPW

DILUTION WATER SOLENOID VALVE No.2

8-POL-2622-SV

POLYBLEND UNIT(TYP.)

GENERAL NOTES

1. SEE SHEET I-001 FOR PROCESS CONTROL SYSTEM ABBREVIATIONS,SYMBOLS AND NOTES.
2. SEE SHEET I-904 AND I-905 FOR SCADA NETWORK ARCHITECTURE DIAGRAM.
3. REFERENCE SPECIFICATION 40 90 05 FOR CONTROL DESCRIPTIONS.
4. REFERENCE SPECIFICATION 40 91 10 FOR INSTRUMENT SCHEDULE.
5. REFERENCE SPECIFICATION 40 94 43 FOR PLC I/O SCHEDULE.
6. INSTRUMENTATION AND CONTROL EQUIPMENT SHALL BE SUITABLE FOR INSTALLATION IN HAZARDOUS AS DEFINED ON SHEET 00G-06, HAZARDOUS AREA PLAN.
7. MAJOR FUNCTIONS FOR PACKAGED EQUIPMENT VENDOR SUPPLIED CONTROL PANELS ARE SHOWN. ACTUAL EQUIPMENT VENDOR PANELS MAY OFFER ADDITIONAL FUNCTIONALITY.
8. SEE INSTRUMENT SCHEDULE FOR COMPLETE TAG NUMBER.

KEY NOTES

(1) INCLUDES INTEGRAL DISPLAY.

(2) HOSE CONNECTION.

THE DRAWINGS IN THIS SET ARE RECORD DRAWINGS. THEY ARE CONSTRUCTION CONTRACT DRAWINGS WHICH HAVE BEEN REVISED BASED ON AVAILABLE FIELD INFORMATION RECORDED BY OTHERS DURING CONSTRUCTION OF THIS CONTRACT. THERE HAS BEEN NO VERIFICATION OF DIMENSIONS SHOWN ON THE CONSTRUCTION DRAWINGS OR THE ACCURACY/COMPLETENESS OF THE FIELD INFORMATION RECEIVED.

SIGNATURE

2/7/2023

DATE

BIM 360://10054364 – Little Patuxent WRP 8th Addition/264591_Y_Ph1_V18.rvt
1/12/2022 10:07:42 AM

AS-BUILT REPLACEMENT SHEET

PROFESSIONAL CERTIFICATION

THIS DRAWING WAS ORIGINALLY APPROVED FOR CONSTRUCTION AND SEALED BY BILLY J. FOX, A REGISTERED PROFESSIONAL ENGINEER IN THE STATE OF MARYLAND, NO. 46603.

NOTICE TO CONTRACTORS

- PROJECT ELEVATIONS ARE BASED ON NAVD88 AND HOWARD COUNTY'S BENCHMARK SYSTEM
- PREVIOUS PROJECTS USED OTHER DATUMS
- APPLY THE FOLLOWING CONVERSIONS WHEN USING PREVIOUS CONTRACT DRAWINGS:
  - ADDITION NO. 6: SUBTRACT 0.80 FT
  - PRIOR ADDITIONS: SUBTRACT 1.04 FT

DEPARTMENT OF PUBLIC WORKS
HOWARD COUNTY, MARYLAND

CHIEF, BUREAU OF UTILITIES DATE

DES: LH
DRN: LH
CHK: BF
DATE: 12/2016

DATE	REV	DESCRIPTION
07/2019		RECORD DRAWING

INSTRUMENTATION & CONTROLS

THICKENING POLYMER FEED SYSTEM UP NO. 8.01.03

LITTLE PATUXENT WATER RECLAMATION PLANT
8TH ADDITION
BIOSOLIDS PROCESSING FACILITIES - PHASE I

CAPITAL PROJECT S-6295
CONTRACT NO. 24-4935

ELECTION DISTRICT NO. 6
HOWARD COUNTY, MARYLAND

SCALE AS SHOWN

SHEET 425 OF 463

I-103

SCADA HMI

PCS

8-SPG-0011-RIO

UPS

UPS FAULT

ON UPS POWER

SCREENED PRIMARY SLUDGE

FLOW

SCREENED PRIMARY SLUDGE VALVE

POSITION CONTROL

POSITION INDICATION

IN REMOTE

8-DIG-0014-PNL

GRAVITY THICKENER NO. 1

RUN COMMAND

IN REMOTE

RUN STATUS

FAIL

SPEED INDICATION

SPEED CONTROL

HIGH TORQUE WARNING

HIGH-HIGH TORQUE SHUTDOWN

480 VAC

GRAVITY THICKENER NO. 1

YA 1612B FAIL

YI 1612B RUN

SC 1612

SI 1612

I

YA 1612C HIGH HIGH TORQUE

YA 1612D HIGH TORQUE

8-PST-1612-VFD

2

1

UPS

YA 1612A FAIL

YI 1612A RUN

HS 1612A LOR

8-PST-1612-PNL

ZIT 1612

HS 1612B OSC

HS 1612A L/R

120VAC

FIT 1612

FE 1612

480 VAC

M

8-PST-100-VLV

8-PST-101-VLV

I-350 A

SCREENED PRIMARY SLUDGE

6"-PS

4"-PS

8-PST-1612-MOV

I-204 A

DILUTION WATER

6"-DW

OSHH 1612

OSH 1612

TSH 1612

GRAVITY THICKENER DRIVE

8-PST-1612-DRV

GRAVITY THICKENER NO.1

8-PST-1612-TNK

SCUM TANK

8-PST-1812-TNK

6"-SC

I-203 A

TO GT TRANSFER PUMP SYSTEM

6"-TPS

I-203 B

TO GT TRANSFER PUMP SYSTEM

8"-GTO

TO EXISTING PLANT DRAIN

GENERAL NOTES

1. SEE SHEET I-001 FOR PROCESS CONTROL SYSTEM ABBREVIATIONS,SYMBOLS AND NOTES.
2. SEE SHEET I-904 AND I-905 FOR SCADA NETWORK ARCHITECTURE DIAGRAM.
3. REFERENCE SPECIFICATION 40 90 05 FOR CONTROL DESCRIPTIONS.
4. REFERENCE SPECIFICATION 40 91 10 FOR INSTRUMENT SCHEDULE.
5. REFERENCE SPECIFICATION 40 94 43 FOR PLC I/O SCHEDULE.
6. INSTRUMENTATION AND CONTROL EQUIPMENT SHALL BE SUITABLE FOR INSTALLATION IN HAZARDOUS AS DEFINED ON SHEET 00G-06, HAZARDOUS AREA PLAN.
7. SEE INSTRUMENT SCHEDULE FOR COMPLETE TAG NUMBER.

KEY NOTES

1. UPS IS LOCATED WITHIN RIO PANEL
2. VFD INSTALLED IN MCC-31.

THE DRAWINGS IN THIS SET ARE RECORD DRAWINGS. THEY ARE CONSTRUCTION CONTRACT DRAWINGS WHICH HAVE BEEN REVISED BASED ON AVAILABLE FIELD INFORMATION RECORDED BY OTHERS DURING CONSTRUCTION OF THIS CONTRACT. THERE HAS BEEN NO VERIFICATION OF DIMENSIONS SHOWN ON THE CONSTRUCTION DRAWINGS OR THE ACCURACY/COMPLETENESS OF THE FIELD INFORMATION RECEIVED.

SIGNATURE 2/7/2023 DATE

AS-BUILT REPLACEMENT SHEET

PROFESSIONAL CERTIFICATION

THIS DRAWING WAS ORIGINALLY APPROVED FOR CONSTRUCTION AND SEALED BY BILLY J. FOX, A REGISTERED PROFESSIONAL ENGINEER IN THE STATE OF MARYLAND, NO. 46603.

NOTICE TO CONTRACTORS

- PROJECT ELEVATIONS ARE BASED ON NAVD88 AND HOWARD COUNTY'S BENCHMARK SYSTEM
- PREVIOUS PROJECTS USED OTHER DATUMS
- APPLY THE FOLLOWING CONVERSIONS WHEN USING PREVIOUS CONTRACT DRAWINGS:
  - ADDITION NO. 6: SUBTRACT 0.80 FT
  - PRIOR ADDITIONS: SUBTRACT 1.04 FT

DEPARTMENT OF PUBLIC WORKS
HOWARD COUNTY, MARYLAND

CHIEF, BUREAU OF UTILITIES DATE

DES: LH

DRN: LH

CHK: BF

DATE: 12/2016

DATE	REV	DESCRIPTION
07/2019		RECORD DRAWING

INSTRUMENTATION & CONTROLS

GRAVITY THICKENER NO. 1 SYSTEM
UP No. 8.02.02

LITTLE PATUXENT WATER RECLAMATION PLANT
8TH ADDITION
BIOSOLIDS PROCESSING FACILITIES - PHASE I

CAPITAL PROJECT S-6295
CONTRACT NO. 24-4935

ELECTION DISTRICT NO. 6
HOWARD COUNTY, MARYLAND

SCALE AS SHOWN

SHEET 426 OF 463

I-201

BIM 360://10054364 – Little Patuxent WRP 8th Addition/2654591_Y_Ph1_V18.rvt
1/12/2022 10:07:44 AM

SCADA HMI

PCS

8-SPG-0011-RIO

8-DIG-0014-PNL

SCREENED PRIMARY SLUDGE

FLOW

SCREENED PRIMARY SLUDGE VALVE

POSITION CONTROL

POSITION INDICATION

IN REMOTE

GRAVITY THICKENER NO. 2

RUN COMMAND

IN REMOTE

RUN STATUS

FAIL

SPEED INDICATION

SPEED CONTROL

HIGH TORQUE WARNING

HIGH-HIGH TORQUE SHUTDOWN

480 VAC

GRAVITY THICKENER NO. 2

YA 1622B — FAIL

YI 1622B — RUN

SC 1622

SI 1622

I

YA 1622C — HIGH HIGH TORQUE

YA 1622D — HIGH TORQUE

1

8-PST-1622-VFD

YA 1622A — FAIL

YI 1622A — RUN

HS 1622 — LOR

8-PST-1622-PNL

ZIT 1622

HS 1622B — OSC

HS 1622A — L/R

480 VAC

M

120VAC

FIT 1622

FE 1622

OSHH 1622

OSH 1622

GRAVITY THICKENER DRIVE

8-PST-1622-DRV

8-PST-103-VLV

8-PST-104-VLV

I-350 A

6"-PS

4"-PS

M

8-PST-1622-MOV

SCREENED PRIMARY SLUDGE

I-204 A

6"-DW

DILUTION WATER

GRAVITY THICKENER NO.2

8-PST-1622-TNK

SCUM

8-PST-1822-TNK

6"-SC

I-203 A

TO GT TRANSFER PUMP SYSTEM

FROM EXISTING FLUSHING WATER SYSTEM

6"-TPS

6"-TPS

I-203 B

TO GT TRANSFER PUMP SYSTEM

8"-GTO

TO EXISTING PLANT DRAIN

GENERAL NOTES

1. SEE SHEET I-001 FOR PROCESS CONTROL SYSTEM ABBREVIATIONS,SYMBOLS AND NOTES.
2. SEE SHEET I-904 AND I-905 FOR SCADA NETWORK ARCHITECTURE DIAGRAM.
3. REFERENCE SPECIFICATION 40 90 05 FOR CONTROL DESCRIPTIONS.
4. REFERENCE SPECIFICATION 40 91 10 FOR INSTRUMENT SCHEDULE.
5. REFERENCE SPECIFICATION 40 94 43 FOR PLC I/O SCHEDULE.
6. INSTRUMENTATION AND CONTROL EQUIPMENT SHALL BE SUITABLE FOR INSTALLATION IN HAZARDOUS AS DEFINED ON SHEET 00G-06, HAZARDOUS AREA PLAN.
7. SEE INSTRUMENT SCHEDULE FOR COMPLETE TAG NUMBER.

KEY NOTES

1. VFD INSTALLED IN MCC-31.

THE DRAWINGS IN THIS SET ARE RECORD DRAWINGS. THEY ARE CONSTRUCTION CONTRACT DRAWINGS WHICH HAVE BEEN REVISED BASED ON AVAILABLE FIELD INFORMATION RECORDED BY OTHERS DURING CONSTRUCTION OF THIS CONTRACT. THERE HAS BEEN NO VERIFICATION OF DIMENSIONS SHOWN ON THE CONSTRUCTION DRAWINGS OR THE ACCURACY/COMPLETENESS OF THE FIELD INFORMATION RECEIVED.

SIGNATURE — DATE 2/7/2023

AS-BUILT REPLACEMENT SHEET

PROFESSIONAL CERTIFICATION

THIS DRAWING WAS ORIGINALLY APPROVED FOR CONSTRUCTION AND SEALED BY BILLY J. FOX, A REGISTERED PROFESSIONAL ENGINEER IN THE STATE OF MARYLAND, NO. 46603.

NOTICE TO CONTRACTORS

- PROJECT ELEVATIONS ARE BASED ON NAVD88 AND HOWARD COUNTY'S BENCHMARK SYSTEM
- PREVIOUS PROJECTS USED OTHER DATUMS
- APPLY THE FOLLOWING CONVERSIONS WHEN USING PREVIOUS CONTRACT DRAWINGS:
  - ADDITION NO. 6: SUBTRACT 0.80 FT
  - PRIOR ADDITIONS: SUBTRACT 1.04 FT

DEPARTMENT OF PUBLIC WORKS
HOWARD COUNTY, MARYLAND

CHIEF, BUREAU OF UTILITIES — DATE

DES: LH
DRN: LH
CHK: BF
DATE: 12/2016

DATE	REV	DESCRIPTION
07/2019		RECORD DRAWING

INSTRUMENTATION & CONTROLS

GRAVITY THICKENER NO. 2 SYSTEM
UP No. 8.02.02

LITTLE PATUXENT WATER RECLAMATION PLANT
8TH ADDITION
BIOSOLIDS PROCESSING FACILITIES - PHASE I

CAPITAL PROJECT S-6295
CONTRACT NO. 24-4935

ELECTION DISTRICT NO. 6
HOWARD COUNTY, MARYLAND

SCALE AS SHOWN

SHEET 427 OF 463

I-202

BIM 360://10054364 – Little Patuxent WRP 8th Addition/264591_Y_Ph1_V18.rvt
1/12/2022 10:07:46 AM

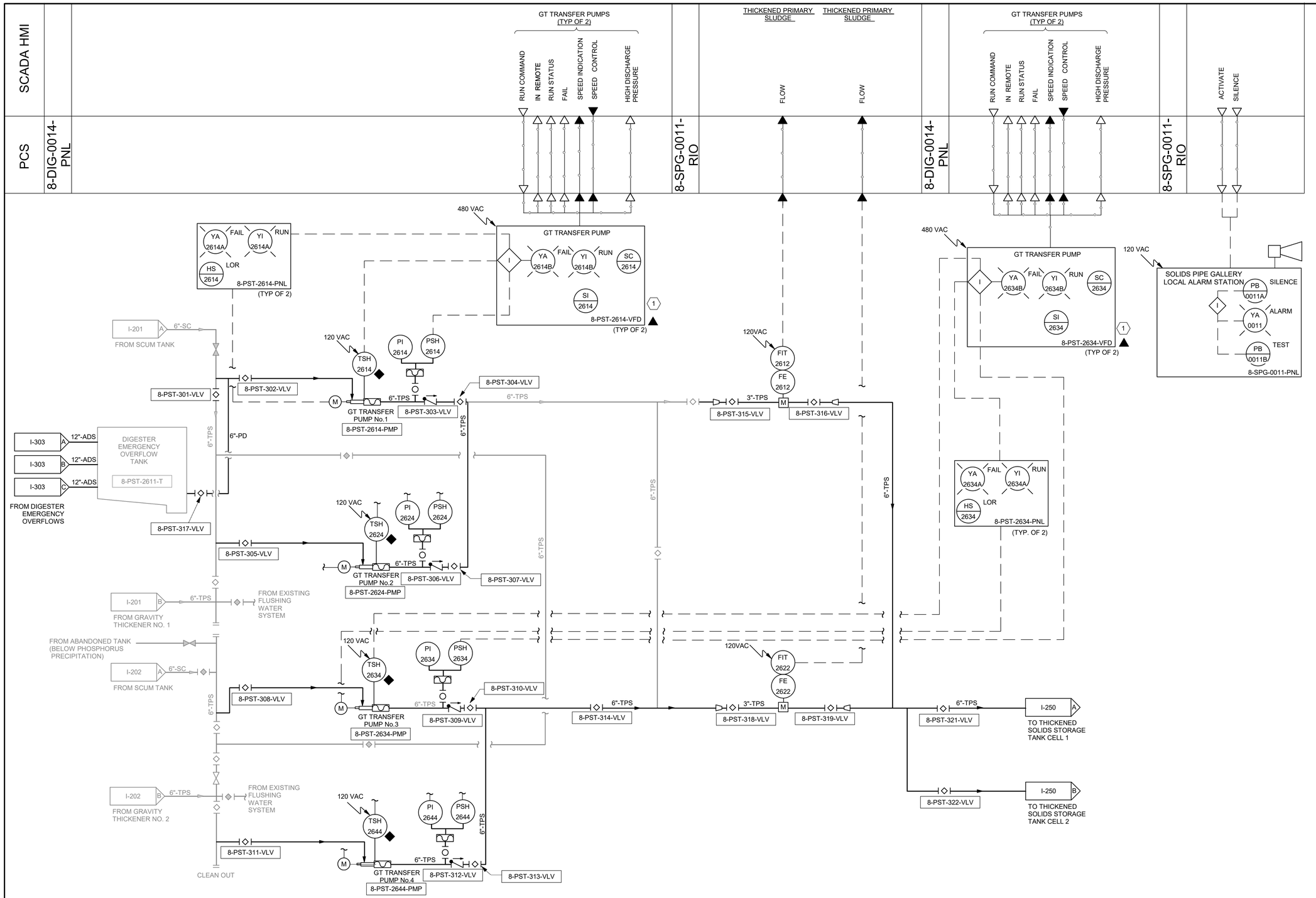

GENERAL NOTES

1. SEE SHEET I-001 FOR PROCESS CONTROL SYSTEM ABBREVIATIONS,SYMBOLS AND NOTES.
2. SEE SHEET I-904 AND I-905 FOR SCADA NETWORK ARCHITECTURE DIAGRAM.
3. REFERENCE SPECIFICATION 40 90 05 FOR CONTROL DESCRIPTIONS.
4. REFERENCE SPECIFICATION 40 91 10 FOR INSTRUMENT SCHEDULE.
5. REFERENCE SPECIFICATION 40 94 43 FOR PLC I/O SCHEDULE.
6. INSTRUMENTATION AND CONTROL EQUIPMENT SHALL BE SUITABLE FOR INSTALLATION IN HAZARDOUS AS DEFINED ON SHEET 00G-06, HAZARDOUS AREA PLAN.
7. SEE INSTRUMENT SCHEDULE FOR COMPLETE TAG NUMBER.

KEY NOTES

(1) VFD INSTALLED IN MCC-31

THE DRAWINGS IN THIS SET ARE RECORD DRAWINGS. THEY ARE CONSTRUCTION CONTRACT DRAWINGS WHICH HAVE BEEN REVISED BASED ON AVAILABLE FIELD INFORMATION RECORDED BY OTHERS DURING CONSTRUCTION OF THIS CONTRACT. THERE HAS BEEN NO VERIFICATION OF DIMENSIONS SHOWN ON THE CONSTRUCTION DRAWINGS OR THE ACCURACY/COMPLETENESS OF THE FIELD INFORMATION RECEIVED.

SIGNATURE — DATE 2/7/2023

AS-BUILT REPLACEMENT SHEET

PROFESSIONAL CERTIFICATION

THIS DRAWING WAS ORIGINALLY APPROVED FOR CONSTRUCTION AND SEALED BY BILLY J. FOX, A REGISTERED PROFESSIONAL ENGINEER IN THE STATE OF MARYLAND, NO. 46603.

NOTICE TO CONTRACTORS

- PROJECT ELEVATIONS ARE BASED ON NAVD88 AND HOWARD COUNTY'S BENCHMARK SYSTEM
- PREVIOUS PROJECTS USED OTHER DATUMS
- APPLY THE FOLLOWING CONVERSIONS WHEN USING PREVIOUS CONTRACT DRAWINGS:
  - ADDITION NO. 6: SUBTRACT 0.80 FT
  - PRIOR ADDITIONS: SUBTRACT 1.04 FT

DEPARTMENT OF PUBLIC WORKS
HOWARD COUNTY, MARYLAND

CHIEF, BUREAU OF UTILITIES — DATE

DES: LH
DRN: LH
CHK: BF
DATE: 12/2016

DATE	REV	DESCRIPTION
07/2019		RECORD DRAWING

INSTRUMENTATION & CONTROLS

GT TRANSFER PUMP UP No. 8.02.03

LITTLE PATUXENT WATER RECLAMATION PLANT
8TH ADDITION
BIOSOLIDS PROCESSING FACILITIES - PHASE I

CAPITAL PROJECT S-6295
CONTRACT NO. 24-4935

ELECTION DISTRICT NO. 6
HOWARD COUNTY, MARYLAND

SCALE AS SHOWN

SHEET 428 OF 463

I-203

BIM 360://10054364 – Little Patuxent WRP 8th Addition/264591_Y_Ph1_V18.rvt
1/12/2022 10:07:50 AM

SCADA HMI

PCS 8-GBT-0012-PNL

8-POL-0011-RIO

DILUTION WATER PUMP NO. 1 — RUN COMMAND, IN REMOTE, RUN STATUS, FAIL, SPEED INDICATION, SPEED CONTROL

DILUTION WATER PUMP NO. 2 — RUN COMMAND, IN REMOTE, RUN STATUS, FAIL, SPEED INDICATION, SPEED CONTROL

DILUTION WATER PUMP NO. 3 — RUN COMMAND, IN REMOTE, RUN STATUS, FAIL, SPEED INDICATION, SPEED CONTROL

UPS — UPS FAULT, ON UPS POWER

DEAMMONIFICATION DILUTION WATER FLOW SWITCH — FLOW PRESENCE

SOLIDS GALLERY DRAIN VAULT — HIGH LEVEL (CAPACITANCE), HIGH LEVEL (FLOAT)

GRAVITY THICKENER NO. 2 — FLOW, LOW FLOW ALARM

GRAVITY THICKENER NO. 1 — FLOW, LOW FLOW ALARM

LOCAL ALARM STATION — ACTIVATE, SILENCE

480 VAC

DILUTION WATER PUMP No. 1
YA 2813B FAIL, YI 2813B RUN, SI 2813, SC 2813
8-PST-2813-VFD

DILUTION WATER PUMP No. 2
YA 2823B FAIL, YI 2823B RUN, SI 2823, SC 2823
8-PST-2823-VFD

DILUTION WATER PUMP No. 3
YA 2833B FAIL, YI 2833B RUN, SI 2833, SC 2833
8-PST-2833-VFD

UPS
1

LSH 2811A, LSH 2811B

120 VAC

CHEMICAL HANDLING AREA LOCAL ALARM STATION
PB 0022A SILENCE
I
YA 0022 ALARM
PB 0022B TEST
8-PST-0022-PNL

120VAC
FSL 2811
6"-DW
8-PST-417-VLV
I-601 A
TO CENTRATE EQUALIZATION TANKS AND DEAMMONIFICATION REACTORS

120VAC
FIT 2822
FE 2822
M
6"-DW
4"-DW
8-PST-420-VLV
8-PST-421-VLV
6"-DW
I-202 A
TO GRAVITY THICKENER NO. 2

120VAC
FIT 2812
FE 2812
M
6"-DW
4"-DW
8-PST-418-VLV
8-PST-419-VLV
6"-DW
I-201 A
TO GRAVITY THICKENER NO. 1

TO EXISTING PLANT WATER

TO EXISTING FLUSHING WATER PUMPS

12"-PW

6"-PW

16"-PW

10"-PW

FROM EXISTING PLANT WATER SYSTEM

120VAC
FIT XXXX
FE XXXX

FROM EXISTING DENITRIFICATION FILTERS
16"-PW
M
10"-PW
16"-PW

BRANCH FROM EXISTING 54" DENITRIFICATION EFFLUENT PIPE

YA 2813A FAIL, YI 2813A RUN, HS 2813 LOR
8-PST-2813-PNL

PI 2813A, PI 2813B, M

6"-DW
8-PST-409-VLV
DILUTION WATER PUMP NO.3
8-PST-2813-PMP

8-PST-410-VLV
8-PST-411-VLV
6"-DW
8-PST-414-VLV
8-PST-416-VLV

YA 2823A FAIL, YI 2823A RUN, HS 2823 LOR
8-PST-2823-PNL

PI 2823A, PI 2823B, M

6"-DW
8-PST-406-VLV
DILUTION WATER PUMP NO.2
8-PST-2823-PMP

8-PST-407-VLV
8-PST-408-VLV
6"-DW
8-PST-413-VLV
8-PST-412-VLV

YA 2833A FAIL, YI 2833A RUN, HS 2833 LOR
8-PST-2833-PNL

PI 2833A, PI 2833B, M

6"-DW
8-PST-403-VLV
DILUTION WATER PUMP NO.1
8-PST-2833-PMP

8-PST-404-VLV
8-PST-405-VLV
6"-DW
8-PST-415-VLV

GENERAL NOTES

1. SEE SHEET I-001 FOR PROCESS CONTROL SYSTEM ABBREVIATIONS,SYMBOLS AND NOTES.
2. SEE SHEET I-904 AND I-905 FOR SCADA NETWORK ARCHITECTURE DIAGRAM.
3. REFERENCE SPECIFICATION 40 90 05 FOR CONTROL DESCRIPTIONS.
4. REFERENCE SPECIFICATION 40 91 10 FOR INSTRUMENT SCHEDULE.
5. REFERENCE SPECIFICATION 40 94 43 FOR PLC I/O SCHEDULE.
6. INSTRUMENTATION AND CONTROL EQUIPMENT SHALL BE SUITABLE FOR INSTALLATION IN HAZARDOUS AS DEFINED ON SHEET 00G-06, HAZARDOUS AREA PLAN.
7. SEE INSTRUMENT SCHEDULE FOR COMPLETE TAG NUMBER.
8. THE FOLLOWING VALVE TAG NUMBERS ARE NOT USED: 8-PST-401-GV, 8-PST-402-GV, 8-PST-412-PV, 8-PST-418-PV.

KEY NOTES

1 UPS IS LOCATED WITHIN RIO PANEL

THE DRAWINGS IN THIS SET ARE RECORD DRAWINGS. THEY ARE CONSTRUCTION CONTRACT DRAWINGS WHICH HAVE BEEN REVISED BASED ON AVAILABLE FIELD INFORMATION RECORDED BY OTHERS DURING CONSTRUCTION OF THIS CONTRACT. THERE HAS BEEN NO VERIFICATION OF DIMENSIONS SHOWN ON THE CONSTRUCTION DRAWINGS OR THE ACCURACY/COMPLETENESS OF THE FIELD INFORMATION RECEIVED.

SIGNATURE — DATE 2/7/2023

AS-BUILT REPLACEMENT SHEET

PROFESSIONAL CERTIFICATION

THIS DRAWING WAS ORIGINALLY APPROVED FOR CONSTRUCTION AND SEALED BY BILLY J. FOX, A REGISTERED PROFESSIONAL ENGINEER IN THE STATE OF MARYLAND, NO. 46603.

NOTICE TO CONTRACTORS

- PROJECT ELEVATIONS ARE BASED ON NAVD88 AND HOWARD COUNTY'S BENCHMARK SYSTEM
- PREVIOUS PROJECTS USED OTHER DATUMS
- APPLY THE FOLLOWING CONVERSIONS WHEN USING PREVIOUS CONTRACT DRAWINGS:
  - ADDITION NO. 6: SUBTRACT 0.80 FT
  - PRIOR ADDITIONS: SUBTRACT 1.04 FT

DEPARTMENT OF PUBLIC WORKS
HOWARD COUNTY, MARYLAND

CHIEF, BUREAU OF UTILITIES — DATE

DES: LH
DRN: LH
CHK: BF
DATE: 12/2016

DATE	REV	DESCRIPTION
07/2019		RECORD DRAWING

INSTRUMENTATION & CONTROLS

DILUTION WATER PUMPS
UP No. 8.02.04

LITTLE PATUXENT WATER RECLAMATION PLANT
8TH ADDITION
BIOSOLIDS PROCESSING FACILITIES - PHASE I

CAPITAL PROJECT S-6295
CONTRACT NO. 24-4935

ELECTION DISTRICT NO. 6
HOWARD COUNTY, MARYLAND

SCALE AS SHOWN

SHEET 429 OF 463

I-204

BIM 360://10054364 – Little Patuxent WRP 8th Addition/284591_Y_Ph1_V18.rvt
1/12/2022 10:07:53 AM

SCADA HMI

PCS

8-DIG-0014-PNL

COMPRESSOR SYSTEM (TYP FOR 2)

VCP SYSTEM

TYP FOR 8

RUN STATUS
FAILURE
WARNING
LOW PRESSURE
HIGH PRESSURE
NO PRESSURE
VOLTAGE VA
VOLTAGE VB
VOLTAGE VC
AMPS PH-A
AMPS PH-B
AMPS PH-C
POWER FACTOR (3-PH)
KILOWATTS (3-PH)
MEGAWATT HOURS (3-PH)
IN REMOTE
START/STOP COMMAND
OPENED INDICATION
CLOSED INDICATION
FAIL TO OPEN
FAIL TO CLOSE
HIGH PRESSURE
LOW PRESSURE
NO PRESSURE

8-SPG-0011-RIO

CELL 2
CELL 1

LEVEL
LEVEL

DIGESTER FEED PUMP (TYP. OF 2)

RUN COMMAND
IN REMOTE
RUN STATUS
FAIL
SPEED INDICATION
SPEED CONTROL

8-DIG-0011-RIO

DIGESTER FEED VALVE (TYP. OF 3)

CLOSE COMMAND
OPEN COMMAND
OPENED INDICATION
CLOSED INDICATION
IN REMOTE

ANAEROBIC DIGESTER FEED (TYP. OF 3)

FLOW

GENERAL NOTES

1. SEE SHEET I-001 FOR PROCESS CONTROL SYSTEM ABBREVIATIONS,SYMBOLS AND NOTES.
2. SEE SHEET I-904 AND I-905 FOR SCADA NETWORK ARCHITECTURE DIAGRAM.
3. REFERENCE SPECIFICATION 40 90 05 FOR CONTROL DESCRIPTIONS.
4. REFERENCE SPECIFICATION 40 91 10 FOR INSTRUMENT SCHEDULE.
5. REFERENCE SPECIFICATION 40 94 43 FOR PLC I/O SCHEDULE.
6. INSTRUMENTATION AND CONTROL EQUIPMENT SHALL BE SUITABLE FOR INSTALLATION IN HAZARDOUS AS DEFINED ON SHEET 00G-06, HAZARDOUS AREA PLAN.
7. MAJOR FUNCTIONS FOR PACKAGED EQUIPMENT VENDOR SUPPLIED CONTROL PANELS ARE SHOWN. ACTUAL EQUIPMENT VENDOR PANELS MAY OFFER ADDITIONAL FUNCTIONALITY.
8. SEE INSTRUMENT SCHEDULE FOR COMPLETE TAG NUMBER.

KEY NOTES

1. DIGESTER NO.2 WILL NORMALLY BE A SECONDARY DIGESTER AND FED FROM THIS SYSTEM ONLY WHEN IT IS IN PRIMARY MODE.
2. VALVE CONTROL PANEL(VCP) WITH PLC AND HMI.
3. OPERATOR INTERFACE (OIT) ON COMPRESSOR PANEL.
4. POWER MONITORING REQUIRED FOR MOTORS GREATER THAN 20 HP.

120 VAC
COMPRESSOR PANEL No.1
HOA 1212
PLC
PB 1212A RUN
PB 1212B STOP
PI 1212
YA 1212A RUN
YA 1212B FAIL
YA 1212C PRESS
8-THS-1212-PNL

480 VAC
COMPRESSOR No.1
8-THS-1212-AIR
M
25 HP
S
LS
8-THS-1212-SV
AIR RECEIVER TANK No.1
1-1/2"-CA
D

120 VAC
VALVE CONTROL PANEL
HS 1011 LOR
8-THS-1011-PNL
1"-CA (TYP.)
S

X"-FA

THICKENED SOLIDS STORAGE TANKS

CELL 2
8-THS-1022-TNK
LIT 1022
LARGE BUBBLE NOZZLES(TYP.)

CELL 1
8-THS-1012-TNK
LIT 1012
LARGE BUBBLE NOZZLES(TYP.)

120 VAC
COMPRESSOR PANEL No.2
HOA 1222
PLC
PB 1222A RUN
PB 1222B STOP
PI 1222
YA 1222A RUN
YA 1222B FAIL
YA 1222C PRESS
8-TSS-1222-PNL

480 VAC
COMPRESSOR No.2
8-THS-1222-AIR
M
25 HP
S
LS
8-THS-1222-SV
AIR RECEIVER TANK No.2
1-1/2"-CA
D

1-1/2"-CA
I-601 A
TO CENTRATE TREATMENT EQ (LARGE BUBBLE MIXING SYSTEM)

8-102-PV
6"-ADF
2"-DR
4"-TWAS
8-220-PV
8-219-PV

I-102
6"-TWAS
4"-TWAS
FROM GBT-1 AND GBT-2

I-203 A
6"-TPS
FROM GT-1 AND GT-2

I-203 B
FROM GT-1 AND GT-2

8-107-PV
I-375
TO CENTRIFUGE FEED PUMPS

480 VAC
DIGESTER FEED PUMP
YA 1412B FAIL
YI 1412B RUN
SC 1412
HS 1412B LOR
SI 1412
I
8-THS-1412-VFD (TYP OF 2)

YA 1412A FAIL
YI 1412A RUN
HS 1412A LOR
8-THS-1412-PNL (TYP OF 2)

120 VAC
TSH 1412
PI 1412
PSH 1412
8-THS-006-VLV
6"ADF
2"-DR
M
DIGESTER FEED PUMP No.1
8-THS-1412-PMP
8-THS-007-VLV
8-THS-008-VLV
6"ADF
2"-DR

8-103-PV
6"-ADF
8-159-PV
2"-DR

120 VAC
TSH 1422
PI 1422
PSH 1422
6"-ADF
8-THS-009-VLV
2"-DR
M
DIGESTER FEED PUMP No.2
8-THS-1422-PMP
8-THS-010-VLV
8-THS-011-VLV
6"ADF
2"-DR

ZSO 1423
ZSC 1423
HS 1423A OC
HS 1423B L/R
480 VAC
M
8-THS-004-VLV
8-THS-1423-MOV
4"-ADF
M
8-THS-005-VLV
I-301 C
DIGESTER 2 ADF TO ADRR

8-THS-013-VLV
8-THS-012-VLV
6"-ADF

ZSO 1433
ZSC 1433
HS 1433A OC
HS 1433B L/R
480 VAC
M
8-THS-015-VLV
8-THS-1433-MOV
ADF
4"-ADF
M
8-THS-016-VLV
I-301 B
DIGESTER 3 ADF TO ADRR

ZSO 1413
ZSC 1413
HS 1413A OC
HS 1413B L/R
480 VAC
M
8-THS-014-VLV
8-THS-1413-MOV
ADF
4"-ADF
M
8-THS-003-VLV
I-301 A
DIGESTER 1 ADF TO ADRR

120 VAC
FIT 1423
FE 1423
120 VAC
FIT 1433
FE 1433
120 VAC
FIT 1413
FE 1413

THE DRAWINGS IN THIS SET ARE RECORD DRAWINGS. THEY ARE CONSTRUCTION CONTRACT DRAWINGS WHICH HAVE BEEN REVISED BASED ON AVAILABLE FIELD INFORMATION RECORDED BY OTHERS DURING CONSTRUCTION OF THIS CONTRACT. THERE HAS BEEN NO VERIFICATION OF DIMENSIONS SHOWN ON THE CONSTRUCTION DRAWINGS OR THE ACCURACY/COMPLETENESS OF THE FIELD INFORMATION RECEIVED.

SIGNATURE — DATE 2/7/2023

HDR

AS-BUILT REPLACEMENT SHEET

PROFESSIONAL CERTIFICATION

THIS DRAWING WAS ORIGINALLY APPROVED FOR CONSTRUCTION AND SEALED BY BILLY J. FOX, A REGISTERED PROFESSIONAL ENGINEER IN THE STATE OF MARYLAND, NO. 46603.

NOTICE TO CONTRACTORS

- PROJECT ELEVATIONS ARE BASED ON NAVD88 AND HOWARD COUNTY'S BENCHMARK SYSTEM
- PREVIOUS PROJECTS USED OTHER DATUMS
- APPLY THE FOLLOWING CONVERSIONS WHEN USING PREVIOUS CONTRACT DRAWINGS:
  - ADDITION NO. 6: SUBTRACT 0.80 FT
  - PRIOR ADDITIONS: SUBTRACT 1.04 FT

DEPARTMENT OF PUBLIC WORKS
HOWARD COUNTY, MARYLAND

CHIEF, BUREAU OF UTILITIES — DATE

DES: LH
DRN: LH
CHK: BF
DATE: 12/2016

DATE	REV	DESCRIPTION
07/2019		RECORD DRAWING

INSTRUMENTATION & CONTROLS

THICKENED SOLIDS STORAGE SYSTEM
UP No. 8.03.01

LITTLE PATUXENT WATER RECLAMATION PLANT
8TH ADDITION
BIOSOLIDS PROCESSING FACILITIES - PHASE I

CAPITAL PROJECT S-6295
CONTRACT NO. 24-4935

ELECTION DISTRICT NO. 6
HOWARD COUNTY, MARYLAND

SCALE AS SHOWN

SHEET 430 OF 463

I-250

BIM 360://10054364 – Little Patuxent WRP 8th Addition/284591_Y_Ph1_V18.rvt
1/12/2022 10:07:57 AM

SCADA HMI

PCS

8-DIG-0011-RIO

8-DIG-0014-PNL

UPS

UPS FAULT

ON UPS POWER

DIGESTER RECIRC PUMP No.1

RUN COMMAND

IN REMOTE

RUN STATUS

FAIL

DIFFERENTIAL PRESSURE HIGH

LOW SUCTION PRESSURE

DIGESTER RECIRC PUMP No.3

RUN COMMAND

IN REMOTE

RUN STATUS

FAIL

DIFFERENTIAL PRESSURE HIGH

LOW SUCTION PRESSURE

SPEED INDICATION

SPEED CONTROL

DIGESTER RECIRC PUMP No.2

RUN COMMAND

IN REMOTE

RUN STATUS

FAIL

DIFFERENTIAL PRESSURE HIGH

LOW SUCTION PRESSURE

UPS

3

480 VAC

RECIRCULATION PUMP No. 1

YA 1013A FAIL YI 1013A RUN

HS 1013 LOR

8-DIG-1013-PNL

YA 1013B FAIL YI 1013B RUN YI 1013C STOPPED

I

8-DIG-1013-MCC

PDSH 1013

PI 1013A

PSL 1013

PI 1013B

M

8-DIG-001-VLV

6"-ADRS

2"-DR

DIGESTER RECIRCULATION PUMP No.1

8-DIG-1013-PMP

2"-DR

2

8-DIG-003-VLV

6"-ADRS

1

HEAT EXCHANGER No.1

UP. 8.04.05

8-DIG-002-VLV

8-DIG-004-VLV

6"-ADRR

6"-ADRR

I-250 A 6"-ADF

ADF TO ADRR

8-DIG-040-VLV

DIGESTER No.1

8-DIG-1413-TNK

8-DIG-041-VLV

6"-ADRS

480 VAC

RECIRCULATION PUMP No. 3

YA 1033A FAIL YI 1033A RUN

HS 1033 LOR

8-DIG-1033-PNL

YA 1033B FAIL YI 1033B RUN SC 1033B

SI 1033B

I

8-DIG-1033-VFD

PDSH 1033

PI 1033A

PSL 1033

PI 1033B

M

8-DIG-046-VLV

8-DIG-009-VLV

6"-ADRS

2"-DR

DIGESTER RECIRCULATION PUMP No.3

8-DIG-1033-PMP

2"-DR

2

8-DIG-011-VLV

6"-ADRS

1

HEAT EXCHANGER No.3

UP. 8.04.05

8-DIG-010-VLV

8-DIG-012-VLV

6"-ADRR

6"-ADRR

8-DIG-013-VLV

I-250 B 6"-ADF

ADF TO ADRR

8-DIG-044-VLV

DIGESTER No.3

8-DIG-1433-TNK

8-DIG-014-VLV

8-DIG-045-VLV

6"-ADRS

4

480 VAC

RECIRCULATION PUMP No. 2

YA 1023A FAIL YI 1023A RUN

HS 1023 LOR

8-DIG-1023-PNL

YA 1023B FAIL YI 1023B RUN YI 1023C STOPPED

I

8-DIG-1023-MCC

PDSH 1023

PI 1023A

PSL 1023

PI 1023B

M

8-DIG-047-VLV

8-DIG-005-VLV

6"-ADRS

2"-DR

DIGESTER RECIRCULATION PUMP No.2

8-DIG-1023-PMP

2"-DR

2

8-DIG-007-VLV

6"-ADRS

1

HEAT EXCHANGER No.2

UP. 8.04.05

8-DIG-006-VLV

8-DIG-008-VLV

6"-ADRR

6"-ADRR

I-250 C 6"-ADF

ADF TO ADRR

8-DIG-043-VLV

6"-ADRR

DIGESTER No.2

8-DIG-1423-TNK

8-DIG-044-VLV

6"-ADRS

GENERAL NOTES

1. SEE SHEET I-001 FOR PROCESS CONTROL SYSTEM ABBREVIATIONS,SYMBOLS AND NOTES.
2. SEE SHEET I-904 AND I-905 FOR SCADA NETWORK ARCHITECTURE DIAGRAM.
3. REFERENCE SPECIFICATION 40 90 05 FOR CONTROL DESCRIPTIONS.
4. REFERENCE SPECIFICATION 40 91 10 FOR INSTRUMENT SCHEDULE.
5. REFERENCE SPECIFICATION 40 94 43 FOR PLC I/O SCHEDULE.
6. INSTRUMENTATION AND CONTROL EQUIPMENT SHALL BE SUITABLE FOR INSTALLATION IN HAZARDOUS AS DEFINED ON SHEET 00G-06, HAZARDOUS AREA PLAN.
7. MAJOR FUNCTIONS FOR PACKAGED EQUIPMENT VENDOR SUPPLIED CONTROL PANELS ARE SHOWN. ACTUAL EQUIPMENT VENDOR PANELS MAY OFFER ADDITIONAL FUNCTIONALITY.
8. SEE INSTRUMENT SCHEDULE FOR COMPLETE TAG NUMBER.

KEY NOTES

1. REFERENCE I-342.
2. ONE VALVE IS UPSTAIRS NEAR HEAT EXCHANGER AND OTHER IS DOWNSTAIRS NEAR PUMP.
3. UPS IS LOCATED WITHIN RIO PANEL
4. PRESSURE TRANSMITTER TAG LIT-1433C FOR DIGESTER NO. 3 IS SHOWN ON I-303

THE DRAWINGS IN THIS SET ARE RECORD DRAWINGS. THEY ARE CONSTRUCTION CONTRACT DRAWINGS WHICH HAVE BEEN REVISED BASED ON AVAILABLE FIELD INFORMATION RECORDED BY OTHERS DURING CONSTRUCTION OF THIS CONTRACT. THERE HAS BEEN NO VERIFICATION OF DIMENSIONS SHOWN ON THE CONSTRUCTION DRAWINGS OR THE ACCURACY/COMPLETENESS OF THE FIELD INFORMATION RECEIVED.

SIGNATURE

DATE 2/7/2023

AS-BUILT REPLACEMENT SHEET

PROFESSIONAL CERTIFICATION

THIS DRAWING WAS ORIGINALLY APPROVED FOR CONSTRUCTION AND SEALED BY BILLY J. FOX, A REGISTERED PROFESSIONAL ENGINEER IN THE STATE OF MARYLAND, NO. 46603.

NOTICE TO CONTRACTORS

- PROJECT ELEVATIONS ARE BASED ON NAVD88 AND HOWARD COUNTY'S BENCHMARK SYSTEM
- PREVIOUS PROJECTS USED OTHER DATUMS
- APPLY THE FOLLOWING CONVERSIONS WHEN USING PREVIOUS CONTRACT DRAWINGS:
  - ADDITION NO. 6: SUBTRACT 0.80 FT
  - PRIOR ADDITIONS: SUBTRACT 1.04 FT

DEPARTMENT OF PUBLIC WORKS
HOWARD COUNTY, MARYLAND

CHIEF, BUREAU OF UTILITIES DATE

DES: LH

DRN: LH

CHK: BF

DATE: 12/2016

DATE	REV	DESCRIPTION
07/2019		RECORD DRAWING

INSTRUMENTATION & CONTROLS

ANAEROBIC DIGESTER RECIRCULATION SYSTEMS UP No. 08.04.01

LITTLE PATUXENT WATER RECLAMATION PLANT
8TH ADDITION
BIOSOLIDS PROCESSING FACILITIES - PHASE I

CAPITAL PROJECT S-6295
CONTRACT NO. 24-4935

ELECTION DISTRICT NO. 6
HOWARD COUNTY, MARYLAND

SCALE AS SHOWN

SHEET 431 OF 463

I-301

BIM 360://10054364 – Little Patuxent WRP 8th Addition/264591_Y_Ph1_V18.rvt
1/12/2022 10:08:00 AM

SCADA HMI

PCS

8-DIG-0011-RIO

8-DIG-0014-PNL

GAS ALARM PANEL

SILENCE

H2S ALARM

CH4 ALARM

MIXING PUMP No.1

RUN COMMAND

IN REMOTE

RUN STATUS

FAIL

SPEED INDICATION

SPEED CONTROL

DIFFERENTIAL PRESSURE HIGH

LOW SUCTION PRESSURE

VOLTAGE (V)

AMPS (A)

KILOWATTS (kW)

TORQUE

(2)

MIXING PUMP No.3

MIXING PUMP No.2

AIT 0034A

AIT 0034B

H2S

CH4

AE 0034A

AE 0034B

120 VAC

480 VAC

GAS ALARM PANEL

PB 0034 SILENCE

8-DIG-0034-PNL

MIXING PUMP No.1

YI 1213B RUN YA 1213B FAIL SC 1213

SI 1213

8-DIG-1213-VFD

MIXING PUMP No.3

YI 1233B RUN YA 1233B FAIL SC 1233

SI 1233

8-DIG-1233-VFD

MIXING PUMP No.2

YI 1223B RUN YA 1223B FAIL SC 1223

SI 1223

8-DIG-1223-VFD

DIGESTER 1 FIXED COVER

8-DIG-1413-CVR

DIGESTER 3 BIOGAS STORAGE COVER

8-DIG-1433-CVR

DIGESTER 2 FIXED COVER

8-DIG-1423-CVR

DIGESTER No.1

8-DIG-1413-TNK

(1)

DIGESTER No.3

8-DIG-1433-TNK

DIGESTER No.2

8-DIG-1423-TNK

YA 1213A FAIL YI 1213A RUN HS 1213 LOR

8-DIG-1213-PNL

YA 1233A FAIL YI 1233A RUN HS 1233 LOR

8-DIG-1233-PNL

YA 1223A FAIL YI 1223A RUN HS 1223 LOR

8-DIG-1223-PNL

6"-ADMS

I-303 A

DIGESTER DISCHARGE TO TRANSFER SYSTEM

20"-ADMS

18"-ADMR

8"-ADMR

8-DIG-015-VLV

I-303 D

OVERFLOW FLUSH TO TRANSFER SYSTEM

8-DIG-018-VLV

PI 1213A

PSL 1213

PDSH 1213

PI 1213B

TSH 1213

8-DIG-017-VLV

M

12"-ADMR

20"x18" REDUCER(TYP. OF 3)

12"x18" REDUCER (TYP. OF 3)

2"-DR

8-DIG-016-VLV

18"ADMR

20"ADMS

MIXING PUMP No.1

8-DIG-1213-PMP

75 HP

I-303 C

8-DIG-050-VLV

PI 1233A

PSL 1233

PDSH 1233

PI 1233B

TSH 1233

8-DIG-029-VLV

8-DIG-028-VLV

8-DIG-027-VLV

8-DIG-026-VLV

8-DIG-025-VLV

18"ADMS

8-DIG-019-VLV

8-DIG-023-VLV

MIXING PUMP No.3

8-DIG-1233-PMP

I-303 B

8-DIG-020-VLV

I-303 E

8-DIG-024-VLV

PI 1223A

PSL 1223

PDSH 1223

PI 1223B

TSH 1223

8-DIG-022-VLV

8-DIG-021-VLV

MIXING PUMP No.2

8-DIG-1223-PMP

GENERAL NOTES

1. SEE SHEET I-001 FOR PROCESS CONTROL SYSTEM ABBREVIATIONS,SYMBOLS AND NOTES.
2. SEE SHEET I-904 AND I-905 FOR SCADA NETWORK ARCHITECTURE DIAGRAM.
3. REFERENCE SPECIFICATION 40 90 05 FOR CONTROL DESCRIPTIONS.
4. REFERENCE SPECIFICATION 40 91 10 FOR INSTRUMENT SCHEDULE.
5. REFERENCE SPECIFICATION 40 94 43 FOR PLC I/O SCHEDULE.
6. INSTRUMENTATION AND CONTROL EQUIPMENT SHALL BE SUITABLE FOR INSTALLATION IN HAZARDOUS AS DEFINED ON SHEET 00G-06, HAZARDOUS AREA PLAN.
7. MAJOR FUNCTIONS FOR PACKAGED EQUIPMENT VENDOR SUPPLIED CONTROL PANELS ARE SHOWN. ACTUAL EQUIPMENT VENDOR PANELS MAY OFFER ADDITIONAL FUNCTIONALITY.
8. SEE INSTRUMENT SCHEDULE FOR COMPLETE TAG NUMBER.

KEY NOTES

(1) PIPE SIZES VARY. REFERENCE MECHANICAL DRAWINGS.

(2) POWER MONITORING REQUIRED FOR MOTORS GREATER THAN 20 HP.

THE DRAWINGS IN THIS SET ARE RECORD DRAWINGS. THEY ARE CONSTRUCTION CONTRACT DRAWINGS WHICH HAVE BEEN REVISED BASED ON AVAILABLE FIELD INFORMATION RECORDED BY OTHERS DURING CONSTRUCTION OF THIS CONTRACT. THERE HAS BEEN NO VERIFICATION OF DIMENSIONS SHOWN ON THE CONSTRUCTION DRAWINGS OR THE ACCURACY/COMPLETENESS OF THE FIELD INFORMATION RECEIVED.

SIGNATURE

2/7/2023

DATE

AS-BUILT REPLACEMENT SHEET

PROFESSIONAL CERTIFICATION

THIS DRAWING WAS ORIGINALLY APPROVED FOR CONSTRUCTION AND SEALED BY BILLY J. FOX, A REGISTERED PROFESSIONAL ENGINEER IN THE STATE OF MARYLAND, NO. 46603.

NOTICE TO CONTRACTORS

- PROJECT ELEVATIONS ARE BASED ON NAVD88 AND HOWARD COUNTY'S BENCHMARK SYSTEM
- PREVIOUS PROJECTS USED OTHER DATUMS
- APPLY THE FOLLOWING CONVERSIONS WHEN USING PREVIOUS CONTRACT DRAWINGS:
  - ADDITION NO. 6: SUBTRACT 0.80 FT
  - PRIOR ADDITIONS: SUBTRACT 1.04 FT

DEPARTMENT OF PUBLIC WORKS
HOWARD COUNTY, MARYLAND

CHIEF, BUREAU OF UTILITIES DATE

DES: LH

DRN: LH

CHK: BF

DATE: 12/2016

DATE	REV	DESCRIPTION
07/2019		RECORD DRAWING

INSTRUMENTATION & CONTROLS

ANAEROBIC DIGESTER MIXING SYSTEMS
UP No. 08.04.02

LITTLE PATUXENT WATER RECLAMATION PLANT
8TH ADDITION
BIOSOLIDS PROCESSING FACILITIES - PHASE I

CAPITAL PROJECT S-6295
CONTRACT NO. 24-4935

ELECTION DISTRICT NO. 6
HOWARD COUNTY, MARYLAND

SCALE AS SHOWN

SHEET 432 OF 463

I-302

BIM 360://10054364 – Little Patuxent WRP 8th Addition/264591_Y_Ph1_V18.rvt
1/12/2022 10:08:03 AM

SCADA HMI

PCS

8-DIG-0011-RIO

8-DIG-0014-PNL

DIGESTER No. 1: LEVEL, LEVEL, GAS PRESSURE

TRANSFER PUMP No. 1: RUN COMMAND, IN REMOTE, RUN STATUS, FAIL, SPEED INDICATION, SPEED CONTROL, HIGH DISCHARGE PRESSURE

DIGESTER No. 3: LEVEL, LEVEL

TRANSFER PUMP No. 3: RUN COMMAND, IN REMOTE, RUN STATUS, FAIL, SPEED INDICATION, SPEED CONTROL, HIGH DISCHARGE PRESSURE

DIGESTER No. 2: LEVEL, LEVEL, GAS PRESSURE

TRANSFER PUMP No. 2: RUN COMMAND, IN REMOTE, RUN STATUS, FAIL, SPEED INDICATION, SPEED CONTROL, HIGH DISCHARGE PRESSURE

480 VAC

TRANSFER PUMP No.1 — YI 1613B RUN, YA 1613B FAIL, SC 1613, SI 1613 — I — 8-DIG-1613-VFD

TRANSFER PUMP No.3 — YI 1633B RUN, YA 1633B FAIL, SC 1633, SI 1633 — I — 8-DIG-1633-VFD

TRANSFER PUMP No.2 — YI 1623B RUN, YA 1623B FAIL, SC 1623, SI 1623 — I — 8-DIG-1623-VFD

LIT 1413A, PIT 1413A, LE 1413A, PE 1413A

LIT 1423A, PIT 1423A, LE 1423A, PE 1423A

12"-ADS (OVERFLOW)

DIGESTER No.1 — 8-DIG-1413-TNK

DIGESTER No.3 — 8-DIG-1433-TNK

DIGESTER No. 2 — 8-DIG-1423-TNK

8-DIG-048-VLV, 10"-ADS (OVERFLOW), FLUSH CONNECTION

8-DIG-049-VLV, 10"-ADS (OVERFLOW), FLUSH CONNECTION

8-DIG-051-VLV, 8-DIG-052-VLV, 8-DIG-053-VLV, 8-DIG-054-VLV, 8"-ADS

8-DIG-055-VLV, 8-DIG-056-VLV, 8-DIG-057-VLV, 8-DIG-058-VLV, 8"-ADS

LIT 1413B, PE 1413B — LIT 1433B, PE 1433B — LIT 1433C, PE 1433C — LIT 1423B, PE 1423B

I-302 D — OVERFLOW FLUSH FROM MIXING SYSTEM

I-302 E — OVERFLOW FLUSH FROM MIXING SYSTEM

8-DIG-064-VLV

8-DIG-063-VLV

8-DIG-062-VLV, 6"-ADS

I-203 A, B, C — EMERGENCY OVERFLOWS TO DIGESTER EMERGENCY OVERFLOW TANK

I-302 A — DIGESTER DISCHARGE FROM ADMS — 8-DIG-059-VLV, 6"-ADS

I-302 C — DIGESTER DISCHARGE FROM ADMS — 8-DIG-061-VLV, 6"-ADS

I-302 B — DIGESTER DISCHARGE FROM ADMS — 8-DIG-060-VLV, 6"-ADS

8-DIG-079-VLV, 8-DIG-091-VLV

120 VAC — PI 1613, PSH 1613, TSH 1613 — 8-DIG-077-VLV — ANAEROBIC DIGESTER TRANSFER PUMP No.1 — 8-DIG-1613-PMP — 8-DIG-078-VLV, 8-DIG-080-VLV

120 VAC — PI 1633, PSH 1633, TSH 1633 — 8-DIG-095-VLV — ANAEROBIC DIGESTER TRANSFER PUMP No.3 — 8-DIG-1633-PMP — 8-DIG-094-VLV, 8-DIG-096-VLV

120 VAC — PI 1623, PSH 1623, TSH 1623 — 8-DIG-089-VLV — ANAEROBIC DIGESTER TRANSFER PUMP No.2 — 8-DIG-1623-PMP — 8-DIG-090-VLV, 8-DIG-092-VLV

8-DIG-1613-PNL: YA 1613A FAIL, YI 1613A RUN, HS 1613 LOR

8-DIG-1633-PNL: YA 1633A FAIL, YI 1633A RUN, HS 1633 LOR

8-DIG-1623-PNL: YA 1623A FAIL, YI 1623A RUN, HS 1623 LOR

8-DIG-093-VLV, 8-DIG-067-VLV, 8-DIG-065-VLV, 8-DIG-066-VLV

6"-ADS

8-DIG-069-VLV, 6"-ADS, I-375 B — TO DIGESTED SOLIDS STORAGE

8-DIG-068-VLV, 6"-ADS, I-801 A — TO PHOSPHORUS PRECIPITATION SYSTEM

GENERAL NOTES

1. SEE SHEET I-001 FOR PROCESS CONTROL SYSTEM ABBREVIATIONS,SYMBOLS AND NOTES.
2. SEE SHEET I-904 AND I-905 FOR SCADA NETWORK ARCHITECTURE DIAGRAM.
3. REFERENCE SPECIFICATION 40 90 05 FOR CONTROL DESCRIPTIONS.
4. REFERENCE SPECIFICATION 40 91 10 FOR INSTRUMENT SCHEDULE.
5. REFERENCE SPECIFICATION 40 94 43 FOR PLC I/O SCHEDULE.
6. INSTRUMENTATION AND CONTROL EQUIPMENT SHALL BE SUITABLE FOR INSTALLATION IN HAZARDOUS AS DEFINED ON SHEET 00G-06, HAZARDOUS AREA PLAN.
7. MAJOR FUNCTIONS FOR PACKAGED EQUIPMENT VENDOR SUPPLIED CONTROL PANELS ARE SHOWN. ACTUAL EQUIPMENT VENDOR PANELS MAY OFFER ADDITIONAL FUNCTIONALITY.
8. SEE INSTRUMENT SCHEDULE FOR COMPLETE TAG NUMBER.

KEY NOTES

1. LEVEL READINGS BASED ON PRESSURE MUST BE ADJUSTED TO FACTOR IN DIGESTER COVER GAS PRESSURE.
2. ADS (OVERFLOW) SHALL BE STANLESS STEEL PIPES, PER SPECIFICATION.
3. SEE I-402 FOR DIGESTER NO. 3 GAS INSTRUMENTATION.
4. REFER TO I-301 FOR MOUNTING LOCATION OF LIT-1433C.

THE DRAWINGS IN THIS SET ARE RECORD DRAWINGS. THEY ARE CONSTRUCTION CONTRACT DRAWINGS WHICH HAVE BEEN REVISED BASED ON AVAILABLE FIELD INFORMATION RECORDED BY OTHERS DURING CONSTRUCTION OF THIS CONTRACT. THERE HAS BEEN NO VERIFICATION OF DIMENSIONS SHOWN ON THE CONSTRUCTION DRAWINGS OR THE ACCURACY/COMPLETENESS OF THE FIELD INFORMATION RECEIVED.

SIGNATURE — DATE 2/7/2020

HDR

AS-BUILT REPLACEMENT SHEET

PROFESSIONAL CERTIFICATION

THIS DRAWING WAS ORIGINALLY APPROVED FOR CONSTRUCTION AND SEALED BY BILLY J. FOX, A REGISTERED PROFESSIONAL ENGINEER IN THE STATE OF MARYLAND, NO. 46603.

NOTICE TO CONTRACTORS

- PROJECT ELEVATIONS ARE BASED ON NAVD88 AND HOWARD COUNTY'S BENCHMARK SYSTEM
- PREVIOUS PROJECTS USED OTHER DATUMS
- APPLY THE FOLLOWING CONVERSIONS WHEN USING PREVIOUS CONTRACT DRAWINGS:
  - ADDITION NO. 6: SUBTRACT 0.80 FT
  - PRIOR ADDITIONS: SUBTRACT 1.04 FT

DEPARTMENT OF PUBLIC WORKS
HOWARD COUNTY, MARYLAND

CHIEF, BUREAU OF UTILITIES — DATE

DES: LH
DRN: LH
CHK: BF
DATE: 12/2016

DATE	REV	DESCRIPTION
07/2019		RECORD DRAWING

INSTRUMENTATION & CONTROLS

ANAEROBIC DIGESTER TRANSFER PUMPING SYSTEMS
UP No. 08.04.03

LITTLE PATUXENT WATER RECLAMATION PLANT
8TH ADDITION
BIOSOLIDS PROCESSING FACILITIES - PHASE I

CAPITAL PROJECT S-6295
CONTRACT NO. 24-4935

ELECTION DISTRICT NO. 6
HOWARD COUNTY, MARYLAND

SCALE AS SHOWN

SHEET 433 OF 463

I-303

BIM 360://10054364 – Little Patuxent WRP 8th Addition/284591_Y_Ph1_V18.rvt
1/12/2022 10:08:09 AM

SCADA HMI

PCS 8-DIG-0011-RIO

GAS ALARM PANEL: SILENCE; H2S ALARM; CH4 ALARM

DIGESTER GAS: FLOW; FLOW

HWR: PRESSURE

8-DIG-0014-PNL

8-DIG-0011-RIO

HOT WATER BOILER (TYP FOR 2): RUN PERMISSIVE; HEATING ON STATUS; FAIL

HWS: PRESSURE; PRESSURE HIGH HIGH; TEMPERATURE

MIXING VALVE: POSITION CONTROL; POSITION INDICATION; IN REMOTE

8-DIG-0014-PNL

HWS PUMP (TYP FOR 3): RUN COMMAND; IN REMOTE; RUN STATUS; FAIL; SPEED INDICATION; SPEED CONTROL; HIGH DISCHARGE PRESSURE

8-DIG-0011-RIO

EXPANSION TANK: DIFFERENTIAL PRESSURE; LOW -LOW LEVEL

HWS DISCHARGE: TEMPERATURE; PRESSURE; FLOW

GENERAL NOTES

1. SEE SHEET I-001 FOR PROCESS CONTROL SYSTEM ABBREVIATIONS,SYMBOLS AND NOTES.
2. SEE SHEET I-904 AND I-905 FOR SCADA NETWORK ARCHITECTURE DIAGRAM.
3. REFERENCE SPECIFICATION 40 90 05 FOR CONTROL DESCRIPTIONS.
4. REFERENCE SPECIFICATION 40 91 10 FOR INSTRUMENT SCHEDULE.
5. REFERENCE SPECIFICATION 40 94 43 FOR PLC I/O SCHEDULE.
6. INSTRUMENTATION AND CONTROL EQUIPMENT SHALL BE SUITABLE FOR INSTALLATION IN HAZARDOUS AS DEFINED ON SHEET 00G-06, HAZARDOUS AREA PLAN.
7. MAJOR FUNCTIONS FOR PACKAGED EQUIPMENT VENDOR SUPPLIED CONTROL PANELS ARE SHOWN. ACTUAL EQUIPMENT VENDOR PANELS MAY OFFER ADDITIONAL FUNCTIONALITY.
8. SEE INSTRUMENT SCHEDULE FOR COMPLETE TAG NUMBER.

AIT 0044A H2S; AIT 0044B CH4; AE 0044A; AE 0044B

120 VAC

BOILER AREA GAS ALARM PANEL: PB 0044 SILENCE

8-DIG-0044-PNL

PI 2412

120 VAC

FIT 2412; FE 2412

I-401 4"-DGS BIOGAS TREATMENT — TD — 8-DIG-071-VLV — DGS FUEL TRAIN

4"-NG DISTRIBUTION SYSTEM — 8-DIG-070-VLV — NG FUEL TRAIN

I-602 B 4"-HWR DEAMMONIFICATION SYSTEM

I-342 D 6"-HWR DIGESTER No.1 HEX

I-342 E 6"-HWR DIGESTER No.3 HEX

I-342 F 6"-HWR DIGESTER No.2 HEX

PIT 2412; PE 2412; PRESSURE REDUCING VALVE — 8-DIG-072-PRV

6"-HWR; 8"-HWR; 6"-HWR

PI 2412A; PI 2412B; PRESSURE REDUCING VALVE — 8-DIG-2512-PRV

3/4" HWR

2"-W POTABLE WATER

120 VAC

FIT 2422; FE 2422

I-401 4"-DGS BIOGAS TREATMENT — TD — 8-DIG-126-VLV — DGS FUEL TRAIN

4"-NG DISTRIBUTION SYSTEM — 8-DIG-127-VLV — NG FUEL TRAIN

2"-W POTABLE WATER

120 VAC

HOT WATER BOILER No.1 CONTROL PANEL

OIT

YI 2412A PERMISSIVE ENABLED; PB 2412B STOP; HS 2412 OFF/ON

YI 2412 ON; YA 2412 FLAME FAIL; LI 2412

8-DIG-2412-PNL (TYP. OF 2)

E-STOP

6"-HWR

BOILER EXHAUST THRU ROOF

8-DIG-074-DIG

16"-EXH

8-DIG-073-DIG

M BURNER

HOT WATER BOILER No.1 8-DIG-2412-HWB

LIT 2412; LSLL 2412; LI 2412

D

SWH-9; SWH-2

HOT WATER BOILER No.2 (SIMILAR TO HOT WATER BOILER No.1) 8-DIG-2422-HWB

FI — BYPASS CHEMICAL FEEDER — 3/4" HWS

3/4" DRAIN

BOILER EXHAUST THRU ROOF

PI 2401A; TI 2401

PIT 2422; PE 2422

PSHH 2411; TIT 2411; TE 2411

8"-HWS

SWH-9; SWH-8

PI 2411

ZIT 2434; HS 2434A L/R; HS 2434B OSC; 480 VAC

MIXING VALVE M — 8-DIG-2411-MOV

480 VAC

HWS PUMP No. 1

YA 2613B FAIL; YI 2613B RUN; SI 2613; SC 2613

8-DIG-2613-VFD (TYP FOR 3)

THRU ROOF

1"-HWS; 6"-HWS; 2"-HWS

BLADDER 3/4"-ALP

EXPANSION TANK 8-DIG-2811-TNK

LS 2811; LI 2811; TI 2611; PI 2611

8-DIG-030-VLV

PDIT 2411

YA 2613A FAIL; YI 2613A RUN; HS 2613 LOR

8-DIG-2613-PNL (TYP FOR 3)

PI 2613; PSH 2613

8-DIG-032-VLV; 8-DIG-033-VLV

4"-HWS

8-DIG-031-VLV

HWS PUMP No.1 8-DIG-2613-PMP

PI 2623; PSH 2623

8-DIG-035-VLV; 8-DIG-036-VLV

HWS PUMP No.2 8-DIG-2623-PMP

PI 2633; PSH 2633

8-DIG-038-VLV; 8-DIG-039-VLV

HWS PUMP No.3 8-DIG-2633-PMP

8-DIG-034-VLV; 8-DIG-037-VLV

SWH-8

3/4"-HWS

120 VAC

TIT 2611; PIT 2611; FIT 2611; TE 2611; PE 2611; FE 2611

8"-HWS — M — 6"

I-342 A TO DIGESTER HEAT EXCHANGER

I-342 B TO DIGESTER HEAT EXCHANGER

I-342 C TO DIGESTER HEAT EXCHANGER

I-602 A TO DEAMMONIFICATION SYSTEM

KEY NOTES

1. FIELD SIGNAL INDICATOR SHALL BE INSTALLED FOR INSTRUMENTS IN INACCESSIBLE LOCATIONS.
2. E-STOP AS PER NFPA 85.

THE DRAWINGS IN THIS SET ARE RECORD DRAWINGS. THEY ARE CONSTRUCTION CONTRACT DRAWINGS WHICH HAVE BEEN REVISED BASED ON AVAILABLE FIELD INFORMATION RECORDED BY OTHERS DURING CONSTRUCTION OF THIS CONTRACT. THERE HAS BEEN NO VERIFICATION OF DIMENSIONS SHOWN ON THE CONSTRUCTION DRAWINGS OR THE ACCURACY/COMPLETENESS OF THE FIELD INFORMATION RECEIVED.

SIGNATURE — DATE 2/7/2023

AS-BUILT REPLACEMENT SHEET

PROFESSIONAL CERTIFICATION

THIS DRAWING WAS ORIGINALLY APPROVED FOR CONSTRUCTION AND SEALED BY BILLY J. FOX, A REGISTERED PROFESSIONAL ENGINEER IN THE STATE OF MARYLAND, NO. 46603.

NOTICE TO CONTRACTORS

- PROJECT ELEVATIONS ARE BASED ON NAVD88 AND HOWARD COUNTY'S BENCHMARK SYSTEM
- PREVIOUS PROJECTS USED OTHER DATUMS
- APPLY THE FOLLOWING CONVERSIONS WHEN USING PREVIOUS CONTRACT DRAWINGS:
  - ADDITION NO. 6: SUBTRACT 0.80 FT
  - PRIOR ADDITIONS: SUBTRACT 1.04 FT

DEPARTMENT OF PUBLIC WORKS HOWARD COUNTY, MARYLAND

CHIEF, BUREAU OF UTILITIES — DATE

DES: LH

DRN: LH

CHK: BF

DATE: 12/2016

DATE	REV	DESCRIPTION
07/2019		RECORD DRAWING

INSTRUMENTATION & CONTROLS

DIGESTER HEATING SYSTEM UP No. 08.04.05

LITTLE PATUXENT WATER RECLAMATION PLANT
8TH ADDITION
BIOSOLIDS PROCESSING FACILITIES - PHASE I

CAPITAL PROJECT S-6295
CONTRACT NO. 24-4935

ELECTION DISTRICT NO. 6
HOWARD COUNTY, MARYLAND

SCALE AS SHOWN

SHEET 434 OF 463

I-341

BIM 360://10054364 – Little Patuxent WRP 8th Addition/264591_Y_Ph1_V18.rvt
1/12/2022 10:08:12 AM

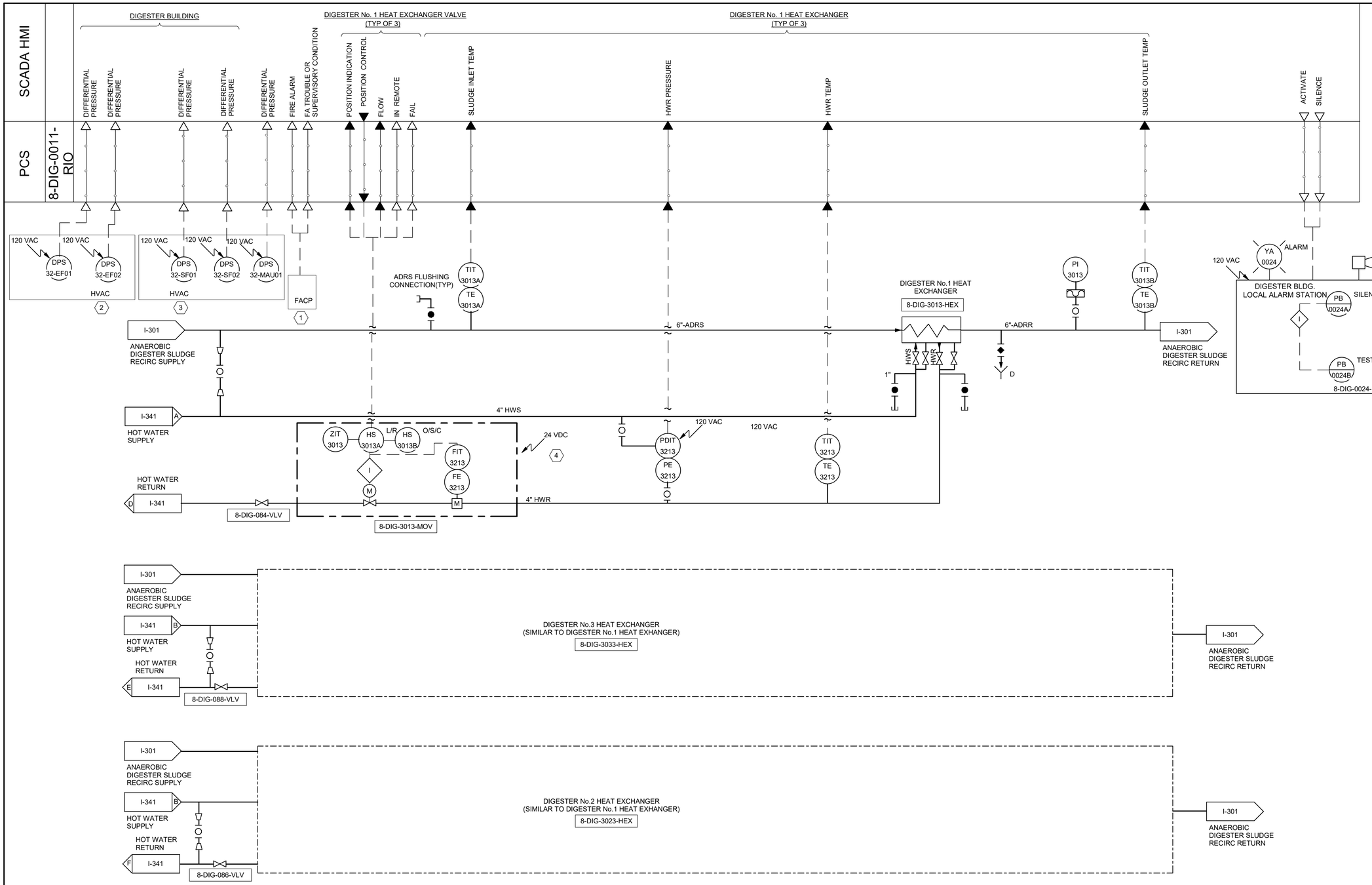

GENERAL NOTES

1. SEE SHEET I-001 FOR PROCESS CONTROL SYSTEM ABBREVIATIONS,SYMBOLS AND NOTES.
2. SEE SHEET I-904 AND I-905 FOR SCADA NETWORK ARCHITECTURE DIAGRAM.
3. REFERENCE SPECIFICATION 40 90 05 FOR CONTROL DESCRIPTIONS.
4. REFERENCE SPECIFICATION 40 91 10 FOR INSTRUMENT SCHEDULE.
5. REFERENCE SPECIFICATION 40 94 43 FOR PLC I/O SCHEDULE.
6. INSTRUMENTATION AND CONTROL EQUIPMENT SHALL BE SUITABLE FOR INSTALLATION IN HAZARDOUS AS DEFINED ON SHEET 00G-06, HAZARDOUS AREA PLAN.
7. MAJOR FUNCTIONS FOR PACKAGED EQUIPMENT VENDOR SUPPLIED CONTROL PANELS ARE SHOWN. ACTUAL EQUIPMENT VENDOR PANELS MAY OFFER ADDITIONAL FUNCTIONALITY.
8. SEE INSTRUMENT SCHEDULE FOR COMPLETE TAG NUMBER.

KEY NOTES

1. CONTRACTOR TO WIRE FIRE ALARM SIGNALS TO PCS FROM THE DIGESTER BLDG FACP INSTALLED BY OTHERS.
2. CONTRACTOR TO WIRE HVAC SIGNALS TO PCS FROM THE DIGESTER BLDG INSTALLED BY OTHERS. REFER TO H-321 FOR FURTHER INFORMATION.
3. CONTRACTOR TO WIRE HVAC SIGNALS TO PCS FROM THE DIGESTER BLDG INSTALLED BY OTHERS. REFER TO H-322 FOR FURTHER INFORMATION.
4. 24VDC POWER SUPPLIES IN 8-DIG-0011-RIO CABINET SHALL BE SIZED TO ACCOUNT FOR THE LOAD OF HEAT EXCHANGER HOT WATER RETURN VALVES.

THE DRAWINGS IN THIS SET ARE RECORD DRAWINGS. THEY ARE CONSTRUCTION CONTRACT DRAWINGS WHICH HAVE BEEN REVISED BASED ON AVAILABLE FIELD INFORMATION RECORDED BY OTHERS DURING CONSTRUCTION OF THIS CONTRACT. THERE HAS BEEN NO VERIFICATION OF DIMENSIONS SHOWN ON THE CONSTRUCTION DRAWINGS OR THE ACCURACY/COMPLETENESS OF THE FIELD INFORMATION RECEIVED.

SIGNATURE — DATE 2/7/2023

AS-BUILT REPLACEMENT SHEET

PROFESSIONAL CERTIFICATION

THIS DRAWING WAS ORIGINALLY APPROVED FOR CONSTRUCTION AND SEALED BY BILLY J. FOX, A REGISTERED PROFESSIONAL ENGINEER IN THE STATE OF MARYLAND, NO. 46603.

NOTICE TO CONTRACTORS

- PROJECT ELEVATIONS ARE BASED ON NAVD88 AND HOWARD COUNTY'S BENCHMARK SYSTEM
- PREVIOUS PROJECTS USED OTHER DATUMS
- APPLY THE FOLLOWING CONVERSIONS WHEN USING PREVIOUS CONTRACT DRAWINGS:
  - ADDITION NO. 6: SUBTRACT 0.80 FT
  - PRIOR ADDITIONS: SUBTRACT 1.04 FT

DEPARTMENT OF PUBLIC WORKS
HOWARD COUNTY, MARYLAND

CHIEF, BUREAU OF UTILITIES — DATE

DES: LH
DRN: LH
CHK: BF
DATE: 12/2016

DATE	REV	DESCRIPTION
07/2019		RECORD DRAWING

INSTRUMENTATION & CONTROLS

DIGESTER HEAT EXCHANGER UP No. 08.04.05

LITTLE PATUXENT WATER RECLAMATION PLANT
8TH ADDITION
BIOSOLIDS PROCESSING FACILITIES - PHASE I

CAPITAL PROJECT S-6295
CONTRACT NO. 24-4935

ELECTION DISTRICT NO. 6
HOWARD COUNTY, MARYLAND

SCALE AS SHOWN

SHEET 435 OF 463

I-342

BIM 360://10054364 – Little Patuxent WRP 8th Addition/264591_Y_Ph1_V18.rvt
1/12/2022 10:08:14 AM

SCADA HMI

PCS

8-PST-0011-RIO

8-GBT-0012-PNL

8-PST-0011-RIO

LOCAL ALARM STATION

ACTIVATE

SILENCE

PRIMARY SOLIDS SCREENING

PRESSURE

PRIMARY SOLIDS SCREENING (TYP. OF 2)

RUN COMMAND

IN REMOTE

RUN STATUS

FAIL

HIGH TORQUE

HIGH MOISTURE

INLET PRESSURE

DISCHARGE PRESSURE

UPS

UPS FAULT

ON UPS POWER

HOPPER

LEVEL

UPS

2

480 VAC

PRIMARY SOLIDS SCREEN LOCAL CONTROL PANEL

PLC

OIT

YA 1012 FAIL

YI 1012A HIGH PRESS

HS 1012B F/O/R

HS 1012A L/O/R

PB 1012A E-STOP

YI 1012B FWD

PB 1012B RESET

YI 1012C REV

YI 1012D CONTROL POWER ON

I

1

8-PST-1012A-PNL (TYP. OF 2)

120 VAC

SOLIDS SCREENING AREA LOCAL ALARM STATION

PB 0012A SILENCE

I

YA 0012 ALARM

PB 0012B TEST

8-PST-0012-PNL

PNEUMATIC PANEL

8-PST-1412-PNL

SV

8-PST-1412-SV

PI 1412

PS 1412

MULTI STAGE MICROFILTER

PRESSURE REGULATOR

FILTER/SEPARATOR WITH AUTO DRAIN

CA

D

(TYP. OF 2)

120 VAC

M

COMPRESSOR NO. 1

8-PST-1412-AIR

120 VAC

M

COMPRESSOR NO. 2

8-PST-1422-AIR

TO PNEUMATIC CP NO. 2

CA

S

ELECTRO-PNEUMATIC REGULATOR

120VAC

FIT 1011

FE 1011

8-PST-007-VLV

I-XXX

6"-PS

3"-PS

M

3"-PS

FROM PRIMARY CLARIFIERS

8-PST-008-VLV

480 VAC

GRINDER CONTROL PANEL

HS XXXX ON/OFF

YI XXXX RUN

YA XXXX FAIL

8-PST-1011-PNL

SLUDGE SCREENING GRINDER 8-PST-1011-GRN

8-PST-006-VLV

8-PST-001-VLV

PIT 1011

PIT 1012A

PIT 1012B

OSH 1012

MSH 1012

SLUDGE DISCHARGE MOISTURE

M

CA

PRIMARY SOLIDS SCREEN NO. 1

8-PST-1012-SCRN

6"-PS

4"-PS

8-PST-002-VLV

8-PST-003-VLV

4"-PS

6"-PS

14" SCREENING

I-201

A

TO GRAVITY THICKENER No.1

I-202

A

TO GRAVITY THICKENER No.2

6"-PS

CA

LIT 1211

LE 1211

8-PST-1211-TNK

HOPPER TO DUMPSTER

PIT 1022A

PIT 1022B

MSH 1022

SLUDGE DISCHARGE MOISTURE

CA

COMPRESSED AIR FROM PNEUMATIC CP NO. 2

M

PRIMARY SOLIDS SCREEN NO. 2

8-PST-1022-SCRN

6"-PS

4"-PS

8-PST-004-VLV

4"-PS

8-PST-005-VLV

6"-PS

14" SCREENING

6"-PS

GENERAL NOTES

1. SEE SHEET I-001 FOR PROCESS CONTROL SYSTEM ABBREVIATIONS,SYMBOLS AND NOTES.
2. SEE SHEET I-903 FOR SCADA NETWORK ARCHITECTURE DIAGRAM.
3. REFERENCE SPECIFICATION 40 90 05 FOR CONTROL DESCRIPTIONS.
4. REFERENCE SPECIFICATION 40 91 10 FOR INSTRUMENT SCHEDULE.
5. REFERENCE SPECIFICATION 40 94 43 FOR PLC I/O SCHEDULE.
6. INSTRUMENTATION AND CONTROL EQUIPMENT SHALL BE SUITABLE FOR INSTALLATION IN HAZARDOUS AS DEFINED ON SHEET 00G-06, HAZARDOUS AREA PLAN.
7. MAJOR FUNCTIONS FOR PACKAGED EQUIPMENT VENDOR SUPPLIED CONTROL PANELS ARE SHOWN. ACTUAL EQUIPMENT VENDOR PANELS MAY OFFER ADDITIONAL FUNCTIONALITY.
8. SEE INSTRUMENT SCHEDULE FOR COMPLETE TAG NUMBER.

KEY NOTES

1 INCLUDES PLC AND OIT.

2 UPS IS LOCATED WITHIN RIO PANEL.

THE DRAWINGS IN THIS SET ARE RECORD DRAWINGS. THEY ARE CONSTRUCTION CONTRACT DRAWINGS WHICH HAVE BEEN REVISED BASED ON AVAILABLE FIELD INFORMATION RECORDED BY OTHERS DURING CONSTRUCTION OF THIS CONTRACT. THERE HAS BEEN NO VERIFICATION OF DIMENSIONS SHOWN ON THE CONSTRUCTION DRAWINGS OR THE ACCURACY/COMPLETENESS OF THE FIELD INFORMATION RECEIVED.

SIGNATURE

2/7/2023

DATE

AS-BUILT REPLACEMENT SHEET

PROFESSIONAL CERTIFICATION

THIS DRAWING WAS ORIGINALLY APPROVED FOR CONSTRUCTION AND SEALED BY BILLY J. FOX, A REGISTERED PROFESSIONAL ENGINEER IN THE STATE OF MARYLAND, NO. 46603.

NOTICE TO CONTRACTORS

- PROJECT ELEVATIONS ARE BASED ON NAVD88 AND HOWARD COUNTY'S BENCHMARK SYSTEM
- PREVIOUS PROJECTS USED OTHER DATUMS
- APPLY THE FOLLOWING CONVERSIONS WHEN USING PREVIOUS CONTRACT DRAWINGS:
  - ADDITION NO. 6: SUBTRACT 0.80 FT
  - PRIOR ADDITIONS: SUBTRACT 1.04 FT

DEPARTMENT OF PUBLIC WORKS
HOWARD COUNTY, MARYLAND

CHIEF, BUREAU OF UTILITIES DATE

DES: LH

DRN: LH

CHK: BF

DATE: 12/2016

DATE	REV	DESCRIPTION
07/2019		RECORD DRAWING

INSTRUMENTATION & CONTROLS

PRIMARY SOLIDS SCREENING SYSTEM
UP No. 8.02.01

LITTLE PATUXENT WATER RECLAMATION PLANT
8TH ADDITION
BIOSOLIDS PROCESSING FACILITIES - PHASE I

CAPITAL PROJECT S-6295
CONTRACT NO. 24-4935

ELECTION DISTRICT NO. 6
HOWARD COUNTY, MARYLAND

SCALE AS SHOWN

SHEET 436 OF 463

I-350

BIM 360://10054364 – Little Patuxent WRP 8th Addition/264591_Y_Ph1_V18.rvt
1/12/2022 10:08:16 AM

SCADA HMI

PCS

8-DIG-0014-PNL

8-SPG-0011-RIO

CELL 1 MIXING PUMP (TYP. OF 2)

RUN COMMAND
IN REMOTE
RUN STATUS
FAIL
SPEED INDICATION
SPEED CONTROL
3
VOLTAGE VA
VOLTAGE VB
VOLTAGE VC
AMPS PH-A
AMPS PH-B
AMPS PH-C
POWER FACTOR (3-PH)
KILOWATTS (3-PH)
MEGAWATT HOURS (3-PH)

DIGESTED SOLIDS STORAGE TANK No.2

LEVEL

DIGESTED SOLIDS STORAGE TANK No.1

LEVEL

CENTRIFUGE FEED PUMP (TYP. OF 3)

RUN COMMAND
IN REMOTE
RUN STATUS
FAIL
SPEED INDICATION
SPEED CONTROL

DISCHARGE FLOW

480 VAC

CELL 2 MIXER

YA 1814 FAIL
YI 1814 RUN
HS 1814 ON/OFF
I
4
8-DSS-1814-PNL
1 (TYP. OF 4)

480 VAC

CELL 1 MIXING PUMP

YA 2012B FAIL
YI 2012B RUN
SI 2012
SC 2012
I
8-DSS-2012-VFD (TYP. OF 2)

480 VAC

CENTRIFUGE FEED PUMP

YA 2213B FAIL
YI 2213B RUN
SC 2213
SI 2213
I
8-DSS-2213-VFD (TYP. OF 3)

I-303 B

I-501 A
FROM CENTRIFUGES
8"-SLOP

I-801 A
GRAVITY FLOW FROM PHOSPHORUS PRECIPITATION SYSTEM
6"-ADS

8-DSS-001-VLV
8-DSS-010-VLV
8-DSS-002-VLV
8-DSS-011-VLV

6"-ADS

8-DSS-036-VLV

4"-ADS

6"-ADS

YA 2213A FAIL
YI 2213A RUN
HS 2213 LOR
8-DSS-2213-PNL (TYP. OF 3)

X"-FA
DIGESTED SOLIDS STORAGE TANKS
8-DSS-1812-TNK

I-7XX
TO ODOR CONTROL

8-DSS-037-VLV

8-DSS-1822-TNK
CELL 2

TSH 1814 TEMP
MSH 1814 LEAK
M
8-DSS-1814-MXR

TSH 1824 TEMP
MSH 1824 LEAK
M
8-DSS-1824-MXR

TSH 1834 TEMP
MSH 1834 LEAK
M
8-DSS-1834-MXR

TSH 1844 TEMP
MSH 1844 LEAK
M
8-DSS-1844-MXR

LIT 1811

CELL 1

LIT 2011

8-DSS-009-VLV
8-DSS-038-VLV

6"-ADS
8-DSS-014-VLV

NOZZLES(TYP.)

8"-DSMS

YA 2012A FAIL
YI 2012A RUN
HS 2012 LOR
8-DSS-2012-PNL (TYP. OF 2)

PI XXXX
PSL 2012
M
8-DSS-003-VLV
2"-DR

PI 2012
PSH 2012
8-DSS-004-VLV
2"-DR

6"-DSMR
8-DSS-005-VLV

MIXING PUMP No. 1
8-DSS-2012-PMP
20 HP

PI XXXX
PSL 2022
M
8-DSS-006-VLV
2"-DR

PI 2022
PSH 2022
8-DSS-007-VLV
2"-DR

6"-DSMR
8-DSS-008-VLV

MIXING PUMP No. 2
8-DSS-2022-PMP
20 HP

8-DSS-040-VLV

8-DSS-012-VLV
6"-ADS
8-DSS-013-VLV
6"-ADS
8-DSS-018-VLV

6"-ADS
8-DSS-022-VLV

I-250
FROM THICKENED SOLIDS STORAGE

120 VAC
TSH 2213
PI 2213
PSH 2213
M
CENTRIFUGE FEED PUMP No.1
8-DSS-2213-PMP
2"-DR

8-DSS-015-VLV
6" 4" M 6"-CF
8-DSS-016-VLV
2"-DR

120VAC
FIT 2213
FE 2213

8-DSS-017-VLV

120 VAC
TSH 2223
PI 2223
PSH 2223
M
CENTRIFUGE FEED PUMP No.2
8-DSS-2223-PMP
2"-DR

8-DSS-019-VLV
6" 4" M 6"-CF
8-DSS-020-VLV
2"-DR

120VAC
FIT 2223
FE 2223

8-DSS-021-VLV

120 VAC
TSH 2233
PI 2233
PSH 2233
M
CENTRIFUGE FEED PUMP No.3
8-DSS-2233-PMP
2"-DR

8-DSS-023-VLV
6" 4" M 6"-CF
8-DSS-024-VLV
2"-DR

120VAC
FIT 2233
FE 2233

8-DSS-025-VLV
8-DSS-033-VLV
8-DSS-034-VLV
8-DSS-035-VLV
8-DSS-029-VLV

6"-ADS

8-DSS-026-VLV
8-DSS-027-VLV
8-DSS-028-VLV
8-DSS-030-VLV
8-DSS-031-VLV
8-DSS-032-VLV

120VAC
FIT
FE
4"-CF M 6"-CF
8-148-PV
8-147-PV
I-501 A
TO CENTRIFUGE NO.1

120VAC
FIT
FE
4"-CF M 6"-CF
8-149-PV
8-146-PV
I-501 B
TO CENTRIFUGE NO.2

120VAC
FIT
FE
4"-CF M 6"-CF
8-150-PV
8-145-PV
I-501 C
TO CENTRIFUDE NO.3

GENERAL NOTES

1. SEE SHEET I-001 FOR PROCESS CONTROL SYSTEM ABBREVIATIONS,SYMBOLS AND NOTES.
2. SEE SHEET I-904 AND I-905 FOR SCADA NETWORK ARCHITECTURE DIAGRAM.
3. REFERENCE SPECIFICATION 40 90 05 FOR CONTROL DESCRIPTIONS.
4. REFERENCE SPECIFICATION 40 91 10 FOR INSTRUMENT SCHEDULE.
5. REFERENCE SPECIFICATION 40 94 43 FOR PLC I/O SCHEDULE.
6. INSTRUMENTATION AND CONTROL EQUIPMENT SHALL BE SUITABLE FOR INSTALLATION IN HAZARDOUS AS DEFINED ON SHEET 00G-06, HAZARDOUS AREA PLAN.
7. MAJOR FUNCTIONS FOR PACKAGED EQUIPMENT VENDOR SUPPLIED CONTROL PANELS ARE SHOWN. ACTUAL EQUIPMENT VENDOR PANELS MAY OFFER ADDITIONAL FUNCTIONALITY.
8. SEE INSTRUMENT SCHEDULE FOR COMPLETE TAG NUMBER.

KEY NOTES

1 SUBMERSIBLE MIXERS ARE CONTROLLED MANUALLY AND INDEPENDENT OF THE PCS.

3 POWER MONITORING REQUIRED FOR MOTORS GREATER THAN 20 HP.

4 VFD LOCATED INSIDE MCC-31.

THE DRAWINGS IN THIS SET ARE RECORD DRAWINGS. THEY ARE CONSTRUCTION CONTRACT DRAWINGS WHICH HAVE BEEN REVISED BASED ON AVAILABLE FIELD INFORMATION RECORDED BY OTHERS DURING CONSTRUCTION OF THIS CONTRACT. THERE HAS BEEN NO VERIFICATION OF DIMENSIONS SHOWN ON THE CONSTRUCTION DRAWINGS OR THE ACCURACY/COMPLETENESS OF THE FIELD INFORMATION RECEIVED.

SIGNATURE — DATE 2/7/2020

HDR

AS-BUILT REPLACEMENT SHEET

PROFESSIONAL CERTIFICATION

THIS DRAWING WAS ORIGINALLY APPROVED FOR CONSTRUCTION AND SEALED BY BILLY J. FOX, A REGISTERED PROFESSIONAL ENGINEER IN THE STATE OF MARYLAND, NO. 46603.

NOTICE TO CONTRACTORS

- PROJECT ELEVATIONS ARE BASED ON NAVD88 AND HOWARD COUNTY'S BENCHMARK SYSTEM
- PREVIOUS PROJECTS USED OTHER DATUMS
- APPLY THE FOLLOWING CONVERSIONS WHEN USING PREVIOUS CONTRACT DRAWINGS:
  - ADDITION NO. 6: SUBTRACT 0.80 FT
  - PRIOR ADDITIONS: SUBTRACT 1.04 FT

DEPARTMENT OF PUBLIC WORKS
HOWARD COUNTY, MARYLAND

CHIEF, BUREAU OF UTILITIES — DATE

DES: LH
DRN: LH
CHK: BF
DATE: 12/2016

DATE	REV	DESCRIPTION
07/2019		RECORD DRAWING

INSTRUMENTATION & CONTROLS

DIGESTED SOLIDS STORAGE UP No. 8.04.04

LITTLE PATUXENT WATER RECLAMATION PLANT
8TH ADDITION
BIOSOLIDS PROCESSING FACILITIES - PHASE I

CAPITAL PROJECT S-6295
CONTRACT NO. 24-4935

ELECTION DISTRICT NO. 6
HOWARD COUNTY, MARYLAND

SCALE AS SHOWN

SHEET 437 OF 463

I-375

BIM 360://10054364 – Little Patuxent WRP 8th Addition/284591_Y_Ph1_V18.rvt
1/12/2022 10:08:20 AM

SCADA HMI

PCS 8-DIG-0011-RIO

DIGESTER GAS DISCHARGE — FLOW, FLOW

DIGESTER GAS — FLOW

DIGESTER GAS TO BIOGAS TREATMENT — PRESSURE

DIGESTER GAS TO FLARE — FLOW

BIOGAS TREATMENT DISCHARGE — PRESSURE

DIGESTER GAS TO BELT DRYERS — FLOW

8-DIG-121-VLV
8-DIG-122-VLV
GAS PRESSURE/VACUUM RELIEF VALVE 8-DIG-001-PVRV
8-DIG-1016-ARR
8-DIG-1026-ARR
8-DIG-1015-PRM
30" PRESSURE RELIEF MANHOLE COVER
12" PRESSURE RELIEF MANHOLE COVER
8-DIG-1025-PRM
8-DIG-120-VLV
DIGESTER No.1
8"-DGR
TD FE 1013 FIT 1013
FIT-1013
120VAC
8-DGT-019-VLV
8-DGT-005-VLV
8-DGT-004-VLV
I-402
8"-DGR
10"-DGR
DIGESTER NO. 3 GAS STORAGE SYSTEM
8-DIG-125-VLV
8-DIG-124-VLV
GAS PRESSURE/ VACUUM RELIEF VALVE 8-DIG-002-PVRV
8-DIG-1036-ARR
8-DIG-1035-PVRV
8-DIG-123-VLV
8-DIG-003-VLV
2"-DR
CONDENSATE AND SEDIMENT
8-DGT-1211-TRP
MANUAL DRIP TRAP
8-DGT-1212-TRP
1"-DR
AUTOMATIC DRIP TRAP
8-DGT-1222-TRP
DR
8-DIG-1046-ARR
8-DIG-020-VLV
8-DIG-1045-PRM
TD FE 1023 FIT 1023
FIT-1023
120VAC
8"-DGR
DIGESTER No.2
10"-DGR
120VAC
FIT 1211
FE 1211
8-DGT-006-VLV
8-DGT-007-VLV
TD
FIT-1211
10"-DGR
8-DGT-008-VLV
PIT 1012
PE 1012
10"-DGR
BIOGAS TREATMENT I-427
I-427 A
TO DIGESTER GAS TREATMENT SYSTEM
8-DGT-001-VLV
I-427 B
FROM DIGESTER GAS TREATMENT SYSTEM
PIT 1022
PE 1022
6"
120VAC
FIT 1411
FE 1411
8-DGT-016-VLV
8-DGT-018-VLV
TD
FIT-1411
10"-DGR
8-DGT-017-VLV
I-450
TO DIGESTER GAS FLARE
4"-DGS
I-341
TO DIGESTER HEATING SYSTEM
4"-DGS
I-341
TO DIGESTER HEATING SYSTEM
6"-DGS
1"-DGS
I-450
TO DIGESTER GAS FLARE
(PHASE II)
120VAC
FIT 1611
FE 1611
TD
FIT-1611
6"-DGS
6"-DGS
6"-DGS
I-521
TO BELT DRYER SYSTEM NO. 1 (PHASE II)
6"-DGS
I-522
TO BELT DRYER SYSTEM NO. 2 (PHASE II)

GENERAL NOTES

1. SEE SHEET I-001 FOR PROCESS CONTROL SYSTEM ABBREVIATIONS,SYMBOLS AND NOTES.
2. SEE SHEET I-904 AND I-905 FOR SCADA NETWORK ARCHITECTURE DIAGRAM.
3. REFERENCE SPECIFICATION 40 90 05 FOR CONTROL DESCRIPTIONS.
4. REFERENCE SPECIFICATION 40 91 10 FOR INSTRUMENT SCHEDULE.
5. REFERENCE SPECIFICATION 40 94 43 FOR PLC I/O SCHEDULE.
6. INSTRUMENTATION AND CONTROL EQUIPMENT SHALL BE SUITABLE FOR INSTALLATION IN HAZARDOUS AS DEFINED ON SHEET 00G-06, HAZARDOUS AREA PLAN.
7. MAJOR FUNCTIONS FOR PACKAGED EQUIPMENT VENDOR SUPPLIED CONTROL PANELS ARE SHOWN. ACTUAL EQUIPMENT VENDOR PANELS MAY OFFER ADDITIONAL FUNCTIONALITY.
8. SEE INSTRUMENT SCHEDULE FOR COMPLETE TAG NUMBER.

THE DRAWINGS IN THIS SET ARE RECORD DRAWINGS. THEY ARE CONSTRUCTION CONTRACT DRAWINGS WHICH HAVE BEEN REVISED BASED ON AVAILABLE FIELD INFORMATION RECORDED BY OTHERS DURING CONSTRUCTION OF THIS CONTRACT. THERE HAS BEEN NO VERIFICATION OF DIMENSIONS SHOWN ON THE CONSTRUCTION DRAWINGS OR THE ACCURACY/COMPLETENESS OF THE FIELD INFORMATION RECEIVED.

SIGNATURE 2/7/2023 DATE

HDR

AS-BUILT REPLACEMENT SHEET

PROFESSIONAL CERTIFICATION

THIS DRAWING WAS ORIGINALLY APPROVED FOR CONSTRUCTION AND SEALED BY BILLY J. FOX, A REGISTERED PROFESSIONAL ENGINEER IN THE STATE OF MARYLAND, NO. 46603.

NOTICE TO CONTRACTORS

- PROJECT ELEVATIONS ARE BASED ON NAVD88 AND HOWARD COUNTY'S BENCHMARK SYSTEM
- PREVIOUS PROJECTS USED OTHER DATUMS
- APPLY THE FOLLOWING CONVERSIONS WHEN USING PREVIOUS CONTRACT DRAWINGS:
  - ADDITION NO. 6: SUBTRACT 0.80 FT
  - PRIOR ADDITIONS: SUBTRACT 1.04 FT

DEPARTMENT OF PUBLIC WORKS
HOWARD COUNTY, MARYLAND

CHIEF, BUREAU OF UTILITIES DATE

DES: LH
DRN: LH
CHK: BF
DATE: 12/2016

DATE	REV	DESCRIPTION
07/2019		RECORD DRAWING

INSTRUMENTATION & CONTROLS

DIGESTER GAS TREATMENT SYSTEM UP No. 08.05.01

LITTLE PATUXENT WATER RECLAMATION PLANT
8TH ADDITION
BIOSOLIDS PROCESSING FACILITIES - PHASE I

CAPITAL PROJECT S-6295
CONTRACT NO. 24-4935

ELECTION DISTRICT NO. 6
HOWARD COUNTY, MARYLAND

SCALE AS SHOWN

SHEET 438 OF 463

I-401

BIM 360://10054364 – Little Patuxent WRP 8th Addition/264591_Y_Ph1_V18.rvt
1/12/2022 10:08:23 AM

SCADA HMI

PLC

8-DIG-0014-PNL

UPS

UPS FAULT

ON UPS POWER

SLUDGE LEVEL

DIGESTER GAS FLOW BETWEEN DIGESTER COVERS

DIGESTER GAS OUTLET FLOW

DIGESTER GAS GENERATION RATE

DIGESTER GAS TEMP

INT MEBRANE POSITION

DIGESTER GAS PRESSURE

DIGESTER GAS VOLUME

MGHP COMMON ALARM

DIGESTER GAS PRESSURE HIGH

DIGESTER GAS PRESSURE LOW

DIGESTER GAS STORAGE EMPTY

DIGESTER GAS STORAGE FULL

DIGESTER GAS HIGH LEVEL

DIGESTER GAS LOW LEVEL

DIGESTER GAS DIFFERENTIAL PRESSURE

8-DIG-0011-RIO

DIGESTER GAS

FLOW

GENERAL NOTES

1. SEE SHEET I-001 FOR PROCESS CONTROL SYSTEM ABBREVIATIONS,SYMBOLS AND NOTES.
2. SEE SHEET I-904 AND I-905 FOR SCADA NETWORK ARCHITECTURE DIAGRAM.
3. REFERENCE SPECIFICATION 40 90 05 FOR CONTROL DESCRIPTIONS.
4. REFERENCE SPECIFICATION 40 91 10 FOR INSTRUMENT SCHEDULE.
5. REFERENCE SPECIFICATION 40 94 43 FOR PLC I/O SCHEDULE.
6. INSTRUMENTATION AND CONTROL EQUIPMENT SHALL BE SUITABLE FOR INSTALLATION IN HAZARDOUS AS DEFINED ON SHEET 00G-06, HAZARDOUS AREA PLAN.
7. MAJOR FUNCTIONS FOR PACKAGED EQUIPMENT VENDOR SUPPLIED CONTROL PANELS ARE SHOWN. ACTUAL EQUIPMENT VENDOR PANELS MAY OFFER ADDITIONAL FUNCTIONALITY.
8. SEE INSTRUMENT SCHEDULE FOR COMPLETE TAG NUMBER.

KEY NOTES

1. LOCAL CONTROL PANEL WITH PLC AND HMI.
2. LASER TYPE LEVEL TRANSMITTER.
3. INSTALL I.S. BARRIER PANEL ADJACENT TO GAS HOLDER PANEL.
4. UPS IS LOCATED WITHIN RIO PANEL.

480VAC

UPS

DIGESTER 3 GAS STORAGE PLC CONTROL PANEL
8-DIG-3211-PNL

FAN 1: HS 3212 LOR; PB 3212 START; PB 3212 STOP

FAN 2: HS 3222 LOR; PB 3222 START; PB 3222 STOP

PI 3211A AIR; PI 3211B GAS; DPI 3211 DIFF GAS

LI 3211 SLUDGE GAS LEVEL; QI 3211 GAS; AI 3211 EX GAS LEVEL

YA 3211 ALARM

PURGE VALVE: HS 3211 HOR; PB 3211A OPEN; PB 3211B CLOSE

PLC

YL 3211 POWER ON

8-DIG-3211-PNL

120 VAC

I.S. BARRIER | I.S. BARRIER | I.S. BARRIER | I.S. BARRIER

3 8-DIG-3201-ISB

120VAC AIT 3211 LEL; AE 3211

FLAME CHECK 8-DIG-002-FCH

1.5"-A

FLEX HOSE

120VAC LIT 3212; LIT 3222; 120VAC

FLAME CHECK 8-DIG-003-FCH

1.5"-A

FLEX HOSE

PIT 3211A AIR

2 2

AIR CHAMBER

GAS STORAGE

PDI 3212

M

FAN No.1
14-3212-FAN

INLET AIR FILTER

8"-ALP

PI 3212

8-DIG-113-VLV

8-DIG-115-VLV

PDI 3222

M

FAN No.2
14-3222-FAN

INLET AIR FILTER

8"-ALP

PI 3222

8-DIG-114-VLV

8-DIG-116-VLV

AIR PRESSURE REGULATOR VALVE

8-DIG-117-VLV

PRESSURE RELIEF VALVE

8" ALP

8-DIG-118-PRV

PI 3211

8-DIG-001-FCH

FLAME CHECK

FLAME ARRESTER
8-DIG-3213-ARR

8"-ALP

D

8-DIG-1055-PRM

12" PRESSURE RELIEF MANHOLE COVER

12"-DGR

8-DIG-1433-CVR

DIGESTER NO. 3

FLEX HOSE

PDT 3211

8-DIG-3223-ARR

M

VENT TO ATMOSPHERE

8"-ALP

8-DIG-099-VLV

FLAME ARRESTER (FAIL LOCKED)

8-DIG-3211-MOV

1" AUTO DRIP PAN

8-DIG-130-VLV

D

8-DIG-131-VLV

GAS PRESSURE/ VACUUM RELIEF VALVE
8-DIG-003-PVRV

PIT 3211B GAS

8-DIG-1066-ARR

8-DIG-1056-ARR

1"

FIT 1033

120VAC

FE 1033

TD

FLAME CHECK
8-DIG-004-FCH

8"-DGR

DIGESTER GAS

I-401

TO DIGESTER GAS HANDLING

FIT-1033

8-DIG-128-VLV

8-DGT-021-VLV

THE DRAWINGS IN THIS SET ARE RECORD DRAWINGS. THEY ARE CONSTRUCTION CONTRACT DRAWINGS WHICH HAVE BEEN REVISED BASED ON AVAILABLE FIELD INFORMATION RECORDED BY OTHERS DURING CONSTRUCTION OF THIS CONTRACT. THERE HAS BEEN NO VERIFICATION OF DIMENSIONS SHOWN ON THE CONSTRUCTION DRAWINGS OR THE ACCURACY/COMPLETENESS OF THE FIELD INFORMATION RECEIVED.

SIGNATURE

2/7/2020
DATE

AS-BUILT REPLACEMENT SHEET

PROFESSIONAL CERTIFICATION

THIS DRAWING WAS ORIGINALLY APPROVED FOR CONSTRUCTION AND SEALED BY BILLY J. FOX, A REGISTERED PROFESSIONAL ENGINEER IN THE STATE OF MARYLAND, NO. 46603.

NOTICE TO CONTRACTORS

- PROJECT ELEVATIONS ARE BASED ON NAVD88 AND HOWARD COUNTY'S BENCHMARK SYSTEM
- PREVIOUS PROJECTS USED OTHER DATUMS
- APPLY THE FOLLOWING CONVERSIONS WHEN USING PREVIOUS CONTRACT DRAWINGS:
  - ADDITION NO. 6: SUBTRACT 0.80 FT
  - PRIOR ADDITIONS: SUBTRACT 1.04 FT

DEPARTMENT OF PUBLIC WORKS
HOWARD COUNTY, MARYLAND

CHIEF, BUREAU OF UTILITIES DATE

DES: LH

DRN: LH

CHK: BF

DATE: 12/2016

DATE	REV	DESCRIPTION
07/2019		RECORD DRAWING

INSTRUMENTATION & CONTROLS

ANAEROBIC DIGESTER GAS STORAGE SYSTEM
UP No. 08.04.06

LITTLE PATUXENT WATER RECLAMATION PLANT
8TH ADDITION
BIOSOLIDS PROCESSING FACILITIES - PHASE I

CAPITAL PROJECT S-6295
CONTRACT NO. 24-4935

ELECTION DISTRICT NO. 6
HOWARD COUNTY, MARYLAND

SCALE AS SHOWN

SHEET 439 OF 463

I-402

BIM 360://10054364 – Little Patuxent WRP 8th Addition/264591_Y_Ph1_V18.rvt
1/12/2022 10:08:26 AM

SCADA HMI

PCS

8-DIG-0011-RIO

GAS CONDITIONING

RUN PERMISSIVE
FAIL
RUNNING
IN AUTO
INLET TEMP
INLET PRESSURE
BLOWER DISCH PRESSURE
H2S LEVEL
HX INLET TEMP
HX DISCH TEMP

480VAC

120VAC

GLYCOL CHILLER
8-DGT-1212-PNL

LOCATED AT CHILLER

GAS CONDITIONING LOCAL CONTROL PANEL
8-DGT-1222-PNL

LOCATED IN DIGESTER BUILDING

GENERAL NOTES

1. SEE SHEET I-001 FOR PROCESS CONTROL SYSTEM ABBREVIATIONS,SYMBOLS AND NOTES.
2. SEE SHEET I-904 AND I-905 FOR SCADA NETWORK ARCHITECTURE DIAGRAM.
3. REFERENCE SPECIFICATION 40 90 05 FOR CONTROL DESCRIPTIONS.
4. REFERENCE SPECIFICATION 40 91 10 FOR INSTRUMENT SCHEDULE.
5. REFERENCE SPECIFICATION 40 94 43 FOR PLC I/O SCHEDULE.
6. INSTRUMENTATION AND CONTROL EQUIPMENT SHALL BE SUITABLE FOR INSTALLATION IN HAZARDOUS AS DEFINED ON SHEET 00G-06, HAZARDOUS AREA PLAN.
7. MAJOR FUNCTIONS FOR PACKAGED EQUIPMENT VENDOR SUPPLIED CONTROL PANELS ARE SHOWN. ACTUAL EQUIPMENT VENDOR PANELS MAY OFFER ADDITIONAL FUNCTIONALITY.
8. SEE INSTRUMENT SCHEDULE FOR COMPLETE TAG NUMBER.

THE DRAWINGS IN THIS SET ARE RECORD DRAWINGS. THEY ARE CONSTRUCTION CONTRACT DRAWINGS WHICH HAVE BEEN REVISED BASED ON AVAILABLE FIELD INFORMATION RECORDED BY OTHERS DURING CONSTRUCTION OF THIS CONTRACT. THERE HAS BEEN NO VERIFICATION OF DIMENSIONS SHOWN ON THE CONSTRUCTION DRAWINGS OR THE ACCURACY/COMPLETENESS OF THE FIELD INFORMATION RECEIVED.

SIGNATURE

2/7/2023
DATE

I-401 A
DGR FROM DIGESTERS
10"-DGR
8-DGT-1211-ARR
FLAME ARRESTER
8-DGT-014-VLV
10"x6" REDUCER
FILTER 1
8-DGT-1212-FIL
PROVISIONS FOR H2S REMOVAL SYSTEM
8-DGT-013-VLV
8-DGT-015-VLV
TIT 1212A
PIT 1012
4"-DGR
M
6"-DGR
GAS BLOWER No.1
8-DGT-1012-BLW
GAS BLOWER No.2
8-DGT-1022-BLW
1"
TIT 1216
PIT 1212
HEAT EXCHANGER No.1
8-DGT-1212-HEX
GLYCOL CHILLER
8-DGT-1211-CHL
TIT 1226
TIT 1236
TIT 1246
TIT 1256
HEAT EXCHANGER No.2
8-DGT-1222-HEX
WATER KNOCKOUT DRUM
6"-DGS
FILTER 2
8-DGT-1222-FIL
TIT 1266
PIT 1222
GAS ANALYSIS MODULE 4
AIT 1212
AE 1212
H2S
ZIT 1211
HS 1211A
HS 1211B
OSC
L/R
8-DGT-012-VLV
8-DIG-002-VLV
I-401 B
DGS TO DGS DISTRIBUTION SYSTEM
D

BIM 360://10054364 – Little Patuxent WRP 8th Addition/264591_Y_Ph1_V18.rvt
1/12/2022 10:08:28 AM

AS-BUILT REPLACEMENT SHEET

PROFESSIONAL CERTIFICATION

THIS DRAWING WAS ORIGINALLY APPROVED FOR CONSTRUCTION AND SEALED BY BILLY J. FOX, A REGISTERED PROFESSIONAL ENGINEER IN THE STATE OF MARYLAND, NO. 46603.

NOTICE TO CONTRACTORS

- PROJECT ELEVATIONS ARE BASED ON NAVD88 AND HOWARD COUNTY'S BENCHMARK SYSTEM
- PREVIOUS PROJECTS USED OTHER DATUMS
- APPLY THE FOLLOWING CONVERSIONS WHEN USING PREVIOUS CONTRACT DRAWINGS:
  - ADDITION NO. 6: SUBTRACT 0.80 FT
  - PRIOR ADDITIONS: SUBTRACT 1.04 FT

DEPARTMENT OF PUBLIC WORKS
HOWARD COUNTY, MARYLAND

CHIEF, BUREAU OF UTILITIES DATE

DES: LH
DRN: LH
CHK: BF
DATE: 12/2016

DATE	REV	DESCRIPTION
07/2019		RECORD DRAWING

INSTRUMENTATION & CONTROLS

DIGESTER GAS TREATMENT SYSTEM - COMPRESSION AND MOISTURE REMOVAL SYSTEM

LITTLE PATUXENT WATER RECLAMATION PLANT
8TH ADDITION
BIOSOLIDS PROCESSING FACILITIES - PHASE I

CAPITAL PROJECT S-6295
CONTRACT NO. 24-4935

ELECTION DISTRICT NO. 6
HOWARD COUNTY, MARYLAND

SCALE AS SHOWN

SHEET 440 OF 463

I-427

SCADA HMI

PCS

8-DIG-0014-PNL

8-DIG-0011-RIO

WASTE GAS TRAIN No.2

WASTE GAS TRAIN No.1

LOCAL ALARM STATION

IN REMOTE
PILOT ON
FLARE FAIL
MAIN GAS VALVE OPEN
RUN PERMISSIVE
1

ACTIVATE
SILENCE

120 VAC

WASTE FAS FLARE LOCAL ALARM STATION
PB 0011A SILENCE
I
YA 0011 ALARM
PB 0011B TEST
8-DGT-1411-PNL

WASTE GAS BURNER CONTROL PANEL No. 1
OIT
PLC
HS 1012A ON/OFF
HS 1012 AUTO/OFF/MANUAL
YA 1012 SYSTEM ALARM
PB 1012A STOP/RESET
YI 1012A POWER
YI 1012 PILOT RUN
YI 1012 FLARE FAIL
PB 1012C E-STOP
PB 1012B START/SPARK
8-DGT-1412-PNL

WASTE GAS BURNER CONTROL PANEL No. 2
OIT
PLC
HS 1022A ON/OFF
HS 1022 AUTO/OFF/MANUAL
YA 1022 SYSTEM ALARM
PB 1022A STOP/RESET
YI 1022A POWER
YI 1022 PILOT RUN
YI 1022 FLARE FAIL
PB 1022C ON/OFF
PB 1022B START/SPARK
8-DGT-1422-PNL

WASTE GAS BURNER NO. 1
8-DGT-1411-BRN
8-DGT-026-VLV
8-DGT-023-VLV
FLAME ARRESTER TYP
8-DGT-1412-ARR
MANUAL DRIP TRAP
FLAME ARRESTER TYP
8-DGT-1422-ARR
MANUAL DRIP TRAP
DR
DR
10"-DGR
8-DGT-022-VLV
8-DGT-010-VLV
PRESSURE CONTROL VALVE TYP
8-DGT-001-PCV
8-DGT-025-VLV
8-DGT-024-VLV
10"-DGR
PRESSURE CONTROL VALVE TYP
8-DGT-002-PCV
WASTE GAS BURNER
1"-DGS
2"-DGS
1"-NG
2"-NG

I-401
10"-DGR
FROM DIGESTER GAS STORAGE SYSTEM
8-DGT-009-VLV
MANUAL DRIP TRAP
8-DGT-1422-TRP
2"-DR
AUTOMATIC DRIP TRAP
8-DGT-1412-TRP
DR

DIGESTER GAS VALVE AND REGULATOR PACKAGE
I-401
FROM BIOGAS TREATMENT

NATURAL GAS VALVE AND REGULATOR PACKAGE
NG
FROM NATURAL GAS DISTRIBUTION SYSTEM

GENERAL NOTES

1. SEE SHEET I-001 FOR PROCESS CONTROL SYSTEM ABBREVIATIONS,SYMBOLS AND NOTES.
2. SEE SHEET I-904 AND I-905 FOR SCADA NETWORK ARCHITECTURE DIAGRAM.
3. REFERENCE SPECIFICATION 40 90 05 FOR CONTROL DESCRIPTIONS.
4. REFERENCE SPECIFICATION 40 91 10 FOR INSTRUMENT SCHEDULE.
5. REFERENCE SPECIFICATION 40 94 43 FOR PLC I/O SCHEDULE.
6. INSTRUMENTATION AND CONTROL EQUIPMENT SHALL BE SUITABLE FOR INSTALLATION IN HAZARDOUS AS DEFINED ON SHEET 00G-06, HAZARDOUS AREA PLAN.
7. MAJOR FUNCTIONS FOR PACKAGED EQUIPMENT VENDOR SUPPLIED CONTROL PANELS ARE SHOWN. ACTUAL EQUIPMENT VENDOR PANELS MAY OFFER ADDITIONAL FUNCTIONALITY.
8. SEE INSTRUMENT SCHEDULE FOR COMPLETE TAG NUMBER.

KEY NOTES

1 RUN PERMISSIVE BASED ON MATRIX LEAD/LAG GAS BURNER SELECTION IN PCS SYSTEM. THE WASTE GAS BURNER CONTROL PANEL WILL OPERATE BASED ON RUN PERMISSIVE AND PRESSURE SWITCH.

THE DRAWINGS IN THIS SET ARE RECORD DRAWINGS. THEY ARE CONSTRUCTION CONTRACT DRAWINGS WHICH HAVE BEEN REVISED BASED ON AVAILABLE FIELD INFORMATION RECORDED BY OTHERS DURING CONSTRUCTION OF THIS CONTRACT. THERE HAS BEEN NO VERIFICATION OF DIMENSIONS SHOWN ON THE CONSTRUCTION DRAWINGS OR THE ACCURACY/COMPLETENESS OF THE FIELD INFORMATION RECEIVED.

SIGNATURE 2/7/2023 DATE

AS-BUILT REPLACEMENT SHEET

PROFESSIONAL CERTIFICATION

THIS DRAWING WAS ORIGINALLY APPROVED FOR CONSTRUCTION AND SEALED BY BILLY J. FOX, A REGISTERED PROFESSIONAL ENGINEER IN THE STATE OF MARYLAND, NO. 46603.

NOTICE TO CONTRACTORS

- PROJECT ELEVATIONS ARE BASED ON NAVD88 AND HOWARD COUNTY'S BENCHMARK SYSTEM
- PREVIOUS PROJECTS USED OTHER DATUMS
- APPLY THE FOLLOWING CONVERSIONS WHEN USING PREVIOUS CONTRACT DRAWINGS:
  - ADDITION NO. 6: SUBTRACT 0.80 FT
  - PRIOR ADDITIONS: SUBTRACT 1.04 FT

DEPARTMENT OF PUBLIC WORKS
HOWARD COUNTY, MARYLAND

CHIEF, BUREAU OF UTILITIES DATE

DES: LH
DRN: LH
CHK: BF
DATE: 12/2016

DATE	REV	DESCRIPTION
07/2019		RECORD DRAWING

INSTRUMENTATION & CONTROLS

WASTE GAS FLARE SYSTEM
UP No. 08.05.03

LITTLE PATUXENT WATER RECLAMATION PLANT
8TH ADDITION
BIOSOLIDS PROCESSING FACILITIES - PHASE I

CAPITAL PROJECT S-6295
CONTRACT NO. 24-4935

ELECTION DISTRICT NO. 6
HOWARD COUNTY, MARYLAND

SCALE AS SHOWN

SHEET 441 OF 463

I-450

BIM 360://10054364 – Little Patuxent WRP 8th Addition/264591_Y_Ph1_V18.rvt
1/12/2022 10:08:30 AM

SCADA HMI

PCS

8-DIG-0014-PNL

480VAC

FROM I-502

POWER ON

E-STOP

OIT

FRONT DRIVE VFD

BACK DRIVE VFD

HOA

START

STOP

RUNNING

FAIL

SPEED

HI

HI-HI

RESET

DEWATERING CENTRIFUGE NO. 1 CONTROL PANEL
8-XXX-1013-LCP

PLC

8-XXX-1013-LCP
(TYP OF 3)

CENTRIFUGE PCS OPERATOR CONSOLE

PROTOCOL CONVERTER (TYP OF 2)

FOR CENTRIFUGE CASING FLUSH (TYP)

O/C

L/R

480 VAC

2"-PW

6"-CF

I-375 A
FROM CENTRIFUGE FEED PUMPS

FLEX HOSE (TYP)

I-505
FROM POLYMER METERING PUMP NO. 1

4"-PW

1"-POLY

FRONT DRIVE

BACK DRIVE

DEWATERING CENTRIFUGE NO. 1
11-DEW-1013-CEN

1"-DR

TO DRAIN

LUBE OIL SYSTEM

NON-POTABLE CITY WATER (TYP.)

1"-NPW

PROCESS WATER FROM EXISTING FLUSHING WATER PUMPS

6"-PW

10"-CTR

N.C.

N.O.

8"-SLOP

CS

I-502 A
TO CONVEYORS

480 VAC

1"-PW

11-DRY-1013B-PV

2"-PW

CENTRIFUGE NO. 2 FLUSHING VALVE (SIMILAR TO CENTRIFUGE NO. 1)

DEWATERING CENTRIFUGE NO. 2
(SIMILAR TO DEWATERING CENTRIFUGE NO. 1)
10-DEW-1023-CEN

I-375 B
FROM CENTRIFUGE FEED PUMPS

I-505
FROM POLYMER METERING PUMP NO. 2

DIVERTER SLIDE GATE NO. 2
(SIMILAR TO DIVERTER SLIDE GATE NO. 1)

DIVERTER SLIDE GATE FLUSHING VALVE NO. 2
(SIMILAR TO VALVE NO. 1)

I-502 B
TO CONVEYORS

CENTRIFUGE NO. 3 FLUSHING VALVE (SIMILAR TO CENTRIFUGE NO. 1)

DEWATERING CENTRIFUGE NO. 3
(SIMILAR TO DEWATERING CENTRIFUGE NO. 1)
10-DEW-1033-CEN

I-375 C
FROM CENTRIFUGE FEED PUMPS

I-505
FROM POLYMER METERING PUMP NO. 3

DIVERTER SLIDE GATE NO. 3
(SIMILAR TO DIVERTER SLIDE GATE NO. 1)

DIVERTER SLIDE GATE FLUSHING VALVE NO. 3
(SIMILAR TO VALVE NO. 1)

I-502 C
TO CONVEYORS

PROCESS WATER

8"-SLOP

I-375 A
TO DIGESTED SOLIDS STORAGE

TO PROCESS DRAIN

I-601 A
TO CENTRATE EQUALIZATION TANKS (SECONDARY LINE)

I-601 B
TO CENTRATE EQUALIZATION TANKS (PRIMARY LINE)

THE DRAWINGS IN THIS SET ARE RECORD DRAWINGS. THEY ARE CONSTRUCTION CONTRACT DRAWINGS WHICH HAVE BEEN REVISED BASED ON AVAILABLE FIELD INFORMATION RECORDED BY OTHERS DURING CONSTRUCTION OF THIS CONTRACT. THERE HAS BEEN NO VERIFICATION OF DIMENSIONS SHOWN ON THE CONSTRUCTION DRAWINGS OR THE ACCURACY/COMPLETENESS OF THE FIELD INFORMATION RECEIVED.

SIGNATURE 2/7/2023 DATE

AS-BUILT REPLACEMENT SHEET

PROFESSIONAL CERTIFICATION

THIS DRAWING WAS ORIGINALLY APPROVED FOR CONSTRUCTION AND SEALED BY BILLY J. FOX, A REGISTERED PROFESSIONAL ENGINEER IN THE STATE OF MARYLAND, NO. 46603.

NOTICE TO CONTRACTORS

- PROJECT ELEVATIONS ARE BASED ON NAVD88 AND HOWARD COUNTY'S BENCHMARK SYSTEM
- PREVIOUS PROJECTS USED OTHER DATUMS
- APPLY THE FOLLOWING CONVERSIONS WHEN USING PREVIOUS CONTRACT DRAWINGS:
  - ADDITION NO. 6: SUBTRACT 0.80 FT
  - PRIOR ADDITIONS: SUBTRACT 1.04 FT

DEPARTMENT OF PUBLIC WORKS
HOWARD COUNTY, MARYLAND

CHIEF, BUREAU OF UTILITIES DATE

DES: BF
DRN: LH
CHK: BF
DATE: 12/2016

DATE	REV	DESCRIPTION
07/2019		RECORD DRAWING

INSTRUMENTATION & CONTROLS

CENTRIFUGE DEWATERING SYSTEM

LITTLE PATUXENT WATER RECLAMATION PLANT
8TH ADDITION
BIOSOLIDS PROCESSING FACILITIES - PHASE I

CAPITAL PROJECT S-6295
CONTRACT NO. 24-4935

ELECTION DISTRICT NO. 6
HOWARD COUNTY, MARYLAND

SCALE AS SHOWN

SHEET 442 OF 463

I-501

BIM 360://10054364 – Little Patuxent WRP 8th Addition/264591_Y_Ph1_V18.rvt
1/12/2022 10:08:33 AM

SCADA HMI

PCS

8-GBT-0012-PNL

DIVERTER GATE NO. 3: CLOSE COMMAND; OPEN COMMAND; OPEN INDICATION; CLOSED INDICATION; IN REMOTE

DIVERTER GATE NO. 2: CLOSE COMMAND; OPEN COMMAND; OPEN INDICATION; CLOSED INDICATION; IN REMOTE

DIVERTER GATE NO. 1: CLOSE COMMAND; OPEN COMMAND; OPEN INDICATION; CLOSED INDICATION; IN REMOTE

HORIZONTAL CONVEYOR NO. 1: RUN STATUS; FAIL; PULL CORD; ZERO SPEED; IN REMOTE; RUN COMMAND

HORIZONTAL CONVEYOR NO. 2: RUN STATUS; FAIL; PULL CORD; ZERO SPEED; IN REMOTE; RUN COMMAND; E-STOP

480VAC

I-501 A CS FROM CENTRIFUGE NO.1

I-501 B CS FROM CENTRIFUGE NO.2

I-501 C CS FROM CENTRIFUGE NO.3

ZSO 2013, ZSC 2013, HS 2013 OSC/L/R, M — 8-CTR-2013-DIV — DIVERTER GATE NO.1

ZSO 2023, ZSC 2023, HS 2023 OSC/L/R, M — 8-CTR-2023-DIV — DIVERTER GATE NO.2

ZSO 2033, ZSC 2033, HS 2033 OSC/L/R, M — 8-CTR-2033-DIV — DIVERTER GATE NO.3

CONVEYOR MASTER CONTROL PANEL LCP (1)

PLC

YL 3011 POWER ON

PB 3011 E-STOP

OIT

HORIZONTAL CONVEYOR NO. 1	HORIZONTAL CONVEYOR NO. 2	ANGLED CONVEYOR NO. 1	ANGLED CONVEYOR NO. 2
HS 3015 HOA	HS 3025 HOA	HS 3035 HOA	HS 3045 HOA
YI 3015 RUNNING	YI 3025 RUNNING	YI 3035 RUNNING	YI 3045 RUNNING
HS 3015 START	HS 3025 START	HS 3035 START	HS 3045 START
YA 3015 FAIL	YA 3025 FAIL	YA 3035 FAIL	YA 3045 FAIL
HS 3015 STOP	HS 3025 STOP	HS 3035 STOP	HS 3045 STOP

8-CTR-3011-PNL

TO I-501 (2)

SSA 3012 ZERO SPEED (3)

HS 3012 PULL CORD

HS 3011 E-STOP (4)

HORIZONTAL CONVEYOR NO.1 — 8-CTR-3012-CNV

SSA 3022 ZERO SPEED (3)

HS 3022 PULL CORD

M — SCREW CONVEYOR DRIVE — 8-CTR-3012-DRV

HORIZONTAL CONVEYOR NO.2 — 8-CTR-3022-CNV

M — SCREW CONVEYOR DRIVE — 8-CTR-3022-DRV

TO TRUCK

8-CTR-4012-DRV — M — SCREW CONVEYOR DRIVE

INSTALLED IN PHASE 2 (SEE I-508)

8-CTR-3034-GAT

8-CTR-3044-GAT

8-CTR-3024-GAT

8-CTR-3014-GAT

SSA 4012 ZERO SPEED (3); HS 4012 PULL CORD (2)

ZSC 4024, ZSO 4024, HS 4024 OSC/L/R (6)

8-CTR-4024-MOV (4)

8-CTR-4022-DRV — M — SCREW CONVEYOR DRIVE

ZSC 4014, ZSO 4014, HS 4014 OSC/L/R (5)

8-CTR-4014-MOV (4)

ANGLED CONVEYOR NO.1 — 8-CTR-4012-CNV

SSA 4022 ZERO SPEED (3); HS 4022 PULL CORD (4)

ZSC 4034, ZSO 4034, HS 4034 OSC/L/R (7)

8-CTR-4034-MOV (4)

ZSC 4044, ZSO 4044, HS 4044 OSC/L/R (8)

8-CTR-4044-MOV (4)

TO WET CAKE BIN — I-520

ANGLED CONVEYOR NO.2 — 8-CTR-4022-CNV

KEY NOTES

(1) CONVEYOR MASTER CONTROL PANEL SHALL INCLUDE STARTERS FOR ALL CONVEYOR MOTORS INCLUDING STARTERS FOR MOTORS THAT WILL BE INSTALLED IN PHASE 2. CONVEYOR MASTER CONTROL PANEL SHALL INCLUDE TERMINAL BLOCKS AND I/O POINTS FOR INSTRUMENTS AND SIGNALS ASSOCIATED WITH THE ANGLED CONVEYORS THAT WILL BE INSTALLED IN PHASE 2.

(2) HARDWIRE CONVEYOR RUN STATUS TO EACH OF THE EXISTING CENTRIFUGE CONTROL PANELS.

(3) THIS LINE REPRESENTS INSTRUMENT SIGNAL AND 120VAC POWER.

(4) PROVIDE E-STOP WITH FOUR (4) SETS OF CONTACT BLOCKS. WIRE NORMALLY CLOSED (NC) CONTACT FROM EACH SET OF CONTACT BLOCKS TO EACH OF THE FOUR CONVEYOR MOTOR STARTERS TO STOP THE CONVEYOR WHEN E-STOP IS PRESSED. WIRE ONE (1) NORMALLY OPEN (NO) CONTACT TO PLC INPUT FOR STATUS.

THE DRAWINGS IN THIS SET ARE RECORD DRAWINGS. THEY ARE CONSTRUCTION CONTRACT DRAWINGS WHICH HAVE BEEN REVISED BASED ON AVAILABLE FIELD INFORMATION RECORDED BY OTHERS DURING CONSTRUCTION OF THIS CONTRACT. THERE HAS BEEN NO VERIFICATION OF DIMENSIONS SHOWN ON THE CONSTRUCTION DRAWINGS OR THE ACCURACY/COMPLETENESS OF THE FIELD INFORMATION RECEIVED.

SIGNATURE — DATE 2/7/2023

BIM 360://10054364 – Little Patuxent WRP 8th Addition/264591_Y_Ph1_V18.rvt
1/12/2022 10:08:37 AM

AS-BUILT REPLACEMENT SHEET

PROFESSIONAL CERTIFICATION

THIS DRAWING WAS ORIGINALLY APPROVED FOR CONSTRUCTION AND SEALED BY BILLY J. FOX, A REGISTERED PROFESSIONAL ENGINEER IN THE STATE OF MARYLAND, NO. 46603.

NOTICE TO CONTRACTORS

- PROJECT ELEVATIONS ARE BASED ON NAVD88 AND HOWARD COUNTY'S BENCHMARK SYSTEM
- PREVIOUS PROJECTS USED OTHER DATUMS
- APPLY THE FOLLOWING CONVERSIONS WHEN USING PREVIOUS CONTRACT DRAWINGS:
  - ADDITION NO. 6: SUBTRACT 0.80 FT
  - PRIOR ADDITIONS: SUBTRACT 1.04 FT

DEPARTMENT OF PUBLIC WORKS
HOWARD COUNTY, MARYLAND

CHIEF, BUREAU OF UTILITIES — DATE

DES: BF
DRN: LH
CHK: BF
DATE: 12/2016

DATE	REV	DESCRIPTION
07/2019		RECORD DRAWING

INSTRUMENTATION & CONTROLS

DEWATERED SOLIDS MATERIALS HANDLING SYSTEM

LITTLE PATUXENT WATER RECLAMATION PLANT
8TH ADDITION
BIOSOLIDS PROCESSING FACILITIES - PHASE I

CAPITAL PROJECT S-6295
CONTRACT NO. 24-4935

ELECTION DISTRICT NO. 6
HOWARD COUNTY, MARYLAND

SCALE AS SHOWN

SHEET 443 OF 463

I-502

SCADA HMI

PCS 8-GBT-0012-PNL

DILUTION WATER FLOW (TYP. OF 2): FLOW

NEAT POLYMER METERING PUMP (TYP. OF 2): HIGH PRESSURE, RUN COMMAND, IN REMOTE, RUN STATUS, FAIL, SPEED INDICATION, SPEED CONTROL

POLYMER RECIRCULATION PUMP: RUN COMMAND, IN REMOTE, RUN STATUS, FAIL, SPEED INDICATION, SPEED CONTROL

AGING TANK: HIGH-HIGH LEVEL, LOW-LOW LEVEL, LEVEL

POLYMER DISCHARGE VALVE: CLOSE COMMAND, OPEN COMMAND, OPENED INDICATION, CLOSED INDICATION, IN REMOTE

ACTIVATION CHAMBER (TYP. OF 2): RUN COMMAND, IN REMOTE, RUN STATUS, FAIL

DILUTION WATER INLET VALVE (TYP. OF 2): CLOSE COMMAND, OPEN COMMAND, OPENED INDICATION, CLOSED INDICATION, IN REMOTE

I-503 FROM PROCESS WATER PUMPS

3"-PW

480 VAC

CENTRIFUGE POLYMER SYSTEM CONTROL PANEL

PLC

OIT

YI 1811A POWER ON

YI 1811B SYSTEM RUNNING

YA 1811 SYSTEM FAULT

YI 1811C SYSTEM IN AUTO

8-POL-1811-PNL

120VAC

FIT 1812

FE 1812

M

3"-PW

8-POL-1812-MOV

TO I-103 POLYMER FILL LOCAL CONTROL PANEL

VENT

LIT 1812

LE 1812

EMULSION POLYMER STORAGE TANK NO.1

8-POL-1812-TNK

OVERFLOW TO PROCESS DRAIN

FROM POLYMER FILL STATION

8-POL-1811-PMP

I-103 A TO GBT POLYMER SYSTEM

120VAC

FIT 1822

FE 1822

8-POL-1822-MOV

2"-POLY

PI 1812

PSH 1812

NEAT POLYMER METERING PUMP NO. 1

8-POL-1812-PMP

ACTIVATION CHAMBER

8-POL-1812-POL

ZSO 2011

ZSC 2011

HS 2011A OC

HS 2011B L/R

480 VAC

LSHH 2011

LSLL 2011

LIT 2011

D

8-POL-2011-MOV

AGING TANK

8-POL-2011-TNK

VENT

LIT 1822

LE 1822

EMULSION POLYMER STORAGE TANK NO.2

8-POL-1822-TNK

OVERFLOW TO PROCESS DRAIN

FROM POLYMER FILL STATION

2"-POLY

PI 1822

PSH 1822

NEAT POLYMER METERING PUMP NO. 2

8-POL-1822-PMP

ACTIVATION CHAMBER

8-POL-1822-POL

3"-POLYS

3"-POLYS

I-527 A TO METERING PUMPS

GENERAL NOTES

1. SEE SHEET I-001 FOR PROCESS CONTROL SYSTEM ABBREVIATIONS,SYMBOLS AND NOTES.
2. SEE SHEET I-904 AND I-905 FOR SCADA NETWORK ARCHITECTURE DIAGRAM.
3. REFERENCE SPECIFICATION 40 90 05 FOR CONTROL DESCRIPTIONS.
4. REFERENCE SPECIFICATION 40 91 10 FOR INSTRUMENT SCHEDULE.
5. REFERENCE SPECIFICATION 40 94 43 FOR PLC I/O SCHEDULE.
6. INSTRUMENTATION AND CONTROL EQUIPMENT SHALL BE SUITABLE FOR INSTALLATION IN HAZARDOUS AS DEFINED ON SHEET 00G-06, HAZARDOUS AREA PLAN.
7. MAJOR FUNCTIONS FOR PACKAGED EQUIPMENT VENDOR SUPPLIED CONTROL PANELS ARE SHOWN. ACTUAL EQUIPMENT VENDOR PANELS MAY OFFER ADDITIONAL FUNCTIONALITY.
8. SEE INSTRUMENT SCHEDULE FOR COMPLETE TAG NUMBER.

THE DRAWINGS IN THIS SET ARE RECORD DRAWINGS. THEY ARE CONSTRUCTION CONTRACT DRAWINGS WHICH HAVE BEEN REVISED BASED ON AVAILABLE FIELD INFORMATION RECORDED BY OTHERS DURING CONSTRUCTION OF THIS CONTRACT. THERE HAS BEEN NO VERIFICATION OF DIMENSIONS SHOWN ON THE CONSTRUCTION DRAWINGS OR THE ACCURACY/COMPLETENESS OF THE FIELD INFORMATION RECEIVED.

SIGNATURE 2/7/2023 DATE

AS-BUILT REPLACEMENT SHEET

PROFESSIONAL CERTIFICATION

THIS DRAWING WAS ORIGINALLY APPROVED FOR CONSTRUCTION AND SEALED BY BILLY J. FOX, A REGISTERED PROFESSIONAL ENGINEER IN THE STATE OF MARYLAND, NO. 46603.

NOTICE TO CONTRACTORS

- PROJECT ELEVATIONS ARE BASED ON NAVD88 AND HOWARD COUNTY'S BENCHMARK SYSTEM
- PREVIOUS PROJECTS USED OTHER DATUMS
- APPLY THE FOLLOWING CONVERSIONS WHEN USING PREVIOUS CONTRACT DRAWINGS:
  - ADDITION NO. 6: SUBTRACT 0.80 FT
  - PRIOR ADDITIONS: SUBTRACT 1.04 FT

DEPARTMENT OF PUBLIC WORKS
HOWARD COUNTY, MARYLAND

CHIEF, BUREAU OF UTILITIES DATE

DES: LH
DRN: LH
CHK: BF
DATE: 12/2016

DATE	REV	DESCRIPTION
07/2019		RECORD DRAWING

INSTRUMENTATION & CONTROLS

POLYMER DEWATERING P&ID (1 OF 2)
UP No. 08.06.03

LITTLE PATUXENT WATER RECLAMATION PLANT
8TH ADDITION
BIOSOLIDS PROCESSING FACILITIES - PHASE I

CAPITAL PROJECT S-6295
CONTRACT NO. 24-4935

ELECTION DISTRICT NO. 6
HOWARD COUNTY, MARYLAND

SCALE AS SHOWN

SHEET 444 OF 463

I-526

BIM 360://10054364 – Little Patuxent WRP 8th Addition/2645911_V_Ph1_V18.rvt
1/12/2022 10:08:41 AM

SCADA HMI

PCS

8-GBT-0012-PNL

DILUTION WATER INLET VALVE (TYP. OF 3)
POSITION CONTROL
POSITION INDICATION
IN REMOTE

POLYMER SOLUTION METERING PUMP (TYP. OF 3)
RUN COMMAND
IN REMOTE
RUN STATUS
FAIL
SPEED INDICATION
SPEED CONTROL

POLYMER SOLUTION TO CENTRIFUGES (TYP. OF 3)
HIGH PRESSURE

POLYMER SOLUTION (TYP. OF 3)
FLOW

GENERAL NOTES

1. SEE SHEET I-001 FOR PROCESS CONTROL SYSTEM ABBREVIATIONS,SYMBOLS AND NOTES.
2. SEE SHEET I-904 AND I-905 FOR SCADA NETWORK ARCHITECTURE DIAGRAM.
3. REFERENCE SPECIFICATION 40 90 05 FOR CONTROL DESCRIPTIONS.
4. REFERENCE SPECIFICATION 40 91 10 FOR INSTRUMENT SCHEDULE.
5. REFERENCE SPECIFICATION 40 94 43 FOR PLC I/O SCHEDULE.
6. INSTRUMENTATION AND CONTROL EQUIPMENT SHALL BE SUITABLE FOR INSTALLATION IN HAZARDOUS AS DEFINED ON SHEET 00G-06, HAZARDOUS AREA PLAN.
7. MAJOR FUNCTIONS FOR PACKAGED EQUIPMENT VENDOR SUPPLIED CONTROL PANELS ARE SHOWN. ACTUAL EQUIPMENT VENDOR PANELS MAY OFFER ADDITIONAL FUNCTIONALITY.
8. SEE INSTRUMENT SCHEDULE FOR COMPLETE TAG NUMBER.

KEY NOTES

(1) COORDINATE LCP REQUIREMENTS WITH SHEET I-526.

(1) CENTRIFUGE POLYMER SYSTEM CONTROL PANEL

8-POL-1811-PNL

I-503 FROM PROCESS WATER PUMPS — 3"-PW

I-526 A FROM AGING TANK — 3"-POLYS

PI 2013A

8-POL-2013-SV

8-POL-2013-FI

120VAC

PI 2013B

PSH 2013

FIT 2013

FE 2013

PI 2013C

2"-POLYS

POLYMER SOLUTION METERING PUMP NO. 1
8-POL-2013-PMP

8-POL-2013-MXR

3"-POLYS

TO CENTRIFUGE NO. 1/NO.2

PI 2023A

8-POL-2023-SV

8-POL-2023-FI

PI 2023B

PSH 2023B

FIT 2023

FE 2023

PI 2023C

POLYMER SOLUTION METERING PUMP NO. 2
8-POL-2023-PMP

8-POL-2023-MXR

PI 2033A

8-POL-2033-SV

8-POL-2033-FI

PI 2033B

PSH 2033

FIT 2033

FE 2033

PI 2033C

POLYMER SOLUTION METERING PUMP NO. 3
8-POL-2033-PMP

8-POL-2033-MXR

TO CENTRIFUGE NO.3/NO.2

THE DRAWINGS IN THIS SET ARE RECORD DRAWINGS. THEY ARE CONSTRUCTION CONTRACT DRAWINGS WHICH HAVE BEEN REVISED BASED ON AVAILABLE FIELD INFORMATION RECORDED BY OTHERS DURING CONSTRUCTION OF THIS CONTRACT. THERE HAS BEEN NO VERIFICATION OF DIMENSIONS SHOWN ON THE CONSTRUCTION DRAWINGS OR THE ACCURACY/COMPLETENESS OF THE FIELD INFORMATION RECEIVED.

SIGNATURE — DATE 2/7/2020

AS-BUILT REPLACEMENT SHEET

PROFESSIONAL CERTIFICATION

THIS DRAWING WAS ORIGINALLY APPROVED FOR CONSTRUCTION AND SEALED BY BILLY J. FOX, A REGISTERED PROFESSIONAL ENGINEER IN THE STATE OF MARYLAND, NO. 46603.

NOTICE TO CONTRACTORS

- PROJECT ELEVATIONS ARE BASED ON NAVD88 AND HOWARD COUNTY'S BENCHMARK SYSTEM
- PREVIOUS PROJECTS USED OTHER DATUMS
- APPLY THE FOLLOWING CONVERSIONS WHEN USING PREVIOUS CONTRACT DRAWINGS:
  - ADDITION NO. 6: SUBTRACT 0.80 FT
  - PRIOR ADDITIONS: SUBTRACT 1.04 FT

DEPARTMENT OF PUBLIC WORKS
HOWARD COUNTY, MARYLAND

CHIEF, BUREAU OF UTILITIES — DATE

DES: LH
DRN: LH
CHK: BF
DATE: 12/2016

DATE	REV	DESCRIPTION
07/2019		RECORD DRAWING

INSTRUMENTATION & CONTROLS

POLYMER DEWATERING P&ID (2 OF 2)
UP No. 08.06.03

LITTLE PATUXENT WATER RECLAMATION PLANT
8TH ADDITION
BIOSOLIDS PROCESSING FACILITIES - PHASE I

CAPITAL PROJECT S-6295
CONTRACT NO. 24-4935

ELECTION DISTRICT NO. 6
HOWARD COUNTY, MARYLAND

SCALE AS SHOWN

SHEET 445 OF 463

I-527

BIM 360://10054364 – Little Patuxent WRP 8th Addition/264591_Y_Ph1_V18.rvt
1/12/2022 10:08:45 AM

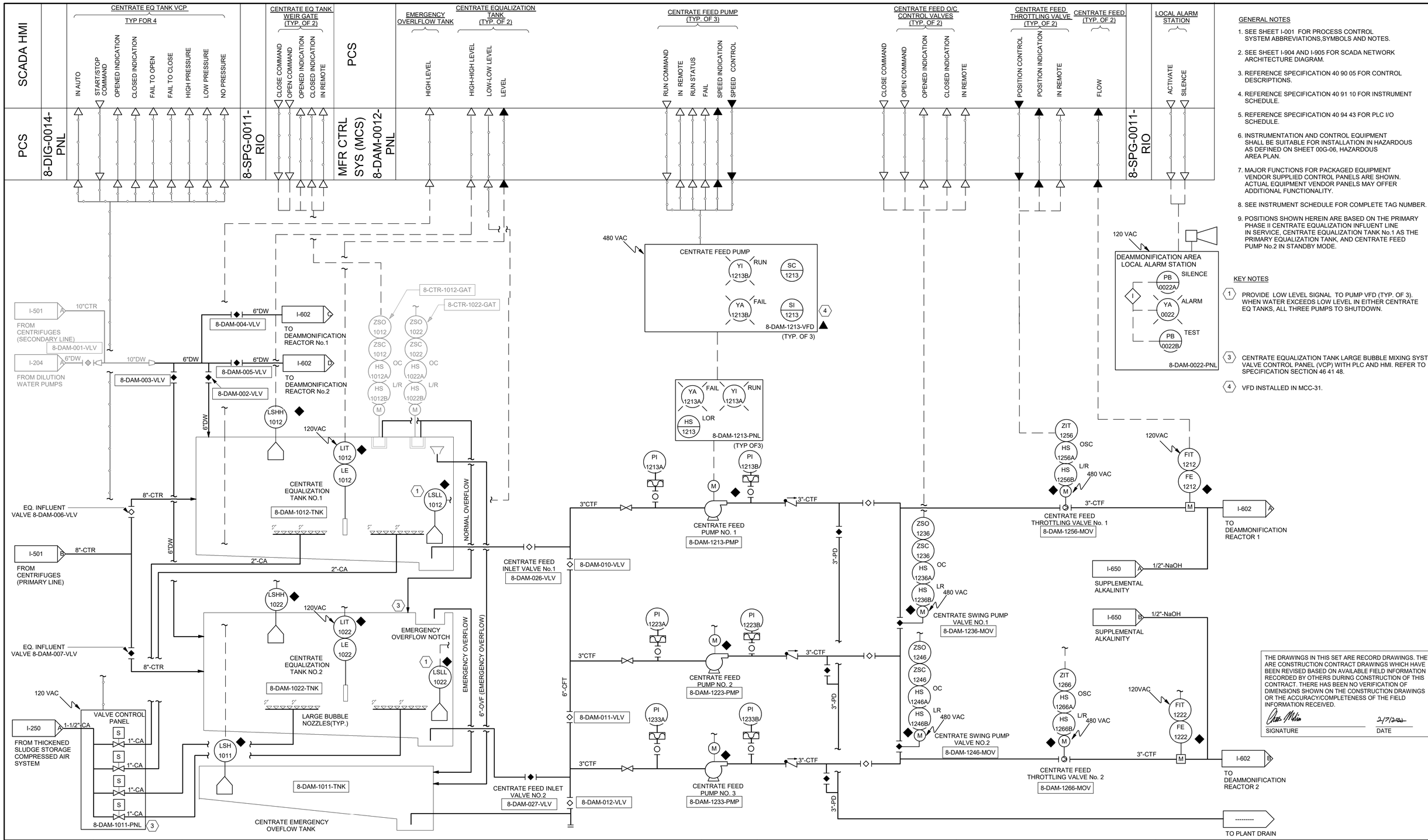

GENERAL NOTES

1. SEE SHEET I-001 FOR PROCESS CONTROL SYSTEM ABBREVIATIONS,SYMBOLS AND NOTES.
2. SEE SHEET I-904 AND I-905 FOR SCADA NETWORK ARCHITECTURE DIAGRAM.
3. REFERENCE SPECIFICATION 40 90 05 FOR CONTROL DESCRIPTIONS.
4. REFERENCE SPECIFICATION 40 91 10 FOR INSTRUMENT SCHEDULE.
5. REFERENCE SPECIFICATION 40 94 43 FOR PLC I/O SCHEDULE.
6. INSTRUMENTATION AND CONTROL EQUIPMENT SHALL BE SUITABLE FOR INSTALLATION IN HAZARDOUS AS DEFINED ON SHEET 00G-06, HAZARDOUS AREA PLAN.
7. MAJOR FUNCTIONS FOR PACKAGED EQUIPMENT VENDOR SUPPLIED CONTROL PANELS ARE SHOWN. ACTUAL EQUIPMENT VENDOR PANELS MAY OFFER ADDITIONAL FUNCTIONALITY.
8. SEE INSTRUMENT SCHEDULE FOR COMPLETE TAG NUMBER.
9. POSITIONS SHOWN HEREIN ARE BASED ON THE PRIMARY PHASE II CENTRATE EQUALIZATION INFLUENT LINE IN SERVICE, CENTRATE EQUALIZATION TANK No.1 AS THE PRIMARY EQUALIZATION TANK, AND CENTRATE FEED PUMP No.2 IN STANDBY MODE.

KEY NOTES

1. PROVIDE LOW LEVEL SIGNAL TO PUMP VFD (TYP. OF 3). WHEN WATER EXCEEDS LOW LEVEL IN EITHER CENTRATE EQ TANKS, ALL THREE PUMPS TO SHUTDOWN.
3. CENTRATE EQUALIZATION TANK LARGE BUBBLE MIXING SYSTEM VALVE CONTROL PANEL (VCP) WITH PLC AND HMI. REFER TO SPECIFICATION SECTION 46 41 48.
4. VFD INSTALLED IN MCC-31.

THE DRAWINGS IN THIS SET ARE RECORD DRAWINGS. THEY ARE CONSTRUCTION CONTRACT DRAWINGS WHICH HAVE BEEN REVISED BASED ON AVAILABLE FIELD INFORMATION RECORDED BY OTHERS DURING CONSTRUCTION OF THIS CONTRACT. THERE HAS BEEN NO VERIFICATION OF DIMENSIONS SHOWN ON THE CONSTRUCTION DRAWINGS OR THE ACCURACY/COMPLETENESS OF THE FIELD INFORMATION RECEIVED.

SIGNATURE — DATE 2/7/2023

AS-BUILT REPLACEMENT SHEET

PROFESSIONAL CERTIFICATION

THIS DRAWING WAS ORIGINALLY APPROVED FOR CONSTRUCTION AND SEALED BY BILLY J. FOX, A REGISTERED PROFESSIONAL ENGINEER IN THE STATE OF MARYLAND, NO. 46603.

NOTICE TO CONTRACTORS

- PROJECT ELEVATIONS ARE BASED ON NAVD88 AND HOWARD COUNTY'S BENCHMARK SYSTEM
- PREVIOUS PROJECTS USED OTHER DATUMS
- APPLY THE FOLLOWING CONVERSIONS WHEN USING PREVIOUS CONTRACT DRAWINGS:
  - ADDITION NO. 6: SUBTRACT 0.80 FT
  - PRIOR ADDITIONS: SUBTRACT 1.04 FT

DEPARTMENT OF PUBLIC WORKS
HOWARD COUNTY, MARYLAND

CHIEF, BUREAU OF UTILITIES — DATE

DES: LH
DRN: LH
CHK: BF
DATE: 12/2016

DATE	REV	DESCRIPTION
07/2019		RECORD DRAWING

INSTRUMENTATION & CONTROLS

DEAMMONIFICATION SYSTEM (1 OF 2)
UP No. 8.08.01

LITTLE PATUXENT WATER RECLAMATION PLANT
8TH ADDITION
BIOSOLIDS PROCESSING FACILITIES - PHASE I

CAPITAL PROJECT S-6295
CONTRACT NO. 24-4935

ELECTION DISTRICT NO. 6
HOWARD COUNTY, MARYLAND

SCALE AS SHOWN

SHEET 446 OF 463

I-601

BIM 360://10054364 – Little Patuxent WRP 8th Addition/264591_Y_Ph1_V18.rvt
1/12/2022 10:08:49 AM

PCS

MFR CTRL SYS (MCS) 8-DAM-0012-PNL

DEAMMONIFICATION HOT WATER SUPPLY VALVE NO. 2: VALVE OPEN COMMAND

MICRONUTRIENT FEED PUMPS (TYP. OF 2): IN REMOTE; RUN COMMAND; ALARM/ WARNING; RUN STATUS; SPEED INDICATION; SPEED CONTROL

DEAMMONIFICATION HOT WATER SUPPLY VALVE NO. 1: VALVE OPEN COMMAND

DEAMMONIFICATION REACTOR (TYP. OF 2): HIGH LEVEL; HIGH-HIGH LEVEL

DEAMMONIFICATION REACTOR (TYP. OF 2): DISSOLVED OXYGEN; pH; TEMPERATURE

DEAMMONIFICATION MIXER (TYP. OF 2): RUN COMMAND; IN REMOTE; RUN STATUS; FAIL; SPEED INDICATION; SPEED CONTROL

DEAMMONIFICATION AIR(TYP. OF 2): FLOW

DEAMMONIFICATION BLOWER (TYP. OF 3): RUN COMMAND; IN REMOTE; RUN STATUS; FAIL; SPEED INDICATION; SPEED CONTROL; VOLTAGE (V); AMPS (A); KILOWATTS (kW); TORQUE

DEAMMONIFICATION SWING BLOWER VALVE (TYP. OF 2): CLOSE COMMAND; OPEN COMMAND; OPENED INDICATION; CLOSED INDICATION; IN REMOTE

GENERAL NOTES

1. SEE SHEET I-001 FOR PROCESS CONTROL SYSTEM ABBREVIATIONS,SYMBOLS AND NOTES.
2. SEE SHEET I-904 AND I-905 FOR SCADA NETWORK ARCHITECTURE DIAGRAM.
3. REFERENCE SPECIFICATION 40 90 05 FOR CONTROL DESCRIPTIONS.
4. REFERENCE SPECIFICATION 40 91 10 FOR INSTRUMENT SCHEDULE.
5. REFERENCE SPECIFICATION 40 94 43 FOR PLC I/O SCHEDULE.
6. INSTRUMENTATION AND CONTROL EQUIPMENT SHALL BE SUITABLE FOR INSTALLATION IN HAZARDOUS AS DEFINED ON SHEET 00G-06, HAZARDOUS AREA PLAN.
7. MAJOR FUNCTIONS FOR PACKAGED EQUIPMENT VENDOR SUPPLIED CONTROL PANELS ARE SHOWN. ACTUAL EQUIPMENT VENDOR PANELS MAY OFFER ADDITIONAL FUNCTIONALITY.
8. SEE INSTRUMENT SCHEDULE FOR COMPLETE TAG NUMBER.

KEY NOTES

1. POWER MONITORING REQUIRED FOR MOTORS GREATER THAN 20 HP.
2. FOOT VALVE WITH LEVEL INDICATION BY MICRO-NUTRIENT PUMP MANUFACTURER.
3. SEPARATE 120VAC COOLING FAN MAY NOT BE REQUIRED FOR ALL MANUFACTURERS OR MODELS. COORDINATE WITH BLOWER MANUFACTURER.

120VAC
MICRONUTRIENT FEED PUMP CONTROL PANEL
8-DAM-1912-PNL
LSL 1911
LSLL 1922
CALIBRATION COLUMN
MICRONUTRIENT FEED PUMP NO. 1
8-DAM-1912-PMP
MICRONUTRIENT FEED PUMP NO. 2
8-DAM-1922-PMP
8-DAM-1412-FI
PRE-ASSEMBLED PUMP SKID
LSH 1412
LSHH 1412

I-341 A — HOT WATER SUPPLY — 4"-HWS — 3"-HWS — 1.5"-HWS
DEAMMONIFICATION HW SUPPLY VALVE NO. 1
8-DAM-1412-SV
I-341 B — HOT WATER RETURN — 4"-HWR — 3"-HWR — 3"-HWR
I-601 C — FROM DILUTION WATER PUMPS — 6"-DW
I-601 A — FROM CENTRATE — 3"-CTF
DEAMMONIFICATION HW SUPPLY VALVE NO. 2
8-DAM-1422-SV
8-DAM-1422-FI
1" SUBMERGED HOT WATER LOOP

480 VAC
DEAMMONIFICATION MIXER
YA 1412B FAIL; YI 1412B RUN; SC 1412; SI 1412
8-DAM-1412-VFD (TYP. OF 2)
480 VAC
FIT 1412
FE 1412
HS 1412A LOR; YA 1412C FAIL; YI 1412C RUN
8-DAM-1412-PNL (TYP. OF 2)

120VAC — AIT 1412A — DO — AE 1412A
120VAC — AIT 1412B — AE 1412B
DO; pH TEMP
1"-DAA; 4"-DAA; 6"-DAA; 8"-DAA; 2"-DAA
DEAMMONIFICATION MIXER NO. 1
8-DAM-1412-MXR
AIR LIFT PUMPS (TYP. 2 PER REACTOR)
8-DAM-1412-PMP
8-DAM-017-VLV; 8-DAM-016-VLV; 8-DAM-015-VLV
CYLINDRICAL SCREEN 1
8-DAM-1414-SCRN
WEIR; WEIR
MEDIUM BUBBLE DIFFUSERS (TYP)

DEAMMONIFICATION REACTOR 1
8-DAM-1412-TNK

120VAC
FIT 1422
FE 1422
CYLINDRICAL SCREEN 2
8-DAM-1424-SCRN

FROM MICRONUTRIENT FEED PUMP NO.2
LSH 1422
LSHH 1422

DEAMMONIFICATION MIXER NO. 2
8-DAM-1422-MXR
120VAC — AIT 1422A — DO — AE 1422A
120VAC — AIT 1422B — AE 1422B
DO; pH TEMP
1"-DAA; 4"-DAA; 6"-DAA; 8"-DAA; 2"-DAA
AIR LIFT PUMPS (TYP. 2 PER REACTOR)
8-DAM-1422-PMP
8-DAM-020-VLV; 8-DAM-019-VLV; 8-DAM-018-VLV
CYLINDRICAL SCREEN 1
8-DAM-1434-SCRN
WEIR; WEIR
MEDIUM BUBBLE DIFFUSERS (TYP)

DEAMMONIFICATION REACTOR 2
8-DAM-1422-TNK

I-601 D — FROM DILUTION WATER PUMPS — 6"-DW
I-601 B — FROM CENTRATE FEED — 3"-CTF

THE DRAWINGS IN THIS SET ARE RECORD DRAWINGS. THEY ARE CONSTRUCTION CONTRACT DRAWINGS WHICH HAVE BEEN REVISED BASED ON AVAILABLE FIELD INFORMATION RECORDED BY OTHERS DURING CONSTRUCTION OF THIS CONTRACT. THERE HAS BEEN NO VERIFICATION OF DIMENSIONS SHOWN ON THE CONSTRUCTION DRAWINGS OR THE ACCURACY/COMPLETENESS OF THE FIELD INFORMATION RECEIVED.

SIGNATURE — DATE 2/7/2023

480 VAC
DEAMMONIFICATION BLOWER
YA 1633A FAIL; YI 1633A RUN; SC 1633; YA 1633B HIGH PRESSURE
SI 1633; YI 1633B HIGH TEMP
8-DAM-1633-VFD (TYP. OF 3)

6"-DAE
EXISTING PROCESS DRAIN TO HEAD OF PLANT
DEAMMONIFICATION BLOWER HS 1633 LOR
8-DAM-1633-PNL (TYP. OF 3)
ZSO 1612; ZSC 1612; HS 1612 OC; HS 1612 L/R
ZSO 1622; ZSC 1622; HS 1622 OC; HS 1622 L/R
480 VAC
DEAMMONIFICATION SWING BLOWER VALVE NO.1
8-DAM-1612-MOV
DEAMMONIFICATION SWING BLOWER VALVE NO.2
8-DAM-1622-MOV

120 VAC
PSH 1633; TSH 1633
50 HP
480 VAC
6"-DDA
8-DAM-013-VLV
DEAMMONIFICATION BLOWER NO.3
8-DAM-1633-BLW
BLOWER ENCLOSURE
BLOWER NO.2 (SIMILAR TO BLOWER NO.3) 50 HP
6"-DDA
8-DAM-014-VLV
DEAMMONIFICATION BLOWER NO.2
8-DAM-1623-BLW
BLOWER NO.1 (SIMILAR TO BLOWER NO.3) 50 HP
6"-DDA
8-DAM-028-VLV
DEAMMONIFICATION BLOWER NO.1
8-DAM-1613-BLW

	HDR	AS-BUILT REPLACEMENT SHEET	PROFESSIONAL CERTIFICATION: THIS DRAWING WAS ORIGINALLY APPROVED FOR CONSTRUCTION AND SEALED BY BILLY J. FOX, A REGISTERED PROFESSIONAL ENGINEER IN THE STATE OF MARYLAND, NO. 46603.	NOTICE TO CONTRACTORS: • PROJECT ELEVATIONS ARE BASED ON NAVD88 AND HOWARD COUNTY'S BENCHMARK SYSTEM • PREVIOUS PROJECTS USED OTHER DATUMS • APPLY THE FOLLOWING CONVERSIONS WHEN USING PREVIOUS CONTRACT DRAWINGS: - ADDITION NO. 6: SUBTRACT 0.80 FT - PRIOR ADDITIONS: SUBTRACT 1.04 FT	DEPARTMENT OF PUBLIC WORKS HOWARD COUNTY, MARYLAND CHIEF, BUREAU OF UTILITIES DATE	DES: LH DRN: LH CHK: BF DATE: 12/2016	07/2019 — RECORD DRAWING	INSTRUMENTATION & CONTROLS DEAMMONIFICATION SYSTEM (2 OF 2) UP No. 8.08.01	LITTLE PATUXENT WATER RECLAMATION PLANT 8TH ADDITION BIOSOLIDS PROCESSING FACILITIES - PHASE I CAPITAL PROJECT S-6295 CONTRACT NO. 24-4935 ELECTION DISTRICT NO. 6 HOWARD COUNTY, MARYLAND	SCALE AS SHOWN SHEET 447 OF 463 I-602

DATE | REV | DESCRIPTION

BIM 360://10054364 – Little Patuxent WRP 8th Addition/264591_Y_Ph1_V18.rvt
1/12/2022 10:08:53 AM

SCADA HMI

FOXBORO PCS

PIU-2

SODIUM HYDROXIDE STORAGE TANK

LEVEL

SODIUM HYDROXIDE TRANSFER PUMP (TYP. OF 2)

RUN COMMAND

IN REMOTE

RUN STATUS

FAIL

EYE WASH STATION

FLOW SWITCH

120 VAC

HORN

SODIUM HYDROXIDE FILL PANEL

YA 1811A SILENCE

YA 1811B HIGH LEVEL

LI 1811 TANK LEVEL

8-DAM-1811-PNL

FILTER CONTROL BUILDING

480 VAC

SODIUM HYDROXIDE TRANSFER PUMP

YA 1812A RUN

HS 1812 LOR

I

8-703-PNL

(TYP. OF 2)

120VAC

LIT

4" VENT TO ROOF

LE

2" NAOH

6000 GALLON SODIUM HYDROXIDE STORAGE TANK

8-DAM-1811-TNK

3"

1 1/2"

3"

1 1/2"

1 1/2"

3"

M

SODIUM HYDROXIDE TRANSFER PUMP NO. 1

8-703-PMP

M

SODIUM HYDROXIDE TRANSFER PUMP NO. 2

8-704-PMP

2" NAOH

1" NAOH

CHEMICAL CONTAINMENT AREA

CHEMICAL CONTAINMENT AREA SUMP

DOUBLE CONTAINMENT PIPING IN YARD

1-1/2" NAOH

I-650

TO SODIUM HYDROXIDE METERING PUMPS

120 VAC

1

FS 1811

GENERAL NOTES

1. SEE SHEET I-001 FOR PROCESS CONTROL SYSTEM ABBREVIATIONS,SYMBOLS AND NOTES.
2. SEE SHEET I-904 AND I-905 FOR SCADA NETWORK ARCHITECTURE DIAGRAM.
3. REFERENCE SPECIFICATION 40 90 05 FOR CONTROL DESCRIPTIONS.
4. REFERENCE SPECIFICATION 40 91 10 FOR INSTRUMENT SCHEDULE.
5. REFERENCE SPECIFICATION 40 94 43 FOR PLC I/O SCHEDULE.
6. INSTRUMENTATION AND CONTROL EQUIPMENT SHALL BE SUITABLE FOR INSTALLATION IN HAZARDOUS AS DEFINED ON SHEET 00G-06, HAZARDOUS AREA PLAN.
7. MAJOR FUNCTIONS FOR PACKAGED EQUIPMENT VENDOR SUPPLIED CONTROL PANELS ARE SHOWN. ACTUAL EQUIPMENT VENDOR PANELS MAY OFFER ADDITIONAL FUNCTIONALITY.
8. SEE INSTRUMENT SCHEDULE FOR COMPLETE TAG NUMBER.

KEY NOTES

1. CONTRACTOR TO INSTALL FLOW SWITCH ON THE EYEWASH STATION. WIRE FLOW SWITCH SIGNAL TO PCS. REFER TO P-640 FOR FURTHER INFORMATION.

THE DRAWINGS IN THIS SET ARE RECORD DRAWINGS. THEY ARE CONSTRUCTION CONTRACT DRAWINGS WHICH HAVE BEEN REVISED BASED ON AVAILABLE FIELD INFORMATION RECORDED BY OTHERS DURING CONSTRUCTION OF THIS CONTRACT. THERE HAS BEEN NO VERIFICATION OF DIMENSIONS SHOWN ON THE CONSTRUCTION DRAWINGS OR THE ACCURACY/COMPLETENESS OF THE FIELD INFORMATION RECEIVED.

SIGNATURE

2/7/2020

DATE

AS-BUILT REPLACEMENT SHEET

PROFESSIONAL CERTIFICATION

THIS DRAWING WAS ORIGINALLY APPROVED FOR CONSTRUCTION AND SEALED BY BILLY J. FOX, A REGISTERED PROFESSIONAL ENGINEER IN THE STATE OF MARYLAND, NO. 46603.

NOTICE TO CONTRACTORS

- PROJECT ELEVATIONS ARE BASED ON NAVD88 AND HOWARD COUNTY'S BENCHMARK SYSTEM
- PREVIOUS PROJECTS USED OTHER DATUMS
- APPLY THE FOLLOWING CONVERSIONS WHEN USING PREVIOUS CONTRACT DRAWINGS:
  - ADDITION NO. 6: SUBTRACT 0.80 FT
  - PRIOR ADDITIONS: SUBTRACT 1.04 FT

DEPARTMENT OF PUBLIC WORKS
HOWARD COUNTY, MARYLAND

CHIEF, BUREAU OF UTILITIES DATE

DES: LH

DRN: LH

CHK: BF

DATE: 12/2016

DATE	REV	DESCRIPTION
07/2019		RECORD DRAWING

INSTRUMENTATION & CONTROLS

SODIUM HYDROXIDE STORAGE AND TRANSFER PUMP SYSTEM
UP No. 08.10.01

LITTLE PATUXENT WATER RECLAMATION PLANT
8TH ADDITION
BIOSOLIDS PROCESSING FACILITIES - PHASE I

CAPITAL PROJECT S-6295
CONTRACT NO. 24-4935

ELECTION DISTRICT NO. 6
HOWARD COUNTY, MARYLAND

SCALE AS SHOWN

SHEET 448 OF 463

I-640

BIM 360://10054364 – Little Patuxent WRP 8th Addition/264591_Y_Ph1_V18.rvt
1/12/2022 10:08:56 AM

SCADA HMI

PCS 8-PST-0011-RIO

UPS | CHEMICAL CONTAINMENT AREA | DAY TANK FEED VALVE | SODIUM HYDROXIDE DAY TANK | SODIUM HYDROXIDE METERING PUMP (TYP. OF 3)

EYE WASH ACTIVATED | UPS FAULT | ON UPS POWER | HIGH LEVEL | CLOSE COMMAND | OPEN COMMAND | OPENED INDICATION | CLOSED INDICATION | IN REMOTE | LEVEL | HIGH LEVEL | RUN COMMAND | IN REMOTE | RUN STATUS | FAIL | SPEED INDICATION | SPEED CONTROL

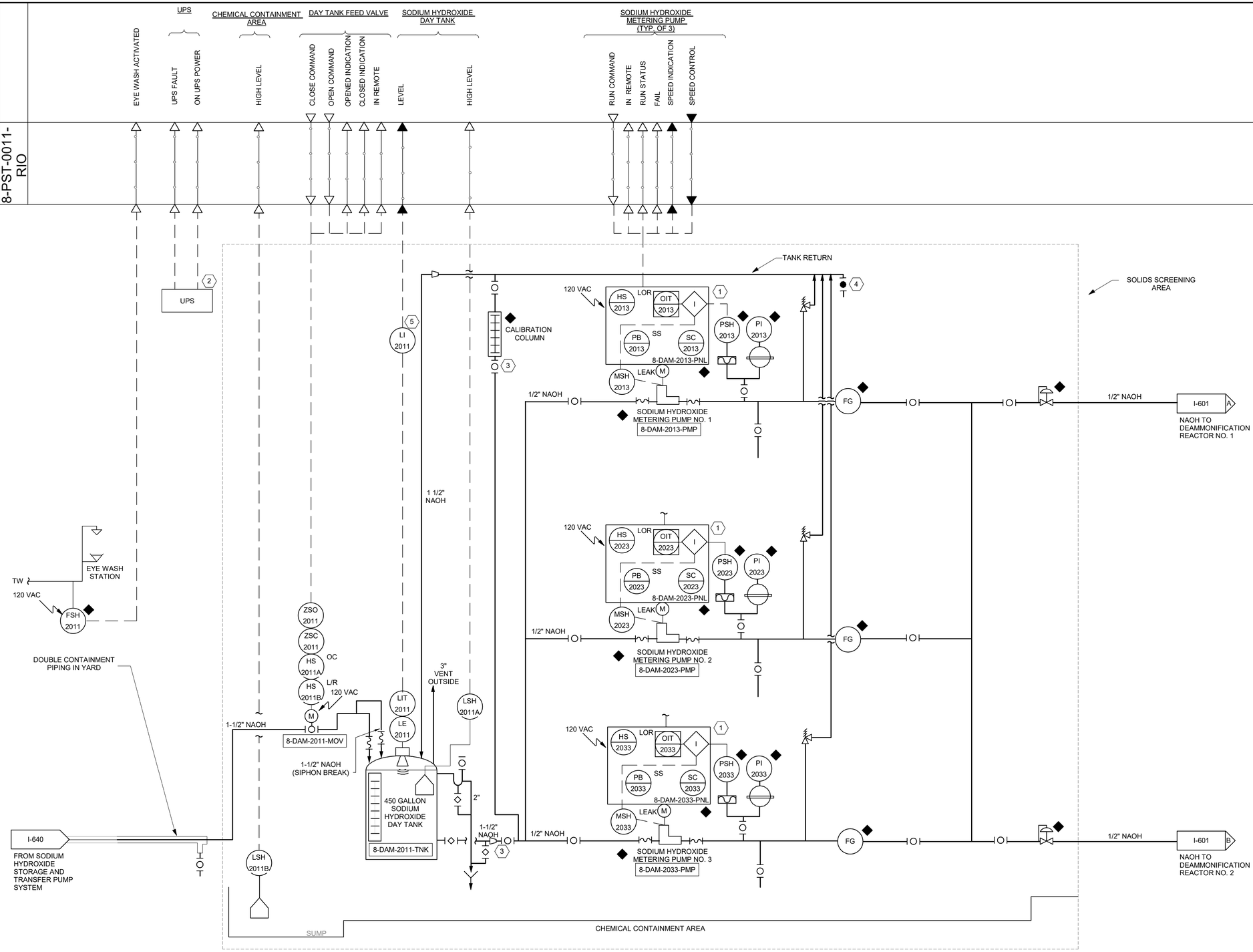

GENERAL NOTES

1. SEE SHEET I-001 FOR PROCESS CONTROL SYSTEM ABBREVIATIONS,SYMBOLS AND NOTES.
2. SEE SHEET I-904 AND I-905 FOR SCADA NETWORK ARCHITECTURE DIAGRAM.
3. REFERENCE SPECIFICATION 40 90 05 FOR CONTROL DESCRIPTIONS.
4. REFERENCE SPECIFICATION 40 91 10 FOR INSTRUMENT SCHEDULE.
5. REFERENCE SPECIFICATION 40 94 43 FOR PLC I/O SCHEDULE.
6. INSTRUMENTATION AND CONTROL EQUIPMENT SHALL BE SUITABLE FOR INSTALLATION IN HAZARDOUS AS DEFINED ON SHEET 00G-06, HAZARDOUS AREA PLAN.
7. MAJOR FUNCTIONS FOR PACKAGED EQUIPMENT VENDOR SUPPLIED CONTROL PANELS ARE SHOWN. ACTUAL EQUIPMENT VENDOR PANELS MAY OFFER ADDITIONAL FUNCTIONALITY.
8. SEE INSTRUMENT SCHEDULE FOR COMPLETE TAG NUMBER.

KEY NOTES

1. METERING PUMP PANEL INCLUDES INTEGRAL DISPLAY.
2. UPS IS LOCATED WITHIN RIO PANEL.
3. LOCATE TANK AND CALIBRATION COLUMN ISOLATION VALVES IN SAME AREA FOR OPERATOR ACCESS. LOCATE CALIBRATE COLUMN AT DAY TANK LEVEL TO ALLOW FILLING BY GRAVITY.
4. PROVIDE NORMALLY CLOSED BALL VALVE AT LOW POINT OF PRV TANK RETURN PIPING.
5. FIELD SIGNAL INDICATOR SHALL BE INSTALLED FOR INSTRUMENTS IN INACCESSIBLE LOCATIONS.

THE DRAWINGS IN THIS SET ARE RECORD DRAWINGS. THEY ARE CONSTRUCTION CONTRACT DRAWINGS WHICH HAVE BEEN REVISED BASED ON AVAILABLE FIELD INFORMATION RECORDED BY OTHERS DURING CONSTRUCTION OF THIS CONTRACT. THERE HAS BEEN NO VERIFICATION OF DIMENSIONS SHOWN ON THE CONSTRUCTION DRAWINGS OR THE ACCURACY/COMPLETENESS OF THE FIELD INFORMATION RECEIVED.

SIGNATURE 2/7/2023 DATE

AS-BUILT REPLACEMENT SHEET

PROFESSIONAL CERTIFICATION

THIS DRAWING WAS ORIGINALLY APPROVED FOR CONSTRUCTION AND SEALED BY BILLY J. FOX, A REGISTERED PROFESSIONAL ENGINEER IN THE STATE OF MARYLAND, NO. 46603.

NOTICE TO CONTRACTORS

- PROJECT ELEVATIONS ARE BASED ON NAVD88 AND HOWARD COUNTY'S BENCHMARK SYSTEM
- PREVIOUS PROJECTS USED OTHER DATUMS
- APPLY THE FOLLOWING CONVERSIONS WHEN USING PREVIOUS CONTRACT DRAWINGS:
  - ADDITION NO. 6: SUBTRACT 0.80 FT
  - PRIOR ADDITIONS: SUBTRACT 1.04 FT

DEPARTMENT OF PUBLIC WORKS
HOWARD COUNTY, MARYLAND

CHIEF, BUREAU OF UTILITIES DATE

DES: LH
DRN: LH
CHK: BF
DATE: 12/2016

DATE	REV	DESCRIPTION
07/2019		RECORD DRAWING

INSTRUMENTATION & CONTROLS

SODIUM HYDROXIDE STORAGE AND METERING PUMP SYSTEM
UP No. 08.10.01

LITTLE PATUXENT WATER RECLAMATION PLANT
8TH ADDITION
BIOSOLIDS PROCESSING FACILITIES - PHASE I

CAPITAL PROJECT S-6295
CONTRACT NO. 24-4935

ELECTION DISTRICT NO. 6
HOWARD COUNTY, MARYLAND

SCALE AS SHOWN

SHEET 449 OF 463

I-650

BIM 360://10054364 – Little Patuxent WRP 8th Addition/264591_Y_Ph1_V18.rvt
1/12/2022 10:09:00 AM

SCADA HMI

PCS 8-GBT-0011-RIO

EXHAUST FAN — RUN STATUS, FAIL

PROCESS WATER — LOW PRESSURE

HUMIDIFICATION — LOW PRESSURE

480 VAC

BIOFILTER PANEL

IRRIGATION VALVE: HS 2022A OCA; KI 2022 TIMER

EXHAUST FAN: HS 2022B HOA; YI 2022 RUN; SC 2022; PB 2022A ESTOP; YA 2022 FAIL; SI 2022; PB 2022B RESET

8-ODR-2011-PNL

I-701 A — FROM WATER BOX

TREATED AIR EXHAUST TO ATMOSPHERE

EXHAUST STACK

120 VAC

TI 2023 TEMP

TE 2023

PI 2022B; PSL 2022B

8-ODR-2022-FI

FI

2"

I-702 — EXISTING BIOFILTER SYSTEM

24" 8-ODR-002-DMP

1"

PDI 2013

M

24"

20"

8-ODR-003-DMP

BIOFILTER EXHAUST FAN 8-ODR-2011-FAN

TI 2013

TRAP

DRAIN WATER TO COMMON DRAIN

PDI 2023

PRE-HUMIDIFICATION MEDIA

TEMP

BIOFILTER MEDIA

PDI 2033

FOUL AIR FROM SOURCE — 24" 24"

PI 2022A; PSL 2022A

PI 1022B

24VDC

FIT 2022; FE 2022; S

PI 1022C

PLANT WATER 2" PW

8-ODR-2022-PRV

8-ODR-1022-SV

2" I-701 A — TO BIOFILTER IRRIGATION WATER

WATER BOX INSULATED AND HEATED 8-ODR-2011-BOX

BIOFILTER VESSEL 8-ODR-2011-TNK

2" 2"

TRAP — DRAIN WATER TO COMMON DRAIN

TRAP — DRAIN WATER TO COMMON DRAIN

GENERAL NOTES

1. SEE SHEET I-001 FOR PROCESS CONTROL SYSTEM ABBREVIATIONS,SYMBOLS AND NOTES.
2. SEE SHEET I-904 AND I-905 FOR SCADA NETWORK ARCHITECTURE DIAGRAM.
3. REFERENCE SPECIFICATION 40 90 05 FOR CONTROL DESCRIPTIONS.
4. REFERENCE SPECIFICATION 40 91 10 FOR INSTRUMENT SCHEDULE.
5. REFERENCE SPECIFICATION 40 94 43 FOR PLC I/O SCHEDULE.
6. INSTRUMENTATION AND CONTROL EQUIPMENT SHALL BE SUITABLE FOR INSTALLATION IN HAZARDOUS AS DEFINED ON SHEET 00G-06, HAZARDOUS AREA PLAN.
7. MAJOR FUNCTIONS FOR PACKAGED EQUIPMENT VENDOR SUPPLIED CONTROL PANELS ARE SHOWN. ACTUAL EQUIPMENT VENDOR PANELS MAY OFFER ADDITIONAL FUNCTIONALITY.
8. SEE INSTRUMENT SCHEDULE FOR COMPLETE TAG NUMBER.

NOTES

1. PRESSURE DIFFERENTIAL INDICATORS SHALL BE SUPPLIED WITH PRE-ASSEMBLED DRIP LEGS FOR DRAINAGE OF AIR LINE MOISTURE.
2. ALLOW SUFFICIENT LENGTHS UPSTREAM AND DOWNSTREAM OF INSTRUMENTATION AS IDENTIFY BY EQUIPMENT MANUFACTURERS.
3. ALL EXPOSED WATER LINES, RECIRCULATION LINES, AND DRAINS ARE TO BE HEAT TRACED AND INSULATED.

THE DRAWINGS IN THIS SET ARE RECORD DRAWINGS. THEY ARE CONSTRUCTION CONTRACT DRAWINGS WHICH HAVE BEEN REVISED BASED ON AVAILABLE FIELD INFORMATION RECORDED BY OTHERS DURING CONSTRUCTION OF THIS CONTRACT. THERE HAS BEEN NO VERIFICATION OF DIMENSIONS SHOWN ON THE CONSTRUCTION DRAWINGS OR THE ACCURACY/COMPLETENESS OF THE FIELD INFORMATION RECEIVED.

SIGNATURE — DATE 2/7/2023

BIM 360://10054364 – Little Patuxent WRP 8th Addition/264591_Y_Ph1_V18.rvt
1/12/2022 10:09:03 AM

AS-BUILT REPLACEMENT SHEET

PROFESSIONAL CERTIFICATION

THIS DRAWING WAS ORIGINALLY APPROVED FOR CONSTRUCTION AND SEALED BY BILLY J. FOX, A REGISTERED PROFESSIONAL ENGINEER IN THE STATE OF MARYLAND, NO. 46603.

NOTICE TO CONTRACTORS

- PROJECT ELEVATIONS ARE BASED ON NAVD88 AND HOWARD COUNTY'S BENCHMARK SYSTEM
- PREVIOUS PROJECTS USED OTHER DATUMS
- APPLY THE FOLLOWING CONVERSIONS WHEN USING PREVIOUS CONTRACT DRAWINGS:
  - ADDITION NO. 6: SUBTRACT 0.80 FT
  - PRIOR ADDITIONS: SUBTRACT 1.04 FT

DEPARTMENT OF PUBLIC WORKS
HOWARD COUNTY, MARYLAND

CHIEF, BUREAU OF UTILITIES — DATE

DES: LH
DRN: LH
CHK: BF
DATE: 12/2016

DATE	REV	DESCRIPTION
07/2019		RECORD DRAWING

INSTRUMENTATION & CONTROLS

ODOR CONTROL - BIOFILTER SYSTEM

LITTLE PATUXENT WATER RECLAMATION PLANT
8TH ADDITION
BIOSOLIDS PROCESSING FACILITIES - PHASE I

CAPITAL PROJECT S-6295
CONTRACT NO. 24-4935

ELECTION DISTRICT NO. 6
HOWARD COUNTY, MARYLAND

SCALE AS SHOWN

SHEET 450 OF 463

I-701

SCADA HMI

PCS

FOXBORO PCS

EXHAUST FAN

PROCESS WATER

RUN STATUS

FAIL

LOW PRESSURE

480 VAC

BIOFILTER PANEL

IRRIGATION VALVE

EXHAUST FAN

HS 1412A OCA

HS 1412B HOA

YI 1412 RUN

SC 1412

PB 1412A ESTOP

KI 1412 TIMER

YA 1412 FAIL

SI 1412

PB 1412B RESET

VFD 8-OCS-1412-LCP

PI 1012A

FIT 1012

S

1"-PW

TREATED AIR EXHAUST STACK

PI 1012B

PSL 1012

TI 1012A

TI 1012B

PLANT WATER

PW

1"-PW

S

FI

1"

DPI 1012

M

20"

EXHAUST FAN 8-OCS-1212-F

8-OCS-1012-T

TI 1012

FI 1012

2"

20"

24"

FOUL AIR FROM SOURCE

8-ODR-001-DMP

2"

DRAIN

24"

I-701

TO BIOFILTER SYSTEM

DRAIN

THE DRAWINGS IN THIS SET ARE RECORD DRAWINGS. THEY ARE CONSTRUCTION CONTRACT DRAWINGS WHICH HAVE BEEN REVISED BASED ON AVAILABLE FIELD INFORMATION RECORDED BY OTHERS DURING CONSTRUCTION OF THIS CONTRACT. THERE HAS BEEN NO VERIFICATION OF DIMENSIONS SHOWN ON THE CONSTRUCTION DRAWINGS OR THE ACCURACY/COMPLETENESS OF THE FIELD INFORMATION RECEIVED.

SIGNATURE

2/7/2020

DATE

AS-BUILT REPLACEMENT SHEET

PROFESSIONAL CERTIFICATION

THIS DRAWING WAS ORIGINALLY APPROVED FOR CONSTRUCTION AND SEALED BY BILLY J. FOX, A REGISTERED PROFESSIONAL ENGINEER IN THE STATE OF MARYLAND, NO. 46603.

NOTICE TO CONTRACTORS

- PROJECT ELEVATIONS ARE BASED ON NAVD88 AND HOWARD COUNTY'S BENCHMARK SYSTEM
- PREVIOUS PROJECTS USED OTHER DATUMS
- APPLY THE FOLLOWING CONVERSIONS WHEN USING PREVIOUS CONTRACT DRAWINGS:
  - ADDITION NO. 6: SUBTRACT 0.80 FT
  - PRIOR ADDITIONS: SUBTRACT 1.04 FT

DEPARTMENT OF PUBLIC WORKS
HOWARD COUNTY, MARYLAND

CHIEF, BUREAU OF UTILITIES DATE

DES: LH

DRN: LH

CHK: BF

DATE: 12/2016

DATE	REV	DESCRIPTION
07/2019		RECORD DRAWING

INSTRUMENTATION & CONTROLS

ODOR CONTROL-EXISTING BIOFILTER SYSTEM

LITTLE PATUXENT WATER RECLAMATION PLANT
8TH ADDITION
BIOSOLIDS PROCESSING FACILITIES - PHASE I

CAPITAL PROJECT S-6295
CONTRACT NO. 24-4935

ELECTION DISTRICT NO. 6
HOWARD COUNTY, MARYLAND

SCALE AS SHOWN

SHEET 451 OF 463

I-702

BIM 360://10054364 – Little Patuxent WRP 8th Addition/2645911_Y_Ph1_V18.rvt
1/12/2022 10:09:04 AM

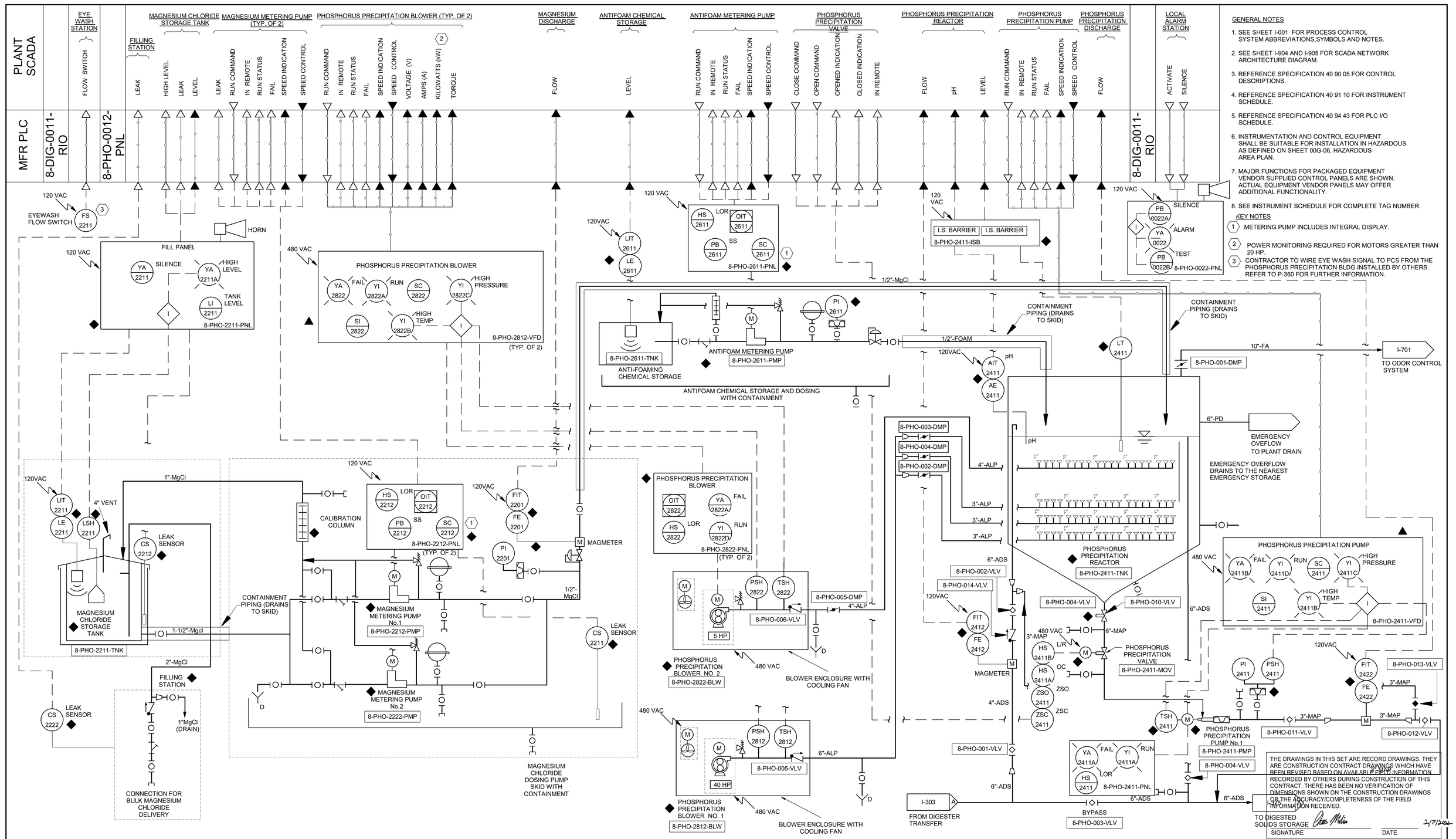

GENERAL NOTES

1. SEE SHEET I-001 FOR PROCESS CONTROL SYSTEM ABBREVIATIONS,SYMBOLS AND NOTES.
2. SEE SHEET I-904 AND I-905 FOR SCADA NETWORK ARCHITECTURE DIAGRAM.
3. REFERENCE SPECIFICATION 40 90 05 FOR CONTROL DESCRIPTIONS.
4. REFERENCE SPECIFICATION 40 91 10 FOR INSTRUMENT SCHEDULE.
5. REFERENCE SPECIFICATION 40 94 43 FOR PLC I/O SCHEDULE.
6. INSTRUMENTATION AND CONTROL EQUIPMENT SHALL BE SUITABLE FOR INSTALLATION IN HAZARDOUS AS DEFINED ON SHEET 00G-06, HAZARDOUS AREA PLAN.
7. MAJOR FUNCTIONS FOR PACKAGED EQUIPMENT VENDOR SUPPLIED CONTROL PANELS ARE SHOWN. ACTUAL EQUIPMENT VENDOR PANELS MAY OFFER ADDITIONAL FUNCTIONALITY.
8. SEE INSTRUMENT SCHEDULE FOR COMPLETE TAG NUMBER.

KEY NOTES

1. METERING PUMP INCLUDES INTEGRAL DISPLAY.
2. POWER MONITORING REQUIRED FOR MOTORS GREATER THAN 20 HP.
3. CONTRACTOR TO WIRE EYE WASH SIGNAL TO PCS FROM THE PHOSPHORUS PRECIPITATION BLDG INSTALLED BY OTHERS. REFER TO P-360 FOR FURTHER INFORMATION.

THE DRAWINGS IN THIS SET ARE RECORD DRAWINGS. THEY ARE CONSTRUCTION CONTRACT DRAWINGS WHICH HAVE BEEN REVISED BASED ON AVAILABLE FIELD INFORMATION RECORDED BY OTHERS DURING CONSTRUCTION OF THIS CONTRACT. THERE HAS BEEN NO VERIFICATION OF DIMENSIONS SHOWN ON THE CONSTRUCTION DRAWINGS OR THE ACCURACY/COMPLETENESS OF THE FIELD INFORMATION RECEIVED.

SIGNATURE _____ DATE 2/7/2023

AS-BUILT REPLACEMENT SHEET

PROFESSIONAL CERTIFICATION

THIS DRAWING WAS ORIGINALLY APPROVED FOR CONSTRUCTION AND SEALED BY BILLY J. FOX, A REGISTERED PROFESSIONAL ENGINEER IN THE STATE OF MARYLAND, NO. 46603.

NOTICE TO CONTRACTORS

- PROJECT ELEVATIONS ARE BASED ON NAVD88 AND HOWARD COUNTY'S BENCHMARK SYSTEM
- PREVIOUS PROJECTS USED OTHER DATUMS
- APPLY THE FOLLOWING CONVERSIONS WHEN USING PREVIOUS CONTRACT DRAWINGS:
  - ADDITION NO. 6: SUBTRACT 0.80 FT
  - PRIOR ADDITIONS: SUBTRACT 1.04 FT

DEPARTMENT OF PUBLIC WORKS
HOWARD COUNTY, MARYLAND

CHIEF, BUREAU OF UTILITIES DATE

DES: LH
DRN: LH
CHK: BF
DATE: 12/2016

DATE	REV	DESCRIPTION
07/2019		RECORD DRAWING

INSTRUMENTATION & CONTROLS

PHOSPHORUS PRECIPITATION SYSTEM
UP No. 08.10.02

LITTLE PATUXENT WATER RECLAMATION PLANT
8TH ADDITION
BIOSOLIDS PROCESSING FACILITIES - PHASE I

CAPITAL PROJECT S-6295
CONTRACT NO. 24-4935

ELECTION DISTRICT NO. 6
HOWARD COUNTY, MARYLAND

SCALE AS SHOWN

SHEET 452 OF 463

I-801

BIM 360://10054364 – Little Patuxent WRP 8th Addition/264591_Y_Ph1_V18.rvt
1/12/2022 10:09:10 AM

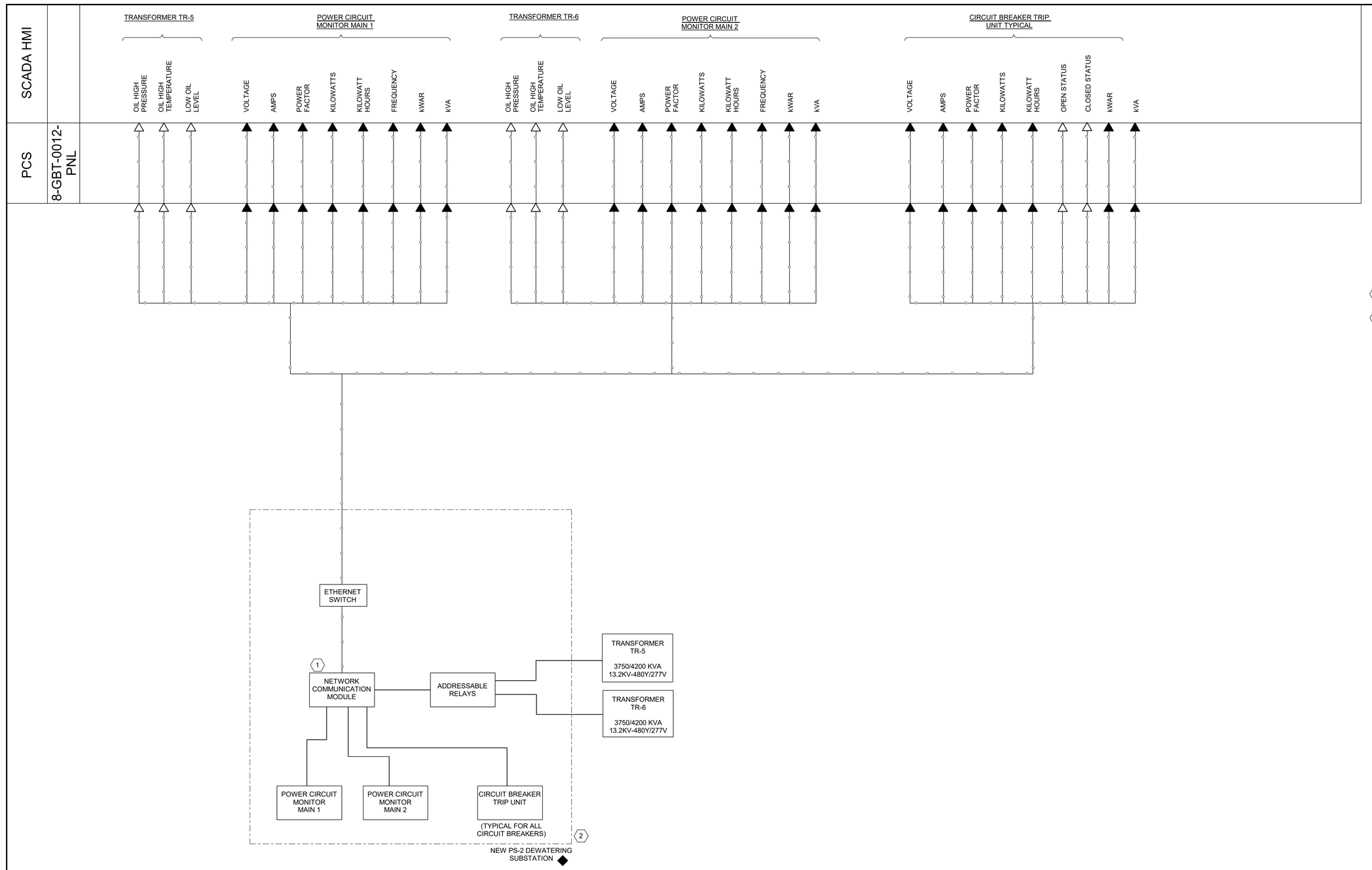

GENERAL NOTES

1. SEE SHEET I-001 FOR PROCESS CONTROL SYSTEM ABBREVIATIONS,SYMBOLS AND NOTES.
2. SEE SHEET I-904 AND I-905 FOR SCADA NETWORK ARCHITECTURE DIAGRAM.
3. REFERENCE SPECIFICATION 40 90 05 FOR CONTROL DESCRIPTIONS.
4. REFERENCE SPECIFICATION 40 91 10 FOR INSTRUMENT SCHEDULE.
5. REFERENCE SPECIFICATION 40 94 43 FOR PLC I/O SCHEDULE.
6. INSTRUMENTATION AND CONTROL EQUIPMENT SHALL BE SUITABLE FOR INSTALLATION IN HAZARDOUS AS DEFINED ON SHEET 00G-06, HAZARDOUS AREA PLAN.
7. MAJOR FUNCTIONS FOR PACKAGED EQUIPMENT VENDOR SUPPLIED CONTROL PANELS ARE SHOWN. ACTUAL EQUIPMENT VENDOR PANELS MAY OFFER ADDITIONAL FUNCTIONALITY.
8. SEE INSTRUMENT SCHEDULE FOR COMPLETE TAG NUMBER.

KEY NOTES

1. NETWORK COMMUNICATION MODULE (QUANTITY AS REQUIRED)
2. SWITCHGEAR MANUFACTURER'S POWER MONITORING NETWORK (TYPICAL)

THE DRAWINGS IN THIS SET ARE RECORD DRAWINGS. THEY ARE CONSTRUCTION CONTRACT DRAWINGS WHICH HAVE BEEN REVISED BASED ON AVAILABLE FIELD INFORMATION RECORDED BY OTHERS DURING CONSTRUCTION OF THIS CONTRACT. THERE HAS BEEN NO VERIFICATION OF DIMENSIONS SHOWN ON THE CONSTRUCTION DRAWINGS OR THE ACCURACY/COMPLETENESS OF THE FIELD INFORMATION RECEIVED.

SIGNATURE _____ DATE 2/7/2022

AS-BUILT REPLACEMENT SHEET

PROFESSIONAL CERTIFICATION

THIS DRAWING WAS ORIGINALLY APPROVED FOR CONSTRUCTION AND SEALED BY BILLY J. FOX, A REGISTERED PROFESSIONAL ENGINEER IN THE STATE OF MARYLAND, NO. 46603.

NOTICE TO CONTRACTORS

- PROJECT ELEVATIONS ARE BASED ON NAVD88 AND HOWARD COUNTY'S BENCHMARK SYSTEM
- PREVIOUS PROJECTS USED OTHER DATUMS
- APPLY THE FOLLOWING CONVERSIONS WHEN USING PREVIOUS CONTRACT DRAWINGS:
  - ADDITION NO. 6: SUBTRACT 0.80 FT
  - PRIOR ADDITIONS: SUBTRACT 1.04 FT

DEPARTMENT OF PUBLIC WORKS
HOWARD COUNTY, MARYLAND

CHIEF, BUREAU OF UTILITIES DATE

DES: LH
DRN: LH
CHK: BF
DATE: 12/2016

DATE	REV	DESCRIPTION
07/2019		RECORD DRAWING

INSTRUMENTATION & CONTROLS

SWITCHGEAR AND TRANSFORMER POWER SYSTEM MONITORING

LITTLE PATUXENT WATER RECLAMATION PLANT
8TH ADDITION
BIOSOLIDS PROCESSING FACILITIES - PHASE I

CAPITAL PROJECT S-6295
CONTRACT NO. 24-4935

ELECTION DISTRICT NO. 6
HOWARD COUNTY, MARYLAND

SCALE AS SHOWN

SHEET 453 OF 463

I-903

BIM 360://10054364 – Little Patuxent WRP 8th Addition/264591_Y_Ph1_V18.rvt
1/12/2022 10:09:12 AM

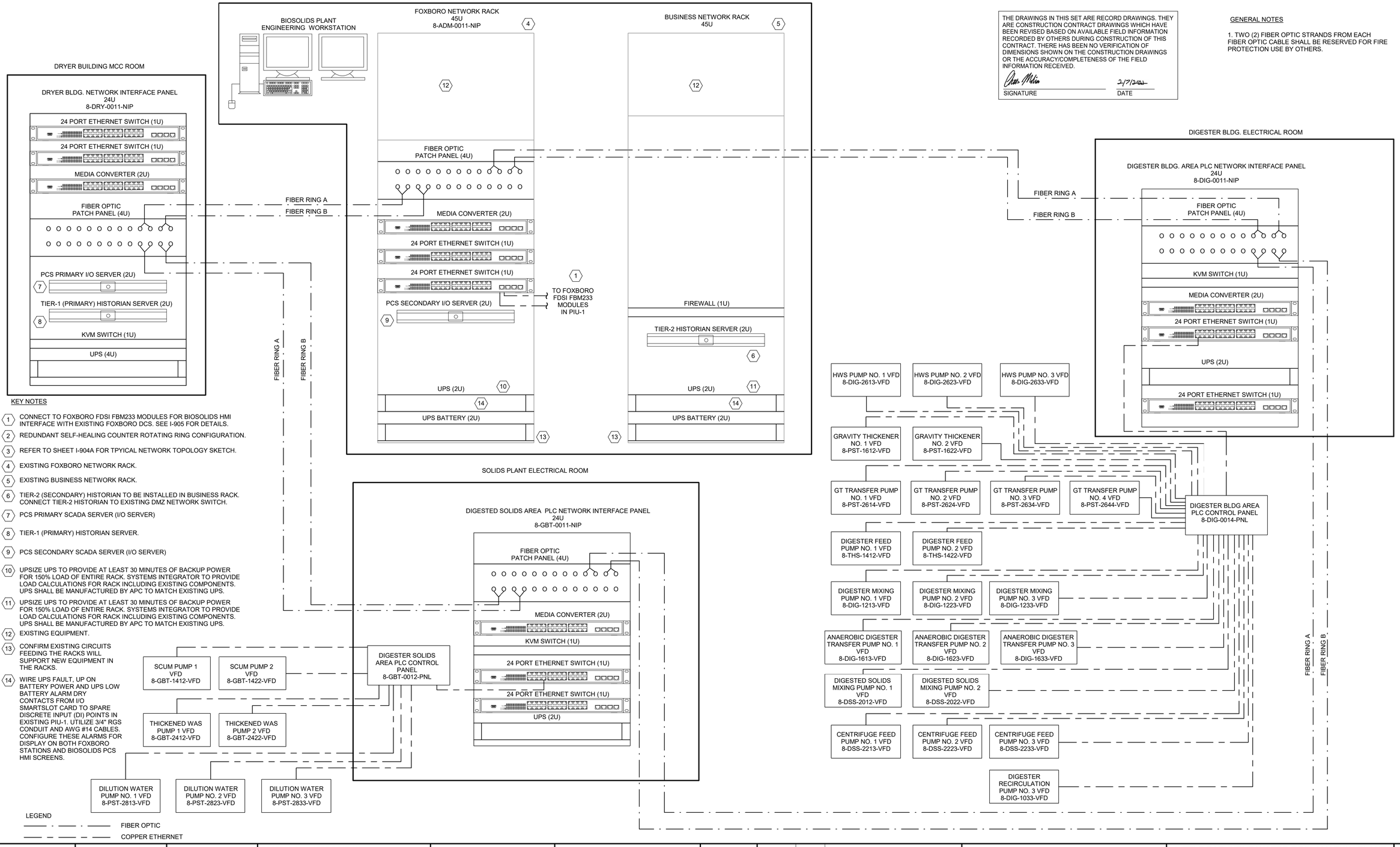

THE DRAWINGS IN THIS SET ARE RECORD DRAWINGS. THEY ARE CONSTRUCTION CONTRACT DRAWINGS WHICH HAVE BEEN REVISED BASED ON AVAILABLE FIELD INFORMATION RECORDED BY OTHERS DURING CONSTRUCTION OF THIS CONTRACT. THERE HAS BEEN NO VERIFICATION OF DIMENSIONS SHOWN ON THE CONSTRUCTION DRAWINGS OR THE ACCURACY/COMPLETENESS OF THE FIELD INFORMATION RECEIVED.

SIGNATURE _____ DATE 2/7/2022

GENERAL NOTES

1. TWO (2) FIBER OPTIC STRANDS FROM EACH FIBER OPTIC CABLE SHALL BE RESERVED FOR FIRE PROTECTION USE BY OTHERS.

KEY NOTES

1. CONNECT TO FOXBORO FDSI FBM233 MODULES FOR BIOSOLIDS HMI INTERFACE WITH EXISTING FOXBORO DCS. SEE I-905 FOR DETAILS.
2. REDUNDANT SELF-HEALING COUNTER ROTATING RING CONFIGURATION.
3. REFER TO SHEET I-904A FOR TPYICAL NETWORK TOPOLOGY SKETCH.
4. EXISTING FOXBORO NETWORK RACK.
5. EXISTING BUSINESS NETWORK RACK.
6. TIER-2 (SECONDARY) HISTORIAN TO BE INSTALLED IN BUSINESS RACK. CONNECT TIER-2 HISTORIAN TO EXISTING DMZ NETWORK SWITCH.
7. PCS PRIMARY SCADA SERVER (I/O SERVER)
8. TIER-1 (PRIMARY) HISTORIAN SERVER.
9. PCS SECONDARY SCADA SERVER (I/O SERVER)
10. UPSIZE UPS TO PROVIDE AT LEAST 30 MINUTES OF BACKUP POWER FOR 150% LOAD OF ENTIRE RACK. SYSTEMS INTEGRATOR TO PROVIDE LOAD CALCULATIONS FOR RACK INCLUDING EXISTING COMPONENTS. UPS SHALL BE MANUFACTURED BY APC TO MATCH EXISTING UPS.
11. UPSIZE UPS TO PROVIDE AT LEAST 30 MINUTES OF BACKUP POWER FOR 150% LOAD OF ENTIRE RACK. SYSTEMS INTEGRATOR TO PROVIDE LOAD CALCULATIONS FOR RACK INCLUDING EXISTING COMPONENTS. UPS SHALL BE MANUFACTURED BY APC TO MATCH EXISTING UPS.
12. EXISTING EQUIPMENT.
13. CONFIRM EXISTING CIRCUITS FEEDING THE RACKS WILL SUPPORT NEW EQUIPMENT IN THE RACKS.
14. WIRE UPS FAULT, UP ON BATTERY POWER AND UPS LOW BATTERY ALARM DRY CONTACTS FROM I/O SMARTSLOT CARD TO SPARE DISCRETE INPUT (DI) POINTS IN EXISTING PIU-1. UTILIZE 3/4" RGS CONDUIT AND AWG #14 CABLES. CONFIGURE THESE ALARMS FOR DISPLAY ON BOTH FOXBORO STATIONS AND BIOSOLIDS PCS HMI SCREENS.

AS-BUILT REPLACEMENT SHEET

PROFESSIONAL CERTIFICATION

THIS DRAWING WAS ORIGINALLY APPROVED FOR CONSTRUCTION AND SEALED BY BILLY J. FOX, A REGISTERED PROFESSIONAL ENGINEER IN THE STATE OF MARYLAND, NO. 46603.

NOTICE TO CONTRACTORS

- PROJECT ELEVATIONS ARE BASED ON NAVD88 AND HOWARD COUNTY'S BENCHMARK SYSTEM
- PREVIOUS PROJECTS USED OTHER DATUMS
- APPLY THE FOLLOWING CONVERSIONS WHEN USING PREVIOUS CONTRACT DRAWINGS:
  - ADDITION NO. 6: SUBTRACT 0.80 FT
  - PRIOR ADDITIONS: SUBTRACT 1.04 FT

DEPARTMENT OF PUBLIC WORKS
HOWARD COUNTY, MARYLAND

CHIEF, BUREAU OF UTILITIES DATE

DES: LH
DRN: LH
CHK: BF
DATE: 12/2016

DATE	REV	DESCRIPTION
07/2019		RECORD DRAWING

INSTRUMENTATION & CONTROLS

PCS PHYSICAL NETWORK DIAGRAM

LITTLE PATUXENT WATER RECLAMATION PLANT
8TH ADDITION
BIOSOLIDS PROCESSING FACILITIES - PHASE I

CAPITAL PROJECT S-6295
CONTRACT NO. 24-4935

ELECTION DISTRICT NO. 6
HOWARD COUNTY, MARYLAND

SCALE AS SHOWN

SHEET 454 OF 463

I-904

BIM 360://10054364 – Little Patuxent WRP 8th Addition/264591_Y_Ph1_V18.rvt
1/12/2022 10:09:14 AM

PROCESS AREA (TYPICAL)

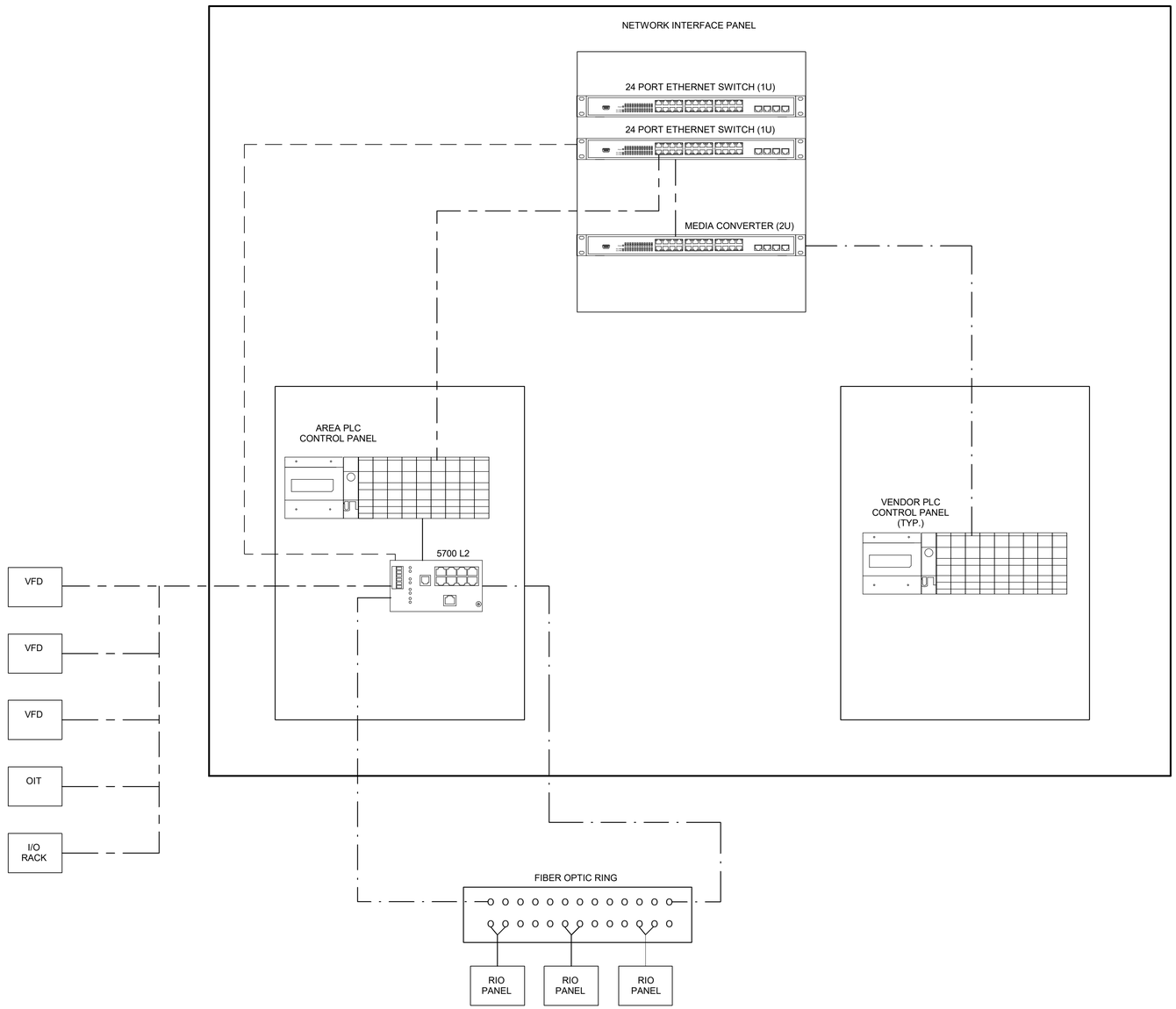

LEGEND

FIBER OPTIC

COPPER ETHERNET

VLAN

THE DRAWINGS IN THIS SET ARE RECORD DRAWINGS. THEY ARE CONSTRUCTION CONTRACT DRAWINGS WHICH HAVE BEEN REVISED BASED ON AVAILABLE FIELD INFORMATION RECORDED BY OTHERS DURING CONSTRUCTION OF THIS CONTRACT. THERE HAS BEEN NO VERIFICATION OF DIMENSIONS SHOWN ON THE CONSTRUCTION DRAWINGS OR THE ACCURACY/COMPLETENESS OF THE FIELD INFORMATION RECEIVED.

SIGNATURE

2/7/2023
DATE

AS-BUILT REPLACEMENT SHEET

PROFESSIONAL CERTIFICATION

THIS DRAWING WAS ORIGINALLY APPROVED FOR CONSTRUCTION AND SEALED BY BILLY J. FOX, A REGISTERED PROFESSIONAL ENGINEER IN THE STATE OF MARYLAND, NO. 46603.

NOTICE TO CONTRACTORS

- PROJECT ELEVATIONS ARE BASED ON NAVD88 AND HOWARD COUNTY'S BENCHMARK SYSTEM
- PREVIOUS PROJECTS USED OTHER DATUMS
- APPLY THE FOLLOWING CONVERSIONS WHEN USING PREVIOUS CONTRACT DRAWINGS:
  - ADDITION NO. 6: SUBTRACT 0.80 FT
  - PRIOR ADDITIONS: SUBTRACT 1.04 FT

DEPARTMENT OF PUBLIC WORKS
HOWARD COUNTY, MARYLAND

CHIEF, BUREAU OF UTILITIES DATE

DES: LH

DRN: LH

CHK: BF

DATE: 12/2016

DATE	REV	DESCRIPTION
07/2019		RECORD DRAWING

INSTRUMENTATION & CONTROLS

PCS PHYSICAL NETWORK TOPOLOGY

LITTLE PATUXENT WATER RECLAMATION PLANT
8TH ADDITION
BIOSOLIDS PROCESSING FACILITIES - PHASE I

CAPITAL PROJECT S-6295
CONTRACT NO. 24-4935

ELECTION DISTRICT NO. 6
HOWARD COUNTY, MARYLAND

SCALE AS SHOWN

SHEET 455 OF 463

I-904A

BIM 360://10054364 - Little Patuxent WRP 8th Addition/2645911_V_Ph1_V18.rvt
1/12/2022 10:09:15 AM

DRYER BUILDING

DRYER VENDOR PLC CONTROL PANEL
8-DRY-XX11-LCP

BIOSOLIDS PLANT OPERATOR WORKSTATION

BIOSOLIDS PLANT OPERATOR WORKSTATION

FOXBORO PLANT ENGINEERING WORKSTATION

BIOSOLIDS PLANT ENGINEERING WORKSTATION

DRYER AREA PLC CONTROL PANEL
8-DRY-0011-LCP

THE DRAWINGS IN THIS SET ARE RECORD DRAWINGS. THEY ARE CONSTRUCTION CONTRACT DRAWINGS WHICH HAVE BEEN REVISED BASED ON AVAILABLE FIELD INFORMATION RECORDED BY OTHERS DURING CONSTRUCTION OF THIS CONTRACT. THERE HAS BEEN NO VERIFICATION OF DIMENSIONS SHOWN ON THE CONSTRUCTION DRAWINGS OR THE ACCURACY/COMPLETENESS OF THE FIELD INFORMATION RECEIVED.

SIGNATURE DATE

DRYER AREA PLC NETWORK INTERFACE PANEL
42U
8-DRY-0011-NIP

24 PORT ETHERNET SWITCH 1U (TYP)

FIBER OPTIC PATCH PANEL 4U

FIBER PATCH CABLE

FIBER PATCH CABLE

LASER PRINTER

CENTRIFUGE NO. 1 CONTROL PANEL

CENTRIFUGE NO. 2 CONTROL PANEL

CENTRIFUGE NO. 3 CONTROL PANEL

ADMINISTRATION BLDG.
NETWORK INTERFACE PANEL
8-ADM-0011-NIP

BIOSOLIDS PLANT ENGINEERING WORKSTATION

FOXBORO FDSI FBM-233

FOXBORO FDSI FBM-233

4

ADMINISTRATION BLDG.

FIBER RING A
FIBER RING B
FIBER RING B
FIBER RING A

DEAMMONIFICATION SYSTEM VENDOR PLC CONTROL PANEL
8-DAM-1811-PNL

CENTRATE EQ TANK VCP
8-DAM-1011-PNL

CONTROLLER

THICKENED SOLIDS STORAGE TANK VCP
8-THS-1011-PNL

CONTROLLER

DIGESTER BLDG. RIO PANEL
8-DIG-0011-RIO

PHOSPHOROUS PRECIPITATION VENDOR PLC CONTROL PANEL
8-PHO-0012-PNL

SOLIDS PIPE GALLERY RIO PANEL
8-SPG-0011-RIO

GRAVITY THICKENER TRANSFER PUMPS
DIGESTED SOLIDS MIXING PUMPS CENTRIFUGE FEED PUMPS
CENTRATE FEED PUMPS GRAVITY THICKENERS

ANAEROBIC DIGESTERS
DIGESTER RECIRCULATION PUMPS
DIGESTER MIXING PUMPS
ANAEROBIC DIGESTER TRANSFER PUMPS
DIGESTER HEAT EXCHANGERS
HOT WATER SUPPLY PUMPS

DIGESTER BLDG. AREA NETWORK INTERFACE PANEL
8-DIG-0011-NIP

DIGESTER BLDG. AREA PLC CONTROL PANEL
8-DIG-0014-PNL

DIGESTER BUILDING ELECTRICAL ROOM

FIBER RING A
FIBER RING B

FIBER RING A
FIBER RING B

GBT AREA RIO PANEL
8-GBT-0011-RIO

THICKENED WAS PUMPS SCUM PUMPS SCUM TANK MIXERS
WASH WATER BOOSTER PUMPS GBT

LIQUID POLYMER FEED SYSTEM CONTROL PANEL
8-POL-2612-PNL
8-POL-2622-PNL

XXXXXXXXXX
XXXXXXXXXX

LCD DISPLAY

CONTROLLER

DIGESTED SOLIDS AREA NETWORK INTERFACE PANEL
8-GBT-0011-NIP

PRIMARY SOLIDS SCREEN LCP (TYP OF TWO)
8-PST-1012A-PNL
8-PST-1022A-PNL

HC AIR COMPRESSOR LCP (TYP OF 2)
8-THS-1212-PNL
8-THS-1222-PNL

WASTE GAS BURNER NO. 1 AND 2 LCP (TYP OF TWO)
8-DGT-1412-PNL
8-DGT-1422-PNL

CHEMICAL HANDLING AREA RIO PANEL
8-POL-0011-RIO

DILUTION WATER PUMPS

GRAVITY BELT THICKENER 1 & 2 LCP (TYP OF 2)
8-GBT-2012-PNL
8-GBT-2022-PNL

DIGESTED SOLIDS AREA PLC CONTROL PANEL
8-GBT-0012-PNL

SOLIDS PLANT ELECTRICAL ROOM

SOLIDS SCREENING AREA RIO PANEL
8-PST-0011-RIO

SODIUM HYDROXIDE FEED

PRIMARY SOLIDS SCREENS

DUAL MEMBRANE GAS HOLDER PLC CONTROL PANEL (MGHP)
8-DIG-3211-PNL

HOT WATER BOILER PLC CONTROL PANEL (TYP OF 2)
8-DIG-2412-PNL
8-DIG-2422-PNL

LEGEND:

FIBER OPTIC

COPPER ETHERNET

HARDWIRED

KEY NOTES

1. THIS EQUIPMENT SHALL BE INSTALLED AS PART OF PHASE 2 OF THE PROJECT.
2. ONLY PARTIAL RACK SHOWN. SEE DRAWING I-904 AND SPECIFICATIONS FOR COMPLETE RACK COMPONENTS.
3. CONTRACTOR SHALL PROVIDE TEMPORARY LOCATION FOR NETWORK RACK IN EXISTING ADMINISTRATION BLDG. CONTROL ROOM UNTIL CONTROL ROOM IN DRYER BLDG. IS COMPLETED IN PHASE 2. AFTER CONSTRUCTION OF CONTROL ROOM IN DRYER BLDG. CONTRACTOR SHALL RELOCATE NETWORK RACK TO THE CONTROL ROOM IN DRYER BLDG. CONTRACTOR TO COORIDNATE EXACT TEMPORARY LOCATION WITH PLANT.
4. INSTALL FOXBORO FDSI FBM-233 MODULES IN EXISTING FOXBORO CABINET.

THE DRAWINGS IN THIS SET ARE RECORD DRAWINGS. THEY ARE CONSTRUCTION CONTRACT DRAWINGS WHICH HAVE BEEN REVISED BASED ON AVAILABLE FIELD INFORMATION RECORDED BY OTHERS DURING CONSTRUCTION OF THIS CONTRACT. THERE HAS BEEN NO VERIFICATION OF DIMENSIONS SHOWN ON THE CONSTRUCTION DRAWINGS OR THE ACCURACY/COMPLETENESS OF THE FIELD INFORMATION RECEIVED.

SIGNATURE DATE

AS-BUILT REPLACEMENT SHEET

PROFESSIONAL CERTIFICATION

THIS DRAWING WAS ORIGINALLY APPROVED FOR CONSTRUCTION AND SEALED BY BILLY J. FOX, A REGISTERED PROFESSIONAL ENGINEER IN THE STATE OF MARYLAND, NO. 46603.

NOTICE TO CONTRACTORS

- PROJECT ELEVATIONS ARE BASED ON NAVD88 AND HOWARD COUNTY'S BENCHMARK SYSTEM
- PREVIOUS PROJECTS USED OTHER DATUMS
- APPLY THE FOLLOWING CONVERSIONS WHEN USING PREVIOUS CONTRACT DRAWINGS:
  - ADDITION NO. 6: SUBTRACT 0.80 FT
  - PRIOR ADDITIONS: SUBTRACT 1.04 FT

DEPARTMENT OF PUBLIC WORKS
HOWARD COUNTY, MARYLAND

CHIEF, BUREAU OF UTILITIES DATE

DES: LH
DRN: LH
CHK: BF
DATE: 12/2016

DATE	REV	DESCRIPTION
07/2019		RECORD DRAWING

INSTRUMENTATION & CONTROLS

PCS NETWORK DIAGRAM - DETAILED

LITTLE PATUXENT WATER RECLAMATION PLANT
8TH ADDITION
BIOSOLIDS PROCESSING FACILITIES - PHASE I

CAPITAL PROJECT S-6295
CONTRACT NO. 24-4935

ELECTION DISTRICT NO. 6
HOWARD COUNTY, MARYLAND

SCALE AS SHOWN

SHEET 456 OF 463

I-905

BIM 360://10054364 – Little Patuxent WRP 8th Addition/264591_Y_Ph1_V18.rvt
1/12/2022 10:09:16 AM

KEY NOTES

1. PANEL SIZE SHOWN MINIMUM REQUIRED. PANEL SIZED REQUIRED BY SYSTEMS INTEGRATOR AND SUBMITTED FOR APPROVAL TO OWNER AND ENGINEER.
2. SYSTEM INTEGRATOR TO ENSURE OPERATOR INTERFACE IS AT PROPER HEIGHT.
3. AREA PLC CONTROL PANEL TAG NUMBERS (TYP. OF 3 ENCLOSURES):

   DIGESTER BLDG. AREA PLC
   (8-DIG-0014-PNL)

   DIGESTED SOLIDS AREA PLC
   (8-GBT-0012-PNL)

   DRYER AREA BLDG. AREA PLC
   (8-DRY-0011-PNL)

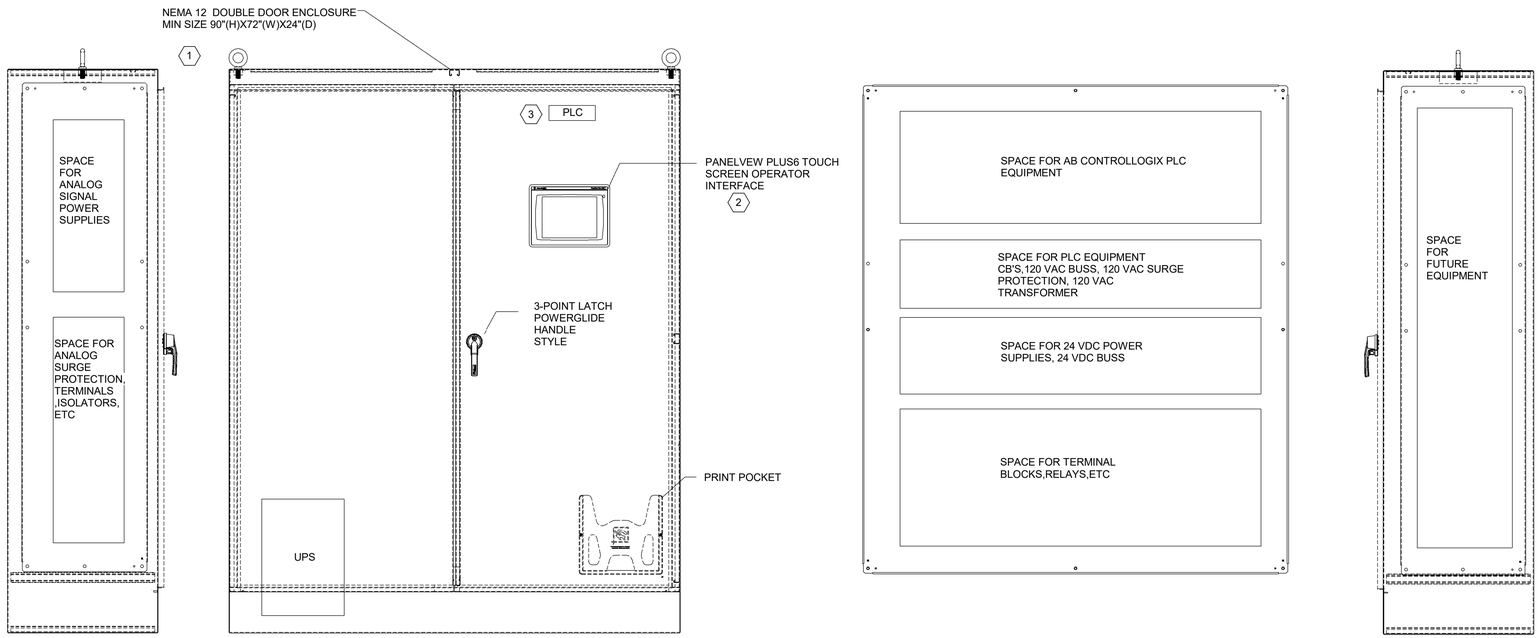

SIDE INSIDE VIEW | FROM PANEL VIEW | INSIDE VIEW | SIDE INSIDE VIEW

THE DRAWINGS IN THIS SET ARE RECORD DRAWINGS. THEY ARE CONSTRUCTION CONTRACT DRAWINGS WHICH HAVE BEEN REVISED BASED ON AVAILABLE FIELD INFORMATION RECORDED BY OTHERS DURING CONSTRUCTION OF THIS CONTRACT. THERE HAS BEEN NO VERIFICATION OF DIMENSIONS SHOWN ON THE CONSTRUCTION DRAWINGS OR THE ACCURACY/COMPLETENESS OF THE FIELD INFORMATION RECEIVED.

SIGNATURE _____ DATE 2/7/2023

AS-BUILT REPLACEMENT SHEET

PROFESSIONAL CERTIFICATION

THIS DRAWING WAS ORIGINALLY APPROVED FOR CONSTRUCTION AND SEALED BY BILLY J. FOX, A REGISTERED PROFESSIONAL ENGINEER IN THE STATE OF MARYLAND, NO. 46603.

NOTICE TO CONTRACTORS

- PROJECT ELEVATIONS ARE BASED ON NAVD88 AND HOWARD COUNTY'S BENCHMARK SYSTEM
- PREVIOUS PROJECTS USED OTHER DATUMS
- APPLY THE FOLLOWING CONVERSIONS WHEN USING PREVIOUS CONTRACT DRAWINGS:
  - ADDITION NO. 6: SUBTRACT 0.80 FT
  - PRIOR ADDITIONS: SUBTRACT 1.04 FT

DEPARTMENT OF PUBLIC WORKS
HOWARD COUNTY, MARYLAND

CHIEF, BUREAU OF UTILITIES DATE

DES: LH
DRN: LH
CHK: BF
DATE: 12/2016

DATE	REV	DESCRIPTION
07/2019		RECORD DRAWING

INSTRUMENTATION & CONTROLS

AREA PLC CONTROL PANEL LAYOUT

LITTLE PATUXENT WATER RECLAMATION PLANT
8TH ADDITION
BIOSOLIDS PROCESSING FACILITIES - PHASE I

CAPITAL PROJECT S-6295
CONTRACT NO. 24-4935

ELECTION DISTRICT NO. 6
HOWARD COUNTY, MARYLAND

SCALE AS SHOWN

SHEET **457** OF **463**

I-906

BIM 360://10054364 – Little Patuxent WRP 8th Addition/264591_Y_Ph1_V18.rvt
1/12/2022 10:09:18 AM

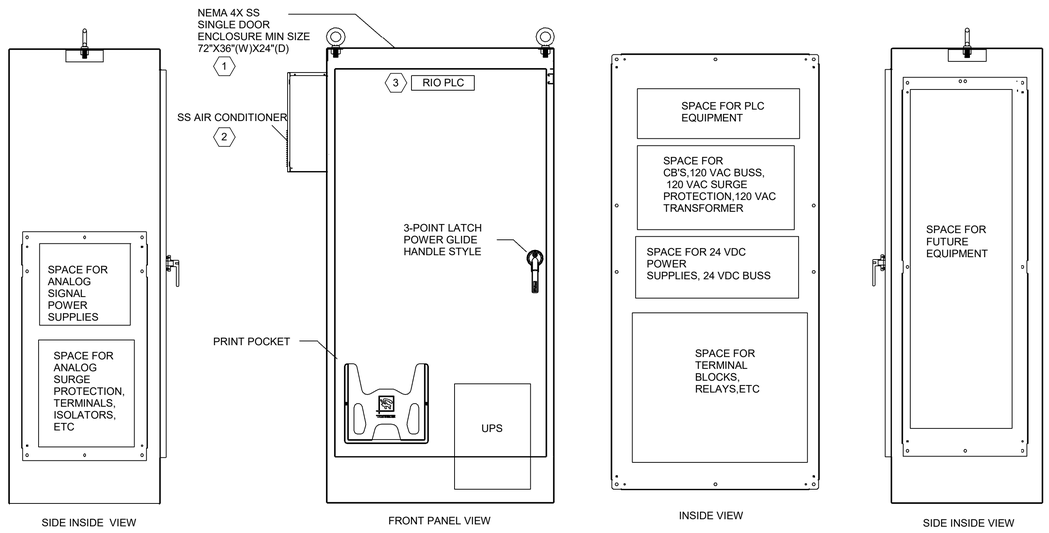

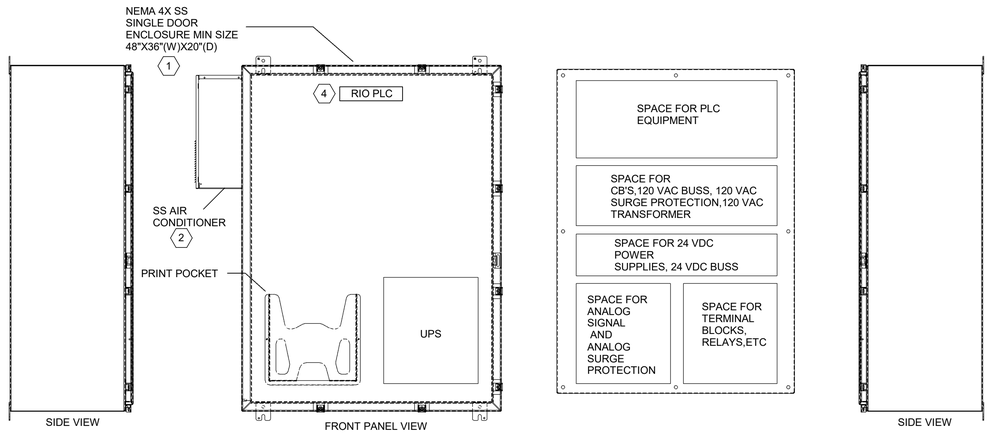

KEY NOTES

1. PANEL SIZE SHOWN MINIMUM REQUIRED. PANEL SIZED REQUIRED BY SYSTEMS INTEGRATOR AND SUBMITTED FOR APPROVAL TO OWNER AND ENGINEER.
2. AIR CONDITIONER TO BE SIZED PROPERLY BY SYSTEM INTEGRATOR
3. RIO PLC CONTROL PANEL TAG NUMBER:

   DIGESTER BUILDING RIO PLC
   (8-DIG-0011-RIO)
4. RIO PLC CONTROL PANEL TAG NUMBER:

   GBT AREA RIO PLC
   (8-GBT-0011-RIO)

   POLYMER AREA RIO PLC
   (8-POL-0011-RIO)

   SOLIDS SCREENING RIO PLC
   (8-PST-0011-RIO)

   SOLIDS PIPE GALLERY RIO PLC
   (8-SPG-0011-RIO)

THE DRAWINGS IN THIS SET ARE RECORD DRAWINGS. THEY ARE CONSTRUCTION CONTRACT DRAWINGS WHICH HAVE BEEN REVISED BASED ON AVAILABLE FIELD INFORMATION RECORDED BY OTHERS DURING CONSTRUCTION OF THIS CONTRACT. THERE HAS BEEN NO VERIFICATION OF DIMENSIONS SHOWN ON THE CONSTRUCTION DRAWINGS OR THE ACCURACY/COMPLETENESS OF THE FIELD INFORMATION RECEIVED.

SIGNATURE — DATE 2/7/2022

AS-BUILT REPLACEMENT SHEET

PROFESSIONAL CERTIFICATION

THIS DRAWING WAS ORIGINALLY APPROVED FOR CONSTRUCTION AND SEALED BY BILLY J. FOX, A REGISTERED PROFESSIONAL ENGINEER IN THE STATE OF MARYLAND, NO. 46603.

NOTICE TO CONTRACTORS

- PROJECT ELEVATIONS ARE BASED ON NAVD88 AND HOWARD COUNTY'S BENCHMARK SYSTEM
- PREVIOUS PROJECTS USED OTHER DATUMS
- APPLY THE FOLLOWING CONVERSIONS WHEN USING PREVIOUS CONTRACT DRAWINGS:
  - ADDITION NO. 6: SUBTRACT 0.80 FT
  - PRIOR ADDITIONS: SUBTRACT 1.04 FT

DEPARTMENT OF PUBLIC WORKS
HOWARD COUNTY, MARYLAND

CHIEF, BUREAU OF UTILITIES — DATE

DES: LH
DRN: LH
CHK: BF
DATE: 12/2016

DATE	REV	DESCRIPTION
07/2019		RECORD DRAWING

INSTRUMENTATION & CONTROLS

RIO PLC CONTROL PANEL LAYOUT

LITTLE PATUXENT WATER RECLAMATION PLANT
8TH ADDITION
BIOSOLIDS PROCESSING FACILITIES - PHASE I

CAPITAL PROJECT S-6295
CONTRACT NO. 24-4935

ELECTION DISTRICT NO. 6
HOWARD COUNTY, MARYLAND

SCALE AS SHOWN

SHEET 458 OF 463

I-907

BIM 360://10054364 – Little Patuxent WRP 8th Addition/284591_Y_Ph1_V18.rvt
1/12/2022 10:09:19 AM

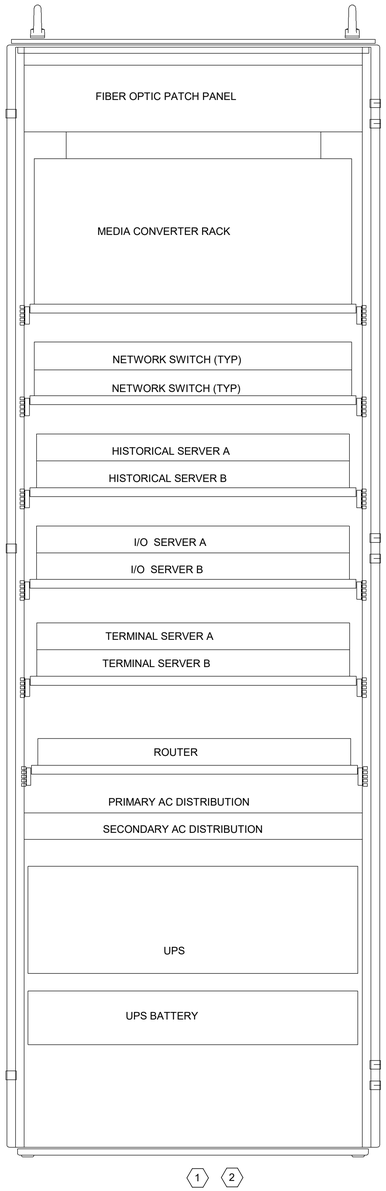

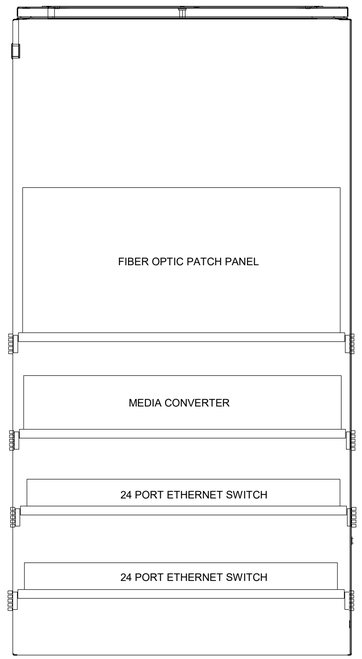

KEY NOTES

1. SERVER RACK 42U COMMUNICATIONS ENCLOSURE(TYP.) AT THE DEWATERING AND THE DRYER BUILDING.
2. SYSTEM INTEGRATOR TO ENSURE PROPER RACK COOLING.
3. SERVER RACK 24U COMMUNICATIONS ENCLOSURE(TYP.)

THE DRAWINGS IN THIS SET ARE RECORD DRAWINGS. THEY ARE CONSTRUCTION CONTRACT DRAWINGS WHICH HAVE BEEN REVISED BASED ON AVAILABLE FIELD INFORMATION RECORDED BY OTHERS DURING CONSTRUCTION OF THIS CONTRACT. THERE HAS BEEN NO VERIFICATION OF DIMENSIONS SHOWN ON THE CONSTRUCTION DRAWINGS OR THE ACCURACY/COMPLETENESS OF THE FIELD INFORMATION RECEIVED.

SIGNATURE _____ DATE 2/7/2022

AS-BUILT REPLACEMENT SHEET

PROFESSIONAL CERTIFICATION

THIS DRAWING WAS ORIGINALLY APPROVED FOR CONSTRUCTION AND SEALED BY BILLY J. FOX, A REGISTERED PROFESSIONAL ENGINEER IN THE STATE OF MARYLAND, NO. 46603.

NOTICE TO CONTRACTORS

- PROJECT ELEVATIONS ARE BASED ON NAVD88 AND HOWARD COUNTY'S BENCHMARK SYSTEM
- PREVIOUS PROJECTS USED OTHER DATUMS
- APPLY THE FOLLOWING CONVERSIONS WHEN USING PREVIOUS CONTRACT DRAWINGS:
  - ADDITION NO. 6: SUBTRACT 0.80 FT
  - PRIOR ADDITIONS: SUBTRACT 1.04 FT

DEPARTMENT OF PUBLIC WORKS
HOWARD COUNTY, MARYLAND

CHIEF, BUREAU OF UTILITIES DATE

DES: LH
DRN: LH
CHK: BF
DATE: 12/2016

DATE	REV	DESCRIPTION
07/2019		RECORD DRAWING

INSTRUMENTATION & CONTROLS

NETWORK EQUIPMENT RACK PANEL LAYOUT

LITTLE PATUXENT WATER RECLAMATION PLANT
8TH ADDITION
BIOSOLIDS PROCESSING FACILITIES - PHASE I

CAPITAL PROJECT S-6295
CONTRACT NO. 24-4935

ELECTION DISTRICT NO. 6
HOWARD COUNTY, MARYLAND

SCALE AS SHOWN

SHEET 459 OF 463

I-908

BIM 360://10054364 – Little Patuxent WRP 8th Addition/264591_Y_Ph1_V18.rvt
1/12/2022 10:09:21 AM

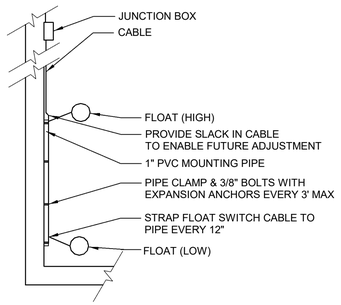

NOTE:
1. WHEN FLOATS ARE SET CLOSER THAN 18" OF LEVEL DIFFERENCE, ROTATE FLOATS AROUND PIPE TO AVOID INTERFERENCE

1 - FLOAT SWITCH
NOT TO SCALE

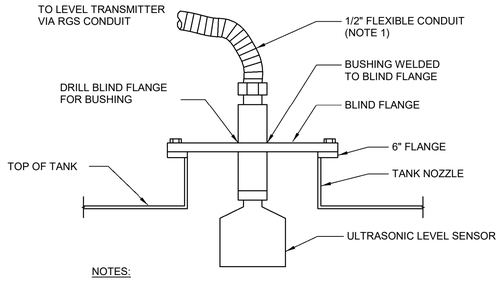

NOTES:
1. FLEX CONDUIT LENGTH TO BE SUFFICIENT TO ALLOW REMOVAL OF SENSOR.
2. USE CONDUIT EXTENSION BETWEEN BUSHING AND SENSOR IF REQUIRED TO ENSURE BOTTOM OF SENSOR IS BELOW TANK TOP.

2 - ULTRASONIC SENSOR FLANGE MOUNT ON TOP OF TANK
NOT TO SCALE

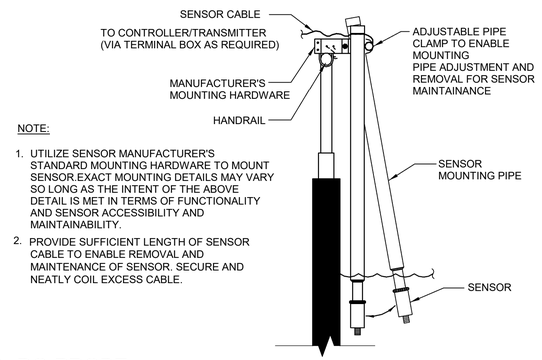

NOTE:
1. UTILIZE SENSOR MANUFACTURER'S STANDARD MOUNTING HARDWARE TO MOUNT SENSOR.EXACT MOUNTING DETAILS MAY VARY SO LONG AS THE INTENT OF THE ABOVE DETAIL IS MET IN TERMS OF FUNCTIONALITY AND SENSOR ACCESSIBILITY AND MAINTAINABILITY.
2. PROVIDE SUFFICIENT LENGTH OF SENSOR CABLE TO ENABLE REMOVAL AND MAINTENANCE OF SENSOR. SECURE AND NEATLY COIL EXCESS CABLE.

3 - DO PROBE
NOT TO SCALE

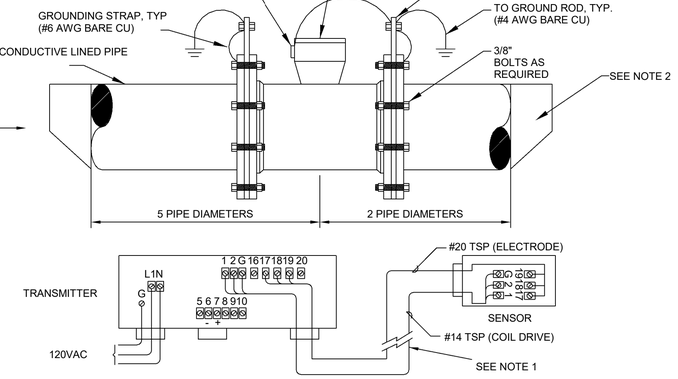

NOTES:
1. INSTALL EQUAL LENGTHS OF ELECTRODE AND COIL DRIVE CABLES BETWEEN SENSOR AND TRANSMITTER.
2. USE ECCENTRIC REDUCERS AS REQUIRED.

4 - MAGMETER
NOT TO SCALE

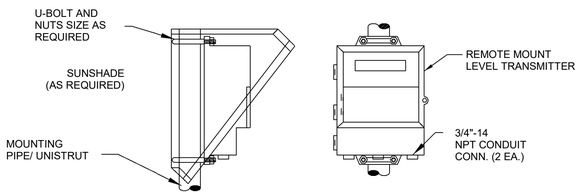

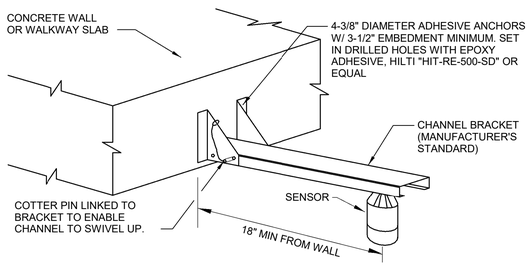

NOTE:
1. MANUFACTURER'S CABLE TO TRANSMITTER NOT SHOWN. PROVIDE SUFFICIENT LENGTH OF FLEXIBLE CONDUIT TO FACILITATE REMOVAL OF SENSOR.

5 - ULTRASONIC SENSOR AND TRANSMITTER
NOT TO SCALE

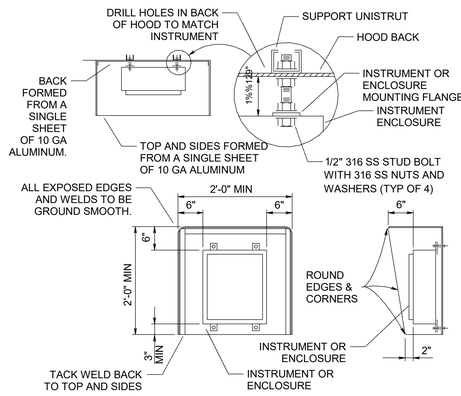

6 - INSTRUMENT SUN AND RAIN HOOD
NOT TO SCALE

THE DRAWINGS IN THIS SET ARE RECORD DRAWINGS. THEY ARE CONSTRUCTION CONTRACT DRAWINGS WHICH HAVE BEEN REVISED BASED ON AVAILABLE FIELD INFORMATION RECORDED BY OTHERS DURING CONSTRUCTION OF THIS CONTRACT. THERE HAS BEEN NO VERIFICATION OF DIMENSIONS SHOWN ON THE CONSTRUCTION DRAWINGS OR THE ACCURACY/COMPLETENESS OF THE FIELD INFORMATION RECEIVED.

SIGNATURE — DATE: 2/7/2023

BIM 360://10054364 – Little Patuxent WRP 8th Addition/264591_Y_Ph1_V18.rvt
1/12/2022 10:09:23 AM

AS-BUILT REPLACEMENT SHEET

PROFESSIONAL CERTIFICATION
THIS DRAWING WAS ORIGINALLY APPROVED FOR CONSTRUCTION AND SEALED BY BILLY J. FOX, A REGISTERED PROFESSIONAL ENGINEER IN THE STATE OF MARYLAND, NO. 46603.

NOTICE TO CONTRACTORS
- PROJECT ELEVATIONS ARE BASED ON NAVD88 AND HOWARD COUNTY'S BENCHMARK SYSTEM
- PREVIOUS PROJECTS USED OTHER DATUMS
- APPLY THE FOLLOWING CONVERSIONS WHEN USING PREVIOUS CONTRACT DRAWINGS:
  - ADDITION NO. 6: SUBTRACT 0.80 FT
  - PRIOR ADDITIONS: SUBTRACT 1.04 FT

DEPARTMENT OF PUBLIC WORKS
HOWARD COUNTY, MARYLAND

CHIEF, BUREAU OF UTILITIES — DATE

DES: LH
DRN: LH
CHK: BF
DATE: 12/2016

DATE	REV	DESCRIPTION
07/2019		RECORD DRAWING

INSTRUMENTATION & CONTROLS

INSTRUMENTATION DETAILS 1

LITTLE PATUXENT WATER RECLAMATION PLANT
8TH ADDITION
BIOSOLIDS PROCESSING FACILITIES - PHASE I

CAPITAL PROJECT S-6295
CONTRACT NO. 24-4935

ELECTION DISTRICT NO. 6
HOWARD COUNTY, MARYLAND

SCALE AS SHOWN

SHEET **460** OF **463**

I-909

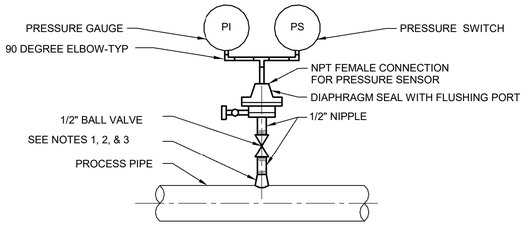

NOTES:

1. FOR STL, GSP, AND PVC 2 1/2" AND SMALLER, USE A BUSHING TEE.
2. FOR DI AND FRP ALL SIZES, USE PIPE SADDLE W/ BUSHING.
3. FOR STL AND SST PIPES 3" AND LARGER, AND PRESSURE VESSELS, USE THREAD-O-LET, OR EQUAL, AS SHOWN.
4. DIAPHRAGM SEAL - PRESSURE SWITCH ASSEMBLY TO BE FACTORY ASSEMBLED.

1 - PRESSURE GAUGE AND SWITCH WITH DIAPHRAGM SEAL
NOT TO SCALE

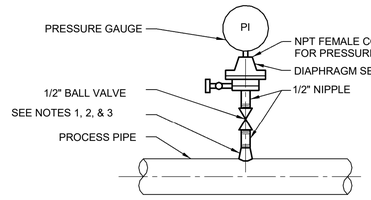

NOTES:

1. FOR STL, GSP, AND PVC 2 1/2" AND SMALLER, USE A BUSHING TEE.
2. FOR DI AND FRP ALL SIZES, USE PIPE SADDLE W/ BUSHING.
3. FOR STL AND SST PIPES 3" AND LARGER, AND PRESSURE VESSELS, USE THREAD-O-LET, OR EQUAL, AS SHOWN.
4. DIAPHRAGM SEAL - PRESSURE SWITCH ASSEMBLY TO BE FACTORY ASSEMBLED.

2 - PRESSURE GAUGE WITH DIAPHRAGM SEAL
NOT TO SCALE

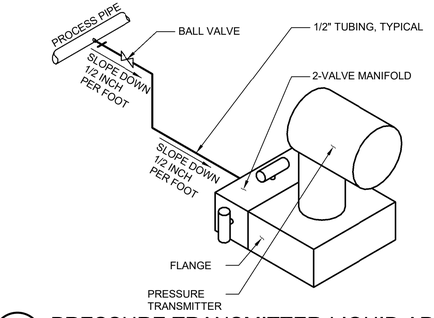

3 - PRESSURE TRANSMITTER-LIQUID APPLICATIONS
NOT TO SCALE

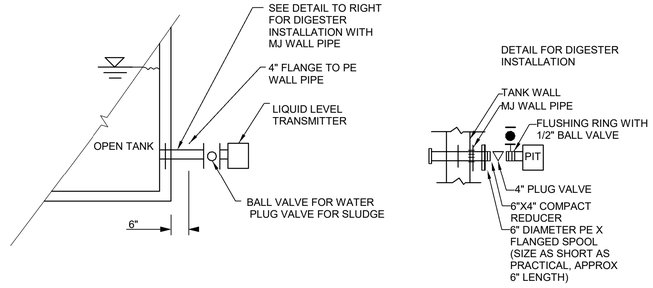

4 - OPEN TYPE FLANGE MOUNTED LIQUID LEVEL TRANSMITTER
NOT TO SCALE

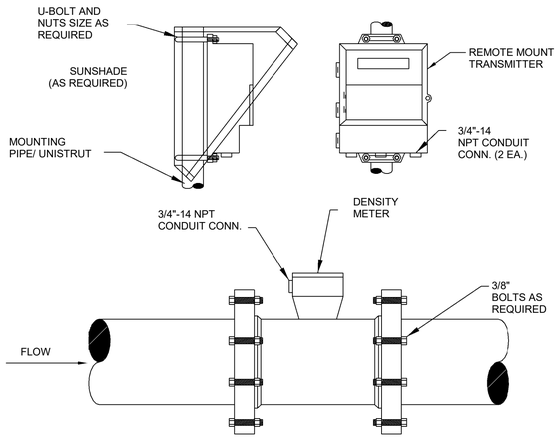

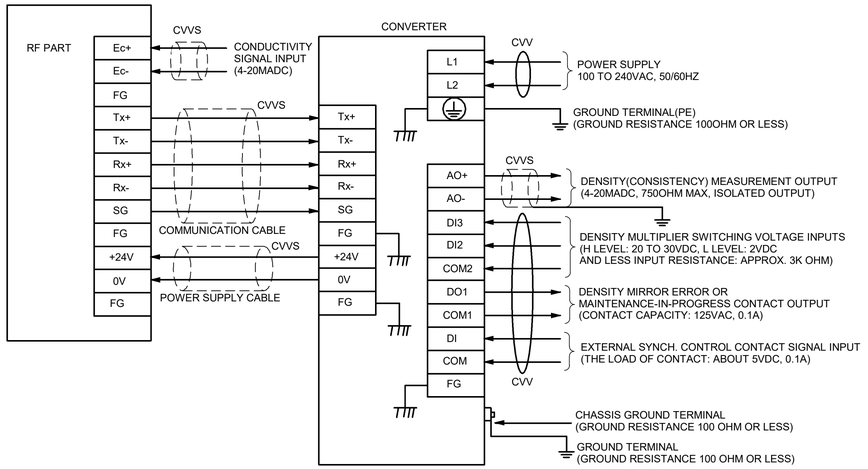

5 - SOLIDS DENSITY METER
NOT TO SCALE

THE DRAWINGS IN THIS SET ARE RECORD DRAWINGS. THEY ARE CONSTRUCTION CONTRACT DRAWINGS WHICH HAVE BEEN REVISED BASED ON AVAILABLE FIELD INFORMATION RECORDED BY OTHERS DURING CONSTRUCTION OF THIS CONTRACT. THERE HAS BEEN NO VERIFICATION OF DIMENSIONS SHOWN ON THE CONSTRUCTION DRAWINGS OR THE ACCURACY/COMPLETENESS OF THE FIELD INFORMATION RECEIVED.

SIGNATURE — DATE

AS-BUILT REPLACEMENT SHEET

PROFESSIONAL CERTIFICATION

THIS DRAWING WAS ORIGINALLY APPROVED FOR CONSTRUCTION AND SEALED BY BILLY J. FOX, A REGISTERED PROFESSIONAL ENGINEER IN THE STATE OF MARYLAND, NO. 46603.

NOTICE TO CONTRACTORS

- PROJECT ELEVATIONS ARE BASED ON NAVD88 AND HOWARD COUNTY'S BENCHMARK SYSTEM
- PREVIOUS PROJECTS USED OTHER DATUMS
- APPLY THE FOLLOWING CONVERSIONS WHEN USING PREVIOUS CONTRACT DRAWINGS:
  - ADDITION NO. 6: SUBTRACT 0.80 FT
  - PRIOR ADDITIONS: SUBTRACT 1.04 FT

DEPARTMENT OF PUBLIC WORKS
HOWARD COUNTY, MARYLAND

CHIEF, BUREAU OF UTILITIES — DATE

DES: LH
DRN: LH
CHK: BF
DATE: 12/2016

DATE	REV	DESCRIPTION
07/2019		RECORD DRAWING

INSTRUMENTATION & CONTROLS

INSTRUMENTATION DETAILS 2

LITTLE PATUXENT WATER RECLAMATION PLANT
8TH ADDITION
BIOSOLIDS PROCESSING FACILITIES - PHASE I

CAPITAL PROJECT S-6295
CONTRACT NO. 24-4935

ELECTION DISTRICT NO. 6
HOWARD COUNTY, MARYLAND

SCALE AS SHOWN

SHEET **461** OF **463**

I-910

BIM 360://10054364 – Little Patuxent WRP 8th Addition/264591_Y_Ph1_V18.rvt
1/12/2022 10:09:24 AM

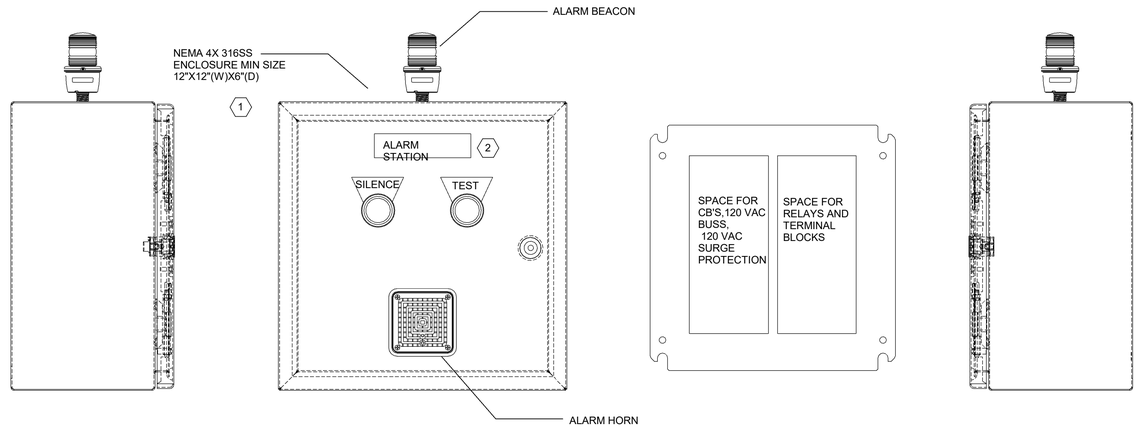

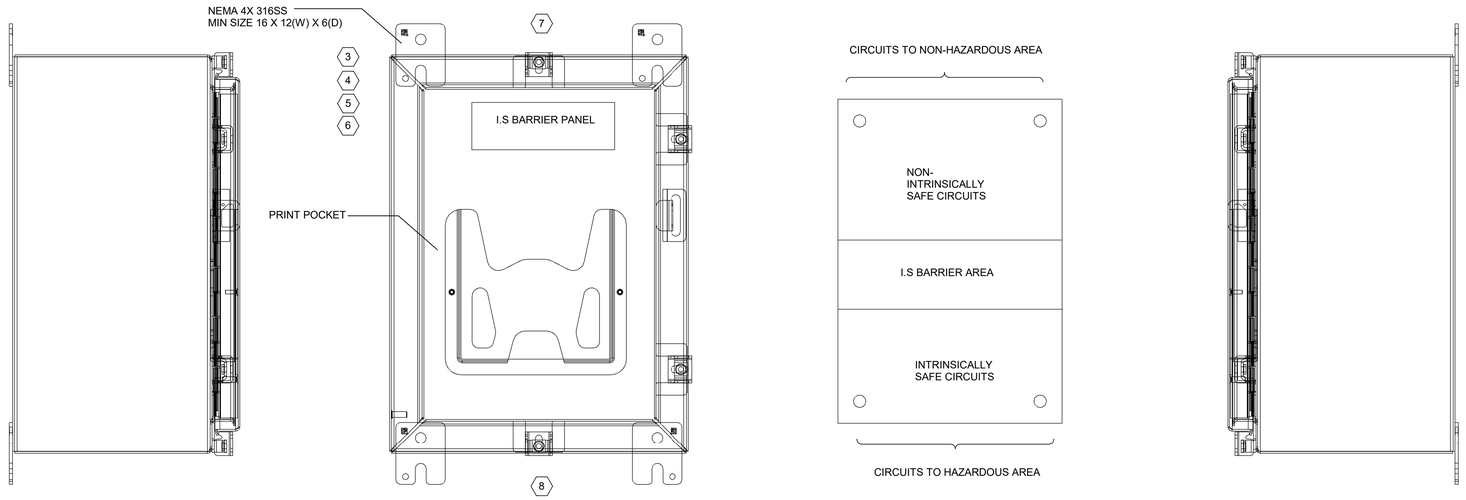

KEY NOTES

1. PANEL SIZE SHOWN MINIMUM REQUIRED. PANEL SIZED REQUIRED BY SYSTEMS INTEGRATOR AND SUBMITTED FOR APPROVAL TO OWNER AND ENGINEER.

2. LOCAL ALARM STATION TAG NUMBER:

   GBT AREA LOCAL ALARM STATION
   (8-GBT-0022-PNL)

   DIGESTER BUILDING LOCAL ALARM STATION
   (8-DIG-0024-PNL)

   SLUDGE SCREENING LOCAL ALARM STATION
   (8-PST-0012-PNL)

   CHEMICAL HANDLING AREA LOCAL ALARM STATION
   (8-PST-0022-PNL)

   SOLIDS PIPE GALLERY LOCAL ALARM STATION
   (8-CTR-0011-PNL)

   WASTE GAS FLARE LOCAL ALARM STATION
   (8-DGT-1411-PNL)

   DEAMMONIFICATION AREA LOCAL ALARM STATION
   (8-DAM-0022-PNL)

   PHOSPHORUS PRECIPITATION AREA LOCAL ALARM STATION
   (8-PHO-0022-PNL)

3. INSTALL INTRINSICALLY SAFE BARRIERS IN ACCORDANCE WITH ARTICLE 504 OF THE NATIONAL ELECTRICAL CODE.

4. I.S SAFE BARRIER PANEL TO BE BUILT IN ACCORDANCE TO UL698A STANDARDS.

5. I.S BARRIER PANEL TAG NUMBER:

   DIGESTER BLDG. I.S. BARRIER PANEL
   (8-DIG-3201-ISB)

   PHOSPHOROUS PRECIPITATION I.S BARRIER PANEL
   (8-PHO-2411-ISB)

6. MINIMUM SIZES SHOWN. CONTRACTOR SHALL DETERMINE EXACT SIZE AND SHALL PROVIDE LARGER PANEL IF NECESSARY. FURNISH I.S. BARRIER QUANTITY AS SHOWN ON THE CONTRACT DRAWINGS.

7. SAFE WIRING CONDUIT SHALL BE RUN TO THE TOP OF THE ENCLOSURE

8. NON-SAFE WIRING CONDUIT SHALL BE RUN TO THE BOTTOM OF THE ENCLOSURE

THE DRAWINGS IN THIS SET ARE RECORD DRAWINGS. THEY ARE CONSTRUCTION CONTRACT DRAWINGS WHICH HAVE BEEN REVISED BASED ON AVAILABLE FIELD INFORMATION RECORDED BY OTHERS DURING CONSTRUCTION OF THIS CONTRACT. THERE HAS BEEN NO VERIFICATION OF DIMENSIONS SHOWN ON THE CONSTRUCTION DRAWINGS OR THE ACCURACY/COMPLETENESS OF THE FIELD INFORMATION RECEIVED.

SIGNATURE — DATE 2/7/2023

AS-BUILT REPLACEMENT SHEET

PROFESSIONAL CERTIFICATION

THIS DRAWING WAS ORIGINALLY APPROVED FOR CONSTRUCTION AND SEALED BY BILLY J. FOX, A REGISTERED PROFESSIONAL ENGINEER IN THE STATE OF MARYLAND, NO. 46603.

NOTICE TO CONTRACTORS

- PROJECT ELEVATIONS ARE BASED ON NAVD88 AND HOWARD COUNTY'S BENCHMARK SYSTEM
- PREVIOUS PROJECTS USED OTHER DATUMS
- APPLY THE FOLLOWING CONVERSIONS WHEN USING PREVIOUS CONTRACT DRAWINGS:
  - ADDITION NO. 6: SUBTRACT 0.80 FT
  - PRIOR ADDITIONS: SUBTRACT 1.04 FT

DEPARTMENT OF PUBLIC WORKS
HOWARD COUNTY, MARYLAND

CHIEF, BUREAU OF UTILITIES — DATE

DES: LH
DRN: LH
CHK: BF
DATE: 12/2016

DATE	REV	DESCRIPTION
07/2019		RECORD DRAWING

INSTRUMENTATION & CONTROLS

MISCELLANEOUS CONTROL PANELS

LITTLE PATUXENT WATER RECLAMATION PLANT
8TH ADDITION
BIOSOLIDS PROCESSING FACILITIES - PHASE I

CAPITAL PROJECT S-6295
CONTRACT NO. 24-4935

ELECTION DISTRICT NO. 6
HOWARD COUNTY, MARYLAND

SCALE AS SHOWN

SHEET 462 OF 463

I-911

BIM 360://10054364 – Little Patuxent WRP 8th Addition/264591_Y_Ph1_V18.rvt
1/12/2022 10:09:26 AM

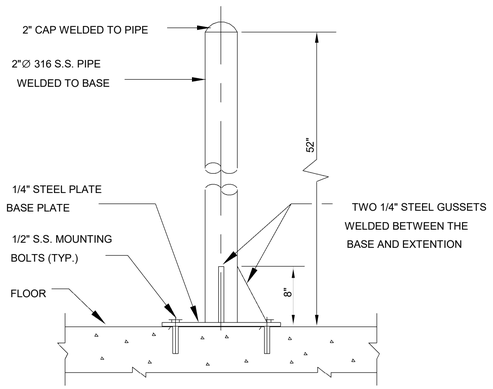

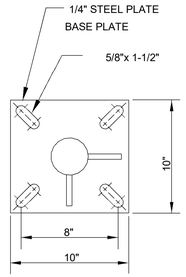

BASE PLATE

FLOOR MOUNTING SUPPORT FOR INSTRUMENTS

GENERAL NOTES:

1. PREFABRICATED TYPE, O'BRIEN CORP.
   MODEL: SADDLEPAK FP52Z OR EQUAL

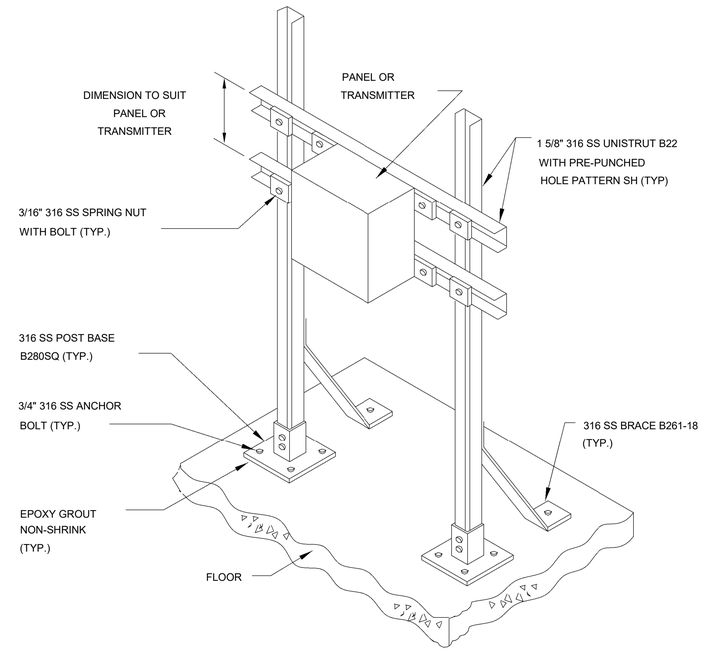

FLOOR MOUNTING SUPPORT FOR PANEL OR TRANSMITTER

GENERAL NOTES:

1. USE ALL STAINLESS STEEL MOUNTING HARDWARE.
2. SEE PROCESS OR ELECTRICAL DRAWINGS FOR MOUNTING LOCATIONS.
3. BOTTOM OF PANEL OR TRANSMITTER SHALL BE NOT LESS THAN 3 1/2 FEET FROM FINISHED FLOOR AND TOP OF PANEL SHALL BE NO MORE THAN 5 1/2 FEET FROM FINISHED FLOOR.
4. OPTIONAL STRUT CHANNEL. IF MOUNTED DIRECTLY TO WALL PROVIDE SPACER TO ALLOW MINIMUM 2" AIR GAP BETWEEN ENCLOSURE BACK AND WALL.

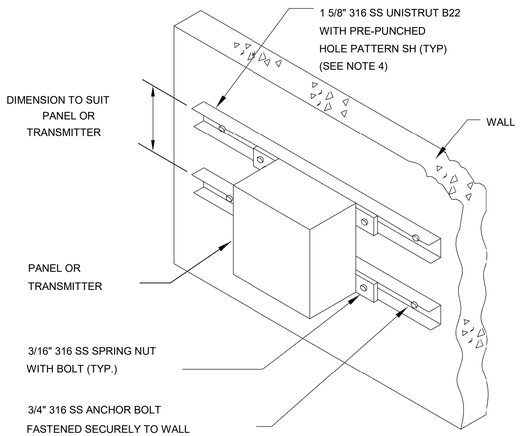

WALL MOUNTING SUPPORT FOR PANEL OR TRANSMITTER

THE DRAWINGS IN THIS SET ARE RECORD DRAWINGS. THEY ARE CONSTRUCTION CONTRACT DRAWINGS WHICH HAVE BEEN REVISED BASED ON AVAILABLE FIELD INFORMATION RECORDED BY OTHERS DURING CONSTRUCTION OF THIS CONTRACT. THERE HAS BEEN NO VERIFICATION OF DIMENSIONS SHOWN ON THE CONSTRUCTION DRAWINGS OR THE ACCURACY/COMPLETENESS OF THE FIELD INFORMATION RECEIVED.

SIGNATURE _____ DATE 2/7/2022

AS-BUILT REPLACEMENT SHEET

PROFESSIONAL CERTIFICATION

THIS DRAWING WAS ORIGINALLY APPROVED FOR CONSTRUCTION AND SEALED BY BILLY J. FOX, A REGISTERED PROFESSIONAL ENGINEER IN THE STATE OF MARYLAND, NO. 46603.

NOTICE TO CONTRACTORS

- PROJECT ELEVATIONS ARE BASED ON NAVD88 AND HOWARD COUNTY'S BENCHMARK SYSTEM
- PREVIOUS PROJECTS USED OTHER DATUMS
- APPLY THE FOLLOWING CONVERSIONS WHEN USING PREVIOUS CONTRACT DRAWINGS:
  - ADDITION NO. 6: SUBTRACT 0.80 FT
  - PRIOR ADDITIONS: SUBTRACT 1.04 FT

DEPARTMENT OF PUBLIC WORKS
HOWARD COUNTY, MARYLAND

CHIEF, BUREAU OF UTILITIES DATE

DES: LH
DRN: LH
CHK: BF
DATE: 12/2016

DATE	REV	DESCRIPTION
07/2019		RECORD DRAWING

INSTRUMENTATION & CONTROLS

TYPICAL MOUNTING FOR PANEL OR TRANSMITTER DETAILS

LITTLE PATUXENT WATER RECLAMATION PLANT
8TH ADDITION
BIOSOLIDS PROCESSING FACILITIES - PHASE I

CAPITAL PROJECT S-6295
CONTRACT NO. 24-4935

ELECTION DISTRICT NO. 6
HOWARD COUNTY, MARYLAND

SCALE AS SHOWN

SHEET 463 OF 463

I-912

BIM 360://10054364 – Little Patuxent WRP 8th Addition/264591_Y_Ph1_V18.rvt
1/12/2022 10:09:27 AM