GENERAL NOTES

1. ALL CONSTRUCTION SHALL BE IN ACCORDANCE WITH THE LATEST STANDARDS AND SPECIFICATIONS OF HOWARD COUNTY PLUS MSHA STANDARDS AND SPECIFICATIONS, IF APPLICABLE.
2. THE CONTRACTOR SHALL NOTIFY "MISS UTILITY" (800-257-7777) AT LEAST FIVE (5) WORKING DAYS PRIOR TO STARTING ANY WORK.
3. THE CONTRACTOR SHALL NOTIFY THE DEPARTMENT OF PUBLIC WORKS/ BUREAU OF ENGINEERING/CONSTRUCTION INSPECTION DIVISION AT (410) 313-1880 AT LEAST FIVE (5) WORKING DAYS PRIOR TO THE START OF WORK.
4. BOUNDARY AND TOPOGRAPHIC INFORMATION SHOWN IS BASED UPON FIELD RUN SURVEY WITH MAX. 2' CONTOUR INTERVALS CONDUCTED BY KCI TECHNOLOGIES, INC. IN SEPTEMBER 2014 AND AERIAL TOPO FROM VIRGINIA RESOURCE MAPPING IN APRIL 27, 2009.
5. THIS PLAN IS SUBJECT TO WAIVER PETITION WP-16-056, APPROVED ON NOVEMBER 23, 2015, TO WAIVE SUBDIVISION SECTIONS 16.115.(C)(1) (TEMPORARY FLOODPLAIN DISTURBANCE), 16.116.(A)(1) (WETLAND BUFFER ENCROACHMENT), AND 16.116.(A)(2)(IV) (PERENNIAL STREAM BANK ENCROACHMENT).
6. A JOINT FEDERAL/STATE APPLICATION FOR THE ALTERATION OF ANY FLOODPLAIN, WATERWAY, TIDAL, OR NON-TIDAL WETLAND HAS BEEN FILED WITH AND APPROVED BY THE MARYLAND DEPARTMENT OF THE ENVIRONMENT (MDE), SEPTEMBER, 2015 (PERMIT NO. 15-NT-3191/201561055).
7. THE FLOODPLAIN STUDY FOR THIS PROJECT WAS PREPARED BY KCI TECHNOLOGIES, INC., SEPTEMBER, 2015 AND APPROVED BY THE HOWARD COUNTY DEVELOPMENT ENGINEERING DIVISION ON 11-6-2015. THE STUDY AREA IS LOCATED WITHIN FEMA FIRM PANEL 24027C0135D. THE TRIBUTARY ITSELF IS OUTSIDE OF THE FEMA LIMIT OF STUDY; HOWEVER, THE CONFLUENCE OF THE TRIBUTARY WITH THE LITTLE PATUXENT RIVER IS WITHIN A FEMA FLOOD ZONE AE, DESIGNATED AS STREAM LPR-1 ON THE FIRM PANEL. THE FLOOD ELEVATION ON THE FIRM PANEL AT THE CONFLUENCE IS APPROXIMATELY ELEVATION 385 FT, WITH THE FEMA FLOOPLAIN BOUNDARY CORRELATING TO UPSTREAM OF HEC-RAS STATION 273.4, WITH A SIMILAR 100-YEAR FLOOD ELEVATION OF 385 FT. THEREFORE, SINCE THE FLOODPLAIN BOUNDARY PRODUCED BY THE CURRENT FLOOD STUDY MEETS THE EXISTING FEMA FLOOD BOUNDARY AT APPROXIMATELY THE SAME ELEVATION AND THE FLOW REGIME ALONG THE PROFILE AT THE INTERSECTION IS SUB-CRITICAL NORMAL DEPTH, NO FURTHER ANALYSIS OF THE FEMA STUDY IS REQUIRED.
8. THE WETLANDS DELINEATION STUDY FOR THE PROJECT WAS PREPARED BY KCI TECHNOLOGIES, INC. JULY 2015 AND WAS APPROVED BY THE MARYLAND DEPARTMENT OF THE ENVIRONMENT (MDE), SEPTEMBER, 2015 (PERMIT NO. 15-NT-3191/201561055).
9. BURNING OF COMBUSTIBLE MATERIALS FROM DEMOLISHED STRUCTURES WILL NOT BE PERMITTED ON SITE.
10. CONTRACTOR SHALL INSURE THAT ALL MATERIAL REMOVED FROM DEMOLISHED STRUCTURES ARE LEGALLY DISPOSED OF OFF-SITE.
11. SEE DEMOLITION PLAN FOR APPROXIMATE LIMITS OF SIDEWALK AND PAVING REMOVAL.
12. EXISTING UTILITIES ARE BASED ON FIELD RUN TOPO PERFORMED BY KCI TECHNOLOGIES, INC. SEPTEMBER 2014 AND EXISTING SITE DEVELOPMENT PLANS OBTAINED FROM HOWARD COUNTY.
13. A GEOTECHNICAL STUDY WAS PREPARED BY FROEHLING & ROBERTSON, INC., DATED MAY 2015.
14. IT SHALL BE DISTINCTLY UNDERSTOOD THAT FAILURE TO MENTION SPECIFICALLY ANY WORK WHICH WOULD NORMALLY BE REQUIRED TO COMPLETE THIS PROJECT SHALL NOT RELIEVE THE CONTRACTOR OF HIS RESPONSIBILITY TO COMPLETE SUCH WORK.
15. A PLANNING BOARD MEETING FOR THE DRIVEWAY ACROSS LOT A-2 AS SHOWN ON THIS SITE PLAN, SDP-16-003 AND FOR RED-LINE REVISIONS TO SDP-73-051, T.C., 6/2, LOT C-2 AND SDP-78-083, T.C., 6/2, LOT C-1 WAS HELD AND APPROVED ON 12-17-15.
16. SEE ARCHITECTURAL PLANS FOR ADDITIONAL BUILDING INFORMATION.
17. SEE MECHANICAL/ELECTRICAL/PLUMBING PLANS FOR ADDITIONAL MECHANICAL/ELECTRICAL/PLUMBING DEMOLITION AND CONSTRUCTION INFORMATION.
18. TRAFFIC CONTROL DEVICES:
    - A.) ALL STOP AND YIELD SIGNS AS WELL AS ANY STREET NAME SIGNS (SNS) MUST BE INSTALLED BEFORE THE BASE PAVING IS COMPLETED.
    - B.) ALL TRAFFIC CONTROL DEVICES AND THEIR LOCATIONS SHALL BE IN ACCORDANCE WITH THE LATEST EDITION OF THE MARYLAND MANUAL ON UNIFORM TRAFFIC CONTROL DEVICES MDMUTCD).
    - C.) ALL SIGN POSTS USED FOR TRAFFIC CONTROL SIGNS SHALL BE MOUNTED ON A 2" GALVANIZED STEEL, PERFORATED, SQUARE TUBE POST (14 GAUGE) INSERTED INTO A 2-1/2" GALVANIZED STEEL, PERFORATED, SQUARE TUBE SLEEVE (12 GAUGE) - 3' LONG. A GALVANIZED STEEL POLE CAP SHALL BE MOUNTED ON TOP OF EACH POST.
19. ALL PLAN DIMENSIONS ARE TO THE FACE OF CURB UNLESS OTHERWISE NOTED.
20. CONTRACTOR TO ADJUST TOP OF CURB GRADES AS NECESSARY TO PROVIDE SMOOTH TRANSITION TO EXISTING.
21. SAW CUT EXISTING PAVEMENT AS NEEDED TO INSTALL NEW CONSTRUCTION.
22. THE CONTRACTOR SHALL NOTE THAT IN CASE OF A DISCREPANCY BETWEEN THE SCALED AND THE FIGURED DIMENSIONS SHOWN ON THESE PLANS, THE FIGURED DIMENSIONS SHALL GOVERN.
23. ALLOWABLE BUILDING HEIGHT HAS BEEN CALCULATED BASED UPON ADDITIONAL SETBACK AS FOLLOWS (IN ACCORDANCE WITH SECTION 115.0.D.1.b OF THE HOWARD COUNTY ZONING REGULATIONS): THE AVERAGE MEAN HEIGHT OF THE BUILDING IS 66'-3". THE ACTUAL BUILDING SETBACK IS 56.25 FEET. THE BUILDING MEETS THE ALLOWABLE HEIGHT REQUIREMENTS BASED ON 2 FEET OF SETBACK PER ADDITIONAL 1 FOOT OF HEIGHT OVER THE ALLOWABLE 50 FEET.
24. NO SPECIMAN TREES WILL BE REMOVED UNDER THIS PROJECT, SDP-16-003.
25. THE CONTRACTOR SHALL MAINTAIN POSITIVE DRAINAGE AWAY FROM BUILDING STRUCTURES AT ALL TIMES.
26. CONTRACTOR SHALL COORDINATE ALL DISCONNECTIONS AND REMOVAL OF EXISTING GAS, ELECTRIC AND TELEPHONE SERVICES AND EQUIPMENT WITH BALTIMORE GAS & ELECTRIC AND VERIZON.
27. CONTRACTOR SHALL INSTALL SEDIMENT CONTROLS PRIOR TO BEGINNING ANY WORK AND MAINTAIN SEDIMENT CONTROLS THROUGHOUT THE ENTIRE DURATION OF DEMOLITION AND CONSTRUCTION ACTIVITIES.
28. SHOULD THE CONTRACTOR DISCOVER DISCREPANCIES BETWEEN THE PLANS AND FIELD CONDITIONS, THE ENGINEER IS TO BE NOTIFIED IMMEDIATELY TO RESOLVE THE SITUATION. SHOULD THE CONTRACTOR MAKE FIELD CORRECTIONS OR ADJUSTMENTS WITHOUT NOTIFYING THE ENGINEER, THEN THE CONTRACTOR ASSUMES ALL RESPONSIBILITY FOR THOSE CHANGES.
29. LANDSCAPING IN ACCORDANCE WITH SECTION 16.124 OF THE HOWARD COUNTY LANDSCAPE MANUAL SHALL BE PROVIDED BY EXISTING FOREST CONSERVATION EASEMENT AREAS PROVIDED TO THE EAST OF THE GARAGE AND RETENTION OF EXISTING VEGETATION ALONG THE STREAM VALLEY.
30. STORM WATER MANAGEMENT WATER QUALITY HAS BEEN PROVIDED IN ACCORDANCE WITH 2010 MARYLAND STORMWATER MANAGEMENT ORDINANCE AND REVISED 2010 STORMWATER MANAGEMENT DESIGN MANUAL. THERE IS ONE (1) PRACTICE M-6 MICRO-BIORETENTION AREA AND ONE (1) PRACTICE F-1 SURFACE SAND FILTER (SHOWN ON SDP-78-083). ALL PRACTICES WILL BE PRIVATELY OWNED AND/OR MAINTAINED IN THEIR ENTIRETY BY HOWARD COMMUNITY COLLEGE.
31. THE COORDINATES SHOWN HEREON ARE BASED UPON THE HOWARD COUNTY GEODETIC CONTROL WHICH IS BASED UPON THE MARYLAND STATE PLANE COORDINATE SYSTEM. HOWARD COUNTY MONUMENT NOS. 35C5 AND 35C5 WERE USED FOR THIS PROJECT.
32. WATER IS PRIVATE IN THIS PROJECT AREA.
33. SEWER IS PUBLIC, CONTRACT NO. 299-W&S SEWER DRAINAGE AREA: PATUXENT TREATMENT PLANT: LITTLE PATUXENT WWTP
34. SUBJECT PROPERTY ZONED POR & NT PER 10/6/13 COMPREHENSIVE ZONING PLAN AND FDP-72-A-1, FDP-233-A.
35. A FOREST CONSERVATION PLAT OF ABANDONMENT (F-16-057 / PLAT NO. 23574) HAS BEEN RECORDED TO ABANDON 0.162 ACRES OF RETENTION AND A FEE -IN-LIEU HAS BEEN PAID IN THE AMOUNT OF $8,833.75 FOR DEVELOPMENT UNDER THIS SITE DEVELOPMENT PLAN. PREVIOUS FOREST CONSERVATION OBLIGATIONS FOR THE ENTIRE CAMPUS WERE ADDRESSED UNDER SDP-01-058/FC, SDP-03-156/FC, AND F-07-10.
36. ALL ELEVATIONS SHOWN ARE BASED ON THE U.S.C. AND G.S. MEAN SEA LEVEL DATUM, 1929.
37. SEE DEPARTMENT OF PLANNING AND ZONING FILE NO. SDP-75-46, SDP-87-95, SDP-76-30, PB-229, SDP-68-12, SDP-75-32, SDP-00-56, SDP-01-58, WP-01-98, SDP-01-123, SDP-03-11, FDP-72-A-1, F-07-010, SDP-06-106/FC, FDP 233A, WP-16-056, PLAT NO. 23574/F-16-57, PLAT NO. 23152/F-15-060, F-16-077
38. THIS PROJECT IS EXEMPT FROM ADEQUATE PUBLIC FACILITIES ORDINANCE (APFO) REQUIREMENTS.
39. EXISTING PARKING CALCULATIONS:

STUDENTS: 1 SPACE / 3 STUDENTS (PER HOWARD COUNTY ZONING REGULATIONS 10/6/2014) 5900 FULL TIME STUDENTS x (1/3) = 1967 SPACES

COLLEGE EMPLOYEES: 1 SPACE / EMPLOYEE
671 EMPLOYEES x 1 = 671 SPACES

DAYCARE SPACES: 3 / 1000 S.F.
12,700 S.F. x 3 /1000 = 39 SPACES
(PER SDP-03-11)

TOTAL REQUIRED SPACES: 1967 + 671 + 39 = 2677 SPACES

PARKING CALCULATIONS:

EXISTING PARKING	2881 SPACES
NO. OF PARKING SPACES ADDED IN PARKING GARAGE NO. 2	742 SPACES
TOTAL ON-SITE PROVIDED	3623 SPACES
TOTAL ON-SITE REQUIRED	2677 SPACES

APPROVED: Howard County Department of Planning & Zoning

Director	Date 3-15-16
Chief, Division of Land Development	Date 3-14-16
Chief, Development Engineering Division	Date 2-12-16

SITE DEVELOPMENT PLAN

HOWARD COMMUNITY COLLEGE

PROPOSED EAST PARKING GARAGE NO. 2 & ACCESS BRIDGE CONSTRUCTION
5TH ELECTION DISTRICT
HOWARD COUNTY, MD
SDP 16-003

Professional Certification. I hereby certify that these documents were prepared or approved by me, and that I am a duly licensed professional engineer under the laws of the State of Maryland.

License No. 33772, Expiration Date: 6/16/17

LOCATION MAP
SCALE: 1"=200'

GRAPHIC SCALE
50 0 25 50 100
(IN FEET)
1 inch = 50ft.

LEGEND

- PROPERTY LINE
- APPROXIMATE LIMITS OF FOREST CONSERVATION EASEMENTS
- APPROXIMATE LIMITS OF ENVIRONMENTAL BUFFER AREA

PERMIT INFORMATION CHART

SUBDIVISION NAME	SECTION/AREA				LOT/PARCEL #
HOWARD COMMUNITY COLLEGE	EAST GARAGE PARKING GARAGE NO. 2				47
PLAT # 19049/50, 23152, 23703	BLOCK # 6	ZONING POR/NT	TAX MAP# 35	ELECT. DISTR. 5TH	CENSUS 6056.02
WATER CODE 107	SEWER CODE 5522500				

ADDRESS CHART

BUIDLING #	STREET ADDRESS
EAST PARKING GARAGE NO. 2	5640 FACULTY DRIVE

BENCHMARK DATA

HORIZONTAL NAD83/91 AND VERTICAL (NGVD29) CONTROL BASED ON GPS OBSERVATIONS. HOWARD COUNTY BENCH MARK NO.'S

		NORTHING	EASTING	ELEV.
35C2	HOW CO MON	563920.830	1344204.150	464.133
35C2	HOW CO MON	562148.450	1344554.472	452.267

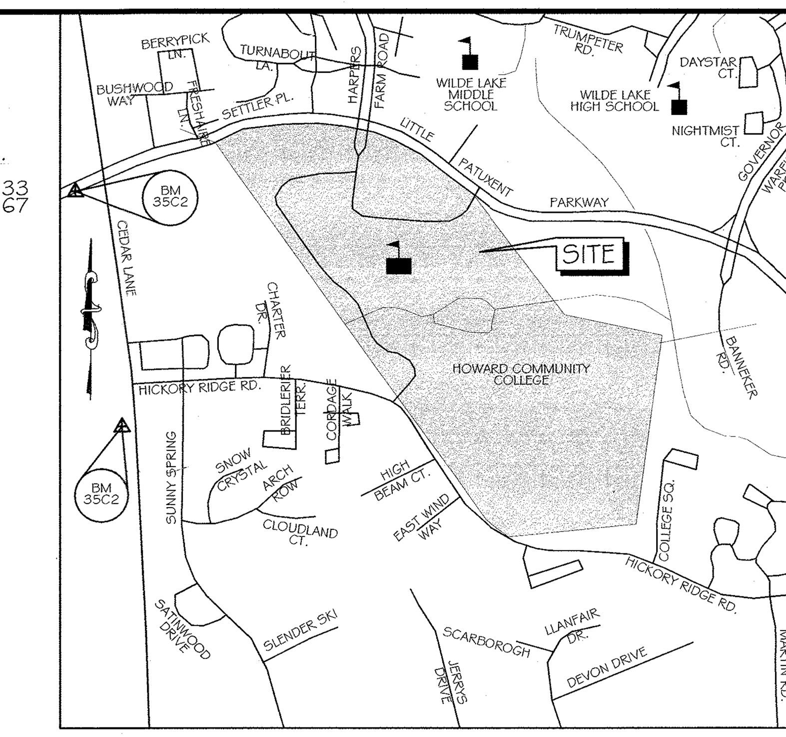

VICINITY MAP
SCALE 1" = 1000'
ADC MAP: 15 GRID: D6

SITE ANALYSIS DATA SHEET

1. SITE ADDRESS: 10901 LITTLE PATUXENT PKWY COLUMBIA, MD 21044
2. OWNER/APPLICANT: BOARD OF TRUSTEES OF HOWARD COUNTY COMMUNITY COLLEGE
3. TAX ACCOUNT NO. : 15-045868
4. PROPERTY REFERENCE: MAP 35 PARCEL 47 PLAT 19049+50, 23152, 23703 ELECTION DISTRICT NO. 5
5. ZONING: POR AND NT
   EXISTING USE: PARKING LOT
   PROPOSED USE: 6 LEVEL PARKING GARAGE/ 742 SPACES PROVIDED AND ACCESS BRIDGE ON LOT A-2
6. TOTAL AREA OF SITE: PARCEL B 117.840 ACRES; O.S. LOT A-2 0.251 ACRES; O.S. LOT A-3 1.631 ACRES
7. LIMIT OF DISTURBANCE (LOD) (SDP-16-003): 110,367 S.F. (2.54 AC.)
8. TOTAL PROJECT LOD
   - PARCEL B: 99,646 S.F. (2.29 AC.)
   - O.S. LOT A-2: 8,972 S.F. (0.21 AC.)
   - O.S. LOT A-3: 1,749 S.F. (0.04 AC.)
   - TOTAL: 110,367 S.F. (2.54 AC.)
9. OPEN SPACE WITHIN PROJECT AREA: 0.91 AC.
10. PROPOSED BUILDING AREA: 1.11 AC. (PARKING GARAGE)

INDEX OF DRAWINGS

NO.	SHEET	DESCRIPTION
1	C1.00	TITLE SHEET
2	C2.00	EXISTING CONDITIONS / DEMOLITION PLAN
3	C3.00	SITE PLAN AND GRADING PLAN
4	C4.00	PAVING, STRIPING & SIGNAGE PLAN
5	C5.00	GEOMETRY PLAN
6	C6.00	SITE DETAILS
7	C6.01	SITE DETAILS
8	C7.00	UTILITY PROFILE
9	C8.00	EROSION & SEDIMENT CONTROL PLAN
10	C8.01	EROSION & SEDIMENT CONTROL DETAILS
11	C8.02	EROSION & SEDIMENT CONTROL NOTES
12	C8.03	EROSION & SEDIMENT CONTROL NOTES
13	C8.04	EROSION & SEDIMENT CONTROL EXISTING CONDITIONS DRAINAGE AREA MAP
14	C8.05	EROSION & SEDIMENT CONTROL DEVELOPED CONDITIONS DRAINAGE AREA MAP
15	C9.00	STORM DRAIN DRAINAGE AREA MAP
16	C10.00	EXISTING CONDITIONS IMPERVIOUS AREA MAP
17	C10.01	PROPOSED CONDITIONS IMPERVIOUS AREA MAP
18	C10.02	ENVIRONMENTAL SITE DESIGN PLAN
19	C10.03	STORM WATER MANAGEMENT FACILITY 1
20	C10.04	STORM WATER MANAGEMENT NOTES
21	C10.05	STORM WATER MANAGEMENT DETAILS
22	BR1.00	STRUCTURAL NOTES
23	BR2.00	FOUNDATION PLAN
24	BR3.00	FRAMING PLAN
25	BR4.00	SECTIONS AND DETAILS
26	BR4.10	SECTIONS AND DETAILS
27	BR4.20	SECTIONS AND DETAILS
28	BR5.00	BRIDGE DRILLED SHAFT DETAILS
29	BW1.00	RETAINING WALL PLAN AND ELEVATIONS
30	BW2.00	RETAINING WALL DETAILS
31	E13.00	ELECTRICAL LEGEND AND DETAILS
32	E14.00	SITE PLAN - REMOVAL WORK - ELECTRICAL
33	E15.00	PART SITE PLAN - NEW WORK - ELECTRICAL
34	E16.00	PART SITE PLAN - NEW WORK - ELECTRICAL
35	E17.00	LIGHTING FIXTURE SCHEDULES AND CUT SHEETS

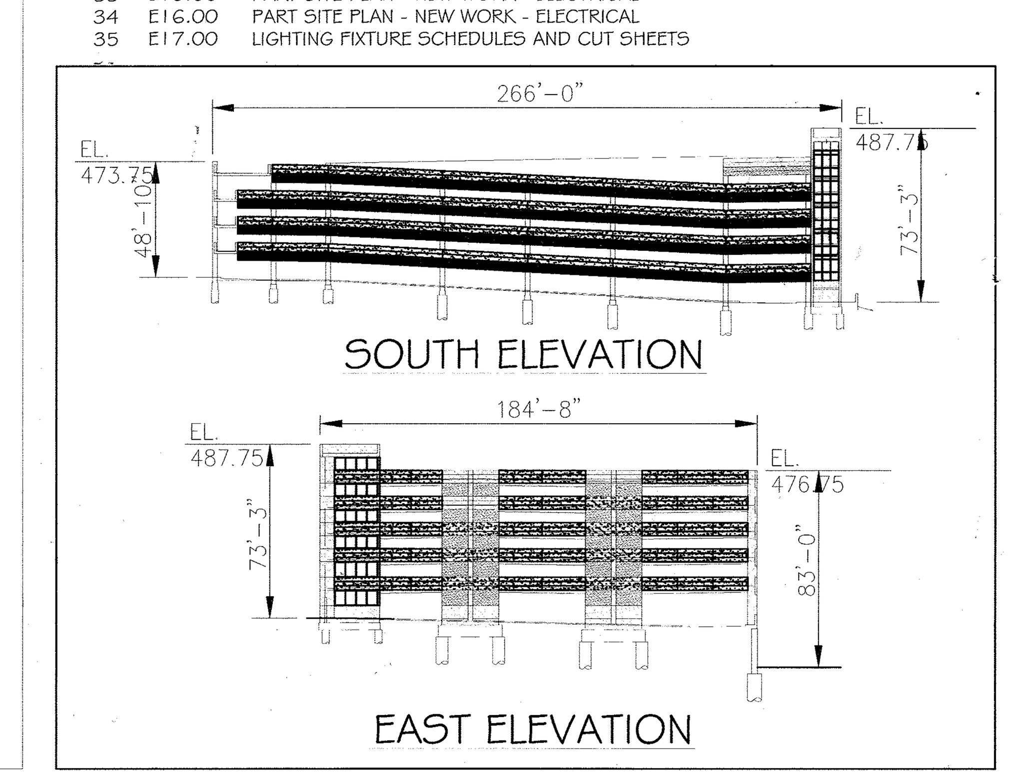

BUILDING ELEVATIONS*
SCALE: 1/64" = 1'-0"

* AVERAGE MEAN HEIGHT BUILDING 66'-3". BUILDING SETBACK 56.25 FEET. BUILDING MEETS ALLOWABLE HEIGHT REQUIREMENTS BASED ON 2 FEET OF SETBACK PER ADDITIONAL 1 FOOT OF HEIGHT OVER THE ALLOWABLE 50 FEET.

Prepared For and Owner:
Howard Community College
10901 Little Patuxent Parkway
Columbia, Maryland 21044
ATTN: Mr. Chuck Nightingale
410-772-4296

Copyright © 2014 Desman, Inc. All rights reserved. No part of these documents may be reproduced in any form or by any means without permission from Desman Inc.

DESMAN ASSOCIATES

KCI TECHNOLOGIES
ENGINEERS PLANNERS SCIENTISTS CONSTRUCTION MANAGERS
936 Ridgebrook Road
Sparks, MD 21152
Phone (410)316-7800
Fax (410)316-7853
www.kci.com

HOWARD COMMUNITY COLLEGE
EAST PARKING GARAGE NO. 2, PARCEL B & ACCESS BRIDGE, LOT A-2 TOWN CENTER 3/3
COLUMBIA, MD
PARCEL B/ PLAT NO. 19049 & NON-CREDITED OPEN SPACE LOT A-2, TC, 3/3 PLAT NO. 23152
TAX MAP: 35, BLOCK: 6,
FIFTH ELECTION DISTRICT, ZONING: POR & NEW TOWN

PROFESSIONAL CERTIFICATION. I HEREBY CERTIFY THAT THESE DOCUMENTS WERE PREPARED OR APPROVED BY ME, AND THAT I AM A DULY LICENSED PROFESSIONAL ENGINEER UNDER THE LAWS OF THE STATE OF MARYLAND, LICENSE NO. 31089 EXPIRATION DATE: 11/21/16

ISSUE

NO.	DESCRIPTION	DATE
1	Parking Count	5/18/16

DRAWING TITLE: TITLE SHEET

DRAWING NO. C1.00

SHEET: 1 OF 35

SCALE:	AS SHOWN
DATE:	JANUARY 8, 2016
PROJECT NO:	27146550

DES.	DRWN.	CK'D.
R.L.B.	C.T.B.	R.L.B.

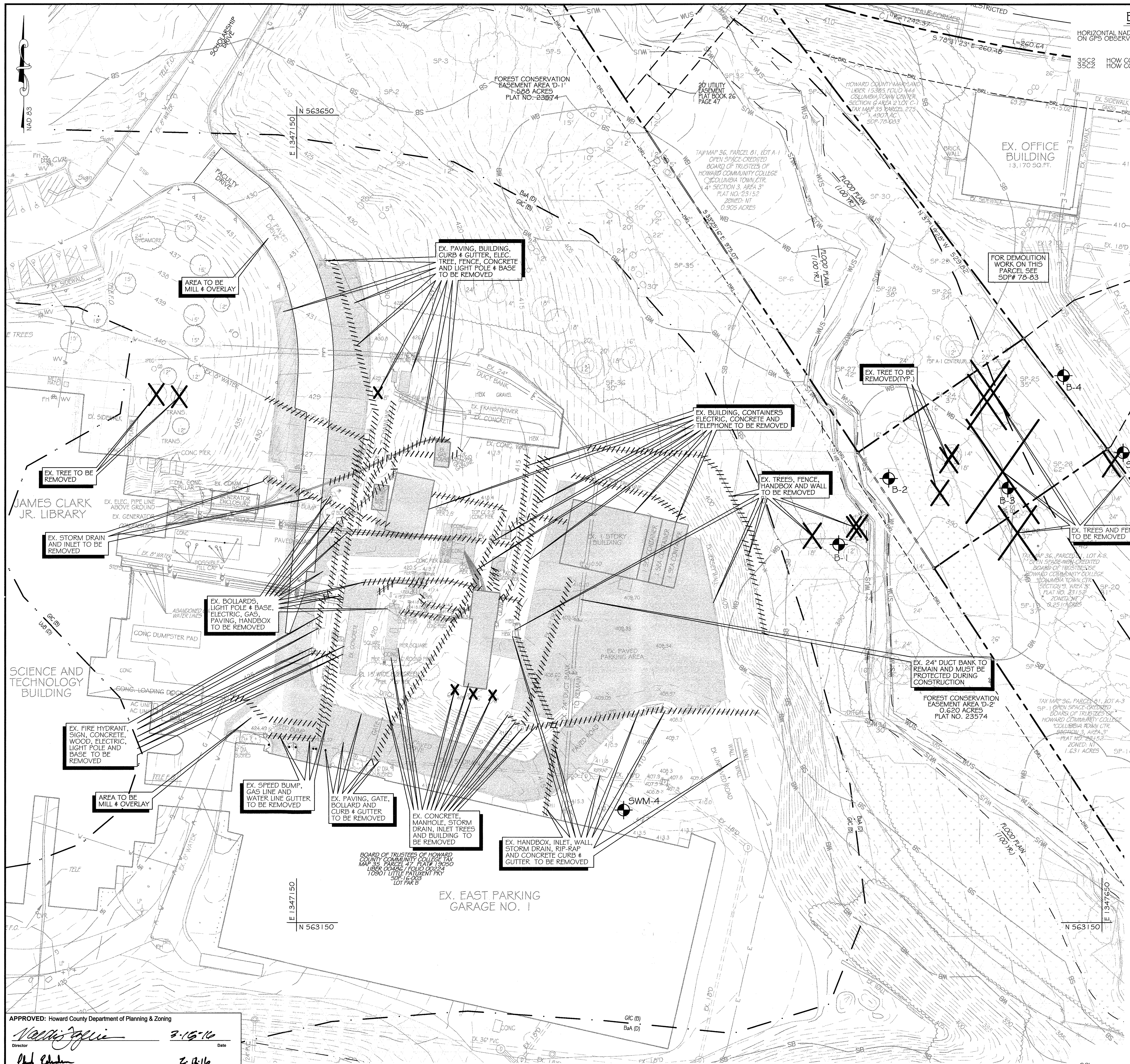

EXISTING CONDITIONS / DEMOLITION PLAN

SCALE: 1" = 30'

GRAPHIC SCALE

30' 0 15' 30' 60'

(IN FEET)
SCALE: 1"= 30'

BENCHMARK DATA

HORIZONTAL NAD83/91 AND VERTICAL (NGVD29) CONTROL BASED ON GPS OBSERVATIONS. HOWARD COUNTY BENCH MARK NO.'S

		NORTHING	EASTING	ELEV.
35C2	HOW CO MON	563920.830	1344204.150	464.133
35C2	HOW CO MON	562148.450	1344554.472	452.267

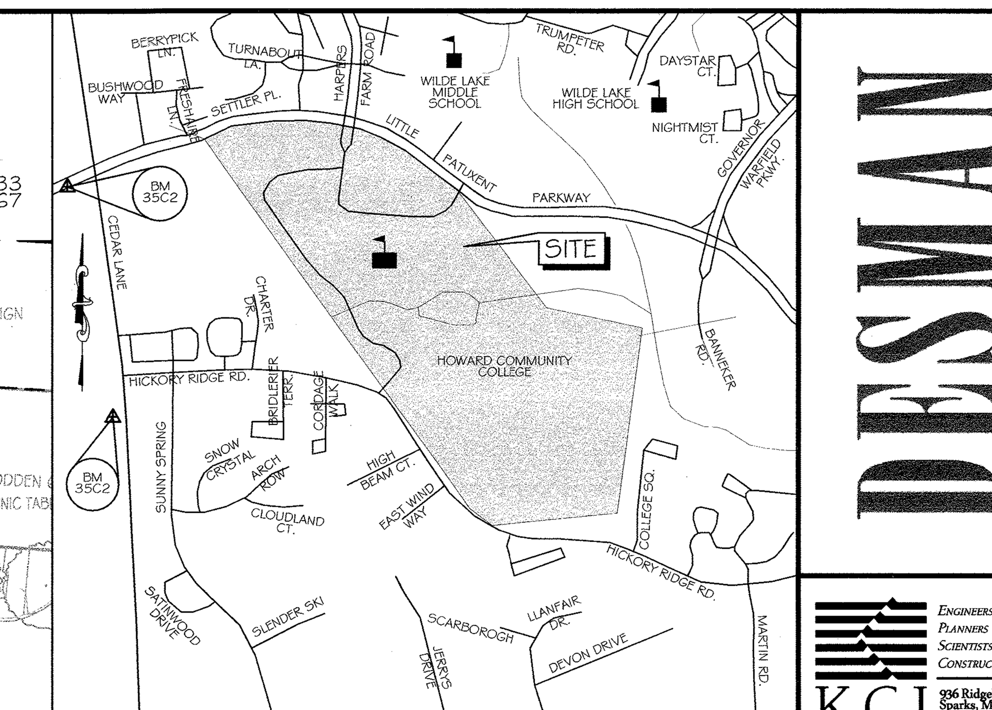

VICINITY MAP

SCALE 1" = 1000'
ADC MAP: 15 GRID: D6

DEMOLITION NOTES

1. THE CONTRACTOR SHALL NOTIFY "MISS UTILITY" (800-257-7777) AT LEAST FIVE (5) WORKING DAYS PRIOR TO STARTING ANY WORK.
2. NO WORK SHALL BEGIN UNTIL THE PROPER PERMITS HAVE BEEN RELEASED BY HOWARD COUNTY.
3. BOUNDARY AND TOPOGRAPHIC INFORMATION SHOWN IS BASED UPON A SURVEY CONDUCTED BY KCI TECHNOLOGIES, INC. SEPTEMBER 2014 AND AERIAL TOPO FROM VIRGINIA RESOURCE MAPPING APRIL 27, 2009.
4. OBSTRUCTIONS SHOWN ON THIS DRAWING ARE FOR THE CONVENIENCE OF THE CONTRACTOR ONLY. KCI TECHNOLOGIES, INC. DOES NOT WARRANT OR GUARANTEE THE CORRECTNESS OR THE COMPLETENESS OF THE INFORMATION GIVEN. THE CONTRACTOR MUST VERIFY ALL SUCH INFORMATION TO HIS OWN SATISFACTION.
5. CONTRACTOR SHALL NOT PROCEED WITH ANY DEMOLITION WORK UNTIL ALL UTILITY COMPANIES HAVE VERIFIED IN WRITING THAT DISCONNECTIONS HAVE BEEN COMPLETED.
6. CONTRACTOR WILL INSTALL A TEMPORARY CONSTRUCTION FENCE AROUND THE CONSTRUCTION AREA WHILE MAINTAINING ACCESS TO THE ADJACENT PUBLIC SIDEWALKS.
7. CONTRACTOR WILL SECURE THE CONSTRUCTION AREA AT THE END OF EACH WORKING DAY AND WILL INSPECT THE SECURITY FENCING TO INSURE ITS INTEGRITY.
8. CONTRACTOR IS RESPONSIBLE TO COMPLY WITH MDSHA AND OSHA REGULATIONS AS THEY PERTAIN TO EXISTING ADJACENT BUILDING WALLS AND PUBLIC SIDEWALKS AND PROVIDING "SAFE" PASSAGE TO THEM.
9. CONTRACTOR WILL INSPECT AND TAKE PICTURES OF ADJACENT BUILDING WALLS AND RETAINING WALLS PRIOR TO THE COMMENCEMENT OF ANY DEMOLITION ON THE SITE. EXISTING WALL CRACKS (IF ANY) WILL BE NOTED.
10. CONTRACTOR WILL CONTINUALLY MONITOR THE WALLS OF THE ADJACENT BUILDINGS AND RETAINING WALLS FOR ANY SIGNS OF STRUCTURAL DISTRESS. IF ANY DISTRESS IS NOTED, CONTRACTOR SHALL STOP WORK IMMEDIATELY AND NOTIFY OWNER, KCI TECHNOLOGIES, INC. AND DESMAN ASSOCIATES.
11. CONTRACTOR WILL NOT EXPOSE, UNDERMINE, OR IMPACT THE ZONE OF INFLUENCE FOR FOOTINGS AND FOUNDATIONS OF ADJACENT BUILDINGS. CONTRACTOR WILL BE RESPONSIBLE FOR THE COST TO REPAIR ADJACENT BUILDINGS THAT ARE DAMAGED DUE TO HIS OPERATION.
12. CONTRACTOR WILL PROVIDE THE NECESSARY MEANS TO CONTROL DUST AND AIR QUALITY DURING THE DEMOLITION PROCESS.
13. CONTRACTOR WILL SAWCUT EXISTING PAVING TO MINIMIZE DAMAGE TO EXISTING PAVING REMAINING.
14. IN CONJUNCTION WITH THE REMOVAL OF CONCRETE APRONS AND WALKS, THE CONTRACTOR IS RESPONSIBLE TO ADJUST ALL PUBLIC UTILITIES (I.E. MANHOLE FRAMES & COVERS, ELECTRIC HAND BOXES, VALVE COVERS) TO BE FINISHED SIDEWALK GRADES.
15. ANY EXISTING CURB AND GUTTER & CONCRETE SIDEWALK SHALL BE REMOVED TO THE NEAREST JOINT.
16. THE CONTRACTOR IS RESPONSIBLE FOR PERFORMING ALL WORK SHOWN ON THESE DRAWINGS UNLESS OTHERWISE NOTED.
17. THE DEMOLITION INFORMATION SHOWN ON THIS DRAWING IS FOR THE CONVENIENCE OF THE CONTRACTOR ONLY. IT IS THE CONTRACTOR'S RESPONSIBILITY TO DETERMINE THE EXACT LIMITS OF DEMOLITION AND REMOVAL OF AFFECTED SITE ITEMS.
18. CONTRACTOR TO VERIFY LOCATION AND ELEVATION OF EXISTING UTILITIES SHOWN HEREON BEFORE STARTING ANY WORK ON THESE PLANS. CONTRACTOR AGREES TO BE FULLY RESPONSIBLE FOR THE COST OF ANY AND ALL DAMAGES WHICH OCCUR AS A RESULT OF A FAILURE TO EXACTLY LOCATE AND PRESERVE ANY AND ALL EXISTING UTILITIES TO REMAIN.
19. THE CONTRACTOR SHALL MAINTAIN POSITIVE DRAINAGE AT ALL TIMES.
20. CONTRACTOR SHALL INSTALL SEDIMENT CONTROLS PRIOR TO BEGINNING ANY WORK AND MAINTAIN SEDIMENT CONTROLS THROUGHOUT THE ENTIRE DURATION OF DEMOLITION AND CONSTRUCTION ACTIVITIES.
21. ALL UTILITY LINES, ELECTRICAL DUCT BANKS, STRUCTURES, ETC. ARE TO BE REMOVED IN THEIR ENTIRETY UNLESS OTHERWISE INDICATED. ALL EXCAVATION SHALL BE BACKFILLED IN ACCORDANCE WITH THE PROJECT SPECIFICATIONS. IN THE EVENT THAT A PORTION OF A UTILITY IS TO BE REMOVED THE CONTRACTOR SHALL TERMINATE & CAP TO THE LIMITS INDICATED IN ACCORDANCE WITH ALL STATE & LOCAL REQUIREMENTS AND THE PROJECT REQUIREMENTS.
22. IT SHALL BE DISTINCTLY UNDERSTOOD THAT FAILURE TO MENTION SPECIFICALLY ANY WORK WHICH WOULD NORMALLY BE REQUIRED TO COMPLETE THIS PROJECT SHALL NOT RELIEVE THE CONTRACTOR OF HIS RESPONSIBILITY TO COMPLETE SUCH WORK.
23. SHOULD THE CONTRACTOR DISCOVER DISCREPANCIES BETWEEN THE PLANS AND FIELD CONDITIONS, THE A/E IS TO BE NOTIFIED IMMEDIATELY TO RESOLVE THE SITUATION. SHOULD THE CONTRACTOR MAKE FIELD CORRECTIONS OR ADJUSTMENTS WITHOUT NOTIFYING THE A/E, THEN THE CONTRACTOR ASSUMES ALL RESPONSIBILITY FOR THOSE CHANGES.
24. CONTRACTOR SHALL CAP EXISTING UTILITY CONNECTIONS AND PROVIDE THEIR HORIZONTAL AND VERTICAL LOCATIONS TO THE OWNER AND THE ENGINEER.
25. CONTRACTOR SHALL REMOVE ALL CONSTRUCTION DEBRIS FROM THE SITE AND DISPOSE OF IT AT AN APPROVED, PERMITTED DISPOSAL FACILITY. NO RUBBLE IS TO BE LEFT ON SITE.
26. BURNING OF COMBUSTIBLE MATERIALS FROM DEMOLISHED STRUCTURES WILL NOT BE PERMITTED.
27. NO EXPLOSIVES WILL BE USED IN THE SITE DEMOLITION.
28. ALL TREES WITHIN THE LOD ARE TO BE REMOVED UNLESS OTHERWISE NOTED.

LEGEND

EX. SANITARY MANHOLE	25' WETLAND BUFFER (WB)
EX. ELECTRIC MANHOLE	75' STREAM BUFFER (SB)
EX. LIGHT POLE	WATERS OF THE U.S. (WUS)
EX. WATER METER	SOILS LINES (GmB (C) / UuB (D))
EX. SIGN	100 YR. FLOOD LINE
EX. UTILITY POLE	EX. UTILITIES TO BE REMOVED
EX. BOLLARD	EX. TREES TO BE REMOVED
EX. DECIDUOUS TREE	APPROXIMATE LIMITS OF ENVIRONMENTAL BUFFER AREA
EX. CONIFEROUS TREE	APPROXIMATE LIMITS OF FOREST CONSERVATION EASEMENT
EX. GAS VALVE	APPROXIMATE LIMITS OF NON-TIDAL WETLAND
EX. GUY WIRE	APPROXIMATE LIMITS OF PAVING, BUILDINGS, CONCRETE AND CURB & GUTTER TO BE REMOVED
EX. WATER VALVE (WV)	APPROXIMATE LIMITS OF MILL AND OVERLAY
EX. FIRE HYDRANT (FH)	SOIL BORINGS (SWM-1)
EX. CLEANOUT (CO)	
EX. STORM DRAIN (EX. 15" D)	
EX. GAS LINE (G)	
EX. SANITARY (PRIVATE 6"S SS)	
EX. ELECTRIC (E)	
EX. TELEPHONE (T)	
EX. WATER (8"WATER W)	

CONTRACTOR NOTE:
CONTRACTOR SHALL EXERCISE EXTREME CAUTION SO AS NOT TO DAMAGE ANY EXISTING PAVING, CURB & GUTTER, SIDEWALK OR OTHER SITE FEATURES WHICH ARE TO REMAIN. SHOULD DAMAGE OCCUR, CONTRACTOR SHALL REPAIR TO ORIGINAL CONDITION AT CONTRACTOR'S EXPENSE.

APPROVED: Howard County Department of Planning & Zoning

[signature] Director	3-16-16 Date
[signature] Chief, ~~Division of Land~~ Development BB ENG. DIV.	2-12-16 Date
[signature] Chief, ~~Development Engineering Division~~ DLD	3-4-16 Date

Prepared For and Owner:
Howard Community College
10901 Little Patuxent Parkway
Columbia, Maryland 21044
ATTN: Mr. Chuck Nightingale
410-772-4296

Copyright © 2014 Desman, Inc. All rights reserved. No part of these documents may be reproduced in any form or by any means without permission from Desman Inc.

DESMAN ASSOCIATES

KCI TECHNOLOGIES
ENGINEERS
PLANNERS
SCIENTISTS
CONSTRUCTION MANAGERS
936 Ridgebrook Road
Sparks, MD 21152
Phone (410)316-7800
Fax (410)316-7853
www.kci.com

HOWARD COMMUNITY COLLEGE
EAST PARKING GARAGE NO. 2, PARCEL B &
ACCESS BRIDGE, LOT A-2 TOWN CENTER, 3/3
COLUMBIA, MD
PARCEL B/ PLAT NO. 19049 &
NON-CREDITED OPEN SPACE LOT A-2, TC, 3/3 PLAT NO. 23152
TAX MAP: 35, BLOCK: 6,
FIFTH ELECTION DISTRICT, ZONING: POR & NEW TOWN

PROFESSIONAL CERTIFICATION. I HEREBY CERTIFY THAT THESE DOCUMENTS WERE PREPARED OR APPROVED BY ME, AND THAT I AM A DULY LICENSED PROFESSIONAL ENGINEER UNDER THE LAWS OF THE STATE OF MARYLAND, LICENSE NO. 31089 EXPIRATION DATE: 11/21/16

STATE OF MARYLAND RICHARD L. BUTT No. 031089 PROFESSIONAL ENGINEER 1/15/16

ISSUE

NO.	DESCRIPTION	DATE

DRAWING TITLE:
EXISTING CONDITIONS / DEMOLITION PLAN

DRAWING NO.
C2.00
SHEET: 2 OF 35

SCALE:	1" = 30'
DATE:	JANUARY 8, 2016
PROJECT NO:	27146550

DES.	DRWN.	CK'D.
R.L.B.	C.T.B.	R.L.B.

SDP 16-003

BENCHMARK DATA

HORIZONTAL NAD83/91 AND VERTICAL (NGVD29) CONTROL BASED ON GPS OBSERVATIONS. HOWARD COUNTY BENCH MARK NO.'S

		NORTHING	EASTING	ELEV.
35C2	HOW CO MON	563920.830	1344204.150	464.133
35C2	HOW CO MON	562148.450	1344554.472	452.267

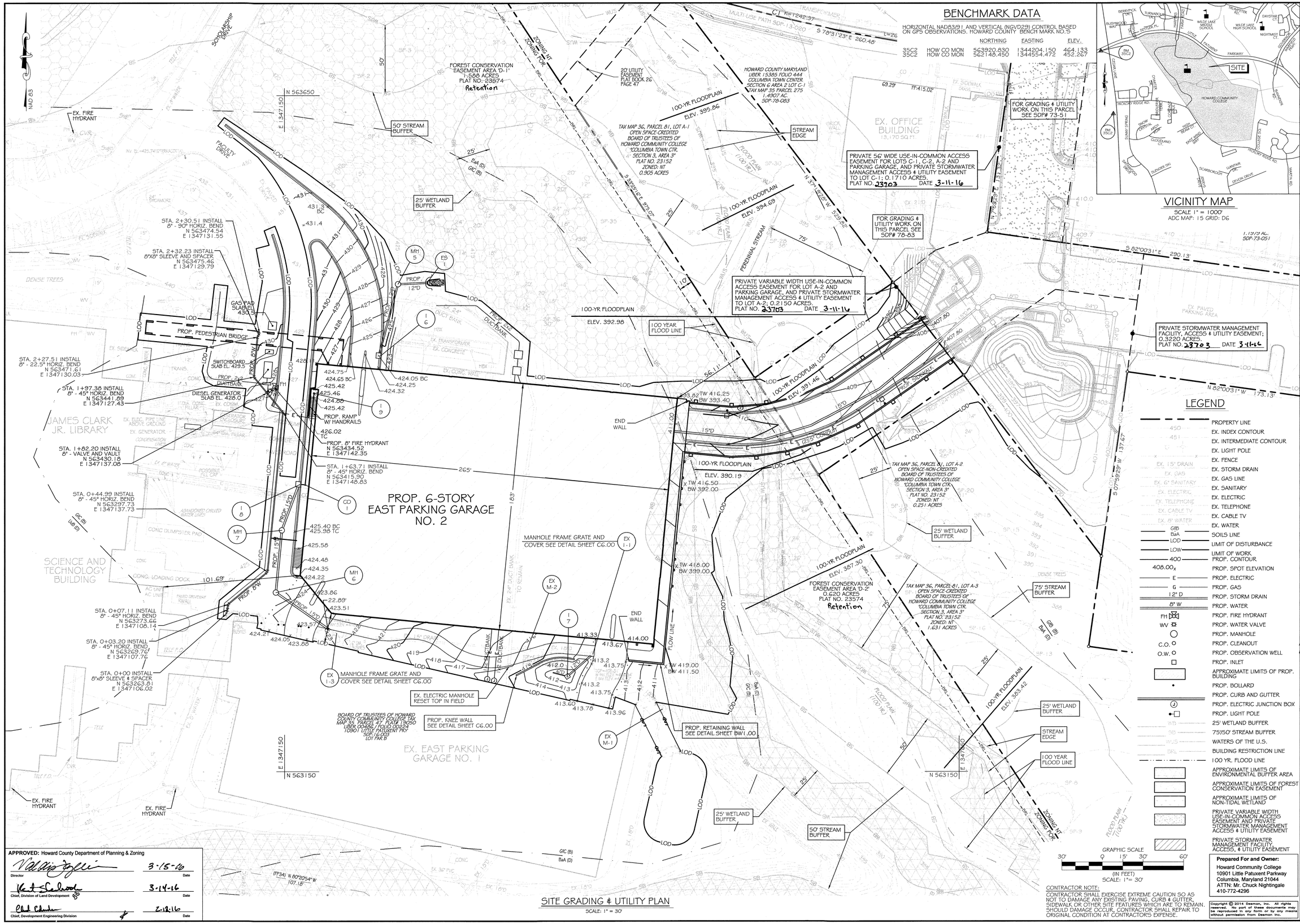

SITE GRADING & UTILITY PLAN

SCALE: 1" = 30'

VICINITY MAP

SCALE 1" = 1000'
ADC MAP: 15 GRID: D6

LEGEND

	PROPERTY LINE
	EX. INDEX CONTOUR
	EX. INTERMEDIATE CONTOUR
	EX. LIGHT POLE
	EX. FENCE
	EX. STORM DRAIN
	EX. GAS LINE
	EX. SANITARY
	EX. ELECTRIC
	EX. TELEPHONE
	EX. CABLE TV
	EX. WATER
GrB / BaA	SOILS LINE
LOD	LIMIT OF DISTURBANCE
LOW	LIMIT OF WORK
400	PROP. CONTOUR
408.00x	PROP. SPOT ELEVATION
E	PROP. ELECTRIC
G	PROP. GAS
12" D	PROP. STORM DRAIN
8" W	PROP. WATER
FH	PROP. FIRE HYDRANT
WV	PROP. WATER VALVE
	PROP. MANHOLE
C.O.	PROP. CLEANOUT
O.W.	PROP. OBSERVATION WELL
	PROP. INLET
	APPROXIMATE LIMITS OF PROP. BUILDING
	PROP. BOLLARD
	PROP. CURB AND GUTTER
J	PROP. ELECTRIC JUNCTION BOX
	PROP. LIGHT POLE
WB	25' WETLAND BUFFER
SB	75/50' STREAM BUFFER
W.S.	WATERS OF THE U.S.
BRL	BUILDING RESTRICTION LINE
	100 YR. FLOOD LINE
	APPROXIMATE LIMITS OF ENVIRONMENTAL BUFFER AREA
	APPROXIMATE LIMITS OF FOREST CONSERVATION EASEMENT
	APPROXIMATE LIMITS OF NON-TIDAL WETLAND
	PRIVATE VARIABLE WIDTH USE-IN-COMMON ACCESS EASEMENT AND PRIVATE STORMWATER MANAGEMENT ACCESS & UTILITY EASEMENT
	PRIVATE STORMWATER MANAGEMENT FACILITY ACCESS, & UTILITY EASEMENT

CONTRACTOR NOTE:
CONTRACTOR SHALL EXERCISE EXTREME CAUTION SO AS NOT TO DAMAGE ANY EXISTING PAVING, CURB & GUTTER, SIDEWALK OR OTHER SITE FEATURES WHICH ARE TO REMAIN. SHOULD DAMAGE OCCUR, CONTRACTOR SHALL REPAIR TO ORIGINAL CONDITION AT CONTRACTORS EXPENSE.

APPROVED: Howard County Department of Planning & Zoning

Director	3-15-16 Date
Chief, Division of Land Development	3-14-16 Date
Chief, Development Engineering Division	2-12-16 Date

Prepared For and Owner:
Howard Community College
10901 Little Patuxent Parkway
Columbia, Maryland 21044
ATTN: Mr. Chuck Nightingale
410-772-4296

Copyright © 2014 Desman, Inc. All rights reserved. No part of these documents may be reproduced in any form or by any means without permission from Desman Inc.

DESMAN ASSOCIATES

KCI TECHNOLOGIES
ENGINEERS
PLANNERS
SURVEYORS
CONSTRUCTION MANAGERS
936 Ridgebrook Road
Sparks, MD 21152
Phone (410) 316-9800
Fax (410) 316-9801
www.kci.com

HOWARD COMMUNITY COLLEGE
EAST PARKING GARAGE NO. 2, PARCEL B & ACCESS BRIDGE, LOT A-2 TOWN CENTER, 3/3
COLUMBIA, MD
PARCEL B/ PLAT NO. 19049 &
NON-CREDITED OPEN SPACE LOT A-2, TC, 6/3 PLAT NO. 23152
FIFTH ELECTION DISTRICT, ZONING: POR & NEW TOWN

PROFESSIONAL CERTIFICATION.
I HEREBY CERTIFY THAT THESE DOCUMENTS WERE PREPARED OR APPROVED BY ME, AND THAT I AM A DULY LICENSED PROFESSIONAL ENGINEER UNDER THE LAWS OF THE STATE OF MARYLAND, LICENSE NO. 31089
EXPIRATION DATE: 11/21/16

STATE OF MARYLAND RICHARD L. BOSS JR. No. 031089 PROFESSIONAL ENGINEER 1-5-16

ISSUE		
NO.	DESCRIPTION	DATE

DRAWING TITLE:
SITE PLAN & GRADING PLAN

DRAWING NO.
C3.00
SHEET: 3 OF 35

SCALE: 1" = 30'
DATE: JANUARY 8, 2016
PROJECT NO: 27146550

DES.	DRWN.	CK'D.
R.L.B.	C.T.B.	R.L.B.

SDP 16-003

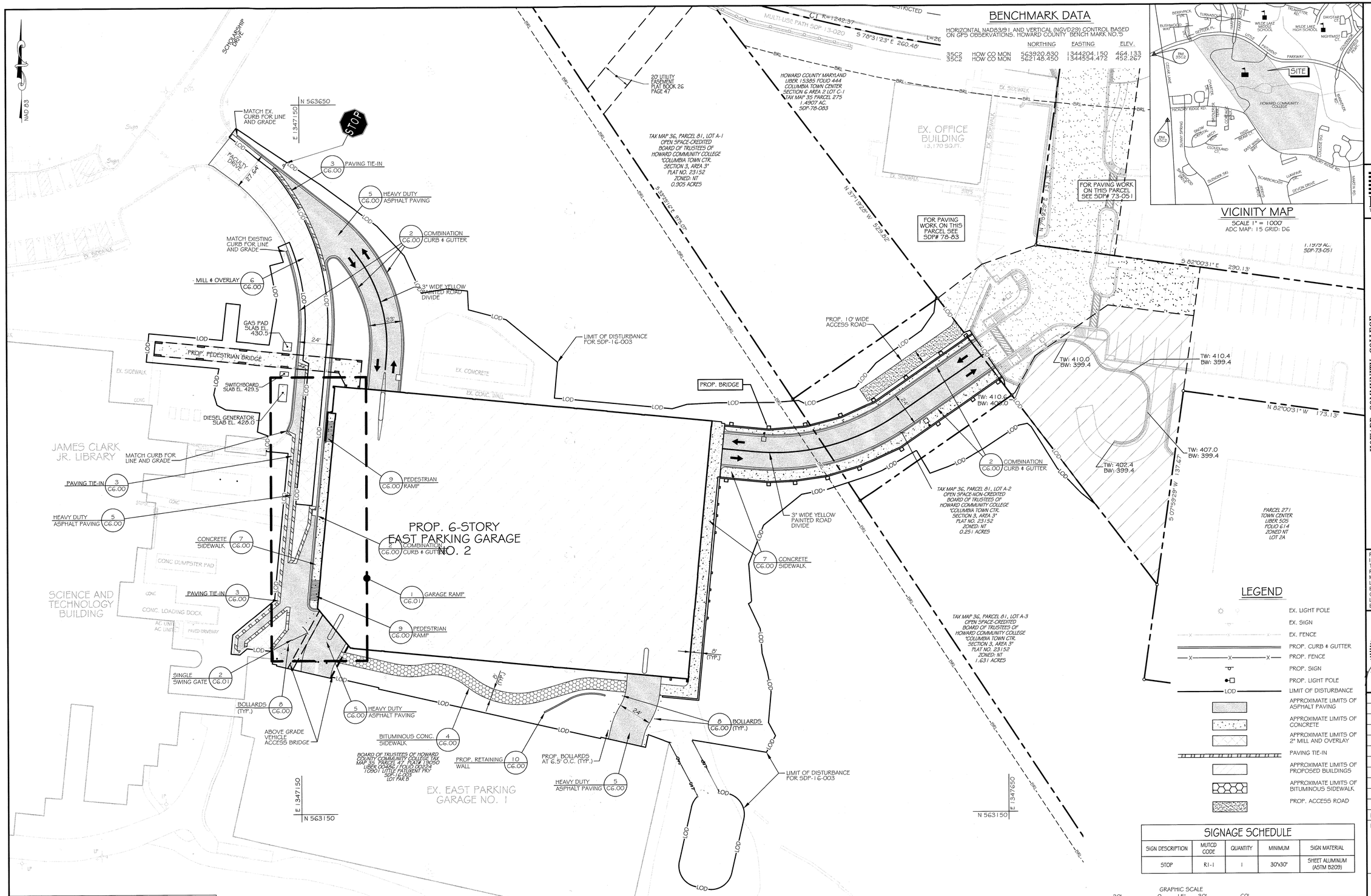

PAVING, STRIPING AND SIGNAGE PLAN

SCALE: 1" = 30'

BENCHMARK DATA

HORIZONTAL NAD83/91 AND VERTICAL (NGVD29) CONTROL BASED ON GPS OBSERVATIONS. HOWARD COUNTY BENCH MARK NO. 9

		NORTHING	EASTING	ELEV.
35C2	HOW CO MON	563920.830	1344204.150	464.133
35C2	HOW CO MON	562148.450	1344554.472	452.267

VICINITY MAP

SCALE 1" = 1000'
ADC MAP: 15 GRID: D6

LEGEND

- EX. LIGHT POLE
- EX. SIGN
- EX. FENCE
- PROP. CURB & GUTTER
- PROP. FENCE
- PROP. SIGN
- PROP. LIGHT POLE
- LOD — LIMIT OF DISTURBANCE
- APPROXIMATE LIMITS OF ASPHALT PAVING
- APPROXIMATE LIMITS OF CONCRETE
- APPROXIMATE LIMITS OF 2" MILL AND OVERLAY
- PAVING TIE-IN
- APPROXIMATE LIMITS OF PROPOSED BUILDINGS
- APPROXIMATE LIMITS OF BITUMINOUS SIDEWALK
- PROP. ACCESS ROAD

SIGNAGE SCHEDULE

SIGN DESCRIPTION	MUTCD CODE	QUANTITY	MINIMUM	SIGN MATERIAL
STOP	R1-1	1	30"x30"	SHEET ALUMINUM (ASTM B209)

GRAPHIC SCALE
30' 0 15' 30' 60'
(IN FEET)
SCALE: 1"= 30'

CONTRACTOR NOTE:
CONTRACTOR SHALL EXERCISE EXTREME CAUTION SO AS NOT TO DAMAGE ANY EXISTING PAVING, CURB & GUTTER, SIDEWALK OR OTHER SITE FEATURES WHICH ARE TO REMAIN. SHOULD DAMAGE OCCUR, CONTRACTOR SHALL REPAIR TO ORIGINAL CONDITION AT CONTRACTOR'S EXPENSE.

APPROVED: Howard County Department of Planning & Zoning

Director	Date 3-15-16
Chief, Division of Land Development	Date 3-14-16
Chief, Development Engineering Division	Date 2-12-16

Prepared For and Owner:
Howard Community College
10901 Little Patuxent Parkway
Columbia, Maryland 21044
ATTN: Mr. Chuck Nightingale
410-772-4296

Copyright © 2014 Desman, Inc. All rights reserved. No part of these documents may be reproduced in any form or by any means without permission from Desman Inc.

DESMAN ASSOCIATES

KCI TECHNOLOGIES
Engineers
Planners
Scientists
Construction Managers
936 Ridgebrook Road
Sparks, MD 21152
410-771-6950
Fax 410-771-7953
www.kci.com

HOWARD COMMUNITY COLLEGE
EAST PARKING GARAGE NO. 2, PARCEL B & ACCESS BRIDGE, LOT A-2 TOWN CENTER 3/3
COLUMBIA, MD
PARCEL B/ PLAT NO. 19049 & NON-CREDITED OPEN SPACE LOT A-2, TC, 3/3 PLAT NO. 23152
TAX MAP 36, GRID 17, PARCEL 81, BLOCK 10
FIFTH ELECTION DISTRICT - ZONING: POR & NEW TOWN

PROFESSIONAL CERTIFICATION. I HEREBY CERTIFY THAT THESE DOCUMENTS WERE PREPARED OR APPROVED BY ME, AND THAT I AM A DULY LICENSED PROFESSIONAL ENGINEER UNDER THE LAWS OF THE STATE OF MARYLAND, LICENSE NO. 31089 EXPIRATION DATE: 11/21/16

STATE OF MARYLAND RICHARD L. BUCKLY No. 031089 PROFESSIONAL ENGINEER 1/15/16

ISSUE		
NO.	DESCRIPTION	DATE

DRAWING TITLE:
PAVING, STRIPING AND SIGNAGE PLAN

DRAWING NO.
C4.00
SHEET: 4 OF 35

SCALE: 1" = 30'
DATE: JANUARY 8, 2016
PROJECT NO: 27146550

DES.	DRWN.	CK'D.
R.L.B.	C.T.B.	R.L.B.

SDP 16-003

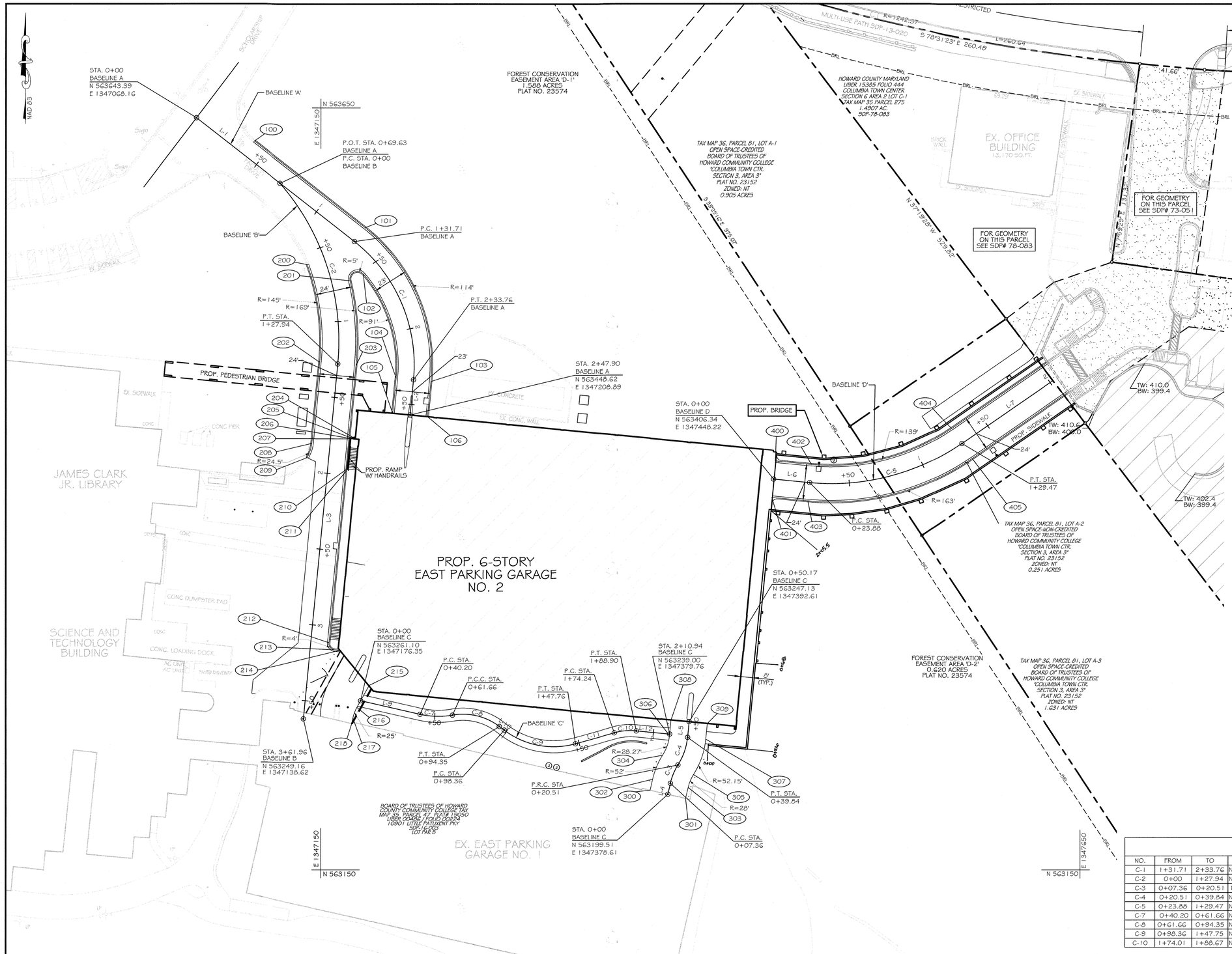

GEOMETRY PLAN
SCALE: 1" = 30'

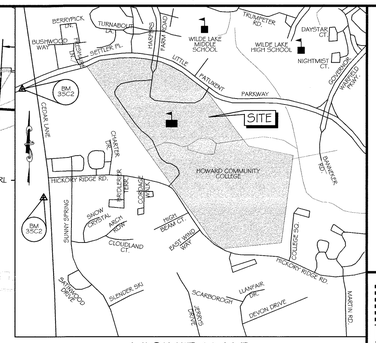

VICINITY MAP
SCALE 1" = 1000'
ADC MAP: 15 GRID: D6

BASELINE 'A'		
NO.	STATION	OFFSET
100	0+39.47	11.50' RT
101	1+31.71	11.50' RT
102	1+41.72	11.50' LT
103	2+24.76	11.50' RT
104	2+24.76	11.50' LT
105	2+47.90	11.50' LT
106	2+47.90	11.50' RT

BASELINE 'B'		
NO.	STATION	OFFSET
200	0+57.45	12.00' RT
201	0+75.81	12.00' LT
202	1+27.94	12.00' RT
203	1+27.94	12.00' LT
204	1+75.16	15.21' LT
205	1+75.16	12.00' LT
206	1+75.84	12.67' LT
207	1+75.84	15.23' LT
208	1+181.45	12.00' RT
209	1+91.08	14.19' RT
210	1+95.94	12.00' LT
211	1+95.94	12.67' RT
212	3+10.66	12.00' LT
213	3+14.92	16.00' LT
214	3+14.92	19.56' LT
215	3+36.00	40.97' LT
216	3+51.08	34.38' LT
217	3+58.30	32.45' LT
218	3+61.96	32.04' LT

BASELINE 'C'		
NO.	STATION	OFFSET
300	0+00	12.00' LT
301	0+00	12.00' RT
302	0+07.36	12.00' LT
303	0+07.36	12.00' RT
304	0+20.51	12.00' LT
305	0+20.51	12.00' RT
306	0+39.84	12.00' LT
307	0+39.84	12.00' RT
308	0+50.17	12.00' LT
309	0+50.17	12.00' RT

BASELINE 'D'		
NO.	STATION	OFFSET
400	0+00	12.00' LT
401	0+00	12.00' RT
402	0+23.88	12.00' LT
403	0+23.88	12.00' RT
404	1+29.47	12.00' LT
405	1+29.47	12.00' RT

BASELINE 'A' DATA					
NO.	STATION	NORTHING	EASTING	BEARING	LENGTH
L-1	0+00	563643.39	1347068.16	S 52° 4'5" E	131.78
L-2	2+24.76	563471.65	1347211.12	S 5° 32'3" W	23.14

BASELINE 'B' DATA					
NO.	STATION	NORTHING	EASTING	BEARING	LENGTH
L-3	1+27.94	563482.09	1347161.19	S 5° 32'5" W	229.79'

BASELINE 'C' DATA					
NO.	STATION	NORTHING	EASTING	BEARING	LENGTH
L-4	0+00	563199.51	1347378.61	N 1° 58'16" E	7.46'
L-5	0+50.17	563236.85	1347391.61	N 5° 32'3" E	10.32'

BASELINE 'D' DATA					
NO.	STATION	NORTHING	EASTING	BEARING	LENGTH
L-6	0+00	563406.34	1347448.22	S 84° 21'42" E	23.94'
L-7	1+29.47	563429.93	1347572.14	N 55° 28'21" E	118.11'

CURVE DATA							
NO.	FROM	TO	Δ	RADIUS	TANGENT	LENGTH	CHORD BEARING & LENGTH
C-1	1+31.71	2+33.76	N 32° 23'50" E	102.50'	56.35'	103.05'	S 23° 16'1" E 98.76'
C-2	0+00	1+27.94	N 43° 18'29" E	157.00'	67.76'	127.94'	S 17° 48'41" E 124.43'
C-3	0+07.36	0+20.51	N 71° 9'29" E	40.00'	6.64'	13.15'	N 22° 27'7" E 13.09'
C-4	0+20.51	0+39.84	N 62° 26'23" E	40.19'	9.86'	19.33'	N 19° 20'49" E 19.15'
C-5	0+23.88	1+29.47	N 49° 56'17" E	151.00'	55.05'	105.58'	N 75° 30'13" E 103.44'
C-7	0+40.20	0+61.66	N 67° 13'46" E	54.00'	10.50'	21.46'	S 88° 29'3" E 21.32'
C-8	0+61.66	0+94.35	N 43° 17'51" E	40.00'	17.32'	32.69'	S 76° 27'32" E 31.78'
C-9	0+98.36	1+47.75	N 37° 39'43" E	54.00'	26.58'	49.40'	S 79° 15'25" E 47.70'
C-10	1+74.01	1+88.67	N 69° 31'45" E	40.00'	7.41'	14.66'	N 85° 2'0" E 14.58'

GRAPHIC SCALE
30' 0 15' 30' 60'
(IN FEET)
SCALE: 1"= 30'

CONTRACTOR NOTE:
CONTRACTOR SHALL EXERCISE EXTREME CAUTION SO AS NOT TO DAMAGE ANY EXISTING PAVING, CURB & GUTTER, SIDEWALK OR OTHER SITE FEATURES WHICH ARE TO REMAIN. SHOULD DAMAGE OCCUR, CONTRACTOR SHALL REPAIR TO ORIGINAL CONDITION AT CONTRACTOR'S EXPENSE.

Prepared For and Owner:
Howard Community College
10901 Little Patuxent Parkway
Columbia, Maryland 21044
ATTN: Mr. Chuck Nightingale
410-772-4296

Copyright © 2014 Deaman, Inc. All rights reserved. No part of these documents may be reproduced in any form or by any means without permission from Deaman Inc.

APPROVED: Howard County Department of Planning & Zoning

Director	Date 3-15-16
Chief, Division of Land Development	Date 3-14-16
Chief, Development Engineering Division	Date 2-12-16

DESMAN ASSOCIATES

KCI TECHNOLOGIES
Engineers
Planners
Scientists
Construction Managers
958 Ridgebrook Road
Sparks, MD 21152
Phone (410)316-7800
Fax (410)316-7803
www.kci.com

HOWARD COMMUNITY COLLEGE
EAST PARKING GARAGE NO. 2, PARCEL B &
ACCESS BRIDGE, LOT A-2 TOWN CENTER 3/3
COLUMBIA, MD
PARCEL B/ PLAT NO. 19049 &
NON-CREDITED OPEN SPACE LOT A2, C, 3/3 PLAT NO. 23152
BLOCK 6 TAX MAP 36 GRID 21
FIFTH ELECTION DISTRICT, ZONING: POR & NEW TOWN

PROFESSIONAL CERTIFICATION.
I HEREBY CERTIFY THAT THESE DOCUMENTS WERE PREPARED OR APPROVED BY ME, AND THAT I AM A DULY LICENSED PROFESSIONAL ENGINEER UNDER THE LAWS OF THE STATE OF MARYLAND, LICENSE NO. 31089
EXPIRATION DATE: 11/21/16

STATE OF MARYLAND
RICHARD L. BLAIR
No. 031089
PROFESSIONAL ENGINEER
1/15/16

ISSUE

NO.	DESCRIPTION	DATE

DRAWING TITLE:
GEOMETRY PLAN

DRAWING NO.
C5.00
SHEET: 5 OF 35
SCALE: 1" = 30'
DATE: JANUARY 8, 2016
PROJECT NO: 27146550

DES.	DRWN.	CK'D.
R.L.B.	C.T.B.	R.L.B.

SDP 16-003

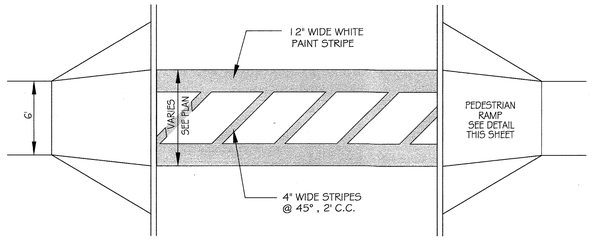

HOWARD COUNTY DETAIL #

1 CROSSWALK PAINT STRIPING — SCALE: N.T.S.

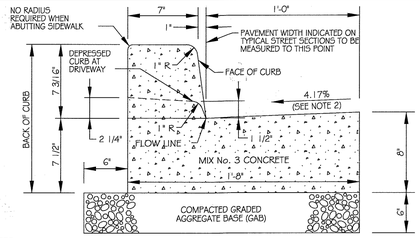

NOTES:

1. A REVERSE GUTTER PAN SHALL HAVE A GUTTER SLOPE OF 4.17% AWAY FROM THE FLOW LINE, AND SHALL NOT BE USED WHERE THIS DRAINAGE CREATES A HAZARDOUS CONDITION.
2. GUTTER PAN AT THE MEDIAN EDGE OF INTERMEDIATE ARTERIALS OR THE HIGH SIDE OF SUPER ELEVATED SECTIONS SHALL BE SLOPED AT THE SAME RATE AND IN THE SAME DIRECTION AS THE PAVEMENT CROSS SLOPE WHEN CURB IS LOCATED ON THE LOW SIDE OF SUPER ELEVATED SECTION AND THE RATE OF SUPER ELEVATION IS GREATER THAN 3% FOR MODIFIED CURB & GUTTER.
3. A MINIMUM OF TWO FEET OF STABILIZED EARTH, SHALL SUPPORT ENTIRE BACK OF CURB.
4. POSITIVE DRAINAGE SHALL BE PROVIDED BOTH BEHIND THE CURB AND ALONG THE GUTTER & FLOW LINE.

HOWARD COUNTY DETAIL #R-3.01

2 COMBINATION CURB AND GUTTER — SCALE: N.T.S.

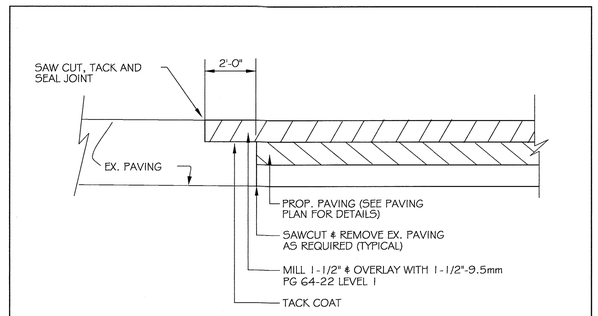

3 PAVING TIE-IN DETAIL — SCALE: N.T.S.

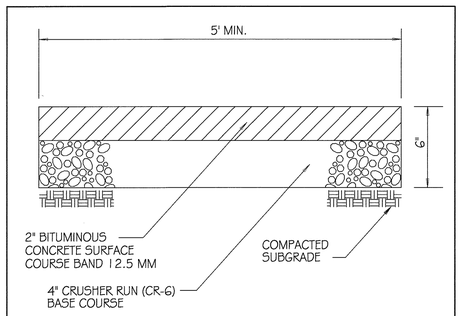

4 BITUMINOUS CONC. WALK — SCALE: N.T.S.

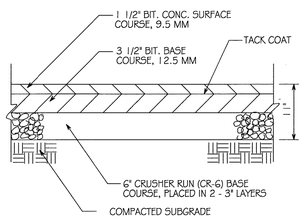

5 HEAVY DUTY ASPHALT PAVING DETAIL — SCALE: N.T.S.

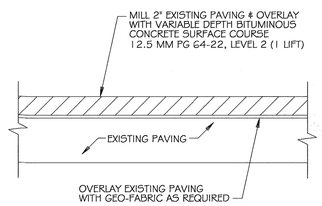

6 MILL & OVERLAY — SCALE: N.T.S.

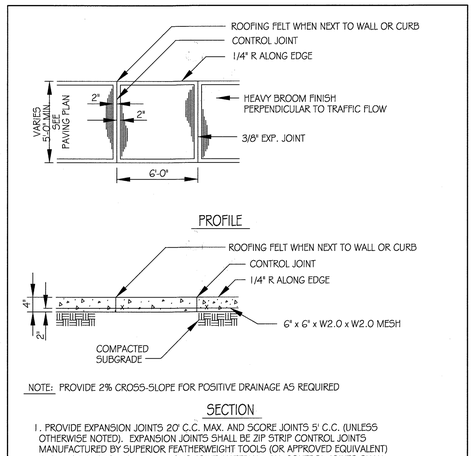

NOTE: PROVIDE 2% CROSS-SLOPE FOR POSITIVE DRAINAGE AS REQUIRED

SECTION

1. PROVIDE EXPANSION JOINTS 20' C.C. MAX. AND SCORE JOINTS 5' C.C. (UNLESS OTHERWISE NOTED). EXPANSION JOINTS SHALL BE ZIP STRIP CONTROL JOINTS MANUFACTURED BY SUPERIOR FEATHERWEIGHT TOOLS (OR APPROVED EQUIVALENT) WITH 1/2" PREMOLDED BITUMINOUS JOINT MATERIAL. ALL CONTROL JOINTS SHALL BE SEALED WITH A POLYURETHANE SEALANT.
2. WHEN SIDEWALK ABUTS CURB, SIDEWALK SHALL BE 1/4" ABOVE CURB WITH ROOFING FELT SATURATED ON BOTH SIDES WITH ASPHALTIC MATERIAL BETWEEN THEM. ROOFING PAPER SHALL NOT WEIGH LESS THAN 39.8 LBS. PER S.F.

HOWARD COUNTY DETAIL #R-3.05

7 CONCRETE SIDEWALK — SCALE: N.T.S.

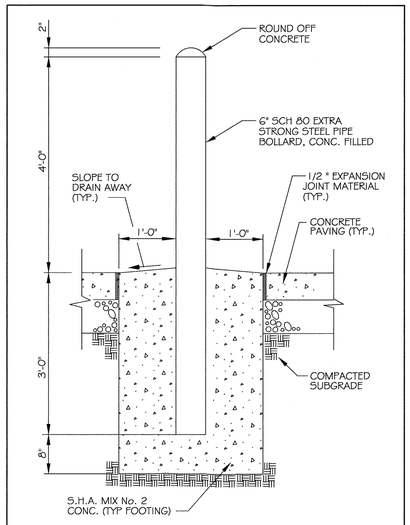

HOWARD COUNTY DETAIL #G-7.42

8 PIPE BOLLARD — SCALE: N.T.S.

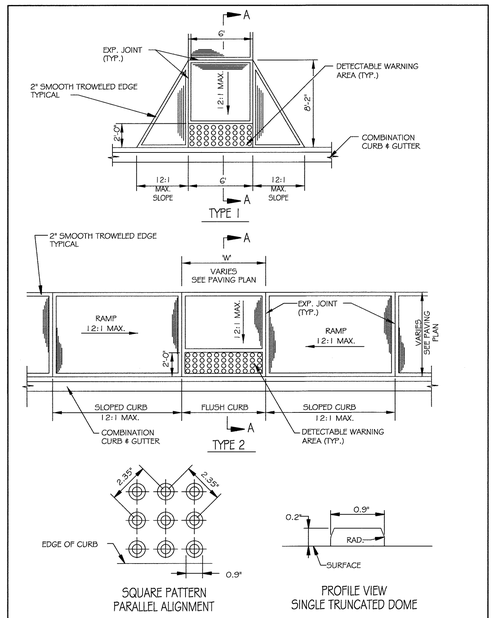

DETECTABLE WARNING DETAIL

NOTES:

1. SURFACE TEXTURE OF RAMPS SHALL BE COARSE BROOMING OR NON SKID SURFACE.
2. DETECTABLE WARNINGS SHALL BE SQUARE PATTERN. PARALLEL ALIGNMENT.
3. SEE DEPRESSED CURB AND GUTTER AT PEDESTRIAN RAMP DETAIL 9 FOR SECTION A-A.
4. SEE PAVING PLAN, SHEET C4.00, FOR TYPE 1 RAMP TAPERED CURB LENGTHS.

1. A DETECTABLE WARNING IS A STANDARDIZED SURFACE FEATURE BUILT IN OR APPLIED TO WALKING SURFACES (OR OTHER ELEMENTS) TO WARN VISUALLY IMPAIRED PEOPLE OF HAZARDS ON A CIRCULATION PATH.
2. DETECTABLE WARNINGS SHALL CONSIST OF RAISED TRUNCATED DOMES WITH NOMINAL DIMENSIONS AS SHOWN AND SHALL CONTRAST VISUALLY WITH ADJOINING SURFACES, EITHER LIGHT-DARK OR DARK-LIGHT. THE MATERIAL USED TO PROVIDE CONTRAST SHALL BE INTEGRAL WITH THE WALKING SURFACE.
3. DETECTABLE WARNING AREAS SHALL EXTEND 24" BACK FROM THE REAR OF THE CURB WITHIN THE RAMP ITSELF. THEY SHALL NOT BE USED ELSEWHERE ON A PEDESTRIAN RAMP.
4. DETECTABLE WARNINGS MAY BE APPLIED USING BRICK OR BLOCK PAVERS OR EXTRUDED TINTED CONCRETE.
5. PAVERS MAY BE SPLAYED AS REQUIRED TO MATCH A CURVED CURB RADIUS.
6. COMMERCIAL PRODUCTS MAY VARY IN SPACING, DIMENSION AND CONFIGURATION OF DOMES. CERTIFICATION OF COMPLIANCE WITH CURRENT A.D.A.A.G. (AMERICANS WITH DISABILITIES ACT ACCESSIBILITY GUIDELINE REQUIREMENTS) SHALL BE REQUIRED OF ALL PRODUCTS BEFORE INSTALLATION.
7. MANUFACTURED PRODUCTS SHALL BE INSTALLED IN ACCORDANCE WITH MANUFACTURER'S INSTRUCTIONS.

HOWARD COUNTY DETAIL #R-4.02, R-4.03 & R-4.04.

9 PEDESTRIAN RAMPS — SCALE: N.T.S.

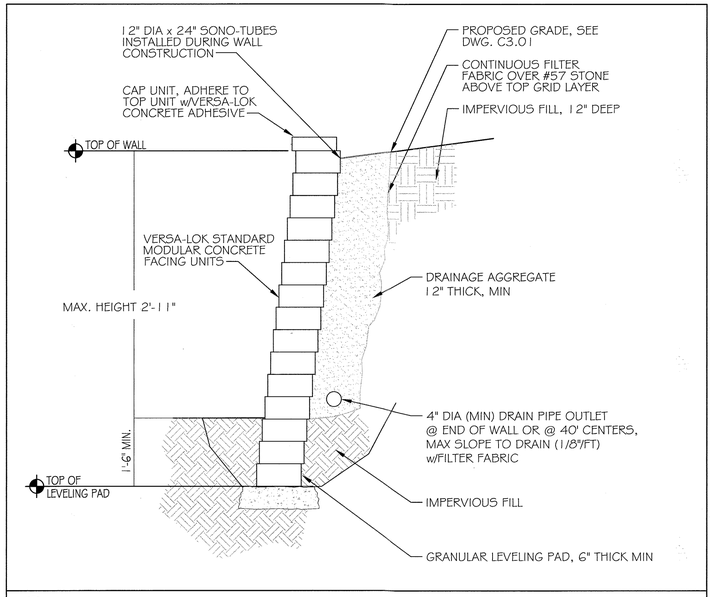

10 KNEE WALL — SCALE: N.T.S

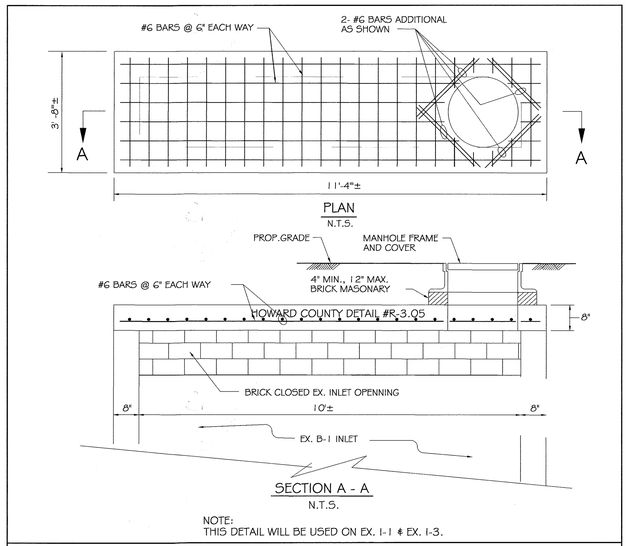

NOTE:
THIS DETAIL WILL BE USED ON EX. I-1 & EX. I-3.

11 MANHOLE OVER EXISTING INLET DETAIL — SCALE: N.T.S.

APPROVED: Howard County Department of Planning & Zoning

Director	3-15-16 Date
Chief, Division of Land Development	3-14-16 Date
Chief, Development Engineering Division	2-12-16 Date

DESMAN ASSOCIATES

KCI TECHNOLOGIES — Engineers, Planners, Scientists, Construction Managers
936 Ridgebrook Road, Sparks, MD 21152
Phone (410)316-7800, Fax (410)316-7803, www.kci.com

HOWARD COMMUNITY COLLEGE
EAST PARKING GARAGE NO. 2, PARCEL B & ACCESS BRIDGE, LOT A-2 TOWN CENTER 3/5
COLUMBIA, MD
PARCEL B/ PLAT NO. 19049 & NON-CREDITED OPEN SPACE LOT A-2 TO BE 6/75 PLAT NO. 23152
TAX MAP: 35, BLOCK: 6, ZONING: POR & NEW TOWN
FIFTH ELECTION DISTRICT, ZONING: POR & NEW TOWN

PROFESSIONAL CERTIFICATION. I HEREBY CERTIFY THAT THESE DOCUMENTS WERE PREPARED OR APPROVED BY ME, AND THAT I AM A DULY LICENSED PROFESSIONAL ENGINEER UNDER THE LAWS OF THE STATE OF MARYLAND, LICENSE NO. 31089 EXPIRATION DATE: 11/21/16

STATE OF MARYLAND — RICHARD L. BISHOP — No. 031089 — PROFESSIONAL ENGINEER — 1/15/16

ISSUE		
NO.	DESCRIPTION	DATE

DRAWING TITLE: SITE DETAILS

DRAWING NO. C6.00
SHEET: 6 OF 35

SCALE:	N.T.S.
DATE:	JANUARY 8, 2016
PROJECT NO:	27146550

DES.	DRWN.	CK'D.
R.L.B.	C.T.B.	R.L.B.

Prepared For and Owner:
Howard Community College
10901 Little Patuxent Parkway
Columbia, Maryland 21044
ATTN: Mr. Chuck Nightingale
410-772-4296

Copyright © 2014 Desman, Inc. All rights reserved. No part of these documents may be reproduced in any form or by any means without permission from Desman Inc.

SDP 16-003

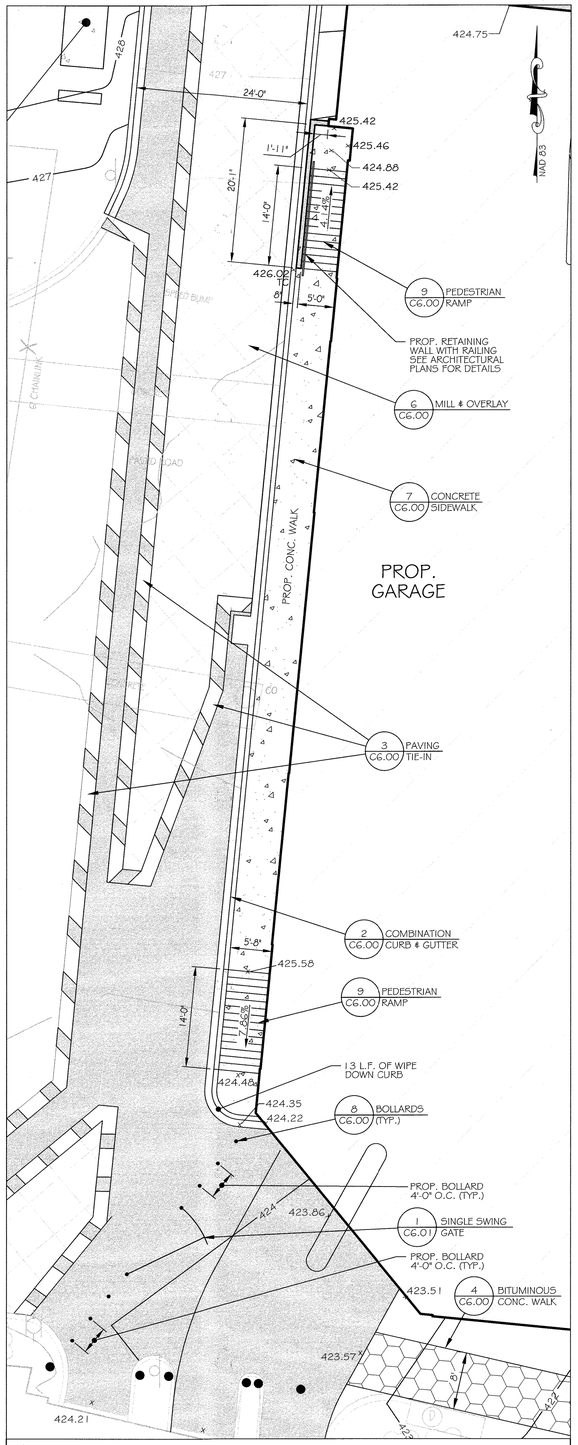

1 GARAGE RAMP DETAIL SCALE: 1" = 10'

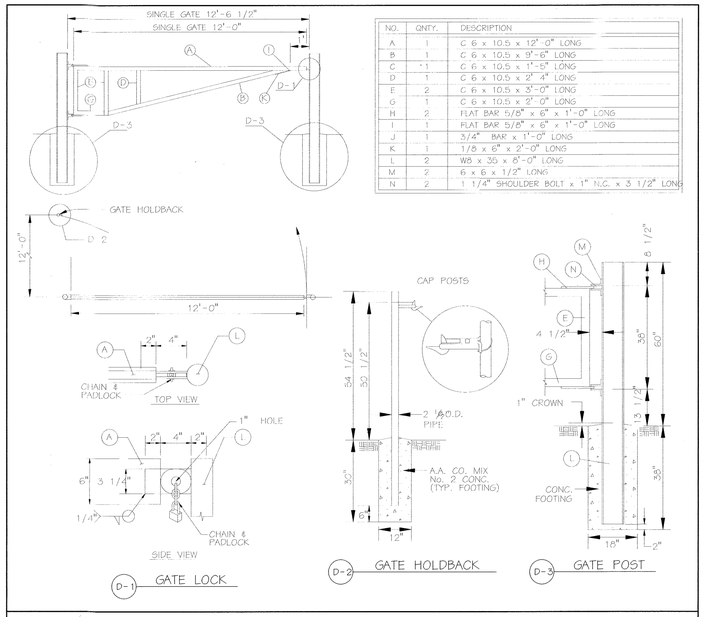

NO.	QNTY.	DESCRIPTION
A	1	C 6 x 10.5 x 12'-0" LONG
B	1	C 6 x 10.5 x 9'-6" LONG
C	1	C 6 x 10.5 x 1'-5" LONG
D	1	C 6 x 10.5 x 2'-4" LONG
E	2	C 6 x 10.5 x 3'-0" LONG
G	1	C 6 x 10.5 x 2'-0" LONG
H	2	FLAT BAR 5/8" x 6" x 1'-0" LONG
I	1	FLAT BAR 5/8" x 6" x 1'-0" LONG
J	1	3/4" BAR x 1'-0" LONG
K	1	1/8 x 6" x 2'-0" LONG
L	2	W8 x 30 x 8'-0" LONG
M	2	6 x 6 x 1/2" LONG
N	2	1 1/4" SHOULDER BOLT x 1" N.C. x 3 1/2" LONG

2 SINGLE SWING GATE DETAIL SCALE: N.T.S.

APPROVED: Howard County Department of Planning & Zoning

Director	Date 3-15-16
Chief, Division of Land Development	Date 3-14-16
Chief, Development Engineering Division	Date 2-12-16

GRAPHIC SCALE
10' 0 5' 10' 20'
(IN FEET)
SCALE: 1" = 10'

Prepared For and Owner:
Howard Community College
10901 Little Patuxent Parkway
Columbia, Maryland 21044
ATTN: Mr. Chuck Nightingale
410-772-4296

Copyright © 2014 Desman, Inc. All rights reserved. No part of these documents may be reproduced in any form or by any means without permission from Desman Inc.

DESMAN ASSOCIATES

KCI TECHNOLOGIES
Engineers
Planners
Scientists
Construction Managers
936 Ridgebrook Road
Sparks, MD 21152
Phone (410)316-7800
Fax (410)316-7803
www.kci.com

HOWARD COMMUNITY COLLEGE
EAST PARKING GARAGE NO. 2, PARCEL B & ACCESS BRIDGE, LOT A-2 TOWN CENTER, 3/3
COLUMBIA, MD
PARCEL B, PLAT NO. 19049 & NON-CREDITED OPEN SPACE LOT A-2, TOWN CENTER, 3/3 PLAT NO. 23152
TAX MAP: 35, BLOCK: 6,
FIFTH ELECTION DISTRICT, ZONING: POR & NEW TOWN

PROFESSIONAL CERTIFICATION. I HEREBY CERTIFY THAT THESE DOCUMENTS WERE PREPARED OR APPROVED BY ME, AND THAT I AM A DULY LICENSED PROFESSIONAL ENGINEER UNDER THE LAWS OF THE STATE OF MARYLAND, LICENSE NO. 31089 EXPIRATION DATE: 11/21/16

STATE OF MARYLAND RICHARD L. BISHOP No. 031089 PROFESSIONAL ENGINEER 1/5/16

ISSUE		
NO.	DESCRIPTION	DATE

DRAWING TITLE:
SITE DETAILS

DRAWING NO.
C6.01
SHEET: 7 OF 35

SCALE: AS SHOWN
DATE: JANUARY 8, 2016
PROJECT NO: 27146550

DES.	DRWN.	CK'D.
R.L.B.	C.T.B.	R.L.B.

SDP 16-003

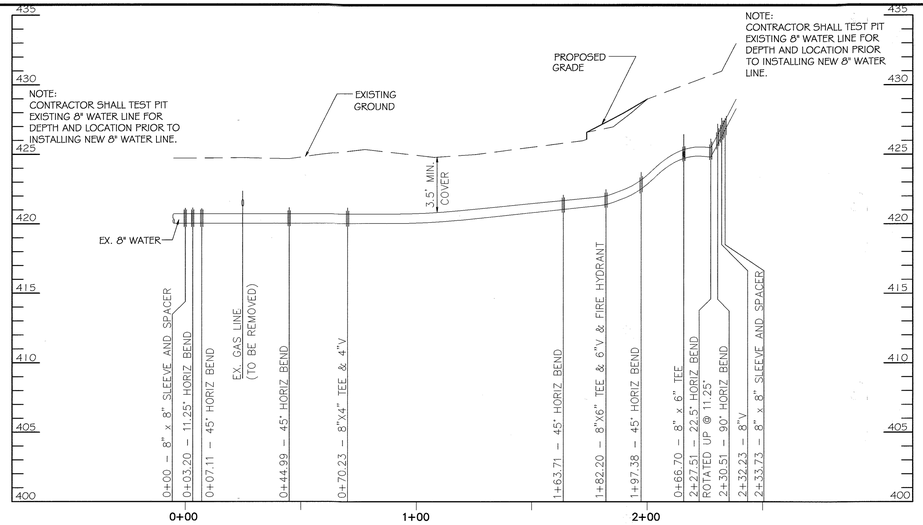

8" WATER LINE PROFILE

SCALE: HORIZ.: 1" = 30'
VERT.: 1" = 5'

WATER PIPE SCHEDULE

ITEM	UNIT	ESTIMATE	AS-BUILT
6" PVC (AWWA C900-DR18)	L.F.	7	
8" PVC (AWWA C900-DR18)	L.F.	233	
8" SLEEVE AND SPACER	EA	2	
8" 11.25° HORIZ.	EA	1	
8" 22.5° HORIZ.	EA	1	
8" 45° HORIZ.	EA	4	
8" 90° HORIZ.	EA	1	
8" VALVE	EA	1	
6" VALVE	EA	1	
4" VALVE	EA	1	
FIRE HYDRANT	EA	1	
8"X4" TEE	EA	1	
8"X6" TEE	EA	2	

STORM DRAIN PIPE SCHEDULE

SIZE	MATERIAL	LENGTH
12"	RCCP CL IV	76 L.F.
15"	RCCP CL IV	162 L.F.

STORM DRAIN STRUCTURE SCHEDULE

NO.	TYPE	SIZE IN.	ELEV. IN	SIZE OUT	ELEV. OUT	TOP ELEV.	REFERENCES / HOWARD COUNTY STD. DETAIL	NORTHING	EASTING
MH-5	48" SHALLOW PRECAST MANHOLE	12"	419.87	12"	419.62	425.00	G-5.12	N 563,510.54	E 1,347,234.18
MH-6	48" SHALLOW PRECAST MANHOLE	15"	420.24	15"	419.99	425.50	G-5.12	N 563,282.54	E 1,347,143.54
MH-7	48" SHALLOW PRECAST MANHOLE	15"	420.72	15"	420.47	424.28	G-5.12	N 563,328.57	E 1,347,148.00
I-6	TYPE 'S' COMB. INLET	-	-	12"	420.50	424.63 TC	D-4.32	N 563,457.60	E 1,347,221.31
I-7	TYPE 'D' PRECAST INLET	-	-	15"	407.67	412.00	D-4.10	N 563,220.42	E 1,347,359.60
I-8	TYPE 'S' COMB. INLET	-	-	15"	420.90	425.08 TC	D-4.32	N 563,362.59	E 1,347,161.69
I-9	8" INLINE DRAIN	-	-	4"	422.88	424.88	8" NYLOPLAST DRAIN	N 563,429.85	E 1,347,171.88
CO-1	CLEANOUT	4"	422.50	4"	421.50	425.16	S-2.22	N 563,362.23	E 1,347,165.33
ES-1	CONCRETE END SECTION	12"	-		419.50	-	D-5.51	N 563,511.43	E 1,347,254.72

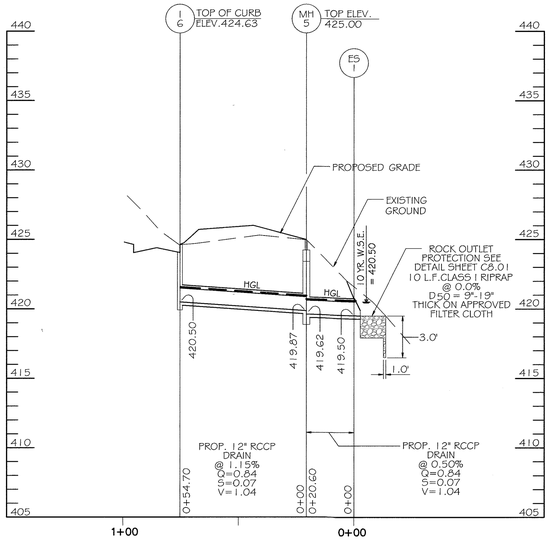

STORM DRAIN PROFILE

SCALE: HORIZ.: 1" = 30'
VERT.: 1" = 5'

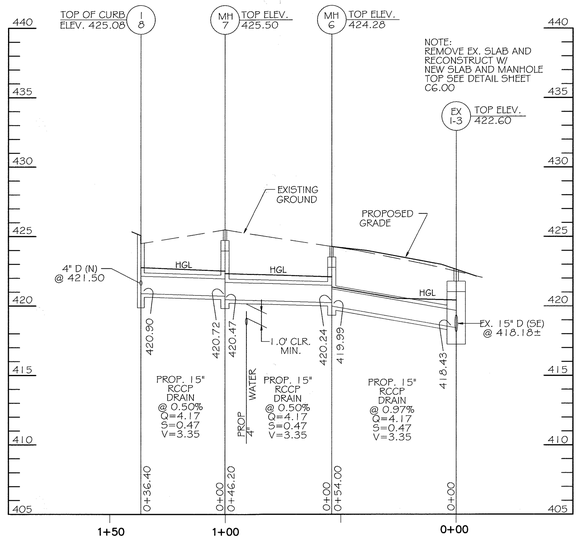

STORM DRAIN PROFILE

SCALE: HORIZ.: 1" = 30'
VERT.: 1" = 5'

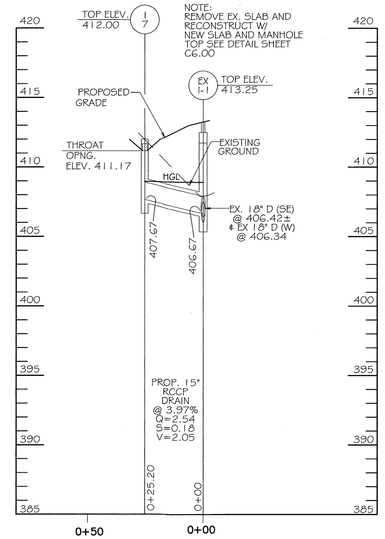

STORM DRAIN PROFILE

SCALE: HORIZ.: 1" = 30'
VERT.: 1" = 5'

CONTRACTOR NOTE:
CONTRACTOR SHALL EXERCISE EXTREME CAUTION SO AS NOT TO DAMAGE ANY EXISTING PAVING, CURB & GUTTER, SIDEWALK OR OTHER SITE FEATURES WHICH ARE TO REMAIN. SHOULD DAMAGE OCCUR, CONTRACTOR SHALL REPAIR TO ORIGINAL CONDITION AT CONTRACTOR'S EXPENSE.

APPROVED: Howard County Department of Planning & Zoning

Director	Date 3-15-16
Chief, Division of Land Development	Date 3-14-16
Chief, Development Engineering Division	Date 2-12-16

Prepared For and Owner:
Howard Community College
10901 Little Patuxent Parkway
Columbia, Maryland 21044
ATTN: Mr. Chuck Nightingale
410-772-4296

Copyright © 2014 Deaman, Inc. All rights reserved. No part of these documents may be reproduced in any form or by any means without permission from Deaman Inc.

DESMAN ASSOCIATES

KCI TECHNOLOGIES
Engineers
Planners
Scientists
Construction Managers
936 Ridgebrook Road
Sparks, MD 21152
Phone (410)316-7800
Fax (410)316-7803
www.kci.com

HOWARD COMMUNITY COLLEGE
EAST PARKING GARAGE NO. 2, PARCEL B & ACCESS BRIDGE, LOT A-2 TOWN CENTER 3/3
COLUMBIA, MD
PARCEL B/ PLAT NO. 19049 & NON-CREDITED OPEN SPACE LOT A-2, TC, 3/3 PLAT NO. 23152
FIFTH ELECTION DISTRICT, ZONING: POR & NEW TOWN

PROFESSIONAL CERTIFICATION. I HEREBY CERTIFY THAT THESE DOCUMENTS WERE PREPARED OR APPROVED BY ME, AND THAT I AM A DULY LICENSED PROFESSIONAL ENGINEER UNDER THE LAWS OF THE STATE OF MARYLAND, LICENSE NO. 31089 EXPIRATION DATE: 11/21/16

STATE OF MARYLAND RICHARD L. BAUER No. 31089 PROFESSIONAL ENGINEER 1/15/16

ISSUE		
NO.	DESCRIPTION	DATE

DRAWING TITLE:
UTILITY PROFILES

DRAWING NO.
C7.00
SHEET: 8 OF 35

SCALE: 1" = 30'
DATE: JANUARY 8, 2016
PROJECT NO: 27146550

DES.	DRWN.	CK'D.
R.L.B.	C.T.B.	R.L.B.

SDP 16-003

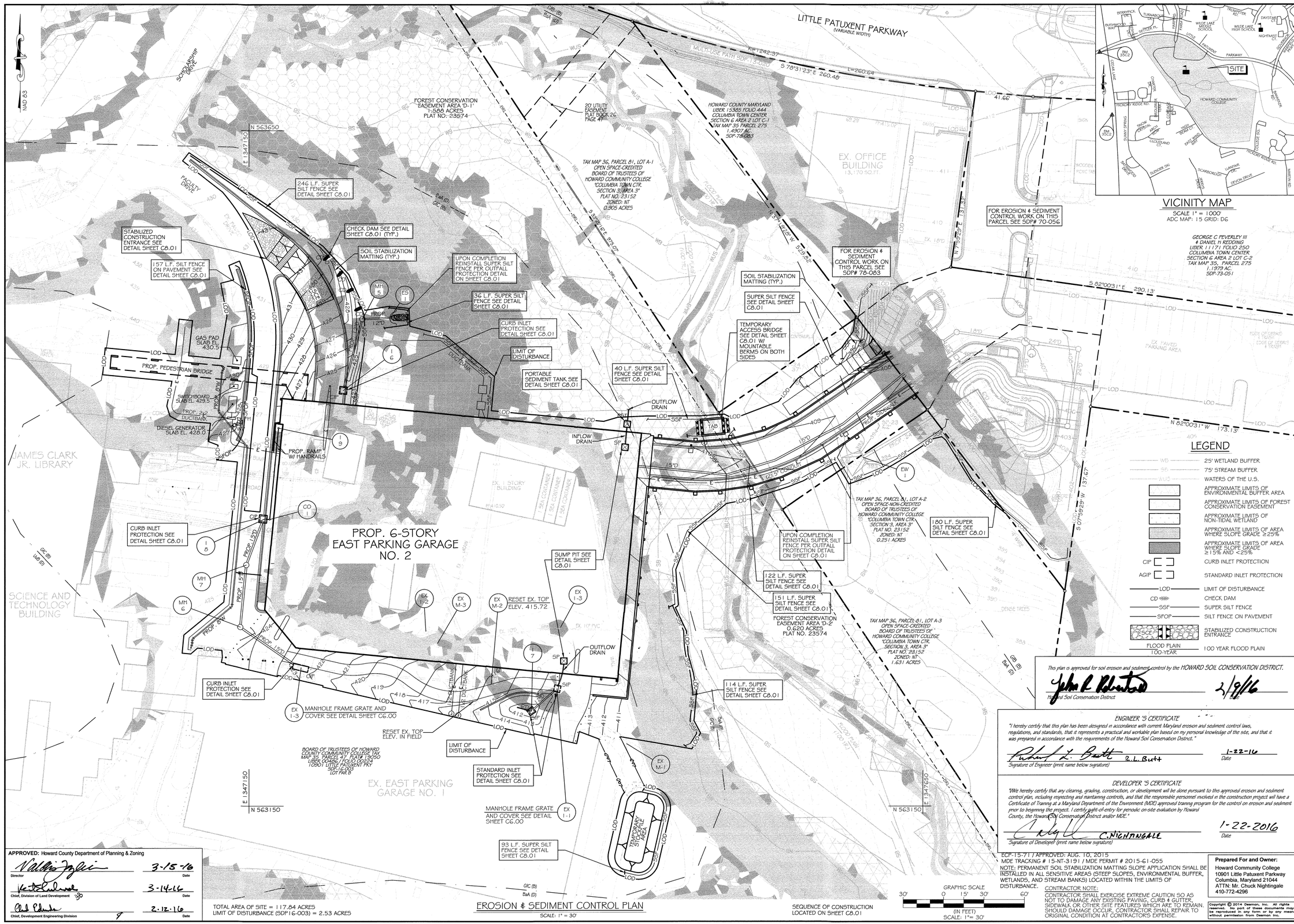

VICINITY MAP

SCALE 1" = 1000'
ADC MAP: 15 GRID: D6

LEGEND

WB	25' WETLAND BUFFER
SB	75' STREAM BUFFER
WUS	WATERS OF THE U.S.
	APPROXIMATE LIMITS OF ENVIRONMENTAL BUFFER AREA
	APPROXIMATE LIMITS OF FOREST CONSERVATION EASEMENT
	APPROXIMATE LIMITS OF NON-TIDAL WETLAND
	APPROXIMATE LIMITS OF AREA WHERE SLOPE GRADE ≥25%
	APPROXIMATE LIMITS OF AREA WHERE SLOPE GRADE ≥15% AND <25%
CIP	CURB INLET PROTECTION
AGIP	STANDARD INLET PROTECTION
LOD	LIMIT OF DISTURBANCE
CD	CHECK DAM
SSF	SUPER SILT FENCE
SFOP	SILT FENCE ON PAVEMENT
SCE	STABILIZED CONSTRUCTION ENTRANCE
FLOOD PLAIN 100-YEAR	100 YEAR FLOOD PLAIN

This plan is approved for soil erosion and sediment control by the HOWARD SOIL CONSERVATION DISTRICT.

John R. Robertson 2/9/16
Howard Soil Conservation District Date

ENGINEER'S CERTIFICATE

"I hereby certify that this plan has been designed in accordance with current Maryland erosion and sediment control laws, regulations, and standards, that it represents a practical and workable plan based on my personal knowledge of the site, and that it was prepared in accordance with the requirements of the Howard Soil Conservation District."

Richard L. Butt R.L. Butt 1-22-16
Signature of Engineer (print name below signature) Date

DEVELOPER'S CERTIFICATE

"We hereby certify that any clearing, grading, construction, or development will be done pursuant to this approved erosion and sediment control plan, including inspecting and maintaining controls, and that the responsible personnel involved in the construction project will have a Certificate of Training at a Maryland Department of the Environment (MDE) approved training program for the control on erosion and sediment prior to beginning the project. I certify point-of-entry for periodic on-site evaluation by Howard County, the Howard Soil Conservation District and/or MDE."

C. NIGHTINGALE 1-22-2016
Signature of Developer (print name below signature) Date

APPROVED: Howard County Department of Planning & Zoning

Director	3-15-16 Date
Chief, Division of Land Development	3-14-16 Date
Chief, Development Engineering Division	2-12-16 Date

TOTAL AREA OF SITE = 117.84 ACRES
LIMIT OF DISTURBANCE (SDP16-003) = 2.53 ACRES

EROSION & SEDIMENT CONTROL PLAN

SCALE: 1" = 30'

SEQUENCE OF CONSTRUCTION LOCATED ON SHEET C8.01

ECP-15-71 / APPROVED: AUG. 10, 2015
MDE TRACKING # 15-NT-3191 / MDE PERMIT # 2015-61-055
NOTE: PERMANENT SOIL STABILIZATION MATTING SLOPE APPLICATION SHALL BE INSTALLED IN ALL SENSITIVE AREAS (STEEP SLOPES, ENVIRONMENTAL BUFFER, WETLANDS, AND STREAM BANKS) LOCATED WITHIN THE LIMITS OF DISTURBANCE.

CONTRACTOR NOTE:
CONTRACTOR SHALL EXERCISE EXTREME CAUTION SO AS NOT TO DAMAGE ANY EXISTING PAVING, CURB & GUTTER, SIDEWALK OR OTHER SITE FEATURES WHICH ARE TO REMAIN. SHOULD DAMAGE OCCUR, CONTRACTOR SHALL REPAIR TO ORIGINAL CONDITION AT CONTRACTOR'S EXPENSE.

Prepared For and Owner:
Howard Community College
10901 Little Patuxent Parkway
Columbia, Maryland 21044
ATTN: Mr. Chuck Nightingale
410-772-4296

Copyright © 2014 Deaman, Inc. All rights reserved. No part of these documents may be reproduced in any form or by any means without permission from Deaman Inc.

DESMAN ASSOCIATES

KCI TECHNOLOGIES
Engineers
Planners
Scientists
Construction Managers
10 Rideknock Road
Sparks, MD 21152
Phone: (410) 316-2900
Fax: (410) 316-2903
www.kci.com

HOWARD COMMUNITY COLLEGE
EAST PARKING GARAGE NO. 2, PARCEL B & ACCESS BRIDGE, LOT A-2 TOWNCENTER 3/3

PARCEL B/ PLAT NO. 19049 & NON-CREDITED OPEN SPACE LOT A-2, BLOCK 3/3 PLAT NO. 23152
FIFTH ELECTION DISTRICT, ZONING: POR & NEW TOWN

PROFESSIONAL CERTIFICATION. I HEREBY CERTIFY THAT THESE DOCUMENTS WERE PREPARED OR APPROVED BY ME, AND THAT I AM A DULY LICENSED PROFESSIONAL ENGINEER UNDER THE LAWS OF THE STATE OF MARYLAND, LICENSE NO. 31089 EXPIRATION DATE: 11/21/16

STATE OF MARYLAND RICHARD L. BUTT No. 031089 PROFESSIONAL ENGINEER 1/15/16

ISSUE		
NO.	DESCRIPTION	DATE

DRAWING TITLE:
EROSION AND SEDIMENT CONTROL PLAN

DRAWING NO.
C8.00
SHEET: 9 OF 35
SCALE: 1" = 30'
DATE: JANUARY 8, 2016
PROJECT NO: 27146550

DES.	DRWN.	CK'D.
R.L.B.	C.T.B.	R.L.B.

SDP 16-003
GP-16-012

DETAIL B-1 STABILIZED CONSTRUCTION ENTRANCE

STANDARD SYMBOL: SCE

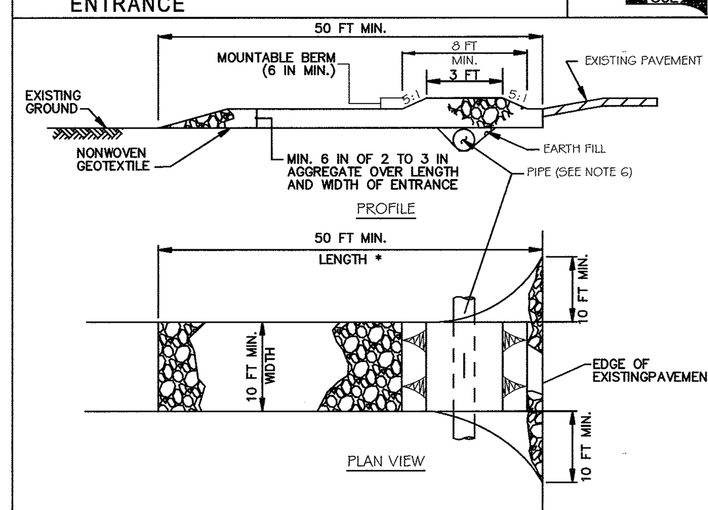

CONSTRUCTION SPECIFICATIONS

1. PLACE STABILIZED CONSTRUCTION ENTRANCE IN ACCORDANCE WITH THE APPROVED PLAN. VEHICLES MUST TRAVEL OVER THE ENTIRE LENGTH OF THE SCE. USE MINIMUM LENGTH OF 50 FEET (*30 FEET FOR SINGLE RESIDENCE LOT). USE MINIMUM WIDTH OF 10 FEET. FLARE SCE 10 FEET MINIMUM AT THE EXISTING ROAD TO PROVIDE A TURNING RADIUS.
2. PIPE ALL SURFACE WATER FLOWING TO OR DIVERTED TOWARD THE SCE UNDER THE ENTRANCE, MAINTAINING POSITIVE DRAINAGE. PROTECT PIPE INSTALLED THROUGH THE SCE WITH A MOUNTABLE BERM WITH 5:1 SLOPES AND A MINIMUM OF 12 INCHES OF STONE OVER THE PIPE. PROVIDE PIPE AS SPECIFIED ON APPROVED PLAN. WHEN THE SCE IS LOCATED AT A HIGH SPOT AND HAS NO DRAINAGE TO CONVEY, A PIPE IS NOT NECESSARY. A MOUNTABLE BERM IS REQUIRED WHEN SCE IS NOT LOCATED AT A HIGH SPOT.
3. PREPARE SUBGRADE AND PLACE NONWOVEN GEOTEXTILE, AS SPECIFIED IN SECTION H-1 MATERIALS.
4. PLACE CRUSHED AGGREGATE (2 TO 3 INCHES IN SIZE) OR EQUIVALENT RECYCLED CONCRETE (WITHOUT REBAR) AT LEAST 6 INCHES DEEP OVER THE LENGTH AND WIDTH OF THE SCE.
5. MAINTAIN ENTRANCE IN A CONDITION THAT MINIMIZES TRACKING OF SEDIMENT. ADD STONE OR MAKE OTHER REPAIRS AS CONDITIONS DEMAND TO MAINTAIN CLEAN SURFACE, MOUNTABLE BERM, AND SPECIFIED DIMENSIONS. IMMEDIATELY REMOVE STONE AND/OR SEDIMENT SPILLED, DROPPED, OR TRACKED ONTO ADJACENT ROADWAY BY VACUUMING, SCRAPING, AND/OR SWEEPING. WASHING ROADWAY TO REMOVE MUD TRACKED ONTO PAVEMENT IS NOT ACCEPTABLE UNLESS WASH WATER IS DIRECTED TO AN APPROVED SEDIMENT CONTROL PRACTICE.

MARYLAND STANDARDS AND SPECIFICATIONS FOR SOIL EROSION AND SEDIMENT CONTROL

U.S. DEPARTMENT OF AGRICULTURE NATURAL RESOURCES CONSERVATION SERVICE	2011	MARYLAND DEPARTMENT OF ENVIRONMENT WATER MANAGEMENT ADMINISTRATION

DETAIL E-3 SUPER SILT FENCE

STANDARD SYMBOL: SSF

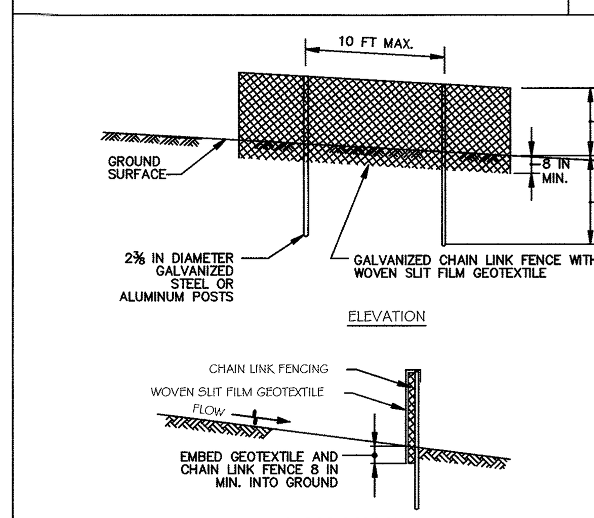

CONSTRUCTION SPECIFICATIONS

1. INSTALL 2⅜ INCH DIAMETER GALVANIZED STEEL POSTS OF 0.095 INCH WALL THICKNESS AND SIX FOOT LENGTH SPACED NO FURTHER THAN 10 FEET APART. DRIVE THE POSTS A MINIMUM OF 36 INCHES INTO THE GROUND.
2. FASTEN 9 GAUGE OR HEAVIER GALVANIZED CHAIN LINK FENCE (2⅜ INCH MAXIMUM OPENING) 42 INCHES IN HEIGHT SECURELY TO THE FENCE POSTS WITH WIRE TIES OR HUG RINGS.
3. FASTEN WOVEN SLIT FILM GEOTEXTILE AS SPECIFIED IN SECTION H-1 MATERIALS, SECURELY TO THE UPSLOPE SIDE OF CHAIN LINK FENCE WITH TIES SPACED EVERY 24 INCHES AT THE TOP AND MID SECTION. EMBED GEOTEXTILE AND CHAIN LINK FENCE A MINIMUM OF 8 INCHES INTO THE GROUND.
4. WHERE ENDS OF THE GEOTEXTILE COME TOGETHER, THE ENDS SHALL BE OVERLAPPED BY 6 INCHES, FOLDED, AND STAPLED TO PREVENT SEDIMENT BY PASS.
5. EXTEND BOTH ENDS OF THE SUPER SILT FENCE A MINIMUM OF FIVE HORIZONTAL FEET UPSLOPE AT 45 DEGREES TO THE MAIN FENCE ALIGNMENT TO PREVENT RUNOFF FROM GOING AROUND THE ENDS OF THE SUPER SILT FENCE.
6. PROVIDE MANUFACTURER CERTIFICATION TO THE INSPECTION/ENFORCEMENT AUTHORITY SHOWING THAT GEOTEXTILE USED MEETS THE REQUIREMENTS IN SECTION H-1 MATERIALS.
7. REMOVE ACCUMULATED SEDIMENT AND DEBRIS WHEN BULGES DEVELOP IN FENCE OR WHEN SEDIMENT REACHES 25% OF FENCE HEIGHT. REPLACE GEOTEXTILE IF TORN. IF UNDERMINING OCCURS, REINSTALL CHAIN LINK FENCING AND GEOTEXTILE.

MARYLAND STANDARDS AND SPECIFICATIONS FOR SOIL EROSION AND SEDIMENT CONTROL

U.S. DEPARTMENT OF AGRICULTURE NATURAL RESOURCES CONSERVATION SERVICE	2011	MARYLAND DEPARTMENT OF ENVIRONMENT WATER MANAGEMENT ADMINISTRATION

DETAIL E-9-1 STANDARD INLET PROTECTION

STANDARD SYMBOL: SIP

TYPE A MAXIMUM DRAINAGE AREA = ¼ ACRE
TYPE B MAXIMUM DRAINAGE AREA = 1 ACRE

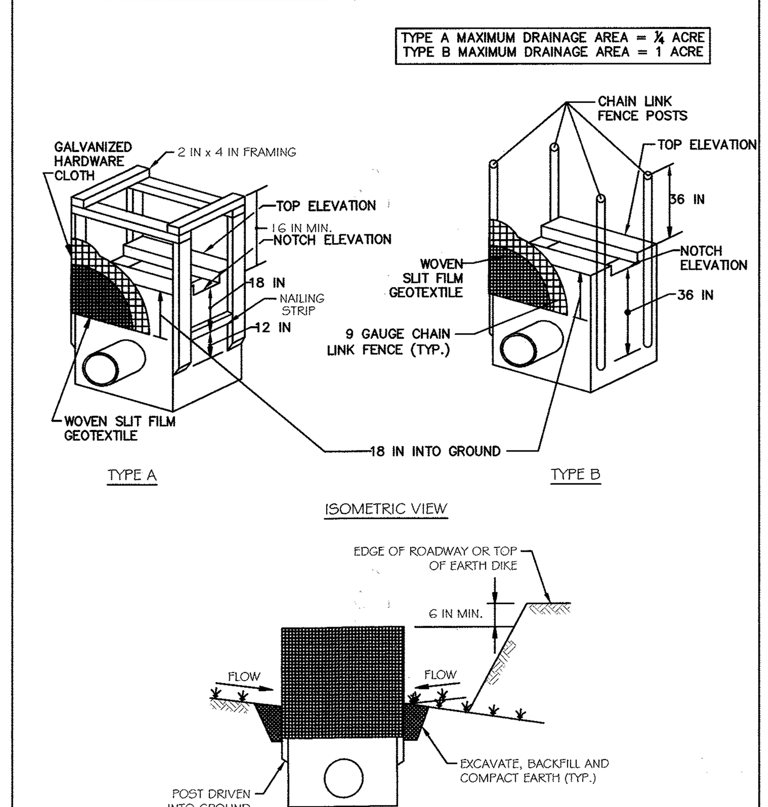

1 OF 2

MARYLAND STANDARDS AND SPECIFICATIONS FOR SOIL EROSION AND SEDIMENT CONTROL

U.S. DEPARTMENT OF AGRICULTURE NATURAL RESOURCES CONSERVATION SERVICE	2011	MARYLAND DEPARTMENT OF ENVIRONMENT WATER MANAGEMENT ADMINISTRATION

DETAIL E-9-1 STANDARD INLET PROTECTION

STANDARD SYMBOL: SIP

CONSTRUCTION SPECIFICATIONS

1. USE WOVEN SLIT FILM GEOTEXTILE AS SPECIFIED IN SECTION H-1 MATERIALS.
2. EXCAVATE COMPLETELY AROUND THE INLET TO A DEPTH OF 18 INCHES BELOW THE NOTCH ELEVATION.
3. FOR TYPE A, USE NOMINAL 2 INCH X 4 INCH CONSTRUCTION GRADE LUMBER POSTS, DRIVEN 1 FOOT INTO THE GROUND AT EACH CORNER OF THE INLET. PLACE NAIL STRIPS BETWEEN THE POSTS ON THE ENDS OF THE INLET. ASSEMBLE THE TOP PORTION OF THE 2X4 FRAME AS SHOWN. STRETCH ¼ INCH GALVANIZED HARDWARE CLOTH TIGHTLY AROUND THE FRAME AND FASTEN SECURELY. FASTEN GEOTEXTILE SECURELY TO THE HARDWARE CLOTH WITH TIES SPACED EVERY 24 INCHES AT THE TOP AND MID SECTION. EMBED GEOTEXTILE AND HARDWARE CLOTH A MINIMUM OF 18 INCHES BELOW THE WEIR CREST. THE ENDS OF THE GEOTEXTILE MUST MEET AT A POST, BE OVERLAPPED AND FOLDED, THEN FASTENED TO THE POST.

FOR TYPE B, USE 2⅜ INCH DIAMETER GALVANIZED STEEL POSTS OF 0.095 INCH WALL THICKNESS AND 6 FOOT LENGTH, DRIVEN A MINIMUM OF 36 INCHES BELOW THE WEIR CREST AT EACH CORNER OF THE STRUCTURE. FASTEN 9 GAUGE OR HEAVIER CHAIN LINK FENCE, 42 INCHES IN HEIGHT, SECURELY TO THE FENCE POSTS WITH WIRE TIES. FASTEN GEOTEXTILE SECURELY TO THE CHAIN LINK FENCE WITH TIES SPACED EVERY 24 INCHES AT THE TOP AND MID SECTION. EMBED GEOTEXTILE AND CHAIN LINK FENCE A MINIMUM OF 18 INCHES BELOW THE WEIR CREST.

4. BACKFILL AROUND THE INLET IN LOOSE 4 INCH LIFTS AND COMPACT UNTIL SOIL IS LEVEL WITH THE NOTCH ELEVATION ON THE ENDS AND TOP ELEVATION ON THE SIDES.
5. STORM DRAIN INLET PROTECTION REQUIRES FREQUENT MAINTENANCE. REMOVE ACCUMULATED SEDIMENT AFTER EACH RAIN EVENT TO MAINTAIN FUNCTION AND AVOID PREMATURE CLOGGING. IF INLET PROTECTION DOES NOT COMPLETELY DRAIN WITHIN 24 HOURS AFTER A STORM EVENT, IT IS CLOGGED. WHEN THIS OCCURS, REMOVE ACCUMULATED SEDIMENT AND CLEAN, OR REPLACE GEOTEXTILE AND STONE.

2 OF 2

MARYLAND STANDARDS AND SPECIFICATIONS FOR SOIL EROSION AND SEDIMENT CONTROL

U.S. DEPARTMENT OF AGRICULTURE NATURAL RESOURCES CONSERVATION SERVICE	2011	MARYLAND DEPARTMENT OF ENVIRONMENT WATER MANAGEMENT ADMINISTRATION

DETAIL E-2 SILT FENCE ON PAVEMENT

STANDARD SYMBOL: SFOP

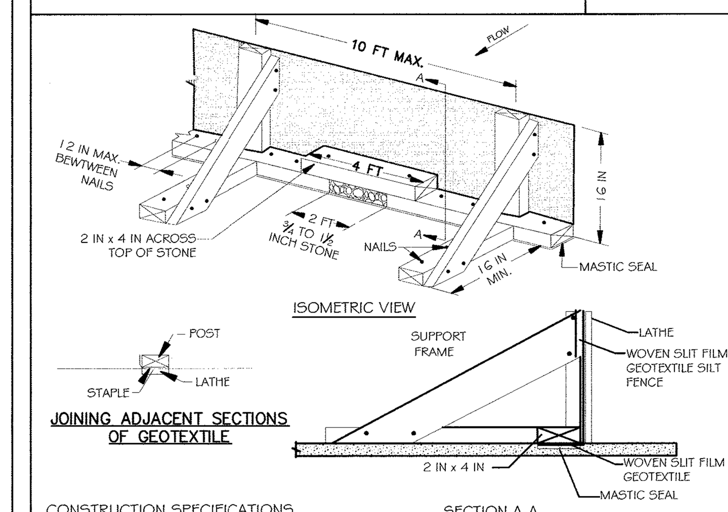

CONSTRUCTION SPECIFICATIONS

1. USE NOMINAL 2 INCH X 4 INCH LUMBER.
2. USE WOVEN SLIT FILM GEOTEXTILE, AS SPECIFIED IN SECTION H-1 MATERIALS.
3. PROVIDE MANUFACTURER CERTIFICATION TO THE AUTHORIZED REPRESENTATIVE OF THE INSPECTION/ENFORCEMENT AUTHORITY SHOWING THAT THE GEOTEXTILE USED MEETS THE REQUIREMENTS IN SECTION H-1 MATERIALS.
4. SPACE UPRIGHT SUPPORTS NO MORE THAN 10 FEET APART.
5. PROVIDE A TWO FOOT OPENING BETWEEN EVERY SET OF SUPPORTS AND PLACE STONE IN THE OPENING OVER GEOTEXTILE.
6. KEEP SILT FENCE TAUT AND SECURELY STAPLE TO THE UPSLOPE SIDE OF UPRIGHT SUPPORTS. EXTEND GEOTEXTILE UNDER 2x4.
7. WHERE TWO SECTIONS OF GEOTEXTILE ADJOIN: OVERLAP, FOLD, AND STAPLE TO POST IN ACCORDANCE WITH THIS DETAIL. ATTACH LATHE.
8. PROVIDE A MASTIC SEAL BETWEEN PAVEMENT, GEOTEXTILE, AND 2x4 TO PREVENT SEDIMENT-LADEN WATER FROM ESCAPING BENEATH SILT FENCE INSTALLATION.
9. SECURE BOARDS TO PAVEMENT WITH 40D 5 INCH MINIMUM LENGTH NAILS.
10. REMOVE ACCUMULATED SEDIMENT AND DEBRIS WHEN BULGES DEVELOP IN SILT FENCE OR WHEN SEDIMENT REACHES 25% OF FENCE HEIGHT. REPLACE GEOTEXTILE IF TORN. MAINTAIN WATER TIGHT SEAL ALONG BOTTOM. REPLACE STONE IF DISPLACED.

MARYLAND STANDARDS AND SPECIFICATIONS FOR SOIL EROSION AND SEDIMENT CONTROL

U.S. DEPARTMENT OF AGRICULTURE NATURAL RESOURCES CONSERVATION SERVICE	2011	MARYLAND DEPARTMENT OF ENVIRONMENT WATER MANAGEMENT ADMINISTRATION

DETAIL E-9-3 CURB INLET PROTECTION

STANDARD SYMBOL: CIP

MAXIMUM DRAINAGE AREA = ¼ ACRE

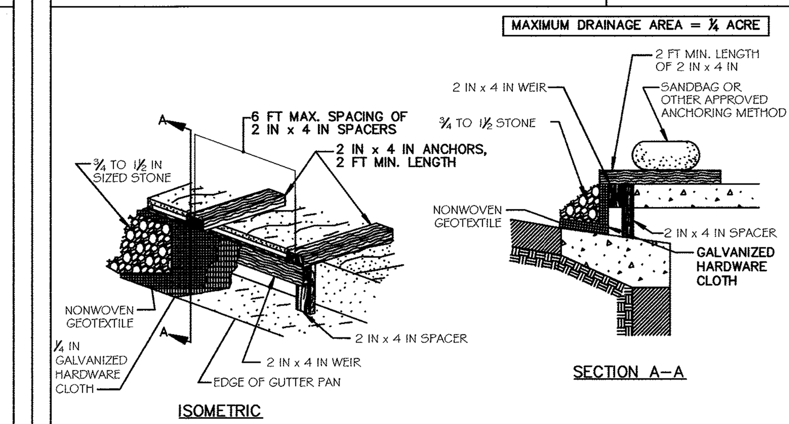

CONSTRUCTION SPECIFICATIONS

1. USE NOMINAL 2 INCH x 4 INCH LUMBER.
2. USE NONWOVEN GEOTEXTILE AS SPECIFIED IN SECTION H-1 MATERIALS.
3. NAIL THE 2x4 WEIR TO 9 INCH LONG VERTICAL SPACERS (MAXIMUM 6 FEET APART).
4. ATTACH A CONTINUOUS PIECE OF ¼ INCH GALVANIZED HARDWARE CLOTH, WITH A MINIMUM WIDTH OF 30 INCHES AND A MINIMUM LENGTH OF 4 FEET LONGER THAN THE THROAT OPENING, TO THE 2x4 WEIR, EXTENDING IT 2 FEET BEYOND THROAT ON EACH SIDE.
5. PLACE A CONTINUOUS PIECE OF NONWOVEN GEOTEXTILE OF THE SAME DIMENSIONS AS THE HARDWARE CLOTH OVER THE HARDWARE CLOTH AND SECURELY ATTACH TO THE 2x4 WEIR.
6. PLACE THE ASSEMBLY AGAINST THE INLET THROAT AND NAIL TO 2x4 ANCHORS (MINIMUM 2 FEET LENGTH). EXTEND THE ANCHORS ACROSS THE INLET TOP AND HOLD IN PLACE BY SANDBAGS OR OTHER APPROVED ANCHORING METHOD.
7. INSTALL END SPACERS A MINIMUM OF 1 FOOT BEYOND THE ENDS OF THE THROAT OPENING.
8. FORM THE HARDWARE CLOTH AND THE GEOTEXTILE TO THE CONCRETE GUTTER AND FACE OF CURB TO SPAN THE INLET OPENING. COVER THE HARDWARE CLOTH AND GEOTEXTILE WITH CLEAN ¾ TO 1½ INCH STONE OR EQUIVALENT RECYCLED CONCRETE.
9. AT NON-SUMP LOCATIONS, INSTALL A TEMPORARY SANDBAG OR ASPHALT BERM TO PREVENT INLET BYPASS.
10. STORM DRAIN INLET PROTECTION REQUIRES FREQUENT MAINTENANCE. REMOVE ACCUMULATED SEDIMENT AFTER EACH RAIN EVENT TO MAINTAIN FUNCTION AND AVOID PREMATURE CLOGGING. IF INLET PROTECTION DOES NOT COMPLETELY DRAIN WITHIN 24 HOURS AFTER A STORM EVENT, IT IS CLOGGED. WHEN THIS OCCURS, REMOVE ACCUMULATED SEDIMENT AND CLEAN, OR REPLACE GEOTEXTILE AND STONE.

MARYLAND STANDARDS AND SPECIFICATIONS FOR SOIL EROSION AND SEDIMENT CONTROL

U.S. DEPARTMENT OF AGRICULTURE NATURAL RESOURCES CONSERVATION SERVICE	2011	MARYLAND DEPARTMENT OF ENVIRONMENT WATER MANAGEMENT ADMINISTRATION

DETAIL F-2 SUMP PIT

STANDARD SYMBOL: ☒SP

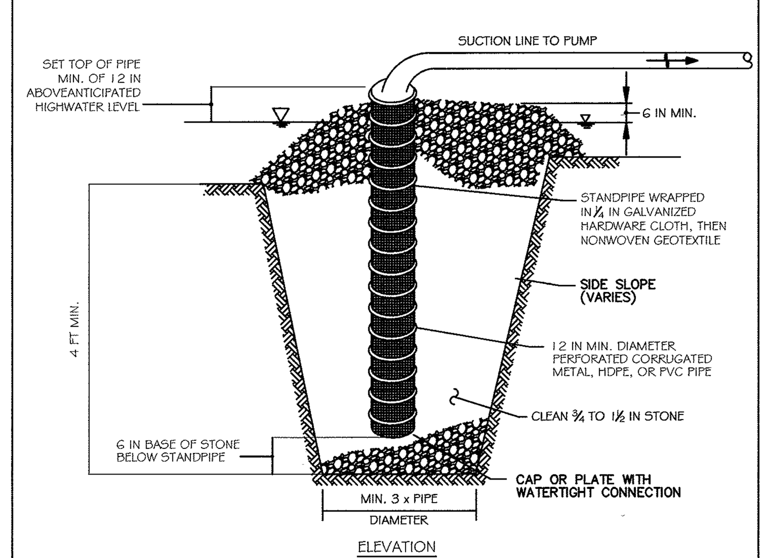

CONSTRUCTION SPECIFICATIONS

1. USE 12 INCH OR LARGER DIAMETER CORRUGATED METAL, HDPE, OR PVC PIPE WITH 1 INCH DIAMETER PERFORATIONS, 6 INCHES ON CENTER. BOTTOM OF PIPE MUST BE CAPPED WITH WATERTIGHT SEAL.
2. WRAP PIPE WITH ¼ INCH GALVANIZED HARDWARE CLOTH AND WRAP NONWOVEN GEOTEXTILE, AS SPECIFIED IN SECTION H-1 MATERIALS, OVER THE HARDWARE CLOTH.
3. EXCAVATE PIT TO THREE TIMES THE PIPE DIAMETER AND FOUR FEET IN DEPTH. PLACE ¾ TO 1½ INCH STONE **OR EQUIVALENT RECYCLED CONCRETE**, 6 INCHES IN DEPTH PRIOR TO PIPE PLACEMENT.
4. SET TOP OF PIPE MINIMUM 12 INCHES ABOVE ANTICIPATED WATER SURFACE ELEVATION.
5. BACKFILL PIT AROUND THE PIPE WITH ¾ TO 1½ INCH CLEAN STONE **OR EQUIVALENT RECYCLED CONCRETE** AND EXTEND STONE A MINIMUM OF 6 INCHES ABOVE ANTICIPATED WATER SURFACE ELEVATION.
6. **DISCHARGE TO A STABLE AREA AT A NONEROSIVE RATE.**
7. A SUMP PIT REQUIRES FREQUENT MAINTENANCE. IF SYSTEM CLOGS, REMOVE PERFORATED PIPE AND REPLACE GEOTEXTILE AND STONE. KEEP POINT OF DISCHARGE FREE OF EROSION.

MARYLAND STANDARDS AND SPECIFICATIONS FOR SOIL EROSION AND SEDIMENT CONTROL

U.S. DEPARTMENT OF AGRICULTURE NATURAL RESOURCES CONSERVATION SERVICE	2011	MARYLAND DEPARTMENT OF ENVIRONMENT WATER MANAGEMENT ADMINISTRATION

DETAIL F-3 PORTABLE SEDIMENT TANK

STANDARD SYMBOL: ☒PST

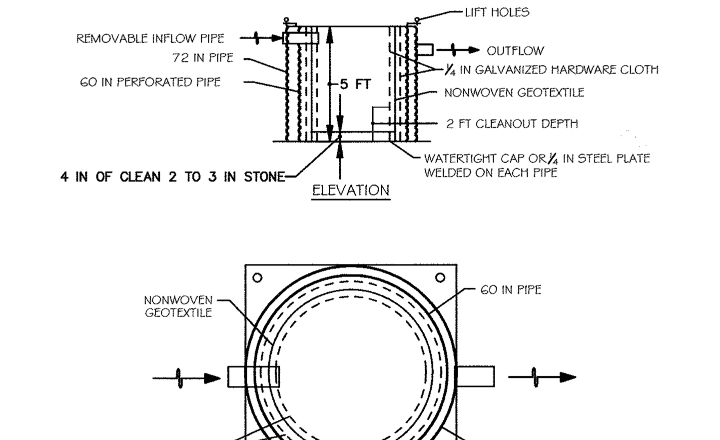

CONSTRUCTION SPECIFICATIONS

1. PROVIDE 1 CUBIC FOOT OF STORAGE FOR EACH GALLON PER MINUTE OF PUMP CAPACITY. REQUIRED STORAGE VOLUME MAY BE ATTAINED BY PLACEMENT OF TANKS IN PARALLEL WITH INFLOW EVENLY DISTRIBUTED AMONG TANKS. OVERTOPPING OF TANKS IS NOT PERMITTED.
2. USE 60 INCH CORRUGATED METAL OR PLASTIC PIPE WITH 1 INCH DIAMETER PERFORATIONS, 6 INCHES ON CENTER FOR THE INNER PIPE. LINE PIPE WITH NONWOVEN GEOTEXTILE, AS SPECIFIED IN SECTION H-1 MATERIALS, SANDWICHED BETWEEN, AND ATTACHED TO, ¼ INCH HARDWARE CLOTH.
3. OVERLAP GEOTEXTILE 8 INCHES MINIMUM AT VERTICAL SEAM AND AT THE BOTTOM PLATE.
4. ANCHOR GEOTEXTILE AT BOTTOM OF TANK WITH 4 INCHES OF 2 TO 3 INCH CLEAN STONE **OR EQUIVALENT RECYCLED CONCRETE**.
5. USE 72 INCH CORRUGATED METAL OR PLASTIC OUTER PIPE WITH PERMANENT OUTFLOW PIPE WITH INVERT LOWER THAN INFLOW PIPE
6. INFLOW PIPE MUST DISCHARGE INTO INNER PIPE AND BE REMOVABLE.
7. PLACE TANK ON LEVEL SURFACE AND DISCHARGE TO A STABLE AREA **AT A NON-EROSIVE RATE**.
8. A PORTABLE SEDIMENT TANK REQUIRES FREQUENT MAINTENANCE. REMOVE ACCUMULATED SEDIMENT FROM INNER PIPE WHEN IT REACHES TWO FEET IN DEPTH. IF SYSTEM CLOGS, PULL OUT INNER PIPE, REMOVE ACCUMULATED SEDIMENT, AND REPLACE GEOTEXTILE. KEEP POINT OF DISCHARGE FREE OF EROSION.

MARYLAND STANDARDS AND SPECIFICATIONS FOR SOIL EROSION AND SEDIMENT CONTROL

U.S. DEPARTMENT OF AGRICULTURE NATURAL RESOURCES CONSERVATION SERVICE	2011	MARYLAND DEPARTMENT OF ENVIRONMENT WATER MANAGEMENT ADMINISTRATION

DETAIL H-4-1 TEMPORARY ACCESS BRIDGE

STANDARD SYMBOL: TB

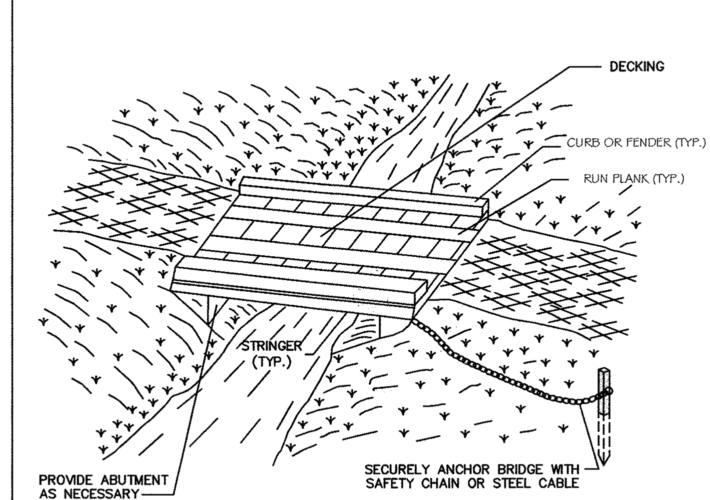

NOTE:
TIME OF YEAR RESTRICTIONS DO NOT APPLY TO THE CONSTRUCTION OR REMOVAL OF A TEMPORARY ACCESS BRIDGE UNLESS THERE IS DISTURBANCE TO THE STREAM CHANNEL.

DESIGN CRITERIA

1. STREAM CLOSURES: THE STREAM CHANNEL MUST NOT BE DISTURBED DURING RESTRICTED TIME PERIODS. STREAM CLOSURE DATES FOR FISH SPAWNING OR MIGRATION WITHIN WATERWAYS ARE AS FOLLOWS:

USE I AND IP	MARCH 1 – JUNE 15
USE II	JUNE 1 – SEPTEMBER 30 AND DECEMBER 16 – MARCH 14
USE III AND IIIP	OCTOBER 1 – APRIL 30
USE IV	MARCH 1 – MAY 31
SAV*	APRIL 1 – OCTOBER 15

*SUBMERGED AQUATIC VEGETATION (SAV)

FOR MORE INFORMATION ABOUT THE CLOSURES BASED ON STREAM USES AND SAVs CONTACT MDE WETLANDS AND WATERWAYS PROGRAM.

1 OF 2

MARYLAND STANDARDS AND SPECIFICATIONS FOR SOIL EROSION AND SEDIMENT CONTROL

U.S. DEPARTMENT OF AGRICULTURE NATURAL RESOURCES CONSERVATION SERVICE	2011	MARYLAND DEPARTMENT OF ENVIRONMENT WATER MANAGEMENT ADMINISTRATION

DETAIL H-4-1 TEMPORARY ACCESS BRIDGE

STANDARD SYMBOL: TB

CONSTRUCTION SPECIFICATIONS

1. CONSTRUCT TEMPORARY BRIDGE STRUCTURE AT OR ABOVE THE BANK ELEVATION TO PREVENT IMPACTS FROM FLOATING MATERIALS AND DEBRIS.
2. PLACE ABUTMENTS PARALLEL TO, AND ON, STABLE BANKS.
3. CONSTRUCT BRIDGE TO SPAN ENTIRE CHANNEL UNLESS OTHERWISE INDICATED ON APPROVED PLAN.
4. USE STRINGERS CONSISTING OF LOGS, SAWN TIMBER, PRESTRESSED CONCRETE BEAMS, METAL BEAMS, OR OTHER APPROVED MATERIALS.
5. SELECT DECKING MATERIALS TO PROVIDE SUFFICIENT STRENGTH TO SUPPORT THE ANTICIPATED LOAD. PLACE ALL DECKING MEMBERS PERPENDICULAR TO THE STRINGERS, BUTT TIGHTLY, AND SECURELY FASTEN. DECKING MATERIALS MUST BE BUTTED TIGHTLY TO PREVENT ANY SOIL MATERIAL TRACKED ONTO THE BRIDGE FROM FALLING INTO THE WATERWAY BELOW.
6. SECURELY FASTEN OPTIONAL RUN PLANKING FOR THE LENGTH OF THE SPAN. PROVIDE A RUN PLANK FOR EACH TRACK OF THE EQUIPMENT WHEELS. ALTHOUGH RUN PLANKS ARE OPTIONAL, THEY MAY BE NECESSARY TO PROPERLY DISTRIBUTE LOADS.
7. INSTALL CURBS THE ENTIRE LENGTH OF THE OUTER SIDES OF THE DECK TO PREVENT SEDIMENT FROM ENTERING THE STREAM CHANNEL.
8. ANCHOR BRIDGE SECURELY AT ONLY ONE END USING STEEL CABLE OR CHAIN. ANCHORING AT ONLY ONE END WILL PREVENT CHANNEL OBSTRUCTION IN THE EVENT THAT FLOODWATERS FLOAT THE BRIDGE. ACCEPTABLE ANCHORS ARE LARGE TREES, LARGE BOULDERS, OR DRIVEN STEEL POSTS. ANCHOR MUST BE SUFFICIENT TO PREVENT THE BRIDGE FROM FLOATING DOWNSTREAM.
9. AREAS DISTURBED DURING BRIDGE INSTALLATION AND/OR REMOVAL MUST NOT BE LEFT UNSTABILIZED OVERNIGHT UNLESS THE RUNOFF IS DIRECTED TO AN APPROVED SEDIMENT CONTROL DEVICE.
10. STABILIZE APPROACH TO BRIDGE AND KEEP FREE OF EROSION. CLEAN SEDIMENT FROM DECKING AND CURBS DAILY BY SCRAPING, SWEEPING, AND/OR VACUUMING. ENSURE THAT DECKING AND CURBS REMAIN TIGHTLY BUTTED WITHOUT GAPS. REMOVE DEBRIS TRAPPED BY BRIDGE. MAINTAIN AREAS ADJACENT TO CROSSING TO CONTINUOUSLY MEET REQUIREMENTS FOR ADEQUATE VEGETATIVE ESTABLISHMENT IN ACCORDANCE WITH SECTION B-4 VEGETATIVE STABILIZATION.
11. AFTER THE TEMPORARY CROSSING IS NO LONGER NEEDED, REMOVE IT WITHIN 14 CALENDAR DAYS. IF SUBJECT TO THE USE DESIGNATION CLOSURE, REMOVE AT THE END OF CLOSURE PERIOD. PROTECT STREAM BANKS DURING BRIDGE REMOVAL AND STABILIZE ALL DISTURBED AREAS WITH EROSION CONTROL MATTING. ACCOMPLISH REMOVAL OF THE BRIDGE AND CLEAN UP OF THE AREA WITHOUT CONSTRUCTION EQUIPMENT WORKING IN THE WATERWAY CHANNEL. STORE ALL REMOVED MATERIALS IN AN APPROVED STAGING AREA.

2 OF 2

MARYLAND STANDARDS AND SPECIFICATIONS FOR SOIL EROSION AND SEDIMENT CONTROL

U.S. DEPARTMENT OF AGRICULTURE NATURAL RESOURCES CONSERVATION SERVICE	2011	MARYLAND DEPARTMENT OF ENVIRONMENT WATER MANAGEMENT ADMINISTRATION

DETAIL B-4-6-D PERMANENT SOIL STABILIZATION MATTING SLOPE APPLICATION

STANDARD SYMBOL: PSSMS – 2.0 lb/ft² (* INCLUDE SHEAR STRESS)

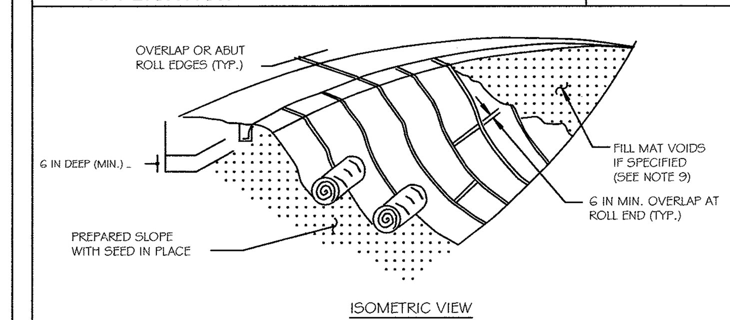

CONSTRUCTION SPECIFICATIONS

1. USE MATTING THAT HAS A DESIGN VALUE FOR SHEAR STRESS EQUAL TO OR HIGHER THAN THE SHEAR STRESS DESIGNATED ON APPROVED PLANS.
2. USE PERMANENT SOIL STABILIZATION MATTING MADE OF OPEN WEAVE SYNTHETIC, NON-DEGRADABLE FIBERS OR ELEMENTS OF UNIFORM THICKNESS AND DISTRIBUTION THROUGHOUT. CHEMICALS USED IN THE MAT MUST BE NON-LEACHING AND NON-TOXIC TO VEGETATION AND SEED GERMINATION AND NON-INJURIOUS TO THE SKIN. IF PRESENT, NETTING MUST BE EXTRUDED PLASTIC WITH A MAXIMUM MESH OPENING OF 2x2 INCHES AND SUFFICIENTLY BONDED OR SEWN ON 2 INCH CENTERS ALONG LONGITUDINAL AXIS OF THE MATERIAL TO PREVENT SEPARATION OF THE NET FROM THE PARENT MATERIAL.
3. SECURE MATTING USING STEEL STAPLES OR WOOD STAKES. STAPLES MUST BE "U" OR "T" SHAPED STEEL WIRE HAVING A MINIMUM GAUGE OF NO. 11 AND NO. 8 RESPECTIVELY. "U" SHAPED STAPLES MUST AVERAGE 1 TO 1½ INCHES WIDE AND BE A MINIMUM OF 6 INCHES LONG. "T" SHAPED STAPLES MUST HAVE A MINIMUM 8 INCH MAIN LEG, A MINIMUM 1 INCH SECONDARY LEG, AND MINIMUM 4 INCH HEAD. WOOD STAKES MUST BE ROUGH-SAWN HARDWOOD, 12 TO 24 INCHES IN LENGTH, 1x3 INCH IN CROSS SECTION, AND WEDGE SHAPE AT THE BOTTOM.
4. PERFORM FINAL GRADING, TOPSOIL APPLICATION, SEEDBED PREPARATION, AND PERMANENT SEEDING IN ACCORDANCE WITH SPECIFICATIONS. PLACE MATTING WITHIN 48 HOURS OF COMPLETING SEEDING OPERATIONS, UNLESS END OF WORKDAY STABILIZATION IS SPECIFIED ON THE APPROVED EROSION AND SEDIMENT CONTROL PLAN.
5. UNROLL MATTING DOWN SLOPE. LAY MATTING SMOOTHLY AND FIRMLY UPON THE SEEDED SURFACE. AVOID STRETCHING THE MATTING.
6. OVERLAP OR ABUT EDGES OF MATTING ROLLS PER MANUFACTURER RECOMMENDATIONS. OVERLAP ROLL ENDS BY 6 INCHES (MINIMUM), WITH THE UPSTREAM MAT OVERLAPPING ON TOP OF THE DOWNSLOPE MAT.
7. KEY IN THE TOP OF SLOPE END OF MAT 6 INCHES (MINIMUM) BY DIGGING A TRENCH, PLACING THE MATTING ROLL END IN THE TRENCH, STAPLING THE MAT IN PLACE, REPLACING THE EXCAVATED MATERIAL, AND TAMPING TO SECURE THE MAT END IN THE KEY.
8. STAPLE/STAKE MAT IN A STAGGERED PATTERN ON 4 FOOT (MAXIMUM) CENTERS THROUGHOUT AND 2 FOOT (MAXIMUM) CENTERS ALONG SEAMS, JOINTS, AND ROLL ENDS.
9. IF SPECIFIED BY THE DESIGNER OR MANUFACTURER AND DEPENDING ON THE TYPE OF MAT BEING INSTALLED, ONCE THE MATTING IS KEYED AND STAPLED IN PLACE, FILL THE MAT VOIDS WITH TOP SOIL OR GRANULAR MATERIAL AND LIGHTLY COMPACT OR ROLL TO MAXIMIZE SOIL/MAT CONTACT WITHOUT CRUSHING MAT.
10. ESTABLISH AND MAINTAIN VEGETATION SO THAT REQUIREMENTS FOR ADEQUATE VEGETATIVE ESTABLISHMENT ARE CONTINUOUSLY MET IN ACCORDANCE WITH SECTION B-4 VEGETATIVE STABILIZATION.

MARYLAND STANDARDS AND SPECIFICATIONS FOR SOIL EROSION AND SEDIMENT CONTROL

U.S. DEPARTMENT OF AGRICULTURE NATURAL RESOURCES CONSERVATION SERVICE	2011	MARYLAND DEPARTMENT OF ENVIRONMENT WATER MANAGEMENT ADMINISTRATION

DETAIL D-4-1-C ROCK OUTLET PROTECTION III

STANDARD SYMBOL: ROPIII

DISCHARGE TO AN UNCONFINED CHANNEL OR FLAT AREA

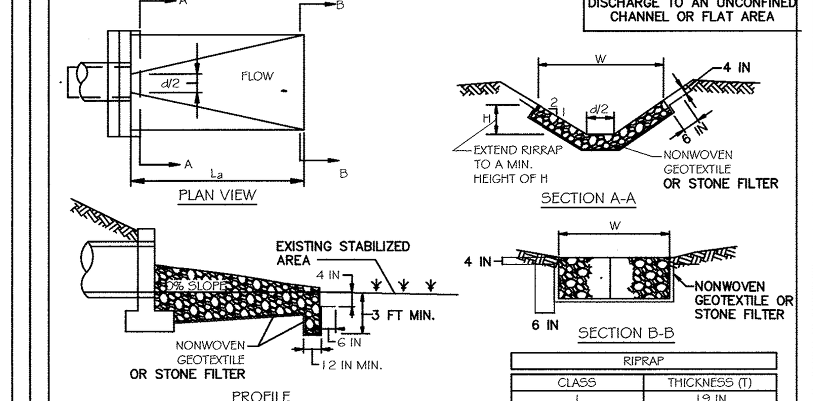

RIPRAP	
CLASS	THICKNESS (T)
I	19 IN
II	32 IN
III	46 IN

CONSTRUCTION SPECIFICATIONS

1. RIPRAP AND STONE MUST CONFORM TO THE SPECIFIED CLASS.
2. USE NONWOVEN GEOTEXTILE, AS SPECIFIED IN SECTION H-1 MATERIALS, AND PROTECT FROM PUNCTURING, CUTTING, OR TEARING. REPAIR ANY DAMAGE OTHER THAN AN OCCASIONAL SMALL HOLE BY PLACING ANOTHER PIECE OF GEOTEXTILE OVER THE DAMAGED PART OR BY COMPLETELY REPLACING THE GEOTEXTILE. PROVIDE A MINIMUM OF ONE FOOT OVERLAP FOR ALL REPAIRS AND FOR JOINING TWO PIECES OF GEOTEXTILE TOGETHER.
3. PREPARE THE SUBGRADE FOR GEOTEXTILE OR STONE FILTER (⅜ TO 1½ INCH MINIMUM STONE FOR 6 INCH MINIMUM DEPTH) AND RIPRAP TO THE REQUIRED LINES AND GRADES. COMPACT ANY FILL REQUIRED IN THE SUBGRADE TO A DENSITY OF APPROXIMATELY THAT OF THE SURROUNDING UNDISTURBED MATERIAL.
4. EXTEND GEOTEXTILE AT LEAST 6 INCHES BEYOND EDGES OF RIPRAP AND EMBED AT LEAST 4 INCHES AT SIDES OF RIPRAP.
5. CONSTRUCT RIPRAP OUTLET TO FULL COURSE THICKNESS IN ONE OPERATION AND IN SUCH A MANNER AS TO AVOID DISPLACEMENT OF UNDERLYING MATERIALS. PLACE STONE FOR RIPRAP OUTLET IN A MANNER THAT WILL ENSURE THAT IT IS REASONABLY HOMOGENOUS WITH THE SMALLER STONES AND SPALLS FILLING THE VOIDS BETWEEN THE LARGER STONES. PLACE RIPRAP IN A MANNER TO PREVENT DAMAGE TO THE FILTER BLANKET OR GEOTEXTILE. HAND PLACE TO THE EXTENT NECESSARY.
6. WHERE NO ENDWALL IS USED, CONSTRUCT THE UPSTREAM END OF THE APRON SO THAT THE WIDTH IS TWO TIMES THE DIAMETER OF THE OUTLET PIPE, AND EXTEND THE STONE UNDER THE OUTLET BY A MINIMUM OF 18 INCHES.
7. CONSTRUCT APRON WITH 0% SLOPE ALONG ITS LENGTH AND WITHOUT OBSTRUCTIONS. PLACE STONE SO THAT IT BLENDS IN WITH EXISTING GROUND.
8. MAINTAIN LINE, GRADE, AND CROSS SECTION. KEEP OUTLET FREE OF EROSION. REMOVE ACCUMULATED SEDIMENT AND DEBRIS. AFTER HIGH FLOWS INSPECT FOR SCOUR AND RIPRAP DISLODGED RIPRAP. MAKE NECESSARY REPAIRS IMMEDIATELY.

MARYLAND STANDARDS AND SPECIFICATIONS FOR SOIL EROSION AND SEDIMENT CONTROL

U.S. DEPARTMENT OF AGRICULTURE NATURAL RESOURCES CONSERVATION SERVICE	2011	MARYLAND DEPARTMENT OF ENVIRONMENT WATER MANAGEMENT ADMINISTRATION

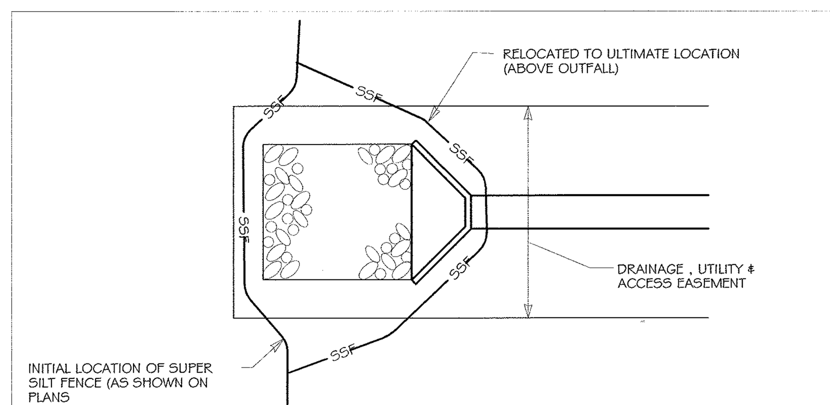

TYPICAL SUPER SILT FENCE INSTALLATION AT PIPE OUTFALL

SUPER SILT FENCE OUTFALL PROTECTION DETAIL

SEQUENCE OF CONSTRUCTION

2 WEEKS	1. OBTAIN GRADING PERMIT. CONTACT THE HOWARD COUNTY CID INSPECTOR AT 410-313-2433 A MINIMUM OF 2 WEEKS PRIOR TO THE START OF CONSTRUCTION TO SCHEDULE A PRE-CONSTRUCTION MEETING. THE CONTRACTOR IS TO SUBMIT A SCHEDULE OF WORK ACTIVITIES TO THE DEPARTMENT OF PUBLIC WORKS PRIOR TO INITIATION OF ANY GRADING ACTIVITIES. (MDE# 15 NT-3191/2015 61 055)
2 DAYS	2. INSTALL STABILIZED CONSTRUCTION ENTRANCES AT LOCATIONS SHOWN AND INSTALL INLET PROTECTION AND BLOCKING WHERE SPECIFIED FOR INLETS EX I-1 THROUGH EX I-4.
2 DAYS	3. INSTALL THE PERIMETER SEDIMENT CONTROL DEVICES SUPER SILT FENCE AT LOCATIONS SHOWN ON SHEET C8.00. MAKE SURE ALL NECESSARY SEDIMENT CONTROLS ARE IN PLACE PRIOR TO STRIPPING THE TOPSOIL.
7 DAYS	4. INSTALL STORM DRAIN FROM EX I-1 THROUGH I-9 PROVIDE INLET PROTECTION AS SHOWN ON PLAN AND PERMISSION FROM INSPECTOR HAS BEEN OBTAINED.
	NOTES: A. ADJUST TOP ELEVATIONS AND PROVIDE NEW TOP SLABS AND MANHOLE TOPS FOR EX I-1 AND EX I-3 PER DETAIL ON SHEET C6.00.
	B. MICRO-BIORETENTION FACILITY SHALL NOT BE INSTALLED AT I-7 UNTIL ALL OF THE UPSTREAM DRAINAGE AREA HAS BEEN PERMANENTLY STABILIZED.
21 DAYS	5. CONCURRENTLY INSTALL RETAINING WALL AND BRIDGE EAST OF PROPOSED PARKING GARAGE.
8 DAYS	6. STRIP THE TOPSOIL, REMOVE EXISTING PAVING, CURB & GUTTER AND OTHER EXISTING SURFACE FEATURES NEEDED TO INSTALL PROPOSED PARKING GARAGE AS SPECIFIED ON SHEET C8.00 OR AS DIRECTED BY OWNER.
5 DAYS	7. STRIP THE REMAINING TOPSOIL AND ROUGH GRADE SITE AS SHOWN ON EROSION & SEDIMENT CONTROL PLAN (C8.00) TO BRING SITE TO SUBGRADE WITHIN LIMITS OF DISTURBANCE.
14 DAYS	8. INSTALL REMAINING STORM DRAIN, WATER LINE AND SITE ELECTRICAL UTILITIES AS SHOWN ON C3.00.
	NOTE: MICROBIORETENTION FACILITY SHALL NOT BE INSTALLED UNTIL EVERYTHING UPSTREAM OF THE FACILITY HAS BEEN PERMANENTLY STABILIZED.
10 DAYS	9. INSTALL CURB AND GUTTER, SIDEWALKS AND BASE COURSE FOR PAVED AREAS.
14 DAYS	10. CONCURRENTLY BEGIN EXISTING PARKING LOT RESURFACING AND CURB REPAIR OR NEW CURB AND GUTTER INSTALLATION.
12 MONTHS	11. UPON COMPLETION OF PARKING GARAGE, BRIDGE AND PARKING LOT INSTALLATION AND REPAIRS PERMANENTLY STABILIZE ALL DISTURBED AREAS WITH SEED & MULCH AND PERMANENT SOIL STABILIZATION MATTING AS NOTED ON SHEET C8.00.
2 DAYS	12. INSTALL ANY REMAINING CURB AND GUTTER AND SURFACE COURSE FOR PAVED AREAS
10 DAYS	13. INSTALL MICRO-BIORETENTION FACILITY AND STABILIZE ALL DISTURBED AREAS AS NECESSARY ONCE PERMISSION FROM INSPECTOR HAS BEEN OBTAINED.
	A. NOTIFY CERTIFYING ENGINEER FIVE (5) WORKING DAYS PRIOR TO BEGINNING CONSTRUCTION OF MICRO-BIORETENTION FACILITY.
	B. STORM DRAIN OUTFALL FROM I-3 TO MH-1 MUST BE INSTALLED PRIOR TO BEGINNING EXCAVATION OF FACILITY #1. EXCAVATION BELOW ELEVATION 462.00 (MIN. 460.00) SHALL NOT OCCUR UNTIL AREA DRAINING TO FACILITY IS PERMANENTLY STABILIZED. (1-DAY)
	C. UPON STABILIZATION OF DRAINAGE AREA TO FACILITY #1 EXCAVATE FOR INSTALLATION OF STONE RESERVOIR AND PLANTING SOIL. (1-DAY)
	D. INSTALL STONE RESERVOIR, UNDERDRAINS AND PLANTING SOIL. (2-DAYS)
	E. FINE GRADE AND PERMANENTLY STABILIZE DISTURBED AREA. (1-DAY)
10 DAYS	14. INSTALL SITE LANDSCAPING, REMOVE ANY REMAINING SEDIMENT CONTROL DEVICES AND STABILIZE ALL DISTURBED AREAS WITH TOPSOIL, SEED & MULCH ONCE PERMISSION HAS BEEN OBTAINED FROM INSPECTOR.
14 DAYS	15. UPON APPROVAL FROM THE HOWARD COUNTY CID INSPECTOR, REMOVE ALL TEMPORARY SEDIMENT AND EROSION CONTROL DEVICES. REPAIR CURB & GUTTER AND PAVING AS REQUIRED AFTER REMOVAL OF SEDIMENT CONTROL MEASURES. STABILIZE ALL AREAS DISTURBED DURING REMOVAL OF SEDIMENT CONTROL DEVICES. PROVIDE COPY OF HSCD LETTER OF APPROVAL FOR POND AS-BUILT TO INSPECTOR.

APPROVED: Howard County Department of Planning & Zoning

Director	Date 3-15-16
Chief, Division of Land Development	Date 3-14-16
Chief, Development Engineering Division	Date 2-12-16

This plan is approved for soil erosion and sediment control by the HOWARD SOIL CONSERVATION DISTRICT.

Howard Soil Conservation District — *Date* 2/9/16

ENGINEER'S CERTIFICATE

"I hereby certify that this plan has been designed in accordance with current Maryland erosion and sediment control laws, regulations, and standards, that it represents a practical and workable plan based on my personal knowledge of the site, and that it was prepared in accordance with the requirements of the Howard Soil Conservation District."

R.L. Butt — 1-22-16
Signature of Engineer (print name below signature) — *Date*

DEVELOPER'S CERTIFICATE

"I/We hereby certify that any clearing, grading, construction, or development will be done pursuant to this approved erosion and sediment control plan, including inspecting and maintaining controls, and that the responsible personnel involved in the construction project will have a Certificate of Training at a Maryland Department of the Environment (MDE) approved training program for the control on erosion and sediment prior to beginning the project. I certify right-of-entry for periodic on-site evaluation by Howard County, the Howard Soil Conservation District and/or MDE."

C NIGHTINGALE — 1/22/2016
Signature of Developer (print name below signature) — *Date*

CONTRACTOR NOTE:
CONTRACTOR SHALL EXERCISE EXTREME CAUTION SO AS NOT TO DAMAGE ANY EXISTING PAVING, CURB & GUTTER, SIDEWALK OR OTHER SITE FEATURES WHICH ARE TO REMAIN. SHOULD DAMAGE OCCUR, CONTRACTOR SHALL REPAIR TO ORIGINAL CONDITION AT CONTRACTOR'S EXPENSE.

Prepared For and Owner:
Howard Community College
10901 Little Patuxent Parkway
Columbia, Maryland 21044
ATTN: Mr. Chuck Nightingale
410-772-4296

Copyright © 2014 Desman, Inc. All rights reserved. No part of these documents may be reproduced in any form or by any means without permission from Desman Inc.

DESMAN ASSOCIATES

KCI TECHNOLOGIES
Engineers
Planners
Scientists
Construction Managers
936 Ridgebrook Road
Sparks, MD 21152
Phone (410)316-7800
Fax (410)316-7853
www.kci.com

HOWARD COMMUNITY COLLEGE
EAST PARKING GARAGE NO. 2, PARCEL B & ACCESS BRIDGE, LOT A-2 TOWN CENTER 3/3
COLUMBIA, MD
PARCEL B/ PLAT NO. 19049 &
NON-CREDITED OPEN SPACE LOT A-2, TC, 3/3 PLAT NO. 23152
TAX MAP: 35, BLOCK: 6,
FIFTH ELECTION DISTRICT, ZONING: POR & NEW TOWN

PROFESSIONAL CERTIFICATION. I HEREBY CERTIFY THAT THESE DOCUMENTS WERE PREPARED OR APPROVED BY ME, AND THAT I AM A DULY LICENSED PROFESSIONAL ENGINEER UNDER THE LAWS OF THE STATE OF MARYLAND, LICENSE NO. 31089 EXPIRATION DATE: 11/21/16

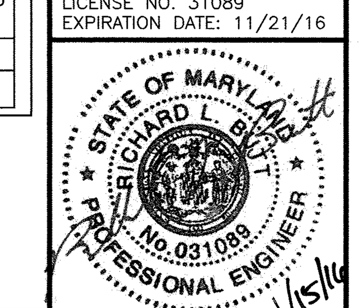

ISSUE

NO.	DESCRIPTION	DATE

DRAWING TITLE:
EROSION & SEDIMENT CONTROL DETAILS

DRAWING NO.
C8.01
SHEET: 10 OF 35

SCALE:	N.T.S.
DATE:	JANUARY 8, 2016
PROJECT NO:	27146550

DES.	DRWN.	CK'D.
R.L.B.	C.T.B.	R.L.B.

SDP 16-003
GP-16-012

B-1 STANDARDS AND SPECIFICATIONS FOR STABILIZED CONSTRUCTION ENTRANCE

DEFINITION

A LAYER OF AGGREGATE THAT IS UNDERLAIN WITH NONWOVEN GEOTEXTILE AT POINTS OF INGRESS AND EGRESS OF THE CONSTRUCTION SITE.

PURPOSE

TO REDUCE TRACKING OF SEDIMENT ONTO ROADWAYS AND PROVIDE A STABLE AREA FOR ENTRANCE TO OR EXIT FROM THE CONSTRUCTION SITE.

CONDITIONS WHERE PRACTICE APPLIES

STABILIZED CONSTRUCTION ENTRANCES MUST BE LOCATED AT ALL POINTS OF CONSTRUCTION INGRESS AND EGRESS.

DESIGN CRITERIA

1. WHERE POSSIBLE, LOCATE THE STABILIZED CONSTRUCTION ENTRANCES AT THE HIGH SIDE OF THE PROJECT AREA.
2. FOR SINGLE FAMILY RESIDENTIAL LOTS, LOCATE THE ENTRANCE AT THE PERMANENT DRIVEWAY.
3. STABILIZED CONSTRUCTION ENTRANCES CANNOT BE INSTALLED OVER PAVEMENT.
4. MINIMUM LENGTH IS 50 FEET (30 FEET FOR SINGLE FAMILY RESIDENTIAL LOTS).
5. MINIMUM WIDTH IS 10 FEET. FLARE ENTRANCE 10 FEET MINIMUM AT THE EXISTING ROAD TO PROVIDE A TURNING RADIUS.
6. THE ORIENTATION OF THE STABILIZED CONSTRUCTION ENTRANCE MAY VARY FROM A STRAIGHT LINE TO A CURVE OR "T" SHAPE DEPENDING ON THE TOPOGRAPHY AND RIGHT-OF-WAY.
7. ALL SURFACE WATER FLOWING TO OR DIVERTED TOWARD THE STABILIZED CONSTRUCTION ENTRANCE (SCE) MUST BE PIPED UNDER THE ENTRANCE. SIZE THE PIPE TO CONVEY THE RUNOFF GENERATED BY THE 2-YEAR, 24-HOUR FREQUENCY STORM AT MINIMUM. THE MINIMUM PERMISSIBLE PIPE SIZE IS 6 INCHES. WHEN THE ENTRANCE IS LOCATED AT A HIGH SPOT AND HAS NO DRAINAGE TO CONVEY, A PIPE IS NOT NECESSARY.

MAINTENANCE

THE SCE MUST BE MAINTAINED IN A CONDITION THAT MINIMIZES TRACKING OF SEDIMENT. THIS MAY REQUIRE ADDING STONE OR MAKING OTHER REPAIRS AS CONDITIONS DEMAND TO MAINTAIN A CLEAN SURFACE, THE MOUNTABLE BERM, AND THE SPECIFIED DIMENSIONS. ALL STONE OR SEDIMENT SPILLED, DROPPED, OR TRACKED ONTO THE ADJACENT ROADWAY MUST BE REMOVED IMMEDIATELY BY VACUUMING, SCRAPING, AND/OR SWEEPING. WASHING THE ROADWAY TO REMOVE MUD TRACKED ONTO PAVEMENT IS NOT ACCEPTABLE UNLESS THE WASH WATER IS DIRECTED TO AN APPROVED SEDIMENT CONTROL PRACTICE

B-4-2 STANDARDS AND SPECIFICATIONS FOR SOIL PREPERATION, TOPSOILING, AND SOIL AMENDMENTS

DEFINITION

THE PROCESS OF PREPARING THE SOILS TO SUSTAIN ADEQUATE VEGETATIVE STABILIZATION.

PURPOSE

TO PROVIDE A SUITABLE SOIL MEDIUM FOR VEGETATIVE GROWTH.

CONDITIONS WHERE PRACTICE APPLIES

WHERE VEGETATIVE STABILIZATION IS TO BE ESTABLISHED.

CRITERIA

A. SOIL PREPARATION

1. TEMPORARY STABILIZATION

a. SEEDBED PREPARATION CONSISTS OF LOOSENING SOIL TO A DEPTH OF 3 TO 5 INCHES BY MEANS OF SUITABLE AGRICULTURAL OR CONSTRUCTION EQUIPMENT, SUCH AS DISC HARROWS OR CHISEL PLOWS OR RIPPERS MOUNTED ON CONSTRUCTION EQUIPMENT. AFTER THE SOIL IS LOOSENED, IT MUST NOT BE ROLLED OR DRAGGED SMOOTH BUT LEFT IN THE ROUGHENED CONDITION. SLOPES 3:1 OR FLATTER ARE TO BE TRACKED WITH RIDGES RUNNING PARALLEL TO THE CONTOUR OF THE SLOPE.

b. APPLY FERTILIZER AND LIME AS PRESCRIBED ON THE PLANS.

c. INCORPORATE LIME AND FERTILIZER INTO THE TOP 3 TO 5 INCHES OF SOIL BY DISKING OR OTHER SUITABLE MEANS.

2. PERMANENT STABILIZATION

a. A SOIL TEST IS REQUIRED FOR ANY EARTH DISTURBANCE OF 5 ACRES OR MORE. THE MINIMUM SOIL CONDITIONS REQUIRED FOR PERMANENT VEGETATIVE ESTABLISHMENT ARE:

I. SOIL PH BETWEEN 6.0 AND 7.0.

II. SOLUBLE SALTS LESS THAN 500 PARTS PER MILLION (PPM).

III. SOIL CONTAINS LESS THAN 40 PERCENT CLAY BUT ENOUGH FINE GRAINED MATERIAL (GREATER THAN 30 PERCENT SILT PLUS CLAY) TO PROVIDE THE CAPACITY TO HOLD A MODERATE AMOUNT OF MOISTURE. AN EXCEPTION: IF LOVEGRASS WILL BE PLANTED, THEN A SANDY SOIL (LESS THAN 30 PERCENT SILT PLUS CLAY) WOULD BE ACCEPTABLE.

IV. SOIL CONTAINS 1.5 PERCENT MINIMUM ORGANIC MATTER BY WEIGHT.

V. SOIL CONTAINS SUFFICIENT PORE SPACE TO PERMIT ADEQUATE ROOT PENETRATION.

b. APPLICATION OF AMENDMENTS OR TOPSOIL IS REQUIRED IF ON-SITE SOILS DO NOT MEET THE ABOVE CONDITIONS.

c. GRADED AREAS MUST BE MAINTAINED IN A TRUE AND EVEN GRADE AS SPECIFIED ON THE APPROVED PLAN, THEN SCARIFIED OR OTHERWISE LOOSENED TO A DEPTH OF 3 TO 5 INCHES.

d. APPLY SOIL AMENDMENTS AS SPECIFIED ON THE APPROVED PLAN OR AS INDICATED BY THE RESULTS OF A SOIL TEST.

e. MIX SOIL AMENDMENTS INTO THE TOP 3 TO 5 INCHES OF SOIL BY DISKING OR OTHER SUITABLE MEANS. RAKE LAWN AREAS TO SMOOTH THE SURFACE, REMOVE LARGE OBJECTS LIKE STONES AND BRANCHES, AND READY THE AREA FOR SEED APPLICATION. LOOSEN SURFACE SOIL BY DRAGGING WITH A HEAVY CHAIN OR OTHER EQUIPMENT TO ROUGHEN THE SURFACE WHERE SITE CONDITIONS WILL NOT PERMIT NORMAL SEEDBED PREPARATION. TRACK SLOPES 3:1 OR FLATTER WITH TRACKED EQUIPMENT LEAVING THE SOIL IN AN IRREGULAR CONDITION WITH RIDGES RUNNING PARALLEL TO THE CONTOUR OF THE SLOPE. LEAVE THE TOP 1 TO 3 INCHES OF SOIL LOOSE AND FRIABLE. SEEDBED LOOSENING MAY BE UNNECESSARY ON NEWLY DISTURBED AREAS.

B. TOPSOILING

1. TOPSOIL IS PLACED OVER PREPARED SUBSOIL PRIOR TO ESTABLISHMENT OF PERMANENT VEGETATION. THE PURPOSE IS TO PROVIDE A SUITABLE SOIL MEDIUM FOR VEGETATIVE GROWTH. SOILS OF CONCERN HAVE LOW MOISTURE CONTENT, LOW NUTRIENT LEVELS, LOW PH, MATERIALS TOXIC TO PLANTS, AND/OR UNACCEPTABLE SOIL GRADATION.

2. TOPSOIL SALVAGED FROM AN EXISTING SITE MAY BE USED PROVIDED IT MEETS THE STANDARDS AS SET FORTH IN THESE SPECIFICATIONS. TYPICALLY, THE DEPTH OF TOPSOIL TO BE SALVAGED FOR A GIVEN SOIL TYPE CAN BE FOUND IN THE REPRESENTATIVE SOIL PROFILE SECTION IN THE SOIL SURVEY PUBLISHED BY USDA-NRCS.

3. TOPSOILING IS LIMITED TO AREAS HAVING 2:1 OR FLATTER SLOPES WHERE:

a. THE TEXTURE OF THE EXPOSED SUBSOIL/PARENT MATERIAL IS NOT ADEQUATE TO PRODUCE VEGETATIVE GROWTH.

b. THE SOIL MATERIAL IS SO SHALLOW THAT THE ROOTING ZONE IS NOT DEEP ENOUGH TO SUPPORT PLANTS OR FURNISH CONTINUING SUPPLIES OF MOISTURE AND PLANT NUTRIENTS.

c. THE ORIGINAL SOIL TO BE VEGETATED CONTAINS MATERIAL TOXIC TO PLANT GROWTH.

d. THE SOIL IS SO ACIDIC THAT TREATMENT WITH LIMESTONE IS NOT FEASIBLE.

4. AREAS HAVING SLOPES STEEPER THAN 2:1 REQUIRE SPECIAL CONSIDERATION AND DESIGN.

5. TOPSOIL SPECIFICATIONS: SOIL TO BE USED AS TOPSOIL MUST MEET THE FOLLOWING CRITERIA:

a. TOPSOIL MUST BE A LOAM, SANDY LOAM, CLAY LOAM, SILT LOAM, SANDY CLAY LOAM, OR LOAMY SAND. OTHER SOILS MAY BE USED IF RECOMMENDED BY AN AGRONOMIST OR SOIL SCIENTIST AND APPROVED BY THE APPROPRIATE APPROVAL AUTHORITY. TOPSOIL MUST NOT BE A MIXTURE OF CONTRASTING TEXTURED SUBSOILS AND MUST CONTAIN LESS THAN 5 PERCENT BY VOLUME OF CINDERS, STONES, SLAG, COARSE FRAGMENTS, GRAVEL, STICKS, ROOTS, TRASH, OR OTHER MATERIALS LARGER THAN 1½ INCHES IN DIAMETER.

b. TOPSOIL MUST BE FREE OF NOXIOUS PLANTS OR PLANT PARTS SUCH AS BERMUDA GRASS, QUACK GRASS, JOHNSON GRASS, NUT SEDGE, POISON IVY, THISTLE, OR OTHERS AS SPECIFIED.

c. TOPSOIL SUBSTITUTES OR AMENDMENTS, AS RECOMMENDED BY A QUALIFIED AGRONOMIST OR SOIL SCIENTIST AND APPROVED BY THE APPROPRIATE APPROVAL AUTHORITY, MAY BE USED IN LIEU OF NATURAL TOPSOIL.

APPROVED: Howard County Department of Planning & Zoning

[signature] 3-15-16
Director — Date

[signature] 3-14-16
Chief, Division of Land Development — Date

[signature] 2-12-16
Chief, Development Engineering Division — Date

B-4-2 STANDARDS AND SPECIFICATIONS FOR SOIL PREPERATION, TOPSOILING, AND SOIL AMENDMENTS (CONTINUED)

6. TOPSOIL APPLICATION

a. EROSION AND SEDIMENT CONTROL PRACTICES MUST BE MAINTAINED WHEN APPLYING TOPSOIL.

b. UNIFORMLY DISTRIBUTE TOPSOIL IN A 5 TO 8 INCH LAYER AND LIGHTLY COMPACT TO A MINIMUM THICKNESS OF 4 INCHES. SPREADING IS TO BE PERFORMED IN SUCH A MANNER THAT SODDING OR SEEDING CAN PROCEED WITH A MINIMUM OF ADDITIONAL SOIL PREPARATION AND TILLAGE. ANY IRREGULARITIES IN THE SURFACE RESULTING FROM TOPSOILING OR OTHER OPERATIONS MUST BE CORRECTED IN ORDER TO PREVENT THE FORMATION OF DEPRESSIONS OR WATER POCKETS.

c. TOPSOIL MUST NOT BE PLACED IF THE TOPSOIL OR SUBSOIL IS IN A FROZEN OR MUDDY CONDITION, WHEN THE SUBSOIL IS EXCESSIVELY WET OR IN A CONDITION THAT MAY OTHERWISE BE DETRIMENTAL TO PROPER GRADING AND SEEDBED PREPARATION.

C. SOIL AMENDMENTS (FERTILIZER AND LIME SPECIFICATIONS)

1. SOIL TESTS MUST BE PERFORMED TO DETERMINE THE EXACT RATIOS AND APPLICATION RATES FOR BOTH LIME AND FERTILIZER ON SITES HAVING DISTURBED AREAS OF 5 ACRES OR MORE. SOIL ANALYSIS MAY BE PERFORMED BY A RECOGNIZED PRIVATE OR COMMERCIAL LABORATORY. SOIL SAMPLES TAKEN FOR ENGINEERING PURPOSES MAY ALSO BE USED FOR CHEMICAL ANALYSES.

2. FERTILIZERS MUST BE UNIFORM IN COMPOSITION, FREE FLOWING AND SUITABLE FOR ACCURATE APPLICATION BY APPROPRIATE EQUIPMENT. MANURE MAY BE SUBSTITUTED FOR FERTILIZER WITH PRIOR APPROVAL FROM THE APPROPRIATE APPROVAL AUTHORITY. FERTILIZERS MUST ALL BE DELIVERED TO THE SITE FULLY LABELED ACCORDING TO THE APPLICABLE LAWS AND MUST BEAR THE NAME, TRADE NAME OR TRADEMARK AND WARRANTY OF THE PRODUCER.

3. LIME MATERIALS MUST BE GROUND LIMESTONE (HYDRATED OR BURNT LIME MAY BE SUBSTITUTED EXCEPT WHEN HYDROSEEDING) WHICH CONTAINS AT LEAST 50 PERCENT TOTAL OXIDES (CALCIUM OXIDE PLUS MAGNESIUM OXIDE). LIMESTONE MUST BE GROUND TO SUCH FINENESS THAT AT LEAST 50 PERCENT WILL PASS THROUGH A #100 MESH SIEVE AND 98 TO 100 PERCENT WILL PASS THROUGH A #20 MESH SIEVE.

4. LIME AND FERTILIZER ARE TO BE EVENLY DISTRIBUTED AND INCORPORATED INTO THE TOP 3 TO 5 INCHES OF SOIL BY DISKING OR OTHER SUITABLE MEANS.

5. WHERE THE SUBSOIL IS EITHER HIGHLY ACIDIC OR COMPOSED OF HEAVY CLAYS, SPREAD GROUND LIMESTONE AT THE RATE OF 4 TO 8 TONS/ACRE (200-400 POUNDS PER 1,000 SQUARE FEET) PRIOR TO THE PLACEMENT OF TOPSOIL.

B-4-3 STANDARDS AND SPECIFICATIONS FOR SEEDING AND MULCHING

DEFINITION

THE APPLICATION OF SEED AND MULCH TO ESTABLISH VEGETATIVE COVER.

PURPOSE

TO PROTECT DISTURBED SOILS FROM EROSION DURING AND AT THE END OF CONSTRUCTION.

CONDITIONS WHERE PRACTICE APPLIES

TO THE SURFACE OF ALL PERIMETER CONTROLS, SLOPES, AND ANY DISTURBED AREA NOT UNDER ACTIVE GRADING.

CRITERIA

A. SEEDING

1. SPECIFICATIONS

a. ALL SEED MUST MEET THE REQUIREMENTS OF THE MARYLAND STATE SEED LAW. ALL SEED MUST BE SUBJECT TO RE-TESTING BY A RECOGNIZED SEED LABORATORY. ALL SEED USED MUST HAVE BEEN TESTED WITHIN THE 6 MONTHS IMMEDIATELY PRECEDING THE DATE OF SOWING SUCH MATERIAL ON ANY PROJECT. REFER TO TABLE B.4 REGARDING THE QUALITY OF SEED. SEED TAGS MUST BE AVAILABLE UPON REQUEST TO THE INSPECTOR TO VERIFY TYPE OF SEED AND SEEDING RATE.

b. MULCH ALONE MAY BE APPLIED BETWEEN THE FALL AND SPRING SEEDING DATES ONLY IF THE GROUND IS FROZEN. THE APPROPRIATE SEEDING MIXTURE MUST BE APPLIED WHEN THE GROUND THAWS.

c. INOCULANTS: THE INOCULANT FOR TREATING LEGUME SEED IN THE SEED MIXTURES MUST BE A PURE CULTURE OF NITROGEN FIXING BACTERIA PREPARED SPECIFICALLY FOR THE SPECIES. INOCULANTS MUST NOT BE USED LATER THAN THE DATE INDICATED ON THE CONTAINER. ADD FRESH INOCULANTS AS DIRECTED ON THE PACKAGE. USE FOUR TIMES THE RECOMMENDED RATE WHEN HYDROSEEDING. NOTE: IT IS VERY IMPORTANT TO KEEP INOCULANT AS COOL AS POSSIBLE UNTIL USED. TEMPERATURES ABOVE 75 TO 80 DEGREES FAHRENHEIT CAN WEAKEN BACTERIA AND MAKE THE INOCULANT LESS EFFECTIVE.

d. SOD OR SEED MUST NOT BE PLACED ON SOIL WHICH HAS BEEN TREATED WITH SOIL STERILANTS OR CHEMICALS USED FOR WEED CONTROL UNTIL SUFFICIENT TIME HAS ELAPSED (14 DAYS MIN.) TO PERMIT DISSIPATION OF PHYTO-TOXIC MATERIALS.

2. APPLICATION

a. DRY SEEDING: THIS INCLUDES USE OF CONVENTIONAL DROP OR BROADCAST SPREADERS.

I. INCORPORATE SEED INTO THE SUBSOIL AT THE RATES PRESCRIBED ON TEMPORARY SEEDING TABLE B.1, PERMANENT SEEDING TABLE B.3, OR SITE-SPECIFIC SEEDING SUMMARIES.

II. APPLY SEED IN TWO DIRECTIONS, PERPENDICULAR TO EACH OTHER. APPLY HALF THE SEEDING RATE IN EACH DIRECTION. ROLL THE SEEDED AREA WITH A WEIGHTED ROLLER TO PROVIDE GOOD SEED TO SOIL CONTACT.

b. DRILL OR CULTIPACKER SEEDING: MECHANIZED SEEDERS THAT APPLY AND COVER SEED WITH SOIL.

I. CULTIPACKING SEEDERS ARE REQUIRED TO BURY THE SEED IN SUCH A FASHION AS TO PROVIDE AT LEAST 1/4 INCH OF SOIL COVERING. SEEDBED MUST BE FIRM AFTER PLANTING.

II. APPLY SEED IN TWO DIRECTIONS, PERPENDICULAR TO EACH OTHER. APPLY HALF THE SEEDING RATE IN EACH DIRECTION.

c. HYDROSEEDING: APPLY SEED UNIFORMLY WITH HYDROSEEDER (SLURRY INCLUDES SEED AND FERTILIZER).

I. IF FERTILIZER IS BEING APPLIED AT THE TIME OF SEEDING, THE APPLICATION RATES SHOULD NOT EXCEED THE FOLLOWING: NITROGEN, 100 POUNDS PER ACRE TOTAL OF SOLUBLE NITROGEN; P_2O_5 (PHOSPHOROUS), 200 POUNDS PER ACRE; K_2O (POTASSIUM), 200 POUNDS PER ACRE.

II. LIME: USE ONLY GROUND AGRICULTURAL LIMESTONE (UP TO 3 TONS PER ACRE MAY BE APPLIED BY HYDROSEEDING). NORMALLY, NOT MORE THAN 2 TONS ARE APPLIED BY HYDROSEEDING AT ANY ONE TIME. DO NOT USE BURNT OR HYDRATED LIME WHEN HYDROSEEDING.

III. MIX SEED AND FERTILIZER ON SITE AND SEED IMMEDIATELY AND WITHOUT INTERRUPTION.

IV. WHEN HYDROSEEDING DO NOT INCORPORATE SEED INTO THE SOIL.

B. MULCHING

1. MULCH MATERIALS (IN ORDER OF PREFERENCE)

a. STRAW CONSISTING OF THOROUGHLY THRESHED WHEAT, RYE, OAT, OR BARLEY AND REASONABLY BRIGHT IN COLOR. STRAW IS TO BE FREE OF NOXIOUS WEED SEEDS AS SPECIFIED IN THE MARYLAND SEED LAW AND NOT MUSTY, MOLDY, CAKED, DECAYED, OR EXCESSIVELY DUSTY. NOTE: USE ONLY STERILE STRAW MULCH IN AREAS WHERE ONE SPECIES OF GRASS IS DESIRED.

b. WOOD CELLULOSE FIBER MULCH (WCFM) CONSISTING OF SPECIALLY PREPARED WOOD CELLULOSE PROCESSED INTO A UNIFORM FIBROUS PHYSICAL STATE.

I. WCFM IS TO BE DYED GREEN OR CONTAIN A GREEN DYE IN THE PACKAGE THAT WILL PROVIDE AN APPROPRIATE COLOR TO FACILITATE VISUAL INSPECTION OF THE UNIFORMLY SPREAD SLURRY.

II. WCFM, INCLUDING DYE, MUST CONTAIN NO GERMINATION OR GROWTH INHIBITING FACTORS.

III. WCFM MATERIALS ARE TO BE MANUFACTURED AND PROCESSED IN SUCH A MANNER THAT THE WOOD CELLULOSE FIBER MULCH WILL REMAIN IN UNIFORM SUSPENSION IN WATER UNDER AGITATION AND WILL BLEND WITH SEED, FERTILIZER AND OTHER ADDITIVES TO FORM A HOMOGENEOUS SLURRY. THE MULCH MATERIAL MUST FORM A BLOTTER-LIKE GROUND COVER, ON APPLICATION, HAVING MOISTURE ABSORPTION AND PERCOLATION PROPERTIES AND MUST COVER AND HOLD GRASS SEED IN CONTACT WITH THE SOIL WITHOUT INHIBITING THE GROWTH OF THE GRASS SEEDLINGS.

IV. WCFM MATERIAL MUST NOT CONTAIN ELEMENTS OR COMPOUNDS AT CONCENTRATION LEVELS THAT WILL BE PHYTO-TOXIC.

V. WCFM MUST CONFORM TO THE FOLLOWING PHYSICAL REQUIREMENTS: FIBER LENGTH OF APPROXIMATELY 10 MILLIMETERS, DIAMETER APPROXIMATELY 1 MILLIMETER, PH RANGE OF 4.0 TO 8.5, ASH CONTENT OF 1.6 PERCENT MAXIMUM AND WATER HOLDING CAPACITY OF 90

2. APPLICATION

a. APPLY MULCH TO ALL SEEDED AREAS IMMEDIATELY AFTER SEEDING.

b. WHEN STRAW MULCH IS USED, SPREAD IT OVER ALL SEEDED AREAS AT THE RATE OF 2 TONS PER ACRE TO A UNIFORM LOOSE DEPTH OF 1 TO 2 INCHES. APPLY MULCH TO ACHIEVE A UNIFORM DISTRIBUTION AND DEPTH SO THAT THE SOIL SURFACE IS NOT EXPOSED. WHEN USING A MULCH ANCHORING TOOL, INCREASE THE APPLICATION RATE TO 2.5 TONS PER ACRE.

c. WOOD CELLULOSE FIBER USED AS MULCH MUST BE APPLIED AT A NET DRY WEIGHT OF 1500 POUNDS PER ACRE. MIX THE WOOD CELLULOSE FIBER WITH WATER TO ATTAIN A MIXTURE WITH A MAXIMUM OF 50 POUNDS OF WOOD CELLULOSE FIBER PER 100 GALLONS OF WATER.

3. ANCHORING

a. PERFORM MULCH ANCHORING IMMEDIATELY FOLLOWING APPLICATION OF MULCH TO MINIMIZE LOSS BY WIND OR WATER. THIS MAY BE DONE BY ONE OF THE FOLLOWING METHODS (LISTED BY PREFERENCE), DEPENDING UPON THE SIZE OF THE AREA AND EROSION HAZARD:

I. A MULCH ANCHORING TOOL IS A TRACTOR DRAWN IMPLEMENT DESIGNED TO PUNCH AND ANCHOR MULCH INTO THE SOIL SURFACE A MINIMUM OF 2 INCHES. THIS PRACTICE IS MOST EFFECTIVE ON LARGE AREAS, BUT IS LIMITED TO FLATTER SLOPES WHERE EQUIPMENT CAN OPERATE SAFELY. IF USED ON SLOPING LAND, THIS PRACTICE SHOULD FOLLOW THE CONTOUR.

II. WOOD CELLULOSE FIBER MAY BE USED FOR ANCHORING STRAW. APPLY THE FIBER BINDER AT A NET DRY WEIGHT OF 750 POUNDS PER ACRE. MIX THE WOOD CELLULOSE FIBER WITH WATER AT A MAXIMUM OF 50 POUNDS OF WOOD CELLULOSE FIBER PER 100 GALLONS OF WATER.

III. SYNTHETIC BINDERS SUCH AS ACRYLIC DLR (AGRO-TACK), DCA-70, PETROSET, TERRA TAX II, TERRA TACK AR OR OTHER APPROVED EQUAL MAY BE USED. FOLLOW APPLICATION RATES AS SPECIFIED BY THE MANUFACTURER. APPLICATION OF LIQUID BINDERS NEEDS TO BE HEAVIER AT THE EDGES WHERE WIND CATCHES MULCH, SUCH AS IN VALLEYS AND ON CRESTS OF BANKS. USE OF ASPHALT BINDERS IS STRICTLY PROHIBITED.

IV. LIGHTWEIGHT PLASTIC NETTING MAY BE STAPLED OVER THE MULCH ACCORDING TO MANUFACTURER RECOMMENDATIONS. NETTING IS USUALLY AVAILABLE IN ROLLS 4 TO 15 FEET WIDE AND 300 TO 3,000 FEET LONG.

B-4-4 STANDARDS AND SPECIFICATIONS FOR TEMPORARY STABILIZATION

DEFINITION

TO STABILIZE DISTURBED SOILS WITH VEGETATION FOR UP TO 6 MONTHS.

PURPOSE

TO USE FAST GROWING VEGETATION THAT PROVIDES COVER ON DISTURBED SOILS.

CONDITIONS WHERE PRACTICE APPLIES

EXPOSED SOILS WHERE GROUND COVER IS NEEDED FOR A PERIOD OF 6 MONTHS OR LESS. FOR LONGER DURATION OF TIME, PERMANENT STABILIZATION PRACTICES ARE REQUIRED.

CRITERIA

1. SELECT ONE OR MORE OF THE SPECIES OR SEED MIXTURES LISTED IN TABLE B.1 FOR THE APPROPRIATE PLANT HARDINESS ZONE (FROM FIGURE B.3), AND ENTER THEM IN THE TEMPORARY SEEDING SUMMARY BELOW ALONG WITH APPLICATION RATES, SEEDING DATES AND SEEDING DEPTHS. IF THIS SUMMARY IS NOT PUT ON THE PLAN AND COMPLETED, THEN TABLE B.1 PLUS FERTILIZER AND LIME RATES MUST BE PUT ON THE PLAN.

2. FOR SITES HAVING SOIL TESTS PERFORMED, USE AND SHOW THE RECOMMENDED RATES BY THE TESTING AGENCY. SOIL TESTS ARE NOT REQUIRED FOR TEMPORARY SEEDING.

3. WHEN STABILIZATION IS REQUIRED OUTSIDE OF A SEEDING SEASON, APPLY SEED AND MULCH OR STRAW MULCH ALONE AS PRESCRIBED IN SECTION B-4-3.A.1.B AND MAINTAIN UNTIL THE NEXT SEEDING SEASON.

B.1 TEMPORARY SEEDING RATES, DEPTHS, AND DATES

PLANT SPECIES	SEEDING RATE LB/AC	SEEDING RATE LB/1000 FT²	SEEDING DEPTH (INCHES)	SEEDING RATE 6B
COOL-SEASON GRASSES				
ANNUAL RYEGRASS (*LOLIUM PERENNE SSP. MULTIFORM*)	40	1.0	0.5	MAR 1 TO MAY 15; AUG 1 TO OCT 15
BARLEY (*HORDEUM VULGARE*)	96	2.2	1.0	MAR 1 TO MAY 15; AUG 1 TO OCT 15
OATS (*AVENA SATIVA*)	72	1.7	1.0	MAR 1 TO MAY 15; AUG 1 TO OCT 15
WHEAT (*TRITICUM AESTIVUM*)	120	2.8	1.0	MAR 1 TO MAY 15; AUG 1 TO OCT 15
CEREAL RYE (*SECALE CEREALE*)	112	2.8	1.0	MAR 1 TO MAY 15; AUG 1 TO OCT 15
WARM-SEASON GRASSES				
FOXTAIL MILLET (*SETARIA ITALICA*)	30	0.7	0.5	MAY 16 TO JUL 31
PEARL MILLET (*PENNISETUM GLAUCUM*)	20	0.5	0.5	MAY 16 TO JUL 31

NOTES:

1/ SEEDING RATES FOR WARM-SEASON GRASSES ARE IN POUNDS OF PURE LIVE SEED (PLS). ACTUAL PLANTING RATES SHALL BE ADJUSTED TO REFLECT PERCENT SEED GERMINATION AND PURITY, AS TESTED. ADJUSTMENT ARE USUALLY NOT NEEDED FOR THE COOL-SEASON GRASSES.

SEEDING RATES LISTED ABOVE ARE FOR TEMPORARY SEEDING, WHEN PLANTED ALONE. WHEN PLANTED AS A NURSE CROP WITH PERMANENT SEED MIXES, USE 1/3 OF THE SEEDING RATE LISTED ABOVE FOR BARLEY, OATS AND WHEAT. FOR - SMALLER - SEEDED GRASSES (ANNUAL RYEGRASS, PEARL MILLET, FOXTAIL MILLET), DO NOT EXCEED MORE THAN 5% (BY WEIGHT) OF THE OVERALL PERMANENT SEEDING MIX. CEREAL RYE GENERALLY SHOULD NOT BE USED AS A NURSE CROP, UNLESS PLANTING WILL OCCUR IN THE VERY LATE FALL BEYOND THE SEEDING DATE FOR OTHER TEMPORARY SEEDINGS. CEREAL RYE HAS ALLELOPATHIC PROPERTIES THAT INHIBIT THE GERMINATION AND GROWTH OF OTHER PLANTS IF IT MUST BE USED AS NURSE CROP, SEED AS 1/3 OF THE RATE LISTED ABOVE.

OATS ARE THE RECOMMENDED NURSE CROP FOR WARM-SEASON GRASSES.

2/ FOR SANDY SOILS, PLANT SEEDS AT TWICE THE DEPTH LISTED ABOVE.

3/ THE PLANTING DATES LISTED ARE AVERAGES FOR EACH ZONE AND MAY REQUIRE ADJUSTMENTS TO REFLECT LOCAL CONDITIONS, ESPECIALLY NEAR THE BOUNDARIES OF THE ZONE.

B-4-5 STANDARDS AND SPECIFICATIONS FOR PERMANENT STABILIZATION

DEFINITION

TO STABILIZE DISTURBED SOILS WITH PERMANENT VEGETATION.

PURPOSE

TO USE LONG-LIVED PERENNIAL GRASSES AND LEGUMES TO ESTABLISH PERMANENT GROUND COVER ON DISTURBED SOILS.

CONDITIONS WHERE PRACTICE APPLIES

EXPOSED SOILS WHERE GROUND COVER IS NEEDED FOR 6 MONTHS OR MORE.

CRITERIA

A. SEED MIXTURES

1. GENERAL USE

a. SELECT ONE OR MORE OF THE SPECIES OR MIXTURES LISTED IN TABLE B.3 FOR THE APPROPRIATE PLANT HARDINESS ZONE (FROM FIGURE B.3) AND BASED ON THE SITE CONDITION OR PURPOSE FOUND ON TABLE B.2. ENTER SELECTED MIXTURE(S), APPLICATION RATES, AND SEEDING DATES IN THE PERMANENT SEEDING SUMMARY. THE SUMMARY IS TO BE PLACED ON THE PLAN.

b. ADDITIONAL PLANTING SPECIFICATIONS FOR EXCEPTIONAL SITES SUCH AS SHORELINES, STREAM BANKS, OR DUNES OR FOR SPECIAL PURPOSES SUCH AS WILDLIFE OR AESTHETIC TREATMENT MAY BE FOUND IN USDA-NRCS TECHNICAL FIELD OFFICE GUIDE, SECTION 342 - CRITICAL AREA PLANTING.

c. FOR SITES HAVING DISTURBED AREA OVER 5 ACRES, USE AND SHOW THE RATES RECOMMENDED BY THE SOIL TESTING AGENCY.

d. FOR AREAS RECEIVING LOW MAINTENANCE, APPLY UREA FORM FERTILIZER (46-0-0) AT 3 ½ POUNDS PER 1000 SQUARE FEET (150 POUNDS PER ACRE) AT THE TIME OF SEEDING IN ADDITION TO THE SOIL AMENDMENTS SHOWN IN THE PERMANENT SEEDING SUMMARY .

2. TURFGRASS MIXTURES

a. AREAS WHERE TURFGRASS MAY BE DESIRED INCLUDE LAWNS, PARKS, PLAYGROUNDS, AND COMMERCIAL SITES WHICH WILL RECEIVE A MEDIUM TO HIGH LEVEL OF MAINTENANCE.

b. SELECT ONE OR MORE OF THE SPECIES OR MIXTURES LISTED BELOW BASED ON THE SITE CONDITIONS OR PURPOSE. ENTER SELECTED MIXTURE(S), APPLICATION RATES, AND SEEDING DATES IN THE PERMANENT SEEDING SUMMARY. THE SUMMARY IS TO BE PLACED ON THE PLAN.

I. KENTUCKY BLUEGRASS: FULL SUN MIXTURE: FOR USE IN AREAS THAT RECEIVE INTENSIVE MANAGEMENT. IRRIGATION REQUIRED IN THE AREAS OF CENTRAL MARYLAND AND EASTERN SHORE. RECOMMENDED CERTIFIED KENTUCKY BLUEGRASS CULTIVARS SEEDING RATE: 1.5 TO 2.0 POUNDS PER 1000 SQUARE FEET. CHOOSE A MINIMUM OF THREE KENTUCKY BLUEGRASS CULTIVARS WITH EACH RANGING FROM 10 TO 35 PERCENT OF THE TOTAL MIXTURE BY WEIGHT.

II. KENTUCKY BLUEGRASS/PERENNIAL RYE: FULL SUN MIXTURE: FOR USE IN FULL SUN AREAS WHERE RAPID ESTABLISHMENT IS NECESSARY AND WHEN TURF WILL RECEIVE MEDIUM TO INTENSIVE MANAGEMENT. CERTIFIED PERENNIAL RYEGRASS CULTIVARS/CERTIFIED KENTUCKY BLUEGRASS SEEDING RATE: 2 POUNDS MIXTURE PER 1000 SQUARE FEET. CHOOSE A MINIMUM OF THREE KENTUCKY BLUEGRASS CULTIVARS WITH EACH RANGING FROM 10 TO 35 PERCENT OF THE TOTAL MIXTURE BY WEIGHT.

III. TALL FESCUE/KENTUCKY BLUEGRASS: FULL SUN MIXTURE: FOR USE IN DROUGHT PRONE AREAS AND/OR FOR AREAS RECEIVING LOW TO MEDIUM MANAGEMENT IN FULL SUN TO MEDIUM SHADE. RECOMMENDED MIXTURE INCLUDES; CERTIFIED TALL FESCUE CULTIVARS 95 TO 100 PERCENT, CERTIFIED KENTUCKY BLUEGRASS CULTIVARS 0 TO 5 PERCENT. SEEDING RATE: 5 TO 8 POUNDS PER 1000 SQUARE FEET. ONE OR MORE CULTIVARS MAY BE BLENDED.

IV. KENTUCKY BLUEGRASS/FINE FESCUE: SHADE MIXTURE: FOR USE IN AREAS WITH SHADE IN BLUEGRASS LAWNS. FOR ESTABLISHMENT IN HIGH QUALITY, INTENSIVELY MANAGED TURF AREA. MIXTURE INCLUDES; CERTIFIED KENTUCKY BLUEGRASS CULTIVARS 30 TO 40 PERCENT AND CERTIFIED FINE FESCUE AND 60 TO 70 PERCENT. SEEDING RATE: 1½ TO 3 POUNDS PER 1000 SQUARE FEET.

NOTES:
SELECT TURFGRASS VARIETIES FROM THOSE LISTED IN THE MOST CURRENT UNIVERSITY OF MARYLAND PUBLICATION, AGRONOMY MEMO #77, "TURFGRASS CULTIVAR RECOMMENDATIONS FOR MARYLAND"

CHOOSE CERTIFIED MATERIAL. CERTIFIED MATERIAL IS THE BEST GUARANTEE OF CULTIVAR PURITY. THE CERTIFICATION PROGRAM OF THE MARYLAND DEPARTMENT OF AGRICULTURE, TURF AND SEED SECTION, PROVIDES A RELIABLE MEANS OF CONSUMER PROTECTION AND ASSURES A PURE GENETIC LINE

c. IDEAL TIMES OF SEEDING FOR TURF GRASS MIXTURES

WESTERN MD: MARCH 15 TO JUNE 1, AUGUST 1 TO OCTOBER 1 (HARDINESS ZONES: 5B, 6A)

CENTRAL MD: MARCH 1 TO MAY 15, AUGUST 15 TO OCTOBER 15 (HARDINESS ZONE: 6B)

SOUTHERN MD, EASTERN SHORE: MARCH 1 TO MAY 15, AUGUST 15 TO OCTOBER 15 (HARDINESS ZONES: 7A, 7B)

d. TILL AREAS TO RECEIVE SEED BY DISKING OR OTHER APPROVED METHODS TO A DEPTH OF 2 TO 4 INCHES, LEVEL AND RAKE THE AREAS TO PREPARE A PROPER SEEDBED. REMOVE STONES AND DEBRIS OVER 1½ INCHES IN DIAMETER. THE RESULTING SEEDBED MUST BE IN SUCH CONDITION THAT FUTURE MOWING OF GRASSES WILL POSE NO DIFFICULTY.

e. IF SOIL MOISTURE IS DEFICIENT, SUPPLY NEW SEEDINGS WITH ADEQUATE WATER FOR PLANT GROWTH (½ TO 1 INCH EVERY 3 TO 4 DAYS DEPENDING ON SOIL TEXTURE) UNTIL THEY ARE FIRMLY ESTABLISHED. THIS IS ESPECIALLY TRUE WHEN SEEDINGS ARE MADE LATE IN THE PLANTING SEASON, IN ABNORMALLY DRY OR HOT SEASONS, OR ON ADVERSE SITES.

HARDINESS ZONE (from figure B.3): 6b
SEED MIXTURE (from table B.1):

NO.	SPECIES	APPLICATION RATE (lb/ac)	SEEDING DATES	SEEDING DEPTHS	FERTILIZER RATE (10-20-20) N	FERTILIZER RATE (10-20-20) P_2O	FERTILIZER RATE (10-20-20) K_2O	LIME RATE
	KENTUCKY BLUEGRASS 10% TURF-TYPE TALL FESCUE 40% GRADE TALL FESCUE 30% PERENNIAL RYEGRASS 20%	250	3/15 - 5/15 OR 8/15 - 11/15	1/4 - 1/2 in.	45 POUNDS PER ACRE (1.0 lb/ 1000 sf)	90 lb/ac (2 lb/ 1000 sf)	90 lb/ac (2 lb/ 1000 sf)	2 tons/ac (90 lb/1000 sf)
	KENTUCKY BLUEGRASS 10% TURF-TYPE TALL FESCUE 40% GRADE TALL FESCUE 30% PERENNIAL RYEGRASS 20%	350	3/15 - 5/15 OR 8/15 - 11/15	1/4 - 1/2 in.				

B. SOD: TO PROVIDE QUICK COVER ON DISTURBED AREAS (2:1 GRADE OR FLATTER).

1. GENERAL SPECIFICATIONS

a. CLASS OF TURFGRASS SOD MUST BE MARYLAND STATE CERTIFIED. SOD LABELS MUST BE MADE AVAILABLE TO THE JOB FOREMAN AND INSPECTOR.

b. SOD MUST BE MACHINE CUT AT A UNIFORM SOIL THICKNESS OF ¾ INCH, PLUS OR MINUS ¼ INCH, AT THE TIME OF CUTTING. MEASUREMENT FOR THICKNESS MUST EXCLUDE TOP GROWTH AND THATCH. BROKEN PADS AND TORN OR UNEVEN ENDS WILL NOT BE ACCEPTABLE.

c. STANDARD SIZE SECTIONS OF SOD MUST BE STRONG ENOUGH TO SUPPORT THEIR OWN WEIGHT AND RETAIN THEIR SIZE AND SHAPE WHEN SUSPENDED VERTICALLY WITH A FIRM GRASP ON THE UPPER 10 PERCENT OF THE SECTION.

d. SOD MUST NOT BE HARVESTED OR TRANSPLANTED WHEN MOISTURE CONTENT (EXCESSIVELY DRY OR WET) MAY ADVERSELY AFFECT ITS SURVIVAL.

e. SOD MUST BE HARVESTED, DELIVERED, AND INSTALLED WITHIN A PERIOD OF 36 HOURS. SOD NOT TRANSPLANTED WITHIN THIS PERIOD MUST BE APPROVED BY AN AGRONOMIST OR SOIL SCIENTIST PRIOR TO ITS INSTALLATION.

B-4-4 STANDARDS AND SPECIFICATIONS FOR TEMPORARY STABILIZATION (CONTINUED)

2. SOD INSTALLATION

a. DURING PERIODS OF EXCESSIVELY HIGH TEMPERATURE OR IN AREAS HAVING DRY SUBSOIL, LIGHTLY IRRIGATE THE SUBSOIL IMMEDIATELY PRIOR TO LAYING THE SOD.

b. LAY THE FIRST ROW OF SOD IN A STRAIGHT LINE WITH SUBSEQUENT ROWS PLACED PARALLEL TO IT AND TIGHTLY WEDGED AGAINST EACH OTHER. STAGGER LATERAL JOINTS TO PROMOTE MORE UNIFORM GROWTH AND STRENGTH. ENSURE THAT SOD IS NOT STRETCHED OR OVERLAPPED AND THAT ALL JOINTS ARE BUTTED TIGHT IN ORDER TO PREVENT VOIDS WHICH WOULD CAUSE AIR DRYING OF THE ROOTS.

c. WHEREVER POSSIBLE, LAY SOD WITH THE LONG EDGES PARALLEL TO THE CONTOUR AND WITH STAGGERING JOINTS. ROLL AND TAMP, PEG OR OTHERWISE SECURE THE SOD TO PREVENT SLIPPAGE ON SLOPES. ENSURE SOLID CONTACT EXISTS BETWEEN SOD ROOTS AND THE UNDERLYING SOIL SURFACE.

d. WATER THE SOD IMMEDIATELY FOLLOWING ROLLING AND TAMPING UNTIL THE UNDERSIDE OF THE NEW SOD PAD AND SOIL SURFACE BELOW THE SOD ARE THOROUGHLY WET. COMPLETE THE OPERATIONS OF LAYING, TAMPING AND IRRIGATING FOR ANY PIECE OF SOD WITHIN EIGHT HOURS.

3. SOD MAINTENANCE

a. IN THE ABSENCE OF ADEQUATE RAINFALL, WATER DAILY DURING THE FIRST WEEK OR AS OFTEN AND SUFFICIENTLY AS NECESSARY TO MAINTAIN MOIST SOIL TO A DEPTH OF 4 INCHES. WATER SOD DURING THE HEAT OF THE DAY TO PREVENT WILTING.

b. AFTER THE FIRST WEEK, SOD WATERING IS REQUIRED AS NECESSARY TO MAINTAIN ADEQUATE MOISTURE CONTENT.

c. DO NOT MOW UNTIL THE SOD IS FIRMLY ROOTED. NO MORE THAN ˇ OF THE GRASS LEAF MUST BE REMOVED BY THE INITIAL CUTTING OR SUBSEQUENT CUTTINGS. MAINTAIN A GRASS HEIGHT OF AT LEAST 3 INCHES UNLESS OTHERWISE SPECIFIED.

B-4-6 STANDARDS AND SPECIFICATIONS FOR SOIL STABILIZATION MATTING

DEFINITION

MATERIAL USED TO TEMPORARILY OR PERMANENTLY STABILIZE CHANNELS OR STEEP SLOPES UNTIL GROUNDCOVER IS ESTABLISHED.

PURPOSE

TO PROTECT THE SOILS UNTIL VEGETATION IS ESTABLISHED.

CONDITIONS WHERE PRACTICE APPLIES

ON NEWLY SEEDED SURFACES TO PREVENT THE APPLIED SEED FROM WASHING OUT; IN CHANNELS AND ON STEEP SLOPES WHERE THE FLOW HAS EROSIVE VELOCITIES OR CONVEYS CLEAR WATER; ON TEMPORARY SWALES, EARTH DIKES, AND PERIMETER DIKE SWALES AS REQUIRED BY THE RESPECTIVE DESIGN STANDARD; AND, ON STREAM BANKS WHERE MOVING WATER IS LIKELY TO WASH OUT NEW VEGETATIVE PLANTINGS.

DESIGN CRITERIA

1. THE SOIL STABILIZATION MATTING THAT IS USED MUST WITHSTAND THE FLOW VELOCITIES AND SHEAR STRESSES DETERMINED FOR THE AREA, BASED ON THE 2-YEAR, 24-HOUR FREQUENCY STORM FOR TEMPORARY APPLICATIONS AND THE 10-YEAR, 24-HOUR FREQUENCY STORM FOR PERMANENT APPLICATIONS. DESIGNATE ON THE PLAN THE TYPE OF SOIL STABILIZATION MATTING USING THE STANDARD SYMBOL AND INCLUDE THE CALCULATED SHEAR STRESS FOR THE RESPECTIVE TREATMENT AREA.

2. MATTING IS REQUIRED ON PERMANENT CHANNELS WHERE THE RUNOFF VELOCITY EXCEEDS TWO AND HALF FEET PER SECOND (2.5 FPS) OR THE SHEAR STRESS EXCEEDS TWO POUNDS PER SQUARE FOOT (2 LBS/FT²). ON TEMPORARY CHANNELS DISCHARGING TO A SEDIMENT TRAPPING PRACTICE, PROVIDE MATTING WHERE THE RUNOFF VELOCITY EXCEEDS FOUR FEET PER SECOND (4 FPS).

3. TEMPORARY SOIL STABILIZATION MATTING IS MADE WITH DEGRADABLE (LASTS 6 MONTHS MINIMUM), NATURAL, OR MANMADE FIBERS OF UNIFORM THICKNESS AND DISTRIBUTION OF FIBERS THROUGHOUT AND IS SMOLDER RESISTANT. THE MAXIMUM PERMISSIBLE VELOCITY FOR TEMPORARY MATTING IS 6 FEET PER SECOND.

4. PERMANENT SOIL STABILIZATION MATTING IS AN OPEN WEAVE, SYNTHETIC MATERIAL CONSISTING OF NON-DEGRADABLE FIBERS OR ELEMENTS OF UNIFORM THICKNESS AND DISTRIBUTION OF WEAVE THROUGHOUT. THE MAXIMUM PERMISSIBLE VELOCITY FOR PERMANENT MATTING IS 8.5 FEET PER SECOND.

5. CALCULATE CHANNEL VELOCITY AND SHEAR STRESS USING THE FOLLOWING PROCEDURE:

SHEAR STRESS (T) IS A MEASURE OF THE FORCE OF MOVING WATER AGAINST THE SUBSTRATE AND IS CALCULATED AS:

T=(y)(R)(Sw) WHERE:

T=SHEAR STRESS (lb/ft²)
y=WEIGHT DENSITY OF WATER (62.4 lb/ft²)
R=AVERAGE WATER DEPTH (HYDRAULIC RADIUS)(ft)
Sw=WATER SURFACE SLOPE (ft/ft)

VELOCITY (v) MEASURES THE RATE OF FLOW THROUGH A DEFINED AREA AND IS CALCULATED AS:

WHERE:

v=VELOCITY (ft/sec)
n=MANNING'S ROUGHNESS COEFFICIENT
R=HYDRAULIC RADIUS (ft)
s=CHANNEL SLOPE (ft/ft)

6. USE TABLE B.7 TO ASSIST IN SELECTING THE APPROPRIATE SOIL STABILIZATION MATTING FOR SLOPE APPLICATIONS BASED ON THE SLOPE, THE SLOPE LENGTH, AND THE SOIL-ERODIBILITY K FACTOR.

TABLE B.7: SOIL STABILIZATION ON SLOPES

SLOPE	20:1 OR FLATTER (<5%)			<20:1 TO 4:1 (>5-25%)			<4:1 TO 3:1 (>25-33%)			<3:1 TO 2.5:1 (>33-40%)			<2.5:1 TO 2:1** (>40-50%)		
SLOPE LENGTH (FEET*)	0-30	30-60	60-120	0-30	30-60	60-120	0-30	30-60	60-120	0-30	30-60	60-120	0-30	30-60	60-120
STRAW MULCH/WOOD CELLULOSE FIBER				FOR K ≤ 0.35***											
TEMPORARY MATTING WITH DESIGN SHEAR STRESS > 1.5 lb/sf															
TEMPORARY MATTING WITH DESIGN SHEAR STRESS > 1.75 lb/sf															
TEMPORARY MATTING WITH DESIGN SHEAR STRESS > 2.0 lb/sf															
TEMPORARY MATTING WITH DESIGN SHEAR STRESS > 2.25 lb/sf															

EFFECTIVE RANGE FOR ALL K VALUES UNLESS OTHERWISE SPECIFIED

* SLOPE LENGTH INCLUDES CONTRIBUTING FLOW LENGTH.
** SLOPES STEEPER THAN 2:1 MUST BE ENGINEERED.
*** SOIL HAVING A K VALUE LESS THAN OR EQUAL TO 0.35 CAN BE STABILIZED EFFECTIVELY WITH STRAW MULCH OR WOOD CELLULOSE FIBER WHEN LOCATED ON SLOPES STEEPER THAN 5%. SOIL STABILIZATION MATTING IS REQUIRED ON ALL SLOPES STEEPER THAN 5% THAT HAVE SOIL WITH A K FACTOR GREATER THAN 0.35. K FACTOR RATINGS ARE PUBLISHED IN THE NRCS SOIL SURVEY HTTP:// WEBSOILSURVEY.NRCS.USDA.GOV/APP. DURING CONSTRUCTION OR RECLAMATION, THE SOIL-ERODIBILITY K VALUE SHOULD REPRESENT THE UPPER 6 INCHES OF THE FINAL FILL MATERIAL RE-SPREAD AS THE LAST LIFT. ONLY THE EFFECTS OF ROCK FRAGMENTS WITHIN THE SOIL PROFILE ARE CONSIDERED IN THE ESTIMATION OF THE K VALUE. DO NOT ADJUST K VALUES TO ACCOUNT FOR ROCKS ON THE SOIL SURFACE OR INCREASES IN SOIL ORGANIC MATTER RELATED TO MANAGEMENT ACTIVITIES.

MAINTENANCE

VEGETATION MUST BE ESTABLISHED AND MAINTAINED SO THAT THE REQUIREMENTS FOR ADEQUATE VEGETATIVE ESTABLISHMENT ARE CONTINUOUSLY MET IN ACCORDANCE WITH SECTION B-4 VEGETATIVE STABILIZATION.

This plan is approved for soil erosion and sediment control by the HOWARD SOIL CONSERVATION DISTRICT.

[signature] 2/9/16
Howard Soil Conservation District — *Date*

ENGINEER 'S CERTIFICATE

"I hereby certify that this plan has been designed in accordance with current Maryland erosion and sediment control laws, regulations, and standards, that it represents a practical and workable plan based on my personal knowledge of the site, and that it was prepared in accordance with the requirements of the Howard Soil Conservation District."

[signature] R.L. Butt — 1-22-16
Signature of Engineer (print name below signature) — *Date*

DEVELOPER 'S CERTIFICATE

"We hereby certify that any clearing, grading, construction, or development will be done pursuant to this approved erosion and sediment control plan, including inspecting and maintaining controls, and that the responsible personnel involved in the construction project will have a Certificate of Training at a Maryland Department of the Environment (MDE) approved training program for the control on erosion and sediment prior to beginning the project. I certify right-of-entry for periodic on-site evaluation by Howard County, the Howard Soil Conservation District and/or MDE."

[signature] C NIGHTINGALE — 1/22/2016
Signature of Developer (print name below signature) — *Date*

CONTRACTOR NOTE:

CONTRACTOR SHALL EXERCISE EXTREME CAUTION SO AS NOT TO DAMAGE ANY EXISTING PAVING, CURB & GUTTER, SIDEWALK OR OTHER SITE FEATURES WHICH ARE TO REMAIN. SHOULD DAMAGE OCCUR, CONTRACTOR SHALL REPAIR TO ORIGINAL CONDITION AT CONTRACTOR'S EXPENSE.

Prepared For and Owner:
Howard Community College
10901 Little Patuxent Parkway
Columbia, Maryland 21044
ATTN: Mr. Chuck Nightingale
410-772-4296

Copyright © 2014 Desman, Inc. All rights reserved. No part of these documents may be reproduced in any form or by any means without permission from Desman Inc.

DESMAN ASSOCIATES

KCI TECHNOLOGIES
ENGINEERS
PLANNERS
SCIENTISTS
CONSTRUCTION MANAGERS
936 Ridgebrook Road
Sparks, MD 21152
Phone (410)316-7800
Fax (410)316-7853
www.kci.com

HOWARD COMMUNITY COLLEGE
EAST PARKING GARAGE NO. 2, PARCEL B & ACCESS BRIDGE, LOT A-2 TOWN CENTER, 3/3
COLUMBIA, MD
PARCEL B/ PLAT NO. 19049 &
NON-CREDITED OPEN SPACE LOT A-2, TC, 3/3 PLAT NO. 23152
TAX MAP: 35, BLOCK: 6,
FIFTH ELECTION DISTRICT, ZONING: POR & NEW TOWN

PROFESSIONAL CERTIFICATION. I HEREBY CERTIFY THAT THESE DOCUMENTS WERE PREPARED OR APPROVED BY ME, AND THAT I AM A DULY LICENSED PROFESSIONAL ENGINEER UNDER THE LAWS OF THE STATE OF MARYLAND, LICENSE NO. 31089 EXPIRATION DATE: 11/21/16

STATE OF MARYLAND · RICHARD L. BUTT · No. 031089 · PROFESSIONAL ENGINEER · 1/15/16

ISSUE

NO.	DESCRIPTION	DATE

DRAWING TITLE:
EROSION & SEDIMENT CONTROL NOTES

DRAWING NO.
C8.02
SHEET: 11 OF 35

SCALE:	N.T.S.
DATE:	JANUARY 8, 2016
PROJECT NO:	27146550

DES.	DRWN.	CK'D.
R.L.B.	C.T.B.	R.L.B.

SDP 16-003
GP-16-012

B-4-8 STANDARDS AND SPECIFICATIONS FOR STOCKPILE AREA

DEFINITION

A MOUND OR PILE OF SOIL PROTECTED BY APPROPRIATELY DESIGNED EROSION AND SEDIMENT CONTROL MEASURES.

PURPOSE

TO PROVIDE A DESIGNATED LOCATION FOR THE TEMPORARY STORAGE OF SOIL THAT CONTROLS THE POTENTIAL FOR EROSION, SEDIMENTATION, AND CHANGES TO DRAINAGE PATTERNS.

CONDITIONS WHERE PRACTICE APPLIES

STOCKPILE AREAS ARE UTILIZED WHEN IT IS NECESSARY TO SALVAGE AND STORE SOIL FOR LATER USE.

DESIGN CRITERIA

1. THE STOCKPILE LOCATION AND ALL RELATED SEDIMENT CONTROL PRACTICES MUST BE CLEARLY INDICATED ON THE EROSION AND SEDIMENT CONTROL PLAN.
2. THE FOOTPRINT OF THE STOCKPILE MUST BE SIZED TO ACCOMMODATE THE ANTICIPATED VOLUME OF MATERIAL AND BASED ON A SIDE SLOPE RATIO NO STEEPER THAN 2:1. BENCHING MUST BE PROVIDED IN ACCORDANCE WITH SECTION B-3 LAND GRADING.
3. RUNOFF FROM THE STOCKPILE AREA MUST DRAIN TO A SUITABLE SEDIMENT CONTROL PRACTICE.
4. ACCESS THE STOCKPILE AREA FROM THE UPGRADE SIDE.
5. CLEAR WATER RUNOFF INTO THE STOCKPILE AREA MUST BE MINIMIZED BY USE OF A DIVERSION DEVICE SUCH AS AN EARTH DIKE, TEMPORARY SWALE OR DIVERSION FENCE. PROVISIONS MUST BE MADE FOR DISCHARGING CONCENTRATED FLOW IN A NON-EROSIVE MANNER.
6. WHERE RUNOFF CONCENTRATES ALONG THE TOE OF THE STOCKPILE FILL, AN APPROPRIATE EROSION/SEDIMENT CONTROL PRACTICE MUST BE USED TO INTERCEPT THE DISCHARGE.
7. STOCKPILES MUST BE STABILIZED IN ACCORDANCE WITH THE 3/7 DAY STABILIZATION REQUIREMENT AS WELL AS STANDARD B-4-1 INCREMENTAL STABILIZATION AND STANDARD B-4-4 TEMPORARY STABILIZATION.
8. IF THE STOCKPILE IS LOCATED ON AN IMPERVIOUS SURFACE, A LINER SHOULD BE PROVIDED BELOW THE STOCKPILE TO FACILITATE CLEANUP. STOCKPILES CONTAINING CONTAMINATED MATERIAL MUST BE COVERED WITH IMPERMEABLE SHEETING.

MAINTENANCE

THE STOCKPILE AREA MUST CONTINUOUSLY MEET THE REQUIREMENTS FOR ADEQUATE VEGETATIVE ESTABLISHMENT IN ACCORDANCE WITH SECTION B-4 VEGETATIVE STABILIZATION. SIDE SLOPES MUST BE MAINTAINED AT NO STEEPER THAN A 2:1 RATIO. THE STOCKPILE AREA MUST BE KEPT FREE OF EROSION. IF THE VERTICAL HEIGHT OF A STOCKPILE EXCEEDS 20 FEET FOR 2:1 SLOPES, 30 FEET FOR 3:1 SLOPES, OR 40 FEET FOR 4:1 SLOPES, BENCHING MUST BE PROVIDED IN ACCORDANCE WITH SECTION B-3 LAND GRADING.

D-2 STANDARDS AND SPECIFICATIONS FOR STONE CHECK DAM

DEFINITION

A STONE WEIR PLACED IN A SWALE.

PURPOSE

TO REDUCE RUNOFF VELOCITIES AND PREVENT CHANNEL EROSION IN DRAINAGE COURSES.

CONDITIONS WHERE PRACTICE APPLIES

STONE CHECK DAMS ARE USED IN SWALES WHERE CHANNEL VELOCITY EXCEEDS 4 FEET PER SECOND AND CHANNEL PROTECTION (E.G., MATTING OR RIP-RAP) IS NOT PROVIDED.

DESIGN CRITERIA

1. THIS PRACTICE IS NOT TO BE USED AS A SEDIMENT TRAPPING DEVICE. SEDIMENT-LADEN RUNOFF MUST PASS THROUGH A SEDIMENT TRAPPING PRACTICE PRIOR TO BEING DISCHARGED FROM THE SITE.
2. VELOCITY CALCULATIONS ARE TO BE BASED ON THE 2-YEAR, 24-HOUR FREQUENCY STORM EVENT.
3. LOCATE STONE CHECK DAM(S) TO PROVIDE MAXIMUM VELOCITY REDUCTION. THIS MAY BE ACHIEVED BY CONSIDERING THE VOLUME OF RUNOFF, THE DRAINAGE AREA, AND THE SLOPE. PLACE STONE CHECK DAMS IN REASONABLY STRAIGHT SECTIONS OF THE FLOW CHANNEL TO MINIMIZE THE POTENTIAL FOR EROSION IN THE CHANNEL BEND.
4. THE HEIGHT OF THE STONE OUTLET WEIR CREST MUST NOT EXCEED ONE-HALF THE DEPTH OF THE SWALE. ADDITIONALLY, THE MAXIMUM HEIGHT TO THE WEIR CREST MUST NOT EXCEED 2 FEET TO PREVENT SCOUR AT THE TOE OF THE DAM. THE STONE CHECK DAM MUST EXTEND FROM BANK TO BANK OF THE SWALE WITH THE WEIR SECTION LENGTH IN THE CENTER OF THE DAM. IF THESE PROVISIONS CANNOT BE MET, AN ENGINEERING ANALYSIS MUST BE CONDUCTED.
5. THE NUMBER OF CHECK DAMS WILL DEPEND ON THE LENGTH AND SLOPE OF THE SWALE. THE DISTANCE BETWEEN THE STONE CHECK DAMS WILL VARY WITH THE LONGITUDINAL SLOPE.
6. THE REQUIRED SPACING IS DETERMINED BY THE FOLLOWING FORMULA OR FIGURE D.1:

$$X = \frac{Y}{S}$$

WHERE:
X = CHECK DAM SPACING (FT)
Y = CHECK DAM HEIGHT (FT)
S = NATURAL CHANNEL SLOPE (FT/FT)

THE SPACING REQUIREMENTS DO NOT CHANGE SIGNIFICANTLY WITH VARYING CHANNEL CROSS SECTIONS BUT ARE MORE SENSITIVE TO THE CHANNEL SLOPE AND HEIGHT OF THE CHECK DAM.

MAINTENANCE

THE STONE CHECK DAM IS NOT A SEDIMENT TRAPPING PRACTICE; HOWEVER, SOME SEDIMENT MAY ACCUMULATE BEHIND THE CHECK DAM. ACCUMULATED SEDIMENT MUST BE REMOVED WHEN IT REACHES ONE-HALF OF THE HEIGHT OF THE WEIR CREST. LINE, GRADE, AND CROSS SECTION MUST BE MAINTAINED.

CHECK DAM REMOVAL

IN TEMPORARY SWALES AND CHANNELS, REMOVE CHECK DAM(S) WHEN NO LONGER NEEDED. IN PERMANENT CHANNELS, CHECK DAMS MAY BE REMOVED WHEN PERMANENT LINING IS INSTALLED. IN THE CASE OF GRASS-LINED CHANNELS, CHECK DAM MAY BE REMOVED WHEN THE GRASS HAS MATURED SUFFICIENTLY TO PROTECT THE SWALE OR CHANNEL. SEED AND INSTALL SOIL STABILIZATION MATTING OR SOD IN THE AREAS DISTURBED BY THE REMOVAL OF THE CHECK DAM.

APPROVED: Howard County Department of Planning & Zoning

Valdis Lazdins (signature) — Director	3-15-16 — Date
Kent Sheubrooks (signature) BS — Chief, Division of Land Development	3-14-16 — Date
Chad Edmondson (signature) — Chief, Development Engineering Division	2-12-16 — Date

H-4 STANDARDS AND SPECIFICATIONS FOR TEMPORARY ACCESS WATERWAY CROSSINGS

DEFINITION

A STRUCTURE PLACED ACROSS A WATERWAY TO PROVIDE ACCESS FOR CONSTRUCTION PURPOSES FOR A PERIOD OF LESS THAN ONE YEAR. TEMPORARY ACCESS CROSSINGS ARE NOT TO BE UTILIZED TO MAINTAIN TRAFFIC FOR THE GENERAL PUBLIC.

PURPOSE

TO PROVIDE SAFE, POLLUTION FREE ACCESS ACROSS A WATERWAY FOR CONSTRUCTION EQUIPMENT BY ESTABLISHING MINIMUM STANDARDS AND SPECIFICATIONS FOR THE DESIGN, CONSTRUCTION, MAINTENANCE, AND REMOVAL OF THE STRUCTURE. A TEMPORARY ACCESS WATERWAY CROSSING IS NECESSARY TO PREVENT CONSTRUCTION EQUIPMENT FROM DAMAGING THE WATERWAY, BLOCKING FISH MIGRATION, AND TRACKING SEDIMENT AND OTHER POLLUTANTS INTO THE WATERWAY. A WATERWAY CROSSING MAY CREATE A CHANNEL CONSTRICTION, THUS THE TEMPORARY NATURE OF WATERWAY ACCESS CROSSINGS MUST BE STRESSED. THE CROSSING SHOULD BE IN PLACE FOR THE SHORTEST PRACTICAL PERIOD OF TIME AND REMOVED AS SOON AS ITS FUNCTION IS COMPLETED.

CONDITIONS WHERE PRACTICE APPLIES

TEMPORARY WATERWAY CROSSINGS MUST CONFORM TO THE TECHNICAL REQUIREMENTS OF THESE STANDARDS AND SPECIFICATIONS AS WELL AS ANY SPECIFIC REQUIREMENTS IMPOSED BY THE MDE WETLANDS AND WATERWAYS PROGRAM. THE DESIGNS ARE BASED ON WATERWAY GEOMETRY RATHER THAN THE DRAINAGE AREA CONTRIBUTING TO THE POINT OF CROSSING. THE PRINCIPAL CONSIDERATION OF THESE STANDARDS AND SPECIFICATIONS IS EROSION AND SEDIMENT CONTROL. STRUCTURAL INTEGRITY AND SAFETY FOR EXPECTED LOADING MUST ALSO BE CONSIDERED WHEN DESIGNING TEMPORARY ACCESS WATERWAY CROSSINGS. THE TWO TYPES OF STANDARD TEMPORARY WATERWAY CROSSINGS ARE BRIDGES AND CULVERTS. BRIDGES ARE PREFERABLE.

DESIGN CRITERIA

1. STREAM CLOSURES: THE STREAM CHANNEL MUST NOT BE DISTURBED DURING RESTRICTED TIME PERIODS. STREAM CLOSURE DATES FOR FISH SPAWNING OR MIGRATION WITHIN WATERWAYS ARE AS FOLLOWS:

USE I AND IP	MARCH 1 - JUNE 15
USE II	JUNE 1 - SEPTEMBER 30 AND DECEMBER 16 - MARCH 14
USE III AND IIIP	OCTOBER 1 - APRIL 30
USE IV	MARCH 1 - MAY 31
SAV*	APRIL 1 - OCTOBER 15

*SUBMERGED AQUATIC VEGETATION (SAV)

FOR MORE INFORMATION ABOUT THE CLOSURES BASED ON STREAM USES AND SAVS CONTACT MDE WETLANDS AND WATERWAYS PROGRAM.

2. AQUATIC MIGRATION: FISH PASSAGE MUST NOT BE OBSTRUCTED BY THE INSTALLATION OF A WATERWAY CROSSING. BRIDGES POSE THE LEAST POTENTIAL FOR CREATING BARRIERS TO AQUATIC MIGRATION. THE CONSTRUCTION OF A WATERWAY CROSSING MUST NOT CAUSE A SIGNIFICANT WATER LEVEL DIFFERENCE BETWEEN THE UPSTREAM AND DOWNSTREAM WATER SURFACE ELEVATIONS.
3. SITE LOCATION: LOCATE THE TEMPORARY CROSSING WHERE THERE WILL BE THE LEAST DISTURBANCE TO THE EXISTING WATERWAY BANKS AND APPROACHES. WHEN POSSIBLE, LOCATE THE CROSSING AT A POINT RECEIVING MINIMAL SURFACE RUNOFF. CONSIDER THE EFFORT THAT WILL BE REQUIRED TO RESTORE THE AREA AFTER THE TEMPORARY CROSSING IS REMOVED.
4. CROSSING ALIGNMENT: THE TEMPORARY WATERWAY CROSSING SHOULD BE AT RIGHT ANGLES TO THE STREAM, UNLESS THE APPROACH CONDITIONS DICTATE OTHERWISE.
5. APPROACHES: THE CENTERLINE OF BOTH APPROACHES NEEDS TO COINCIDE WITH THE CENTERLINE OF THE CROSSING FOR A MINIMUM DISTANCE OF 50 FEET FROM THE TOP OF EACH STREAM BANK, UNLESS PRECLUDED BY PHYSICAL OR RIGHT-OF-WAY CONSTRAINTS. THE APPROACHES SHOULD BE KEPT AS CLOSE TO THE EXISTING GRADE AS POSSIBLE. APPROACHES SHOULD HAVE A MINIMUM WIDTH OF 12 FEET AND A MAXIMUM WIDTH OF 20 FEET DEPENDING ON THE SIZE OF THE VEHICLES THAT WILL USE THE CROSSING.
6. SURFACE RUNOFF: RUNOFF ON THE APPROACHES MUST BE AT A NON-EROSIVE VELOCITY. THIS CAN BE ATTAINED THROUGH SURFACE STABILIZATION OR SURFACE RUNOFF DIVERSION. SURFACE RUNOFF FROM UNSTABILIZED APPROACHES MUST DISCHARGE TO AN APPROVED SEDIMENT CONTROL DEVICE.
7. REMOVAL: AFTER THE TEMPORARY CROSSING IS NO LONGER NEEDED, REMOVE IT WITHIN 14 CALENDAR DAYS UNLESS WITHIN THE USE DESIGNATION STREAM CLOSURE PERIOD.

MAINTENANCE

THE STONE CHECK DAM IS NOT A SEDIMENT TRAPPING PRACTICE; HOWEVER, SOME SEDIMENT MAY ACCUMULATE BEHIND THE CHECK DAM. ACCUMULATED SEDIMENT MUST BE REMOVED WHEN IT REACHES ONE-HALF OF THE HEIGHT OF THE WEIR CREST. LINE, GRADE, AND CROSS SECTION MUST BE MAINTAINED.

CHECK DAM REMOVAL

IN TEMPORARY SWALES AND CHANNELS, REMOVE CHECK DAM(S) WHEN NO LONGER NEEDED. IN PERMANENT CHANNELS, CHECK DAMS MAY BE REMOVED WHEN PERMANENT LINING IS INSTALLED. IN THE CASE OF GRASS-LINED CHANNELS, CHECK DAM MAY BE REMOVED WHEN THE GRASS HAS MATURED SUFFICIENTLY TO PROTECT THE SWALE OR CHANNEL. SEED AND INSTALL SOIL STABILIZATION MATTING OR SOD IN THE AREAS DISTURBED BY THE REMOVAL OF THE CHECK DAM.

H-4-1 STANDARDS AND SPECIFICATIONS FOR TEMPORARY ACCESS BRIDGE

DEFINITION

A TEMPORARY WATERWAY CROSSING THAT SPANS THE STREAM CHANNEL.

DESIGN CONSIDERATION

GENERALLY, A TEMPORARY ACCESS BRIDGE CAUSES LESS DISTURBANCE TO THE WATERWAY BED AND BANKS AND POSES LESS INTERFERENCE WITH FISH MIGRATION THAN A CULVERT ACCESS CROSSING.TIME-OF-YEAR RESTRICTIONS DO NOT APPLY TO THE CONSTRUCTION OR REMOVAL OF A TEMPORARY ACCESS BRIDGE UNLESS THERE IS DISTURBANCE TO THE STREAM CHANNEL.

MAINTENANCE

THE APPROACH TO THE BRIDGE MUST BE STABILIZED AND KEPT FREE OF EROSION. THE DECKING AND CURBS MUST BE CLEANED OF SEDIMENT DAILY BY SCRAPING, SWEEPING, AND/OR VACUUMING. THE DECKING AND CURBS MUST REMAIN TIGHTLY BUTTED WITHOUT GAPS. DEBRIS TRAPPED BY THE BRIDGE MUST BE REMOVED. THE AREAS ADJACENT TO THE CROSSING MUST BE MAINTAINED TO CONTINUOUSLY MEET THE REQUIREMENTS FOR ADEQUATE VEGETATIVE ESTABLISHMENT IN ACCORDANCE WITH SECTION B-4 VEGETATIVE STABILIZATION.

MARYLAND DEPARTMENT OF THE ENVIRONMENT

BEST MANAGEMENT PRACTICES FOR WORKING IN NONTIDAL WETLANDS, THE NONTIDAL WETLAND BUFFER, WATERS OF THE STATE AND THE 100-YEAR FLOODPLAIN

1. NO EXCESS FILL, CONSTRUCTION MATERIAL, OR DEBRIS SHALL BE STOCKPILED OR STORED IN NONTIDAL WETLANDS, NONTIDAL WETLAND BUFFERS, WATERWAYS, OR THE 100-YEAR FLOODPLAIN.
2. PLACE MATERIALS IN A LOCATION AND MANNER THAT DOES NOT ADVERSELY IMPACT SURFACE OR SUBSURFACE WATER FLOW INTO OR OUT OF NONTIDAL WETLANDS, NONTIDAL WETLAND BUFFERS, WATERWAYS, OR THE 100-YEAR FLOODPLAIN.
3. DO NOT USE THE EXCAVATED MATERIAL AS BACKFILL IF IT CONTAINS WASTE METAL PRODUCTS, UNSIGHTLY DEBRIS, TOXIC MATERIAL, OR ANY OTHER DELETERIOUS SUBSTANCE. IF ADDITIONAL BACKFILL IS REQUIRED, USE CLEAN MATERIAL FREE OF WASTE METAL PRODUCTS, UNSIGHTLY DEBRIS, TOXIC MATERIAL, OR ANY OTHER DELETERIOUS SUBSTANCE.
4. PLACE HEAVY EQUIPMENT ON MATS OR SUITABLY OPERATE THE EQUIPMENT TO PREVENT DAMAGE TO NONTIDAL WETLANDS, NONTIDAL WETLAND BUFFERS, WATERWAYS, OR THE 100-YEAR FLOODPLAIN.
5. REPAIR AND MAINTAIN ANY SERVICEABLE STRUCTURE OR FILL SO THERE IS NO PERMANENT LOSS OF NONTIDAL WETLANDS, NONTIDAL WETLAND BUFFERS, OR WATERWAYS, OR PERMANENT MODIFICATION OF THE 100-YEAR FLOODPLAIN IN EXCESS OF THAT LOST UNDER THE ORIGINALLY AUTHORIZED STRUCTURE OR FILL.
6. RECTIFY ANY NONTIDAL WETLANDS, WETLAND BUFFERS, WATERWAYS, OR 100-YEAR FLOODPLAIN TEMPORARILY IMPACTED BY ANY CONSTRUCTION.
7. ALL STABILIZATION IN THE NONTIDAL WETLAND AND NONTIDAL WETLAND BUFFER SHALL CONSIST OF THE FOLLOWING SPECIES: ANNUAL RYEGRASS (LOLIUM MULTIFLORUM), MILLET (SETARIA ITALICA), BARLEY (HORDEUM SP.), OATS (UNIOLA SP.), AND/OR RYE (SECALE CEREALE). THESE SPECIES WILL ALLOW FOR THE STABILIZATION OF THE SITE WHILE ALSO ALLOWING FOR THE VOLUNTARY REVEGETATION OF NATURAL WETLAND SPECIES. OTHER NON-PERSISTENT VEGETATION MAY BE ACCEPTABLE, BUT MUST BE APPROVED BY THE NONTIDAL WETLANDS AND WATERWAYS DIVISION. KENTUCKY 31 FESCUE SHALL NOT BE UTILIZED IN WETLAND OR BUFFER AREAS. THE AREA SHOULD BE SEEDED AND MULCHED TO REDUCE EROSION AFTER CONSTRUCTION ACTIVITIES HAVE BEEN COMPLETED.
8. AFTER INSTALLATION HAS BEEN COMPLETED, MAKE POST-CONSTRUCTION GRADES AND ELEVATIONS THE SAME AS THE ORIGINAL GRADES AND ELEVATIONS IN TEMPORARILY IMPACTED AREAS.
9. TO PROTECT AQUATIC SPECIES, IN-STREAM WORK IS PROHIBITED AS DETERMINED BY THE CLASSIFICATION OF THE STREAM:

   USE I WATERS: IN-STREAM WORK SHALL NOT BE CONDUCTED DURING THE PERIOD MARCH 1 THROUGH JUNE 15, INCLUSIVE, DURING ANY YEAR.
10. STORMWATER RUNOFF FROM IMPERVIOUS SURFACES SHALL BE CONTROLLED TO PREVENT THE WASHING OF DEBRIS INTO THE WATERWAY.
11. CULVERTS SHALL BE CONSTRUCTED AND ANY RIPRAP PLACED SO AS NOT TO OBSTRUCT THE MOVEMENT OF AQUATIC SPECIES, UNLESS THE PURPOSE OF THE ACTIVITY IS TO IMPOUND WATER.

HOWARD SOIL CONSERVATION DISTRICT STANDARD SEDIMENT CONTROL NOTES

1. A MINIMUM OF 48 HOURS MUST BE GIVEN TO THE HOWARD COUNTY DEPARTMENT OF INSPECTION, LICENSES AND PERMITS, SEDIMENT CONTROL DIVISION PRIOR TO THE START OF ANY CONSTRUCTION, (313-1850).
2. ALL VEGETATIVE AND STRUCTURAL PRACTICES ARE TO BE INSTALLED ACCORDING TO THE PROVISIONS OF THIS PLAN AND ARE TO BE IN CONFORMANCE WITH THE MOST CURRENT "MARYLAND STANDARDS AND SPECIFICATION FOR SOIL EROSION AND SEDIMENT CONTROL" AND REVISIONS THERETO.
3. FOLLOWING INITIAL SOIL DISTURBANCE OR RE-DISTURBANCE, PERMANENT OR TEMPORARY STABILIZATION SHALL BE COMPLETE WITHIN: A) 3 CALENDAR DAYS FOR ALL PERIMETER SEDIMENT CONTROL STRUCTURES, DIKES, PERIMETER SLOPES AND ALL SLOPES GREATER THAN 3:1, B) 7 DAYS AS TO ALL OTHER DISTURBED OR GRADED AREAS ON THE PROJECT SITE.
4. ALL DISTURBED AREAS MUST BE STABILIZED WITHIN THE TIME PERIOD SPECIFIED ABOVE IN ACCORDANCE WITH THE 2011 MARYLAND STANDARDS AND SPECIFICATIONS FOR SOIL EROSION AND SEDIMENT CONTROL FOR PERMANENT SEEDINGS (SEC. B-4-5), TEMPORARY SEEDING (SEC. B-4-4) AND MULCHING (SEC. B-4-3). TEMPORARY STABILIZATION WITH MULCH ALONE CAN ONLY BE DONE WHEN RECOMMENDED SEEDING DATES DO NOT ALLOW FOR PROPER GERMINATION AND ESTABLISHMENT OF GRASSES.
5. ALL SEDIMENT CONTROL STRUCTURES ARE TO REMAIN IN PLACE AND ARE TO BE MAINTAINED IN OPERATIVE CONDITION UNTIL PERMISSION FOR THEIR REMOVAL HAS BEEN OBTAINED FROM THE HOWARD COUNTY SEDIMENT CONTROL INSPECTOR.
6. SITE ANALYSIS:

TOTAL AREA OF SITE	117.84 ACRES
AREA DISTURBED	2.53 ACRES
AREA TO BE ROOFED OR PAVED	2.46 ACRES
AREA TO BE VEGETATIVELY STABILIZED	1.07 ACRES
TOTAL CUT	240 CY
TOTAL FILL	935 CY
OFFSITE WASTE AREA LOCATION	SITE WITH APPROVED SED. CONTROL PLAN

7. ANY SEDIMENT CONTROL PRACTICE THAT IS DISTURBED BY GRADING ACTIVITY FOR PLACEMENT OF UTILITIES MUST BE REPAIRED ON THE SAME DAY OF DISTURBANCE.
8. ADDITIONAL SEDIMENT CONTROL MUST BE PROVIDED, IF DEEMED NECESSARY BY THE HOWARD COUNTY SEDIMENT CONTROL INSPECTOR.
9. ON ALL SITES WITH DISTURBED AREAS IN EXCESS OF 2 ACRES, APPROVAL OF THE INSPECTION AGENCY SHALL BE REQUESTED UPON COMPLETION OF INSTALLATION OF PERIMETER EROSION AND SEDIMENT CONTROLS, BUT BEFORE PROCEEDING WITH ANY OTHER EARTH DISTURBANCE OR GRADING, OTHER BUILDING OR GRADING INSPECTION APPROVALS MAY NOT BE AUTHORIZED UNTIL THE INITIAL APPROVAL BY THE INSPECTION AGENCY IS MADE.
10. TRENCHES FOR THE CONSTRUCTION OF UTILITIES IS LIMITED TO THREE PIPE LENGTHS OR THAT WHICH SHALL BE BACK FILLED AND STABILIZED BY THE END OF EACH WORKDAY, WHICHEVER IS SHORTER.
11. ANY CHANGES OR REVISIONS TO THE SEQUENCE OF CONSTRUCTION MUST BE REVIEWED AND APPROVED BY THE PLAN APPROVAL AUTHORITY PRIOR TO PROCEEDING WITH CONSTRUCTION.
12. A PROJECT IS TO BE SEQUENCED SO THAT GRADING ACTIVITIES BEGIN ON ONE GRADING UNIT (MAXIMUM ACREAGE OF 20 AC. PER GRADING UNIT) AT A TIME. WORK MAY PROCEED TO A SUBSEQUENT GRADING UNIT WHEN AT LEAST 50 PERCENT OF THE DISTURBED AREA IN THE PRECEDING GRADING UNIT HAS BE STABILIZED AND APPROVED BY THE ENFORCEMENT AUTHORITY. UNLESS OTHERWISE SPECIFIED AND APPROVED BY THE APPROVAL AUTHORITY, NO MORE THAN 30 ACRES CUMULATIVELY MAY BE DISTURBED AT A GIVEN TIME.
13. ADDITIONAL SEDIMENT CONTROL MUST BE PROVIDED, IF DEEMED NECESSARY BY THE CID. THE SITE AND ALL CONTROLS SHALL BE INSPECTED BY THE CONTRACTOR WEEKLY; AND THE NEXT DAY AFTER EACH RAIN EVENT. A WRITTEN REPORT BY THE CONTRACTOR, MADE AVAILABLE UPON REQUEST, IS PART OF EVERY INSPECTION AND SHOULD INCLUDE:
   - INSPECTION DATE
   - INSPECTION TYPE (ROUTINE, PRE-STORM EVENT, DURING RAIN EVENT)
   - NAME AND TITLE OF INSPECTOR
   - WEATHER INFORMATION (CURRENT CONDITIONS AS WELL AS TIME AND AMOUNT OF LAST RECORDED PRECIPITATION)
   - BRIEF DESCRIPTION OF PROJECT'S STATUS (E.G., PERCENT COMPLETE) AND/OR CURRENT ACTIVITIES
   - EVIDENCE OF SEDIMENT DISCHARGES
   - IDENTIFICATION OF PLAN DEFICIENCIES
   - IDENTIFICATION OF SEDIMENT CONTROLS THAT REQUIRE MAINTENANCE
   - IDENTIFICATION OF MISSING OR IMPROPERLY INSTALLED SEDIMENT CONTROLS
   - COMPLIANCE STATUS REGARDING THE SEQUENCE OF CONSTRUCTION AND STABILIZATION REQUIREMENTS
   - PHOTOGRAPHS
   - MONITORING/SAMPLING
   - MAINTENANCE AND/OR CORRECTIVE ACTION PERFORMED
   - OTHER INSPECTION ITEMS AS REQUIRED BY THE GENERAL PERMIT FOR STORMWATER ASSOCIATED WITH CONSTRUCTION ACTIVITIES (NPDES, MDE).
14. DISTURBANCE SHALL NOT OCCUR OUTSIDE THE L.O.D. A PROJECT IS TO BE SEQUENCED SO THAT GRADING ACTIVITIES BEGIN ON ONE GRADING UNIT (MAXIMUM ACREAGE OF 20 AC. PER GRADING UNIT) AT A TIME. WORK MAY PROCEED TO A SUBSEQUENT GRADING UNIT WHEN AT LEAST 50 PERCENT OF THE DISTURBED AREA IN THE PRECEDING GRADING UNIT HAS BEEN STABILIZED AND APPROVED BY THE CID. UNLESS OTHERWISE SPECIFIED AND APPROVED BY THE CID. NO MORE THAN 30 ACRES CUMULATIVELY MAY BE DISTURBED AT A GIVEN TIME.
15. WASH WATER FROM ANY EQUIPMENT, VEHICLES, WHEELS, PAVEMENT, AND OTHER SOURCES MUST BE TREATED IN A SEDIMENT BASIN OR OTHER APPROVED WASHOUT STRUCTURE.
16. TOPSOIL SHALL BE STOCKPILED AND PRESERVED ON-SITE FOR REDISTRIBUTION ONTO FINAL GRADE
17. ALL SILT FENCE AND SUPER SILT FENCE SHALL BE PLACED ON-THE-CONTOUR, AND BE IMBRICATED AT 25' MINIMUM INTERVALS, WITH LOWER ENDS CURLED UPHILL BY 2' IN ELEVATION.
18. STREAM CHANNELS MUST NOT BE DISTURBED DURING THE FOLLOWING RESTRICTED TIME PERIODS (INCLUSIVE).
   - USE I AND IP MARCH 1 - JUNE 15
   - USE III AND IIIP OCTOBER 1 - APRIL 30
   - USE IV MARCH 1 - MAY 31
19. A COPY OF THIS PLAN, THE 2011 MARYLAND STANDARDS AND SPECIFICATIONS FOR SOIL EROSION AND SEDIMENT CONTROL, AND ASSOCIATED PERMITS SHALL BE ON SITE AND AVAILABLE WHEN THE SITE IS ACTIVE.

1. DEVELOPER'S CERTIFICATION:

I (WE) CERTIFY THAT:

A) ALL DEVELOPMENT AND CONSTRUCTION WILL BE DONE IN ACCORDANCE WITH THIS SEDIMENT AND EROSION CONTROL PLAN, AND FURTHER, AUTHORIZE THE RIGHT OF ENTRY FOR PERIODIC ON-SITE EVALUATION BY THE HOWARD COUNTY SOIL CONSERVATION DISTRICT BOARD OF SUPERVISORS OR THEIR AUTHORIZED AGENTS.

B) ANY RESPONSIBLE PERSONNEL INVOLVED IN THE CONSTRUCTION PROJECT WILL HAVE A CERTIFICATE OF ATTENDANCE FROM THE MARYLAND DEPARTMENT OF THE ENVIRONMENTS APPROVED TRAINING PROGRAM FOR THE CONTROL OF SEDIMENT AND EROSION BEFORE BEGINNING THE PROJECT.

RESPONSIBLE PERSON ON THE SITE: Chuck Bruce

2. THE DEVELOPER IS RESPONSIBLE FOR THE ACQUISITION OF ALL EASEMENTS, RIGHTS, AND/OR RIGHTS OF WAY THAT MAY BE REQUIRED FOR THE SEDIMENT AND EROSION CONTROL PRACTICES. STORMWATER MANAGEMENT PRACTICES AND THE DISCHARGE OF STORMWATER ONTO OR ACROSS ADJACENT OR DOWNSTREAM PROPERTIES INCLUDED IN THIS PLAN. HE IS ALSO RESPONSIBLE FOR THE ACQUISITION OF ALL EASEMENTS, RIGHTS AND/OR RIGHTS OF WAY THAT MAY BE REQUIRED FOR GRADING AND/OR WORK ON ADJACENT PROPERTIES INCLUDED IN THIS PLAN.
3. FOLLOWING INITIAL SOIL DISTURBANCE OR REDISTURBANCE, PERMANENT OR TEMPORARY STABILIZATION SHALL BE COMPLETED WITHIN SEVEN CALENDAR DAYS FOR THE SURFACE OF PERIMETER CONTROLS, DIKES, SWALES, DITCHES, PERIMETER SLOPES, AND ALL SLOPES GREATER THAT 3 HORIZONTAL TO 1 VERTICAL (3:1) AND FOURTEEN DAYS FOR ALL OTHER DISTURBED OR GRADED AREAS ON THE PROJECT SITE.
4. THE SEDIMENT CONTROL APPROVALS ON THE PLAN EXTEND ONLY TO AREAS AND PRACTICES IDENTIFIED AS PROPOSED WORK.
5. THE APPROVAL OF THIS PLAN FOR SEDIMENT AND EROSION CONTROL DOES NOT RELIEVE THE DEVELOPER/CONSULTANT FROM COMPLYING WITH ANY FEDERAL/STATE/COUNTY REQUIREMENTS APPERTAINING TO ENVIRONMENTAL ISSUES.
6. THE DEVELOPER MUST REQUEST THAT THE DEPARTMENT OF INSPECTIONS AND PERMITS APPROVE WORK COMPLETED IN ACCORDANCE WITH THE APPROVED EROSION AND SEDIMENT CONTROL PLAN. THE GRADING OR BUILDING PERMIT AND THE ORDINANCE.
7. ON ALL SITES WITH DISTURBED AREAS IN EXCESS OF 2 ACRES, APPROVAL OF THE DEPARTMENT OF INSPECTIONS AND PERMITS SHALL BE REQUIRED ON COMPLETION OF INSTALLATION OF PERIMETER EROSION AND SEDIMENT CONTROLS, BUT BEFORE PROCEEDING WITH ANY OTHER EARTH DISTURBANCE OR GRADING. OTHER BUILDING OR GRADING INSPECTION APPROVALS MAY NOT BE AUTHORIZED UNTIL THE INITIAL APPROVAL BY THE DEPARTMENT OF INSPECTIONS AND PERMITS IS GIVEN.
8. APPROVAL SHALL BE REQUESTED ON FINAL STABILIZATION OF ALL SITES WITH DISTURBED AREAS IN EXCESS OF 2 ACRES BEFORE REMOVAL OF CONTROLS.

(signature) — SIGNATURE OF DEVELOPER / APPLICANT — DATE: 1/22/2016

PRINT NAME: Chuck Nightingale — TITLE: Dr. Facilities

ADDRESS: 10901 Little Patuxent Parkway, Columbia MD 21044

TELEPHONE: 410-772-4296

THE DEVELOPER'S PLAN TO CONTROL SILT AND EROSION IS ADEQUATE TO CONTAIN THE SILT AND EROSION PROPERTY COVERED BY THE PLAN. I CERTIFY THAT THIS PLAN OF EROSION AND SEDIMENT CONTROL REPRESENTS A PRACTICAL AND WORKABLE PLAN BASED ON MY PERSONAL KNOWLEDGE OF THIS SITE, AND WAS PREPARED IN ACCORDANCE WITH THE REQUIREMENTS OF THE HOWARD COUNTY SOIL CONSERVATION DISTRICT PLAN SUBMITTAL GUIDELINES AND THE CURRENT MARYLAND STANDARDS AND SPECIFICATIONS FOR SEDIMENT AND EROSION CONTROL. I HAVE REVIEWED THIS EROSION AND SEDIMENT CONTROL PLAN WITH THE OWNER/DEVELOPER.

SIGNATURE: Richard L. Butt (signature) — MD. LICENSE NO.: 31089 — DATE:

PRINT NAME: RICHARD L. BUTT — FIRM NAME: KCI TECHNOLOGIES INC.

ADDRESS: 936 RIDGEBROOK ROAD, SPARKS, MD 21152

TELEPHONE: (410) 316-7931

NOTE:
ALL VEGETATIVE AND STRUCTURAL PRACTICES ARE TO BE INSTALLED ACCORDING TO THE PROVISIONS OF THIS PLAN AND ARE TO BE IN CONFORMANCE WITH THE MOST CURRENT MARYLAND STANDARDS AND SPECIFICATIONS FOR SOIL EROSION AND SEDIMENT CONTROL, AND REVISIONS THERETO

This plan is approved for soil erosion and sediment control by the HOWARD SOIL CONSERVATION DISTRICT.

John R. Robertson (signature) — *Howard Soil Conservation District* — *Date* 2/9/16

ENGINEER'S CERTIFICATE

"I hereby certify that this plan has been designed in accordance with current Maryland erosion and sediment control laws, regulations, and standards, that it represents a practical and workable plan based on my personal knowledge of the site, and that it was prepared in accordance with the requirements of the Howard Soil Conservation District."

(signature) R.L. Butt — *Signature of Engineer (print name below signature)* — *Date* 1-22-16

DEVELOPER'S CERTIFICATE

"I/We hereby certify that any clearing, grading, construction, or development will be done pursuant to this approved erosion and sediment control plan, including inspecting and maintaining controls, and that the responsible personnel involved in the construction project will have a Certificate of Training at a Maryland Department of the Environment (MDE) approved training program for the control on erosion and sediment prior to beginning the project. I certify right-of-entry for periodic on-site evaluation by Howard County, the Howard Soil Conservation District and/or MDE."

(signature) C. NIGHTINGALE — *Signature of Developer (print name below signature)* — *Date* 1/22/2016

CONTRACTOR NOTE:
CONTRACTOR SHALL EXERCISE EXTREME CAUTION SO AS NOT TO DAMAGE ANY EXISTING PAVING, CURB & GUTTER, SIDEWALK OR OTHER SITE FEATURES WHICH ARE TO REMAIN. SHOULD DAMAGE OCCUR, CONTRACTOR SHALL REPAIR TO ORIGINAL CONDITION AT CONTRACTOR'S EXPENSE.

Prepared For and Owner:
Howard Community College
10901 Little Patuxent Parkway
Columbia, Maryland 21044
ATTN: Mr. Chuck Nightingale
410-772-4296

Copyright © 2014 Desman, Inc. All rights reserved. No part of these documents may be reproduced in any form or by any means without permission from Desman Inc.

DESMAN ASSOCIATES

KCI TECHNOLOGIES — ENGINEERS, PLANNERS, SCIENTISTS, CONSTRUCTION MANAGERS — 936 Ridgebrook Road, Sparks, MD 21152, Phone (410)316-7800, Fax (410)316-7853, www.kci.com

HOWARD COMMUNITY COLLEGE
EAST PARKING GARAGE NO. 2, PARCEL B & ACCESS BRIDGE, LOT A-2 TOWN CENTER 3/3
COLUMBIA, MD
PARCEL B/ PLAT NO. 19049 &
NON-CREDITED OPEN SPACE LOT A-2, TC, 3/3 PLAT NO. 23152
TAX MAP: 35, BLOCK: 6,
FIFTH ELECTION DISTRICT, ZONING: POR & NEW TOWN

PROFESSIONAL CERTIFICATION. I HEREBY CERTIFY THAT THESE DOCUMENTS WERE PREPARED OR APPROVED BY ME, AND THAT I AM A DULY LICENSED PROFESSIONAL ENGINEER UNDER THE LAWS OF THE STATE OF MARYLAND, LICENSE NO. 31089 EXPIRATION DATE: 11/21/16

STATE OF MARYLAND — RICHARD L. BUTT — No. 031089 — PROFESSIONAL ENGINEER (seal, signed 1/15/16)

ISSUE

NO.	DESCRIPTION	DATE

DRAWING TITLE: EROSION & SEDIMENT CONTROL NOTES

DRAWING NO. C8.03

SHEET: 12 OF 35

SCALE:	N.T.S.
DATE:	JANUARY 8, 2016
PROJECT NO:	27146550

DES.	DRWN.	CK'D.
R.L.B.	C.T.B.	R.L.B.

SDP 16-003
GP-16-012

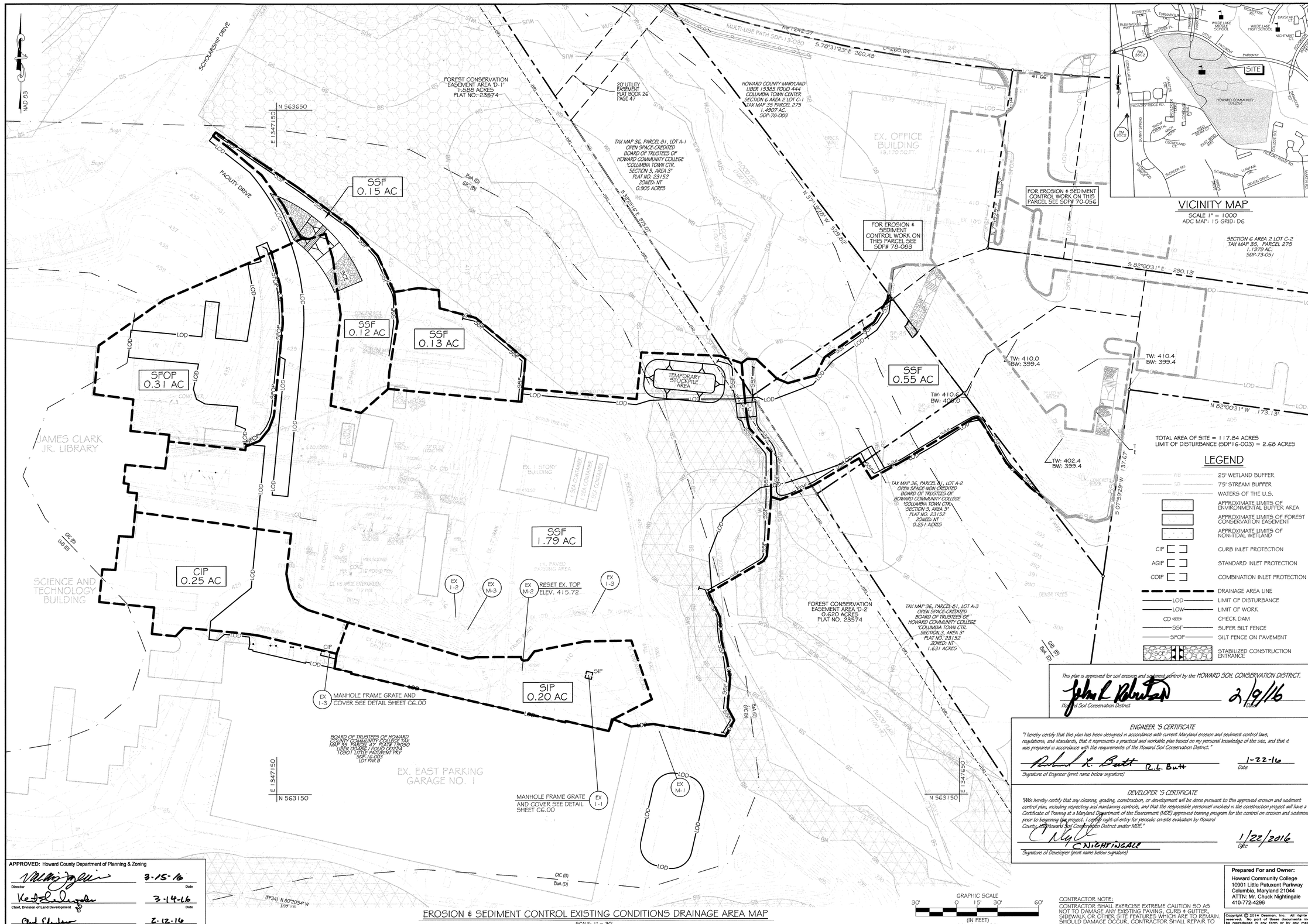

VICINITY MAP
SCALE 1" = 1000'
ADC MAP: 15 GRID: D6

APPROVED: Howard County Department of Planning & Zoning

Director	3-15-16 Date
Chief, Division of Land Development	3-14-16 Date
Chief, Development Engineering Division	2-12-16 Date

EROSION & SEDIMENT CONTROL EXISTING CONDITIONS DRAINAGE AREA MAP
SCALE: 1" = 30'

This plan is approved for soil erosion and sediment control by the HOWARD SOIL CONSERVATION DISTRICT.
Howard Soil Conservation District — 2/9/16 Date

ENGINEER 'S CERTIFICATE
"I hereby certify that this plan has been designed in accordance with current Maryland erosion and sediment control laws, regulations, and standards, that it represents a practical and workable plan based on my personal knowledge of the site, and that it was prepared in accordance with the requirements of the Howard Soil Conservation District."
R.L. Butt — Signature of Engineer (print name below signature) — 1-22-16 Date

DEVELOPER 'S CERTIFICATE
"We hereby certify that any clearing, grading, construction, or development will be done pursuant to this approved erosion and sediment control plan, including inspecting and maintaining controls, and that the responsible personnel involved in the construction project will have a Certificate of Training at a Maryland Department of the Environment (MDE) approved training program for the control on erosion and sediment prior to beginning the project. I certify right-of-entry for periodic on-site evaluation by Howard County, the Howard Soil Conservation District and/or MDE."
C NIGHTINGALE — Signature of Developer (print name below signature) — 1/22/2016 Date

Prepared For and Owner:
Howard Community College
10901 Little Patuxent Parkway
Columbia, Maryland 21044
ATTN: Mr. Chuck Nightingale
410-772-4296

CONTRACTOR NOTE:
CONTRACTOR SHALL EXERCISE EXTREME CAUTION SO AS NOT TO DAMAGE ANY EXISTING PAVING, CURB & GUTTER, SIDEWALK OR OTHER SITE FEATURES WHICH ARE TO REMAIN. SHOULD DAMAGE OCCUR, CONTRACTOR SHALL REPAIR TO ORIGINAL CONDITION AT CONTRACTOR'S EXPENSE.

Copyright © 2014 Desman, Inc. All rights reserved. No part of these documents may be reproduced in any form or by any means without permission from Desman Inc.

DESMAN ASSOCIATES

KCI TECHNOLOGIES
Engineers, Planners, Scientists, Construction Managers
936 Ridgebrook Road
Sparks, MD 21152
Phone (410)316-7800
Fax (410)316-7803
www.kci.com

HOWARD COMMUNITY COLLEGE
EAST PARKING GARAGE NO. 2, PARCEL B & ACCESS BRIDGE, LOT A-2 TOWN CENTER 3/3
COLUMBIA, MD
PARCEL B/ PLAT NO. 19049 & NON-CREDITED OPEN SPACE LOT A-2, SEC. 3/3 PLAT NO. 23152
FIFTH ELECTION DISTRICT, ZONING: POR & NEW TOWN

PROFESSIONAL CERTIFICATION. I HEREBY CERTIFY THAT THESE DOCUMENTS WERE PREPARED OR APPROVED BY ME, AND THAT I AM A DULY LICENSED PROFESSIONAL ENGINEER UNDER THE LAWS OF THE STATE OF MARYLAND, LICENSE NO. 31089. EXPIRATION DATE: 11/21/16

STATE OF MARYLAND — RICHARD L. BUTT — No. 031089 — PROFESSIONAL ENGINEER — 1/5/16

ISSUE		
NO.	DESCRIPTION	DATE

DRAWING TITLE:
EROSION & SEDIMENT CONTROL EXISTING CONDITIONS DRAINAGE AREA MAP

DRAWING NO.
C8.04
SHEET: 13 OF 35

SCALE: 1" = 30'
DATE: JANUARY 8, 2016
PROJECT NO: 27146550

DES.	DRWN.	CK'D.
R.L.B.	C.T.B.	R.L.B.

SDP 16-003
GP-16- 12

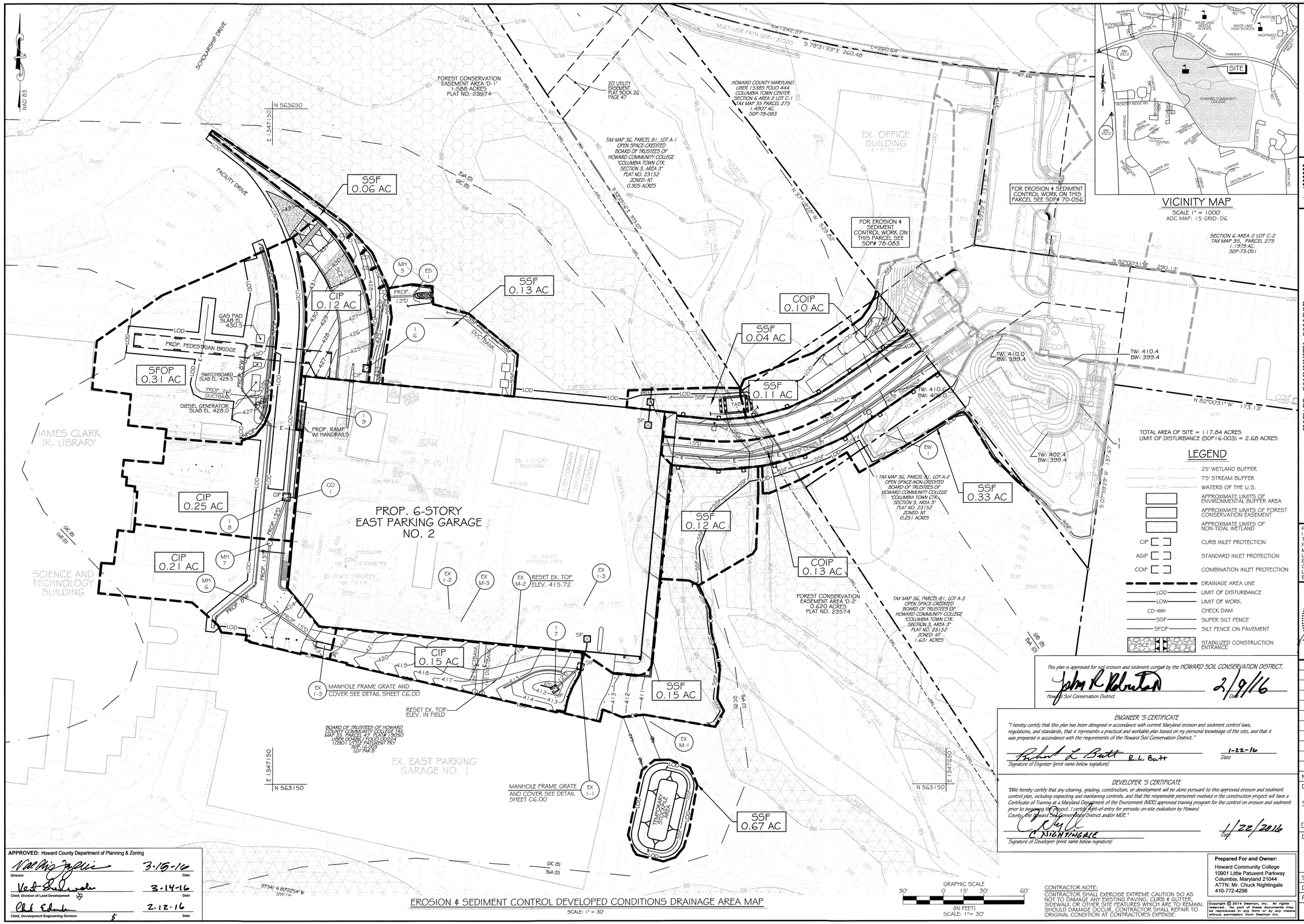

EROSION & SEDIMENT CONTROL DEVELOPED CONDITIONS DRAINAGE AREA MAP

SCALE: 1" = 30'

TOTAL AREA OF SITE = 117.84 ACRES
LIMIT OF DISTURBANCE (SDP16-003) = 2.68 ACRES

LEGEND

WL	25' WETLAND BUFFER
SB	75' STREAM BUFFER
WUS	WATERS OF THE U.S.
	APPROXIMATE LIMITS OF ENVIRONMENTAL BUFFER AREA
	APPROXIMATE LIMITS OF FOREST CONSERVATION EASEMENT
	APPROXIMATE LIMITS OF NON-TIDAL WETLAND
CIP	CURB INLET PROTECTION
AGIP	STANDARD INLET PROTECTION
COIP	COMBINATION INLET PROTECTION
	DRAINAGE AREA LINE
LOD	LIMIT OF DISTURBANCE
LOW	LIMIT OF WORK
CD	CHECK DAM
SSF	SUPER SILT FENCE
SFOP	SILT FENCE ON PAVEMENT
SCE	STABILIZED CONSTRUCTION ENTRANCE

APPROVED: Howard County Department of Planning & Zoning

Director	Date 3-15-16
Chief, Division of Land Development	Date 3-14-16
Chief, Development Engineering Division	Date 2-12-16

This plan is approved for soil erosion and sediment control by the HOWARD SOIL CONSERVATION DISTRICT.

Howard Soil Conservation District — Date 2/9/16

ENGINEER 'S CERTIFICATE

"I hereby certify that this plan has been designed in accordance with current Maryland erosion and sediment control laws, regulations, and standards, that it represents a practical and workable plan based on my personal knowledge of the site, and that it was prepared in accordance with the requirements of the Howard Soil Conservation District."

Signature of Engineer (print name below signature) — R.L. Batt — Date 1-22-16

DEVELOPER 'S CERTIFICATE

"We hereby certify that any clearing, grading, construction, or development will be done pursuant to this approved erosion and sediment control plan, including inspecting and maintaining controls, and that the responsible personnel involved in the construction project will have a Certificate of Training at a Maryland Department of the Environment (MDE) approved training program for the control on erosion and sediment prior to beginning the Project. I certify right-of-entry for periodic on-site evaluation by Howard County, the Howard Soil Conservation Distrct and/or MDE."

Signature of Developer (print name below signature) — C NIGHTINGALE — Date 1/22/2016

Prepared For and Owner:
Howard Community College
10901 Little Patuxent Parkway
Columbia, Maryland 21044
ATTN: Mr. Chuck Nightingale
410-772-4296

CONTRACTOR NOTE:
CONTRACTOR SHALL EXERCISE EXTREME CAUTION SO AS NOT TO DAMAGE ANY EXISTING PAVING, CURB & GUTTER, SIDEWALK OR OTHER SITE FEATURES WHICH ARE TO REMAIN. SHOULD DAMAGE OCCUR, CONTRACTOR SHALL REPAIR TO ORIGINAL CONDITION AT CONTRACTOR'S EXPENSE.

Copyright © 2014 Desman, Inc. All rights reserved. No part of these documents may be reproduced in any form or by any means without permission from Desman Inc.

DESMAN ASSOCIATES

KCI TECHNOLOGIES
ENGINEERS
PLANNERS
SCIENTISTS
CONSTRUCTION MANAGERS
936 Ridgebrook Road
Sparks, MD 21152
Phone: (410)316-2800
Fax: (410)316-2823
www.kci.com

HOWARD COMMUNITY COLLEGE
EAST PARKING GARAGE NO. 2, PARCEL B & ACCESS BRIDGE, LOT A-2 TOWN CENTER 3/3
COLUMBIA, MD

PARCEL B/ PLAT NO. 19049 & NON-CREDITED OPEN SPACE LOT A, BLOCK 3, 3/3 PLAT NO. 23152
FIFTH ELECTION DISTRICT, ZONING: POR & NEW TOWN

PROFESSIONAL CERTIFICATION. I HEREBY CERTIFY THAT THESE DOCUMENTS WERE PREPARED OR APPROVED BY ME, AND THAT I AM A DULY LICENSED PROFESSIONAL ENGINEER UNDER THE LAWS OF THE STATE OF MARYLAND, LICENSE NO. 31089 EXPIRATION DATE: 11/21/16

STATE OF MARYLAND — RICHARD L. BATT — No. 031089 — PROFESSIONAL ENGINEER — 1/15/16

ISSUE		
NO.	DESCRIPTION	DATE

DRAWING TITLE:
EROSION & SEDIMENT CONTROL DEVELOPED CONDITIONS DRAINAGE AREA MAP

DRAWING NO.
C8.05
SHEET: 14 OF 35

SCALE: 1" = 30'
DATE: JANUARY 8, 2016
PROJECT NO: 27146550

DES.	DRWN.	CK'D.
R.L.B.	C.T.B.	R.L.B.

SDP 16-003
GP-16-12

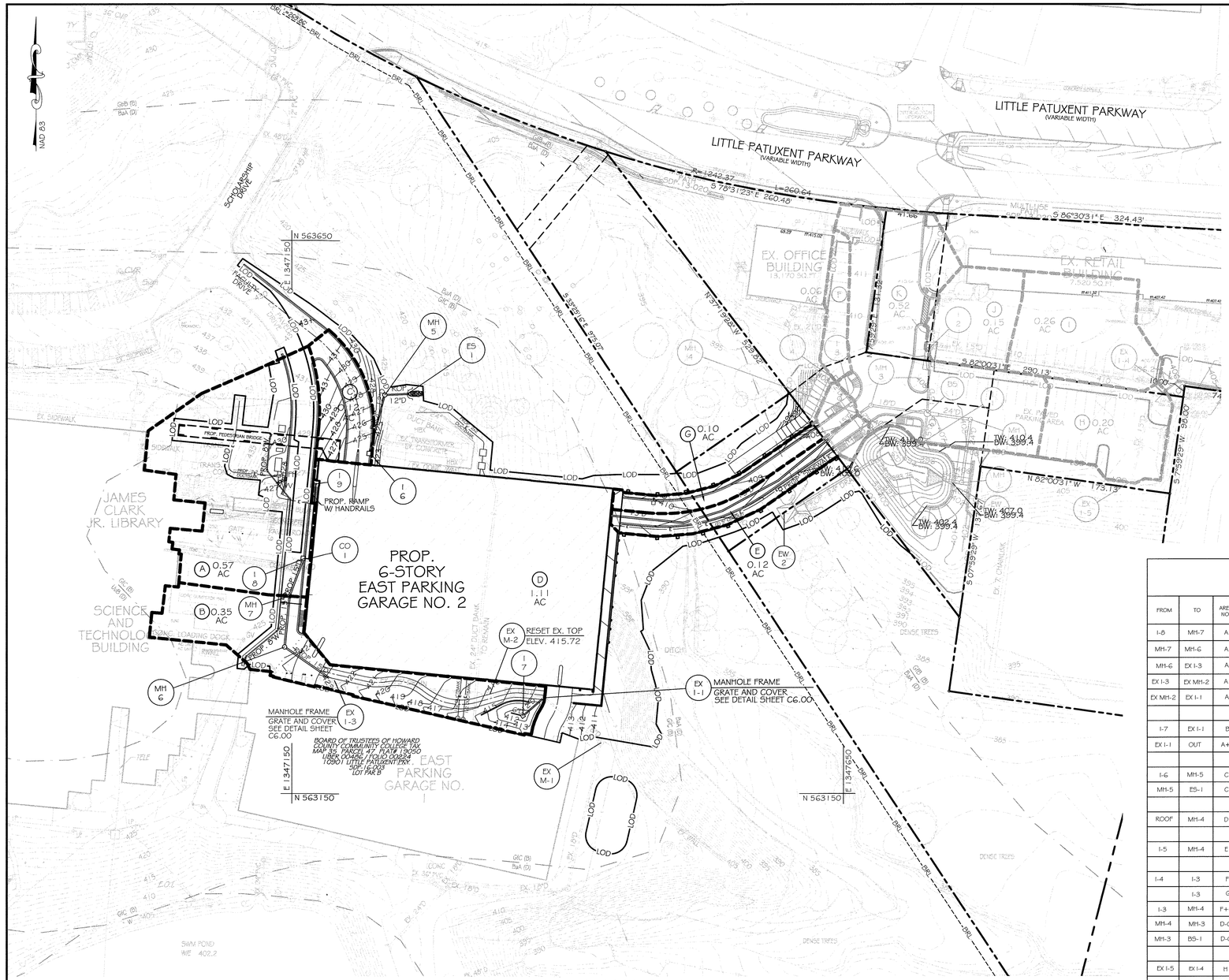

STORM DRAIN DRAINAGE AREA MAP

SCALE: 1" = 50'

BENCHMARK DATA

HORIZONTAL NAD83/91 AND VERTICAL (NGVD29) CONTROL BASED ON GPS OBSERVATIONS. HOWARD COUNTY BENCH MARK NO.'S

		NORTHING	EASTING	ELEV.
35C2	HOW CO MON	563920.830	1344204.150	464.133
35C2	HOW CO MON	562148.450	1344554.472	452.267

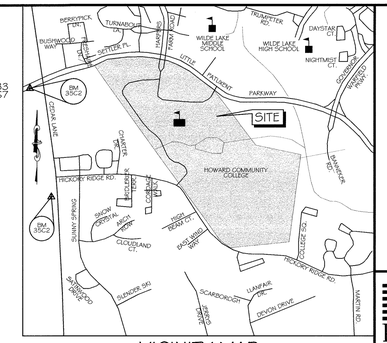

VICINITY MAP

SCALE 1" = 1000'
ADC MAP: 15 GRID: D6

LEGEND

GmB (C) / UuB (D)	SOILS LINE
	DRAINAGE AREA LINE
462	PROP. CONTOUR
PROP. 18" DRAIN	PROP. STORM DRAIN
□	PROP. INLET
○	PROP. MANHOLE
(A)	DRAINAGE AREA

SOILS TABLE

SOIL UNIT	SOIL UNIT NAME	HYDROLIC SOIL GROUP
UuB (D)	Urban land-Udorthents complex, 0 to 8 percent slopes	D
GmB (C)	Glenville Silt Loam, 3 to 8 percent slopes	C
GbB (B)	Glandstone Loam, 3 to 8 percent slopes	B
BaA (D)	Baile Silt Loam, 0 to 3 percent slopes	D

STORM DRAIN DESIGN DATA

10 YEAR STORM

FROM	TO	AREA NO.	AREA (ACRES)	TOTAL AREA (ACRES)	TOTAL COEF. C	C/A	SUM CA	TC (MIN.)	RAINFALL INTENSITY (YHR.)	Q (CFS.)	SIZE (IN.)	TYPE	N	So SLOPE (%)	L LENGTH (FT.)	Vo VOLUME (FT./SEC.)	TIME IN PIPE MIN.	REMARKS
I-8	MH-7	A	0.57		0.75	0.43 / 0.49		5.00	9.76 / 8.50	4.17	15"	RCP	0.014	0.47%	36.20'	3.35	0.2	SUMP 25 YR
MH-7	MH-6	A		0.57			0.49	5.20	8.40	4.17	15"	RCP	0.014	0.47%	46.20'	3.35	0.2	
MH-6	EX I-3	A		0.57			0.49	5.40		4.17	15"	RCP	0.014	0.47%	54.10'	3.35	0.3	
EX I-3	EX MH-2	A		0.57			0.49	5.70		4.17	EX 15"	RCP	0.014	0.47%	141.7'	3.35	0.7	
EX MH-2	EX I-1	A		0.57			0.49	6.40		4.17	EX 15"	RCP	0.014	0.47%	48.8'	3.35	0.2	
I-7	EX I-1	B	0.35		0.75	0.26 / 0.30		5.00	9.76 / 8.50	2.54	15"	RCP	0.014	0.18%	25.1	2.05	0.2	SUMP 25 YR
EX I-1	OUT	A+B		0.92			0.79	6.60	7.76	6.13	EX 15"	RCP	0.014	1.05%		4.95		
I-6	MH-5	C	0.12		0.72	0.09 / 0.10		5.00	9.76 / 8.50	0.84	12"	RCP	0.014	0.07%	54.7'	1.04	0.9	SUMP 25 YR
MH-5	ES-1	C		0.12			0.10	5.90	8.05	0.84	12"	RCP	0.014	0.07%	20.6'	1.04	0.3	
ROOF	MH-4	D	1.11		0.95	1.06		5.00	8.50	8.96	15"	PVC	0.011	1.35%	255'	7.10	0.6	
I-5	MH-4	E	0.12		0.85	0.10		5.00	8.50	0.87	12"	RCP	0.014	0.07%	10.8'	1.70	0.1	
I-4	I-3	F	0.06		0.85	0.05 / 0.06		5.00	9.76 / 8.50	0.49	12"	RCP	0.014	0.02%	38.7'	0.62	0.9	SUMP 25 YR
	I-3	G	0.10		0.85	0.09		5.00	8.50	0.72								
I-3	MH-4	F+G		0.16			0.15	5.90	8.05	1.21	12"	RCP	0.014	0.13%	10.8'	1.50	0.1	
MH-4	MH-3	D-G		1.39			1.31	5.60	8.20	10.74	18"	RCP	0.014	1.18%	13.6'	6.05	0.0	
MH-3	BS-1	D-G		1.39			1.31	5.60	8.20	10.74	18"	RCP	0.014	1.18%	51.6'	6.05	0.1	
EX I-5	EX I-4	H	0.20		0.85	0.17 / 0.20		5.00	9.76 / 8.50	1.66	EX 15"	RCP	0.014	0.08%	95.0'	1.33	1.2	SUMP 25 YR
	EX I-4	I	0.26		0.85	0.22 / 0.25		5.00	9.76 / 8.50	2.15								SUMP 25 YR
EX I-4	I-2	H+I		0.46			0.45	6.20	8.10	3.65	EX 15"	RCP	0.014	0.37%	208.0'	3.00	0.6	
	I-2	J	0.15		0.85	0.13 / 0.15		5.00	9.76 / 8.50	1.27								SUMP 25 YR
I-2	BS-1	H-J		0.61			0.60	6.80	7.68	4.61	15"	RCP	0.014	0.60%	60.6'	3.70	0.3	
I-1	BS-1	K	0.52		0.75	0.39 / 0.45		5.00	9.76 / 8.50	3.81	15"	RCP	0.014	0.40%	24.5'	3.05	0.1	SUMP 25 YR
BS-1	MH-2	D-K		2.37			2.36	5.90	8.05	19.00	24"	RCP	0.014	0.80%	39.5'	6.00	0.1	
MH-2	MH-1	D-K		2.37			2.36	6.00	8.00	19.00	24"	RCP	0.014	0.80%	57.6'	6.00	0.2	
MH-1	EW-1	D-K		2.37			2.36	6.20	7.92	19.00	24"	RCP	0.014	0.80%	16.7'	6.00	0.2	

GRAPHIC SCALE

50' 0 25' 50' 100'

(IN FEET)
SCALE: 1" = 50'

CONTRACTOR NOTE:
CONTRACTOR SHALL EXERCISE EXTREME CAUTION SO AS NOT TO DAMAGE ANY EXISTING PAVING, CURB & GUTTER, SIDEWALK OR OTHER SITE FEATURES WHICH ARE TO REMAIN. SHOULD DAMAGE OCCUR, CONTRACTOR SHALL REPAIR TO ORIGINAL CONDITION AT CONTRACTOR'S EXPENSE.

Prepared For and Owner:
Howard Community College
10901 Little Patuxent Parkway
Columbia, Maryland 21044
ATTN: Mr. Chuck Nightingale
410-772-4296

Copyright © 2014 Deaman, Inc. All rights reserved. No part of these documents may be reproduced in any form or by any means without permission from Deaman Inc.

APPROVED: Howard County Department of Planning & Zoning

Director	Date 3-15-16
Chief, Division of Land Development	Date 3-14-16
Chief, Development Engineering Division	Date 2.12.16

DESMAN ASSOCIATES

KCI TECHNOLOGIES
Engineers
Planners
Scientists
Construction Managers
10 Bloodroot Road
Sparks, MD 21152
Phone: (410) 316-7800
Fax: (410) 316-7803
www.kci.com

HOWARD COMMUNITY COLLEGE
EAST PARKING GARAGE NO. 2, PARCEL B & ACCESS BRIDGE, LOT A-2 TOWN CENTER, 3,5
COLUMBIA, MD
PARCEL B/ PLAT NO. 19049 & PARCEL A/ PLAT NO. 23152
NON-CREDITED OPEN SPACE LOT A-2, BLOCK 3, 3/3 PLAT NO. 23152
FIFTH ELECTION DISTRICT, ZONING: POR & NEW TOWN

EAST

PROFESSIONAL CERTIFICATION.
I HEREBY CERTIFY THAT THESE DOCUMENTS WERE PREPARED OR APPROVED BY ME, AND THAT I AM A DULY LICENSED PROFESSIONAL ENGINEER UNDER THE LAWS OF THE STATE OF MARYLAND, LICENSE NO. 31089
EXPIRATION DATE: 11/21/16

STATE OF MARYLAND
RICHARD L. BAUER
No. 031089
PROFESSIONAL ENGINEER
1/15/16

ISSUE

NO.	DESCRIPTION	DATE

DRAWING TITLE:
STORM DRAIN DRAINAGE AREA MAP

DRAWING NO.
C9.00
SHEET: 15 OF 35

SCALE: 1" = 50'
DATE: JANUARY 8, 2016
PROJECT NO: 27146550

DES.	DRWN.	CK'D.
R.L.B.	C.T.B.	R.L.B.

SDP 16-003

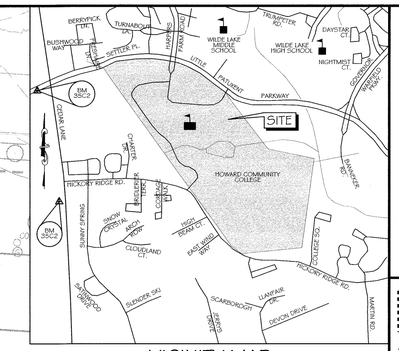

VICINITY MAP

SCALE 1" = 1000'
ADC MAP: 15 GRID: D6

L.O.D. IMPERVIOUSNESS SUMMARY

TOTAL AREA INSIDE THE L.O.D. = 153,158 S.F. (3.52 ACRES)
TOTAL IMPERVIOUS AREA INSIDE THE L.O.D. = 68,652 S.F. (1.58 ACRES)
TOTAL PERVIOUS AREA INSIDE THE L.O.D. = 84,506 S.F. (1.94 ACRES)

SOILS TABLE

SOIL UNIT	SOIL UNIT NAME	HYDROLIC SOIL GROUP	"K" VALUE
BaA	Baile Silt Loam, 0 to 3 percent slopes	D	0.37
GbB	Glandstone Loam, 3 to 8 percent slopes	B	0.28
GfB	Gladstone-Urban land complex, 0 to 8 percent slopes	A	0.28
GfC	Gladstone-Urban land complex, 8 to 15 percent slopes	A	0.28
UuB	Urban land-Udorthents complex, 0 to 8 percent slopes	D	0.28

INFORMATION WAS FOUND USING THE USDA WEB SOIL SURVEY

LEGEND

- WB — 25' WETLAND BUFFER
- SB — 75' STREAM BUFFER
- WOS — WATERS OF THE U.S.
- LOD — LIMIT OF DISTURBANCE
- LOW — LIMIT OF WORK
- BaA / GfB — SOILS LINES
- PROPERTY LINE
- 400 — EX. INDEX CONTOUR
- 458 — EX. INTERMEDIATE CONTOUR
- APPROXIMATE LIMITS OF ENVIRONMENTAL BUFFER AREA
- APPROXIMATE LIMITS OF FOREST CONSERVATION EASEMENT
- APPROXIMATE LIMITS OF NON-TIDAL WETLAND
- APPROXIMATE LIMITS OF IMPERVIOUS AREA
- APPROXIMATE LIMITS OF AREA WHERE SLOPE GRADE ≥25%
- APPROXIMATE LIMITS OF AREA WHERE SLOPE GRADE ≥15% AND <25%

Professional Certification. I hereby certify that these documents were prepared or approved by me, and that I am a duly licensed professional engineer under the laws of the State of Maryland.

License No. 33772, Expiration Date: 6/30/2016

4/4/16

AS-BUILT CERTIFICATION

THERE IS NO "AS-BUILT" INFORMATION PROVIDED ON THIS SHEET.

33772 4/4/16
NAME PE # DATE

GRAPHIC SCALE
30' 0 15' 30' 60'
(IN FEET)
SCALE: 1" = 30'

EXISTING CONDITIONS IMPERVIOUS AREA MAP

SCALE: 1" = 30'

APPROVED: Howard County Department of Planning & Zoning

Director	3-15-16 Date
Chief, Division of Land Development	3-14-16 Date
Chief, Development Engineering Division	2-12-16 Date

Prepared For and Owner:
Howard Community College
10901 Little Patuxent Parkway
Columbia, Maryland 21044
ATTN: Mr. Chuck Nightingale
410-772-4296

Copyright © 2014 Desman, Inc. All rights reserved. No part of these documents may be reproduced in any form or by any means without permission from Desman Inc.

DESMAN ASSOCIATES

KCI TECHNOLOGIES
Engineers
Planners
Scientists
Construction Managers
936 Ridgebrook Road
Sparks, MD 21152
Phone (410)316-7800
Fax (410)316-7803
www.kci.com

HOWARD COMMUNITY COLLEGE
EAST PARKING GARAGE NO. 2, PARCEL B &
ACCESS BRIDGE, LOT A-2 TOWN CENTER 3/13
COLUMBIA, MD
PARCEL B, PLAT NO. 19049 & NON-CREDITED OPEN SPACE LOT A-2, PLAT NO. 23152
TAX MAP: 35, BLOCK: 6, ZONING: POR & NEW TOWN
FIFTH ELECTION DISTRICT

PROFESSIONAL CERTIFICATION. I HEREBY CERTIFY THAT THESE DOCUMENTS WERE PREPARED OR APPROVED BY ME, AND THAT I AM A DULY LICENSED PROFESSIONAL ENGINEER UNDER THE LAWS OF THE STATE OF MARYLAND, LICENSE NO. 31089 EXPIRATION DATE: 11/21/16

STATE OF MARYLAND RICHARD L. BLAIR No. 031089 PROFESSIONAL ENGINEER 1/5/16

ISSUE		
NO.	DESCRIPTION	DATE

DRAWING TITLE:
EXISTING CONDITIONS IMPERVIOUS AREA MAP

DRAWING NO.
C10.00
SHEET: 16 OF 35

SCALE: 1" = 30'
DATE: JANUARY 8, 2016
PROJECT NO: 27146550

DES.	DRWN.	CK'D.
R.L.B.	C.T.B.	R.L.B.

SDP 16-003

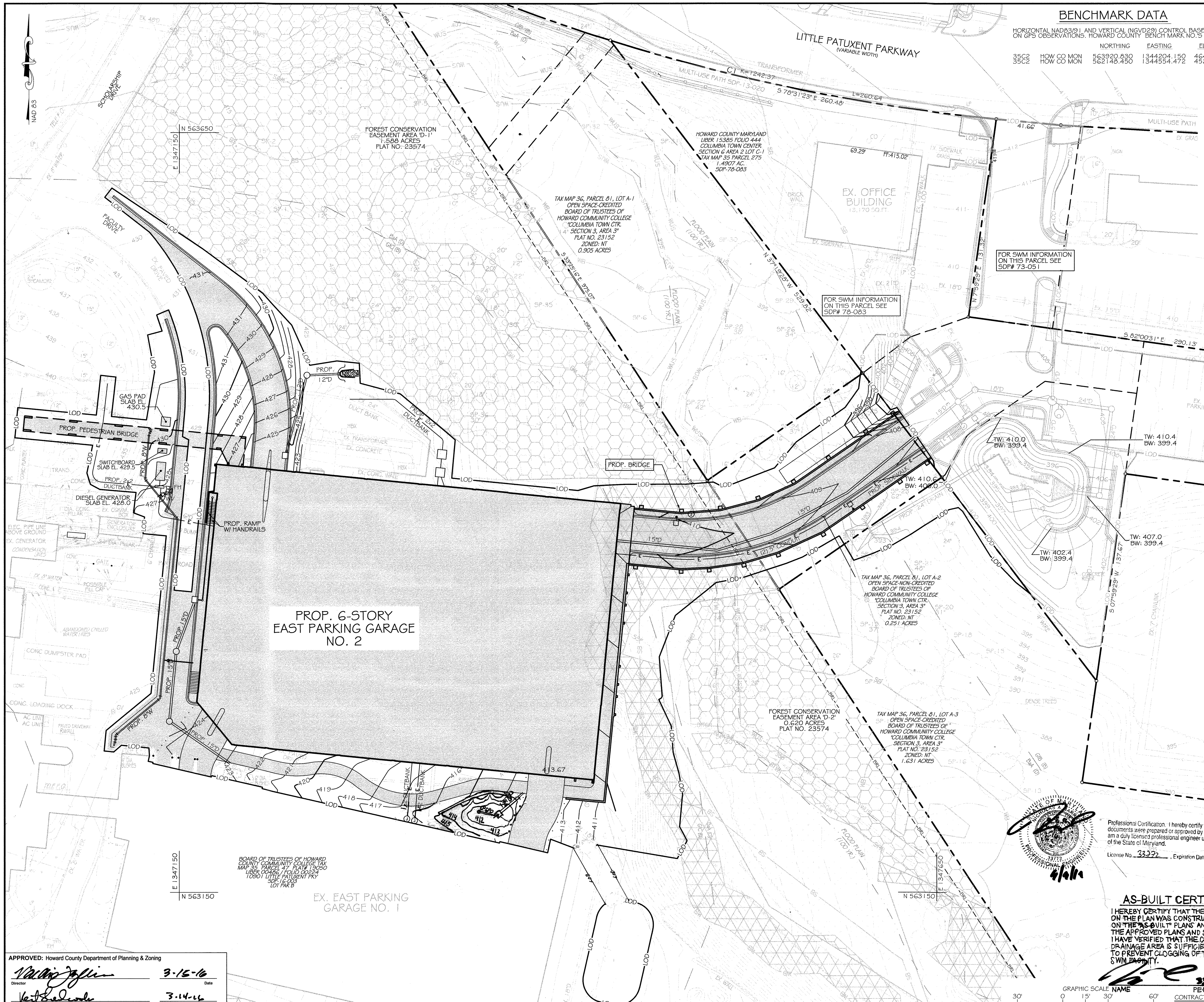

BENCHMARK DATA

HORIZONTAL NAD83/91 AND VERTICAL (NGVD29) CONTROL BASED ON GPS OBSERVATIONS. HOWARD COUNTY BENCH MARK NO.'S

		NORTHING	EASTING	ELEV.
35C2	HOW CO MON	563920.830	1344204.150	464.133
35C2	HOW CO MON	562148.450	1344554.472	452.267

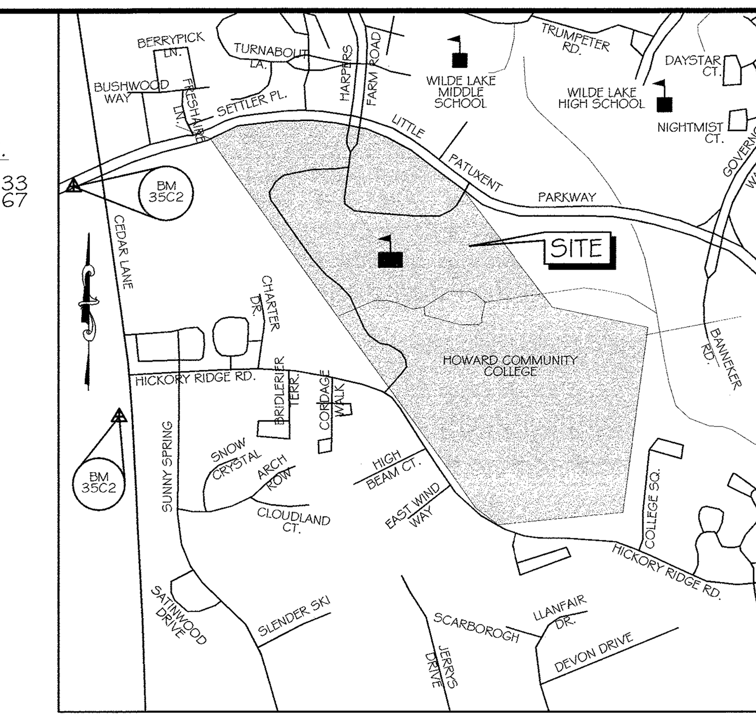

VICINITY MAP

SCALE 1" = 1000'
ADC MAP: 15 GRID: D6

L.O.D. IMPERVIOUSNESS SUMMARY

TOTAL AREA INSIDE THE L.O.D. (SDP 16-003) = 112,920 S.F. (2.59 ACRES)
TOTAL IMPERVIOUS AREA INSIDE THE L.O.D. (SDP 16-003) = 69,667 S.F. (1.60 ACRES)
TOTAL PERVIOUS AREA INSIDE THE L.O.D. (SDP 16-003) = 43,253 S.F. (0.99 ACRES)

LEGEND

Symbol	Description
	PROPERTY LINE
	DRAINAGE AREA LINE
LOD	LIMIT OF DISTURBANCE
LOW	LIMIT OF WORK
450	PROP. CONTOUR
12" DRAIN	PROP. STORM DRAIN
8" WATER	PROP. WATER
	PROP. CURB & GUTTER
FH	PROP. FIRE HYDRANT
WV	PROP. WATER VALVE
	PROP. MANHOLE
	PROP. INLET
	APPROXIMATE LIMITS OF ENVIRONMENTAL BUFFER AREA
	APPROXIMATE LIMITS OF FOREST CONSERVATION EASEMENT
	APPROXIMATE LIMITS OF NON-TIDAL WETLAND
	APPROXIMATE LIMITS OF IMPERVIOUS AREA

Professional Certification. I hereby certify that these documents were prepared or approved by me, and that I am a duly licensed professional engineer under the laws of the State of Maryland.

License No. 33772, Expiration Date: 6/16/21

AS-BUILT CERTIFICATION

I HEREBY CERTIFY THAT THE FACILITY SHOWN ON THE PLAN WAS CONSTRUCTED AS SHOWN ON THE "AS-BUILT" PLANS AND COMPLIES WITH THE APPROVED PLANS AND SPECIFICATIONS. I HAVE VERIFIED THAT THE CONTRIBUTING DRAINAGE AREA IS SUFFICIENTLY STABILIZED TO PREVENT CLOGGING OF THE UNDERGROUND SWM FACILITY.

NAME | PE# 33772 | DATE 9/9/19

GRAPHIC SCALE
30' 0 15' 30' 60'
(IN FEET)
SCALE: 1"= 30'

CONTRACTOR NOTE:
CONTRACTOR SHALL EXERCISE EXTREME CAUTION SO AS NOT TO DAMAGE ANY EXISTING PAVING, CURB & GUTTER, SIDEWALK OR OTHER SITE FEATURES WHICH ARE TO REMAIN. SHOULD DAMAGE OCCUR, CONTRACTOR SHALL REPAIR TO ORIGINAL CONDITION AT CONTRACTOR'S EXPENSE.

Prepared For and Owner:
Howard Community College
10901 Little Patuxent Parkway
Columbia, Maryland 21044
ATTN: Mr. Chuck Nightingale
410-772-4296

Copyright © 2014 Desman, Inc. All rights reserved. No part of these documents may be reproduced in any form or by any means without permission from Desman Inc.

APPROVED: Howard County Department of Planning & Zoning

	Date
Director	3-15-16
Chief, Division of Land Development	3-14-16
Chief, Development Engineering Division	2-12-16

DEVELOPED CONDITIONS IMPERVIOUS AREA MAP

SCALE: 1" = 30'

DESMAN ASSOCIATES

KCI TECHNOLOGIES
Engineers
Planners
Scientists
Construction Managers
936 Ridgebrook Road
Sparks, MD 21152
Phone (410)316-7800
Fax (410)316-7853
www.kci.com

HOWARD COMMUNITY COLLEGE
EAST PARKING GARAGE NO. 2, PARCEL B &
ACCESS BRIDGE, LOT A-2 TOWN CENTER 3/3
COLUMBIA, MD
PARCEL B/ PLAT NO. 19049 &
NON-CREDITED OPEN SPACE LOT A-2, TC, 3/3 PLAT NO. 23152
TAX MAP: 35, BLOCK: 6,
FIFTH ELECTION DISTRICT, ZONING: POR & NEW TOWN

PROFESSIONAL CERTIFICATION. I HEREBY CERTIFY THAT THESE DOCUMENTS WERE PREPARED OR APPROVED BY ME, AND THAT I AM A DULY LICENSED PROFESSIONAL ENGINEER UNDER THE LAWS OF THE STATE OF MARYLAND, LICENSE NO. 31089 EXPIRATION DATE: 11/21/16

STATE OF MARYLAND
RICHARD L. BUTT
No. 031089
PROFESSIONAL ENGINEER

ISSUE

NO.	DESCRIPTION	DATE

DRAWING TITLE:
DEVELOPED CONDITIONS IMPERVIOUS AREA MAP

DRAWING NO.
C10.01
SHEET: 17 OF 35

SCALE:	1" = 30'
DATE:	JANUARY 8, 2016
PROJECT NO:	27146550

DES.	DRWN.	CK'D.
R.L.B.	C.T.B.	R.L.B.

SDP 16-003

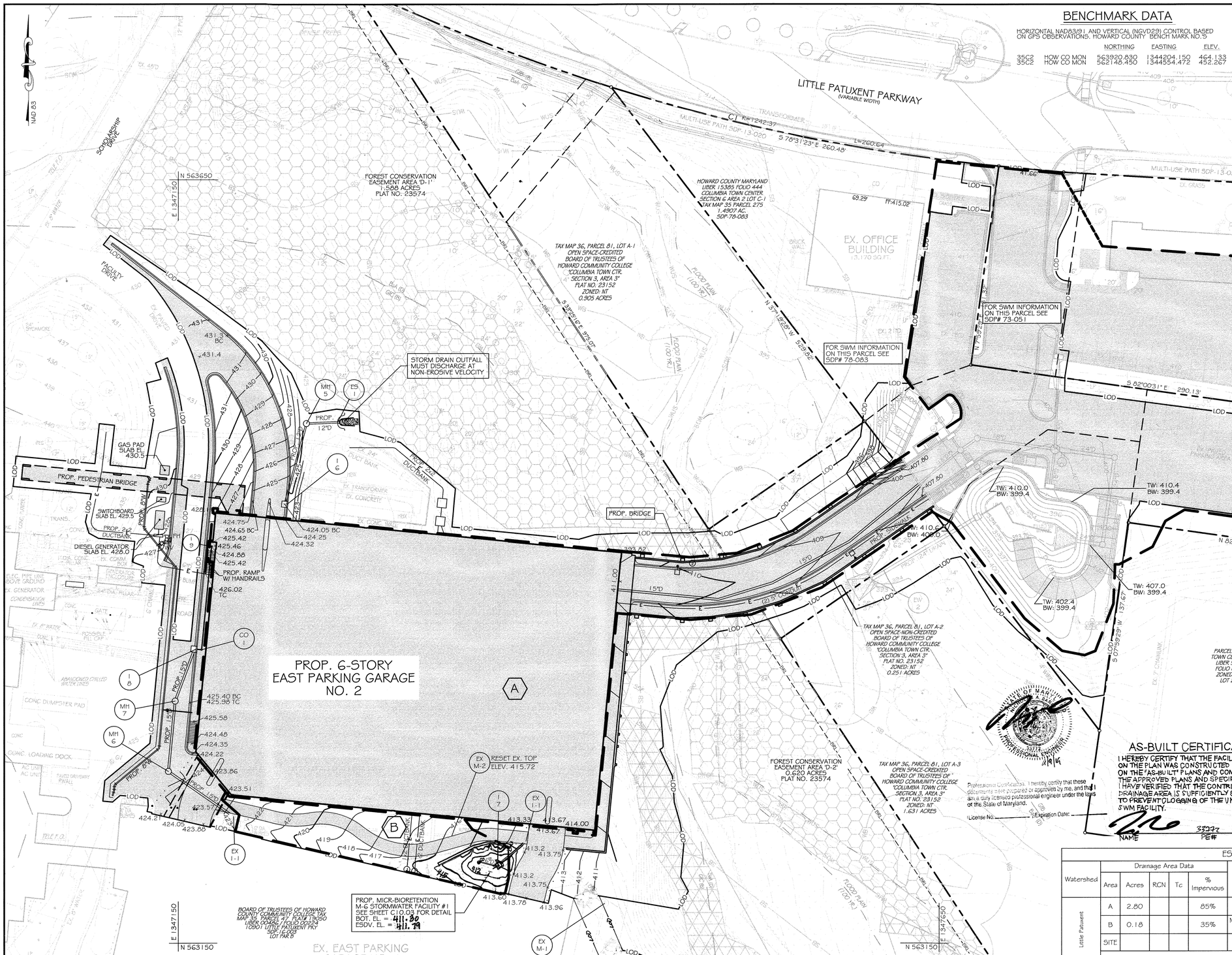

ENVIRONMENTAL SITE DESIGN PLAN

SCALE: 1" = 30'

BENCHMARK DATA

HORIZONTAL NAD83/91 AND VERTICAL (NGVD29) CONTROL BASED ON GPS OBSERVATIONS. HOWARD COUNTY BENCH MARK NO.'S

		NORTHING	EASTING	ELEV.
35C2	HOW CO MON	563920.830	1344204.150	464.133
35C2	HOW CO MON	562148.450	1344554.472	452.267

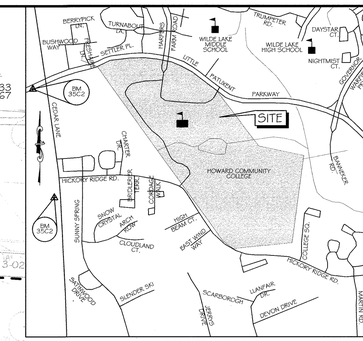

VICINITY MAP

SCALE 1" = 1000'
ADC MAP: 15 GRID: D6

LEGEND

	PROPERTY LINE
	DRAINAGE AREA LINE
LOD	LIMIT OF DISTURBANCE
LOW	LIMIT OF WORK
450	PROP. CONTOUR
12" DRAIN	PROP. STORM DRAIN
8" WATER	PROP. WATER
	PROP. CURB & GUTTER
FH	PROP. FIRE HYDRANT
WV	PROP. WATER VALVE
	PROP. MANHOLE
	PROP. INLET
	APPROXIMATE LIMITS OF ENVIRONMENTAL BUFFER AREA
	APPROXIMATE LIMITS OF FOREST CONSERVATION EASEMENT
	APPROXIMATE LIMITS OF NON-TIDAL WETLAND
	APPROXIMATE LIMITS OF IMPERVIOUS AREA

AS-BUILT CERTIFICATION

I HEREBY CERTIFY THAT THE FACILITY SHOWN ON THE PLAN WAS CONSTRUCTED AS SHOWN ON THE "AS-BUILT" PLANS AND COMPLIES WITH THE APPROVED PLANS AND SPECIFICATIONS. I HAVE VERIFIED THAT THE CONTRIBUTING DRAINAGE AREA IS SUFFICIENTLY STABILIZED TO PREVENT CLOGGING OF THE UNDERGROUND SWM FACILITY.

NAME | 33777 PE# | 9/6/16 DATE

Professional Certification. I hereby certify that these documents were prepared or approved by me, and that I am a duly licensed professional engineer under the laws of the State of Maryland.

License No: Expiration Date:

ESDv Summary Table

Watershed	Drainage Area Data: Area	Acres	RCN	Tc	% Impervious	Facility	Target: Pe	ESDv (C.F.)	Provided: Pe	ESDv (C.F.)	Treated ESDv (C.F.)	Required ESDv (C.F.)
Little Patuxent	A	2.80			85%	SURFACE SAND FILTER (F-1)			0.99	8,367	11,156	
	B	0.18			35%	MICRO-BIORETENTION (M-6)			0.63	127	169	
	SITE											10,877
						Total ESDv =				8,494	11,325	10,877

APPROVED: Howard County Department of Planning & Zoning

Director	3-15-16 Date
Chief, Division of Land Development	3-14-16 Date
Chief, Development Engineering Division	2-12-16 Date

Prepared For and Owner:
Howard Community College
10901 Little Patuxent Parkway
Columbia, Maryland 21044
ATTN: Mr. Chuck Nightingale
410-772-4296

CONTRACTOR NOTE:
CONTRACTOR SHALL EXERCISE EXTREME CAUTION SO AS NOT TO DAMAGE ANY EXISTING PAVING, CURB & GUTTER, SIDEWALK OR OTHER SITE FEATURES WHICH ARE TO REMAIN. SHOULD DAMAGE OCCUR, CONTRACTOR SHALL REPAIR TO ORIGINAL CONDITION AT CONTRACTOR'S EXPENSE.

Copyright © 2014 Desman, Inc. All rights reserved. No part of these documents may be reproduced in any form or by any means without permission from Desman Inc.

DESMAN ASSOCIATES

KCI TECHNOLOGIES
Engineers, Planners, Scientists, Construction Managers
950 Rolesbroook Road
Sparks, MD 21152
Phone (410)316-2800
Fax (410)316-2823
www.kci.com

HOWARD COMMUNITY COLLEGE
EAST PARKING GARAGE NO. 2, PARCEL B & ACCESS BRIDGE, LOT A-2 TOWN CENTER, 3/3
COLUMBIA, MD

PARCEL B/ PLAT NO. 19049 &
NON-CREDITED OPEN SPACE LOT A-2, TC, 3/3 PLAT NO. 23152
TAX MAP 36, GRID 6, PARCEL 81, BLOCK 15
FIFTH ELECTION DISTRICT, ZONING: POR & NEW TOWN

PROFESSIONAL CERTIFICATION. I HEREBY CERTIFY THAT THESE DOCUMENTS WERE PREPARED OR APPROVED BY ME, AND THAT I AM A DULY LICENSED PROFESSIONAL ENGINEER UNDER THE LAWS OF THE STATE OF MARYLAND, LICENSE NO. 31089 EXPIRATION DATE: 11/21/16

STATE OF MARYLAND RICHARD L. BUTLER III No. 031089 PROFESSIONAL ENGINEER 1/15/16

ISSUE		

NO.	DESCRIPTION	DATE

DRAWING TITLE:
ENVIRONMENTAL SITE DESIGN PLAN

DRAWING NO.
C10.02
SHEET: 18 OF 35

SCALE: 1" = 30'
DATE: JANUARY 8, 2016
PROJECT NO: 27146550

DES.	DRWN.	CK'D.
R.L.B.	C.T.B.	R.L.B.

SDP 16-003

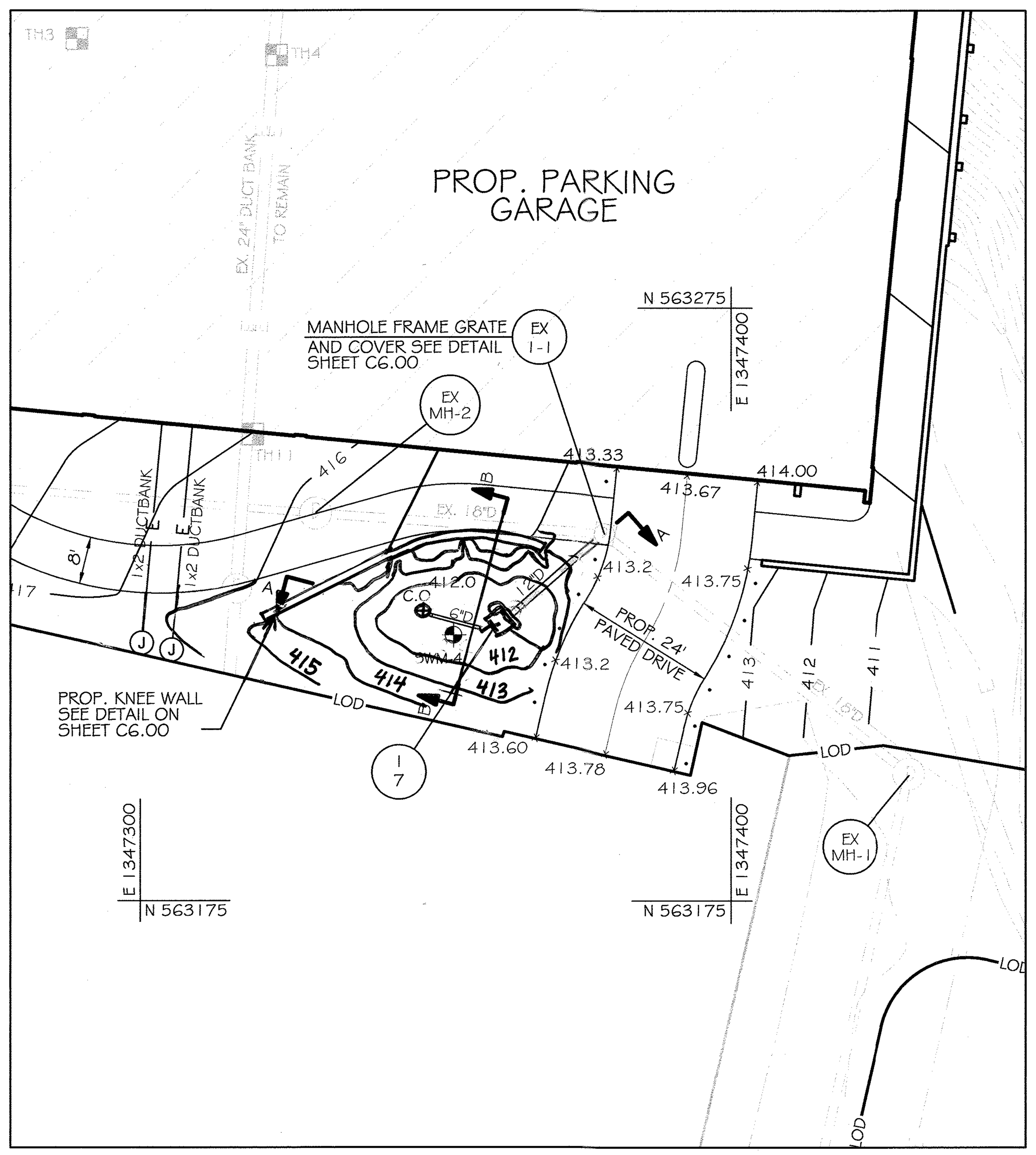

MICRO-BIORETENTION(M-6) - FACILITY #1 PLAN

SCALE: 1' = 20'

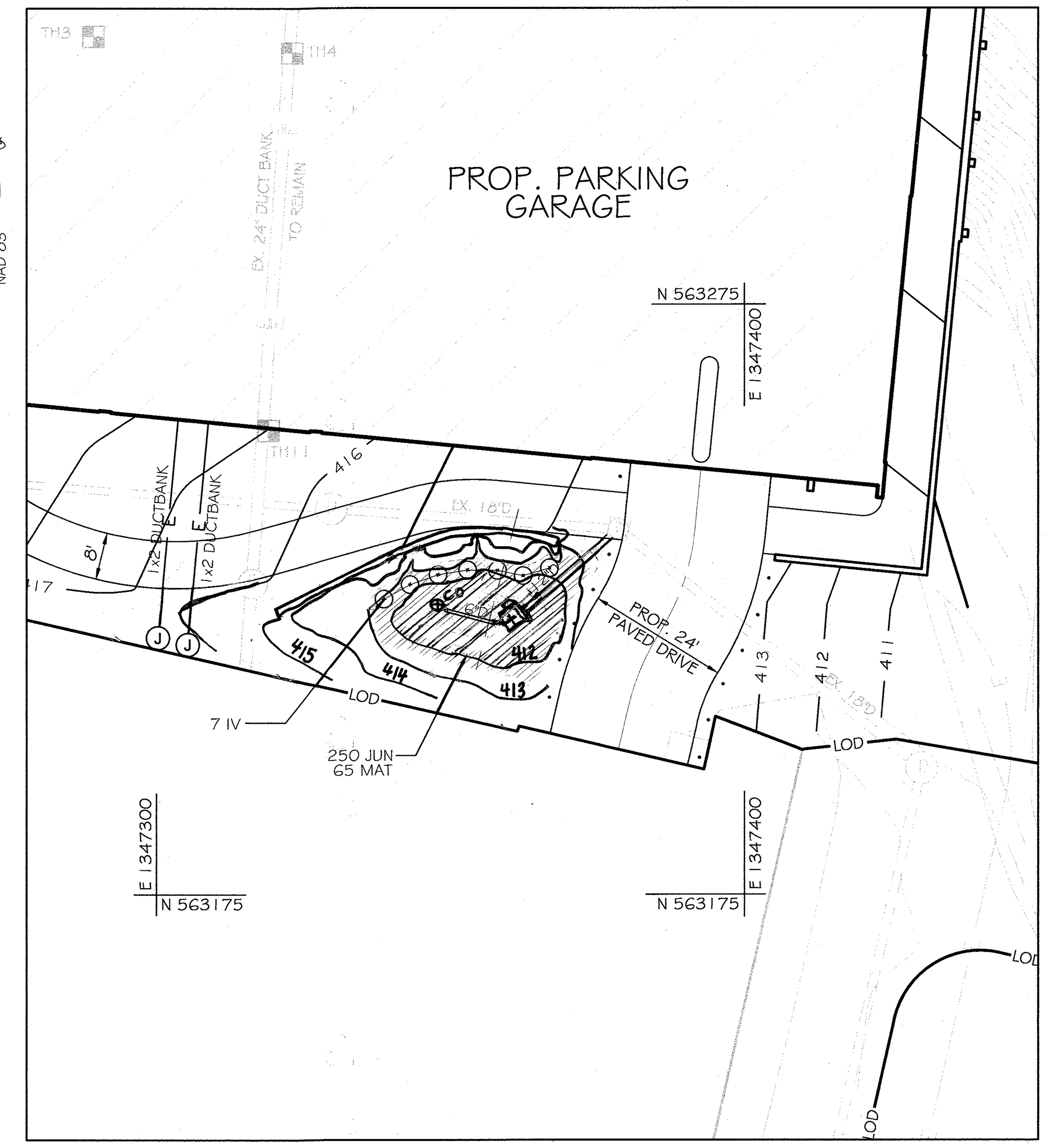

LANDSCAPE PLAN - FACILITY #1

SCALE: 1' = 20'

PLANT SCHEDULE					
KEY	QTY	BOTANICAL NAME / COMMON NAME	SIZE	ROOT	COMMENTS
IV	8	Itea virginica 'Henry's Garnet' / Henry's Garnet Sweetspire	#5	Cont.	30" Ht., Full, Spaced as shown
JUN	250	Juncus effusus / Soft Rush	#SP-4	Cont.	15" O.C.
MAT	65	Matteuccia struthiopteris / Ostrich Fern	#SP-4	Cont.	18" O.C.

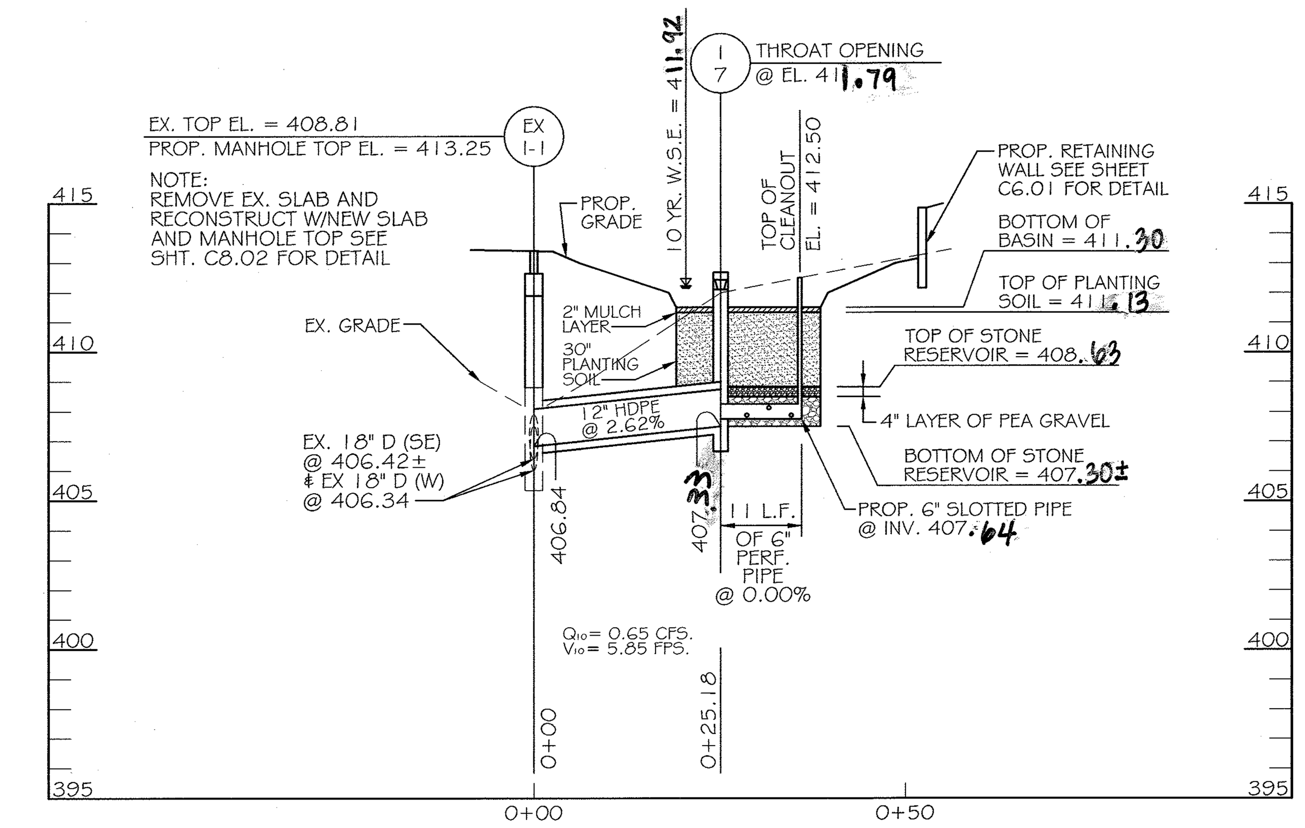

MICRO-BIORETENTION FACILITY #1
SECTION A-A

SCALE: 1" = 20' HORIZONTAL
1" = 5' VERTICAL

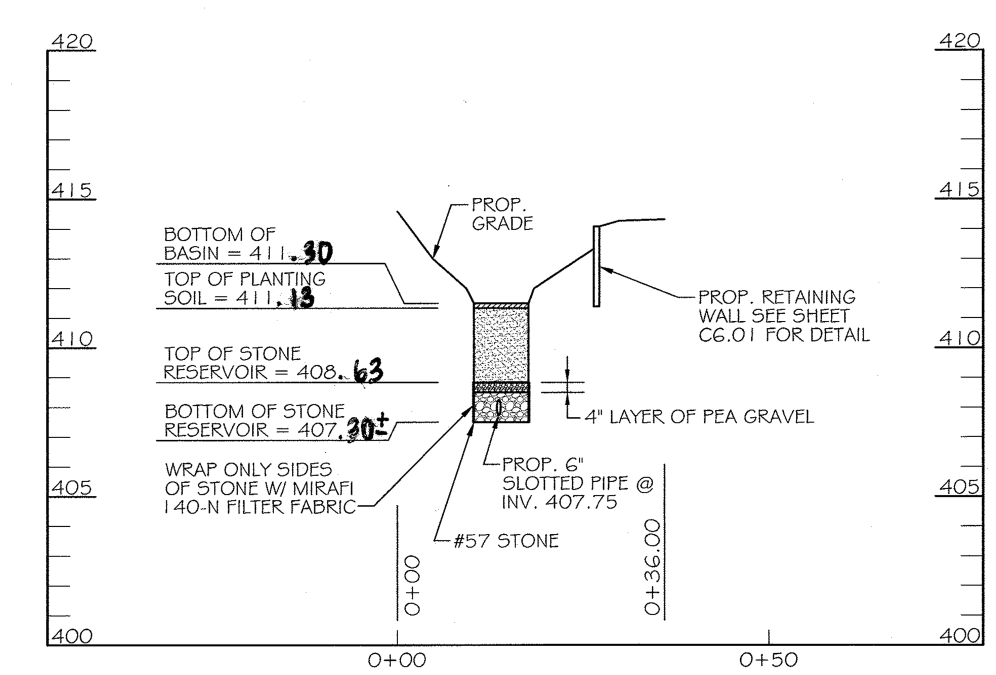

MICRO-BIORETENTION FACILITY #1
SECTION B-B

SCALE: 1" = 20' HORIZONTAL
1" = 5' VERTICAL

LEGEND

400	EX. CONTOURS
18" DRAIN	EX. STORM DRAIN
D	EX. STORM DRAIN MANHOLE
E	EX. ELECTRIC
415	PROP. MAJOR CONTOUR
414	PROP. MINOR CONTOUR
12" DRAIN	PROP. STORM DRAIN
□	PROP. INLET
○	PROP. MANHOLE
○ C.O.	PROP. CLEANOUT
	LIMIT OF PLANTING SOIL
SWM-4	SOIL BORING

DESIGN SUMMARY

1. FACILITY NUMBER: 1
2. FACILITY TYPE: MICRO-BIORETENTION (M-6)
3. DRAINAGE AREA = 0.18 AC.
4. BOTTOM ELEVATION = 411.30
5. TOP OF DAM ELEVATION = 413.00
6. STORAGE VOLUME PROVIDED = 127 C.F.
7. WATER SURFACE ELEV.: 1 YEAR = 411.84; 10 YEAR = 411.92
8. DISCHARGE: 1 YEAR = 0.15 CFS.; 10 YEAR = 0.65 CFS.
9. RISER TYPE: SEE DETAIL SHEET C10.05
10. BARREL TYPE: 12" HDPE
11. MAINTENANCE RESPONSIBILITY: THIS IS A PRIVATE FACILITY TO BE OWNED & MAINTAINED BY THE OWNER
12. THIS FACILITY IS EXEMPT FROM MD378 GUIDELINES IN THAT THE IMPOUNDED DESIGN HIGH WATER DEPTH IS LESS THAN 3 FEET AT THE EMBANKMENT.

APPROVED: Howard County Department of Planning & Zoning

	Date
Director	3-15-16
Chief, Division of Land Development	3-14-16
Chief, Development Engineering Division	2-12-16

OPERATION AND MAINTENANCE SCHEDULE FOR MICRO-BIORETENTION AREAS (M-6)

1. THE OWNER SHALL MAINTAIN THE PLANT MATERIAL, MULCH LAYER AND SOIL LAYER ANNUALLY. MAINTENANCE OF MULCH AND SOIL IS LIMITED TO CORRECTING AREAS OF EROSION OR WASH OUT. ANY MULCH REPLACEMENT SHALL BE DONE IN THE SPRING. PLANT MATERIAL SHALL BE CHECKED FOR DISEASE AND INSECT INFESTATION AND MAINTENANCE WILL ADDRESS DEAD MATERIAL AND PRUNING. ACCEPTABLE REPLACEMENT PLANT MATERIAL IS LIMITED TO THE FOLLOWING: 2000 MARYLAND STORMWATER DESIGN MANUAL VOLUME II, TABLE A.4.1 AND 2.
2. THE OWNER SHALL PERFORM A PLANT IN THE SPRING AND IN THE FALL OF EACH YEAR. DURING THE INSPECTION, THE OWNER SHALL REMOVE DEAD AND DISEASED VEGETATION CONSIDERED BEYOND TREATMENT, REPLACE DEAD PLANT MATERIAL WITH ACCEPTABLE REPLACEMENT PLANT MATERIAL, TREAT DISEASED TREES AND SHRUBS, AND REPLACE ALL DEFICIENT STAKES AND WIRES.
3. THE OWNER SHALL INSPECT THE MULCH EACH SPRING. THE MULCH SHALL BE REPLACED EVERY TWO TO THREE YEARS. THE PREVIOUS MULCH LAYER SHALL BE REMOVED BEFORE THE NEW LAYER IS APPLIED.
4. THE OWNER SHALL CORRECT SOIL EROSION ON AN AS NEEDED BASIS, WITH A MINIMUM OF ONCE PER MONTH AND AFTER EACH HEAVY STORM.

INSPECTION SCHEDULE

1. THE DEVELOPER SHALL NOTIFY THE COUNTRY AT LEAST 48 HOURS BEFORE COMMENCING ANY WORK IN CONJUNCTION WITH THE STORMWATER MANAGEMENT PLAN AND UPON COMPLETION OF A PROJECT WHEN A FINAL INSPECTION WILL BE CONDUCTED.

2. AT A MINIMUM, REGULAR INSPECTIONS SHALL BE MADE AND DOCUMENTED AT THE FOLLOWING SPECIFIED STAGES OF CONSTRUCTION.

(A) DURING EXCAVATION TO SUBGRADE;

(B) DURING PLACEMENT AND BACKFILL OF UNDERDRAIN SYSTEM:

(C) DURING PLACEMENT OF GEOTEXTILES AND ALL FILTER MEDIA:

(D) DURING CONSTRUCTION OF APPURTENANT CONVEYANCE SYSTEMS SUCH AS DIVERSION STRUCTURES, PRE-FILTERS, FILTERS, OUTLETS AND FLOW DISTRIBUTION STRUCTURES; AND

(E) UPON COMPLETION OF FINAL GRADING AND ESTABLISHMENT OF PERMANENT STABILIZATION.

3. INSPECTIONS SHALL BE CONDUCTED BY THE DEPARTMENT OF PUBLIC WORKS OR ITS AUTHORIZED REPRESENTATIVE. WRITTEN INSPECTION REPORTS SHALL BE MADE OF THE PERIODIC INSPECTIONS NECESSARY DURING CONSTRUCTION OF STORMWATER MANAGEMENT SYSTEMS TO ENSURE COMPLIANCE WITH THE APPROVED PLANS.

4. WRITTEN INSPECTION REPORTS SHALL INCLUDE:

(A) DATE AND LOCATION OF THE INSPECTION;

(B) WHETHER CONSTRUCTION WAS IN COMPLIANCE WITH THE APPROVED STORMWATER MANAGEMENT PLAN;

(C) ANY VARIATIONS FROM THE APPROVED CONSTRUCTION SPECIFICATIONS; AND

(D) ANY VIOLATIONS THAT EXIST.

5. ONCE CONSTRUCTION IS COMPLETE, AN AS-BUILT PLAN CERTIFICATION SHALL BE SUBMITTED BY THE APPROPRIATE DESIGN PROFESSIONAL LICENSED IN THE STATE OF MARYLAND TO ENSURE THE CONSTRUCTED STORMWATER MANAGEMENT PRACTICE AND CONVEYANCE SYSTEMS COMPLY WITH THE SPECIFICATIONS CONTAINED IN THE APPROVED PLANS. AT A MINIMUM, AS-BUILT CERTIFICATION SHALL INCLUDE A SET OF DRAWINGS COMPARING THE APPROVED STORMWATER MANAGEMENT PLAN WITH WHAT WAS CONSTRUCTED.

STATE OF MARYLAND — NICHOLAS ... — 33772 — PROFESSIONAL ENGINEER — 9/9/19

Professional Certification. I hereby certify that these documents were prepared or approved by me, and that I am a duly licensed professional engineer under the laws of the State of Maryland.

License No. 33772, Expiration Date: 6/16/21

AS-BUILT CERTIFICATION

I HEREBY CERTIFY THAT THE FACILITY SHOWN ON THE PLAN WAS CONSTRUCTED AS SHOWN ON THE "AS-BUILT" PLANS AND COMPLIES WITH THE APPROVED PLANS AND SPECIFICATIONS. I HAVE VERIFIED THAT THE CONTRIBUTING DRAINAGE AREA IS SUFFICIENTLY STABILIZED TO PREVENT CLOGGING OF THE UNDERGROUND SWM FACILITY.

NAME	PE#	DATE
	33772	9/9/19

FROEHLING & ROBERTSON, INC.

BORING LOG
Boring: SWM-4 (1 of 1)

Project No: 68S-0077 | **Elevation:** 412.5 ± | **Drilling Method:** 3.25" ID HSA
Client: Desman Associates | **Total Depth:** 15.0' | **Hammer Type:** Automatic
Project: HCC East Garage Expansion | **Date Drilled:** 4/29/15
City/State: Columbia, Maryland | **Boring Location:** See Location Plan | **Driller:** Rice

Elevation	Depth	Description of Materials (Classification)	* Sample Blows	Sample Depth (feet)	N-Value (blows/ft)	Remarks
412.3	0.3	3" of Surficial soil containing organics and clayey silt	2-4-4	0.0 / 1.5	8	**GROUNDWATER DATA** Dry upon completion
		Residuum Brown, Moist, Loose, Silty Sand with clay (SM-ML)	2-2-1	3.5 / 5.0	3	
			2-2-2	6.0 / 7.5	4	
			3-2-4	8.5 / 10.0	6	Water at 8.5 feet 24 hours after completion. Cave in at 11.5 feet
397.5	15.0	Boring Terminated at 15 feet	2-2-3	13.5 / 15.0	5	

*Number of blows required for a 140 lb hammer dropping 30" to drive 2" O.D., 1.375" I.D. sampler a total of 18 inches in three 6" increments. The sum of the second and third increments of penetration is termed the standard penetration resistance, N-Value.

BORING_LOG (LONG NAME) 68S-0077A.GPJ F&R.GDT 5/4/15

GRAPHIC SCALE: 20' 0 10' 20' 40' (IN FEET) SCALE: 1"= 20'

CONTRACTOR NOTE:
CONTRACTOR SHALL EXERCISE EXTREME CAUTION SO AS NOT TO DAMAGE ANY EXISTING PAVING, CURB & GUTTER, SIDEWALK OR OTHER SITE FEATURES WHICH ARE TO REMAIN. SHOULD DAMAGE OCCUR, CONTRACTOR SHALL REPAIR TO ORIGINAL CONDITION AT CONTRACTOR'S EXPENSE.

Prepared For and Owner:
Howard Community College
10901 Little Patuxent Parkway
Columbia, Maryland 21044
ATTN: Mr. Chuck Nightingale
410-772-4296

Copyright © 2014 Desman, Inc. All rights reserved. No part of these documents may be reproduced in any form or by any means without permission from Desman Inc.

DESMAN ASSOCIATES

KCI TECHNOLOGIES — Engineers, Planners, Scientists, Construction Managers
936 Ridgebrook Road, Sparks, MD 21152
Phone (410)316-7800
Fax (410)316-7853
www.kci.com

HOWARD COMMUNITY COLLEGE
EAST PARKING GARAGE NO. 2, PARCEL B & ACCESS BRIDGE, LOT A-2 TOWN CENTER 3/3
COLUMBIA, MD
PARCEL B/ PLAT NO. 19049 & NON-CREDITED OPEN SPACE LOT A-2, TC, 3/3 PLAT NO. 23152
TAX MAP: 35, BLOCK: 6,
FIFTH ELECTION DISTRICT, ZONING: POR & NEW TOWN

PROFESSIONAL CERTIFICATION. I HEREBY CERTIFY THAT THESE DOCUMENTS WERE PREPARED OR APPROVED BY ME, AND THAT I AM A DULY LICENSED PROFESSIONAL ENGINEER UNDER THE LAWS OF THE STATE OF MARYLAND, LICENSE NO. 31089 EXPIRATION DATE: 11/21/16

STATE OF MARYLAND — RICHARD L. BUTT — No. 031089 — PROFESSIONAL ENGINEER — 1/15/16

ISSUE		
NO.	DESCRIPTION	DATE

DRAWING TITLE:
STORMWATER MANAGEMENT FACILITY #1

DRAWING NO.
C10.03
SHEET: 19 OF 35

SCALE:	1" = 20'
DATE:	JANUARY 8, 2016
PROJECT NO:	27146550

DES.	DRWN.	CK'D.
R.L.B.	C.T.B.	R.L.B.

SDP 16-003

SPECIFICATIONS FOR MICRO-BIORETENTION, RAIN GARDENS, LANDSCAPE INFILTRATION & INFILTRATION BERMS

1. Material Specifications
The allowable materials to be used in these practices are detailed in Table B.4.1.

2. Planting Soil
The soil shall be a uniform mix, free of stones, stumps, roots or other similar objects larger than two inches. No other materials or substances shall be mixed or dumped within the micro-bioretention practice that may be harmful to plant growth, or prove a hindrance to the planting or maintenance operations. The planting soil shall be free of Bermuda grass, Quackgrass, Johnson grass, or other noxious weeds as specified under COMAR 15.08.01.05.

The planting soil shall be tested and shall meet the following criteria:
- Soil Component - Loamy Sand or Sandy Loam (USDA Soil Textural Classification)
- Organic Content - Minimum 10% by dry weight (ASTM D 2974). In general, this can be met with a mixture of loamy sand (60%-65%) and compost (35% to 40%) or sandy loam (30%), coarse sand (30%), and compost (40%).
- Clay Content - Media shall have a clay content of less than 5%.
- pH Range – Should be between 5.5 - 7.0. Amendments (e.g., lime, iron sulfate plus sulfur) may be mixed into the soil to increase or decrease pH.

There shall be at least one soil test per project. Each test shall consist of both the standard soil test for pH, and additional tests of organic matter, and soluble salts. A textural analysis is required from the site stockpiled topsoil. If topsoil is imported, then a texture analysis shall be performed for each location where the topsoil was excavated.

3. Compaction

It is very important to minimize compaction of both the base of bioretention practices and the required backfill. When possible, use excavation hoes to remove original soil. If practices are excavated using a loader, the contractor should use wide track or marsh track equipment, or light equipment with turf type tires. Use of equipment with narrow tracks or narrow tires, rubber tires with large lugs, or high-pressure tires will cause excessive compaction resulting in reduced infiltration rates and is not acceptable. Compaction will significantly contribute to design failure.

Compaction can be alleviated at the base of the bioretention facility by using a primary tilling operation such as a chisel plow, ripper, or subsoiler. These tilling operations are to refracture the soil profile through the 12 inch compaction zone. Substitute methods must be approved by the engineer. Rototillers typically do not till deep enough to reduce the effects of compaction from heavy equipment.

Rototill 2 to 3 inches of sand into the base of the bioretention facility before backfilling the optional sand layer. Pump any ponded water before preparing (rototilling) base.

When backfilling the topsoil over the sand layer, first place 3 to 4 inches of topsoil over the sand, then rototill the sand/topsoil to create a gradation zone. Backfill the remainder of the topsoil to final grade.

When backfilling the bioretention facility, place soil in lifts 12" to 18". Do not use heavy equipment within the bioretention basin. Heavy equipment can be used around the perimeter of the basin to supply soils and sand. Grade bioretention materials with light equipment such as a compact loader or a dozer/loader with marsh tracks.

4. Plant Material
Recommended plant material for micro-bioretention practices can be found in Appendix A, Section A.2.3.

5. Plant Installation
Compost is a better organic material source, is less likely to float, and should be placed in the invert and other low areas. Mulch should be placed in surrounding to a uniform thickness of 2" to 3". Shredded or chipped hardwood mulch is the only accepted mulch. Pine mulch and wood chips will float and move to the perimeter of the bioretention area during a storm event and are not acceptable. Shredded mulch must be well aged (6 to 12 months) for acceptance.

Rootstock of the plant material shall be kept moist during transport and on-site storage. The plant root ball should be planted so 1/8th of the ball is above final grade surface. The diameter of the planting pit shall be at least six inches larger than the diameter of the planting ball. Set and maintain the plant straight during the entire planting process. Thoroughly water ground bed cover after installation.

Trees shall be braced using 2" by 2" stakes only as necessary and for the first growing season only. Stakes are to be equally spaced on the outside of the tree ball.

Grasses and legume seed should be drilled into the soil to a depth of at least one inch. Grass and legume plugs shall be planted following the non-grass ground cover planting specifications.

The topsoil specifications provide enough organic material to adequately supply nutrients from natural cycling. The primary function of the bioretention structure is to improve water quality. Adding fertilizers defeats, or at a minimum, impedes this goal. Only add fertilizer if wood chips or mulch are used to amend the soil. Rototill urea fertilizer at a rate of 2 pounds per 1000 square feet.

6. Underdrains

Underdrains should meet the following criteria:

- Pipe - Should be 4" to 6" diameter, slotted or perforated rigid plastic pipe (ASTMF 758, Type PS 28, or AASHTO-M-278) in a gravel layer. The preferred material is slotted, 4" rigid pipe (e.g., PVC or HDPE).
- Perforations - If perforated pipe is used, perforations should be 3/8" diameter located 6" on center with a minimum of four holes per row. Pipe shall be wrapped with a 1/4" (No. 4 or 4x4) galvanized hardware cloth.
- Gravel - The gravel layer (No. 57 stone preferred) shall be at least 3" thick above and below the underdrain.
- The main collector pipe shall be at a minimum 0.5% slope.
- A rigid, non-perforated observation well must be provided (one per 1,000 square feet) to provide a clean-out port and monitor performance of the filter.
- A 4" layer of pea gravel (1/8" to 3/8" stone) shall be located between the filter media and underdrain to prevent migration of fines into the underdrain. This layer may be considered part of the filter bed when bed thickness exceeds 24".

The main collector pipe for underdrain systems shall be constructed at a minimum slope of 0.5%. Observation wells and/or clean-out pipes must be provided (one minimum per every 1000 square feet of surface area).

7. Miscellaneous
These practices may not be constructed until all contributing drainage area has been stabilized

APPROVED: Howard County Department of Planning & Zoning

Director — Date 3-15-16

Chief, Division of Land Development — Date 3.14.16

Chief, Development Engineering Division — Date 2.12.16

CONSTRUCTION SPECIFICATIONS

SITE PREPARATION

AREAS DESIGNATED FOR BORROW AREAS, EMBANKMENT, AND STRUCTURAL WORKS SHALL BE CLEARED, GRUBBED AND STRIPPED OF TOPSOIL. ALL TREES, VEGETATION, ROOTS AND OTHER OBJECTIONABLE MATERIAL SHALL BE REMOVED. CHANNEL BANKS AND SHARP BREAKS SHALL BE SLOPED TO NO STEEPER THAN 1:1. ALL TREES SHALL BE CLEARED AND GRUBBED WITHIN 15 FEET OF THE TOE FOR THE EMBANKMENT.

AREAS TO BE COVERED BY THE RESERVOIR WILL BE CLEARED OF ALL TREES, BRUSH, LOGS, FENCES, RUBBISH AND OTHER OBJECTIONABLE MATERIAL UNLEES OTHERWISE DESIGNATED ON THE PLANS. TREES, BRUSH, AND STUMPS SHALL BE CUT APPROXIMATELY LEVEL WITH THE GROUND SURFACE. FOR DRY STORMWATER MANAGEMENT PONDS, A MINIMUM OF A 25-FOOT RADIUS AROUND THE INLET STRUCTURE SHALL BE CLEARED.

ALL CLEARED AND GRUBBED MATERIAL SHALL BE DISPOSED OF OUTSIDE AND BELOW THE LIMITS OF THE DAM AND RESERVOIR AS DIRECTED BY THE OWNER OR HIS REPRESENTATIVE. WHEN SPECIFIED, A SUFFICIENT QUANTITY OF TOPSOIL WILL BE STOCKPILED IN A SUITABLE LOCATION FOR USE ON THE EMBANKMENT AND OTHER DESIGNATED AREAS.

EARTH FILL

MATERIAL - THE FILL MATERIAL SHALL BE TAKEN FROM APPROVED DESIGNATED BORROW AREAS. IT SHALL BE FREE OF ROOTS, STUMPS, WOOD, RUBBISH, STONES GREATER THAN 6", FROZEN OR OTHER OBJECTIONABLE MATERIALS. THE MOST IMPERVIOUS SOIL AVAILABLE ON-SITE (AND AS APPROVED BY THE GEOTECHNICAL ENGINEER) SHALL BE USED AS FILL MATERIAL FOR THE CENTER OF THE EMBANKMENT AND CORE TRENCH. MATERIALS USED IN THE OUTER SHELL OF THE EMBANKMENT MUST HAVE THE CAPABILITY TO SUPPORT VEGETATION OF THE QUALITY REQUIRED TO PREVENT EROSION OF THE EMBANKMENT.

PLACEMENT - AREAS ON WHICH FILL IS TO BE PLACED SHALL BE SCARIFIED PRIOR TO PLACEMENT OF FILL. FILL MATERIALS SHALL BE PLACED IN MAXIMUM 8 INCH THICK (BEFORE COMPACTION) LAYERS WHICH ARE TO BE CONTINUOUS OVER THE ENTIRE LENGTH OF THE FILL. THE MOST PERMEABLE BORROW MATERIAL SHALL BE PLACED IN THE DOWNSTREAM PORTIONS OF THE EMBANKMENT. THE PRINCIPAL SPILLWAY MUST BE INSTALLED CONCURRENTLY WITH FILL PLACEMENT AND NOT EXCAVATED INTO THE EMBANKMENT.

COMPACTION - THE MOVEMENT OF THE HAULING AND SPREADING EQUIPMENT OVER THE FILL SHALL BE CONTROLLED SO THAT THE ENTIRE SURFACE OF EACH LIFT SHALL BE TRAVERSED BY NOT LESS THAN ONE TREAD TRACK OF HEAVY EQUIPMENT OR COMPACTION SHALL BE ACHIEVED BY A MINIMUM OF FOUR COMPLETE PASSES OF A SHEEPSFOOT, RUBBER TIRED OR VIBRATORY ROLLER. FILL MATERIAL SHALL CONTAIN SUFFICIENT MOISTURE SUCH THAT THE REQUIRED DEGREE OF COMPACTION WILL BE OBTIANED WITH THE EQUIPMENT USED. THE FILL MATERIAL SHALL CONTAIN SUFFICIENT MOISTURE SO THAT IF FORMED INTO A BALL IT WILL NOT CRUMBLE, YET NOT BE SO WET THAT WATER CAN BE SQUEEZED OUT.

THE MINIMUM REQUIRED DENSITY SHALL NOT BE LESS THAN 95% OF MAXIMUM DRY DENSITY WITH A MOISTURE CONTENT WITHIN +/- 2% OF THE OPTIMUM. EACH LAYER OF FILL SHALL BE COMPACTED AS NECESSARY TO OBTAIN THAT DENSITY, AND IS TO BE CERTIFIED BY THE ENGINEER AT THE TIME OF CONSTRUCTION. ALL COMPACTION IS TO BE DETERMINED BY AASHTO METHOD T-99 (STANDARD PROCTOR).

STRUCTURE BACKFILL

BACKFILL ADJACENT TO PIPES OR STRUCTURES SHALL BE OF THE TYPE AND QUALITY CONFORMING TO THAT SPECIFIED FOR THE ADJOINING FILL MATERIAL. THE FILL SHALL BE PLACED IN HORIZONTAL LAYERS NOT TO EXCEED FOUR INCHES IN THICKNESS AND COMPACTED BY HAND TAMPERS OR OTHER MANUALLY DIRECTED COMPACTION EQUIPMENT. THE MATERIAL NEEDS TO FILL COMPLETELY ALL SPACES UNDER AND ADJACENT TO THE PIPE. AT NO TIME DURING THE BACKFILLING OPERATION SHALL DRIVEN EQUIPMENT BE ALLOWED TO OPERATE CLOSER THAN FOUR FEET, MEASURED HORIZONTALLY, TO ANY PART OF A STRUCTURE. UNDER NO CIRCUMSTANCES SHALL EQUIPMENT BE DRIVEN OVER ANY PART OF A CONCRETE STRUCTURE OR PIPE, UNLESS THERE IS A COMPACTED FILL OF 24" OR GREATER OVER THE STRUCTURE OR PIPE.

STRUCTURE BACKFILL MAY BE FLOWABLE FILL MEETING THE REQUIREMENTS OF MARYLAND DEPARTMENT OF TRANSPORTATION, STATE HIGHWAY ADMINISTRATION STANDARD SPECIFICATIONS FOR CONSTRUCTION AND MATERIALS, SECTION 313 AS MODIFIED. THE MIXTURE SHALL HAVE A 100-200 PSI; 28 DAY UNCONFINED COMPRESSIVE STRENGTH. THE FLOWABLE FILL SHALL HAVE A MINIMUM PH OF 4.0 AND A MINIMUM RESISTIVITY OF 2,000 OHM-CM. MATERIAL SHALL BE PLACED SUCH THAT A MINIMUM OF 6" (MEASURED PERPENDICULAR TO THE OUTSIDE OF THE PIPE) OF FLOWABLE FILL SHALL BE UNDER (BEDDING), OVER AND, ON THE SIDES OF THE PIPE. IT ONLY NEEDS TO EXTEND UP TO THE SPRING LINE FOR RIGID CONDUITS. AVERAGE SLUMP OF THE FILL SHALL BE 7" TO ASSURE FLOWABILITY OF THE MATERIAL. ADEQUATE MEASURES SHALL BE TAKEN (SAND BAGS, ETC.) TO PREVENT FLOATING THE PIPE. WHEN USING FLOWABLE FILL, ALL METAL PIPE SHALL BE BITUMINOUS COATED. ANY ADJOINING SOIL FILL SHALL BE PLACED IN HORIZONTAL LAYERS NOT TO EXCEED FOUR INCHES IN THICKNESS AND COMPACTED BY HAND TAMPERS OR OTHER MANUALLY DIRECTED COMPACTION EQUIPMENT. THE MATERIAL SHALL COMPLETELY FILL ALL VOIDS ADJACENT TO THE FLOWABLE FILL ZONE. AT NO TIME DURING THE BACKFILLING OPERATION SHALL DRIVEN EQUIPMENT BE ALLOWED TO OPERATE CLOSER THAN FOUR FEET, MEASURED HORIZONTALLY, TO ANY PART OF A STRUCTURE. UNDER NO CIRCUMSTANCES SHALL EQUIPMENT BE DRIVEN OVER ANY PART OF A STRUCTURE OR PIPE UNLESS THERE IS A COMPACTED FILL OF 24" OR GREATER OVER THE STRUCTURE OR PIPE. BACKFILL MATERIAL OUTSIDE THE STRUCTURAL BACKFILL (FLOWABLE FILL) ZONE SHALL BE OF THE TYPE AND QUALITY CONFORMING TO THAT SPECIFIED FOR THE CORE OF THE EMBANKMENT OR OTHER EMBANKMENT MATERIALS.

REMOVAL AND REPLACEMENT OF DEFECTIVE FILL

FILL PLACED AT DENSITIES LOWER THAN SPECIFIED MINIMUM DENSITY OR AT MOISTURE CONTENTS OUTSIDE THE SPECIFIED ACCEPTABLE RANGE OF MOISTURE CONTENT OR OTHERWISE NOT CONFORMING TO THE REQUIREMENTS OF THE SPECIFICATIONS SHALL BE REWORKED TO MEET THE REQUIREMENTS OR REMOVED AND REPLACED BY ACCEPTABLE FILL. THE BOTTOMS OF SUCH EXCAVATIONS SHALL BE FINISHED FLAT OR GENTLY CURVING AND AT THE SIDES OF SUCH EXCAVATIONS THE ADJACENT SOUND FILL SHALL BE TRIMMED TO A SLOPE NOT STEEPER THAN 3 FEET HORIZONTALLY TO 1 FOOT VERTICALLY EXTENDING FROM THE BOTTOM OF THE EXCAVATION TO THE FILL SURFACE.

PIPE CONDUITS

ALL PIPES SHALL BE CIRCULAR IN CROSS SECTION AND HAVE WATER TIGHT JOINTS. CORRUGATED METAL PIPE SHALL BE 14 GAUGE, INSTALLED IN ACCORDANCE WITH ALL APPLICABLE BALTIMORE CITY STANDARD SPECIFICATIONS AND DETAILS.

PLASTIC PIPE - THE FOLLOWING CRITERIA SHALL APPLY FOR PLASTIC PIPE:.

1. MATERIAL - PVC PIPE SHALL BE PVC-1120 OR PVC-1220 CONFORMING TO ASTM D-1785 OR ASTM D-2241. CORRUGATED HIGH DENSITY POLYETHYLENE (HDPE) PIPE, COUPLINGS AND FITTINGS SHALL CONFORM TO THE FOLLOWING: 4"-10" INCH PIPE SHALL MEET THE REQUIREMENTS OF AASHTO M252 TYPE S, AND 12" THROUGH 24" INCH SHALL MEET THE REQUIREMENTS OF AASHTO M294 TYPE S.
2. JOINTS AND CONNECTIONS TO ANTI-SEEP COLLARS SHALL BE COMPLETELY WATERTIGHT.
3. BEDDING - THE PIPE SHALL BE FIRMLY AND UNIFORMLY BEDDED THROUGHOUT ITS ENTIRE LENGTH. WHERE ROCK OR SOFT, SPONGY OR OTHER UNSUITABLE SOIL IS ENCOUNTERED, ALL SUCH MATERIAL SHALL BE REMOVED AND REPLACED WITH SUITABLE EARTH COMPACTED TO PROVIDE ADEQUATE SUPPORT.
4. BACKFILLING SHALL CONFORM TO "STRUCTURE BACKFILL".
5. OTHER DETAILS (ANTI-SEEP COLLARS, VALVES, ETC.) SHALL BE AS SHOWN ON THE DRAWINGS.

CUT OFF TRENCH - THE CUTOFF TRENCH SHALL BE EXCAVATED INTO IMPERVIOUS MATERIAL ALONG OR PARALLEL TO THE CENTERLINE OF THE EMBANKMENT AS SHOWN ON THE PLANS. THE BOTTOM WIDTH OF THE TRENCH SHALL BE GOVERNED BY THE EQUIPMENT USED FOR EXCAVATION, WITH THE MINIMUM WIDTH BEING FOUR FEET. THE DEPTH SHALL BE AT LEAST FOUR FEET BELOW EXISTING GRADE OR AS SHOWN ON THE PLANS. THE SIDE SLOPES OF THE TRENCH SHALL BE 1 TO 1 OR FLATTER. THE BACKFILL SHALL BE COMPACTED WITH CONSTRUCTION EQUIPMENT, ROLLERS, OR HAND TAMPERS TO ASSURE MAXIMUM DENSITY AND MINIMUM PERMEABILITY.

CONCRETE

CONCRETE SHALL MEET THE REQUIREMENTS OF MARYLAND DEPARTMENT OF TRANSPORTATION, STATE HIGHWAY ADMINISTRATION STANDARD SPECIFICATIONS FOR CONSTRUCTION AND MATERIALS, SECTION 414, MIX NO. 3.

FILTER CLOTH

ALL FILTER CLOTH SHALL CONFORM TO BALTIMORE CITY STANDARDS UNLESS OTHERWISE NOTED AS SHA OR THE 1994 MARYLAND STANDARDS AND SPECIFICATIONS FOR SOIL EROSION AND SEDIMENT CONTROL, OR THE LATEST EDITION.

CAST-IN-PLACE CONCRETE STRUCTURES

SPECIFICATIONS: MARYLAND DEPARTMENT OF TRANSPORTATION, STATE HIGHWAY ADMINISTRATION STANDARD SPECIFICATIONS FOR CONSTRUCTION AND MATERIALS, LATEST EDITION.

AASHTO STANDARD SPECIFICATIONS FOR HIGHWAY BRIDGES, LATEST EDITION, FOR DESIGN. CONCRETE DESIGN BY THE "SERVICE LOAD DESIGN METHOD".

CONCRETE: SHALL MEET THE REQUIREMENTS OF THE MARYLAND DEPARTMENT OF TRANSPORTATION, STATE HIGHWAY ADMINISTRATION STANDARD SPECIFICATIONS FOR CONSTRUCTION AND MATERIALS, SECTION 414 AND 902, MIX NO. 3.

CONTRACTOR SHALL SUPPLY MIX DESIGN FOR APPROVAL PRIOR TO APPLICATION. LOAD AND MIX TICKETS SHALL BE SUPPLIED FOR EACH TRUCK DELIVERY. NO PARTIAL FIELD MIXES SHALL BE ALLOWED.

ALL CONCRETE SHALL ATTAIN A MINIMUM COMPRESSIVE STRENGTH OF 3,500 PSI AT 28 DAYS. DESIGN FC = 1,200 PSI.

ALL EXPOSED EDGES SHALL BE CHAMFERED 3/4 " X 3/4 ". ALL CONSTRUCTION KEYS ARE SHOWN NOMINAL SIZE.

REINFORCING STEEL: REINFORCING STEEL SHALL CONFORM TO ASTM A-615, GRADE 60. WHERE NOT INDICATED, BAR LAP SPLICES SHALL BE IN ACCORDANCE WITH AASHTO SPECIFICATIONS. THE MINIMUM CONCRETE COVER SHALL BE 2 INCHES UNLESS OTHERWISE NOTED. DESIGN FS = 24,000 PSI.

FOUNDATION: PRESUMED SOIL BEARING CAPACITY = 2,500 PSF. THE ENGINEER MUST APPROVE ALL FOUNDATIONS PRIOR TO CONCRETE PLACEMENT. IF UNSUITABLE MATERIAL IS ENCOUNTERED, THE MATERIAL SHALL BE UNDERCUT AND BACKFILLED WITH STRUCTURAL BACKFILL.

STRUCTURAL BACKFILL: CAST-IN-PLACE CONCRETE STRUCTURES AND PIPE SHALL BE BACKFILLED WITH MATERIAL OF THE TYPE AND QUALITY CONFORMING TO THAT SPECIFIED FOR THE ADJOINING FILL MATERIAL. STRUCTURAL FILL SHALL BE PLACED IN LOOSE LIFTS OF APPROXIMATELY 6 INCHES, AND COMPACTED TO 95 PERCENT OF THE STANDARD PROCTOR MAXIMUM DRY DENSITY IN ACCORDANCE WITH AASHTO T-180.

THE STATIC WEIGHT OF EQUIPMENT USED ADJACENT TO WALLS SHALL NOT EXCEED 3,000 POUNDS. NO BACKFILL SHALL BE PLACED AGAINST THE CAST-IN-PLACE WALLS UNTIL THE CONCRETE HAS ATTAINED THE SPECIFIED 28 DAY STRENGTH.

PRE-CAST CONCRETE STRUCTURES

SHOP DRAWINGS FOR PRE-CAST CONCRETE RISERS WITH SUPPORTING STRUCTURAL COMPUTATIONS (SIGNED AND SEALED BY A MARYLAND REGISTERED PROFESSIONAL ENGINEER) MEETING ASTM REQUIREMENTS FOR PRE-CAST STRUCTURES MUST BE SUBMITTED TO THE ENGINEER, AND THE APPROVING AGENCY (BALTIMORE COUNTY DEPARTMENT OF ENVIRONMENTAL PROTECTION AND RESOURCE MANAGEMENT) FOR APPROVAL PRIOR TO FABRICATION. IF ANY STRUCTURE DIMENSIONS VARY FROM WHAT WAS ORIGINALLY REVIEWED/APPROVED, THEN THE HYDRAULICS, FLOTATION AND STRUCTURAL INTEGRITY WILL HAVE TO BE RE-ANALYZED.

ROCK RIPRAP

ROCK RIPRAP SHALL MEET THE REQUIREMENTS OF MARYLAND DEPARTMENT OF TRANSPORTATION, STATE HIGHWAY ADMINISTRATION STANDARD SPECIFICATIONS FOR CONSTRUCTION AND MATERIALS, SECTION 311. GEOTEXTILE SHALL BE PLACED UNDER ALL RIP RAP AND SHALL MEET THE REQUIREMENTS OF MARYLAND DEPARTMENT OF TRANSPORTATION, STATE HIGHWAY ADMINISTRATION STANDARD SPECIFICATIONS FOR CONSTRUCTION AND MATERIALS, SECTION 921.09, CLASS C.

THE RIP-RAP SHALL BE PLACED TO THE REQUIRED THICKNESS IN ONE OPERATION. THE ROCK SHALL BE DELIVERED AND PLACED IN A MANNER THAT WILL INSURE THE RIP-RAP IN PLACE SHALL BE REASONABLY HOMOGENEOUS WITH THE LARGE ROCKS UNIFORMLY DISTRIBUTED AND FIRMLY IN CONTACT ONE TO ANOTHER WITH THE SMALLER ROCKS FILLING THE VOIDS BETWEEN THE LARGER ROCKS.

CARE OF WATER DURING CONSTRUCTION

ALL WORK ON PERMANENT STRUCTURES SHALL BE CARRIED OUT IN AREAS FREE FROM WATER. THE CONTRACTOR SHALL CONSTRUCT AND MAINTAIN ALL TEMPORARY DIKES, LEVEES, COFFERDAMS, DRAINAGE CHANNELS, AND STREAM DIVERSIONS NECESSARY TO PROTECT THE AREAS TO BE OCCUPIED BY THE PERMANENT WORKS. THE CONTRACTOR SHALL ALSO FURNISH, INSTALL, OPERATE, AND MAINTAIN ALL NECESSARY PUMPING AND OTHER EQUIPMENT REQUIRED FOR REMOVAL OF WATER FROM VARIOUS PARTS OF THE WORK AND FOR MAINTAINING THE EXCAVATIONS, FOUNDATION, AND OTHER PARTS OF THE WORK FREE FROM WATER AS REQUIRED BY THE ENGINEER FOR CONSTRUCTING EACH PART OF THE WORK. AFTER HAVING SERVED THEIR PURPOSE, ALL TEMPORARY PROTECTIVE WORKS SHALL BE REMOVED OR LEVELED AND GRADED TO THE EXTENT REQUIRED TO PREVENT OBSTRUCTION IN ANY DEGREE WHATSOEVER OF THE FLOW OF WATER TO THE SPILLWAY OR OUTLET WORKS AND SO AS NOT TO INTERFERE IN ANY WAY WITH THE OPERATION OR MAINTENANCE OF THE STRUCTURE. STREAM DIVERSIONS SHALL BE MAINTAINED UNTIL THE FULL FLOW CAN BE PASSED THROUGH THE PERMANENT WORKS. THE REMOVAL OF WATER FROM THE REQUIRED EXCAVATION AND THE FOUNDATION SHALL BE ACCOMPLISHED IN A MANNER AND TO THE EXTENT THAT WILL MAINTAIN STABILITY OF THE EXCAVATED SLOPES AND BOTTOM REQUIRED EXCAVATIONS AND WILL ALLOW SATISFACTORY PERFORMANCE OF ALL CONSTRUCTION OPERATIONS. DURING THE PLACING AND COMPACTING OF MATERIAL IN REQUIRED EXCAVATIONS, THE WATER LEVEL AT THE LOCATIONS BEING REFILLED SHALL BE MAINTAINED BELOW THE BOTTOM OF THE EXCAVATION AT SUCH LOCATIONS WHICH MAY REQUIRE DRAINING THE WATER SUMPS FROM WHICH THE WATER SHALL BE PUMPED.

STABILIZATION

ALL BORROW AREAS SHALL BE GRADED TO PROVIDE PROPER DRAINAGE AND LEFT IN A SIGHTLY CONDITION. ALL EXPOSED SURFACES OF THE EMBANKMENT, SPILLWAY, SPOIL AND BORROW AREAS, AND BERMS SHALL BE STABILIZED BY SEEDING, LIMING, FERTILIZING AND MULCHING IN ACCORDANCE WITH THE NATURAL RESOURCES CONSERVATION SERVICE STANDARDS AND SPECIFICATIONS FOR CRITICAL AREA PLANTING (MD-342) OR AS SHOWN ON THE ACCOMPANYING DRAWINGS.

EROSION AND SEDIMENT CONTROL

CONSTRUCTION OPERATIONS WILL BE CARRIED OUT IN SUCH A MANNER THAT EROSION WILL BE CONTROLLED AND WATER AND AIR POLLUTION MINIMIZED. STATE AND LOCAL LAWS CONCERNING POLLUTION ABATEMENT WILL BE FOLLOWED. CONSTRUCTION PLANS SHALL DETAIL EROSION AND SEDIMENT CONTROL MEASURES.

PERFORATED PIPE

PVC PIPE SHALL BE PVC-1120 OR 1220 CONFORMING TO ASTMD-1785 OR ASTM D-2241. PERFORATED PVC SHALL PROVIDE AT LEAST 1.90 SQ. IN. OF OPEN AREA PER LINEAR FOOT.

SAND

SAND SHALL BE CLEAN AASHTO M-6 OR ASTM C-33 CONCRETE SAND. SIZE 0.02" TO 0.04". SAND SUBSTITUTIONS SUCH AS DIABASE AND GRAYSTONE #10 ARE NOT ACCEPTABLE. NO CALCIUM CARBONATED OR DOLOMITIC SAND SUBSTITUTIONS ARE ACCEPTABLE. NO "ROCK DUST" CAN BE USED FOR SAND.

MATERIALS SPECIFICATIONS FOR MICRO-BIORETENTION, RAIN GARDENS & LANDSCAPE INFILTRATION

MATERIAL	SPECIFICATION	SIZE	NOTES
PLANTINGS	SEE APPENDIX A, TABLE A.4 IN MD 2000 SWM REGS	N/A	PLANTINGS ARE SITE SPECIFIC
PLANTING SOIL (2' TO 4' DEEP)	LOAMY SAND (60 - 65%) & COMPOST (35 - 40%) OR SANDY LOAM (30%), COARSE SAND (30%) & COMPOST (40%)	N/A	USDA SOIL TYPES LOAMY SAND OR SANDY LOAM; CLAY CONTENT < 5%
ORGANIC CONTENT	MIN. 10% BY DRY WEIGHT (ASTM D 2974)		
MULCH	SHREDDED HARDWOOD		AGED 6 MONTHS, MINIMUM; NO PINE OR WOOD CHIPS
PEA GRAVEL DIAPHRAGM	PEA GRAVEL: ASTM-D-448	NO. 8 OR NO. 9 (1/8" TO 3/8")	
CURTAIN DRAIN	ORNAMENTAL STONE; WASHED COBBLES	STONE: 2" TO 5"	
GEOTEXTILE		N/A	PE TYPE 1 NONWOVEN
GRAVEL (UNDERDRAINS & INFILTRATION BERMS	AASHTO M-43	NO 57 OR NO 6 AGGREGATE (3/8" TO 3/4")	
UNDERDRAIN PIPING	F 758, TYPE PS 28 OR AASHTO M-278	4" TO 6" RIGID SCHEDULE 40 PVC OR SDR35	SLOTTED OR PERFORATED PIPE; 3/8" PERF. @ 6' ON CENTER, 4 HOLES PER ROW; MIN OF 3" OF GRAVEL OVER PIPES; NOT NECESSARY UNDERNEATH PIPES. PERFORATED PIPE SHALL BE WRAPPED WITH 1/4" GALVANIZED HARDWARE CLOTH
POURED IN PLACE CONCRETE (IF REQUIRED)	MSHA MIX NO. 3; F'c = 3500 PSI @ 28 DAYS, NORMAL WEIGHT, AIR-ENTRAINED; REINFORCING TO MEET ASTM-615-60	N/A	ON-SITE TESTING OF POURED-IN-PLACE CONCRETE REQUIRED: 28 DAY STRENGTH AND SLUMP TEST; ALL CONCRETE DESIGN (CAST-IN-PLACE OR PRE-CAST) NOT USING PREVIOUSLY APPROVED STATE OR LOCAL STANDARDS REQUIRES DESIGN DRAWINGS SEALED AND APPROVED BY A PROFESSIONAL STRUCTURAL ENGINEER LICENSED IN THE STATE OF MD - DESIGN TO INCLUDE MEETING ACI CODE 350.R/89; VERTICAL LOADING (H-10 OR H-20); ALLOWABLE HORIZONTAL LOADING (BASED ON SOIL PRESSURES); AND ANALYSIS OF POTENTIAL CRACKING
SAND	AASHTO-M-6 OR ASTM-C-33	0.02" TO 0.04"	SAND SUBSTITUTIONS SUCH AS DIABASE AND GRAYSTONE (AASHTO) #10 ARE NOT ACCEPTABLE. NO CALCIUM CARBONATED OR DOLOMITIC SAND SUBSTITUTIONS ARE NOT ACCEPTABLE. NO "ROCK DUST" CAN BE USED FOR SAND.

WATER QUALITY SEEDMIX
APPLICATION RATE: 1/2 lb/1000 s.f.
Panicim virgatum/Switchgrass (40%)
Aster novae-angliae/New England Aster (35%)
Aster puniceus/Purple Stemmed ASter (10%)
Ascepias incarnata/Swamp Milkweed (10%)
Labelia cardinalis/Cardinal Flower (5%)

Professional Certification. I hereby certify that these documents were prepared or approved by me, and that I am a duly licensed professional engineer under the laws of the State of Maryland.
License No. 33772 . Expiration Date: 6/16/21

AS-BUILT CERTIFICATION
THERE IS NO "AS-BUILT" INFORMATION PROVIDED ON THIS SHEET.

NAME — PE# 33772 — DATE 9/4/19

CONTRACTOR NOTE:
CONTRACTOR SHALL EXERCISE EXTREME CAUTION SO AS NOT TO DAMAGE ANY EXISTING PAVING, CURB & GUTTER, SIDEWALK OR OTHER SITE FEATURES WHICH ARE TO REMAIN. SHOULD DAMAGE OCCUR, CONTRACTOR SHALL REPAIR TO ORIGINAL CONDITION AT CONTRACTOR'S EXPENSE.

Prepared For and Owner:
Howard Community College
10901 Little Patuxent Parkway
Columbia, Maryland 21044
ATTN: Mr. Chuck Nightingale
410-772-4296

Copyright © 2014 Desman, Inc. All rights reserved. No part of these documents may be reproduced in any form or by any means without permission from Desman Inc.

DESMAN ASSOCIATES

KCI TECHNOLOGIES — Engineers, Planners, Scientists, Construction Managers — 936 Ridgebrook Road, Sparks, MD 21152, Phone (410)316-7800, Fax (410)316-7853, www.kci.com

HOWARD COMMUNITY COLLEGE
EAST PARKING GARAGE NO. 2, PARCEL B & ACCESS BRIDGE, LOT A-2 TOWN CENTER, 3/3
COLUMBIA, MD
PARCEL B/ PLAT NO. 19049 & NON-CREDITED OPEN SPACE LOT A-2, TC, 3/3 PLAT NO. 23152
TAX MAP: 35, BLOCK: 6,
FIFTH ELECTION DISTRICT, ZONING: POR & NEW TOWN

PROFESSIONAL CERTIFICATION. I HEREBY CERTIFY THAT THESE DOCUMENTS WERE PREPARED OR APPROVED BY ME, AND THAT I AM A DULY LICENSED PROFESSIONAL ENGINEER UNDER THE LAWS OF THE STATE OF MARYLAND, LICENSE NO. 31089 EXPIRATION DATE: 11/21/16

ISSUE		
NO.	DESCRIPTION	DATE

DRAWING TITLE: STORMWATER MANAGEMENT NOTES

DRAWING NO. C10.04

SHEET: 20 OF 35

SCALE:	N.T.S.
DATE:	JANUARY 8, 2016
PROJECT NO:	27146550

DES.	DRWN.	CK'D.
R.L.B.	C.T.B.	R.L.B.

SDP 16-003

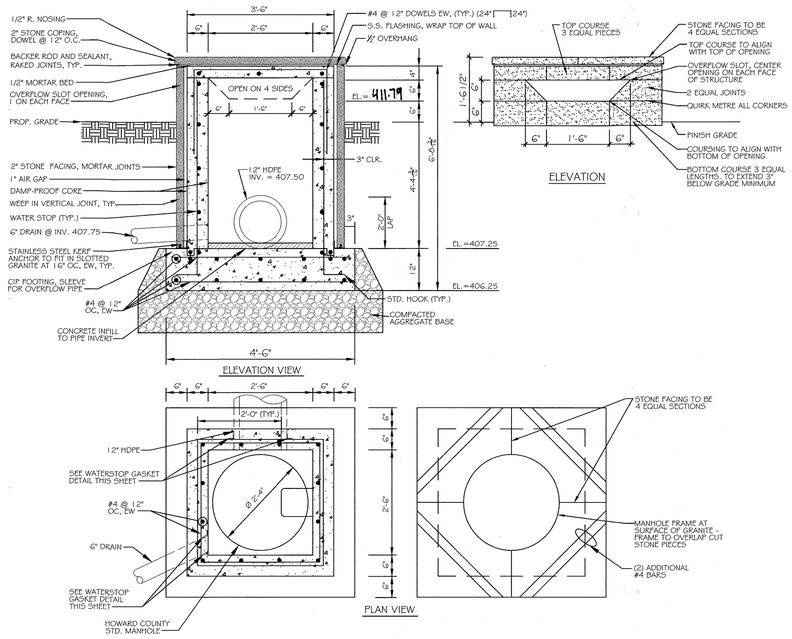

OVERFLOW STRUCTURE

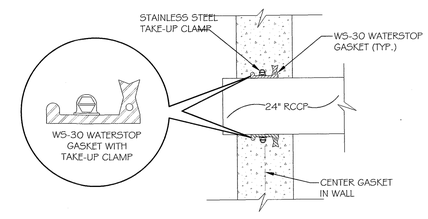

WS-30 WATERSTOP GASKET DETAIL

SCALE: NOT TO SCALE

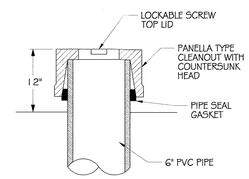

SCREW TOP CAP

NOT TO SCALE

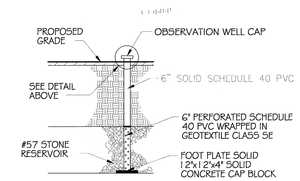

OBSERVATION WELL DETAIL

NOT TO SCALE

NOTE:
THE TUBE SHALL HAVE A FACTORY ATTACHED CAST IRON OR HIGH IMPACT PLASTIC COLLAR WITH RIBS TO PREVENT ROTATION WHEN REMOVING SCREW TOP LID. THE SCREW TOP LID SHALL BE CAST IRON OR HIGH IMPACT PLASTIC THAT WILL WITHSTAND ULTRA-VIOLET RAYS.

APPROVED: Howard County Department of Planning & Zoning

Director	Date 3-15-16
Chief, Division of Land Development	Date 3-14-16
Chief, Development Engineering Division	Date 2-12-16

Professional Certification. I hereby certify that these documents were prepared or approved by me, and that I am a duly licensed professional engineer under the laws of the State of Maryland.

License No: 23776, Expiration Date: 6/30/21

4/6/16

AS-BUILT CERTIFICATION

I HEREBY CERTIFY THAT THE FACILITY SHOWN ON THE PLAN WAS CONSTRUCTED AS SHOWN ON THE "AS-BUILT" PLANS AND COMPLIES WITH THE APPROVED PLANS AND SPECIFICATIONS. I HAVE VERIFIED THAT THE CONTRIBUTING DRAINAGE AREA IS SUFFICIENTLY STABILIZED TO PREVENT CLOGGING OF THE UNDERGROUND SWM FACILITY.

NAME	PE#	DATE
	33772	4/6/16

CONTRACTOR NOTE:
CONTRACTOR SHALL EXERCISE EXTREME CAUTION SO AS NOT TO DAMAGE ANY EXISTING PAVING, CURB & GUTTER, SIDEWALK OR OTHER SITE FEATURES WHICH ARE TO REMAIN. SHOULD DAMAGE OCCUR, CONTRACTOR SHALL REPAIR TO ORIGINAL CONDITION AT CONTRACTOR'S EXPENSE.

Prepared For and Owner:
Howard Community College
10901 Little Patuxent Parkway
Columbia, Maryland 21044
ATTN: Mr. Chuck Nightingale
410-772-4296

Copyright © 2014 Desman, Inc. All rights reserved. No part of these documents may be reproduced in any form or by any means without permission from Desman Inc.

DESMAN ASSOCIATES
Engineers Planners Scientists Construction Managers
KCI TECHNOLOGIES
936 Ridgebrook Road
Sparks, MD 21152
Phone (410)316-7800
Fax (410)316-7803
www.kci.com

HOWARD COMMUNITY COLLEGE
EAST PARKING GARAGE NO. 2, PARCEL B & ACCESS BRIDGE, LOT A-2 TOWN CENTER, 3/3
COLUMBIA, MD
PARCEL B/ PLAT NO. 19049 & NON-CREDITED OPEN SPACE LOT A-2, TC, 3/3 PLAT NO. 23152
FIFTH ELECTION DISTRICT, ZONING: POR & NEW TOWN

PROFESSIONAL CERTIFICATION. I HEREBY CERTIFY THAT THESE DOCUMENTS WERE PREPARED OR APPROVED BY ME, AND THAT I AM A DULY LICENSED PROFESSIONAL ENGINEER UNDER THE LAWS OF THE STATE OF MARYLAND, LICENSE NO. 31089
EXPIRATION DATE: 11/21/16

STATE OF MARYLAND RICHARD L. BUTT No.031089 PROFESSIONAL ENGINEER 1/15/16

ISSUE		
NO.	DESCRIPTION	DATE

DRAWING TITLE:
STORMWATER MANAGEMENT DETAILS

DRAWING NO.
C10.05
SHEET: 21 OF 35

SCALE: N.T.S.
DATE: JANUARY 8, 2016
PROJECT NO: 27146550

DES.	DRWN.	CK'D.
R.L.B.	C.T.B.	R.L.B.

SDP 16-003

STRUCTURAL NOTES

GENERAL

1. STRUCTURAL NOTES FOR THE BRIDGE SUPERSTRUCTURE ARE PROVIDED AS A SUPPLEMENT TO THE STRUCTURAL NOTES FOR THE GARAGE AND ARE NOT INTENDED TO MODIFY OR SUPERCEDE THE REQUIREMENTS STATED IN ANY WAY. REFER TO S-001 FOR ADDITIONAL STRUCTURAL REQUIREMENTS.

2. NO CHANGE IN SIZE, DIMENSION, OR REINFORCEMENT OF STRUCTURAL MEMBERS OR OF THE DESIGNED CONNECTIONS SHALL BE MADE WITHOUT THE WRITTEN APPROVAL OF THE ENGINEER.

3. WORK NOT INDICATED ON A PART OF THE DRAWING BUT IS REASONABLY IMPLIED TO BE SIMILAR TO THAT SHOWN AT CORRESPONDING PLACES SHALL BE REPEATED. UNLESS NOTED OTHERWISE, DETAILS ON STRUCTURAL DRAWINGS ARE TYPICAL AS INDICATED BY CUTS, REFERENCES OR TITLES.

4. CONTRACTOR IS RESPONSIBLE FOR PROTECTING ALL EXCAVATION SLOPES. THE CONTRACTOR SHALL EXERCISE DUE CARE AND CAUTION WORKING IN AREAS ADJOINING EXISTING CONSTRUCTION TO REMAIN.

5. DIMENSIONS RELATED TO THE EXISTING STRUCTURES ARE APPROXIMATE. CONTRACTOR SHALL VERIFY ALL DIMENSIONS OF EXISTING CONSTRUCTION AND COORDINATE WITH NEW CONSTRUCTION.

6. THE CONTRACTOR IS RESPONSIBLE FOR LIMITING THE AMOUNT OF CONSTRUCTION LOAD IMPOSED UPON STRUCTURAL FRAMING. CONSTRUCTION LOADS SHALL NOT EXCEED THE CAPACITY OF THE FRAMING AT THE TIME THE LOADS ARE IMPOSED.

7. THE CONTRACTOR SHALL INFORM THE ENGINEER IN WRITING OF ANY DEVIATION FROM THE CONTRACT DRAWINGS. THE CONTRACTOR SHALL NOT BE RELIEVED FROM RESPONSIBILITY FOR SUCH DEVIATION BY THE ENGINEER'S APPROVAL OF SHOP DRAWINGS, PRODUCT DATA, ETC., UNLESS THE CONTRACTOR HAS SPECIFICALLY INFORMED THE ENGINEER OF SUCH DEVIATION AT THE TIME OF SUBMISSION AND THE ENGINEER HAS GIVEN WRITTEN APPROVAL OF THE SPECIFIC DEVIATION.

8. ALL THINGS WHICH, IN THE OPINION OF THE CONTRACTOR, APPEAR TO BE DEFICIENCIES, OMISSIONS, CONTRADICTIONS AND AMBIGUITIES IN THE PLANS AND SPECIFICATIONS SHALL BE BROUGHT TO THE ATTENTION OF THE ENGINEER. PLANS AND/OR SPECIFICATIONS WILL BE CORRECTED, OR A WRITTEN INTERPRETATION OF THE ALLEGED DEFICIENCY, OMISSION, CONTRADICTION, OR AMBIGUITY WILL BE MADE BY THE ENGINEER BEFORE THE AFFECTED WORK PROCEEDS.

9. PROVIDE ALL TEMPORARY BRACING, SHORING, GUYING OR OTHER MEANS TO AVOID EXCESSIVE STRESSES OR MOVEMENTS AND TO HOLD STRUCTURAL ELEMENTS IN PLACE DURING CONSTRUCTION.

10. THE STRUCTURAL ENGINEER SHALL NOT HAVE CONTROL OR CHARGE OF AND SHALL NOT BE RESPONSIBLE FOR, CONSTRUCTION MEANS, METHODS, TECHNIQUES, SEQUENCES OR PROCEDURES, FOR SAFETY PRECAUTION & PROGRAMS IN CONNECTION WITH THE WORK, FOR ACTS OR OMISSIONS OF THE CONTRACTOR, SUB-CONTRACTORS OR FOR ANY OTHER PERSON PERFORMING ANY OF THE WORK, OR FOR ANY FAILURE OF ANY OF THEM TO CARRY OUT THE WORK IN ACCORDANCE WITH THE CONTRACT DOCUMENTS.

11. ANY ENGINEERING DESIGN PROVIDED BY OTHERS AND SUBMITTED FOR REVIEW SHALL BEAR THE SEAL OF AN ENGINEER REGISTERED IN THE STATE OF MARYLAND.

METAL ANCHORAGE ASSEMBLIES

1. BOLTS AND ANCHORS SHALL BE AS REFERENCED ON DETAILS. SUBSTITUTIONS OF ALTERNATIVE ANCHORAGE MATERIAL WILL BE PERMITTED ONLY AFTER WRITTEN APPROVAL OF THE ENGINEER OF RECORD.

2. REINFORCEMENT TO BE WELDED SHALL CONFORM TO ASTM A706. PROVIDE MILL CERTIFICATION OF THE REINFORCING USED.

3. STEEL PLATES AND SHAPES FOR PRECAST CONNECTIONS SHALL CONFORM TO ASTM A36.

CODES & DESIGN SPECIFICATIONS

INTERNATIONAL BUILDING CODE 2015
AASHTO LRFD SPECIFICATION, 5TH EDITION, 2010

FLOOR LIVE LOAD:
- DESIGN VEHICULAR LOAD: HL-93
  - DESIGN TRUCK WITH AXLE LOADS 8 KIPS – 32 KIPS – 32 KIPS WITH 14 FT SPACING
  - DESIGN LANE LOAD – 0.64 KIPS/FT ON 10 FT WIDTH
  - IMPACT FACTOR = 1.33
  - WHEEL CONTACT AREA = 10" X 20"
- PEDESTRIAN LIVE LOAD – 75 PSF ON CURBS AND WALKWAYS WIDER THAN 2 FT
- TWO-LANE COMBINATION FACTOR = 1.0
- THREE-LANE COMBINATION FACTOR (TWO-LANE + PEDESTRIAN) = 0.85

SNOW LOAD
- ASSHTO BRIDGE DESIGN CRITERIA DOES NOT INCLUDE SNOW LOAD

CENTRIFUGAL FORCE
- V = HIGHWAY DESIGN SPEED = 25 MPH
- C = 8 KIPS APPLIED 6 FT ABOVE THE DECK SURFACE

BRAKING FORCE
- B = 18 KIPS TOTAL

COLLISION FORCE
- CT = 6 KIPS APPLIED BETWEEN 18" AND 27"ABOVE CURB
- (IBC 2015 IMPACT FOR PARKING GARAGE USED IN LIEU OF HIGHWAY BRIDGE COLLISION)

TEMPERATURE PROVISION
- CONCRETE GIRDER WITH CONCRETE DECK: 10 OF TO 105 OF
- SINGLE-BAY MOVEMENT = ¼"
- TOTAL BRIDGE LENGTH MOVEMENT – 1 ½"

WIND LOADS
- RISK CATEGORY II
- WIND PRESSURE PER AASHTO CRTIERIA
- WS – DIRECT TO SUPERSTRUCTURE = 40 PSF
- WL – WIND ON VEHICLE = 100 PLF ACTING 6 FT ABOVE DECK SURFACE

SEISMIC CRITERIA
- MAP INTERPOLATION FROM USGS COMPUTER PROGRAM
- LATITUDE = 39.2136; LONGITUDE = –76.8757
- PGA FOR 1000 YEAR HAZARD CURVE = 0.041
- SITE CLASS C
- SDS = 0.129
- SD1 = 0.057 < 0.15 AASHTO SEISMIC ZONE 1
- AS = FPGA PGA = 1.2 X 0.041 = 0.0492 < 0.05
  - HORIZONTAL DESIGN CONNECTION FORCE = 0.15PD + PL
  - GENERAL SEISMIC ANALYSIS IS NOT REQUIRED.
- SEISMIC FORCE-RESISTING SYSTEM: SINGLE CANTILEVERED COLUMNS
  - R = 3.0 (CLASSIFICATION "OTHER")
  - CONNECTION DESIGN R = 0.8
    - 0.15PD/0.8 = 14.0 KIPS ADDED TO TIE FORCE
    - 28.0 KIPS TOTAL LONGITUDINAL

FATIGUE FACTOR
- NOT APPLIED AS THE BRIDGE WILL NOT BE USED FOR REGULAR TRUCK TRAFFIC

CONCRETE MIX

1. PROVIDE CONCRETE HAVING THE FOLLOWING GENERAL CHARACTERISTICS:

USAGE	28 DAY COMP. STRENGTH, PSI	MAX AGG. SIZE, IN.
TOPPING & CURB	5000	3/4
PRECAST	6000	1

2. PROVIDE 5 PERCENT (+/– 1 1/2 PERCENT) AIR ENTRAINMENT IN CONCRETE. USE OF AIR ENTRAINMENT, AND CORRESPONDING REDUCTION OF THE W/C RATIO, MUST BE NOTED ON THE MIX OPTION.

3. USE OF ACCELERATION OR RETARDING ADMIXTURES REQUIRES PRIOR APPROVAL OF THE ENGINEER. THE USE OF CALCIUM CHLORIDE WILL NOT BE PERMITTED.

4. MAXIMUM WATER/CEMENT RATIO = 0.45 FOR COLUMNS, AND SPANDREL BEAMS. IT SHALL BE 0.40 FOR DOUBLE TEES.

5. CONCRETE SHALL NOT BE IN CONTACT WITH ALUMINUM.

6. AGGREGATES SHALL CONFORM TO ASTM C33, NORMAL WEIGHT.

7. AGGREGATES SHALL NOT CONTAIN ANY MATERIALS THAT ARE DELETERIOUSLY REACTIVE WITH ALKALIES IN THE CEMENT IN AN AMOUNT SUFFICIENT TO CAUSE EXCESSIVE EXPANSION.

8. CONCRETE SHALL NOT BE CURED AT A TEMPERATURE EXCEEDING 160 DEG. F. NO HEAT SHALL BE APPLIED TO CONCRETE PRIOR TO INITIAL SET.

CAST-IN-PLACE CONCRETE

1. ALL CONCRETE WORK SHALL CONFORM TO THE REQUIREMENTS OF ACI 301–10 SPECIFICATIONS FOR STRUCTURAL CONCRETE FOR BUILDINGS, EXCEPT AS SPECIFICALLY MODIFIED IN THE NOTES OR SPECIFICATIONS, AND THE ACI STANDARD "BUILDING CODE REQUIREMENTS FOR REINFORCED CONCRETE" (ACI 318–08).

2. REINFORCING STEEL SHALL BE NEW DOMESTIC DEFORMED BILLET STEEL CONFORMING TO ASTM A–615, GRADE 60. ALL REINFORCEMENT IN THE CAST-IN-PLACE DECK SLAB AND CURBS SHALL BE EPOXY COATED.

4. DETAIL REINFORCING BARS AND PROVIDE BAR SUPPORTS AND SPACERS IN ACCORDANCE WITH THE LATEST EDITION OF ACI 315., "MANUAL OF STANDARD PRACTICE FOR DETAILING REINFORCED CONCRETE STRUCTURES." WHERE HOOKS ARE INDICATED, USE STANDARD HOOKS IN ACCORDANCE WITH TABLE 1, UNLESS NOTED OTHERWISE. BAR SUPPORTS OR OTHER ACCESSORIES IN CONTACT WITH EXPOSED SURFACES SHALL BE PLASTIC TIPPED.

5. PROVIDE CLEAR COVER FOR REINFORCING AS FOLLOWS UNLESS NOTED OTHERWISE:

ELEVATED SLABS	1" BOTTOM 2" TOP

6. ADDITIONAL BARS SHALL BE PROVIDED AROUND ALL FLOOR OPENINGS. OPENINGS IN FLOOR SLABS SHALL BE REINFORCED WITH A MINIMUM OF ONE #5 BARS ON EACH FACE OF THE OPENING. THESE BARS SHALL BE EXTENDED TO DEVELOP THE BAR BEYOND THE CORNERS OF THE OPENING, BUT NOT LESS THAN 24".

11. WHERE CAST-IN-PLACE CONCRETE CURBS OR DECK SLABS CROSS PRECAST CONCRETE JOINTS, A JOINT SHALL BE TOOLED IN THE CAST-IN-PLACE TOP SURFACE.

BLUE RIDGE DESIGN, INC.
3 W. PICCADILLY STREET, 3RD FLOOR, WINCHESTER, VA 22601
540-723-0900

PRECAST/PRESTRESSED CONCRETE FOR ACCESS BRIDGE

1. IT IS THE INTENT OF THESE DRAWINGS TO PROVIDE THE DESIGN OF THE PRECAST/PRESTRESSED CONCRETE BRIDGE SYSTEM. REGIONAL VARIATIONS IN FORMS, STANDARD HARDWARE AND METHODS OF FABRICATION HAVE BEEN CONSIDERED IN AN EFFORT TO PROVIDE A GENERAL DESIGN THAT CAN BE EXECUTED BY QUALIFIED PCI CERTIFIED PLANTS. THE DESIGN REPRESENTED SHOULD BE CONSIDERED THE MINIMUM REQUIREMENTS FOR ANY PRECAST CONCRETE MANUFACTURER WHO WISHES TO PROVIDE ALTERNATIVE DESIGN. THE DESIGN OF ANY PROPOSED ALTERNATIVE MUST SATISFY ALL REQUIREMENTS OF THE AASHTO LRFD SPECIFICATION AS WELL AS THE REQUIREMENTS OF IBC 2015. CALCULATIONS AND DRAWINGS OF ANY PROPOSED ALTERNATIVE DESIGN. THAT DESIGN SHALL BE PREPARED BY AN ENGINEER LICENSED IN THE COMMONWEALTH OF MASSACHUSETTS AND SUBMITTED FOR REVIEW AND APPROVAL BY THE STRUCTURAL ENGINEER OF RECORD.

2. THE FLOOR FRAMING OF THE BRIDGE DECK LATERAL FORCE RESISTANCE SYSTEM IS FORMED WITH 40 INCH DEEP PRECAST/PRESTRESSED CONCRETE DOUBLE TEES. THREE ALTERNATIVE SECTIONS HAVE BEEN PROVIDED THAT USE THE FORM DIMENSIONS IDENTIFIED AS AVAILABLE FROM REGIONAL MANUFACTURERS. ALTERNATIVE 40 INCH DEEP DOUBLE TEES MAY BE PERMITTED PROVIDED THE MANUFACTURER PROVIDES CALCULATIONS THAT DEMONSTRATE THAT THE ALTERNATIVE SECTION PROVIDES STRENGTH, SERVICEABILITY AND DURABILITY EQUIVALENT TO THE SECTIONS SHOWN IN THESE DRAWINGS.

THE DOUBLE TEES ARE DESIGNED TO BE COMPOSITE WITH THE CAST-IN-PLACE DECK SLAB. THE TOP SURFACE OF THE FLANGES SHALL BE INTENTIONALLY ROUGHENED TO AN AMPLITUDE OF 1/4" TO INSURE FULL BOND BETWEEN PRECAST AND CAST-IN-PLACE TOPPING.

3. ALL CONCRETE WORK SHALL CONFORM TO THE REQUIREMENTS OF ACI 301–10, SPECIFICATIONS FOR STRUCTURAL CONCRETE FOR BUILDINGS, EXCEPT AS SPECIFICALLY MODIFIED IN THE NOTES OR SPECIFICATIONS, AND THE ACI STANDARD "BUILDING CODE REQUIREMENTS FOR REINFORCED CONCRETE" (ACI 318–14).

4. PRECAST CONNECTION DETAILS ARE SHOWN TO CONVEY THE DETAILED INTENT OF THE DESIGN. THE PRECAST SUBCONTRACTOR MAY NOT SUBSTITUTE ALTERNATE DETAILS EXCEPT AS APPROVED BY THE STRUCTURAL ENGINEER OF RECORD. ANY SUBSTITUTION SUBMITTED SHALL IN ALL WAYS PROVIDE EQUIVALENT BEHAVIOR IN STRENGTH, VOLUME CHANGE MOVEMENT, STRUCTURAL INTEGRITY, AND MAINTENANCE REQUIREMENTS.

5. UNLESS SHOWN OTHERWISE, ALL PRECAST CONCRETE TO PRECAST CONCRETE BEARINGS SHALL BE REINFORCED WITH STEEL BEARING PLATES NOT LESS THAN 3/8" THICK ON AT LEAST ONE SIDE OF THE BEARING.

6. FLANGE-TOFLANGE CONNECTIONS ARE SHOWN TO PROVIDE FOR ERECTION STABILITY AND FOR A SMALL DEGREE OF REDUNDANCY IN THE FLOOR DIAPHRAGM. HARDWARE AND WELDING OF THESE CONNECTIONS ARE PERMITTED TO FOLLOW THE CONNECTION STANDARDS OF THE MANUFACTURER FOR FLANGE CONNECTIONS BETWEEN TOPPED DOUBLE TEE FLANGES.

7. REINFORCING STEEL SHALL BE NEW DOMESTIC DEFORMED BILLET STEEL CONFORMING TO ASTM A–615, GRADE 60, EXCEPT THAT WELDED REINFORCEMENT SHALL BE ASTM A706, GRADE 60.

8. DETAIL REINFORCING BARS AND PROVIDE BAR SUPPORTS AND SPACERS IN ACCORDANCE WITH ACI 315, "MANUAL OF STANDARD PRACTICE FOR DETAILING REINFORCED CONCRETE STRUCTURES." WHERE HOOKS ARE INDICATED, USE STANDARD HOOKS IN ACCORDANCE WITH TABLE 1, UNLESS NOTED OTHERWISE. BAR SUPPORTS OR OTHER ACCESSORIES IN CONTACT WITH EXPOSED SURFACES SHALL BE PLASTIC TIPPED.

9. UNLESS OTHERWISE NOTED, FLANGES OF DOUBLE TEES SHALL HAVE A MINIMUM REINFORCING OF 12X4 W2.5/W4 WELDED WIRE FABRIC. THE MANUFACTURER MAY SUBSTITUTE ALTERNATIVE REINFORCEMENT IN ACCORDANCE WITH THEIR STANDARD PROVIDED THE FLANGES HAVE SUFFICIENT STRENGTH TO SUPPORT THE WEIGHT OF THE WET CONCRETE OF THE DECK SLAB DURING PLACEMENT.

10. ALL GROUT USED UNDER COLUMN BASES OR IN CONNECTIONS OF PRECAST CONCRETE COMPONENTS SHALL BE OF NON-SHRINK TYPE AND SHALL HAVE A MINIMUM COMPRESSIVE STRENGTH OF 6000 PSI. THE SHEAR AND BOND STRENGTH OF THIS GROUT SHALL BE HIGHER THAN THE PARENT CONCRETE COMPONENTS.

11. THE PRECAST CONCRETE CONTRACTOR SHALL INVESTIGATE THE HANDLING AND SHIPPING STRESSES OF ALL PRECAST MEMBERS AND SHALL PROVIDE THE NECESSARY ADDITIONAL REINFORCEMENT WHERE REQUIRED. THE PRECAST CONCRETE CONTRACTOR SHALL LOCATE, SIZE AND DETAIL PICK-UPS AND STRIPPING INSERTS FOR ALL PRECAST MEMBERS. THIS INFORMATION SHALL BE SHOWN ON THE PRECAST CONCRETE COMPONENT SHOP DRAWINGS.

12. FINISHES FOR THE INTERIOR VERTICAL SURFACES OF PRECAST SPANDREL BEAMS SHALL BE A LIGHT BROOM FINISH APPLIED AFTER FLOAT AND/OR TROWEL MARKS HAVE BEEN REMOVED BY TROWELING. THE TOP OF THE SPANDREL RAIL SHALL SLOPE BACK INTO THE DECK. THE SOFFIT SHALL HAVE A DRIP CAST IN. TOP AND SOFFIT SHALL BE RUBBED. THE OUTSIDE FACE OF THE SPANDREL BEAM SHALL RECEIVE THE SAME TREATMENT AND FINISH AS APPLIED TO THE GARAGE SPANDREL BEAMS

13. STEEL CONNECTION EMBEDMENTS IN THE PRECAST CONCRETE SHALL BE PROTECTED BY HOT-DIPPED GALVANIZING OR A COMMERCIAL ANTI-CORROSION PLATING PROCESS DEMONSTRATED TO HAVE DURABILITY EQUAL TO OR BETTER THAN HOT-DIPPED GALVANIZING.

14. CAST-IN-PLACE FOUNDATION CONCRETE SHALL HAVE A MINIMUM STRENGTH OF 2,500 PSI PRIOR TO ERECTION OF PRECAST THAT BEARS ON IT.

APPROVED: Howard County Department of Planning & Zoning

Director	Date 3-15-16
Chief, Division of Land Development	Date 3-14-16
Chief, Development Engineering Division	Date 2-12-16

DESMAN ASSOCIATES

KCI TECHNOLOGIES
ENGINEERS PLANNERS SCIENTISTS CONSTRUCTION MANAGERS
936 Ridgebrook Road
Sparks, MD 21152
Phone (410)316-7800
Fax (410)316-7853
www.kci.com

HOWARD COMMUNITY COLLEGE
EAST PARKING GARAGE NO. 2, PARCEL B & ACCESS BRIDGE, LOT A-2 TOWN CENTER 3/3
COLUMBIA, MD
PARCEL B/ PLAT NO 19049 &
NON-CREDITED OPEN SPACE LOT A-2, TC, 3/3 PLAT NO. 23152
TAX MAP: 35, BLOCK: 6,
FIFTH ELECTION DISTRICT, ZONING: POR & NEW TOWN

PROFESSIONAL CERTIFICATION. I HEREBY CERTIFY THAT THESE DOCUMENTS WERE PREPARED OR APPROVED BY ME, AND THAT I AM A DULY LICENSED PROFESSIONAL ENGINEER UNDER THE LAWS OF THE STATE OF MARYLAND, LICENSE NO. 11760 EXPIRATION DATE: 12/20/2017

ISSUE

NO.	DESCRIPTION	DATE

DRAWING TITLE:
STRUCTURAL NOTES

DRAWING NO.
BR1.00
SHEET 22 OF 35

SCALE: AS NOTED
DATE: JANUARY 8, 2016
PROJECT NO.
DES. / MC / BRD

Prepared For and Owner:
Howard Community College
10901 Little Patuxent Parkway
Columbia, Maryland
ATTN: Mr. Chuck Nig
410-772-4296

Copyright C 2014 Desman, Inc. All rights reserved. No part of these documents may be reproduced in any form or by any means without permission from Desman Inc.

SDP 16-003
[redacted]

BLUE RIDGE DESIGN, INC.
3 W. PICCADILLY STREET, 3RD FLOOR, WINCHESTER, VA 22601
540-723-0900

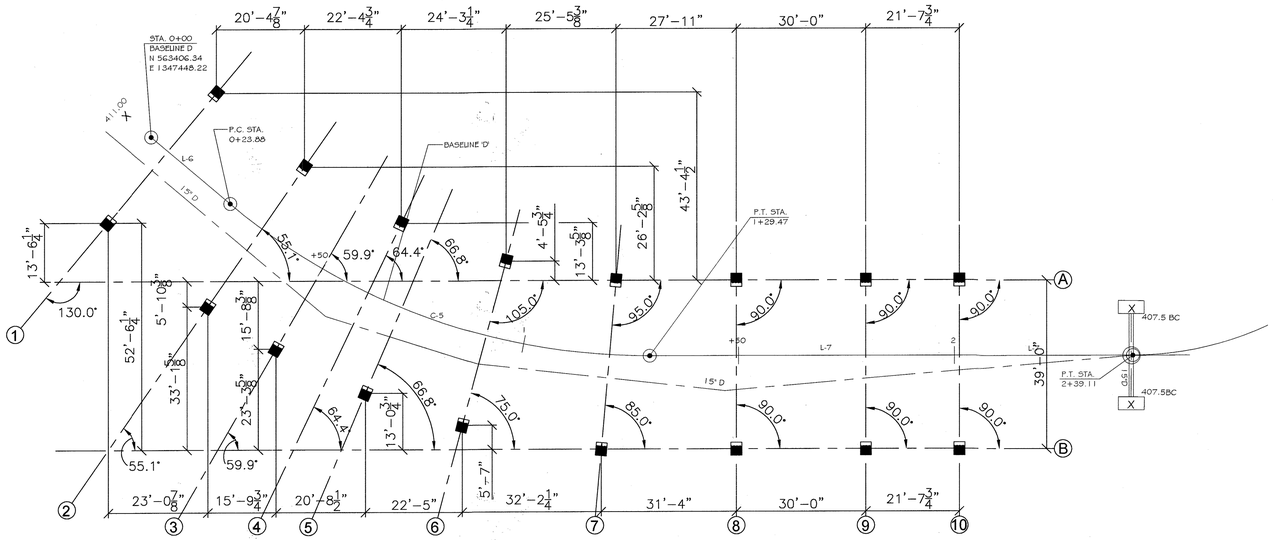

BRIDGE COLUMN GRID LAYOUT

SCALE: 1/16" = 1'-0"

30/36 = DIMENSIONS SHOWN ARE TO THE MIDDLE OF THE 30"x36" COLUMN

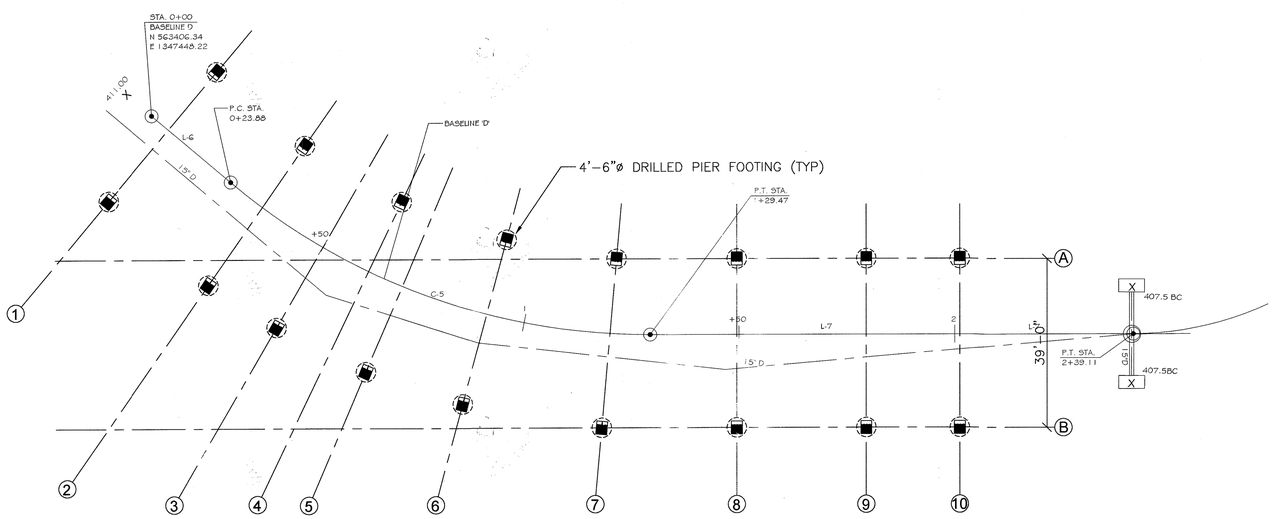

BRIDGE COLUMN FOUNDATION PLAN

SCALE: 1/16" = 1'-0"

4'-6" = DRILLED PIER FOOTINGS TO BE 5'-0"ø TYPICAL AND CENTERED UNDER THE 30"x36" COLUMN

APPROVED: Howard County Department of Planning & Zoning

Director	3-15-16 Date
Chief, Division of Land Development	3-14-16 Date
Chief, Development Engineering Division	2-12-16 Date

Prepared For and Owner
Howard Community College
10901 Little Patuxent Pkwy
Columbia, Maryland 21044
ATTN: Mr. Chuck Nigro
410-772-4296

Copyright © 2014 Desman, Inc. All rights reserved. These set of these documents may not be reproduced in any form or by any means without written permission from Desman Inc.

DESMAN ASSOCIATES

KCI TECHNOLOGIES
Engineers
Planners
Scientists
Construction Managers
936 Ridgebrook Road
Sparks, MD 21152
Phone (410) 316-7800
Fax (410) 316-7815
www.kci.com

HOWARD COMMUNITY COLLEGE
EAST PARKING GARAGE NO. 2, PARCEL B & ACCESS BRIDGE, LOT A-2 TOWN CENTER 3/3
COLUMBIA, MD
PARCEL 'B' PLAT NO. 18949 &
NON-CREDITED OPEN SPACE LOT A-2, TC, 3/3 PLAT NO. 23152
TAX MAP: 35, BLOCK: 6
FIFTH ELECTION DISTRICT, ZONING: POR & NEW TOWN

PROFESSIONAL CERTIFICATION
I HEREBY CERTIFY THAT THESE DOCUMENTS WERE PREPARED OR APPROVED BY ME, AND THAT I AM A DULY LICENSED PROFESSIONAL ENGINEER UNDER THE LAWS OF THE STATE OF MARYLAND, LICENSE NO. 11760 EXPIRATION DATE: 12/20/2017

ISSUE

NO.	DESCRIPTION	DATE

DRAWING TITLE
FOUNDATION PLAN

DRAWING NO.
BR2-10
SHEET 23 OF 35
SCALE
DATE
PROJECT NO.
DES.
NMC

6-003

BLUE RIDGE DESIGN, INC.
3 W. PICCADILLY STREET, 3RD FLOOR, WINCHESTER, VA 22601
540-723-0900

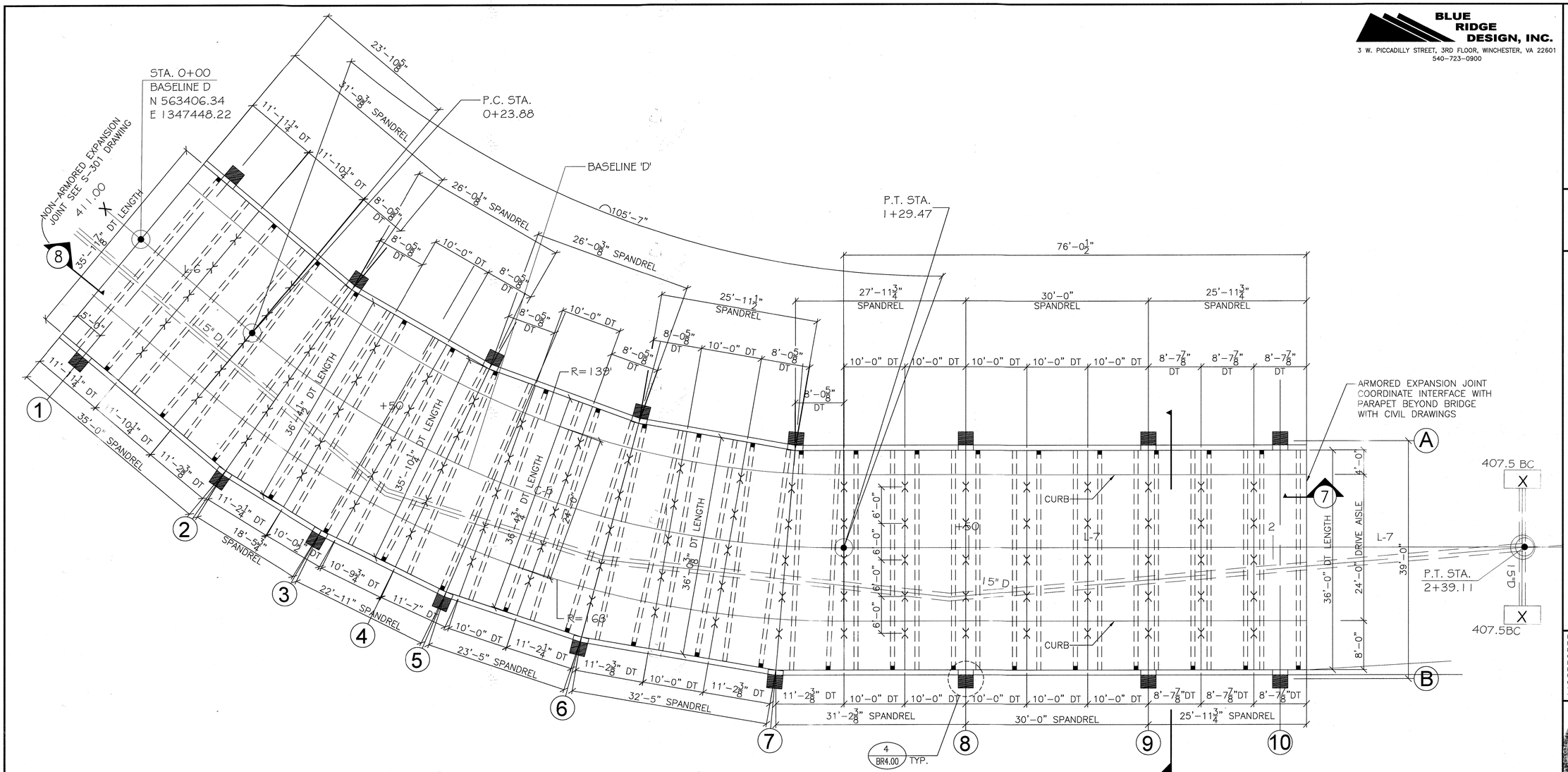

BRIDGE FRAMING PLAN

SCALE: 1/8" = 1'-0"

- DT = DOUBLE TEE
- SECTIONS SHOWN CAN BE FOUND ON BR4.00

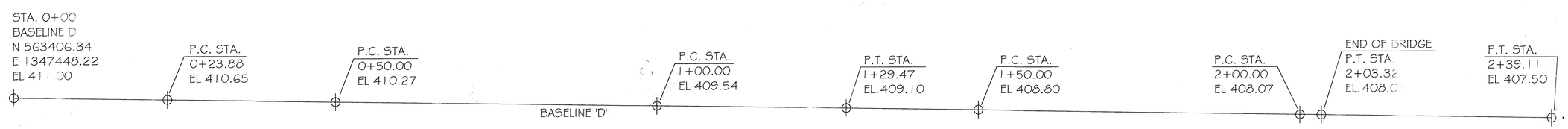

BRIDGE PROFILE

SCALE: 1/8" = 1'-0"

APPROVED: Howard County Department of Planning & Zoning

Director	3-15-16 Date
Chief, Division of Land Development	3-14-16 Date
Chief, Development Engineering Division	3-12-16 Date

Prepared For and Owner
Howard Community College
10901 Little Patuxent
Columbia, Maryland
ATTN: Mr. Chuck Nig
410-772-4296

Copyright © 2014 Desman, Inc. All rights reserved. No part of these documents may be reproduced in any form or by any means without permission from Desman Inc.

DESMAN ASSOCIATES

KCI TECHNOLOGIES
Engineers
Planners
Scientists
Construction Managers
9051 Deereco Road
Timonium, MD 21152
Phone (410) 561-7900
Fax (410) 561-7921
www.kci.com

HOWARD COMMUNITY COLLEGE
EAST PARKING GARAGE NO. 2, PARCEL B & ACCESS BRIDGE, LOT A-2 TOWN CENTER 3/5
COLUMBIA, MD
PARCEL B PLAT NO. 19049 &
NON-CREDITED OPEN SPACE LOT A-2, TC-3/5 PLAT NO. 23152
TAX MAP: 36, BLOCK: 6,
FIFTH ELECTION DISTRICT, ZONING: FOR & NEW TOWN

PROFESSIONAL CERTIFICATION. I HEREBY CERTIFY THAT THESE DOCUMENTS WERE PREPARED OR APPROVED BY ME, AND THAT I AM A DULY LICENSED PROFESSIONAL ENGINEER UNDER THE LAWS OF THE STATE OF MARYLAND, LICENSE NO. 11760 EXPIRATION DATE: 12/20/2017

ISSUE

NO.	DESCRIPTION	DATE

DRAWING TITLE: FRAMING PLAN

DRAWING NO. BR3.00

SHEET	24 OF 35
SCALE	AS NOTED
DATE	JANUARY 8, 2015
PROJECT	27146550
DRAWN	CK'D
	BRD

16-003

BLUE RIDGE DESIGN, INC.
3 W. PICCADILLY STREET, 3RD FLOOR, WINCHESTER, VA 22601
540-723-0900

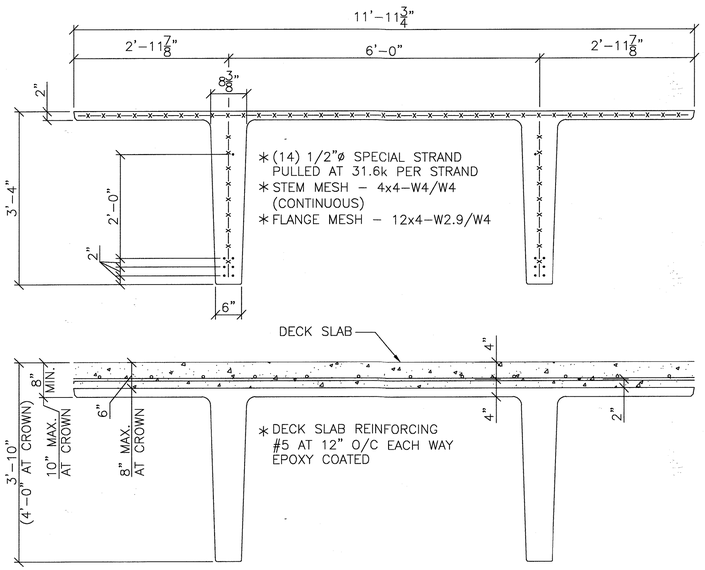

1 BR4.00 OPTION 1
SCALE: 3/4" = 1'-0"

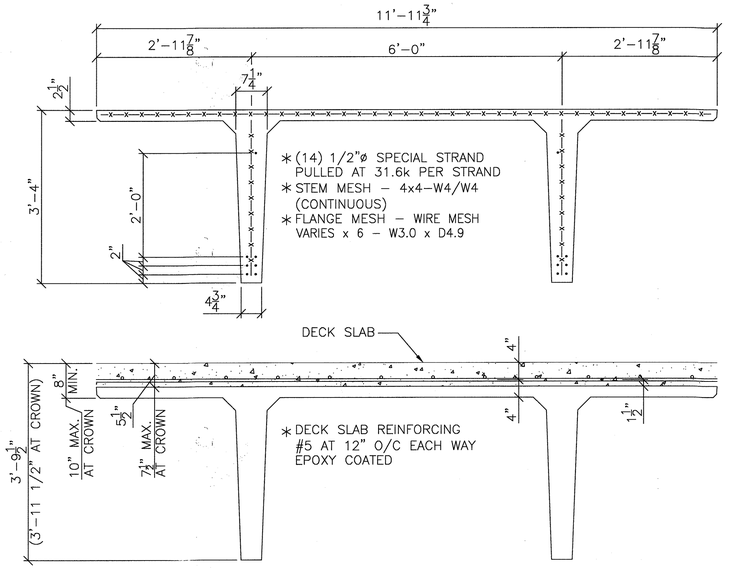

2 BR4.00 OPTION 2
SCALE: 3/4" = 1'-0"

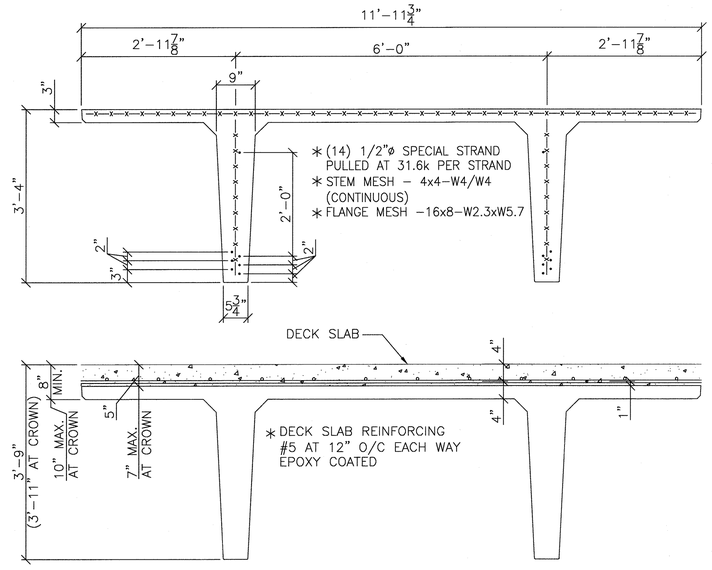

3 BR4.00 OPTION 3
SCALE: 3/4" = 1'-0"

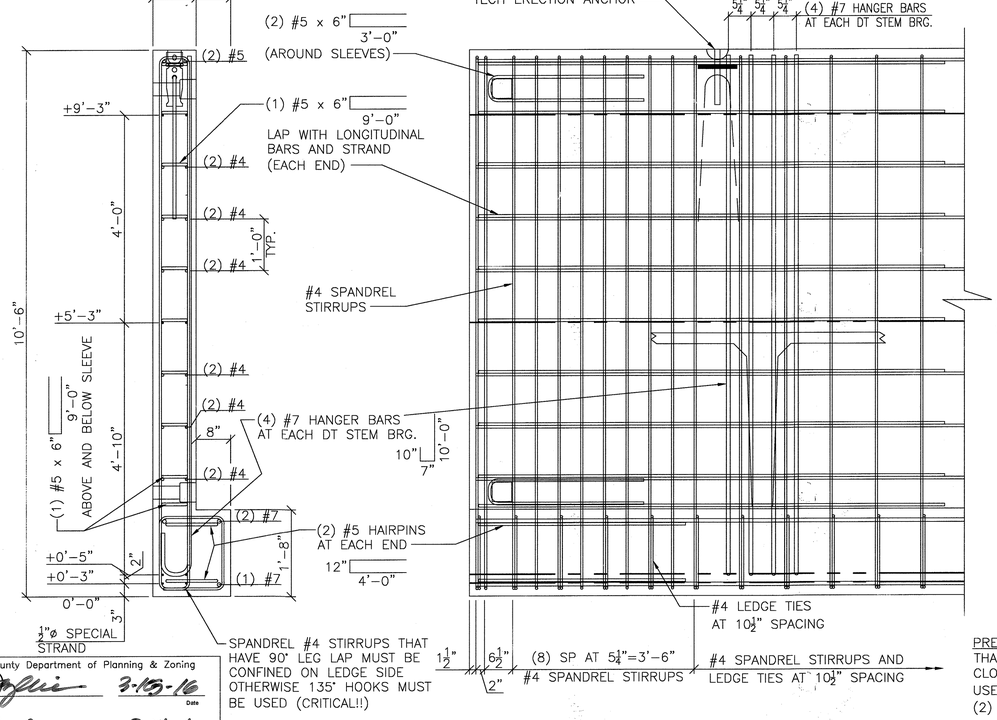

SIMPLE SPAN SPANDREL
SCALE: 3/4" = 1'-0"

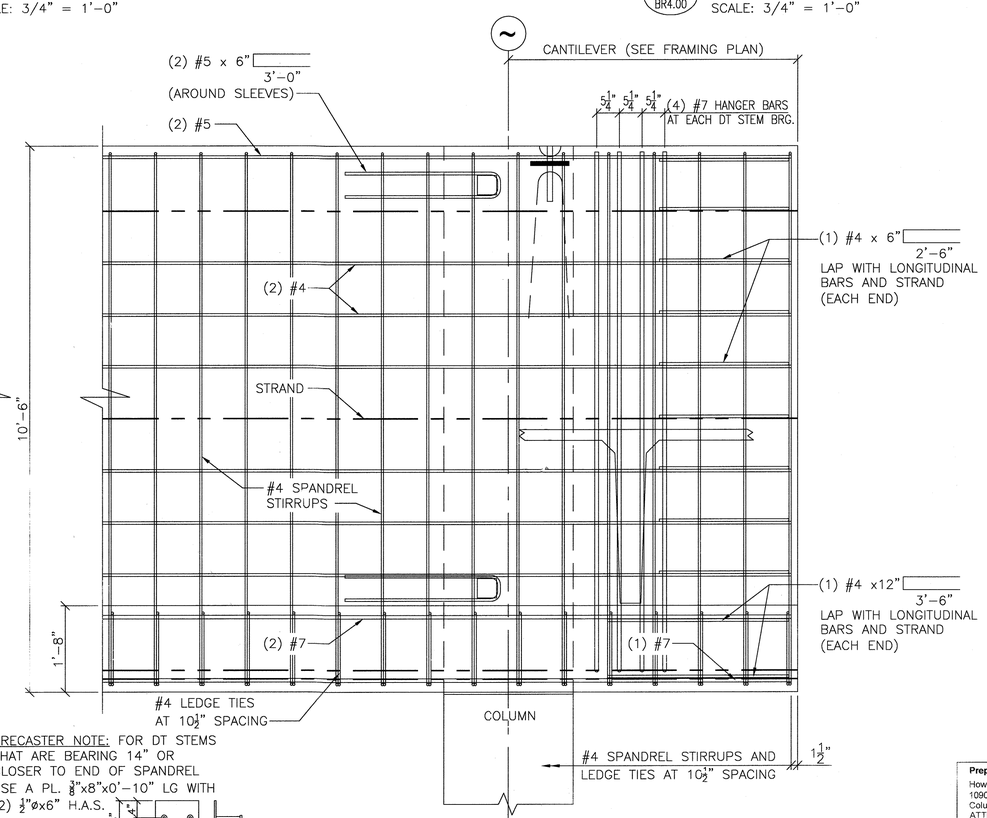

PRECASTER NOTE: FOR DT STEMS THAT ARE BEARING 14" OR CLOSER TO END OF SPANDREL USE A PL. ⅜"x8"x0'-10" LG WITH (2) ½"øx6" H.A.S.

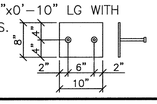

CANTILEVER SPANDREL
SCALE: 3/4" = 1'-0"

APPROVED: Howard County Department of Planning & Zoning

Director	3-15-16 Date
Chief, Division of Land Development	3-14-16 Date
Chief, Development Engineering Division	3-12-16 Date

Prepared For and Owned By
Howard Community College
10901 Little Patuxent Parkway
Columbia, Maryland 21044
ATTN: Mr. Chuck Nightingale
410-772-4296

Copyright © 2016 Desman, Inc. All rights reserved. This part of these documents may not be reproduced in any form or by any means without permission from Desman Inc.

DESMAN ASSOCIATES

KCI TECHNOLOGIES
Engineers Planners Scientists Construction Managers
530 Gilmore Avenue, Bend
Annapolis, MD 21401
Phone (410)216-7900
Fax (410)216-7953
www.kci.com

HOWARD COMMUNITY COLLEGE
EAST PARKING GARAGE NO. 2, PARCEL B & ACCESS BRIDGE, LOT A-2 TOWN CENTER, 3/3
COLUMBIA, MD
PARCEL B/ PLAT NO. 19248 &
NON-CREDITED OPEN SPACE LOT A-2, TC; 3/3 PLAT NO. 23152
TAX MAP: 36, BLOCK 6,
FIFTH ELECTION DISTRICT, ZONING: POR & NEW TOWN

PROFESSIONAL CERTIFICATION. I HEREBY CERTIFY THAT THESE DOCUMENTS WERE PREPARED OR APPROVED BY ME, AND THAT I AM A DULY LICENSED PROFESSIONAL ENGINEER UNDER THE LAWS OF THE STATE OF MARYLAND, LICENSE NO. 11760 EXPIRATION DATE: 12/20/2017.

STATE OF MARYLAND NEIL M. CLELAND No. 11760 PROFESSIONAL ENGINEER

ISSUE

NO.	DESCRIPTION	DATE

DRAWING TITLE:
SECTIONS AND DETAILS

DRAWING NO.
BR4.00

SHEET	5 OF 5
SCALE:	NOTED
DATE:	2016
PROJECT NO.	50
DES. NMC	DR. BR.

SDP 16-

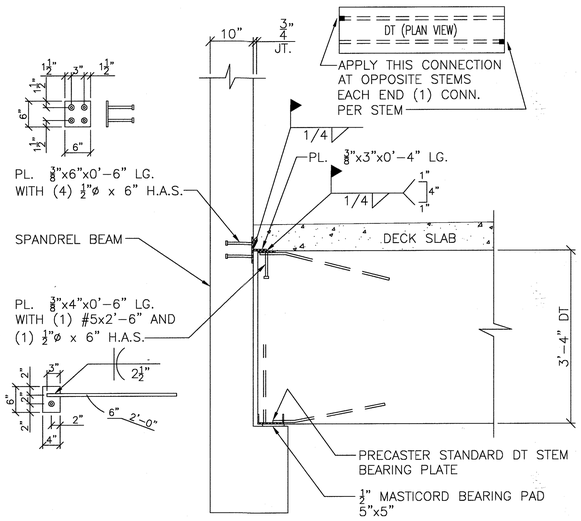

DT TO SPANDREL CONNECTION

SCALE: 3/4" = 1'-0"

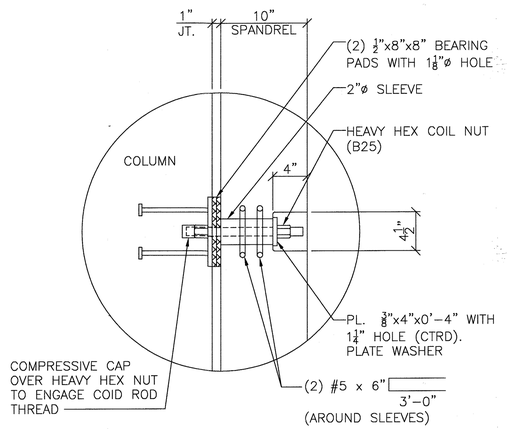

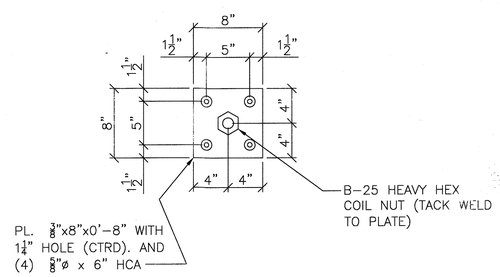

SPANDREL TO COLUMN CONNECTION

SCALE: 1 1/2" = 1'-0"

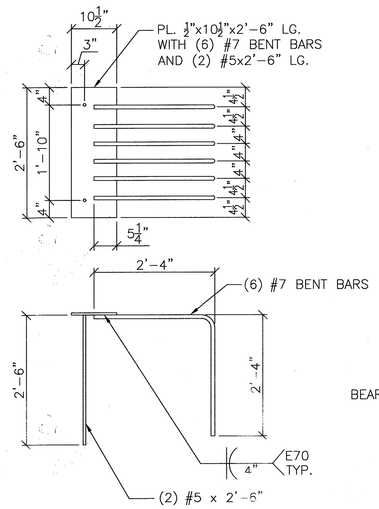

BEARING PLATE

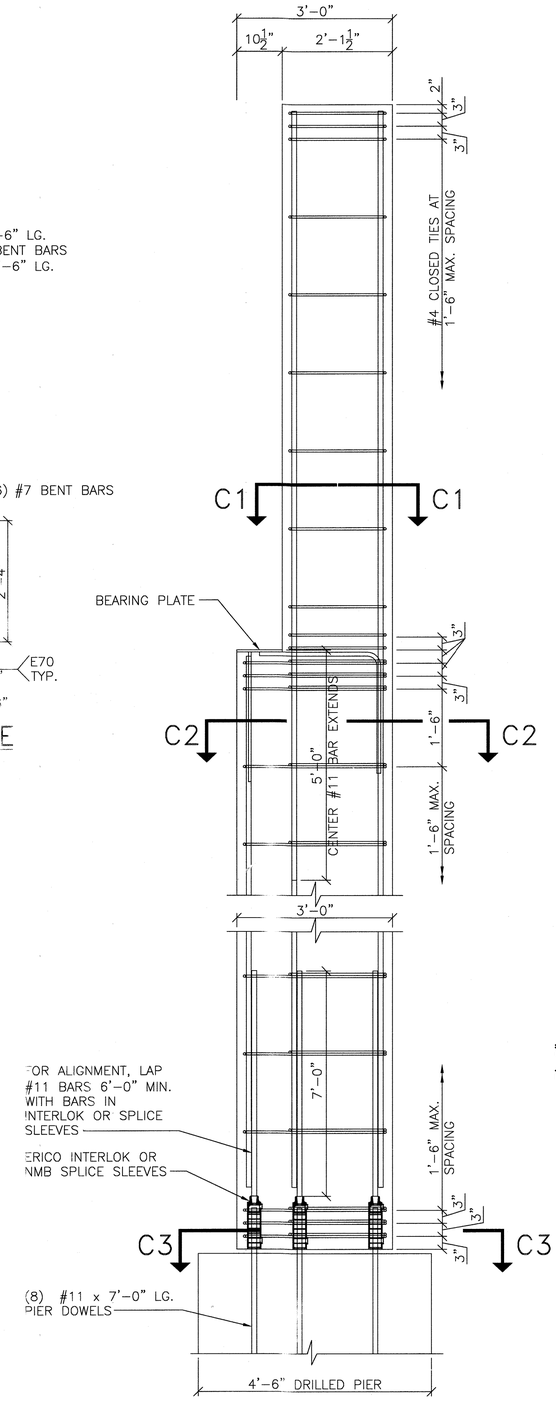

COLUMN REINFORCING

SCALE 3/4" = 1'-0"

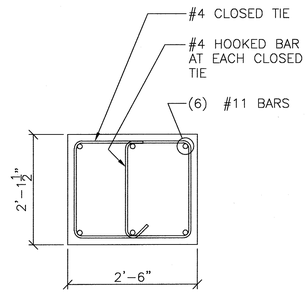

SECTION C1

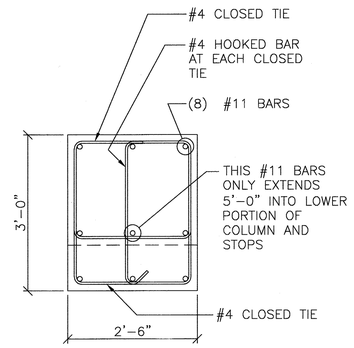

SECTION C2

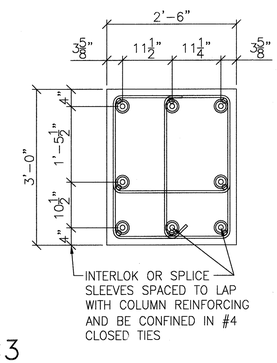

SECTION C3

APPROVED: Howard County Department of Planning & Zoning

Director	Date 3-16-16
Chief, Division of Land Development	Date 3-14-16
Chief, Development Engineering Division	Date 2-17-16

Prepared For and Owner:
Howard Community College
10901 Little Patuxent Parkway
Columbia, Maryland 21044
ATTN: Mr. Chuck Nightingale
410-772-4296

Copyright © 2016 Blue Ridge Design, Inc. All rights reserved. No part of this document may be reproduced in any form or by any means without permission from Blue Ridge Design, Inc.

BLUE RIDGE DESIGN, INC.
3 W. PICCADILLY STREET, 3RD FLOOR, WINCHESTER, VA 22601
540-723-0900

DESMAN ASSOCIATES

KCI TECHNOLOGIES
Engineers
Planners
Scientists
Construction Managers
9051 Rickenbacker Road
Laurel, MD 20723
Phone (410)381-7900
Fax (410)381-7953
www.kci.com

HOWARD COMMUNITY COLLEGE
EAST PARKING GARAGE NO. 2, PARCEL B & ACCESS BRIDGE, LOT A-2 TOWNCENTER 3/5
COLUMBIA, MD
PARCEL B PLAT NO. 13046 &
NON-CREDITED OPEN SPACE LOT A-2, TC, 3/5 PLAT NO. 23152
TAX MAP: 35, BLOCK: 6,
FIFTH ELECTION DISTRICT, ZONING: FOR & NEW TOWN

PROFESSIONAL CERTIFICATION. I HEREBY CERTIFY THAT THESE DOCUMENTS WERE PREPARED OR APPROVED BY ME, AND THAT I AM A DULY LICENSED PROFESSIONAL ENGINEER UNDER THE LAWS OF THE STATE OF MARYLAND, LICENSE NO. 17760 EXPIRATION DATE 12/20/2017

ISSUE

NO.	DESCRIPTION	DATE

DRAWING TITLE:
SECTIONS AND DETAILS

DRAWING NO.
BR4.10
SHEET: 26 OF 35

SCALE: AS NOTED
DATE: JANUARY 8, 2016
JOB NO.: 27146550
DRAWN: BRD
CK'D: BRD

PROJ. 16-003

BLUE RIDGE DESIGN, INC.
3 W. PICCADILLY STREET, 3RD FLOOR, WINCHESTER, VA 22601
540-723-0900

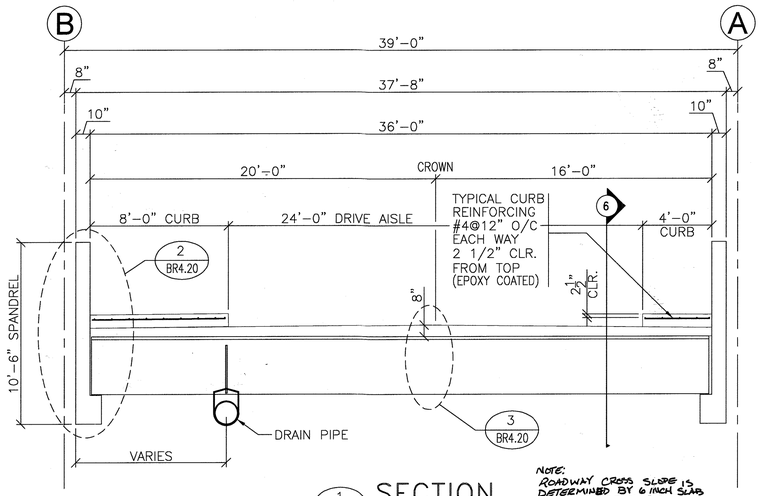

1 BR4.20 SECTION
SCALE: 1/4" = 1'-0"

NOTE:
ROADWAY CROSS SLOPE IS DETERMINED BY 6 INCH SLAB THICKNESS AT THE SPANDREL BEAMS AND 8 INCH SLAB THICKNESS AT THE CROWN POINT. SLAB THICKNESS WILL VARY WITH CAMBER IN THE DOUBLE TEE AND WITH THE FIT OF THE PRECAST DECK SURFACE TO THE HORIZ. CURVE

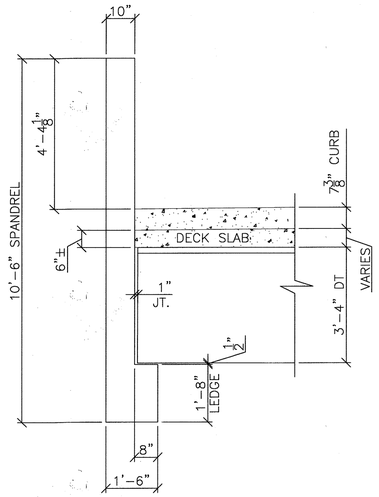

2 BR4.20 DETAIL
SCALE: 1/2" = 1'-0"

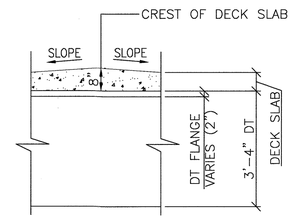

3 BR4.20 DETAIL
SCALE: 1/2" = 1'-0"

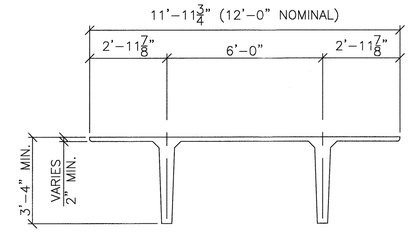

WIDTH AND FLANGE DEPTH OF DOUBLE TEE VARIES DEPENDING ON PRECAST MANUFACTURER.

DOUBLE TEE PROFILE
SCALE: 3/8" = 1'-0"

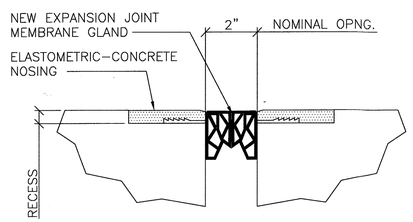

NON-ARMORED EXPANSION JT. AT PARKING GARAGE SIDE

FOR INFORMATION NOT SHOWN REFER TO DRAWING NO. S-301

7 BR4.20 SECTION
SCALE: N.T.S.

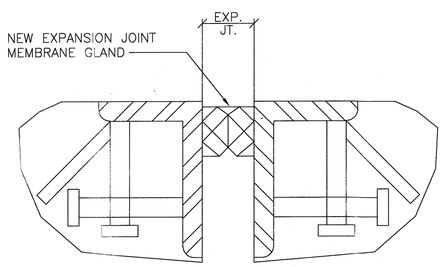

ARMORED EXPANSION JT. AT ROADWAY SIDE

FOR INFORMATION NOT SHOWN REFER TO CIVIL DRAWINGS

7 BR4.20 SECTION
SCALE: N.T.S.

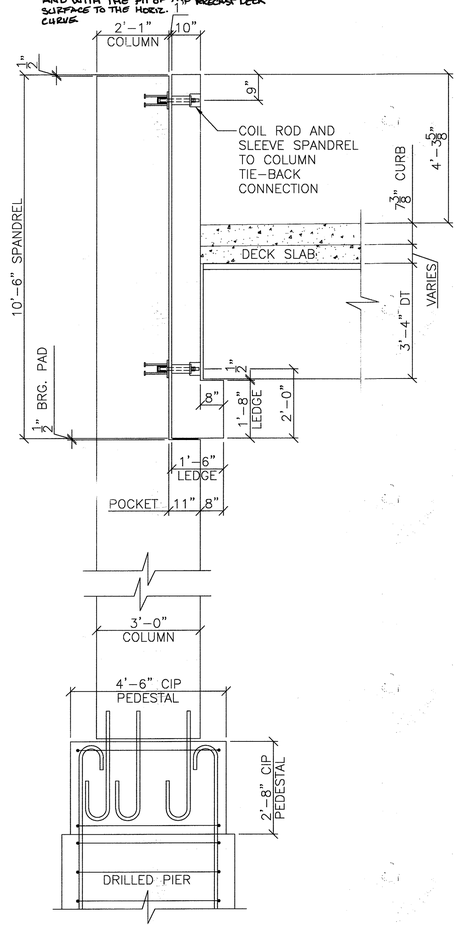

5 BR4.20 SECTION
SCALE: 1/2" = 1'-0"

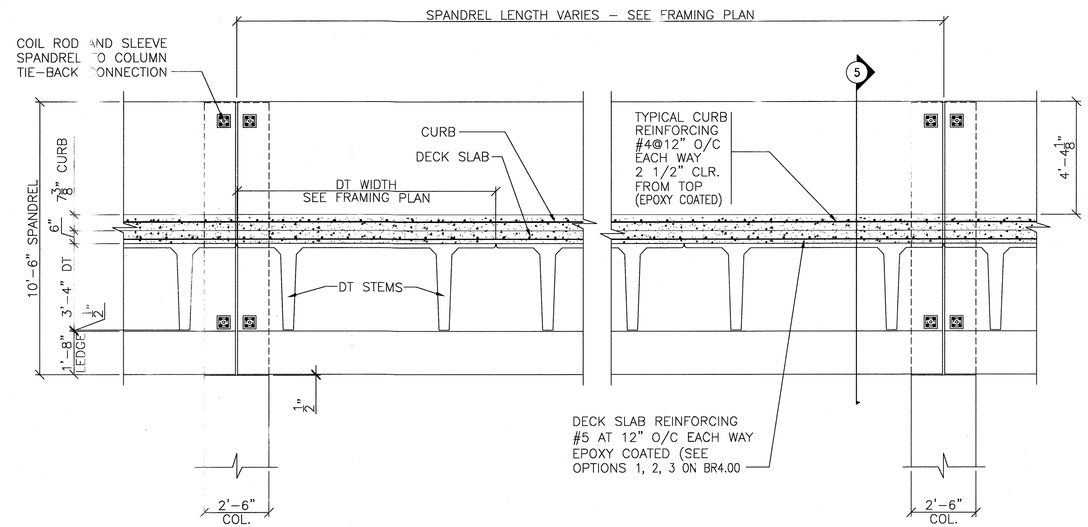

6 BR4.20 SECTION
SCALE: 3/8" = 1'-0"

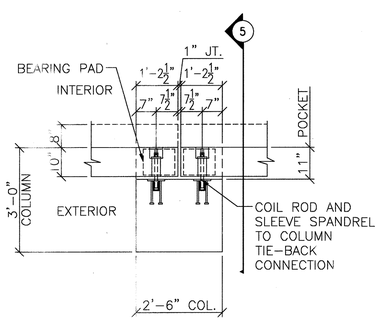

4 BR4.20 DETAIL
SCALE: 1/2" = 1'-0"

APPROVED: Howard County Department of Planning & Zoning

Director	3-15-16 Date
Chief, Division of Land Development	3-14-16 Date
Chief, Development Engineering Division	3-14-16 Date

Prepared For and Owner:
Howard Community College
10901 Little Patuxent Parkway
Columbia, Maryland 21044
ATTN: Mr. Chuck Nightingale
410-772-4296

Copyright © 2016 Desman, Inc. All rights reserved. These construction documents may be reproduced, distributed or transmitted by any means without permission of Desman Inc.

DESMAN ASSOCIATES

KCI TECHNOLOGIES
ENGINEERS
PLANNERS
SCIENTISTS
CONSTRUCTION MANAGERS
936 Ridgebrook Road
Sparks, MD 21152
Phone (410) 316-7800
Fax (410)316-7853
www.kci.com

HOWARD COMMUNITY COLLEGE
EAST PARKING GARAGE NO. 2, PARCEL B &
ACCESS BRIDGE, LOT A-2 TOWN CENTER, 36
COLUMBIA, MD
PARCEL B PLAT NO. 19808-B
NON-CREDITED OPEN SPACE LOT A-2, TC-36 PLAT NO. 23152
TAX MAP: 36, BLOCK: 6
FIFTH ELECTION DISTRICT ZONING: FOR & NEW TOWN

PROFESSIONAL CERTIFICATION. I HEREBY CERTIFY THAT THESE DOCUMENTS WERE PREPARED OR APPROVED BY ME, AND THAT I AM A DULY LICENSED PROFESSIONAL ENGINEER UNDER THE LAWS OF THE STATE OF MARYLAND. LICENSE NO. 11760 EXPIRATION DATE: 12/20/2017

ISSUE

NO.	DESCRIPTION	DATE

DRAWING TITLE:
SECTIONS AND DETAILS

DRAWING NO
BR4.20
SHEET: 27 OF 5
SCALE: AS NOTED
DATE: JANUARY 8, 2016
PROJECT NO: 27146550

DES.	DRWN.	CK'D.
	BRD	BRD

SDP 16-003

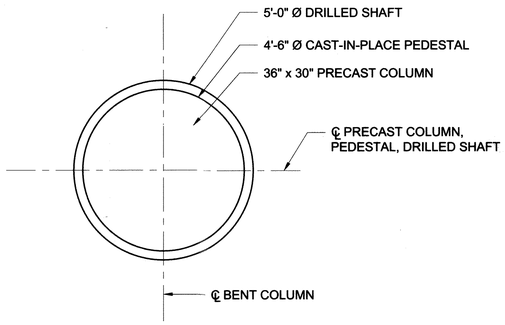

PLAN

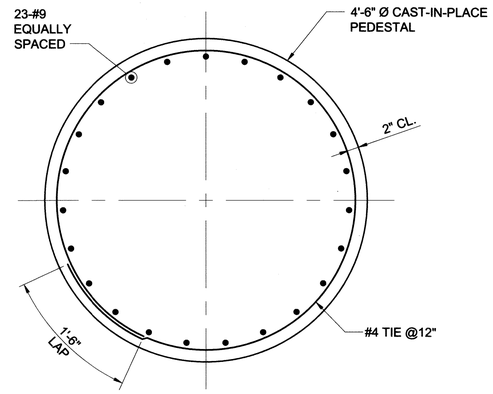

SECTION A–A
SCALE: 1" = 1'-0"

NOTE: PRECAST COLUMN DOWELS NOT SHOWN

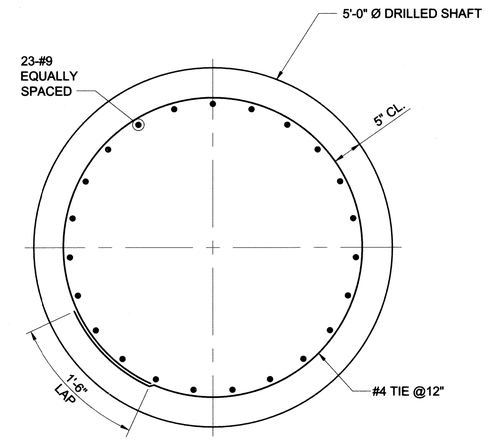

SECTION B–B
SCALE: 1" = 1'-0"

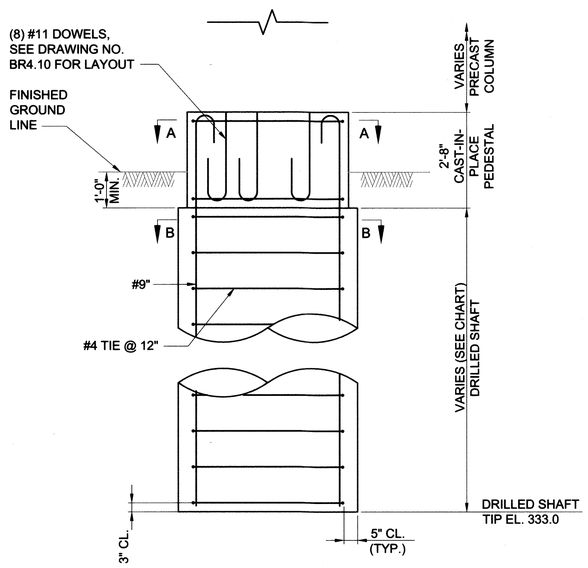

ELEVATION

5'–0" DIAMETER DRILLED SHAFT
SCALE: 1/2" = 1'-0"

DRILLED SHAFT INFORMATION			
BENT NO.	OFFSET	TOP OF DRILLED SHAFT ELEV.	EST. DRILLED SHAFT TIP ELEV.
1	L	392.0	333.0
1	R	391.6	333.0
2	L	390.6	333.0
2	R	390.5	333.0
3	R	389.7	333.0
4	L	390.0	333.0
5	R	389.2	333.0
6	L	390.0	333.0
6	R	388.9	333.0
7	L	390.5	333.0
7	R	389.7	333.0
8	L	392.0	333.0
8	R	391.0	333.0
9	L	395.0	333.0
9	R	394.0	333.0
10	L	396.0	333.0
10	R	396.5	333.0

APPROVED: Howard County Department of Planning & Zoning

Director	3-15-16 Date
Chief, Division of Land Development	3-14-16 Date
Chief, Development Engineering Division	2-12-16 Date

CONTRACTOR NOTE:
CONTRACTOR SHALL EXERCISE EXTREME CAUTION SO AS NOT TO DAMAGE ANY EXISTING PAVING, CURB & GUTTER, SIDEWALK OR OTHER SITE FEATURES WHICH ARE TO REMAIN. SHOULD DAMAGE OCCUR, CONTRACTOR SHALL REPAIR TO ORIGINAL CONDITION AT CONTRACTOR'S EXPENSE.

Prepared For and Owner:
Howard Community College
10901 Little Patuxent Parkway
Columbia, Maryland 21044
ATTN: Mr. Chuck Nightingale
410-772-4296

DESMAN ASSOCIATES

KCI TECHNOLOGIES
Engineers
Planners
Scientists
Construction Managers
936 Ridgebrook Road
Sparks, MD 21152
Phone (410) 472-2580
Fax (410) 472-2583
www.kci.com

HOWARD COMMUNITY COLLEGE
EAST PARKING GARAGE NO. 2, PARCEL B &
ACCESS BRIDGE, LOT A-2 TOWN CENTER, 3/3
COLUMBIA, MD
PARCEL B/ PLAT NO. 19049 &
NON-CREDITED OPEN SPACE LOT A-2, 3/3 PLAT NO. 23152
TAX MAP: 35, BLOCK: 6, PARCEL: 16
FIFTH ELECTION DISTRICT, ZONING: POR & NEW TOWN

PROFESSIONAL CERTIFICATION. I HEREBY CERTIFY THAT THESE DOCUMENTS WERE PREPARED OR APPROVED BY ME, AND THAT I AM A DULY LICENSED PROFESSIONAL ENGINEER UNDER THE LAWS OF THE STATE OF MARYLAND, LICENSE NO. 15554 EXPIRATION DATE: 10/06/17

ISSUE		
NO.	DESCRIPTION	DATE

DRAWING TITLE:
BRIDGE DRILLED SHAFT DETAILS

DRAWING NO.
BR5.00
SHEET: 28 OF 36

SCALE: AS SHOWN
DATE: JANUARY 8, 2016
PROJECT NO: 27146550

DES.	DRWN.	CK'D.
H.M.K.	J.L.S.	R.D.L.

SDP 16-003

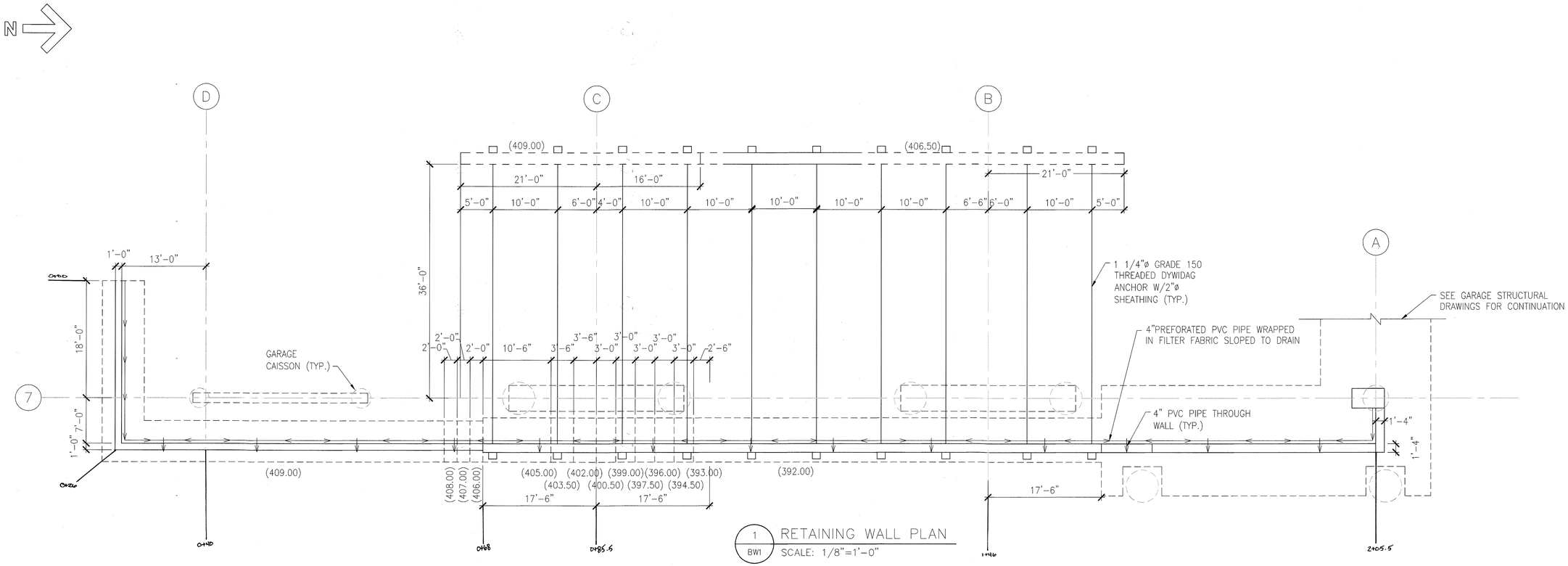

1 BW1 RETAINING WALL PLAN
SCALE: 1/8"=1'-0"

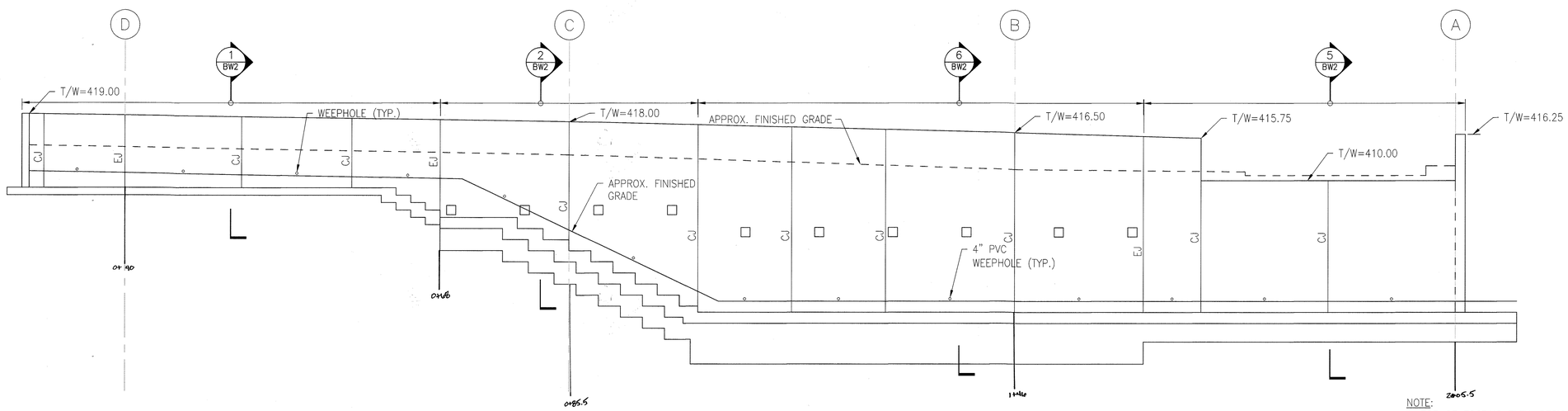

2 BW1 RETAINING WALL ELEVATION
SCALE: 1/8"=1'-0"

NOTE:
1. TOP OF FOOTING ELEV. DESIGNATED AS (XXX.XX)
2. MINIMUM GUARD HEIGHT ABOVE ADJACENT GRADE ELEVATIONS 3'-6" (IBC 1013.3) DESIGN GUARD HEIGHT = 4'-6".

APPROVED: Howard County Department of Planning & Zoning

Director	Date 3-15-16
Chief, Division of Land Development	Date 3-14-16
Chief, Development Engineering Division	Date 2-12-16

Prepared For and Owner:
Howard Community College
10901 Little Patuxent Parkway
Columbia, Maryland 21044
ATTN: Mr. Chuck Nightingale
410-772-4296

Copyright © 2014 Desman, Inc. All rights reserved. No part of these documents may be reproduced in any form or by any means without permission from Desman Inc.

DESMAN ASSOCIATES

KCI TECHNOLOGIES
Engineers
Planners
Scientists
Construction Managers
9051 Rivers Edge Road
Jessup, MD 20794
Phone (410)799-7900
Fax (410)799-7963
www.kci.com

HOWARD COMMUNITY COLLEGE
EAST PARKING GARAGE NO. 2, PARCEL B & ACCESS BRIDGE, LOT A-2 TOWN CENTER, 3/3
COLUMBIA, MD
PARCEL B/ PLAT NO. 19049 & NON-CREDITED OPEN SPACE LOT A-2, TC, 3/3 PLAT NO. 23152
TAX MAP: 35, BLOCK: 6, FIFTH ELECTION DISTRICT, ZONING: POR & NEW TOWN

PROFESSIONAL CERTIFICATION. I HEREBY CERTIFY THAT THESE DOCUMENTS WERE PREPARED OR APPROVED BY ME, AND THAT I AM A DULY LICENSED PROFESSIONAL ENGINEER UNDER THE LAWS OF THE STATE OF MARYLAND, LICENSE NO. 21576 EXPIRATION DATE: 04/29/17

STATE OF MARYLAND JOHN J. HUDGE No. 21576 PROFESSIONAL ENGINEER

ISSUE		

NO.	DESCRIPTION	DATE

DRAWING TITLE:
RETAINING WALL PLAN AND ELEVATION

DRAWING NO.
BW1.00
SHEET: 29 OF 35

SCALE:	AS SHOWN
DATE:	JANUARY 8, 2016
PROJECT NO:	27146550

DES.	DRWN.	CK'D.
JJ	MM	JJ

SDP 16-003

NOTE:
MINIMUM GUARD HEIGHT ABOVE ADJACENT GRADE ELEVATIONS 3'-6" (IBC 1013.3)
DESIGN GUARD HEIGHT = 4'-6".

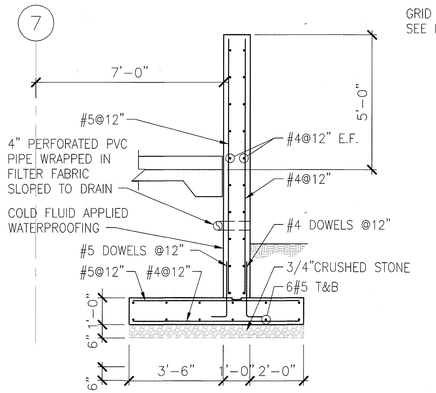

1 / BW2 RETAINING WALL SECTION
SCALE: 3/8"=1'-0"

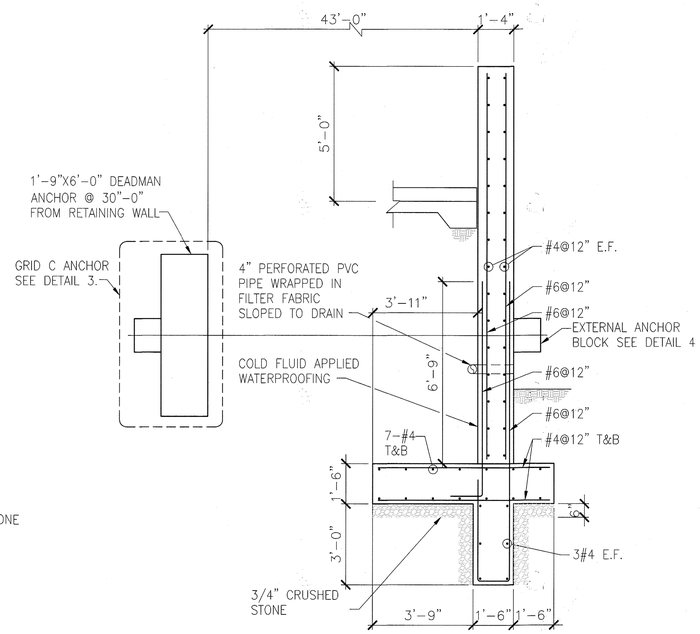

2 / BW2 RETAINING WALL SECTION
SCALE: 3/8"=1'-0"

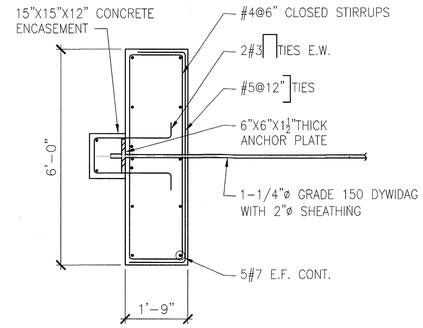

3 / BW2 GRID C ANCHOR DETAIL
SCALE: 1/2"=1'-0"

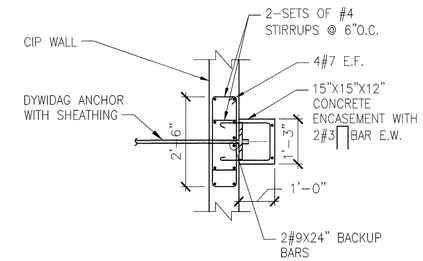

4 / BW2 EXTERNAL ANCHOR BLOCK DETAIL
SCALE: 1/2"=1'-0"

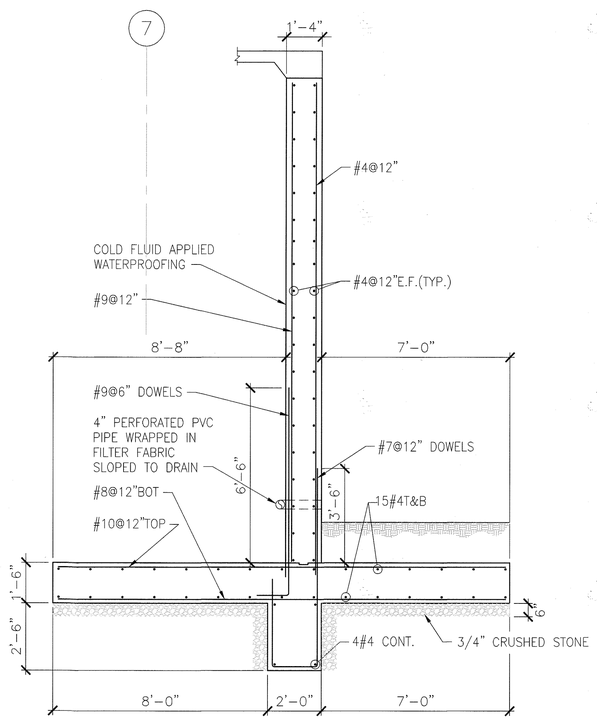

5 / BW2 RETAINING WALL SECTION
SCALE: 3/8"=1'-0"

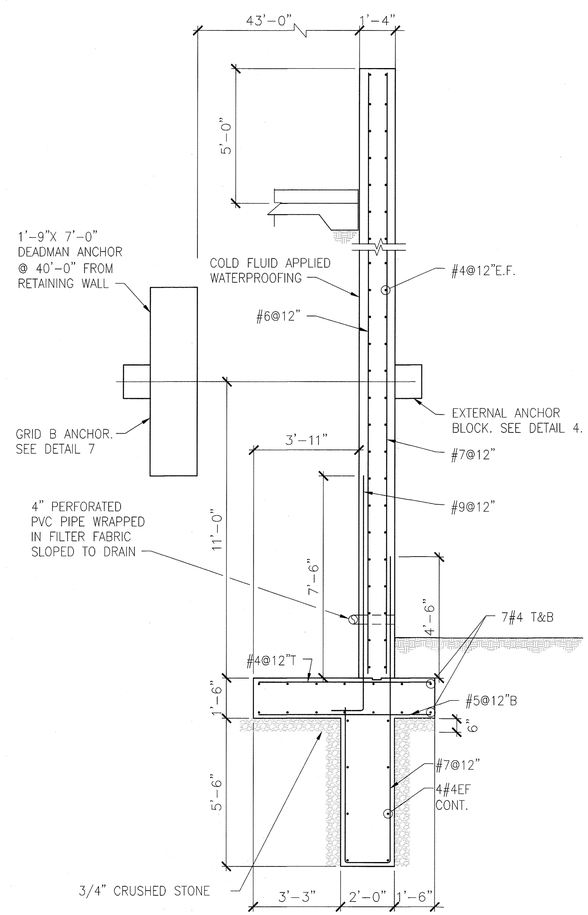

6 / BW2 RETAINING WALL SECTION
SCALE: 3/8"=1'-0"

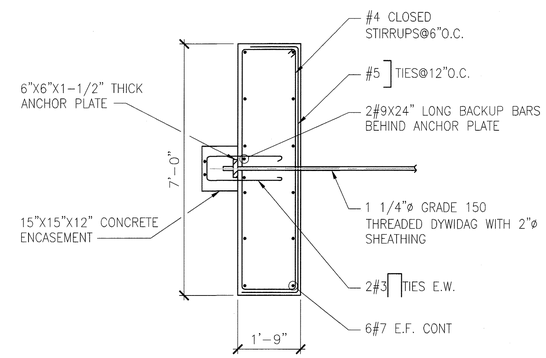

7 / BW2 GRID B ANCHOR BLOCK DETAIL
SCALE: 1/2"=1'-0"

NOTE:
1. FIELD VERIFY ALL BOTTOM OF FOOTING ELEVATIONS WITH MINIMUM OF 2000 PSF SOIL BEARING PRESSURE.
2. CHAMFER ALL EXPOSED EDGES OF CONCRETE WALLS 1"x1" UNLESS NOTED OTHERWISE.

APPROVED: Howard County Department of Planning & Zoning

Director	Date 3-15-16
Chief, Division of Land Development	Date 3-14-16
Chief, Development Engineering Division	Date 2-12-16

Prepared For and Owner:
Howard Community College
10901 Little Patuxent Parkway
Columbia, Maryland 21044
ATTN: Mr. Chuck Nightingale
410-772-4296

Copyright © 2014 Desman, Inc. All rights reserved. No part of these documents may be reproduced in any form or by any means without permission from Desman Inc.

DESMAN ASSOCIATES

KCI TECHNOLOGIES
Engineers
Planners
Scientists
Construction Managers
9200 Rockspring Road
Sparks, MD 21152
Phone: (410) 316-7800
Fax: (410) 316-7803
www.kci.com

HOWARD COMMUNITY COLLEGE
EAST PARKING GARAGE NO. 2, PARCEL B & ACCESS BRIDGE, LOT A-2 TOWN CENTER, 3/3
COLUMBIA, MD
PARCEL B/ PLAT NO. 19049 & NON-CREDITED OPEN SPACE LOT A-2, TC, 3/3 PLAT NO. 23152
TAX MAP: 35, BLOCK: 6, FIFTH ELECTION DISTRICT, ZONING: POR & NEW TOWN

PROFESSIONAL CERTIFICATION.
I HEREBY CERTIFY THAT THESE DOCUMENTS WERE PREPARED OR APPROVED BY ME, AND THAT I AM A DULY LICENSED PROFESSIONAL ENGINEER UNDER THE LAWS OF THE STATE OF MARYLAND, LICENSE NO. 21576
EXPIRATION DATE: 04/29/17

STATE OF MARYLAND
JOHN M. RUDGE
21576
PROFESSIONAL ENGINEER

ISSUE

NO.	DESCRIPTION	DATE

DRAWING TITLE:
RETAINING WALL DETAILS

DRAWING NO.
BW2.00
SHEET: 30 OF 35

SCALE:	AS SHOWN
DATE:	JANUARY 8, 2016
PROJECT NO:	27146550

DES.	DRWN.	CK'D.
JJ	MM	JJ

SDP 16-003

ELECTRICAL LEGEND

SYMBOLS	DESCRIPTION
	WALL MOUNTED LED LIGHTING FIXTURE
	LIGHTING FIXTURE ON EMERGENCY CIRCUIT
	POLE MOUNTED SITE LIGHT
J	JUNCTION BOX
	BRANCH CIRCUIT - CONCEALED IN SLAB OR BELOW GRADE
PTZ	PAN-TILT-ZOOM CAMERA
	FIXED CAMERA
IR	FIXED CAMERA WITH INFRARED
30 F 30/50	SAFETY SWITCH - UNFUSED, FUSED (SUBSCRIPT = SWITCH AMP/FUSE AMPS)

ABBREVIATIONS

A	AMPS OR AMPERE
AC	ALTERNATING CURRENT
AFG	ABOVE FINISHED GRADE
AIC	AMPERES INTERRUPTING CAPACITY
AWG	AMERICAN WIRE GAUGE
C	CONDUIT
DWG	DRAWING
ECB	ENCLOSED CIRCUIT BREAKER
EMT	ELECTRICAL METALLIC TUBING
ETR	EXISTING TO REMAIN
EX.	EXISTING
GRD	GROUND
KV	KILOVOLT
KVA	KILOVOLT-AMPERE
KW	KILOWATT
LTG	LIGHTING
MCB	MAIN CIRCUIT BREAKER
MTD	MOUNTED
MTG	MOUNTING
N	NEUTRAL
NEC	NATIONAL ELECTRICAL CODE
RX	REMOVE EXISTING
UON	UNLESS OTHERWISE NOTED
V	VOLTS OR VOLTAGE
W/	WITH
WP	WEATHERPROOF
#	NUMBER
Ø	PHASE

CONVENTIONS

S — ELECTRICAL EQUIPMENT DENOTED BY DASHED, HEAVY LINEWEIGHT SHALL BE DISPOSED OF, UNLESS INDICATED TO BE REUSED OR TURNED OVER TO THE OWNER

ELECTRICAL EQUIPMENT DENOTED BY LIGHT, SOLID LINEWEIGHT INDICATES EXISTING TO REMAIN, UNLESS INDICATED OTHERWISE

ELECTRICAL EQUIPMENT DENOTED BY HEAVY, SOLID LINEWEIGHT SHALL BE NEW WORK PROVIDED BY CONTRACTOR

3 — INDICATES SPACE OR POLE NUMBER
1 — BRANCH CIRCUIT HOMERUN TO PANELBOARD, SWITCHBOARD, MCC
LP-3 — PANELBOARD DESIGNATION
INDICATES PHASE, SWITCHED, AND TRAVELER CONDUCTORS (IF NOT SHOWN, PROVIDE 2#12 AWG & 1#12 GROUND)

3S — INDICATES NUMBER OF SWITCHES IN GROUP
a,b,c — LIGHTING TOGGLE SWITCH; DENOTES SWITCH DESIGNATION

2 — DRAWING NOTE

G3 — GENERAL NOTE - APPLIES TO ALL SHEETS WITHIN THE ELECTRICAL DRAWING SET

A1 — LIGHTING FIXTURE TYPE (REFER TO SCHEDULE)
LIGHTING FIXTURE
Z6 — INDICATES SWITCH DESIGNATION
12b — INDICATES CIRCUIT DESIGNATION
INDICATES SWITCHING ZONE DESIGNATION (ZP# REFERS TO ZONE CONTROLLED BY PHOTOCELL)

1 — FEEDER NUMBER (REFER TO SCHEDULE)

CONNECT TO EXISTING

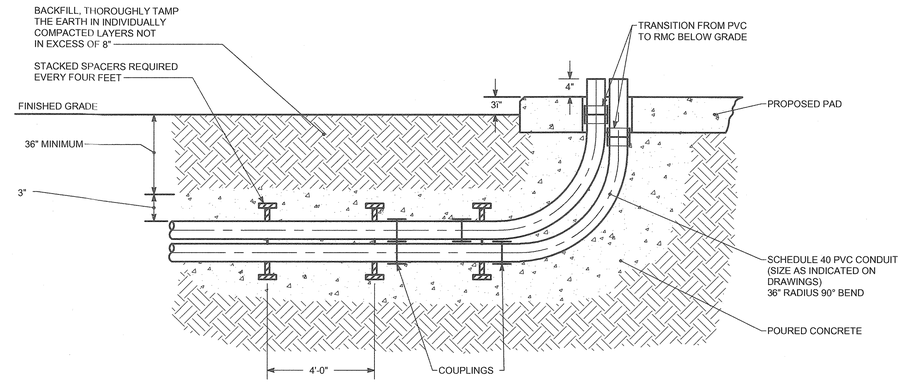

DETAIL - TYPICAL UNDERGROUND DUCTBANK INSTALLATION INTO CONCRETE PAD

NOT TO SCALE

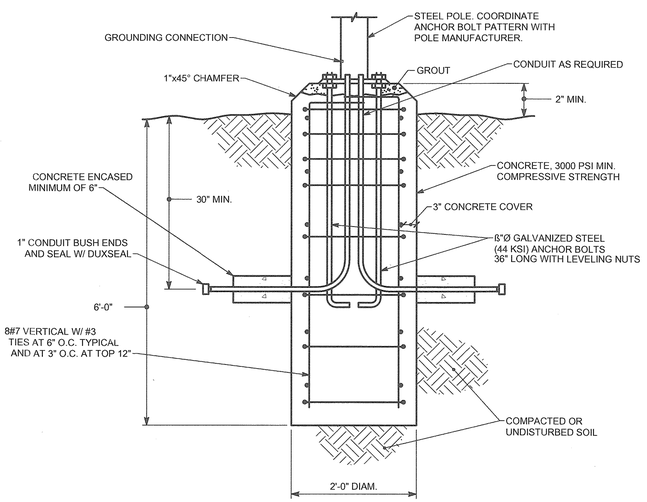

DETAIL - POLE BASE ON GRADE

NOT TO SCALE

NOTE: REFER TO ARCHITECTURAL AND CIVIL PLANS FOR POLE BASE DETAILS WHERE INTEGRAL TO GARAGE STRUCTURE OR CIVIL STRUCTURE.

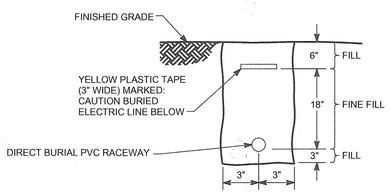

DETAIL - DIRECT BURIAL CONDUIT INSTALLATION

NOT TO SCALE

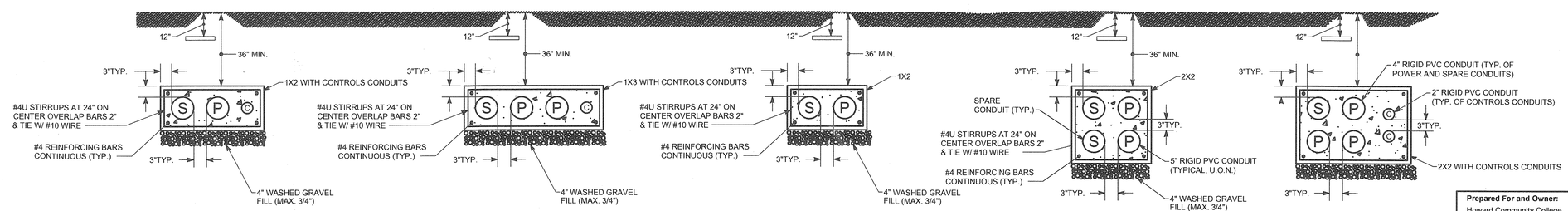

DETAIL - ELECTRICAL DUCTBANKS

NOT TO SCALE

NOTES:

S - SPARE
P - POWER
C - LOW VOLTAGE CONTROLS

APPROVED: Howard County Department of Planning & Zoning

Director	3-15-16 Date
Chief, Division of Land Development	3-14-16 Date
Chief, Development Engineering Division	2-17-16 Date

Prepared For and Owner:
Howard Community College
10901 Little Patuxent Parkway
Columbia, Maryland 21044
ATTN: Mr. Chuck Nightingale
410-772-4296

Copyright © DESMAN, Inc. All rights reserved. No part of these documents may be reproduced in any form or by any means without permission from Desman Inc.

LWA PROJECT # 14-508-00

SDP 16-003

DESMAN ASSOCIATES

Leach Wallace Associates, Inc.
Consulting Engineers
6522 Meadowridge Road
Elkridge, MD 21075
(410) 579-8100
FAX (410) 540-9041

HOWARD COMMUNITY COLLEGE
EAST PARKING GARAGE NO. 2, PARCEL B & ACCESS BRIDGE, LOT A-2 TOWN CENTER, 33
COLUMBIA, MD
PARCEL B: PLAT NO. 19048 &
NON-CREDITED OPEN SPACE LOT A-2: PLAT NO. 23152
TAX MAP: 35, BLOCK: 6,
FIFTH ELECTION DISTRICT; ZONING: POR & NEW TOWN

Professional Certification. I hereby certify that these documents were prepared or approved by me, and that I am a duly licensed professional engineer under the laws of the State of Maryland. License No. 39234, Expiration Date: 06/28/16

STATE OF MARYLAND · PHILIP EVANS MACEY · No. 39234 · PROFESSIONAL ENGINEER

ISSUE

NO.	DESCRIPTION	DATE

DRAWING TITLE: ELECTRICAL LEGEND AND DETAILS

DRAWING NO. E13.00
SHEET: 31 OF 35

SCALE:	NONE
DATE:	JANUARY 8, 2016
PROJECT NO:	27146550

DES.	DRWN.	CK'D.
AH	AH	PEM

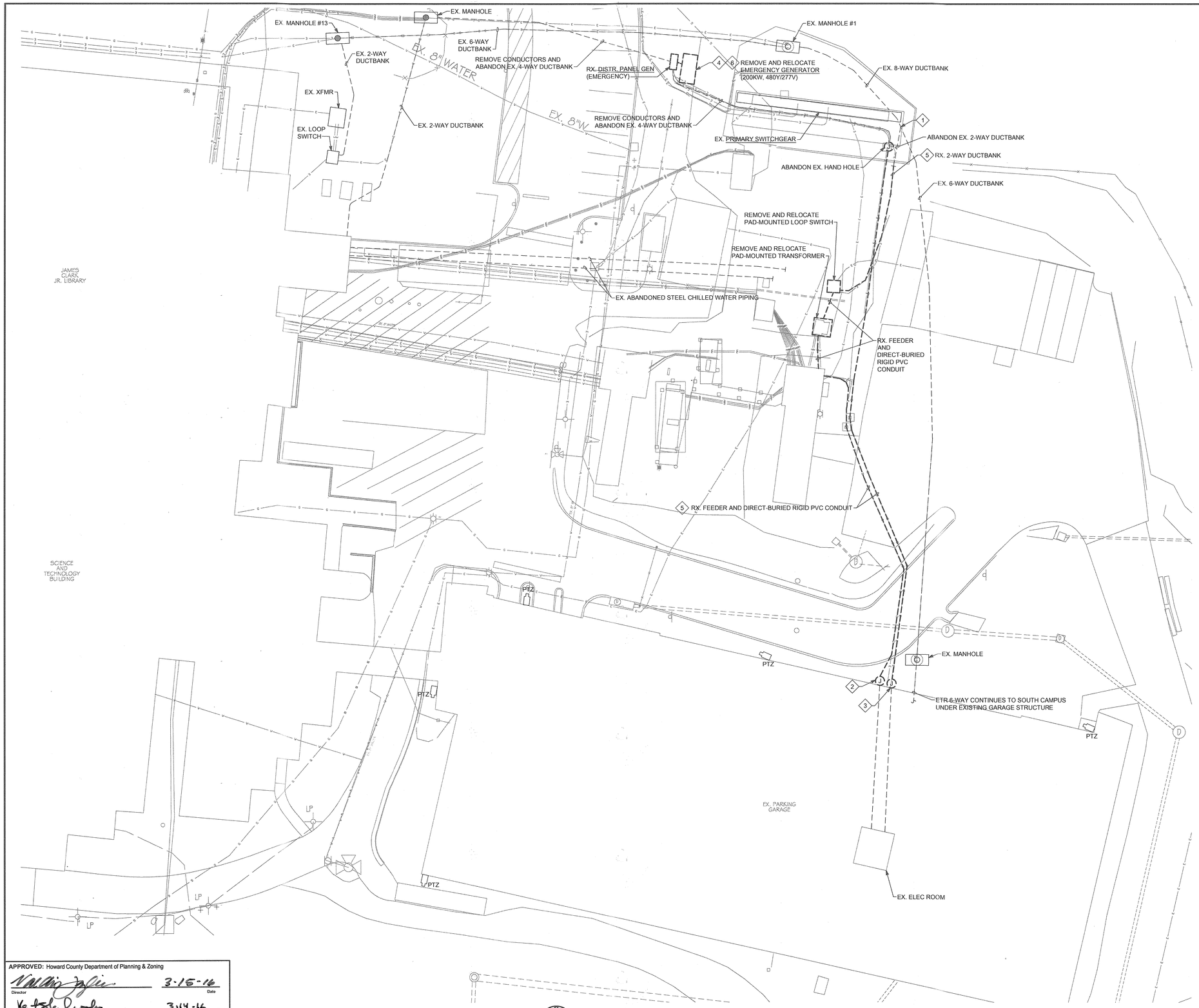

DRAWING NOTES:

1. REMOVE 2-WAY DUCTBANK BACK TO LOCATION WHERE IT JOINS 6-WAY DUCTBANK SERVING SOUTH CAMPUS. REMOVE CONDUCTORS BACK TO SOURCE. CAP AND SEAL ALL ABANDONED RACEWAYS.
2. REMOVE CONDUIT BELOW GRADE SERVING EX. EAST GARAGE 1 TO THIS POINT FOR RECONNECTION ON NEW WORK PLAN. RETAIN PORTION OF CONDUIT UNDER GARAGE FOR REUSE. REMOVE CONDUCTORS FROM TRANSFORMER TO EX. PANEL HP.
3. REMOVE CONDUIT BELOW GRADE SERVING EX. EAST GARAGE 1 EMERGENCY POWER TO THIS POINT. ABANDON PORTION OF CONDUIT UNDER GARAGE. REMOVE CONDUCTORS FROM SWBD GEN TO EX. ATS.
4. ALTERNATE #1: REMOVE EMERGENCY GENERATOR.
5. ABANDON IN PLACE WHERE RACEWAY DOES NOT CONFLICT WITH EXCAVATION OR RACEWAYS INDICATED ON NEW WORK PLAN. REMOVE ALL CONDUIT AND DUCTBANK THAT CONFLICTS WITH NEW WORK.
6. PRIOR TO RELOCATION OF GENERATOR, PERFORM 2-HOUR LOAD TEST OF GENERATOR AT 100% RATED LOAD UTILIZING A TEMPORARY LOAD BANK. TEST RESULTS SHALL BE REVIEWED AND APPROVED BY OWNER/ENGINEER PRIOR TO RELOCATION OF GENERATOR.

SITE PLAN - REMOVAL WORK - ELECTRICAL

SCALE: 1"=20'-0"

APPROVED: Howard County Department of Planning & Zoning

Director	3-15-16 Date
Chief, Division of Land Development	3-14-16 Date
Chief, Development Engineering Division	2-12-16 Date

Prepared For and Owner:
Howard Community College
10901 Little Patuxent Parkway
Columbia, Maryland 21044
ATTN: Mr. Chuck Nightingale
410-772-4296

Copyright © 2016 Desman, Inc. All rights reserved. No part of these documents may be reproduced in any form or by any means without permission from Desman Inc.

DESMAN ASSOCIATES

Leach Wallace Associates, Inc.
Consulting Engineers
6522 Meadowridge Road
Elkridge, MD 21075
(410) 579-8100
FAX (410) 540-9041

HOWARD COMMUNITY COLLEGE
EAST PARKING GARAGE NO. 2, PARCEL B & ACCESS BRIDGE, LOT A-2 TOWN CENTER 3/5
COLUMBIA, MD
PARCEL B1, PLAT NO. 19049 & PARCEL B2, PLAT NO. 19050 & NON-CREDITED OPEN SPACE, LOT A-2, PLAT NO. 3/5 PLAT NO. 23152
TAX MAP: 35, BLOCK: 6,
FIFTH ELECTION DISTRICT, ZONING: POR & NEW TOWN

Professional Certification. I hereby certify that these documents were prepared or approved by me, and that I am a duly licensed professional engineer under the laws of the State of Maryland. License No. 39234 Expiration Date: 06/28/16

STATE OF MARYLAND · PHILLIP EVANS MAGEE · No. 39234 · PROFESSIONAL ENGINEER

ISSUE

NO.	DESCRIPTION	DATE

DRAWING TITLE: SITE PLAN - REMOVAL WORK - ELECTRICAL

DRAWING NO. E14.00

SHEET: 32 OF 35

SCALE:	1"=20'-0"
DATE:	JANUARY 8, 2016
PROJECT NO:	27146550

DES.	DRWN.	CK'D.
AH	AH	PEM

LWA PROJECT # 14-508-00

SDP 16-003

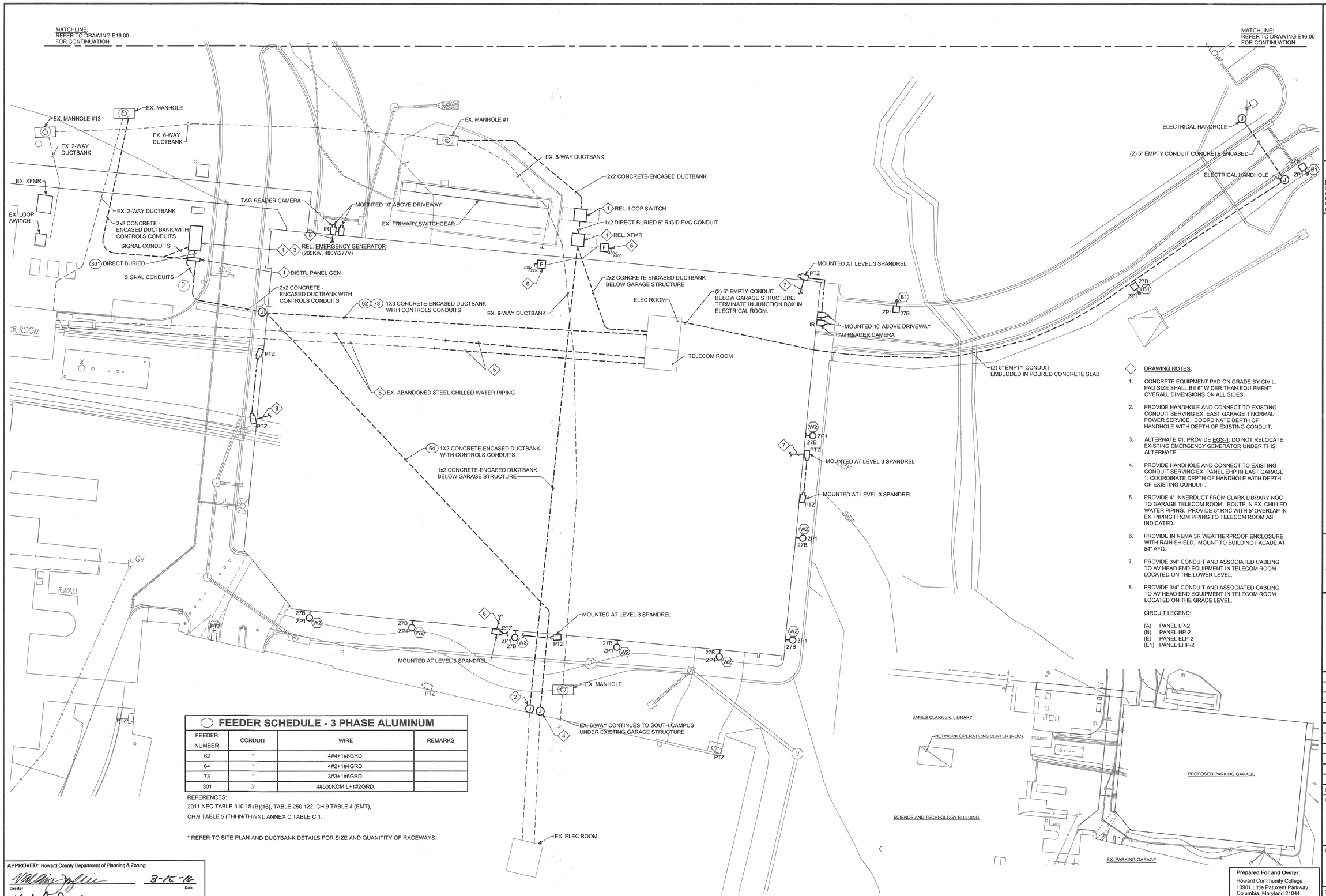

FEEDER SCHEDULE - 3 PHASE ALUMINUM

FEEDER NUMBER	CONDUIT	WIRE	REMARKS
62	*	4#4+1#8GRD.	
64	*	4#2+1#4GRD.	
73	*	3#3+1#6GRD.	
301	3"	4#500KCMIL+1#2GRD.	

REFERENCES:
2011 NEC TABLE 310.15 (B)(16), TABLE 250.122, CH.9 TABLE 4 (EMT),
CH.9 TABLE 5 (THHN/THWN), ANNEX C TABLE C.1.

* REFER TO SITE PLAN AND DUCTBANK DETAILS FOR SIZE AND QUANITITY OF RACEWAYS.

PART SITE PLAN - NEW WORK - ELECTRICAL
SCALE: 1"=20'-0"

PART SITE PLAN - NEW WORK - ELECTRICAL
SCALE: 1"=60'-0"

DRAWING NOTES:

1. CONCRETE EQUIPMENT PAD ON GRADE BY CIVIL. PAD SIZE SHALL BE 6" WIDER THAN EQUIPMENT OVERALL DIMENSIONS ON ALL SIDES.
2. PROVIDE HANDHOLE AND CONNECT TO EXISTING CONDUIT SERVING EX. EAST GARAGE 1 NORMAL POWER SERVICE. COORDINATE DEPTH OF HANDHOLE WITH DEPTH OF EXISTING CONDUIT.
3. ALTERNATE #1: PROVIDE EGS-1, DO NOT RELOCATE EXISTING EMERGENCY GENERATOR UNDER THIS ALTERNATE.
4. PROVIDE HANDHOLE AND CONNECT TO EXISTING CONDUIT SERVING EX. PANEL EHP IN EAST GARAGE 1. COORDINATE DEPTH OF HANDHOLE WITH DEPTH OF EXISTING CONDUIT.
5. PROVIDE 4" INNERDUCT FROM CLARK LIBRARY NOC TO GARAGE TELECOM ROOM. ROUTE IN EX. CHILLED WATER PIPING. PROVIDE 5" RNC WITH 5' OVERLAP IN EX. PIPING FROM PIPING TO TELECOM ROOM AS INDICATED.
6. PROVIDE IN NEMA 3R WEATHERPROOF ENCLOSURE WITH RAIN SHIELD. MOUNT TO BUILDING FACADE AT 54" AFG.
7. PROVIDE 3/4" CONDUIT AND ASSOCIATED CABLING TO AV HEAD END EQUIPMENT IN TELECOM ROOM LOCATED ON THE LOWER LEVEL.
8. PROVIDE 3/4" CONDUIT AND ASSOCIATED CABLING TO AV HEAD END EQUIPMENT IN TELECOM ROOM LOCATED ON THE GRADE LEVEL.

CIRCUIT LEGEND:

(A) PANEL LP-2
(B) PANEL HP-2
(E) PANEL ELP-2
(E1) PANEL EHP-2

APPROVED: Howard County Department of Planning & Zoning

Director	3-15-16 Date
Chief, Division of Land Development	3-14-16 Date
Chief, Development Engineering Division	2-12-16 Date

DESMAN ASSOCIATES

Leach Wallace Associates, Inc.
Consulting Engineers
6522 Meadowridge Road
Elkridge, MD 21075
(410) 579-8100
FAX (410) 540-9041

HOWARD COMMUNITY COLLEGE
EAST PARKING GARAGE NO. 2, PARCEL B & ACCESS BRIDGE, LOT A-2 TOWN CENTER 3/3
COLUMBIA, MD
PARCEL B/ PLAT NO. 19048 & PARCEL B, LOT A-2 / PLAT NO. 19313
NON-CREDITED OPEN SPACE / LOT A-2 / PLAT NO. 20152
TAX MAP: 35, BLOCK: 6, PARCEL: 68
FIFTH ELECTION DISTRICT, ZONING: POR & NEW TOWN

EAST

Professional Certification. I hereby certify that these documents were prepared or approved by me, and that I am a duly licensed professional engineer under the laws of the State of Maryland. License No. 39234 Expiration Date: 06/28/16

STATE OF MARYLAND PHILIP EVANS MACEY No. 39234 PROFESSIONAL ENGINEER

ISSUE

NO.	DESCRIPTION	DATE

DRAWING TITLE:
PART SITE PLAN - NEW WORK - ELECTRICAL

DRAWING NO.
E15.00
SHEET: 33 OF 35

SCALE: AS INDICATED
DATE: JANUARY 8, 2016
PROJECT NO: 27146550

DES.	DRWN.	CK'D.
AH	AH	PEM

Prepared For and Owner:
Howard Community College
10901 Little Patuxent Parkway
Columbia, Maryland 21044
ATTN: Mr. Chuck Nightingale
410-772-4296

Copyright © 2016 Desman, Inc. All rights reserved. No part of these documents may be reproduced in any form or by any means without permission from Desman Inc.

LWA PROJECT # 14-508-00

SDP 16-003

CIRCUIT LEGEND:

(A) PANEL LP-2
(B) PANEL HP-2
(E) PANEL ELP-2
(E1) PANEL EHP-2

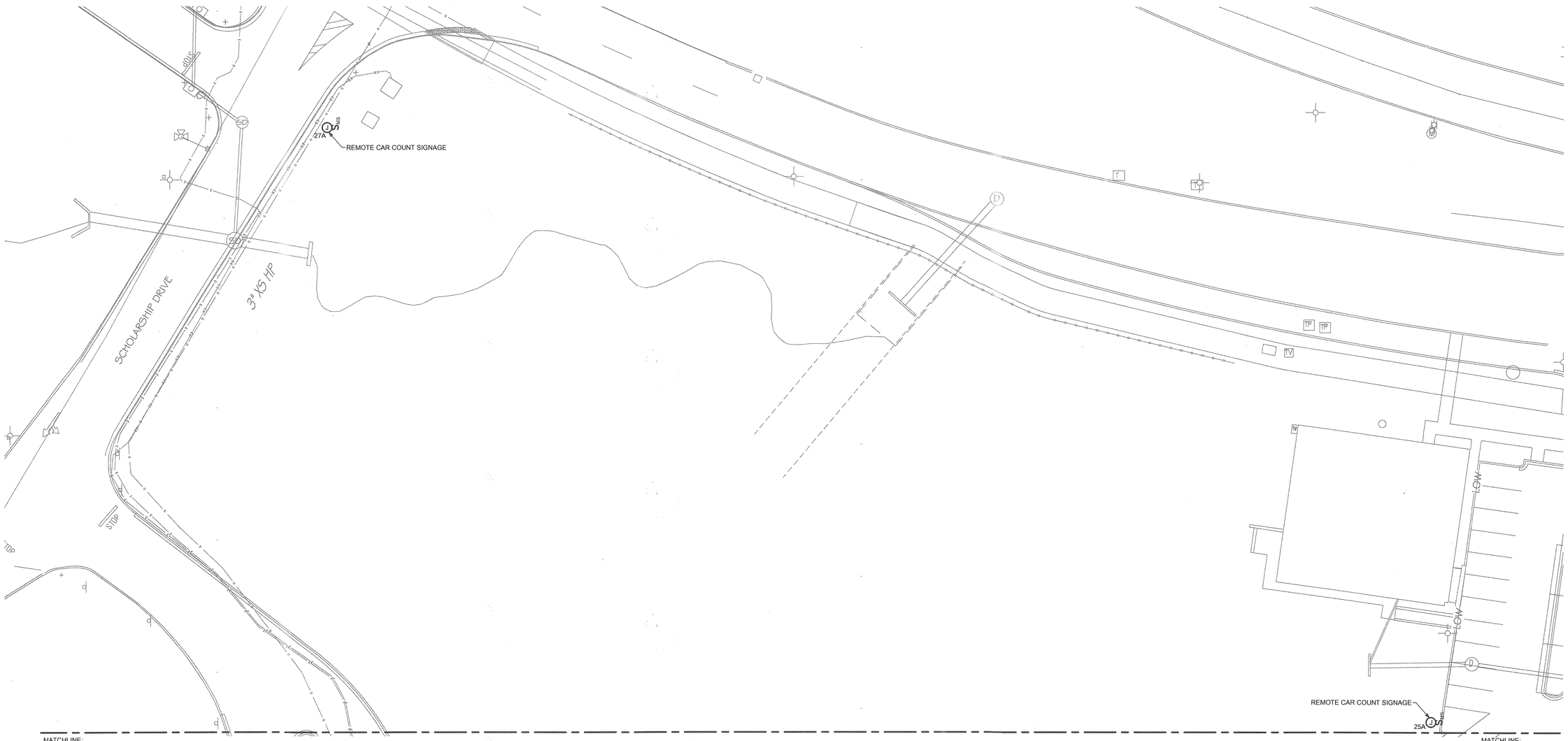

PART SITE PLAN - NEW WORK - ELECTRICAL

SCALE: 1"=20'-0"

APPROVED: Howard County Department of Planning & Zoning

Director	Date 3-16-16
Chief, Division of Land Development	Date 3-14-16
Chief, Development Engineering Division	Date 2-12-16

Prepared For and Owner:
Howard Community College
10901 Little Patuxent Parkway
Columbia, Maryland 21044
ATTN: Mr. Chuck Nightingale
410-772-4296

Copyright © 2016 Desman, Inc. All rights reserved. No part of these documents may be reproduced in any form or by any means without permission from Desman Inc.

LWA PROJECT # 14-508-00

SDP 16-003

DESMAN ASSOCIATES

Leach Wallace Associates, Inc.
Consulting Engineers
6522 Meadowridge Road
Elkridge, MD 21075
(410) 579-8100
FAX (410) 540-9041

HOWARD COMMUNITY COLLEGE
EAST PARKING GARAGE NO. 2, PARCEL B & ACCESS BRIDGE, LOT A-2 TOWNCENTER 3/5
COLUMBIA, MD
PARCEL B-PLAT NO. 18048 &
PARCEL A, LOT A-2, PLAT NO. 28 PLAT NO. 23152
NON-CREDITED OPEN SPACE, LOT 3/5
TAX MAP: 35, BLOCK: 6,
FIFTH ELECTION DISTRICT, ZONING: POR & NEW TOWN

Professional Certification. I hereby certify that these documents were prepared or approved by me, and that I am a duly licensed professional engineer under the laws of the State of Maryland. License No. 39234 Expiration Date: 06/28/16

STATE OF MARYLAND
PHILIP EVANS MACKEY
No. 39234
PROFESSIONAL ENGINEER

ISSUE

NO	DESCRIPTION	DATE

DRAWING TITLE:
PART SITE PLAN - NEW WORK - ELECTRICAL

DRAWING NO.
E16.00
SHEET: 34 OF 35

SCALE: 1"=20'-0"
DATE: JANUARY 8, 2016
PROJECT NO: 27146550

DES.	DRWN.	CK'D.
AH	AH	PEM

Cree Edge™ Series

LED High Output Area/Flood Luminaire featuring Cree TrueWhite® Technology

Product Description

The Cree Edge™ High Output Area/Flood luminaire is designed to deliver high lumen packages with precise optical control. The unit features a slim, low profile design that minimizes wind load and a rugged die cast aluminum adjustable arm that mounts to a horizontal or vertical 2" (51mm) IP, 2.375-2.50" (60-64mm) O.D. steel tenon. Tenon length must be a minimum of 3.75" (95mm). The direct mount bracket accessory allows for further mounting flexibility. Available with Cree TrueWhite® Technology, the Cree Edge™ High Output helps to beautifully render true colors and deliver value beyond energy savings.
Applications: Auto dealerships, parking lots, campuses, facade lighting, high-mast and general site lighting applications

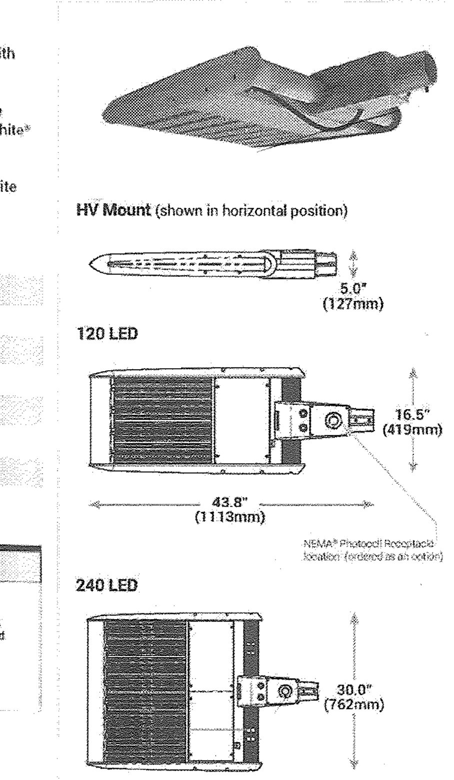

Performance Summary

- Utilizes BetaLED® Technology
- Utilizes Cree TrueWhite® Technology on 5000K Luminaires
- Patented NanoOptic® Product Technology
- Made in the U.S.A. of U.S. and imported parts
- **CRI:** Minimum 70 CRI (4000K & 5700K); 90 CRI (5000K)
- **CCT:** 4000K (+/- 300K), 5000K (+/- 300K), 5700K (+/- 500K) standard
- **Limited Warranty**[†]: 10 years on luminaire/10 years on Colorfast DeltaGuard® finish

Accessories

Field-Installed		
Bird Spikes XA-BRDSPKXAK12 - 120 LED XA-BRDSPKXAK24 - 240 LED	**Backlight Control Shields** XA-30BLS-4 - Four-pack for 120 LED - Unpainted stainless steel XA-30BLS-8 - Eight-pack for 240 LED - Unpainted stainless steel	**Direct Mount Bracket** EHO-UNV** - Mounts to minimum 4" (102mm) round or square; aluminum or steel pole or can be surface-mounted directly to a vertical or horizontal surface - See Direct Mount Configuration table on page 15 - Poles must be field drilled for direct mount

** Must specify color

Ordering Information

Example: ARE EHO 2M HV 12 E UL SV 700

Product	Optic	Mounting	LED Count (x10)	Series	Voltage	Color Options	Drive Current	Options
		HV		E				
ARE EHO	**1S** Type I Short **2M** Type II Medium **2MB** Type II Medium w/BLS **2MP** Type II Medium w/Partial BLS **2S** Type II Short **2SB** Type II Short w/BLS **2SP** Type II Short w/Partial BLS **3M** Type III Medium **3MB** Type III Medium w/BLS **3MP** Type III Medium w/Partial BLS **4M** Type IV Medium **4MB** Type IV Medium w/BLS **4MP** Type IV Medium w/Partial BLS **5M** Type V Medium **5S** Type V Short **AF** Automotive Frontline	**HV** Horizontal/ Vertical Tenon	**12** **24**	**E**	**UL** Universal 120-277V **UH** Universal 347-480V	**SV** Silver **BK** Black **BZ** Bronze **PB** Platinum Bronze **WH** White	**700** 700mA **1000** 1000mA	**40K** 4000K Color Temperature - Minimum 70 CRI - Color temperature per luminaire **50K** 5000K Color Temperature - Minimum 90 CRI - Utilizes Cree TrueWhite® Technology - Color temperature per luminaire **DIM** 0-10V Dimming - Control by others - Refer to Dimming spec sheet for details - Can't exceed specified drive current **F** Fuse - When code dictates fusing, use time delay fuse - Refer to ML spec sheet for availability with ML options - No available with UH voltage **ML** Multi-Level - Refer to ML spec sheet for details - Intended for downlight applications at 0° tilt **R** NEMA® Photocell Receptacle - Intended for downlight applications with maximum 45° tilt - Consult factory for vertical tenon application - Photocell by others - Refer to ML spec sheet for availability with ML options
FLD EHO	**15** 15° Flood **25** 25° Flood **40** 40° Flood **70** 70° Flood **SN** Sign **N6** NEMA 6							

[†] See www.cree.com/lighting/products/warranty for warranty terms

BetaLED® TECHNOLOGY

Rev. Date: V3 12/09/2014

CREE

US: www.cree.com/lighting T (800) 236-6800 F (262) 504-5415

Canada: www.cree.com/canada T (800) 473-1234 F (800) 890-7507

FIXTURE B1

Cree Edge™ Series

LED Security Wall Pack Luminaire

Product Description

The Cree Edge™ wall mount luminaire has a slim, low profile design. The luminaire end caps are made from rugged die cast aluminum with integral, weathertight LED driver compartments and high performance aluminum heat sinks specifically designed for LED applications. Housing is rugged aluminum. Includes a lightweight mounting box for installation over standard and mud ring single gang J-Boxes. Secures to wall with four 3/16" (5mm) screws (by others). Conduit entry from top, bottom, sides and rear. Allows mounting for uplight or downlight. Designed and approved for easy through-wiring. Includes leaf/debris guard.
Applications: General area and security lighting

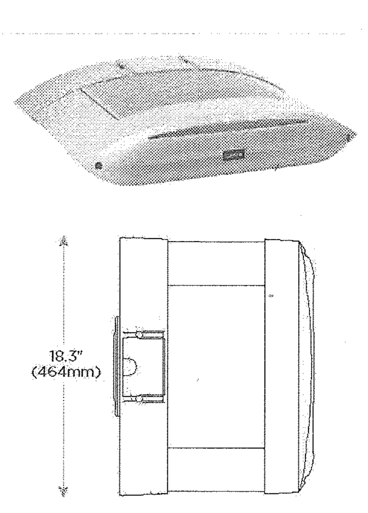

LED Count (x10)	Dim. "A"	Weight
02	9.9" (251mm)	20 lbs (9.1kg)
04	11.9" (303mm)	22 lbs (10.0kg)
06	13.9" (353mm)	25 lbs (11.3kg)
08	15.9" (404mm)	27 lbs (12.2kg)
10	17.9" (455mm)	31 lbs (14.1kg)
12	19.9" (505mm)	32 lbs (14.5kg)

Performance Summary

- Utilizes BetaLED® Technology
- Patented NanoOptic® Product Technology
- Made in the U.S.A. of U.S. and imported parts
- **CRI:** Minimum 70 CRI
- **CCT:** 4000K (+/- 300K), 5700K (+/- 500K) standard
- **Limited Warranty**[†]: 10 years on luminaire/10 years on Colorfast DeltaGuard® finish

[†] See www.cree.com/lighting/products/warranty for warranty terms

Accessories

Field-Installed	
Bird Spikes XA-BRDSPK	**Hand-Held Remote** XA-SENSREM - For successful implementation of the programmable multi-level option, a minimum of one hand-held remote is required

Ordering Information

Example: SEC EDG 2M WM 06 E UL SV 700

Product	Optic	Mounting	LED Count (x10)	Series	Voltage	Color Options	Drive Current	Options
SEC EDG		WM		E				
SEC EDG	**2M** Type II Medium **2MB** Type II Medium w/BLS **2S** Type II Short **2SB** Type II Short w/BLS **3M** Type III Medium **3MB** Type III Medium w/BLS **4M** Type IV Medium **4MB** Type IV Medium w/BLS	**WM** Wall Mount	**02** **04** **06** **08** **10** **12**	**E**	**UL** Universal 120-277V **UH** Universal 347-480V **34** 347V	**BK** Black **BZ** Bronze **PB** Platinum Bronze **SV** Silver **WH** White	**350** 350mA **525** 525mA -Available with 20-80 LEDs **700** 700mA -Available with 20-60 LEDs	**40K** 4000K Color Temperature - Minimum 70 CRI - Color temperature per luminaire **DIM** 0-10V Dimming - Control by others - Refer to Dimming spec sheet for details - Can't exceed specified drive current **F** Fuse - Refer to ML spec sheet for availability with ML options - Available with UL voltage only - When code dictates fusing, use time delay fuse **ML** Multi-Level - Refer to ML spec sheet for details - Intended for downlight applications of 0° tilt **P** Photocell - Refer to ML spec sheet for availability with ML options - Must specify UL or 34 voltage **PML** Programmable Multi-Level - Refer to PML spec sheet for details - Intended for downlight applications of 0° tilt

BetaLED® TECHNOLOGY

Rev. Date: V1 04/23/2015

CREE

US: www.cree.com/lighting T (800) 236-6800 F (262) 504-5415

FIXTURE W2 W3

LIGHTING FIXTURE SCHEDULE

TYPE	DESCRIPTION	MANUFACTURER / CATALOG NO.	LAMPS	VOLTAGE	NOTES
B1	SINGLE HEAD, ARM MOUNT, BLACK FINISH, TYPE III, MEDIUM DISTRIBUTION, 120 HIGH OUTPUT LED ARRAY, 700mA DRIVE CURRENT, 30' OVERALL HEIGHT, HOUSE SIDE SHEILD, WET LISTED	CREE ARE-EHO	LED (INCLUDED) 16010 LUMEN 4000K 70+ CRI	MVOLT	NOTE 1, 2, 3 267 FW
W2	18" WALL PACK, SURFACE MOUNTED, BLACK FINISH, TYPE III, MEDIUM DISTRIBUTION, 20 LED ARRAY, 700mA DRIVE CURRENT, 12' MOUNTING HEIGHT TO BOTTOM OF FIXTURE, WET LISTED	CREE SEC-EDG	LED (INCLUDED) 3599 LUMEN 5700K CRI 70+	MVOLT	NOTE 1 50 FW
W3	SAME AS "W2" EXCEPT 40 LED ARRAY	CREE SEC-EDG	LED (INCLUDED) 7198 LUMEN 5700K CRI 70+	MVOLT	NOTE 1 93 FW

NOTES:

1. PROVIDE UNIT PRICE FOR FIXTURE.
2. PROVIDE FUSE IN HANDHOLE OF EACH POLE FOR OVERCURRENT PROTECTION OF HEADS ON EACH POLE. COORDINATE FUSE SIZE WITH TYPE AND QUANTITY OF HEAD(S).
3. COORDINATE POLE EPA WITH QUANTITY OF FIXTURE HEADS AND CAMERAS ON EACH POLE.

FW = FIXTURE WATTS

APPROVED: Howard County Department of Planning & Zoning

Director	Date 3-15-16
Chief, Division of Land Development	Date 3-14-16
Chief, Development Engineering Division	Date 2-12-16

DESMAN ASSOCIATES

Leach Wallace Associates, Inc.
Consulting Engineers
6522 Meadowridge Road
Elkridge, MD 21075
(410) 579-8100
FAX (410) 540-9041

HOWARD COMMUNITY COLLEGE
EAST PARKING GARAGE NO. 2, PARCEL B & ACCESS BRIDGE, LOT A-2 TOWNCENTER 3/3
COLUMBIA, MD
PARCEL B/ PLAT NO. 19049 &
NON-CREDITED OPEN SPACE LOT A-2, TC, 3/3 PLAT NO. 23152
TAX MAP: 35, BLOCK: 6,
FIFTH ELECTION DISTRICT, ZONING: POR & NEW TOWN

Professional Certification. I hereby certify that these documents were prepared or approved by me, and that I am a duly licensed professional engineer under the laws of the State of Maryland. License No. 39234, Expiration Date: 06/28/16

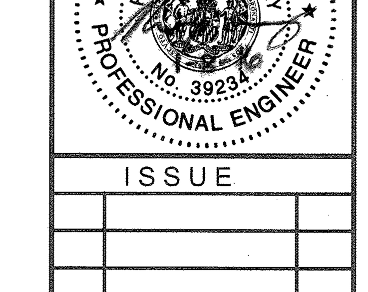

ISSUE		
NO.	DESCRIPTION	DATE

DRAWING TITLE: LIGHTING FIXTURE SCHEDULE AND CUTSHEETS

DRAWING NO. E17.00

SHEET: 35 OF 35

SCALE:	NONE
DATE:	JANUARY 8, 2016
PROJECT NO:	27146550

DES.	DRWN.	CK'D.
AH	AH	PEM

Prepared For and Owner:
Howard Community College
10901 Little Patuxent Parkway
Columbia, Maryland 21044
ATTN: Mr. Chuck Nightingale
410-772-4296

Copyright C 2014 Desman, Inc. All rights reserved. No part of these documents may be reproduced in any form or by any means without permission from Desman Inc.

LWA PROJECT # 14-508-00

SDP 16-003