SITE DEVELOPMENT PLANS
for
PATAPSCO VALLEY BUSINESS CENTER
PARCEL E-1
HOWARD COUNTY, MARYLAND

GENERAL NOTES

1. ALL CONSTRUCTION SHALL BE PERFORMED IN ACCORDANCE WITH THE LATEST STANDARDS AND SPECIFICATIONS OF HOWARD COUNTY, PLUS MSHA STANDARDS AND SPECIFICATIONS IF APPLICABLE OR AS SPECIFIED.
2. APPROXIMATE LOCATION OF EXISTING UTILITIES ARE BASED SOLELY ON AVAILABLE RECORDS. CONTRACTOR SHALL VERIFY THE LOCATION OF ANY UTILITIES WHICH MAY BE IMPACTED BY THE WORK. MAINTAIN UNINTERRUPTED SERVICE. ANY DAMAGE INCURRED DUE TO CONTRACTORS OPERATION SHALL BE REPAIRED IMMEDIATELY AT THE CONTRACTOR'S EXPENSE.
3. THE CONTRACTOR SHALL TEST PIT EXISTING UTILITIES AT LEAST FIVE (5) DAYS BEFORE STARTING WORK SHOWN ON THESE DRAWINGS TO VERIFY THEIR LOCATION AND ELEVATION. THE CONTRACTOR SHALL NOTIFY THE ENGINEER IMMEDIATELY IF LOCATION OF UTILITIES IS OTHER THAN SHOWN.
4. THE CONTRACTOR SHALL NOTIFY 'MISS UTILITY' AT 1-800-257-7777 AT LEAST 48 HOURS PRIOR TO ANY EXCAVATION WORK BEING DONE, AND SHALL NOTIFY THE DEPARTMENT OF PUBLIC WORKS / BUREAU OF ENGINEERING / CONSTRUCTION INSPECTION DIVISION AT 410-313-1880 AT LEAST FIVE (5) WORKING DAYS PRIOR TO THE START OF WORK. ANY DAMAGE CAUSED BY THE CONTRACTOR TO EXISTING PUBLIC RIGHT-OF-WAY, EXISTING PAVING, EXISTING CURB & GUTTER, EXISTING UTILITIES, ETC. SHALL BE REPAIRED AT THE CONTRACTORS EXPENSE.
5. THE EXISTING TOPOGRAPHY IS TAKEN FROM A FIELD RUN SURVEY WITH MAXIMUM OF 2' CONTOUR INTERVALS PREPARED BY FISHER COLLINS & CARTER, INC. ON APRIL 24, 2004.
6. EXISTING PUBLIC WATER AND PUBLIC SEWER PROVIDED BY CONTRACT NUMBER 14-3342. PROPOSED PUBLIC WATER AND SEWER PROVIDED BY CONTRACT NUMBER 14-4237-D. EXISTING DRAINAGE AREA FOR SEWER: PATAPSCO, WASTEWATER TREATMENT PLANT - CITY OF BALTIMORE.
7. THE SUBSURFACE EXPLORATION AND GEOTECHNICAL ENGINEERING ANALYSIS FOR THIS PROJECT WAS MADE BY HARDIN - KIGHT ASSOCIATES, INC. ON MARCH 24, 2004.
8. ALL FILL AREAS SHALL BE COMPACTED TO A MINIMUM OF 95% OF THE MAXIMUM DRY DENSITY AS DETERMINED AND VERIFIED IN ACCORDANCE WITH ASHTO T-180, OR AS SPECIFIED BY GEOTECHNICAL ENGINEER.
9. OPERATING EXISTING VALVES, SWITCHES, SERVICES OR START UP OF NEW SERVICES SHALL BE COORDINATED WITH THE OWNERS REPRESENTATIVE. THE BUILDING WILL BE PROVIDED WITH A SPRINKLER SYSTEM.
10. TRENCH COMPACTION FOR STORM DRAINS WITHIN THE ROAD OR STREET RIGHT OF WAY LIMITS SHALL BE IN ACCORDANCE WITH HOWARD COUNTY DESIGN MANUAL IV, STD. NO. G-2.01.
11. UNLESS OTHERWISE NOTED, DIMENSIONS FROM CURB ARE MEASURED FROM FACE.
12. REFER TO ARCHITECTURAL DRAWINGS FOR EXACT BUILDING DIMENSIONS.
13. THE CONTRACTOR SHALL COORDINATE THE LOCATION OF ALL WATER, SEWER, AND DRAIN HOUSE CONNECTIONS WITH THE MECHANICAL DRAWINGS.
14. THE CONTRACTOR SHALL MAINTAIN 2.0 FEET MINIMUM PROTECTIVE COVER OVER ALL UTILITIES DURING CONSTRUCTION.
15. THERE ARE NO KNOWN CEMETERIES OR BURIAL GROUNDS ON THIS SITE. HOWEVER, UPON DISCOVERY OF ANY EVIDENCE OF BURIAL OR GRAVES, THE DEVELOPER WILL BE SUBJECT TO SECTION 16.1305 OF THE HOWARD COUNTY SUBDIVISION AND LAND DEVELOP REGULATIONS.
16. ALL SLOPES 3:1 OR GREATER, EXCEPT THOSE ASSOCIATED WITH LANDSCAPE BERMING, SHALL BE MONITORED DURING PLACEMENT BY THE PROJECT GEOTECHNICAL ENGINEER
17. PAVING MARKINGS TO BE "TRAFFIC WHITE"
18. CONTRACTOR SHALL MAINTAIN A MINIMUM 2 FOOT BENCH BEHIND CURB AND GUTTER IN FILL AREAS.
19. ALL FIRE LINE PIPING SHALL MEET THE REQUIREMENTS OF THE NFPA PIPE SHALL BE UL LISTED, FM APPROVED AND MEET THE AWWA STANDARDS FOR FIRE PROTECTION USE. FITTINGS SHALL HAVE PRESSURE CLASS RATINGS COMPATIBLE WITH THE PIPE USED.
20. THE CONTRACTOR SHALL MAINTAIN A MINIMUM OF 3.5 FEET OF COVER OVER THE PRIVATE WATER MAIN SHOWN HEREON UNLESS OTHERWISE NOTED. THE CONTRACTOR SHALL PROVIDE ALL CRIMPS OR VERTICAL BENDS NECESSARY TO MAINTAIN CLEARANCES WITH OTHER UTILITIES.
21. THE CONTRACTOR SHALL INSPECT THE SITE TO DETERMINE IF ANY TREES, PAVING OR STRUCTURES ARE TO BE REMOVED, PRIOR TO PLACING A BID ON THOSE ITEMS. THE CONTRACTOR SHALL CLEAR THE CONSTRUCTION AREA OF ALL EXISTING TREES, PAVING, STRUCTURES, ETC., UNLESS NOTED ON PLAN.
22. THE SUBJECT PROPERTY IS ZONED M-2 PER 2-2-04 COMPREHENSIVE ZONING PLAN
23. NO CLEARING, GRADING OR CONSTRUCTION IS PERMITTED WITHIN THE WETLANDS, STREAM(S) OR THEIR REQUIRED BUFFERS.
24. THIS PLAN HAS BEEN PREPARED IN ACCORDANCE WITH THE PROVISIONS OF SECTION 16.124 OF THE HOWARD COUNTY CODE AND LANDSCAPE MANUAL.
25. FINANCIAL SURETY FOR THE REQUIRED LANDSCAPING HAS BEEN POSTED AS PART OF THE DPW DEVELOPERS AGREEMENT IN THE AMOUNT OF $27,090.00 .
26. TRAFFIC CONTROL DEVICES, MARKINGS AND SIGNING SHALL BE IN ACCORDANCE WITH THE LATEST EDITION OF THE MANUAL OF UNIFORM TRAFFIC CONTROL DEVICES(MUTCD). ALL STREET AND REGULATORY SIGNS SHALL BE IN PLACE PRIOR TO THE PLACEMENT OF ANY ASPHALT.
27. THE COORDINATES SHOWN HEREON ARE BASED UPON THE HOWARD COUNTY GEODETIC CONTROL WHICH IS BASED UPON THE MARYLAND STATE PLAN COORDINATE SYSTEM. HOWARD COUNTY GEODETIC CONTROL STATIONS NO. 2447002, 2447003 & 2446002.
28. ALL EXTERIOR LIGHTING SHALL COMPLY WITH SECTION 134 OF THE ZONING REGULATIONS
29. THE TRAFFIC STUDY WAS PREFORMED BY THE TRAFFIC GROUP AND APPROVED ON OCTOBER 1, 1992 UNDER P-91-14.
30. NOISE STUDY IS NOT REQUIRED FOR THIS INDUSTRIAL ZONED PROPERTY.
31. CONTRACTOR TO PLACE A WITNESS POST AT THE TERMINUS OF ALL UTILITY STUBS.
32. CONTRACTOR TO VERIFY THE SIZE, LOCATION AND ELEVATION OF ALL WATER, SEWER AND STORM DRAIN CONNECTIONS AT THE BUILDING WITH THE MECHANICAL CONTRACTOR BEFORE BEGINNING CONSTRUCTION OF SERVICE CONNECTIONS TO SERVE THE BUILDING.
33. GUARDRAIL SHALL BE INSTALLED WHERE SHOWN AND SHALL BE STATE OF MARYLAND STATE HIGHWAY ADMINISTRATION, GUARDRAIL WITH BEAM, STANDARD NO. 660.00 SERIES INCLUDING END SECTION AT ALL TERMINI.
34. CONCRETE WHEEL STOPS SHALL BE INSTALLED WHERE SHOWN ON THE PLAN AND SHALL BE PRECAST, STANDARD CONCRETE, ANCHORED TO THE PAVEMENT WITH 2 STEEL RODS PER EACH WHEEL STOP DRIVEN A MINIMUM OF 8" IN BITUMINOUS CONCRETE PAVEMENT OR TWO DOWELLS PER EACH WHEEL STOP GROUTED A MINIMUM OF 4" INTO CEMENT PAVEMENT.
35. DUMPSTERS WILL BE LOCATED WITHIN TRUCK LOADING AREA.

NOTES

1. STORM WATER MANAGEMENT FOR THE ENTIRE SUBDIVISION WAS PROVIDED UNDER F94-24. DETENTION FACILITIES WERE SIZED TO MANAGE ULTIMATE SITE CONDITIONS.
2. THIS PLAN IS EXEMPT FROM COMPLIANCE WITH THE REQUIREMENTS OF THE FOREST CONSERVATION ACT PER SUBDIVISION SECTION 16.1202(b)(1)(iii) BECAUSE THIS SUBDIVISION HAD PRELIMINARY PLANS (P-91-13 and P-91-14) APPROVED PRIOR TO 12/31/92 AND THIS SITE DEVELOPMENT PLAN DOES NOT EXCEED THE LIMIT OF DISTURBANCE SHOWN ON P-91-13 or P-91-14.
3. THE FLOODPLAIN STUDY AND WETLANDS DELINEATION WAS COMPLETED, REVIEWED AND APPROVED UNDER P-91-14 ON OCTOBER 1, 1992.
4. IMPACT TO NONTIDAL WETLANDS AND WATERWAYS WAS APPROVED ON JANUARY 13, 1994 BY MARYLAND DEPARTMENT OF NATURAL RESOURCES WATER RESOURCES ADMINISTRATION TRACKING NO. 1991011196 DIVISION NO. 93-NT-0858.
5. THIS SUBDIVISION IS SUBJECT TO WAIVER WP 91-98 DATED MARCH 15, 1991 WHICH APPROVED THE FOLLOWING:
   1. SECTION 16.116.C.4 - TO PERMIT REMOVAL OF VEGETATIVE COVER AND / OR GRADING ON SPECIFIC STEEP SLOPES ADJACENT TO A FLOODPLAIN OR WETLAND AND WITHIN SPECIFIC WETLANDS.
   2. SECTION 16.116.C.6 - TO PERMIT REMOVAL OF VEGETATIVE COVER AND / OR GRADING WITHIN THE REQUIRED 25 FT WETLAND BUFFERS FOR ROAD CROSSINGS, STORM WATER MANAGEMENT AND SPECIFIC FUTURE DEVELOPMENT AREAS.
6. THIS PLAN IS SUBJECT TO WAIVER TO THE DESIGN MANUAL VOLUME III (INTERSECTION SIGHT DISTANCE) DATED FEBRUARY 4, 2005, WHICH APPROVED THE FOLLOWING: TO PERMIT A SAFE STOPPING SIGHT DISTANCE OTHER THAN THE DESIGN MANUAL VOLUME III, INTERSECTION SIGHT DISTANCE REQUIREMENTS.
7. THIS PLAN IS SUBJECT TO WAIVER TO RETAINING WALL GUIDELINES DATED MARCH 15, 2005. WHICH APPROVED THE WAIVER BASED ON THE SUBMITTED REPORT INDICATING THAT PROPOSED WATER MAIN IS NOT WITHIN THE FAILURE PLAIN OF THE PROPOSED WALL.
8. THIS PLAN IS SUBJECT TO WAIVER WP-05-57 DATED JANUARY 27, 2005, WHICH APPROVED THE FOLLOWING: SECTION 16.123(a)(2) - TO PERMIT THE ISSUANCE OF A GRADING PERMIT AFTER A "TECHNICALLY COMPLETE" LETTER IS ISSUED AND PRIOR TO OBTAINING SIGNATURE APPROVAL.

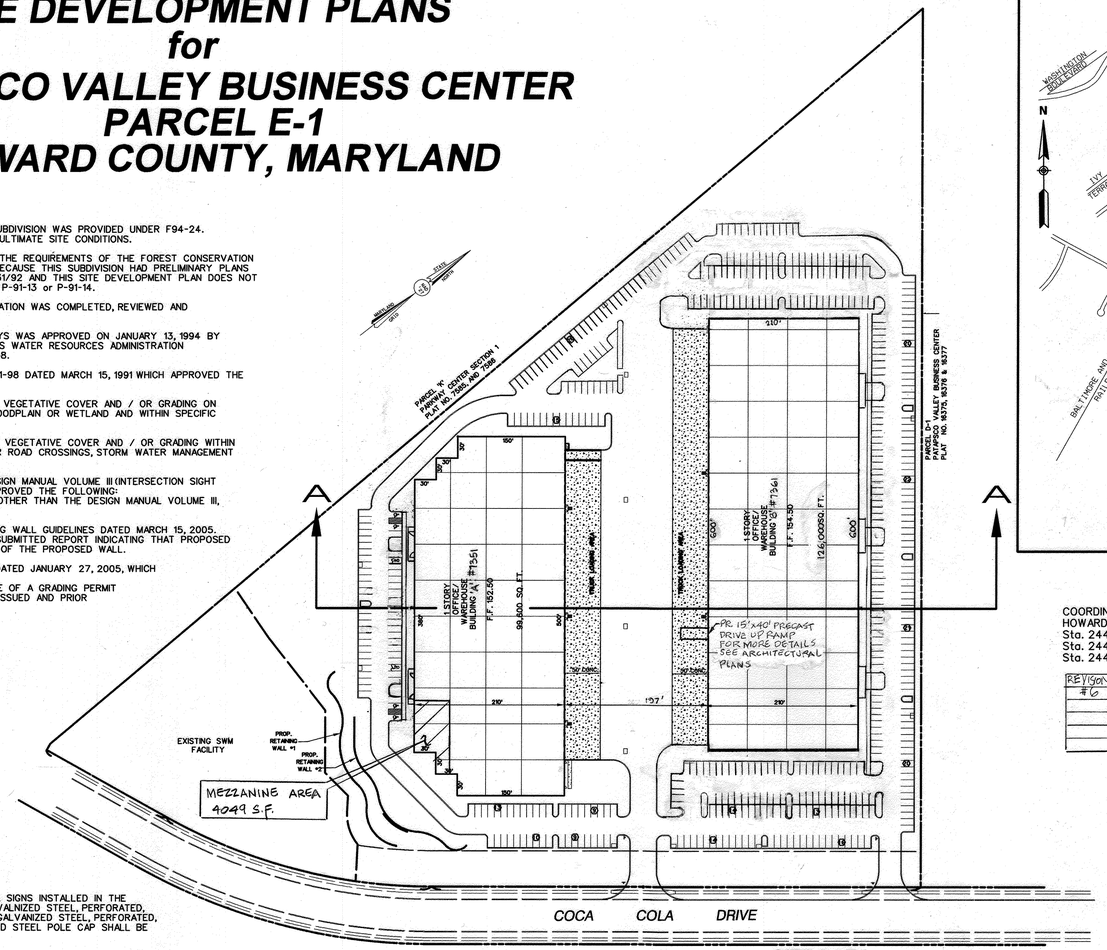

SIGN POST NOTE:

"SIGN POSTS: ALL SIGN POST USED FOR TRAFFIC CONTROL SIGNS INSTALLED IN THE COUNTY RIGHT-OF-WAY SHALL BE MOUNTED ON A 2" GAVALNIZED STEEL, PERFORATED, SQUARE TUBE SLEEVE (14 GAUGE) INSERTED INTO A 2½" GALVANIZED STEEL, PERFORATED, SQUARE TUBE SLEEVE (12 GAUGE) - 3' LONG. A GALVANIZED STEEL POLE CAP SHALL BE MOUNTED ON TOP OF EACH POST."

STREET TREE SPACING NOTE:

A MINIMUM 20 FOOT SPACING IS TO BE PROVIDED BETWEEN STREET LIGHTS AND STREET TREES.

PROPOSED LAYOUT

Scale 1" = 100'

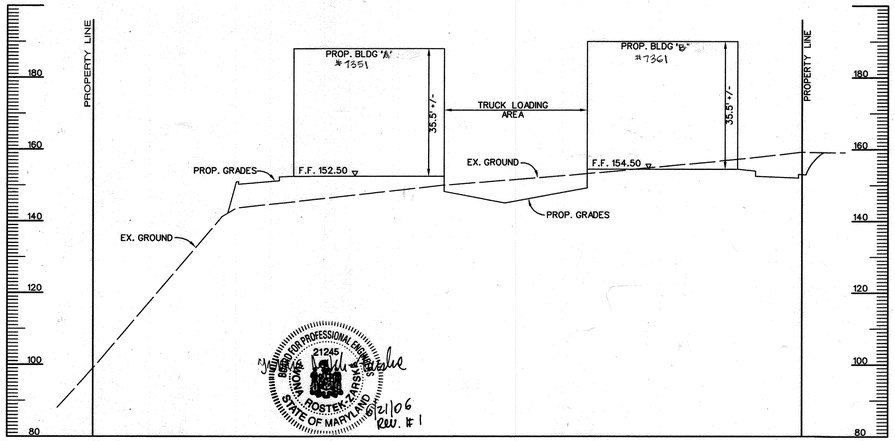

SECTION A-A THROUGH SITE

Scale H: 1" = 100'
V: 1" = 20'

REVISION #1
RELOCATED H.C. SPACES CLOSER TO THE BLDG. ENTRANCES
REVISED "SITE DATA", REDUCED THE WIDTH OF TRUCK LOADING AREA FROM 200' TO 197', REDUCED THE NUMBER OF ENTRANCES TO BLDG 'A' FROM 6 TO 4, INCREASED BLDG 'A' SETBACK FROM PROPERTY LINE TO 40'.

SITE DATA

I. GENERAL SITE DATA

1. CURRENT PLAT REFERENCE: 16375, 16376
2. CURRENT DEED REFERENCE: 8814/467
3. TAX ACCOUNT NUMBER: 01-289489
4. PRESENT ZONING: M-2
5. APPLICABLE DPZ FILE REFERENCES: S90-19, P91-14, F94-24, F02-164, WP-91-98, P-91-13 and F04-067, F-05-190
6. EXISTING USE: VACANT
7. PROPOSED USE: 2 OFFICE / WAREHOUSE BUILDINGS (229,649 SF)
   BUILD 'A' #7351 - 99,600 SF FIRST LEVEL + 4049 S.F. MEZZANINE LEVEL = 103,649 S.F.
   OFFICE - 19,920 SF AND MEZZANINE LEVEL - 4049 S.F.
   WAREHOUSE - 79,680 SF
   BUILD 'B' #7361 - 126,000 SF
   20% OFFICE - 25,200 SF
   80% WAREHOUSE - 100,800 SF
   NOTE: THERE IS NO PROPOSED SECOND LEVEL OR MEZZANINE LEVEL IN BUILDING 'B'
8. PROPOSED WATER: PUBLIC
9. PROPOSED SEWER: PRIVATE ON SITE LINE TIES TO PUBLIC ON SITE SYSTEM
10. WATER AND SEWER CONTRACT NUMBER: 14-4237-D

II. AREA TABULATION:

1. PARCEL E-1 AREA: 19.056 ACRES
2. AREA OF THIS PLAN SUBMISSION: 19.056 ACRES
3. TOTAL DISTURBED AREA: 16.8 ACRES
4. TOTAL IMPERVIOUS AREA: 522,278 SF (11.98 AC) - 63%
5. BUILDING COVERAGE TO SITE: 225,600 SF GROUND FLOOR AREA / TOTAL 830,079 S.F. - 27%

III. OPEN SPACE DATA:

N/A. OPEN SPACE PROVIDED AS PART OF APPROVED SUBDIVISION

IV. PARKING SPACE DATA

- BUILD. 'A' #7351 - 103,649 SF
  OFFICE - 19,920 SF @ 3.3 PS/1000 SF = 65.74 PS
  WAREHOUSE - 79,680 SF @ 0.5 PS/1000 SF = 39.84 PS
  MEZZANINE - 4049 SF @ 3.3 PS/1000 S.F. = 13.36 P.S.
- PARKING REQUIRED 120 P.S.
- PARKING PROVIDED: 124 PS
  HANDICAPPED PARKING SPACES
  STANDARD H.C. - 4 PS
  VAN ACCESSIBLE H.C. - 2 PS
- BUILD. 'B' #7361 - 126,000 SF
  OFFICE - 25,200 SF @ 3.3 PS/1000 SF = 83.16 PS
  WAREHOUSE - 100,800 SF @ 0.5 PS/1000 SF = 50.4 PS
  PARKING REQUIRED: 134 PS

PARKING PROVIDED: 250 PS
HANDICAPPED PARKING SPACES
STANDARD H.C. - 6 PS
VAN ACCESSIBLE H.C. - 2 PS

TOTAL INCLUDES: 499 PS
485 STANDARD SPACES @ 9' x 18'
10 STANDARD + 4 VAN ACCESSIBLE HANDICAP SPACES @ 24' x 18' TWO SIDE BY SIDE

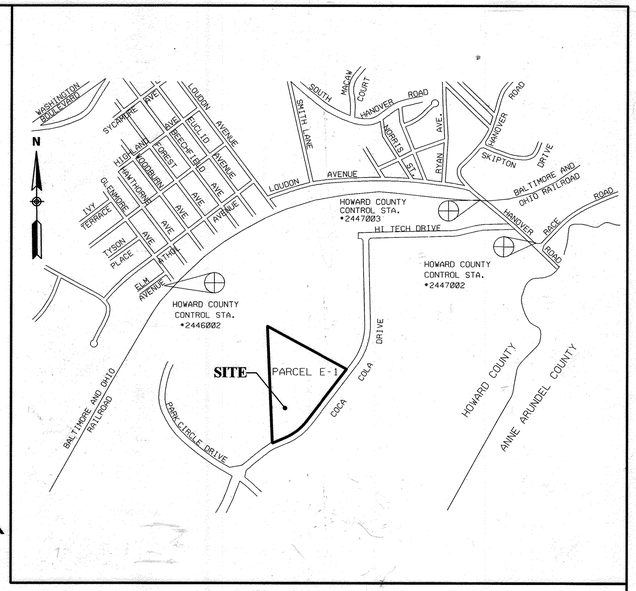

LOCATION MAP

SCALE: 1" = 1,000'

COORDINATES BASED ON NAD '27, MARYLAND COORDINATE SYSTEM AS PROJECTED BY HOWARD COUNTY GEODETIC CONTROL STATIONS NO. 2447002, 2447003 AND NO. 2446002.
Sta. 2447002 N 494376.0470 E 879030.1730
Sta. 2447003 N 494994.5460 E 878209.6580
Sta. 2446002 N 493665.7900 E 873726.1094

REVISION	DATE	DESCRIPTION
#6	6-5-2023	REV 6: REV. SHEETS 1, 20, 22, 24, 25, 30 SWAP OUT SHEET 26, 27, NEW SHEET 30A

STATE OF MARYLAND LOUIS C. MEISGEIER 29203 PROFESSIONAL ENGINEER
MD LIC. 29203, EXP. 6-16-23

REVISION #5 5/2/2022
ADDED LOD FOR THE REINFORCEMENT OF EXIST. RETAINING WALLS AND STORM DRAINAGE

APPROVED: HOWARD COUNTY DEPARTMENT OF PLANNING AND ZONING

Chief, Development Engineering Division	Date 7/26/05
Chief, Land Development Division	Date 8/2/05
Director	Date 8/4/05

ADDRESS CHART

LOT /PARCEL NO.	STREET ADDRESS
PARCEL 285 LOT E-1	BUILDING "A" 7351 COCA COLA DRIVE
" "	BUILDIND "B" 7361 COCA COLA DRIVE

PERMIT INFORMATION CHART

SUBDIVISION NAME			SECTION / AREA		LOT/PARCEL NO.
PATAPSCO VALLEY BUSINESS CENTER			N/A		PARCEL 285 LOT E-1
PLAT NO. 17589, 17590	GRID 20	ZONING M-2	TAX MAP NO. 38	ELECTION DISTRICT 1st	CENSUS TRACT 6012.02
WATER CODE A 04			SEWER CODE 2150000		

COVER SHEET

PATAPSCO VALLEY BUSINESS CENTER

PARCEL E-1

HOWARD COUNTY, MARYLAND
SCALE: AS SHOWN

SDP-04-147

SHEET 1 OF 32
MAY, 2004

SDP-04-147

SHEET INDEX	
NO.	SHEET TITLE
1	COVER SHEET
2	SITE PLAN
3	SITE PLAN
4	GRADING & UTILITY PLAN
5	GRADING & UTILITY PLAN
6	SITE DETAILS
7	SITE DETAILS & SANITARY SEWER PROFILE
8	STORM DRAIN DRAINAGE AREA MAP
9	STORM DRAIN PROFILES
10	STORM DRAIN PROFILES
11	EROSION & SEDIMENT CONTROL PLAN
12	EROSION & SEDIMENT CONTROL PLAN
13	EROSION & SEDIMENT CONTROL DETAILS
14	LANDSCAPE PLAN
15	LANDSCAPE PLAN
16	RETAINING WALL LOCATION PLAN & DETAILS
17	RETAINING WALL 1, ELEVATION VIEW
18	RETAINING WALL 2, ELEVATION VIEW
19	RETAINING WALL SPECIFICATIONS
20	E&S CONTROL / FOREST CONSERVATION LANDSCAPE PLAN
21	EROSION AND SEDIMENT CONTROL NOTES & DETAILS RET WALL REINFORCEMENT
22-32	PROPOSED RETAINING WALL PLANS AND DETAILS

REVISION #4 12/05/16
ADDITION OF A PRECAST DRIVE UP RAMP WITHIN THE LOADING AREA OF BUILDING 'B' (#7361)

REVISION #3 11-02-06
INCREASE BUILDING 'A' SQUARE FOOTAGE FROM 99,600 S.F. TO 103,649 S.F. BY ADDING AN MEZZANINE AREA OF 4049 S.F., REVISED PARKING CALCULATIONS.

REVISION #2
REDUCED BLDG 'B' S.F. FROM 157,500 TO 126,000 S.F., INCREASED THE PARKING SPACES FOR BLDG 'B' AND BLDG 'A', REVISED "SITE DATA", REDUCED THE NUMBER OF ENTRANCES TO BLDG 'B' FROM 7 TO 6, RELOCATED H.C. SPACES CLOSER TO THE REVISED ENTRANCES.

BLDG
Baltimore Land Design Group Inc.
Consulting Engineers
222 SCHILLING CIRCLE SUITE 105 HUNT VALLEY, MARYLAND 21030
PHONE: 410.229.9851 FAX: 410.229.9865 BLDGINC@WINSTARMAIL.COM

OWNER / DEVELOPER

LIBERTY PROPERTY LIMITED PARTNERSHIP

5950 SYMPHONY WOODS ROAD, SUITE 210
COLUMBIA, MARYLAND 21044
ATTN: MR. JAMES FLANNERY

SITE CONSTRUCTION NOTES

1. SAW CUT EXISTING PAVING. REMOVE EXISTING CONCRETE CURB & GUTTER AND EXIST. SIDEWALK. REGRADE. INSTALL NEW CONCRETE CURB & GUTTER (SEE HOWARD CO. STD. DETAIL. PLATE R-3.01) NEW PAVING. MATCH EXISTING CONCRETE CURB & GUTTER FOR GRADE & LINE. PROVIDE HANDICAP RAMPS AT CURB RETURNS ON BOTH SIDES OF THE ENTRANCE
2. STOP SIGN R1-1

LEGEND

HEAVY DUTY PAVEMENT P-5

- 1.5" BIT. CONC. SURFACE
- 1.5" BIT. CONC. BASE
- 5" BIT. CONC. BASE
- 6" GRADED AGGREGATE BASE (GAB)

LIGHT DUTY PAVEMENT P-3

- 1.5" BIT. CONC. SURFACE
- 4.5" BIT. CONC. BASE
- 5" GRADED AGGREGATE BASE (GAB)

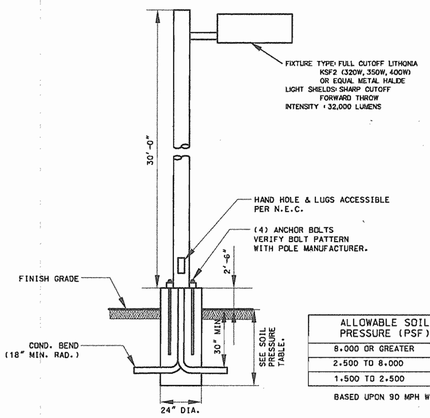

ALLOWABLE SOIL PRESSURE (PSF)	DEPTH
8,000 OR GREATER	3'-8"
2,500 TO 8,000	6'-0"
1,500 TO 2,500	7'-6"

BASED UPON 90 MPH WIND LOAD

LIGHT POLE DETAIL

N.T.S.

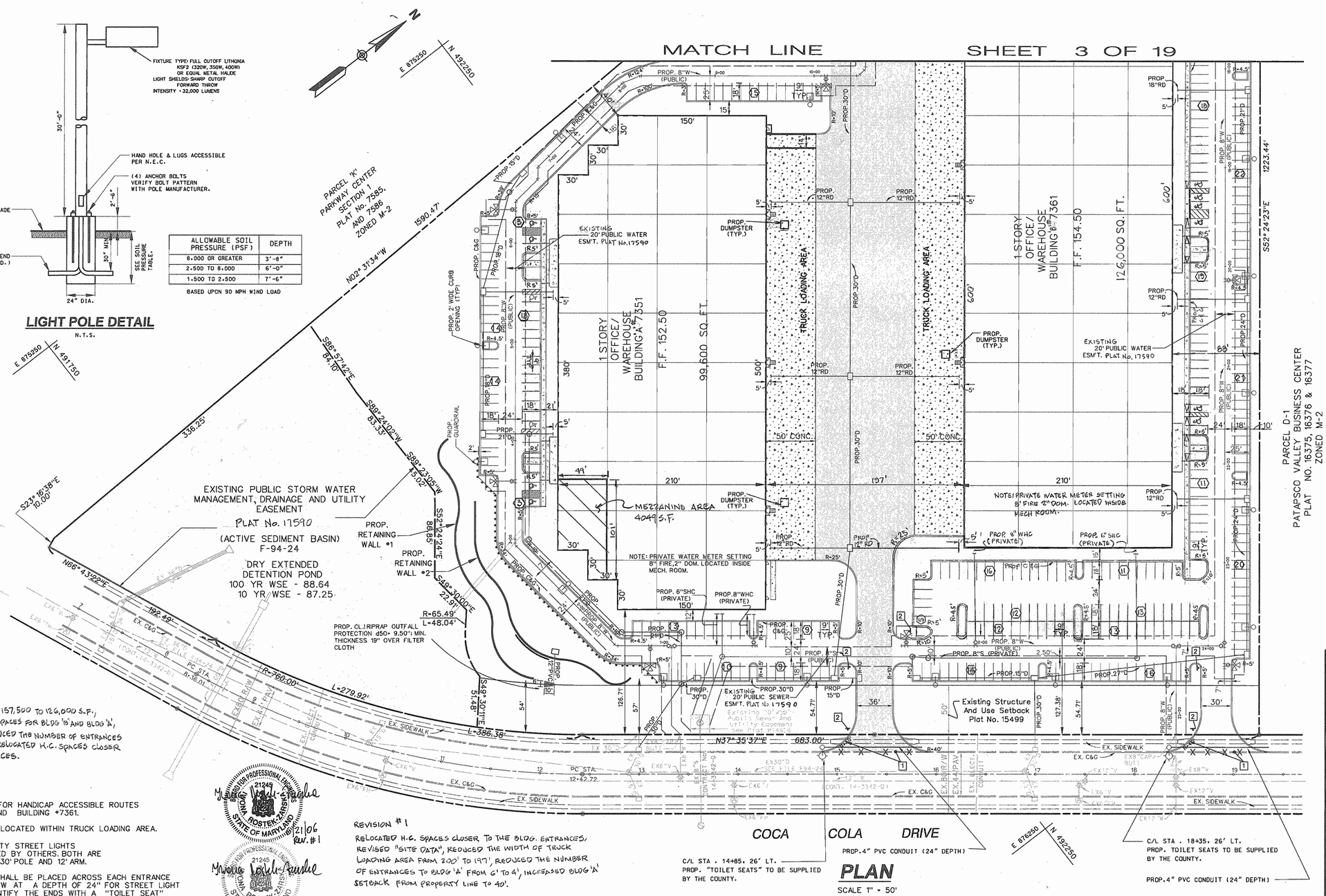

PLAN

SCALE 1" = 50'

LEGEND

- EXIST. R/W LINE
- EXIST. PROPERTY LINE
- EXIST. CONC. C & G
- EXIST. CONC. C&G TO BE REMOVED
- EXIST. WOODS
- EXIST. STORM DRAIN — EX. 15"D
- EXIST. SANITARY — EX. 8"S
- EXIST. WATER — EX. 12"W
- EXIST. FIRE HYDRANT
- PROP. CONC. C & G
- PROP. GUARD RAIL
- EX. DRAINAGE & UTILITY EASEMENT
- PROP. STORM DRAIN — PROP. 30"D
- PROP. SANITARY (PUBLIC) — PROP. 8"S
- PROP. SANITARY (PRIVATE) — PROP. 8"S
- PROP. WATER — PROP. 8"W
- PROP. HEAVY DUTY PAVING
- PROP. CONCRETE
- PROP. No. OF PARKING SPACES — (13)
- PROP. REFERENCE SITE CONSTRUCTION NOTES — 2
- PROP. ON-SITE 30' HIGH LIGHT POLE (PRIVATE)
- PROP. HOWARD COUNTY STREET LIGHTS ARE TO BE INSTALLED BY OTHERS

REVISION #2

REDUCED BLDG 'B' S.F. FROM 157,500 TO 126,000 S.F., INCREASED THE PARKING SPACES FOR BLDG 'B' AND BLDG 'A', REVISED "SITE DATA", REDUCED THE NUMBER OF ENTRANCES TO BLDG 'B' FROM 7 TO 6, RELOCATED H.C. SPACES CLOSER TO THE REVISED ENTRANCES.

NOTES:

1. SEE SHEET 6 OF 19 FOR HANDICAP ACCESSIBLE ROUTES FOR BUILDING #7351 AND BUILDING #7361.
2. DUMPSTERS WILL BE LOCATED WITHIN TRUCK LOADING AREA.
3. PROP. HOWARD COUNTY STREET LIGHTS ARE TO BE INSTALLED BY OTHERS. BOTH ARE 250 WATTS WITH A 30' POLE AND 12' ARM.
4. A 4" PVC CONDUIT SHALL BE PLACED ACROSS EACH ENTRANCE IN THE COUNTY R-O-W AT A DEPTH OF 24" FOR STREET LIGHT CABLE CROSSING. IDENTIFY THE ENDS WITH A "TOILET SEAT" THAT WILL BE SUPPLIED BY THE COUNTY.

REVISION #1

RELOCATED H.C. SPACES CLOSER TO THE BLDG. ENTRANCES, REVISED "SITE DATA", REDUCED THE WIDTH OF TRUCK LOADING AREA FROM 200' TO 197', REDUCED THE NUMBER OF ENTRANCES TO BLDG 'A' FROM 6' TO 4', INCREASED BLDG 'A' SETBACK FROM PROPERTY LINE TO 40'.

REVISION #3 11-02-06

INCREASE BUILDING 'A' SQUARE FOOTAGE FROM 99,600 S.F. TO 103,649 S.F. BY ADDING AN MEZZANINE AREA OF 4049 S.F. REVISED PARKING CALCULATIONS.

PUBLIC STREET LIGHT LOCATION DATA			
ROAD STATION	QUANTITY	DESCRIPTION	POLE
14+85, 26' LEFT	1	250 WATT SAG LENSE	30' POLE WITH 12' ARM
18+35, 26' LEFT	1	250 WATT SAG LENSE	30' POLE WITH 12' ARM

NOTE:

DEVELOPER MAY BE RESPONSIBLE FOR PAVEMENT MARKING MODIFICATION IF COCA COLA DRIVE IS MARKED PRIOR TO COMPLETION OF THIS PROJECT.

APPROVED: HOWARD COUNTY DEPARTMENT OF PLANNING AND ZONING

Chief, Development Engineering Division	Date 7/26/05
Chief, Land Development Division	Date 8/8/05
Director	Date 8/9/05

ADDRESS CHART

Lot/Parcel No.	Street Address
PARCEL 285 E-1	BUILDING "A" 7351 COCA COLA DRIVE
" "	BUILDING "B" 7361 COCA COLA DRIVE

PERMIT INFORMATION CHART

Subdivision Name			Section /Area		Lot/Parcel No.
PATAPSCO VALLEY BUSINESS CENTER			N/A		PARCEL 285 LOT E-1
PLAT NO. 17589, 17590	Grid # 20	Zoning M-2	Tax Map No. 38	Election District 1st	Census Tract 6012.02
Water Code A 04			Sewer Code 2150000		

SITE PLAN

PATAPSCO VALLEY BUSINESS CENTER

PARCEL E-1

HOWARD COUNTY, MARYLAND — SHEET 2 OF 19

SCALE: AS SHOWN — SDP-04-147 — MAY, 2004

SDP-04-147

BLDG
Baltimore Land Design Group Inc.
Consulting Engineers
222 SCHILLING CIRCLE SUITE 105 HUNT VALLEY, MARYLAND 21030
PHONE: 410.229.9851 FAX: 410.229.9865 BLDGINC@WINSTARMAIL.COM

OWNER / DEVELOPER

LIBERTY PROPERTY LIMITED PARTNERSHIP

5950 SYMPHONY WOODS ROAD, SUITE 210
COLUMBIA, MARYLAND 21044
ATTN: MR. JAMES FLANNERY

LEGEND

HEAVY DUTY PAVEMENT P-5

- 1.5" BIT. CONC. SURFACE
- 1.5" BIT. CONC. BASE
- 5" BIT. CONC. BASE
- 6" GRADED AGGREGATE BASE (GAB)

LIGHT DUTY PAVEMENT P-3

- 1.5" BIT. CONC. SURFACE
- 4.5" BIT. CONC. BASE
- 5" GRADED AGGREGATE BASE (GAB)

EXISTING WETLANDS PLAT NO. 14624		
LINE	BEARING	LENGTH
200	S03°31'03"E	59.57'
201	S04°13'28"E	61.09'
202	S32°14'44"E	33.32'
203	S10°56'38"W	29.77'
204	S25°21'36"E	25.09'
205	S32°55'51"W	7.64'
206	N26°57'24"W	46.97'
207	N02°04'21"E	30.25'
208	N26°14'59"W	29.50'
209	N08°42'22"W	42.68'
210	N00°16'07"E	56.47'
211(a)	N23°48'23"W	23.48'

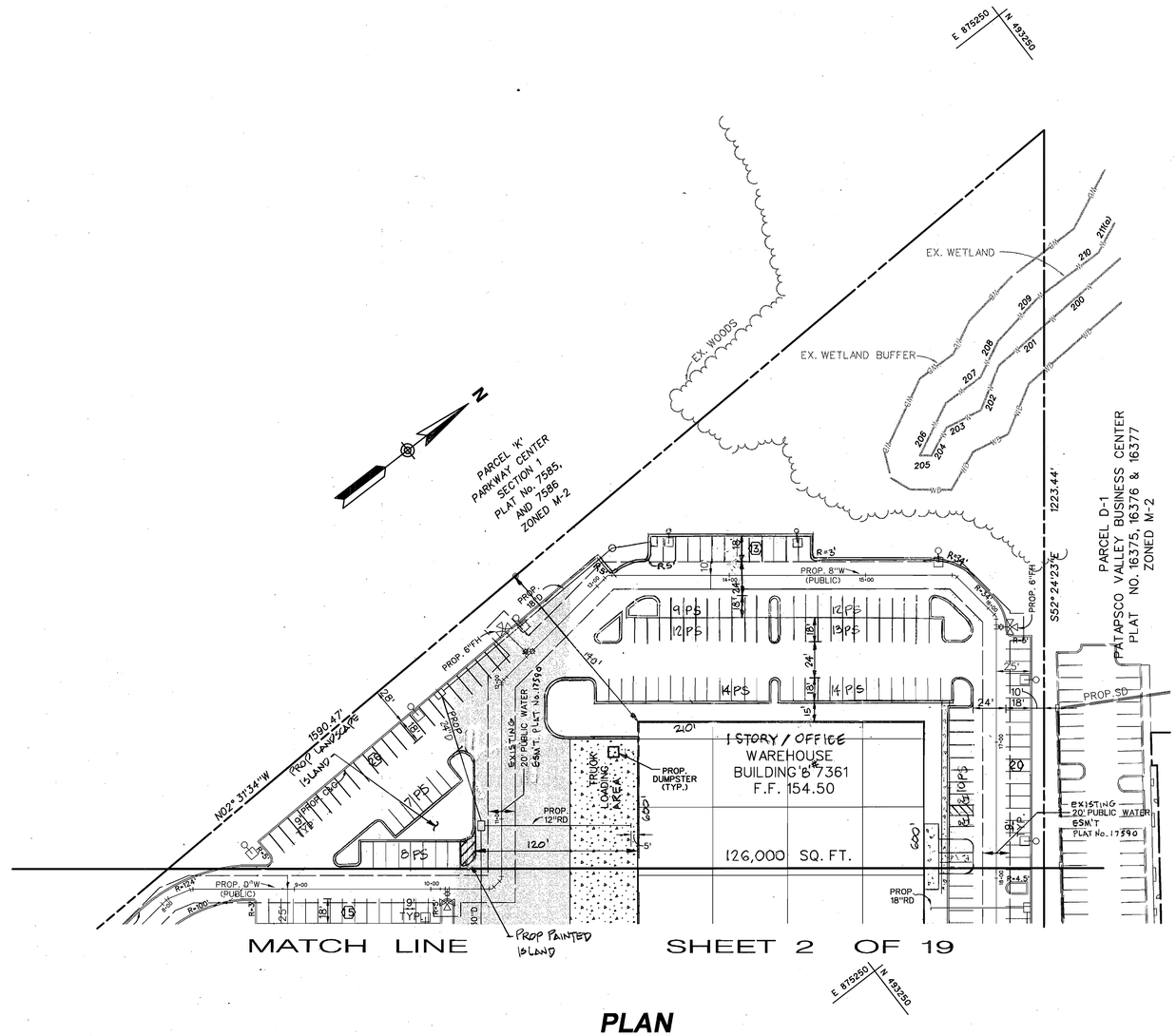

PLAN

SCALE 1" = 50'

LEGEND

- EXIST. R/W LINE
- EXIST. PROPERTY LINE
- EXIST. CONC. C & G
- EXIST. CONC. C&G TO BE REMOVED
- EXIST. WOODS
- EXIST. STORM DRAIN — EX.15"D
- EXIST. SANITARY — EX.8"S
- EXIST. WATER — EX.12"W
- EXIST. FIRE HYDRANT
- PROP. CONC. C & G
- PROP. GUARD RAIL
- EX. DRAINAGE & UTILITY EASEMENT
- PROP. STORM DRAIN — PROP. 30"D
- PROP. SANITARY (PUBLIC) — PROP. 8"S
- PROP. SANITARY (PRIVATE) — PROP. 8"S
- PROP. WATER — PROP. 8"W
- PROP. HEAVY DUTY PAVING
- PROP. CONCRETE
- PROP. No. OF PARKING SPACES — 13
- PROP. REFERENCE SITE CONSTRUCTION NOTES — 2
- PROP. ON-SITE 30' HIGH LIGHT POLE (PRIVATE)
- PROP. HOWARD COUNTY STREET LIGHTS ARE TO BE INSTALLED BY OTHERS

APPROVED: HOWARD COUNTY DEPARTMENT OF PLANNING AND ZONING

Chief, Development Engineering Division	Date 2/26/05
Chief, Land Development Division	Date 8/3/05
Director	Date 8/4/05

ADDRESS CHART	
Lot/Parcel No.	Street Address
PARCEL 285 E-1	BUILDING "A" 7351 COCA COLA DRIVE
" "	BUILDING "B" 7361 COCA COLA DRIVE

PERMIT INFORMATION CHART					
Subdivision Name			Section /Area		Lot/Parcel No.
PATAPSCO VALLEY BUSINESS CENTER			N/A		PARCEL 285 LOT E-1
PLAT NO.	Grid #	Zoning	Tax Map No.	Election District	Census Tract
17589, 17590	20	M-2	38	1st	6012.02
Water Code			Sewer Code		
A 04			2150000		

NOTES:

1. SEE SHEET 6 OF 19 FOR HANDICAP ACCESSIBLE ROUTES FOR BUILD. 'A' #7351 AND BUILD. 'B' #7361.
2. DUMPSTERS WILL BE LOCATED WITHIN TRUCK LOADING AREA.

REVISION #2

REDUCED BLDG 'B' S.F FROM 157,500 TO 126,000 S.F, INCREASED THE PARKING SPACES FOR BLDG 'B' AND BLDG 'A', REVISED "SITE DATA", REDUCED THE NUMBER OF ENTRANCES TO BLDG 'B' FROM 7 TO 6, RELOCATED H.C. SPACES CLOSER TO THE REVISED ENTRANCES.

NOTE:

DEVELOPER MAY BE RESPONSIBLE FOR PAVEMENT MARKING MODIFICATION IF COCA COLA DRIVE IS MARKED PRIOR TO COMPLETION OF THIS PROJECT.

BLDG
Baltimore Land Design Group Inc.
Consulting Engineers
222 SCHILLING CIRCLE SUITE 105 HUNT VALLEY, MARYLAND 21030
PHONE: 410.229.9851 FAX: 410.229.9865 BLDGINC@WINSTARMAIL.COM

OWNER / DEVELOPER

LIBERTY PROPERTY LIMITED PARTNERSHIP

5950 SYMPHONY WOODS ROAD, SUITE 210
COLUMBIA, MARYLAND 21044
ATTN: MR. JAMES FLANNERY

LICENSED PROFESSIONAL ENGINEER 21245 LAURA HOOKY ZAUNER STATE OF MARYLAND 9/6/05

SITE PLAN

PATAPSCO VALLEY BUSINESS CENTER

PARCEL E-1

HOWARD COUNTY, MARYLAND SHEET 3 OF 19
SCALE: AS SHOWN SDP-04-147 MAY, 2004

SDP-04-147

DATA FOR PROPOSED RETAINING WALLS

RETAINING WALL #1		
STATION	TOP OF WALL ELEV.	BOTTOM OF WALL ELEV.
0+00	140.00	140.00
0+50	140.00	127.00
1+00	135.00	115.00
1+50	125.00	105.00
2+00	123.00	102.00
2+50	120.00	108.00
2+84	119.00	119.00

RETAINING WALL #2		
STATION	TOP OF WALL ELEV.	BOTTOM OF WALL ELEV.
0+00	143.00	143.00
0+50	142.00	130.50
1+00	140.00	127.50
1+50	138.00	127.00
2+00	138.00	130.00
2+50	136.00	133.00
2+77	139.00	139.00

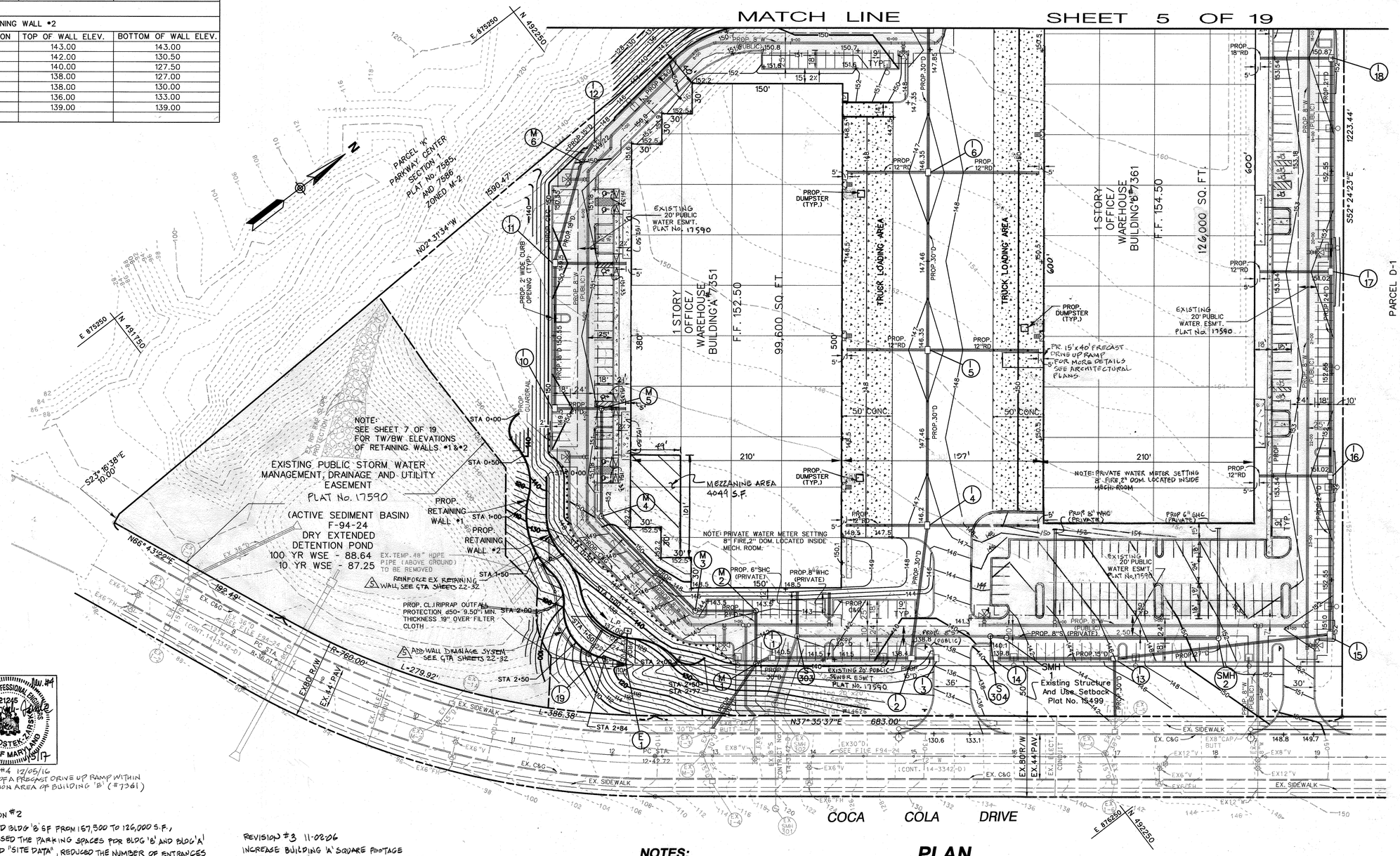

LEGEND

- EXIST. R/W LINE
- EXIST. PROPERTY LINE
- EXIST. CONC. C & G
- EXIST. CONC. C&G TO BE REMOVED
- EXIST. WOODS
- EXIST. STORM DRAIN — EX.15"D
- EXIST. SANITARY — EX.8"S
- EXIST. WATER — EX.12"W
- EXIST. FIRE HYDRANT
- PROP. CONC. C & G
- PROP. GUARD RAIL
- EX. DRAINAGE & UTILITY EASEMENT
- PROP. STORM DRAIN — PROP. 30"D
- PROP. SANITARY (PUBLIC) — PROP. 8"S
- PROP. SANITARY (PRIVATE) — PROP. 8"S
- PROP. WATER — PROP. 8"W
- PROP. CONCRETE
- PROP. ON-SITE 30' HIGH LIGHT POLE (PRIVATE)
- PROP. HOWARD COUNTY STREET LIGHTS ARE TO BE INSTALLED BY OTHERS

REVISION #4 12/05/16
ADDITION OF A PRECAST DRIVE UP RAMP WITHIN THE LOCATION AREA OF BUILDING 'B' (#7361)

REVISION #2
REDUCED BLDG 'B' SF FROM 157,500 TO 126,000 S.F., INCREASED THE PARKING SPACES FOR BLDG 'B' AND BLDG 'A' REVISED "SITE DATA", REDUCED THE NUMBER OF ENTRANCES TO BLDG 'B' FROM 7 TO 6, RELOCATED H.C SPACES CLOSER TO THE REVISED ENTRANCES. EXTENDED BOTH WATER AND SEWER SERVICES TO BLDG. 'B'.

REVISION #3 11-08-06
INCREASE BUILDING 'A' SQUARE FOOTAGE FROM 99,600 S.F. TO 103,649 SF BY ADDING AN MEZZANINE AREA OF 4049 S.F. REVISED PARKING CALCULATIONS.

NOTES:

FOR PROPOSED RETAINING WALL PLAN, ELEVATIONS AND DETAILS SEE SHEETS: 7, 16, 17, 18, AND 19 OF 19

REVISION #1
RELOCATED H.C. SPACES CLOSER TO THE BLDG. ENTRANCES, REVISED "SITE DATA", REDUCED THE WIDTH OF TRUCK LOADING AREA FROM 200' TO 197', REDUCED THE NUMBER OF ENTRANCES TO BLDG 'A' FROM 6 TO 4, INCREASED BLDG 'A' SETBACK FROM PROPERTY LINE TO 40'.

PLAN

SCALE 1" = 50'

REVISION #5 5/2/2022
ADDED REINFORCEMENT OF THE EXISTING RETAINING WALLS AND STORM DRAINAGE

APPROVED: HOWARD COUNTY DEPARTMENT OF PLANNING AND ZONING

Chief, Development Engineering Division	Date 7/26/05
Chief, Land Development Division	Date 8/5/05
Director	Date 8/4/05

ADDRESS CHART

Lot/Parcel No.	Street Address
PARCEL 285 E-1	BUILDING "A" 7351 COCA COLA DRIVE
" "	BUILDING "B" 7361 COCA COLA DRIVE

PERMIT INFORMATION CHART

Subdivision Name			Section /Area		Lot/Parcel No.
PATAPSCO VALLEY BUSINESS CENTER			N/A		PARCEL 285 LOT E-1
PLAT NO.	Grid #	Zoning	Tax Map No.	Election District	Census Tract
17589, 17590	20	M-2	38	1st	6012.02
Water Code			Sewer Code		
A 04			2150000		

GRADING AND UTILITY PLAN

PATAPSCO VALLEY BUSINESS CENTER

PARCEL E-1

HOWARD COUNTY, MARYLAND
SCALE: AS SHOWN
SHEET 4 OF 32
SDP-04-147
MAY, 2004

BLDG
Baltimore Land Design Group Inc.
Consulting Engineers
222 SCHILLING CIRCLE SUITE 105 HUNT VALLEY, MARYLAND 21030
PHONE: 410.229.9851 FAX: 410.229.9865 BLDGINC@WINSTARMAIL.COM

OWNER / DEVELOPER

LIBERTY PROPERTY LIMITED PARTNERSHIP

5950 SYMPHONY WOODS ROAD, SUITE 210
COLUMBIA, MARYLAND 21044
ATTN: MR. JAMES FLANNERY

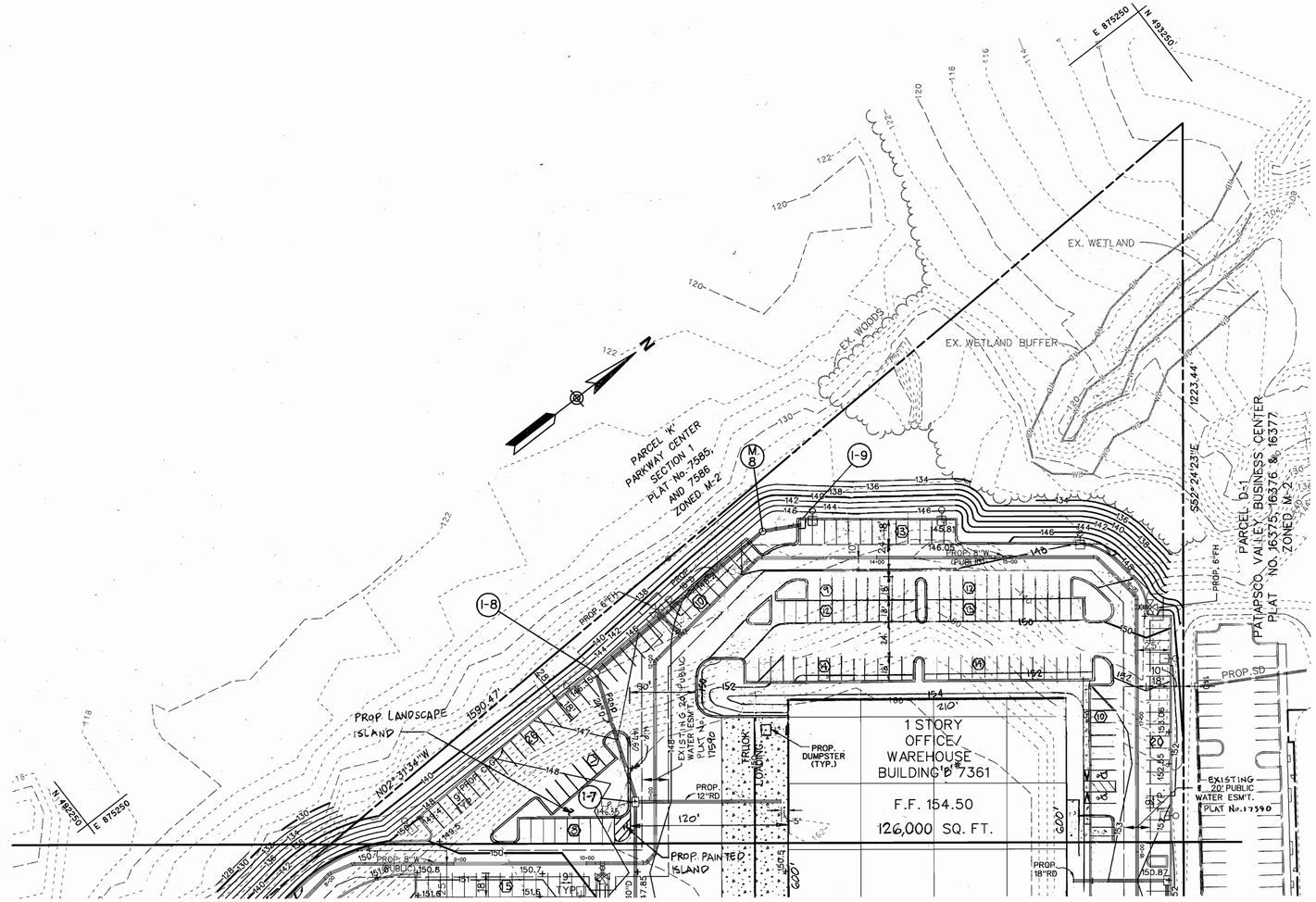

MATCH LINE **SHEET 4 OF 19**

LEGEND

EXIST. R/W LINE	
EXIST. PROPERTY LINE	
EXIST. CONC. C & G	
EXIST. CONC. C&G TO BE REMOVED	
EXIST. WOODS	
EXIST. STORM DRAIN	EX.15"D
EXIST. SANITARY	EX.8"S
EXIST. WATER	EX.12"W
EXIST. FIRE HYDRANT	
PROP. CONC. C & G	
PROP. GUARD RAIL	
EX. DRAINAGE & UTILITY EASEMENT	
PROP. STORM DRAIN	PROP. 30"D
PROP. SANITARY (PUBLIC)	PROP. 8"S
PROP. SANITARY (PRIVATE)	PROP. 8"S
PROP. WATER	PROP. 8"W
PROP. CONCRETE	
PROP. ON-SITE 30' HIGH LIGHT POLE (PRIVATE)	
PROP. HOWARD COUNTY STREET LIGHTS ARE TO BE INSTALLED BY OTHERS	

PLAN

SCALE 1" = 50'

REVISION #2
REDUCED BLDG 'B' S.F. FROM 157,500 TO 126,000 S.F., INCREASED THE PARKING SPACES FOR BLDG 'B' AND BLDG 'A', REVISED "SITE DATA", REDUCED THE NUMBER OF ENTRANCES TO BLDG 'B' FROM 7 TO 6, RELOCATED H.C. SPACES CLOSER TO THE REVISED ENTRANCES, EXTENDED BOTH WATER AND SEWER SERVICES TO BLDG 'B'.

APPROVED: HOWARD COUNTY DEPARTMENT OF PLANNING AND ZONING

Chief, Development Engineering Division	Date 7/26/05
Chief, Land Development Division	Date 8/5/05
Director	Date 8/9/05

ADDRESS CHART

Lot/Parcel No.	Street Address
PARCEL 285 E-1	BUILDING "A" 7351 COCA COLA DRIVE
	BUILDING "B" 7361 COCA COLA DRIVE

PERMIT INFORMATION CHART

Subdivision Name			Section /Area		Lot/Parcel No.
PATAPSCO VALLEY BUSINESS CENTER			N/A		PARCEL 285 LOT E-1
PLAT NO.	Grid #	Zoning	Tax Map No.	Election District	Census Tract
17589, 17590	20	M-2	38	1st	6012.02
Water Code			Sewer Code		
A 04			2150000		

BLDG
Baltimore Land Design Group Inc.
Consulting Engineers
222 SCHILLING CIRCLE SUITE 105 HUNT VALLEY, MARYLAND 21030
PHONE: 410.229.9851 FAX: 410.229.9865 BLDGINC@WINSTARMAIL.COM

OWNER / DEVELOPER
LIBERTY PROPERTY LIMITED PARTNERSHIP
5950 SYMPHONY WOODS ROAD, SUITE 210
COLUMBIA, MARYLAND 21044
ATTN: MR. JAMES FLANNERY

MARYLAND REGISTERED PROFESSIONAL ENGINEER 21245 MONA L. BOSTEK, JR. STATE OF MARYLAND
7/6/05

GRADING AND UTILITY PLAN
PATAPSCO VALLEY BUSINESS CENTER
PARCEL E-1

HOWARD COUNTY, MARYLAND
SCALE: AS SHOWN SDP-04-147
SHEET 5 OF 19
MAY, 2004

SDP-04-147

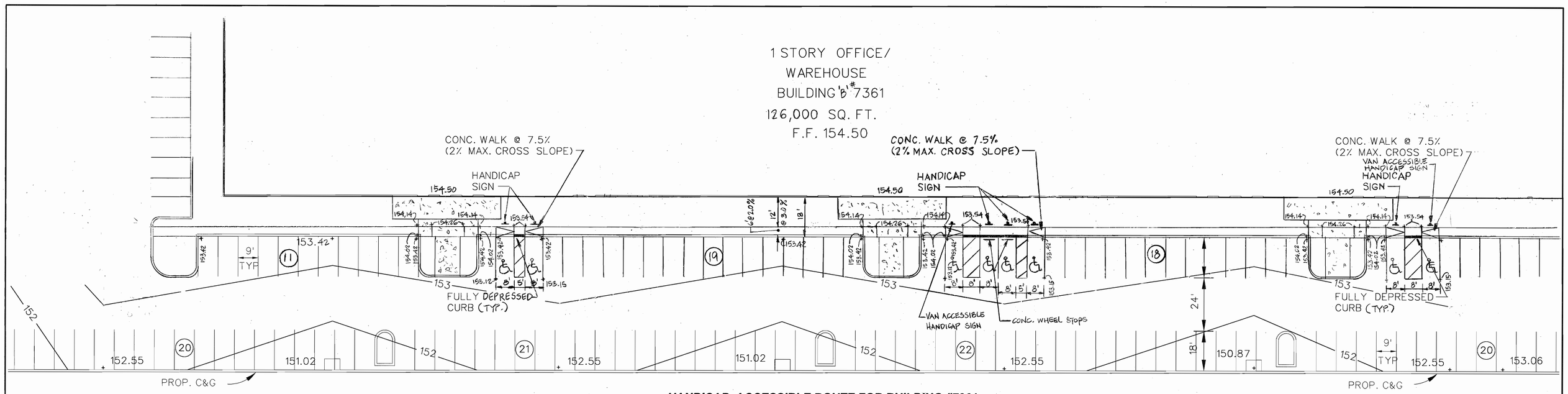

HANDICAP ACCESSIBLE ROUTE FOR BUILDING #7361

SCALE: 1" = 20'

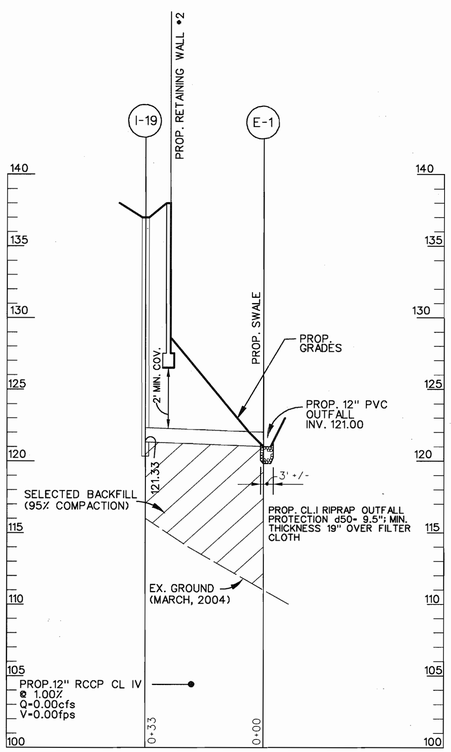

STORM DRAIN PROFILES

SCALE: HORZ. 1" = 50'
VERT. 1" = 5'

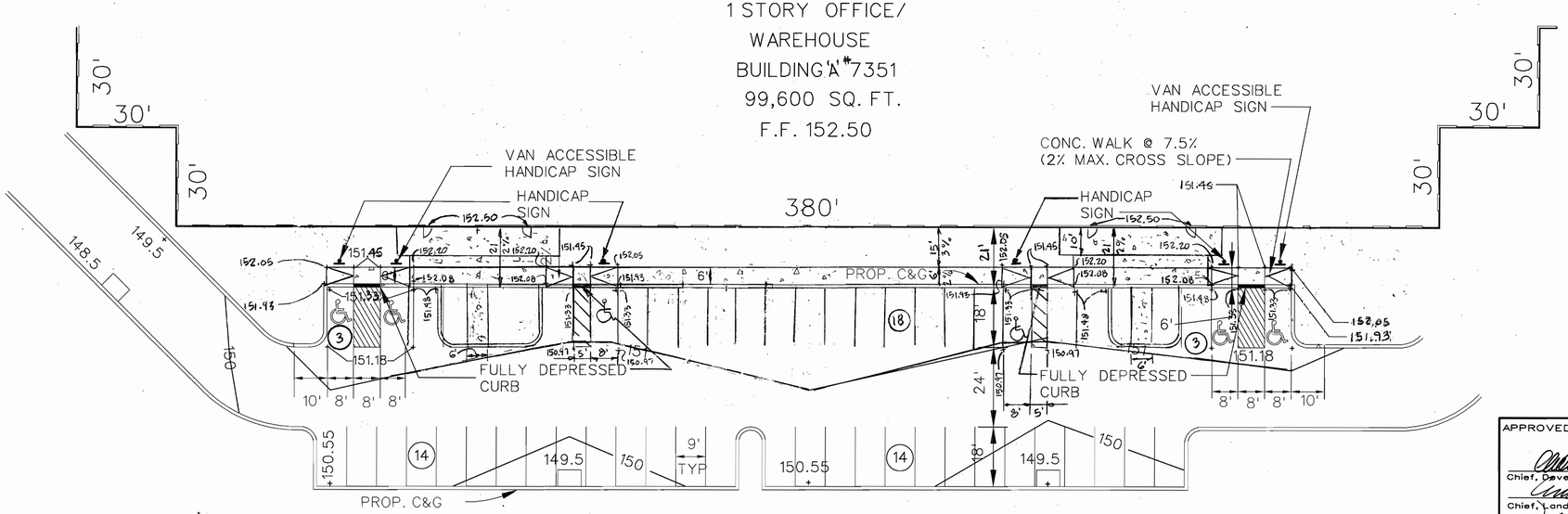

HANDICAP ACCESSIBLE ROUTE FOR BUILDING #7351

SCALE: 1" = 20'

REVISION #2
REDUCED BLDG 'B' S.F. FROM 137,500 TO 126,000 S.F., INCREASED THE PARKING SPACES FOR BLDG 'B' AND BLDG 'A', REVISED "SITE DATA", REDUCED THE NUMBER OF ENTRANCES TO BLDG 'B' FROM 7 TO 6, RELOCATED H.C. SPACES CLOSER TO THE REVISED ENTRANCES.

Monica Rostek-Zarsky
PROFESSIONAL ENGINEER 21245 MONICA ROSTEK-ZARSKY STATE OF MARYLAND
8/21/06
REV. #1

REVISION #1
RELOCATED H.C. SPACES CLOSER TO THE BLDG. ENTRANCES, REVISED "SITE DATA", REDUCED THE WIDTH OF TRUCK LOADING AREA FROM 200' TO 197', REDUCED THE NUMBER OF ENTRANCES TO BLDG 'A' FROM 6 TO 4, INCREASED BLDG 'A' SETBACK FROM PROPERTY LINE TO 40'.

Monica Rostek-Zarsky
PROFESSIONAL ENGINEER 21245 MONICA ROSTEK-ZARSKY STATE OF MARYLAND
7/6/05

BLDG
Baltimore Land Design Group Inc.
Consulting Engineers
222 SCHILLING CIRCLE SUITE 105 HUNT VALLEY, MARYLAND 21030
PHONE: 410.229.9851 FAX: 410.229.9865 BLDGINC@WINSTARMAIL.COM

OWNER / DEVELOPER

LIBERTY PROPERTY LIMITED PARTNERSHIP

5950 SYMPHONY WOODS ROAD, SUITE 210
COLUMBIA, MARYLAND 21044
ATTN: MR. JAMES FLANNERY

APPROVED: HOWARD COUNTY DEPARTMENT OF PLANNING AND ZONING

Chief, Development Engineering Division — Date 7/20/05
Chief, Land Development Division — Date 8/8/05
Director — Date 8/4/05

PERMIT INFORMATION CHART

Subdivision Name			Section / Area		Lot / Parcel No.
PATAPSCO VALLEY BUSINESS CENTER			N/A		PARCEL 285 LOT E-1
PLAT NO.	Grid	Zoning	Tax Map No.	Election District	Census Tract
17589, 17590	20	M-2	38	1st	6012.02
Water Code			Sewer Code		
A 04			2150000		

SITE DETAILS

PATAPSCO VALLEY BUSINESS CENTER

PARCEL E-1

HOWARD COUNTY, MARYLAND — SHEET 6 OF 19
SCALE: AS SHOWN — SDP-04-147 — MAY, 2004

SDP-04-147

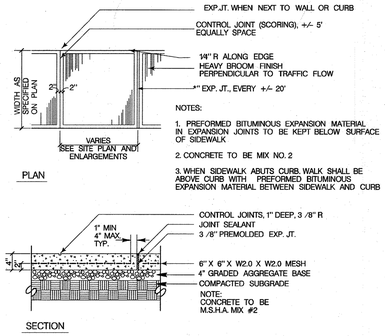

NOTES:

1. PREFORMED BITUMINOUS EXPANSION MATERIAL IN EXPANSION JOINTS TO BE KEPT BELOW SURFACE OF SIDEWALK
2. CONCRETE TO BE MIX NO. 2
3. WHEN SIDEWALK ABUTS CURB, WALK SHALL BE ABOVE CURB WITH PREFORMED BITUMINOUS EXPANSION MATERIAL BETWEEN SIDEWALK AND CURB

Detail Concrete Walk

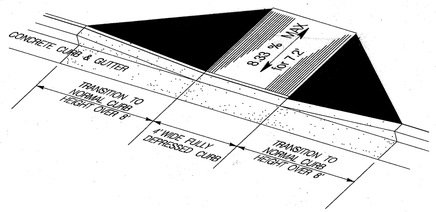

Type 'A' Sidewalk Ramp

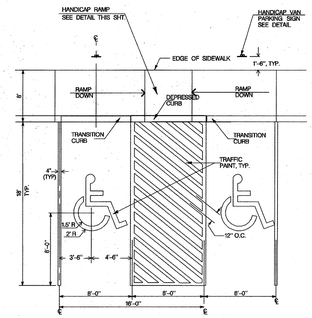

Van Accessible Handicap Parking Space

ALL DIMENSIONS ARE IN INCHES

* REDUCE SPACING 50 PERCENT

COLORS
LEGEND AND BORDER - GREEN
WHITE SYMBOL ON BLUE BACKGROUND
BACKGROUND - WHITE

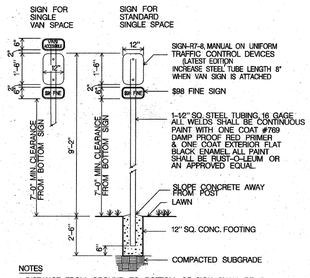

NOTES

1. DISTANCE FROM GROUND TO BOTTOM OF SIGN SHALL BE 7'
2. SEE HANDICAPPED PARKING SPACE DETAIL THIS SHEET FOR LOCATION OF HANDICAPPED SIGN.
3. VAN ACCESSIBLE SPACES SHALL INCLUDE "VAN SIGN" AS REQUIRED
4. SIGNS SHALL CONFORM TO CURRENT ADA CRITERIA.

SIGN COLORS
LETTERS AND BORDER - GREEN
WHITE H.C. SYMBOLS ON BLUE BACKGROUND
BACKGROUND - WHITE

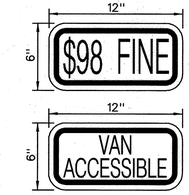

$98 FINE SIGN / VAN ACCESSIBLE SIGN

SIGN TO UTILIZE AN ALUMINUM BLANK 6" X 12" X 0.080 " THICK WITH TWO SINGLE POST MOUNTING HOLES.

THE TEXT AND BORDER SHALL BE STANDARD GREEN TO MATCH THAT ON R7-8 AND, THE BACKGROUND SHALL BE REFLECTIVE WHITE. TEXT SHALL BE IN 3" CHARACTERS

Detail Handicap Parking Signs

Not To Scale

Not To Scale

Refer to Howard County Standard Plate R -3.01

Detail Solid Waste Service Pad

Refer to Howard County Standard Plate R-3.01

Detail Concrete Curb and Gutter

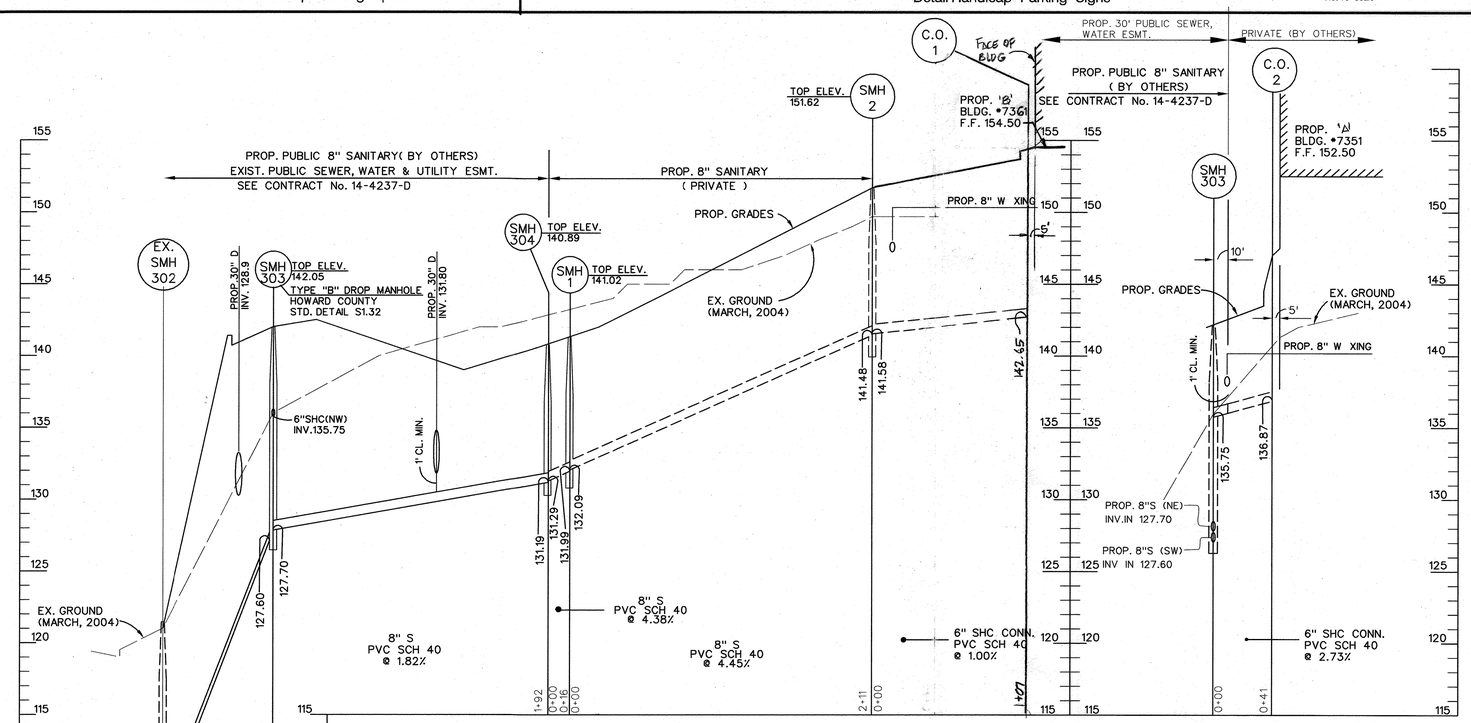

REVISION #2
REVISED 6" SHC PROFILE BETWEEN SM-2 & C.O.-1.

SANITARY PROFILE

SCALE: HORZ. 1" - 50'
VERT. 1" - 5'

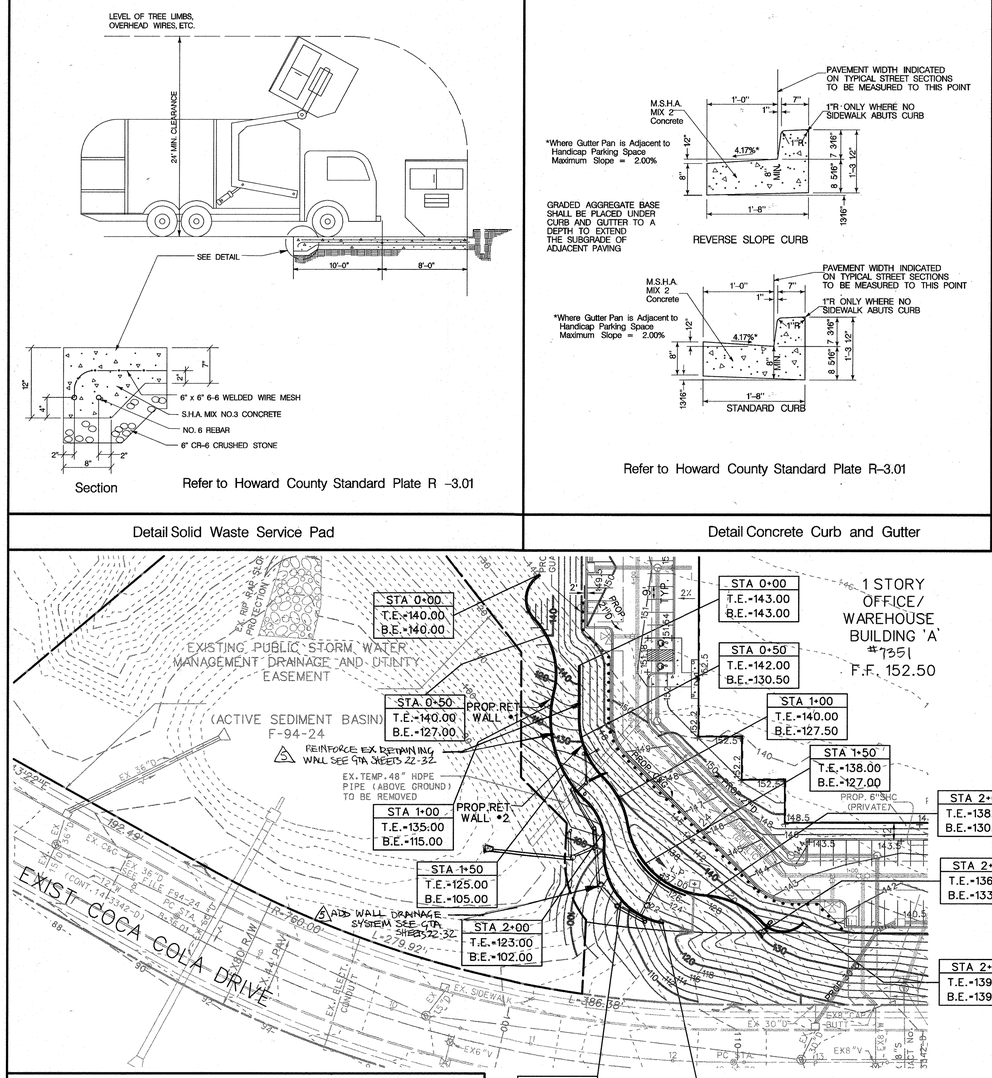

PROPOSED RETAINING WALL #1 AND RETAINING WALL #2 ELEVATIONS

SCALE: 1-50'

BLDG
Baltimore Land Design Group Inc.
Consulting Engineers
222 SCHILLING CIRCLE SUITE 105 HUNT VALLEY, MARYLAND 21030
PHONE: 410.229.9851 FAX: 410.229.9865 BLDGINC@WINSTARMAIL.COM

9/6/05

OWNER / DEVELOPER

LIBERTY PROPERTY LIMITED PARTNERSHIP

5950 SYMPHONY WOODS ROAD, SUITE 210
COLUMBIA, MARYLAND 21044
ATTN: MR. JAMES FLANNERY

MD LIC. 29203, EXP. 6-16-23

REVISION #1 5/2/2022
ADDED REINFORCEMENT OF EXISTING RETAINING WALLS AND STORM DRAINAGE

APPROVED: HOWARD COUNTY DEPARTMENT OF PLANNING AND ZONING

Chief, Development Engineering Division — Date 9/20/05
Chief, Land Development Division — Date 8/3/05
Director — Date 8/4/05

PERMIT INFORMATION CHART

Subdivision Name		Section / Area		Lot / Parcel No.
PATAPSCO VALLEY BUSINESS CENTER		N/A		PARCEL 285 LOT E-1
PLAT NO. 17589, 17590	Grid 20	Zoning M-2	Tax Map No. 38	Election District 1st	Census Tract 6012.02
Water Code A 04		Sewer Code 2150000		

SITE DETAILS AND SEWER PROFILE

PATAPSCO VALLEY BUSINESS CENTER

PARCEL E-1

HOWARD COUNTY, MARYLAND — SHEET 7 OF 32
SCALE: AS SHOWN — SDP-04-147 — MAY , 2004

SDP-04-147

INLET SCHEDULE

NO.	TYPE	INV. IN	INV. OUT	TOP ELEV.	REMARKS
I-1	DBL TYPE S	128.54	128.34	140.50	SEE HOWARD CO STD DETAIL PLATE 4.34
I-2	DBL TYPE S	131.48/132.73	131.28	138.40	SEE HOWARD CO STD DETAIL PLATE 4.34
I-3	DBL TYPE S	----------	132.86	136.70	SEE HOWARD CO STD DETAIL PLATE 4.34
I-4	DBL TYPE S	136.68/133.18	132.98	146.20	SEE HOWARD CO STD DETAIL PLATE 4.23
I-5	DBL TYPE S	137.95/134.45	134.25	146.35	SEE HOWARD CO STD DETAIL PLATE 4.23
I-6	DBL TYPE S	139.26/135.96	135.76	146.35	SEE HOWARD CO STD DETAIL PLATE 4.23
I-7	DBL TYPE S	139.71/137.71	137.21	146.35	SEE HOWARD CO STD DETAIL PLATE 4.23
I-8	DBL TYPE S	138.83	138.33	146.35	SEE HOWARD CO STD DETAIL PLATE 4.34
I-9	DBL TYPE S	----------	140.04	146.10	SEE HOWARD CO STD DETAIL PLATE 4.34
I-10	DBL TYPE S	144.55/143.05	142.80	149.50	SEE HOWARD CO STD DETAIL PLATE 4.34
I-11	DBL TYPE S	146.50/143.98	143.78	149.50	SEE HOWARD CO STD DETAIL PLATE 4.34
I-12	DBL TYPE S	----------	143.90	149.22	SEE HOWARD CO STD DETAIL PLATE 4.34
I-13	DBL TYPE S	135.82/135.76	135.57	146.00	SEE HOWARD CO STD DETAIL PLATE 4.34
I-14	DBL TYPE S	----------	136.36	139.80	SEE HOWARD CO STD DETAIL PLATE 4.34
I-15	DBL TYPE S	142.24	142.04	151.00	SEE HOWARD CO STD DETAIL PLATE 4.34
I-16	DBL TYPE S	145.75/143.75	143.50	151.02	SEE HOWARD CO STD DETAIL PLATE 4.34
I-17	DBL TYPE S	147.36/145.61	145.36	151.02	SEE HOWARD CO STD DETAIL PLATE 4.34
I-18	DBL TYPE S	147.14	146.89	150.87	SEE HOWARD CO STD DETAIL PLATE 4.34
I-19	DBL TYPE S	----------	109.00	113.00	SEE HOWARD CO STD DETAIL PLATE 4.23

MANHOLE SCHEDULE

NO.	TYPE	INV. IN	INV. OUT	TOP ELEV.	REMARKS
M-1	STD. 48" DROP MH	128.01/128.76	111.69	140.00	SEE SHA STD. DETAIL MD.383.11
M-2	STD. 48" MH	131.15	130.98	143.00	SEE SHA STD. DETAIL MD.384.01
M-3	STD. 48" MH	134.18	133.98	144.30	SEE SHA STD. DETAIL MD.384.01
M-4	STD. 48" MH	140.86	140.66	151.22	SEE SHA STD. DETAIL MD.384.01
M-5	STD. 48" MH	141.58	141.38	151.13	SEE SHA STD. DETAIL MD.384.01
M-6	STD. 48" MH	144.76	144.51	150.00	SEE SHA STD. DETAIL MD.384.01
–	–	–	–	–	–
M-8	STD. 48" MH	139.87	139.67	147.00	SEE SHA STD. DETAIL MD.384.01

STRUCTURE SCHEDULE

NO.	TYPE	INV. OUT	SIZE	REMARKS
E-1	STD. CONC. END SECTION	90.00	18"	SEE HOWARD CO STD DETAIL S.D.-5.51

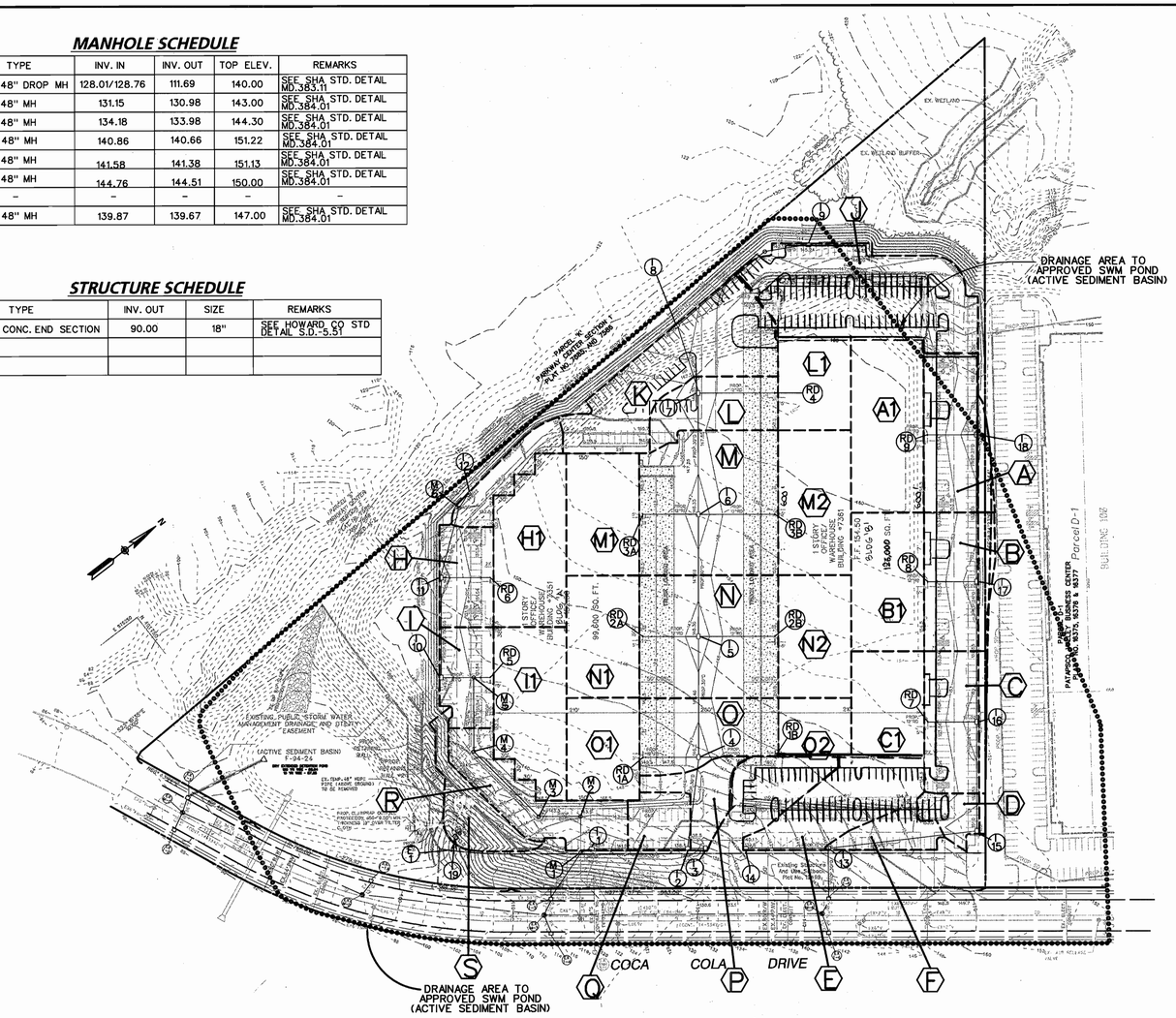

DRAINAGE AREA MAP

SCALE 1" = 100'

DRAINAGE AREA		
NO.	ACRES (AC)	COEFF. "C"
A	0.47	0.74
B	0.45	0.73
C	0.42	0.73
D	0.12	0.60
E	0.39	0.87
F	0.16	0.95
G	0.23	0.70
H	0.26	0.81
I	0.25	0.76
J	0.31	0.85
K	0.74	0.80
L	0.32	0.90
M	0.93	0.94
N	0.80	0.76
O	0.44	0.92
P	0.26	0.63
Q	0.17	0.77
R	0.44	0.73
A1	0.60	0.95
B1	0.48	0.95
C1	0.96	0.95
H1	0.54	0.95
J1	0.54	0.95
L1	0.31	0.95
M1	0.42	0.95
M2	0.51	0.95
N1	0.42	0.95
N2	0.42	0.95
O1	0.36	0.95
O2	0.20	0.95
S	0.24	0.35

ROOF DRAINS

STRUCTURE NUMBERS (I-15)

APPROVED: HOWARD COUNTY DEPARTMENT OF PLANNING AND ZONING

Chief, Development Engineering Division — Date 7/20/05

Chief, Land Development Division — Date 8/3/05

Director — Date 8/4/05

ADDRESS CHART	
LOT /PARCEL NO.	STREET ADDRESS
PARCEL 285 LOT E-1	BUILDING "A" 7351 COCA COLA DRIVE
" "	BUILDING "B" 7361 COCA COLA DRIVE

PERMIT INFORMATION CHART					
SUBDIVISION NAME PATAPSCO VALLEY BUSINESS CENTER			SECTION / AREA N/A		LOT/PARCEL NO. PARCEL 285 LOT E-1
PLAT NO. 17589, 17590	GRID # 20	ZONING M-2	TAX MAP NO. 38	ELECTION DISTRICT 1st	CENSUS TRACT 6012.02
WATER CODE A 04			SEWER CODE 2150000		

STORM DRAIN DRAINAGE AREA MAP

PATAPSCO VALLEY BUSINESS CENTER

PARCEL E-1

HOWARD COUNTY, MARYLAND — SHEET 8 OF 19

SCALE: AS SHOWN — SDP-04-147 — MAY, 2004

BLDG
Baltimore Land Design Group Inc.
Consulting Engineers
222 SCHILLING CIRCLE SUITE 105 HUNT VALLEY, MARYLAND 21030
PHONE: 410.229.9851 FAX: 410.229.9865 BLDGINC@WINSTARMAIL.COM

OWNER / DEVELOPER

LIBERTY PROPERTY LIMITED PARTNERSHIP

5950 SYMPHONY WOODS ROAD, SUITE 210
COLUMBIA, MARYLAND 21044
ATTN: MR. JAMES FLANNERY

REGISTERED PROFESSIONAL ENGINEER — 21245 — DONA A. ROSTEK-ZAPPIA — STATE OF MARYLAND — 7/6/05

REVISION #2
REDUCED BLDG'B' S.F. FROM 157,500 TO 126,000 S.F., INCREASED THE PARKING SPACES FOR BLDG 'B' AND BLDG 'A', REVISED "SITE DATA", REDUCED THE NUMBER OF ENTRANCES TO BLDG 'B' FROM 7 TO 6, RELOCATED H.C. SPACES CLOSER TO THE REVISED ENTRANCES. REVISED THE STORM DRAINAGE AREA CHART.

SDP-04-147

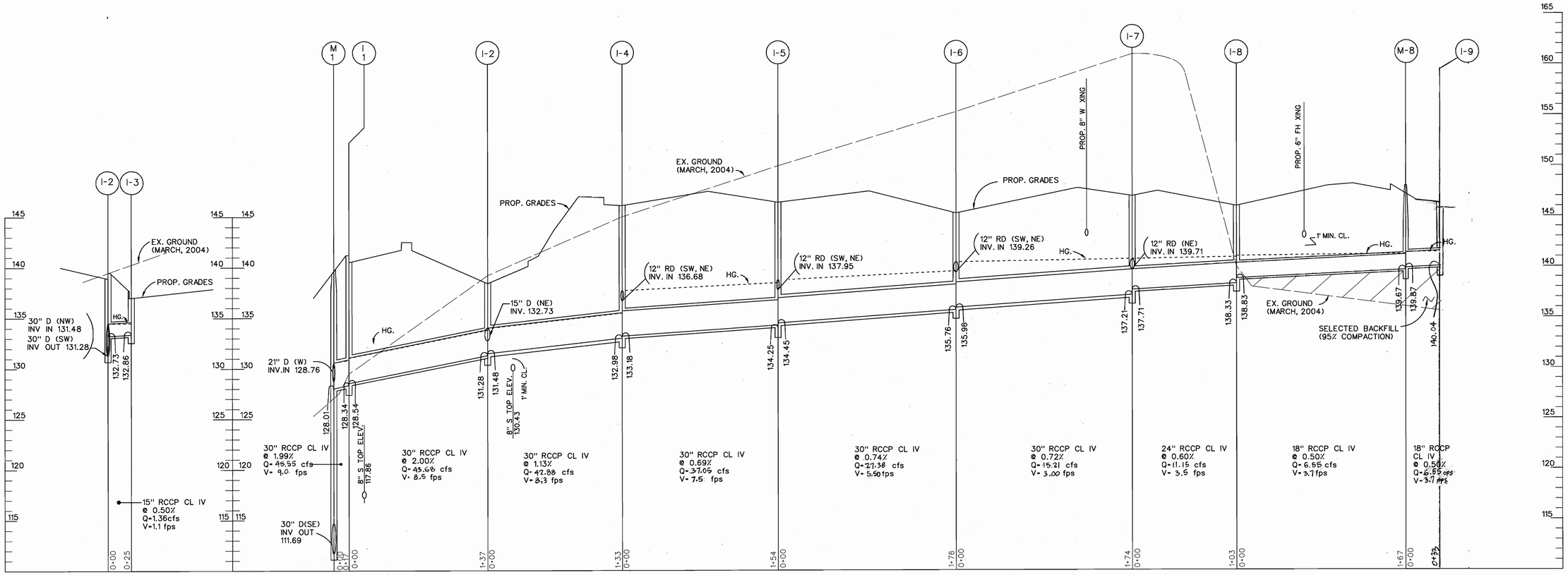

STORM DRAIN PROFILES

SCALE: HORZ. 1" = 50'
VERT. 1" = 5'

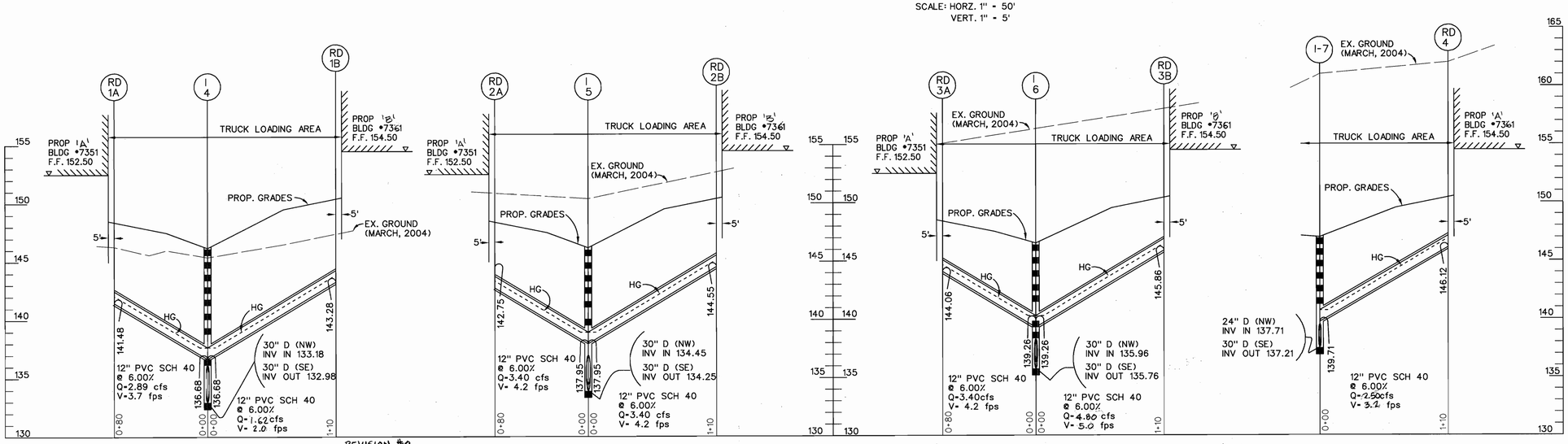

REVISION #2
REVISED STORM DRAIN COMPUTATIONS AND PROFILES

STORM DRAIN PROFILES

SCALE: HORZ. 1" = 50'
VERT. 1" = 5'

BLDG
Baltimore Land Design Group Inc.
Consulting Engineers
222 SCHILLING CIRCLE SUITE 105 HUNT VALLEY, MARYLAND 21030
PHONE: 410.229.9851 FAX: 410.229.9865 BLDGINC@WINSTARMAIL.COM

OWNER / DEVELOPER

LIBERTY PROPERTY LIMITED PARTNERSHIP

5950 SYMPHONY WOODS ROAD, SUITE 210
COLUMBIA, MARYLAND 21044
ATTN: MR. JAMES FLANNERY

MARYLAND LICENSED PROFESSIONAL ENGINEER 21245 STATE OF MARYLAND
7/6/05

PERMIT INFORMATION CHART

Subdivision Name	Section / Area	Lot / Parcel No	
PATAPSCO VALLEY BUSINESS CENTER	N/A	PARCEL 285 LOT E-1	
PLAT NO.	Grid #	Zoning	Tax Map No.	Election District	Census Tract
17589, 17590	20	M-2	38	1st	6012.02
Water Code			Sewer Code		
A 04			2150000		

APPROVED: HOWARD COUNTY DEPARTMENT OF PLANNING AND ZONING

Chief, Development Engineering Division — Date 7/26/05
Chief, Land Development Division — Date 8/2/05
Director — Date 8/4/05

STORM DRAIN PROFILES
PATAPSCO VALLEY BUSINESS CENTER
PARCEL E-1

HOWARD COUNTY, MARYLAND — SHEET 9 OF 19
SCALE: AS SHOWN — SDP-04-147 — MAY, 2004

SDP-04-147

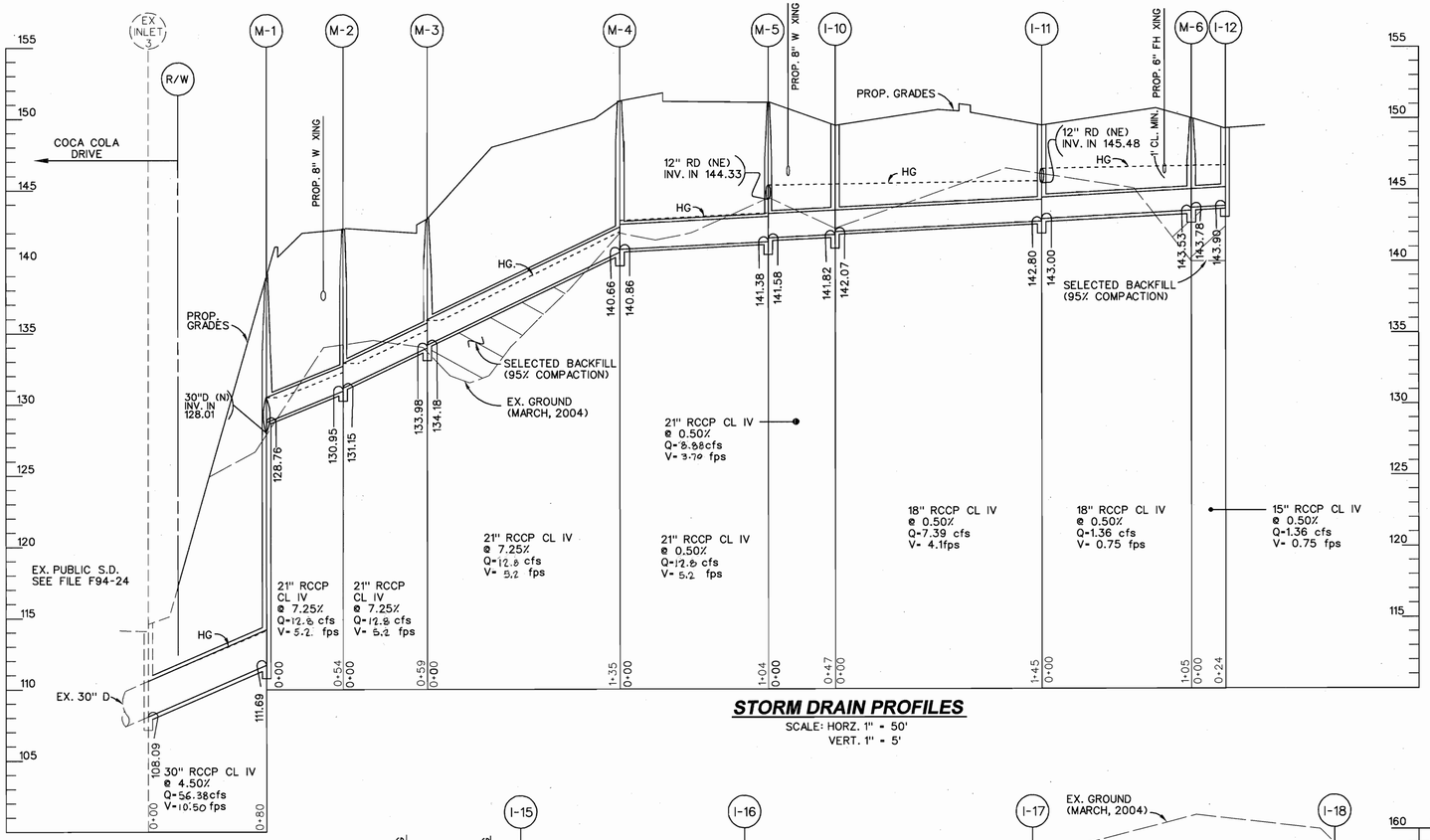

STORM DRAIN PROFILES

SCALE: HORZ. 1" = 50'
VERT. 1" = 5'

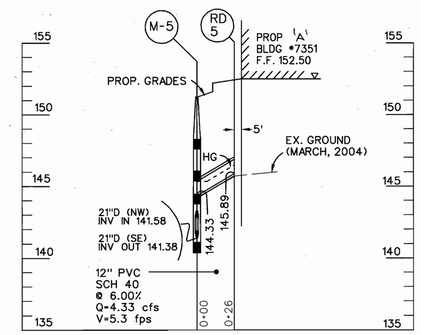

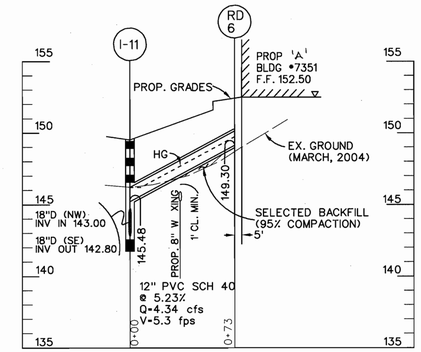

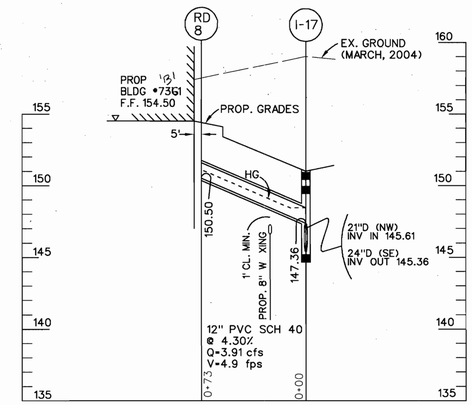

STORM DRAIN PROFILE

SCALE: HORZ. 1" = 50'
VERT. 1" = 5'

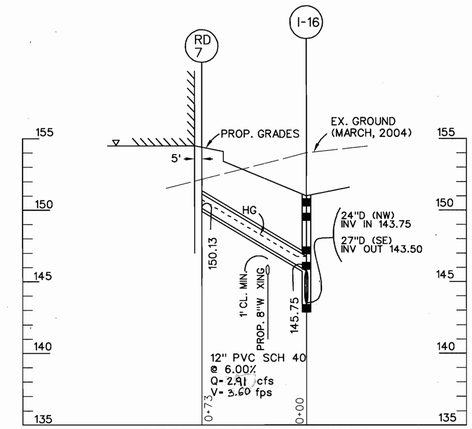

STORM DRAIN PROFILES

SCALE: HORZ. 1" = 50'
VERT. 1" = 5'

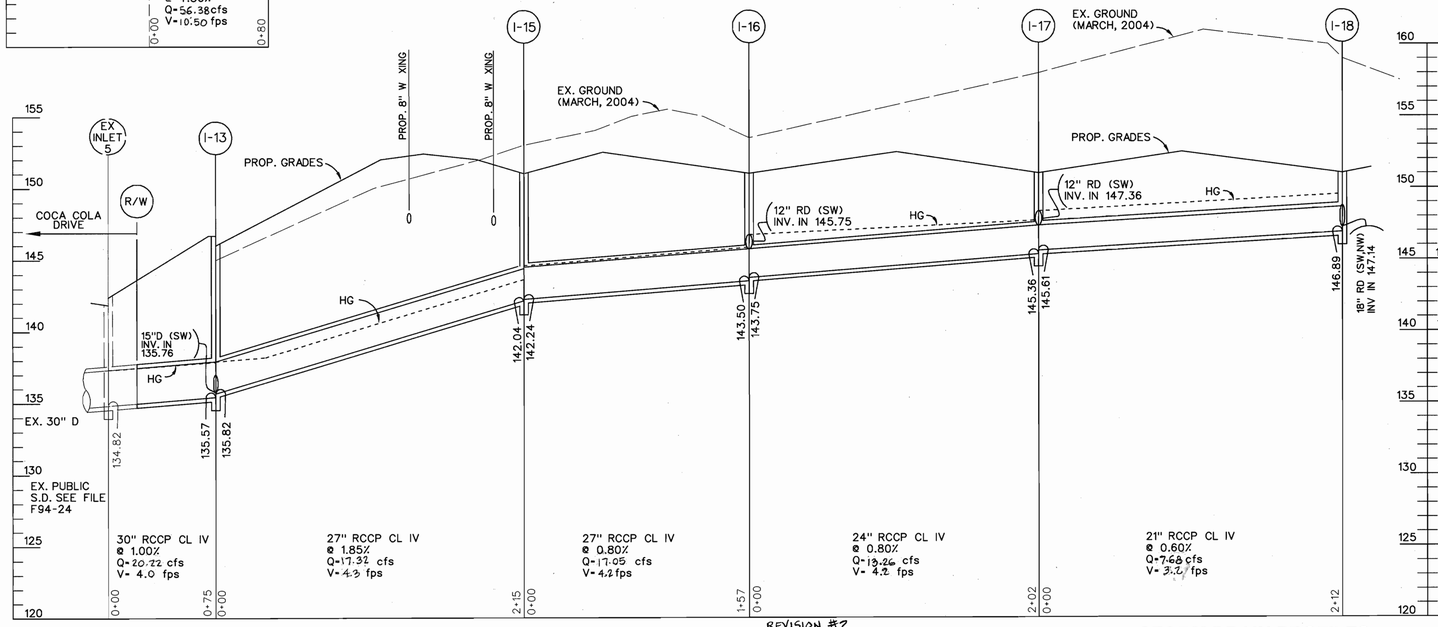

REVISION #2
REVISED STORM DRAIN COMPUTATIONS AND PROFILES

STORM DRAIN PROFILES

SCALE: HORZ. 1" = 50'
VERT. 1" = 5'

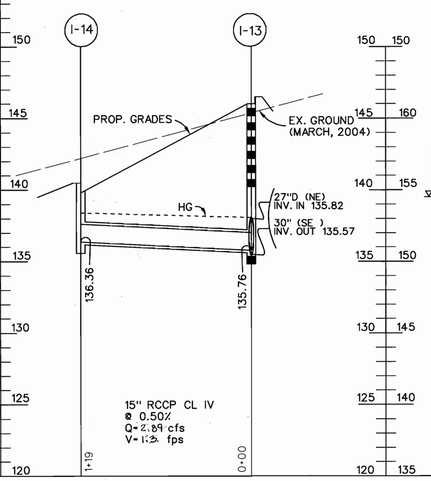

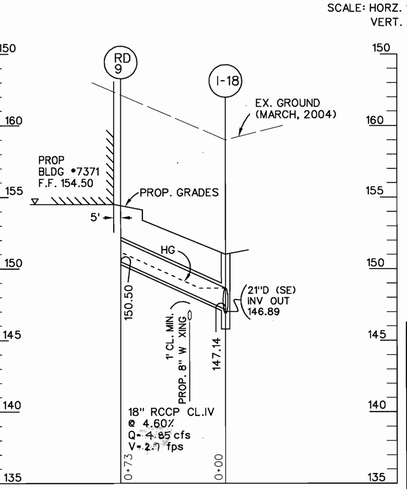

BLDG
Baltimore Land Design Group Inc.
Consulting Engineers
222 SCHILLING CIRCLE SUITE 105 HUNT VALLEY, MARYLAND 21030
PHONE: 410.229.9851 FAX: 410.229.9865 BLDGINC@WINSTARMAIL.COM

OWNER / DEVELOPER
LIBERTY PROPERTY LIMITED PARTNERSHIP
5950 SYMPHONY WOODS ROAD, SUITE 210
COLUMBIA, MARYLAND 21044
ATTN: MR. JAMES FLANNERY

PERMIT INFORMATION CHART

Subdivision Name	Section / Area	Lot / Parcel No
PATAPSCO VALLEY BUSINESS CENTER	N/A	PARCEL 285 LOT E-1

PLAT NO.	Grid #	Zoning	Tax Map No.	Election District	Census Tract
17589, 17590	20	M-2	38	1st	6012.02

Water Code	Sewer Code
A 04	2150000

APPROVED: HOWARD COUNTY DEPARTMENT OF PLANNING AND ZONING

Chief, Development Engineering Division — Date 7/26/05
Chief, Land Development Division — Date 8/5/05
Director — Date 8/4/05

STORM DRAIN PROFILES
PATAPSCO VALLEY BUSINESS CENTER
PARCEL E-1
HOWARD COUNTY, MARYLAND — SHEET 10 OF 19
SCALE: AS SHOWN — SDP-04-147 — MAY, 2004

SDP-04-147

SEQUENCE OF OPERATION

1. OBTAIN GRADING PERMIT. (1 DAY)
2. NOTIFY HOWARD COUNTY DEPARTMENT OF PERMITS AND LICENSES 48 HOURS PRIOR TO BEGINNING WORK. (1 DAY)
3. INSTALL STABILIZED CONSTRUCTION ENTRANCES AS SHOWN ON THE PLAN. (1 DAY)
4. IF NECESSARY, REMOVE SILT FROM THE EXISTING ACTIVE SEDIMENT BASIN. INSPECT THE CONDITION OF AND RELOCATE THE EXISTING 48" HDPE PIPE. UPGRADE EXISTING EARTH DIKE FROM A TO B TO TYPE B-3 EARTH DIKE. IF NECESSARY, REPAIR EXISTING EARTH DIKE FROM C TO D. INSTALL REMAINING SEDIMENT AND EROSION CONTROL MEASURES AND DEVICES. (10 DAYS)
5. WITH PERMISSION FROM THE SEDIMENT CONTROL INSPECTOR BEGIN GRADING OPERATIONS. AT THIS TIME DO NOT PROCEED WITH GRADING FOR PHASE II OF CONSTRUCTION OR WITHIN THE AREAS ADJACENT IMMEDIATELY TO EARTH DIKES. MAINTAIN POSITIVE DRAINAGE TO SEDIMENT CONTROL MEASURES AND DEVICES AT ALL TIMES. (10 DAYS)
6. BEGIN CONSTRUCTION OF THE RETAINING WALLS. AS WORK PROGRESSES BEGIN INSTALLATION OF UTILITIES. AS SOON AS POSSIBLE, INSTALL STORM DRAIN SYSTEMS FROM EXIST. INLET I-3 TO I-7 AND FROM EXIST. I-5 TO I-19. PROVIDE INLET PROTECTIONS AT THE NEWLY INSTALLED INLETS (20 DAYS).
7. BEGIN CONSTRUCTION OF PROPOSED BUILDINGS. (20 DAYS)
8. AS WORK PROGRESSES AND AFTER OBTAINING PERMISSION FROM SEDIMENT CONTROL INSPECTOR, REMOVE EARTH DIKES AND TEMPORARY EXISTING 48" HDPE PIPE. COMPLETE GRADING OPERATION, UTILITY INSTALLATION, AND RETAINING WALLS CONSTRUCTION WITHIN PHASE I OF CONSTRUCTION. (12 DAYS)
9. PROCEED WITH GRADING OPERATIONS WITHIN PHASE II OF CONSTRUCTION. CONTINUE BUILDING CONSTRUCTION AND THE INSTALLATION OF REMAINING UTILITIES. INSTALL INLET PROTECTIONS AT THE NEWLY INSTALLED INLETS. (15 DAYS)
10. FINE GRADE ALL AREAS, INSTALL CONCRETE CURB AND GUTTER AND STONE SUB-BASE. (12 DAYS)
11. AFTER OBTAINING PERMISSION FROM SEDIMENT CONTROL INSPECTOR FLUSH THE STORM DRAIN SYSTEM DISCHARGING INTO THE EXISTING SEDIMENT BASIN WITH WATER. REMOVE THE REMAINING SEDIMENT AND EROSION CONTROL MEASURES AND DEVICES AND PROCEED WITH PAVING AND LANDSCAPING INSTALLATION. (8 DAYS)

NOTE: EXISTING SEDIMENT BASIN WILL BE CONVERTED TO A SWM POND BY THE LEGAL OWNER OF THE PROPERTY.

NOTE:
1.) ALL EXISTING CONTROLS ARE TO BE REFURBISHED AT THE DISCRETION OF THE SEDIMENT CONTROL INSPECTOR.

2.) ALL CONTROLS ARE TO BE INSPECTED AND REPAIRED AS NECESSARY AT THE END OF EACH WORKING DAY.

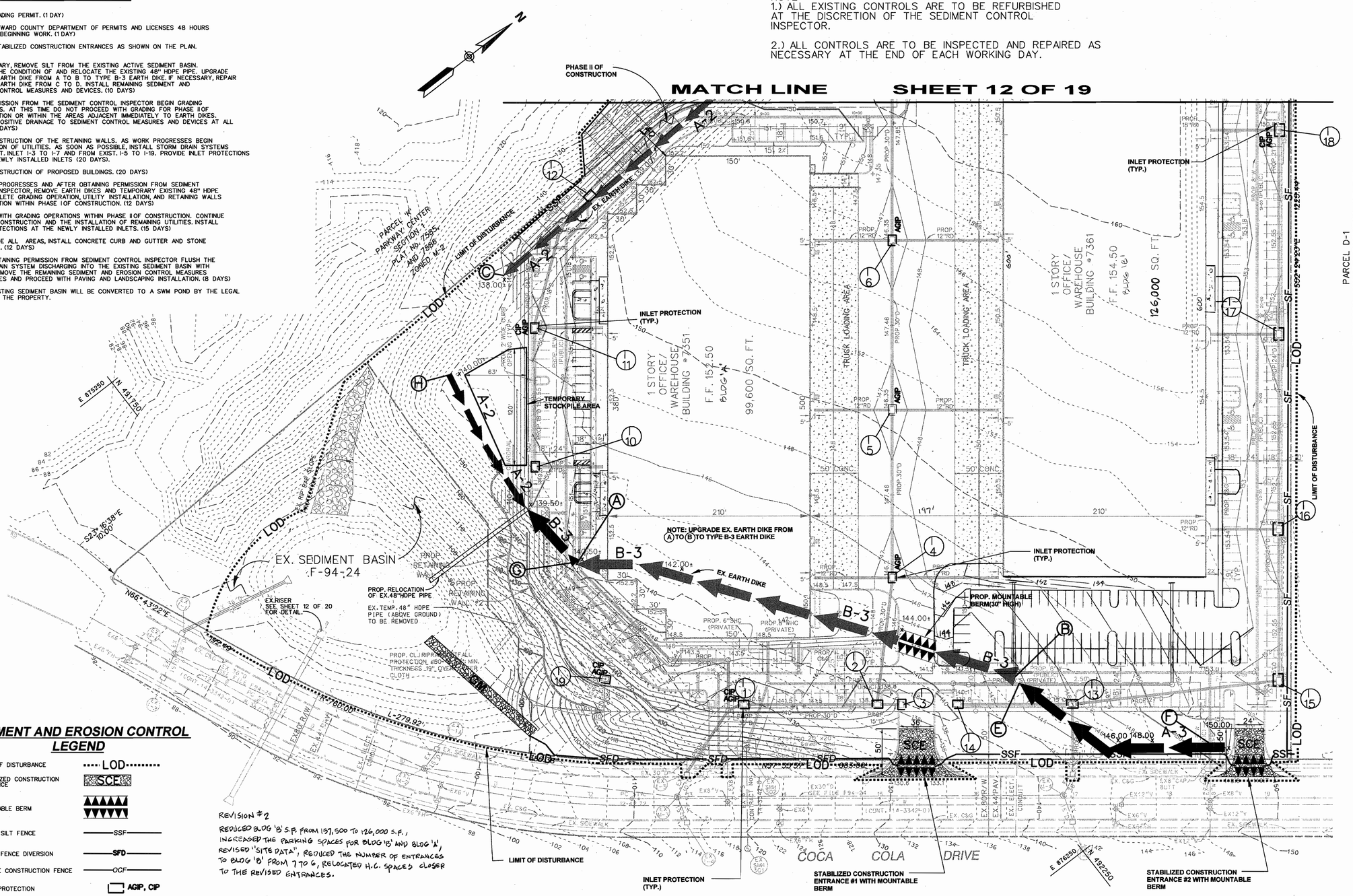

PLAN

SCALE 1" = 50'

LEGEND

EXIST. R/W LINE	
EXIST. PROPERTY LINE	
EXIST. CONC. C & G	
EXIST. CONC. C&G TO BE REMOVED	
EXIST. WOODS	
EXIST. STORM DRAIN	EX.15"D
EXIST. SANITARY	EX.8"S
EXIST. WATER	EX.12"W
EXIST. FIRE HYDRANT	
PROP. CONC. C & G	
PROP. GUARD RAIL	
EXIST. DRAINAGE & UTILITY EASEMENT	
PROP. STORM DRAIN	PROP. 30"D
PROP. SANITARY (PUBLIC)	PROP. 8"S
PROP. SANITARY (PRIVATE)	PROP. 8"S
PROP. WATER	PROP. 8"W
PROP. CONCRETE	
PROP. ON-SITE 30' HIGH LIGHT POLE (PRIVATE)	
PROP. HOWARD COUNTY STREET LIGHTS ARE TO BE INSTALLED BY OTHERS	

SEDIMENT AND EROSION CONTROL LEGEND

LIMIT OF DISTURBANCE	LOD
STABILIZED CONSTRUCTION ENTRANCE	SCE
MOUNTABLE BERM	
SUPER SILT FENCE	SSF
SUPER FENCE DIVERSION	SFD
ORANGE CONSTRUCTION FENCE	OCF
INLET PROTECTION	AGIP, CIP
GABION MATTRESS INFLOW PROTECTION	GM
PROPOSED EARTH DIKE	A-2
EXISTING EARTH DIKE	B-3 A-2

REVISION #2
REDUCED BLDG 'B' S.F. FROM 137,500 TO 126,000 S.F., INCREASED THE PARKING SPACES FOR BLDG 'B' AND BLDG 'A', REVISED "SITE DATA", REDUCED THE NUMBER OF ENTRANCES TO BLDG 'B' FROM 7 TO 6, RELOCATED H.C. SPACES CLOSER TO THE REVISED ENTRANCES.

REVISION #1
RELOCATED H.C. SPACES CLOSER TO THE BLDG ENTRANCES, REVISED "SITE DATA", REDUCED THE WIDTH OF TRUCK LOADING AREA FROM 200' TO 197', REDUCED THE NUMBER OF ENTRANCES TO BLDG 'A' FROM 6 TO 4, INCREASED BLDG 'A' SETBACK FROM PROPERTY LINE TO 40'.

MARYLAND REGISTERED PROFESSIONAL ENGINEER 21245 IWONA ROSTEK-ZARSKA STATE OF MARYLAND
Iwona Rostek-Zarska 8/21/06 REV. #1

Reviewed for Howard SCD and meets Technical Requirements
Jim Myers 7/18/05
USDA – Natural Resources Conservation Service — Date
This development plan is approved for soil erosion and sediment control by the HOWARD SOIL CONSERVATION DISTRICT.
John R. Robertson 7/18/05
Howard SCD — Date

ENGINEER'S CERTIFICATE

" I certify that this plan for sediment and erosion control represents a practical and workable plan based on my personal knowledge of the site conditions and that it was prepared in accordance with the requirements of the Howard Soil Conservation District"

Iwona Rostek-Zarska — MARYLAND REGISTERED PROFESSIONAL ENGINEER 21245 IWONA ROSTEK-ZARSKA STATE OF MARYLAND — 7/6/05
IWONA ROSTEK–ZARSKA, P.E. 21245 — Date

DEVELOPER'S CERTIFICATE

" I/We certify that all development and construction will be done according to this plan for sediment and erosion control, and that all responsible personnel involved in the construction project will have a Certificate of Attendance at a Department of the Environment Approved Training Program for the Control of Sediment and Erosion before beginning the project. I also authorize periodic on-site inspection by the Howard Soil Conservation District"

Liberty Property Limited Partnership
By: Liberty Property Trust, its sole general partner
By: [signature]
James K. Flannery, Jr.
Vice President, Life Manager — 7/1/05 — Date

APPROVED: HOWARD COUNTY DEPARTMENT OF PLANNING AND ZONING

Chief, Development Engineering Division — Date 7/26/05
Chief, Land Development Division — Date 8/3/05
Director — Date 8/11/05

ADDRESS CHART

Lot/Parcel No.	Street Address
PARCEL 285 E-1	BUILDING "A" 7351 COCA COLA DRIVE
" "	BUILDING "B" 7361 COCA COLA DRIVE

PERMIT INFORMATION CHART

Subdivision Name			Section /Area		Lot/Parcel No.
PATAPSCO VALLEY BUSINESS CENTER			N/A		PARCEL 285 LOT E-1
PLAT NO.	Grid #	Zoning	Tax Map No.	Election District	Census Tract
17589, 17590	20	M-2	38	1st	6012.02
Water Code			Sewer Code		
A 04			2150000		

NOTES:

1) PHASE II OF CONSTRUCTION WILL BEGIN AFTER INSTALLATION OF THE STORM DRAIN SYSTEM FROM EX. I-3 TO I-7 AND FROM EX.I-5 TO I-18 AND AFTER INSTALLATION OF THE INLET PROTECTION AT ALL INLETS.
2) THE EXISTING SEDIMENT BASIN IS ADEQUATE IN SIZE TO RECEIVE SEDIMENT FROM THE ENTIRE DRAINAGE AREA SHOWN ON SHEET 13 OF 19. PROPOSED INLET PROTECTIONS ARE TO BE PROVIDED TO PROTECT THE STORM DRAIN SYSTEM AS MUCH AS POSSIBLE FROM THE LEADEN WATER AND SILT COMING FROM THIS CONSTRUCTION SITE.
3) SEE SHEET 12 OF 19 FOR "SEDIMENT CONTROL STANDARD GENERAL NOTES".
4) PERMISSION FOR OFF-SITE GRADING (PARCEL K) HAS BEEN OBTAINED FROM ADJACENT PROPERTY OWNER.

BLDG
Baltimore Land Design Group Inc.
Consulting Engineers
222 SCHILLING CIRCLE SUITE 105 HUNT VALLEY, MARYLAND 21030
PHONE: 410.229.9851 FAX: 410.229.9865 BLDGINC@WINSTARMAIL.COM

OWNER / DEVELOPER
LIBERTY PROPERTY LIMITED PARTNERSHIP
5950 SYMPHONY WOODS ROAD, SUITE 210
COLUMBIA, MARYLAND 21044
ATTN: MR. JAMES FLANNERY

MARYLAND REGISTERED PROFESSIONAL ENGINEER 21245 IWONA ROSTEK-ZARSKA STATE OF MARYLAND
Iwona Rostek-Zarska 7/6/05

SEDIMENT AND EROSION CONTROL PLAN
PATAPSCO VALLEY BUSINESS CENTER
PARCEL E-1

HOWARD COUNTY, MARYLAND — SHEET 11 OF 19
SCALE: AS SHOWN — SDP-04-147 — MAY, 2004

SDP-04-147

SEDIMENT CONTROL STANDARD GENERAL NOTES

1. A MINIMUM OF 24 HOURS NOTICE MUST BE GIVEN TO THE HOWARD COUNTY DEPARTMENT INSPECTIONS, LICENSES AND PERMITS, SEDIMENT CONTROL DIVISION PRIOR TO THE START OF ANY CONSTRUCTION (313-1855).
2. ALL VEGETATIVE AND STRUCTURAL PRACTICES ARE TO BE INSTALLED ACCORDING TO THE PROVISIONS OF THIS PLAN AND ARE TO BE IN CONFORMANCE WITH THE "1994 MARYLAND STANDARDS AND SPECIFICATIONS FOR SOIL EROSION AND SEDIMENT CONTROL".
3. FOLLOWING INITIAL SOIL DISTURBANCE OR REDISTURBANCE, PERMANENT OR TEMPORARY STABILIZATION SHALL BE COMPLETED WITHIN:
   A. SEVEN CALENDAR DAYS FOR ALL PERIMETER SEDIMENT CONTROL STRUCTURES, DIKES, PERIMETER SLOPES AND ALL SLOPES GREATER THAN 3:1.
   B. FOURTEEN DAYS AS TO ALL OTHER DISTURBED OF GRADED AREAS ON THE PROJECT SITE.
4. ALL SEDIMENT TRAPS/BASINS SHOWN MUST BE FENCED AND WARNING SIGNS POSTED AROUND THEIR PERIMETER IN ACCORDANCE WITH VOL. 1, CHAPTER 12, OF THE "HOWARD COUNTY MANUAL," STORM DRAINAGE.
5. ALL DISTURBED AREAS MUST BE STABILIZED WITHIN THE TIME PERIOD SPECIFIED ABOVE IN ACCORDANCE WITH THE "1994 MARYLAND STANDARDS AND SPECIFICATIONS FOR SOIL EROSION AND SEDIMENT CONTROL" FOR PERMANENT SEEDINGS, SODS, TEMPORARY SEEDING, AND MULCHING (SECTION G). TEMPORARY STABILIZATION WITH MULCH ALONE CAN ONLY BE DONE WHEN RECOMMENDED SEEDING DATES DO NOT ALLOW FOR PROPER GERMINATION AND ESTABLISHMENT OF GRASSES.
6. ALL SEDIMENT CONTROL STRUCTURES ARE TO REMAIN IN PLACE AND ARE TO BE MAINTAINED IN OPERATIVE CONDITION UNTIL PERMISSION FOR THEIR REMOVAL HAS BEEN OBTAINED FROM THE HOWARD COUNTY SEDIMENT CONTROL INSPECTOR.
7. SITE ANALYSIS:

TOTAL AREA OR SITE	19.06	ACRES +/-
AREA DISTURBED	16.80	ACRES +/-
AREA TO BE ROOFED OR PAVED	11.98	ACRES +/-
AREA TO BE VEGETATIVELY STABILIZED	4.82	ACRES +/-
TOTAL CUT	60,000	CUBIC YARDS*
TOTAL FILL	60,000	CUBIC YARDS*

   OFF-SITE WASTE/BORROW AREA LOCATION WASTE - N/A.

8. ANY SEDIMENT CONTROL PRACTICE WHICH IS DISTURBED BY GRADING ACTIVITY FOR PLACEMENT OF UTILITIES MUST BE REPAIRED ON THE SAME DAY OF DISTURBANCE.
9. ADDITIONAL SEDIMENT CONTROLS MUST BE PROVIDED, IF DEEMED NECESSARY BY THE HOWARD COUNTY DPW SEDIMENT CONTROL INSPECTOR.
10. ON ALL SITES WITH DISTURBED AREAS IN EXCESS OF 2 ACRES, APPROVAL OF THE INSPECTION AGENCY SHALL BE REQUESTED UPON COMPLETION OF INSTALLATION OF PERIMETER EROSION AND SEDIMENT CONTROLS, BUT BEFORE PROCEEDING WITH ANY OTHER EARTH DISTURBANCE OR GRADING. OTHER BUILDING OR GRADING INSPECTION APPROVALS MAY NOT BE AUTHORIZED UNTIL THIS INITIAL APPROVAL BY THE INSPECTION AGENCY IS MADE.
11. TRENCHES FOR THE CONSTRUCTION OF UTILITIES IS LIMITED TO THREE PIPE LENGTHS OR THAT WHICH SHALL BE BACK-FILLED AND STABILIZED WITHIN ONE DAY. WHICHEVER IS SHORTER.

* EARTH QUANTITY VOLUMES ARE PROVIDED FOR THE CONVENIENCE OF THE CONTRACTOR. CONTRACTOR IS ADVISED TO PERFORM HIS OWN ANALYSIS PRIOR TO PLACING A BID ON THIS ITEM

NOTES:

1) PHASE II OF CONSTRUCTION WILL BEGIN AFTER INSTALLATION OF THE STORM DRAIN SYSTEM FROM EX. I-3 TO I-7 AND FROM EX.I-5 TO I-18 AND AFTER INSTALLATION OF THE INLET PROTECTION AT ALL INLETS.
2) THE EXISTING SEDIMENT BASIN IS ADEQUATE IN SIZE TO RECEIVE SEDIMENT FROM THE ENTIRE DRAINAGE AREA SHOWN ON SHEET 13 OF 19 PROPOSED INLET PROTECTIONS ARE TO BE PROVIDED TO PROTECT THE STORM DRAIN SYSTEM AS MUCH AS POSSIBLE FROM THE LEADEN WATER AND SILT COMING FROM THIS CONSTRUCTION SITE.
3) PERMISSION FOR OFF-SITE GRADING (PARCEL K) HAS BEEN OBTAINED FROM ADJACENT PROPERTY OWNER.

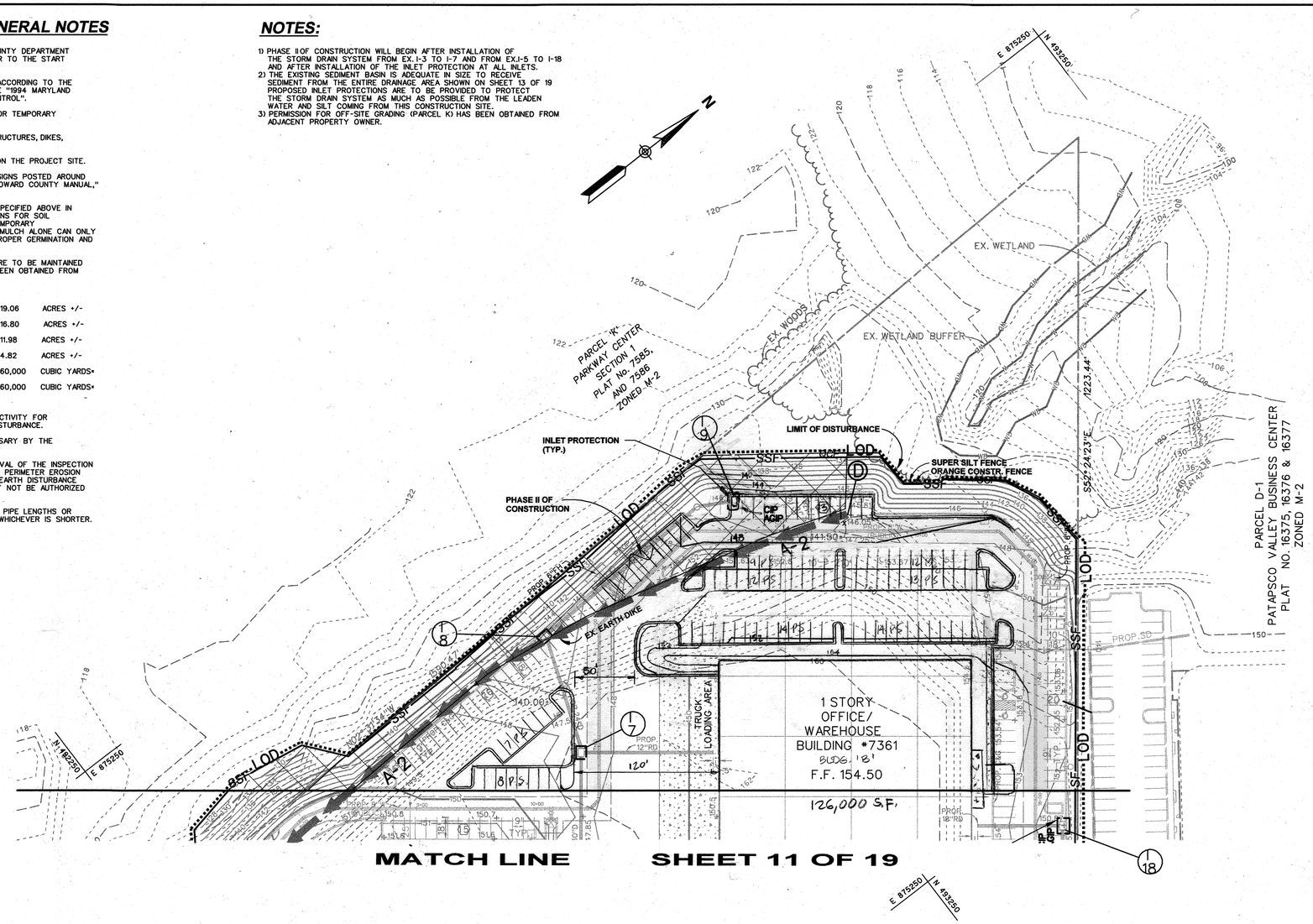

LEGEND

EXIST. R/W LINE	
EXIST. PROPERTY LINE	
EXIST. CONC. C & G	
EXIST. CONC. C&G TO BE REMOVED	
EXIST. WOODS	
EXIST. STORM DRAIN	EX.15"D
EXIST. SANITARY	EX.8"S
EXIST. WATER	EX.12"W
EXIST. FIRE HYDRANT	
PROP. CONC. C & G	
PROP. GUARD RAIL	
EXIST. DRAINAGE & UTILITY EASEMENT	
PROP. STORM DRAIN	PROP. 30"D
PROP. SANITARY (PUBLIC)	PROP. 8"S
PROP. SANITARY (PRIVATE)	PROP. 8"S
PROP. WATER	PROP. 8"W
PROP. CONCRETE	
PROP. ON-SITE 30' HIGH LIGHT POLE (PRIVATE)	
PROP. HOWARD COUNTY STREET LIGHTS ARE TO BE INSTALLED BY OTHERS	

SEDIMENT AND EROSION CONTROL LEGEND

LIMIT OF DISTURBANCE	LOD
STABILIZED CONSTRUCTION ENTRANCE	SCE
MOUNTABLE BERM	
SUPER SILT FENCE	SSF
SUPER FENCE DIVERSION	SFD
ORANGE CONSTRUCTION FENCE	OCF
INLET PROTECTION	AGIP, CIP
GABION MATTRESS INFLOW PROTECTION	GM
PROPOSED EARTH DIKE	A-2
EXISTING EARTH DIKE	B-3, A-2

REVISION #2
REDUCED BLDG 'B' S.F. FROM 157,500 TO 126,000 S.F., INCREASED THE PARKING SPACES FOR BLDG 'B' AND BLDG 'A', REVISED "SITE DATA", REDUCED THE NUMBER OF ENTRANCES TO BLDG 'B' FROM 7 TO 6, RELOCATED H.C. SPACES CLOSER TO THE REVISED ENTRANCES.

PLAN

SCALE 1" = 50'

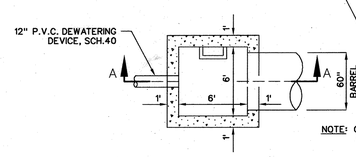

PLAN- BELOW SLAB

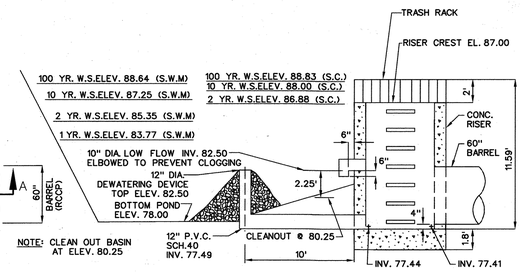

SECTION A-A

CONCRETE RISER DETAIL

NOT TO SCALE

Reviewed for Howard SCD and meets Technical Requirements

Jim Myers 7/18/05
USDA – Natural Resources Conservation Service Date

This development plan is approved for erosion and sediment control by the HOWARD SOIL CONSERVATION DISTRICT.

John R Robertson 7/18/05
Howard SCD Date

ENGINEER'S CERTIFICATE

" I certify that this plan for sediment and erosion control represents a practical and workable plan based on my personal knowledge of the site conditions and that it was prepared in accordance with the requirements of the Howard Soil Conservation District"

Iwona Rostek-Zarska 7/6/05
IWONA ROSTEK–ZARSKA, P.E. 21245 Date

DEVELOPER'S CERTIFICATE

" I/We certify that all development and construction will be done according to this plan for sediment and erosion control, and that all responsible personnel involved in the construction project will have a Certificate of Attendance at a Department of the Environment Approved Training Program for the Control of Sediment and Erosion before beginning the project. I also authorize periodic on-site inspection by the Howard Soil Conservation District"

Liberty Property Limited Partnership
By: Liberty Property Trust, its sole general partner
By: [signature]
James K. Flannery, Jr.
Vice President - Ctr Manager
7/1/05
Date

APPROVED: HOWARD COUNTY DEPARTMENT OF PLANNING AND ZONING

Chief, Development Engineering Division — Date 7/20/05
Chief, Land Development Division — Date 8/9/05
Director — Date 8/4/05

ADDRESS CHART

Lot/Parcel No.	Street Address
PARCEL 285 E-1	BUILDING A – 7361 COCA COLA DRIVE
" "	BUILDING B – 7361 COCA COLA DRIVE

PERMIT INFORMATION CHART

Subdivision Name			Section /Area		Lot/Parcel No.
PATAPSCO VALLEY BUSINESS CENTER			N/A		PARCEL 285 LOT E-1
PLAT NO. 17589	Grid #	Zoning	Tax Map No.	Election District	Census Tract
17590	20	M-2	38	1st	6012.02
Water Code			Sewer Code		
A 04			2150000		

SEDIMENT AND EROSION CONTROL PLAN

PATAPSCO VALLEY BUSINESS CENTER

PARCEL E-1

HOWARD COUNTY, MARYLAND — SHEET 12 OF 32
SCALE: AS SHOWN — SDP-04-147 — MAY, 2004

SDP-04-147

BLDG
Baltimore Land Design Group Inc.
Consulting Engineers
222 SCHILLING CIRCLE SUITE 105 HUNT VALLEY, MARYLAND 21030
PHONE: 410.229.9851 FAX: 410.229.9865 BLDGINC@WINSTARMAIL.COM

OWNER / DEVELOPER

LIBERTY PROPERTY LIMITED PARTNERSHIP

5950 SYMPHONY WOODS ROAD, SUITE 210
COLUMBIA, MARYLAND 21044
ATTN: MR. JAMES FLANNERY

Iwona Rostek-Zarska 7/6/05

21.0 STANDARD AND SPECIFICATIONS FOR TOPSOIL

DEFINITION

PLACEMENT OF TOPSOIL OVER A PREPARED SUBSOIL PRIOR TO ESTABLISHMENT OF PERMANENT VEGETATION.

PURPOSE

TO PROVIDE A SUITABLE SOIL MEDIUM FOR VEGETATIVE GROWTH. SOILS OF CONCERN HAVE LOW MOISTURE CONTENT, LOW NUTRIENT LEVELS, LOW PH, MATERIALS TOXIC TO PLANTS, AND/OR UNACCEPTABLE SOIL GRADATION.

CONDITIONS WHERE PRACTICE APPLIES

I. THIS PRACTICE IS LIMITED TO AREAS HAVING 2:1 OR FLATTER SLOPES WHERE:
A. THE TEXTURE OF THE EXPOSED SUBSOIL/PARENT MATERIAL IS NOT ADEQUATE TO PRODUCE VEGETATIVE GROWTH.
B. THE SOIL MATERIAL IS SO SHALLOW THAT THE ROOTING ZONE IS NOT DEEP ENOUGH TO SUPPORT PLANTS OR FURNISH CONTINUING SUPPLIES OF MOISTURE AND PLANT NUTRIENTS.
C. THE ORIGINAL SOIL TO BE VEGETATED CONTAINS MATERIAL TOXIC TO PLANT GROWTH.
D. THE SOIL IS SO ACIDIC THAT TREATMENT WITH LIMESTONE IS NOT FEASIBLE.

II. FOR THE PURPOSED OF THESE STANDARDS AND SPECIFICATIONS, AREAS HAVING SLOPES STEEPER THAN 2:1 REQUIRE SPECIAL CONSIDERATION AND DESIGN FOR ADEQUATE STABILIZATION. AREAS HAVING SLOPES STEEPER THAT 2:1 SHALL HAVE THE APPROPRIATE STABILIZATION SHOWN ON THE PLANS.

CONSTRUCTION AND MATERIAL SPECIFICATIONS

I. TOPSOIL SALVAGED FROM THE EXISTING SITE MAY BE USED PROVIDED THAT IT MEETS THE STANDARDS AS SET FORTH IN THESE SPECIFICATIONS. TYPICALLY, THE DEPTH OF TOPSOIL TO BE SALVAGED FOR A GIVEN SOIL TYPE WILL BE FOUND IN THE REPRESENTATIVE SOIL PROFILE SECTION IN THE SOIL SURVEY PUBLISHED BY USDA-SCS IN COOPERATION WITH MARYLAND AGRICULTURAL EXPERIMENTAL STATION.
II. TOPSOIL SPECIFICATIONS - SOIL TO BE USED AS TOPSOIL MUST MEET THE FOLLOWING:
I. TOPSOIL SHALL BE A LOAM, SANDY LOAM, CLAY LOAM, SILT LOAM, SANDY CLAY LOAM, LOAMY SAND. OTHER SOILS MAY BE USED IF RECOMMENDED BY AN AGRONOMIST OR SOIL SCIENTIST AND APPROVED BY THE APPROPRIATE APPROVAL AUTHORITY. REGARDLESS, TOPSOIL SHALL NOT BE A MIXTURE OF CONTRASTING TEXTURED SUBSOILS AND SHALL CONTAIN LESS THAN 5% BY VOLUME OF CINDERS, STONES, SLAG, COARSE FRAGMENTS, GRAVEL, STICKS, ROOTS, TRASH, OR OTHER MATERIAL LARGER THAN 1½" IN DIAMETER.
II. TOPSOIL MUST BE FREE OF PLANTS OR PLANT PARTS SUCH A S BERMUDA GRASS, QUACKGRASS, JOHNSONGRASS, NUTSEDGE, POISON IVY, THISTLE, OR OTHERS AS SPECIFIED.

III. WHERE THE SUBSOIL IS EITHER HIGHLY ACIDIC OR COMPOSED OF HEAVY CLAYS, GROUND LIMESTONE SHALL BE SPREAD AT THE RATE OF 4-8 TONS/ACRE (200-400 POUNDS PER 1,000 SQUARE FEET) PRIOR TO THE PLACEMENT OF TOPSOIL. LIME SHALL BE DISTRIBUTED UNIFORMLY OVER DESIGNATED AREAS AND WORKED INTO THE SOIL IN CONJUNCTION WITH TILLAGE OPERATIONS AS DESCRIBED IN THE FOLLOWING PROCEDURES.

III. FOR SITES HAVING DISTURBED AREAS UNDER 5 ACRES:
I. PLACE TOPSOIL (IF REQUIRED) AND APPLY SOIL AMENDMENTS AS SPECIFIED IN 20.0 VEGETATIVE STABILIZATION - SECTION I- VEGETATIVE STABILIZATION METHODS AND MATERIALS.

IV. FOR SITES HAVING DISTURBED AREAS OVER 5 ACRES:

I. ON SITE MEETING TOPSOIL SPECIFICATIONS, OBTAIN TEST RESULTS DICTATING FERTILIZER AND LIME AMENDMENTS REQUIRED TO BRING THE SOIL INTO COMPLIANCE WITH THE FOLLOWING:
A. PH FOR TOPSOIL SHALL BE BETWEEN 6.0 ANBD 7.5. IF THE TESTED SOIL DEMONSTRATES A PH OF LESS THAN 6.0, SUFFICIENT LIME SHALL BE PRESCRIBED TO RAISE THE PH TO 6.5 OR HIGHER.
B. ORGANIC CONTENT OF TOPSOIL SHALL BE NOT LESS THAN 1.5 PERCENT BY WEIGHT.
C. TOPSOIL HAVING SOLUBLE SALT CONTENT GREATER THAN 500 PARTS PER MILLION SHALL NOT BE USED.
D. NO SOD OR SEED SHALL BE PLACED ON SOIL WHICH HAS BEEN TREATED WITH SOIL STERILANTS OR CHEMICALS USED FOR WEED CONTROL UNTIL SUFFICIENT TIME HAS ELAPSED (14 DAYS MIN.) TO PERMIT DISSIPATION OF PHYTO-TOXIC MATERIALS.

NOTE: TOPSOIL SUBSTITUTES OR AMENDMENTS, AS RECOMMENDED BY A QUALIFIED AGRONOMIST OR SOIL SCIENTIST AND APPROVED BY THE APPROPRIATE APPROVAL AUTHORITY, MAY BE USED IN LIEU OF NATURAL TOPSOIL.

II. PLACE TOPSOIL (IF REQUIRED) AND APPLY SOIL AMENDMENTS AS SPECIFIED IN 20.0 VEGETATIVE STABILIZATION - SECTION I- VEGETATIVE STABILIZATION METHODS AND MATERIALS.

V. TOPSOIL APPLICATION

I. WHEN TOPSOILING, MAINTAIN NEEDED EROSION AND SEDIMENT CONTROL PRACTICES SUCH AS DIVERSION, GRADE STABILIZATION STRUCTURES, EARTH DIKES, SLOPE SILT FENCE AND SEDIMENT TRAPS AND BASINS.
II. GRADES ON THE AREAS TO BE TOPSOILED, WHICH HAVE BEEN PREVIOUSLY ESTABLISHED, SHALL BE MAINTAINED, ABOUT 4" - 8" HIGHER IN ELEVATION.
III. TOPSOIL SHALL BE UNIFORMLY DISTRIBUTES IN A 4" - 8" LAYER AND LIGHTLY COMPACTED TO A MINIMUM THICKNESS OF 4". SPREADING SHALL BE PERFORMED IN SUCH A MANNER THAT SODDING OR SEEDING CAN PROCEED WITH A MINIMUM OF ADDITIONAL SOIL PREPARATION AND TILLAGE. ANY IRREGULARIES IN THE SURFACE RESULTING FORM TOPSOILING OR OTHER OPERATIONS SHALL BE CORRECTED IN ORDER TO PREVENT THE FORMATION OF DEPRESSIONS OR WATER POCKETS.
IV. TOPSOIL SHALL NOT BE PLACED WHILE THE TOPSOIL OR SUBSOIL IS IN A FROZEN OR MUDDY CONDITION, WHEN THE SUBSOIL IS EXCESSIVELY WET OR IN A CONDITION THAT MAY OTHERWISED BE DETRIMENTAL TO PROPER GRADING AND SEEDBED PREPARATION.

VI. ALTERNATIVE FOR PERMANENT SEEDING - INSTEAD OF APPLYING THE FULL AMOUNTS OF LIME AND COMMERCIAL FERTILIZER, COMPOSTED SLUDGE AND AMENDMENTS MAY BE APPLIED AS SPECIFIED, BELOW:

I. COMPOSTED SLUDGE MATERIAL FOR USE AS A SOIL CONDITIONER FOR SITES HAVING DISTURBED AREAS OVER 5 ACRES SHALL BE TESTED TO PRESCRIBE AMENDMENTS AND FOR SITES HAVING DISTURBED AREAS UNDER 5 ACRES SHALL CONFORM TO THE FOLLOWING REQUIREMENTS:
A. COMPOSTED SLUDGE SHALL BE SUPPLIED BY, OR ORIGINATED FROM, A PERSON OR PERSONS THAT ARE PERMITTED (AT THE TIME OF ACQUISTION OF THE COMPOST) BY THE MARYLAND DEPARTMENT OF THE ENVIRONMENT UNDER COMAR 26.04.06.
B. COMPOSTED SLUDGE SHALL CONTAIN AT LEAST 1 PERCENT NITROGEN, 1.5 PERCENT PHOSPHORUS, AND 0.2 PERCENT POTASSIUM AND HAVE A PH OF 7.0 TO 8.0. IF COMPOST DOES NOT MEET THESE REQUIREMENTS, THE APPROPRIATE CONSTITUENTS MUST BE ADDED TO MEET THE REQUIREMENTS PRIOR TO USE.
C. COMPOSTED SLUDGE SHALL BE APPLIED AT A RATE OF 1 TON/1,000 SQUARE FEET.

II. COMPOSTED SLUDGE SHALL BE AMENDED WITH A POTASSIUM FERTILIZER APPLIED AT THE RATE OF 4 LB./1,000 SQUARE FEET, AND 1/3 THE NORMAL LIME APPLICATION RATE.

REFERENCES: GUIDELINE SPECIFICATIONS, SOIL PREPARATION AND SODDING. MD-VA, PUB. #1, COOPERATIVE EXTENSION SERVICE, UNIVERSITY OF MARYLAND AND VIRGINIA POLYTECHNIC INSTITUTES. REVISED 1973.

PERMANENT / TEMPORARY SEEDING NOTES

PERMANENT SEEDING NOTES

APPLY TO GRADED OR CLEARED AREAS NOT SUBJECT TO IMMEDIATE FURTHER DISTURBANCE WHERE A PERMANENT LONG-LIVED VEGETATIVE COVER IS NEEDED.

SEEDBED PREPARATION: LOOSEN UPPER THREE INCHES OF SOIL BY RAKING, DISKING OR OTHER ACCEPTABLE MEANS BEFORE SEEDING, IF NOT PREVIOUSLY LOOSENED.

SOIL AMENDMENTS: IN LIEU OF SOIL TEST RECOMMENDATIONS, USE ONE OF THE FOLLOWING SCHEDULES:
1. PREFERRED - APPLY 2 TONS PER ACRES DOLOMITIC LIMESTONE (92 LBS./1000 SQ. FT.) AND 1000 LBS. PER ACRE 10-10-10 FERTILIZER (14 LBS./1000 SQ. FT.) BEFORE SEEDING. HARROW OR DISK INTO UPPER THREE INCHES OF SOIL. AT TIME OF SEEDING, APPLY 400 LBS. PER ACRE 30-0-0 UREAFORM FERTILIZER (9 LBS./1000 SQ. FT.)
2. ACCEPTABLE - APPLY 2 TONS PER ACRE DOLOMITIC LIMESTONE (92 LBS./1000 SQ. FT.) AND 1000 LBS. PER ACRE 10-10-10 FERTILIZER (23 LBS./1000 SQ. FT.) BEFORE SEEDING. HARROW OR DISK INTO UPPER THREE INCHES OF SOIL.

SEEDING - FOR THE PERIODS MARCH 1 THRU APRIL 30, AND AUGUST 1 THRU OCTOBER 15, SEED WITH 60 LBS. PER ACRE (1.4 LBS./1000 SQ. FT.) OF KENTUCKY 31 TALL FESCUE. FOR THE PERIOD MAY 1 THRU JULY 31 SEED WITH 60 LBS. KENTUCKY 31 TALL FESCUE PER ACRE AND 2 LBS. PER ACRE (.05 LBS./1000 SQ. FT.) OF WEEPING LOVEGRASS. DURING THE PERIOD OF OCTOBER 16 THRU FEBRUARY 28, PROTECT SITE BY: OPTION (1) - 2 TONS PER ACRE OF WELL ANCHORED STRAW MULCH AND SEED AS SOON AS POSSIBLE IN THE SPRING. OPTION (2) - USE SOD. (3) - SEED WITH 60 LBS./ACRE KENTUCKY 31 TALL FESCUE AND MULCH WITH 2 TONS/ACRE WELL ANCHORED STRAW.

MULCHING - APPLY 1½ TO 2 TONS PER ACRE (70 - 90 LBS./1000 SQ. FT.) OF UNROTTED SMALL GRAIN STRAW IMMEDIATELY AFTER SEEDING. ANCHOR MULCH IMMEDIATELY AFTER APPLICATIONS USING MULCH ANCHORING TOOL OR 218 GALLONS PER ACRE (5 GAL./1000 SQ. FT.) OF EMULSIFIED ASPHALT ON FLAT AREAS. ON SLOPES 8 FEET OR HIGHER, USE 348 GALLONS PER ACRE (8 GAL/1000 SQ. FT.) FOR ANCHORING.

MAINTENANCE - INSPECT ALL SEEDING AREAS AND MAKE NEEDED REPAIRS, REPLACEMENTS AND RESEEDING.

TEMPORARY SEEDING NOTES

APPLY TO GRADED OR CLEARED AREAS LIKELY TO BE REDISTURBED WHERE A SHORT-TERM VEGETATIVE COVER IS NEEDED.

SEEDBED PREPARATION - LOOSEN UPPER THREE INCHES OF SOIL BY RAKING, DISKING OR OTHER ACCEPTABLE MEANS BEFORE SEEDING, IF NOT PREVIOUSLY LOOSENED.

SOIL AMENDMENTS - APPLY 600 LBS. PER ACRE 10-10-10 FERTILIZER (14 LBS./1000 SQ. FT.)

SEEDING - FOR THE PERIODS MARCH 1 THRU APRIL 30, AND AUGUST 15 THRU OCTOBER 15, SEED WITH 2½ BUSHEL PER ACRE OF ANNUAL RYE (3.2 LBS./1000 SQ. FT.). FOR THE PERIOD MAY 1 THRU AUGUST 14, SEED WITH 3 LBS. PER ACRE OF WEEPING LOVEGRASS (.07 LBS./1000 SQ. FT.). FOR THE PERIOD NOVEMBER 16 THRU FEBRUARY 28, PROTECT SITE BY APPLYING 2 TONS PER ACRE OF WELL ANCHORED STRAW MULCH AND SEED AS SOON AS POSSIBLE IN THE SPRING, OR USE SOD.

MULCHING - APPLY 1½ TO 2 TONS PER ACRE (70 - 90 LBS./1000 SQ. FT.) OF UNROTTED WEED FREE SMALL GRAIN STRAW IMMEDIATELY AFTER SEEDING. ANCHOR MULCH IMMEDIATELY AFTER APPLICATION USING MULCH ANCHORING TOOL OR 218 GAL. PER ACRE (5 GAL./1000 SQ. FT.) OF EMULSIFIED ASPHALT ON FLAT AREAS. ON SLOPES 8 FT. OR HIGHER. USE 348 GAL. PER ACRE (8 GAL./1000 SQ. FT.) FOR ANCHORING.

REFER TO THE 1994 MARYLAND STANDARDS AND SPECIFICATIONS FOR SOIL EROSION AND SEDIMENT CONTROL FOR ADDITIONAL RATES AND METHODS NOT COVERED.

DUST CONTROL SPECIFICATIONS

TEMPORARY METHODS:
1. MULCHES - SEE STANDARDS FOR VEGETATIVE STABILIZATION WITH MULCHES ONLY. MULCH SHOULD BE CRIMPED OR TACKED TO PREVENT BLOWING.
2. VEGETATIVE COVER - SEE STANDARDS FOR TEMPORARY VEGETATIVE COVER.
3. TILLAGE - TO ROUGHEN SURFACE AND BRING CLODS TO THE SURFACE. THIS IS AN EMERGENCY MEASURE WHICH SHOULD BE USED BEFORE SOIL BLOWING STARTS. BEGIN PLOWING ON WINDWARD SIDE OF SITE. CHISEL-TYPE PLOWS SPACED ABOUT 12 INCHES APART, SPRING-TOOTHED HARROWS, AND SIMILAR PLOWS ARE EXAMPLES OF EQUIPMENT WHICH MAY PRODUCE THE DESIRED EFFECT.
4. IRRIGATION - THIS IS GENERALLY DONE AS AN AN EMERGENCY TREATMENT. SITE IS SPRINKLED WITH WATER UNTIL THE SURFACE IS MOIST. REPEAT AS NEEDED. AT NO TIME SHOULD THE SITE BE IRRIGATED TO THE POINT THE RUNOFF BEGINS TO FLOW.
5. BARRIERS - SOLID BOARD FENCES, SNOW FENCES, BURLAP FENCES, STRAW BALES, AND SIMILAR MATERIAL CAN BE USED TO CONTROL AIR CURRENTS AND SOIL BLOWING. BARRIERS PLACED AT RIGHT ANGLES TO PREVAILING CURRENTS AT INTERVALS OF ABOUT 10 TIMES THEIR HEIGHT ARE AFFECTIVE IN CONTROLING SOIL BLOWING.
6. CALCIUM CHLORIDE - APPLY AT A RATE THAT WILL KEEP SURFACE MOIST. MAY NEED RETREATMENT.

PERMANENT METHODS:
1. PERMANENT VEGETATION - SEE STANDARDS FOR PERMANENT VEGETATIVE COVER, AND PERMANENT STABILIZATION WITH SOD. EXISTING TREES OR LARGE SHRUBS MAY AFFORD VALUABLE PROTECTION IF LEFT IN PLACE.
2. TOPSOILING - COVERING WITH LESS EROSIVE SOIL MATERIALS. SEE STANDARDS FOR TOPSOILING.
3. STONE - COVER SURFACE WITH CRUSHED STONE OR COARSE GRAVEL.

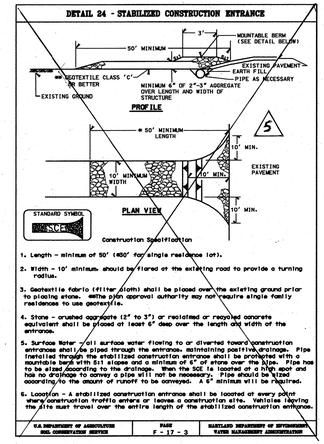

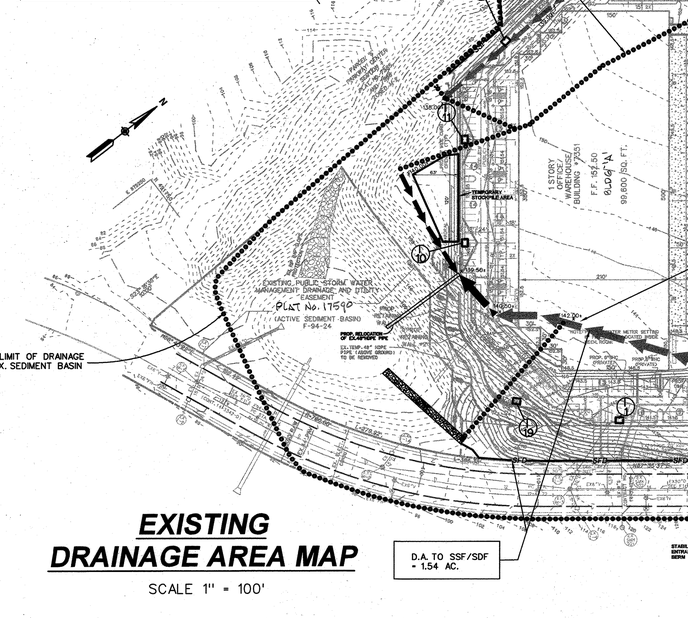

STONE MOUNTABLE BERM

NOT TO SCALE

EXISTING DRAINAGE AREA MAP

SCALE 1" = 100'

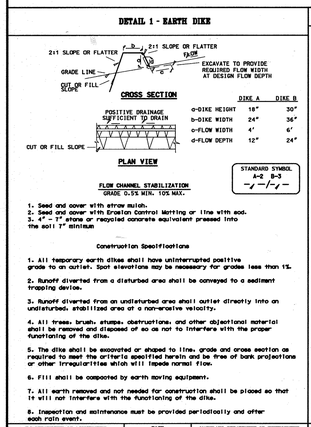

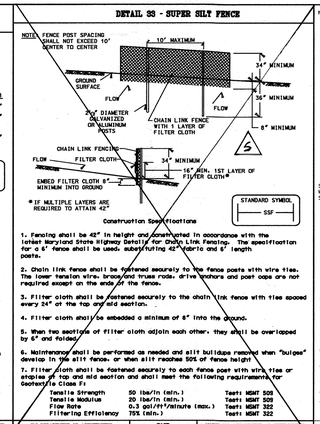

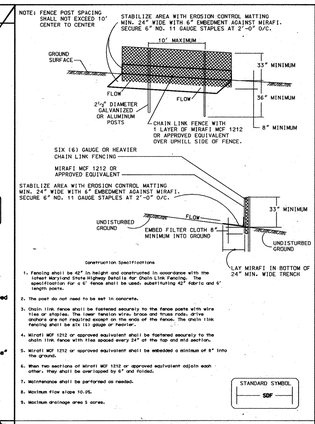

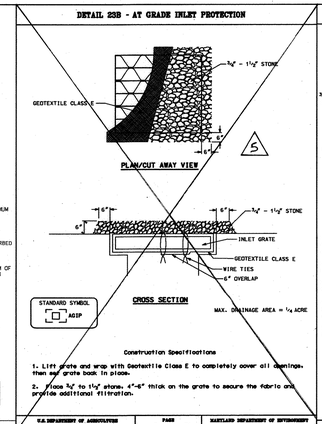

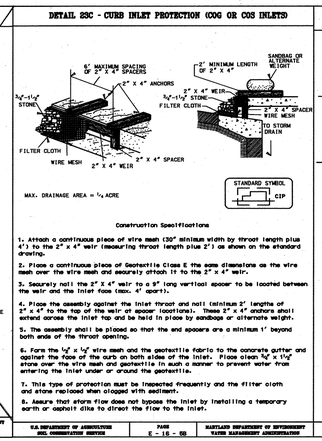

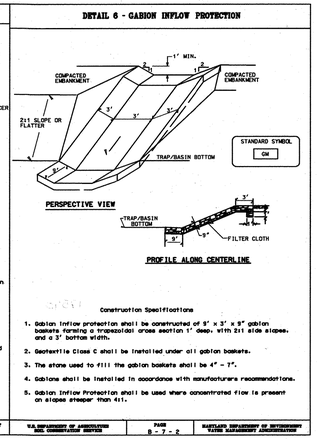

BLDG
Baltimore Land Design Group Inc.
Consulting Engineers
222 SCHILLING CIRCLE SUITE 105 HUNT VALLEY, MARYLAND 21030
PHONE: 410.229.9851 FAX: 410.229.9865 BLDGINC@WINSTARMAIL.COM

OWNER / DEVELOPER

LIBERTY PROPERTY LIMITED PARTNERSHIP

5950 SYMPHONY WOODS ROAD, SUITE 210
COLUMBIA, MARYLAND 21044
ATTN: MR. JAMES FLANNERY

MARYLAND PROFESSIONAL ENGINEER 21245 ROSTER NUMBER STATE OF MARYLAND
7/16/05

Reviewed for HOWARD S.C.D. Name and meet Technical Requirements
Signature Date 7/13/05
USDA, NATURAL RESOURCES CONS. SERVICE

THIS DEVELOPMENT PLAN IS APPROVED FOR SOIL EROSION AND SEDIMENT CONTROL BY THE HOWARD SOIL CONSERVATION DISTRICT.
Approved Howard S.C.D. Date 7/18/05

MD LIC. 28203 EXP. 6-16-23

REVISION #5 5/2/2022 REMOVED OUTDATED STANDARDS

REVISION #2
REDUCED BLDG 'B' S.F. FROM 157,500 TO 126,000 S.F., INCREASED THE PARKING SPACES FOR BLDG 'B' AND BLDG 'A', REVISED "SITE DATA", REDUCED THE NUMBER OF ENTRANCES TO BLDG 'B' FROM 7 TO 6, RELOCATED H.C. SPACES CLOSER TO THE REVISED ENTRANCES.

APPROVED: HOWARD COUNTY DEPARTMENT OF PLANNING AND ZONING

Chief, Development Engineering Division — Date 7/20/05
Chief, Land Development Division — Date 8/3/05
Director — Date 8/11/05

ADDRESS CHART

Lot/Parcel No.	Street Address
PARCEL 285 E-1	BUILDING "A" 7351 COCA COLA DRIVE
" "	BUILDING "B" 7361 COCA COLA DRIVE

PERMIT INFORMATION CHART

Subdivision Name			Section /Area	Lot/Parcel No.
PATAPSCO VALLEY BUSINESS CENTER			N/A	PARCEL 285 LOT E-1
PLAT NO. 17589 17590	Grid # 20	Zoning M-2	Tax Map No. 38	Election District 1st	Census Tract 6012.02
Water Code A 04			Sewer Code 2150000	

SEDIMENT AND EROSION CONTROL PLAN
PATAPSCO VALLEY BUSINESS CENTER
PARCEL E-1

HOWARD COUNTY, MARYLAND — SHEET 13 OF 32
SCALE: AS SHOWN — SDP-04-147 — MAY, 2004

SDP-04-147

PLANT LIST

KEY	QUANTITY	BOTANICAL NAME / COMMON NAME	SIZE	CONDITION	REMARKS
	26	ACER RUBRUM 'AUTUMN BLAZE' 'AUTUMN BLAZE' RED MAPLE	2 1/2-3" CAL.	B & B	HEAVY SPECIMENS
	39	ZELKOVA SERRATA 'VILLAGE GREEN' 'VILLAGE GREEN JAPANESE ZELKOVA	2 1/2-3" CAL.	B & B	HEAVY SPECIMENS
	23	TILIA CORDATA 'GREENSPIRE' 'GREENSPIRE' LITTLELEAF LINDEN	2 1/2-3" CAL.	B & B	HEAVY SPECIMENS
	18	LIQUIDAMBAR STYRACIFLUA SWEET GUM	2 1/2-3" CAL.	B & B	HEAVY SPECIMENS
	17	PRUNUS SERRULATA 'KWANZAN' 'KWANZAN' FLOWERING CHERRY	1 1/2-2" CAL.	B & B	FULL CROWN
	3	CERCIS CANADENSIS EASTERN REDBUD	8-10' HT.	B & B	MULTI-STEMMED
	26	PINUS STROBUS EASTERN WHITE PINE	6-8' HT.	B & B	SPACE 10' O.C. STAGGER
	12	PICEA ABIES NORWAY SPRUCE	6-8' HT.	B & B	SPACE 10' O.C. STAGGER
	198	ABELIA X GRANDIFLORA GLOSSY ABELIA	2 1/2-3' HT	CONTAINER	SPACE 5' O.C. STAGGER
		PUBLIC ROAD STREET TREES AS PER PLAN FILE #F-94-24			
EK	18	EUONYMUS KIAUTSCHOVICUS 'PAULII' 'PAULII' EUONYMUS	2 1/2-3'	CONT.	SPACE 4-5' O.C.

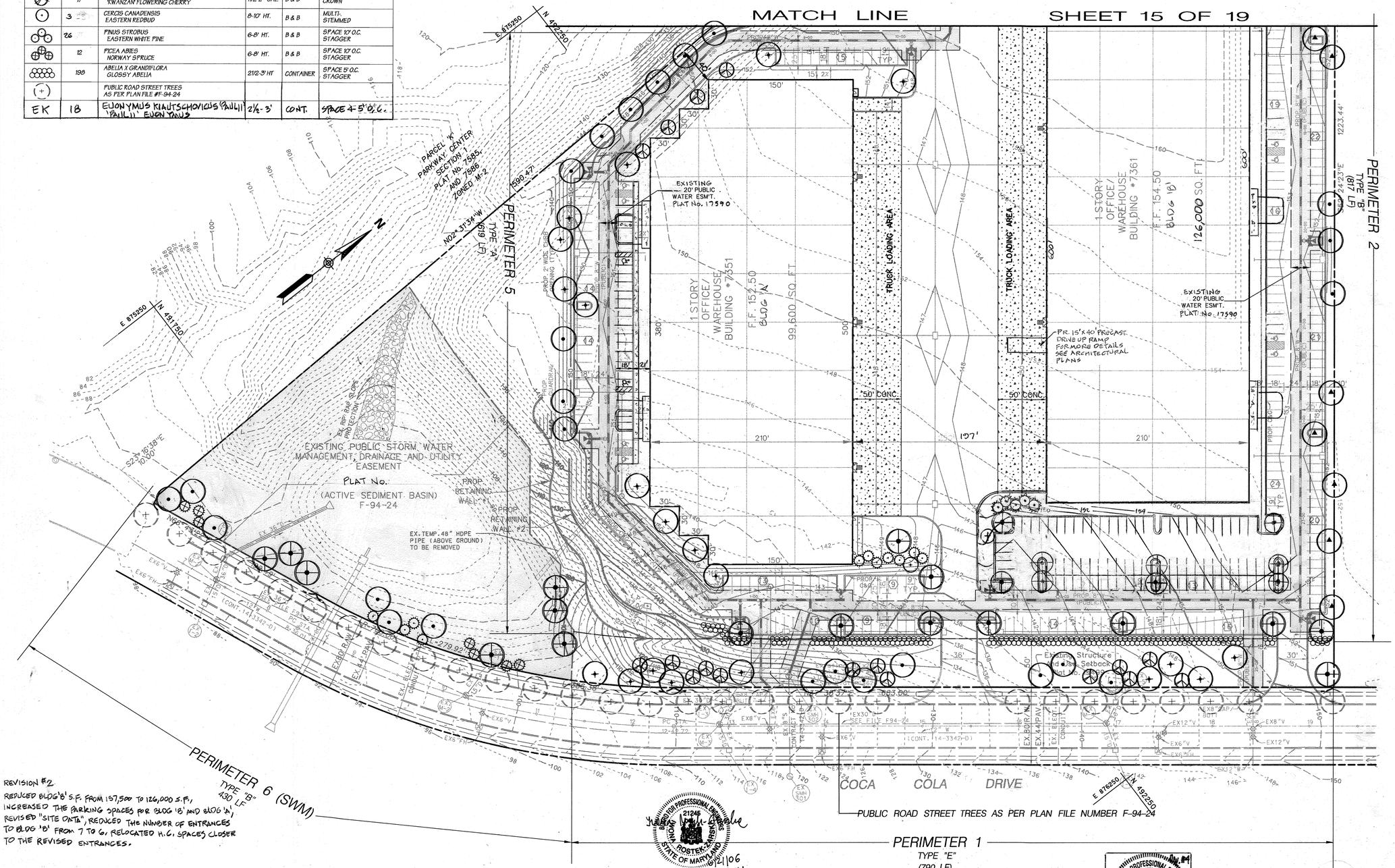

REVISION #2
REDUCED BLDG'B' S.F. FROM 157,500 TO 126,000 S.F., INCREASED THE PARKING SPACES FOR BLDG 'B' AND BLDG 'A', REVISED "SITE DATA", REDUCED THE NUMBER OF ENTRANCES TO BLDG 'B' FROM 7 TO 6, RELOCATED H.C. SPACES CLOSER TO THE REVISED ENTRANCES.

REV. #1 9/21/06

REVISION #1
RELOCATED H.C. SPACES CLOSER TO THE BLDG. ENTRANCES REVISED "SITE DATA", REDUCED THE WIDTH OF TRUCK LOADING AREA FROM 200' TO 197', REDUCED THE NUMBER OF ENTRANCES TO BLDG 'A' FROM 6 TO 4, INCREASED BLDG 'A' SETBACK FROM PROPERTY LINE TO 40'.

9/6/05

REVISION #4 12/05/16
ADDITION OF A PRECAST DRIVE UP RAMP WITHIN THE LOCATION AREA OF BUILDING 'B' (#7361)

LEGEND

- EXIST. R/W LINE
- EXIST. PROPERTY LINE
- EXIST. CONC. C & G
- EXIST. CONC. C&G TO BE REMOVED
- EXIST. WOODS
- EXIST. STORM DRAIN — EX.15"D
- EXIST. SANITARY — EX.8"S
- EXIST. WATER — EX.12"W
- EXIST. FIRE HYDRANT
- PROP. CONC. C & G
- PROP. GUARD RAIL
- PROP. DRAINAGE & UTILITY EASEMENT
- PROP. STORM DRAIN — PROP. 30"D
- PROP. SANITARY (PUBLIC) — PROP. 8"S
- PROP. SANITARY (PRIVATE) — PROP. 8"S
- PROP. WATER — PROP. 8"W
- PROP. CONCRETE
- PROP. No. OF PARKING SPACES — 13
- PROP. ON-SITE 30' HIGH LIGHT POLE (PRIVATE)
- PROP. HOWARD COUNTY STREET LIGHTS ARE TO BE INSTALLED BY OTHERS

PATAPSCO VALLEY BUSINESS CENTER
PARCEL D-1
PLAT NO. 16375, 16376 & 16377
ZONED M-2

APPROVED: FOR PUBLIC (OR PRIVATE) WATER AND PUBLIC (OR PRIVATE) SEWERAGE SYSTEMS:

County Health Officer Howard County — Date

APPROVED: HOWARD COUNTY DEPARTMENT OF PLANNING AND ZONING

Chief, Development Engineering Division — Date 7/20/05
Chief, Land Development Division — Date 8/3/05
Director — Date 8/4/05

ADDRESS CHART

Lot/Parcel No.	Street Address
PARCEL 285 E-1	BUILDING "A" 7351 COCA COLA DRIVE
" "	BUILDING "B" 7361 COCA COLA DRIVE

PERMIT INFORMATION CHART

Subdivision Name			Section /Area		Lot/Parcel No.
PATAPSCO VALLEY BUSINESS CENTER			N/A		PARCEL 285 LOT E-1
PLAT NO. 17589 17590	Grid # 20	Zoning M-2	Tax Map No. 38	Election District 1st	Census Tract 6012.02
Water Code A 04			Sewer Code 2150000		

BLDG
Baltimore Land Design Group Inc.
Consulting Engineers
222 SCHILLING CIRCLE SUITE 105 HUNT VALLEY, MARYLAND 21030
PHONE: 410.229.9851 FAX: 410.229.9865 BLDGINC@WINSTARMAIL.COM

OWNER / DEVELOPER
LIBERTY PROPERTY LIMITED PARTNERSHIP
5950 SYMPHONY WOODS ROAD, SUITE 210
COLUMBIA, MARYLAND 21044
ATTN: MR. JAMES FLANNERY

PLAN
SCALE 1" = 50'

HUMAN & ROHDE, INC.
LANDSCAPE ARCHITECTS
512 VIRGINIA AVENUE
TOWSON, MARYLAND 21286
410 825 3885

LANDSCAPE PLAN
PATAPSCO VALLEY BUSINESS CENTER
PARCEL E-1

HOWARD COUNTY, MARYLAND
SCALE: AS SHOWN
SDP-04-147
SHEET 14 OF 32
OCTOBER, 2004

SDP-04-147

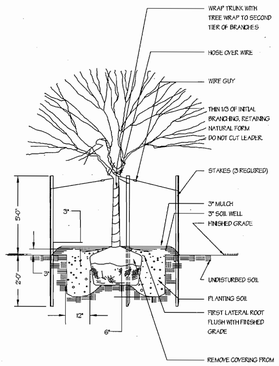

Tree Planting Detail

NOT TO SCALE

Shrub Planting Detail

NOT TO SCALE

SCHEDULE D
STORMWATER MANAGEMENT AREA LANDSCAPING

Linear Feet of Perimeter	430 LF. Type 'B'
Number of Trees Required Shade Trees Evergreen Trees	 9 11
Credit for Existing Vegetation (No, Yes and %)	NO
Credit for Other Landscaping (No, Yes and %)	NO
Number of Trees Provided Shade Trees Evergreen Trees Other Trees (2:1 substitution)	 11 11

SCHEDULE B
PARKING LOT INTERNAL LANDSCAPING

Number of Parking Spaces	361
Number of Trees Required	18
Number of Trees Provided Shade Trees Other Trees (2:1 substitution)	 24
Internal Islands Required	18
Internal Islands Provided (Min. 200 Sf.)	18

SCHEDULE A
PERIMETER LANDSCAPE EDGE

Category	Adjacent to Roadways				
Perimeter Number	1	2	3	4	5
Landscape Type	'E'	Optional	'A'	'A'	'A'
Linear Feet of Roadway Frontage/Perimeter	790 LF.	817 LF.	335 LF.	383 LF.	619 LF.
Credit for Existing Vegetation (Yes, No, Linear Feet) (Describe below if needed)	NO		YES 235 LF.	NO	NO
Credit for Wall, Fence or Berm (Yes, No, Linear Feet) (Describe below if needed)	NO		NO	NO	NO
Number of Plants Required Shade Trees Evergreen Trees Shrubs	 20 198		 2 	 6 	 10
Number of Plants Provided Shade Trees Evergreen Trees Other Trees (2:1 substitution) Shrubs (10:1 substitution)	 17 8 199		 5 	 9 10 	 17 8
(Describe plant substitution credits below if needed)	8 SMALL FLOWERING TREES SUBSTITUTED FOR 4 SHADE TREES				

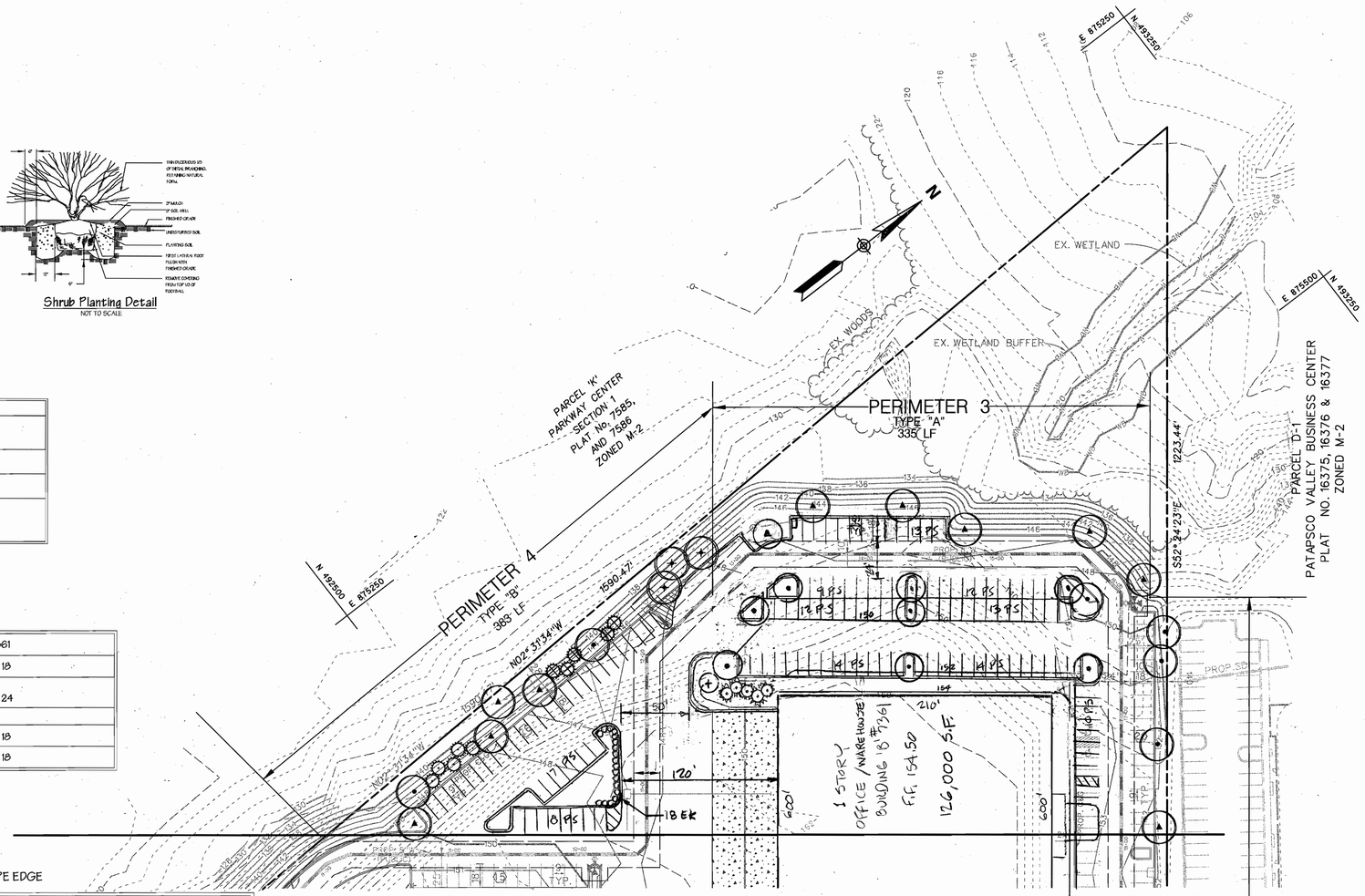

MATCH LINE

SHEET 14 OF 19

PLAN

SCALE 1" - 50'

LEGEND

EXIST. R/W LINE	
EXIST. PROPERTY LINE	
EXIST. CONC. C & G	
EXIST. CONC. C&G TO BE REMOVED	
EXIST. WOODS	
EXIST. STORM DRAIN	EX.15"D
EXIST. SANITARY	EX.8"S
EXIST. WATER	EX.12"W
EXIST. FIRE HYDRANT	
PROP. CONC. C & G	
PROP. GUARD RAIL	
PROP. DRAINAGE & UTILITY EASEMENT	
PROP. STORM DRAIN	PROP. 30"D
PROP. SANITARY (PUBLIC)	PROP. 8"S
PROP. SANITARY (PRIVATE)	PROP. 8"S
PROP. WATER	PROP. 8"W
PROP. CONCRETE	
PROP. No. OF PARKING SPACES	13
PROP. ON-SITE 30' HIGH LIGHT POLE (PRIVATE)	
PROP. HOWARD COUNTY STREET LIGHTS ARE TO BE INSTALLED BY OTHERS	

SPECIFICATIONS FOR PLANTING

PLANT IDENTIFICATION:
All plants shall be properly marked for identification and checking.

LIST OF PLANT MATERIALS:
The contractor will verify plant quantities prior to bidding and any descrepancies shall be brought to the attention of the Landscape Architect. The Contractor shall furnish and plant all plants required to complete the work as shown on the drawings. Substitutions shall not be made without the written approval of the Landscape Architect. This contract will be based on the bidder having verified, prior to bidding, the availability of the required plant materials as specified on the Plant List.

PLANT QUANTITY:
All shrubs shall be dense, heavy to the ground, and well grown, showing evidence of having been sheared regularly, and sound, free of plant disease or insect eggs, and shall have a healthy, normal root system. plants shall be nursery grown. Plants shall not be pruned prior to delivery. The shape of the plant shall in general conform to its natural growth proportions unless otherwise specified. All plants including container grown shall conform to American Standard for Nursery Stock (ANSI z60.1, latest edition), and shall have a well-shaped, heavy branch structure for the species. Evergreen trees are to have an intermode no greater than 24" and shall be uniformly well-shaped. All plant sizes shall average at least the middle of the range given in the plant list.

PLANT SPACING:
Plant spacing is to scale on the plan or as shown on the plant list.

SOIL MIX:
Soil mix will be 2/3 existing soil and 1/3 leaf mold or equal organic material, thoroughly mixed and homogenized.

BALL SIZE:
The ball size shall conform to the American Association of Nurserymen's publication entitled American Standard For Nursery Stock, ANSI z60.1, latest edition.

EXCAVATION:
Holes for all plants shall be 18" larger in diameter than size of ball or container and shall have vertical sides. Hedges shall be planted in a trench 12" wider than ball diameter. Beds for mass planting shall be entirely rototilled to a depth of 8" and shall be 18" beyond the average outside edge of plant balls. A 2" layer of organic material (i.e., leaf mold) will be incorporated into plant beds by tilling again.

PLANTING:
Backfilling shall be done with soil mix, reasonably free of stones, subsoil, clay, lumps, stumps, roots, weeds, bermuda grass, litter, toxic substances, or any other material which may be harmful to plant growth or hinder grading, planting, or maintence operations. Should any unforeseen or unsuitable planting conditions arise, such as faulty soil drainage or chemical residues, they should be called to the attention of the Landsape Architect and Owner for adjustments before planting. The plant shall be set plumb and straight and shall be staked at the time of planting. Backfill shall be well worked about the roots and settled by watering. Plants will be planted higher than surrounding grade. Shrubs will be 1" higher and trees will be 3" higher. Remove rope from around tree trunks and lay back burlap from top of all B&B material. Nylon or vinyl rope and/or burlap will be completely removed from all plant material prior to planting.

TRANSPLANTING TREES BY TREE MACHINES:
Trees shall be moved by machines that provide a minimum of 9" per 1" of tree caliper. Holes are to be dug by the same size machine as the one transporting the plant. The plant material shall be transplanted in approximately the same growing condition as it is pleasently growing, in terms of soil type and moisture content. Fertilize and guy as described in these plans and specifications.

CULTIVATION:
All trenches and shrub beds shall be cultivated, edged and mulched to a depth of 3" with shredded bark. The area around isolated plants shall be mulched to at least 6' greater diameter than that of the hole. Plant beds adjacent to buildings shall be mulched to the building wall.

MAINTENANCE:
the Contractor shall be responsible during the contract and up to the time of acceptance for keeping the planting and work incidental thereto in good condition, by replanting, plant replacement, watering, weeding, cultivating, pruning and spraying, restaking and cleaning up and by performing all other necessary operations of care for promotion of good plant growth so that all work is in satisfactory condition at time of acceptance, at no additional cost to the Owner.

FERTILIZER:
Fertilizer shall be a slow release type contained in polyethylene perforated bags with micropore holes for controlled feeding, such as Easy Grow as manufactured by Specialty Fertilizer, Inc., Box 355, Suffern, New York 10901, or approved equal. The bags shall contain 1 cane of soluble fertilizer analysis 16-18-16 per unit to last three (3) years and shall be applied during planting as recommended by the manufacturer. If fertilizer packets are not used, the Contractor shall apply granular fertilizer to the soil mixt with 10-6-4 analysis, 50% organic, at the following rates: Trees @ 2-3 lbs. per caliper inch; Shrub Beds @ 3-5 lbs per 100 sq.ft.; and Groundcover Beds @ 2-3 lbs. per 100 sq.ft.

GROUNDCOVER:
All areas of groundcover shall be rototilled a depth of 6". Apply 2" of organic material and rototill until thoroughly mixed. Apply fertilizer as stated above.

GUARANTEE AND REPLACEMENT:
All material shall be unconditionally guaranteed for one (1) year. The Contractor is responsible for watering but not for losses or damage caused by mechanical injury or vandilism.

LANDSCAPE SURETY NOTE:

LANDSCAPE SURETY IN THE AMOUNT OF 27,090.00 FOR THIS PLAN HAS BEEN POSTED AS A PART OF DEVELOPER'S AGREEMENT.

PLANTING NOTES:
1. This Plan is for planting purposes only.
2. This Plan has been prepared in accordance with the provisions of section 16.124 of the Howard County Code and the Landscape Manual.
3. All plant material shall be nursery grown and shall conform to AmericanAssociation of Nurserymen latest standards. Plant installation must conform to the minimum standards cited in the latest edition of the "LANDSCAPE SPECIFICATION GUIDELINES" by the Landscape Contractor's Association.
4. Contractor is to notify Miss Utility a minimum of 72 hours prior to digging. Telephone 1-800-257-7777
5. The Landscape Architect is to be notified 48 hours before planting begins. The location of all plant material is to be approved in field by the Landscape Architect.
6. No tree or shrub planting pits are to be left open or unattended.
7. Shrubs are to be grouped into mulched beds. Beds are to be edged and the grass is to be killed or removed prior to mulching.

APPROVED: FOR PUBLIC (OR PRIVATE) WATER AND PUBLIC (OR PRIVATE) SEWERAGE SYSTEMS:

County Health Officer Howard County — Date

APPROVED: HOWARD COUNTY DEPARTMENT OF PLANNING AND ZONING

Chief, Development Engineering Division — Date 7/20/05
Chief, Land Development Division — Date 8/1/05
Director — Date 8/4/05

ADDRESS CHART

Lot/Parcel No.	Street Address
PARCEL 285 E-1	BUILDING "A" 7351 COCA COLA DRIVE
" "	BUILDING "B" 7361 COCA COLA DRIVE

PERMIT INFORMATION CHART

Subdivision Name			Section /Area		Lot/Parcel No.
PATAPSCO VALLEY BUSINESS CENTER			N/A		PARCEL 285 LOT E-1
PLAT NO. 17589 17590	Grid # 20	Zoning M-2	Tax Map No. 38	Election District 1st	Census Tract 6012.02
Water Code A 04			Sewer Code 2150000		

LANDSCAPE PLAN

PATAPSCO VALLEY BUSINESS CENTER

PARCEL E-1

HOWARD COUNTY, MARYLAND — SHEET 15 OF 19

SCALE: AS SHOWN — SDP-04-147 — January, 2005

SDP-04-147

BLDG
Baltimore Land Design Group Inc.
Consulting Engineers
222 SCHILLING CIRCLE SUITE 105 HUNT VALLEY, MARYLAND 21030
PHONE: 410.229.9851 FAX: 410.229.9865 BLDGINC@WINSTARMAIL.COM

OWNER / DEVELOPER

LIBERTY PROPERTY LIMITED PARTNERSHIP

5950 SYMPHONY WOODS ROAD, SUITE 210
COLUMBIA, MARYLAND 21044
ATTN: MR. JAMES FLANNERY

REGISTERED PROFESSIONAL ENGINEER 21245 — STEPHEN A. ROSTEK-ZARSKI — STATE OF MARYLAND — 7/6/05

REVISION #2
REDUCED BLDG 'B' S.F. FROM 157,500 TO 126,000 S.F., INCREASED THE PARKING SPACES FOR BLDG 'B' AND BLDG 'A' REVISED "SITE DATA", REDUCED THE NUMBER OF ENTRANCES TO BLDG 'B' FROM 7 TO 6, RELOCATED H.C. SPACES CLOSER TO THE REVISED ENTRANCES.

HUMAN & ROHDE, INC.
LANDSCAPE ARCHITECTS
512 VIRGINIA AVENUE
TOWSON, MARYLAND 21286
(410) 825 -3885

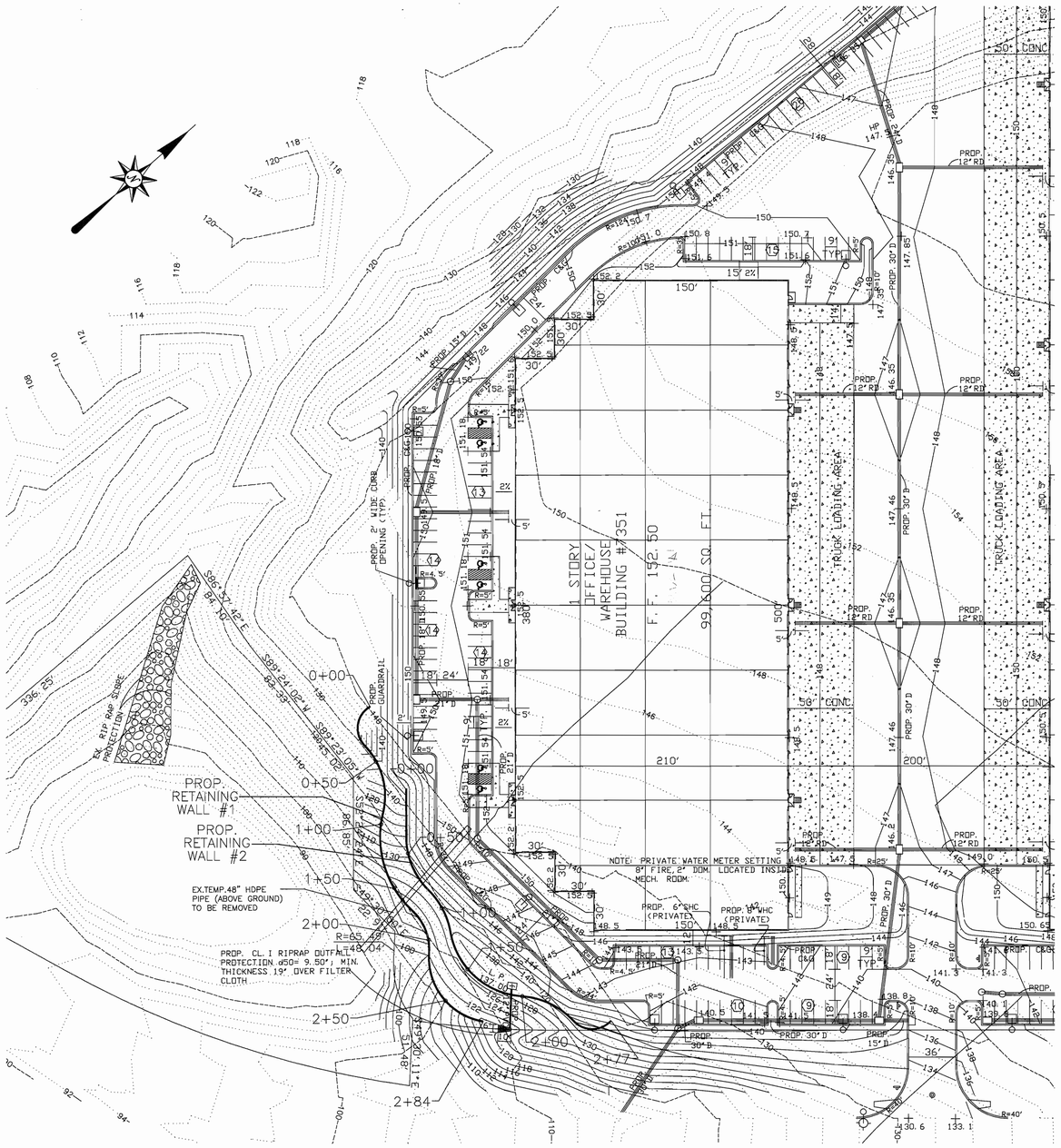

RETAINING WALL LOCATION PLAN

SCALE 1" = 50'

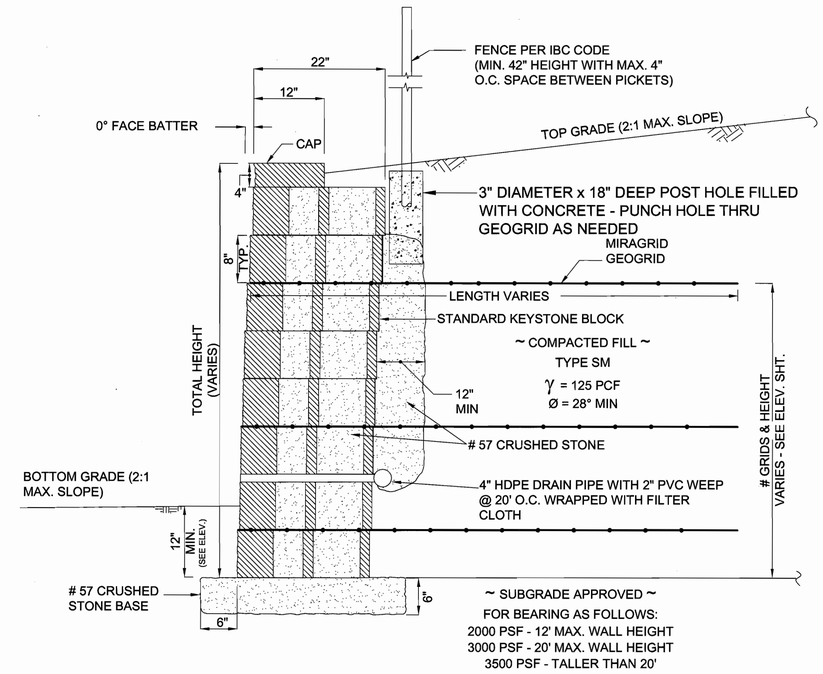

TYPICAL RETAINING WALL SECTION

NOT TO SCALE

APPROVED: HOWARD COUNTY DEPARTMENT OF PLANNING AND ZONING

Chief, Development Engineering Division	7/26/05 Date
Chief, Land Development Division	8/8/05 Date
Director	8/9/05 Date

ADDRESS CHART

Lot / Parcel No.	Street Address
PARCEL 285 E-1	BUILDING "A" 7351 COCA COLA DRIVE
	BUILDING "B" 7361 COCA COLA DRIVE

PERMIT INFORMATION CHART

Subdivision Name			Section / Area		Lot / Parcel No.
PATAPSCO VALLEY BUSINESS CENTER			N/A		PARCEL 285 LOT E-1
PLAT NO.	Grid #	Zoning	Tax Map No.	Election District	Census Tract
17589, 17590	20	M-2	38	1st	6012.02
Water Code			Sewer Code		
A 04			2150000		

BLDG
Baltimore Land Design Group Inc.
Consulting Engineers
222 SCHILLING CIRCLE SUITE 105 HUNT VALLEY, MARYLAND 21030
PHONE: 410.229.9851 FAX: 410.229.9865 BLDG@BLDGINC.COM

OWNER / DEVELOPER

LIBERTY PROPERTY LIMITED PARTNERSHIP
5950 SYMPHONY WOODS ROAD, SUITE 210
COLUMBIA, MARYLAND 21044
ATTN: MR. JAMES FLANNERY

STATE OF MARYLAND REGISTERED PROFESSIONAL ENGINEER NO. 14828 BRIAN S. FOSTER

HILLIS-CARNES
ENGINEERING ASSOCIATES, INC.
12011 Guilford Road Suite 106 Annapolis Junction, Maryland 20701
Balto. (410) 880-4788 D.C. (301) 470-4239 Fax (410) 880-4098

RETAINING WALL LOCATION PLAN & DETAILS
PATAPSCO VALLEY BUSINESS CENTER
PARCEL E-1

HOWARD COUNTY, MARYLAND SHEET 16 OF 19
SCALE: AS SHOWN SDP-04-147 MAY, 2004

SDP-04-147

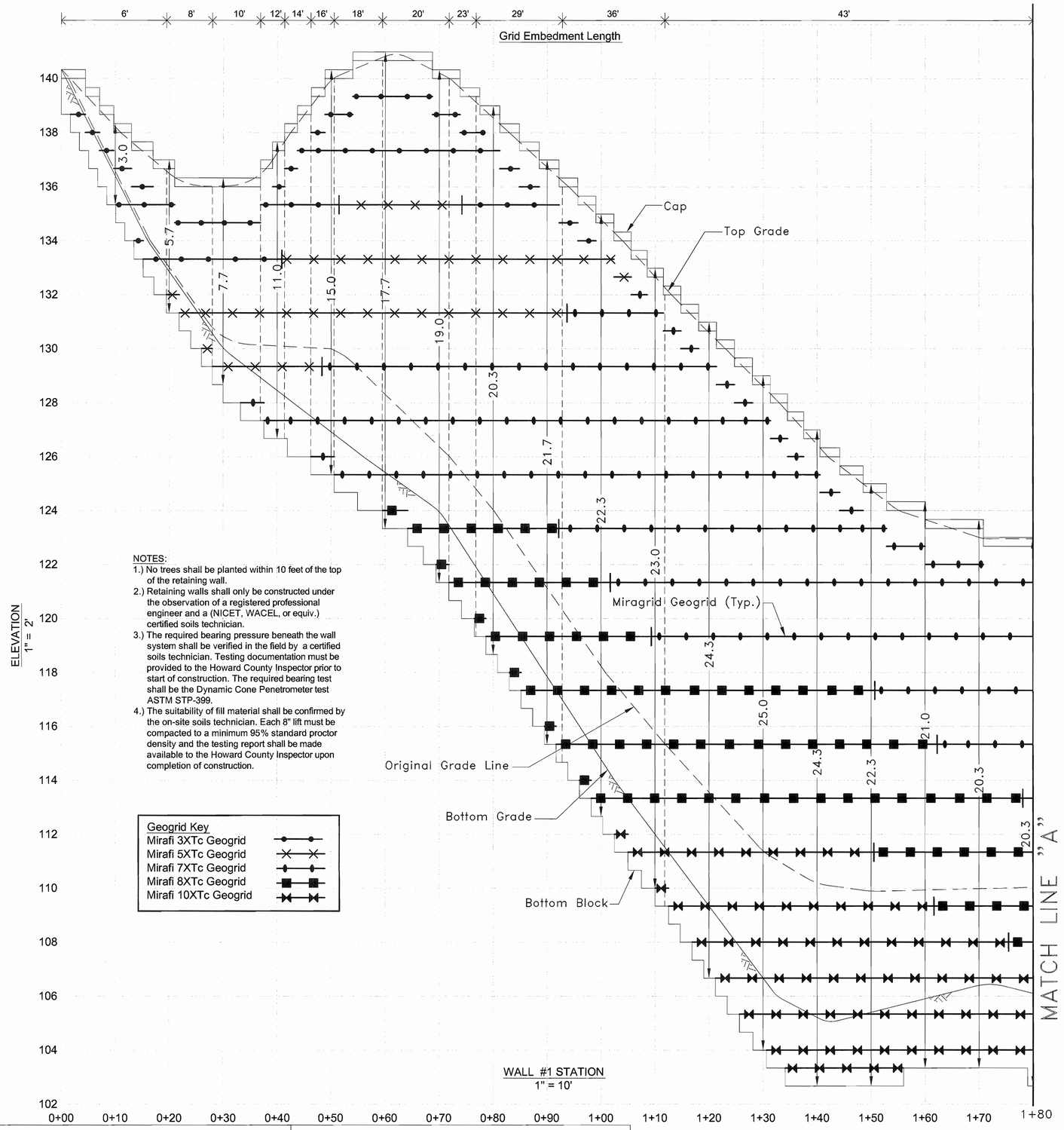

NOTES:

1.) No trees shall be planted within 10 feet of the top of the retaining wall.

2.) Retaining walls shall only be constructed under the observation of a registered professional engineer and a (NICET, WACEL, or equiv.) certified soils technician.

3.) The required bearing pressure beneath the wall system shall be verified in the field by a certified soils technician. Testing documentation must be provided to the Howard County Inspector prior to start of construction. The required bearing test shall be the Dynamic Cone Penetrometer test ASTM STP-399.

4.) The suitability of fill material shall be confirmed by the on-site soils technician. Each 8" lift must be compacted to a minimum 95% standard proctor density and the testing report shall be made available to the Howard County Inspector upon completion of construction.

Geogrid Key

- Mirafi 3XTc Geogrid
- Mirafi 5XTc Geogrid
- Mirafi 7XTc Geogrid
- Mirafi 8XTc Geogrid
- Mirafi 10XTc Geogrid

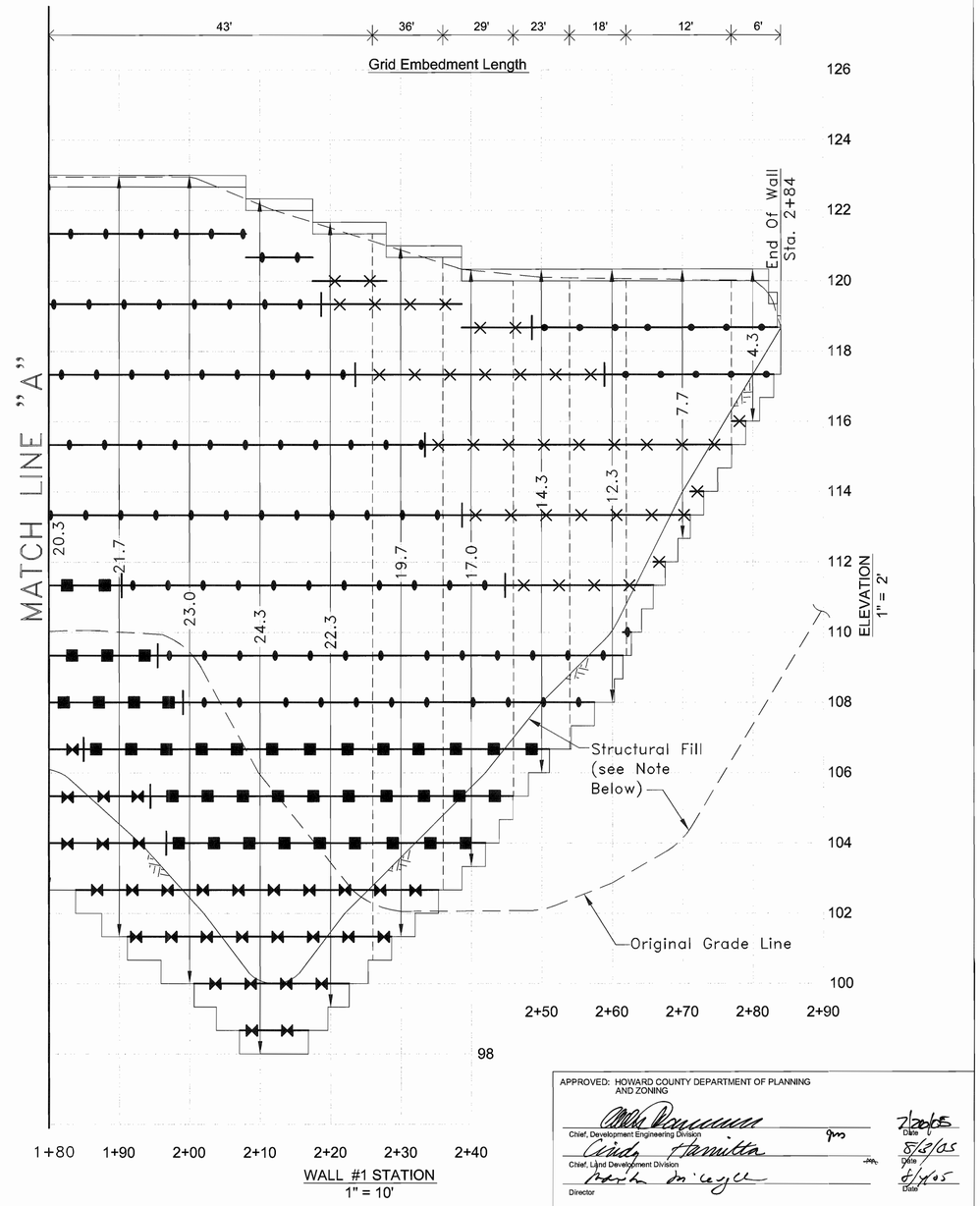

STRUCTURAL FILL NOTE:

- Stuctural fill shall be placed below and about the wall where shown for walls #1 and #2 for a minimum distance of 30 feet in all directions beyond the grid reinforced footprint of the walls. The structural fill shall be the same soil type and compaction effort meeting the wall specifications of this plan and all applicable Howard County criteria for site fill compaction and testing.

APPROVED: HOWARD COUNTY DEPARTMENT OF PLANNING AND ZONING

Chief, Development Engineering Division	Date 7/20/05
Chief, Land Development Division	Date 8/2/05
Director	Date 8/4/05

ADDRESS CHART

Lot / Parcel No.	Street Address
PARCEL 285 E-1	BUILDING "A" 7351 COCA COLA DRIVE
	BUILDING "B" 7361 COCA COLA DRIVE

PERMIT INFORMATION CHART

Subdivision Name			Section / Area		Lot / Parcel No.
PATAPSCO VALLEY BUSINESS CENTER			N/A		PARCEL 285 LOT E-1
PLAT NO.	Grid #	Zoning	Tax Map No.	Election District	Census Tract
17589 / 17590	20	M-2	38	1st	6012.02
Water Code			Sewer Code		
A 04			2150000		

BLDG
Baltimore Land Design Group Inc.
Consulting Engineers
222 SCHILLING CIRCLE SUITE 105 HUNT VALLEY, MARYLAND 21030
PHONE: 410.229.9851 FAX: 410.229.9865 BLDG@BLDGINC.COM

OWNER / DEVELOPER

LIBERTY PROPERTY LIMITED PARTNERSHIP
5950 SYMPHONY WOODS ROAD, SUITE 210
COLUMBIA, MARYLAND 21044
ATTN: MR. JAMES FLANNERY

HILLIS-CARNES
ENGINEERING ASSOCIATES, INC.
12011 Guilford Road Suite 106 Annapolis Junction, Maryland 20701
Balto. (410) 880-4788 D.C. (301) 470-4239 Fax (410) 880-4098

RETAINING WALL 1, ELEVATION VIEW
PATAPSCO VALLEY BUSINESS CENTER
PARCEL E-1

HOWARD COUNTY, MARYLAND
SCALE: AS SHOWN SDP-04-147
SHEET 17 OF 19
MAY, 2004

SDP-04-147

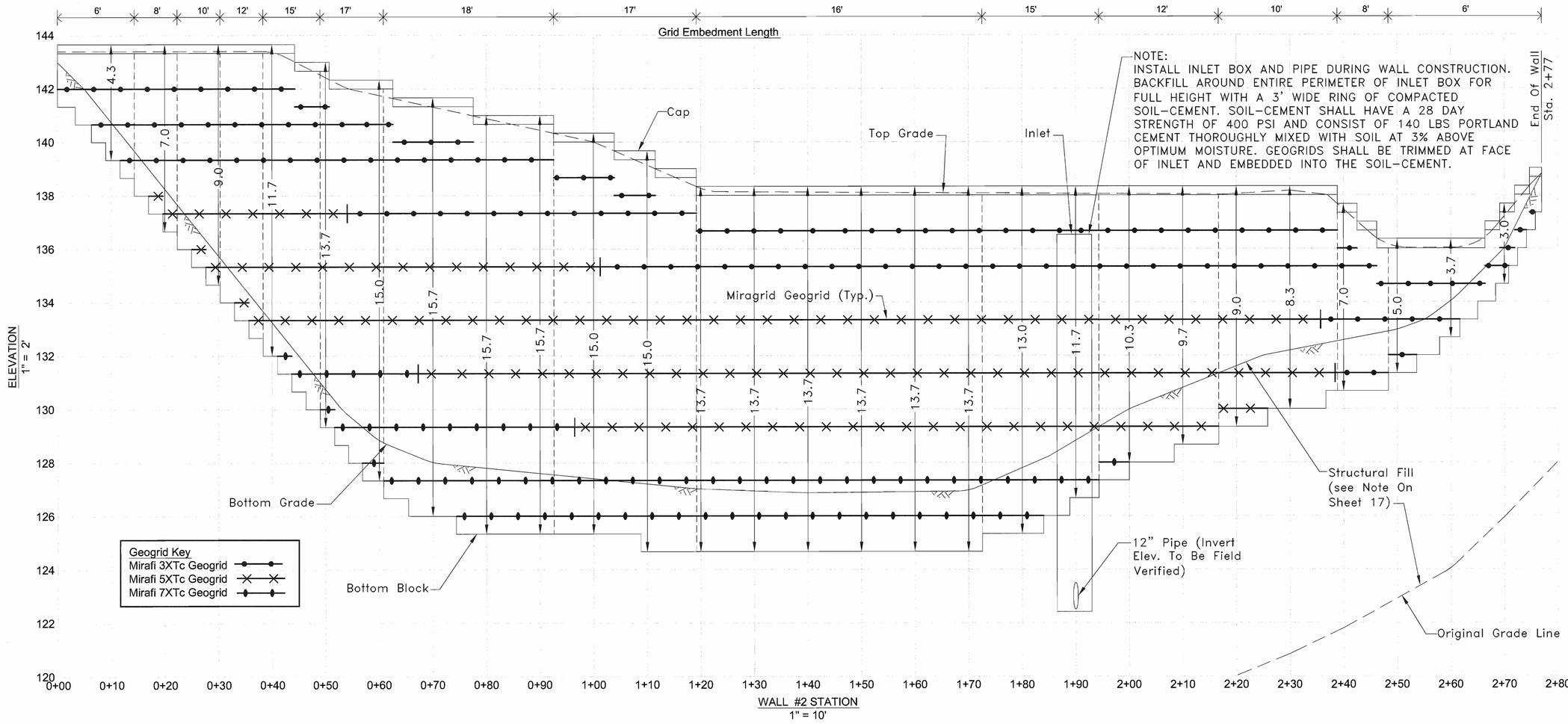

APPROVED: HOWARD COUNTY DEPARTMENT OF PLANNING AND ZONING

Chief, Development Engineering Division		7/26/05 Date
Chief, Land Development Division		8/9/05 Date
Director		8/11/05 Date

ADDRESS CHART

Lot / Parcel No.	Street Address
PARCEL 285 E-1	BUILDING "A" 7351 COCA COLA DRIVE
	BUILDING "B" 7361 COCA COLA DRIVE

PERMIT INFORMATION CHART

Subdivision Name			Section / Area		Lot / Parcel No.
PATAPSCO VALLEY BUSINESS CENTER			N/A		PARCEL 285 LOT E-1
PLAT NO.	Grid #	Zoning	Tax Map No.	Election District	Census Tract
17589, 17590	20	M-2	38	1st	6012.02
Water Code			Sewer Code		
A 04			2150000		

BLDG
Baltimore Land Design Group Inc.
Consulting Engineers
222 SCHILLING CIRCLE SUITE 105 HUNT VALLEY, MARYLAND 21030
PHONE: 410.229.9851 FAX: 410.229.9865 BLDG@BLDGINC.COM

OWNER / DEVELOPER

LIBERTY PROPERTY LIMITED PARTNERSHIP
5950 SYMPHONY WOODS ROAD, SUITE 210
COLUMBIA, MARYLAND 21044
ATTN: MR. JAMES FLANNERY

STATE OF MARYLAND — OWEN STAUFFER — No. 14400 — REGISTERED PROFESSIONAL ENGINEER

HILLIS-CARNES
ENGINEERING ASSOCIATES, INC.
12011 Guilford Road Suite 106 Annapolis Junction, Maryland 20701
Balto. (410) 880-4788 D.C. (301) 470-4239 Fax (410) 880-4098

RETAINING WALL 2, ELEVATION VIEW
PATAPSCO VALLEY BUSINESS CENTER
PARCEL E-1

HOWARD COUNTY, MARYLAND SHEET 18 OF 19
SCALE: AS SHOWN SDP-04-147 MAY, 2004

SDP-04-147

SPECIFICATIONS

MODULAR CONCRETE BLOCK RETAINING WALL

PART 1: GENERAL

1.01 Description

A. Work shall consist of furnishing and construction of a Modular Block Retaining Wall System in accordance with these specifications and in reasonably close conformity with the lines, grades, design, and dimensions shown on the plans.

B. Work includes preparing foundation soil, furnishing and installing leveling pad, unit drainage fill and backfill to the lines and grades shown on the construction drawings.

C. Work includes furnishing and installing geogrid soil reinforcement of the type, size, location, and lengths designated on the construction drawings.

1.02 Delivery, Storage and Handling

A. Contractor shall check all materials upon delivery to assure that the proper type, grade, color, and certification has been received.

B. Contractor shall protect all materials from damage due to job site conditions and in accordance with manufacturer's recommendations. Damaged materials shall not be incorporated into the work.

PART 2: PRODUCTS

2.01 Modular Concrete Retaining Wall Units

A. Modular concrete units shall conform to the following architectural requirements:
face color specified by the Owner.
bond configuration - running with bonds nominally located at midpoint vertically adjacent units, in both straight and curved alignments.
exposed surfaces of units shall be free of chips, cracks or other imperfections when viewed from a distance of 10 feet under diffused lighting.
Modular concrete materials shall conform to the requirements of ASTM C1372 - Standard Specifications for Segmental Retaining Wall Units.
Modular concrete units shall conform to the following

B. structural and geometric requirements measured in accordance with appropriate references:
compressive strength = 3000 psi minimum;

C. absorption = 8 % maximum (6% in northern states) for standard weight aggregates;
dimensional tolerances = ± 1/8" from nominal unit dimensions not including rough split unit dimensions not including rough split face, ±1/16" unit height - top and bottom planes;
unit size - 8" (H) x 18" (W) x 22" (D) minimum;
unit weight - 95 lbs/unit minimum for standard weight aggregates;
inter-unit shear strength - 600 plf minimum at 2 psi normal pressure;
geogrid/unit peak connection strength - 600 plf minimum at 2 psi normal force.

D. Modular concrete units shall conform to the following constructability requirements:
vertical setback = 1/8"± per course (near vertical) or 1"+ per course per the design;
alignment and grid positioning mechanism - fiberglass pins, two per unit minimum;
maximum horizontal gap between erected units shall be - 1/2 inch.

2.03 Base Levelling Pad Material

A. Material shall consist of a compacted #57 crushed stone base as shown on the construction drawings.

2.04 Unit Drainage Fill

A. Unit drainage fill shall consist of #57crushed stone

2.05 Reinforced Backfill

A. Reinforced backfill shall type SM, be free of debris and meet the following gradation tested in accordance with ASTM D-422 and meet other properties shown on the plan:

Sieve Size	Percent Passing
2 inch	100-75
3/4 inch	100-75
No. 40	0-60
No. 200	0-40

Plasticity Index (PI) <15 and Liquid Limit <40 per ASTM D-4318.

B. Material can be site excavated soils where the above requirements can be met. Unsuitable soils for backfill (high plastic clays or organic soils) shall not be used in the reinforced soil mass.

2.06 Geogrid Soil Reinforcement

A. Geosynthetic reinforcement shall consist of geogrids manufactured specifically for soil reinforcement applications and shall be manufactured from high tenacity polyester yarn.

2.07 Drainage Pipe

A. The drainage pipe shall be perforated corrugated HDPE pipe manufactured in accordance with ASTM D-1248.

PART 3 EXECUTION

3.01 Excavation

A. Contractor shall excavate to the lines and grades shown on the construction drawings. Owner's representative shall be responsible for inspecting and approving the excavation prior to placement of leveling material or fill soils.

3.02 Base Leveling Pad

A. Leveling pad material shall be placed to the lines and grades shown on the construction drawings, to a minimum thickness of 6 inches and extend laterally a minimum of 6" in front and behind the modular wall unit.

B. Leveling pad shall be prepared to insure full contact to the base surface of the concrete units.

3.03 Modular Unit Installation

A. First course of units shall be placed on the leveling pad at the appropriate line and grade. Alignment and level shall be checked in all directions and insure that all units are in full contact with the base and properly seated.

B. Place the front of units side-by-side. Do not leave gaps between adjacent units. Layout of corners and curves shall be in accordance with manufacturer's recommendations.

C. Install shear/connecting devices per manufacturer's recommendations.

D. Place and compact drainage fill within and behind wall units. Place and compact backfill soil behind drainage fill. Follow wall erection and drainage fill closely with structure backfill.

E. Maximum stacked vertical height of wall units, prior to unit drainage fill and backfill placement and compaction, shall not exceed three courses.

3.04 Structural Geogrid Installation

A. Geogrid shall be oriented with the highest strength axis perpendicular to the wall alignment.

B. Geogrid reinforcement shall be placed at the strengths, lengths, and elevations shown on the construction design drawings or as directed by the Engineer.

C. The geogrid shall be laid horizontally on compacted backfill and attached to the modular wall units. Place the next course of modular concrete units over the geogrid. The geogrid shall be pulled taut, and anchored prior to backfill placement on the geogrid.

D. Geogrid reinforcements shall be continuous throughout their embedment lengths and placed side-by-side to provide 100% coverage at each level. Spliced connections between shorter pieces of geogrid or gaps between adjacent pieces of geogrid are not permitted.

3.05 Reinforced Backfill Placement

A. Reinforced backfill shall be placed, spread, and compacted in such a manner that minimizes the development of slack in the geogrid and installation damage.

B. Reinforced backfill shall be placed and compacted in lifts not to exceed 6 inches where hand compaction is used, or 8 - 10 inches where heavy compaction equipment is used. Lift thickness shall be decreased to achieve the required density as required.

C. Reinforced backfill shall be compacted to 95% of the maximum density as determined by ASTM D698. The moisture content of the backfill material prior to and during compaction shall be uniformly distributed throughout each layer and shall be + 3% to - 3% of optimum.

D. Only lightweight hand-operated equipment shall be allowed within 3 feet from the tail of the modular concrete unit.

E. Tracked construction equipment shall not be operated directly upon the geogrid reinforcement. A minimum fill thickness of 6 inches is required prior to operation of tracked vehicles over the geogrid. Tracked vehicle turning should be kept to a minimum to prevent tracks from displacing the fill and damaging the geogrid.

F. Rubber tired equipment may pass over geogrid reinforcement at slow speeds, less than 10 MPH. Sudden braking and sharp turning shall be avoided.

G. At the end of each day's operation, the Contractor shall slope the last lift of reinforced backfill away from the wall units to direct runoff away from wall face. The Contractor shall not allow surface runoff from adjacent areas to enter the wall construction site.

3.06 Cap Installation

A. Cap units shall be glued to underlying units with an all-weather adhesive recommended by the manufacturer.

3.07 Field Quality Control

A. The Owner shall engage inspection and testing services, including independent laboratories, to provide quality assurance and testing services during construction.

B. As a minimum, quality assurance testing should include foundation soil inspection, soil and backfill testing, verification of design parameters, and observation of construction for general compliance with design drawings and specifications.

APPROVED: HOWARD COUNTY DEPARTMENT OF PLANNING AND ZONING

Chief, Development Engineering Division	Date 7/26/05
Chief, Land Development Division	Date 8/2/05
Director	Date 8/4/05

ADDRESS CHART

Lot / Parcel No.	Street Address
PARCEL 285 E-1	BUILDING "A" 7351 COCA COLA DRIVE
	BUILDING "B" 7361 COCA COLA DRIVE

PERMIT INFORMATION CHART

Subdivision Name			Section / Area		Lot / Parcel No.
PATAPSCO VALLEY BUSINESS CENTER			N/A		PARCEL 285 LOT E-1
PLAT NO.	Grid #	Zoning	Tax Map No.	Election District	Census Tract
17589, 17590	20	M-2	38	1st	6012.02
Water Code			Sewer Code		
A 04			2150000		

BLDG
Baltimore Land Design Group Inc.
Consulting Engineers
222 SCHILLING CIRCLE SUITE 105 HUNT VALLEY, MARYLAND 21030
PHONE: 410.229.9851 FAX: 410.229.9865 BLDG@BLDGINC.COM

OWNER / DEVELOPER

LIBERTY PROPERTY LIMITED PARTNERSHIP
5950 SYMPHONY WOODS ROAD, SUITE 210
COLUMBIA, MARYLAND 21044
ATTN: MR. JAMES FLANNERY

HILLIS-CARNES
ENGINEERING ASSOCIATES, INC.
12011 Guilford Road Suite 106 Annapolis Junction, Maryland 20701
Balto. (410) 880-4788 D.C. (301) 470-4239 Fax (410) 880-4098

RETAINING WALL SPECIFICATIONS
PATAPSCO VALLEY BUSINESS CENTER
PARCEL E-1

HOWARD COUNTY, MARYLAND SHEET 19 OF 19
SCALE: AS SHOWN SDP-04-147 MAY, 2004

SDP-04-147

REPLACEMENT LANDSCAPE PLANT LIST					
KEY	BOTANICAL NAME / COMMON NAME	SIZE	ROOT	SPACING / NOTES	QUANTITY
SHADE TREES					
AR	*Acer rubrum 'October Glory'* / October Glory Red Maple	2-1/2"-3" Cal.	B & B	As shown	2
TOTAL SHADE TREES					2
EVERGREEN TREES					
PA	*Picea abies* / Norway Spruce	6'-8' Tall	B & B	As shown	4
PS	*Pinus strobus* / White Pine	6'-8' Tall	B & B	As shown	3
TOTAL EVERGREEN TREES					7
SHRUBS					
IV	*Ilex verticillata* / Common Winterberry	3'-4' Tall	Container	As shown	8
TOTAL SHRUBS					8

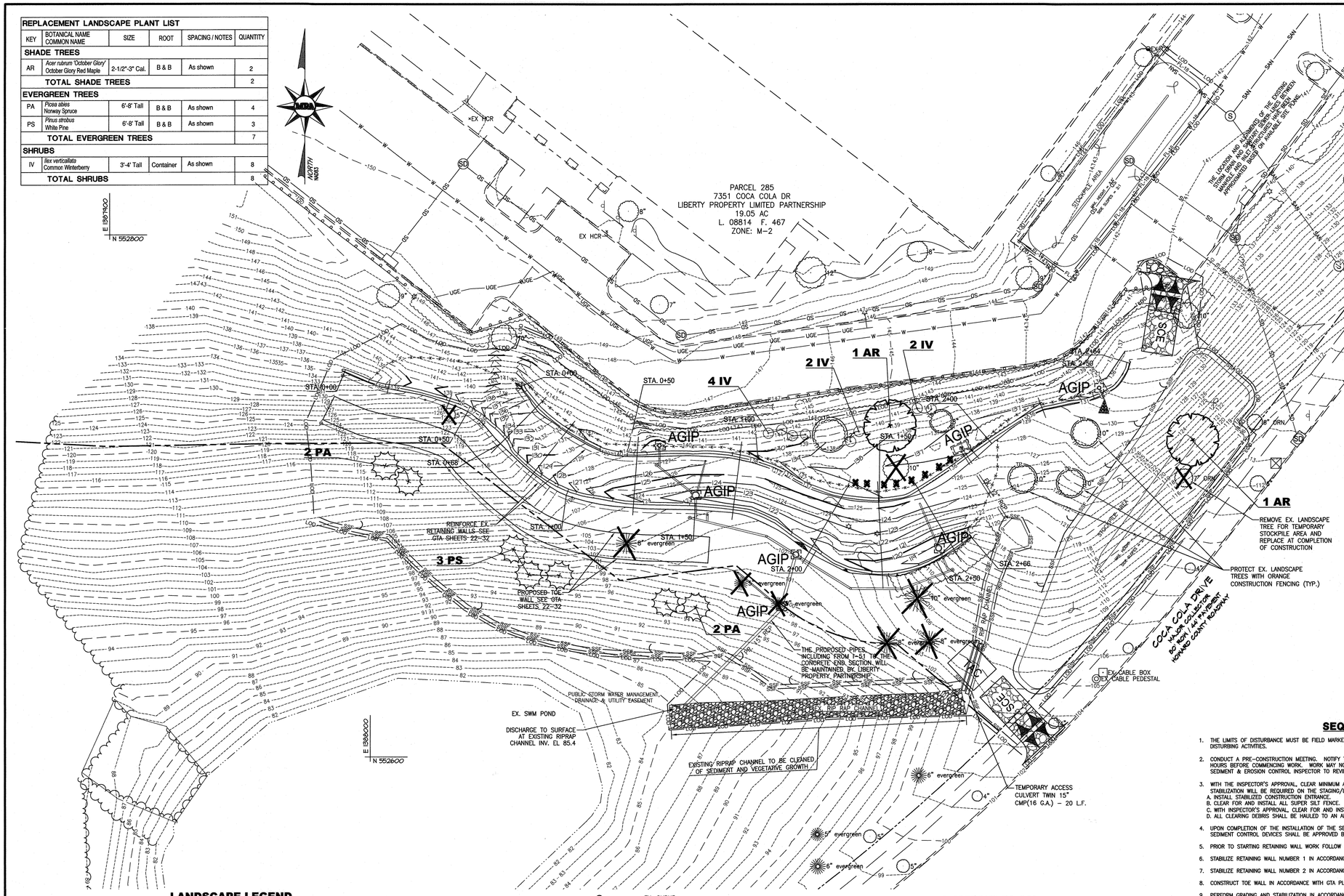

WOODLAND CONSERVATION NOTES

WOODLAND CONSERVATION HAS BEEN CALCULATED BASED ON THE LIMIT OF DISTURBANCE (LOD) OF 37,971 SF (0.87 ACRES) SHOWN, WHICH IS LESS THAN THE 40,000 SQUARE FOOT THRESHOLD AS DESCRIBED IN THE HOWARD COUNTY FOREST CONSERVATION MANUAL ADOPTED FEBRUARY 3, 2021 IN SECTION 3.2.4(1).

CALCULATING THE FOREST CONSERVATION REQUIREMENTS BASED ON THE LOD, YIELDS A SMALL REQUIREMENT OF 0.10 ACRES.

DUE TO LIMITED SIZE OF FOREST CONSERVATION REQUIRED WHICH MAKES THE PROCESS OF DEDICATION AND EASEMENT CREATION CUMBERSOME, AND THAT NO TREE BANK IS LOCATED IN THE SAME WATERSHED, WE ARE PROPOSING TO SATISFY THE WOODLAND CONSERVATION REQUIREMENTS WITH FEE-IN-LIEU INSTEAD.

ANY FUTURE EXPANSION OF THE AREA WILL NEED TO ADDRESS FOREST CONSERVATION.

FOREST CONSERVATION WORKSHEET FOR: Patapsco Valley Business Center, Parcel E-1 Prologis

Net Tract Area

A.	Total (Gross) Tract Area	A =	0.9
B.	Area within 100-year Floodplain	B =	0.0
C.	Other Deductions (Identify _____)	C =	0.0
D.	Net Tract Area	D =	0.9

Land Use Category

Insert the number "1" under the appropriate land use (limit to only one entry)

Resid. Rural LD	Resid. Rural MD	Resid. Suburban	Inst / Linear	Retail/Ind / Office	Mixed Use/ PUD
0	0	0	0	1	0

E.	Afforestation Threshold (Net Tract Area x 15%)	E =	0.1
F.	Reforestation Threshold (Net Tract Area x 15%)	F =	0.1

Existing Forest Cover

G.	Existing Forest Cover within the Net Tract Area	G =	0.0
H.	Area of Forest above Afforestation Threshold	H =	0.0
I.	Area of Forest above Reforestation Threshold	I =	0.0

Break Even Point

J.	Break Even Point	J =	0.0
K.	Forest Clearing Permitted without Mitigation	K =	0.0

Proposed Forest Clearing

L.	Total Area of Forest to be Cleared	L =	0.0
M.	Total Area of Forest to be Retained	M =	0.0

Planting Requirements Inside Watershed

N.	Reforestation for Clearing above the Reforestation Threshold	N =	0.0
P.	Reforestation for Clearing below the Reforestation Threshold	P =	0.0
Q.	Credit for Retention above the Reforestation Threshold	Q =	0.0
R.	Total Reforestation Required	R =	0.0
S.	Total Afforestation Required	S =	0.1
T.	Total Reforestation and Afforestation Requirement	T =	0.1
U.	75% of Total Obligation (Retention + Planting)	U =	0.1
V.	Planting Required Onsite to meet 75% Obligation	V =	0.1

Planting Requirements Outside Watershed

W.	Total Planting within Development Site Watershed	W =	0.0
X.	Total Afforestation Required	X =	0.1
Y.	Remaining Planting within Watershed for Reforestation Credit	Y =	0.0
Z.	Reforestation for Clearing above the Reforestation Threshold	Z =	0.0
AA.	Reforestation for Clearing below the Reforestation Threshold	AA =	0.0
BB.	Credit for Retention above the Reforestation Threshold	BB =	0.0
CC.	Total Reforestation Required	CC =	0.0
DD.	Total Afforestation and Reforestation Requirement	DD =	0.1

Date: MAY 24, 2022

SEQUENCE OF CONSTRUCTION

1. THE LIMITS OF DISTURBANCE MUST BE FIELD MARKED PRIOR TO GRADING, INSTALLATION OF SEDIMENT CONTROL MEASURES, CONSTRUCTION, OR OTHER LAND DISTURBING ACTIVITIES.
2. CONDUCT A PRE-CONSTRUCTION MEETING. NOTIFY THE DEPARTMENT OF PUBLIC WORKS CONSTRUCTION INSPECTION DIVISION (410) 313-1880 AT LEAST 48 HOURS BEFORE COMMENCING WORK. WORK MAY NOT COMMENCE UNTIL THE PERMITTEE OR THE RESPONSIBLE PERSONNEL HAVE MET ON SITE WITH THE SEDIMENT & EROSION CONTROL INSPECTOR TO REVIEW THE APPROVED PLANS.
3. WITH THE INSPECTOR'S APPROVAL, CLEAR MINIMUM AREA NECESSARY TO INSTALL SEDIMENT CONTROLS AND THE STAGING/LAYDOWN AREAS. MECHANICAL STABILIZATION WILL BE REQUIRED ON THE STAGING/LAYDOWN AREAS AND HEAVY USE AREAS, INCLUDING TRAVEL LANES. — 1 WEEK
   A. INSTALL STABILIZED CONSTRUCTION ENTRANCE.
   B. CLEAR FOR AND INSTALL ALL SUPER SILT FENCE.
   C. WITH INSPECTOR'S APPROVAL, CLEAR FOR AND INSTALL CONTRACTOR STAGING AREA, STABILIZED STAGING/LAYDOWN AREA WITH WOOD CHIPS OR GRAVEL.
   D. ALL CLEARING DEBRIS SHALL BE HAULED TO AN APPROVED LANDFILL OR SITE.
4. UPON COMPLETION OF THE INSTALLATION OF THE SEDIMENT CONTROL DEVICES, BUT BEFORE PROCEEDING WITH OTHER EARTH DISTURBANCE OR GRADING, SEDIMENT CONTROL DEVICES SHALL BE APPROVED BY THE HOWARD COUNTY INSPECTOR. — 1 WEEK
5. PRIOR TO STARTING RETAINING WALL WORK FOLLOW SEQUENCE OF CONSTRUCTION STEPS IN ACCORDANCE WITH GTA PLAN SHEET SDP 23 PART 4C. — 1 MONTH
6. STABILIZE RETAINING WALL NUMBER 1 IN ACCORDANCE WITH GTA PLAN SHEET SDP 23 PART 4D. — 1 MONTH
7. STABILIZE RETAINING WALL NUMBER 2 IN ACCORDANCE WITH GTA PLAN SHEET SDP 23 PART 4E. — 1 MONTH
8. CONSTRUCT TOE WALL IN ACCORDANCE WITH GTA PLAN SHEET SDP 23 PART 4F. BACKFILL AND STABILIZE TOE WALL AREA. — 1 MONTH
9. PERFORM GRADING AND STABILIZATION IN ACCORDANCE WITH GTA PLAN SHEET SDP 23 PART 4P. — 1 WEEK
10. WITH INSPECTOR'S APPROVAL, REMOVE REMAINING SEDIMENT CONTROL PRACTICES AND STABILIZE DISTURBED AREAS. — 1 WEEK

SHEET: **SDP-20**

LANDSCAPE LEGEND

- PR. REPLACEMENT SHADE TREE
- PR. REPLACEMENT EVERGREEN
- PR. REPLACEMENT SHRUB
- PR. TREE REMOVAL

APPROVED: DEPARTMENT OF PLANNING AND ZONING
Amy Gray 7-18-22
Director Date

HOWARD SOIL CONSERVATION DISTRICT

THIS PLAN IS APPROVED FOR SOIL EROSION AND SEDIMENT CONTROL BY THE HOWARD SOIL CONSERVATION DISTRICT

Alexander Brodie 06/15/22
HOWARD SOIL CONSERVATION DISTRICT — DATE

APPROVED: HOWARD COUNTY DEPARTMENT OF PLANNING AND ZONING

For: EC 7/7/22
CHIEF, DEVELOPMENT ENGINEERING DIVISION — DATE

7/18/22
CHIEF, LAND DEVELOPMENT DIVISION — DATE

LEGEND

- EX. PROPERTY LINE
- EX. RIGHT-OF-WAY
- EX. ADJACENT PROPERTY LINE
- EX. EASEMENT
- EX. FLOODPLAIN
- EX. NON-TIDAL WETLAND
- EX. WETLAND BUFFER
- EX. WATERS-OF-THE-US
- EX. STREAM BUFFER
- EX. FOREST CONSERVATION EASEMENT
- EX. BUILDING
- EX. BUILDING OVERHANG
- EX. CURB
- EX. PAVEMENT/EDGE OF GUTTER
- EX. WALK
- EX. WALL
- EX. CONCRETE
- EX. METAL FENCE
- EX. WOOD FENCE
- EX. GUARDRAIL
- EX. RAILROAD TRACK
- EX. STREAM/POND
- EX. TREELINE
- EX. SHRUBLINE
- EX. SPECIMEN TREE
- EX. TREE
- EX. SHRUB
- EX. STORM DRAIN
- EX. SANITARY LINE
- EX. WATERLINE
- EX. GAS LINE
- EX. UNDERGROUND ELECTRIC
- EX. UNDERGROUND TELEPHONE
- EX. UNDERGROUND CABLE TELEVISION
- EX. UNDERGROUND FIBER OPTIC
- EX. OVERHEAD ELECTRIC
- EX. OVERHEAD TELEPHONE
- EX. FIRE HYDRANT
- EX. WATER VALVE
- EX. WATER METER
- EX. MONITORING WELL
- EX. POWER POLE
- EX. LIGHT POLE
- PR. RETAINING WALL
- PR. 18" SD — PR. STORM DRAIN (PRIVATE)
- 200 — PR. 1' CONTOUR
- 202 — PR. 2' CONTOUR
- 200 — PR. 10' CONTOUR
- LOD — PR. LIMIT OF DISTURBANCE
- SF — PR. SILT FENCE
- SSF — PR. SUPER SILT FENCE
- SCE — PR. STABILIZED CONSTRUCTION ENTRANCE (SCE)
- FL-18 — PR. FILTER LOG
- PR. TEMPORARY ACCESS CULVERT

LAYOUT PLAN

SCALE: 1"=20'

20 0 20 40 80

Scale 1" = 20

ENGINEER'S CERTIFICATE

"I HEREBY CERTIFY THAT THIS PLAN FOR SEDIMENT AND EROSION CONTROL REPRESENTS A PRACTICAL AND WORKABLE PLAN BASED ON MY PERSONAL KNOWLEDGE OF THE SITE CONDITIONS AND THAT IT WAS PREPARED IN ACCORDANCE WITH THE REQUIREMENTS OF THE HOWARD SOIL CONSERVATION DISTRICT."

THOMAS C. NEUGEBAUER, P.E. 29203 — 5-24-2022 DATE

DEVELOPER'S CERTIFICATE

"I/WE CERTIFY THAT ALL DEVELOPMENT AND CONSTRUCTION WILL BE DONE ACCORDING TO THIS PLAN OF DEVELOPMENT FOR SEDIMENT AND EROSION CONTROL, AND THAT ALL RESPONSIBLE PERSONNEL INVOLVED IN THE CONSTRUCTION PROJECT WILL HAVE A CERTIFICATE OF ATTENDANCE AT THE DEPARTMENT OF ENVIRONMENT APPROVED TRAINING PROGRAM FOR THE CONTROL OF SEDIMENT AND EROSION BEFORE BEGINNING THE PROJECT. I ALSO AUTHORIZE PERIODIC ON-SITE INSPECTIONS BY THE HOWARD SOIL CONSERVATION DISTRICT."

SIGNATURE OF DEVELOPER — 5-24-22 DATE

OWNER / APPLICANT / DEVELOPER:
LIBERTY PROPERTY, LLC.
ADDRESS: 1800 WAZEE ST, SUITE 500
DENVER, CO 80202
CONTACT: MS. ASHLEY WITKOWSKI
PHONE: 443-878-7693

STATE OF MARYLAND — THOMAS C. NEUGEBAUER — 29203 — PROFESSIONAL ENGINEER — 5-24-22

MD PROFESSIONAL CERTIFICATION:

I HEREBY CERTIFY THAT THESE DOCUMENTS WERE PREPARED OR APPROVED BY ME, AND THAT I AM A DULY LICENSED PROFESSIONAL ENGINEER UNDER THE LAWS OF THE STATE OF MARYLAND, LICENSE NO. 29203, EXPIRATION DATE: 06/16/2023.

MORRIS & RITCHIE ASSOCIATES, INC.
ENGINEERS, PLANNERS, SURVEYORS AND LANDSCAPE ARCHITECTS
14280 PARK CENTER DRIVE
LAUREL, MD 20707
(410) 792-9792 / (301) 776-1690
FAX: (410) 792-7395
MRAGTA.COM

PATAPSCO VALLEY BUSINESS CENTER
PARCEL E-1
7351 COCA COLA DRIVE, HANOVER MARYLAND
EROSION AND SEDIMENT CONTROL PLAN
FOREST CONSERVATION AND LANDSCAPE PLAN

TAX MAP 38 GRIDS 20 PARCEL 285 ZONED:M-2
1ST ELECTION DISTRICT
HOWARD COUNTY, MD 21076

DATE	REVISIONS
5-24-2022	ADDED NEW SHEETS 20 THROUGH 32 TO PLAN FOR RETAINING WALL REINFORCEMENT

JOB NO.:	31191319
SCALE:	1" = 20'
DATE:	5-24-2022
DRAWN BY:	MBF
DESIGN BY:	MM
REVIEW BY:	MM
SHEET:	20 OF 32

SDP-04-147

P:\PROJ\31191319-Prologis\Plans\LDE\Overall\Plot\Plan Sets\SDP\31191319-SDP-20.dwg, 5/24/2022 3:33:11 PM, MAMitchell, 1:1, Copyright 2022 Morris & Ritchie Associates, Inc.

B-4-5 STANDARDS AND SPECIFICATIONS

FOR

PERMANENT STABILIZATION

Definition

To stabilize disturbed soils with permanent vegetation.

Purpose

To use long-lived perennial grasses and legumes to establish permanent ground cover on disturbed soils.

Conditions Where Practice Applies

Exposed soils where ground cover is needed for 6 months or more.

Criteria

A. Seed Mixtures

1. General Use

   a. Select one or more of the species or mixtures listed in Table B.3 for the appropriate Plant Hardiness Zone (from Figure B.3) and based on the site condition or purpose found on Table B.2. Enter selected mixture(s), application rates, and seeding dates in the Permanent Seeding Summary. The Summary is to be placed on the plan.

   b. Additional planting specifications for exceptional sites such as shorelines, stream banks, or dunes or for special purposes such as wildlife or aesthetic treatment may be found in USDA-NRCS Technical Field Office Guide, Section 342 - Critical Area Planting.

   c. For sites having disturbed area over 5 acres, use and show the rates recommended by the soil testing agency.

   d. For areas receiving low maintenance, apply urea form fertilizer (46-0-0) at 3 ½ pounds per 1000 square feet (150 pounds per acre) at the time of seeding in addition to the soil amendments shown in the Permanent Seeding Summary.

2. Turfgrass Mixtures

   a. Areas where turfgrass may be desired include lawns, parks, playgrounds, and commercial sites which will receive a medium to high level of maintenance.

   b. Select one or more of the species or mixtures listed below based on the site conditions or purpose. Enter selected mixture(s), application rates, and seeding dates in the Permanent Seeding Summary. The summary is to be placed on the plan.

      i. Kentucky Bluegrass: Full Sun Mixture: For use in areas that receive intensive management. Irrigation required in the areas of central Maryland and Eastern Shore. Recommended Certified Kentucky Bluegrass Cultivars Seeding Rate: 1.5 to 2.0 pounds per 1000 square feet. Choose a minimum of three Kentucky bluegrass cultivars with each ranging from 10 to 35 percent of the total mixture by weight.

      ii. Kentucky Bluegrass/Perennial Rye: Full Sun Mixture: For use in full sun areas where

B.21

rapid establishment is necessary and when turf will receive medium to intensive management. Certified Perennial Ryegrass Cultivars/Certified Kentucky Bluegrass Seeding Rate: 2 pounds mixture per 1000 square feet. Choose a minimum of three Kentucky bluegrass cultivars with each ranging from 10 to 35 percent of the total mixture by weight.

      iii. Tall Fescue/Kentucky Bluegrass: Full Sun Mixture: For use in drought prone areas and/or for areas receiving low to medium management in full sun to medium shade. Recommended mixture includes; Certified Tall Fescue Cultivars 95 to 100 percent, Certified Kentucky Bluegrass Cultivars 0 to 5 percent. Seeding Rate: 5 to 8 pounds per 1000 square feet. One or more cultivars may be blended.

      iv. Kentucky Bluegrass/Fine Fescue: Shade Mixture: For use in areas with shade in Bluegrass lawns. For establishment in high quality, intensively managed turf area. Mixture includes; Certified Kentucky Bluegrass Cultivars 30 to 40 percent and Certified Fine Fescue and 60 to 70 percent. Seeding Rate: 1½ to 3 pounds per 1000 square feet.

      Notes:
      Select turfgrass varieties from those listed in the most current University of Maryland Publication, Agronomy Memo #77, "Turfgrass Cultivar Recommendations for Maryland"

      Choose certified material. Certified material is the best guarantee of cultivar purity. The certification program of the Maryland Department of Agriculture, Turf and Seed Section, provides a reliable means of consumer protection and assures a pure genetic line

   c. Ideal Times of Seeding for Turf Grass Mixtures

      Western MD: March 15 to June 1, August 1 to October 1 (Hardiness Zones: 5b, 6a)

      Central MD: March 1 to May 15, August 15 to October 15 (Hardiness Zone: 6b)

      Southern MD, Eastern Shore: March 1 to May 15, August 15 to October 15 (Hardiness Zones: 7a, 7b)

   d. Till areas to receive seed by disking or other approved methods to a depth of 2 to 4 inches, level and rake the areas to prepare a proper seedbed. Remove stones and debris over 1½ inches in diameter. The resulting seedbed must be in such condition that future mowing of grasses will pose no difficulty.

   e. If soil moisture is deficient, supply new seedings with adequate water for plant growth (½ to 1 inch every 3 to 4 days depending on soil texture) until they are firmly established. This is especially true when seedings are made late in the planting season, in abnormally dry or hot seasons, or on adverse sites.

Permanent Seeding Summary

Hardiness Zone (from Figure B.3): 6B Seed Mixture (from Table B.3): 9					Fertilizer Rate (10-20-20)			Lime Rate
No.	Species	Application Rate (lb/ac)	Seeding Dates	Seeding Depths	N	P_2O_5	K_20	
1	T. FESC.	60	3/1-5/15	¼- ½ in	45 pounds per acre (1.0 lb/ 1000 sf)	90 lb/ac (2 lb/ 1000 sf)	90 lb/ac (2 lb/ 1000 sf)	2 tons/ac (90 lb/ 1000 sf)
2	K. BLUE.	40	3/1-5/15	¼- ½ in				
				¼- ½ in				

B.22

B. Sod: To provide quick cover on disturbed areas (2:1 grade or flatter).

1. General Specifications

   a. Class of turfgrass sod must be Maryland State Certified. Sod labels must be made available to the job foreman and inspector.

   b. Sod must be machine cut at a uniform soil thickness of ¾ inch, plus or minus ¼ inch, at the time of cutting. Measurement for thickness must exclude top growth and thatch. Broken pads and torn or uneven ends will not be acceptable.

   c. Standard size sections of sod must be strong enough to support their own weight and retain their size and shape when suspended vertically with a firm grasp on the upper 10 percent of the section.

   d. Sod must not be harvested or transplanted when moisture content (excessively dry or wet) may adversely affect its survival.

   e. Sod must be harvested, delivered, and installed within a period of 36 hours. Sod not transplanted within this period must be approved by an agronomist or soil scientist prior to its installation.

2. Sod Installation

   a. During periods of excessively high temperature or in areas having dry subsoil, lightly irrigate the subsoil immediately prior to laying the sod.

   b. Lay the first row of sod in a straight line with subsequent rows placed parallel to it and tightly wedged against each other. Stagger lateral joints to promote more uniform growth and strength. Ensure that sod is not stretched or overlapped and that all joints are butted tight in order to prevent voids which would cause air drying of the roots.

   c. Wherever possible, lay sod with the long edges parallel to the contour and with staggering joints. Roll and tamp, peg or otherwise secure the sod to prevent slippage on slopes. Ensure solid contact exists between sod roots and the underlying soil surface.

   d. Water the sod immediately following rolling and tamping until the underside of the new sod pad and soil surface below the sod are thoroughly wet. Complete the operations of laying, tamping and irrigating for any piece of sod within eight hours.

3. Sod Maintenance

   a. In the absence of adequate rainfall, water daily during the first week or as often and sufficiently as necessary to maintain moist soil to a depth of 4 inches. Water sod during the heat of the day to prevent wilting.

   b. After the first week, sod watering is required as necessary to maintain adequate moisture content.

   c. Do not mow until the sod is firmly rooted. No more than ⅓ of the grass leaf must be removed by the initial cutting or subsequent cuttings. Maintain a grass height of at least 3 inches unless otherwise specified.

B-4-4 STANDARDS AND SPECIFICATIONS

FOR

TEMPORARY STABILIZATION

Definition

To stabilize disturbed soils with vegetation for up to 6 months.

Purpose

To use fast growing vegetation that provides cover on disturbed soils.

Conditions Where Practice Applies

Exposed soils where ground cover is needed for a period of 6 months or less. For longer duration of time, permanent stabilization practices are required.

Criteria

1. Select one or more of the species or seed mixtures listed in Table B.1 for the appropriate Plant Hardiness Zone (from Figure B.3), and enter them in the Temporary Seeding Summary below along with application rates, seeding dates and seeding depths. If this Summary is not put on the plan and completed, then Table B.1 plus fertilizer and lime rates must be put on the plan.
2. For sites having soil tests performed, use and show the recommended rates by the testing agency. Soil tests are not required for Temporary Seeding.
3. When stabilization is required outside of a seeding season, apply seed and mulch or straw mulch alone as prescribed in Section B-4-3.A.1.b and maintain until the next seeding season.

Temporary Seeding Summary

Hardiness Zone (from Figure B.3): 6B Seed Mixture (from Table B.1): 6					Fertilizer Rate (10-20-20)	Lime Rate
No.	Species	Application Rate (lb/ac)	Seeding Dates	Seeding Depths		
1	FOX. MILL.	30	5/16-7/31	0.5"	436 lb/ac (10 lb/1000 sf)	2 tons/ac (90 lb/1000 sf)

B-4-2 STANDARDS AND SPECIFICATIONS

FOR

SOIL PREPARATION, TOPSOILING, AND SOIL AMENDMENTS

Definition

The process of preparing the soils to sustain adequate vegetative stabilization.

Purpose

To provide a suitable soil medium for vegetative growth.

Conditions Where Practice Applies

Where vegetative stabilization is to be established.

Criteria

A. Soil Preparation

1. Temporary Stabilization

   a. Seedbed preparation consists of loosening soil to a depth of 3 to 5 inches by means of suitable agricultural or construction equipment, such as disc harrows or chisel plows or rippers mounted on construction equipment. After the soil is loosened, it must not be rolled or dragged smooth but left in the roughened condition. Slopes 3:1 or flatter are to be tracked with ridges running parallel to the contour of the slope.

   b. Apply fertilizer and lime as prescribed on the plans.

   c. Incorporate lime and fertilizer into the top 3 to 5 inches of soil by disking or other suitable means.

2. Permanent Stabilization

   a. A soil test is required for any earth disturbance of 5 acres or more. The minimum soil conditions required for permanent vegetative establishment are:

      i. Soil pH between 6.0 and 7.0.

      ii. Soluble salts less than 500 parts per million (ppm).

      iii. Soil contains less than 40 percent clay but enough fine grained material (greater than 30 percent silt plus clay) to provide the capacity to hold a moderate amount of moisture. An exception: if lovegrass will be planted, then a sandy soil (less than 30 percent silt plus clay) would be acceptable.

      iv. Soil contains 1.5 percent minimum organic matter by weight.

      v. Soil contains sufficient pore space to permit adequate root penetration.

   b. Application of amendments or topsoil is required if on-site soils do not meet the above conditions.

   c. Graded areas must be maintained in a true and even grade as specified on the approved plan, then scarified or otherwise loosened to a depth of 3 to 5 inches.

   d. Apply soil amendments as specified on the approved plan or as indicated by the results of a soil test.

   e. Mix soil amendments into the top 3 to 5 inches of soil by disking or other suitable means. Rake lawn areas to smooth the surface, remove large objects like stones and branches, and ready the area for seed application. Loosen surface soil by dragging with a heavy chain or other equipment to roughen the surface where site conditions will not permit normal seedbed preparation. Track slopes 3:1 or flatter with tracked equipment leaving the soil in an irregular condition with ridges running parallel to the contour of the slope. Leave the top 1 to 3 inches of soil loose and friable. Seedbed loosening may be unnecessary on newly disturbed areas.

B. Topsoiling

1. Topsoil is placed over prepared subsoil prior to establishment of permanent vegetation. The purpose is to provide a suitable soil medium for vegetative growth. Soils of concern have low moisture content, low nutrient levels, low pH, materials toxic to plants, and/or unacceptable soil gradation.

2. Topsoil salvaged from an existing site may be used provided it meets the standards as set forth in these specifications. Typically, the depth of topsoil to be salvaged for a given soil type can be found in the representative soil profile section in the Soil Survey published by USDA-NRCS.

3. Topsoiling is limited to areas having 2:1 or flatter slopes where:

   a. The texture of the exposed subsoil/parent material is not adequate to produce vegetative growth.

   b. The soil material is so shallow that the rooting zone is not deep enough to support plants or furnish continuing supplies of moisture and plant nutrients.

   c. The original soil to be vegetated contains material toxic to plant growth.

   d. The soil is so acidic that treatment with limestone is not feasible.

4. Areas having slopes steeper than 2:1 require special consideration and design.

5. Topsoil Specifications: Soil to be used as topsoil must meet the following criteria:

   a. Topsoil must be a loam, sandy loam, clay loam, silt loam, sandy clay loam, or loamy sand. Other soils may be used if recommended by an agronomist or soil scientist and approved by the appropriate approval authority. Topsoil must not be a mixture of contrasting textured subsoils and must contain less than 5 percent by volume of cinders, stones, slag, coarse fragments, gravel, sticks, roots, trash, or other materials larger than 1½ inches in diameter.

   b. Topsoil must be free of noxious plants or plant parts such as Bermuda grass, quack grass, Johnson grass, nut sedge, poison ivy, thistle, or others as specified.

   c. Topsoil substitutes or amendments, as recommended by a qualified agronomist or soil scientist and approved by the appropriate approval authority, may be used in lieu of natural topsoil.

6. Topsoil Application

   a. Erosion and sediment control practices must be maintained when applying topsoil.

   b. Uniformly distribute topsoil in a 5 to 8 inch layer and lightly compact to a minimum thickness of 4 inches. Spreading is to be performed in such a manner that sodding or seeding can proceed with a minimum of additional soil preparation and tillage. Any irregularities in the surface resulting from topsoiling or other operations must be corrected in order to prevent the formation of depressions or water pockets.

   c. Topsoil must not be placed if the topsoil or subsoil is in a frozen or muddy condition, when the subsoil is excessively wet or in a condition that may otherwise be detrimental to proper grading and seedbed preparation.

C. Soil Amendments (Fertilizer and Lime Specifications)

1. Soil tests must be performed to determine the exact ratios and application rates for both lime and fertilizer on sites having disturbed areas of 5 acres or more. Soil analysis may be performed by a recognized private or commercial laboratory. Soil samples taken for engineering purposes may also be used for chemical analyses.

2. Fertilizers must be uniform in composition, free flowing and suitable for accurate application by appropriate equipment. Manure may be substituted for fertilizer with prior approval from the appropriate approval authority. Fertilizers must all be delivered to the site fully labeled according to the applicable laws and must bear the name, trade name or trademark and warranty of the producer.

3. Lime materials must be ground limestone (hydrated or burnt lime may be substituted except when hydroseeding) which contains at least 50 percent total oxides (calcium oxide plus magnesium oxide). Limestone must be ground to such fineness that at least 50 percent will pass through a #100 mesh sieve and 98 to 100 percent will pass through a #20 mesh sieve.

4. Lime and fertilizer are to be evenly distributed and incorporated into the top 3 to 5 inches of soil by disking or other suitable means.

5. Where the subsoil is either highly acidic or composed of heavy clays, spread ground limestone at the rate of 4 to 8 tons/acre (200-400 pounds per 1,000 square feet) prior to the placement of topsoil.

B-4-3 STANDARDS AND SPECIFICATIONS

FOR

SEEDING AND MULCHING

Definition

The application of seed and mulch to establish vegetative cover.

Purpose

To protect disturbed soils from erosion during and at the end of construction.

Conditions Where Practice Applies

To the surface of all perimeter controls, slopes, and any disturbed area not under active grading.

Criteria

A. Seeding

1. Specifications

   a. All seed must meet the requirements of the Maryland State Seed Law. All seed must be subject to re-testing by a recognized seed laboratory. All seed used must have been tested within the 6 months immediately preceding the date of sowing such material on any project. Refer to Table B.4 regarding the quality of seed. Seed tags must be available upon request to the inspector to verify type of seed and seeding rate.

   b. Mulch alone may be applied between the fall and spring seeding dates only if the ground is frozen. The appropriate seeding mixture must be applied when the ground thaws.

   c. Inoculants: The inoculant for treating legume seed in the seed mixtures must be a pure culture of nitrogen fixing bacteria prepared specifically for the species. Inoculants must not be used later than the date indicated on the container. Add fresh inoculants as directed on the package. Use four times the recommended rate when hydroseeding. Note: It is very important to keep inoculant as cool as possible until used. Temperatures above 75 to 80 degrees Fahrenheit can weaken bacteria and make the inoculant less effective.

   d. Sod or seed must not be placed on soil which has been treated with soil sterilants or chemicals used for weed control until sufficient time has elapsed (14 days min.) to permit dissipation of phyto-toxic materials.

2. Application

   a. Dry Seeding: This includes use of conventional drop or broadcast spreaders.

      i. Incorporate seed into the subsoil at the rates prescribed on Temporary Seeding Table B.1, Permanent Seeding Table B.3, or site-specific seeding summaries.

      ii. Apply seed in two directions, perpendicular to each other. Apply half the seeding rate in each direction. Roll the seeded area with a weighted roller to provide good seed to soil contact.

   b. Drill or Cultipacker Seeding: Mechanized seeders that apply and cover seed with soil.

      i. Cultipacking seeders are required to bury the seed in such a fashion as to provide at least 1/4 inch of soil covering. Seedbed must be firm after planting.

      ii. Apply seed in two directions, perpendicular to each other. Apply half the seeding rate in each direction.

   c. Hydroseeding: Apply seed uniformly with hydroseeder (slurry includes seed and fertilizer).

      i. If fertilizer is being applied at the time of seeding, the application rates should not exceed the following: nitrogen, 100 pounds per acre total of soluble nitrogen; P_2O_5 (phosphorous), 200 pounds per acre; K_2O (potassium), 200 pounds per acre.

      ii. Lime: Use only ground agricultural limestone (up to 3 tons per acre may be applied by hydroseeding). Normally, not more than 2 tons are applied by hydroseeding at any one time. Do not use burnt or hydrated lime when hydroseeding.

      iii. Mix seed and fertilizer on site and seed immediately and without interruption.

      iv. When hydroseeding do not incorporate seed into the soil.

B. Mulching

1. Mulch Materials (in order of preference)

   a. Straw consisting of thoroughly threshed wheat, rye, oat, or barley and reasonably bright in color. Straw is to be free of noxious weed seeds as specified in the Maryland Seed Law and not musty, moldy, caked, decayed, or excessively dusty. **Note: Use only sterile straw mulch in areas where one species of grass is desired.**

   b. Wood Cellulose Fiber Mulch (WCFM) consisting of specially prepared wood cellulose processed into a uniform fibrous physical state.

      i. WCFM is to be dyed green or contain a green dye in the package that will provide an appropriate color to facilitate visual inspection of the uniformly spread slurry.

      ii. WCFM, including dye, must contain no germination or growth inhibiting factors.

      iii. WCFM materials are to be manufactured and processed in such a manner that the wood cellulose fiber mulch will remain in uniform suspension in water under agitation and will blend with seed, fertilizer and other additives to form a homogeneous slurry. The mulch material must form a blotter-like ground cover, on application, having moisture absorption and percolation properties and must cover and hold grass seed in contact with the soil without inhibiting the growth of the grass seedlings.

      iv. WCFM material must not contain elements or compounds at concentration levels that will be phyto-toxic.

      v. WCFM must conform to the following physical requirements: fiber length of approximately 10 millimeters, diameter approximately 1 millimeter, pH range of 4.0 to 8.5, ash content of 1.6 percent maximum and water holding capacity of 90 percent minimum.

2. Application

   a. Apply mulch to all seeded areas immediately after seeding.

   b. When straw mulch is used, spread it over all seeded areas at the rate of 2 tons per acre to a uniform loose depth of 1 to 2 inches. Apply mulch to achieve a uniform distribution and depth so that the soil surface is not exposed. When using a mulch anchoring tool, increase the application rate to 2.5 tons per acre.

   c. Wood cellulose fiber used as mulch must be applied at a net dry weight of 1500 pounds per acre. Mix the wood cellulose fiber with water to attain a mixture with a maximum of 50 pounds of wood cellulose fiber per 100 gallons of water.

3. Anchoring

   a. Perform mulch anchoring immediately following application of mulch to minimize loss by wind or water. This may be done by one of the following methods (listed by preference), depending upon the size of the area and erosion hazard:

      i. A mulch anchoring tool is a tractor drawn implement designed to punch and anchor mulch into the soil surface a minimum of 2 inches. This practice is most effective on large areas, but is limited to flatter slopes where equipment can operate safely. If used on sloping land, this practice should follow the contour.

      ii. Wood cellulose fiber may be used for anchoring straw. Apply the fiber binder at a net dry weight of 750 pounds per acre. Mix the wood cellulose fiber with water at a maximum of 50 pounds of wood cellulose fiber per 100 gallons of water.

      iii. Synthetic binders such as Acrylic DLR (Agro-Tack), DCA-70, Petroset, Terra Tax II, Terra Tack AR or other approved equal may be used. Follow application rates as specified by the manufacturer. Application of liquid binders needs to be heavier at the edges where wind catches mulch, such as in valleys and on crests of banks. **Use of asphalt binders is strictly prohibited.**

      iv. Lightweight plastic netting may be stapled over the mulch according to manufacturer recommendations. Netting is usually available in rolls 4 to 15 feet wide and 300 to 3,000 feet long.

B-4-8 STANDARDS AND SPECIFICATIONS

FOR

STOCKPILE AREA

Definition

A mound or pile of soil protected by appropriately designed erosion and sediment control measures.

Purpose

To provide a designated location for the temporary storage of soil that controls the potential for erosion, sedimentation, and changes to drainage patterns.

Conditions Where Practice Applies

Stockpile areas are utilized when it is necessary to salvage and store soil for later use.

Criteria

1. The stockpile location and all related sediment control practices must be clearly indicated on the erosion and sediment control plan.
2. The footprint of the stockpile must be sized to accommodate the anticipated volume of material and based on a side slope ratio no steeper than 2:1. Benching must be provided in accordance with Section B-3 Land Grading.
3. Runoff from the stockpile area must drain to a suitable sediment control practice.
4. Access the stockpile area from the upgrade side.
5. Clear water runoff into the stockpile area must be minimized by use of a diversion device such as an earth dike, temporary swale or diversion fence. Provisions must be made for discharging concentrated flow in a non-erosive manner.
6. Where runoff concentrates along the toe of the stockpile fill, an appropriate erosion/sediment control practice must be used to intercept the discharge.
7. Stockpiles must be stabilized in accordance with the 3/7 day stabilization requirement as well as Standard B-4-1 Incremental Stabilization and Standard B-4-4 Temporary Stabilization.
8. If the stockpile is located on an impervious surface, a liner should be provided below the stockpile to facilitate cleanup. Stockpiles containing contaminated material must be covered with impermeable sheeting.

Maintenance

The stockpile area must continuously meet the requirements for Adequate Vegetative Establishment in accordance with Section B-4 Vegetative Stabilization. Side slopes must be maintained at no steeper than a 2:1 ratio. The stockpile area must be kept free of erosion. If the vertical height of a stockpile exceeds 20 feet for 2:1 slopes, 30 feet for 3:1 slopes, or 40 feet for 4:1 slopes, benching must be provided in accordance with Section B-3 Land Grading.

HOWARD SOIL CONSERVATION DISTRICT (HSCD) STANDARD SEDIMENT CONTROL NOTES

A pre-construction meeting must occur with the Howard County Department of Public Works, Construction Inspection Division (CID), 410-313-1855 after the future LOD and protected areas are marked clearly in the field. A minimum of 48 hour notice to CID must be given at the following stages:

a. Prior to the start of earth disturbance,
b. Upon completion of the installation of perimeter erosion and sediment controls, but before proceeding with any other earth disturbance or grading,
c. Prior to the start of another phase of construction or opening of another grading unit,
d. Prior to the removal or modification of sediment control practices.

Other building or grading inspection approvals may not be authorized until this initial approval by the inspection agency is made. Other related state and federal permits shall be referenced, to ensure coordination and to avoid conflicts with this plan.

All vegetative and structural practices are to be installed according to the provisions of this plan and are to be in conformance with the 2011 MARYLAND STANDARDS AND SPECIFICATIONS FOR SOIL EROSION AND SEDIMENT CONTROL, and revisions thereto.

Following initial soil disturbance or re-disturbance, permanent or temporary stabilization is required within three (3) calendar days as to the surface of all perimeter controls, dikes, swales, ditches, perimeter slopes, and all slopes steeper than 3 horizontal to 1 vertical (3:1); and seven (7) calendar days as to all other disturbed areas on the project site except for those areas under active grading.

All disturbed areas must be stabilized within the time period specified above in accordance with the 2011 MARYLAND STANDARDS AND SPECIFICATIONS FOR SOIL EROSION AND SEDIMENT CONTROL for topsoil (Sec. B-4-2), permanent seeding (Sec. B-4-5), temporary seeding (Sec. B-4-4) and mulching (Sec. B-4-3). Temporary stabilization with mulch alone can only be applied between the fall and spring seeding dates if the ground is frozen. Incremental stabilization (Sec. B-4-1) specifications shall be enforced in areas with >15' of cut and/or fill. Stockpiles (Sec. B-4-8) in excess of 20 ft. must be benched with stable outlet. All concentrated flow, steep slope, and highly erodible areas shall receive soil stabilization matting (Sec. B-4-6).

All sediment control structures are to remain in place, and are to be maintained in operative condition until permission for their removal has been obtained from the CID.

Site Analysis:

Total Area of Site:	19.05	Acres
Area Disturbed:	0.87	Acres
Area to be roofed or paved:	0	Acres
Area to be vegetatively stabilized:	0.87	Acres
Total Cut:	0	Cu. Yds.
Total Fill:	0	Cu. Yds.
Offsite waste/borrow area location:	TO BE DETERMINED	

Any sediment control practice which is disturbed by grading activity for placement of utilities must be repaired on the same day of disturbance.

Additional sediment control must be provided, if deemed necessary by the CID. The site and all controls shall be inspected by the contractor weekly; and the next day after each rain event. A written report by the contractor, made available upon request, is part of every inspection and should include:

- Inspection date
- Inspection type (routine, pre-storm event, during rain event)
- Name and title of inspector
- Weather information (current conditions as well as time and amount of last recorded precipitation)
- Brief description of project's status (e.g., percent complete) and/or current activities
- Evidence of sediment discharges
- Identification of plan deficiencies
- Identification of sediment controls that require maintenance
- Identification of missing or improperly installed sediment controls
- Compliance status regarding the sequence of construction and stabilization requirements
- Photographs
- Monitoring/sampling
- Maintenance and/or corrective action performed
- Other inspection items as required by the General Permit for Stormwater Associated with Construction Activities (NPDES, MDE).

Trenches for the construction of utilities is limited to three pipe lengths or that which can and shall be back-filled and stabilized by the end of each workday, whichever is shorter.

Any major changes or revisions to the plan or sequence of construction must be reviewed and approved by the HSCD prior to proceeding with construction. Minor revisions may allowed by the CID per the list of HSCD-approved field changes.

Disturbance shall not occur outside the L.O.D. A project is to be sequenced so that grading activities begin on one grading unit (maximum acreage of 20 ac. per grading unit) at a time. Work may proceed to a subsequent grading unit when at least 50 percent of the disturbed area in the preceding grading unit has been stabilized and approved by the CID. Unless otherwise specified and approved by the HSCD, no more than 30 acres cumulatively may be disturbed at a given time.

Wash water from any equipment, vehicles, wheels, pavement, and other sources must be treated in a sediment basin or other approved washout structure.

Topsoil shall be stockpiled and preserved on-site for redistribution onto final grade.

All Silt Fence and Super Silt Fence shall be placed on-the-contour, and be imbricated at 25' minimum intervals, with lower ends curled uphill by 2' in elevation.

Stream channels must not be disturbed during the following restricted time periods (inclusive):

- Use I and IP March 1 - June 15
- Use III and IIIP October 1 - April 30
- Use IV March 1 - May 31

A copy of this plan, the 2011 MARYLAND STANDARDS AND SPECIFICATIONS FOR SOIL EROSION AND SEDIMENT CONTROL, and associated permits shall be on-site and available when the site is active.

Rev. 8.2016

DETAIL E-3 SUPER SILT FENCE

STANDARD SYMBOL: SSF

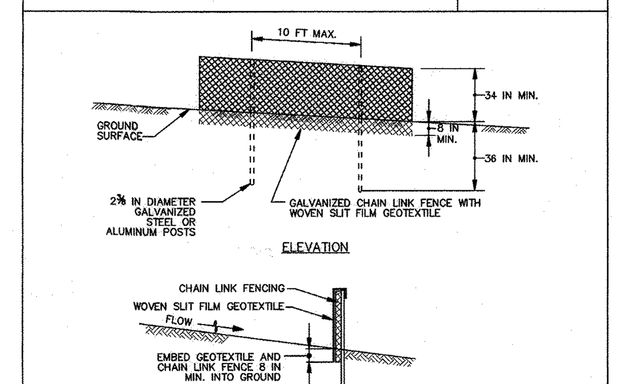

CONSTRUCTION SPECIFICATIONS

1. INSTALL 2⅜ INCH DIAMETER GALVANIZED STEEL POSTS OF 0.095 INCH WALL THICKNESS AND SIX FOOT LENGTH SPACED NO FURTHER THAN 10 FEET APART. DRIVE THE POSTS A MINIMUM OF 36 INCHES INTO THE GROUND.
2. FASTEN 9 GAUGE OR HEAVIER GALVANIZED CHAIN LINK FENCE (2⅜ INCH MAXIMUM OPENING) 42 INCHES IN HEIGHT SECURELY TO THE FENCE POSTS WITH WIRE TIES OR HUG RINGS.
3. FASTEN WOVEN SLIT FILM GEOTEXTILE AS SPECIFIED IN SECTION H-1 MATERIALS, SECURELY TO THE UPSLOPE SIDE OF CHAIN LINK FENCE WITH TIES SPACED EVERY 24 INCHES AT THE TOP AND MID SECTION. EMBED GEOTEXTILE AND CHAIN LINK FENCE A MINIMUM OF 8 INCHES INTO THE GROUND.
4. WHERE ENDS OF THE GEOTEXTILE COME TOGETHER, THE ENDS SHALL BE OVERLAPPED BY 6 INCHES, FOLDED, AND STAPLED TO PREVENT SEDIMENT BY PASS.
5. EXTEND BOTH ENDS OF THE SUPER SILT FENCE A MINIMUM OF FIVE HORIZONTAL FEET UPSLOPE AT 45 DEGREES TO THE MAIN FENCE ALIGNMENT TO PREVENT RUNOFF FROM GOING AROUND THE ENDS OF THE SUPER SILT FENCE.
6. PROVIDE MANUFACTURER CERTIFICATION TO THE INSPECTION/ENFORCEMENT AUTHORITY SHOWING THAT GEOTEXTILE USED MEETS THE REQUIREMENTS IN SECTION H-1 MATERIALS.
7. REMOVE ACCUMULATED SEDIMENT AND DEBRIS WHEN BULGES DEVELOP IN FENCE OR WHEN SEDIMENT REACHES 25% OF FENCE HEIGHT. REPLACE GEOTEXTILE IF TORN. IF UNDERMINING OCCURS, REINSTALL CHAIN LINK FENCING AND GEOTEXTILE.

MARYLAND STANDARDS AND SPECIFICATIONS FOR SOIL EROSION AND SEDIMENT CONTROL
U.S. DEPARTMENT OF AGRICULTURE NATURAL RESOURCES CONSERVATION SERVICE | 2011 | MARYLAND DEPARTMENT OF ENVIRONMENT WATER MANAGEMENT ADMINISTRATION

DETAIL E-6 FILTER LOG

STANDARD SYMBOL: FL-18 — DESIGNATION FL-18 REFERS TO 18 INCH DIAMETER FILTER LOG.

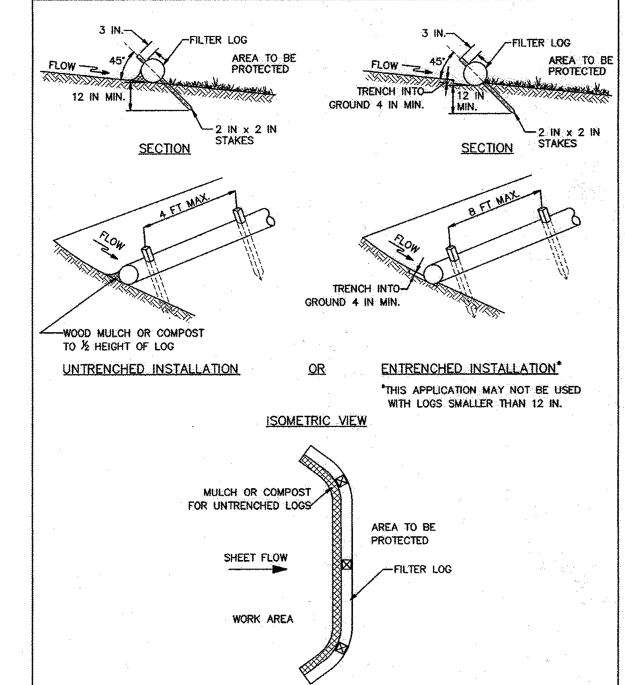

1 OF 2

MARYLAND STANDARDS AND SPECIFICATIONS FOR SOIL EROSION AND SEDIMENT CONTROL
U.S. DEPARTMENT OF AGRICULTURE NATURAL RESOURCES CONSERVATION SERVICE | 2011 | MARYLAND DEPARTMENT OF ENVIRONMENT WATER MANAGEMENT ADMINISTRATION

DETAIL E-6 FILTER LOG

STANDARD SYMBOL: FL-18 — DESIGNATION FL-18 REFERS TO 18 INCH DIAMETER FILTER LOG.

CONSTRUCTION SPECIFICATIONS

1. PRIOR TO INSTALLATION, CLEAR ALL OBSTRUCTIONS INCLUDING ROCKS, CLODS, AND DEBRIS GREATER THAN ONE INCH THAT MAY INTERFERE WITH PROPER FUNCTION OF FILTER LOG.
2. FILL LOG NETTING UNIFORMLY WITH COMPOST (IN ACCORDANCE WITH SECTION H-1 MATERIALS), OR OTHER APPROVED BIODEGRADABLE MATERIAL TO DESIRED LENGTH SUCH THAT LOGS DO NOT DEFORM.
3. INSTALL FILTER LOGS PERPENDICULAR TO THE FLOW DIRECTION AND PARALLEL TO THE SLOPE WITH THE BEGINNING AND END OF THE INSTALLATION POINTING SLIGHTLY UP THE SLOPE CREATING A "J" SHAPE AT EACH END TO PREVENT BYPASS.
4. FOR UNTRENCHED INSTALLATION BLOW OR HAND PLACE MULCH OR COMPOST ON UPHILL SIDE OF THE SLOPE ALONG LOG.
5. STAKE FILTER LOG EVERY 4 FEET OR CLOSER ALONG ENTIRE LENGTH OF LOG OR TRENCH LOG INTO GROUND A MINIMUM OF 4 INCHES AND STAKE LOG EVERY 8 FEET OR CLOSER.
6. USE STAKES WITH A MINIMUM NOMINAL CROSS SECTION OF 2X2 INCH AND OF SUFFICIENT LENGTH TO ATTAIN A MINIMUM OF 12 INCHES INTO THE GROUND AND 3 INCHES PROTRUDING ABOVE LOG.
7. WHEN MORE THAN ONE LOG IS NEEDED, OVERLAP ENDS 12 INCHES MINIMUM AND STAKE.
8. REMOVE SEDIMENT WHEN IT HAS ACCUMULATED TO A DEPTH OF ½ THE EXPOSED HEIGHT OF LOG AND REPLACE MULCH. REPLACE FILTER LOG IF TORN. REINSTALL FILTER LOG IF UNDERMINING OR DISLODGING OCCURS. REPLACE CLOGGED FILTER LOGS. FOR PERMANENT APPLICATIONS, ESTABLISH AND CONTINUOUSLY MEET REQUIREMENTS FOR ADEQUATE VEGETATIVE ESTABLISHMENT IN ACCORDANCE WITH SECTION B-4 VEGETATIVE STABILIZATION.

2 OF 2

MARYLAND STANDARDS AND SPECIFICATIONS FOR SOIL EROSION AND SEDIMENT CONTROL
U.S. DEPARTMENT OF AGRICULTURE NATURAL RESOURCES CONSERVATION SERVICE | 2011 | MARYLAND DEPARTMENT OF ENVIRONMENT WATER MANAGEMENT ADMINISTRATION

DETAIL B-1 STABILIZED CONSTRUCTION ENTRANCE

STANDARD SYMBOL: SCE

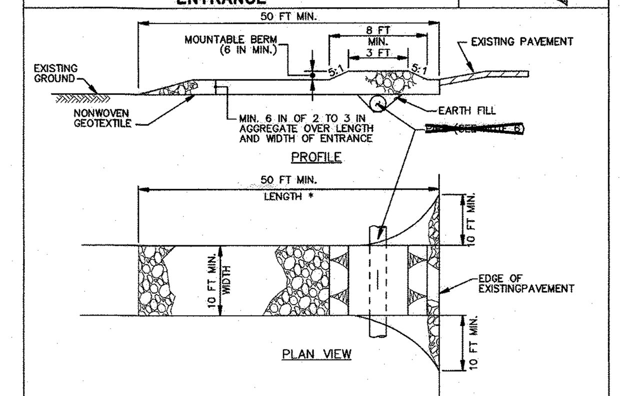

CONSTRUCTION SPECIFICATIONS

1. PLACE STABILIZED CONSTRUCTION ENTRANCE IN ACCORDANCE WITH THE APPROVED PLAN. VEHICLES MUST TRAVEL OVER THE ENTIRE LENGTH OF THE SCE. USE MINIMUM LENGTH OF 50 FEET (*30 FEET FOR SINGLE RESIDENCE LOT). USE MINIMUM WIDTH OF 10 FEET. FLARE SCE 10 FEET MINIMUM AT THE EXISTING ROAD TO PROVIDE A TURNING RADIUS.
2. PIPE ALL SURFACE WATER FLOWING TO OR DIVERTED TOWARD THE SCE UNDER THE ENTRANCE, MAINTAINING POSITIVE DRAINAGE. PROTECT PIPE INSTALLED THROUGH THE SCE WITH A MOUNTABLE BERM WITH 5:1 SLOPES AND A MINIMUM OF 12 INCHES OF STONE OVER THE PIPE. PROVIDE PIPE AS SPECIFIED ON APPROVED PLAN. WHEN THE SCE IS LOCATED AT A HIGH SPOT AND HAS NO DRAINAGE TO CONVEY, A PIPE IS NOT NECESSARY. A MOUNTABLE BERM IS REQUIRED WHEN SCE IS NOT LOCATED AT A HIGH SPOT.
3. PREPARE SUBGRADE AND PLACE NONWOVEN GEOTEXTILE, AS SPECIFIED IN SECTION H-1 MATERIALS.
4. PLACE CRUSHED AGGREGATE (2 TO 3 INCHES IN SIZE) OR EQUIVALENT RECYCLED CONCRETE (WITHOUT REBAR) AT LEAST 6 INCHES DEEP OVER THE LENGTH AND WIDTH OF THE SCE.
5. MAINTAIN ENTRANCE IN A CONDITION THAT MINIMIZES TRACKING OF SEDIMENT. ADD STONE OR MAKE OTHER REPAIRS AS CONDITIONS DEMAND TO MAINTAIN CLEAN SURFACE, MOUNTABLE BERM, AND SPECIFIED DIMENSIONS. IMMEDIATELY REMOVE STONE AND/OR SEDIMENT SPILLED, DROPPED, OR TRACKED ONTO ADJACENT ROADWAY BY VACUUMING, SCRAPING, AND/OR SWEEPING. WASHING ROADWAY TO REMOVE MUD TRACKED ONTO PAVEMENT IS NOT ACCEPTABLE UNLESS WASH WATER IS DIRECTED TO AN APPROVED SEDIMENT CONTROL PRACTICE.

MARYLAND STANDARDS AND SPECIFICATIONS FOR SOIL EROSION AND SEDIMENT CONTROL
U.S. DEPARTMENT OF AGRICULTURE NATURAL RESOURCES CONSERVATION SERVICE | 2011 | MARYLAND DEPARTMENT OF ENVIRONMENT WATER MANAGEMENT ADMINISTRATION

DETAIL H-4-2 TEMPORARY ACCESS CULVERT

STANDARD SYMBOL: TAC

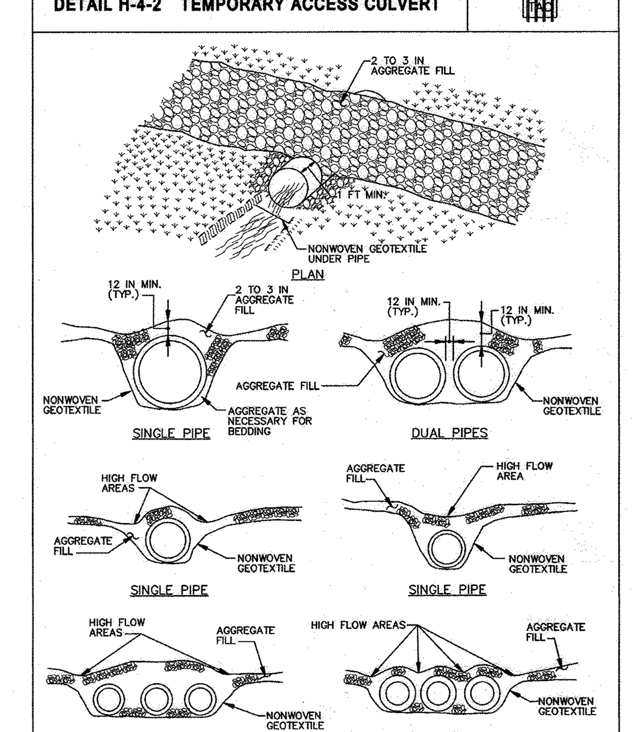

1 OF 2

MARYLAND STANDARDS AND SPECIFICATIONS FOR SOIL EROSION AND SEDIMENT CONTROL
U.S. DEPARTMENT OF AGRICULTURE NATURAL RESOURCES CONSERVATION SERVICE | 2011 | MARYLAND DEPARTMENT OF ENVIRONMENT WATER MANAGEMENT ADMINISTRATION

H.20

DETAIL H-4-2 TEMPORARY ACCESS CULVERT

STANDARD SYMBOL: TAC

CONSTRUCTION SPECIFICATIONS

1. CONSTRUCTION OR REMOVAL OF A TEMPORARY ACCESS CULVERT WILL NOT BE PERMITTED DURING THE FOLLOWING PERIODS:

USE I AND IP	MARCH 1 – JUNE 15
USE II	JUNE 1 – SEPTEMBER 30 AND DECEMBER 16 – MARCH 14
USE III AND IIIP	OCTOBER 1 – APRIL 30
USE IV	MARCH 1 – MAY 31
SAV* (ALL FLOWING STREAMS)	APRIL 15 – OCTOBER 15

*SUBMERGED AQUATIC VEGETATION

2. EXTEND THE CULVERT(S) A MINIMUM OF ONE FOOT BEYOND THE UPSTREAM AND DOWNSTREAM TOE OF THE AGGREGATE PLACED AROUND THE CULVERT.
3. PLACE NONWOVEN GEOTEXTILE ON THE STREAM BED AND STREAM BANKS PRIOR TO PLACEMENT OF THE PIPE CULVERT(S) AND AGGREGATE. COVER THE STREAM BED WITH THE GEOTEXTILE AND EXTEND IT A MINIMUM SIX INCHES AND A MAXIMUM OF ONE FOOT BEYOND THE END OF THE CULVERT AND BEDDING MATERIAL. USE NONWOVEN GEOTEXTILE AS SPECIFIED IN SECTION H-1 MATERIALS. GEOTEXTILE REDUCES SETTLEMENT AND IMPROVES CROSSING STABILITY.
4. PLACE CULVERT(S) ON THE NATURAL STREAM BED GRADE TO MINIMIZE INTERFERENCE WITH FISH PASSAGE.
5. COVER THE CULVERT WITH A MINIMUM OF ONE FOOT OF WASHED AGGREGATE. FOR MULTIPLE CULVERTS PROVIDE AT LEAST 12 INCHES OF COMPACTED AGGREGATE FILL BETWEEN CULVERTS.
6. STABILIZE ALL AREAS DISTURBED DURING CULVERT INSTALLATION WITHIN 24 HOURS OF THE DISTURBANCE IN ACCORDANCE WITH STANDARDS FOR PERMANENT STABILIZATION, SECTION B-4-5, OR TEMPORARY STABILIZATION, SECTION B-4-4, AS APPLICABLE.
7. STABILIZE APPROACH TO CROSSING AND KEEP FREE OF EROSION. REPLACE DISPLACED STONE, AND MAINTAIN HIGH FLOW AREAS. REMOVE DEBRIS TRAPPED BY CULVERT. REPLACE DAMAGED PIPE(S). MAINTAIN AREAS ADJACENT TO CROSSING TO CONTINUOUSLY MEET REQUIREMENTS FOR ADEQUATE VEGETATIVE ESTABLISHMENT IN ACCORDANCE WITH SECTION B-4 VEGETATIVE STABILIZATION.
8. AFTER THE TEMPORARY CROSSING IS NO LONGER NEEDED, REMOVE IT WITHIN 14 CALENDAR DAYS. IF SUBJECT TO THE USE DESIGNATION CLOSURE, REMOVE AT THE END OF CLOSURE PERIOD. PROTECT STREAM BANKS DURING CULVERT REMOVAL AND STABILIZE ALL DISTURBED AREAS WITH EROSION CONTROL MATTING. ACCOMPLISH REMOVAL OF THE CULVERT AND CLEAN UP OF THE AREA WITHOUT CONSTRUCTION EQUIPMENT WORKING IN THE WATERWAY CHANNEL. STORE ALL REMOVED MATERIALS IN AN APPROVED STAGING AREA.

2 OF 2

MARYLAND STANDARDS AND SPECIFICATIONS FOR SOIL EROSION AND SEDIMENT CONTROL
U.S. DEPARTMENT OF AGRICULTURE NATURAL RESOURCES CONSERVATION SERVICE | 2011 | MARYLAND DEPARTMENT OF ENVIRONMENT WATER MANAGEMENT ADMINISTRATION

H.21

DETAIL E-1 SILT FENCE

STANDARD SYMBOL: SF

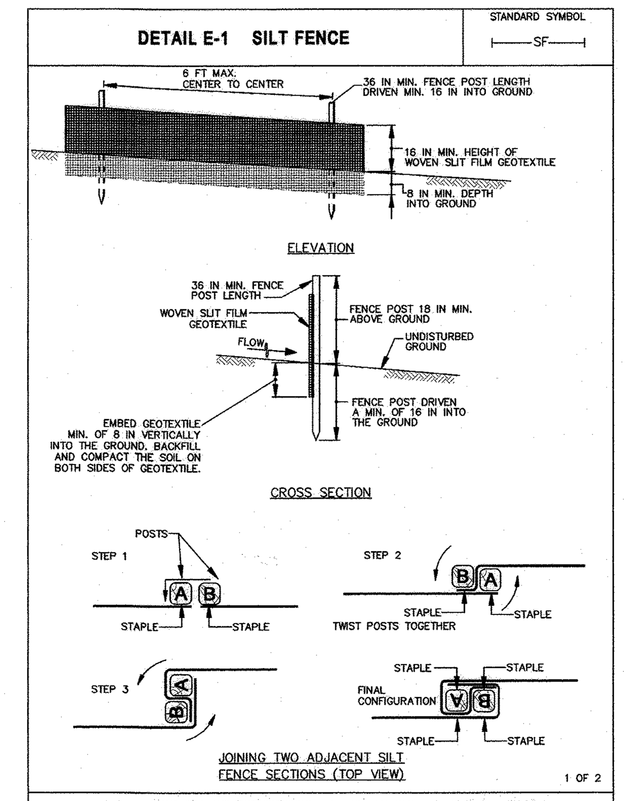

1 OF 2

MARYLAND STANDARDS AND SPECIFICATIONS FOR SOIL EROSION AND SEDIMENT CONTROL
U.S. DEPARTMENT OF AGRICULTURE NATURAL RESOURCES CONSERVATION SERVICE | 2011 | MARYLAND DEPARTMENT OF ENVIRONMENT WATER MANAGEMENT ADMINISTRATION

DETAIL E-1 SILT FENCE

STANDARD SYMBOL: SF

CONSTRUCTION SPECIFICATIONS

1. USE WOOD POSTS 1¾ X 1¾ ± ⅛ INCH (MINIMUM) SQUARE CUT OF SOUND QUALITY HARDWOOD. AS AN ALTERNATIVE TO WOODEN POST USE STANDARD "T" OR "U" SECTION STEEL POSTS WEIGHING NOT LESS THAN 1 POUND PER LINEAR FOOT.
2. USE 36 INCH MINIMUM POSTS DRIVEN 16 INCH MINIMUM INTO GROUND NO MORE THAN 6 FEET APART.
3. USE WOVEN SLIT FILM GEOTEXTILE AS SPECIFIED IN SECTION H-1 MATERIALS AND FASTEN GEOTEXTILE SECURELY TO UPSLOPE SIDE OF FENCE POSTS WITH WIRE TIES OR STAPLES AT TOP AND MID-SECTION.
4. PROVIDE MANUFACTURER CERTIFICATION TO THE AUTHORIZED REPRESENTATIVE OF THE INSPECTION/ENFORCEMENT AUTHORITY SHOWING THAT THE GEOTEXTILE USED MEETS THE REQUIREMENTS IN SECTION H-1 MATERIALS.
5. EMBED GEOTEXTILE A MINIMUM OF 8 INCHES VERTICALLY INTO THE GROUND. BACKFILL AND COMPACT THE SOIL ON BOTH SIDES OF FABRIC.
6. WHERE TWO SECTIONS OF GEOTEXTILE ADJOIN: OVERLAP, TWIST, AND STAPLE TO POST IN ACCORDANCE WITH THIS DETAIL.
7. EXTEND BOTH ENDS OF THE SILT FENCE A MINIMUM OF FIVE HORIZONTAL FEET UPSLOPE AT 45 DEGREES TO THE MAIN FENCE ALIGNMENT TO PREVENT RUNOFF FROM GOING AROUND THE ENDS OF THE SILT FENCE.
8. REMOVE ACCUMULATED SEDIMENT AND DEBRIS WHEN BULGES DEVELOP IN SILT FENCE OR WHEN SEDIMENT REACHES 25% OF FENCE HEIGHT. REPLACE GEOTEXTILE IF TORN. IF UNDERMINING OCCURS, REINSTALL FENCE.

2 OF 2

MARYLAND STANDARDS AND SPECIFICATIONS FOR SOIL EROSION AND SEDIMENT CONTROL
U.S. DEPARTMENT OF AGRICULTURE NATURAL RESOURCES CONSERVATION SERVICE | 2011 | MARYLAND DEPARTMENT OF ENVIRONMENT WATER MANAGEMENT ADMINISTRATION

DETAIL E-9-2 AT-GRADE INLET PROTECTION

STANDARD SYMBOL: AGIP

MAXIMUM DRAINAGE AREA = 1 ACRE

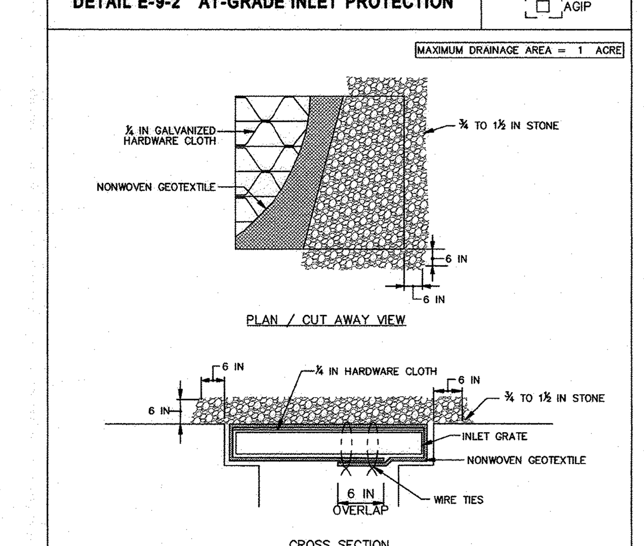

CONSTRUCTION SPECIFICATIONS

1. USE NONWOVEN GEOTEXTILE AS SPECIFIED IN SECTION H-1 MATERIALS.
2. LIFT GRATE AND WRAP WITH NONWOVEN GEOTEXTILE TO COMPLETELY COVER ALL OPENINGS. SECURE WITH WIRE TIES AND SET GRATE BACK IN PLACE.
3. PLACE CLEAN ¾ TO 1½ INCH STONE OR EQUIVALENT RECYCLED CONCRETE 6 INCHES THICK ON THE GRATE.
4. STORM DRAIN INLET PROTECTION REQUIRES FREQUENT MAINTENANCE. REMOVE ACCUMULATED SEDIMENT AFTER EACH RAIN EVENT TO MAINTAIN FUNCTION AND AVOID PREMATURE CLOGGING. IF INLET PROTECTION DOES NOT COMPLETELY DRAIN WITHIN 24 HOURS AFTER A STORM EVENT, IT IS CLOGGED. WHEN THIS OCCURS, REMOVE ACCUMULATED SEDIMENT AND CLEAN, OR REPLACE GEOTEXTILE AND STONE.

MARYLAND STANDARDS AND SPECIFICATIONS FOR SOIL EROSION AND SEDIMENT CONTROL
U.S. DEPARTMENT OF AGRICULTURE NATURAL RESOURCES CONSERVATION SERVICE | 2011 | MARYLAND DEPARTMENT OF ENVIRONMENT WATER MANAGEMENT ADMINISTRATION

APPROVED: DEPARTMENT OF PLANNING AND ZONING
[signature] 7-18-22
Director Date

HOWARD SOIL CONSERVATION DISTRICT

THIS PLAN IS APPROVED FOR SOIL EROSION AND SEDIMENT CONTROL BY THE HOWARD SOIL CONSERVATION DISTRICT

[signature] 06/15/22
HOWARD SOIL CONSERVATION DISTRICT — DATE

APPROVED: HOWARD COUNTY DEPARTMENT OF PLANNING AND ZONING

[signature] For: CE — 7/7/22
CHIEF, DEVELOPMENT ENGINEERING DIVISION JP — DATE

[signature] 7/18/22
CHIEF, LAND DEVELOPMENT DIVISION — DATE

ENGINEER'S CERTIFICATE

"I HEREBY CERTIFY THAT THIS PLAN FOR SEDIMENT AND EROSION CONTROL REPRESENTS A PRACTICAL AND WORKABLE PLAN BASED ON MY PERSONAL KNOWLEDGE OF THE SITE CONDITIONS AND THAT IT WAS PREPARED IN ACCORDANCE WITH THE REQUIREMENTS OF THE HOWARD SOIL CONSERVATION DISTRICT."

[signature] #29203 — 5-24-2022
THOMAS C. NEUGEBAUER — P.E. — DATE

DEVELOPER'S CERTIFICATE

"I/WE CERTIFY THAT ALL DEVELOPMENT AND CONSTRUCTION WILL BE DONE ACCORDING TO THIS PLAN OF DEVELOPMENT FOR SEDIMENT AND EROSION CONTROL, AND THAT ALL RESPONSIBLE PERSONNEL INVOLVED IN THE CONSTRUCTION PROJECT WILL HAVE A CERTIFICATE OF ATTENDANCE AT THE DEPARTMENT OF ENVIRONMENT APPROVED TRAINING PROGRAM FOR THE CONTROL OF SEDIMENT AND EROSION BEFORE BEGINNING THE PROJECT. I ALSO AUTHORIZE PERIODIC ON-SITE INSPECTIONS BY THE HOWARD SOIL CONSERVATION DISTRICT."

[signature] 5-24-22
SIGNATURE OF DEVELOPER — DATE

OWNER / APPLICANT / DEVELOPER:
LIBERTY PROPERTY, LLC.
ADDRESS: 1800 WAZEE ST, SUITE 500
DENVER, CO 80202
CONTACT: MS. ASHLEY WITKOWSKI
PHONE: 443-878-7693

MORRIS & RITCHIE ASSOCIATES, INC.
ENGINEERS, PLANNERS, SURVEYORS AND LANDSCAPE ARCHITECTS
14280 PARK CENTER DRIVE
LAUREL, MD 20707
(410) 792-9792 / (301) 776-1690
FAX: (410) 792-7395
MRAGTA.COM

STATE OF MARYLAND — THOMAS C. NEUGEBAUER — 29203 — PROFESSIONAL ENGINEER — 5-24-22

MD PROFESSIONAL CERTIFICATION:
I HEREBY CERTIFY THAT THESE DOCUMENTS WERE PREPARED OR APPROVED BY ME, AND THAT I AM A DULY LICENSED PROFESSIONAL ENGINEER UNDER THE LAWS OF THE STATE OF MARYLAND, LICENSE NO. 29203, EXPIRATION DATE: 06/16/2023.

SHEET: **SDP-21**

PATAPSCO VALLEY BUSINESS CENTER

PARCEL E-1

7351 COCA COLA DRIVE, HANOVER MARYLAND

EROSION AND SEDIMENT CONTROL NOTES AND DETAILS RETAINING WALL REINFORCEMENT

TAX MAP 38 GRIDS 20 PARCEL 285 ZONED:M-2
1ST ELECTION DISTRICT
HOWARD COUNTY, MD 21076

DATE	REVISIONS		
5-24-2022	ADDED NEW SHEETS 20 THROUGH 32 TO PLAN FOR RETAINING WALL REINFORCEMENT	JOB NO.:	31191319
		SCALE:	
		DATE:	5-24-2022
		DRAWN BY:	MBF
		DESIGN BY:	MM
		REVIEW BY:	MM
		SHEET:	21 OF 32

SDP-04-147

P:\PROJ\31191319-Prologis\Plans\LDE\Overall\Plot\Plan Sets\SDP\31191319-SDP-21-ESC DET.dwg, 5/24/2022 3:36:07 PM, MMitchell,
1:1, Copyright 2022 Morris & Ritchie Associates, Inc.

Structural Stabilization of Retaining Walls - Phase II
7351 Coca Cola Drive, Howard County, Maryland

Sheet Index

Sheet No. 22 - Title Sheet
Sheet No. 23 - General Notes
Sheet No. 24 - Site Plan
Sheet No. 25 - Flute Hole Grouting Plan
Sheet No. 26 - RW#1 and RW#2 Elevations
Sheet No. 27 - Toe Wall Elevation
Sheet No. 28 - Cross Section A-A'
Sheet Nos. 29 through 32 - Details

Owner: Liberty Property Limited Partnership
Address: 1800 Wazee Street, Suite 500 ,Denver, CO 80202
Owner Contact Name: Ms. Ashley Witkowski
Owner Contact Phone: (443) 878-7693

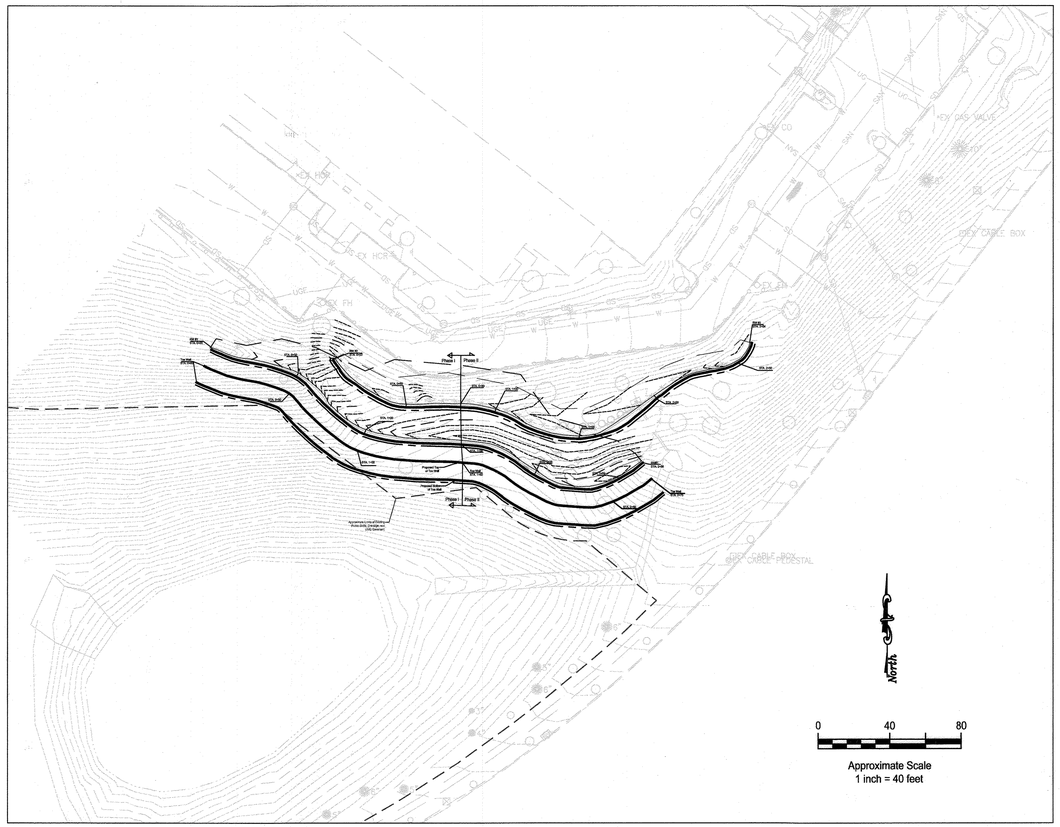

Location Plan

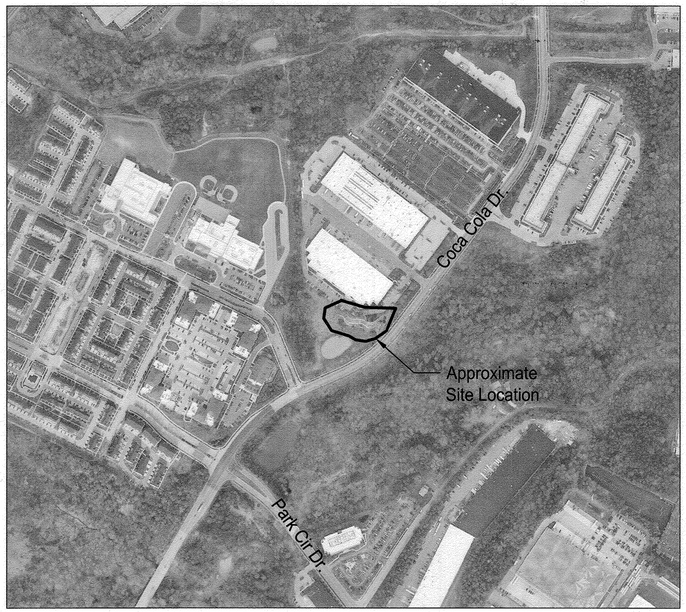

Vicinity Map

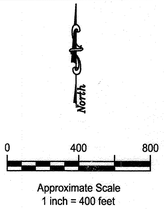

SHEET: **SDP-22**

APPROVED: DEPARTMENT OF PLANNING AND ZONING

Lynda Eisenberg — DIRECTOR — DATE 6/27/23

Amy Gray — CHIEF, DEVELOPMENT ENGINEERING DIVISION — DATE 6.22.23

CHIEF, DIVISION OF LAND DEVELOPMENT — DATE 6/27/23

DATE	REVISIONS
05/05/2023	6 Redlines
6-22-23	PHASE 1 WAS PREVIOUSLY APPROVED
	UNDER A SEPARATE REDLINE APRIL
	2023. PHASE 2 APPROVED
	UNDER THIS RED LINE 5-25-23

MD PROFESSIONAL CERTIFICATION:

I HEREBY CERTIFY THAT THESE DOCUMENTS WERE PREPARED OR APPROVED BY ME, AND THAT I AM A DULY LICENSED PROFESSIONAL ENGINEER UNDER THE LAWS OF THE STATE OF MARYLAND, LICENSE NO. 24495, EXPIRATION DATE: 10/30/23.

GEO-TECHNOLOGY ASSOCIATES, INC.
GEOTECHNICAL AND ENVIRONMENTAL CONSULTANTS
14280 PARK CENTER DRIVE, SUITE A
LAUREL, MARYLAND 20707
(410) 792-9446 OR (301) 470-4470
www.gtaeng.com

© Geo-Technology Associates, Inc.

Patapsco Valley Business Center
7351 COCA COLA DRIVE
HOWARD COUNTY, MARYLAND

STRUCTURAL STABILIZATION - PHASE II
TITLE SHEET

PROJECT: 13-13-9-2	DATE: 01/10/2022	SCALE: AS SHOWN	DESIGN BY: AFV	REVIEW BY: RPM	SHEET: 22 OF 32

SDP-04-0147

GENERAL NOTES

PART 1 - GENERAL

A. TWO EXISTING GEOGRID-REINFORCED RETAINING WALLS, DESIGNATED AS RW#1 AND RW#2, HAVE EXPERIENCED SIGNIFICANT MOVEMENT AND DISTRESSES DUE TO INTERNAL AND DEEP-SEATED GLOBAL INSTABILITY. THESE PLANS HAVE BEEN PREPARED BY GEO-TECHNOLOGY ASSOCIATES, INC. (ENGINEER) TO STABILIZE THE WALLS BY INSTALLING SOIL NAILS AND A STRUCTURAL SHOTCRETE FACING. THESE PLANS ARE FOR THE SOLE USE OF PROLOGIS. ANY OTHER UNAUTHORIZED USE IS STRICTLY FORBIDDEN.

B. THE WORK INCLUDES FURNISHING ALL MATERIALS AND LABOR TO CONSTRUCT THE PERMANENT SOIL NAIL AND SHOTCRETE FACING; GRADING; INSTALLATION OF SURFACE AND SUBSURFACE DRAINAGE PIPING AND ASSOCIATED STRUCTURES; REMOVING SEDIMENTS FROM EXISTING STORMDRAIN STRUCTURES AND PIPES; AND STABILIZATION OF THE WORK AREA AS SHOWN ON THESE PLANS AND AS SPECIFIED HEREIN.

C. THE CONSTRUCTION SHALL BE PERFORMED IN ACCORDANCE WITH THE INTERNATIONAL BUILDING CODE (IBC) 2018 AND PUBLICATION NO. FHWA-NHI-14-007, SOIL NAIL WALLS, REFERENCE MANUAL, PREPARED BY THE U.S. DEPARTMENT OF TRANSPORTATION FEDERAL HIGHWAY ADMINISTRATION, DATED FEBRUARY 2015.

D. GEO-TECHNOLOGY ASSOCIATES, INC. HAS PERFORMED EXPLORATIONS AND MONITORING AND PREPARED A GEOTECHNICAL REPORT FOR THE OWNER, DATED JANUARY 12, 2020. THIS REPORT IS AVAILABLE TO THE CONTRACTOR FOR INFORMATION.

E. A CAMERA INSPECTION OF THE INLET I-19 AND THE OUTLET PIPE WAS PERFORMED IN 2019. THE RESULTS OF THE CAMERA INSPECTION INCLUDING A VIDEO IS AVAILABLE TO THE CONTRACTOR FOR INFORMATION.

F. THE DESIGN PLANS FOR THE EXISTING GEOGRID-REINFORCED RETAINING WALLS, DATED MAY 2004, ARE AVAILABLE TO THE CONTRACTOR FOR INFORMATION. THE AS-BUILT CONDITION OF THE WALLS, INCLUDING PLAN LOCATION, ALIGNMENT, LENGTH, AND EMBEDMENT, MAY VARY FROM WHAT IS SHOWN ON THESE PLANS. FIELD VERIFICATION OF THE AS-BUILT CONDITION WILL BE REQUIRED.

G. BEFORE SUBMITTING A PROPOSAL FOR THE WORK, THE CONTRACTOR SHALL REVIEW THE AVAILABLE SUBSURFACE INFORMATION AND DESIGN PLANS; VISIT THE SITE TO ASSESS THE SITE GEOMETRY, EQUIPMENT ACCESS CONDITIONS, LOCATION OF EXISTING STRUCTURES AND ABOVE GROUND FACILITIES; AND EVALUATE TYPE OF SPECIALTY EQUIPMENT NEEDED TO PERFORM THE WORK.

H. THE WALL STABILIZATION WORK SHALL BE CONSTRUCTED BY A FIRM WHICH IS REGULARLY ENGAGED IN THE INSTALLATION OF SOIL NAILS AND SHOTCRETE AND HAS AT LEAST TEN YEARS OF EXPERIENCE IN THE INSTALLATION OF SIMILAR SOIL NAILS AND SHOTCRETE TOTALING AT LEAST 10,000 SQUARE FEET OF FACE AREA AND AT LEAST 500 PERMANENT SOIL NAILS. THE SUPERINTENDENT SHALL HAVE INSTALLED SOIL NAILS AND SHOTCRETE ON AT LEAST THREE PROJECTS OF SIMILAR SCOPE AND SIZE.

I. THE CONTRACTOR SHALL BE RESPONSIBLE FOR PROVIDING THE NECESSARY SURVEY AND ALIGNMENT CONTROL FOR THE WORK.

J. THE CONTRACTOR IS RESPONSIBLE FOR FOLLOWING ALL OSHA, STATE, AND LOCAL REGULATIONS REGARDING THE SAFETY OF WORKERS, PEDESTRIANS, VEHICLES, EXISTING UTILITIES AND OTHER IMPROVEMENTS.

PART 2 - MATERIALS

A. PERMANENT SOIL NAILS - CORE STEEL FOR SOIL NAILS SHALL BE FULLY THREADED, HOLLOW STEEL BARS, USED AS THE DRILLING STEEL, GROUT TRANSFER MEDIUM, AND THE REINFORCING ELEMENT OF THE SOIL NAIL OF THE MINIMUM SIZES SHOWN ON PLANS. THE HOLLOW BARS SHALL CONSIST OF GRADE 87 STEEL, CTS/IBO HOLLOW BARS SUPPLIED BY CON-TECH SYSTEMS OR APPROVED EQUIVALENT. STEEL COUPLERS FOR BARS SHALL BE CAPABLE OF DEVELOPING 100 PERCENT OF THE MINIMUM SPECIFIED ULTIMATE TENSILE STRENGTH OF THE BARS. SUBMIT CERTIFIED TEST REPORTS FOR EACH LOT OF SOIL NAIL BARS WITH MATERIALS DELIVERED TO THE SITE. SUBMIT MILL REPORTS AND A CERTIFICATE FROM THE MANUFACTURER STATING CHEMICAL PROPERTIES, ULTIMATE STRENGTHS, AND YIELD STRENGTHS.

AT THE CONTRACTOR'S OPTION, USE OF SOLID BAR MAY BE ALLOWED FOR SOIL NAIL REINFORCEMENT. THE CONTRACTOR WILL BE RESPONSIBLE FOR SELECTING APPROPRIATE INSTALLATION METHOD, INCLUDING USE OF A TEMPORARY CASING, TO DRILL AND INSTALL THE SOIL NAIL WHILE MAINTAINING THE STABILITY OF THE DRILL HOLE. THE SOLID BARS SHALL BE MINIMUM GRADE 75, CONTINUOUSLY THREADED BAR, MINIMUM 10 FOOT SECTION LENGTH OF THE DIAMETER SHOWN ON PLANS.

B. DRILL BITS FOR HOLLOW BAR SOIL NAIL - CAPABLE OF DRILLING THROUGH THE SOILS AT THE SITE AND COMPATIBLE WITH THE SOIL NAIL SYSTEM.

C. BEARING PLATES, NUTS, AND WASHERS - BEARING PLATES, NUTS, AND WASHERS, AND ASSOCIATED FITTINGS FOR SOIL NAILS SHALL BE MADE OF STEEL CONFORMING TO THE REQUIREMENTS OF ASTM A36 OR AASHTO M291, GRADE B. THREADED FASTENERS AND NUTS SHALL CONFORM TO ASTM 307. CORROSION PROTECTION FOR BEARING PLATES AND ASSOCIATED NUTS, WASHERS AND STUDS, SHALL BE PROVIDED BY A GALVANIZED COATING APPLIED IN ACCORDANCE WITH ASTM A153. HEADED STUDS SHALL CONFORM TO ASTM A-29, 1010-1020, TYPE B WITH MINIMUM TENSILE STRENGTH OF 65 KSI.

D. NAIL GROUT - GROUT SHALL BE MADE OF PORTLAND CEMENT CONFORMING TO ASTM C150 TYPE I, II, III, V OR TYPE I/II, AND SHALL BE THE PRODUCT OF ONE MANUFACTURER. FILLERS SUCH AS SAND SHALL NOT BE USED.

FINAL GROUT SHALL HAVE A MINIMUM 3-DAY COMPRESSIVE STRENGTH OF 1,500 PSI AND A MINIMUM 28-DAY COMPRESSIVE STRENGTH OF 3,000 PSI, MEETING THE REQUIREMENTS OF ASTM C109. THE SPECIFIC GRAVITY OF THE FINAL GROUT SHALL RANGE BETWEEN 1.8 AND 1.9. THE SPECIFIC GRAVITY OF THE GROUT USED FOR DRILLING AND INSTALLING THE HOLLOW BARS MAY BE LOWER THAN THE FINAL GROUT AND RANGE FROM 1.4 TO 1.6.

E. CENTRALIZERS - CENTRALIZERS SHALL BE MANUFACTURED FROM STEEL OR OTHER MATERIAL NOT DETRIMENTAL TO THE NAIL STEEL; SECURELY ATTACHED TO THE NAIL BAR; SIZED TO POSITION THE NAIL BAR WITHIN 1 INCH OF THE CENTER OF THE DRILL-HOLE; AND SIZED TO ALLOW GROUT AND CUTTINGS TO FREELY FLOW UP THE DRILL-HOLE.

H. SHOTCRETE - SHOTCRETE SHALL CONFORM TO THE REQUIREMENTS OF ACI 506.2-13, WITH A MINIMUM COMPRESSIVE STRENGTH OF 2,900 PSI AT 7 DAYS AND 4,500 PSI AT 28 DAYS. SUBMIT THE PROPOSED SHOTCRETE MIX DESIGN FOR REVIEW AT LEAST 14 WORKING DAYS PRIOR TO THE COMMENCEMENT OF WORK. THE SHOTCRETE SHALL BE PRODUCED USING THE WET-MIX METHOD AND MEET THE FOLLOWING REQUIREMENTS: MAXIMUM WATER/CEMENT RATIO OF 0.45, AIR CONTENT OF 9% (+/-1%) AT DISCHARGE INTO THE PUMP.

I. STEEL WELDED WIRE FABRIC - WELDED WIRE FABRIC SHALL CONFORM TO THE REQUIREMENTS OF ASTM A185, GRADE 60.

J. SHOTCRETE REINFORCEMENT STEEL - REINFORCEMENT STEEL SHALL CONFORM TO THE REQUIREMENTS OF ASTM A615, GRADE 60.

K. GEO-COMPOSITE STRIP DRAIN - GEO-COMPOSITE STRIP DRAIN SHALL BE MANUFACTURED WITH A DRAINAGE CORE (E.G., GEONET) AND A NON-WOVEN GEOTEXTILE ATTACHED TO OR ENCAPSULATING THE CORE. GEO-COMPOSITE STRIP DRAINS SHALL CONSIST OF STRIP DRAIN C-188 SUPPLIED BY AMERICAN WICK DRAIN OR APPROVED EQUIVALENT.

L. COLLECTOR UNDERDRAIN - HDPE COLLECTOR UNDERDRAIN SHALL CONSIST OF SINGLE WALL, PERFORATED PIPES (AS SHOWN ON THE PLANS), SUPPLIED BY ADS OR APPROVED EQUIVALENT.

M. COLLECTOR PIPE - HDPE COLLECTOR PIPE SHALL CONSIST OF SINGLE WALL, NON-PERFORATED PIPES (AS SHOWN ON THE PLANS), SUPPLIED BY ADS OR APPROVED EQUIVALENT.

N. DRAINAGE PIPE - HDPE DRAINAGE PIPE SHALL CONSIST OF SINGLE WALL OR N-12, PERFORATED AND NON-PERFORATED PIPES (AS SHOWN ON THE PLANS), SUPPLIED BY ADS OR APPROVED EQUIVALENT. POLYVINYL CHLORIDE (PVC) PIPES SHALL MEET THE REQUIREMENTS OF ASTM D3034 WALL THICKNESS SDR 35, WITH SOLVENT WELD OR ELASTOMETRIC JOINTS.

O. STORM DRAIN PIPE - REINFORCED CONCRETE PIPE (RCP) AND FITTINGS SHALL MEET THE REQUIREMENTS OF ASTM C76 AND C361. RCP INTERIOR WALL SHALL PERMIT SMOOTH AND EVEN FLOW OF LIQUID. CONCRETE END SECTIONS SHALL CONFORM TO AASHTO M170.

P. DRAIN BASINS - STORM DRAIN BASINS SHALL CONSIST OF STRUCTURES SPECIFICALLY MANUFACTURED AND SUPPLIED FOR THE INTENDED USE AND SHALL CONSIST OF STRUCTURES SUPPLIED BY NYLOPLAST FOR TURF TRAFFIC APPLICATION.

Q. MANHOLES - PRECAST MANHOLES SHALL MEET THE REQUIREMENTS OF ASTM C478. JOINTS BETWEEN PRECAST MANHOLE AND PRECAST PIPE SECTIONS SHALL BE RUBBER GASKETS MEETING THE REQUIREMENTS OF ASTM C443. THE HDPE PIPE TO MANHOLE SEAL SHALL CONFORM TO ASTM C923.

R. DOWNSPOUTS - DOWNSPOUTS SHALL CONSIST OF CUSTOM FABRICATED ALUMINUM OR STAINLESS-STEEL RECTANGULAR DOWNSPOUTS OF THE SIZE AND DIMENSIONS SHOWN ON THE PLANS. THE DOWNSPOUTS SHALL INCLUDE A CLEANOUT AND LEAF GUARD LOCATED ONE FOOT ABOVE THE FINISHED GRADE NEAR THE BOTTOM OF THE DOWNSPOUT.

S. CRUSHER RUN AGGREGATE - CRUSHER RUN AGGREGATE (CR-6) SHALL MEET THE REQUIREMENTS OF THE LATEST STANDARD SPECIFICATIONS FOR CONSTRUCTION AND MATERIALS, PREPARED BY THE STATE HIGHWAY ADMINISTRATION, MARYLAND DEPARTMENT OF TRANSPORTATION.

T. CLAYEY SOILS - CLAYEY SOILS FOR SURFACE STABILIZATION APPLICATION SHALL CONSISTS OF ON-SITE OR OFF-SITE SOILS FREE OF TRASH, DEBRIS, OR OTHER DELETERIOUS MATERIALS AND CONSISTING OF A MIXTURE OF CLAY, SILT, SAND, AND GRAVEL WITH A MINIMUM OF 50% PASSING THE NO. 200 SIEVE AND PLASTICITY INDEX IN THE RANGE OF 10 TO 20.

U. FLOWABLE FILL - FLOWABLE FILL SHALL MEET THE REQUIREMENTS OF CONTROLLED LOW-STRENGTH MATERIAL, TYPE A OF THE LATEST STANDARD SPECIFICATIONS FOR CONSTRUCTION AND MATERIALS, PREPARED BY THE STATE HIGHWAY ADMINISTRATION, MARYLAND DEPARTMENT OF TRANSPORTATION.

V. COMPACTION GROUT - COMPACTION GROUT FOR FILLING FLUTE HOLES AND OTHER VOIDS SPECIFIED ON THE PLANS SHALL BE A LOW TO MEDIUM SLUMP GROUT SUITABLE FOR THE INTENDED USE CONSISTING OF A MIXTURE OF GRAVEL, SILTY SAND, CEMENT, AND WATER AND COMPLY WITH THE ASCE COMPACTION GROUTING CONSENSUS GUIDE, PUBLICATION NO. ASCE/G-1, 53-19, PREPARED BY THE AMERICAN SOCIETY OF CIVIL ENGINEERS.

W. TOPSOIL - TOPSOIL MATERIAL AND PLACEMENT SHALL BE IN ACCORDANCE WITH SECTION B-4-2 SOIL PREPARATION, TOPSOILING AND SOIL AMENDMENTS OF THE STANDARDS AND SPECIFICATIONS FOR SOIL EROSION AND SEDIMENT CONTROL, PREPARED BY THE MARYLAND DEPARTMENT OF ENVIRONMENT.

X. SEED AND MULCH - SEED, MULCH, FERTILIZER, AND LIME SHALL BE IN ACCORDANCE WITH SECTION B-4-5 - PERMANENT STABILIZATION OF THE STANDARDS AND SPECIFICATIONS FOR SOIL EROSION AND SEDIMENT CONTROL, PREPARED BY THE MARYLAND DEPARTMENT OF ENVIRONMENT, WITH THE FOLLOWING SEED MIX.

HARDINESS ZONE (FROM FIGURE B.3): ZONE 6B **SEED MIXTURE** (FROM TABLE B.3): 12					**FERTILIZER RATE (10-20-20)**			**LIME RATE**
NO.	**SPECIES**	**APPLICATION RATE (LB/AC)**	**SEEDING DATES**	**SEEDING DEPTHS**	**N**	**P2O5**	**K20**	
1	CREEPING RED FESCUE HARD FESCUE SHEEP FESCUE WHITE CLOVER RED CLOVER	25 25 25 3 3	MARCH 1 TO MAY 15, AUGUST 15 TO OCTOBER 15	¼- ½ IN.	45 LBS. PER ACRE (1.0 LBS./1,000 SF)	45 LBS. PER ACRE (1.0 LBS./1,000 SF)	45 LBS. PER ACRE (1.0 LBS./1,000 SF)	45 LBS. PER ACRE (1.0 LBS./1,000 SF)

Y. THE EXISTING SEGMENTAL RETAINING WALLS ARE CONSTRUCTED USING KEYSTONE RETAINING WALL UNIT. PROVIDE UNITS OF MATCHING DEPTH/SIZE FOR RAISING THE HEIGHT OF THE WALLS, WHERE SHOWN ON PLANS.

PART 3 - SUBMITTALS

THE CONTRACTOR SHALL SUBMIT THE FOLLOWING INFORMATION IN WRITING TO THE OWNER AND THE ENGINEER A MINIMUM 4 WEEKS BEFORE MOBILIZATION TO THE SITE:

A. THE PROPOSED DETAILED WALL STABILIZATION CONSTRUCTION SEQUENCE AND PROCEDURES, INCLUDING:

1. DETAILED PLAN DESCRIBING EQUIPMENT ACCESS AND ANY TEMPORARY ACCESS ROUTE, AND BENCHING OR GRADING REQUIRED OR PROPOSED FOR THE WORK.
2. PLAN DESCRIBING HOW SURFACE WATER WILL BE DIVERTED, CONTROLLED, AND DISPOSED OF.
3. PROPOSED METHODS AND EQUIPMENT.
4. MEASURES TO ENSURE STABILITY DURING VARIOUS STAGES OF STABILIZATION CONSTRUCTION AND EXCAVATION.
5. PROPOSED NAIL DRILLING METHODS AND EQUIPMENT, INCLUDING DRILL-HOLE DIAMETER PROPOSED TO ACHIEVE THE SPECIFIED PULLOUT RESISTANCE VALUES AND ANY VARIATION OF THESE ALONG THE ALIGNMENT OR WALLS.
6. SOIL NAIL INSTALLER QUALIFICATIONS.
7. LOCATIONS AND ELEVATIONS OF PRE-PRODUCTION VERIFICATION TEST NAILS.
8. PLAN WITH PROPOSED SOIL NAIL IDENTIFICATION/NUMBERING SYSTEM.

B. NAIL GROUT MIX DESIGN, INCLUDING TYPE OF PORTLAND CEMENT, AGGREGATE SOURCE AND GRADATION, PROPOSED ADMIXTURES, AND COMPRESSIVE STRENGTH TEST RESULTS (PER ASTM C109) VERIFYING THE SPECIFIED MINIMUM 3 AND 28-DAY GROUT COMPRESSIVE STRENGTHS.

C. PROPOSED NAIL GROUT PLACEMENT PROCEDURES AND EQUIPMENT.

D. PROPOSED NAIL TESTING METHODS AND EQUIPMENT SETUP, INCLUDING DETAILS OF THE JACKING FRAME AND BRACING AND DETAILS SHOWING METHODS OF PROVIDING THE TEMPORARY UNBONDED LENGTH AND OF GROUTING THE TEMPORARY UNBONDED LENGTH OF TEST NAILS AFTER COMPLETION OF TESTING.

E. IDENTIFICATION NUMBER AND CERTIFIED CALIBRATION RECORDS FOR EACH TEST JACK, PRESSURE GAUGE, AND LOAD CELL TO BE USED. JACK AND PRESSURE GAUGE SHALL BE CALIBRATED AS A UNIT. CALIBRATION RECORDS SHALL INCLUDE THE DATE TESTED, DEVICE IDENTIFICATION NUMBER, AND THE CALIBRATION TEST RESULTS AND SHALL BE CERTIFIED FOR AN ACCURACY OF AT LEAST 2 PERCENT OF THE APPLIED CERTIFICATION LOADS BY A QUALIFIED INDEPENDENT TESTING LABORATORY WITHIN 30 DAYS PRIOR TO SUBMITTAL.

F. CATALOG CUTS, BROCHURES, OR OTHER DESCRIPTIVE LITERATURE DESCRIBING THE EQUIPMENT TO BE USED FOR DRILLING, GROUTING, HANDLING, AND INSTALLING THE SOIL NAILS AND THE SHOTCRETE.

G. SKETCHES, DRAWINGS, OR DETAILS SHOWING THE ACCESS AND TEMPORARY SUPPORTS WHERE REQUIRED FOR THE DRILLING EQUIPMENT AND STRESSING FRAMES. PROVIDE DESCRIPTIONS OF STRESSING JACKS, GAGES, DYNAMOMETERS, LOAD CELLS, OR OTHER DEVICES FOR MEASURING STRESSING LOAD.

H. QUALIFICATIONS AND EXPERIENCE RECORDS OF CONTRACTOR PERSONNEL WHO WILL BE INVOLVED IN THE CONSTRUCTION. EXPERIENCE RECORDS SHALL IDENTIFY ALL OF THE INDIVIDUALS RESPONSIBLE FOR THE SOIL NAILS AND SHOTCRETE AND SHALL INCLUDE A LISTING OF PROJECTS OF SIMILAR SCOPE PERFORMED WITHIN THE SPECIFIED PERIOD ALONG WITH POINTS OF CONTACT.

I. MANUFACTURER'S CUT SHEET FOR STRIP DRAIN, DRAIN GRATE, AND ASSOCIATED FITTINGS AND MATERIALS.

J. PROPOSED PROCEDURE, EQUIPMENT, MATERIALS, AND PERSONNEL FOR SHOTCRETE CONSTRUCTION, INCLUDING:

1. THE QUALIFICATIONS OF THE CONTRACTOR AND WORK CREW, INCLUDING THE SUPERVISOR, SHOTCRETE NOZZLEMAN, PUMP OPERATOR, AND SHOTCRETE BLOWPIPE OPERATORS, AND THE PREVIOUS CLIENT/PROJECT REFERENCES FOR THE CONTRACTOR AND SHOTCRETE CREW FOREMAN.
2. TEST RECORDS SHOWING SOURCE AND PROOF OF CONFORMANCE TO PROJECT SPECIFICATIONS FOR ALL SHOTCRETE MATERIALS.
3. DETAILS OF PROPOSED SHOTCRETE MIXTURE(S), PROPORTIONS, AND MEANS OF SHOTCRETE SUPPLY.
4. A LIST OF THE PROPOSED SHOTCRETING EQUIPMENT, INCLUDING BRAND NAME, MODEL, AND CAPACITY OF PROPOSED PUMP AND AIR COMPRESSOR.
5. PRECONSTRUCTION TRIAL/TESTING PROGRAM AND A DESCRIPTION OF THE PROPOSED CONSTRUCTION QUALITY CONTROL TESTING PROGRAM, INCLUDING THE FREQUENCY OF SPECIFIC TESTS.
6. DETAILS OF PROPOSED SCAFFOLDING, MAN LIFTS, OR OTHER TEMPORARY SUPPORT SYSTEM FOR WORKERS AND INSPECTORS.
7. DETAILS OF PROPOSED FORMING, BRACING, AND TEMPORARY SUPPORT SYSTEMS FOR CONSTRUCTION OF SHOTCRETE.
8. DETAILS OF PROPOSED MEANS OF PREPARING SURFACE TO RECEIVE SHOTCRETE.
9. A DESCRIPTION OF PROPOSED CURING PROCEDURES AND PROTECTION TO BE PROVIDED TO SHOTCRETE.
10. DETAILS OF PROPOSED METHODS FOR CONTROL AND DISPOSAL OF WASTE MATERIALS, INCLUDING WASTE SHOTCRETE, REBOUND, AND OVERSPRAY.
11. DETAILS OF PROPOSED REINFORCING, INCLUDING BAR/WWF SIZES, SPACINGS, LOCATIONS, SPLICES, AND BENDS.

K. PROPOSED PROCEDURE, EQUIPMENT, AND MATERIALS FOR FILLING THE VOID AT THE FACE OF RW# 1, INCLUDING MIX DESIGN FOR FLOWABLE FILL.

L. PROPOSED PROCEDURE, EQUIPMENT, AND MATERIALS FOR COMPACTION GROUTING TO FILL THE FLUTE HOLES AND OTHER VOIDS USING COMPACTION GROUTING METHODS, INCLUDING MIX DESIGN, TEST RESULTS FOR THE GROUT, SEQUENCE FOR DRILLING AND GROUTING OF HOLES, GROUT VOLUME AND PRESSURE MONITORING EQUIPMENT AND PROCEDURE, REFUSAL CRITERIA, AND MOVEMENT MONITORING SYSTEM.

M. PROPOSED SOURCE AND GRADATION/PLASTICITY TEST RESULTS FOR CRUSHER RUN AGGREGATE (CR-6) AND CLAYEY SOIL.

N. DETAILS OF THE PROPOSED MATERIALS AND MANUFACTURER CUT SHEETS AND CERTIFICATIONS FOR THE VARIOUS PIPES, DRAIN BASINS, MANHOLES, GRATES, DOWNSPOUTS, AND ASSOCIATED FITTINGS.

O. PROPOSED SOURCE, TEST RESULTS, AND CERTIFICATION FOR THE TOPSOIL AND SEED MIX, MULCH, AND FERTILIZER FOR PERMANENT GROUND STABILIZATION.

PART 4 - EXECUTION

A. EXISTING CONDITIONS

1. THE CONTRACTOR SHALL VERIFY LOCATIONS OF EXISTING UTILITIES PRIOR TO STARTING WORK. NOTIFY THE ENGINEER IF UTILITY CONFLICTS ARE FOUND PRIOR TO STARTING WORK.
2. THE CONTRACTOR SHALL CHECK ALL DIMENSIONS FOR ALL WORK PRIOR TO BEGINNING CONSTRUCTION. REPORT ALL DISCREPANCIES TO THE ENGINEER PRIOR TO BEGINNING WORK.
3. THE CONTRACTOR IS RESPONSIBLE FOR VERIFYING THE LOCATION OF ALL UTILITIES AND SLOPE INCLINOMETERS THAT MAY BE AFFECTED BY CONSTRUCTION OR THE INSTALLATION OF THE SOIL NAILS AND OTHER CONSTRUCTION ACTIVITIES. EXISTING IMPROVEMENTS, INCLUDING UTILITIES, MONITORING WELLS, AND SLOPE INCLINOMETERS, DAMAGED BY THE CONTRACTOR SHALL BE REPLACED AT NO ADDITIONAL COST.
4. DURING CONSTRUCTION, THE CONTRACTOR SHALL OBSERVE THE CONDITIONS ABOVE AND BELOW THE EXISTING WALLS AND SLOPE ON A DAILY BASIS FOR SIGNS OF GROUND MOVEMENT IN THE VICINITY OF THE WORK. IMMEDIATELY NOTIFY THE OWNER AND THE ENGINEER IF SIGNS OF MOVEMENTS, SUCH AS NEW CRACKS IN STRUCTURES, FOUNDATIONS, GROUND SURFACE, SLOPE SURFACE, PAVED SURFACES, AND UNPAVED SURFACES ARE OBSERVED. IF THE MOVEMENTS EXCEED THOSE ANTICIPATED FOR TYPICAL SOIL NAIL SLOPE STABILIZATION CONSTRUCTION AND REQUIRE CORRECTIVE ACTION, THE CONTRACTOR SHALL TAKE CORRECTIVE ACTIONS NECESSARY TO STOP THE MOVEMENT OR PERFORM REPAIRS. THE COSTS OF PROVIDING CORRECTIVE ACTIONS SHALL BE BORNE BY THE CONTRACTOR WHEN SUCH ACTIONS ARE NECESSARY DUE TO THE CONTRACTOR'S METHODS OR OPERATIONS OR FAILURE TO FOLLOW THE SPECIFIED/APPROVED CONSTRUCTION SEQUENCE.

B. DELIVERY, STORAGE, AND HANDLING

MATERIALS SHALL BE SUITABLY WRAPPED, PACKAGED, OR COVERED AT THE FACTORY OR SHOP TO PREVENT THE MATERIALS FROM BEING AFFECTED BY DIRT, WATER, OIL, GREASE, AND RUST. PROTECT MATERIALS AGAINST ABRASION OR DAMAGE DURING SHIPMENT AND HANDLING. PLACE MATERIALS STORED AT THE SITE ABOVE GROUND ON A WELL-SUPPORTED PLATFORM AND COVERED WITH PLASTIC OR OTHER APPROVED MATERIAL. MATERIALS SHALL BE PROTECTED FROM ADJACENT CONSTRUCTION OPERATIONS. THE CONTRACTOR SHALL REJECT AND REMOVE FROM THE SITE ANY MATERIALS WHICH ARE DAMAGED BY ABRASION, CUTS, NICKS, HEAVY CORROSIONS, PITTING, WELDS, OR WELD SPATTER, INCLUDING THE SOIL NAIL STEEL BARS, SHOTCRETE REBARS, AND WELDED WIRE FABRIC. ANY ITEMS DAMAGED SHALL BE REPLACED OR REPAIRED IN A MANNER RECOMMENDED BY THE MANUFACTURER AND APPROVED BY THE ENGINEER.

C. CONSTRUCTION SEQUENCE - UNLESS MODIFICATIONS ARE APPROVED BY THE ENGINEER, THE CONSTRUCTION WORK SHALL BE PERFORMED IN STRICT ACCORDANCE WITH THE FOLLOWING SEQUENCE:

1. LAYOUT LIMITS AND ELEVATIONS OF THE WALL. CONTRACTOR IS RESPONSIBLE FOR ALL SURVEYS REQUIRED FOR THE PROPOSED CONSTRUCTION.
2. LOCATE AND MARK ALL UTILITIES AND OTHER SUBSURFACE ELEMENTS TO REMAIN.
3. INSTALL EROSION AND SEDIMENT CONTROL MEASURES PER APPROVED PLANS.
4. ESTABLISH ACCESS AND CONSTRUCT BENCHES AS REQUIRED FOR EQUIPMENT ACCESS. DO NOT EXCAVATE SOILS BELOW THE BOTTOM OF THE WALLS WITHOUT PRIOR REVIEW AND APPROVAL OF THE ENGINEER.
5. REMOVE AND DISPOSE OF TREES, AS INDICATED ON PLANS.
6. FILL THE EXISTING VOIDS AT THE FACE OF RW#1 BETWEEN STATIONS 0+60 AND 0+75 USING FLOWABLE FILL.
7. FILL VOIDS AND FLUTE HOLES USING COMPACTION GROUTING WHERE SHOWN ON THE PLANS, INCLUDING ANY ADDITIONAL VOIDS IDENTIFIED DURING SITE PREPARATION.
8. PERFORM TEST PITS TO EXPOSE THE BOTTOM OF THE EXISTING RETAINING WALLS (RW#1 AND RW#2) AT MAXIMUM 10-FOOT INTERVALS ALONG THE FULL LENGTH OF THE WALLS DURING PHASE I CONSTRUCTION. SURVEY THE ELEVATION OF THE BOTTOM OF THE WALLS. PROVIDE THIS INFORMATION TO THE ENGINEER WITHIN A DAY OF THE TEST PIT COMPLETION. DEPENDING UPON THE RESULTS OF THE TEST PIT, THE ENGINEER MAY ADJUST THE BOTTOM OF SHOTCRETE ELEVATION FOR RW#1 AND RW#2. IN GENERAL, EXCAVATIONS FOR WALL STABILIZATION SHALL NOT BE EXTENDED BELOW THE BOTTOM OF THE EXISTING LOWEST BLOCK FOR EACH OF THE WALLS.
9. REMOVE AND STOCKPILE EXISTING RIPRAP NEAR THE WESTERN END OF RW#2 FOR REUSE.
10. REMOVE EXISTING CAP UNITS AND ADD SEGMENTAL WALL BLOCKS ABOVE THE EXISTING WALLS TO RAISE THE TOP OF WALL AS SHOWN ON THE PLANS. USE SHEAR PIN AND MANUFACTURER-RECOMMENDED CONSTRUCTION ADHESIVE TO CONNECT THE ADDITIONAL BLOCKS. REPLACE THE CAP UNITS.
11. CORE THE WALL BLOCKS AND INSTALL THE DRAINAGE PIPES, WHICH ARE DESIGNED TO PENETRATE THE WALLS, PRIOR TO INSTALLATION OF SOIL NAILS AND SHOTCRETE.
12. GRADE THE AREAS BEHIND RW#1 AND RW#2, CONSTRUCT SWALES. PROVIDE TEMPORARY PIPES WHERE DOWNSPOUTS ARE TO BE INSTALLED AFTER SHOTCRETE FACING CONSTRUCTION.
13. UNLESS MODIFICATIONS ARE APPROVED BY THE ENGINEER, THE SOIL NAIL INSTALLATION AND WALL STABILIZATION WORK SHALL BE PERFORMED IN THE FOLLOWING SEQUENCE:
   - 13.1. INSTALL SOIL NAILS AND SHOTCRETE FACING FOR RW#1.
   - 13.2. INSTALL SOIL NAILS AND SHOTCRETE FACING FOR RW#2.
   - 13.3. INSTALL THE DRAINAGE PIPING, DRAIN BASINS, AND MANHOLE SHOWN ON THE PLANS. USE TEMPORARY BASINS AND PIPES AS NECESSARY.
   - 13.4. EXCAVATE AND INSTALL SOIL NAILS AND SHOTCRETE FOR THE TOE WALL.
   - 13.5. BACKFILL TEMPORARY EXCAVATIONS IN FRONT OF THE TOE WALL.
   - 13.6. INSTALL COLLECTOR UNDERDRAINS AND CONNECT THEM TO THE OUTFLOW PIPE AND/OR DRAIN BASINS AND MANHOLE.
   - 13.7. GRADE THE AREAS BEHIND RW#1 AND RW#2 AND ANY DISTURBED AREAS AS SHOWN ON THE PLANS, CONSTRUCT SWALES.
   - 13.8. CLEAN INLET I-19 AND OUTFLOW PIPE BY REMOVING ACCUMULATED SEDIMENT.
   - 13.9. STABILIZE AREAS AROUND WALLS AS SHOWN ON PLANS.
   - 13.10. REPLACE THE RIPRAP BACK TO THE ORIGINAL LOCATION NEAR THE WESTERN END OF RW#2.

D. THE STABILIZATION FOR RW#1 SHALL BE PERFORMED IN THE FOLLOWING SEQUENCE:

1. INSTALL SACRIFICIAL VERIFICATION TEST NAIL AT THE LOCATIONS SHOWN ON THE PLAN FOR PRE-PRODUCTION VERIFICATION TESTING AND PERFORM TESTING OF THESE NAILS PRIOR TO START OF PRODUCTION NAILS. SUBMIT RESULTS FOR REVIEW AND APPROVAL OF THE ENGINEER WITHIN ONE DAY OF THE TESTING AND ALLOW TWO WORKING DAYS FOR REVIEW AND APPROVAL BY THE ENGINEER.
2. INSTALL PRODUCTION NAILS.
3. INSTALL STRIP DRAINS AND REINFORCEMENT FOR THE FIRST SHOTCRETE LAYER AND APPLY FIRST SHOTCRETE LAYER FOR THE FULL HEIGHT OF THE WALL.
4. ATTACH BEARING PLATE WHILE THE SHOTCRETE IS STILL PLASTIC AND BEFORE ITS INITIAL SET. UNIFORMLY SET THE BEARING PLATE ON THE SHOTCRETE BY HAND-WRENCH TIGHTENING THE NUT. HAND-WRENCH TIGHTEN THE NUT AFTER THE SHOTCRETE HAS SET FOR 24-HOURS.
5. INSTALL THE PROPOSED STRUT NAILS.
6. INSTALL THE REQUIRED SHOTCRETE REINFORCEMENT FOR THE SECOND LAYER AND BEARING PLATE FOR THE STRUT NAIL.
7. APPLY THE SECOND LAYER OF SHOTCRETE FOR THE FULL HEIGHT OF THE WALL.
8. INSTALL THE COLLECTOR UNDERDRAIN AND CONNECT THE STRIP DRAINS TO THE COLLECTOR UNDERDRAIN.
9. CONNECT THE COLLECTOR UNDERDRAIN TO THE OUTFALL PIPE TO ALLOW UNINTERRUPTED FLOW OF COLLECTED WATER.

E. THE STABILIZATION FOR RW#2 SHALL BE PERFORMED ONLY AFTER COMPLETION OF THE STABILIZATION FOR RW#1 AND IN THE FOLLOWING SEQUENCE:

1. INSTALL SACRIFICIAL TEST NAIL AT THE LOCATIONS SHOWN ON THE PLAN FOR PRE-PRODUCTION VERIFICATION TESTING AND PERFORM TESTING OF THESE NAILS PRIOR TO START OF PRODUCTION NAILS. SUBMIT RESULTS FOR REVIEW AND APPROVAL OF THE ENGINEER WITHIN ONE DAY OF THE TESTING AND ALLOW TWO WORKING DAYS FOR REVIEW AND APPROVAL BY THE ENGINEER.
2. INSTALL PRODUCTION NAILS.
3. INSTALL STRIP DRAINS AND REINFORCEMENT FOR THE FIRST SHOTCRETE LAYER AND APPLY FIRST SHOTCRETE LAYER FOR THE FULL HEIGHT OF THE WALL.
4. ATTACH BEARING PLATE WHILE THE SHOTCRETE IS STILL PLASTIC AND BEFORE ITS INITIAL SET. UNIFORMLY SET THE BEARING PLATE ON THE SHOTCRETE BY HAND-WRENCH TIGHTENING THE NUT. HAND-WRENCH TIGHTEN THE NUT AFTER THE SHOTCRETE HAS SET FOR 24-HOURS.
5. INSTALL THE REQUIRED SHOTCRETE REINFORCEMENT FOR THE SECOND LAYER AND APPLY THE SECOND LAYER OF SHOTCRETE FOR THE FULL HEIGHT OF THE WALL.
6. INSTALL THE COLLECTOR PIPE AND CONNECT THE STRIP DRAINS TO THE COLLECTOR PIPE.
7. CONNECT THE COLLECTOR PIPE TO THE OUTFALL PIPE TO ALLOW UNINTERRUPTED FLOW OF COLLECTED WATER.
8. INSTALL THE DOWNSPOUT AND CONNECT TO THE OUTFLOW PIPE.

F. THE CONSTRUCTION OF THE TOE WALL SHALL BE PERFORMED ONLY AFTER COMPLETION OF THE STABILIZATION FOR RW#1 AND RW#2 AND IN THE FOLLOWING SEQUENCE:

1. INSTALL SACRIFICIAL TEST NAIL AT THE LOCATIONS SHOWN ON THE PLAN FOR PRE-PRODUCTION VERIFICATION TESTING AND PERFORM TESTING OF THESE NAILS PRIOR TO START OF PRODUCTION NAIL INSTALLATION. SUBMIT RESULTS FOR REVIEW AND APPROVAL OF THE ENGINEER WITHIN ONE DAY OF THE TESTING AND ALLOW TWO WORKING DAYS FOR REVIEW AND APPROVAL BY THE ENGINEER.
2. PERFORM TEMPORARY EXCAVATIONS REQUIRED FOR THE CONSTRUCTION OF THE TOE WALL. THESE EXCAVATIONS SHALL BE PERFORMED IN NO MORE THAN 5-FOOT VERTICAL LIFTS.
3. EXCAVATE IN LIFTS AND INSTALL PRODUCTION NAILS FOR THE FIRST LIFT.
4. INSTALL STRIP DRAINS AND REINFORCEMENT FOR THE FIRST SHOTCRETE LAYER
5. INSTALL FIRST SHOTCRETE LAYER.
6. ATTACH BEARING PLATE WHILE THE SHOTCRETE IS STILL PLASTIC AND BEFORE ITS INITIAL SET. UNIFORMLY SET THE BEARING PLATE ON THE SHOTCRETE BY HAND-WRENCH TIGHTENING THE NUT. HAND-WRENCH TIGHTEN THE NUT AFTER THE SHOTCRETE HAS SET FOR 24-HOURS.
7. EXCAVATE DOWN TO THE PROPOSED BOTTOM OF SHOTCRETE OR THE BOTTOM OF THE SECOND LIFT.
8. REPEAT THE ABOVE STEPS AND INSTALL PRODUCTION NAILS, THE STRIP DRAINS, AND FIRST LAYER OF SHOTCRETE.
9. ATTACH BEARING PLATE WHILE THE SHOTCRETE IS STILL PLASTIC AND BEFORE ITS INITIAL SET. UNIFORMLY SET THE BEARING PLATE ON THE SHOTCRETE BY HAND-WRENCH TIGHTENING THE NUT. HAND-WRENCH TIGHTEN THE NUT AFTER THE SHOTCRETE HAS SET FOR 24-HOURS.
10. INSTALL THE REQUIRED SHOTCRETE REINFORCEMENT FOR THE SECOND LAYER AND APPLY THE SECOND LAYER OF SHOTCRETE.
11. INSTALL THE COLLECTOR UNDERDRAIN AND CONNECT THE STRIP DRAINS TO THE COLLECTOR UNDERDRAIN.
12. CONNECT THE COLLECTOR UNDERDRAIN TO THE OUTFALL PIPE TO ALLOW UNINTERRUPTED FLOW OF COLLECTED WATER.

G. FLUTE HOLE GROUTING

1. THE FLUTE HOLES SHOWN ON THE PLANS AND ADDITIONAL FLUTE HOLES IDENTIFIED DURING SITE PREPARATION SHALL BE FILLED BY GROUTING WITH LOW TO MEDIUM MOBILITY GROUT AND USING THE COMPACTION GROUTING PROCESS. THE MATERIALS AND GROUTING PROCEDURES SHALL BE IN CONFORMANCE WITH THE ASCE COMPACTION GROUTING CONSENSUS GUIDE, PUBLICATION NO. ASCE/G-1, 53-19, PREPARED BY THE AMERICAN SOCIETY OF CIVIL ENGINEERS.
2. THE BORE HOLE AND GROUTING TUBE SHALL BE EXTENDED FROM THE SURFACE TO ELEVATION 90 OR A MINIMUM OF FIVE FEET INTO THE NATIVE CLAYS SOILS, WHICHEVER IS HIGHER.
3. ALL OF THE FLUTE HOLES SHALL BE FILLED AS PART OF THE PHASE I CONSTRUCTION.
4. MONITOR MOVEMENT OF THE GROUND SURFACE, RETAINING WALL OR NEARBY STRUCTURES LOCATED WITHIN A RADIUS OF 30 FEET FROM THE ACTIVE GROUT HOLE LOCATION.

H. EXCAVATION

1. EXCAVATION SHALL PROCEED IN STAGES, EXPOSING THE MINIMUM AMOUNT OF SOIL FACE THAT WILL ALLOW THE PRACTICAL AND EXPEDITIOUS INSTALLATION OF SOIL NAILS AND SHOTCRETE FACING, WHILE MAINTAINING STABILITY OF THE EXCAVATED FACE AND MINIMIZING GROUND MOVEMENTS.
2. EXCAVATIONS SHALL NOT BE EXTENDED BELOW THE PROPOSED BOTTOM OF SHOTCRETE UNLESS REVIEWED AND APPROVED BY THE ENGINEER.
3. INSTALL SOIL NAILS AND PLACE SHOTCRETE IN A MANNER TO LIMIT THE TIME THAT THE EXCAVATION IS EXPOSED. EXCAVATIONS SHALL NOT REMAIN EXPOSED FOR MORE THAN 48 HOURS. WHERE SHOTCRETE HAS NOT BEEN APPLIED, PLACE PLASTIC SHEET OVER EXCAVATIONS EXPOSED TO PRECIPITATION.

I. NAIL INSTALLATION

1. DRILL HOLES FOR SOIL NAIL AT THE LOCATIONS AND OF LENGTHS SHOWN ON THE PLANS. PROVIDE MINIMUM NAIL BORE HOLE DIAMETER SHOWN ON THE PLANS AND WHICH IS NECESSARY TO DEVELOP LOAD CAPACITY TO SATISFY TESTING ACCEPTANCE CRITERIA FOR THE ULTIMATE LOAD OF 2 KIPS PER FOOT. THE CONTRACTOR MAY INCREASE THE DRILL HOLE DIAMETER TO DEVELOP THE REQUIRED DESIGN LOAD CAPACITY (GROUT BODY TO SOIL BOND PER LINEAR FOOT) SHOWN ON THE PLANS. IT SHALL BE THE CONTRACTOR'S RESPONSIBILITY TO CHOOSE APPROPRIATE EQUIPMENT AND DRILLING METHODS THAT WILL MAINTAIN OPEN DRILL HOLES AND DO NOT PROMOTE MINING OR LOOSENING OF THE SOIL AT THE PERIMETER OF THE DRILL HOLE. CLEAN ALL LOOSE AND COLLAPSED MATERIAL FROM THE HOLE.
2. NO HOLE SHALL BE DRILLED WITHIN 10 FEET OF A GROUTED HOLE UNTIL THE GROUT HAS SET FOR A MINIMUM OF 24 HOURS.
3. DO NOT INSTALL PRODUCTION NAILS UNTIL SUCCESSFUL PRE-PRODUCTION VERIFICATION TESTING OF THE NAILS IS COMPLETED AND REVIEWED BY THE ENGINEER.
4. AT THE FACE OF WALL OR THE EXCAVATION, THE DRILL HOLE SHALL BE LOCATED WITHIN 6 INCHES OF THE LOCATION SHOWN ON THE PLANS. AT THE POINT OF ENTRY, THE NAIL ANGLE SHALL BE WITHIN PLUS OR MINUS 3 DEGREES OF THAT SHOWN ON THE PLANS. WHENEVER THE DRILL HOLE IS NOT WITHIN THE SPECIFIED TOLERANCE, THE HOLE SHALL BE GROUTED AND A NEW HOLE DRILLED ADJACENT TO THE REJECTED HOLE.
5. SUBSIDENCE OR PHYSICAL DAMAGE BY DRILLING OPERATIONS SHALL BE CAUSE FOR IMMEDIATE CESSATION OF OPERATIONS AND REPAIR.
6. PLACE CENTRALIZERS AT NO MORE THAN TEN-FOOT INTERVALS ALONG THE FULL LENGTH OF THE NAIL, WITH THE LAST CENTRALIZER 1 FOOT FROM THE END OF EACH NAIL AND ENSURE THAT NOT LESS THAN 1.5 INCH OF GROUT COVER IS ACHIEVED ALONG THE NAIL. INJECT GROUT AT THE LOWEST POINT OF THE DRILL HOLE. PLACE GROUT ONLY IN FULLY CLEAN HOLES. PUMP GROUT THROUGH HOLLOW BARS, GROUT TUBES, CASING, OR DRILL RODS SUCH THAT THE HOLE IS FILLED TO PREVENT AIR VOIDS. GROUT PROGRESSIVELY FROM THE BOTTOM TO THE TOP IN ONE CONTINUOUS OPERATION. GROUT UNTIL THE HOLE IS COMPLETELY FILLED WITH GROUT AND CLEAN GROUT IS SEEN TO RUN FROM THE TOP OF THE HOLE. PROVIDE GROUTING EQUIPMENT CAPABLE OF CONTINUOUS MIXING AND PRODUCING A GROUT FREE OF LUMPS. NAILS SHALL BE PLACED IN EACH DRILLED HOLE WITHIN 15 MINUTES OF THE GROUT INJECTION. THE SPACE ABOVE THE BOTTOM ELEVATION OF THE DRILL HOLE OPENING ("BIRD'S BEAK") SHALL BE FILLED UP WITH ADDITIONAL GROUT AFTER A TEMPORARY COVER IS PLACED IN FRONT OF THE DRILL HOLE, OR FILLED WITH SHOTCRETE.
7. GROUTING OF THE NAILS TO BE TESTED SHALL NOT EXTEND CLOSER THAN 3 FEET FROM THE FACE OF THE EXISTING WALL OR THE EXCAVATION FACE TO PROVIDE AN UNBONDED LENGTH.
8. THE SPECIFIC GRAVITY OF THE FINAL GROUT SHALL RANGE BETWEEN 1.8 AND 1.9. THE SPECIFIC GRAVITY OF THE GROUT USED FOR DRILLING AND INSTALLING THE HOLLOW BARS MAY BE LOWER THAN THE FINAL GROUT AND RANGE FROM 1.4 TO 1.6. AFTER THE BAR IS INSTALLED TO THE DESIRED DEPTH, THE FINAL GROUT MIXTURE SHALL BE PUMPED THROUGH THE HOLLOW BAR, AND THE NAIL IS CONSIDERED COMPLETE WHEN THE HEAVIER MIXTURE RETURNS TO THE EXCAVATION FACE, SIGNALING THAT THE LIGHTER DRILLING GROUT WAS FLUSHED FROM THE HOLE AND THAT ALL DRILLING SPOILS HAVE ALSO BEEN REMOVED.
9. A HIGH-SHEAR COLLOIDAL MIXER WITH SEPARATE HOLDING TANK AND WATER AND CEMENT DOSING SYSTEM SHALL BE USED TO ENSURE CONTINUOUS GROUTING INDEPENDENT FROM MIXING. PUMPS WITH FLOW RATES OF AT LEAST 15 GAL./MINUTE FOR THE SMALLER DIAMETER BARS (LESS THAN 2 IN. DIAMETER) AND 45 GAL./MINUTE FOR THE LARGER DIAMETER BARS (2 IN. DIAMETER AND LARGER) SHALL BE PROVIDED. AN AUTOMATED MONITORING SYSTEM SHALL BE USED TO RECORD THE GROUT VOLUME AND PRESSURE.

J. INSTALLATION OF GEO-COMPOSITE STRIP DRAIN

1. INSTALL GEO-COMPOSITE DRAIN STRIPS AS SHOWN ON THE PLANS. SECURE THE STRIPS TO THE FACE OF THE EXISTING WALL(S) OR THE SOIL EXCAVATION FACE AND PREVENT SHOTCRETE FROM CONTAMINATING THE GEOTEXTILE.
2. MAKE SPLICES WITH A 12-INCH MINIMUM VERTICAL OVERLAP SUCH THAT THE FLOW OF WATER IS NOT IMPEDED. REPAIR DAMAGE TO THE DRAIN STRIP WHICH MAY INTERRUPT THE FLOW OF WATER.
3. INSTALL CONNECTOR PIPE AT THE BASE OF EACH STRIP AND OUTLET PIPE THROUGH THE SHOTCRETE FACING. BACKFILL PIPES WITH NO. 57 STONE UNLESS NOTED OTHERWISE ON THE PLANS.
4. TIE THE STRIP DRAIN OUTLETS INTO THE COLLECTOR UNDERDRAIN/PIPE SYSTEM.

K. INSTALLATION OF INITIAL SHOTCRETE FACING

1. INSTALL WELDED WIRE MESH TO FULLY COVER THE EXCAVATED LIFT OR THE RETAINING WALL FACE. THE WELDED WIRE MESH SHOULD BE OVERLAPPED A MINIMUM OF 15 INCHES AT THE JOINTS OR SPLICE AND TIED WITH FLEXIBLE WIRE TIES OR OTHER APPROPRIATE MEANS.
2. INSTALL THE STEEL REINFORCEMENT AS SHOWN ON THE PLANS. PROVIDE A MINIMUM LAP OF 48 BAR DIAMETERS OR 24 INCHES, WHICHEVER IS GREATER. PROVIDE A MINIMUM SHOTCRETE COVER AS SHOWN ON PLANS. WHERE A 90-, 135- OR 180-DEGREES HOOK IS GRAPHICALLY INDICATED, PROVIDE CORRESPONDING ACI STANDARD HOOKS, UNLESS NOTED OTHERWISE.
3. REMOVE ALL LOOSE SOIL AND DEBRIS FROM SURFACES WHERE SHOTCRETE WILL BE APPLIED. CLEAN CONSTRUCTION JOINTS PRIOR TO PLACING SUCCESSIVE LAYERS OF SHOTCRETE.
4. CONSTRUCT CONTROL AND EXPANSION JOINTS AT THE LOCATIONS AND PER THE DETAILS SHOWN ON PLANS.

L. INSTALLATION OF BEARING PLATES

ATTACH A BEARING PLATE, WASHERS, AND NUT TO EACH NAIL HEAD AS SHOWN IN THE PLANS. WHILE THE SHOTCRETE CONSTRUCTION FACING IS STILL PLASTIC AND BEFORE ITS INITIAL SET, UNIFORMLY SEAT THE PLATE ON THE SHOTCRETE BY HAND-WRENCH TIGHTENING THE NUT. WHERE UNIFORM CONTACT BETWEEN THE PLATE AND THE SHOTCRETE CANNOT BE PROVIDED, SET THE PLATE IN A BED OF GROUT. AFTER GROUT HAS SET FOR 24 HOURS, HAND-WRENCH TIGHTEN THE NUT.

M. NAIL TESTING

1. STRESSING EQUIPMENT SHALL BE HYDRAULICALLY OPERATED AND SHALL HAVE A CAPACITY EQUAL TO 200 PERCENT OF THE REQUIRED TEST LOADS WITHIN THE RATED CAPACITY IN ONE STROKE. PUMPS SHALL BE CAPABLE OF APPLYING EACH LOAD INCREMENT IN LESS THAN 60 SECONDS AND SHALL BE CAPABLE OF MAINTAINING THE HYDRAULIC PRESSURE WITHIN 50 PSI OF THE TARGET PRESSURE. THE EQUIPMENT SHALL PERMIT STRESSING OF THE SOIL NAIL BAR IN INCREMENTS AND RAISING OR LOWERING THE LOAD IN THE SOIL NAIL BAR. THE EQUIPMENT SHALL BE CALIBRATED WITH AN ACCURACY OF +/-2 PERCENT AND THE CALIBRATION CERTIFICATE AND GRAPHS SHALL BE AVAILABLE AT THE SITE. THE PRODUCTION GAGE SHALL HAVE GRADUATIONS OF 50 PSI OR LESS. A SECOND CERTIFIED GAGE SHALL BE MAINTAINED FOR PERIODIC VERIFICATION OF THE PRODUCTION GAGE. A MINIMUM OF THREE DIAL GAGES OR APPROVED DEVICE SHALL BE PROVIDED TO MEASURE TOTAL SOIL NAIL BAR ELONGATION AT EACH LOAD INCREMENT TO THE NEAREST 0.001 INCH. THE DIAL GAGES SHALL BE CAPABLE OF MEASURING THE ENTIRE SOIL NAIL MOVEMENT WITHOUT BEING RESET. CALIBRATION OF GAGES SHALL BE VERIFIED NO MORE THAN 30 CALENDAR DAYS PRIOR TO COMMENCING WORK AND AT SIX- MONTH INTERVALS THROUGHOUT THE PERIOD OF USE.
2. INSTALL TEST NAILS AT THE LOCATIONS SHOWN ON PLANS FOR VERIFICATION TESTING TO EVALUATE THE ULTIMATE PULLOUT RESISTANCE. LOAD THE VERIFICATION NAILS TO FAILURE OR TO THE ULTIMATE LOAD. ANY MODIFICATIONS TO THE LOCATION OF THE TEST NAILS SHALL BE APPROVED BY THE ENGINEER.
3. THE METHOD OF INSTALLATION AND SIZE OF DRILL HOLE FOR THE TEST NAILS SHALL BE THE SAME AS FOR PRODUCTION NAILS EXCEPT THE FINAL 3-FOOT LENGTH OF THE TEST NAILS SHALL NOT BE GROUTED. EACH TEST NAIL SHALL BE GROUTED IN PLACE AS PER THE CONTRACTOR'S PROPOSED GROUTING PROCESS FOR THE PRODUCTION NAILS. AFTER GROUTING, THE NAIL SHALL NOT BE LOADED FOR A MINIMUM OF 3 DAYS.
4. AFTER THE SOIL NAIL GROUT HAS REACHED SUFFICIENT STRENGTH, AS VERIFIED BY GROUT BREAK RESULTS, THE SOIL NAILS SHALL BE STRESSED. PRIOR TO STRESSING, SURFACES UPON WHICH THE STRESSING EQUIPMENT IS RESTING MUST BE CLEAN AND THE STRESSING EQUIPMENT SHALL BE ALIGNED WITH THE CENTER OF THE HOLE.
5. AN ALIGNMENT LOAD SHALL BE APPLIED TO THE SOIL NAIL PRIOR TO SETTING DIAL GAUGES. THE PROCESS OF STRESSING THE SOIL NAILS SHALL BE SO CONDUCTED THAT ACCURATE ELONGATION OF THE SOIL NAIL STEEL CAN AT ALL TIMES BE RECORDED AND COMPARED WITH THE ESTIMATED ELONGATION. ALL STRESSING SHALL BE DONE IN THE PRESENCE OF A REPRESENTATIVE OF THE ENGINEER. AT NO TIME DURING THE STRESSING AND TESTING OF A SOIL NAIL SHALL THE STRESSING EQUIPMENT BE DISCONNECTED FROM THE TEMPORARY STRESSING HEAD OR SOIL NAIL. VERIFICATION TESTS SHALL BE PERFORMED ACCORDING TO THE FOLLOWING SCHEDULE.

LOAD SCHEDULE IN VERIFICATION TESTS	
LOAD	**HOLD TIME (MINUTES)****
AL*	1
0.13 VTL	10 (RECORDED AT 1, 2, 4, 5, 10)
0.25 VTL	10 (RECORDED AT 1, 2, 4, 5, 10)
0.38 VTL	10 (RECORDED AT 1, 2, 4, 5, 10)
0.50 VTL	10 (RECORDED AT 1, 2, 4, 5, 10)
0.63 VTL	10 (RECORDED AT 1, 2, 4, 5, 10)
0.75 VTL (CREEP TEST)	60 (RECORDED AT 1, 2, 4, 5, 6, 10, 20, 30, 50, 60)
0.88 VTL	10
1.00 VTL	10
AL	1***

NOTES:
* AL = ALIGNMENT LOAD, SHALL BE LESS THAN OR EQUAL TO 0.025 X VERIFICATION TEST LOAD (VTL).
** SOIL MOVEMENT MUST BE MEASURED AFTER EACH LOAD INCREMENT HAS BEEN ACHIEVED AND AT EACH TIME STEP.
*** PERMANENT SOIL NAIL MOVEMENT MUST ALSO BE RECORDED.
**** RELOAD THE TEST NAILS TO FAILURE USING LOAD INCREMENT OF 25% OF VTL AND CONTINUE LOADING UNTIL FAILURE OR 90 PERCENT OF THE YIELD LOAD OF THE NAIL REINFORCEMENT, WHICHEVER IS EARLIER.

6. FIVE PERCENT OF PERMANENT NAILS SHALL BE PROOF TESTED TO THE REQUIRED PROOF TEST LOAD (PTL). NAILS TO BE PROOF TESTED ARE IDENTIFIED ON THE PLANS. PROOF TESTS SHALL BE PERFORMED ACCORDING TO THE FOLLOWING SCHEDULE.

LOAD SCHEDULE IN PROOF TESTS	
LOAD	**HOLD TIME (MINUTES)*****
AL*	1
0.17 PTL	UNTIL MOVEMENT STABILIZES
0.33 PTL	UNTIL MOVEMENT STABILIZES
0.50 PTL	UNTIL MOVEMENT STABILIZES
0.67 PTL	UNTIL MOVEMENT STABILIZES
0.83 PTL	UNTIL MOVEMENT STABILIZES
1.00 PTL (CREEP TEST)**	10 (RECORDED AT 1, 2, 3, 4, 5, 6, AND 10)
AL	1

NOTES:
* AL = ALIGNMENT LOAD, WHICH SHALL BE LESS THAN OR EQUAL TO 0.025 X PROOF TEST LOAD (PTL).
** IF THE NAIL MOVEMENT MEASURED BETWEEN 1 AND 10 MINUTES EXCEEDS 0.04 IN., PTL MUST BE MAINTAINED FOR 50 ADDITIONAL MINUTES AND MOVEMENTS MUST BE RECORDED AT 20, 30, 50, AND 60 MINUTES. THE PERMANENT SOIL MOVEMENT MUST ALSO BE RECORDED.
*** TIMES ARE MEASURED AFTER THE TARGET LOAD HAS BEEN ACHIEVED IN EACH INCREMENT.

7. ACCEPTANCE CRITERIA OF TEST SOIL NAILS
   - 7.1. VERIFICATION TESTS - A TEST NAIL SHALL BE CONSIDERED ACCEPTABLE WHEN ALL OF THE FOLLOWING CRITERIA ARE MET:
     - 7.1.1. THE TOTAL CREEP MOVEMENT IS LESS THAN 0.08 IN. BETWEEN THE 6- AND 60-MINUTE READINGS, AND THE CREEP RATE IS LINEAR OR DECREASING THROUGHOUT THE CREEP TEST LOAD HOLD PERIOD;
     - 7.1.2. THE TOTAL MOVEMENT MEASURED AT VTL EXCEEDS 80 PERCENT OF THE THEORETICAL ELASTIC ELONGATION OF THE UNBONDED LENGTH OF THE TEST NAIL; AND:
     - 7.1.3. PULLOUT DOES NOT OCCUR BEFORE ACHIEVING 1.0 × VTL.
   - 7.2. PROOF TESTS - A PROOF TEST SHALL BE CONSIDERED ACCEPTABLE WHEN ALL OF THE FOLLOWING CRITERIA ARE MET:
     - 7.2.1. THE CREEP MOVEMENT BETWEEN THE 1- AND THE 10-MINUTE READINGS IS LESS THAN 0.04 IN.
     - 7.2.2. IN CASES WHEN THE CREEP MOVEMENT BETWEEN THE 1- AND THE 10-MINUTE READINGS IS GREATER THAN 0.04 IN., THE CREEP MOVEMENT BETWEEN THE 6- AND THE 60-MINUTE READINGS IS LESS THAN 0.08 IN., AND THE CREEP RATE IS LINEAR OR DECREASING THROUGHOUT THE CREEP TEST LOAD HOLD PERIOD.
     - 7.2.3. THE TOTAL SOIL NAIL MOVEMENT MEASURED AT PTL EXCEEDS 80 PERCENT OF THE THEORETICAL ELASTIC ELONGATION OF THE UNBONDED LENGTH.
     - 7.2.4. PULLOUT DOES NOT OCCUR BEFORE THE TEST LOAD IS 1.0 X PTL.
     - 7.2.5. THE TEMPORARY UNBONDED TEST LENGTH IN PROOF TESTS IS SUCCESSFULLY MAINTAINED FOR SUBSEQUENT SATISFACTORY GROUTING.
8. RE-USE OF TEST NAILS - VERIFICATION TEST NAILS SHALL BE CUT-OFF FLUSHED WITH THE WALL FACE OR THE FACE OF THE FIRST LAYER OF SHOTCRETE AND THE UNBONDED LENGTH FULLY GROUTED. VERIFICATION TEST NAILS SHALL NOT BE USED AS PRODUCTION NAILS.

N. WALL DRAINAGE NETWORK

ALL ELEMENTS OF THE SOIL NAIL WALL DRAINAGE NETWORK SHALL BE INSTALLED AND SECURED AS SHOWN ON THE PLANS. THE DRAINAGE NETWORK SHALL CONSIST OF GEO-COMPOSITE DRAIN STRIPS, WEEPHOLES, PVC AND HDPE CONNECTION PIPES, HDPE COLLECTOR UNDERDRAINS, HDPE COLLECTOR PIPES, AND DRAIN BASINS AS SHOWN ON THE PLANS. THE DRAINAGE NETWORK SHALL PROVIDE A CONTINUOUS AND UNRESTRICTED FLOW PATH TO DISCHARGE THE WATER COLLECTED BEHIND THE WALL FACE. EXCLUSIVE OF THE COLLECTOR UNDERDRAIN AND COLLECTOR PIPE, ALL ELEMENTS OF THE DRAINAGE NETWORK SHALL BE INSTALLED PRIOR TO SHOTCRETING. GEO-COMPOSITE DRAIN STRIPS SHALL BE CENTERED BETWEEN THE COLUMNS OF SOIL NAILS AS SHOWN ON THE PLANS. STRIPS SHALL BE SECURED TO THE WALL OR THE EXCAVATION FACE.

O. SHOTCRETE

1. SHOTCRETE FOR INITIAL AND FINAL FACING SHALL BE PROVIDED AS SPECIFIED HEREIN. WHERE SHOTCRETE IS USED TO COMPLETE THE TOP UNGROUTED ZONE OF THE SOIL NAIL DRILL HOLE NEAR THE FACE, THE NOZZLE SHALL BE POSITIONED INTO THE MOUTH OF THE DRILL HOLE TO COMPLETELY FILL THE VOID.
2. WHERE SHOTCRETE FACING WILL BE PERMANENTLY EXPOSED, PROVIDE TROWEL FINISHED FACING. THE EXPOSED PORTION OF THE FACING SHALL BE STAINED TO MATCH THE COLOR OF THE EXISTING BLOCK WALL.
3. SAW-CUT VERTICAL CONTROL JOINTS BETWEEN SOIL NAILS AT A MAXIMUM SPACING OF 40 FEET ON-CENTER.
4. CONSTRUCTION TOLERANCES FOR THE SHOTCRETE FACING FROM PLAN LOCATION AND PLAN DIMENSIONS SHALL BE AS FOLLOWS:

SHOTCRETE FACING ITEM	**TOLERANCE**
HORIZONTAL LOCATION OF WELDED WIRE MESH, REINFORCING BARS, AND HEADED STUDS	3/8 IN.
LOCATION OF HEADED STUDS ON BEARING PLATE	1/4 IN.
SPACING BETWEEN REINFORCING BARS	1 IN.
REINFORCING LAP	1 IN.
THICKNESS OF SHOTCRETE, IF TROWELED OR SCREEDED	9/16 IN.
THICKNESS OF SHOTCRETE, IF LEFT AS SHOT	1-1/8 IN.
PLANENESS OF FINISH-FACE SURFACE, GAP UNDER 10-FT STRAIGHTEDGE, IF TROWELED OR SCREEDED	9/16 IN.
PLANENESS OF FINISH-FACE SURFACE, GAP UNDER 10-FT STRAIGHTEDGE, IF LEFT AS SHOT	1-1/8 IN.
NAIL HEAD BEARING PLATE DEVIATION FROM PARALLEL TO WALL FACE	10 DEGRESS

P. GRADING AND STABILIZATION

1. REMOVE THE ACCUMULATED SEDIMENT WITHIN THE INLET I-19 AND THE OUTFALL PIPE EXITING FROM THE INLET. THE REMOVED SEDIMENT SHALL BE DISPOSED OFF-SITE. THIS WORK SHALL BE INCLUDED WITH PHASE I PORTION OF THE CONSTRUCTION.
2. GRADE ANY DISTURBED AREA AND THE AREA BETWEEN AND AROUND THE RETAINING WALLS AS SHOWN ON PLAN. USE STABILIZATION METHODS AND MATERIALS AS SHOWN ON THE PLANS.
3. PROTECT EXISTING INCLINOMETERS FROM ANY DAMAGE DURING CONSTRUCTION. REPLACE ANY INCLINOMETERS DAMAGED DURING CONSTRUCTION WITHIN SEVEN DAYS.
4. FOR THE INCLINOMETERS DESIGNATED AS "NON-FUNCTIONING AND TO BE ABANDONED" ON THE PLANS, REMOVE THE CONCRETE BASE, PROTECTING CASING, AND INCLINOMETER CASING TO ONE FOOT BELOW THE SURFACE. FILL THE REMAINING CASING WITH FLOWABLE FILL OR GROUT.
5. FOR TYPE I STABILIZATION, PLACE AND COMPACT CLAYEY SOIL LAYER TO MINIMUM 92 PERCENT OF MAXIMUM DRY DENSITY PER ASTM D698 USING WALK BEHIND SHEEP'S FOOT ROLLER. MAINTAIN THE MOISTURE CONTENT OF THE LOOSE SOILS WITHIN 2 TO 4 PERCENT OF THE OPTIMUM MOISTURE CONTENT AS PER ASTM D698.
6. PLACE AND COMPACT THE CR-6 LAYER BY APPLYING A MINIMUM OF THREE PASSES OF A SMOOTH DRUM WALK BEHIND VIBRATORY ROLLER.
7. DO NOT USE HEAVY COMPACTION OR HEAVY EARTH MOVING EQUIPMENT WITHIN 10 FEET OF TOP OF THE RETAINING WALLS, INCLUDING THE TOE WALL.
8. FOR TYPE II STABILIZATION, GRADE ANY WORK AREA OR DISTURBED AREA TO MATCH EXCISING GRADE AND SPREAD A MINIMUM OF 4 INCHES OF TOPSOIL. APPLY SEED, MULCH, FERTILIZER, AND LIME AS SPECIFIED HEREIN AND ON THE PLANS.
9. PROVIDE POSITIVE CONTROL AND DISCHARGE OF ALL SURFACE WATER THAT WILL AFFECT THE WORK AREA AND CONSTRUCTION. MAINTAIN ALL PIPES OR CONDUITS USED TO CONTROL SURFACE WATER DURING CONSTRUCTION. REPAIR DAMAGE CAUSED BY SURFACE WATER AT NO ADDITIONAL COST. UPON SUBSTANTIAL COMPLETION OF THE STABILIZATION WORK, REMOVE ALL TEMPORARY SURFACE WATER CONTROL PIPES OR CONDUITS FROM THE SITE.

PART 5 - DESIGN CRITERIA

FOR HOLLOW BAR ANCHOR SOIL NAILS								
NAIL TYPE	NAIL LENGTH (FT.)	INCLINATION BELOW HORIZONTAL (DEG.)	REINFORCEMENT	MINIMUM BORE DIAMETER (IN.)	DESIGN ULTIMATE GROUT BODY TO GROUND BOND (KIPS/L. FT.)	PROOF TEST LOAD (KIPS)	VERIFICATION TEST NAIL: LENGTH (FT.)	VERIFICATION TEST NAIL: VERIFICATION TEST LOAD (KIPS)
SOIL NAIL S-1	55	20	HBA 30/11	5½	2	58	30	53
SOIL NAIL S-2	55	20	HBA 40/20	6	2	78	45	86
SOIL NAIL S-2A	60	20	HBA 40/20	6	2	78	45	86
STRUT NAIL S-3	45	70	HBA 40/20	6	2	67	45	86

ALTERNATE: SOLID BAR ANCHOR SOIL NAILS									
NAIL TYPE	NAIL LENGTH (FT.)	INCLINATION BELOW HORIZONTAL (DEG.)	REINFORCEMENT	MINIMUM BORE DIAMETER (IN.)	DESIGN ULTIMATE GROUT BODY TO GROUND BOND (KIPS/L. FT.)	PROOF TEST LOAD (KIPS)	VERIFICATION TEST NAIL: LENGTH (FT.)	VERIFICATION TEST NAIL: VERIFICATION TEST LOAD (KIPS)	VERIFICATION TEST NAIL: REINFORCEMENT
SOIL NAIL S-1	55	20	#9 BAR	5½	2	58	55	104	#14 BAR
SOIL NAIL S-2	55	20	#10 BAR	6	2	78	55	104	#14 BAR
SOIL NAIL S-2A	60	20	#10 BAR	6	2	78	55	104	#14 BAR
STRUT NAIL S-3	45	70	#10 BAR	6	2	67	45	86	#14 BAR

PART 6 - SPECIAL INSPECTIONS

A. THE OWNER WILL RETAIN THE ENGINEER TO PROVIDE SPECIAL INSPECTIONS AND CONSTRUCTION OBSERVATION AND TESTING SERVICES FOR THE WORK.

B. SPECIAL INSPECTIONS FOR CONCRETE AND GROUT SHALL CONFORM TO IBC SECTION 1704.4, TABLE 1704.4, AND INCLUDE THE OBSERVATION AND VERIFICATION OF THE FOLLOWING:

1. THE SIZE, LOCATION, AND SPLICING OF REINFORCING STEEL PRIOR TO SHOTCRETE PLACEMENT.
2. PROVIDE STRENGTH TESTING AT 3 AND 28 DAYS OF THE SHOTCRETE CORE IN ACCORDANCE WITH ACI 506. THE CONTRACTOR SHALL FABRICATE AN 8-INCH DEEP AND 18-INCH SQUARE TEST PANEL DURING PRE-CONSTRUCTION TRIAL AND DURING THE FIRST PRODUCTION APPLICATION OF SHOTCRETE AND THEREAFTER FOR EVERY ADDITIONAL 50 CUBIC YARDS PLACED, OR FOR EACH DAY OF SHOTCRETE PRODUCTION, WHICHEVER IS MORE FREQUENT. THE PANELS SHALL BE SHOT IN THE SAME ORIENTATION AS THE PRODUCTION SHOTCRETE. THE CONTRACTOR SHALL CORE THE PANELS IN THE PRESENCE OF A REPRESENTATIVE OF THE ENGINEER TO PROVIDE SAMPLES FOR LABORATORY TESTING.
3. TEST NAIL GROUT IN ACCORDANCE WITH ASTM C109 AT A FREQUENCY OF NO LESS THAN ONE TEST EVERY 10 CUBIC YARDS OR ONE TEST PER FIVE NAILS, OR AT LEAST ONE TEST PER DAY GROUT IS PLACED.
4. SAMPLE AND TEST SHOTCRETE AT A FREQUENCY OF AT LEAST ONE TEST PER DAY SHOTCRETE IS PLACED AND THEREAFTER FOR EVERY ADDITIONAL 25 CUBIC YARDS PLACED.
5. GROUTING AND SHOTCRETE PLACEMENT FOR PROPER PLACEMENT/APPLICATION.

C. OBSERVE DRILLING OPERATIONS AND MAINTAIN RECORDS FOR EACH SOIL NAIL INCLUDING HOLE ANGLE, ELEVATION, AND SOIL TYPE. VERIFY THAT CORE STEEL MATERIALS, SIZES, AND LENGTHS COMPLY WITH THE REQUIREMENTS.

D. OBSERVE AND TEST PLACEMENT AND COMPACTION OF THE SOIL AND AGGREGATE, CONCRETE, AND DRAINAGE STRUCTURES.

E. OBSERVE AND VERIFY THE INSTALLATION OF ADDITIONAL BLOCKS TO RAISE TOP OF WALLS.

APPROVED: DEPARTMENT OF PLANNING AND ZONING
[signature]
DIRECTOR 7-18-22
Date

APPROVED: DEPARTMENT OF PLANNING AND ZONING

[signature] For: [initials] 7/7/22
CHIEF, DEVELOPMENT ENGINEERING DIVISION [initials] DATE

[signature] 7/18/22
CHIEF, DIVISION OF LAND DEVELOPMENT [initials] DATE

DATE	REVISIONS

MD PROFESSIONAL CERTIFICATION:
I HEREBY CERTIFY THAT THESE DOCUMENTS WERE PREPARED OR APPROVED BY ME, AND THAT I AM A DULY LICENSED PROFESSIONAL ENGINEER UNDER THE LAWS OF THE STATE OF MARYLAND, LICENSE NO. 24495, EXPIRATION DATE: 10/30/23.

SHEET: **SDP-23**

GEO-TECHNOLOGY ASSOCIATES, INC.
GEOTECHNICAL AND ENVIRONMENTAL CONSULTANTS
14280 PARK CENTER DRIVE, SUITE A
LAUREL, MARYLAND 20707
(410) 792-9446 OR (301) 470-4470
www.gtaeng.com

© Geo-Technology Associates, Inc.

7351 COCA COLA DRIVE
HOWARD COUNTY, MARYLAND

STRUCTURAL STABILIZATION - PHASE I
GENERAL NOTES

PROJECT: 191319x2	DATE: 01/10/2022	SCALE: AS SHOWN	DESIGN BY: AFV	REVIEW BY: RPM	SHEET: 23 OF 32

SDP-04-147

This portion of the access road will be closed during construction and will be available for the contractor to access the site

Existing Riprap to be removed prior to construction and replaced after regrading

Approximate RW #1 Geogrid Zone

Proposed Swale Center Line (typ.), See Detail, Sheet SDP-32

RW #1 STA. 0+00

Toe Wall STA. 0+00

Proposed Clean Out (Typ.)

Minimum limits of Type I Stabilization

Proposed Top of Toe Wall

Proposed Bottom of Toe Wall

Disturbed and regraded areas in front of and below the Toe Wall to be stabilized with Type II Stabilization

Approximate Limits of Existing Public SWM, Drainage, and Utility Easement

Existing trees to be removed and disposed off (typ.)

Phase I | Phase II

PREVIOUSLY APPROVED APRIL 2023

This portion of the access road will be closed during construction and will be available for the contractor to access the site

Approximate RW #2 Geogrid Zone

RW #2 STA. 2+64

Proposed Swale Center Line (Typ.) 4'-wide and minimum 6"-deep See Detail, Sheet SDP-32

Existing Inlet I-19

Drainage piping to be installed as part of Phase II construction

Approximate location of existing 12" RCP. Remove sediments from the inlet and pipe

RW#1 STA. 2+66

Toe Wall STA. 2+75

Drainage piping to be installed as part of Phase II construction

Existing Riprap Channel

Toe Wall STA. 1+60

15" diam. Reinforced Concrete Pipe

Flared Concrete End Section ES-50 See Detail D-5.51, Sheet SDP-32

Discharge to Surface at Existing Riprap Channel Inv. El. 85.4

Inlet I-51 Precast 48" Manhole, Top of Manhole El. 99.5 See Detail G-5.12, Sheet SDP-32

Inlet I-52 Nyloplast 24" Drain Basin, Top of Basin El. 102.0

Inlet I-53 Nyloplast 30" Drain Basin Top of Basin El. 121.9

Inlet I-54 Nyloplast 18" Drain Basin Top of Basin El. 138.8

Inlet I-55 Nyloplast 24" Drain Basin Top of Basin El. 118

Nyloplast 18" Drain Basin Top of Basin El. 135.2

4" diam. PVC Pipe Extend through the wall and connect to downspout

Downspout 4"x12" Discharge to Surface

Riprap 5' long x 4' wide x 12" thick (3" to 6" size stone placed on filter fabric)

8" diam. PVC Pipe, Extend through the wall and connect to downspout. See Detail, Sheet SDP-32

Downspout 4"x12", Extend and Connect to 8" HDPE Pipe

Legend

GTA-1	Identification and approximate location of Standard Penetration Test (SPT) borings performed by GTA in October and November of 2019
(INC) / (MW)	Indicates boring location where an inclinometer / monitoring well was installed and is still functional based on GTA's survey from April 4, 2021
~~(INC)~~	Indicates existing non-functioning inclinometers to be cutoff at the ground surface and abandoned by grouting in place
INC-1	Identification and approximate location of inclinometer installed by Hillis-Carnes Engineering, Inc. (HCEA) in July of 2019
A A'	Cross Section Line
F-1	Approximate location of existing Flute Hole
	Existing tree to be removed and disposed
	Existing 1' Contour
	Existing 5' Contour
	Proposed 1' Contour
	Proposed 5' Contour
X141	Proposed Top of Wall Spot Grades
	Proposed Clean Out

Notes

1. Base map was adapted from the electronic site plan provided by MRA via their topographic survey.
2. Exploration locations were selected by GTA and Borings GTA-4 through GTA-11 were field-located by MRA using an instrumented survey. Borings GTA-1 through GTA-3, and hand auger explorations, were field-located by GTA using approximate tape measurements from existing site features and the staked locations of the other borings. Exploration locations should be considered accurate only to the degree implied by the method used.
3. The observed flute holes (numbered as F-1 through F-7) were approximately field-located by GTA using approximate tape measurements from existing site features.

0 10 20

Approximate Scale
1 inch = 10 feet

APPROVED: DEPARTMENT OF PLANNING AND ZONING

DIRECTOR	Lynda Eisenberg	6/27/23 DATE
CHIEF, DEVELOPMENT ENGINEERING DIVISION	JP	6-22-23 DATE
CHIEF, DIVISION OF LAND DEVELOPMENT	BL	6/27/23 DATE

DATE	REVISIONS
05/05/2023	6 Redlines
6-22-2023	PHASE 1 WAS PREVIOUSLY APPROVED UNDER A SEPARATE REDLINE APRIL 2023. PHASE 2 APPROVED UNDER THIS REDLINE MAY 25, 2023

MD PROFESSIONAL CERTIFICATION:

I HEREBY CERTIFY THAT THESE DOCUMENTS WERE PREPARED OR APPROVED BY ME, AND THAT I AM A DULY LICENSED PROFESSIONAL ENGINEER UNDER THE LAWS OF THE STATE OF MARYLAND, LICENSE NO. 24495, EXPIRATION DATE: 10/30/23.

STATE OF MARYLAND · ROBERT PAUL MYERS · 24495 · PROFESSIONAL ENGINEER

GEO-TECHNOLOGY ASSOCIATES, INC.
GEOTECHNICAL AND ENVIRONMENTAL CONSULTANTS
14280 PARK CENTER DRIVE, SUITE A
LAUREL, MARYLAND 20707
(410) 792-9446 OR (301) 470-4470
www.gtaeng.com

© Geo-Technology Associates, Inc.

Patapsco Valley Business Center
7351 COCA COLA DRIVE
HOWARD COUNTY, MARYLAND

STRUCTURAL STABILIZATION - PHASE II SITE PLAN

PROJECT: 191319x2	DATE: 01/10/2022	SCALE: 1" = 10'	DESIGN BY: AFV	REVIEW BY: RPM	SHEET: 24 OF 32

SHEET: SDP-24

SDP-04-147

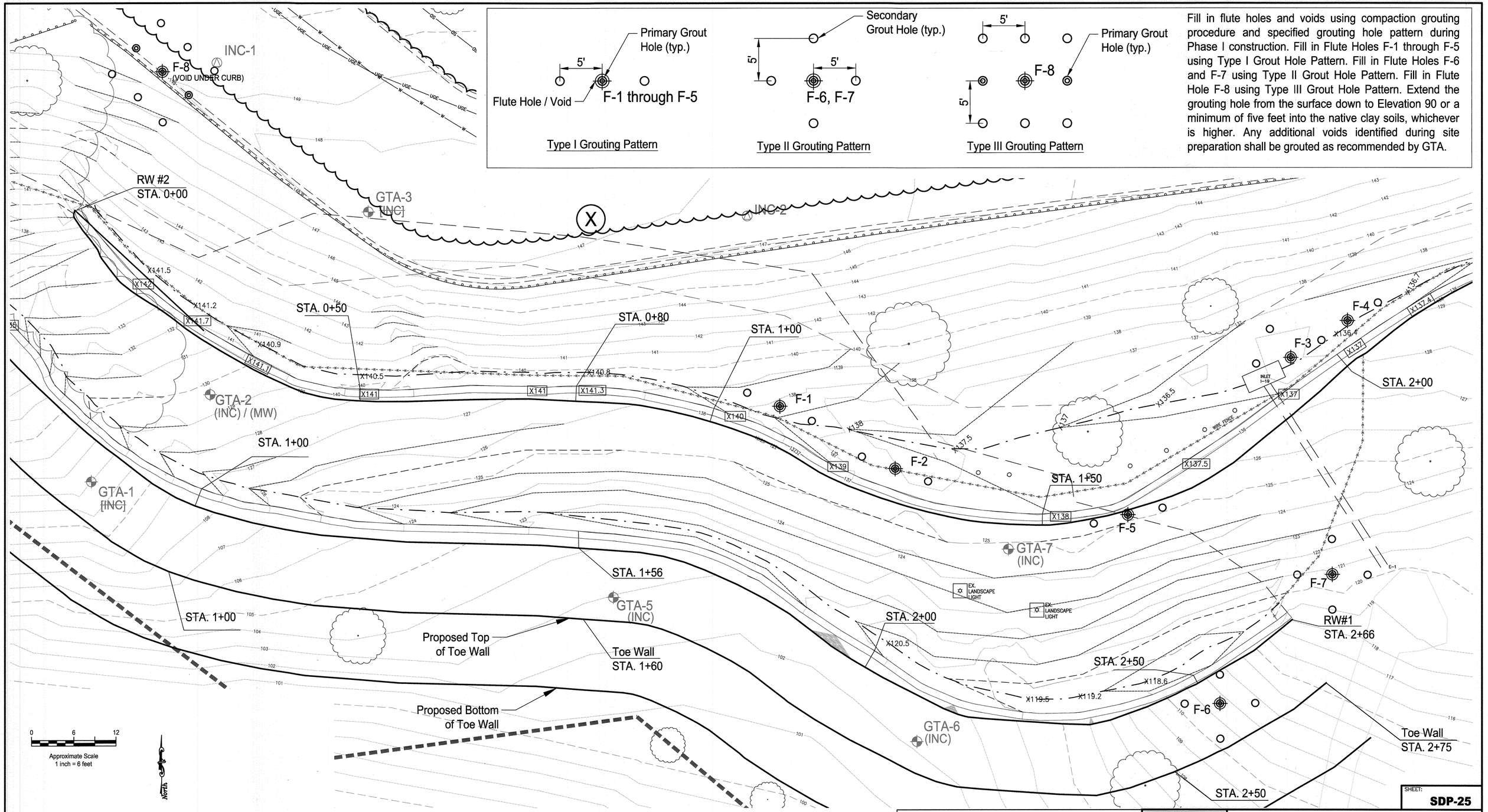

Fill in flute holes and voids using compaction grouting procedure and specified grouting hole pattern during Phase I construction. Fill in Flute Holes F-1 through F-5 using Type I Grout Hole Pattern. Fill in Flute Holes F-6 and F-7 using Type II Grout Hole Pattern. Fill in Flute Hole F-8 using Type III Grout Hole Pattern. Extend the grouting hole from the surface down to Elevation 90 or a minimum of five feet into the native clay soils, whichever is higher. Any additional voids identified during site preparation shall be grouted as recommended by GTA.

Notes

1. Base map was adapted from the electronic site plan provided by MRA via their topographic survey.
2. Exploration locations were selected by GTA and Borings GTA-4 through GTA-11 were field-located by MRA using an instrumented survey. Borings GTA-1 through GTA-3, and hand auger explorations, were field-located by GTA using approximate tape measurements from existing site features and the staked locations of the other borings. Exploration locations should be considered accurate only to the degree implied by the method used.
3. The observed flute holes (numbered as F-1 through F-8) were approximately field-located by GTA using approximate tape measurements from existing site features.

Legend

GTA-1	Identification and approximate location of Standard Penetration Test (SPT) borings performed by GTA in October and November of 2019
(INC) / (MW)	Indicates boring location where an inclinometer / monitoring well was installed and is still functional based on GTA's survey from April 4, 2021
~~[INC]~~	Indicates existing non-functioning inclinometers to be cutoff at the ground surface and abandoned by grouting in place
INC-1	Identification and approximate location of inclinometer installed by Hillis-Carnes Engineering, Inc. (HCEA) in July of 2019
	Existing 1' Contour
	Existing 5' Contour
	Proposed 1' Contour
	Proposed 5' Contour
X141	Proposed Top of Wall Spot Grades
F-1	Approximate location of existing Flute Hole
	Proposed primary grout hole
	Proposed secondary grout hole

APPROVED: DEPARTMENT OF PLANNING AND ZONING

DIRECTOR — DATE 6/27/23

CHIEF, DEVELOPMENT ENGINEERING DIVISION — DATE 6-22-23

CHIEF, DIVISION OF LAND DEVELOPMENT — DATE 6/27/23

DATE	REVISIONS
05/05/2023	6 Redlines
6-22-2023	PHASE I WAS PREVIOUSLY APPROVED UNDER A SEPARATE REDLINE APRIL 2023. PHASE 2 APPROVED UNDER THIS REDLINE MAY 25, 2023.

MD PROFESSIONAL CERTIFICATION:

I HEREBY CERTIFY THAT THESE DOCUMENTS WERE PREPARED OR APPROVED BY ME, AND THAT I AM A DULY LICENSED PROFESSIONAL ENGINEER UNDER THE LAWS OF THE STATE OF MARYLAND, LICENSE NO. 24495, EXPIRATION DATE: 10/30/23.

STATE OF MARYLAND — RICHARD P. MAYER — 24495 — PROFESSIONAL ENGINEER

GEO-TECHNOLOGY ASSOCIATES, INC.
GEOTECHNICAL AND ENVIRONMENTAL CONSULTANTS
14280 PARK CENTER DRIVE, SUITE A
LAUREL, MARYLAND 20707
(410) 792-9446 OR (301) 470-4470
www.gtaeng.com

© Geo-Technology Associates, Inc.

Patapsco Valley Business Center
7351 COCA COLA DRIVE
HOWARD COUNTY, MARYLAND

STRUCTURAL STABILIZATION - PHASE II
FLUTE HOLE GROUTING PLAN

PROJECT: 191319x2	DATE: 01/10/2022	SCALE: 1" = 6'	DESIGN BY: AFV	REVIEW BY: RPM	SHEET: 25 OF 32

SHEET: **SDP-25**

SDP-04-147

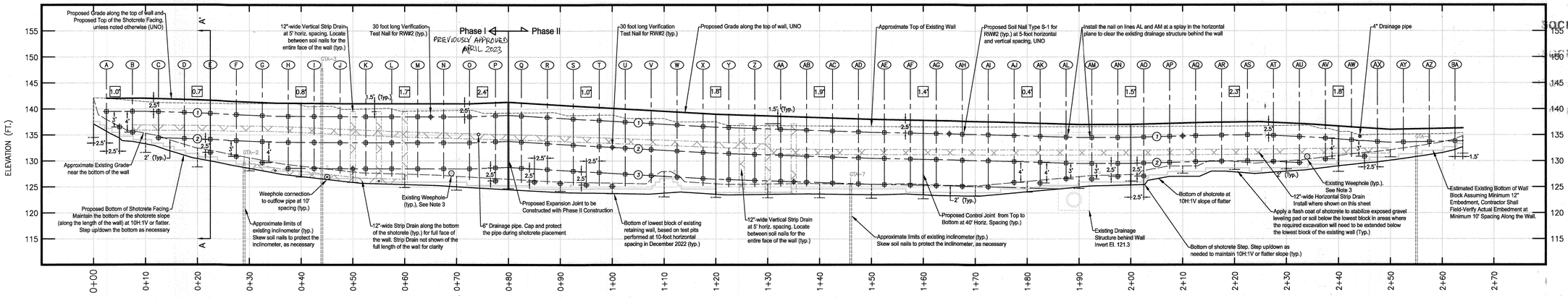

RETAINING WALL #2 ELEVATION

HORIZONTAL/VERTICAL SCALE: 1" = 10'

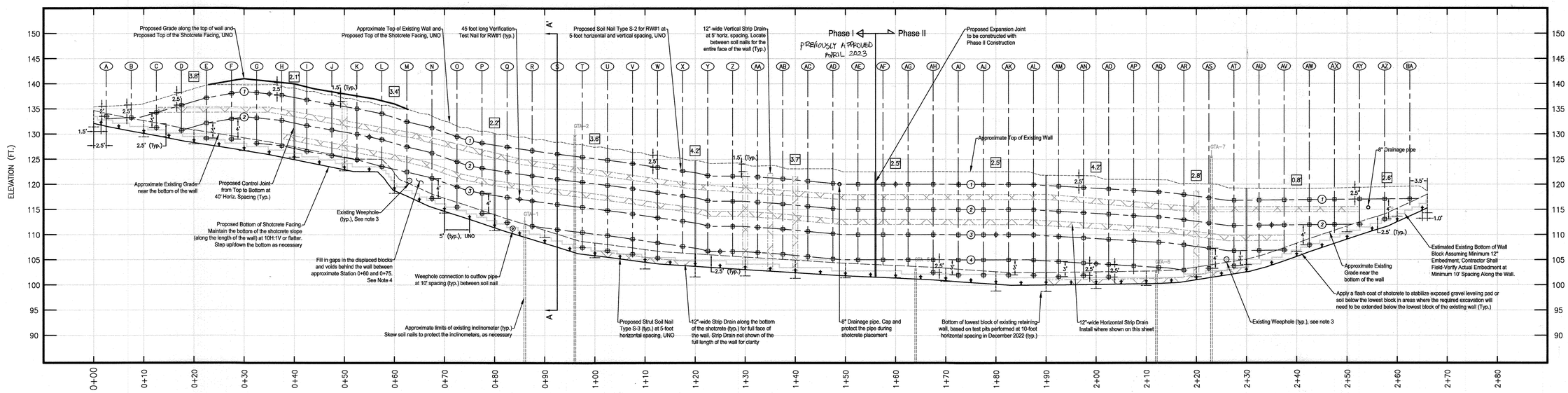

RETAINING WALL #1 ELEVATION

HORIZONTAL/VERTICAL SCALE: 1" = 10'

PROOF TEST NAIL LOCATIONS	
WALL# / NAIL	TEST NAIL LOCATION
RW#2 / S-1	C-1, L-2, O-3
RW#1 / S-2	G-1, K-3, T-4, W-2, AB-1, AD-3
RW#1 (STRUT NAILS) / S-3	F .5, AA .5
TOE WALL / S-2	D-1, H-2, R-1, AC-2

PROOF TEST NAIL LOCATIONS (PHASE II)	
WALL# / NAIL	TEST NAIL LOCATION
RW#2 / S-1	T-2, AF-3, AR-1
RW#1 / S-2	AH-3, AL-1, AP-4, AU-2
RW#1 (STRUT NAILS) / S-3	AU .5
TOE WALL / S-2	AL-1, AX-2

Notes

1. Sections were drawn based on the topographic survey performed by Morris & Ritchie Associates, Inc. in October of 2019 and the topographic contours and site development details shown on the available plans, Sections should be considered approximate.
2. The explorations that are not located on the subsurface section line shown in plan view have been projected onto the section views. Exploration locations should be considered approximate.
3. Expose and clean existing weep holes for RW#1 and RW#2 and fill them with folded layers of non-woven geotextile reamed in to create a barrier for soil loss. Place a 12"-wide strip of drainage mat vertically to cover the weephole and extend it down to bottom layer of drainage strip. Weepholes are believed to be present at nominal 20-foot spacing along both of the walls. These elevations only show weepholes which were above grade and were readily visible. Additional weepholes are present below the existing grade.
4. The wall block units have experienced displacement and wash out of backfill soils between approximate Stations 0+60 and 0+75. Form a temporary bulkhead at the face of the wall and pump flowable fill to completely fill the voids and the gaps at the face of the wall.

Legend

- GTA-1 — Approximate horizontal location of Standard Penetration Test (SPT) borings performed by GTA in October and November of 2019.
- A A' — Cross Section Line
- 4.2' — Approximate batter of retaining wall face, measured by GTA personnel on December 28, 2019, using a tape measure and 4-foot to 6-foot bubble levels.
- Soil Nail
- Verification Test Nail
- Strut Nail
- Existing Top of Wall and Proposed Top of the Shotcrete Facing, unless proposed grades are planned along the top of the wall
- Existing approximate grades near the bottom of the wall
- Proposed Top of Wall and Proposed Top of the Shotcrete Facing, unless noted otherwise (UNO)
- Proposed Bottom of the Shotcrete Facing

0 10 20

Approximate Scale
1 inch = 10 feet

APPROVED: DEPARTMENT OF PLANNING AND ZONING

Lynda Eisenberg — 6/27/23
DIRECTOR — DATE

6-22-23
CHIEF, DEVELOPMENT ENGINEERING DIVISION JP — DATE

6/27/23
CHIEF, DIVISION OF LAND DEVELOPMENT — DATE

DATE	REVISIONS
05/05/2023	6 Redlines
6-22-2023	PHASE 1 WAS PREVIOUSLY APPROVED
	UNDER A SEPARATE REDLINE APRIL
	2023. PHASE 2 APPROVED UNDER
	THIS REDLINE MAY 25, 2023.

MD PROFESSIONAL CERTIFICATION:

I HEREBY CERTIFY THAT THESE DOCUMENTS WERE PREPARED OR APPROVED BY ME, AND THAT I AM A DULY LICENSED PROFESSIONAL ENGINEER UNDER THE LAWS OF THE STATE OF MARYLAND, LICENSE NO. 24495, EXPIRATION DATE: 10/30/23.

STATE OF MARYLAND — ANDRA P. MARTIN — 24495 — PROFESSIONAL ENGINEER

GEO-TECHNOLOGY ASSOCIATES, INC.
GEOTECHNICAL AND ENVIRONMENTAL CONSULTANTS
14280 PARK CENTER DRIVE, SUITE A
LAUREL, MARYLAND 20707
(410) 792-9446 OR (301) 470-4470
www.gtaeng.com

© Geo-Technology Associates, Inc.

Patapsco Valley Business Center
7351 COCA COLA DRIVE
HOWARD COUNTY, MARYLAND

STRUCTURAL STABILIZATION - PHASE II
RW #1 AND #2 ELEVATIONS

PROJECT: 191319x2	DATE: 01/10/2022	SCALE: 1" = 10'	DESIGN BY: AFV	REVIEW BY: RPM	SHEET: 26 OF 32

SHEET: **SDP-26**

SDP-04-0147

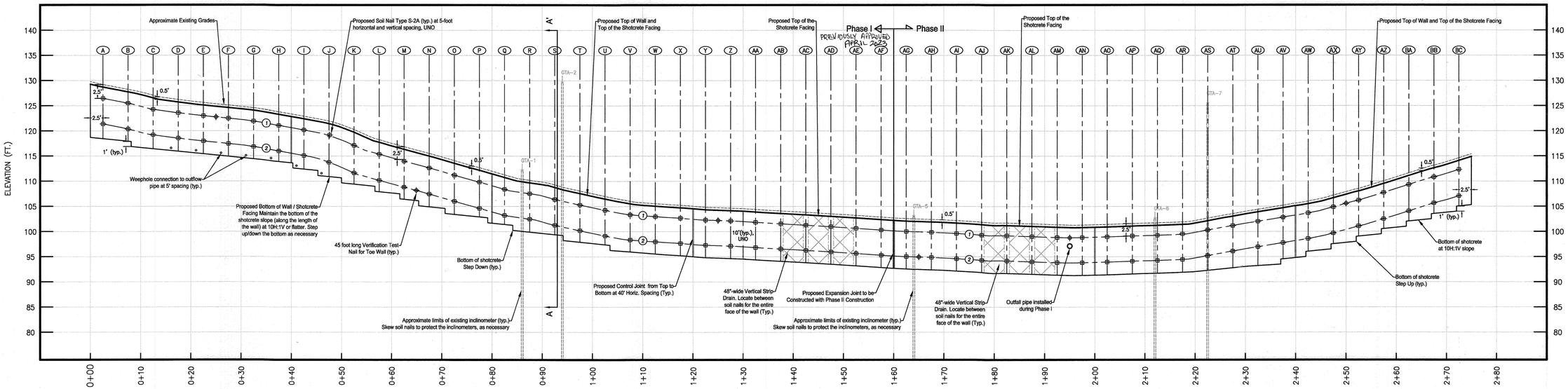

TOE WALL ELEVATION

HORIZONTAL/VERTICAL SCALE: 1" = 10'

PROOF TEST NAIL LOCATIONS	
WALL# / NAIL	TEST NAIL LOCATION
RW#2 / S-1	C-1, L-2, O-3
RW#1 / S-2	G-1, K-3, T-4, W-2, AB-1, AD-3
RW#1 (STRUT NAILS) / S-3	F .5, AA .5
TOE WALL / S-2	D-1, H-2, R-1, AC-2

PROOF TEST NAIL LOCATIONS (PHASE II)	
WALL# / NAIL	TEST NAIL LOCATION
RW#2 / S-1	T-2, AF-3, AR-1
RW#1 / S-2	AH-3, AL-1, AP-4, AU-2
RW#1 (STRUT NAILS) / S-3	AU .5
TOE WALL / S-2	AL-1, AX-2

Notes

1. Sections were drawn based on the topographic survey performed by Morris & Ritchie Associates, Inc. in October of 2019 and the topographic contours and site development details shown on the available plans, Sections should be considered approximate.
2. The explorations that are not located on the subsurface section line shown in plan view have been projected onto the section views. Exploration locations should be considered approximate.

Legend

- GTA-1 — Approximate horizontal location of Standard Penetration Test (SPT) borings performed by GTA in October and November of 2019.
- A A' — Cross Section Line
- Soil Nail
- Verification Test Nail
- Approximate Existing Grades above Proposed Toe Wall
- Proposed Top of Wall and Shotcrete Facing
- Proposed Bottom of Wall and Shotcrete Facing

0 10 20
Approximate Scale
1 inch = 10 feet

APPROVED: DEPARTMENT OF PLANNING AND ZONING
DIRECTOR — DATE 6/27/23
CHIEF, DEVELOPMENT ENGINEERING DIVISION — DATE 6-22-23
CHIEF, DIVISION OF LAND DEVELOPMENT — DATE 6/27/23

DATE	REVISIONS
05/05/2023	1 Redlines
6-22-2023	PHASE I WAS PREVIOUSLY APPROVED
	UNDER A SEPARATE REDLINE APRIL
	2023. PHASE 2 APPROVED UNDER
	THIS REDLINE MAY 25, 2023.

MD PROFESSIONAL CERTIFICATION:

I HEREBY CERTIFY THAT THESE DOCUMENTS WERE PREPARED OR APPROVED BY ME, AND THAT I AM A DULY LICENSED PROFESSIONAL ENGINEER UNDER THE LAWS OF THE STATE OF MARYLAND, LICENSE NO. 24495, EXPIRATION DATE: 10/30/23.

STATE OF MARYLAND — ROBERT PAUL MCCARTY — 24495 — PROFESSIONAL ENGINEER

GEO-TECHNOLOGY ASSOCIATES, INC.
GEOTECHNICAL AND ENVIRONMENTAL CONSULTANTS
14280 PARK CENTER DRIVE, SUITE A
LAUREL, MARYLAND 20707
(410) 792-9446 OR (301) 470-4470
www.gtaeng.com

© Geo-Technology Associates, Inc.

Patapsco Valley Business Center
7351 COCA COLA DRIVE
HOWARD COUNTY, MARYLAND

STRUCTURAL STABILIZATION - PHASE II
TOE WALL ELEVATION

PROJECT: 191319x2	DATE: 01/10/2022	SCALE: 1" = 10'	DESIGN BY: AFV	REVIEW BY: RPM	SHEET: 27 OF 32

SHEET: **SDP-27**

SDP-04-0147

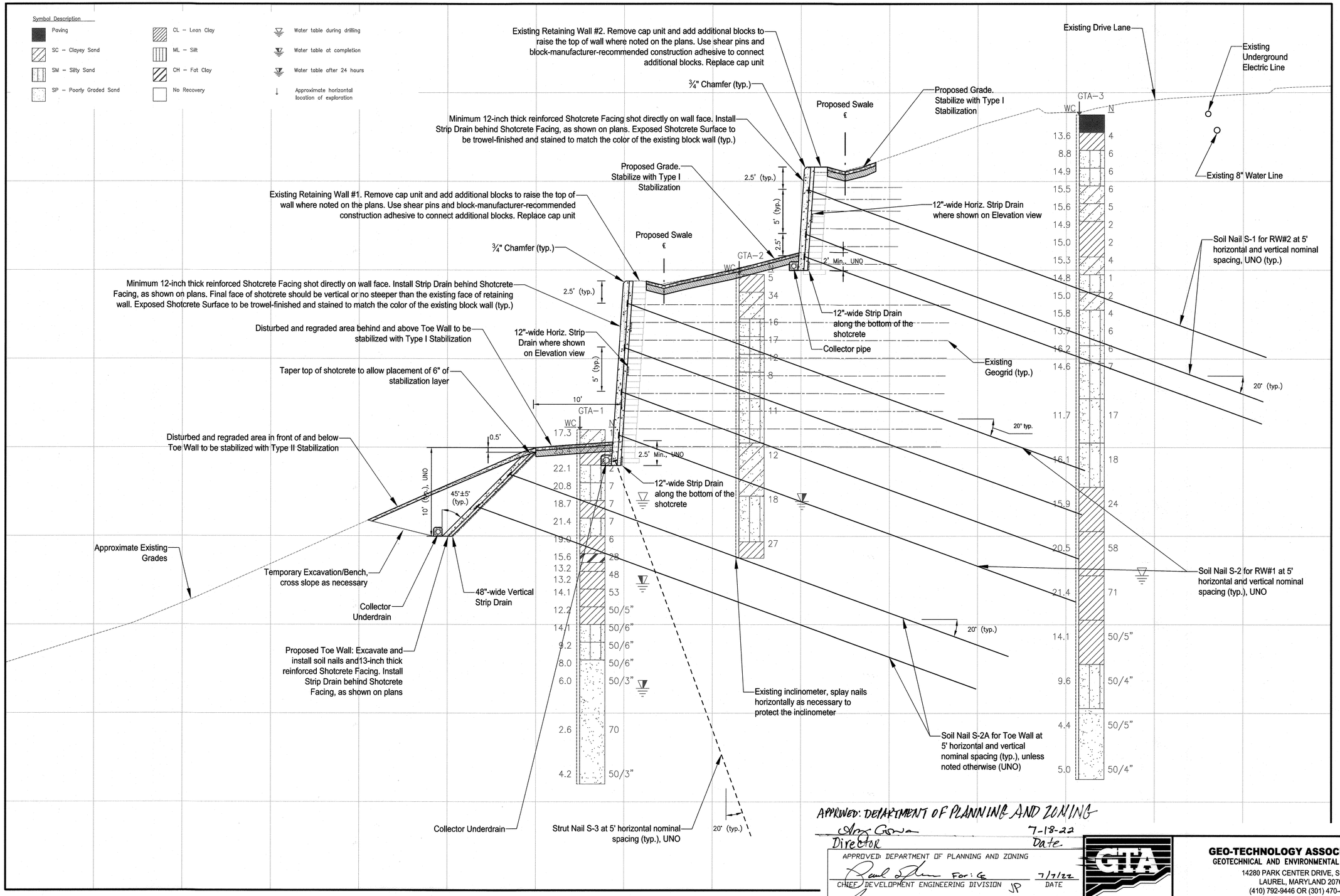

APPROVED: DEPARTMENT OF PLANNING AND ZONING

Director — Date 7-18-22

APPROVED: DEPARTMENT OF PLANNING AND ZONING

For: CE — CHIEF, DEVELOPMENT ENGINEERING DIVISION — DATE 7/7/22

CHIEF, DIVISION OF LAND DEVELOPMENT — DATE 7/18/22

Notes

1. Sections were drawn based on the topographic survey performed by Morris & Ritchie Associates, Inc. in October of 2019 and the topographic contours and site development details shown on the available plans, Sections should be considered approximate.
2. The explorations that are not located on the subsurface section line shown in plan view have been projected on to the section views. Exploration locations should be considered approximate.

Legend

GTA–1 ↓ Identification and approximate location of Standard Penetration Test (SPT) borings performed by GTA in October and November of 2019.

DATE	REVISIONS

MD PROFESSIONAL CERTIFICATION:

I HEREBY CERTIFY THAT THESE DOCUMENTS WERE PREPARED OR APPROVED BY ME, AND THAT I AM A DULY LICENSED PROFESSIONAL ENGINEER UNDER THE LAWS OF THE STATE OF MARYLAND, LICENSE NO. 24495, EXPIRATION DATE: 10/30/23.

SHEET: **SDP-28**

GEO-TECHNOLOGY ASSOCIATES, INC.
GEOTECHNICAL AND ENVIRONMENTAL CONSULTANTS
14280 PARK CENTER DRIVE, SUITE A
LAUREL, MARYLAND 20707
(410) 792-9446 OR (301) 470-4470
www.gtaeng.com

© Geo-Technology Associates, Inc.

7351 COCA COLA DRIVE
HOWARD COUNTY, MARYLAND

STRUCTURAL STABILIZATION - PHASE I CROSS SECTION A-A'

PROJECT: 191319x2	DATE: 01/10/2022	SCALE: 1" = 5'	DESIGN BY: AFV	REVIEW BY: RPM	SHEET: 28 OF 32

SDP-04-147

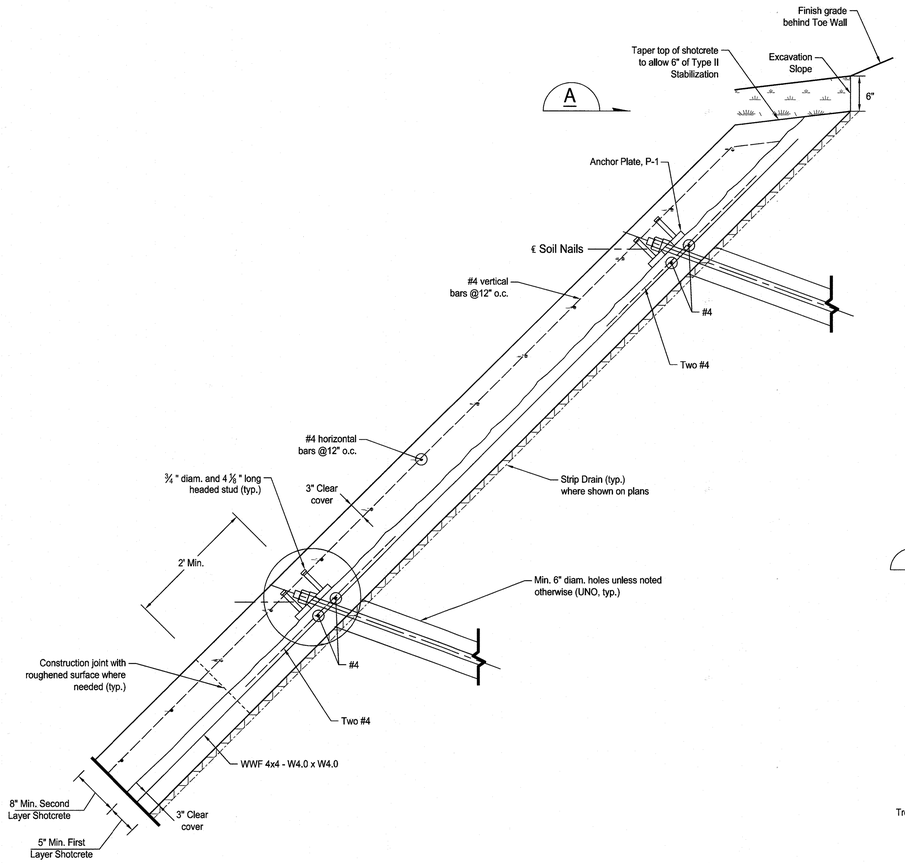

TYPICAL SHOTCRETE SECTION FOR TOE WALL

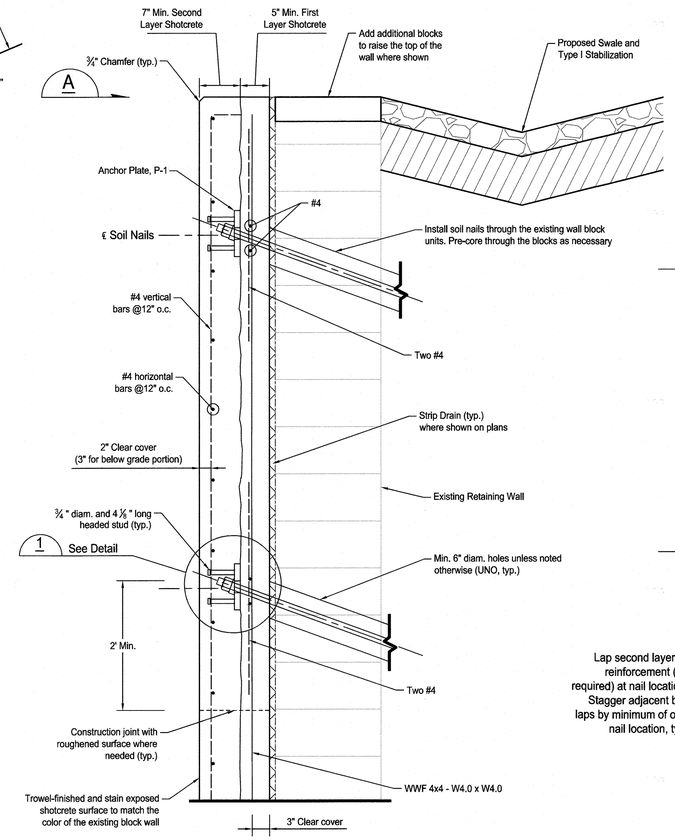

TYPICAL SHOTCRETE SECTION FOR RW#1 AND RW#2

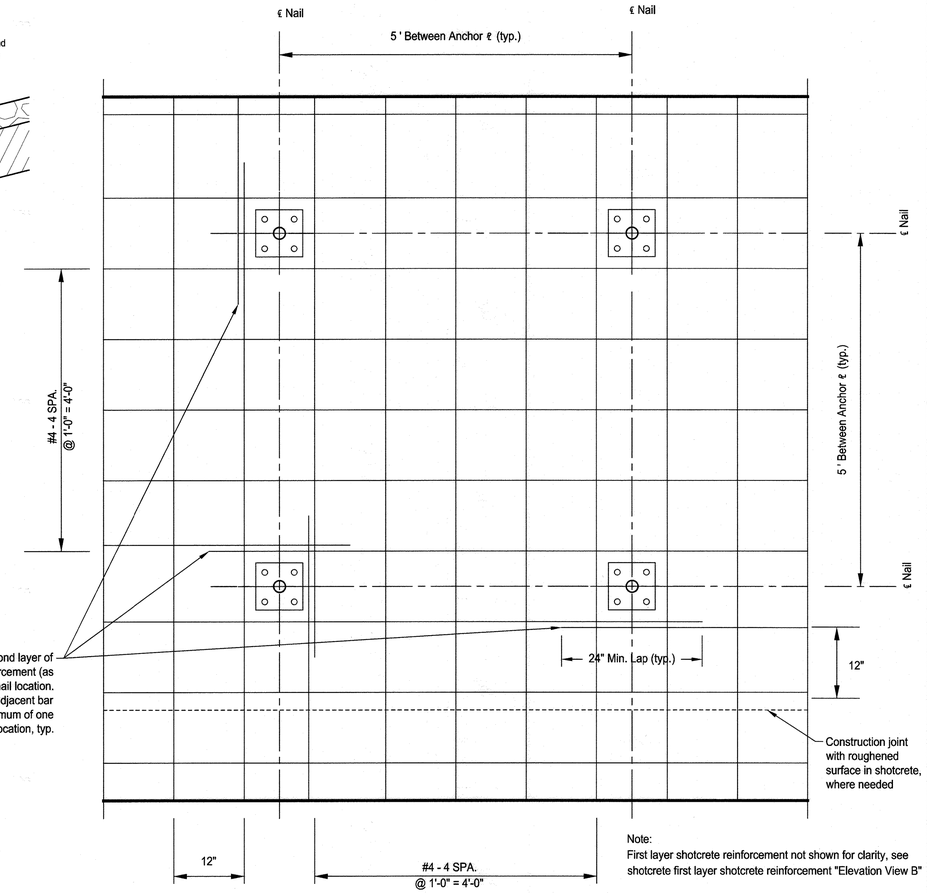

Note:
First layer shotcrete reinforcement not shown for clarity, see shotcrete first layer shotcrete reinforcement "Elevation View B"

SECOND LAYER SHOTCRETE REINFORCEMENT VIEW A

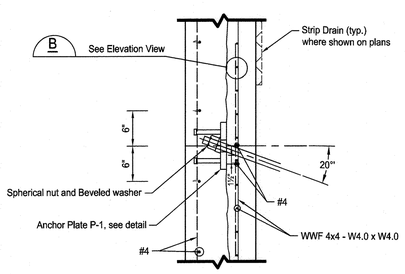

SOIL NAIL HEAD DETAIL 1

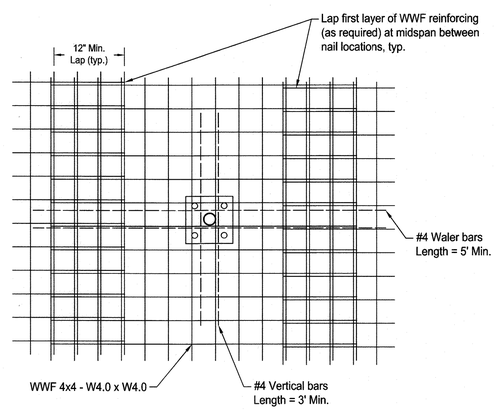

FIRST LAYER SHOTCRETE REINFORCEMENT VIEW B

APPROVED: DEPARTMENT OF PLANNING AND ZONING

Director — Date 7-18-22

APPROVED: DEPARTMENT OF PLANNING AND ZONING

CHIEF, DEVELOPMENT ENGINEERING DIVISION — For: ℄ — DATE 7/7/22

CHIEF, DIVISION OF LAND DEVELOPMENT — DATE 7/18/22

DATE	REVISIONS

MD PROFESSIONAL CERTIFICATION:

I HEREBY CERTIFY THAT THESE DOCUMENTS WERE PREPARED OR APPROVED BY ME, AND THAT I AM A DULY LICENSED PROFESSIONAL ENGINEER UNDER THE LAWS OF THE STATE OF MARYLAND, LICENSE NO. 24495, EXPIRATION DATE: 10/30/23.

SHEET: **SDP-29**

GEO-TECHNOLOGY ASSOCIATES, INC.
GEOTECHNICAL AND ENVIRONMENTAL CONSULTANTS
14280 PARK CENTER DRIVE, SUITE A
LAUREL, MARYLAND 20707
(410) 792-9446 OR (301) 470-4470
www.gtaeng.com

© Geo-Technology Associates, Inc.

7351 COCA COLA DRIVE
HOWARD COUNTY, MARYLAND

STRUCTURAL STABILIZATION - PHASE I DETAILS

PROJECT: 191319x2	DATE: 01/10/2022	SCALE: 1" = 1'	DESIGN BY: AFV	REVIEW BY: RPM	SHEET: 29 OF 32

SDP-04-147

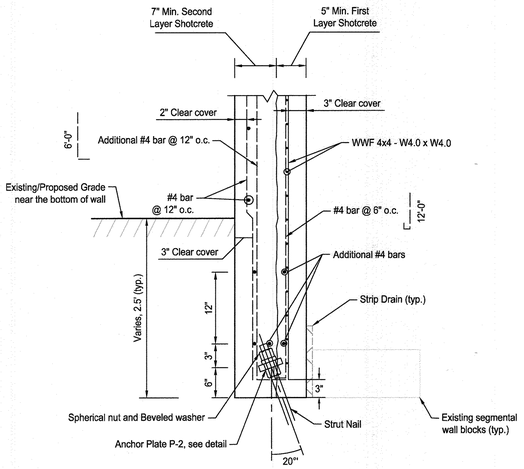

TYPICAL DETAIL - BOTTOM OF SHOTCRETE REINFORCEMENT WITH STRUT NAIL FOR RW#1

SCALE: 1" = 1'

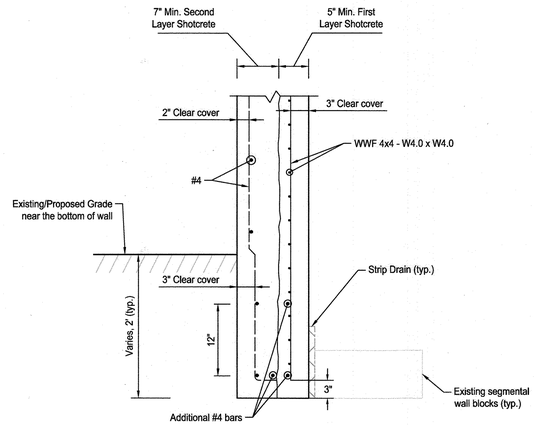

TYPICAL DETAIL - BOTTOM OF SHOTCRETE REINFORCEMENT FOR RW#2

SCALE: 1" = 1'

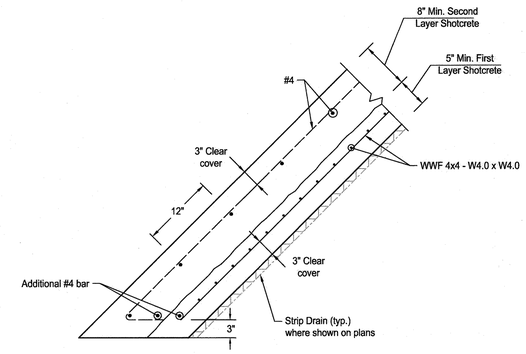

TYPICAL DETAIL - BOTTOM OF SHOTCRETE REINFORCEMENT FOR TOE WALL

SCALE: 1" = 1'

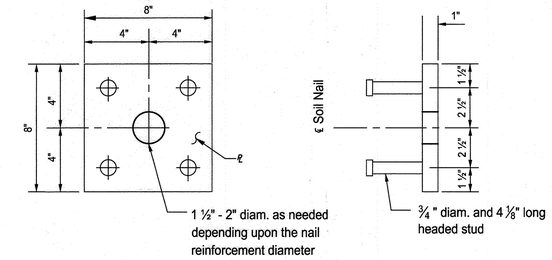

Note:
Plate, washer, nut, and stud shall be galvanized

TYPICAL DETAIL - ANCHOR PLATE P-1

SCALE: 3/8" = 1'

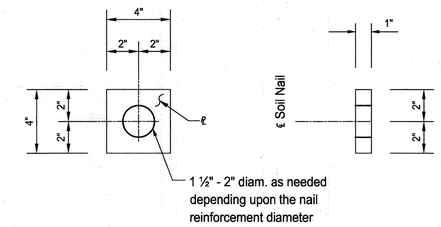

Note:
Plate, washer, nut, and stud shall be galvanized

TYPICAL DETAIL - ANCHOR PLATE P-2

SCALE: 3/8" = 1'

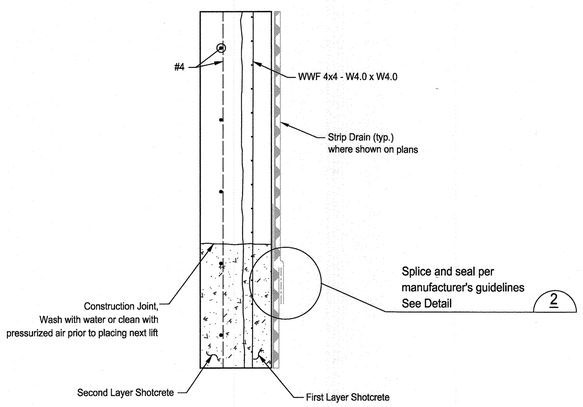

HORIZONTAL CONSTRUCTION JOINT DETAIL

SCALE: 1" = 1'

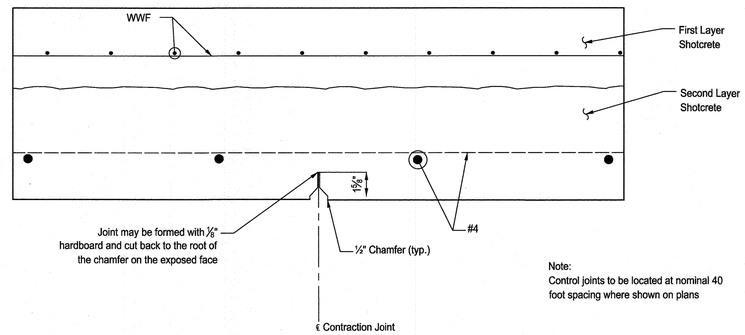

Note:
Control joints to be located at nominal 40 foot spacing where shown on plans

CONTROL JOINT DETAIL

SCALE: 3/8" = 1'

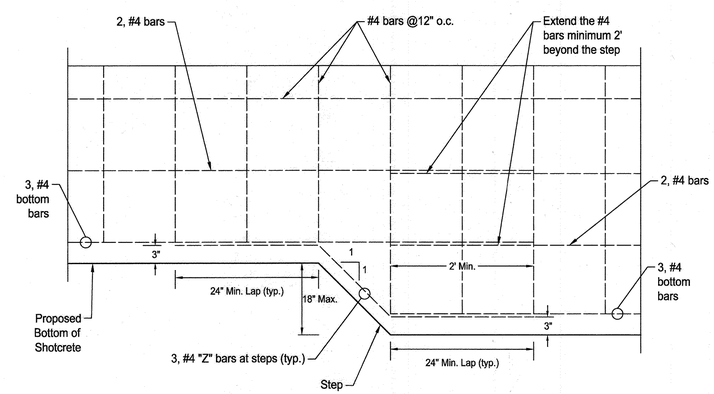

TYPICAL DETAIL - BOTTOM OF SHOTCRETE STEP AND REINFORCEMENT FOR RW#2 AND TOE WALL

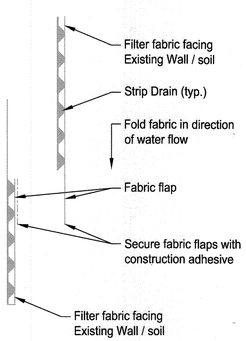

STRIP DRAIN DETAIL 2

NOT TO SCALE

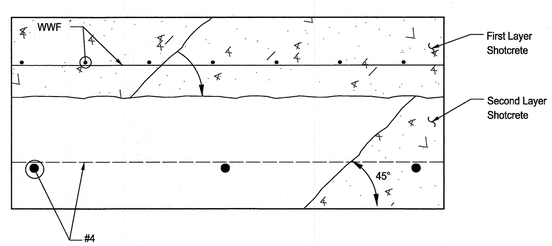

VERTICAL CONSTRUCTION JOINT DETAIL

SCALE: 3/8" = 1'

SHEET: **SDP-30**

APPROVED DEPARTMENT OF PLANNING AND ZONING

DIRECTOR — DATE 6/27/23

CHIEF, DEVELOPMENT ENGINEERING DIVISION — DATE 6-27-23

CHIEF, DIVISION OF LAND DEVELOPMENT — DATE 6/27/23

DATE	REVISIONS
05/05/2023	0 Signature Block
6-22-2023	PHASE 1 WAS PREVIOUSLY APPROVED
	UNDER A SEPARATE REDLINE APRIL
	2023. PHASE 2 APPROVED UNDER
	THIS REDLINE MAY 25, 2023

MD PROFESSIONAL CERTIFICATION:

I HEREBY CERTIFY THAT THESE DOCUMENTS WERE PREPARED OR APPROVED BY ME, AND THAT I AM A DULY LICENSED PROFESSIONAL ENGINEER UNDER THE LAWS OF THE STATE OF MARYLAND, LICENSE NO. 24495, EXPIRATION DATE: 10/30/23.

GEO-TECHNOLOGY ASSOCIATES, INC.
GEOTECHNICAL AND ENVIRONMENTAL CONSULTANTS
14280 PARK CENTER DRIVE, SUITE A
LAUREL, MARYLAND 20707
(410) 792-9446 OR (301) 470-4470
www.gtaeng.com

© Geo-Technology Associates, Inc.

Patapsco Valley Business Center
7351 COCA COLA DRIVE
HOWARD COUNTY, MARYLAND

STRUCTURAL STABILIZATION - PHASE II DETAILS

PROJECT: 191319x2	DATE: 01/10/2022	SCALE: AS SHOWN	DESIGN BY: AFV	REVIEW BY: RPM	SHEET: 30 OF 32

SDP-04-147

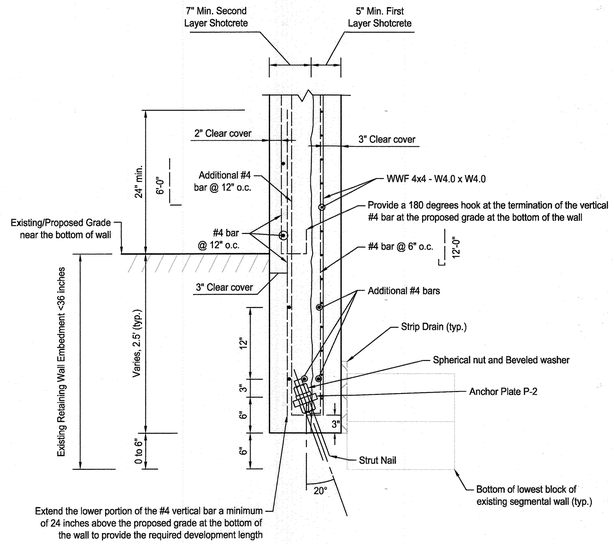

DETAIL A

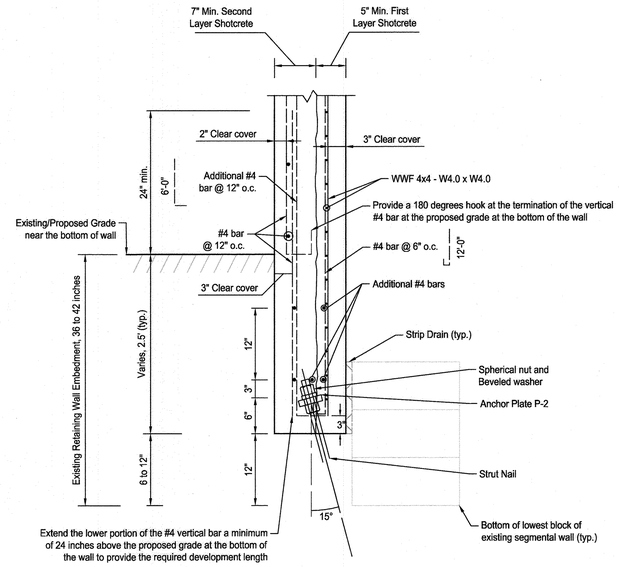

DETAIL B

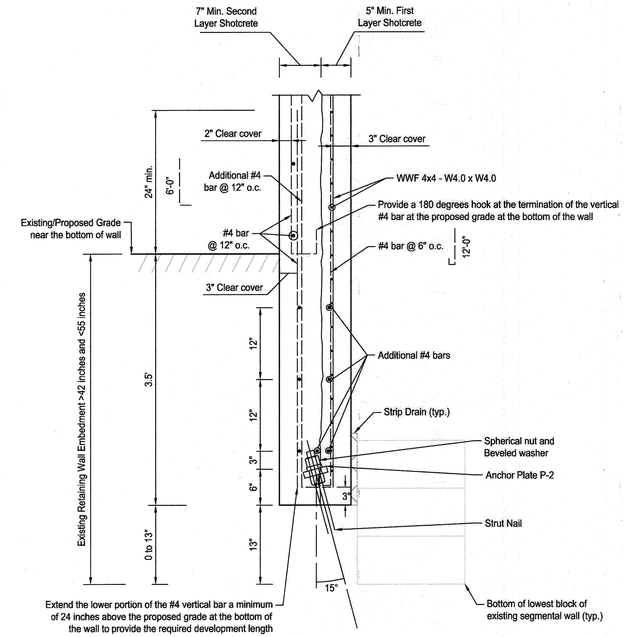

DETAIL C

BOTTOM OF SHOTCRETE WITH STRUT NAIL FOR RW#1

SCALE: 1" = 1'

NOTES

1. BASED ON THE TEST PITS PERFORMED IN DECEMBER OF 2022, IN SOME AREAS THE BOTTOM OF THE LOWEST EXISTING RETAINING WALL BLOCK IS SIGNIFICANTLY DEEPER THAN 6 INCHES BELOW THE PROPOSED BOTTOM OF SHOTCRETE. USE DETAIL A WHEN THE BOTTOM OF THE LOWEST EXISTING RETAINING WALL BLOCK IS LESS THAN 6 INCHES BELOW THE PROPOSED BOTTOM OF SHOTCRETE.
2. IF THE BOTTOM OF THE LOWEST EXISTING RETAINING WALL BLOCK IS DEEPER THAN 6 INCHES BELOW THE PROPOSED BOTTOM OF SHOTCRETE, GTA RECOMMENDS THE FOLLOWING:

   CASE 1 - BOTTOM OF LOWEST EXISTING RETAINING WALL BLOCK EMBEDMENT IS MORE THAN 36 INCHES AND LESS THAN 42 INCHES. USE DETAIL B (APPLIES TO STA. 1+05 TO 1+15, STA. 1+25 TO 1+45, AND STA. 1+95 TO 2+05).

   CASE 2 - BOTTOM OF LOWEST EXISTING RETAINING WALL BLOCK EMBEDMENT IS MORE THAN 42 INCHES. USE DETAIL C (APPLIES TO STA. 1+15 TO 1+25 AND 1+75 TO 1+95).

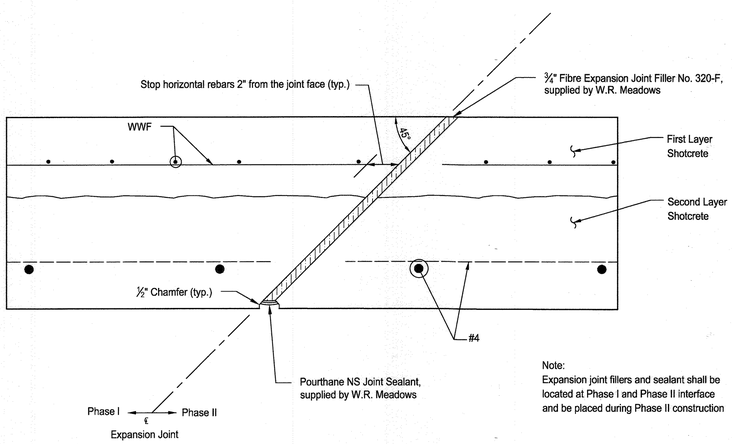

Note:
Expansion joint fillers and sealant shall be located at Phase I and Phase II interface and be placed during Phase II construction

EXPANSION JOINT DETAIL

NOT TO SCALE

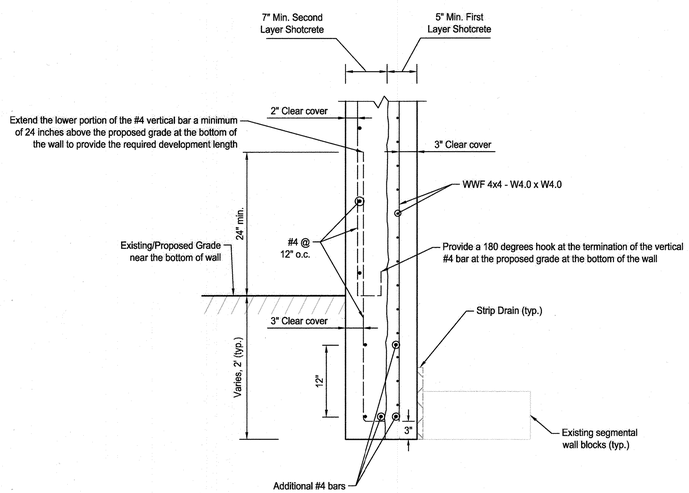

ALTERNATE DETAIL FOR VERTICAL REBAR IN SECOND LAYER OF SHOTCRETE FOR RW#1 AND RW#2

SCALE: 1" = 1'

APPROVED: DEPARTMENT OF PLANNING AND ZONING

DIRECTOR — DATE 6/27/23

CHIEF, DIVISION OF LAND DEVELOPMENT — DATE 6/27/23

CHIEF, DIVISION OF LAND DEVELOPMENT ENGINEERING DIVISION — DATE 6-22-23

DATE	REVISIONS
05/05/2023	6 Sheet Added
6-22-2023	PHASE I WAS PREVIOUSLY APPROVED
	UNDER A SEPARATE REDLINE APRIL
	2023. PHASE 2 APPROVED UNDER
	THIS REDLINE MAY 25, 2023.

MD PROFESSIONAL CERTIFICATION:

I HEREBY CERTIFY THAT THESE DOCUMENTS WERE PREPARED OR APPROVED BY ME, AND THAT I AM A DULY LICENSED PROFESSIONAL ENGINEER UNDER THE LAWS OF THE STATE OF MARYLAND, LICENSE NO. 24495, EXPIRATION DATE: 10/30/23.

STATE OF MARYLAND — RHONDA F. MAYER — 24495 — PROFESSIONAL ENGINEER

GEO-TECHNOLOGY ASSOCIATES, INC.
GEOTECHNICAL AND ENVIRONMENTAL CONSULTANTS
14280 PARK CENTER DRIVE, SUITE A
LAUREL, MARYLAND 20707
(410) 792-9446 OR (301) 470-4470
www.gtaeng.com

© Geo-Technology Associates, Inc.

Patapsco Valley Business Center
7351 COCA COLA DRIVE
HOWARD COUNTY, MARYLAND

STRUCTURAL STABILIZATION - PHASE II
SHOTCRETE DETAILS

SHEET: **SDP-30A**

PROJECT: 191319x2 | DATE: 05/05/2023 | SCALE: AS SHOWN | DESIGN BY: AFV | REVIEW BY: RPM | SHEET: 31 OF 32

SDP-04-147

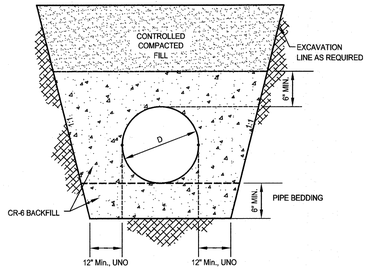

HDPE STORM DRAIN PIPE BACKFILL DETAIL

NOT TO SCALE

HDPE PIPE INSTALLATION

1. UNLESS NOTED OTHERWISE, THE INSTALLATION OF HDPE PIPE SHALL BE PERFORMED ACCORDING TO THE GUIDELINES AND RECOMMENDATIONS INCLUDED IN THE ADVANCED DRAINAGE SYSTEMS (ADS) INC. DRAINAGE HANDBOOK, DATED MAY 2020 AND ASTM D2321 "RECOMMENDED PRACTICE FOR UNDERGROUND INSTALLATION OF FLEXIBLE THERMOPLASTIC SEWER PIPE".

4. UNLESS NOTED OTHERWISE, ALL HDPE PIPE AS SHOWN ON THESE PLANS IS TO BE ADS N-12 PIPE, AND CONTRACTOR IS TO COORDINATE WITH ADS PRIOR TO COMMENCING INSTALLATION OF ANY HDPE PIPE AS SHOWN ON THESE PLANS.

5. PIPE JOINTS ARE TO BE WATER-TIGHT PER ADS RECOMMENDATIONS. PIPE CONNECTIONS INTO STORM DRAIN STRUCTURES ARE TO BE WATER-TIGHT, FLEXIBLE JOINTS PER ADS SPECIFICATIONS.

6. PIPE FOUNDATION SUBGRADE SHALL BE OBSERVED AND EVALUATED BY THE MATERIALS TESTING COMPANY RETAINED BY THE PROJECT OWNER/DEVELOPER. ZONES OF SOFT, UNSTABLE, OR OTHERWISE UNSUITABLE MATERIALS SHALL BE UNDERCUT AS RECOMMENDED BY THE GEOTECHNICAL ENGINEER OR THE MATERIALS TESTING COMPANY.

UTILITY TRENCH BACKFILL

1. MATERIALS

A. PIPE BEDDING, HAUNCH, AND INITIAL BACKFILL MATERIAL SHALL CONSIST OF CRUSHER RUN AGGREGATE (CR-6) OR BANK RUN SAND AND GRAVEL. THE CR-6 SHALL MEET THE REQUIREMENTS OF THE CURRENT MARYLAND STATE HIGHWAY, STANDARD SPECIFICATIONS FOR CONSTRUCTION AND MATERIALS. THE SAND AND GRAVEL SHALL BE BANK RUN, NON-PLASTIC, WELL-GRADED WITH MAXIMUM STONE SIZE NOT TO EXCEED 2 INCHES AND FINES (FRACTION PASSING #200 SIEVE) LESS THAN 12 PERCENT, AND SHALL BE CLASSIFIED AS GW OR SW PER ASTM D2487 - TEST METHOD FOR CLASSIFICATIONS OF SOILS FOR ENGINEERING PURPOSES.

B. BACKFILL MATERIALS - USE CR-6 OR WELL GRADED SAND AND GRAVEL AS BACKFILL MATERIAL TO THE MINIMUM EXTENT SHOWN ON THE PLANS OR AS NOTED HEREIN. THE BACKFILL FOR THE REMAINDER OF THE TRENCH SHALL CONSIST OF ON-SITE OR OFF-SITE SOILS CONFORMING TO THE REQUIREMENT OF THE PROJECT GEOTECHNICAL REPORT AND COUNTY SPECIFICATIONS. NO STONES LARGER THAN 2 INCHES SHALL BE ALLOWED WITHIN 2 FEET OF THE PIPE. LARGER STONE UP TO 6 INCHES IN THE LARGEST DIMENSION CAN BE USED IN LIFTS 2 FEET ABOVE THE PIPE. FOR GRANULAR SOILS (WITH LESS THAN 35% PASSING #200 SIEVE), THE SOIL MOISTURE SHALL BE WITHIN 4 PERCENTAGE POINTS OF OPTIMUM UNLESS OTHERWISE DIRECTED BY PROJECT ENGINEER OR COUNTY SPECIFICATIONS. FOR FINE-GRAINED SOILS (WITH GREATER THAN 35% PASSING #200 SIEVE), THE SOIL MOISTURE SHALL BE WITHIN 0 TO PLUS 4 PERCENT OF OPTIMUM UNLESS OTHERWISE DIRECTED BY ENGINEER OR COUNTY SPECIFICATIONS.

C. A MINIMUM OF 6 INCHES OF BEDDING SHALL BE PLACED ABOVE THE PIPE FOUNDATION SOILS. A STABLE AND UNIFORM BEDDING SHALL BE PROVIDED FOR THE PIPE AND ANY PROTRUDING FEATURES OF ITS JOINTS AND/OR FITTINGS. THE MIDDLE OF THE BEDDING, UNDER THE PIPE INVERT, EQUAL TO 1/3 OF THE PIPE OUTSIDE DIAMETER SHALL BE LOOSELY PLACED, WITH THE REMAINDER COMPACTED TO THE MINIMUM SPECIFIED LEVELS.

D. HAUNCHING BACKFILL SHALL BE PLACED IN LIFTS OF 4- TO 6-INCHES AND COMPACTED TO THE SPECIFIED LEVELS. THE BACKFILL SHALL BE WORKED IN AND AROUND THE PIPE BY SHOVELS, HAND TOOLS, AND OTHER APPROPRIATE MEANS TO PROVIDE UNIFORM SUPPORT AND COMPACTED WITH SUITABLE SMALLER COMPACTION EQUIPMENT. PLACE AND COMPACT EACH SUCCESSIVE LIFT TO THE PIPE SPRINGLINE.

E. INITIAL BACKFILL SHALL EXTEND FROM THE PIPE SPRINGLINE TO A MINIMUM ONE FOOT ABOVE THE TOP OF THE PIPE. INITIAL BACKFILL SHALL BE PLACED IN LIFTS OF 4- TO 6-INCHES AND COMPACTED TO THE SPECIFIED LEVELS. THE BACKFILL SHALL BE WORKED IN AND AROUND THE PIPE BY HAND TOOLS AND OTHER APPROPRIATE MEANS TO PROVIDE UNIFORM SUPPORT AND COMPACTED WITH SUITABLE SMALLER COMPACTION EQUIPMENT. DO NOT PLACE MECHANICAL COMPACTION EQUIPMENT DIRECTLY ON THE PIPE ITSELF. PLACE AND COMPACT EACH SUCCESSIVE LIFT TO THE REQUIRED LEVEL ABOVE THE TOP OF THE PIPE.

F. BEDDING, HAUNCH BACKFILL, INITIAL BACKFILL, AND FINAL BACKFILL SHALL BE COMPACTED TO MINIMUM 95 PERCENT OF THE MAXIMUM DRY DENSITY PER ASTM D-698 (STANDARD PROCTOR). THE REQUIRED COMPACTION LEVEL OF THE PAVEMENT SUBGRADE SHALL BE IN ACCORDANCE WITH THE COUNTY REQUIREMENTS.

2. BACKFILLING PROCEDURES

A. THE EXCAVATED NATIVE SOILS ARE EXPECTED TO BE PREDOMINATELY MEDIUM TO HIGH-PLASTICITY CLAYEY SOILS (USCS CH AND CL). PROPER MOISTURE CONTROL/CONDITIONING AND COMPACTION OF THE UTILITY BACKFILL WILL BE CRITICAL TO ACHIEVE COMPACTION AND THEREBY REDUCE THE POTENTIAL FOR SETTLEMENT OF THE STRUCTURES SUPPORTED ON THE BACKFILL. INADEQUATE CARE AND QUALITY CONTROL WILL LEAD TO FAILURE OF THE TRENCH BACKFILLED WITH CLAYEY SOILS. THE UTILITY CONTRACTOR WILL BE RESPONSIBLE FOR THE ADEQUATE PERFORMANCE OF THE TRENCH BACKFILL AND RESULTING DAMAGES TO THE IMPROVEMENTS CONSTRUCTED ABOVE THE TRENCH BACKFILL.

B. CONTRACTOR SHALL PLACE LEVEL LIFTS OF SOIL ADJACENT AND ABOVE THE UTILITY. THE LIFT THICKNESS SHALL BE DEPENDENT UPON THE TYPE OF EQUIPMENT BEING USED FOR COMPACTION AND THE MATERIALS. UTILITY BACKFILL SHALL BE PLACED UNDER THE FOLLOWING CRITERIA UNLESS OTHERWISE RECOMMENDED BY THE GEOTECHNICAL ENGINEER DURING CONSTRUCTION:

- FINE-GRAINED MATERIALS - FINE-GRAINED MATERIALS (MATERIALS WITH MORE THAN 35% PASSING #200 SIEVE) SHALL BE COMPACTED WITH SHEEPS-FOOT TYPE ROLLER. THE LIFT THICKNESS SHALL NOT EXCEED 4 INCHES IF HAND OPERATED EQUIPMENT IS USED. HAND EQUIPMENT WILL BE REQUIRED FOR COMPACTION AROUND MANHOLES, STRUCTURES AND ADJACENT TO AND OVER THE UTILITY. IF HEAVY SHEEPS-FOOT COMPACTION EQUIPMENT IS USED, THEN THE LOOSE LIFT THICKNESS CAN BE INCREASED TO 6 INCHES. EACH LIFT SHALL BE UNIFORMLY COMPACTED WITH A SUFFICIENT NUMBER OF PASSES TO OBTAIN THE REQUIRED DEGREE OF COMPACTION. THE SOIL CLODS AND VOIDS MUST BE ELIMINATED DURING BACKFILLING, RESULTING IN A HOMOGENEOUS SOIL MATRIX.
- GRANULAR SOILS - GRANULAR SOILS (MATERIALS WITH LESS THAN 5% PASSING THE #200 SIEVE) SHALL BE COMPACTED WITH VIBRATORY TYPE COMPACTION EQUIPMENT. THE LOOSE LIFT THICKNESS MUST BE REDUCED TO 4 INCHES WHEN COMPACTING WITH LIGHTWEIGHT EQUIPMENT. HAND EQUIPMENT WILL BE REQUIRED AROUND MANHOLES, STRUCTURES AND ADJACENT TO AND ABOVE THE UTILITY. IF HEAVY VIBRATORY COMPACTION EQUIPMENT IS USED, THEN THE LOOSE LIFT THICKNESS CAN BE INCREASED TO 8 INCHES. EACH LIFT SHALL BE UNIFORMLY COMPACTED WITH A SUFFICIENT NUMBER OF PASSES TO OBTAIN THE RECOMMENDED DEGREE OF COMPACTION.
- THE BACKFILL SHALL BE WORKED USING HAND TOOLS AROUND PIPE HAUNCH TO PROVIDE UNIFORM AND FIRM SUPPORT.

C. IF A LIFT FAILS TO MEET THE REQUIRED COMPACTION, THEN THE LIFT SHALL BE RE-COMPACTED AND RETESTED. IF THE MATERIAL IS TOO WET OR TOO DRY, THE MOISTURE SHALL BE ADJUSTED TO WITHIN THE REQUIRED RANGE PRIOR TO RE-COMPACTION.

3. TESTING

A. EACH LIFT OF FILL SHOULD BE MONITORED FOR STABILITY, LIFT THICKNESS AND COMPACTIVE EFFORT. A DENSITY TEST SHOULD BE PERFORMED FOR EACH LIFT OF FILL PLACED PER EVERY 150 FEET OF TRENCH. THIS REQUIREMENT INCLUDES THE UTILITY LATERAL CONNECTIONS. THE TEST PROCEDURE SHOULD BE THE SAND CONE METHOD (ASTM D-1556) OR THE NUCLEAR GAUGE METHOD (ASTM D-2922). THE TEST RESULTS SHOULD BE MADE AVAILABLE TO THE CONTRACTOR UPON THE COMPLETION OF THE TEST. FOR EACH TEST, THE TECHNICIAN SHOULD RECORD THE FOLLOWING: DATE; TEST LOCATION; TEST ELEVATION; MATERIAL TYPE; DEGREE OF COMPACTION; ONE-POINT RESULTS; LIFT THICKNESS; AND MOISTURE CONTENT. WHEN THE TRENCH IS TOO DEEP OR UNSAFE TO ACCESS, THE TECHNICIAN SHALL OBSERVE AND DOCUMENT THE LIFT THICKNESS AND COMPACTION EFFORT AS RECOMMENDED BY THE GEOTECHNICAL ENGINEER.

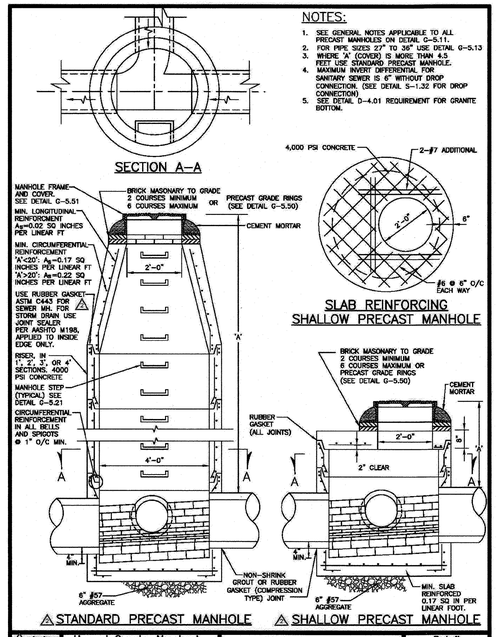

NOTES:

1. SEE GENERAL NOTES APPLICABLE TO ALL PRECAST MANHOLES ON DETAIL G–5.11.
2. FOR PIPE SIZES 27" TO 36" USE DETAIL G–5.13
3. WHERE "A" (COVER) IS MORE THAN 4.5 FEET USE STANDARD PRECAST MANHOLE.
4. MAXIMUM INVERT DIFFERENTIAL FOR SANITARY SEWER IS 6" WITHOUT DROP CONNECTION. (SEE DETAIL S–1.32 FOR DROP CONNECTION)
5. SEE DETAIL D–4.01 REQUIREMENT FOR GRANITE BOTTOM.

Revised 5/20/2017	Howard County, Maryland Department of Public Works	PRECAST MANHOLE Standard and Shallow 4'–0" for 24" Pipe and smaller	Detail
Revised 6/1/2014	Approved: Chief, Bureau of Engineering		G–5.12
Revised 9/7/2007			
Approved			

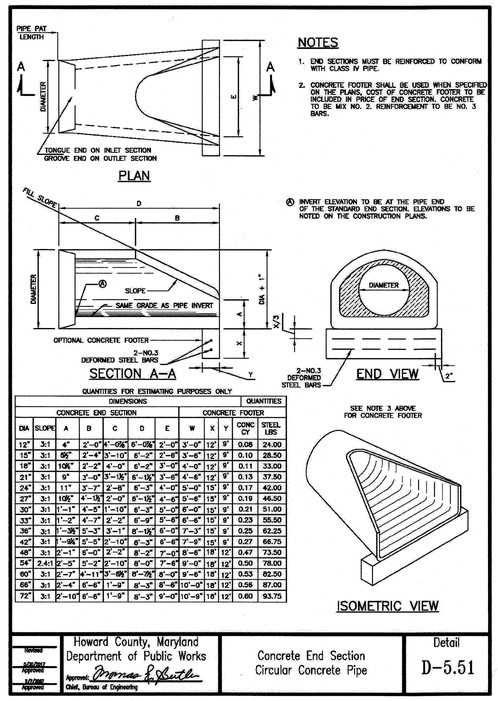

NOTES

1. END SECTIONS MUST BE REINFORCED TO CONFORM WITH CLASS IV PIPE.
2. CONCRETE FOOTER SHALL BE USED WHEN SPECIFIED ON THE PLANS. COST OF CONCRETE FOOTER TO BE INCLUDED IN PRICE OF END SECTION. CONCRETE TO BE MIX NO. 2. REINFORCEMENT TO BE NO. 3 BARS.

Ⓐ INVERT ELEVATION TO BE AT THE PIPE END OF THE STANDARD END SECTION. ELEVATIONS TO BE NOTED ON THE CONSTRUCTION PLANS.

QUANTITIES FOR ESTIMATING PURPOSES ONLY

DIMENSIONS										QUANTITIES	
CONCRETE END SECTION						CONCRETE FOOTER					
DIA	SLOPE	A	B	C	D	E	W	X	Y	CONC CY	STEEL LBS
12"	3:1	4"	2'–0"	4'–05⅜"	6'–05⅜"	2'–0"	3'–0"	12"	9"	0.08	24.00
15"	3:1	5⅝"	2'–4"	3'–10"	6'–2"	2'–6"	3'–6"	12"	9"	0.10	28.50
18"	3:1	10⅝"	2'–2"	4'–0"	6'–2"	3'–0"	4'–0"	12"	9"	0.11	33.00
21"	3:1	9"	3'–0"	3'–10½"	6'–10½"	3'–6"	4'–6"	12"	9"	0.13	37.50
24"	3:1	11"	3'–7"	2'–8"	6'–3"	4'–0"	5'–0"	15"	9"	0.17	42.00
27"	3:1	10⅝"	4'–1⅝"	2'–0"	6'–10⅝"	4'–6"	5'–6"	15"	9"	0.19	46.50
30"	3:1	1'–1"	4'–5"	1'–10"	6'–3"	5'–0"	6'–0"	15"	9"	0.21	51.00
33"	3:1	1'–2"	4'–7"	2'–2"	6'–9"	5'–6"	6'–6"	15"	9"	0.23	55.50
36"	3:1	1'–3⅝"	5'–3"	3'–1"	8'–10½"	6'–0"	7'–3"	15"	9"	0.25	62.25
42"	3:1	1'–9⅝"	5'–5"	2'–10"	8'–3"	6'–6"	7'–9"	15"	9"	0.27	66.75
48"	3:1	2'–1"	6'–0"	2'–2"	8'–2"	7'–0"	8'–6"	18"	12"	0.47	73.50
54"	2.4:1	2'–5"	5'–2"	2'–10"	8'–0"	7'–6"	9'–0"	18"	12"	0.50	78.00
60"	3:1	2'–7"	4'–11"	3'–6½"	8'–7½"	8'–0"	9'–6"	18"	12"	0.53	82.50
66"	3:1	2'–4"	6'–6"	1'–9"	8'–3"	8'–6"	10'–0"	18"	12"	0.56	87.00
72"	3:1	2'–10"	6'–6"	1'–9"	8'–3"	9'–0"	10'–9"	18"	12"	0.60	93.75

Revised 5/20/2017	Howard County, Maryland Department of Public Works	Concrete End Section Circular Concrete Pipe	Detail
Revised 6/1/2014	Approved: Chief, Bureau of Engineering		D–5.51
Revised 9/7/2007			
Approved			

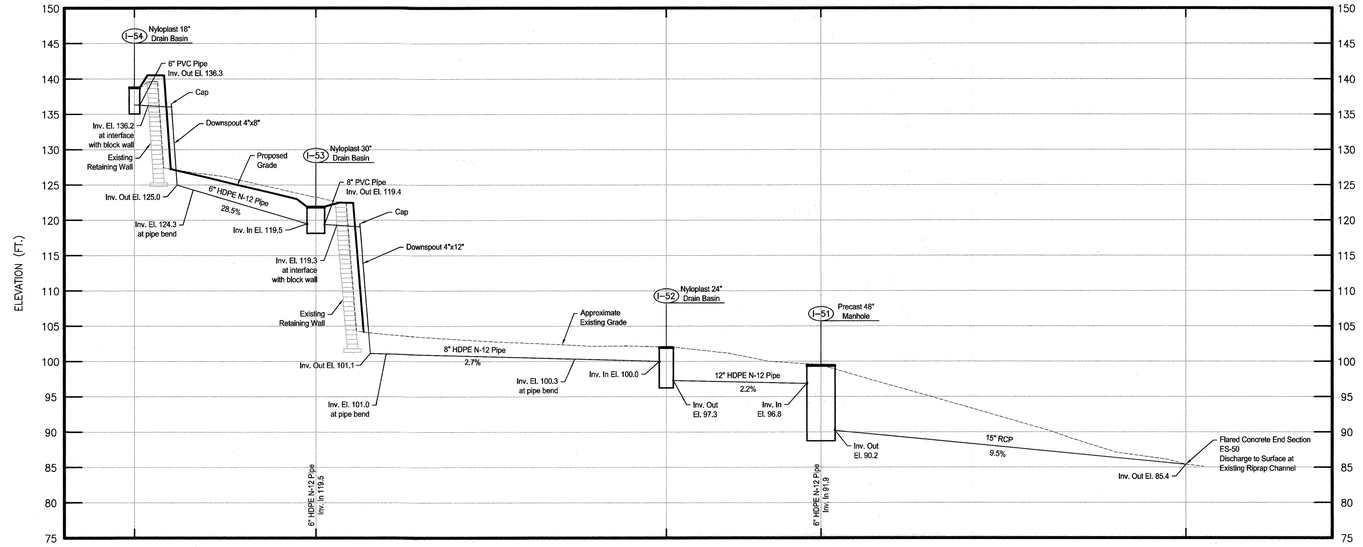

STORM DRAIN PROFILE I-54 THROUGH I-51

HORIZONTAL/VERTICAL SCALE: 1" = 10'

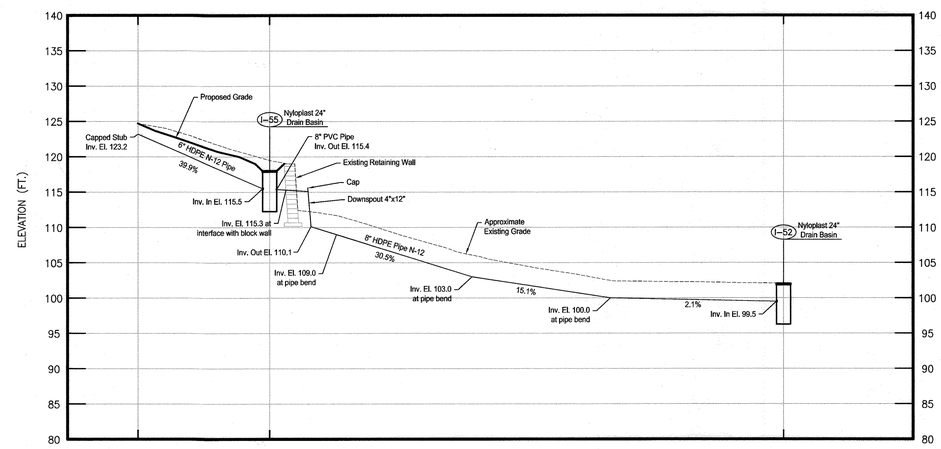

STORM DRAIN PROFILE I-55 THROUGH I-52

HORIZONTAL/VERTICAL SCALE: 1" = 10'

APPROVED: DEPARTMENT OF PLANNING AND ZONING

Director — Date 7-18-22

APPROVED: DEPARTMENT OF PLANNING AND ZONING

CHIEF, DEVELOPMENT ENGINEERING DIVISION — For: — DATE 7/7/22

CHIEF, DIVISION OF LAND DEVELOPMENT — DATE 7/18/22

DATE	REVISIONS

MD PROFESSIONAL CERTIFICATION:

I HEREBY CERTIFY THAT THESE DOCUMENTS WERE PREPARED OR APPROVED BY ME, AND THAT I AM A DULY LICENSED PROFESSIONAL ENGINEER UNDER THE LAWS OF THE STATE OF MARYLAND, LICENSE NO. 24495, EXPIRATION DATE: 10/30/23.

SHEET: **SDP-32**

GEO-TECHNOLOGY ASSOCIATES, INC.
GEOTECHNICAL AND ENVIRONMENTAL CONSULTANTS
14280 PARK CENTER DRIVE, SUITE A
LAUREL, MARYLAND 20707
(410) 792-9446 OR (301) 470-4470
www.gtaeng.com

© Geo-Technology Associates, Inc.

7351 COCA COLA DRIVE
HOWARD COUNTY, MARYLAND

STRUCTURAL STABILIZATION - PHASE I
DETAILS

PROJECT: 191319x2	DATE: 01/10/2022	SCALE: AS SHOWN	DESIGN BY: AFV	REVIEW BY: RPM	SHEET: 32 OF 32

SDP-04-147