SILT FENCE

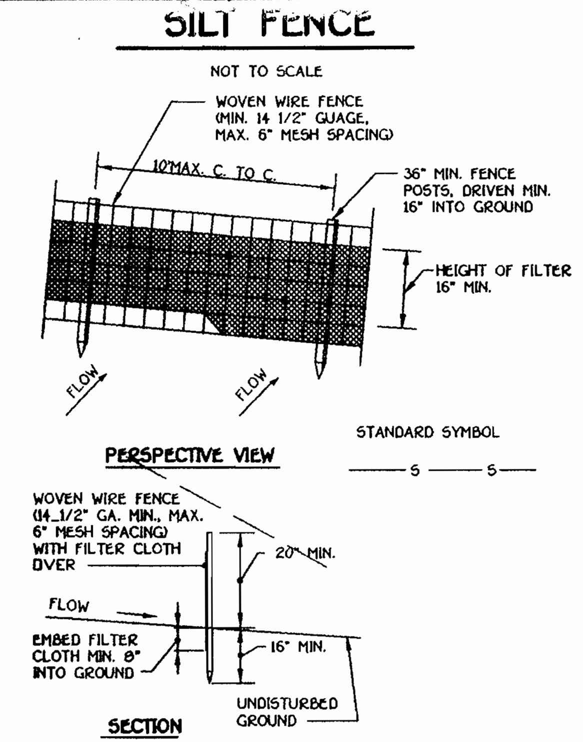

CONSTRUCTION NOTES FOR FABRICATED SILT FENCE

1. WOVEN WIRE FENCE TO BE FASTENED SECURELY TO FENCE POSTS WITH WIRE TIES OF STAPLES.
2. FILTER CLOTH TO BE FASTENED SECURELY TO WOVEN WIRE FENCE WITH TIES SPACED EVERY 24" AT TOP AND MID SECTION.
3. WHEN TWO SECTIONS OF FILTER CLOTH ADJOIN EACH OTHER THEY SHALL BE OVERLAPPED BY SIX INCHES AND FOLDED.
4. MAINTENANCE SHALL BE PERFORMED AS NEEDED AND MATERIAL REMOVED WHEN "BULGES" DEVELOP IN THE SILT FENCE.

POSTS: STEEL EITHER T OR U TYPE OR 2" HARDWOOD
FENCE: WOVEN WIRE, 14. GA. 6" MAX. MESH OPENING
FILTER CLOTH: FILTER X, MIRAFI 100X, STABILINKA T14 ON OR APPROVED EQUAL
PREFABRICATED UNIT: GEOFAB, ENVIROFENCE, OR APPROVED EQUAL.

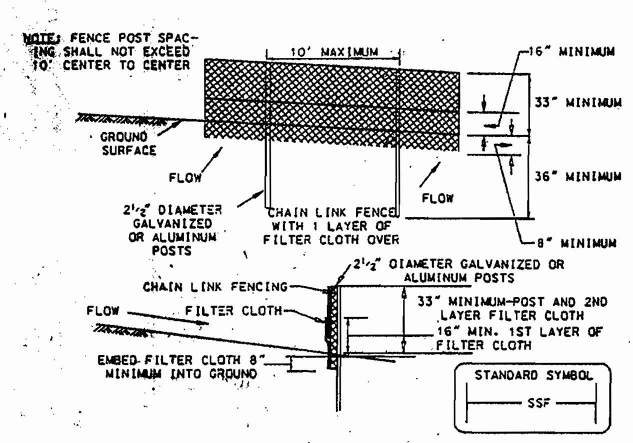

Construction Specifications

Fencing shall be 42 inches in height and constructed in accordance with the latest Maryland State Highway Details for Chain Link Fencing. The specification for a 6 foot fence shall be used, substituting 42 inch fabric and 6 foot length posts.

1. The poles do not need to set in concrete.
2. Chain link fence shall be fastened securely to the fence posts with wire ties or staples.
3. Filter cloth shall be fastened securely to the chain link fence with ties spaced every 24" at the top and mid section.
4. Filter cloth shall be embedded a minimum of 8" into the ground.
5. When two sections of filter cloth adjoin each other, they shall be overlapped by 6" and folded.
6. Maintenance shall be performed as needed and silt buildups removed when "bulges" develop in the silt fence.

SUPER SILT FENCE

NOT TO SCALE

PERMANENT SEEDING NOTES

ALL DISTURBED AREAS SHALL BE STABILIZED AS FOLLOWS:

SEEDBED PREPARATION:
LOOSEN UPPER THREE INCHES OF SOIL BY RAKING, DISCING OR OTHER ACCEPTABLE MEANS BEFORE SEEDING.

SOIL AMENDMENTS:
APPLY TWO TONS PER ACRE DOLOMITIC LIMESTONE (92 LBS/1,000 SQ.FT.) AND 600 LBS. PER ACRE 0-20-20 FERTILIZER (14 LBS./1,000 SQ.FT.) BEFORE SEEDING HARROW OR DISC. INTO UPPER THREE INCHES OF SOIL. AT TIME OF SEEDING, APPLY 400 LBS. PER ACRE 38-0-0 UREAFORM FERTILIZER (9 LBS./1,000 SQ.FT.) AND 500 LBS. PER ACRE (11.5 LBS./1,000 SQ.FT.) OF 10-20-20 FERTILIZER.

SEEDING:
FOR THE PERIODS MARCH 1 THROUGH APRIL 30, AND AUGUST 1 THROUGH OCTOBER 15, SEED WITH 100 LBS. PER ACRE (2.3 LBS./1,000 SQ.FT.) OF KENTUCKY 31 TALL FESCUE. FOR THE PERIOD MAY 1 THROUGH JULY 31, SEED WITH 60 LBS/ACRE (1.4 LBS./1,000 SQ.FT.) KENTUCKY 31 TALL FESCUE AND 2 LBS. PER ACRE (0.05 LBS./1,000 SQ.FT.) OF WEEPING LOVEGRASS. DURING THE PERIOD OF OCTOBER 16 THROUGH FEBRUARY 28, PROJECT SITE BY: OPTION (1) - TWO TONS PER ACRE OF WELL ANCHORED STRAW MULCH AND SEED AS SOON AS POSSIBLE IN THE SPRING; OPTION (2) - USE SOD; OPTION (3) - SEED WITH 100 LBS./ACRE KENTUCKY 31 TALL FESCUE AND MULCH WITH TWO TONS/ACRE WELL ANCHORED STRAW. ALL SLOPES SHOULD BE HYDROSEEDED.

MULCHING:
APPLY 1 TO 2 TONS PER ACRE (10 TO 90 LBS./1,000 SQ.FT.) OF UNROTTED SMALL GRAIN STRAW IMMEDIATELY AFTER SEEDING. ANCHOR MULCH IMMEDIATELY AFTER APPLICATION USING 200 GALLONS PER ACRE (5 GAL./1,000 SQ.FT.) OF EMULSIFIED ASPHALT ON FLAT ACRES. ON SLOPES 8 FEET OR HIGHER USE 348 GALLONS PER ACRE (8 GAL./1,000 SQ.FT.) FOR ANCHORING.

MAINTENANCE:
INSPECT ALL SEEDED AREAS AND MAKE NEEDED REPAIRS, REPLACEMENTS AND RESEEDINGS.

* FOR PUBLIC PONDS SUBSTITUTE CHEMUNG CROWNVETCH AT 15 LBS./ACRE AND KENTUCKY 31 TALL FESCUE AT 40 LBS/ACRE AS THE SEEDING REQUIRMENT. OPTIMUM SEEDING DATE FOR THIS MIXTURE IS MARCH 1 TO APRIL 30.

STABILIZED CONSTRUCTION ENTRANCE

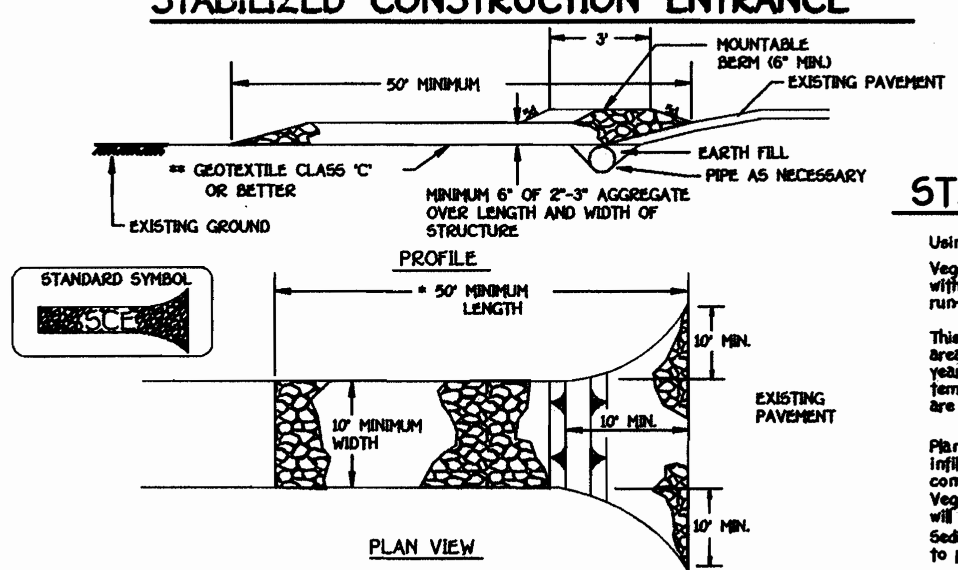

Construction Specification

1. Length - minimum of 50' (*30' for single residence lot).
2. Width - 10' minimum, should be flared at the existing road to provide a turning radius.
3. Geotextile fabric (filter cloth) shall be placed over the existing ground prior to placing stone. **The plan approval authority may not require single family residences to use geotextile.
4. Stone - crushed aggregate (2" to 3") or reclaimed or recycled concrete equivalent shall be placed at least 6" deep over the length and width of the entrance.
5. Surface Water - all surface water flowing to or diverted toward construction entrances shall be piped through the entrance, maintaining positive drainage. Pipe installed through the stabilized construction entrance shall be protected with a mountable berm with 5:1 slopes and a minimum of 6" of stone over the pipe. Pipe has to be sized according to the drainage. When the SCE is located at a high spot and has no drainage to convey a pipe will not be necessary. Pipe should be sized according to the amount of runoff to be conveyed. A 6" minimum will be required.
6. Location - A stabilized construction entrance shall be located at every point where construction traffic enters or leaves a construction site. Vehicles leaving the site must travel over the entire length of the stabilized construction entrance.

SEDIMENT CONTROL NOTES

1) A MINIMUM OF 48 HOURS NOTICE MUST BE GIVEN TO THE HOWARD COUNTY DEPARTMENT OF INSPECTIONS, LISCENSES AND PERMITS, SEDIMENT CONTROL DIVISION PRIOR TO THE START OF ANY CONSTRUCTION (313-1855).
2) ALL VEGETATIVE AND STRUCTURAL PRACTICES ARE TO BE INSTALLED ACCORDING TO THE PROVISIONS OF THIS PLAN AND ARE TO BE IN CONFORMANCE WITH THE MOST CURRENT MARYLAND STANDARDS AND SPECIFICATIONS FOR SOIL EROSION AND SEDIMENT CONTROL AND REVISIONS THERETO.
3) FOLLOWING INITIAL SOIL DISTURBANCE OR RE-DISTURBANCE, PERMANENT OR TEMPORARY STABILIZATION SHALL BE COMPLETED WITHIN: a) 7 CALENDAR DAYS FOR ALL PERIMETER SEDIMENT CONTROL STRUCTURES, DIKES, PERIMETER SLOPES AND ALL SLOPES STEEPER THAN 3:1, b) 14 DAYS AS TO ALL OTHER DISTURBED OR GRADED AREAS ON THE PROJECT SITE.
4) ALL SEDIMENT TRAPS/BASINS SHOWN MUST BE FENCED AND WARNING SIGNS POSTED AROUND THEIR PERIMETER IN ACCORDANCE WITH VOL. 1, CHAPTER 12, OF THE HOWARD COUNTY DESIGN MANUAL, STORM DRAINAGE.
5) ALL DISTURBED AREAS MUST BE STABILIZED WITHIN THE TIME PERIOD SPECIFIED ABOVE IN ACCORDANCE WITH THE 1994 MARYLAND STANDARDS AND SPECIFICATIONS FOR SOIL EROSION AND SEDIMENT CONTROL FOR PERMANENT SEEDING (SEC. 51), SOD (SEC. 54), TEMPORARY SEEDING (SEC. 50), AND MULCHING (SEC. 52). TEMPORARY STABILIZATION WITH MULCH ALONE CAN ONLY BE DONE WHEN RECOMMENDED SEEDING DATES DO NOT ALLOW FOR PROPER GERMINATION AND ESTABLISHMENT OF GRASSES.
6) ALL SEDIMENT CONTROL STRUCTURES ARE TO REMAIN IN PLACE AND ARE TO BE MAINTAINED IN OPERATIVE CONDITION UNTIL PERMISSION FOR THEIR REMOVAL HAS BEEN OBTAINED FROM THE HOWARD COUNTY SEDIMENT CONTROL INSPECTOR.
7) SITE ANALYSIS:

TOTAL AREA OF SITE	0.25	ACRES
AREA DISTURBED	0.32	ACRES
AREA TO BE ROOFED OR PAVED	0.05	ACRES
AREA TO BE VEGETATIVELY STABILIZED	0.27	ACRES
TOTAL CUT	235	CU.YDS.
TOTAL FILL	235	CU.YDS.
OFFSITE WASTE/BORROW AREA LOCATION	—	CU.YDS.

8) ANY SEDIMENT CONTROL PRACTICE WHICH IS DISTURBED BY GRADING ACTIVITY FOR PLACEMENT OF UTILITIES MUST BE REPAIRED ON THE SAME DAY OF DISTURBANCE.
9) ADDITIONAL SEDIMENT CONTROLS MUST BE PROVIDED, IF DEEMED NECESSARY BY THE HOWARD COUNTY SEDIMENT CONTROL INSPECTOR.
10) ON ALL SITES WITH DISTURBED AREAS IN EXCESS OF 2 ACRES, APPROVAL OF THE INSPECTION AGENCY SHALL BE REQUESTED UPON COMPLETION OF INSTALLATION OF PERIMETER EROSION AND SEDIMENT CONTROLS, BUT BEFORE PROCEEDING WITH ANY OTHER EARTH DISTURBANCE OR GRADING. OTHER BUILDING OR GRADING INSPECTION APPROVALS MAY NOT BE AUTHORIZED UNTIL THIS INITIAL APPROVAL BY THE INSPECTION AGENCY IS MADE.
11) TRENCHES FOR THE CONSTRUCTION OF UTILITIES IS LIMITED TO THREE PIPE LENGTHS OR THAT WHICH SHALL BE BACK-FILLED AND STABILIZED WITHIN ONE WORKING DAY, WHICHEVER IS SHORTER.

SEQUENCE OF CONSTRUCTION

1. OBTAIN GRADING PERMIT.
2. INSTALL SEDIMENT CONTROLS AS SHOWN ON PLAN. (1 day)
3. CLEAR AND GRUB TO LIMITS OF DISTURBANCE AND MASS GRADE TO SUB-BASE. (2 days)
4. INSTALL TEMPORARY SEEDING. (1 day)
5. CONSTRUCT UTILITIES (WATER, SEWER AND HOUSE CONNECTIONS). (1 day)
6. CONSTRUCT BUILDINGS. (90 days)
7. GRADE SIDEWALK AND DRIVEWAYS. (1 day)
8. FINE GRADE SITE AND INSTALL PERMANENT SEEDING. (1 day)
9. REMOVE SEDIMENT CONTROL DEVICES AS UPLAND AREAS ARE STABILIZED AND PERMISSION IS GRANTED BY E/S CONTROL INSPECTOR.

TEMPORARY SEEDING NOTES

APPLY TO GRADED OR CLEARED AREAS LIKELY TO BE REDISTURBED WHERE A SHORT-TERM VEGETATIVE COVER IS NEEDED.

SEEDBED PREPARATION:
LOOSEN UPPER THREE INCHES OF SOIL BY RAKING, DISCING OR OTHER ACCEPTABLE MEANS BEFORE SEEDING, IF NOT PREVIOUSLY LOOSENED.

SOIL AMENDMENTS:
APPLY 600 LBS. PER ACRE 10-10-10 FERTILIZER (14 LBS./1,000 SQ.FT.)

SEEDING:
FOR THE PERIODS MARCH 1 THROUGH APRIL 30, AND AUGUST 15 THROUGH NOVEMBER 15, SEED WITH 1 BUSHEL PER ACRE OF ANNUAL RYE (3.2 LBS./ACRE OF WEEPING LOVEGRASS (.07 LBS./1,000 SQ.FT. FOR THE PERIOD NOVEMBER 16 THRU FEBRUARY 28, PROTECT SITE BY APPLYING 2 TONS PER ACRE OF WELL ANCHORED STRAW MULCH AND SEED AS SOON AS POSSIBLE IN THE SPRING, OR USE SOD.

MULCHING:
APPLY 1 TO 2 TONS PER ACRE (70 TO 90 LBS./1,000 SQ.FT.) OF UNROTTED SMALL GRAIN STRAW IMMEDIATELY AFTER SEEDING. ANCHORING TOOL OR 218 GALLONS PER ACRE (5 GAL.1,000 SQ.FT.) OF EMULSIFIED ASPHALT ON FLAT ACRES ON SLOPES 8 FEET OR HIGHER, USE 348 GALLONS PER ACRE (8 GAL./1,000 SQ.FT.) FOR ANCHORING.

REFER TO THE 1988 MARYLAND STANDARDS AND SPECIFICATION FOR SOIL EROSION AND SEDIMENT CONTROL FOR RATE AND METHODS NOT COVERED.

STATE OF MARYLAND — CHARLES ... — No. 13204 — REGISTERED PROFESSIONAL ENGINEER

STANDARDS AND SPECIFICATIONS FOR VEGETATIVE STABILIZATION

DEFINITION

Using vegetation as cover for barren soil to protect it from forces that cause erosion.

PURPOSE

Vegetative stabilization specifications are used to promote the establishment of vegetation on exposed soil. When soil is stabilized with vegetation, the soil is less likely to erode and more likely to allow infiltration of rainfall, thereby reducing sediment loads and run-off to downstream areas, and improving wildlife habitat and visual resources.

CONDITIONS WHERE PRACTICE APPLIES

This practice shall be used on denuded areas as specified on the plans and may be used on highly erodible or critically eroding areas. This specification is divided into Temporary Seeding, to quickly establish vegetative cover for short duration (Up to one year), and Permanent Seeding, for long term vegetative cover. Examples of applicable areas for Temporary Seeding are temporary Soil Stockpiles, cleared areas being left idle between construction phases, earth dikes, etc. and for Permanent Seeding are lawns, dams, cut and fill slopes and other areas at final grade, former stockpile and staging areas, etc.

EFFECTS ON WATER QUALITY AND QUANTITY

Planting vegetation in disturbed areas will have an effect on the water budget, especially on volumes and rates of runoff, infiltration evaporation, transpiration, percolation, and groundwater recharge. Vegetation, over time, will increase organic matter content and improve the water holding capacity of the soil and subsequent plant growth.
Vegetation will help reduce the movement of sediment, nutrients, and other chemicals carried by runoff to receiving waters. Plants will also help protect groundwater supplies by assimilating those substances present within the root zone.
Sediment control devices must remain in place during grading, seedbed preparation, seeding, mulching and vegetative establishment to prevent large quantities of sediment and associated chemicals and nutrients from washing into surface waters.

SECTION 1 - VEGETATIVE STABILIZATION METHODS AND MATERIALS

A. Site Preparation
   i. Install erosion and sediment control structures (either temporary or permanent) such as diversions, grade stabilization structures, berms, waterways, or sediment control basins.
   ii. Perform all grading operations at right angles to the slope. Final grading and shaping is not usually necessary for temporary seeding.
   iii. Schedule required soil tests to determine soil amendment composition and application rates for sites having disturbed area over 5 acres.
B. Soil Amendments (Fertilizer and Lime Specifications)
   i. Soil tests must be performed to determine the exact ratios and application rates for both lime and fertilizer on sites having disturbed areas over 5 acres. Soil analysis may be performed by the University of Maryland or a recognized commercial laboratory. Soil samples taken for engineering purposes may also be used for chemical analyses.
   ii. Fertilizers shall be uniform in composition, free flowing and suitable for accurate application by approved equipment. Manure may be substituted for fertilizer with prior approval from the appropriate approval authority. Fertilizers shall all be delivered to the site fully labeled according to the applicable state fertilizer laws and shall bear the name, trade name or trademark and warrantee of the producer.
   iii. Lime materials shall be ground limestone (hydrated or burnt lime may be substituted) which contains at least 50% total oxides (calcium oxide plus magnesium oxide). Limestone shall be ground to such fineness that at least 50% will pass through a #100 mesh sieve and 98-100% will pass through a #20 mesh sieve.
   iv. Incorporate lime and fertilizer into the top 3-5" of soil by discing or other suitable means.
C. Seedbed Preparation
   i. Temporary Seeding
      a. Seedbed preparation shall consist of loosening soil to a depth of 3" to 5" by means of suitable agricultural or construction equipment, such as disc harrows or chisel plows or rippers mounted on construction equipment. After the soil is loosened it should not be rolled or dragged smooth, but left in the roughened condition. Sloped areas (greater than 3:1) should be tracked leaving the surface in an irregular condition with ridges running parallel to the contour of the slope.
      b. Apply fertilizer and lime as prescribed on the plans.
      c. In corporate lime and fertilizer into the top 3-5" of soil by discing or other suitable means.
   ii. Permanent Seeding
      a. Minimum soil conditions required for permanent vegetative establishment:
         1. Soil pH shall be between 6.0 and 7.0.
         2. Soluble salts shall be less than 500 parts per million (ppm).
         3. The soil shall contain less than 40% clay, but enough fine grained material (>30% silt plus clay) to provide the capacity to hold a moderate amount of moisture. An exception is if lovegrass or serecia lespedezas is to be planted, then a sandy soil (<30% silt plus clay) would be acceptable.
         4. Soil shall contain 1.5% minimum organic matter by weight.
         5. Soil must contain sufficient pore space to permit adequate root penetration.
         6. If these conditions cannot be met by soils on site, adding topsoil is required in accordance with Section 21 Standard and Specification for Topsoil.
      b. Areas previously graded in conformance with the drawings shall be maintained in a true and even grade, then scarified or otherwise loosened to a depth of 3-5" to permit bonding of the topsoil to the surface area and to create horizontal erosion check slots to prevent topsoil to the surface area and to create horizontal erosion check slots to prevent topsoil from sliding down a slope.
      c. Apply soil amendments as per soil test or as included on the plans.
      d. Mix soil amendments into the top 3-5" of topsoil by discing or other suitable means. Lawn areas should be raked to smooth the surface, remove large objects like stones and branches, and ready the area for seed and application. Where site conditions will not permit normal seedbed preparation, loosen surface soil by dragging with a heavy chain or other equipment to roughen the surface. Steep slopes (steeper than 3:1) should be tracked by a dozer leaving the soil in an irregular condition with ridges running parallel to the contour of the slope. The top 1-3" of soil should be loose and friable. Seedbed loosening may not be necessary on newly disturbed areas.
D. Seed Specifications
   i. All seed must meet the requirements of the Maryland State Seed Law. All seed shall be subject to re-testing by a recognized seed laboratory. All seed used shall have been tested within the 6 months immediately preceding the date of sowing such material on this job.
   Note: Seed tags shall be made available to the inspector to verify type and rate of seed used.
   ii. Inoculant - The inoculant for treating legume seed in the seed mixtures shall be a pure culture of nitrogen-fixing bacteria prepared specifically for the species. Inoculants shall not be used later than the date indicated on the container. Add fresh inoculant as directed on package. Use four times the recommended rate when hydroseeding. Note: It is very important to keep inoculant as cool as possible until used. Temperatures above 75-80° F. can weaken bacteria and make the inoculant less effective.
E. Methods of Seeding
   i. Hydroseeding: Apply seed uniformly with hydroseeder (slurry includes seed and fertilizer), broadcast or drop seeded, or a cultipacker seeder.
      a. If fertilizer is being applied at the time of seeding, the application rates amounts will not exceed the following: nitrogen: maximum of 100 lbs. per acre total of soluble nitrogen; P205 (phosphorous): 200 lbs/ac; K20 (potassium): 200 lbs/ac.
      b. Lime - use only ground agricultural limestone, (Up to 3 tons per acre may be applied by hydroseeding). Normally, not more than 2 tons are applied by hydroseeding at any one time. Do not use burnt or hydrated lime when hydroseeding.
      c. Seed and fertilizer shall be mixed on site and seeding shall be done immediately and without interruption.
   ii. Dry Seeding: This includes use of conventional drop or broadcast spreaders.
      a. Seed spread dry shall be incorporated into the subsoil at the rates prescribed on the Temporary or Permanent Seeding Summaries or Tables 265 or 26. The seeded area shall then be rolled with a weighted roller to provide good seed to soil contact.
      b. Where practical, seed should be applied in two directions perpendicular to each other. Apply half the seeding rate in each direction.
   iii. Drill or Cultipacker Seeding: Mechanized seeders that apply and cover seed with soil.
      a. Cultipacking seeders are required to bury the seed in such a fashion as to provide at least 1/4 inch of soil covering. Seedbed must be firm after planting.
      b. Where practical, seed should be applied in two directions perpendicular to each other. Apply half the seeding rate in each direction.
F. Mulch Specifications (In order of preference)
   i. Straw shall consist of thoroughly threshed wheat, rye or oat straw, reasonable bright in color, and shall not be musty, moldy, caked, decayed, or excessively dusty and shall be free of noxious weed seeds as specified in the Maryland Seed Law.
   ii. Wood Cellulose Fiber Mulch (WCFM)
      a. WCFM shall consist of specially prepared wood cellulose processed into a uniform fibrous physical state.
      b. WCFM shall be dyed green or contain a green dye in the package that will provide an appropriate color to facilitate visual inspection of the uniformly spread slurry.
      c. WCFM, including dye, shall contain no germination or growth inhibiting factors.
      d. WCFM materials shall be manufactured and processed in such a manner that the wood cellulose fiber mulch will remain in uniform suspension in water under agitation and will blend with seed, fertilizer and other additives to form a homogeneous slurry. The mulch material shall form a blotter-like ground cover, on application, having moisture absorption and percolation properties and shall cover and hold grass seed in contact with the soil without inhibiting the growth of the grass seedlings.
      e. WCFM material shall contain no elements or compounds at concentration levels that will be phytol-toxic.
      f. WCFM must conform to the following physical requirements: fiber length to approximately 10 mm., diameter approximately 1 mm., pH range of 4.0 to 8.5, ash content of 1.6% maximum and water holding capacity of 90% minimum.
   Note: Only sterile straw mulch should be used in areas where one species of grass is desired.
G. Mulching Seeded Areas - Mulch shall be applied to all seeded areas immediately after seeding.
   i. If grading is completed outside of the seeding season, mulch along shall be applied as prescribed in this section and maintained until the seeding season returns and seeding can be performed in accordance with these specifications.
   ii. When straw mulch is used, it shall be spread over all seeded areas at the rate of 2 tons/acre. Mulch shall be applied to a uniform loose depth of between 1" and 2". Mulch applied shall achieve a uniform distribution and depth so that the soil surface is not exposed. If a mulch anchoring tool is to be used, the rate should be increased to 2.5 tons/acre.
   iii. Wood cellulose fiber used as a mulch shall be applied at a net dry weight of 1,500 lbs. per acre. The wood cellulose fiber shall be mixed with water, and the mixture shall contain a maximum of 50 lbs. of wood cellulose fiber per 100 gallons of water.
H. Securing Straw Mulch (Mulch Anchoring): Mulch anchoring shall be performed immediately following mulch application to minimize loss by wind or water. This may be done by one of the following methods (listed by preference), depending upon size of area and erosion hazard:
   i. A mulch anchoring tool is a tractor drawn implement designed to punch and anchor mulch into the soil surface a minimum of two (2) inches. This practice is most effective on large areas, but is limited to flatter slopes where equipment can operate safely. If used on sloping land, this practice should be used on the contour if possible.
   ii. Wood cellulose fiber may be used for anchoring straw. The fiber binder shall be applied at a net dry weight of 750 pounds/acre. The wood cellulose fiber shall be mixed with water and the mixture shall contain a maximum of 50 pounds of wood cellulose fiber per 100 gallons of water.
   iii. Application of liquid binders should be heavier at the edges where wind catches mulch, such as in valleys and crest of banks. The remainder of area should be appear uniform after binder application. Synthetic binders - such as Acrylic DLR (Agro-Tack), DCA-70 Petroset, Terra Tax II, Terra Tack AR or other approved equal may be used at rates recommended by the manufacturer to anchor mulch.
   iv. Lightweight plastic netting may be stapled over the mulch according to manufacturer's recommendations. Netting is usually available in rolls 4' to 15' feet wide and 300 to 3,000 feet long.

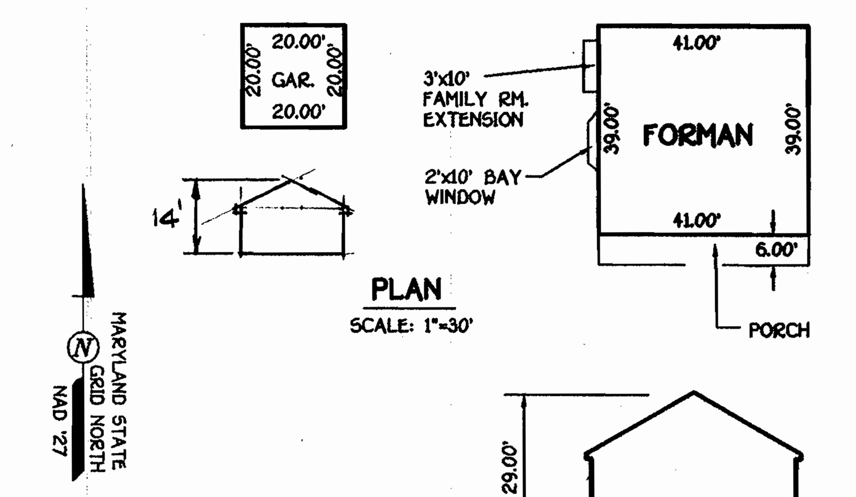

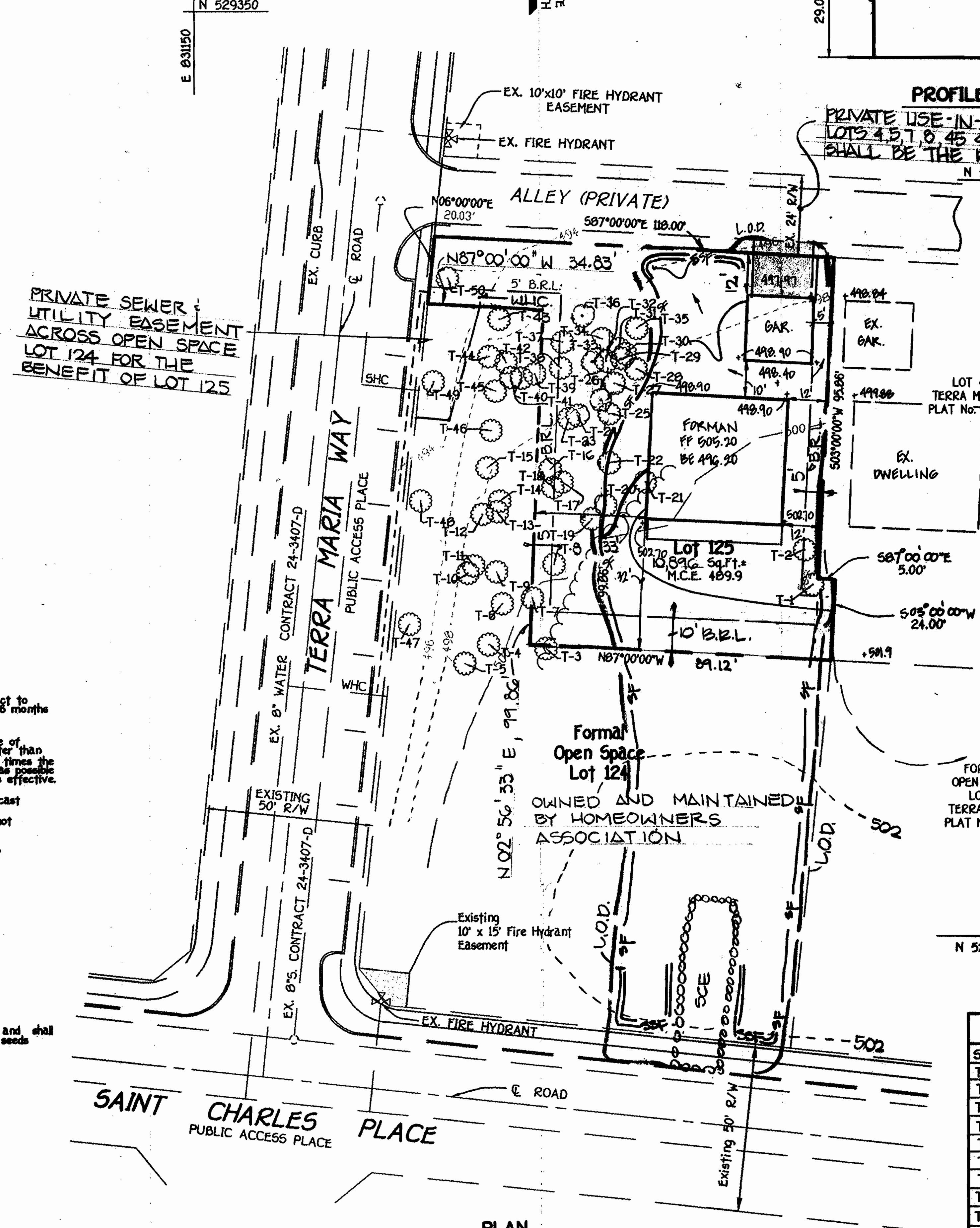

19. OFF-STREET PARKING LOTS AND GARAGES SHALL BE LOCATED TO THE SIDE OR REAR OF THE PRINCIPAL STRUCTURE PER SECTION 128 G.3. OF THE ZONING REGULATION.

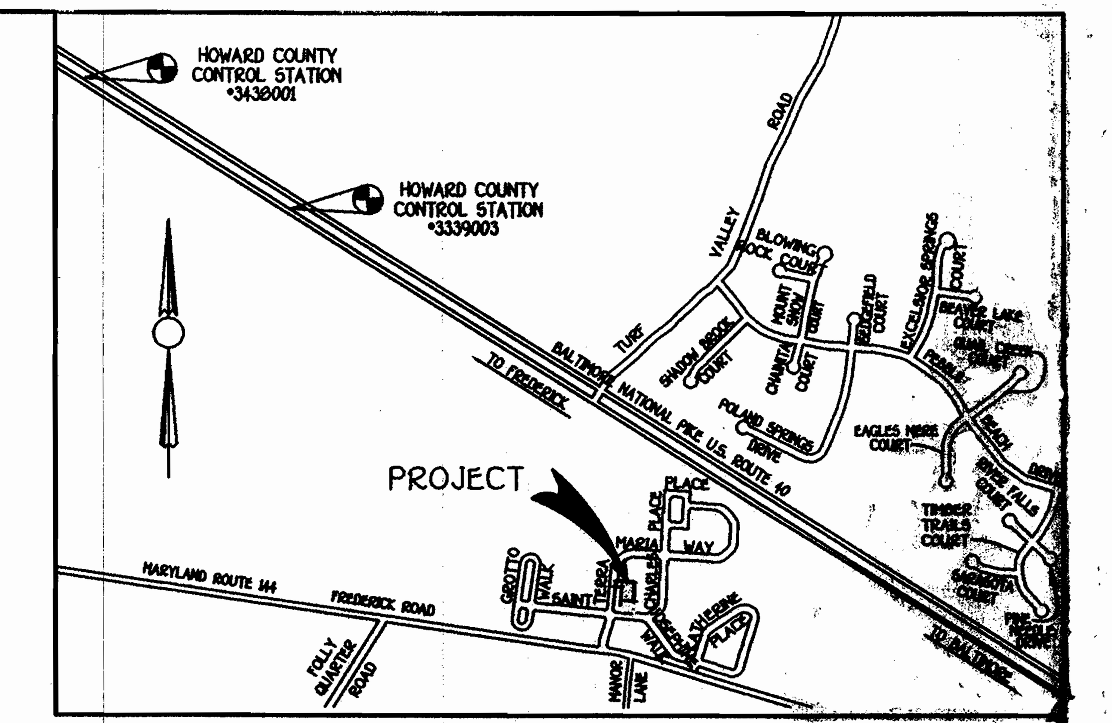

VICINITY MAP

SCALE: 1"=2000'

GENERAL NOTES

1. THE CONTRACTOR SHALL NOTIFY THE CONSTRUCTION INSPECTION DIVISION AT (410) 313-1880 AT LEAST (5) FIVE WORKING DAYS PRIOR TO THE START OF WORK.
2. THE CONTRACTOR SHALL NOTIFY "MISS UTILITY" AT 1-800-257-7777 AT LEAST 48 HOURS PRIOR TO ANY EXCAVATION WORK.
3. THIS PROJECT IS SUBJECT TO HOWARD COUNTY FILES: F93-65, F93-115, WP-92-114, S94-02, F 95-99 AND P.B. 291, P 94-24, F00-146
4. BOUNDARY AND SURVEY PERFORMED BY: FISHER COLLINS AND CARTER INC. ON OR ABOUT JANUARY 1992.
5. HORIZONTAL AND VERTICAL CONTROL DATUM IS BASED ON HOWARD COUNTY GEODETIC CONTROL STATIONS:
   HOWARD COUNTY MONUMENT 3438001 N 532502.146 E 827774.234
   HOWARD COUNTY MONUMENT 3339003 N 531659.159 E 829105.468
6. ANY DAMAGE TO THE COUNTY'S RIGHTS-OF-WAY SHALL BE CORRECTED AT THE DEVELOPER'S EXPENSE.
7. THIS PLAN IS FOR HOUSE SITING AND LOT GRADING ONLY. IMPROVEMENTS SHOWN WITHIN THE RIGHTS-OF-WAY OF THIS S.D.P. ARE NOT USED FOR CONSTRUCTION. FOR CONSTRUCTION SEE APPROVED ROAD CONSTRUCTION PLANS F-95-99 AND/OR APPROVED WATER AND SEWER PLANS CONTRACT NO. 24-3407-D
8. CONTRACTOR WILL CHECK SEWER HOUSE CONNECTION ELEVATION AT EASEMENT LINE PRIOR TO CONSTRUCTION.
9. STORMWATER MANAGEMENT OBLIGATIONS ARE FULFILLED UNDER F-95-99.
10. THIS PLAN IS SUBJECT TO WAIVER PETITION NO. WP 92-114. THE SUBDIVISION AND LAND DEVELOPMENT REGULATIONS, WHICH RESTRICTS GRADING AND REMOVAL OF VEGETATIVE COVER FROM WETLANDS AND STREAM BUFFER.
11. SITE ANALYSIS DATA:
    A. TOTAL PROJECT AREA: 0.25AC.±
    B. AREA OF PLAN SUBMISSION: 0.32 AC.±
    C. LIMIT OF DISTURBED AREA: 0.32 AC.±
    D. PRESENT ZONING: R-ED
    E. PROPOSED USE FOR SITE AND STRUCTURES: SINGLE FAMILY DETACHED D.U.
    F. OPEN SPACE REQUIREMENTS ARE PROVIDED UNDER F-93-115.
12. NO WETLANDS EXIST ON-SITE.
13. THIS SITE WILL UTILIZE EX. PUBLIC WATER & SEWER.
14. TOPOGRAPHIC SURVEY PERFORMED BY: FISHER, COLLINS AND CARTER, INC. ON OR ABOUT JANUARY 18, 2000.
15. GARAGES SHALL BE USED FOR PARKING PURPOSES IN ACCORDANCE WITH SECTION 133.D.2.a OF THE ZONING REGULATIONS.
16. FOREST CONSERVATION REQUIREMENTS HAVE BEEN COMPLETED BY F 95-99.
17. THE REQUIRED SIDE OR REAR SET BACK FROM AN ALLEY RIGHT OF WAY SHALL BE 0 FEET, FOR ACCESSORY STRUCTURE, PER SECTION 128.G.3. OF THE ZONING REG.
18. A MINIMUM OF 10 FEET MUST BE PROVIDED BETWEEN STRUCTURES PER SECTION 128 G.3. OF THE ZONING REG.

TREE CHART

SYMBOL	TREE TYPE	SYMBOL	TREE TYPE
T-1	32" WHITE OAK	T-24	5" NORWAY MAPLE
T-2	22" BLACK GUM	T-25	5" BLACK LOCUST
T-3	6" HICKORY	T-26	3" RED MAPLE
T-4	3" DOGWOOD	T-27	4" TULIP POPLAR
T-5	3" DOGWOOD	T-28	3" BLACK GUM
T-6	3" HICKORY	T-29	6" TULIP POPLAR
T-7	32" WHITE OAK	T-30	4" BLACK CHERRY
T-8	6" HICKORY	T-31	5" LINDEN
T-9	3" BLACK CHERRY	T-32	4" BLACK LOCUST
T-10	3" DOGWOOD	T-33	4" BLACK LOCUST
T-11	3" SASSAFRAS	T-34	3" SASSAFRAS
T-12	6" WHITE OAK	T-35	3" WHITE OAK
T-13	3" BLACK GUM	T-36	6" TULIP POPLAR
T-14	3" HICKORY	T-37	6" TULIP POPLAR
T-15	3" BLACK GUM	T-38	3" TULIP POPLAR
T-16	5" RED MAPLE	T-39	4" BLACK CHERRY
T-17	4" BLACK LOCUST	T-40	3" DOGWOOD
T-18	3" BLACK CHERRY	T-41	6" TULIP POPLAR
T-19	6" TULIP POPLAR	T-42	5" BLACK CHERRY
T-20	8" TULIP POPULAR	T-43	3" TULIP POPLAR
T-21	24" WHITE OAK	T-44	6" HICKORY
T-22	5" HICKORY	T-45	5" TULIP POPLAR
T-23	8" TULIP POPLAR	T-46	6" HICKORY
		T-47	3" WILLOW OAK
		T-48	3" WILLOW OAK
		T-49	3" WILLOW OAK
		T-50	3" WILLOW OAK

LOT	STREET ADDRESS
125	3020 TERRA MARIA WAY

ADDRESS CHART

SHEET INDEX	
Sheet No.	Description
1	Plan View - Notes and Details

LEGEND	
Symbol	Description
- - - - - -	Existing Contour 2' Interval
— — —	Existing Contour 10' Interval
———	Proposed Contour 2' Interval
━━━	Proposed Contour 10' Interval
+ 624	Spot Elevation
—SF—SF—	Silt Fence
FF	First Floor Elevation
BE	Basement Elevation
WO	Proposed Walkout
— — —	Earth Dike
—X—X—	Tree Protection
⌒⌒⌒	Existing Tree Line
L.O.D.	Limit Of Disturbance
(x)	Existing Street Tree

FISHER, COLLINS & CARTER, INC.
CIVIL ENGINEERING CONSULTANTS & LAND SURVEYORS
CENTENNIAL SQUARE OFFICE PARK - 10272 BALTIMORE NATIONAL PIKE
ELLICOTT CITY, MARYLAND 21042
(410) 461 - 2855

G:\61471 PLOT PLAN 125

DATE	DESCRIPTION

REVISION

ENGINEER'S CERTIFICATE

"I certify that this plan for erosion and sediment control represents a practical and workable plan based on my personal knowledge of the site conditions and that it was prepared in accordance with the requirements of the Howard Soil Conservation District."

Signature of Engineer (Print name below signature) — Date 7/28/00

DEVELOPER'S CERTIFICATE

"I/We certify that all development and construction will be done according to this plan for sediment and erosion control and that any responsible personnel involved in the construction project will have a Certificate of Attendance at a Department of the Environment Approved Training Program for the Control of Sediment and Erosion before beginning the project. I also authorize periodic on-site inspection by the Howard Soil Conservation District."

Signature of Developer (Print name below signature) — Date 7/28/00

Reviewed for HOWARD SCD and meets Technical Requirements.
U.S.D.A.-Natural Resources Conservation Service — Date 8/24/00
This development plan is approved for soil erosion and sediment control by the HOWARD SOIL CONSERVATION DISTRICT.
Howard SCD — Date 8/24/00

OWNER/DEVELOPER

JENELL FORMAN
3119 PINE ORCHARD LANE
APT. 201
ELLICOTT CITY, MD. 21042

APPROVED: DEPARTMENT OF PLANNING AND ZONING
Chief, Division of Land Development — Date 9/22/00
Chief, Development Engineering Division MK — Date 9/20/00
Director - Department of Planning and Zoning BC — Date 9/22/00

PROJECT			SECTION/AREA		LOT NO.
TERRA MARIA			—		125
PLAT	BLOCK NO.	ZONE	TAX/ZONE	ELEC. DIST.	CENSUS TR.
14323	23	R-ED	16	2ND	6023.01
WATER CODE			SEWER CODE		
J01, H07			5992000		

SITE DEVELOPMENT PLAN

LOT 125 TERRA MARIA

TAX MAP No: 16 PARCEL: 114
SECOND ELECTION DISTRICT, HOWARD COUNTY, MARYLAND
SCALE: 1"=30' DATE: FEBRUARY, 2000
SHEET 1 OF 1

SDP 00-121