Docusign Envelope ID: 999D0C02-B097-4DFE-99EA-90E2336A257B

MATERIALS SPECIFICATIONS FOR MICRO-BIORETENTION, RAIN GARDEN & LANDSCAPE INFILTRATION

MATERIAL	SPECIFICATION	SIZE	NOTES
PLANTINGS	SEE PLANT LIST THIS SHEET	N/A	PLANTINGS ARE SITE-SPECIFIC, SEE PLANT LIST THIS SHEET
PLANTING SOIL [2'-4' TO 4' DEEP]	LOAMY SAND (60% - 65%) & COMPOST (35%-40%) OR SANDY LOAM (30%), COARSE SAND (30%) & COMPOST (40%)	N/A	USDA SOIL TYPES LOAMY SAND OR SANDY LOAM; CLAY CONTENT < 5%
ORGANIC CONTENT	MIN. 10% BY DRY WEIGHT (ASTM-D-2974)		
MULCH	SHREDDED HARDWOOD		AGED 6 MONTHS, MINIMUM; NO PINE OR WOOD CHIPS
PEA GRAVEL DIAPHRAGM	PEA GRAVEL: ASTM-D-448	NO. 8 OR NO. 9 (1/8" TO 3/8")	
CURTAIN DRAIN (IF REQUIRED)	ORNAMENTAL STONE: WASHED COBBLES	STONE: 2" TO 5"	
GEOTEXTILE		N/A	PE TYPE 1 NONWOVEN
GRAVEL (UNDERDRAINS & INFILTRATION BERMS)	AASHTO M-43	NO. 57 OR NO. 6 AGGREGATE (3/8" TO 3/4")	
UNDERDRAIN PIPING	F 758, TYPE PS 28 OR AASHTO M-278	4" TO 6" RIGID SCHEDULE 40 PVC OR SDR35	SLOTTED OR PERFORATED PIPE, 3/8" PERF. @ 6" ON CENTER, 4 HOLES PER ROW; MINIMUM OF 3" OF GRAVEL OVER PIPES; NOT NECESSARY UNDERNEATH PIPES. PERFORATED PIPE SHALL BE WRAPPED WITH 1/4" GALVANIZED HARDWARE CLOTH.
POURED IN PLACE CONCRETE (IF REQUIRED)	MSHA MX NO.3; F'c= 3500 PSI @ 28 DAYS, NORMAL WEIGHT, AIR-ENTRAINED; REINFORCING TO MEET ASTM-615-60	N/A	ON-SITE TESTING OF POURED-IN-PLACE CONCRETE REQUIRED; 28 DAY STRENGTH AND SLUMP TEST; ALL CONCRETE DESIGN (CAST-IN-PLACE OR PRE-CAST) *NOT USING PREVOUSLY APPROVED STATE OR LOCAL STANDARDS* REQUIRES DESIGN DRAWINGS SEALED AND APPROVED BY A PROFESSIONAL STRUCTURAL ENGINEER LICENSED IN THE STATE OF MARYLAND-DESIGN TO INCLUDE MEETING ACI CODE 350.R/89; VERTICAL LOADING [H-10 OR H-20]; ALLOWABLE HORIZONTAL LOADING (BASED ON SOIL PRESSURES); AND ANALYSIS OF POTENTIAL CRACKING.
SAND	AASHTO-M-6 OR ASTM-C-33	0.02" TO 0.04"	SAND SUBSTITUTIONS SUCH AS DIABASE AND GRAYSTONE (AASHTO) #10 ARE NOT ACCEPTABLE. NO CALCIUM CARBONATED OR DOLOMITIC SAND SUBSTITUTIONS ARE ACCEPTABLE. NO "ROCK DUST" CAN BE USED FOR SAND.

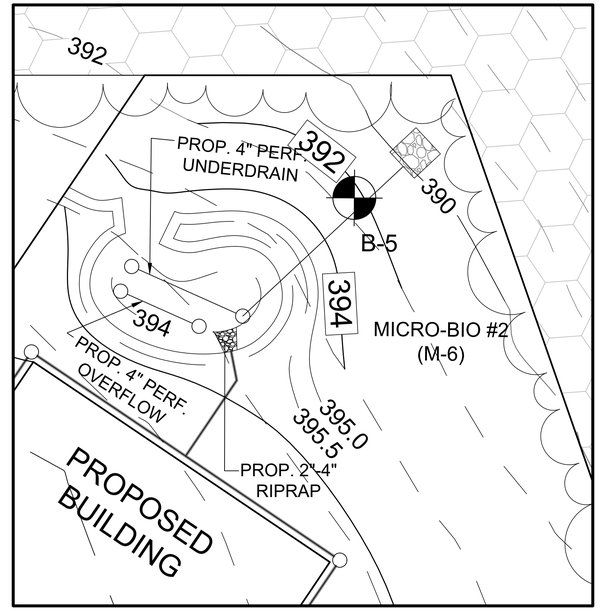

PLAN VIEW: MICRO-BIORETENTION FACILITY #2 (M-6)

SCALE: 1"=10'

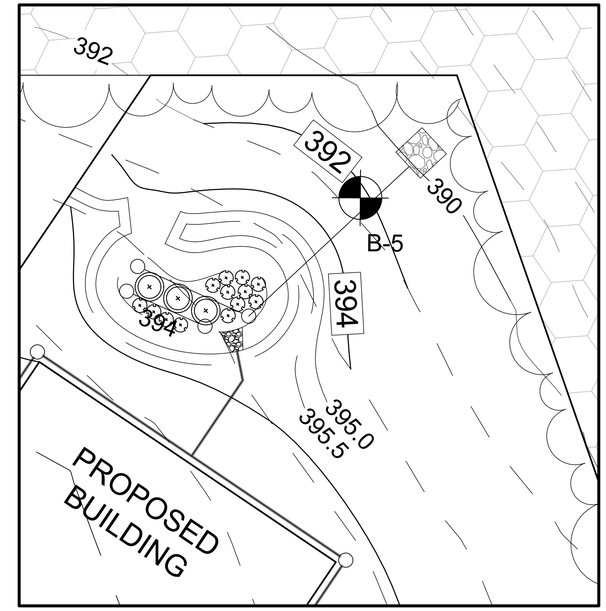

PLAN VIEW: MICRO-BIORETENTION FACILITY #2 (M-6) LANDSCAPE PLAN

SCALE: 1"=10'

OPERATION AND MAINTENANCE SCHEDULE FOR PRIVATELY OWNED AND MAINTAINED DRY WELLS (M-5)

1. THE MONITORING WELLS AND STRUCTURES SHALL BE INSPECTED ON A QUARTERLY BASIS AND AFTER EVERY LARGE STORM EVENT.
2. WATER LEVELS AND SEDIMENT BUILD UP IN THE MONITORING WELLS SHALL BE RECORDED OVER A PERIOD OF SEVERAL DAYS TO INSURE TRENCH DRAINAGE.
3. A LOG BOOK SHALL BE MAINTAINED TO DETERMINE THE RATE AT WHICH THE FACILITY DRAINS.
4. WHEN THE FACILITY BECOMES CLOGGED SO THAT IT DOES NOT DRAIN DOWN WITHIN THE 72 HOURS TIME PERIOD, CORRECTIVE ACTION SHALL BE TAKEN.
5. THE MAINTENANCE LOG BOOK SHALL BE AVAILABLE TO HOWARD COUNTY FOR INSPECTION TO INSURE COMPLIANCE WITH OPERATION AND MAINTENANCE CRITERIA.
6. ONCE THE PERFORMANCE CHARACTERISTICS OF THE INFILTRATION FACILITY HAVE BEEN VERIFIED, THE MONITORING SCHEDULE CAN BE REDUCED TO AN ANNUAL BASIS UNLESS THE PERFORMANCE DATA INDICATES THAT A MORE FREQUENT SCHEDULE IS REQUIRED.

BIORETENTION ELEVATIONS AND DIMENSIONS

DESCRIPTION	BIO 1
'A' PONDING DEPTH	1.0'
'B' TOP OF MULCH	394.00
'C' WSEL	395.00
'D' EMBANKMENT WIDTH	2.0'
'E' SPILLWAY WIDTH	6.0'
'F' SPILLWAY LENGTH	5.0'
'G' FACILITY LENGTH	22.0'
'H' FACILITY WIDTH (AVERAGE)	7.5'
'I' PERF. UNDERDRAIN PIPE DIMENSION	17.0'
'J' UNDERDRAIN PIPE INVERT	390.92
'K' SOLID UNDERDRAIN DIMENSION	31.23'
'L' OUTFALL INVERT	390.0
'M' PERF. OVERFLOW PIPE DIMENSION	11.0'
'N' OVERFLOW PIPE INVERT	390.92
'O' GRAVEL STORAGE DEPTH	2.5'
'P' BOTTOM ELEVATION OF FACILITY	388.25
'Q' GRADE % OF OUTFALL PIPE	2.9%

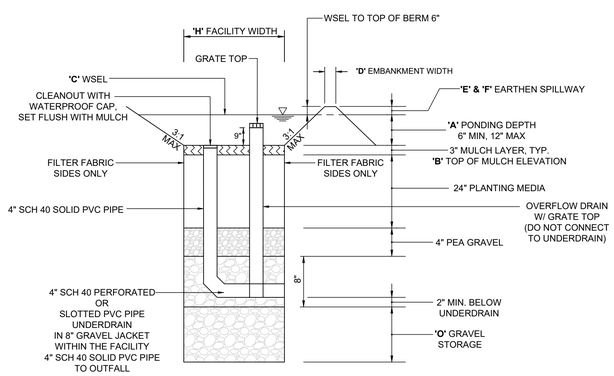

BIORETENTION FACILITY TYPICAL SECTION

NOT TO SCALE

NOTES:
- FOR ADDITIONAL INFORMATION, SEE THE 2000 MARYLAND STORMWATER DESIGN MANUAL, VOLUMES I AND II.
- SEE CHART, THIS SHEET, FOR ELEVATIONS AND DISTANCES

BIORETENTION PLANT LIST

SHRUBS						
LEGEND	BOTANICAL NAME	COMMON NAME	SPACING	SIZE	REMARKS	QTY. BIO 2
*	ILEX GLABRA	INK BERRY	AS SHOWN* (MIN. 4' O.C.)	24"- 36" HT.	--	3
	RUDBECKIA	BLACK-EYED SUSAN	AS SHOWN* (MIN. 2' O.C.)	1 GALLON	--	13

NOTE: PLANT MATERIAL MUST COVER 50% OF THE MULCH AREA AT MATURE GROWTH.
*INTERSPERSE PLANTINGS THROUGHOUT BIORETENTION FILTER AREA

BIO 2 - BIORETENTION AREA = 151 S.F. OR 0.0035 AC.
PROVIDED: 3 SHRUBS AND 13 HERBACEOUS SPECIES

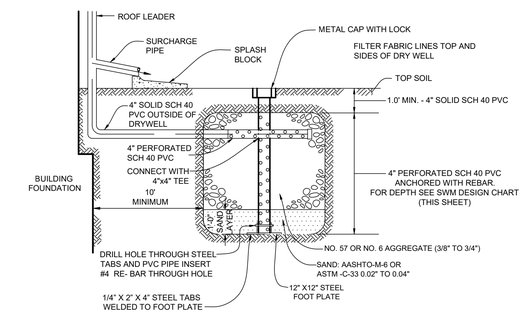

TYPICAL DRY WELL CROSS SECTION

NOT TO SCALE

NOTES:
1. MANUFACTURED SAND IS NOT ACCEPTABLE IN DRYWELLS.
2. ALL PIPES SHOULD BE SCH 40 PVC 4" MIN.
3. DRYWELLS MUST BE A MINIMUM OF:
   - 10' FROM BUILDING FOUNDATION
   - 30' FROM SEPTIC FIELD
   - 100' FROM WELL LOCATION AND SHOULD BE LOCATED TO MINIMIZE ANY BASEMENT SEEPAGE.
4. TRENCH MAY NOT BE INSTALLED IN FILL.

ON LOT 1, THE STORMWATER MANAGEMENT FACILITY ESD #2, THE PROPOSED HOUSE AND ITS IMPROVEMENTS,SHALL BE CONSTRUCTED UNDER THE SDP-24-022 PLAN. THE BIO-RETENTION FACILITY ESD #1, SHOWN ON LOT 5 HAS BEEN BONDED AND WILL BE CONSTRUCTED UNDER THE APPROVED F-21-021 PLAN. THE LINEWORK PROVIDED ON THIS SHEET ARE FOR INFORMATIONAL PURPOSES. FOR ADDITIONAL STORMWATER MANAGEMENT INFORMATION PERTAINING TO ESD FACILITIES #1 AND 2, REFER TO F-21-021 AND SDP-24-022.

OPERATION AND MAINTENANCE SCHEDULE FOR PRIVATELY OWNED AND MAINTAINED MICRO-BIORETENTION FACILITIES (M-6)

1. THE OWNER SHALL MAINTAIN THE PLANT MATERIAL, MULCH LAYER AND SOIL LAYER ANNUALLY. MAINTENANCE OF MULCH AND SOIL IS LIMITED TO CORRECTING AREAS OF EROSION OR WASH OUT. ANY MULCH REPLACEMENT SHALL BE DONE IN THE SPRING. PLANT MATERIAL SHALL BE CHECKED FOR DISEASE AND INSECT INFESTATION AND MAINTENANCE WILL ADDRESS DEAD MATERIAL AND PRUNING. ACCEPTABLE REPLACEMENT PLANT MATERIAL IS LIMITED TO THE FOLLOWING: 2000 MARYLAND STORMWATER DESIGN MANUAL, VOLUME II, TABLE A.4.1 AND 2.
2. THE OWNER SHALL PERFORM A PLANT INSPECTION IN THE SPRING AND IN THE FALL OF EACH YEAR. DURING THE INSPECTION, THE OWNER SHALL REMOVE DEAD OR DISEASED VEGETATION CONSIDERED BEYOND TREATMENT, REPLACE DEAD PLANT MATERIAL WITH ACCEPTABLE REPLACEMENT PLANT MATERIAL, TREAT DISEASED TREES AND SHRUBS, AND REPLACE ALL DEFICIENT STAKES AND WIRES.
3. THE OWNER SHALL INSPECT THE MULCH EACH SPRING. THE MULCH SHALL BE REPLACED EVERY TWO TO THREE YEARS. THE PREVIOUS MULCH LAYER SHALL BE REMOVED BEFORE THE NEW LAYER IS APPLIED.
4. THE OWNER SHALL CORRECT SOIL EROSION ON AN AS NEEDED BASIS, WITH A MINIMUM OF ONCE PER MONTH AND AFTER EACH HEAVY STORM.

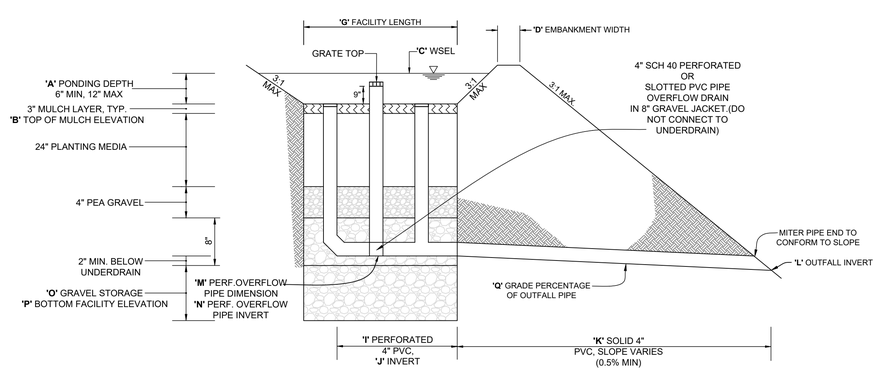

BIORETENTION FACILITY TYPICAL PROFILE

NOT TO SCALE

OWNER/DEVELOPER

LLU, LLC
12143 CLARKSVILLE PIKE
CLARKSVILLE, MARYLAND 21029
C/O RON BAQUOL
RLBDEVLLC2@GMAIL.COM
443-250-7272

STORMWATER MANAGEMENT PLAN, NOTES & DETAILS LUTFI PROPERTY

LUTFI PROPERTY LOTS 2 THRU 5, A RESUBDIVISION OF NON-BUILDABLE BULK PARCEL 'A' AS SHOWN ON PLAT NUMBER 26221 LUTFI PROPERTY LOT 1 AND NON-BUILDABLE BULK PARCEL 'A'

TAX MAP 35 GRID 13 — PARCEL 56
5TH ELECTION DISTRICT — HOWARD COUNTY, MARYLAND

SILL ENGINEERING GROUP, LLC
16005 Frederick Road, 2nd Floor
Woodbine, Maryland 21797
Phone: 443.325.5076
Fax: 410.696.2022
Email: info@sillengineering.com
Civil Engineering & Surveying for Land Development

DESIGN BY:	PS
DRAWN BY:	TB
CHECKED BY:	PS
SCALE:	AS SHOWN
DATE:	JULY 3, 2024
PROJECT #:	23-065
SHEET #:	6 of 8

PROFESSIONAL CERTIFICATION: I HEREBY CERTIFY THAT THESE DOCUMENTS WERE PREPARED OR APPROVED BY ME, AND THAT I AM A DULY LICENSED PROFESSIONAL ENGINEER UNDER THE LAWS OF THE STATE OF MARYLAND, LICENSE NO. 32025. EXPIRATION DATE JUNE 20, 2025

APPROVED: HOWARD COUNTY DEPARTMENT OF PLANNING AND ZONING

DocuSigned by: Kent Sheubrooks 706387E4EF41490...	7/26/2024
CHIEF, DEVELOPMENT ENGINEERING DIVISION	DATE
DocuSigned by: 7/26/2024	
CHIEF, DIVISION OF LAND DEVELOPMENT	DATE

NO.	DESCRIPTION	DATE

REVISIONS

F-24-030