DocuSign Envelope ID: 42A4CCF4-8A0E-4DE5-9A1B-C40A02CEBB2F

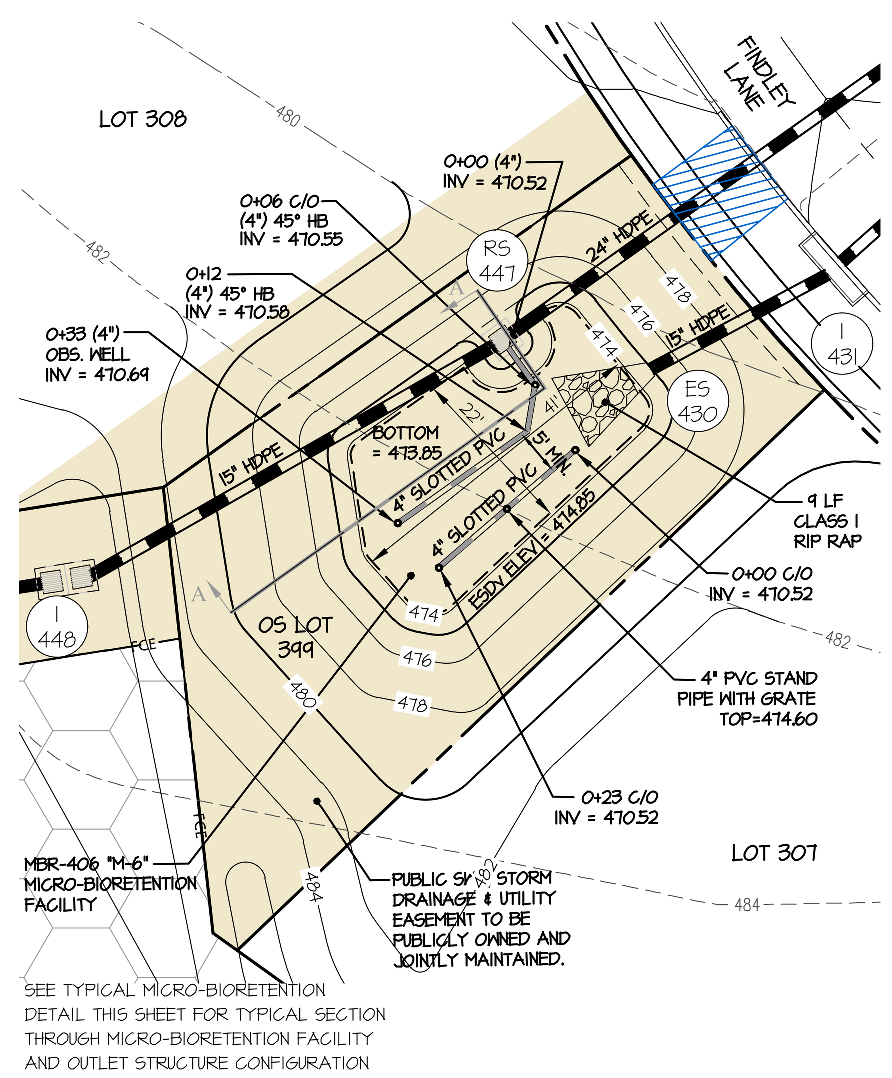

SEE TYPICAL MICRO-BIORETENTION DETAIL THIS SHEET FOR TYPICAL SECTION THROUGH MICRO-BIORETENTION FACILITY AND OUTLET STRUCTURE CONFIGURATION

MICRO-BIORETENTION 406 SCALE: 1" = 20'

MBR-406
TYPE (PER MDE): MICRO BIORETENTION SYSTEM (M6)
NON - MDE 378 FACILITY
TOTAL DRAINAGE AREA TO FACILITY = 37,127 SF
STORAGE PROVIDED = 1,007 CU-FT (@474.85)
ESDv PROVIDED = 1,339 CU-FT

LOW-FLOW OUTFALL: PERFORATED 4" UNDERDRAIN SYSTEM
BOTTOM OF FACILITY = 473.85
HIGH-FLOW OUTFALL: RS-447 ('S' INLET, TOP = 474.85)
MINIMUM DAM ELEVATION = 475.35

52 HERBACEOUS PLANTINGS (101 S.F.)

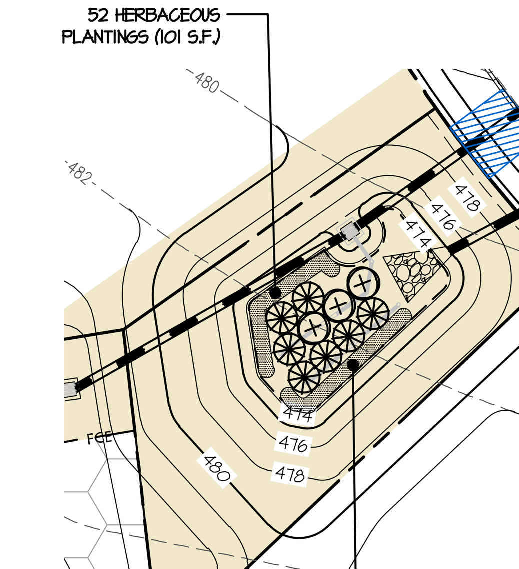

50 HERBACEOUS PLANTINGS (98 S.F.)

MICRO-BIORETENTION 406 LANDSCAPE PLAN SCALE: 1" = 30'

NOTES:
1) PROVIDE FILTER FABRIC BETWEEN SOIL AND STONE (SIDES ONLY) MSHA CLASS C
2) SEE THE MICRO-BIORETENTION SECTION DETAIL ON SHEET 45 FOR THE TYPICAL OVERFLOW DISTRIBUTION PIPE CONFIGURATION

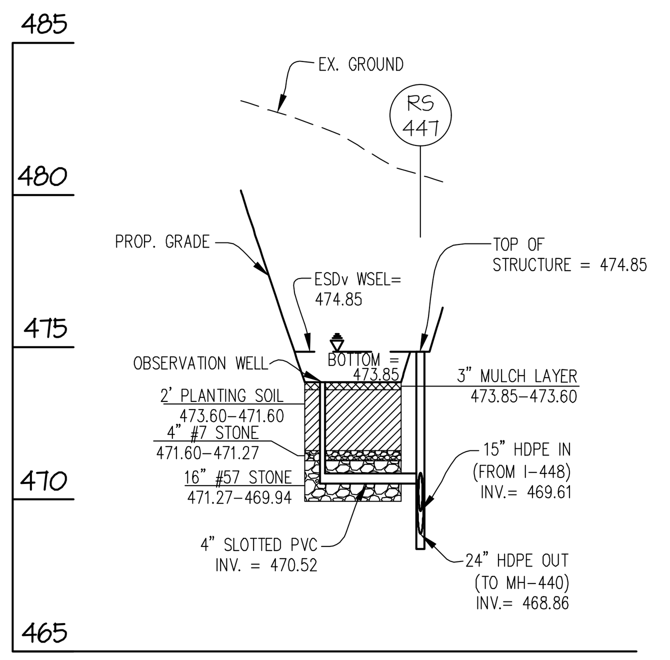

SECTION "A"-"A"
SCALE: 1" = 50' (HORZ.) 1" = 5' (VERT.)

MICRO-BIORETENTION 406 DETAILS

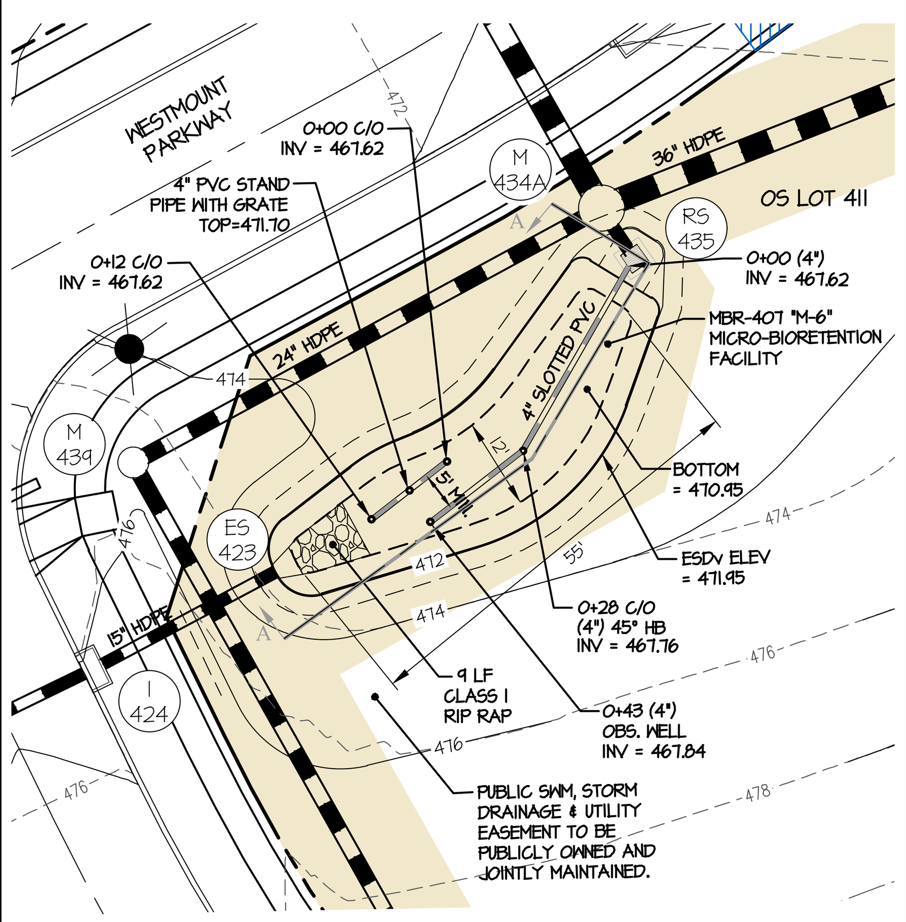

SEE TYPICAL MICRO-BIORETENTION DETAIL THIS SHEET FOR TYPICAL SECTION THROUGH MICRO-BIORETENTION FACILITY AND OUTLET STRUCTURE CONFIGURATION

MICRO-BIORETENTION 407 SCALE: 1" = 20'

MBR-407
TYPE (PER MDE): MICRO BIORETENTION SYSTEM (M6)
NON - MDE 378 FACILITY
TOTAL DRAINAGE AREA TO FACILITY = 24,293 SF
STORAGE PROVIDED = 815 CU-FT (@471.95)
ESDv PROVIDED = 1,084 CU-FT

LOW-FLOW OUTFALL: PERFORATED 4" UNDERDRAIN SYSTEM
BOTTOM OF FACILITY = 470.95
HIGH-FLOW OUTFALL: RS-435 ('S' INLET, TOP = 471.95)
MINIMUM DAM ELEVATION = 472.28

57 HERBACEOUS PLANTINGS (112 S.F.)

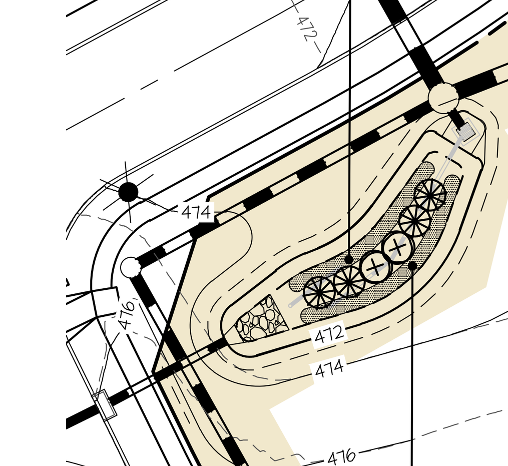

67 HERBACEOUS PLANTINGS (131 S.F.)

MICRO-BIORETENTION 407 LANDSCAPE PLAN SCALE: 1" = 30'

NOTES:
1) PROVIDE FILTER FABRIC BETWEEN SOIL AND STONE (SIDES ONLY) MSHA CLASS C
2) SEE THE MICRO-BIORETENTION SECTION DETAIL ON SHEET 45 FOR THE TYPICAL OVERFLOW DISTRIBUTION PIPE CONFIGURATION

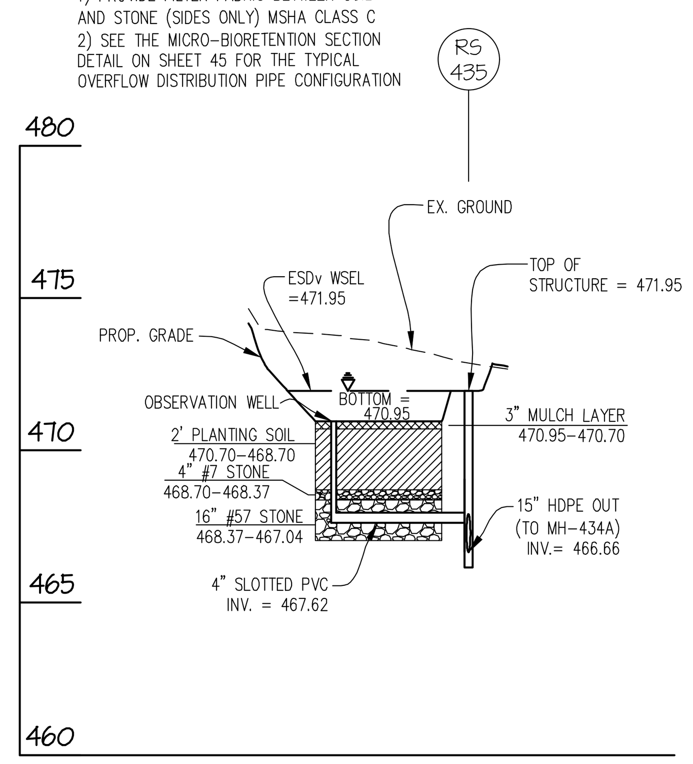

SECTION "A"-"A"
SCALE: 1" = 50' (HORZ.) 1" = 5' (VERT.)

MICRO-BIORETENTION 407 DETAILS

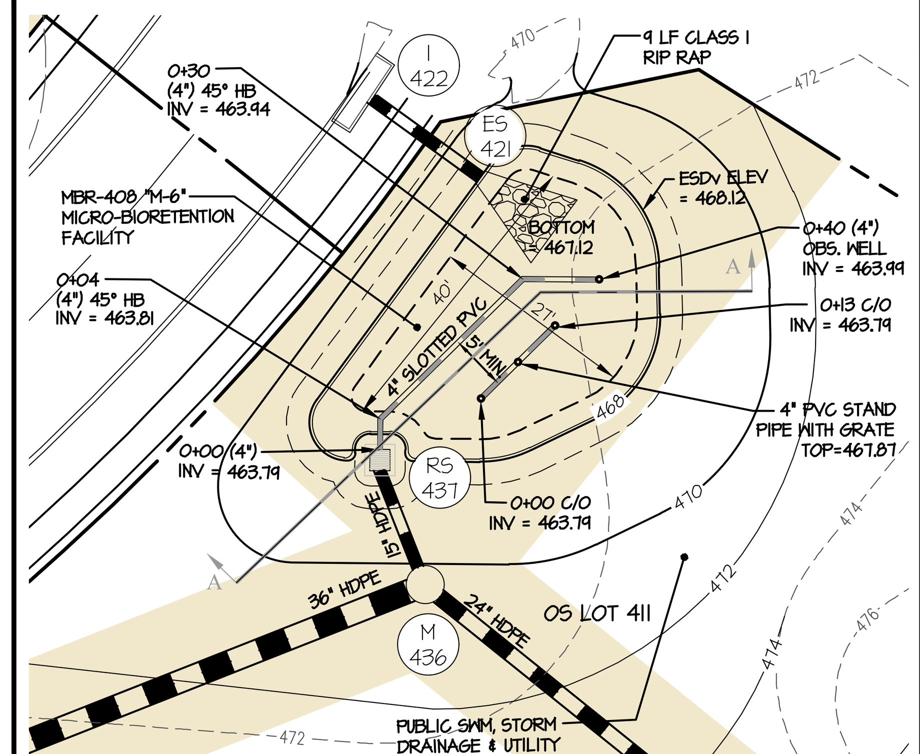

SEE TYPICAL MICRO-BIORETENTION DETAIL THIS SHEET FOR TYPICAL SECTION THROUGH MICRO-BIORETENTION FACILITY AND OUTLET STRUCTURE CONFIGURATION

MICRO-BIORETENTION 408 SCALE: 1" = 20'

MBR-408
TYPE (PER MDE): MICRO BIORETENTION SYSTEM (M6)
NON - MDE 378 FACILITY
TOTAL DRAINAGE AREA TO FACILITY = 41,775 SF
STORAGE PROVIDED = 1,034 CU-FT (@468.12)
ESDv PROVIDED = 1,375 CU-FT

LOW-FLOW OUTFALL: PERFORATED 4" UNDERDRAIN SYSTEM
BOTTOM OF FACILITY = 467.12
HIGH-FLOW OUTFALL: RS-437 ('S' INLET, TOP = 468.12)
MINIMUM DAM ELEVATION = 468.45

36 HERBACEOUS PLANTINGS (70 S.F.)

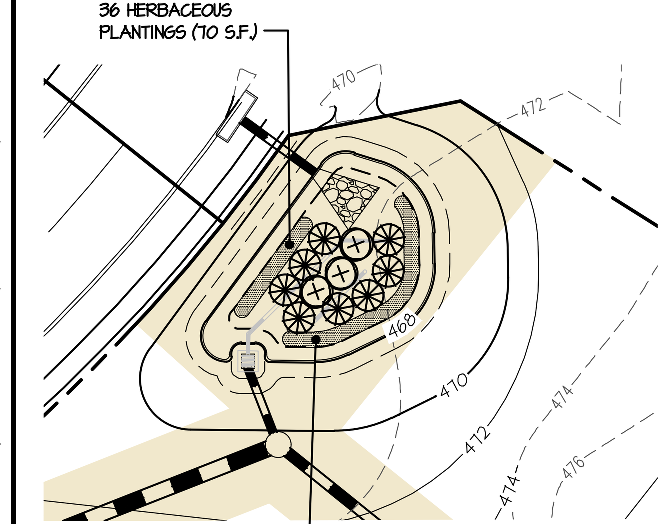

70 HERBACEOUS PLANTINGS (137 S.F.)

MICRO-BIORETENTION 408 LANDSCAPE PLAN SCALE: 1" = 30'

NOTES:
1) PROVIDE FILTER FABRIC BETWEEN SOIL AND STONE (SIDES ONLY) MSHA CLASS C
2) SEE THE MICRO-BIORETENTION SECTION DETAIL ON SHEET 45 FOR THE TYPICAL OVERFLOW DISTRIBUTION PIPE CONFIGURATION

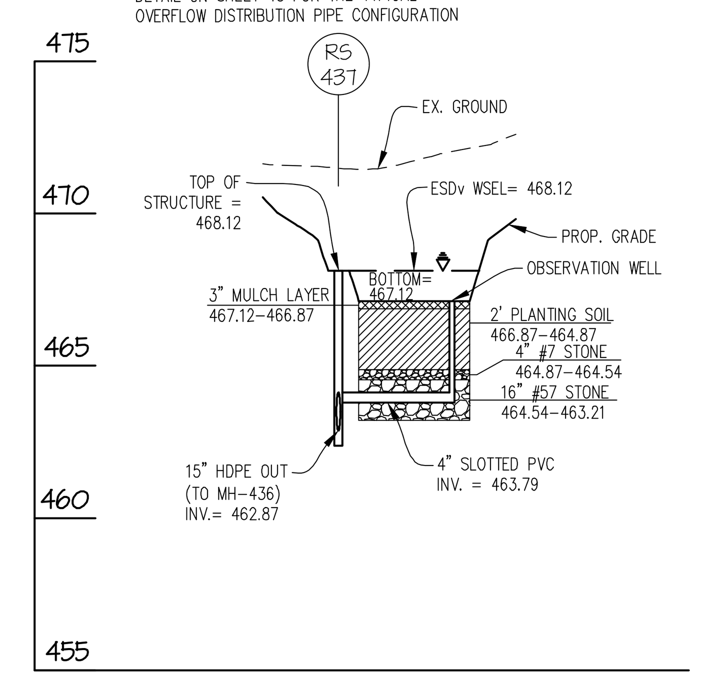

SECTION "A"-"A"
SCALE: 1" = 50' (HORZ.) 1" = 5' (VERT.)

MICRO-BIORETENTION 408 DETAILS

SEE TYPICAL MICRO-BIORETENTION DETAIL THIS SHEET FOR TYPICAL SECTION THROUGH MICRO-BIORET. FACILITY AND OUTLET STRUCTURE CONFIGURATION

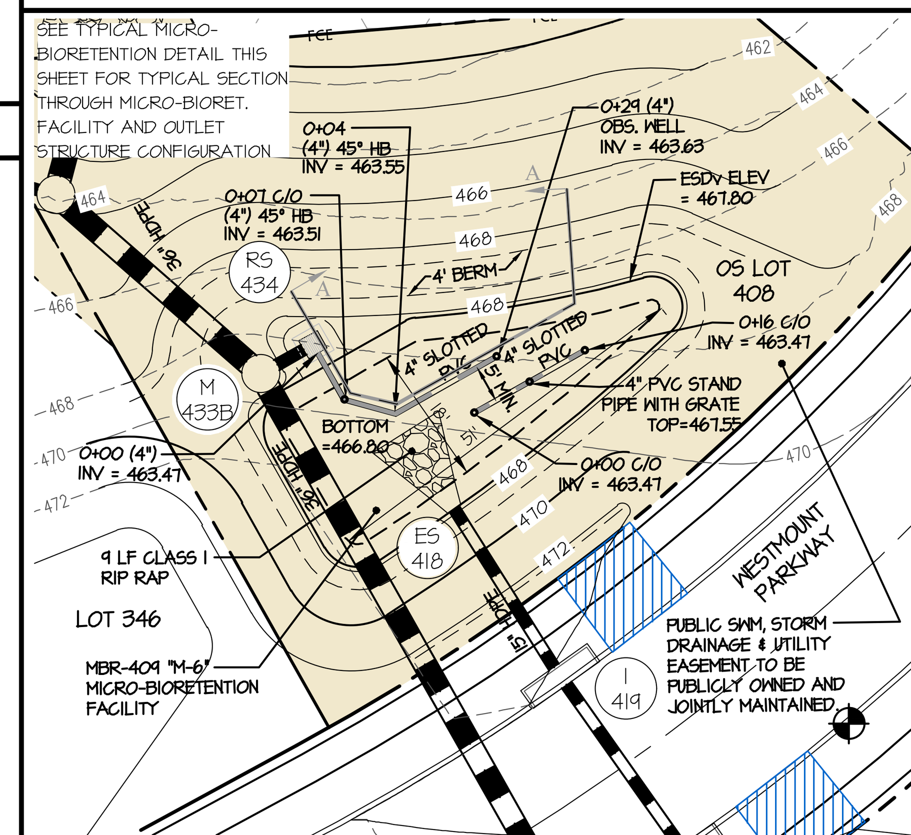

MICRO-BIORETENTION 409 SCALE: 1" = 20'

MBR-409
TYPE (PER MDE): MICRO BIORETENTION SYSTEM (M6)
NON - MDE 378 FACILITY
TOTAL DRAINAGE AREA TO FACILITY = 32,019 SF
STORAGE PROVIDED = 946 CU-FT (@467.80)
ESDv PROVIDED = 1,258 CU-FT

LOW-FLOW OUTFALL: PERFORATED 4" UNDERDRAIN SYSTEM
BOTTOM OF FACILITY = 466.80
HIGH-FLOW OUTFALL: RS-434 ('S' INLET, TOP = 467.80)
MINIMUM DAM ELEVATION = 468.30

94 HERBACEOUS PLANTING (183 S.F.)

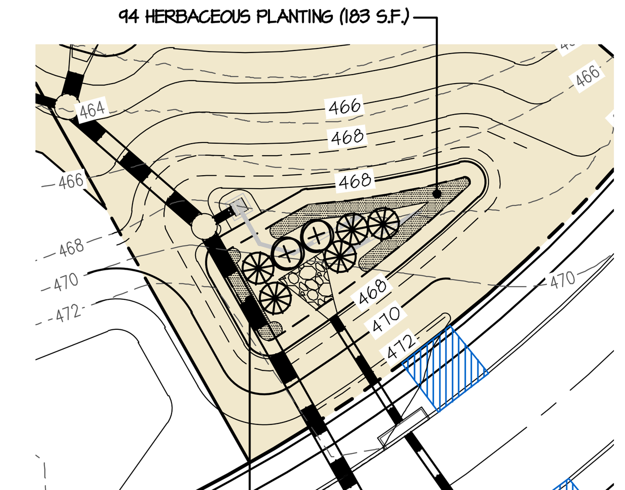

32 HERBACEOUS PLANTINGS (63 S.F.)

MICRO-BIORETENTION 409 LANDSCAPE PLAN SCALE: 1" = 30'

NOTES:
1) PROVIDE FILTER FABRIC BETWEEN SOIL AND STONE (SIDES ONLY) MSHA CLASS C
2) SEE THE MICRO-BIORETENTION SECTION DETAIL ON SHEET 45 FOR THE TYPICAL OVERFLOW DISTRIBUTION PIPE CONFIGURATION

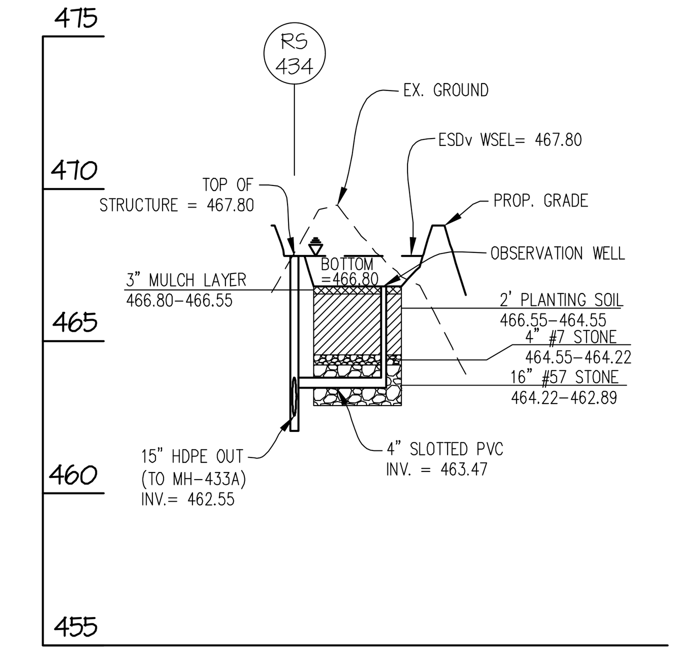

SECTION "A"-"A"
SCALE: 1" = 50' (HORZ.) 1" = 5' (VERT.)

MICRO-BIORETENTION 409 DETAILS

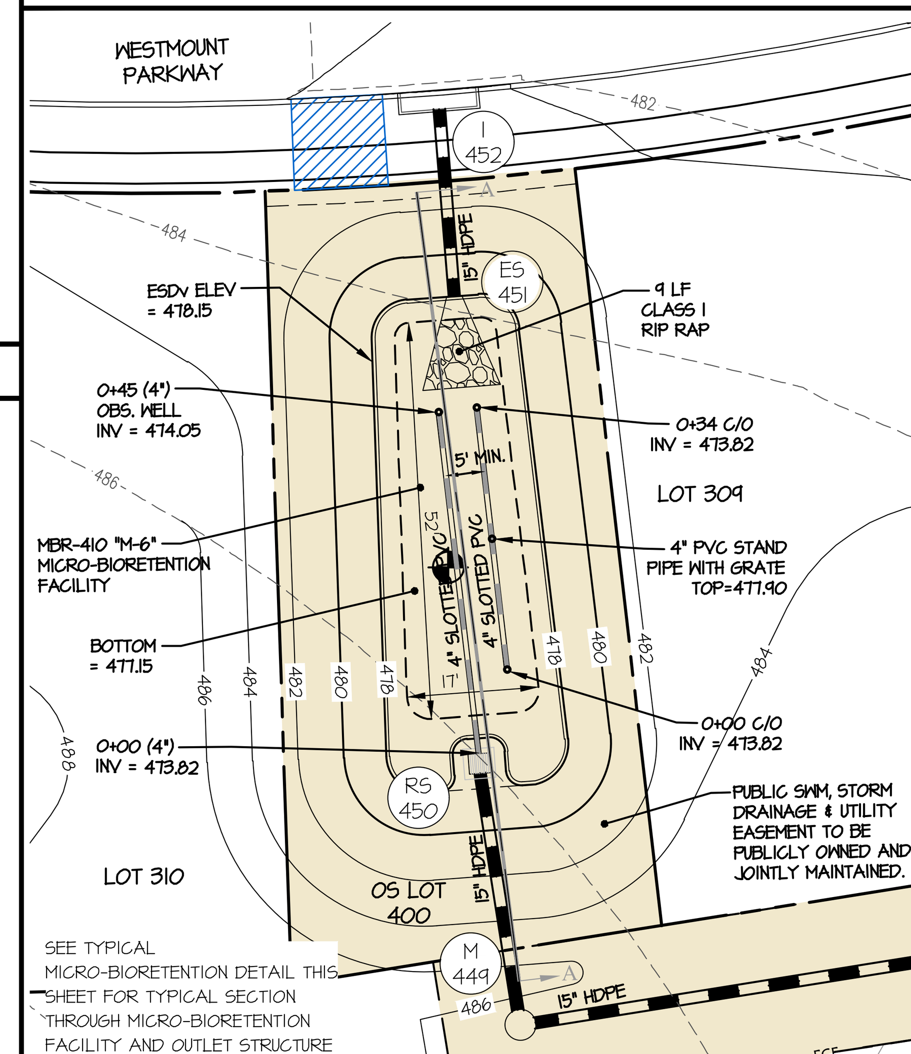

SEE TYPICAL MICRO-BIORETENTION DETAIL THIS SHEET FOR TYPICAL SECTION THROUGH MICRO-BIORETENTION FACILITY AND OUTLET STRUCTURE CONFIGURATION

MICRO-BIORETENTION 410 SCALE: 1" = 20'

MBR-410
TYPE (PER MDE): MICRO BIORETENTION SYSTEM (M6)
NON - MDE 378 FACILITY
TOTAL DRAINAGE AREA TO FACILITY = 21,464 SF
STORAGE PROVIDED = 1,069 CU-FT (@478.15)
ESDv PROVIDED = 1,422 CU-FT

LOW-FLOW OUTFALL: PERFORATED 4" UNDERDRAIN SYSTEM
BOTTOM OF FACILITY = 477.15
HIGH-FLOW OUTFALL: RS-450 ('S' INLET, TOP = 478.15)
MINIMUM DAM ELEVATION = 478.48

75 HERBACEOUS PLANTINGS (146 S.F.)

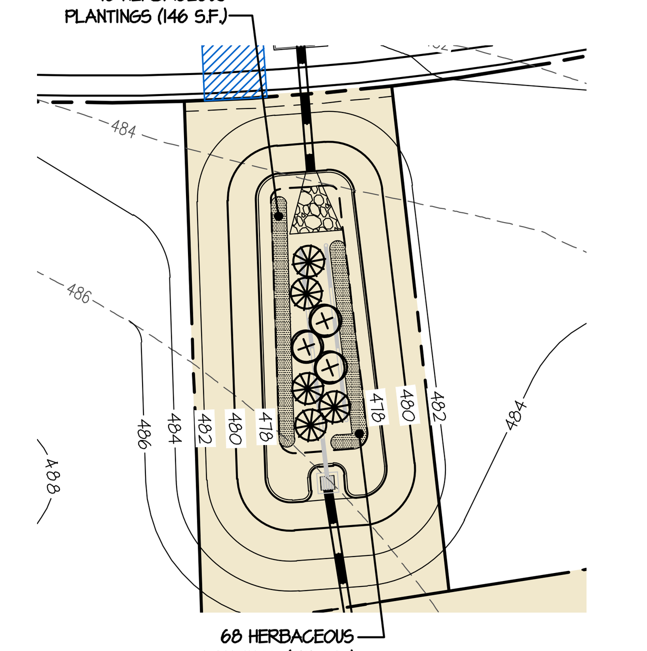

68 HERBACEOUS PLANTINGS (133 S.F.)

MICRO-BIORETENTION 410 LANDSCAPE PLAN SCALE: 1" = 30'

NOTES:
1) PROVIDE FILTER FABRIC BETWEEN SOIL AND STONE (SIDES ONLY) MSHA CLASS C
2) SEE THE MICRO-BIORETENTION SECTION DETAIL ON SHEET 45 FOR THE TYPICAL OVERFLOW DISTRIBUTION PIPE CONFIGURATION

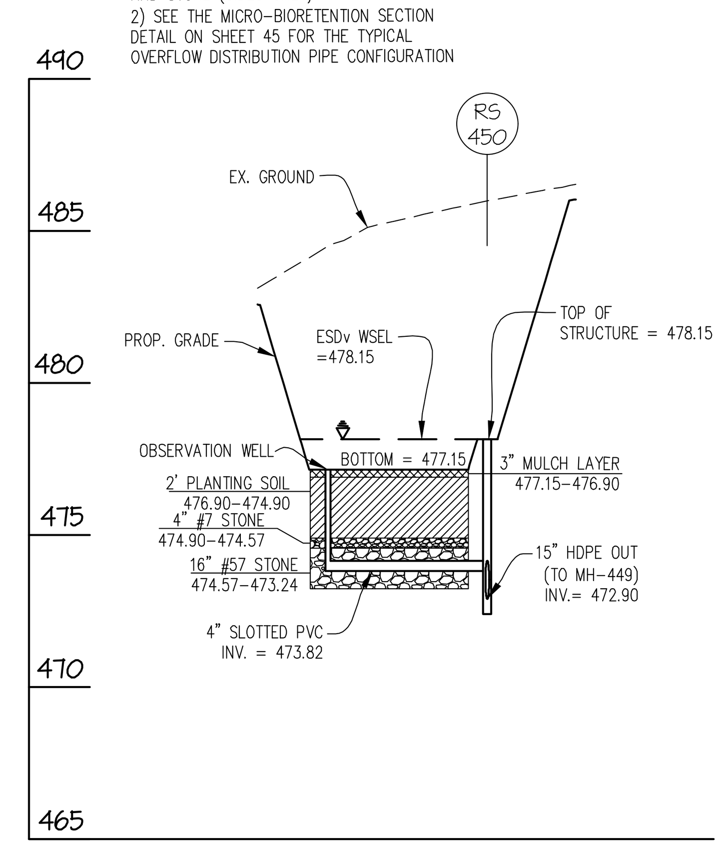

SECTION "A"-"A"
SCALE: 1" = 50' (HORZ.) 1" = 5' (VERT.)

MICRO-BIORETENTION 410 DETAILS

GRAPHIC SCALE 1 inch = 5' ft. (VERTICAL)

GRAPHIC SCALE 1 inch = 50' ft. (HORIZONTAL)

0 4 10 20 40 — 1 inch = 20 ft.

0 6 15 30 60 — 1 inch = 30 ft.

MICRO-BIORETENTION PLANT LIST (for this sheet)

SYMBOL	QTY.	NAMES (BOTANICAL / SCIENTIFIC)	SIZE	ROOT/COMMENTS
SHRUBS *				
(⊗)	13	CORNUS SERICEA 'RUBY'/ RUBY RED OSIER DOGWOOD	18"-24" SPR.	CONTAINER
(✳)	29	ITEA VIRGINICA 'HENRY'S GARNET/ VIRGINIA SWEETSPIRE	18"-24" SPR.	CONTAINER
HERBACEOUS *				
(shaded)	601	PROVIDE AN EVEN MIX OF THE FOLLOWING PLANTS IN EACH MICRO-BIO: -HERMEROCALLIS 'STRAWBERRY CANDY' DAYLILY -HERMEROCALLIS 'JOAN SENIOR' DAYLILY -KALMIA ANGUSTIFOLIA/SHEEP LAUREL -ELEOCHARIS OVATA OBTUSA/BLUNT SPIKE RUSH	18" O.C.	CONTAINER

* SEE SHEET 45 FOR SHRUB AND HERBACEOUS PLANTING DETAILS

APPROVED: HOWARD COUNTY DEPARTMENT OF PUBLIC WORKS
DocuSigned by: [signature] 2465821AE4DA4C2...
Chief, Bureau of Highways — Date 11/29/2021

APPROVED: HOWARD COUNTY DEPARTMENT OF PLANNING & ZONING
DocuSigned by: [signature] 1EB75478A22B49A...
Chief, Division of Land Development — Date 11/24/2021
DocuSigned by: Chad Edmondson D5E6F9A84923495...
Chief, Development Engineering Division — Date 11/23/2021

GLW PLANNING | ENGINEERING | SURVEYING
3909 NATIONAL DRIVE | SUITE 250 | BURTONSVILLE, MD 20866 | GLWPA.COM
PHONE: 301-421-4024 | BALT: 410-880-1820 | DC&VA: 301-989-2524 | FAX: 301-421-4186

DESIGNED BY: AWL
DRAWN BY: LMW
CHECKED BY: DEV

DATE	REVISION	BY	APP'R.

PREPARED FOR:
WESTMOUNT DEVELOPMENT CORPORATION
307 INTERNATIONAL CIRCLE, SUITE 130
HUNT VALLEY, MARYLAND 21030
410-489-4489
ATTN.: ROBERT GOODIER

PROFESSIONAL CERTIFICATION
I HEREBY CERTIFY THAT THESE PLANS WERE PREPARED OR APPROVED BY ME, AND THAT I AM A DULY LICENSED PROFESSIONAL ENGINEER UNDER THE LAWS OF THE STATE OF MARYLAND, LICENSE NO. 12975 EXPIRATION DATE: MAY 26, 2022
10/28/21

STORMWATER MANAGEMENT DETAILS

WESTMOUNT - PHASE 4
LOTS 295-394 AND OPEN SPACE LOTS 395-418

A RESUBDIVISION OF NON-BUILDABLE BULK PARCELS E & F

ELECTION DISTRICT No. 2 — HOWARD COUNTY, MARYLAND

SCALE	ZONING	G. L. W. FILE No.
AS SHOWN	R-ED	13-013
DATE	TAX MAP - GRID	SHEET
OCT., 2021	23-6&12	39 OF 45

F-21-032

L:\CADD\DRAWINGS\13013\PLANS BY GLW\ROADS-SD (PH4)\PHASE 4_39_ESD DETAILS-2(406-410).dwg, PLOTTED: 10/26/2021 3:31 PM, LAST SAVED: 10/26/2021 3:30 PM, PLOTTED BY: Tony Leggieri

© GLW 2020