DocuSign Envelope ID: 42A4CCF4-8A0E-4DE5-9A1B-C40A02CEBB2F

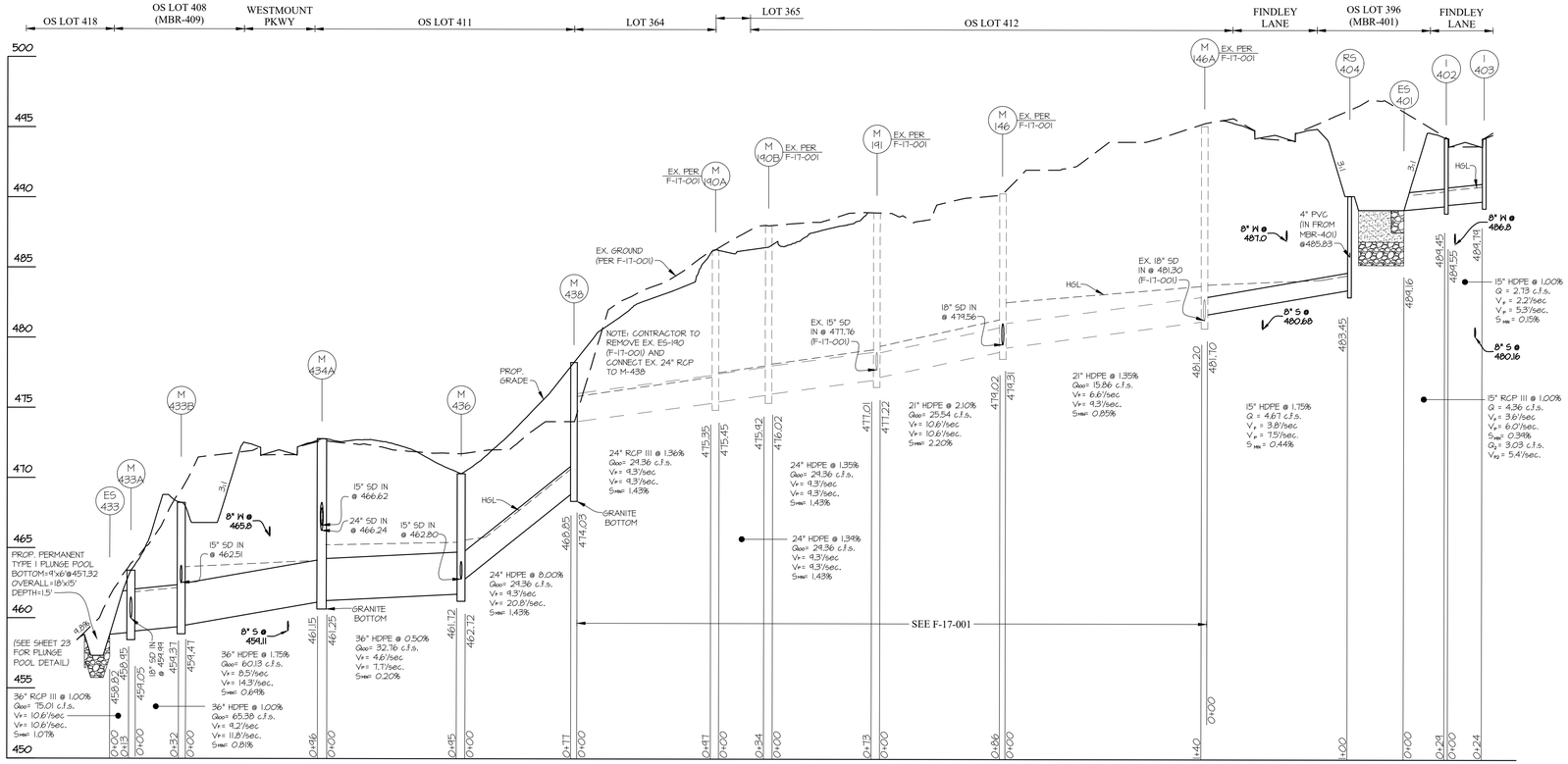

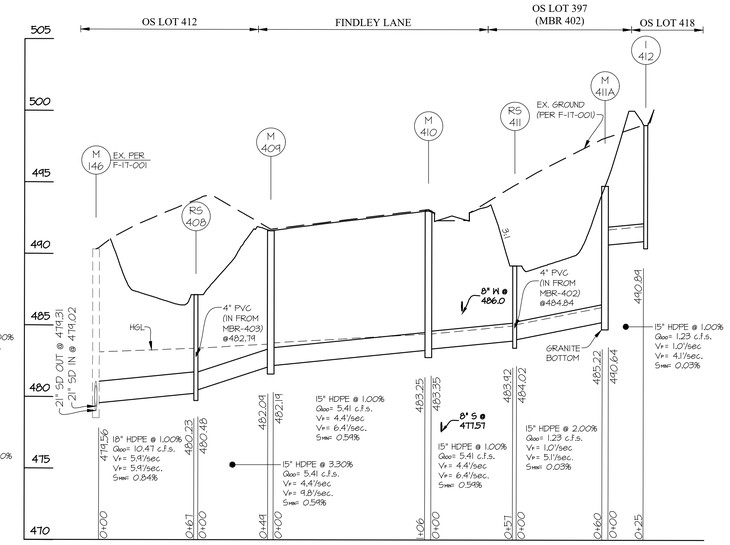

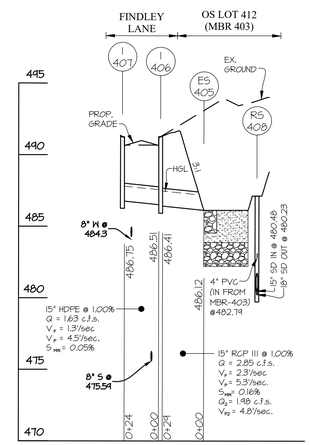

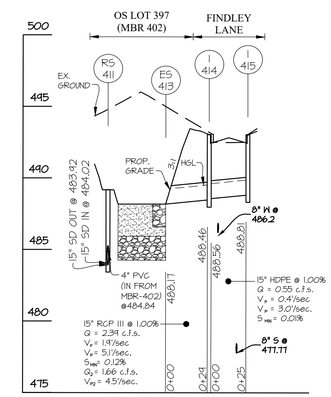

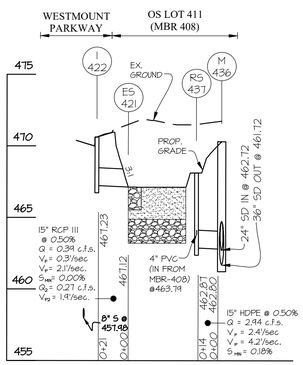

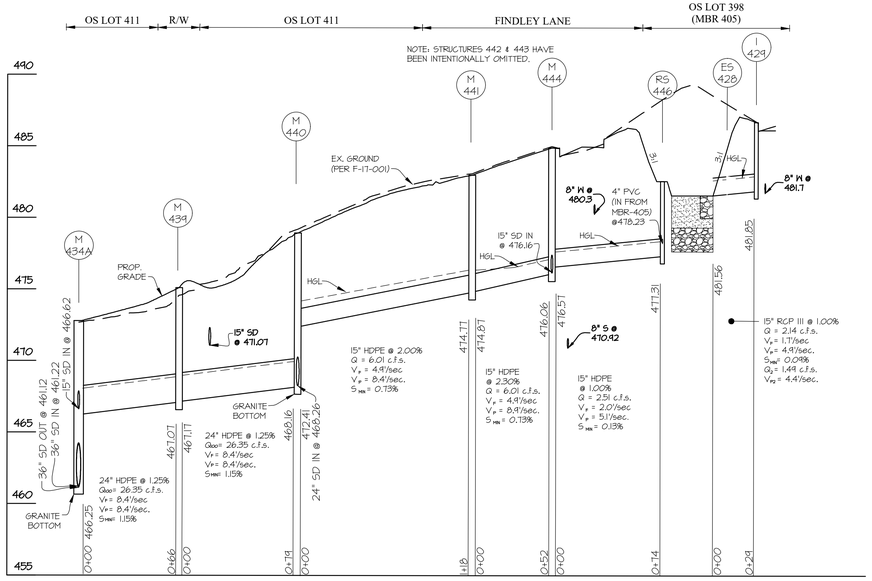

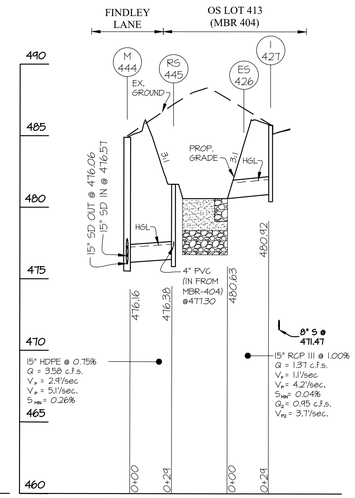

GRAPHIC SCALE
1 inch = 5' ft.
(VERTICAL)

NOTE:
1. FOR RIP RAP INFORMATION, SEE SHEET 23
2. FOR PIPE SCHEDULE, SEE SHEET 22

GRAPHIC SCALE
1 inch = 50' ft.
(HORIZONTAL)

APPROVED: HOWARD COUNTY DEPARTMENT OF PUBLIC WORKS
DocuSigned by: 3A6B921AE6D4AC3... 11/29/2021
Chief, Bureau of Highways — Date

APPROVED: HOWARD COUNTY DEPARTMENT OF PLANNING & ZONING
DocuSigned by: 1EB7547A329E49... 11/24/2021
Director, Division of Land Development — Date
DocuSigned by: Chad Edmundson 1B5F7AA3D1A9... 11/23/2021
Chief, Development Engineering Division — Date

GLW PLANNING | ENGINEERING | SURVEYING
3909 NATIONAL DRIVE | SUITE 250 | BURTONSVILLE, MD 20866 | GLWPA.COM
PHONE: 301-421-4024 | BALT: 410-880-1820 | DC&VA: 301-989-2524 | FAX: 301-421-4186

DESIGNED BY: AWL
DRAWN BY: AWL
CHECKED BY: DEV

DATE	REVISION	BY	APP'R.

PREPARED FOR:
WESTMOUNT DEVELOPMENT CORPORATION
307 INTERNATIONAL CIRCLE, SUITE 130
HUNT VALLEY, MARYLAND 21030
410-489-4489
ATTN.: ROBERT GOODIER

PROFESSIONAL CERTIFICATION
I HEREBY CERTIFY THAT THESE PLANS WERE PREPARED OR APPROVED BY ME, AND THAT I AM A DULY LICENSED PROFESSIONAL ENGINEER UNDER THE LAWS OF THE STATE OF MARYLAND, LICENSE NO. 12975
EXPIRATION DATE: MAY 26, 2022
10/28/21

STORM DRAIN PROFILES

WESTMOUNT - PHASE 4

LOTS 295-394 AND OPEN SPACE LOTS 395-418

A RESUBDIVISION OF NON-BUILDABLE BULK PARCELS E & F

ELECTION DISTRICT No. 2 — HOWARD COUNTY, MARYLAND

SCALE	ZONING	G. L. W. FILE No.
AS SHOWN	R-ED	13-013
DATE	TAX MAP - GRID	SHEET
OCT., 2021	23-6&12	19 OF 45

© GLW 2021

F-21-032

L:\CADD\DRAWINGS\13013\PLANS BY GLW\ROADS-SD (PH4)\PHASE 4_19-21_SD PROFILES.dwg, EDWARDS, 10/22/2021 2:33 PM, 1.63 (LEGACY), 10/22/2021 2:33 PM, PLOTTED BY: Rory Langer