DocuSign Envelope ID: 42A4CCF4-8A0E-4DE5-9A1B-C40A02CEBB2F

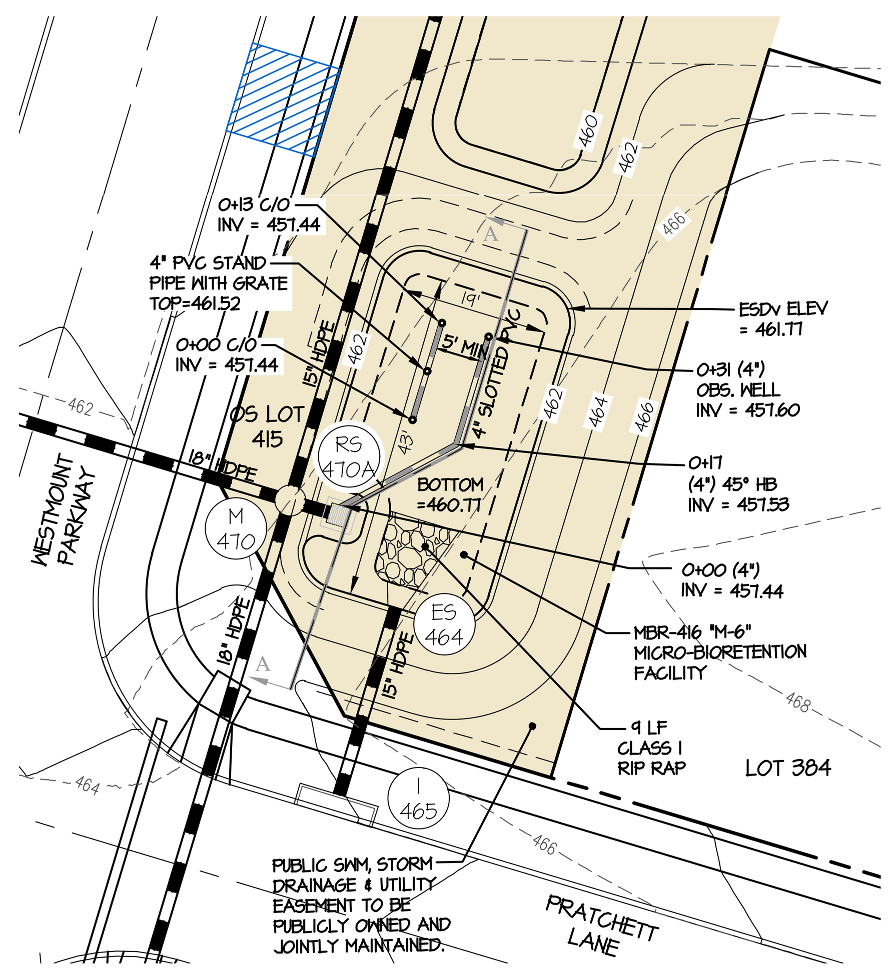

SEE TYPICAL MICRO-BIORETENTION DETAIL THIS SHEET FOR TYPICAL SECTION THROUGH MICRO-BIORETENTION FACILITY AND OUTLET STRUCTURE CONFIGURATION

MICRO-BIORETENTION 416 SCALE: 1" = 20'

MBR-416
TYPE (PER MDE): MICRO BIORETENTION SYSTEM (M6)
NON - MDE 378 FACILITY
TOTAL DRAINAGE AREA TO FACILITY = 15,235 SF
STORAGE PROVIDED = 890 CU-FT (@461.77)
ESDv PROVIDED = 1,184 CU-FT

LOW-FLOW OUTFALL: PERFORATED 4" UNDERDRAIN SYSTEM
BOTTOM OF FACILITY = 460.77
HIGH-FLOW OUTFALL: RS-470A ('S' INLET, TOP = 461.77)
MINIMUM DAM ELEVATION = 462.10

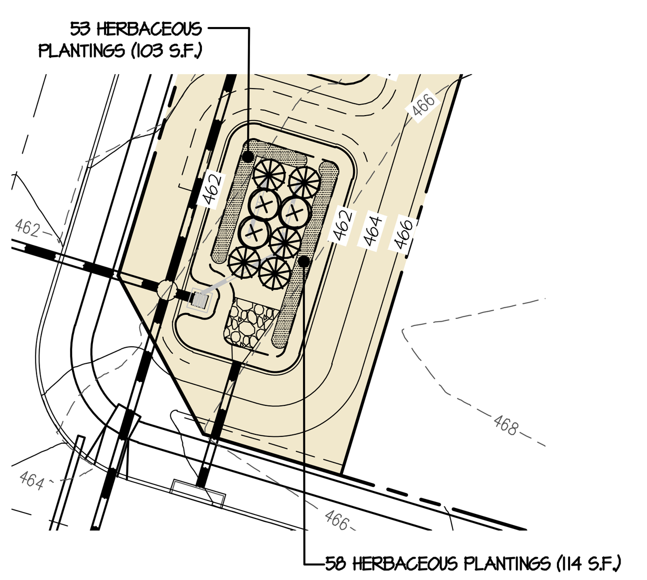

MICRO-BIORETENTION 416 LANDSCAPE PLAN SCALE: 1" = 30'

NOTES:
1) PROVIDE FILTER FABRIC BETWEEN SOIL AND STONE (SIDES ONLY) MSHA CLASS C
2) SEE THE MICRO-BIORETENTION SECTION DETAIL ON SHEET 45 FOR THE TYPICAL OVERFLOW DISTRIBUTION PIPE CONFIGURATION

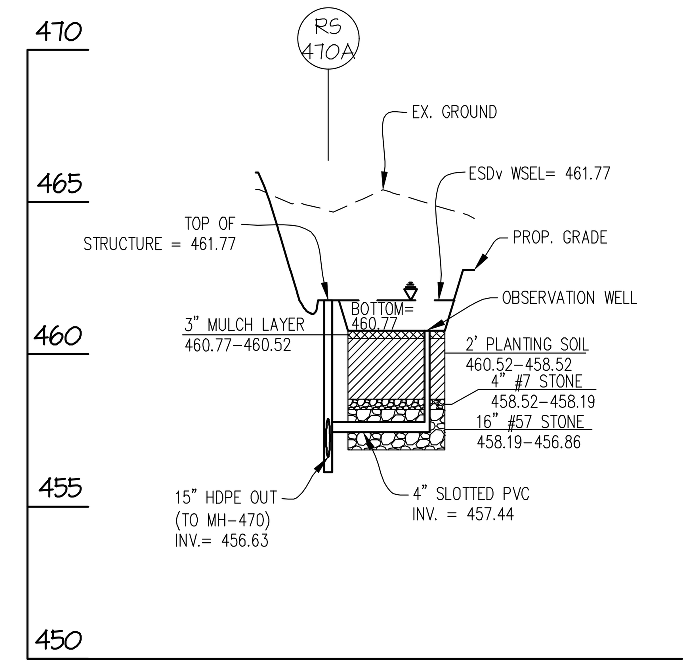

SECTION "A"-"A"
SCALE: 1" = 50' (HORZ.) 1" = 5' (VERT.)

MICRO-BIORETENTION 416 DETAILS

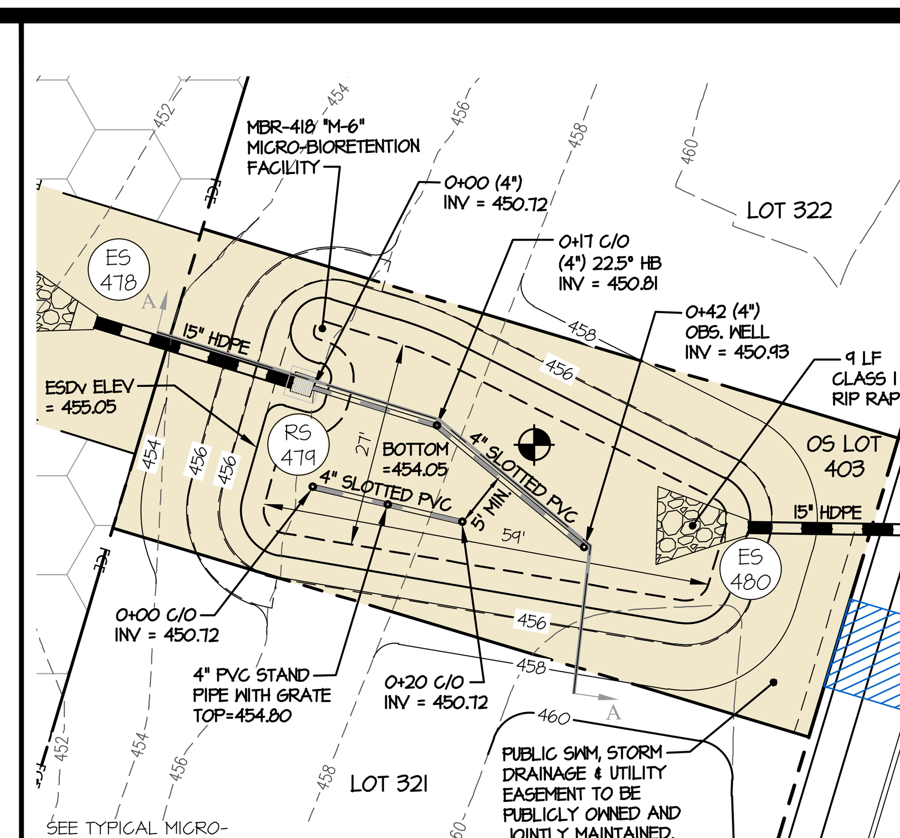

SEE TYPICAL MICRO-BIORETENTION DETAIL THIS SHEET FOR TYPICAL SECTION THROUGH MICRO-BIORETENTION FACILITY AND OUTLET STRUCTURE CONFIGURATION

MICRO-BIORETENTION 418 SCALE: 1" = 20'

MBR-418
TYPE (PER MDE): MICRO BIORETENTION SYSTEM (M6)
NON - MDE 378 FACILITY
TOTAL DRAINAGE AREA TO FACILITY = 34,983 SF
STORAGE PROVIDED = 1,473 CU-FT (@455.05)
ESDv PROVIDED = 1,959 CU-FT

LOW-FLOW OUTFALL: PERFORATED 4" UNDERDRAIN SYSTEM
BOTTOM OF FACILITY = 454.05
HIGH-FLOW OUTFALL: RS-479 ('S' INLET, TOP = 455.05)
MINIMUM DAM ELEVATION = 455.55

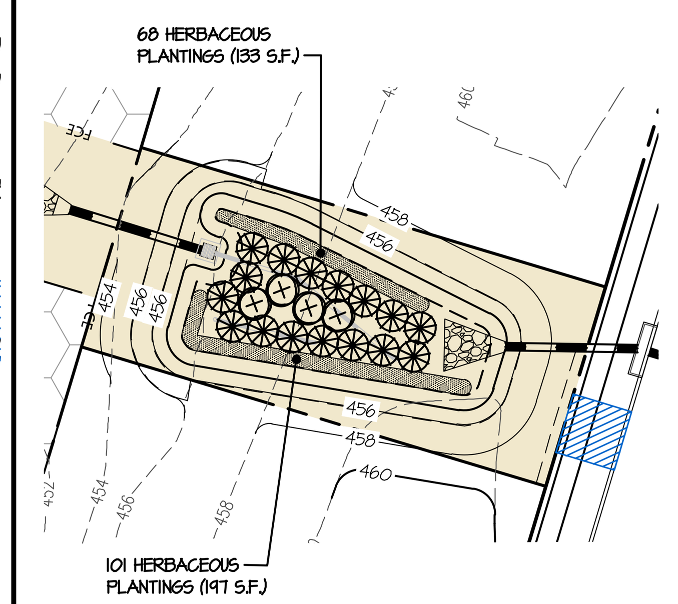

MICRO-BIORETENTION 418 LANDSCAPE PLAN SCALE: 1" = 30'

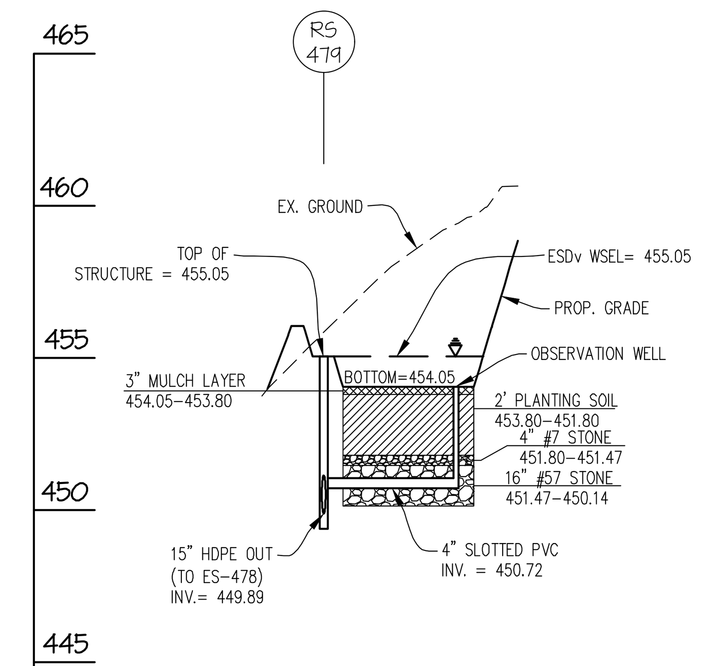

NOTES:
1) PROVIDE FILTER FABRIC BETWEEN SOIL AND STONE (SIDES ONLY) MSHA CLASS C
2) SEE THE MICRO-BIORETENTION SECTION DETAIL ON SHEET 45 FOR THE TYPICAL OVERFLOW DISTRIBUTION PIPE CONFIGURATION

SECTION "A"-"A"
SCALE: 1" = 50' (HORZ.) 1" = 5' (VERT.)

MICRO-BIORETENTION 418 DETAILS

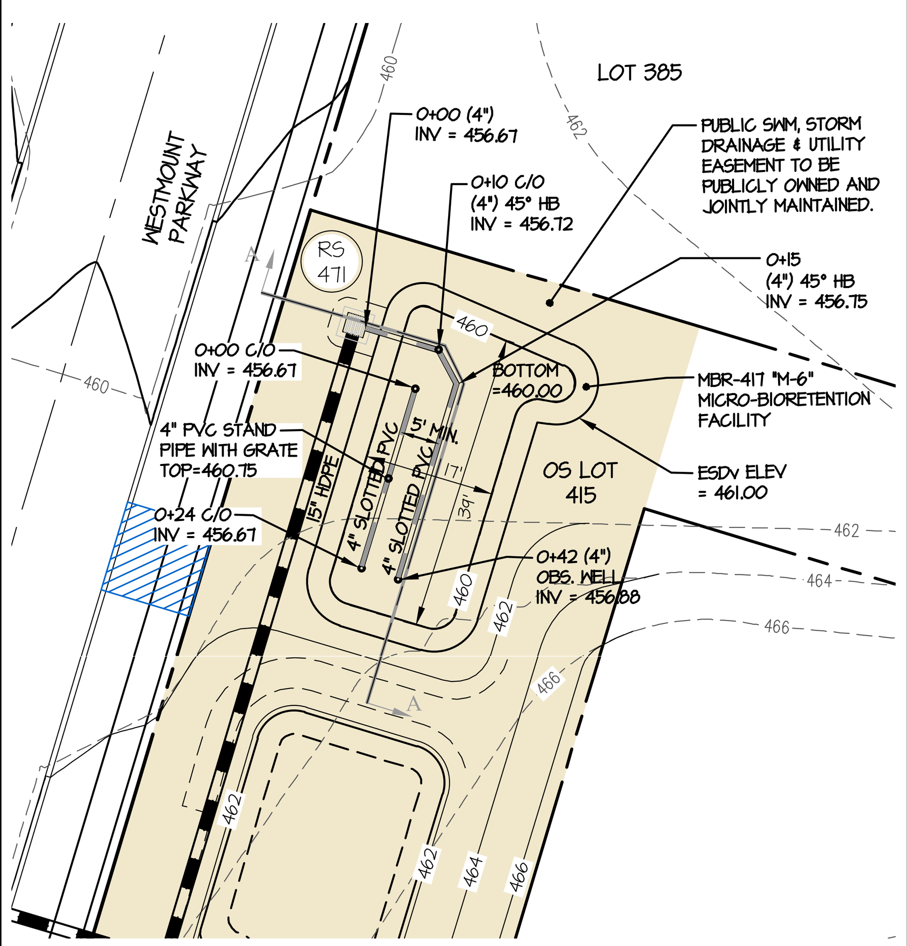

SEE TYPICAL MICRO-BIORETENTION DETAIL THIS SHEET FOR TYPICAL SECTION THROUGH MICRO-BIORETENTION FACILITY AND OUTLET STRUCTURE CONFIGURATION

MICRO-BIORETENTION 417 SCALE: 1" = 20'

MBR-417
TYPE (PER MDE): MICRO BIORETENTION SYSTEM (M6)
NON - MDE 378 FACILITY
TOTAL DRAINAGE AREA TO FACILITY = 21,542 SF
STORAGE PROVIDED = 900 CU-FT (@461.00)
ESDv PROVIDED = 1,197 CU-FT

LOW-FLOW OUTFALL: PERFORATED 4" UNDERDRAIN SYSTEM
BOTTOM OF FACILITY = 460.00
HIGH-FLOW OUTFALL: RS-471 ('S' INLET, TOP = 461.00)
MINIMUM DAM ELEVATION = 461.33

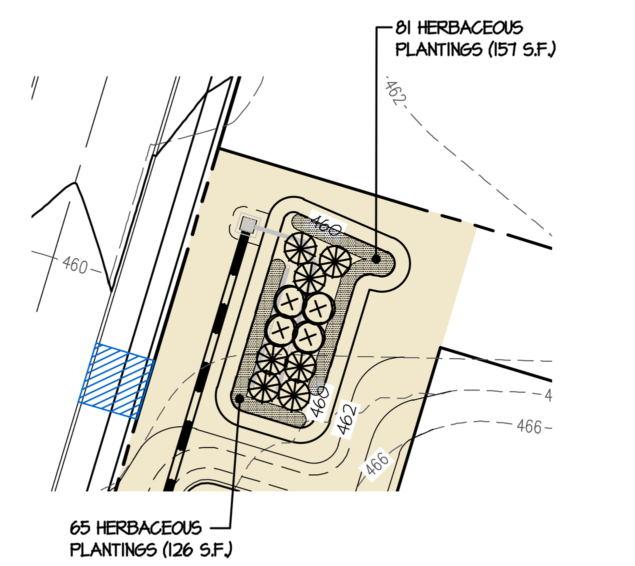

MICRO-BIORETENTION 417 LANDSCAPE PLAN SCALE: 1" = 30'

NOTES:
1) PROVIDE FILTER FABRIC BETWEEN SOIL AND STONE (SIDES ONLY) MSHA CLASS C
2) SEE THE MICRO-BIORETENTION SECTION DETAIL ON SHEET 45 FOR THE TYPICAL OVERFLOW DISTRIBUTION PIPE CONFIGURATION

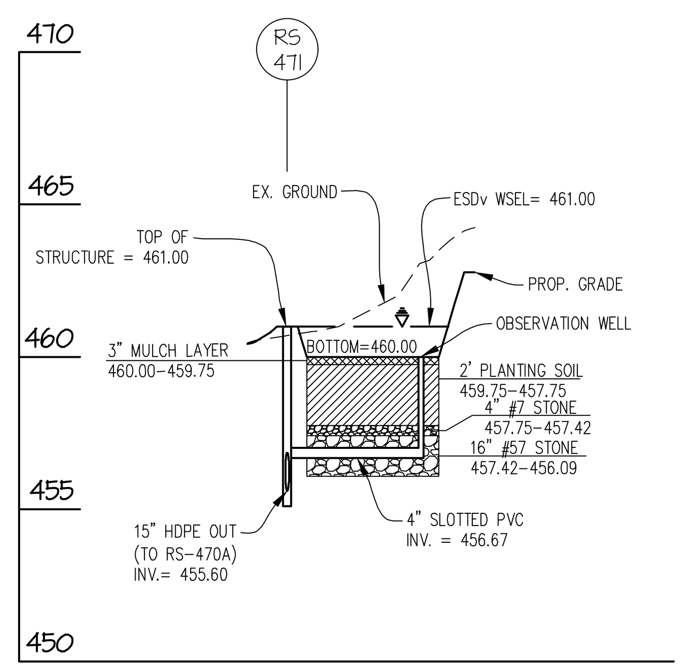

SECTION "A"-"A"
SCALE: 1" = 50' (HORZ.) 1" = 5' (VERT.)

MICRO-BIORETENTION 417 DETAILS

SEE TYPICAL MICRO-BIORETENTION DETAIL THIS SHEET FOR TYPICAL SECTION THROUGH MICRO-BIORET. FACILITY AND OUTLET STRUCTURE CONFIGURATION

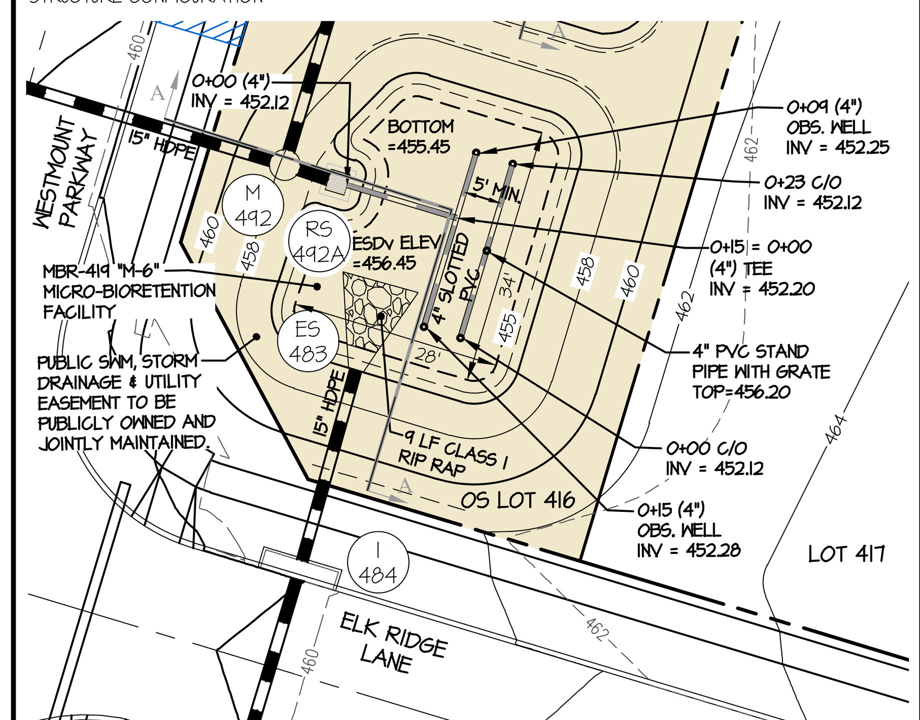

MICRO-BIORETENTION 419 SCALE: 1" = 20'

MBR-419
TYPE (PER MDE): MICRO BIORETENTION SYSTEM (M6)
NON - MDE 378 FACILITY
TOTAL DRAINAGE AREA TO FACILITY = 30,215 SF
STORAGE PROVIDED = 1,010 CU-FT (@456.45)
ESDv PROVIDED = 1,343 CU-FT

LOW-FLOW OUTFALL: PERFORATED 4" UNDERDRAIN SYSTEM
BOTTOM OF FACILITY = 455.45
HIGH-FLOW OUTFALL: RS-492A ('S' INLET, TOP = 456.45)
MINIMUM DAM ELEVATION = 456.95

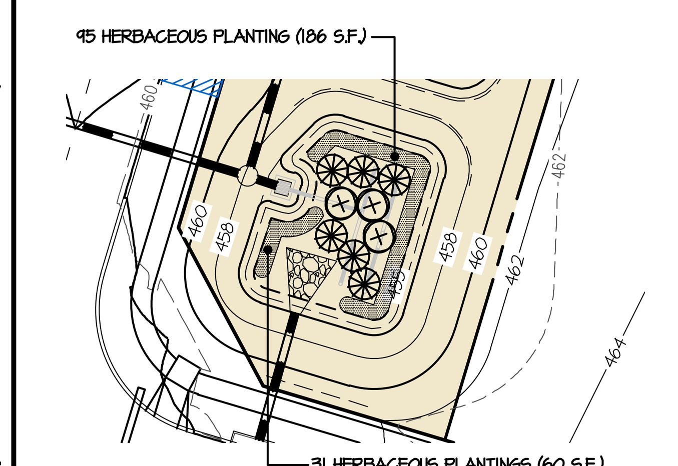

MICRO-BIORETENTION 419 LANDSCAPE PLAN SCALE: 1" = 30'

NOTES:
1) PROVIDE FILTER FABRIC BETWEEN SOIL AND STONE (SIDES ONLY) MSHA CLASS C
2) SEE THE MICRO-BIORETENTION SECTION DETAIL ON SHEET 45 FOR THE TYPICAL OVERFLOW DISTRIBUTION PIPE CONFIGURATION

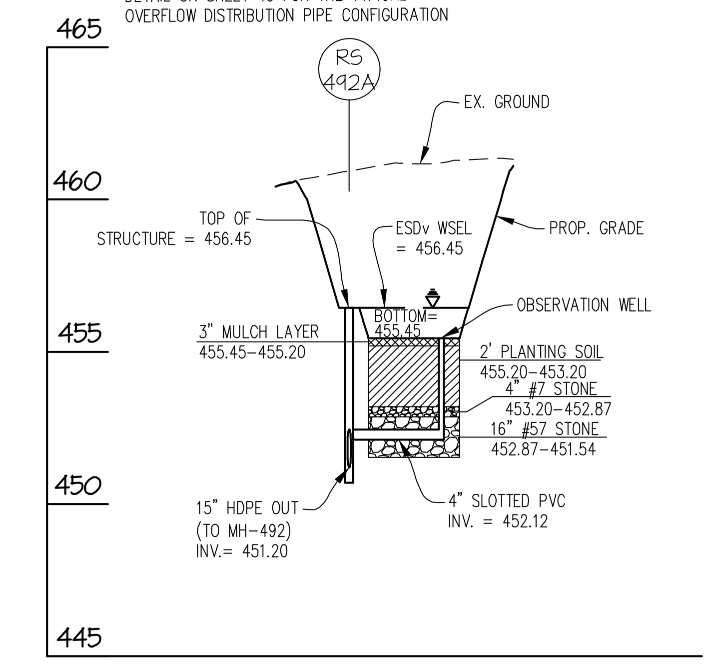

SECTION "A"-"A"
SCALE: 1" = 50' (HORZ.) 1" = 5' (VERT.)

MICRO-BIORETENTION 419 DETAILS

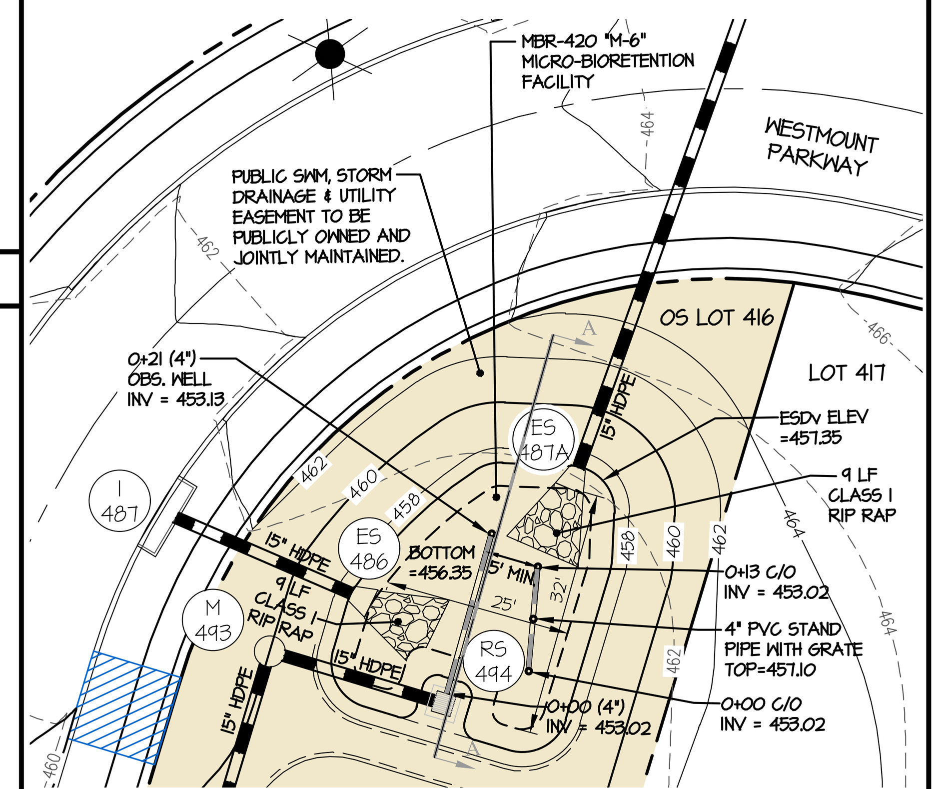

SEE TYPICAL MICRO-BIORETENTION DETAIL THIS SHEET FOR TYPICAL SECTION THROUGH MICRO-BIORETENTION FACILITY AND OUTLET STRUCTURE CONFIGURATION

MICRO-BIORETENTION 420 SCALE: 1" = 20'

MBR-420
TYPE (PER MDE): MICRO BIORETENTION SYSTEM (M6)
NON - MDE 378 FACILITY
TOTAL DRAINAGE AREA TO FACILITY = 25,444 SF
STORAGE PROVIDED = 791 CU-FT (@457.35)
ESDv PROVIDED = 1,052 CU-FT

LOW-FLOW OUTFALL: PERFORATED 4" UNDERDRAIN SYSTEM
BOTTOM OF FACILITY = 456.35
HIGH-FLOW OUTFALL: RS-494 ('S' INLET, TOP = 457.35)
MINIMUM DAM ELEVATION = 457.68

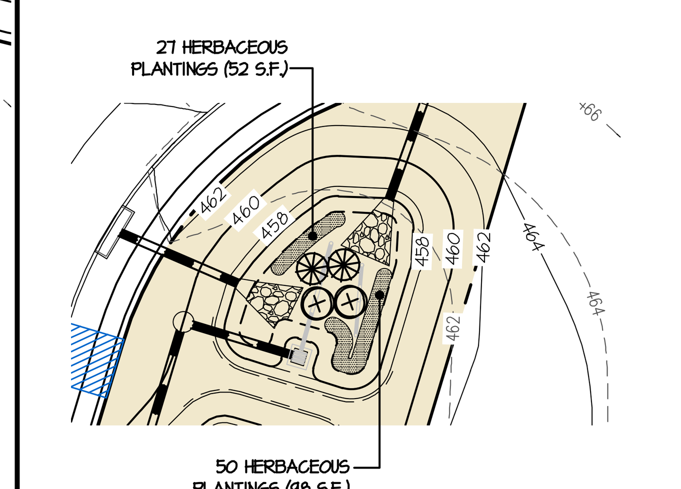

MICRO-BIORETENTION 420 LANDSCAPE PLAN SCALE: 1" = 30'

NOTES:
1) PROVIDE FILTER FABRIC BETWEEN SOIL AND STONE (SIDES ONLY) MSHA CLASS C
2) SEE THE MICRO-BIORETENTION SECTION DETAIL ON SHEET 45 FOR THE TYPICAL OVERFLOW DISTRIBUTION PIPE CONFIGURATION

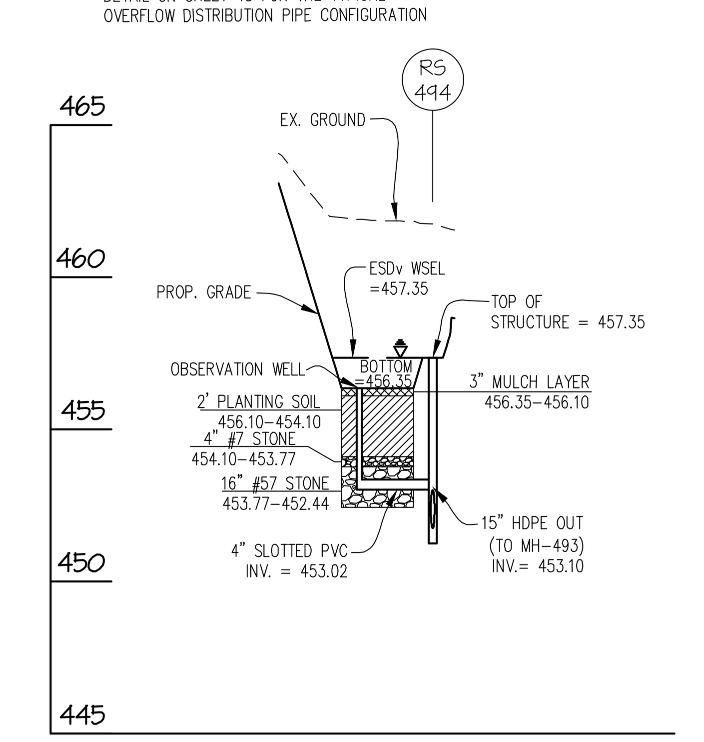

SECTION "A"-"A"
SCALE: 1" = 50' (HORZ.) 1" = 5' (VERT.)

MICRO-BIORETENTION 420 DETAILS

0 4 10 20 40
1 inch = 20 ft.

0 6 15 30 60
1 inch = 30 ft.

GRAPHIC SCALE 1 inch = 5' ft. (VERTICAL)

GRAPHIC SCALE 1 inch = 50' ft. (HORIZONTAL)

MICRO-BIORETENTION PLANT LIST (for this sheet)

SYMBOL	QTY.	NAMES (BOTANICAL / SCIENTIFIC)	SIZE	ROOT/COMMENTS
SHRUBS *				
(⊗)	16	CORNUS SERICEA 'RUBY'/ RUBY RED OSIER DOGWOOD	18"-24" SPR.	CONTAINER
(✻)	36	ITEA VIRGINICA 'HENRY'S GARNET/ VIRGINIA SWEETSPIRE	18"-24" SPR.	CONTAINER
HERBACEOUS *				
(stippled)	629	PROVIDE AN EVEN MIX OF THE FOLLOWING PLANTS IN EACH MICRO-BIO: -HERMEROCALLIS 'STRAWBERRY CANDY' DAYLILY -HERMEROCALLIS 'JOAN SENIOR' DAYLILY -KALMIA ANGUSTIFOLIA/SHEEP LAUREL -ELEOCHARIS OVATA OBTUSA/BLUNT SPIKE RUSH	18" O.C.	CONTAINER

* SEE SHEET 45 FOR SHRUB AND HERBACEOUS PLANTING DETAILS

APPROVED: HOWARD COUNTY DEPARTMENT OF PUBLIC WORKS
DocuSigned by: 2465821AE4DA4C2...
Chief, Bureau of Highways — Date 11/29/2021

APPROVED: HOWARD COUNTY DEPARTMENT OF PLANNING & ZONING
DocuSigned by: 1FB75478A22B49A...
Chief, Division of Land Development — Date 11/24/2021
DocuSigned by: Chad Edmondson D5E6F9A84923495...
Chief, Development Engineering Division — Date 11/23/2021

GLW
PLANNING | ENGINEERING | SURVEYING
3909 NATIONAL DRIVE | SUITE 250 | BURTONSVILLE, MD 20866 | GLWPA.COM
PHONE: 301-421-4024 | BALT: 410-880-1820 | DC&VA: 301-989-2524 | FAX: 301-421-4186

DESIGNED BY: AWL
DRAWN BY: LMW
CHECKED BY: DEV

DATE	REVISION	BY	APP'R.

PREPARED FOR:
WESTMOUNT DEVELOPMENT CORPORATION
307 INTERNATIONAL CIRCLE, SUITE 130
HUNT VALLEY, MARYLAND 21030
410-489-4489
ATTN.: ROBERT GOODIER

PROFESSIONAL CERTIFICATION
I HEREBY CERTIFY THAT THESE PLANS WERE PREPARED OR APPROVED BY ME, AND THAT I AM A DULY LICENSED PROFESSIONAL ENGINEER UNDER THE LAWS OF THE STATE OF MARYLAND, LICENSE NO. 12975
EXPIRATION DATE: MAY 26, 2022
10/28/21

STORMWATER MANAGEMENT DETAILS

WESTMOUNT - PHASE 4
LOTS 295-394 AND OPEN SPACE LOTS 395-418

A RESUBDIVISION OF NON-BUILDABLE BULK PARCELS E & F

ELECTION DISTRICT No. 2 — HOWARD COUNTY, MARYLAND

SCALE	ZONING	G. L. W. FILE No.
AS SHOWN	R-ED	13-013
DATE	TAX MAP - GRID	SHEET
OCT., 2021	23-6&12	41 OF 45

F-21-032

L:\CADD\DRAWINGS\13013\PLANS BY GLW\ROADS-SD (PH4)\PHASE 4_41_ESD DETAILS-4(416-420).dwg, PLOTTED:10/26/2021 3:45 PM, LAST SAVED:10/26/2021 3:44 PM, PLOTTED BY: Tony Leggieri

© GLW 2020