DocuSign Envelope ID: 42A4CCF4-8A0E-4DE5-9A1B-C40A02CEBB2F

RIP RAP/OUTFALL INFORMATION

SECTION	CLASS	LENGTH	WIDTH	D_{50}	THICKNESS	
ES-401	CLASS I	9	10.25'	9.5	19	
ES-405	CLASS I	9	10.25'	9.5	19	
ES-413	CLASS I	9	10.25'	9.5	19	
ES-418	CLASS I	9	10.25'	9.5	19	
ES-421	CLASS I	9	10.25'	9.5	19	
ES-423	CLASS I	9	10.25'	9.5	19	
ES-426	CLASS I	9	10.25'	9.5	19	
ES-428	CLASS I	9	10.25'	9.5	19	
ES-430	CLASS I	9	10.25'	9.5	19	
ES-433	TYPE I PLUNGE POOL (SEE DETAIL THIS SHEET)					
ES-451	CLASS I	9	10.25'	9.5	19	
ES-453	CLASS I	9	10.25'	9.5	19	
ES-455	CLASS I	9	10.25'	9.5	19	
ES-457	CLASS I	9	10.25'	9.5	19	
ES-460	CLASS I	9	10.25'	9.5	19	
ES-462	CLASS I	9	10.25'	9.5	19	
ES-464	CLASS I	9	10.25'	9.5	19	
ES-466	CLASS I	9	10.25'	9.5	19	
ES-468	CLASS II	10	11.5'	16	32	◇2
ES-478	CLASS I	9	10.25'	9.5	19	◇2
ES-480	CLASS I	9	10.25'	9.5	19	
ES-483	CLASS I	9	10.25'	9.5	19	
ES-486	CLASS I	9	10.25'	9.5	19	
ES-487A	CLASS I	9	10.25'	9.5	19	
ES-488	CLASS I	10	11.25'	9.5	19	
ES-490	CLASS I	10	11.25'	9.5	19	
ES-495	CLASS I	9	10.25'	9.5	19	
ES-497	CLASS I	9	10.25'	9.5	19	
ES-500	CLASS I	9	10.25'	9.5	19	
ES-502	CLASS I	9	10.5'	9.5	19	◇2
ES-505	CLASS I	9	10.25'	9.5	19	
ES-507	CLASS I	9	10.25'	9.5	19	
ES-509	CLASS I	9	10.25'	9.5	19	
ES-515	CLASS I	9	10.25'	9.5	19	
ES-517	CLASS I	9	10.25'	9.5	19	
ES-520	CLASS I	9	10.25'	9.5	19	

◇2 SEE SHEET 45 FOR TYPICAL RIP RAP DETAILS AND FOR OUTFALLS ONTO SLOPES GREATER THAN 10%.

DETAIL D-4-2 PLUNGE POOL

STANDARD SYMBOL (PP)

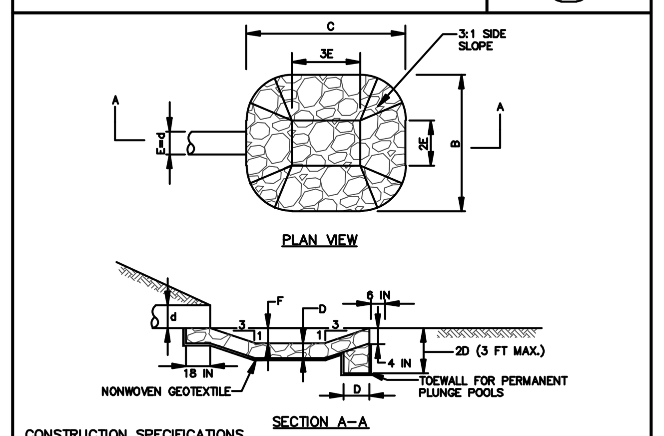

CONSTRUCTION SPECIFICATIONS

1. USE SPECIFIED CLASS OF RIPRAP.
2. USE NONWOVEN GEOTEXTILE AS SPECIFIED IN SECTION H–1 MATERIALS, AND PROTECT FROM PUNCHING, CUTTING, OR TEARING. REPAIR ANY DAMAGE OTHER THAN AN OCCASIONAL SMALL HOLE BY PLACING ANOTHER PIECE OF GEOTEXTILE OVER THE DAMAGED PART OR BY COMPLETELY REPLACING THE GEOTEXTILE. PROVIDE A MINIMUM OF ONE FOOT OVERLAP FOR ALL REPAIRS AND FOR JOINING TWO PIECES OF GEOTEXTILE.
3. PREPARE THE SUBGRADE FOR THE PLUNGE POOL TO THE REQUIRED LINES AND GRADES. COMPACT ANY FILL REQUIRED IN THE SUBGRADE TO A DENSITY OF APPROXIMATELY THAT OF THE SURROUNDING UNDISTURBED MATERIAL.
4. EMBED THE GEOTEXTILE A MINIMUM OF 4 INCHES AND EXTEND THE GEOTEXTILE A MINIMUM OF 6 INCHES BEYOND THE EDGE OF THE SCOUR HOLE.
5. STONE FOR THE PLUNGE POOL MAY BE PLACED BY EQUIPMENT. CONSTRUCT TO THE FULL COURSE THICKNESS IN ONE OPERATION AND IN SUCH A MANNER AS TO AVOID DISPLACEMENT OF UNDERLYING MATERIALS. DELIVER AND PLACE THE STONE FOR THE PLUNGE POOL IN A MANNER THAT WILL ENSURE THAT IT IS REASONABLY HOMOGENEOUS WITH THE SMALLER STONES AND SPALLS FILLING THE VOIDS BETWEEN THE LARGER STONES. PLACE STONE FOR THE PLUNGE POOL IN A MANNER TO PREVENT DAMAGE TO THE GEOTEXTILE. HAND PLACE TO THE EXTENT NECESSARY.
6. AT THE PLUNGE POOL OUTLET, PLACE THE STONE SO THAT IT MEETS THE EXISTING GRADE.
7. MAINTAIN LINE, GRADE, AND CROSS SECTION. KEEP OUTLET FREE OF EROSION. REMOVE ACCUMULATED SEDIMENT AND DEBRIS. AFTER HIGH FLOWS INSPECT FOR SCOUR AND DISLODGED RIPRAP. MAKE NECESSARY REPAIRS IMMEDIATELY.

MARYLAND STANDARDS AND SPECIFICATIONS FOR SOIL EROSION AND SEDIMENT CONTROL

U.S. DEPARTMENT OF AGRICULTURE NATURAL RESOURCES CONSERVATION SERVICE	2011	MARYLAND DEPARTMENT OF ENVIRONMENT WATER MANAGEMENT ADMINISTRATION

STRUCTURE SCHEDULE

NO	TYPE	WIDTH (INSIDE)	TOP ELEVATION PROPOSED UPPER	TOP ELEVATION PROPOSED LOWER	TOP ELEVATION AS-BUILT UPPER	TOP ELEVATION AS-BUILT LOWER	INVERT PROPOSED UPPER	INVERT PROPOSED LOWER	INVERT AS-BUILT UPPER	INVERT AS-BUILT LOWER	STD. DETAIL	LOCATIONS ◇1	PRIVATE/ PUBLIC
ES-401	END SECTION	1'-3"	490.41	---			---	489.16			HO. CO. D-5.51	N 582,850 E 1,347,155	
ES-405	END SECTION	1'-3"	487.37	---			---	486.12			HO. CO. D-5.51	N 582,897 E 1,346,909	
ES-413	END SECTION	1'-3"	489.42	---			---	488.17			HO. CO. D-5.51	N 582,771 E 1,347,030	
ES-418	END SECTION	1'-3"	468.05	---			---	466.80			HO. CO. D-5.51	N 583,214 E 1,346,534	
ES-421	END SECTION	1'-3"	468.37	---			---	467.12			HO. CO. D-5.51	N 583,230 E 1,346,661	
ES-423	END SECTION	1'-3"	472.20	---			---	470.95			HO. CO. D-5.51	N 583,096 E 1,346,519	
ES-426	END SECTION	1'-3"	481.88	---			---	480.63			HO. CO. D-5.51	N 582,955 E 1,346,716	
ES-428	END SECTION	1'-3"	482.81	---			---	481.56			HO. CO. D-5.51	N 582,863 E 1,346,718	
ES-430	END SECTION	1'-3"	475.10	---			---	473.85			HO. CO. D-5.51	N 582,983 E 1,346,487	
ES-433	END SECTION	3'-0"	461.82	---			---	458.82			HO. CO. D-5.51	N 583,267 E 1,346,487	
ES-451	END SECTION	1'-3"	478.40	---			---	477.15			HO. CO. D-5.51	N 583,031 E 1,346,287	
ES-453	END SECTION	1'-3"	475.13	---			---	473.88			HO. CO. D-5.51	N 583,128 E 1,346,274	
ES-455	END SECTION	1'-3"	475.80	---			---	474.55			HO. CO. D-5.51	N 583,209 E 1,345,925	
ES-457	END SECTION	1'-3"	476.30	---			---	475.05			HO. CO. D-5.51	N 583,118 E 1,345,888	
ES-460	END SECTION	1'-3"	462.03	---			---	460.78			HO. CO. D-5.51	N 583,360 E 1,345,972	
ES-462	END SECTION	1'-3"	462.03	---			---	460.78			HO. CO. D-5.51	N 583,361 E 1,345,980	
ES-464	END SECTION	1'-3"	462.02	---			---	460.77			HO. CO. D-5.51	N 583,445 E 1,346,005	
ES-466	END SECTION	1'-3"	459.31	---			---	458.06			HO. CO. D-5.51	N 583,465 E 1,345,911	
ES-468	END SECTION	1'-6"	454.12	---			---	452.62			HO. CO. D-5.51	N 583,502 E 1,345,836	
ES-478	END SECTION	1'-3"	450.92	---			---	449.67			HO. CO. D-5.51	N 583,672 E 1,345,880	
ES-480	END SECTION	1'-3"	455.30	---			---	454.05			HO. CO. D-5.51	N 583,645 E 1,345,965	
ES-483	END SECTION	1'-3"	456.70	---			---	455.45			HO. CO. D-5.51	N 583,708 E 1,346,084	
ES-486	END SECTION	1'-3"	457.60	---			---	456.35			HO. CO. D-5.51	N 583,769 E 1,346,096	
ES-487A	END SECTION	1'-3"	457.60	---			---	456.35			HO. CO. D-5.51	N 583,784 E 1,346,122	
ES-488	END SECTION	1'-3"	456.16	---			---	454.91			HO. CO. D-5.51	N 583,745 E 1,345,996	
ES-490	END SECTION	1'-3"	449.57	---			---	448.32			HO. CO. D-5.51	N 583,777 E 1,345,925	
ES-495	END SECTION	1'-3"	440.43	---			---	439.18			HO. CO. D-5.51	N 584,000 E 1,346,479	
ES-497	END SECTION	1'-3"	452.95	---			---	451.70			HO. CO. D-5.51	N 584,004 E 1,346,384	
ES-500	END SECTION	1'-3"	461.83	---			---	460.58			HO. CO. D-5.51	N 583,543 E 1,346,338	
ES-502	END SECTION	1'-6"	457.50	---			---	456.00			HO. CO. D-5.51	N 583,517 E 1,346,439	
ES-505	END SECTION	1'-3"	463.08	---			---	461.83			HO. CO. D-5.51	N 583,547 E 1,346,255	
ES-507	END SECTION	1'-3"	467.46	---			---	466.21			HO. CO. D-5.51	N 583,297 E 1,346,239	
ES-509	END SECTION	1'-3"	467.92	---			---	466.67			HO. CO. D-5.51	N 583,294 E 1,346,326	
ES-515	END SECTION	1'-3"	440.75	---			---	439.50			HO. CO. D-5.51	N 583,958 E 1,346,696	
ES-517	END SECTION	1'-3"	452.39	---			---	451.14			HO. CO. D-5.51	N 583,965 E 1,346,792	
ES-520	END SECTION	1'-3"	467.46	---			---	466.21			HO. CO. D-5.51	N 583,309 E 1,346,230	

◇1 COORDINATE POINT GIVEN IS TO THE CENTER OF MANHOLES, RISERS AND S-INLETS, TO THE CENTERLINE OF A, COG, AND COS INLETS AT FACE OF CURB, AND AT CENTERLINE OF OUTLET OF END SECTIONS.

NOTE: STRUCTURES 416, 417, 442 & 443 HAVE BEEN INTENTIONALLY OMITTED.

APPROVED: HOWARD COUNTY DEPARTMENT OF PUBLIC WORKS
DocuSigned by: 2465821AE4DA4C2...
Chief, Bureau of Highways — 11/29/2021 Date

APPROVED: HOWARD COUNTY DEPARTMENT OF PLANNING & ZONING
DocuSigned by: 1EB75478A22B49A...
Chief, Division of Land Development — 11/24/2021 Date
DocuSigned by: Chad Edmondson D5E6F9A84923495...
Chief, Development Engineering Division — 11/23/2021 Date

GLW PLANNING | ENGINEERING | SURVEYING
3909 NATIONAL DRIVE | SUITE 250 | BURTONSVILLE, MD 20866 | GLWPA.COM
PHONE: 301-421-4024 | BALT: 410-880-1820 | DC&VA: 301-989-2524 | FAX: 301-421-4186

DESIGNED BY: AWL
DRAWN BY: AWL
CHECKED BY: DEV

DATE	REVISION	BY	APP'R.

PREPARED FOR:
WESTMOUNT DEVELOPMENT CORPORATION
307 INTERNATIONAL CIRCLE, SUITE 130
HUNT VALLEY, MARYLAND 21030
410-489-4489
ATTN.: ROBERT GOODIER

PROFESSIONAL CERTIFICATION
I HEREBY CERTIFY THAT THESE PLANS WERE PREPARED OR APPROVED BY ME, AND THAT I AM A DULY LICENSED PROFESSIONAL ENGINEER UNDER THE LAWS OF THE STATE OF MARYLAND, LICENSE NO. 12975, EXPIRATION DATE: MAY 26, 2022.
10/28/21

STORM DRAIN STRUCTURE SCHEDULE & RIPRAP INFORMATION

WESTMOUNT - PHASE 4
LOTS 295-394 AND OPEN SPACE LOTS 395-418

A RESUBDIVISION OF NON-BUILDABLE BULK PARCELS E & F

ELECTION DISTRICT No. 2 — HOWARD COUNTY, MARYLAND

SCALE	ZONING	G. L. W. FILE No.
NO SCALE	R-ED	13-013
DATE	TAX MAP – GRID	SHEET
OCT., 2021	23-6&12	23 OF 45

F-21-032

© GLW 2021

L:\CADD\DRAWINGS\13013\PLANS BY GLW\ROADS-SD (PH4)\PHASE 4_22-23_STRUCTURE SCHEDULE.dwg, PLOTTED:10/20/2021 2:40 PM, LAST SAVED:10/20/2021 2:40 PM, PLOTTED BY: Tony Leggieri