DocuSign Envelope ID: 42A4CCF4-8A0E-4DE5-9A1B-C40A02CEBB2F

APPENDIX B.1.1. – SUPPLEMENTAL POND SPECIFICATIONS (NON–378)

SUPPLEMENTAL STORMWATER PONDS AND WETLAND SPECIFICATIONS (NON–378)

THESE NOTES AND SPECIFICATIONS ARE IN ADDITION TO THE MD–378 SPECIFICATIONS. IF THERE IS ANY QUESTIONS AS TO THE APPLICABILITY, THE MD–378 SPECIFICATIONS SUPERCEDE.

1. IT IS PREFERRED TO USE THE SAME MATERIAL IN THE EMBANKMENT AS IS BEING INSTALLED FOR THE CORE TRENCH. IF THIS IS NOT POSSIBLE BECAUSE THE APPROPRIATE MATERIAL IS NOT AVAILABLE, A DAM CORE WITH A SHALL MAY BE USED. THE CROSS–SECTION OF THE STORMWATER FACILITY SHOULD SHOW THE LIMITS OF THE DAM CORE (UP TO 10–YEAR WATER SURFACE ELEVATION) AS WELL AS THE ACCEPTABLE MATERIALS FOR THE SHELL. THE SHAPE OF THE DAM CORE AND THE MATERIAL TO BE USED IN THE SHELL SHOULD BE PROVIDED BY THE GEOTECHNICAL ENGINEER.
2. IF THE COMPACTION TESTS FOR THE SITE IMPROVEMENTS IS USING MODIFIED PROCTOR (AASHTO T–180), THEN TO MAINTAIN ON–SITE CONSISTENCY, THE MODIFIED PROCTOR MAY BE USED IN LIEU OF A STANDARD PROCTOR (AASHTO T–99). THE MINIMUM DENSITY USING THE MODIFIED PROCTOR TEST METHOD SHALL BE AT LEAST 92% OF THE MAXIMUM DRY DENSITY WITH A MOISTURE CONTENT OF ±2% OF THE OPTIMUM. THE MINIMUM REQUIRED DENSITY USING THE STANDARD PROCTOR TEST METHOD SHALL BE AT LEAST 95% OF THE MAXIMUM DRY DENSITY WITH A MOISTURE CONTENT OF ±2% OF THE OPTIMUM.
3. FOR ALL STORMWATER MANAGEMENT FACILITIES, A GEOTECHNICAL ENGINEER OR THEIR REPRESENTATIVE MUST BE PRESENT TO VERIFY COMPACTION IN ACCORDANCE WITH THE SELECTED TEST METHOD. THIS INFORMATION NEEDS TO BE PROVIDED IN A REPORT TO THE DESIGN ENGINEER, SO THAT CERTIFICATION OF THE CONSTRUCTION OF THE FACILITY, IN ACCORDANCE WITH MD–378 SPECIFICATIONS, CAN BE MADE.
4. A 4–INCH LAYER OF TOPSOIL SHALL BE PLACED ON ALL DISTURBED AREAS OF THE DAM EMBANKMENT. SEEDING, LIMING, FERTILIZING, MULCHING, ETC. SHALL BE IN ACCORDANCE WITH MARYLAND SOIL CONSERVATION SERVICE MD–342 OR THE 1994 MARYLAND STANDARDS AND SPECIFICATIONS FOR SOIL EROSION AND SEDIMENT CONTROL PERMANENT SEEDING, SECTION IN CHAPTER 20. THE PURPOSE OF THE TOPSOIL IS TO ESTABLISH A GOOD GROWTH OF GRASS, WHICH IS NOT ALWAYS POSSIBLE WITH SOME OF THE MATERIALS THAT MAY BE PLACED FOR THE EMBANKMENT FILL.
5. GEOTEXTILE PLACED BENEATH RIP–RAP SHALL BE CLASS "C" GEOTEXTILE OR BETTER (SEE SECTION 24.0, MATERIAL SPECIFICATIONS, 1994 STANDARDS AND SPECIFICATIONS FOR SOIL EROSION AND SEDIMENT CONTROL (MDE, 1994). SOME ACCEPTABLE GEOTEXTILES THAT MEET THE CLASS "C" CRITERIA INCLUDE.

   AMOCO 4552 — CARTHAGE FX–70S
   GEOLON N70 — MIRAFI 180–N
   WEBTEC N07

   THIS IS ONLY A PARTIAL LISTING OF AVAILABLE GEOTEXTILES BASED ON INFORMATION PROVIDED BY THE MANUFACTURES OF THE 1997 SPECIFIER'S GUIDE DATED DECEMBER 1996. IT IS THE RESPONSIBILITY OF THE ENGINEER TO VERIFY THE ADEQUACY OF THE MATERIAL, AS THERE ARE CHANGES IN THE MANUFACTURING PROCESS AND THE TYPE OF FABRIC USED, WHICH MAY AFFECT THE CONTINUED ACCEPTANCE.
6. A RULE OF THUMB TO DETERMINE WHEN AN EXCAVATED POND MAY NEED TO BE CONSIDERED AN EMBANKMENT POND IS AS FOLLOWS:
   PROVIDE CALCULATION OF 10H + 20 FEET = L, WHERE H HEIGHT FROM POND BOTTOM TO TOP OF DAM. IF THE PROJECTION OF L, DOWNSTREAM IS A HORIZONTAL LINE FROM THE UPSTREAM TOE OF SLOPE IS BELOW EXISTING GROUND, THE POND CAN BE CONSIDERED AN EXCAVATED POND. IN ADDITION, THE EXISTING GROUND SLOPE, DOWNSTREAM OF THE TOE, MUST BE LESS THAN 10%.
7. THE DESIGN ENGINEER AND GEOTECHINCAL ENGINEER SHOULD MAKE THE DETERMINATION THAT THE SETTLEMENT OF THE POND WILL NOT CAUSE EXCESSIVE JOINT EXTENSION. FOR FURTHER INFORMATION ON JOINT ANALYSIS, SEE NRCE PUBLICATION TR–18.
8. FILL PLACEMENT SHALL NOT EXCEED A MAXIMUM 8–INCH. EACH LIFT SHALL BE CONTINUOUS FOR THE ENTIRE LENGTH OF THE EMBANKMENT.
9. THE EMBANKMENT FILL SHALL NOT BE PLACED HIGHER THAN THE CENTERLINE OF THE PRINCIPAL SPILLWAY UNTIL AFTER THE PRINCIPAL SPILLWAY HAS BEEN INSTALLED. IF THE EMBANKMENT NEEDS TO BE EXCAVATED TO INSTALL THE PRINCIPAL SPILLWAY, THE SIDE SLOPE SHALL BE NO LESS THAN 2:1
10. THE SIDE SLOPES OF A CUT TO REPAIR A DAM, INSTALL A PRINCIPAL SPILLWAY FOR AN EXCAVATED POND, OR OTHER REPAIR WORK, SHALL BE NO LESS THAN 2:1.

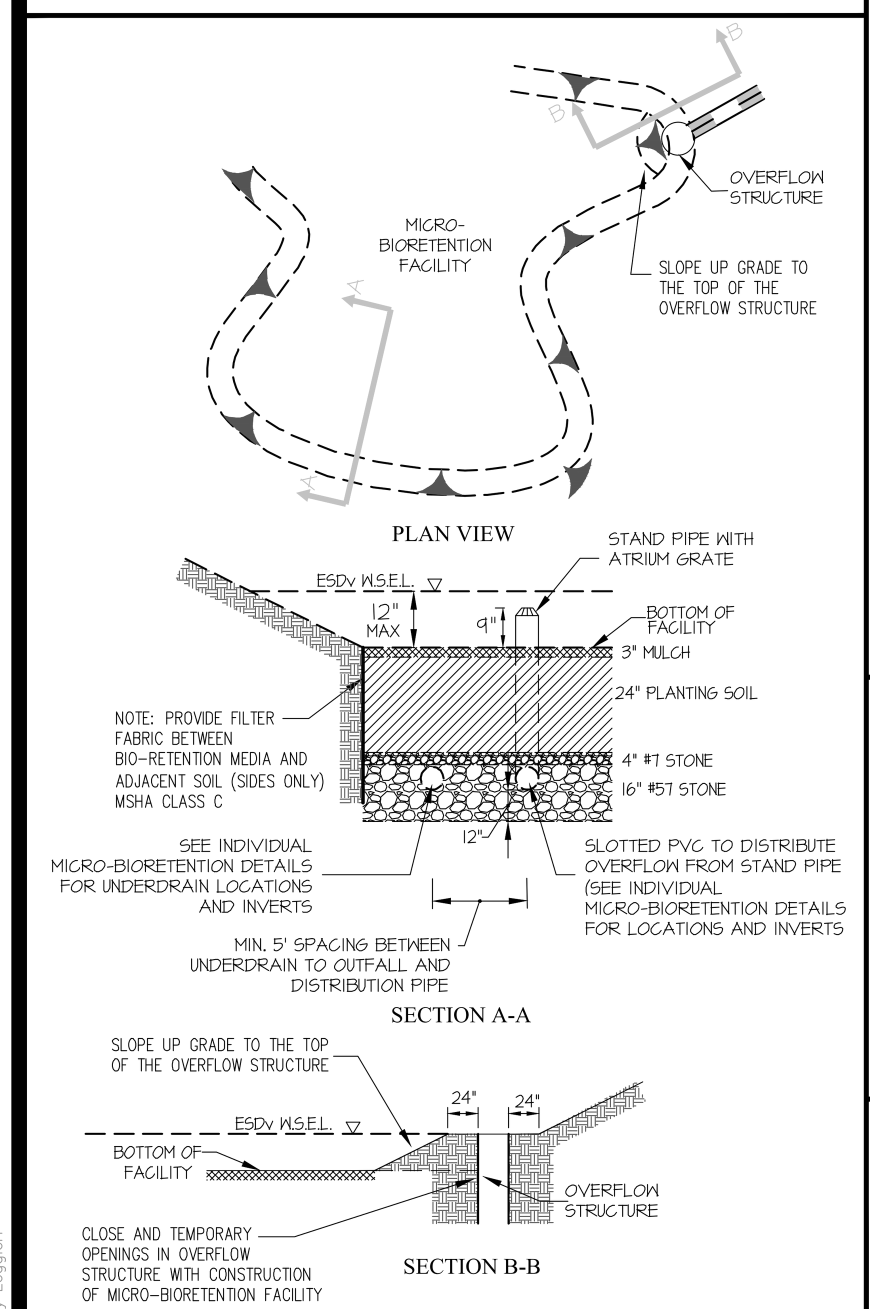

TYPICAL MICRO-BIORETENTION SECTION SCALE: N.T.S.

GENERAL NOTES

1. MATERIAL SPECIFICATIONS
THE ALLOWABLE MATERIALS TO BE USED IN THESE MICRO-BIORETENTION PRACTICES ARE DETAILED IN TABLE B.4.1.

2. PLANTING SOIL
THE SOIL SHALL BE A UNIFORM MIX, FREE OF STONES, STUMPS, ROOTS OR OTHER SIMILAR OBJECTS LARGER THAN TWO INCHES. NO OTHER MATERIALS OR SUBSTANCES SHALL BE MIXED OR DUMPED WITHIN THE MICRO-BIORETENTION PRACTICE THAT MAY BE HARMFUL TO PLANT GROWTH, OR PROVE A HINDRANCE TO THE PLANTING OR MAINTENANCE OPERATIONS. THE PLANTING SOIL SHALL BE FREE OF BERMUDA GRASS, QUACKGRASS, JOHNSON GRASS, OR OTHER NOXIOUS WEEDS AS SPECIFIED UNDER COMAR 15.08.01.05.

THE PLANTING SOIL SHALL BE TESTED AND SHALL MEET THE FOLLOWING CRITERIA:

SOIL COMPONENT – LOAMY SAND OR SANDY LOAM (USDA SOIL TEXTURAL CLASSIFICATION)
ORGANIC CONTENT – MIN. 10% BY DRY WEIGHT (ASTM D 2974). IN GENERAL, THIS CAN BE MET WITH A MIXTURE OF LOAMY SAND (60–65%) AND COMPOST (35–40%) OR SANDY LOAM (30%), COARSE SAND (30%), AND COMPOST (40%).
CLAY CONTENT – MEDIA SHALL HAVE A CLAY CONTENT OF LESS THAN 5%
PH RANGE – SHOULD BE BETWEEN 5.5–7.0. AMENDMENTS (E.G., LIME, IRON SULFATE PLUS SULFUR) MAY BE MIXED INTO THE SOIL TO INCREASE OR DECREASE PH.

THERE SHALL BE AT LEAST ONE SOIL TEST PER PROJECT. EACH TEST SHALL CONSIST OF BOTH THE STANDARD SOIL TEST FOR PH, AND ADDITIONAL TESTS OF ORGANIC MATTER, AND SOLUBLE SALTS. A TEXTURAL ANALYSIS SHALL BE PERFORMED FOR EACH LOCATION WHERE THE TOPSOIL WAS EXCAVATED.

3. COMPACTION
IT IS VERY IMPORTANT TO MINIMIZE COMPACTION OF BOTH THE BASE OF THE BIORETENTION PRACTICES AND THE REQUIRED BACKFILL. WHEN POSSIBLE, USE EXCAVATION HOES TO REMOVE ORIGINAL SOIL. IF PRACTICES ARE EXCAVATED USING A LOADER, THE CONTRACTOR SHOULD USE WIDE TRACK OR MARSH TRACK EQUIPMENT, OR LIGHT EQUIPMENT WITH TURF TYPE TIRES. USE OF EQUIPMENT WITH NARROW TRACKS OR NARROW TIRES, RUBBER TIRES WITH LARGE LUGS, OR HIGH PRESSURE TIRES WILL CAUSE EXCESSIVE COMPACTION RESULTING IN REDUCED INFILTRATION RATES AND IS NOT ACCEPTABLE. COMPACTION WILL SIGNIFICANTLY CONTRIBUTE TO DESIGN FAILURE.

COMPACTION CAN BE ALLEVIATED AT THE BASE OF THE BIORETENTION FACILITY BY USING A PRIMARY TILLING OPERATION SUCH AS A CHISEL PLOW, RIPPER, OR SUBSOILER. THESE TILLING OPERATIONS ARE TO REFRACTURE THE SOIL PROFILE THROUGH THE 12 INCH COMPACTION ZONE. SUBSTITUTE METHODS MUST BE APPROVED BY THE ENGINEER. ROTOTILLERS TYPICALLY DO NOT TILL DEEP ENOUGH TO REDUCE THE EFFECTS OF COMPACTION FROM HEAVY EQUIPMENT.

ROTOTILL 2 TO 3 INCHES OF SAND INTO THE BASE OF THE BIORETENTION FACILITY BEFORE BACKFILLING THE OPTIONAL SAND LAYER. PUMP ANY PONDED WATER BEFORE PREPARING (ROTOTILLING) BASE.

WHEN BACKFILLING THE TOPSOIL OVER THE SAND LAYER, FIRST PLACE 3 TO 4 INCHES OF TOPSOIL OVER THE SAND, THEN ROTOTILL THE SAND/TOPSOIL TO CREATE A GRADATION ZONE. BACKFILL THE REMAINDER OF THE TOPSOIL TO FINAL GRADE.

WHEN BACKFILLING THE BIORETENTION FACILITY, PLACE SOIL IN LIFTS 12" TO 18". DO NOT USE HEAVY EQUIPMENT WITHIN THE BIORETENTION BASIN. HEAVY EQUIPMENT CAN BE USED AROUND THE PERIMETER OF THE BASIN TO SUPPLY SOILS AND SAND. GRADE BIORETENTION MATERIALS WITH LIGHT EQUIPMENT SUCH AS A COMPACT LOADER OR A DOZER/LOADER WITH MARSH TRACKS.

4. PLANT MATERIAL
RECOMMENDED PLANT MATERIAL FOR MICRO-BIORETENTION PRACTICES CAN BE FOUND IN APPENDIX A, SECTION A.2.3.

5. PLANT INSTALLATION
MULCH SHOULD BE PLACED TO A UNIFORM THICKNESS OF 2" TO 3". SHREDDED HARDWOOD MULCH IS THE ONLY ACCEPTED MULCH. PINE MULCH AND WOOD CHIPS WILL FLOAT AND MOVE TO THE PERIMETER OF THE BIORETENTION AREA DURING A STORM EVENT AND ARE NOT ACCEPTABLE. SHREDDED MULCH MUST BE WELL AGED (6 TO 12 MONTHS) FOR ACCEPTANCE.

ROOT STOCK OF THE PLANT MATERIAL SHALL BE KEPT MOIST DURING TRANSPORT AND ON–SITE STORAGE. THE PLANT ROOT BALL SHOULD BE PLANTED SO 1/8TH OF THE BALL IS ABOVE FINAL GRADE SURFACE. THE DIAMETER OF THE PLANTING PIT SHALL BE AT LEAST SIX INCHES LARGER THAN THE DIAMETER OF THE PLANTING BALL. SET AND MAINTAIN THE PLANT STRAIGHT DURING THE ENTIRE PLANTING PROCESS. THOROUGHLY WATER GROUND BED COVER AFTER INSTALLATION.

TREES SHALL BE BRACED USING 2" BY 2" STAKES ONLY AS NECESSARY AND FOR THE FIRST GROWING SEASON ONLY. STAKES ARE TO BE EQUALLY SPACED ON THE OUTSIDE OF THE TREE BALL.

GRASSES AND LEGUME SEED SHOULD BE DRILLED INTO THE SOIL TO A DEPTH OF AT LEAST ONE INCH. GRASS AND LEGUME PLUGS SHALL BE PLANTED FOLLOWING THE NON–GRASS GROUND COVER PLANTING SPECIFICATIONS.

THE TOPSOIL SPECIFICATIONS PROVIDE ENOUGH ORGANIC MATERIAL TO ADEQUATELY SUPPLY NUTRIENTS FROM NATURAL CYCLING. THE PRIMARY FUNCTION OF THE BIORETENTION STRUCTURE IS TO IMPROVE WATER QUALITY. ADDING FERTILIZERS DEFEATS, OR AT A MINIMUM, IMPEDES THIS GOAL. ONLY ADD FERTILIZER IF WOOD CHIPS OR MULCH ARE USED TO AMEND THE SOIL. ROTOTILL UREA FERTILIZER AT A RATE OF 2 POUNDS PER 1000 SQUARE FEET.

6. UNDERDRAINS
UNDERDRAINS SHOULD MEET THE FOLLOWING CRITERIA:

- PIPE– SHOULD BE 4" TO 6" DIAMETER, SLOTTED OR PERFORATED RIGID PLASTIC PIPE (ASTMF 758, TYPE PS 28, OR AASHTO–M–278) IN A GRAVEL LAYER. THE PREFERRED MATERIAL IS SLOTTED, 4" RIGID PIPE (E.G., PVC OR HDPE).
- PERFORATIONS – IF PERFORATED PIPE IS USED, PERFORATIONS SHOULD BE 3/8" DIAMETER LOCATED 6" ON CENTER WITH A MINIMUM OF FOUR HOLES PER ROW. PIPE SHALL BE WRAPPED WITH A ¼" (NO. 4 OR 4X4) GALVANIZED HARDWARE CLOTH
- GRAVEL ∟ THE GRAVEL LAYER (NO. 57 STONE PREFERRED) SHALL BE AT LEAST 3∟ THICK ABOVE AND BELOW THE UNDERDRAIN.
- THE MAIN COLLECTOR PIPE SHALL BE AT A MINIMUM 0.5% SLOPE
- A RIGID, NON–PERFORATED OBSERVATION WELL MUST BE PROVIDED (ONE PER EVERY 1,0000 SQUARE FEET) TO PROVIDE A CLEAN–OUT PORT AND MONITOR PERFORMANCE OF THE FILTER.
- A 4⊔ LAYER OF PEA GRAVEL (1/8⊔ TO 3/8⊔ STONE) SHALL BE LOCATED BETWEEN THE FILTER MEDIA AND UNDERDRAIN TO PREVENT MIGRATION OF FINES INTO THE UNDERDRAIN. THIS LAYER MAY BE CONSIDERED PART OF THE FILTER BED WHEN BED THICKNESS EXCEEDS 24⊓

THE MAIN COLLECTOR PIPE FOR UNDERDRAIN SYSTEMS SHALL BE CONSTRUCTED AT A MINIMUM SLOPE OF 0.5%. OBSERVATION WELLS AND/OR CLEAN–OUT PIPES MUST BE PROVIDED (ONE MINIMUM PER EVERY 1000 SQUARE FEET OF SURFACE AREA).

7. MISCELLANEOUS

THE BIORETENTION FACILITY MAY NOT BE CONSTRUCTED UNTIL ALL CONTRIBUTING DRAINAGE AREA HAS BEEN STABILIZED.

STORMWATER MANAGEMENT GENERAL NOTES:

1. THE STORMWATER MANAGEMENT OBLIGATION WAS MET WITH ESD PRACTICES INCLUDING: RAINWATER HARVESTING (M–1), DRY WELLS (M–5), MICRO–BIORETENTION FACILITIES (M–6), AND SWALES (M–8).

2. WITH THE EXCEPTION OF THE MICRO–BIORETENTION FACILITIES THAT LIE WITHIN THE COUNTY ROAD RIGHT–OF–WAY, ALL ESD PRACTICES WILL BE OWNED AND MAINTAINED BY THE HOME OWNER'S ASSOCIATION.

3. ON LOT ESD PRACTICES SHALL BE SUBJECT TO RECORDED DOCUMENTS OUTLINING OWNERSHIP AND FUTURE MAINTENANCE. THE HOMEOWNER WILL BE RESPONSIBLE FOR THE MAINTENANCE OF ON LOT ESD DEVICES.

4. IN ADDITION TO STANDARD MDE REQUIREMENTS, THE CONTRACTOR SHOULD BE PREPARED TO DEWATER EXCAVATIONS AND MAINTAIN TRAFFICABILITY OF THE SWM AREAS DURING CONSTRUCTION. ALL EXCAVATIONS SHOULD BE PROPERLY SHORED AND SUPPORTED IN ACCORDANCE WITH THE LATEST OSHA REQUIREMENTS. IF INFILTRATION FACILITY AREAS ARE EXCAVATED USING A LOADER, THE CONTRACTOR SHOULD USE WIDE–TRACK OR LIGHTWEIGHT EQUIPMENT WITH TURF TIRES TO MINIMIZE COMPACTION OF THE SUBGRADE SOILS. EXCESSIVE COMPACTION WITHIN THE INFILTRATION AREA WILL RESULT IN POOR PERFORMANCE OF THE FACILITIES. THE BASE OF THE INFILTRATION FACILITIES SHOULD BE TILLED TO A DEPTH OF 12 INCHES TO ALLEVIATE ANY COMPACTION OF THE SUBGRADE BY EXCAVATION EQUIPMENT. BACKFILL OF THE INFILTRATION FACILITIES SHOULD BE PERFORMED IN ACCORDANCE WITH MDE GUIDELINES.

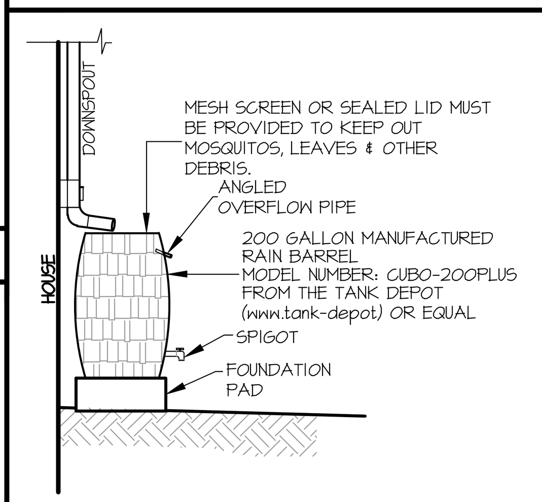

RAIN BARREL DETAIL NO SCALE

OPERATION AND MAINTENANCE SCHEDULE FOR

RAINWATER HARVESTING (RAIN BARRELS) (M-1)

A. THE HOMEOWNER SHALL EMPTY BARRELS ON A MONTHLY BASIS AND CLEAN BARREL WITH A HOSE.
B. THE HOMEOWNER SHALL VERIFY INTEGRITY OF LEAF SCREENS, GUTTERS, DOWNSPOUTS, SPIGOTS, AND MOSQUITO SCREENS, AND CLEAN AND REMOVE ANY DEBRIS.
C. THE HOMEOWNER SHALL REPLACE DAMAGED COMPONENTS AS NEEDED.
D. THE HOMEOWNER SHALL DISCONNECT THE BARREL PRIOR TO WINTER, OR ALLOW THE BARREL TO DRAIN BY BOTTOM SPIGOT DURING THE WINTER SEASON.

OPERATION AND MAINTENANCE SCHEDULE FOR

DRY WELLS (M-5)

A. THE HOMEOWNER SHALL INSPECT THE MONITORING WELLS AND STRUCTURES ON A QUARTERLY BASIS AND AFTER EVERY HEAVY STORM EVENT.
B. THE HOMEOWNER SHALL RECORD THE WATER LEVELS AND SEDIMENT BUILD UP IN THE MONITORING WELLS OVER A PERIOD OF SEVERAL DAYS TO INSURE TRENCH DRAINAGE.
C. THE HOMEOWNER SHALL MAINTAIN A LOG BOOK TO DETERMINE THE RATE AT WHICH THE FACILITY DRAINS.
D. WHEN THE FACILITY BECOMES CLOGGED SO THAT IT DOES NOT DRAIN DOWN WITHIN A SEVENTY-TWO (72) HOUR TIME PERIOD, CORRECTIVE ACTION SHALL BE TAKEN.
E. THE MAINTENANCE LOG BOOK SHALL BE AVAILABLE TO HOWARD COUNTY FOR INSPECTION TO INSURE COMPLIANCE WITH OPERATION AND MAINTENANCE CRITERIA.
F. ONCE THE PERFORMANCE CHARACTERISTICS OF THE INFILTRATION FACILITY HAVE BEEN VERIFIED, THE MONITORING SCHEDULE CAN BE REDUCED TO AN ANNUAL BASIS UNLESS THE PERFORMANCE DATA INDICATES THAT A MORE FREQUENT SCHEDULE IS REQUIRED.

OPERATION AND MAINTENANCE SCHEDULE FOR

MICRO-BIORETENTION (M-6) AND BIORETENTION SWALE (M-8)

A. THE HOA SHALL MAINTAIN THE PLANT MATERIAL, MULCH LAYER AND SOIL LAYER ANNUALLY. MAINTENANCE OF MULCH AND SOIL IS LIMITED TO CORRECTING AREAS OF EROSION OR WASH OUT. ANY MULCH REPLACEMENT SHALL BE DONE IN THE SPRING. PLANT MATERIAL SHALL BE CHECKED FOR DISEASE AND INSECT INFESTATION AND MAINTENANCE WILL ADDRESS DEAD MATERIAL AND PRUNING. ACCEPTABLE REPLACEMENT PLANT MATERIAL IS LIMITED TO THE FOLLOWING: 2000 MARYLAND STORMWATER DESIGN MANUAL VOLUME II, TABLE A.4.1 AND 2.
B. THE HOA SHALL PERFORM A PLANT INSPECTION IN THE SPRING AND IN THE FALL OF EACH YEAR. DURING THE INSPECTION, THE OWNER SHALL REMOVE DEAD AND DISEASED VEGETATION CONSIDERED BEYOND TREATMENT, REPLACE DEAD PLANT MATERIAL WITH ACCEPTABLE REPLACEMENT PLANT MATERIAL, TREAT DISEASED TREES AND SHRUBS, AND REPLACE ALL DEFICIENT STAKES AND WIRES.
C. THE HOA SHALL INSPECT THE MULCH EACH SPRING. THE MULCH SHALL BE REPLACED EVERY TWO TO THREE YEARS. THE PREVIOUS MULCH LAYER SHALL BE REMOVED BEFORE THE NEW LAYER IS APPLIED.
D. THE HOA SHALL CORRECT SOIL EROSION ON AN AS NEEDED BASIS, WITH A MINIMUM OF ONCE PER MONTH AND AFTER EACH HEAVY STORM.
E. THE HOA SHALL BE RESPONSIBLE FOR THE MAINTENANCE OF ALL PRIVATE STORM DRAIN PIPES AND STRUCTURES AND ALL UNDERDRAINS WITHIN THE MICRO-BIORETENTION LAYERS, REGARDLESS OF OWNERSHIP.
F. HOWARD COUNTY SHALL BE RESPONSIBLE FOR THE MAINTENANCE OF ALL PUBLIC STORM DRAIN PIPES AND STRUCTURES.

NOTE: EXACT LOCATION AND DIMENSIONS OF DRYWELLS TO BE SHOWN ON SDP OR BUILDING PERMIT PLOT PLAN, WHEN ACTUAL HOUSE TO BE BUILT IS DETERMINED.

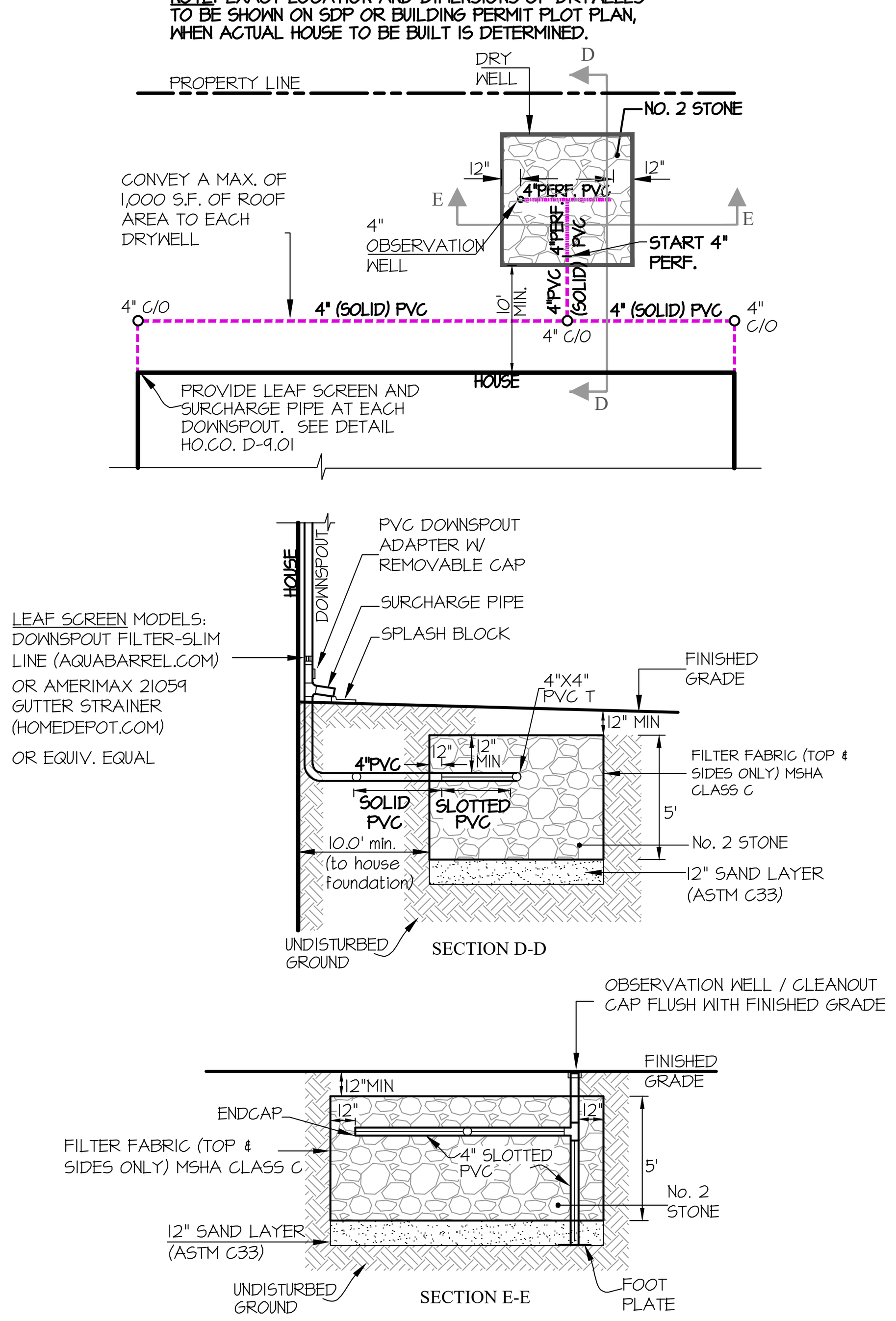

DRYWELL NOTE:

DRYWELLS SHOULD NOT BE PLANNED IN THE PROXIMITY OF THE STEEPLY SLOPING AREAS AS THE STABILITY OF THE SLOPE MAY BE IMPACTED. IF CONSTRUCTION OF THE SWM FACILITIES IN SLOPING AREAS IS UNAVOIDABLE, THE FACILITIES SHOULD BE LINED TO REDUCE THE POTENTIAL FOR INFILTRATION AND SEEPAGE TOWARD THE SLOPE.

DRYWELL DETAIL NO SCALE

DETAIL D-4-1-C ROCK OUTLET PROTECTION III

STANDARD SYMBOL: ROPIII

DISCHARGE TO AN UNCONFINED CHANNEL OR FLAT AREA

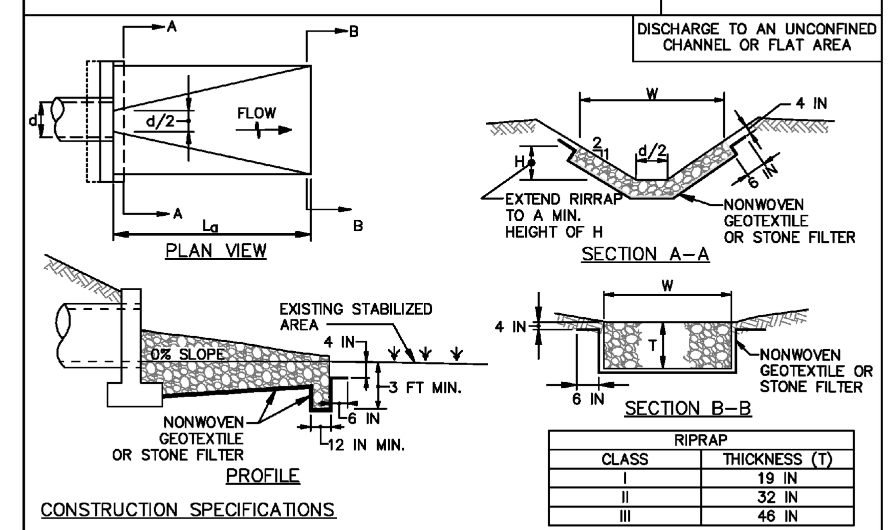

RIPRAP	
CLASS	THICKNESS (T)
I	19 IN
II	32 IN
III	46 IN

CONSTRUCTION SPECIFICATIONS

1. RIPRAP AND STONE MUST CONFORM TO THE SPECIFIED CLASS.
2. USE NONWOVEN GEOTEXTILE, AS SPECIFIED IN SECTION H–1 MATERIALS, AND PROTECT FROM PUNCTURING, CUTTING, OR TEARING. REPAIR ANY DAMAGE OTHER THAN AN OCCASIONAL SMALL HOLE BY PLACING ANOTHER PIECE OF GEOTEXTILE OVER THE DAMAGED PART OR BY COMPLETELY REPLACING THE GEOTEXTILE. PROVIDE A MINIMUM OF ONE FOOT OVERLAP FOR ALL REPAIRS AND FOR JOINING TWO PIECES OF GEOTEXTILE TOGETHER.
3. PREPARE THE SUBGRADE FOR GEOTEXTILE OR STONE FILTER (⅜ TO 1½ INCH MINIMUM STONE FOR 6 INCH MINIMUM DEPTH) AND RIPRAP TO THE REQUIRED LINES AND GRADES. COMPACT ANY FILL REQUIRED IN THE SUBGRADE TO A DENSITY OF APPROXIMATELY THAT OF THE SURROUNDING UNDISTURBED MATERIAL.
4. EXTEND GEOTEXTILE AT LEAST 6 INCHES BEYOND EDGES OF RIPRAP AND EMBED AT LEAST 4 INCHES AT SIDES OF RIPRAP.
5. CONSTRUCT RIPRAP OUTLET TO FULL COURSE THICKNESS IN ONE OPERATION AND IN SUCH A MANNER AS TO AVOID DISPLACEMENT OF UNDERLYING MATERIALS. PLACE STONE FOR RIPRAP OUTLET IN A MANNER THAT WILL ENSURE THAT IT IS REASONABLY HOMOGENOUS WITH THE SMALLER STONES AND SPALLS FILLING THE VOIDS BETWEEN THE LARGER STONES. PLACE RIPRAP IN A MANNER TO PREVENT DAMAGE TO THE FILTER BLANKET OR GEOTEXTILE. HAND PLACE TO THE EXTENT NECESSARY.
6. WHERE NO ENDWALL IS USED, CONSTRUCT THE UPSTREAM END OF THE APRON SO THAT THE WIDTH IS TWO TIMES THE DIAMETER OF THE OUTLET PIPE, AND EXTEND THE STONE UNDER THE OUTLET BY A MINIMUM OF 18 INCHES.
7. CONSTRUCT APRON WITH 0% SLOPE ALONG ITS LENGTH AND WITHOUT OBSTRUCTIONS. PLACE STONE SO THAT IT BLENDS IN WITH EXISTING GROUND.
8. MAINTAIN LINE, GRADE, AND CROSS SECTION. KEEP OUTLET FREE OF EROSION. REMOVE ACCUMULATED SEDIMENT AND DEBRIS. AFTER HIGH FLOWS INSPECT FOR SCOUR AND RIPRAP DISLODGED RIPRAP. MAKE NECESSARY REPAIRS IMMEDIATELY.

MARYLAND STANDARDS AND SPECIFICATIONS FOR SOIL EROSION AND SEDIMENT CONTROL

U.S. DEPARTMENT OF AGRICULTURE NATURAL RESOURCES CONSERVATION SERVICE	2011	MARYLAND DEPARTMENT OF ENVIRONMENT WATER MANAGEMENT ADMINISTRATION

D.22

NOTE:
PRIOR TO PLANTING CUT POT-BOUND ROOTS. AFTER PLANTING, THE ENTIRE GROUND COVER BED SHALL BE THOROUGHLY WATERED.

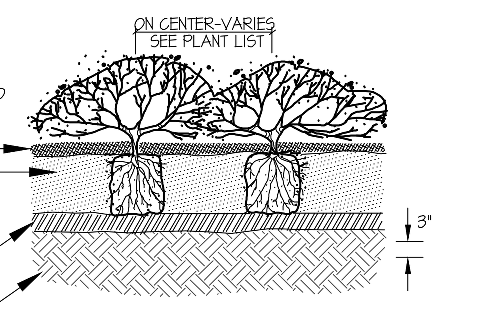

GROUNDCOVER PLANTING DETAIL NTS

NOTE:
SET ROOT BALL AT OR SLIGHTLY ABOVE FINISH GRADE. CONTAINERS TO BE REMOVED PRIOR TO PLANTING. SCARIFY ROOT EDGES TO STIMULATE GROWTH.

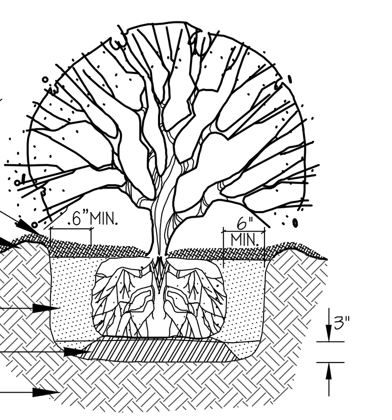

SHRUB PLANTING DETAIL NTS

Appendix B.4. Construction Specifications for Environmental Site Design Practices

Table B.4.1 Materials Specifications for Micro-Bioretention, Rain Gardens & Landscape Infiltration-

Material	Specification	Size	Notes
Plantings	see Appendix A, Table A.4	n/a	plantings are site-specific
Planting soil [2' to 4' deep]	loamy sand (60 - 65%) & compost (35 – 40%) or sandy loam (30%), coarse sand (30%) & compost (40%)	n/a	USDA soil types loamy sand or sandy loam; clay content < 5%
Organic content	Min. 10% by dry weight (ASTM D 2974)		
Mulch	shredded hardwood		aged 6 months, minimum; no pine or wood chips
Pea gravel diaphragm	pea gravel: ASTM-D-448	NO. 8 OR NO. 9 (1/8" TO 3/8")	
Curtain drain	ornamental stone: washed cobbles	stone: 2" to 5"	
Geotextile		n/a	PE Type 1 nonwoven
Gravel (underdrains and infiltration berms)	AASHTO M-43	NO. 57 OR NO. 6 AGGREGATE (3/8" to 3/4")	
Underdrain piping	F 758, Type PS 28 or AASHTO M-278	4" to 6" rigid schedule 40 PVC or SDR35	Slotted or perforated pipe; 3/8" perf. @ 6" on center, 4 holes per row; minimum of 3" of gravel over pipes; not necessary underneath pipes. Perforated pipe shall be wrapped with ¼-inch galvanized hardware cloth
Poured in place concrete (if required)	MSHA Mix No. 3; f'_c = 3500 psi @ 28 days, normal weight, air-entrained; reinforcing to meet ASTM-615-60	n/a	on-site testing of poured-in-place concrete required: 28 day strength and slump test; all concrete design (cast-in-place or pre-cast) *not using previously approved State or local standards* requires design drawings sealed and approved by a professional structural engineer licensed in the State of Maryland - design to include meeting ACI Code 350.R/89; vertical loading [H-10 or H-20]; allowable horizontal loading (based on soil pressures); and analysis of potential cracking
Sand	AASHTO-M-6 or ASTM-C-33	0.02" to 0.04"	Sand substitutions such as Diabase and Graystone (**AASHTO)** #10 are not acceptable. No calcium carbonated or dolomitic sand substitutions are acceptable. No "rock dust" can be used for sand.

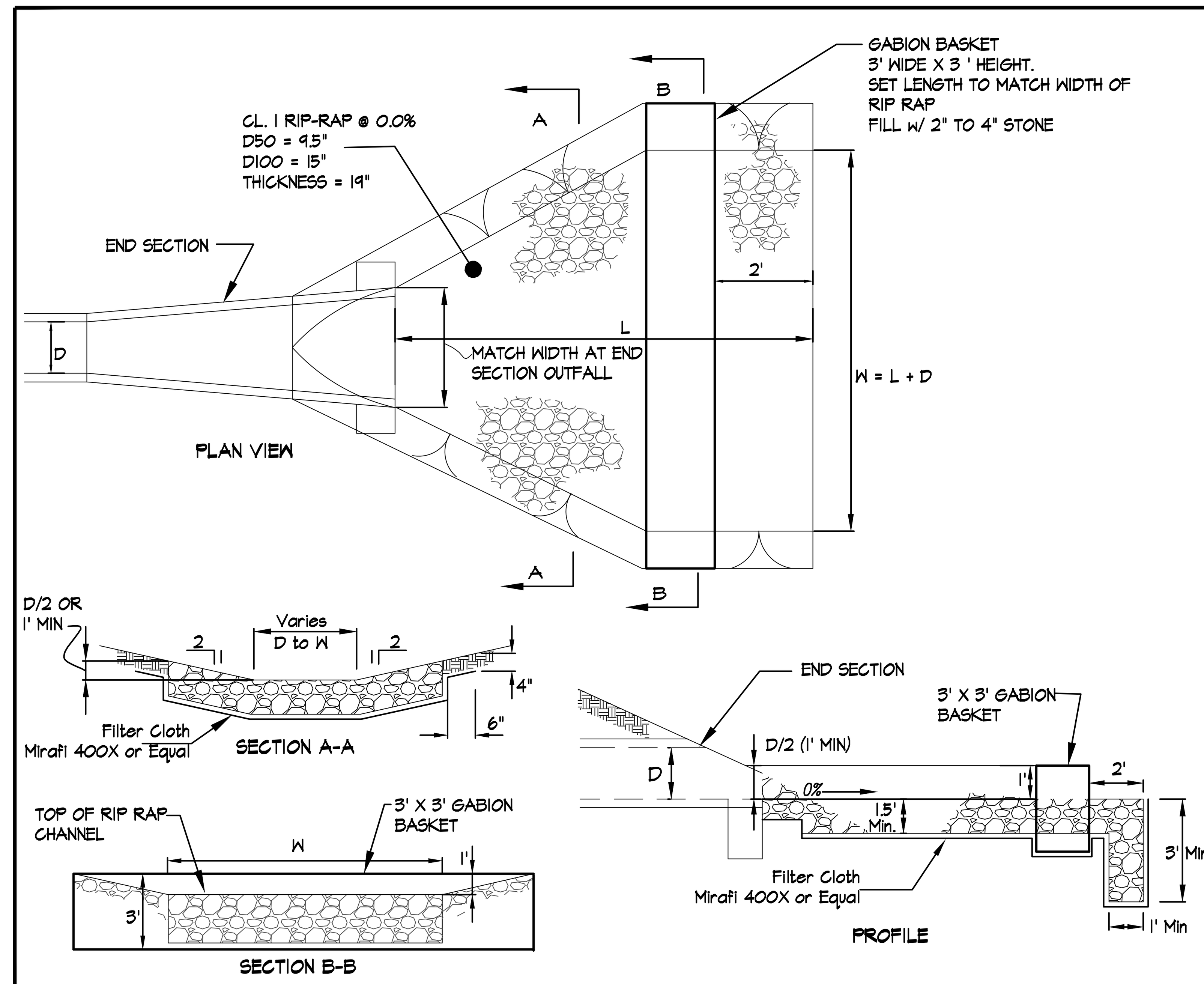

DETAIL FOR OUTFALL ON SLOPES GREATER THAN 10% SCALE: NTS

APPROVED: HOWARD COUNTY DEPARTMENT OF PUBLIC WORKS
DocuSigned by: 2465821AE4DA4C2...
Chief, Bureau of Highways — Date 11/29/2021

APPROVED: HOWARD COUNTY DEPARTMENT OF PLANNING & ZONING
DocuSigned by: 1EB75478A22B49A...
Chief, Division of Land Development — Date 11/24/2021
DocuSigned by: Chad Edmondson D5F6F9A84923495...
Chief, Development Engineering Division — Date 11/23/2021

GLW — PLANNING | ENGINEERING | SURVEYING
3909 NATIONAL DRIVE | SUITE 250 | BURTONSVILLE, MD 20866 | GLWPA.COM
PHONE: 301-421-4024 | BALT: 410-880-1820 | DC&VA: 301-989-2524 | FAX: 301-421-4186

DESIGNED BY: DEV
DRAWN BY: LMW
CHECKED BY: DEV

DATE	REVISION	BY	APP'R.

PREPARED FOR:
WESTMOUNT DEVELOPMENT CORPORATION
307 INTERNATIONAL CIRCLE, SUITE 130
HUNT VALLEY, MARYLAND 21030
410–489–4489
ATTN.: ROBERT GOODIER

PROFESSIONAL CERTIFICATION
I HEREBY CERTIFY THAT THESE PLANS WERE PREPARED OR APPROVED BY ME, AND THAT I AM A DULY LICENSED PROFESSIONAL ENGINEER UNDER THE LAWS OF THE STATE OF MARYLAND, LICENSE NO. 12975. EXPIRATION DATE: MAY 26, 2022.
10/28/21

STORMWATER MANAGEMENT NOTES and DETAILS

WESTMOUNT - PHASE 4

LOTS 295-394 AND OPEN SPACE LOTS 395-418

A RESUBDIVISION OF NON-BUILDABLE BULK PARCELS E & F

ELECTION DISTRICT No. 2 — HOWARD COUNTY, MARYLAND

SCALE	ZONING	G. L. W. FILE No.
AS SHOWN	R–ED	13–013
DATE	TAX MAP – GRID	SHEET
OCT., 2021	23–6&12	45 OF 45

F-21-032

© GLW 2021

L:\CADD\DRAWINGS\13013\PLANS BY GLW\ROADS-SD (PH4)\PHASE 4_44-45_SWM NOTES & DETAILS.dwg, PLOTTED:10/26/2021 3:53 PM, LAST SAVED:10/26/2021 3:52 PM, PLOTTED BY: Tony Leggieri