DocuSign Envelope ID: 42A4CCF4-8A0E-4DE5-9A1B-C40A02CEBB2F

EXTERNAL PERIMETER PLANTING SCHEDULE - SCHEDULE A

PERIMETER	LAND USE	ADJACENT LAND USE	TYPE OF BUFFER	LINEAR FEET OF ROADWAY FRONTAGE/ PERIMETER	NUMBER OF PLANTS REQUIRED: SHADE TREES	ORNAMENTALS TREES	EVERGREEN TREES	MITIGATION TREES	CREDIT FOR EXISTING VEGETATION (YES, NO, LINEAR FEET) DESCRIBE BELOW IF NEEDED.			CREDIT FOR WALL, FENCE OR BERM (YES, NO, LINEAR FEET) DESCRIBE BELOW IF NEEDED.	NUMBER OF PLANTS PROVIDED: SHADE TREES	ORNAMENTALS TREES	EVERGREEN TREES	MITIGATION TREES
PERIMETER 6	SFD RESIDENTIAL	SFD RESIDENTIAL	'A' Buffer	641'	11	---	---	---	YES	641'	SEE NOTE (1)	NO	0	EXISTING WOODLAND		---
PERIMETER 7	SFD RESIDENTIAL	SFD RESIDENTIAL	'A' Buffer	1,764'	30	---	---	---	YES	258'	---	NO	25	---	---	---
PERIMETER 8	SFD RESIDENTIAL	SFD RESIDENTIAL	'A' Buffer	2,452'	41	---	---	---	YES	2,452'	SEE NOTE (1)	NO	0	EXISTING WOODLAND		---

(1) CREDIT FOR FOREST RETENTION ALONG THIS PERIMETER.

PLANT LIST FOR SCHEDULE A

SYMBOL		QTY.	NAMES (BOTANICAL / SCIENTIFIC)	SIZE	ROOT/COMMENTS
SHADE TREES					
(??)	MC	13	QUERCUS PALUSTRIS/ PIN OAK	2-1/2" CAL	B&B
	QA	12	QUERCUS RUBRA/ NORTHERN RED OAK	2 1/2-3" CAL	B&B

THIS PLAN HAS BEEN PREPARED IN ACCORDANCE WITH SECTION 16.124 OF THE HOWARD COUNTY CODE AND THE LANDSCAPE MANUAL WITH 237 SHADE TREES (@ $300.00 PER TREE)

SURETY CALCULATIONS: (FOR SHADE TREES)

PERIMETER PLANTING: 25 SHADE TREES x $300 =$ 7,500.00

SURETY REQUIRED: **25 SHADE TREES X $300 =$ 7,500.00**
(To be posted w/ the developer agreement)

LEGEND

EXISTING FOREST CONSERVATION EASEMENTS
(FCE 17 THROUGH FCE 22 WERE ESTABLISHED UNDER F-17-001)

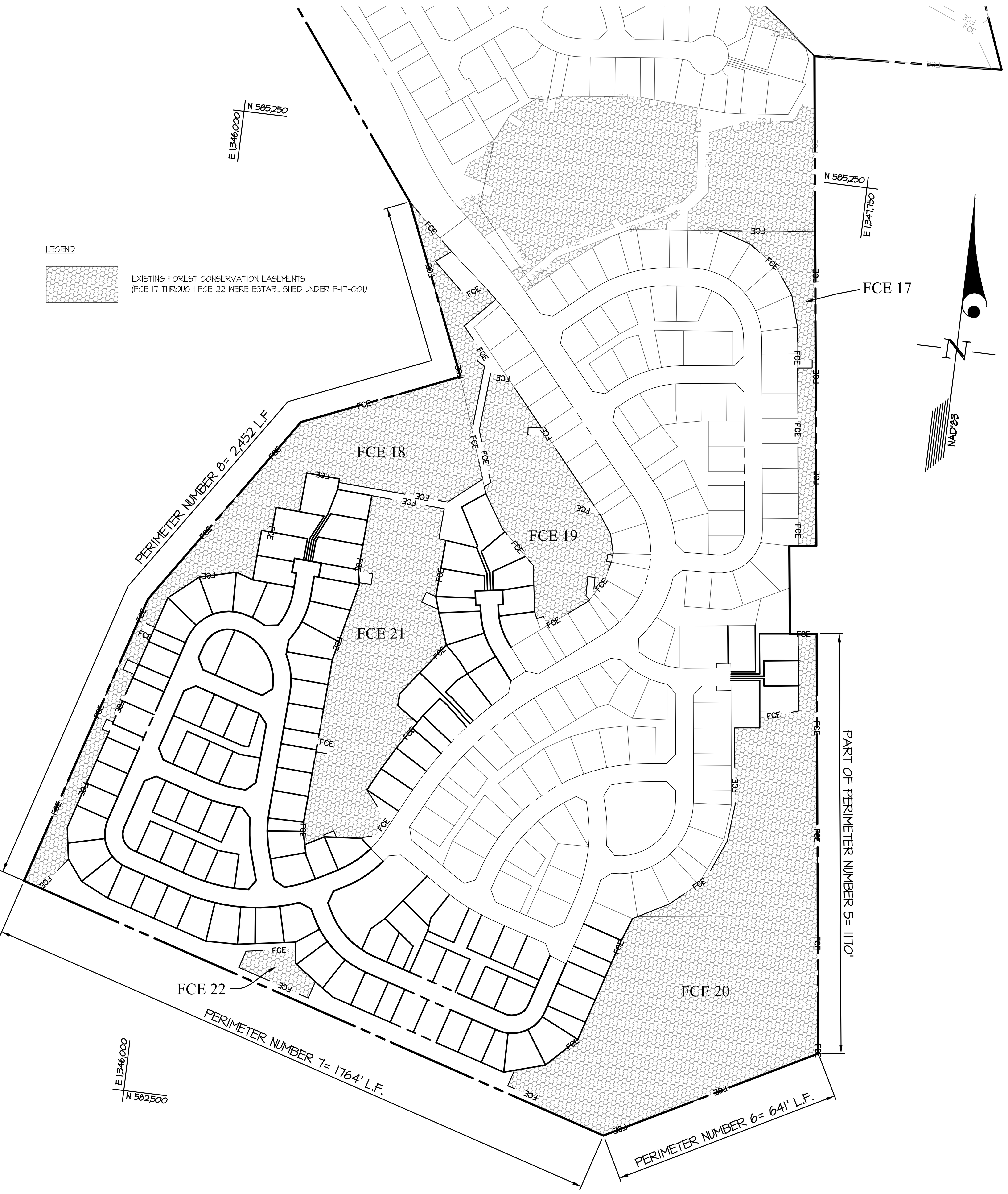

GRAPHIC SCALE

200 0 100 200 400 800

(IN FEET)
1 inch = 200 ft.

STREET TREE REQUIREMENTS

ROAD	LENGTH OF CURB (L.F.)	# OF TREES REQUIRED	# OF TREES PROVIDED	NAME (BOTANICAL/COMMON)	SIZE	REMARKS
WESTMOUNT PARKWAY	4,725	119	118	ACER RUBRUM 'ARMSTRONG' / ARMSTRONG COLUMNAR RED MAPLE	2-1/2" CAL.	B&B - FULL HEADS, MIN. 6' BRANCHING HT.
FINDLEY LANE	1,802	46	43	ACER RUBRUM 'ARMSTRONG' / ARMSTRONG COLUMNAR RED MAPLE	2-1/2" CAL.	B&B - FULL HEADS, MIN. 6' BRANCHING HT.
PRATCHETT LANE	550	14	15	ACER RUBRUM 'ARMSTRONG' / ARMSTRONG COLUMNAR RED MAPLE	2-1/2" CAL.	B&B - FULL HEADS, MIN. 6' BRANCHING HT.
ELK RIDGE LANE	426	11	13	ACER RUBRUM 'ARMSTRONG' / ARMSTRONG COLUMNAR RED MAPLE	2-1/2" CAL.	B&B - FULL HEADS, MIN. 6' BRANCHING HT.
PICTON COURT	451	12	10	ACER RUBRUM 'ARMSTRONG' / ARMSTRONG COLUMNAR RED MAPLE	2-1/2" CAL.	B&B - FULL HEADS, MIN. 6' BRANCHING HT.
WAKEFIELD COURT	509	13	13	ACER RUBRUM 'ARMSTRONG' / ARMSTRONG COLUMNAR RED MAPLE	2-1/2" CAL.	B&B - FULL HEADS, MIN. 6' BRANCHING HT.
	TOTAL	212	212			

MINIMUM TREE QUANTITIES AND PREFERRED SPACING ARE AS FOLLOWS: 1 TREE PER 40 LINEAR FEET, BOTH SIDES, FOR ALL STREETS.

STREET LIGHT SCHEDULE

ROAD	CENTERLINE STATION/ COORDINATE	OFFSET	LAMP TYPE	FIXTURE	POLE TYPE
WESTMOUNT PARKWAY	70+02	17' L	100 LED	COLONIAL POST	14' FIBERGLASS
WESTMOUNT PARKWAY	72+17	17' R	100 LED	COLONIAL POST	14' FIBERGLASS
WESTMOUNT PARKWAY	74+47	17' L	100 LED	COLONIAL POST	14' FIBERGLASS
WESTMOUNT PARKWAY	76+50	17' L	100 LED	COLONIAL POST	14' FIBERGLASS
WESTMOUNT PARKWAY	78+60	23' R	100 LED	COLONIAL POST	14' FIBERGLASS
WESTMOUNT PARKWAY	81+24	17' R	100 LED	COLONIAL POST	14' FIBERGLASS
WESTMOUNT PARKWAY	83+29	17' L	100 LED	COLONIAL POST	14' FIBERGLASS
WESTMOUNT PARKWAY	84+75	19' L	100 LED	COLONIAL POST	14' FIBERGLASS
WESTMOUNT PARKWAY	86+62	23' R	100 LED	COLONIAL POST	14' FIBERGLASS
WESTMOUNT PARKWAY	89+13	16' R	100 LED	COLONIAL POST	14' FIBERGLASS
FINDLEY LANE	2+09	16' R	100 LED	COLONIAL POST	14' FIBERGLASS
FINDLEY LANE	4+60	16' R	100 LED	COLONIAL POST	14' FIBERGLASS
FINDLEY LANE	7+42	16' R	100 LED	COLONIAL POST	14' FIBERGLASS
PICTON COURT	2+56	34' R	100 LED	COLONIAL POST	14' FIBERGLASS
WAKEFIELD COURT	N 584,002 E 1,346,830	-	100 LED	COLONIAL POST	14' FIBERGLASS

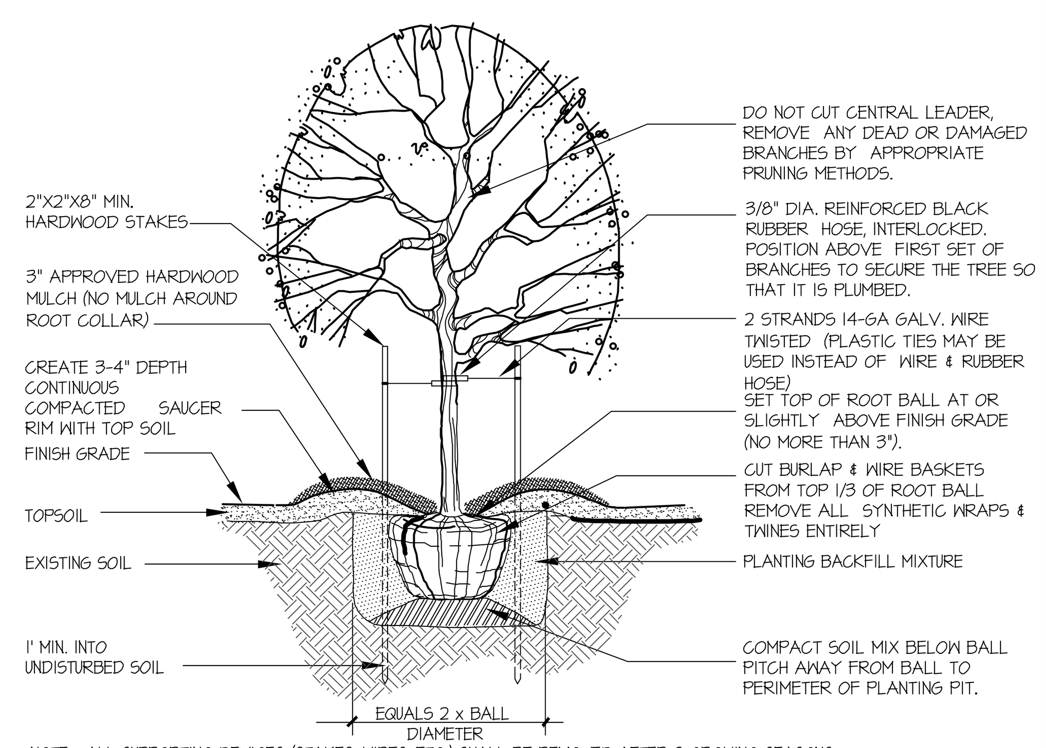

NOTE: ALL SUPPORTING DEVICES (STAKES, WIRES, ETC.) SHALL BE REMOVED AFTER 2 GROWING SEASONS.

DECIDUOUS TREE PLANTING DETAIL NTS
FOR PLANTING MATERIAL UP TO 3 1/2" CALIPER

LANDSCAPING NOTES:

1. STREET TREES ARE BEING PROVIDED AS PART OF THIS FINAL PLAN.
2. INTERNAL PLANTING WILL BE PROVIDED WITH THE SITE DEVELOPMENT PLANS.
3. THE BUFFERS SHOWN IN THE SCHEDULES ARE IN ACCORDANCE WITH THE LANDSCAPE MANUAL. THE FOLLOWING ARE THE MINIMUM PLANTING TO BE PROVIDED ALONG A PERIMETER EDGE:

PERIMETER LANDSCAPE TYPES - BASED ON ADJACENT LAND USE

LANDSCAPE EDGE TYPE	LANDSCAPE CHARACTER	SHADE TREES/ LINEAR FEET	EVERGREEN TREES/ LINEAR FEET	SHRUBS/ LINEAR FEET
A	LIGHT BUFFER	1:60	0	0
B	MODERATE BUFFER	1:50	1:40	0

2 SMALL DECIDUOUS TREES MAY BE SUBSTITUTED FOR 1 SHADE TREE
2 EVERGREEN TREES MAY BE SUBSTITUTED FOR 1 SHADE TREE
10 SHRUBS MAY BE SUBSTITUTED FOR 1 SHADE TREE OR EVERGREEN TREE

4. UNLESS NOTED, ALL STEEP SLOPES AREAS WITHIN THE LIMITS OF SUBMISSION ARE LESS THAN 5,000 S.F.
5. STREET TREES SHALL BE PLACED A MINIMUM OF 15' FROM ALL SIGNS AND INTERSECTIONS WHEN PLANTED BETWEEN THE SIDEWALK AND CURB, AND BE LOCATED WITH CONSIDERATION TO UNDERGROUND UTILITIES AND STRUCTURES. STREET TREES MAY NOT BE PLANTED WITHIN 5' OF A DRAIN INLET STRUCTURE, WITHIN 5' OF AN OPEN SPACE ACCESS STRIP, AND WITHIN 10' OF A DRIVEWAY. A 20' MINIMUM DISTANCE SHALL BE MAINTAINED BETWEEN ANY TREES LOCATED ALONG THE CURB LINE AND ANY STREET LIGHT. FINAL PLACEMENT OF THE STREET TREES WILL BE DETERMINED IN THE FIELD BY THE DEPARTMENT OF PUBLIC WORKS TO BEST ACCOMMODATE THESE SETBACKS WHILE PROVIDING THE MAXIMUM NUMBER OF STREET TREES REQUIRED.
6. ALL PAVEMENT MARKINGS AND SIGN LOCATIONS SHALL BE APPROVED BY HOWARD COUNTY TRAFFIC DIVISION PRIOR TO ANY INSTALLATION (410-313-5752).
7. TREES CANNOT BE PLANTED WITHIN 40' OF STOP SIGN LOCATIONS ON THE APPROACH SIDE FOR VISIBILITY CONCERNS.

NOTES:

1. AT THE TIME OF PLANT INSTALLATION, ALL SHRUBS AND TREES LISTED AND APPROVED ON THE LANDSCAPE PLAN, SHALL COMPLY WITH THE PROPER HEIGHT REQUIREMENT IN ACCORDANCE WITH THE HOWARD COUNTY LANDSCAPE MANUAL. IN ADDITION, NO SUBSTITUTIONS OR RELOCATIONS OF THE REQUIRED PLANTINGS MAY BE MADE WITHOUT PRIOR REVIEW AND APPROVAL FROM THE DEPARTMENT OF PLANNING AND ZONING. ANY DEVIATION FROM THE APPROVED LANDSCAPE PLAN MAY RESULT IN DENIAL IN THE RELEASE OF LANDSCAPE SURETY UNTIL SUCH TIME AS ALL REQUIRED MATERIALS ARE PLANTED AND/OR REVISIONS ARE MADE TO THE APPLICABLE PLANS.
2. THE OWNER AND/OR THEIR AGENTS SHALL BE RESPONSIBLE FOR MAINTENANCE OF THE REQUIRED LANDSCAPING INCLUDING BOTH PLANT MATERIALS AND BERMS, FENCES AND WALLS. ALL PLANT MATERIALS SHALL BE MAINTAINED IN GOOD GROWING CONDITION, AND WHEN NECESSARY, REPLACED WITH NEW MATERIAL TO ENSURE CONTINUED COMPLIANCE WITH APPLICABLE REGULATIONS. ALL OTHER REQUIRED LANDSCAPING SHALL BE PERMANENTLY MAINTAINED IN GOOD CONDITION, AND WHEN NECESSARY, REPAIRED OR REPLACED.

RESIDENTIAL LOT LANDSCAPE PERIMETER REQUIREMENTS SCHEDULE

LOT NUMBER	LENGTH OF SIDE PERIMETER	REQUIRED LANDSCAPING
308		THE REQUIRED LOT LANDSCAPING PER THE HOWARD COUNTY LANDSCAPE DESIGN MANUAL SHALL BE PROVIDED AT SDP STAGE
327		
345		
354		
368		
369		
382		
385		

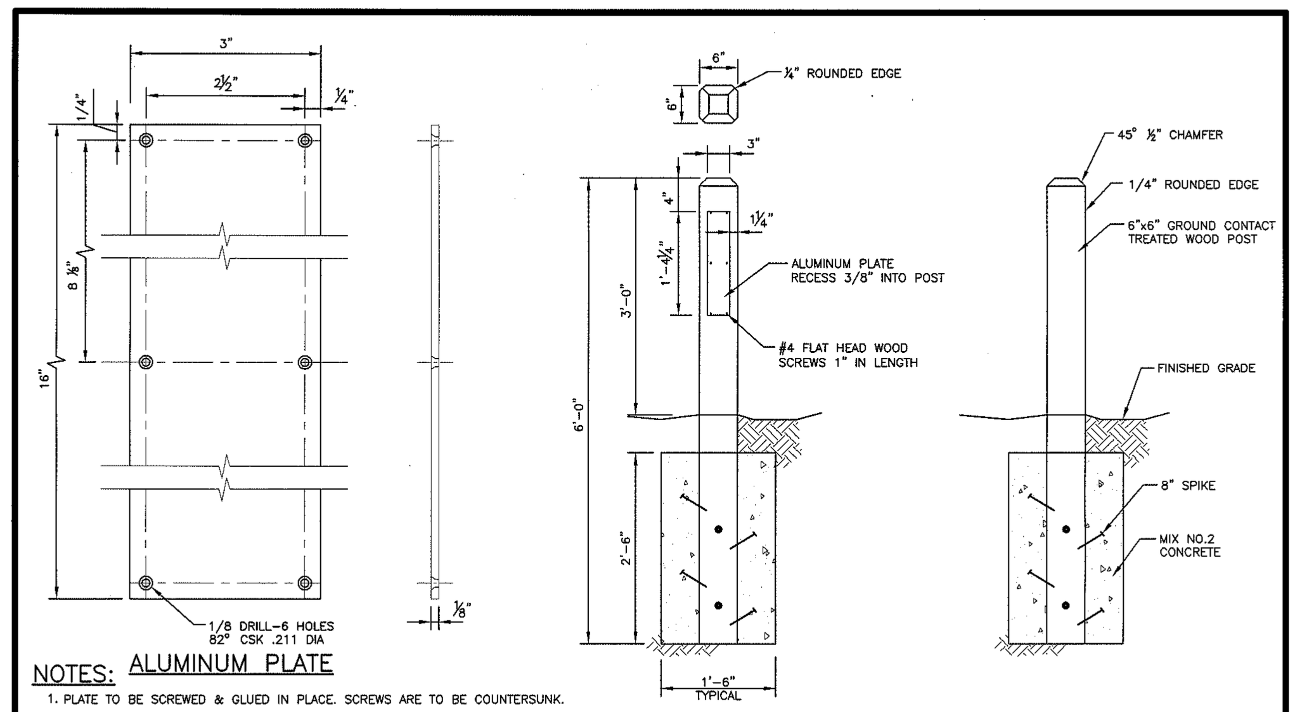

ALUMINUM PLATE

NOTES:
1. PLATE TO BE SCREWED & GLUED IN PLACE. SCREWS ARE TO BE COUNTERSUNK.
2. BOLLARDS WILL BE PLACED AT THE FOUR CORNERS OF THE OPEN SPACE ACCESS STRIP.
3. THE ALUMINUM PLATE WILL ONLY BE REQUIRED ON THE FRONT RIGHT BOLLARD DIRECTLY FACING THE ROAD.

Revised / Revised 5/7/2007 / Approved	Howard County, Maryland Department of Public Works. Approved: [signature] Chief, Bureau of Engineering	Open Space Bollard	Detail G-7.41

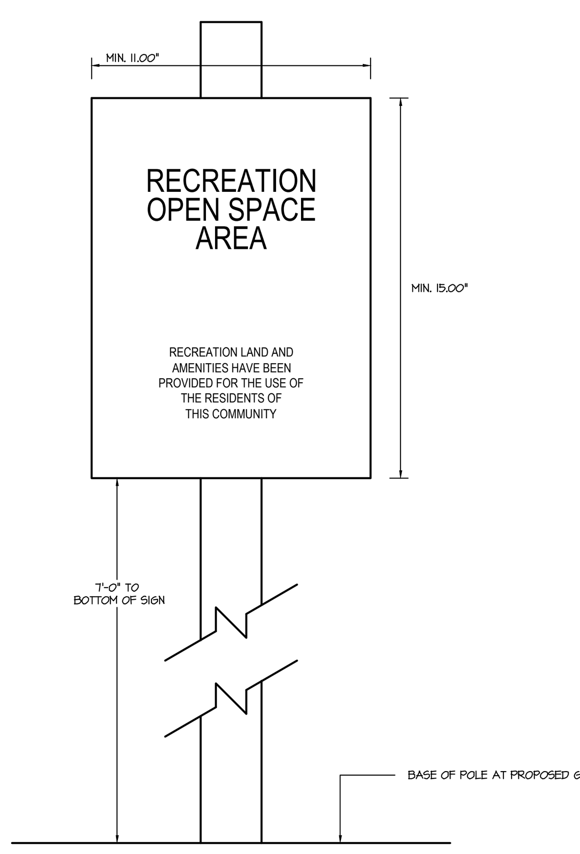

RECREATION OPEN SPACE
SIGN DETAIL
NOT TO SCALE

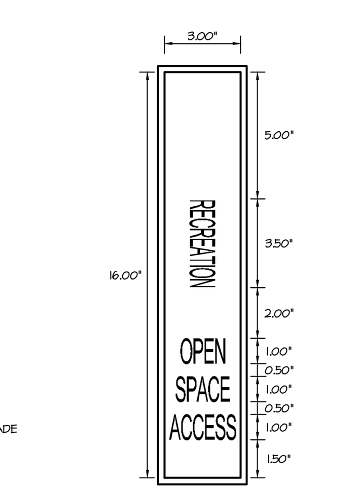

RECREATION OPEN SPACE
G-7.41 - 3" X 16"
BOLLARD SIGN DETAIL
NOT TO SCALE

APPROVED: HOWARD COUNTY DEPARTMENT OF PUBLIC WORKS
DocuSigned by: [signature] 2465821AE4DA4C2...
Chief, Bureau of Highways — Date 11/29/2021

APPROVED: HOWARD COUNTY DEPARTMENT OF PLANNING & ZONING
DocuSigned by: [signature] 1EB75478A22B49A...
Chief, Division of Land Development — Date 11/24/2021

DocuSigned by: Chad Edmondson D5E6F9A84923495...
Chief, Development Engineering Division — Date 11/23/2021

GLW
PLANNING | ENGINEERING | SURVEYING
3909 NATIONAL DRIVE | SUITE 250 | BURTONSVILLE, MD 20866 | GLWPA.COM
PHONE: 301-421-4024 | BALT: 410-880-1820 | DC&VA: 301-989-2524 | FAX: 301-421-4186

DESIGNED BY: AWL
DRAWN BY: AWL
CHECKED BY: DEV

DATE	REVISION	BY	APP'R.

PREPARED FOR:
WESTMOUNT DEVELOPMENT CORPORATION
307 INTERNATIONAL CIRCLE, SUITE 130
HUNT VALLEY, MARYLAND 21030
410-489-4489
ATTN.: ROBERT GOODIER

PROFESSIONAL CERTIFICATION
I HEREBY CERTIFY THAT THESE PLANS WERE PREPARED OR APPROVED BY ME, AND THAT I AM A DULY LICENSED PROFESSIONAL ENGINEER UNDER THE LAWS OF THE STATE OF MARYLAND, LICENSE NO. 12975, EXPIRATION DATE: MAY 26, 2022.
10/28/21

SIGNING, STREET TREE, LIGHTING & LANDSCAPE NOTES AND DETAILS

WESTMOUNT - PHASE 4
LOTS 295-394 AND OPEN SPACE LOTS 395-418

A RESUBDIVISION OF NON-BUILDABLE BULK PARCELS E & F

ELECTION DISTRICT No. 2 — HOWARD COUNTY, MARYLAND

SCALE	ZONING	G. L. W. FILE No.
1"=200'	R-ED	13-013
DATE	TAX MAP - GRID	SHEET
OCT., 2021	23-6&12	12 OF 45

F-21-032

© GLW 2020

L:\CADD\DRAWINGS\13013\PLANS BY GLW\ROADS-SD (PH4)\PHASE 4_12_SSTL.dwg, PLOTTED:10/20/2021 2:24 PM, LAST SAVED:10/20/2021 2:24 PM, PLOTTED BY: Tony Leggieri