DocuSign Envelope ID: 42A4CCF4-8A0E-4DE5-9A1B-C40A02CEBB2F

MICRO-BIORETENTION 421 DETAILS

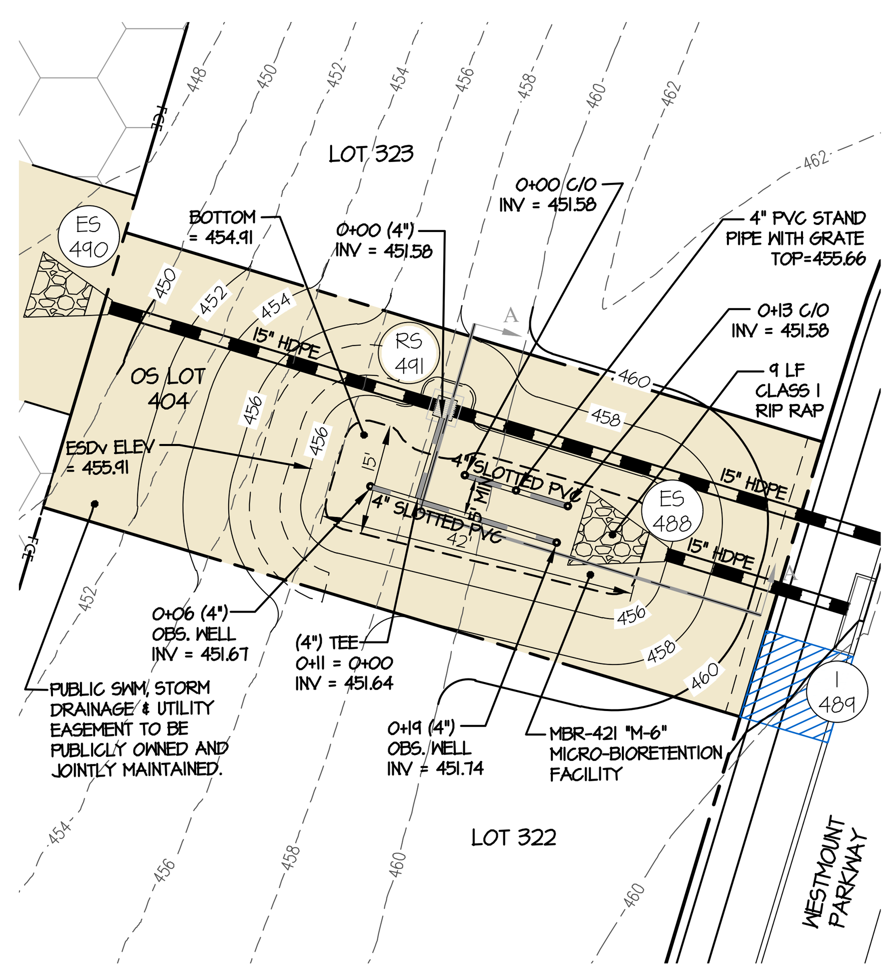

SEE TYPICAL MICRO-BIORETENTION DETAIL THIS SHEET FOR TYPICAL SECTION THROUGH MICRO-BIORETENTION FACILITY AND OUTLET STRUCTURE CONFIGURATION

MICRO-BIORETENTION 421 SCALE: 1" = 20'

MBR-421
TYPE (PER MDE): MICRO BIORETENTION SYSTEM (M6)
NON - MDE 378 FACILITY
TOTAL DRAINAGE AREA TO FACILITY = 18,616 SF
STORAGE PROVIDED = 726 CU-FT (@455.91)
ESDv PROVIDED = 966 CU-FT

LOW-FLOW OUTFALL: PERFORATED 4" UNDERDRAIN SYSTEM
BOTTOM OF FACILITY = 454.91
HIGH-FLOW OUTFALL: RS-491 ('S' INLET, TOP = 455.91)
MINIMUM DAM ELEVATION = 456.24

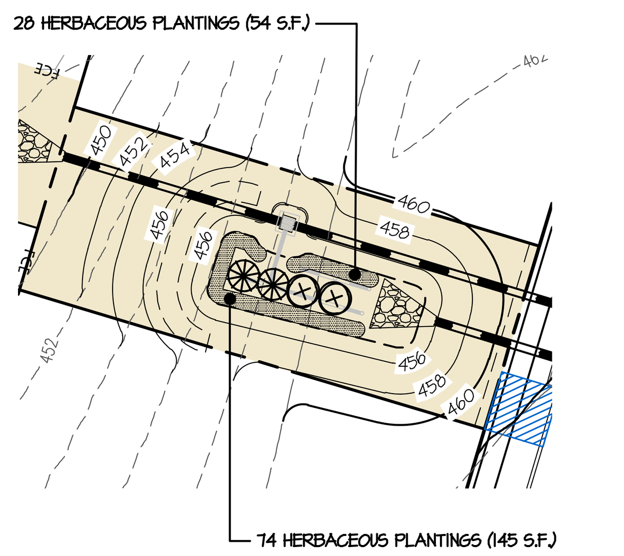

MICRO-BIORETENTION 421 LANDSCAPE PLAN SCALE: 1" = 30'

NOTES:
1) PROVIDE FILTER FABRIC BETWEEN SOIL AND STONE (SIDES ONLY) MSHA CLASS C
2) SEE THE MICRO-BIORETENTION SECTION DETAIL ON SHEET 45 FOR THE TYPICAL OVERFLOW DISTRIBUTION PIPE CONFIGURATION

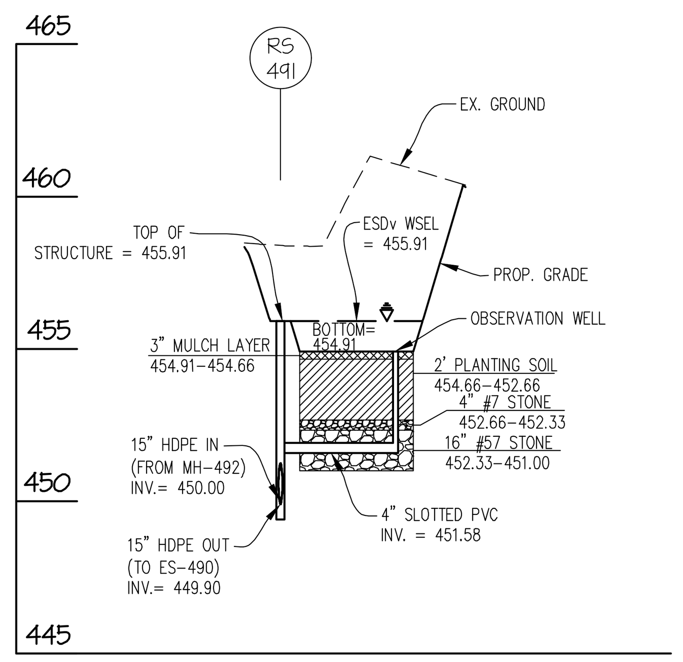

SECTION "A"-"A"
SCALE: 1" = 50' (HORZ.) 1" = 5' (VERT.)

MICRO-BIORETENTION 423 DETAILS

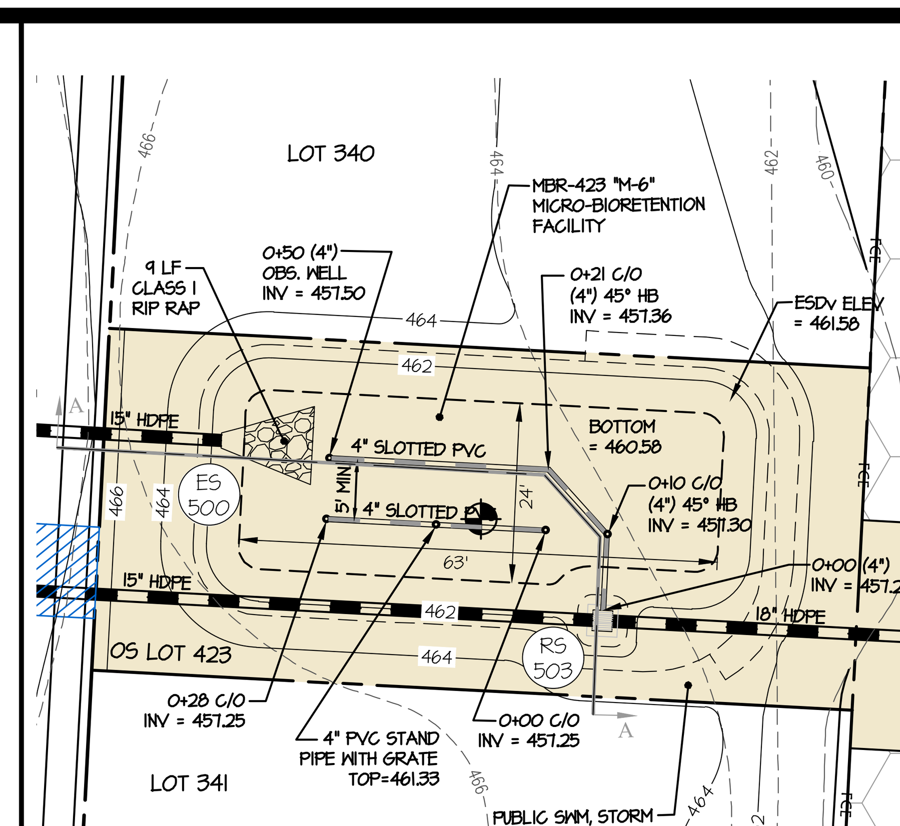

SEE TYPICAL MICRO-BIORETENTION DETAIL THIS SHEET FOR TYPICAL SECTION THROUGH MICRO-BIORETENTION FACILITY AND OUTLET STRUCTURE CONFIGURATION

MICRO-BIORETENTION 423 SCALE: 1" = 20'

MBR-423
TYPE (PER MDE): MICRO BIORETENTION SYSTEM (M6)
NON - MDE 378 FACILITY
TOTAL DRAINAGE AREA TO FACILITY = 36,391 SF
STORAGE PROVIDED = 1,693 CU-FT (@461.58)
ESDv PROVIDED = 2,252 CU-FT

LOW-FLOW OUTFALL: PERFORATED 4" UNDERDRAIN SYSTEM
BOTTOM OF FACILITY = 460.58
HIGH-FLOW OUTFALL: RS-503 ('S' INLET, TOP = 461.58)
MINIMUM DAM ELEVATION = 462.08

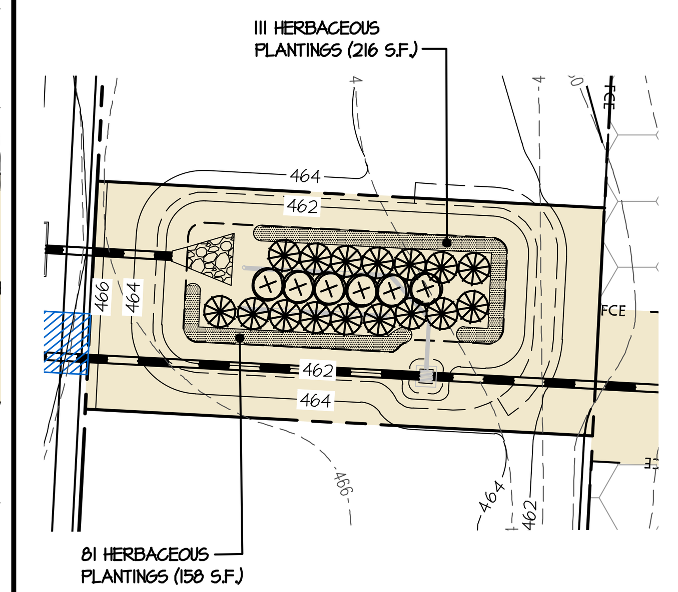

MICRO-BIORETENTION 423 LANDSCAPE PLAN SCALE: 1" = 30'

NOTES:
1) PROVIDE FILTER FABRIC BETWEEN SOIL AND STONE (SIDES ONLY) MSHA CLASS C
2) SEE THE MICRO-BIORETENTION SECTION DETAIL ON SHEET 45 FOR THE TYPICAL OVERFLOW DISTRIBUTION PIPE CONFIGURATION

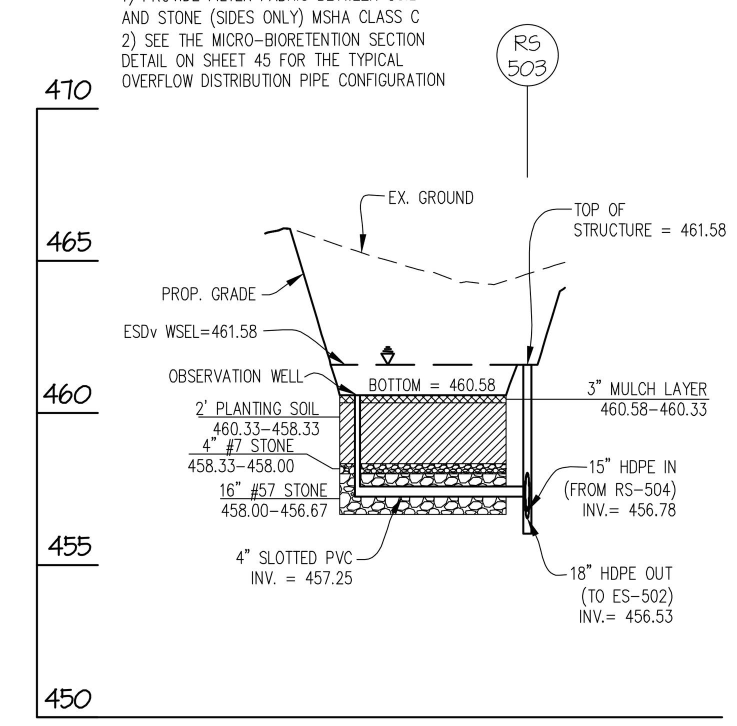

SECTION "A"-"A"
SCALE: 1" = 50' (HORZ.) 1" = 5' (VERT.)

MICRO-BIORETENTION 422 DETAILS

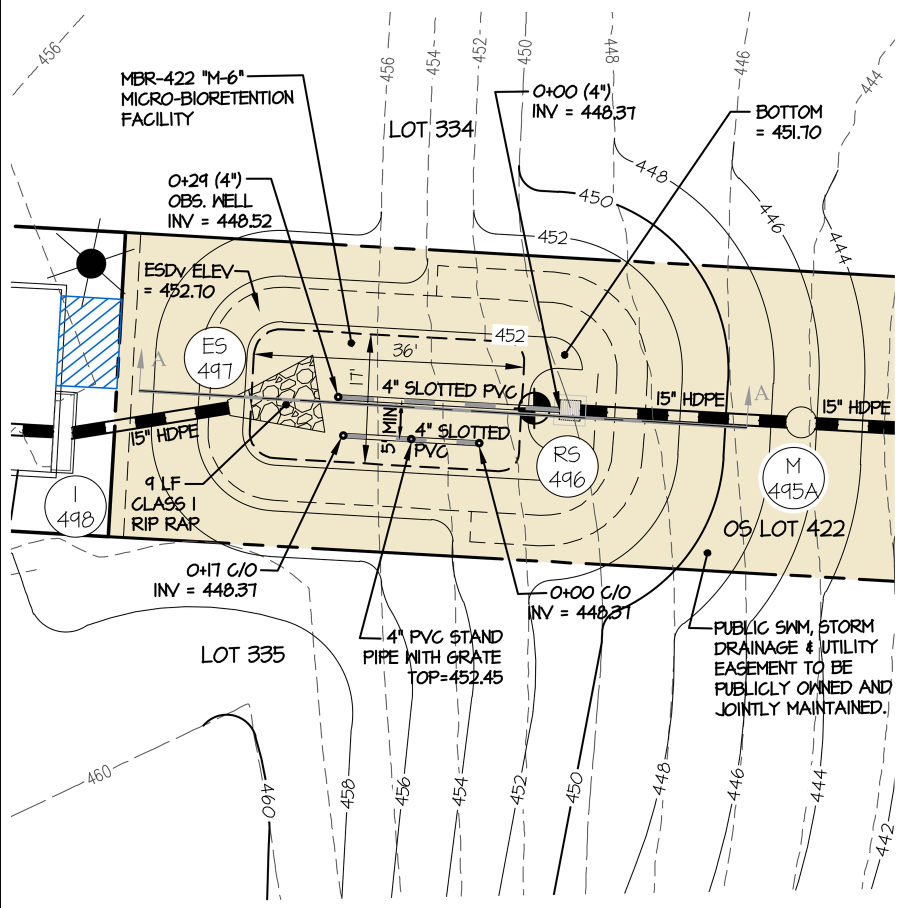

SEE TYPICAL MICRO-BIORETENTION DETAIL THIS SHEET FOR TYPICAL SECTION THROUGH MICRO-BIORETENTION FACILITY AND OUTLET STRUCTURE CONFIGURATION

MICRO-BIORETENTION 422 SCALE: 1" = 20'

MBR-422
TYPE (PER MDE): MICRO BIORETENTION SYSTEM (M6)
NON - MDE 378 FACILITY
TOTAL DRAINAGE AREA TO FACILITY = 35,327 SF
STORAGE PROVIDED = 816 CU-FT (@452.70)
ESDv PROVIDED = 1,085 CU-FT

LOW-FLOW OUTFALL: PERFORATED 4" UNDERDRAIN SYSTEM
BOTTOM OF FACILITY = 451.70
HIGH-FLOW OUTFALL: RS-496 ('S' INLET, TOP = 452.70)
MINIMUM DAM ELEVATION = 453.20

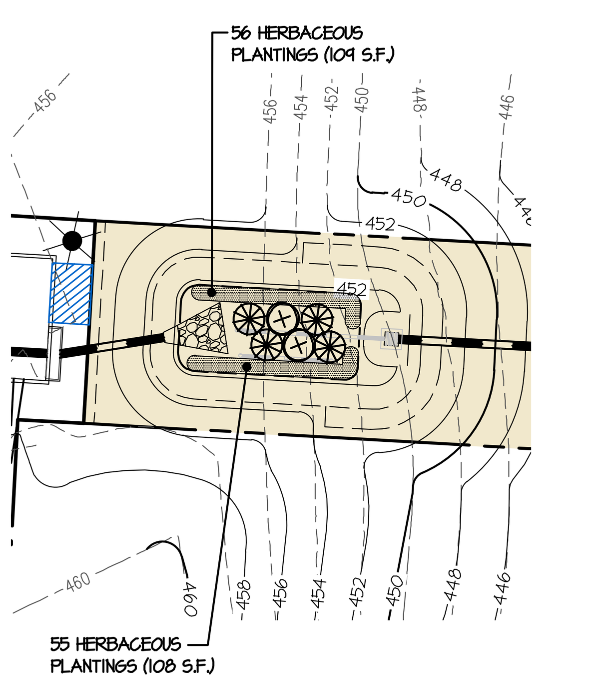

MICRO-BIORETENTION 422 LANDSCAPE PLAN SCALE: 1" = 30'

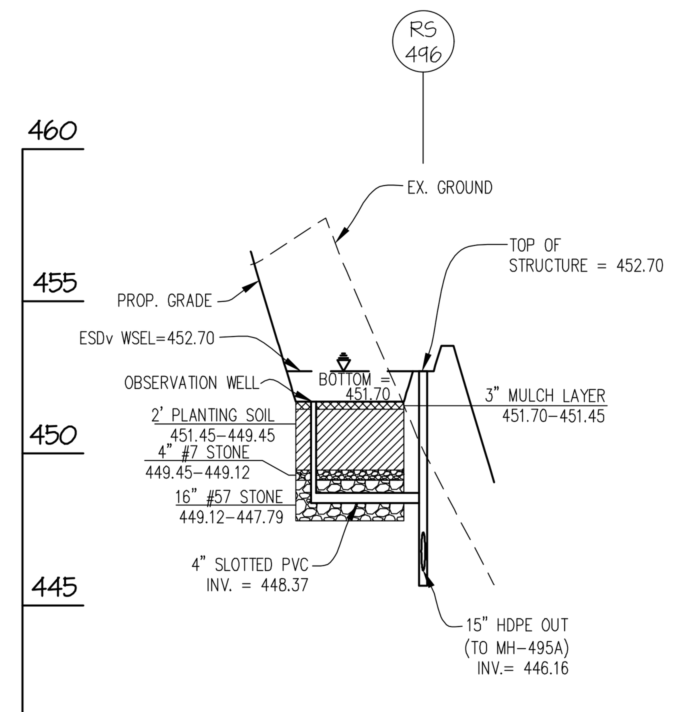

NOTES:
1) PROVIDE FILTER FABRIC BETWEEN SOIL AND STONE (SIDES ONLY) MSHA CLASS C
2) SEE THE MICRO-BIORETENTION SECTION DETAIL ON SHEET 45 FOR THE TYPICAL OVERFLOW DISTRIBUTION PIPE CONFIGURATION

SECTION "A"-"A"
SCALE: 1" = 50' (HORZ.) 1" = 5' (VERT.)

MICRO-BIORETENTION 424 DETAILS

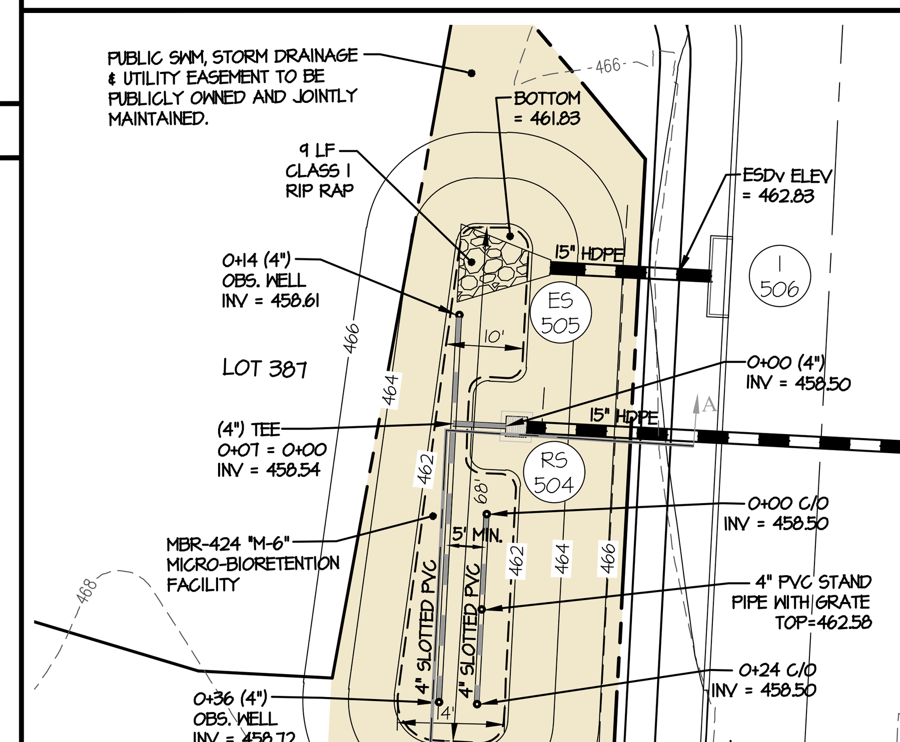

SEE TYPICAL MICRO-BIORETENTION DETAIL THIS SHEET FOR TYPICAL SECTION THROUGH MICRO-BIORET. FACILITY AND OUTLET STRUCTURE CONFIGURATION

MICRO-BIORETENTION 424 SCALE: 1" = 20'

MBR-424
TYPE (PER MDE): MICRO BIORETENTION SYSTEM (M6)
NON - MDE 378 FACILITY
TOTAL DRAINAGE AREA TO FACILITY = 34,015 SF
STORAGE PROVIDED = 1,512 CU-FT (@462.83)
ESDv PROVIDED = 2,011 CU-FT

LOW-FLOW OUTFALL: PERFORATED 4" UNDERDRAIN SYSTEM
BOTTOM OF FACILITY = 461.83
HIGH-FLOW OUTFALL: RS-504 ('S' INLET, TOP = 462.83)
MINIMUM DAM ELEVATION = 463.33

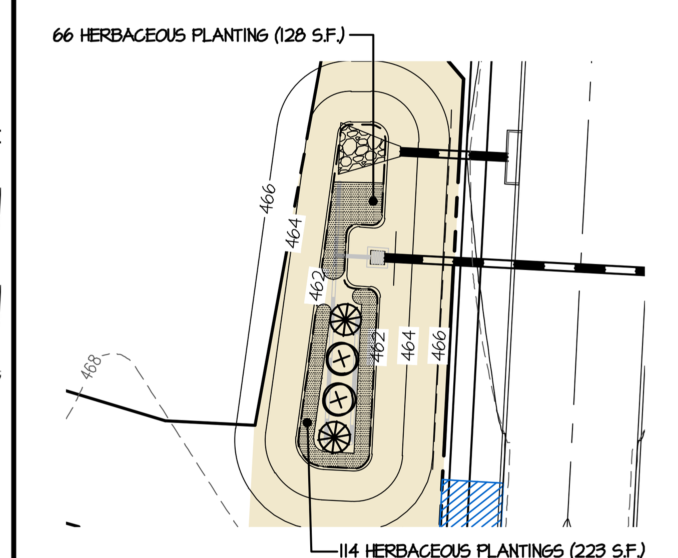

MICRO-BIORETENTION 424 LANDSCAPE PLAN SCALE: 1" = 30'

NOTES:
1) PROVIDE FILTER FABRIC BETWEEN SOIL AND STONE (SIDES ONLY) MSHA CLASS C
2) SEE THE MICRO-BIORETENTION SECTION DETAIL ON SHEET 45 FOR THE TYPICAL OVERFLOW DISTRIBUTION PIPE CONFIGURATION

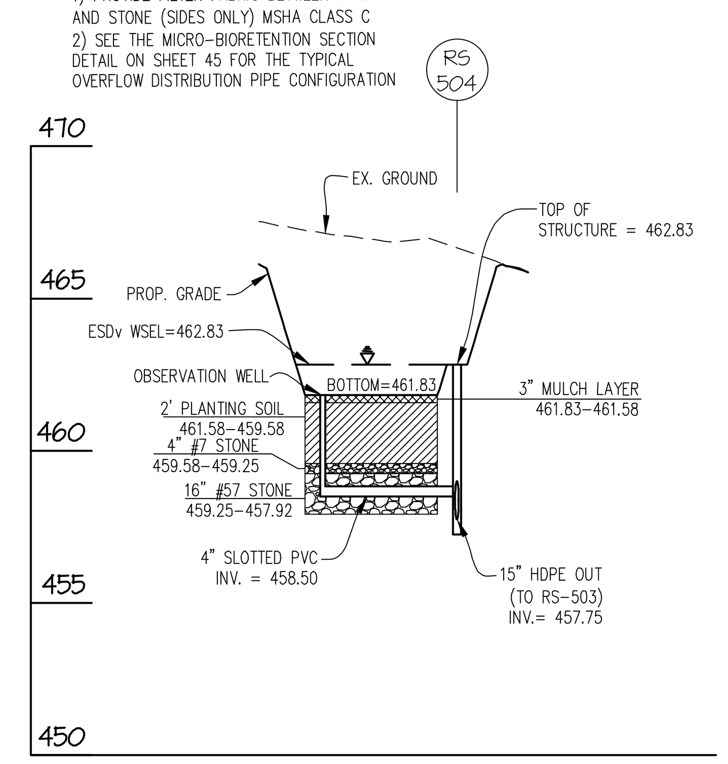

SECTION "A"-"A"
SCALE: 1" = 50' (HORZ.) 1" = 5' (VERT.)

MICRO-BIORETENTION 425 DETAILS

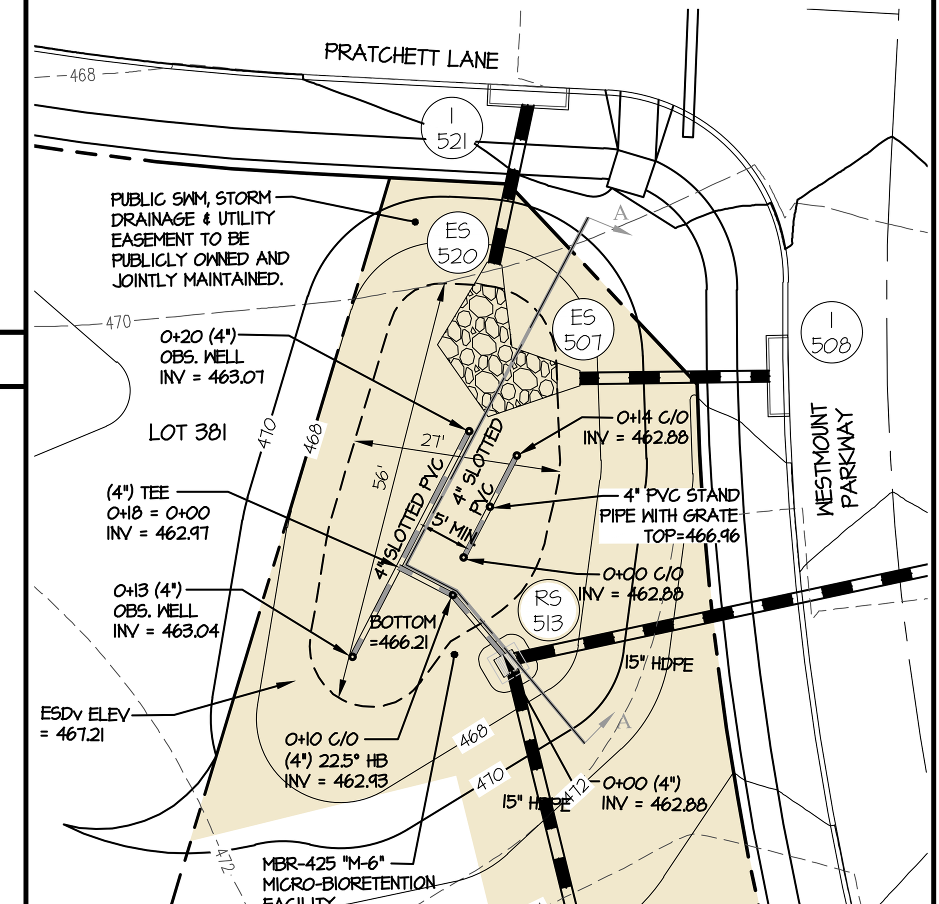

SEE TYPICAL MICRO-BIORETENTION DETAIL THIS SHEET FOR TYPICAL SECTION THROUGH MICRO-BIORETENTION FACILITY AND OUTLET STRUCTURE CONFIGURATION

MICRO-BIORETENTION 425 SCALE: 1" = 20'

MBR-425
TYPE (PER MDE): MICRO BIORETENTION SYSTEM (M6)
NON - MDE 378 FACILITY
TOTAL DRAINAGE AREA TO FACILITY = 25,532 SF
STORAGE PROVIDED = 892 CU-FT (@467.21)
ESDv PROVIDED = 1,186 CU-FT

LOW-FLOW OUTFALL: PERFORATED 4" UNDERDRAIN SYSTEM
BOTTOM OF FACILITY = 466.21
HIGH-FLOW OUTFALL: RS-513 ('S' INLET, TOP = 467.21)
MINIMUM DAM ELEVATION = 467.54

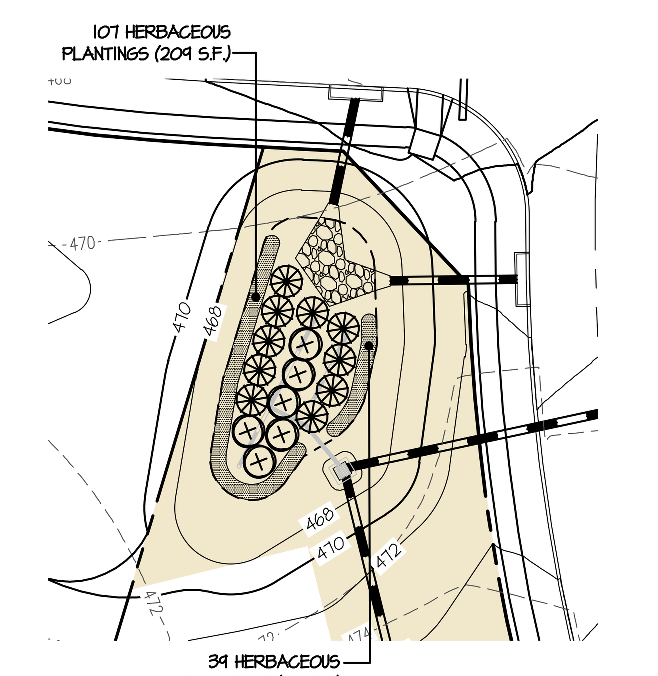

MICRO-BIORETENTION 425 LANDSCAPE PLAN SCALE: 1" = 30'

NOTES:
1) PROVIDE FILTER FABRIC BETWEEN SOIL AND STONE (SIDES ONLY) MSHA CLASS C
2) SEE THE MICRO-BIORETENTION SECTION DETAIL ON SHEET 45 FOR THE TYPICAL OVERFLOW DISTRIBUTION PIPE CONFIGURATION

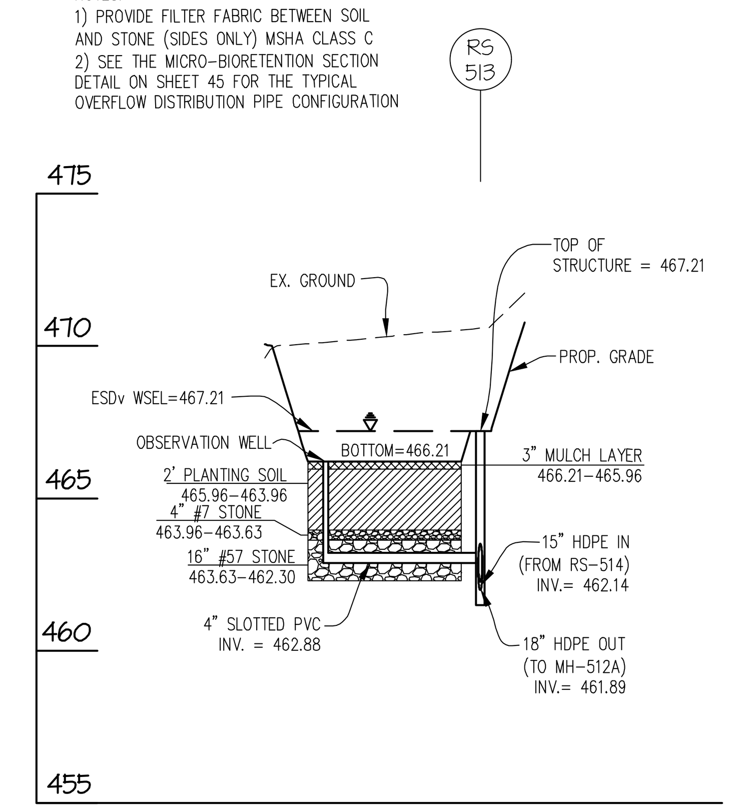

SECTION "A"-"A"
SCALE: 1" = 50' (HORZ.) 1" = 5' (VERT.)

0 4 10 20 40
1 inch = 20 ft.

0 6 15 30 60
1 inch = 30 ft.

GRAPHIC SCALE 1 inch = 5' ft. (VERTICAL)

GRAPHIC SCALE 50' 0 25' 50' 100'
1 inch = 50' ft. (HORIZONTAL)

MICRO-BIORETENTION PLANT LIST (for this sheet)

SYMBOL	QTY.	NAMES (BOTANICAL / SCIENTIFIC)	SIZE	ROOT/COMMENTS
SHRUBS *				
(X)	18	CORNUS SERICEA 'RUBY'/ RUBY RED OSIER DOGWOOD	18"-24" SPR.	CONTAINER
(✱)	34	ITEA VIRGINICA 'HENRY'S GARNET/ VIRGINIA SWEETSPIRE	18"-24" SPR.	CONTAINER
HERBACEOUS *				
(hatched)	731	PROVIDE AN EVEN MIX OF THE FOLLOWING PLANTS IN EACH MICRO-BIO: -HERMEROCALLIS 'STRAWBERRY CANDY' DAYLILY -HERMEROCALLIS 'JOAN SENIOR' DAYLILY -KALMIA ANGUSTIFOLIA/SHEEP LAUREL -ELEOCHARIS OVATA OBTUSA/BLUNT SPIKE RUSH	18" O.C.	CONTAINER

* SEE SHEET 45 FOR SHRUB AND HERBACEOUS PLANTING DETAILS

APPROVED: HOWARD COUNTY DEPARTMENT OF PUBLIC WORKS
DocuSigned by: 2465821AE4DA4C2...
Chief, Bureau of Highways — Date 11/29/2021

APPROVED: HOWARD COUNTY DEPARTMENT OF PLANNING & ZONING
DocuSigned by: 1EB75478A22B49A...
Chief, Division of Land Development — Date 11/24/2021
DocuSigned by: Chad Edmondson D5E6F9A84923495...
Chief, Development Engineering Division — Date 11/23/2021

L:\CADD\DRAWINGS\13013\PLANS BY GLW\ROADS-SD (PH4)\PHASE 4_42_ESD DETAILS-5(421-425).dwg, PLOTTED: 10/26/2021 3:46 PM, LAST SAVED: 10/26/2021 3:46 PM, PLOTTED BY: Tony Leggieri

GLW PLANNING | ENGINEERING | SURVEYING
3909 NATIONAL DRIVE | SUITE 250 | BURTONSVILLE, MD 20866 | GLWPA.COM
PHONE: 301-421-4024 | BALT: 410-880-1820 | DC&VA: 301-989-2524 | FAX: 301-421-4186

DESIGNED BY: AWL
DRAWN BY: LMW
CHECKED BY: DEV

DATE	REVISION	BY	APP'R.

PREPARED FOR:
WESTMOUNT DEVELOPMENT CORPORATION
307 INTERNATIONAL CIRCLE, SUITE 130
HUNT VALLEY, MARYLAND 21030
410-489-4489
ATTN.: ROBERT GOODIER

PROFESSIONAL CERTIFICATION
I HEREBY CERTIFY THAT THESE PLANS WERE PREPARED OR APPROVED BY ME, AND THAT I AM A DULY LICENSED PROFESSIONAL ENGINEER UNDER THE LAWS OF THE STATE OF MARYLAND, LICENSE NO. 12975
EXPIRATION DATE: MAY 26, 2022
10/28/21

STORMWATER MANAGEMENT DETAILS

WESTMOUNT - PHASE 4
LOTS 295-394 AND OPEN SPACE LOTS 395-418

A RESUBDIVISION OF NON-BUILDABLE BULK PARCELS E & F

ELECTION DISTRICT No. 2 — HOWARD COUNTY, MARYLAND

SCALE	ZONING	G. L. W. FILE No.
AS SHOWN	R-ED	13-013
DATE	TAX MAP - GRID	SHEET
OCT., 2021	23-6&12	42 OF 45

F-21-032

© GLW 2020