DocuSign Envelope ID: 42A4CCF4-8A0E-4DE5-9A1B-C40A02CEBB2F

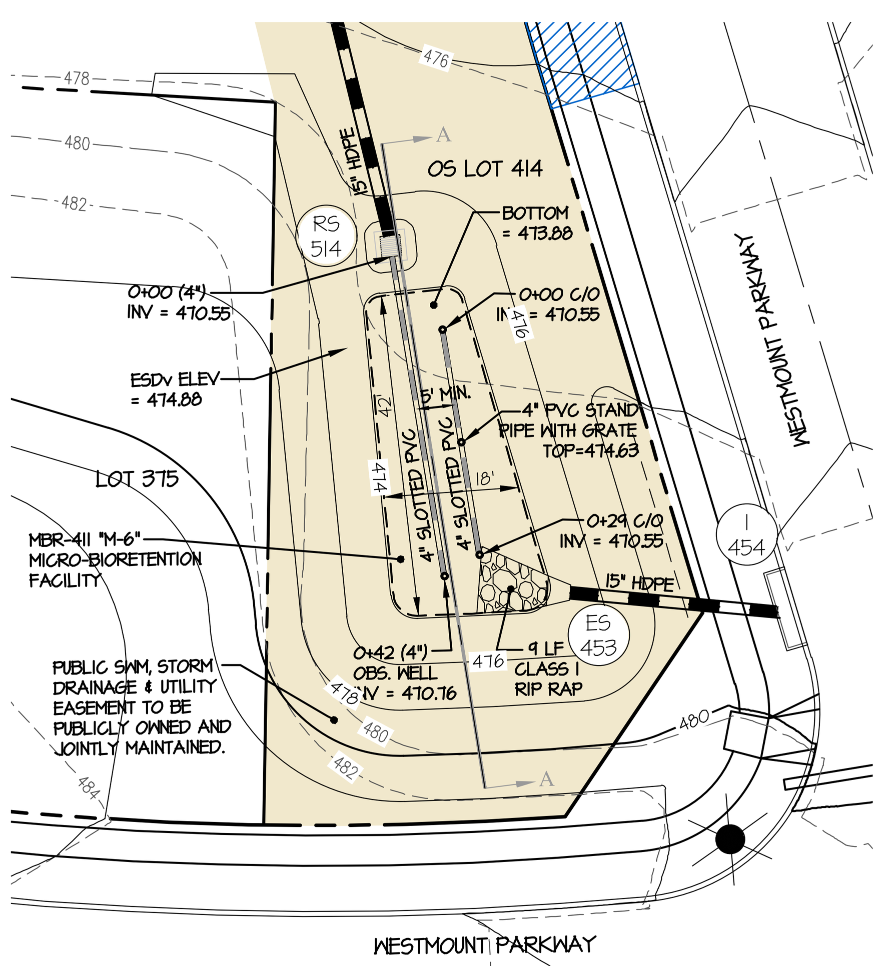

SEE TYPICAL MICRO-BIORETENTION DETAIL THIS SHEET FOR TYPICAL SECTION THROUGH MICRO-BIORETENTION FACILITY AND OUTLET STRUCTURE CONFIGURATION

MICRO-BIORETENTION 411 SCALE: 1" = 20'

MBR-411
TYPE (PER MDE): MICRO BIORETENTION SYSTEM (M6)
NON - MDE 378 FACILITY
TOTAL DRAINAGE AREA TO FACILITY = 25,692 SF
STORAGE PROVIDED = 892 CU-FT (@474.88)
ESDv PROVIDED = 1,186 CU-FT

LOW-FLOW OUTFALL: PERFORATED 4" UNDERDRAIN SYSTEM
BOTTOM OF FACILITY = 473.88
HIGH-FLOW OUTFALL: RS-514 ('S' INLET, TOP = 474.88)
MINIMUM DAM ELEVATION = 475.21

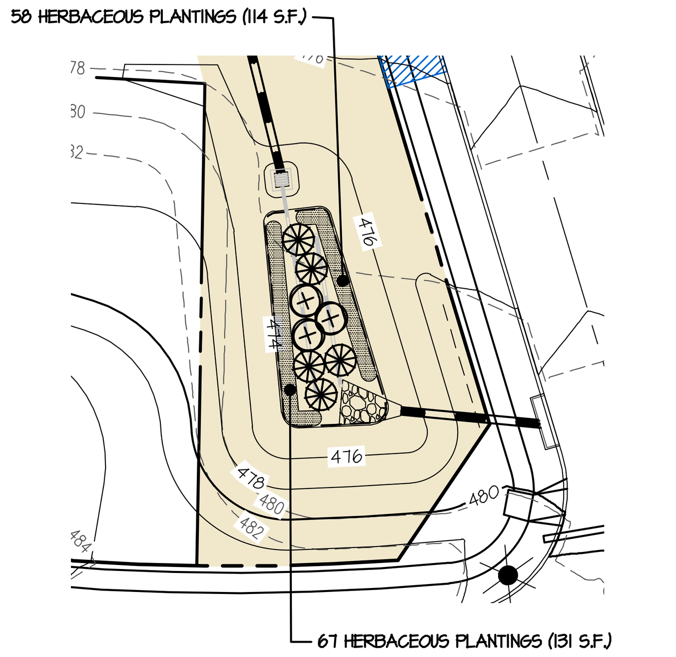

MICRO-BIORETENTION 411 LANDSCAPE PLAN SCALE: 1" = 30'

NOTES:
1) PROVIDE FILTER FABRIC BETWEEN SOIL AND STONE (SIDES ONLY) MSHA CLASS C
2) SEE THE MICRO-BIORETENTION SECTION DETAIL ON SHEET 45 FOR THE TYPICAL OVERFLOW DISTRIBUTION PIPE CONFIGURATION

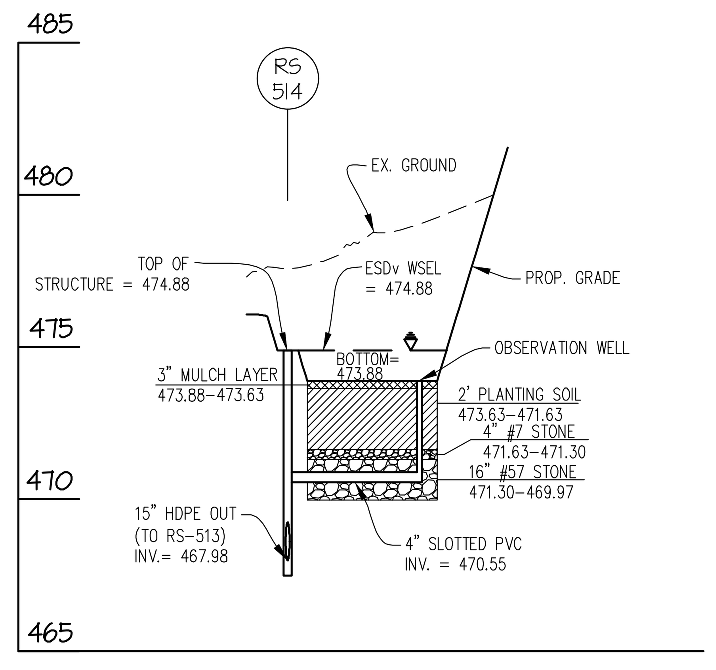

SECTION "A"-"A"
SCALE: 1" = 50' (HORZ.)
1" = 5' (VERT.)

MICRO-BIORETENTION 411 DETAILS

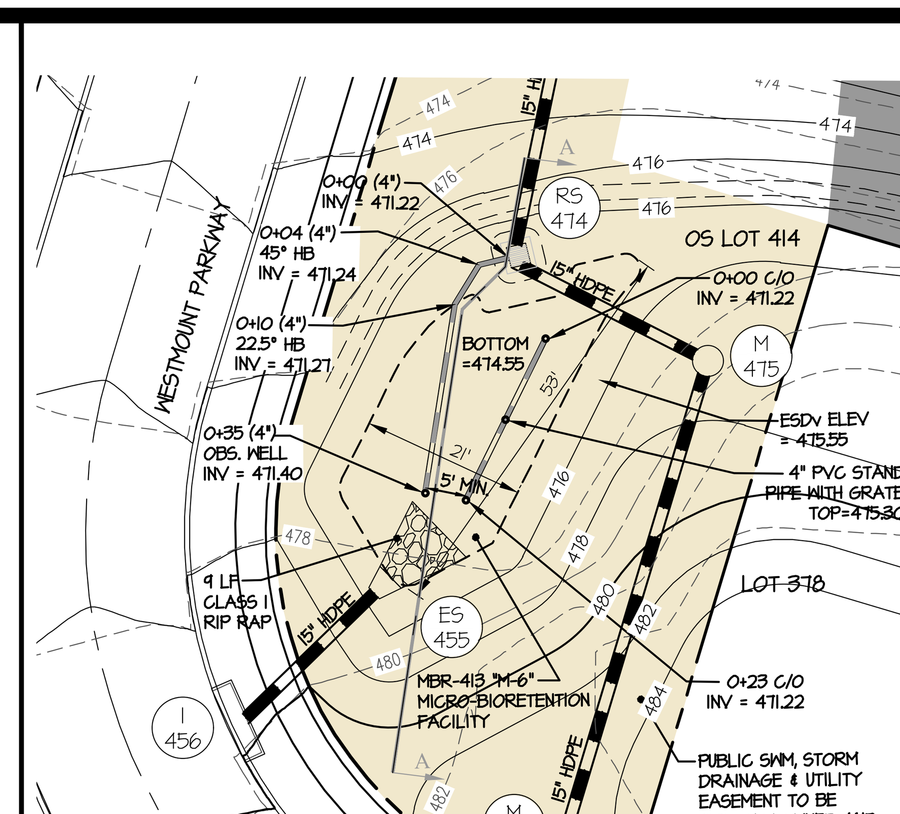

SEE TYPICAL MICRO-BIORETENTION DETAIL THIS SHEET FOR TYPICAL SECTION THROUGH MICRO-BIORETENTION FACILITY AND OUTLET STRUCTURE CONFIGURATION

MICRO-BIORETENTION 413 SCALE: 1" = 20'

MBR-413
TYPE (PER MDE): MICRO BIORETENTION SYSTEM (M6)
NON - MDE 378 FACILITY
TOTAL DRAINAGE AREA TO FACILITY = 22,435 SF
STORAGE PROVIDED = 1,030 CU-FT (@475.55)
ESDv PROVIDED = 1,370 CU-FT

LOW-FLOW OUTFALL: PERFORATED 4" UNDERDRAIN SYSTEM
BOTTOM OF FACILITY = 474.55
HIGH-FLOW OUTFALL: RS-474 ('S' INLET, TOP = 475.55)
MINIMUM DAM ELEVATION = 475.88

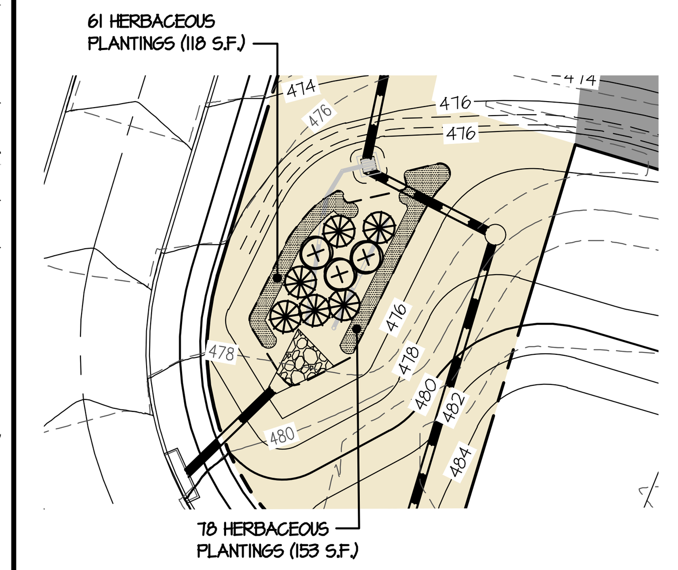

MICRO-BIORETENTION 413 LANDSCAPE PLAN SCALE: 1" = 30'

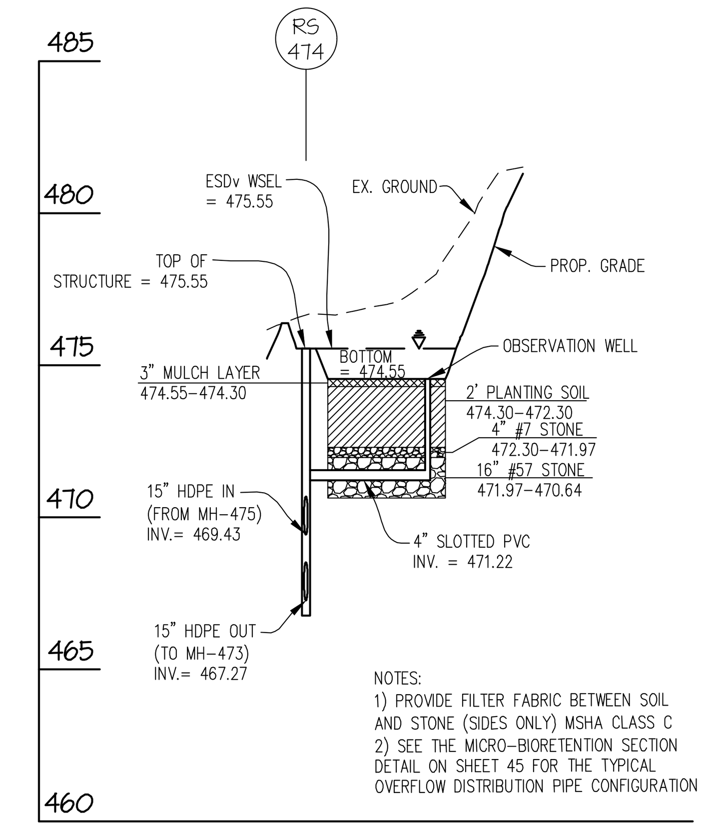

NOTES:
1) PROVIDE FILTER FABRIC BETWEEN SOIL AND STONE (SIDES ONLY) MSHA CLASS C
2) SEE THE MICRO-BIORETENTION SECTION DETAIL ON SHEET 45 FOR THE TYPICAL OVERFLOW DISTRIBUTION PIPE CONFIGURATION

SECTION "A"-"A"
SCALE: 1" = 50' (HORZ.)
1" = 5' (VERT.)

MICRO-BIORETENTION 413 DETAILS

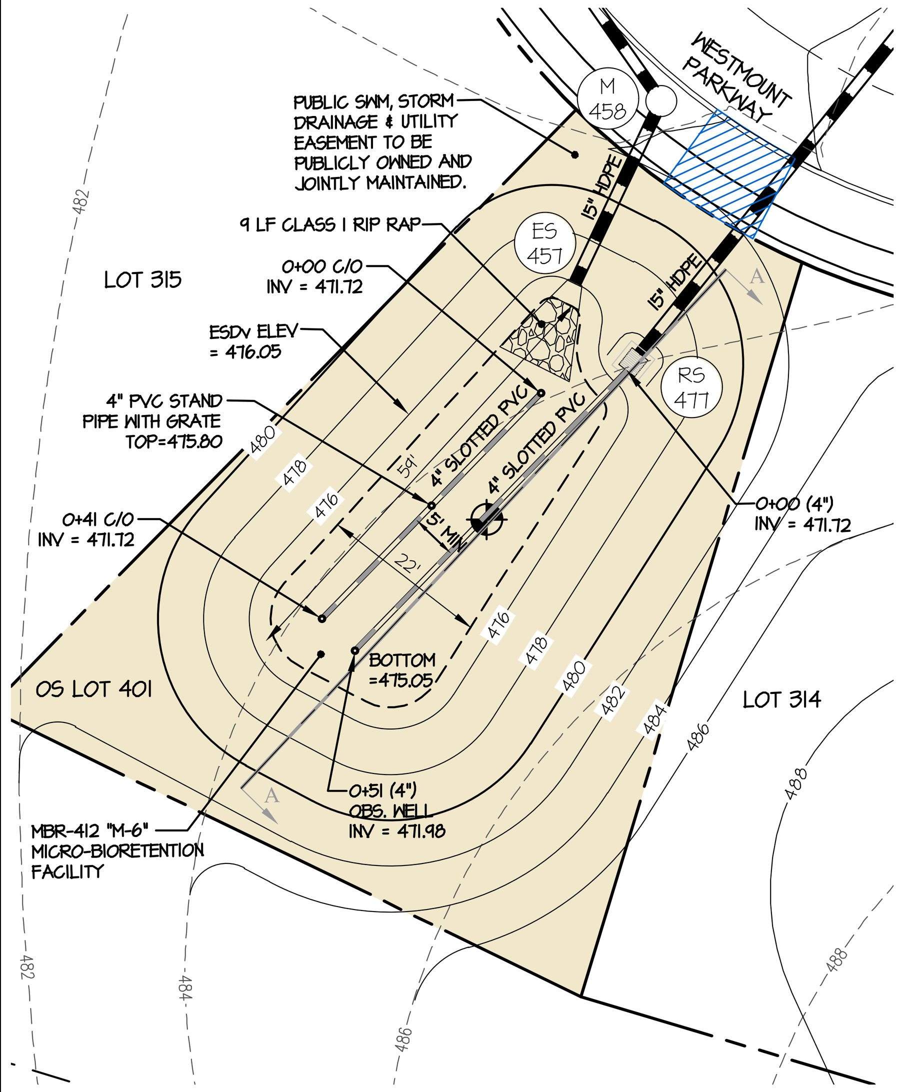

SEE TYPICAL MICRO-BIORETENTION DETAIL THIS SHEET FOR TYPICAL SECTION THROUGH MICRO-BIORETENTION FACILITY AND OUTLET STRUCTURE CONFIGURATION

MICRO-BIORETENTION 412 SCALE: 1" = 20'

MBR-412
TYPE (PER MDE): MICRO BIORETENTION SYSTEM (M6)
NON - MDE 378 FACILITY
TOTAL DRAINAGE AREA TO FACILITY = 35,038 SF
STORAGE PROVIDED = 1,319 CU-FT (@476.05)
ESDv PROVIDED = 1,754 CU-FT

LOW-FLOW OUTFALL: PERFORATED 4" UNDERDRAIN SYSTEM
BOTTOM OF FACILITY = 475.05
HIGH-FLOW OUTFALL: RS-477 ('S' INLET, TOP = 476.05)
MINIMUM DAM ELEVATION = 476.55

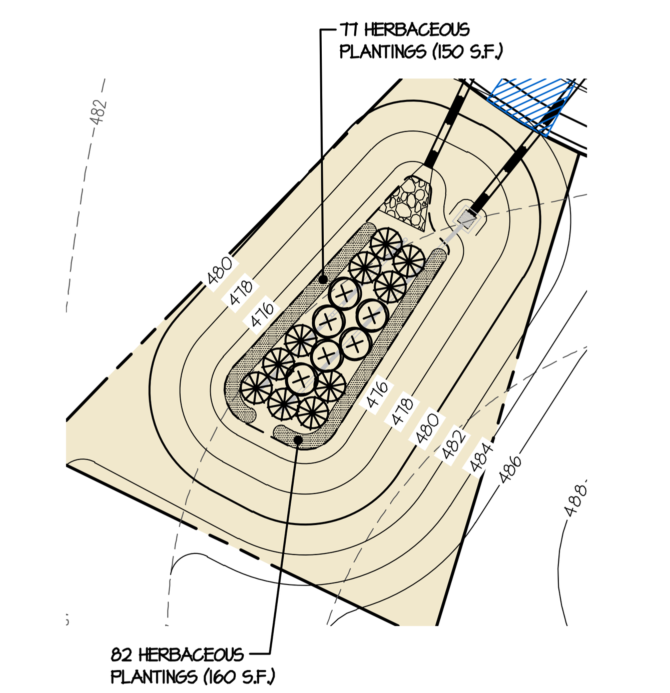

MICRO-BIORETENTION 412 LANDSCAPE PLAN SCALE: 1" = 30'

NOTES:
1) PROVIDE FILTER FABRIC BETWEEN SOIL AND STONE (SIDES ONLY) MSHA CLASS C
2) SEE THE MICRO-BIORETENTION SECTION DETAIL ON SHEET 45 FOR THE TYPICAL OVERFLOW DISTRIBUTION PIPE CONFIGURATION

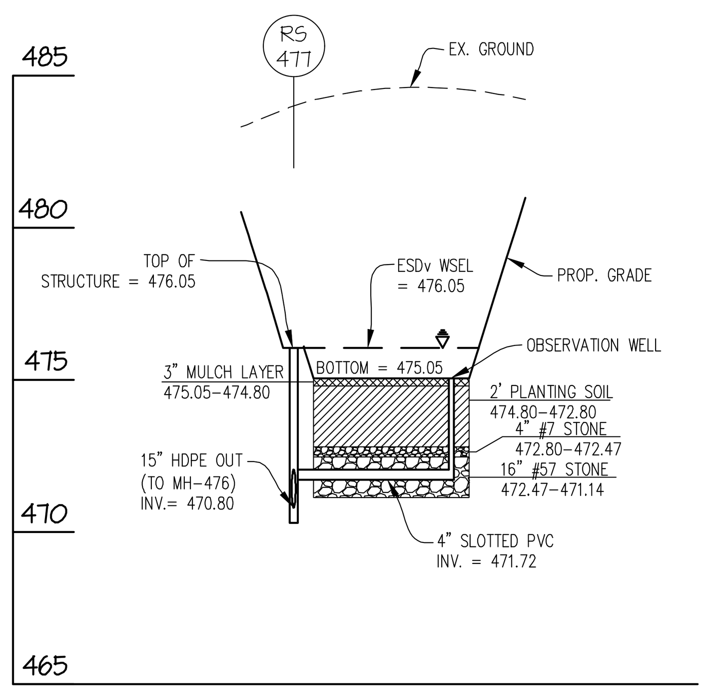

SECTION "A"-"A"
SCALE: 1" = 50' (HORZ.)
1" = 5' (VERT.)

MICRO-BIORETENTION 412 DETAILS

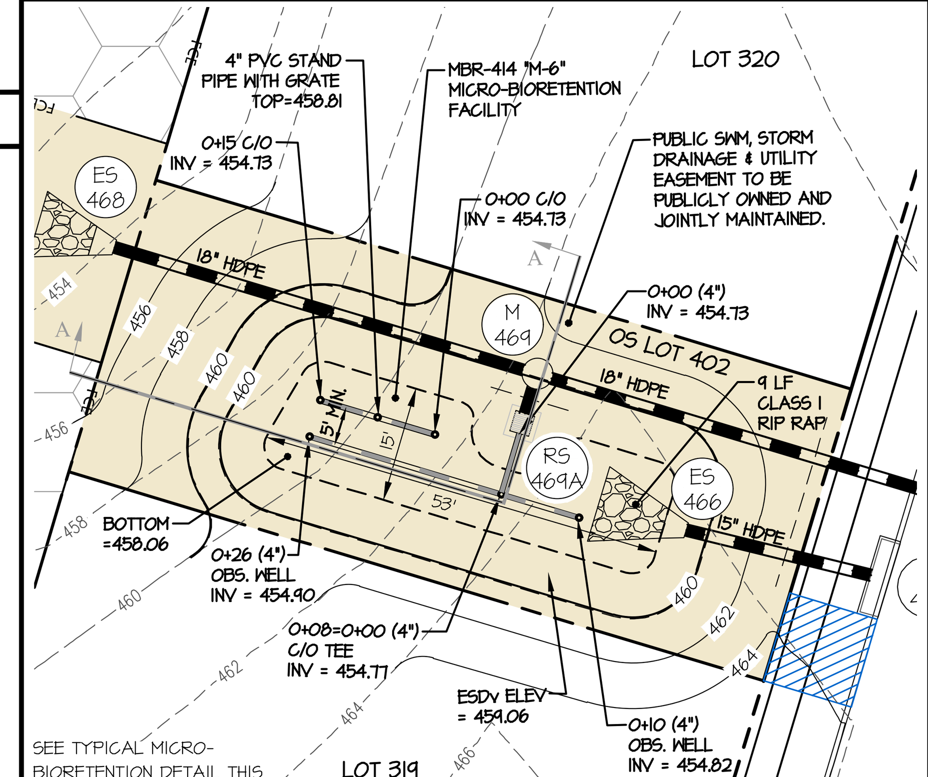

SEE TYPICAL MICRO-BIORETENTION DETAIL THIS SHEET FOR TYPICAL SECTION THROUGH MICRO-BIORET. FACILITY AND OUTLET STRUCTURE CONFIGURATION

MICRO-BIORETENTION 414 SCALE: 1" = 20'

MBR-414
TYPE (PER MDE): MICRO BIORETENTION SYSTEM (M6)
NON - MDE 378 FACILITY
TOTAL DRAINAGE AREA TO FACILITY = 27,015 SF
STORAGE PROVIDED = 937 CU-FT (@459.06)
ESDv PROVIDED = 1,246 CU-FT

LOW-FLOW OUTFALL: PERFORATED 4" UNDERDRAIN SYSTEM
BOTTOM OF FACILITY = 458.06
HIGH-FLOW OUTFALL: RS-469A ('S' INLET, TOP = 459.06)
MINIMUM DAM ELEVATION = 459.56

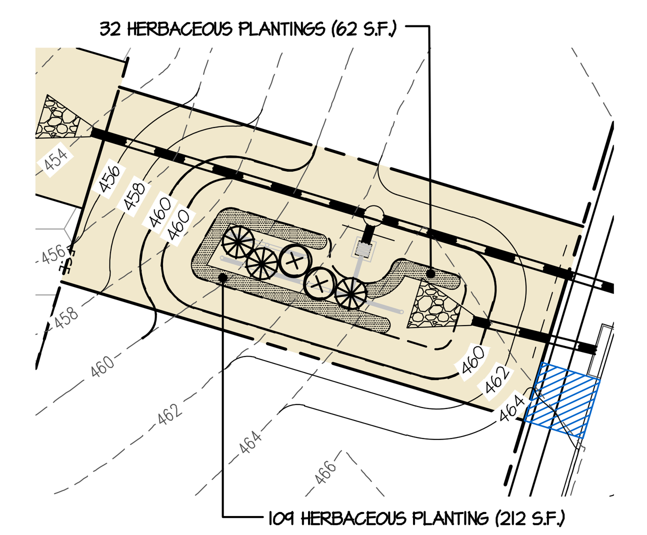

MICRO-BIORETENTION 414 LANDSCAPE PLAN SCALE: 1" = 30'

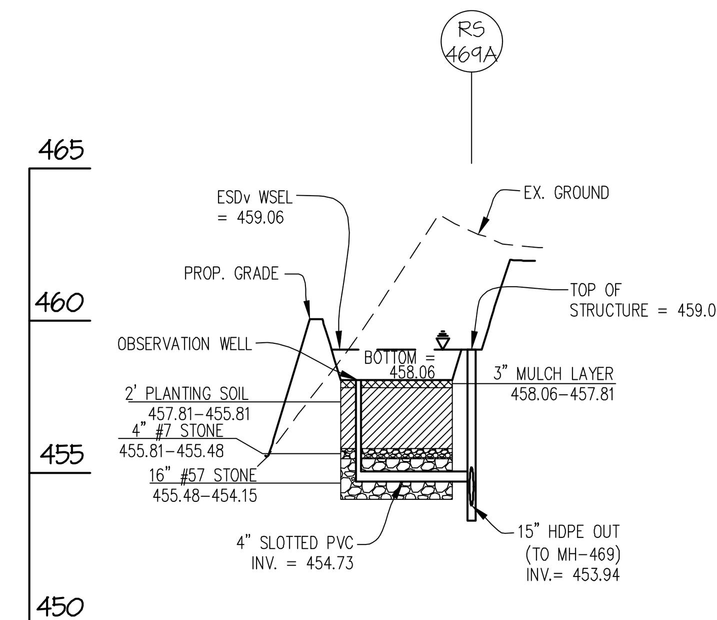

NOTES:
1) PROVIDE FILTER FABRIC BETWEEN SOIL AND STONE (SIDES ONLY) MSHA CLASS C
2) SEE THE MICRO-BIORETENTION SECTION DETAIL ON SHEET 45 FOR THE TYPICAL OVERFLOW DISTRIBUTION PIPE CONFIGURATION

SECTION "A"-"A"
SCALE: 1" = 50' (HORZ.)
1" = 5' (VERT.)

MICRO-BIORETENTION 414 DETAILS

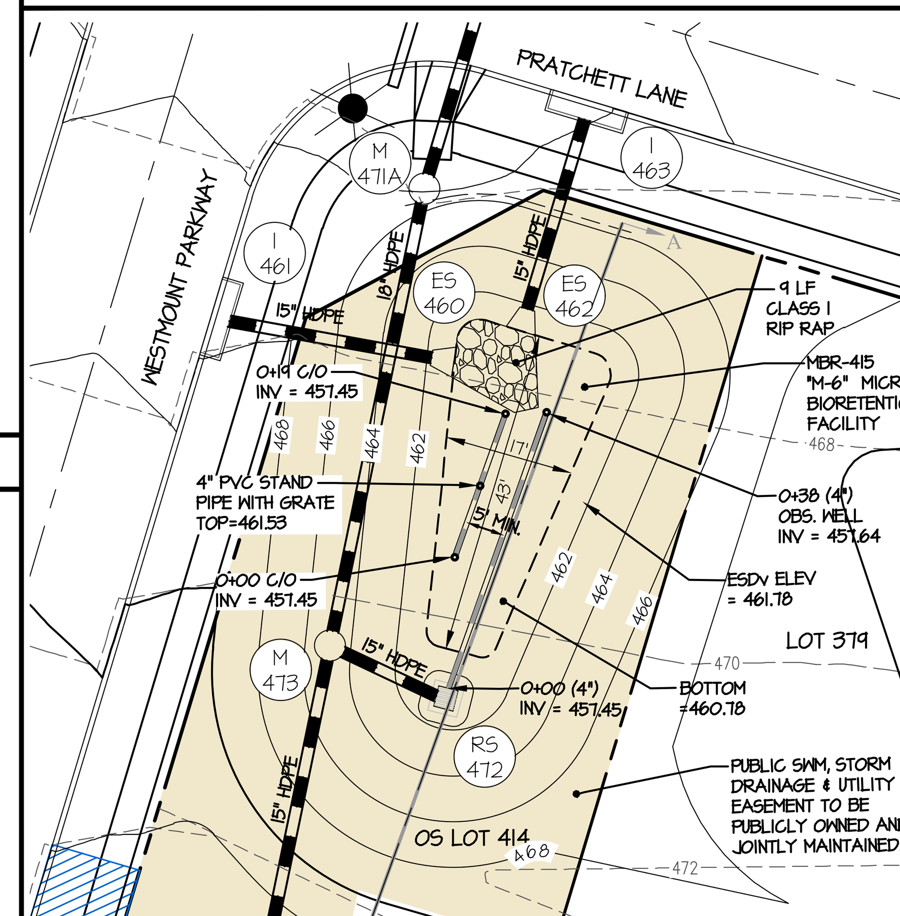

SEE TYPICAL MICRO-BIORETENTION DETAIL THIS SHEET FOR TYPICAL SECTION THROUGH MICRO-BIORETENTION FACILITY AND OUTLET STRUCTURE CONFIGURATION

MICRO-BIORETENTION 415 SCALE: 1" = 20'

MBR-415
TYPE (PER MDE): MICRO BIORETENTION SYSTEM (M6)
NON - MDE 378 FACILITY
TOTAL DRAINAGE AREA TO FACILITY = 32,251 SF
STORAGE PROVIDED = 837 CU-FT (@461.78)
ESDv PROVIDED = 1,113 CU-FT

LOW-FLOW OUTFALL: PERFORATED 4" UNDERDRAIN SYSTEM
BOTTOM OF FACILITY = 460.78
HIGH-FLOW OUTFALL: RS-472 ('S' INLET, TOP = 461.78)
MINIMUM DAM ELEVATION = 462.28

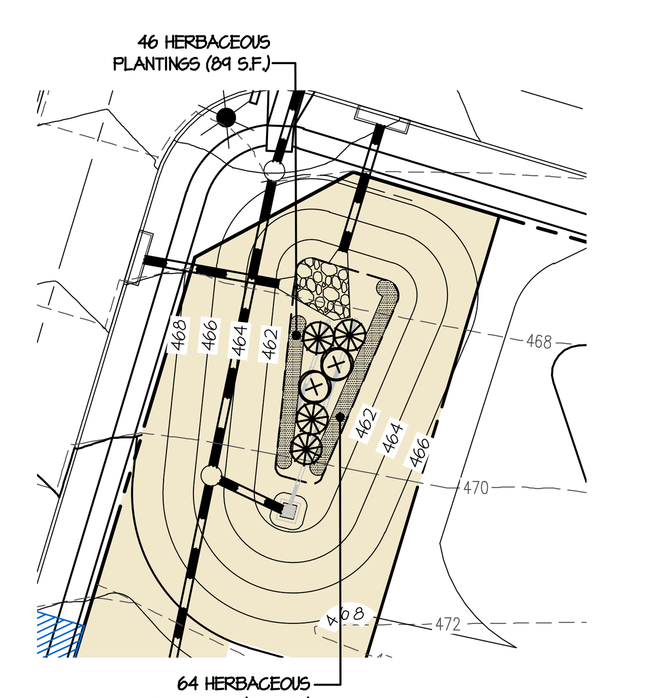

MICRO-BIORETENTION 415 LANDSCAPE PLAN SCALE: 1" = 30'

NOTES:
1) PROVIDE FILTER FABRIC BETWEEN SOIL AND STONE (SIDES ONLY) MSHA CLASS C
2) SEE THE MICRO-BIORETENTION SECTION DETAIL ON SHEET 45 FOR THE TYPICAL OVERFLOW DISTRIBUTION PIPE CONFIGURATION

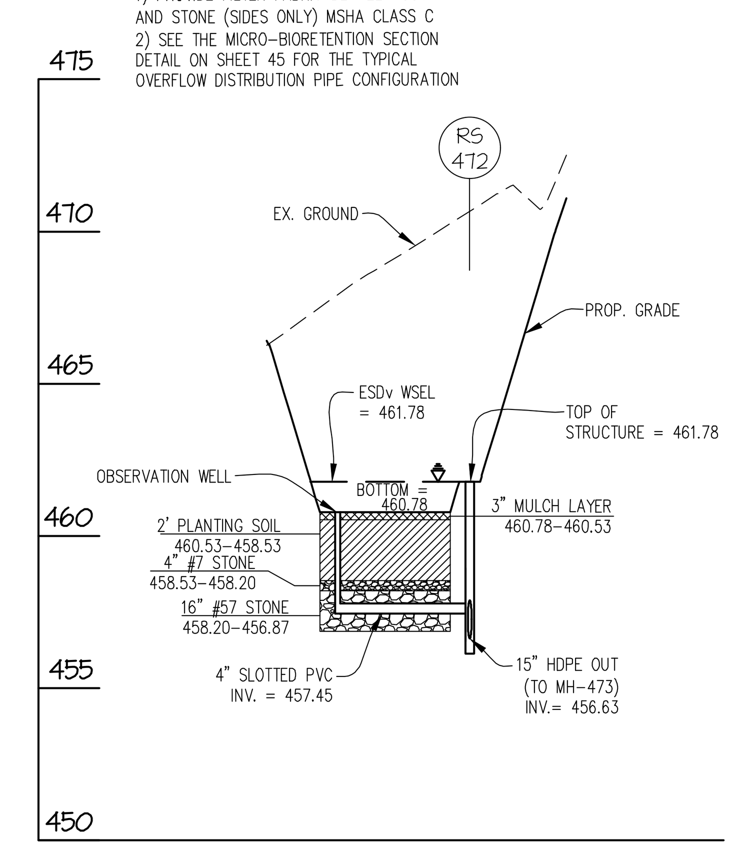

SECTION "A"-"A"
SCALE: 1" = 50' (HORZ.)
1" = 5' (VERT.)

MICRO-BIORETENTION 415 DETAILS

0 4 10 20 40
1 inch = 20 ft.

0 6 15 30 60
1 inch = 30 ft.

GRAPHIC SCALE
1 inch = 5' ft.
(VERTICAL)

GRAPHIC SCALE
50' 0 25' 50' 100'
1 inch = 50' ft.
(HORIZONTAL)

MICRO-BIORETENTION PLANT LIST (for this sheet)

SYMBOL	QTY.	NAMES (BOTANICAL / SCIENTIFIC)	SIZE	ROOT/COMMENTS
SHRUBS *				
(⊗)	16	CORNUS SERICEA 'RUBY'/ RUBY RED OSIER DOGWOOD	18"-24" SPR.	CONTAINER
(✲)	28	ITEA VIRGINICA 'HENRY'S GARNET/ VIRGINIA SWEETSPIRE	18"-24" SPR.	CONTAINER
HERBACEOUS *				
(shaded)	674	PROVIDE AN EVEN MIX OF THE FOLLOWING PLANTS IN EACH MICRO-BIO: -HERMEROCALLIS 'STRAWBERRY CANDY' DAYLILY -HERMEROCALLIS 'JOAN SENIOR' DAYLILY -KALMIA ANGUSTIFOLIA/SHEEP LAUREL -ELEOCHARIS OVATA OBTUSA/BLUNT SPIKE RUSH	18" O.C.	CONTAINER

* SEE SHEET 45 FOR SHRUB AND HERBACEOUS PLANTING DETAILS

APPROVED: HOWARD COUNTY DEPARTMENT OF PUBLIC WORKS
DocuSigned by: 2465821AE4DA4C2...
11/29/2021
Chief, Bureau of Highways — Date

APPROVED: HOWARD COUNTY DEPARTMENT OF PLANNING & ZONING
DocuSigned by: 1FB75478A22B49A...
11/24/2021
Chief, Division of Land Development — Date
DocuSigned by: Chad Edmondson D5E6F9A84923495...
11/23/2021
Chief, Development Engineering Division — Date

GLW
PLANNING | ENGINEERING | SURVEYING
3909 NATIONAL DRIVE | SUITE 250 | BURTONSVILLE, MD 20866 | GLWPA.COM
PHONE: 301-421-4024 | BALT: 410-880-1820 | DC&VA: 301-989-2524 | FAX: 301-421-4186

DESIGNED BY: AWL
DRAWN BY: LMW
CHECKED BY: DEV

DATE	REVISION	BY	APP'R.

PREPARED FOR:
WESTMOUNT DEVELOPMENT CORPORATION
307 INTERNATIONAL CIRCLE, SUITE 130
HUNT VALLEY, MARYLAND 21030
410-489-4489
ATTN.: ROBERT GOODIER

PROFESSIONAL CERTIFICATION
I HEREBY CERTIFY THAT THESE PLANS WERE PREPARED OR APPROVED BY ME, AND THAT I AM A DULY LICENSED PROFESSIONAL ENGINEER UNDER THE LAWS OF THE STATE OF MARYLAND, LICENSE NO. 12975
EXPIRATION DATE: MAY 26, 2022
10/28/21

STORMWATER MANAGEMENT DETAILS
WESTMOUNT - PHASE 4
LOTS 295-394 AND OPEN SPACE LOTS 395-418
A RESUBDIVISION OF NON-BUILDABLE BULK PARCELS E & F
ELECTION DISTRICT No. 2 — HOWARD COUNTY, MARYLAND

SCALE	ZONING	G. L. W. FILE No.
AS SHOWN	R-ED	13-013
DATE	TAX MAP - GRID	SHEET
OCT., 2021	23-6&12	40 OF 45

F-21-032

© GLW 2020

L:\CADD\DRAWINGS\13013\PLANS BY GLW\ROADS-SD (PH4)\PHASE 4_40_ESD DETAILS-3(411-415).dwg, PLOTTED: 10/26/2021 3:35 PM, LAST SAVED: 10/26/2021 3:34 PM, PLOTTED BY: Tony Leggieri