DocuSign Envelope ID: 42A4CCF4-8A0E-4DE5-9A1B-C40A02CEBB2F

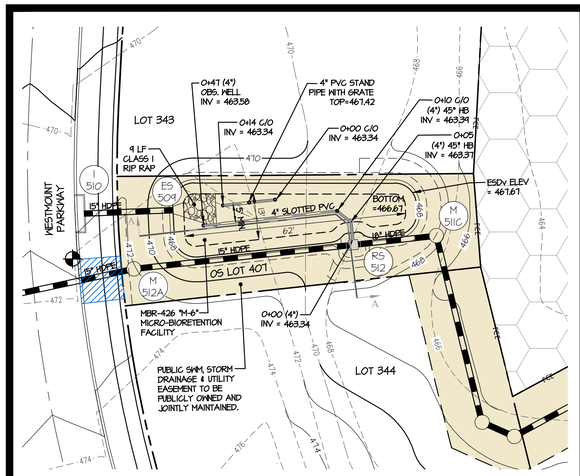

SEE TYPICAL MICRO-BIORETENTION DETAIL THIS SHEET FOR TYPICAL SECTION THROUGH MICRO-BIORETENTION FACILITY AND OUTLET STRUCTURE CONFIGURATION

MICRO-BIORETENTION 426 SCALE: 1" = 20'

MBR-426
TYPE (PER MDE): MICRO BIORETENTION SYSTEM (M6)
NON - MDE 319 FACILITY
TOTAL DRAINAGE AREA TO FACILITY = 14,828 SF
STORAGE PROVIDED = 922 CU-FT (@467.67)
ESDv PROVIDED = 1,226 CU-FT

LOW-FLOW OUTFALL: PERFORATED 4" UNDERDRAIN SYSTEM
BOTTOM OF FACILITY = 466.67
HIGH-FLOW OUTFALL: RS-512 (5' INLET, TOP = 467.67)
MINIMUM DAM ELEVATION = 468.00

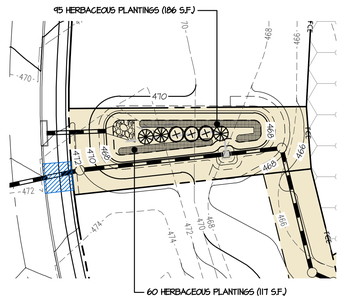

MICRO-BIORETENTION 426 LANDSCAPE PLAN SCALE: 1" = 30'

NOTES:
1) PROVIDE FILTER FABRIC BETWEEN SOIL AND STONE (SIDES ONLY) MSHA CLASS C
2) SEE THE MICRO-BIORETENTION SECTION DETAIL ON SHEET 45 FOR THE TYPICAL OVERFLOW DISTRIBUTION PIPE CONFIGURATION

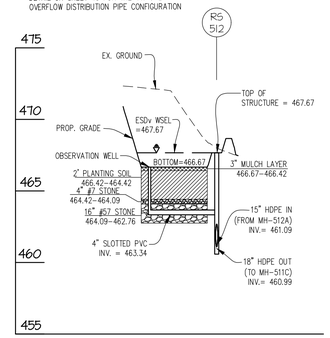

SECTION "A"-"A"
SCALE: 1" = 50' (HORZ.)
1" = 5' (VERT.)

MICRO-BIORETENTION 426 DETAILS

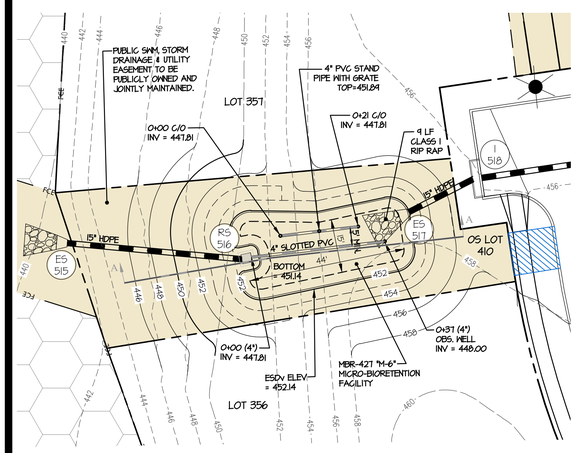

SEE TYPICAL MICRO-BIORETENTION DETAIL THIS SHEET FOR TYPICAL SECTION THROUGH MICRO-BIORETENTION FACILITY AND OUTLET STRUCTURE CONFIGURATION

MICRO-BIORETENTION 427 SCALE: 1" = 20'

MBR-427
TYPE (PER MDE): MICRO BIORETENTION SYSTEM (M6)
NON - MDE 319 FACILITY
TOTAL DRAINAGE AREA TO FACILITY = 38,205 SF
STORAGE PROVIDED = 841 CU-FT (@452.14)
ESDv PROVIDED = 1,181 CU-FT

LOW-FLOW OUTFALL: PERFORATED 4" UNDERDRAIN SYSTEM
BOTTOM OF FACILITY = 451.14
HIGH-FLOW OUTFALL: RS-516 (5' INLET, TOP = 452.14)
MINIMUM DAM ELEVATION = 452.64

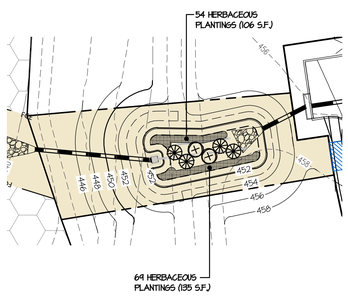

MICRO-BIORETENTION 427 LANDSCAPE PLAN SCALE: 1" = 30'

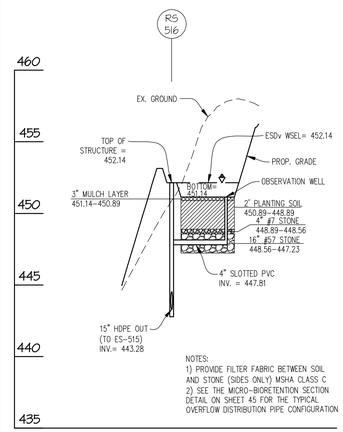

NOTES:
1) PROVIDE FILTER FABRIC BETWEEN SOIL AND STONE (SIDES ONLY) MSHA CLASS C
2) SEE THE MICRO-BIORETENTION SECTION DETAIL ON SHEET 45 FOR THE TYPICAL OVERFLOW DISTRIBUTION PIPE CONFIGURATION

SECTION "A"-"A"
SCALE: 1" = 50' (HORZ.)
1" = 5' (VERT.)

MICRO-BIORETENTION 427 DETAILS

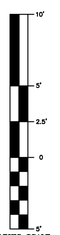

GRAPHIC SCALE
1 inch = 5' ft.
(VERTICAL)

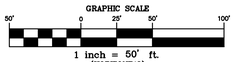

1 inch = 50' ft.
(HORIZONTAL)

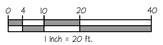

1 inch = 20 ft.

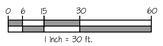

1 inch = 30 ft.

MICRO-BIORETENTION PLANT LIST (for this sheet)

SYMBOL	QTY.	NAMES (BOTANICAL / SCIENTIFIC)	SIZE	ROOT/COMMENTS
SHRUBS *				
	5	CORNUS SERICEA 'RUBY'/ RUBY RED OSIER DOGWOOD	18"-24" SPR.	CONTAINER
	7	ITEA VIRGINICA 'HENRY'S GARNET/ VIRGINIA SWEETSPIRE	18"-24" SPR.	CONTAINER
HERBACEOUS *				
	278	PROVIDE AN EVEN MIX OF THE FOLLOWING PLANTS IN EACH MICRO-BIO: -HEMEROCALLIS 'STRAWBERRY CANDY' DAYLILY -HEMEROCALLIS 'JOAN SENIOR' DAYLILY -KALMIA ANGUSTIFOLIA/SHEEP LAUREL -ELEOCHARIS OVATA OBTUSA/BLUNT SPIKE RUSH	18" O.C.	CONTAINER

* SEE SHEET 45 FOR SHRUB AND HERBACEOUS PLANTING DETAILS

APPROVED: HOWARD COUNTY DEPARTMENT OF PUBLIC WORKS

DocuSigned by: 2A6E6D1A3D3D4C... — 11/29/2021
Chief, Bureau of Highways — Date

APPROVED: HOWARD COUNTY DEPARTMENT OF PLANNING & ZONING

DocuSigned by: 5F87647A3238498... — 11/24/2021
Chief, Division of Land Development — Date

DocuSigned by: 1E6F1A4D3B3B4... — 11/23/2021
Chief, Development Engineering Division — Date

GLW PLANNING | ENGINEERING | SURVEYING
3909 NATIONAL DRIVE | SUITE 250 | BURTONSVILLE, MD 20866 | GLWPA.COM
PHONE: 301-421-4024 | BALT: 410-880-1820 | DC&VA: 301-989-2524 | FAX: 301-421-4186

DESIGNED BY: AWL
DRAWN BY: LMW
CHECKED BY: DEV

DATE	REVISION	BY	APP'R.

PREPARED FOR:
WESTMOUNT DEVELOPMENT CORPORATION
307 INTERNATIONAL CIRCLE, SUITE 130
HUNT VALLEY, MARYLAND 21030
410-489-4489
ATTN.: ROBERT GOODIER

PROFESSIONAL CERTIFICATION
I HEREBY CERTIFY THAT THESE PLANS WERE PREPARED OR APPROVED BY ME, AND THAT I AM A DULY LICENSED PROFESSIONAL ENGINEER UNDER THE LAWS OF THE STATE OF MARYLAND, LICENSE NO. 12975
EXPIRATION DATE: MAY 26, 2022
10/28/21

STORMWATER MANAGEMENT DETAILS

WESTMOUNT - PHASE 4
LOTS 295-394 AND OPEN SPACE LOTS 395-418

A RESUBDIVISION OF NON-BUILDABLE BULK PARCELS E & F

ELECTION DISTRICT No. 2 — HOWARD COUNTY, MARYLAND

SCALE	ZONING	G. L. W. FILE No.
AS SHOWN	R-ED	13-013
DATE	TAX MAP - GRID	SHEET
OCT., 2021	23-6&12	43 OF 45

F-21-032

© GLW 2020

L:\CADD\DRAWINGS\13013\PLANS BY GLW\ROADS-SD (PH4)\PHASE 4_43_ESD DETAILS-6(426-427).dwg, 6/22/2021 3:47 PM, LAST SAVED: 10/22/2021 3:47 PM, PLOTTED BY: Tony Lepper