DocuSign Envelope ID: 42A4CCF4-8A0E-4DE5-9A1B-C40A02CEBB2F

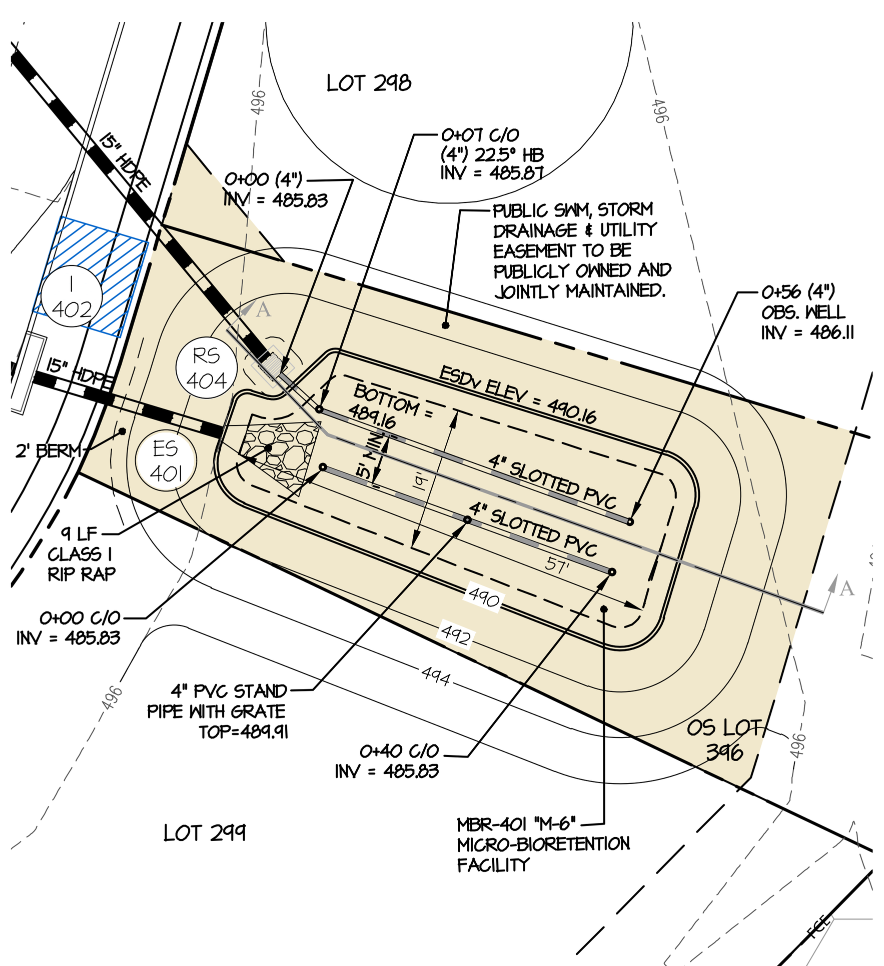

SEE TYPICAL MICRO-BIORETENTION DETAIL THIS SHEET FOR TYPICAL SECTION THROUGH MICRO-BIORETENTION FACILITY AND OUTLET STRUCTURE CONFIGURATION

MICRO-BIORETENTION 401 SCALE: 1" = 20'

MBR-401
TYPE (PER MDE): MICRO BIORETENTION SYSTEM (M6)
NON - MDE 378 FACILITY
TOTAL DRAINAGE AREA TO FACILITY = 34,770 SF
STORAGE PROVIDED = 1,257 CU-FT (@490.16)
ESDv PROVIDED = 1,672 CU-FT

LOW-FLOW OUTFALL: PERFORATED 4" UNDERDRAIN SYSTEM
BOTTOM OF FACILITY = 489.16
HIGH-FLOW OUTFALL: RS-404 ('S' INLET, TOP = 490.16)
MINIMUM DAM ELEVATION = 490.66

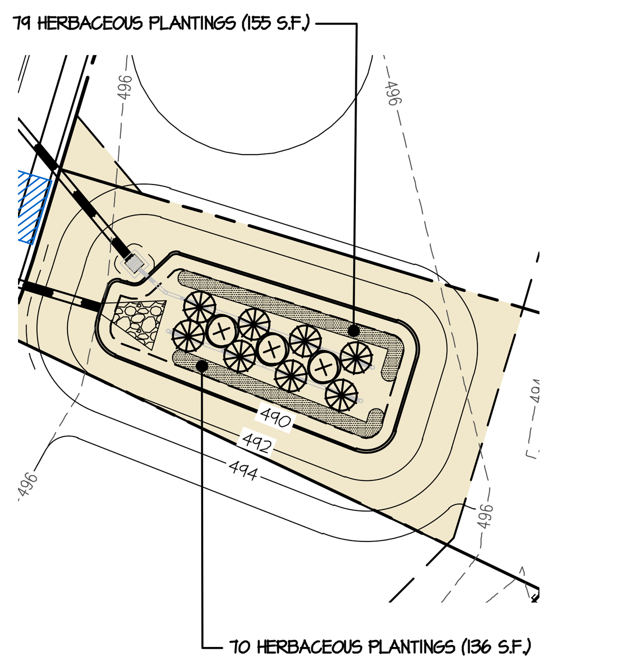

MICRO-BIORETENTION 401 LANDSCAPE PLAN SCALE: 1" = 30'

NOTES:
1) PROVIDE FILTER FABRIC BETWEEN SOIL AND STONE (SIDES ONLY) MSHA CLASS C
2) SEE THE MICRO-BIORETENTION SECTION DETAIL ON SHEET 45 FOR THE TYPICAL OVERFLOW DISTRIBUTION PIPE CONFIGURATION

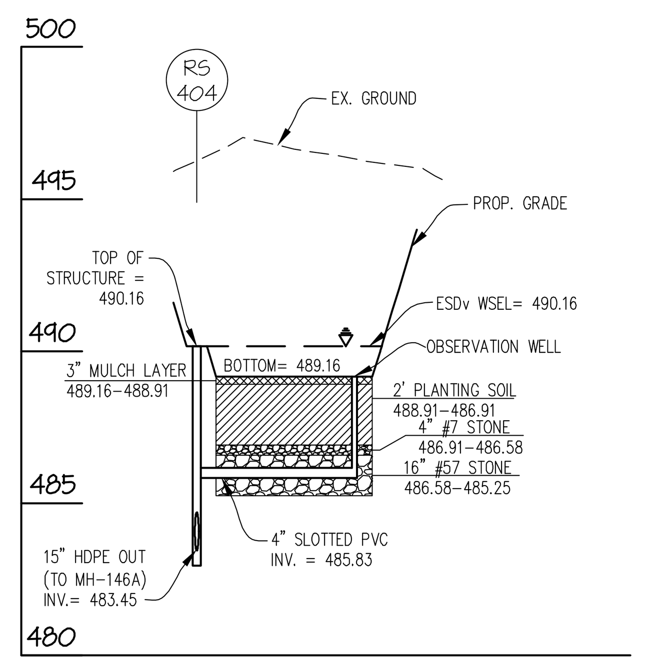

SECTION "A"-"A"
SCALE: 1" = 50' (HORZ.)
1" = 5' (VERT.)

MICRO-BIORETENTION 401 DETAILS

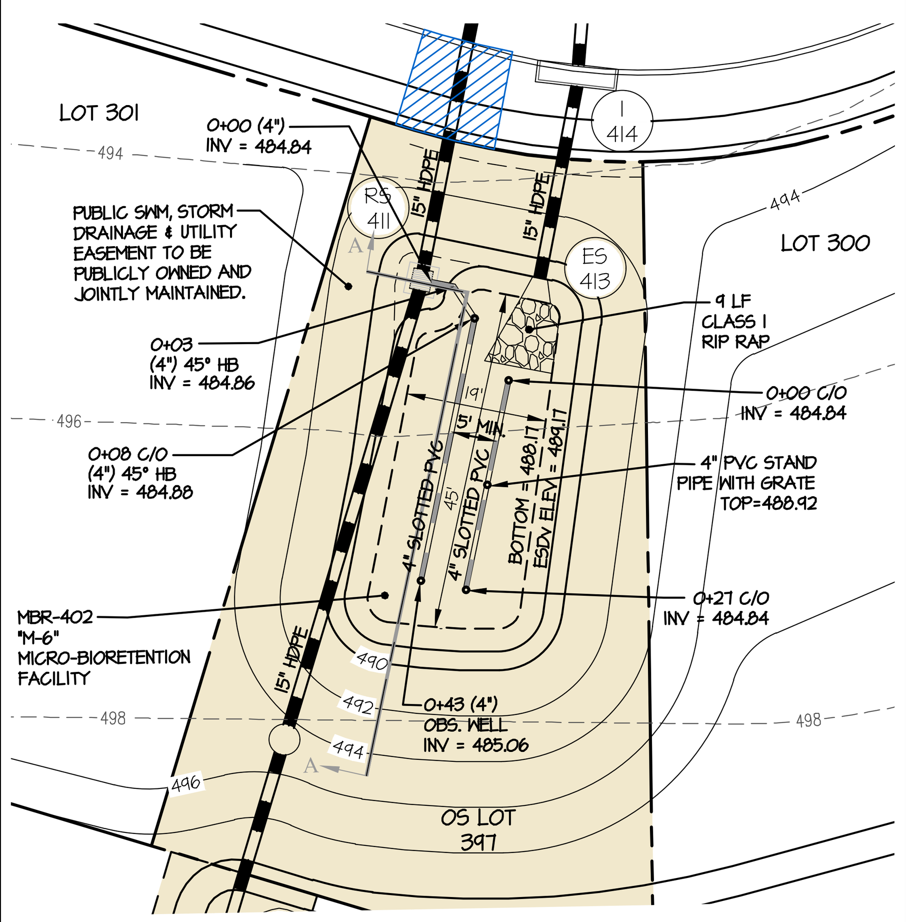

SEE TYPICAL MICRO-BIORETENTION DETAIL THIS SHEET FOR TYPICAL SECTION THROUGH MICRO-BIORETENTION FACILITY AND OUTLET STRUCTURE CONFIGURATION

MICRO-BIORETENTION 402 SCALE: 1" = 20'

MBR-402
TYPE (PER MDE): MICRO BIORETENTION SYSTEM (M6)
NON - MDE 378 FACILITY
TOTAL DRAINAGE AREA TO FACILITY = 24,276 SF
STORAGE PROVIDED = 999 CU-FT (@489.17)
ESDv PROVIDED = 1,329 CU-FT

LOW-FLOW OUTFALL: PERFORATED 4" UNDERDRAIN SYSTEM
BOTTOM OF FACILITY = 488.17
HIGH-FLOW OUTFALL: RS-411 ('S' INLET, TOP = 489.17)
MINIMUM DAM ELEVATION = 489.67

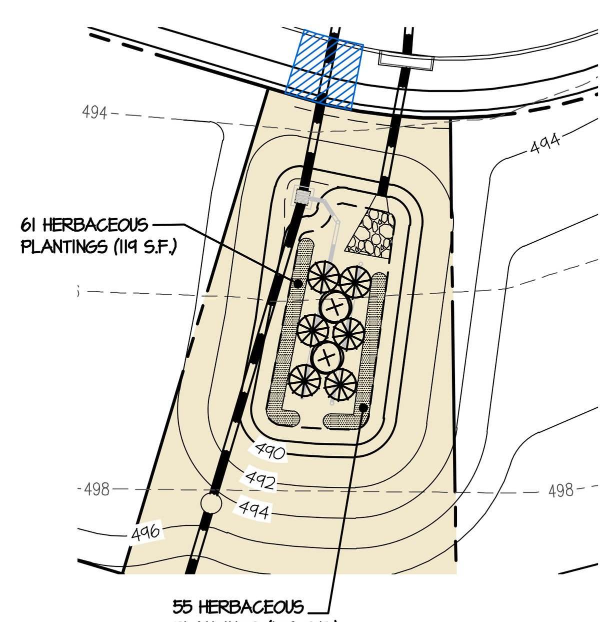

MICRO-BIORETENTION 402 LANDSCAPE PLAN SCALE: 1" = 30'

NOTES:
1) PROVIDE FILTER FABRIC BETWEEN SOIL AND STONE (SIDES ONLY) MSHA CLASS C
2) SEE THE MICRO-BIORETENTION SECTION DETAIL ON SHEET 45 FOR THE TYPICAL OVERFLOW DISTRIBUTION PIPE CONFIGURATION

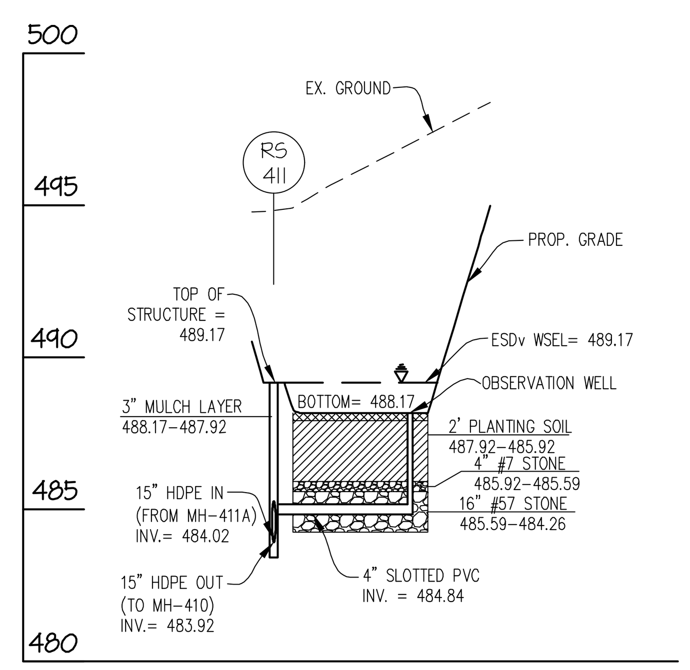

SECTION "A"-"A"
SCALE: 1" = 50' (HORZ.)
1" = 5' (VERT.)

MICRO-BIORETENTION 402 DETAILS

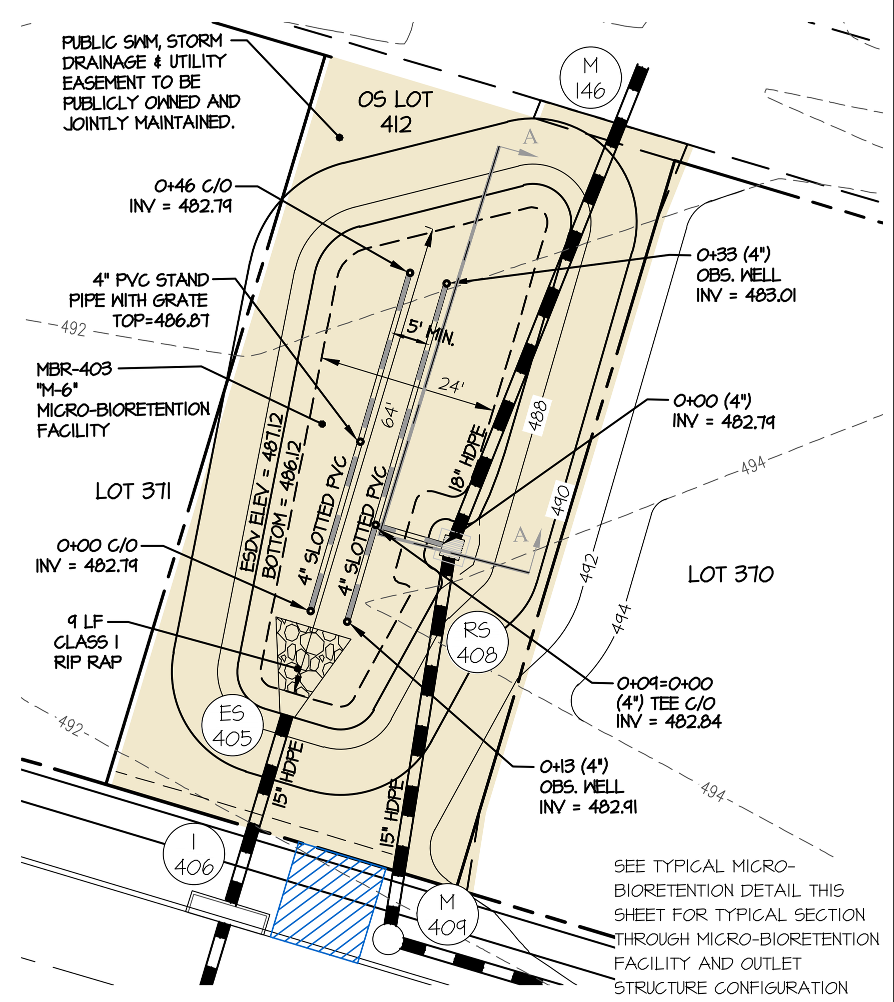

SEE TYPICAL MICRO-BIORETENTION DETAIL THIS SHEET FOR TYPICAL SECTION THROUGH MICRO-BIORETENTION FACILITY AND OUTLET STRUCTURE CONFIGURATION

MICRO-BIORETENTION 403 SCALE: 1" = 20'

MBR-403
TYPE (PER MDE): MICRO BIORETENTION SYSTEM (M6)
NON - MDE 378 FACILITY
TOTAL DRAINAGE AREA TO FACILITY = 31,387 SF
STORAGE PROVIDED = 1,543 CU-FT (@487.12)
ESDv PROVIDED = 2,052 CU-FT

LOW-FLOW OUTFALL: PERFORATED 4" UNDERDRAIN SYSTEM
BOTTOM OF FACILITY = 486.12
HIGH-FLOW OUTFALL: RS-408 ('S' INLET, TOP = 487.12)
MINIMUM DAM ELEVATION = 487.62

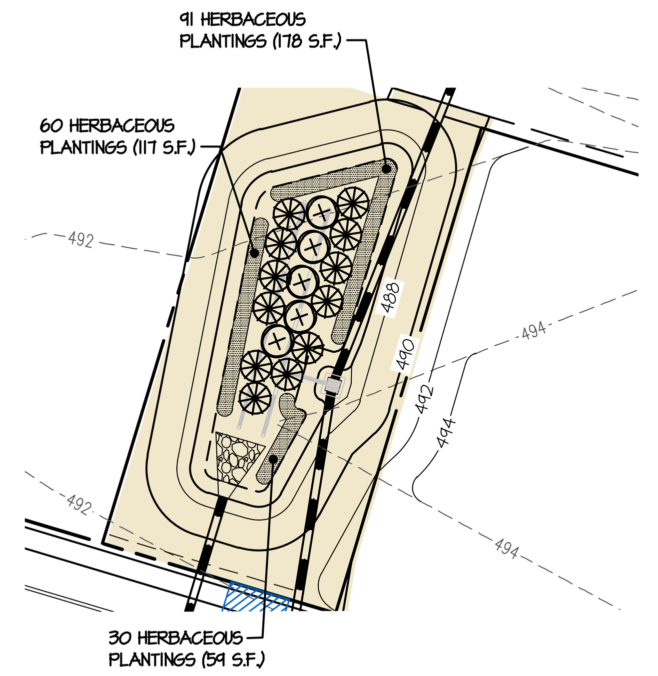

MICRO-BIORETENTION 403 LANDSCAPE PLAN SCALE: 1" = 30'

NOTES:
1) PROVIDE FILTER FABRIC BETWEEN SOIL AND STONE (SIDES ONLY) MSHA CLASS C
2) SEE THE MICRO-BIORETENTION SECTION DETAIL ON SHEET 45 FOR THE TYPICAL OVERFLOW DISTRIBUTION PIPE CONFIGURATION

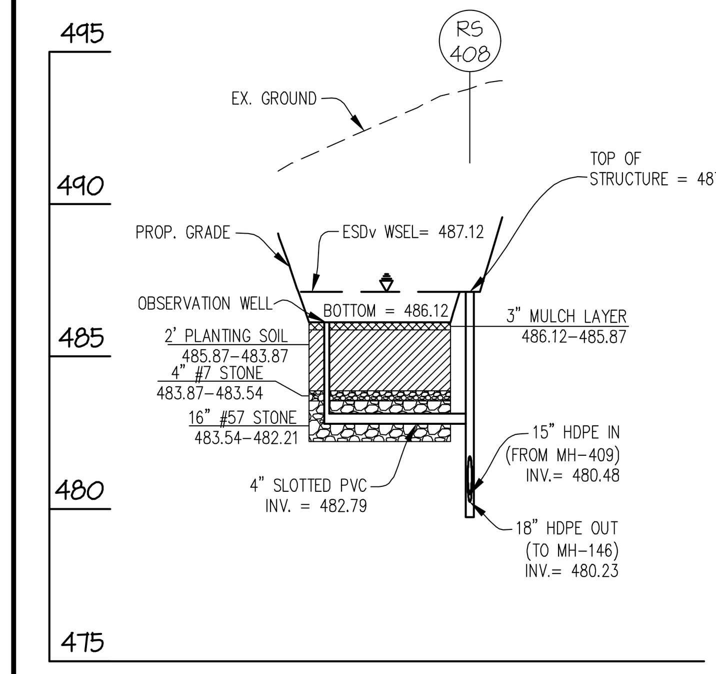

SECTION "A"-"A"
SCALE: 1" = 50' (HORZ.)
1" = 5' (VERT.)

MICRO-BIORETENTION 403 DETAILS

SEE TYPICAL MICRO-BIORETENTION DETAIL THIS SHEET FOR TYPICAL SECTION THROUGH MICRO-BIORET. FACILITY AND OUTLET STRUCTURE CONFIGURATION

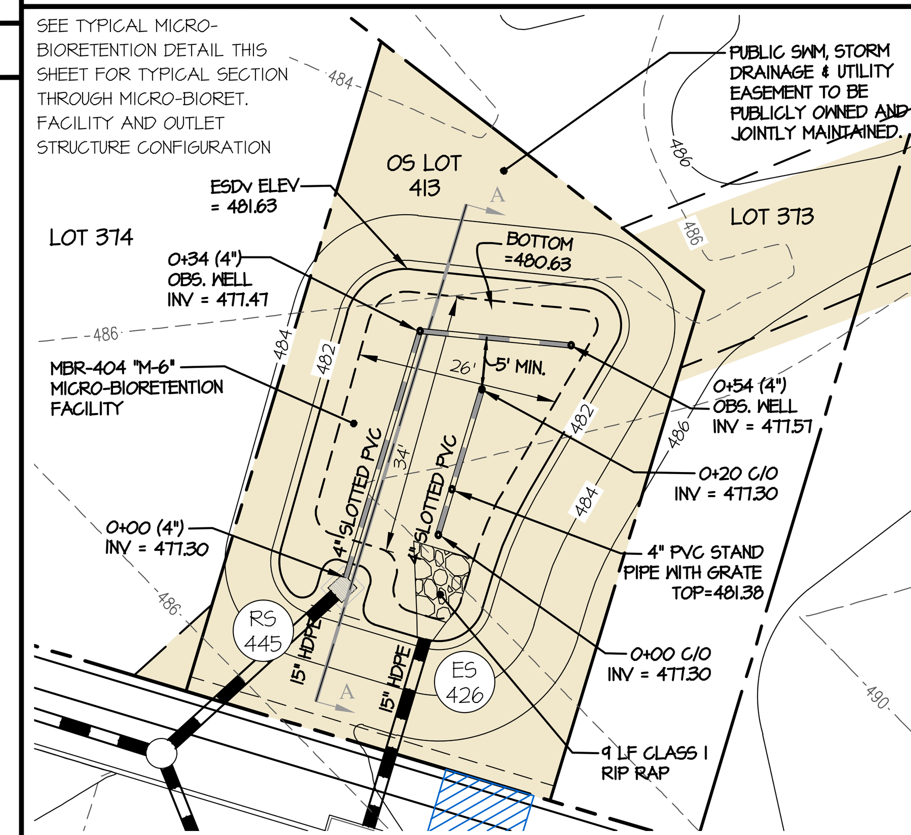

MICRO-BIORETENTION 404 SCALE: 1" = 20'

MBR-404
TYPE (PER MDE): MICRO BIORETENTION SYSTEM (M6)
NON - MDE 378 FACILITY
TOTAL DRAINAGE AREA TO FACILITY = 26,644 SF
STORAGE PROVIDED = 1,161 CU-FT (@481.63)
ESDv PROVIDED = 1,544 CU-FT

LOW-FLOW OUTFALL: PERFORATED 4" UNDERDRAIN SYSTEM
BOTTOM OF FACILITY = 480.63
HIGH-FLOW OUTFALL: RS-445 ('S' INLET, TOP = 481.63)
MINIMUM DAM ELEVATION = 482.13

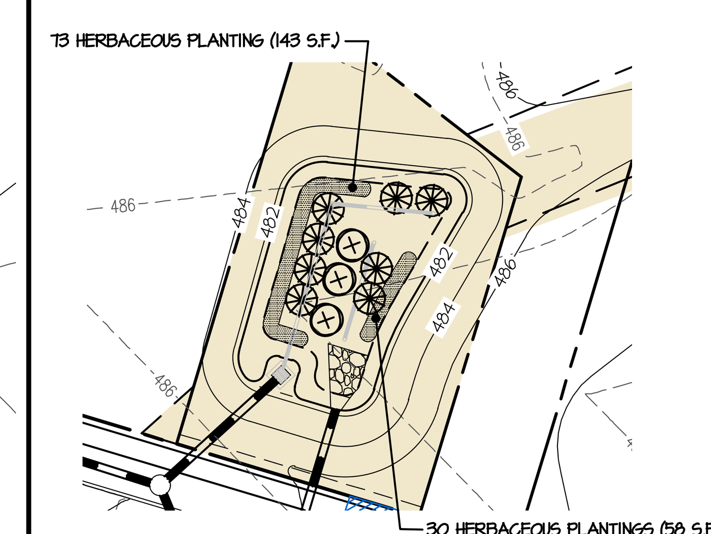

MICRO-BIORETENTION 404 LANDSCAPE PLAN SCALE: 1" = 30'

NOTES:
1) PROVIDE FILTER FABRIC BETWEEN SOIL AND STONE (SIDES ONLY) MSHA CLASS C
2) SEE THE MICRO-BIORETENTION SECTION DETAIL ON SHEET 45 FOR THE TYPICAL OVERFLOW DISTRIBUTION PIPE CONFIGURATION

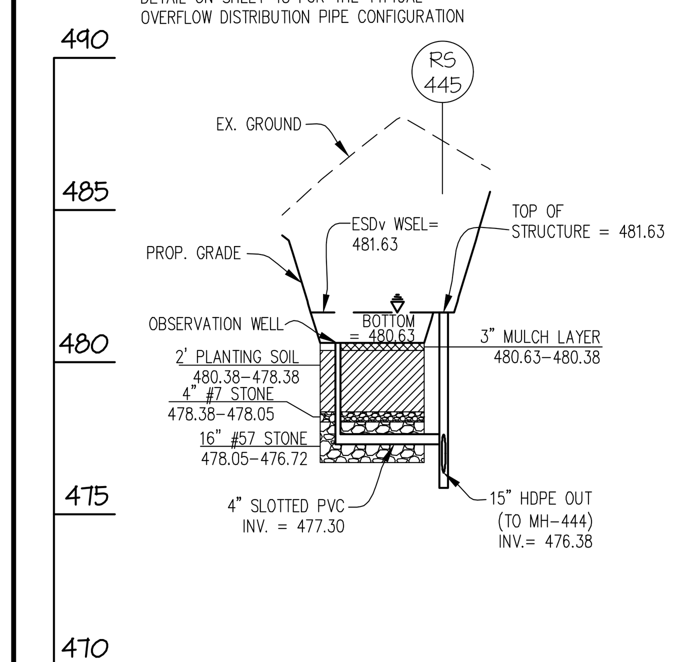

SECTION "A"-"A"
SCALE: 1" = 50' (HORZ.)
1" = 5' (VERT.)

MICRO-BIORETENTION 404 DETAILS

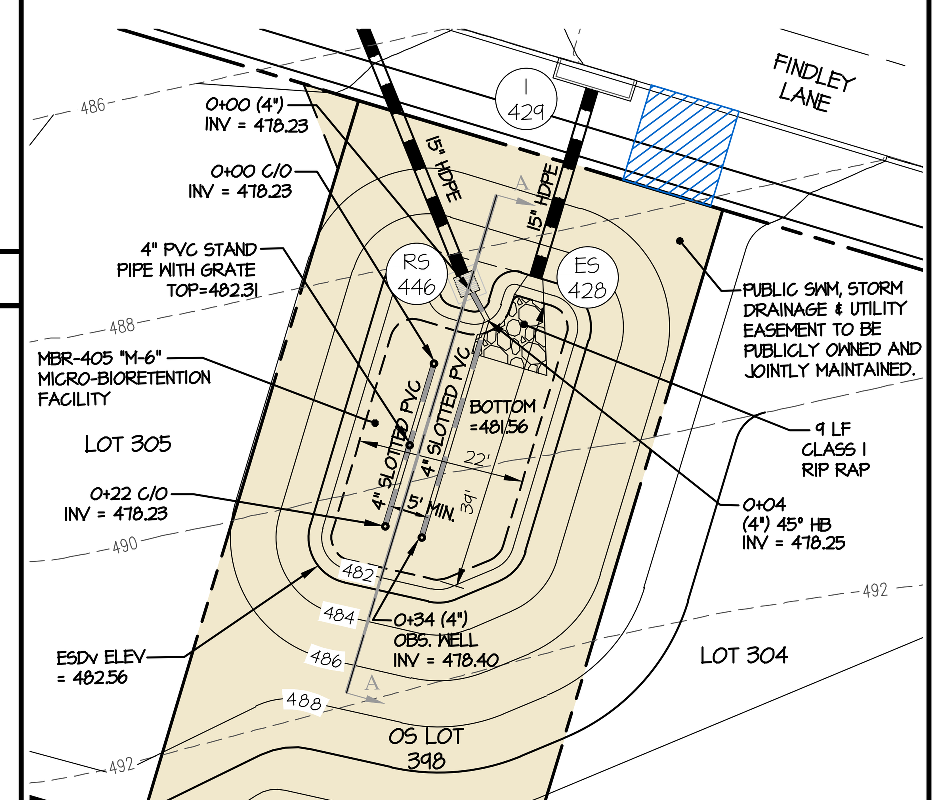

SEE TYPICAL MICRO-BIORETENTION DETAIL THIS SHEET FOR TYPICAL SECTION THROUGH MICRO-BIORETENTION FACILITY AND OUTLET STRUCTURE CONFIGURATION

MICRO-BIORETENTION 405 SCALE: 1" = 20'

MBR-405
TYPE (PER MDE): MICRO BIORETENTION SYSTEM (M6)
NON - MDE 378 FACILITY
TOTAL DRAINAGE AREA TO FACILITY = 17,207 SF
STORAGE PROVIDED = 957 CU-FT (@482.56)
ESDv PROVIDED = 1,273 CU-FT

LOW-FLOW OUTFALL: PERFORATED 4" UNDERDRAIN SYSTEM
BOTTOM OF FACILITY = 481.56
HIGH-FLOW OUTFALL: RS-446 ('S' INLET, TOP = 482.56)
MINIMUM DAM ELEVATION = 482.89

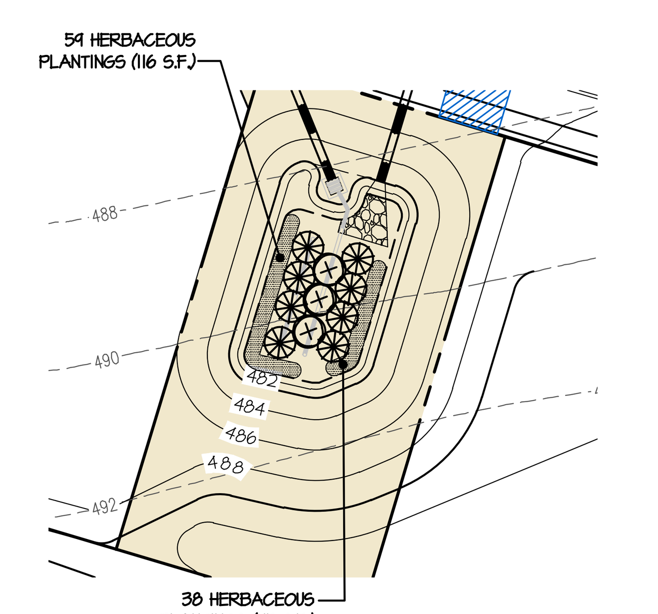

MICRO-BIORETENTION 405 LANDSCAPE PLAN SCALE: 1" = 30'

NOTES:
1) PROVIDE FILTER FABRIC BETWEEN SOIL AND STONE (SIDES ONLY) MSHA CLASS C
2) SEE THE MICRO-BIORETENTION SECTION DETAIL ON SHEET 45 FOR THE TYPICAL OVERFLOW DISTRIBUTION PIPE CONFIGURATION

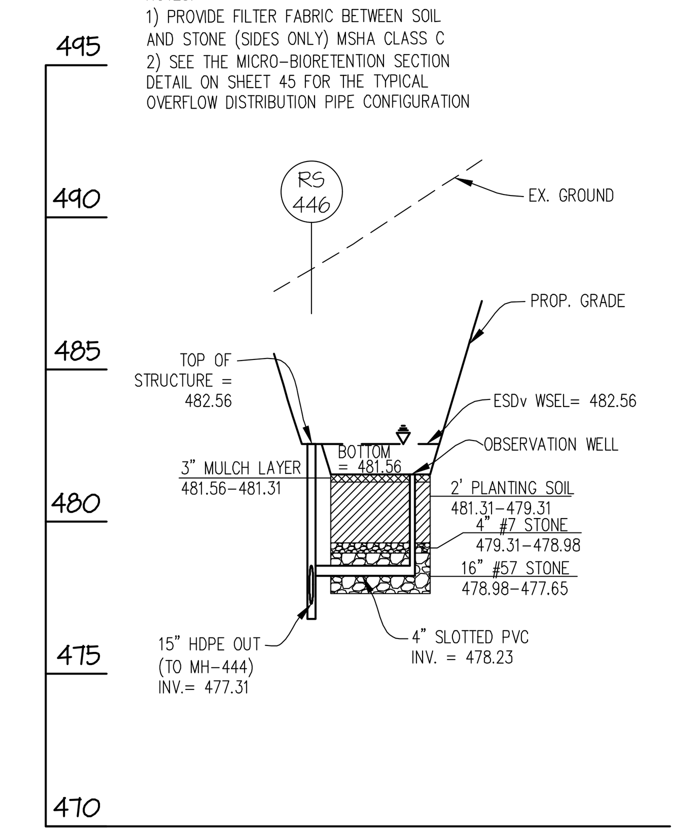

SECTION "A"-"A"
SCALE: 1" = 50' (HORZ.)
1" = 5' (VERT.)

MICRO-BIORETENTION 405 DETAILS

0 4 10 20 40
1 inch = 20 ft.

0 6 15 30 60
1 inch = 30 ft.

S.D. PIPE SUMMARY TABLE - PUBLICALLY OWNED AND JOINTLY MAINTAINED			
SIZE (INCHES)	TYPE	QUANTITY (L.F.)	REMARKS
4	SLOTTED PVC	1,719	SCHEDULE 40
4	PVC	90	SCHEDULE 40

THE SD PIPE SUMMARY TABLE IS FOR THE STORMWATER MANAGEMENT UNDERDRAIN ONLY. FOR THE SITE SD PIPE SUMMARY, SEE SHEET 22.

MICRO-BIORETENTION PLANT LIST (for this sheet)

SYMBOL	QTY.	NAMES (BOTANICAL / SCIENTIFIC)	SIZE	ROOT/COMMENTS
SHRUBS *				
⊗	16	CORNUS SERICEA 'RUBY'/ RUBY RED OSIER DOGWOOD	18"-24" SPR.	CONTAINER
✱	42	ITEA VIRGINICA 'HENRY'S GARNET/ VIRGINIA SWEETSPIRE	18"-24" SPR.	CONTAINER
HERBACEOUS *				
(shaded)	646	PROVIDE AN EVEN MIX OF THE FOLLOWING PLANTS IN EACH MICRO-BIO: -HERMEROCALLIS 'STRAWBERRY CANDY' DAYLILY -HERMEROCALLIS 'JOAN SENIOR' DAYLILY -KALMIA ANGUSTIFOLIA/SHEEP LAUREL -ELEOCHARIS OVATA OBTUSA/BLUNT SPIKE RUSH	18" O.C.	CONTAINER

* SEE SHEET 45 FOR SHRUB AND HERBACEOUS PLANTING DETAILS

GRAPHIC SCALE
10' 5' 2.5' 0 5'
1 inch = 5' ft.
(VERTICAL)

GRAPHIC SCALE
50' 0 25' 50' 100'
1 inch = 50' ft.
(HORIZONTAL)

APPROVED: HOWARD COUNTY DEPARTMENT OF PUBLIC WORKS
DocuSigned by: 2465821AE4DA4C2...
Chief, Bureau of Highways — Date 11/29/2021

APPROVED: HOWARD COUNTY DEPARTMENT OF PLANNING & ZONING
DocuSigned by: 1FB75478A22B49A...
Chief, Division of Land Development — Date 11/24/2021
DocuSigned by: Chad Edmondson D5E6F9A84923495...
Chief, Development Engineering Division — Date 11/23/2021

GLW PLANNING | ENGINEERING | SURVEYING
3909 NATIONAL DRIVE | SUITE 250 | BURTONSVILLE, MD 20866 | GLWPA.COM
PHONE: 301-421-4024 | BALT: 410-880-1820 | DC&VA: 301-989-2524 | FAX: 301-421-4186

DESIGNED BY: AWL
DRAWN BY: LMW
CHECKED BY: DEV

DATE	REVISION	BY	APP'R.

PREPARED FOR:
WESTMOUNT DEVELOPMENT CORPORATION
307 INTERNATIONAL CIRCLE, SUITE 130
HUNT VALLEY, MARYLAND 21030
410-489-4489
ATTN.: ROBERT GOODIER

PROFESSIONAL CERTIFICATION
I HEREBY CERTIFY THAT THESE PLANS WERE PREPARED OR APPROVED BY ME, AND THAT I AM A DULY LICENSED PROFESSIONAL ENGINEER UNDER THE LAWS OF THE STATE OF MARYLAND, LICENSE NO. 12975 EXPIRATION DATE: MAY 26, 2022
10/28/21

STORMWATER MANAGEMENT DETAILS
WESTMOUNT - PHASE 4
LOTS 295-394 AND OPEN SPACE LOTS 395-418
A RESUBDIVISION OF NON-BUILDABLE BULK PARCELS E & F
ELECTION DISTRICT No. 2 — HOWARD COUNTY, MARYLAND

SCALE	ZONING	G. L. W. FILE No.
AS SHOWN	R-ED	13-013
DATE	TAX MAP - GRID	SHEET
OCT., 2021	23-6&12	38 OF 45

F-21-032

© GLW 2020

L:\CADD\DRAWINGS\13013\PLANS BY GLW\ROADS-SD (PH4)\PHASE 4_38_ESD DETAILS-1(401-405).dwg, PLOTTED:10/26/2021 3:30 PM, LAST SAVED:10/26/2021 3:29 PM, PLOTTED BY: Tony Leggieri