DocuSign Envelope ID: 42A4CCF4-8A0E-4DE5-9A1B-C40A02CEBB2F

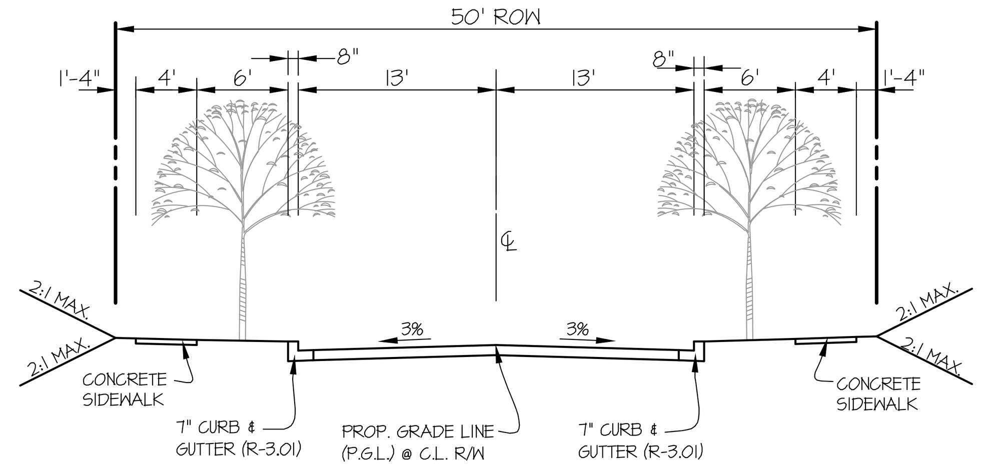

1 **TYPICAL SECTION FOR 26' PAVING** NO SCALE

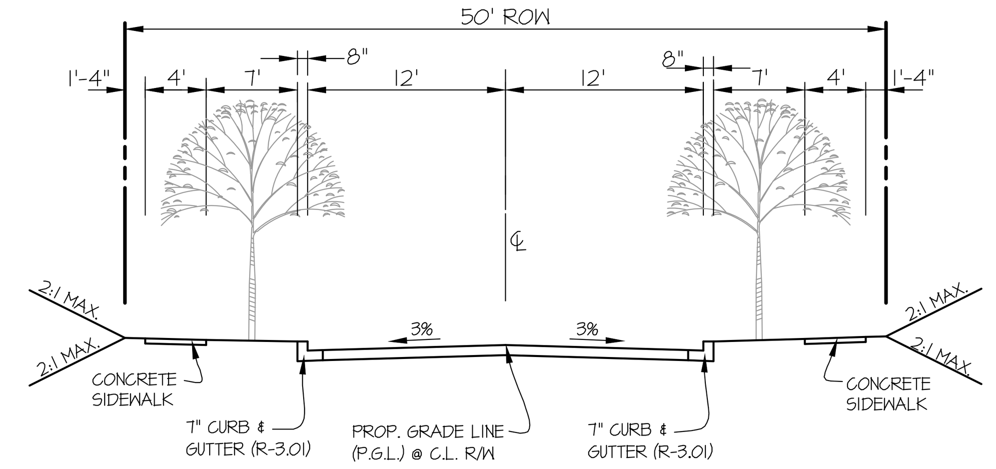

2 **TYPICAL SECTION FOR 24' PAVING** NO SCALE

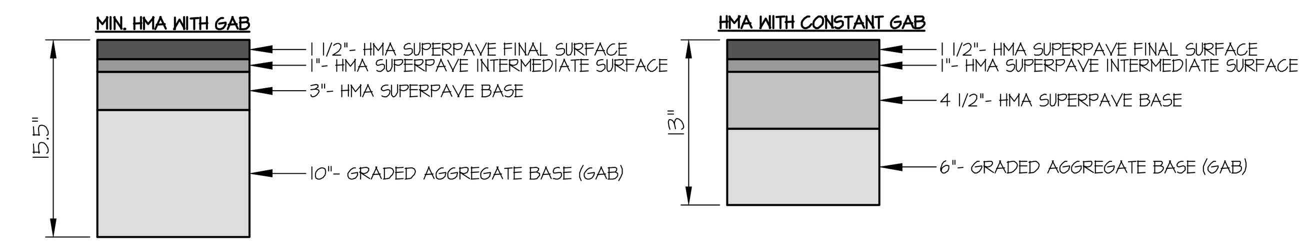

3 **P-3 PAVING SECTIONS** NO SCALE

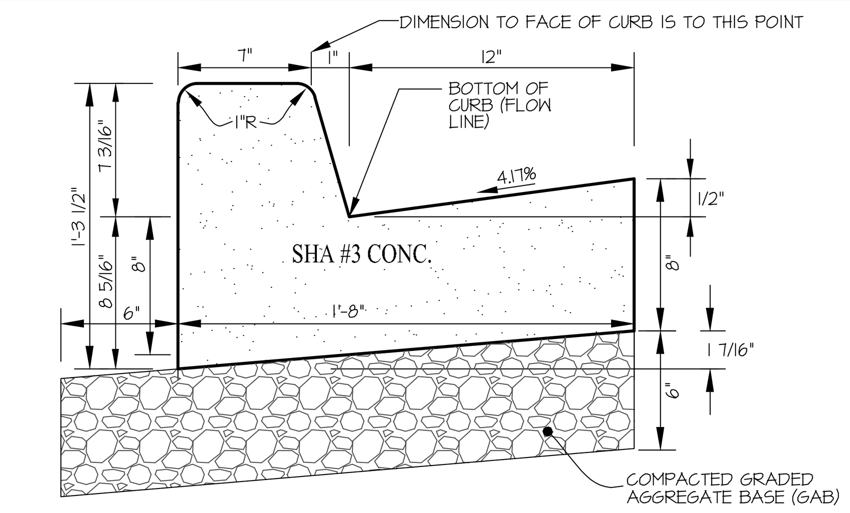

STANDARD COMBINATION CURB AND GUTTER

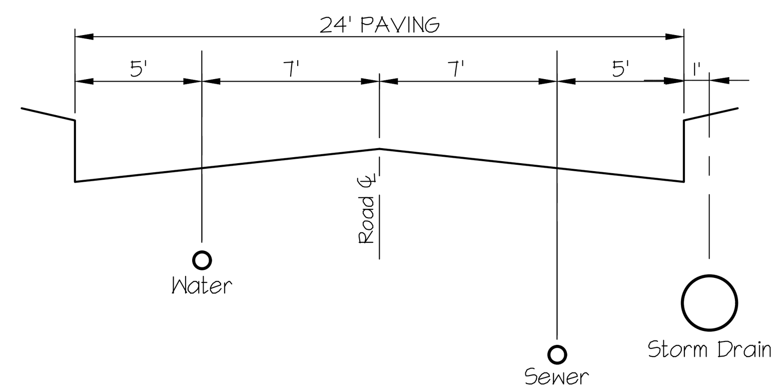

24' PAVING WIDTH

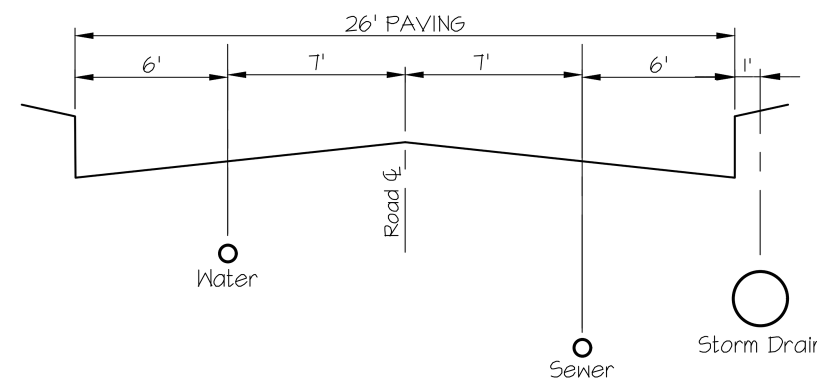

26' PAVING WIDTH

5 **TYPICAL UTILITY LOCATIONS** SCALE: 1"=6'

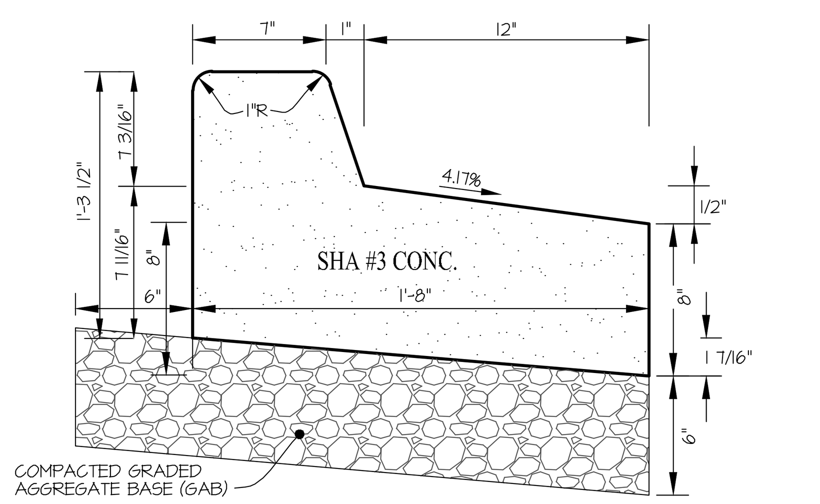

REVERSE COMBINATION CURB AND GUTTER

NOTES:
1. STANDARD 7" COMBINATION CURB AND GUTTER TO BE USED IN ALL PUBLIC RIGHTS OF WAY.
2. GUTTER PAN AT MEDIAN EDGE OF INTERMEDIATE ARTERIALS OR THE HIGH SIDE OF SUPERELEVATED SECTIONS SHALL BE SLOPED AT THE SAME RATE AND IN THE SAME DIRECTION AS THE PAVEMENT. MATCH PAVEMENT CROSS SLOPE WHEN CURB IS LOCATED ON THE LOW SIDE OF SUPERELEVATED SECTION AND THE RATE OF SUPERELEVATION IS GREATER THAN 3% FOR MODIFIED CURB AND GUTTER.

4 **7" CONCRETE CURB AND GUTTER (STANDARD AND REVERSE)** NO SCALE

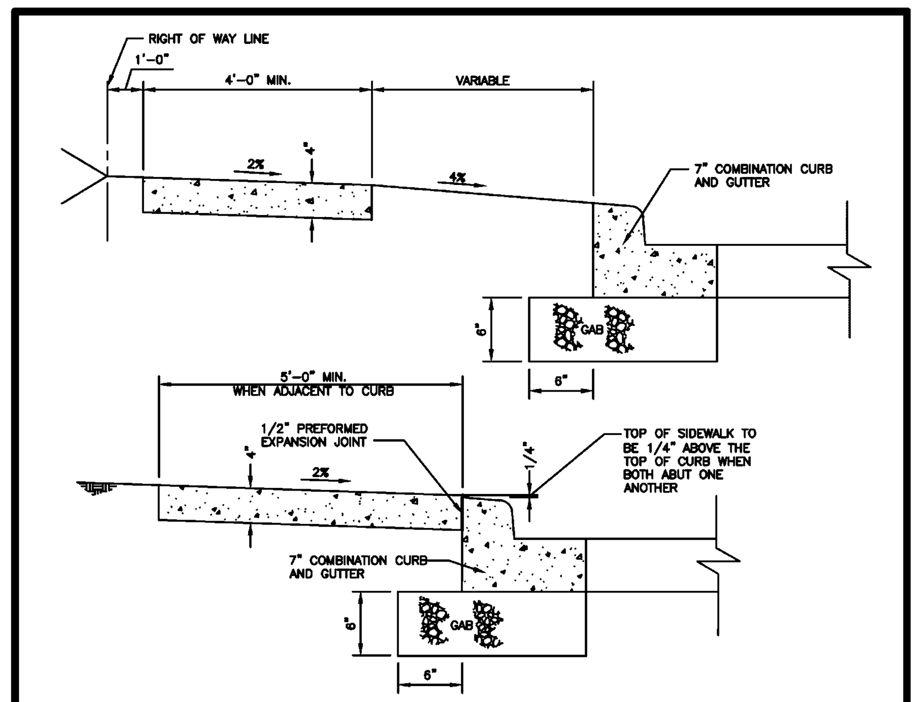

NOTES:
1. SIDEWALK TO BE SCRIBED IN 5'-0" MAXIMUM SQUARES.
2. EXPANSION JOINTS ACROSS THE SIDEWALK NOT TO BE MORE THAN 15' APART, OR 16' FOR 4' WIDE SIDEWALK.
3. 1/2" PREFORMED EXPANSION MATERIAL IN EXPANSION JOINTS TO BE KEPT 1/4" BELOW SURFACE OF SIDEWALK.
4. CONCRETE TO BE MIX #3.
5. WHEN SIDEWALK ABUTS CURB, SIDEWALK SHALL BE 1/4" ABOVE CURB WITH 1/2" PREFORMED EXPANSION JOINT BETWEEN SIDEWALK AND CURB.
6. ON LONGITUDINAL SIDEWALK GRADES OF 5% OR GREATER, A CONCRETE HEADER, 6" THICK AND 6" DEEP BELOW THE NORMAL 4" SIDEWALK THICKNESS SHALL BE CONSTRUCTED FOR THE FULL WIDTH OF THE SIDEWALK AT INTERVALS OF 48 FEET. THE HEADERS SHALL BE PLACED AT THE EXPANSION JOINT LOCATIONS AND SHALL BE MONOLITHIC WITH THE SIDEWALK.
7. SIDEWALK WIDTH ADJACENT TO CURB SHALL BE 5'-0" MINIMUM EXCEPT SIDEWALK ADJACENT TO CURB IN CUL-DE-SAC BULBS MAY BE 4'-0" WIDE.
8. SIDEWALK LOCATED 2' OR MORE FROM CURB MAY BE 4'-0" IN WIDTH WITH A 5'x5' PAVED SECTION PLACED 200' APART.
9. 4'-0" SIDEWALK REQUIRES A PASSING AREA (SEE DETAIL R-4.01).

Revised 5/30/2017 | Revised 5/7/2007 | Approved — Howard County, Maryland, Department of Public Works — Approved: Chief, Bureau of Engineering — CONCRETE SIDEWALK — Detail R-3.05

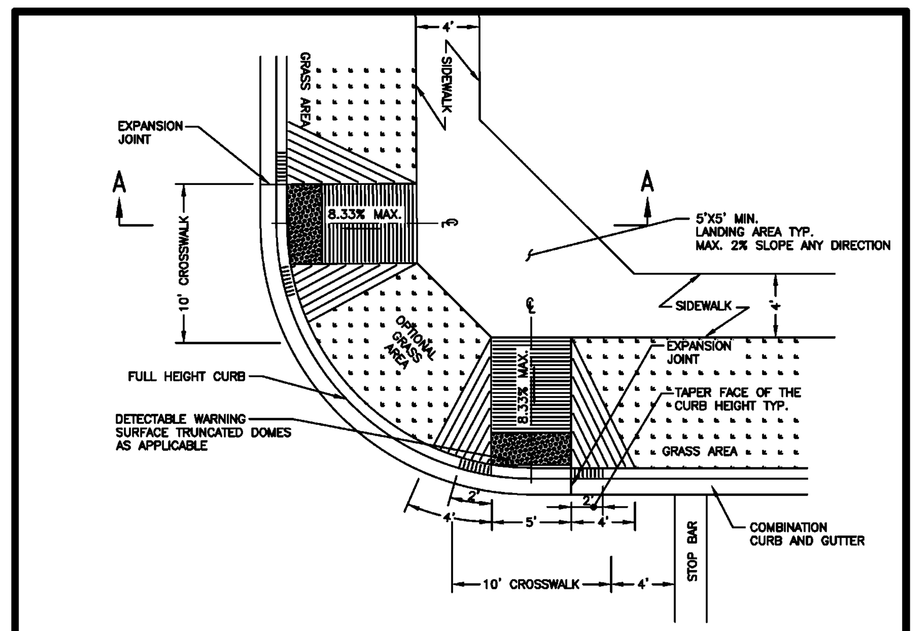

PLAN

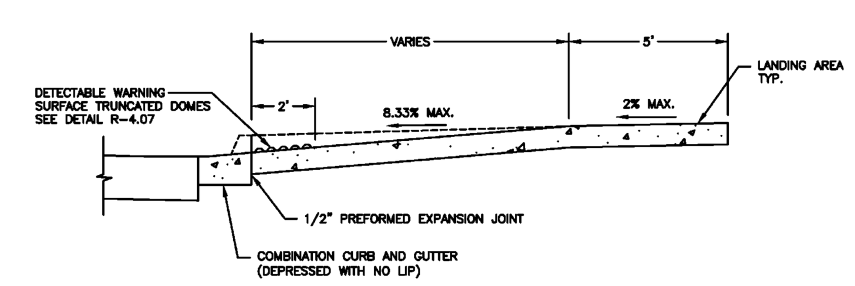

SECTION A–A

Revised 5/30/2017 | Revised 5/7/2007 | Approved — Howard County, Maryland, Department of Public Works — Approved: Chief, Bureau of Engineering — SIDEWALK RAMP Type B Dual Ramp — Detail R-4.03

℄ CURVE DATA CHART

CURVE	STREET NAME	PC STA.	PT STA.	RADIUS	TANGENT	ARC	CHORD	BEARING	DELTA
C1	WESTMOUNT PARKWAY	68+35.07	69+59.39	310.00'	63.01'	124.32'	123.49'	S50°01'40"W	22°58'38"
C2	WESTMOUNT PARKWAY	70+16.94	73+99.62	485.00'	201.92'	382.67'	372.83'	S84°07'12"W	45°12'27"
C3	WESTMOUNT PARKWAY	75+73.81	76+91.62	75.00'	75.00'	117.81'	106.07'	N28°16'34"W	90°00'00"
C4	WESTMOUNT PARKWAY	82+44.44	83+89.99	100.00'	89.09'	145.55'	133.04'	N58°25'13"E	83°23'34"
C5	WESTMOUNT PARKWAY	83+89.99	86+35.91	170.00'	150.09'	245.92'	225.03'	S38°26'30"E	82°53'00"
C6	WESTMOUNT PARKWAY	89+71.44	90+91.83	350.00'	60.80'	120.39'	119.80'	S6°51'14"E	19°42'29"
C7	FINDLEY LANE	0+66.70	2+72.68	250.00'	109.24'	205.98'	200.20'	S49°40'23"E	47°12'22"
C8	FINDLEY LANE	6+71.32	7+89.13	75.00'	75.00'	117.81'	106.07'	N61°43'26"E	90°00'00"
C9	PRATCHETT LANE	1+90.45	2+74.29	350.00'	42.12'	83.83'	83.63'	S80°08'17"E	13°43'26"
C10	ELK RIDGE LANE	2+10.88	2+70.76	250.00'	30.08'	59.88'	59.74'	S80°08'17"E	13°43'26"
C11	PICTON COURT	0+06.71	1+65.64	210.00'	83.49'	158.93'	155.17'	N24°56'02"E	43°21'46"
C12	WAKEFIELD CT	1+43.75	2+54.89	210.00'	56.90'	111.14'	109.85'	N23°35'35"W	30°19'22"

ROAD INFORMATION

ROAD NAME	STATION	CLASSIFICATION	DESIGN SPEED	POSTED SPEED	R/W	PAVING WIDTH	PAVING SECTION	DETAIL
WESTMOUNT PARKWAY	68+15 TO 92+22	ACCESS STREET	30 MPH	25 MPH	50'	26'	P-3	1
FINDLEY LANE	0+00 TO 6+66	ACCESS STREET	30 MPH	25 MPH	50'	24'	P-3	2
FINDLEY LANE	6+66 TO 7+01	ACCESS STREET	30 MPH	25 MPH	50'	VARIES	P-3	2
FINDLEY LANE	7+01 TO 7+60	ACCESS STREET	30 MPH	25 MPH	50'	26'	P-3	1
FINDLEY LANE	7+60 TO 7+94	ACCESS STREET	30 MPH	25 MPH	50'	VARIES	P-3	2
FINDLEY LANE	7+94 TO 9+39	ACCESS STREET	30 MPH	25 MPH	50'	24'	P-3	2
PRATCHETT LANE	0+00 TO 3+51	ACCESS STREET	30 MPH	25 MPH	50'	24'	P-3	2
ELK RIDGE LANE	0+00 TO 2+86	ACCESS STREET	30 MPH	25 MPH	50'	24'	P-3	2
PICTON COURT	0+00 TO 2+56	ACCESS STREET	30 MPH	25 MPH	50'	24'	P-3	2
WAKEFIELD COURT	0+46 TO 3+00	ACCESS STREET	30 MPH	25 MPH	50'	24'	P-3	2

NOTES:
1. ALL TYPICAL SECTIONS ARE SHOWN LOOKING UP STATION.

APPROVED: HOWARD COUNTY DEPARTMENT OF PUBLIC WORKS
DocuSigned by: 2465821AE4DA4C2...
Chief, Bureau of Highways — Date 11/29/2021

APPROVED: HOWARD COUNTY DEPARTMENT OF PLANNING & ZONING
DocuSigned by: 1EB75478A22B49A...
Chief, Division of Land Development — Date 11/24/2021
DocuSigned by: Chad Edmondson D5E6F9A84923495...
Chief, Development Engineering Division — Date 11/23/2021

L:\CADD\DRAWINGS\13013\PLANS BY GLW\ROADS-SD (PH4)\PHASE 4_08_ROAD DETAILS.dwg, PLOTTED:10/20/2021 12:53 PM, LAST SAVED:9/20/2021 11:53 AM, PLOTTED BY: Tony Leggieri

GLW PLANNING | ENGINEERING | SURVEYING
3909 NATIONAL DRIVE | SUITE 250 | BURTONSVILLE, MD 20866 | GLWPA.COM
PHONE: 301-421-4024 | BALT: 410-880-1820 | DC&VA: 301-989-2524 | FAX: 301-421-4186

DESIGNED BY: AWL
DRAWN BY: AWL
CHECKED BY: DEV

DATE	REVISION	BY	APP'R.

PREPARED FOR:
WESTMOUNT DEVELOPMENT CORPORATION
307 INTERNATIONAL CIRCLE, SUITE 130
HUNT VALLEY, MARYLAND 21030
410-489-4489
ATTN.: ROBERT GOODIER

PROFESSIONAL CERTIFICATION
I HEREBY CERTIFY THAT THESE PLANS WERE PREPARED OR APPROVED BY ME, AND THAT I AM A DULY LICENSED PROFESSIONAL ENGINEER UNDER THE LAWS OF THE STATE OF MARYLAND, LICENSE NO. 12975, EXPIRATION DATE: MAY 26, 2022.
10/28/21

ROAD DETAILS

WESTMOUNT - PHASE 4
LOTS 295-394 AND OPEN SPACE LOTS 395-418
A RESUBDIVISION OF NON-BUILDABLE BULK PARCELS E & F
ELECTION DISTRICT No. 2 — HOWARD COUNTY, MARYLAND

SCALE	ZONING	G. L. W. FILE No.
AS SHOWN	R-ED	13-013
DATE	TAX MAP - GRID	SHEET
OCT., 2021	23-6&12	8 OF 45

© GLW 2020

F-21-032