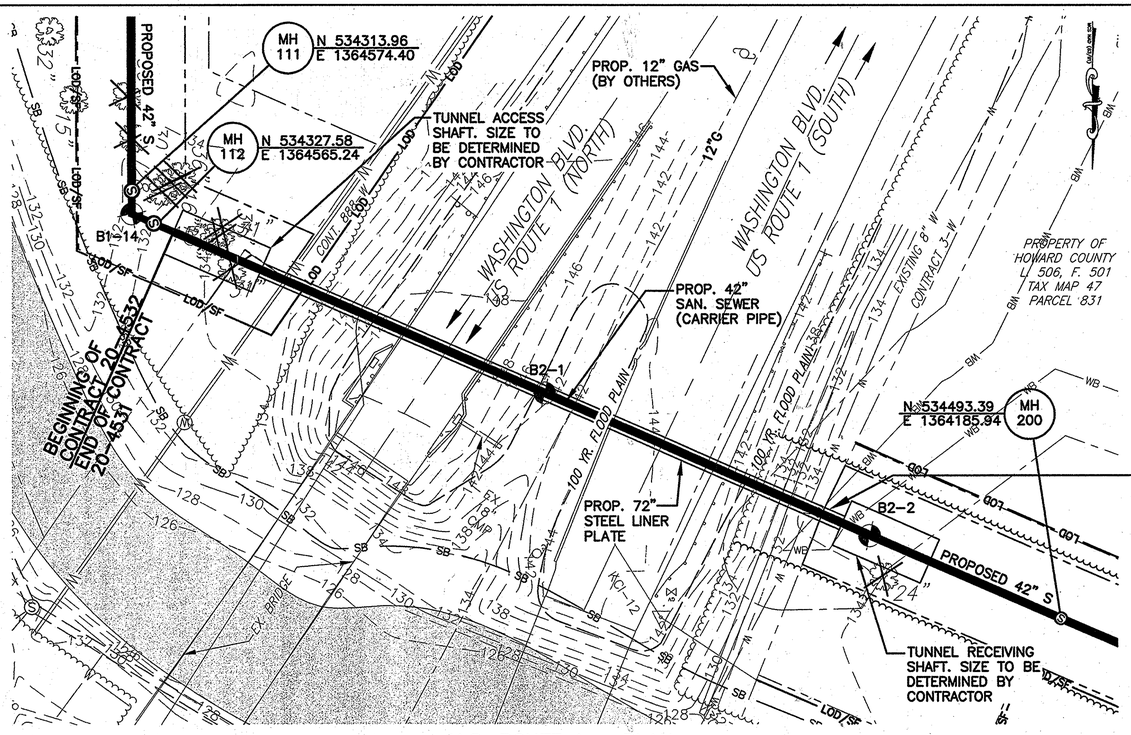

U.S. ROUTE 1 – PLAN

1"=30'

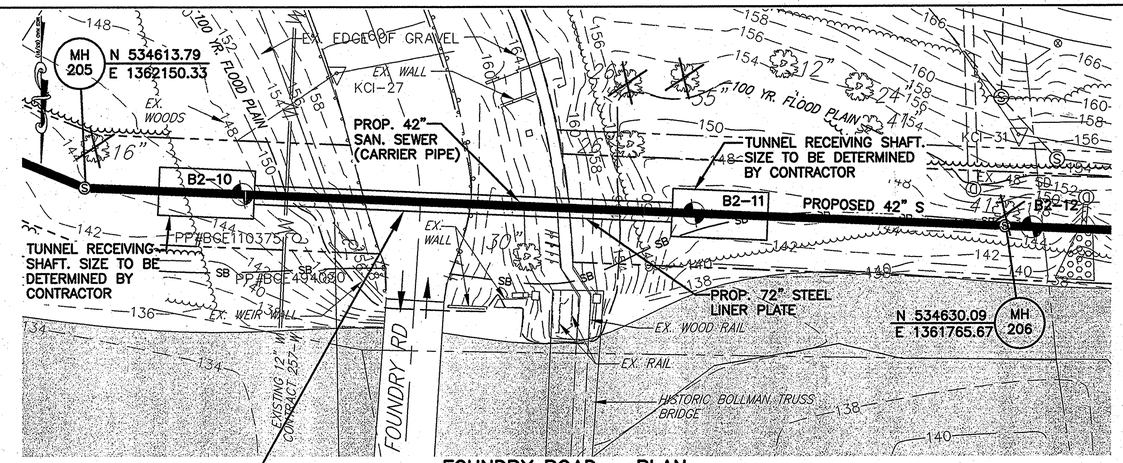

FOUNDRY ROAD – PLAN

1"=30'

INSTALL SETTLEMENT MARKERS AT INTERVALS OF 25 FEET FROM THE FACE OF THE ACCESS SHAFT TO RECEIVING SHAFT, AND AT 10 AND 20 FEET INTERVALS FROM THE TUNNEL CENTER LINE. SEE SPECIFICATIONS.

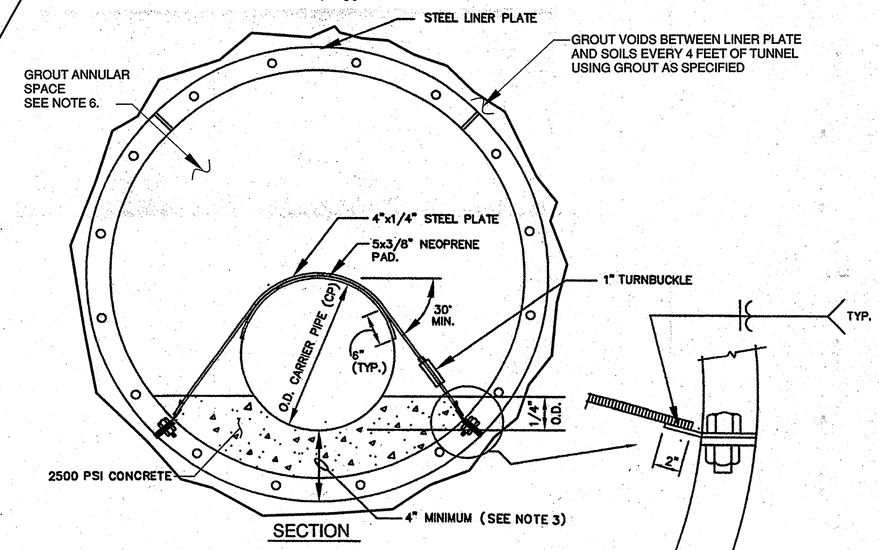

SECTION

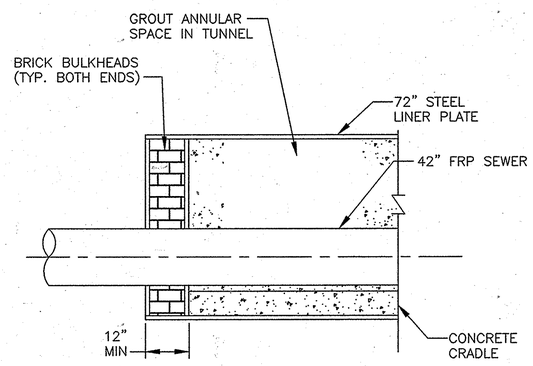

BULKHEAD END SEAL

NO SCALE

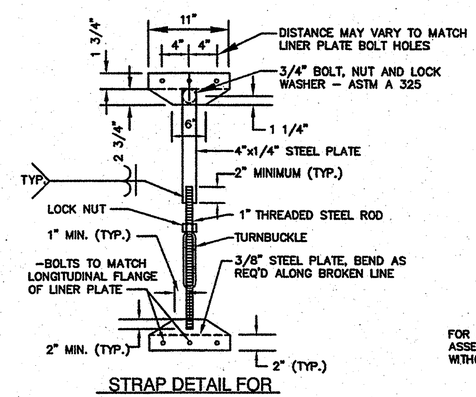

STRAP DETAIL FOR CONNECTION TO LONGITUDINAL FLANGE OF LINER PLATES

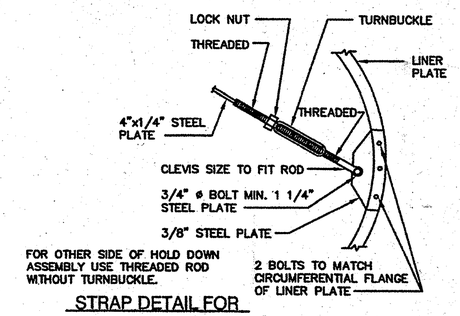

STRAP DETAIL FOR CONNECTION TO CIRCUMFERENTIAL FLANGE OF LINER PLATES

AS-BUILT

NOTES:

1. ALL STEEL LINER PLATES SHALL CONFORM TO ASTM A1011, ASTM A139 (36,000) AND AASHTO M167.
2. THE MINIMUM THICKNESS OF THE LINER PLATE SHALL BE 12 GAGE (0.1046").
3. CONTRACTOR SHALL PROVIDE MINIMUM 4" OF CONCRETE BETWEEN LINER PLATE AND BOTTOM OF CARRIER PIPE.
4. THE TUNNEL SHALL MEET THE REQUIREMENTS OF THE MARYLAND STATE HIGHWAY ADMINISTRATION MASTER PUBLIC UTILITY PERMIT ISSUED FOR THIS PROJECT.
5. NO WELDING OR CUTTING WILL BE PERMITTED IN THE FIELD.
6. ANNULAR SPACE IN LINER PLATE TUNNEL SHALL BE FILLED W/ GROUT, WITH A MINIMUM COMPRESSIVE STRENGTH OF 100 psi. AFTER A SUCCESSFUL PRESSURE TEST OF THE CARRIER PIPE.
7. SEE HOWARD COUNTY STD. SPECIFICATION SECTIONS 905, 963, 1000 & 1012.

PROFESSIONAL CERTIFICATION

I HEREBY CERTIFY THAT THESE DOCUMENTS WERE PREPARED OR APPROVED BY ME, AND THAT I AM A DULY LICENSED PROFESSIONAL ENGINEER UNDER THE LAWS OF THE STATE OF MARYLAND.

LICENSE NO. 8146 EXPIRATION DATE: 10/8/11

DEPARTMENT OF PUBLIC WORKS
HOWARD COUNTY, MARYLAND

DIRECTOR OF PUBLIC WORKS — DATE — CHIEF, BUREAU OF ENGINEERING — DATE 12/12/08

CHIEF, BUREAU OF UTILITIES — DATE 12/12/08 — CHIEF, UTILITY DESIGN DIVISION — DATE 12/11/08

Patton Harris Rust & Associates, Inc.
Engineers. Surveyors. Planners. Landscape Architects.
8818 Centre Park Drive
Columbia, MD 21045
T 410.997.8900
F 410.997.9282

PHR+A

STATE OF MARYLAND — GARY L. GOLDSTEIN — No. 8146 — ARCHITECT — PROFESSIONAL ENGINEER
8/8/11

DES: C.H.
DRN: K.L.B.
CHK: G.C.L.
DECEMBER, 2008

BY	NO.	REVISION	DATE
			12/10

TUNNEL PLAN AND DETAILS

600' SCALE MAP 47 | BLOCK 10, 16, 17, & 18

LITTLE PATUXENT
PARALLEL INTERCEPTOR SEWER
CAPITAL PROJECT S-6175
CONTRACT NO. 20-4532
1ST ELECTION DISTRICT
HOWARD COUNTY, MARYLAND

SCALE AS SHOWN

SHEET 10 OF 27

J:\proj\jobs\1479\1-0\Eng\Plans\Contract 2\AS-BUILT\10-AS-BUILT-Tunnel Plan & Details.dwg, 7/22/2011 9:52:30 AM, TDS600.pc3