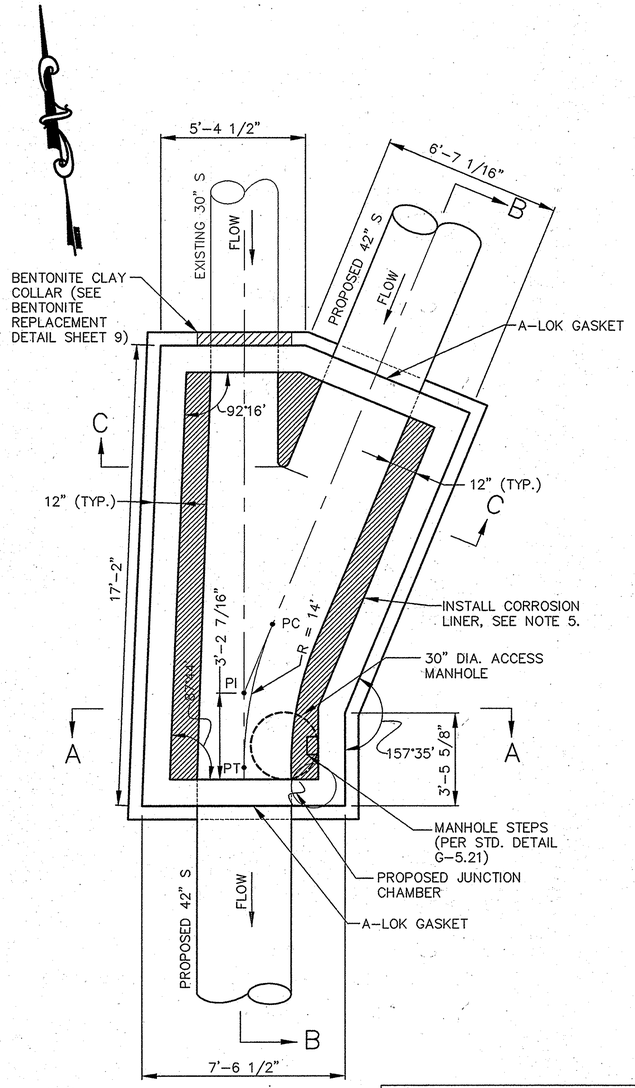

PLAN

3/8"=1'-0"

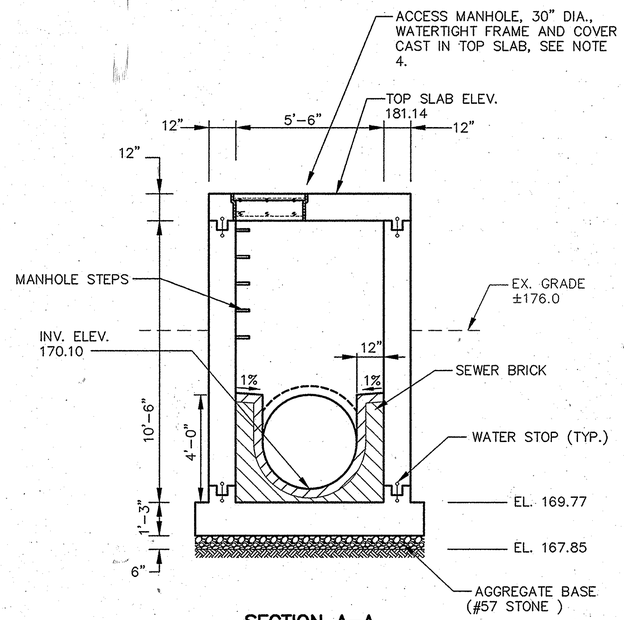

SECTION A-A

3/8"=1'-0"

NOTES:

1. SEE SHEETS 23 AND 24 FOR GRAVITY BYPASS DETAILS.
2. FOR STRUCTURAL DETAILS SEE SHEET 14.
3. A-LOK GASKETS SHALL BE USED AT PIPE ENTRY/EXIT POINTS OF THE DIVERSION STRUCTURE, WHERE INDICATED ON DRAWINGS.
4. MANHOLE FRAME AND COVER SHALL BE PER MODEL B-6077 SOLID LID, FURNISHED BOLTED DOWN AND WATERTIGHT, AS MANUFACTURED BY BARRY PATTERN AND FOUNDRY OR APPROVED EQUAL. CONTRACTOR SHALL SUBMIT SHOP DRAWINGS OF THE FRAME AND COVER FOR APPROVAL.
5. CONTRACTOR SHALL LINE THE INTERIOR OF THE STRUCTURE WITH T-LOCK CORROSION LINER AS MANUFACTURED BY AMERON INTERNATIONAL, OR APPROVED EQUAL.

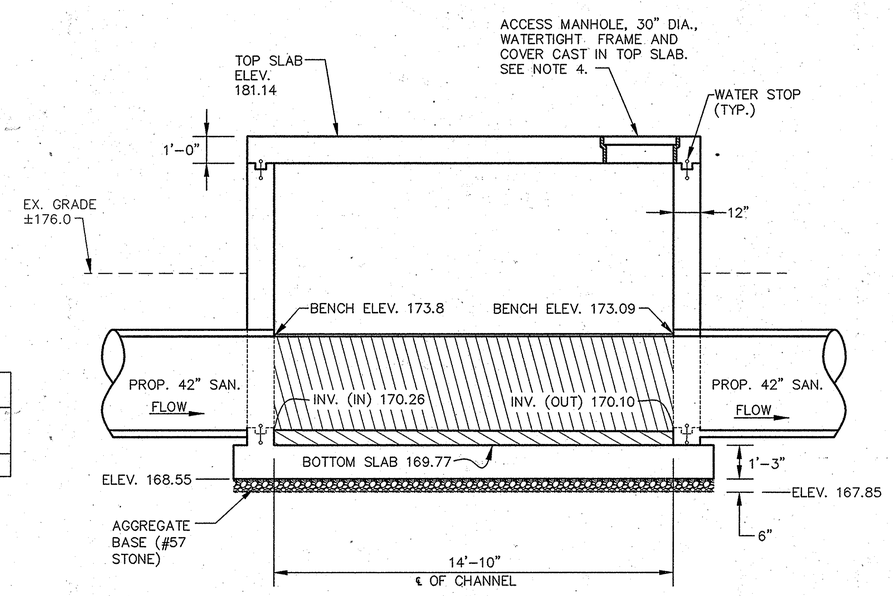

SECTION B-B

3/8"=1'-0"

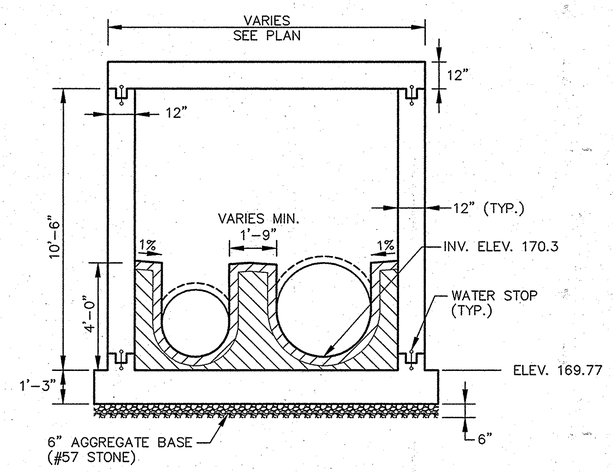

SECTION C-C

3/8"=1'-0"

CURVE DATA				
STATION	RADIUS	TANGENT	LENGTH	INCLUDED ANGLE
CURVE 1	14.0'	2.77'	5.44'	22°24'41"

CURVE STAKEOUT		
	NORTHING	EASTING
PT	N 534493.39	E 1364185.94
PI	N 534594.60	E 1363954.45
PC	N 534573.16	E 1363691.36

PROFESSIONAL CERTIFICATION

I HEREBY CERTIFY THAT THESE DOCUMENTS WERE PREPARED OR APPROVED BY ME, AND THAT I AM A DULY LICENSED PROFESSIONAL ENGINEER UNDER THE LAWS OF THE STATE OF MARYLAND.

LICENSE NO. 8146 EXPIRATION DATE: 10/8/11

AS-BUILT

DEPARTMENT OF PUBLIC WORKS
HOWARD COUNTY, MARYLAND

DIRECTOR OF PUBLIC WORKS — DATE 12/12/08
CHIEF, BUREAU OF ENGINEERING — DATE 12/12/08
CHIEF, BUREAU OF UTILITIES — DATE 12/12/08
CHIEF, UTILITY DESIGN DIVISION — DATE 12/11/08

Patton Harris Rust & Associates, Inc.
Engineers. Surveyors. Planners. Landscape Architects.
PHR+A
8818 Centre Park Drive
Columbia, MD 21045
T 410.997.8900
F 410.997.9282

STATE OF MARYLAND — GARY L. GONZALEZ — NO. 8146 — REGISTERED PROFESSIONAL ENGINEER
8/8/11

DES: C.H.
DRN: K.L.B.
CHK: G.C.L.
DECEMBER, 2008

BY	NO.	REVISION	DATE
R.J.C.		AS-BUILT	12/10

JUNCTION CHAMBER
PLAN & SECTIONS

600' SCALE MAP 47 | BLOCK 10, 16, 17 ,& 18

LITTLE PATUXENT
PARALLEL INTERCEPTOR SEWER
CAPITAL PROJECT S-6175
CONTRACT NO. 20-4532
1ST ELECTION DISTRICT
HOWARD COUNTY, MARYLAND

SCALE AS SHOWN

SHEET 13 OF 27

P:\project\1479410-01\Env\Plans\Contract 2\AS-BUILT\13-AS-BUILT-Junction Chamber Plan & Sections.dwg, 7/18/2011 1:34:38 PM, TDS500.pc3