DETAIL 24 – STABILIZED CONSTRUCTION ENTRANCE

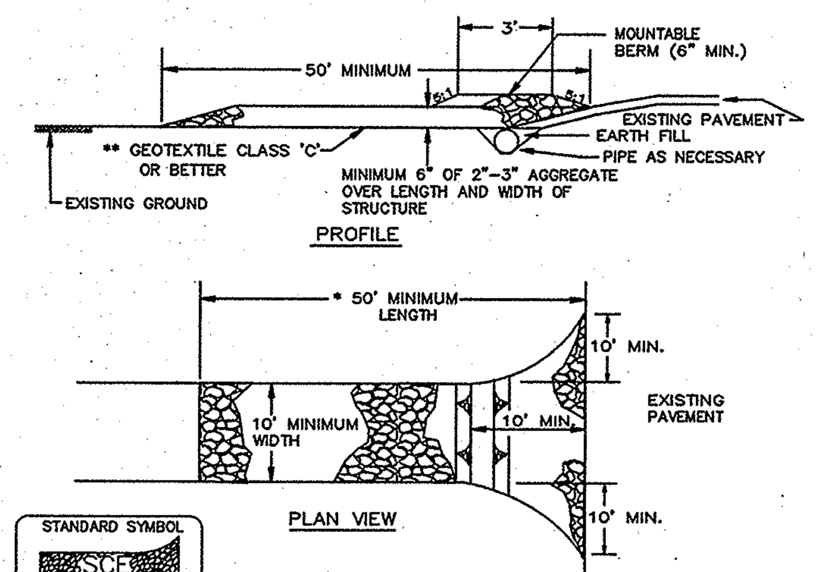

Construction Specification

1. Length – minimum of 50' (*30' for single residence lot).

2. Width – 10' minimum, should be flared at the existing road to provide a turning radius.

3. Geotextile fabric (filter cloth) shall be placed over the existing ground prior to placing stone. **The plan approval authority may not require single family residences to use geotextile.

4. Stone – crushed aggregate (2" to 3") or reclaimed or recycled concrete equivalent shall be placed at least 6" deep over the length and width of the entrance.

5. Surface Water – all surface water flowing to or diverted toward construction entrances shall be piped through the entrance, maintaining positive drainage. Pipe installed through the stabilized construction entrance shall be protected with a mountable berm with 5:1 slopes and a minimum of 6" of stone over the pipe. Pipe has to be sized according to the drainage. When the SCE is located at a high spot and has no drainage to convey a pipe will not be necessary. Pipe should be sized according to the amount of runoff to be conveyed. A 6" minimum will be required.

6. Location – A stabilized construction entrance shall be located at every point where construction traffic enters or leaves a construction site. Vehicles leaving the site must travel over the entire length of the stabilized construction entrance.

U.S. DEPARTMENT OF AGRICULTURE SOIL CONSERVATION SERVICE	PAGE F - 17 - 3	MARYLAND DEPARTMENT OF ENVIRONMENT WATER MANAGEMENT ADMINISTRATION

DETAIL 33 – SUPER SILT FENCE

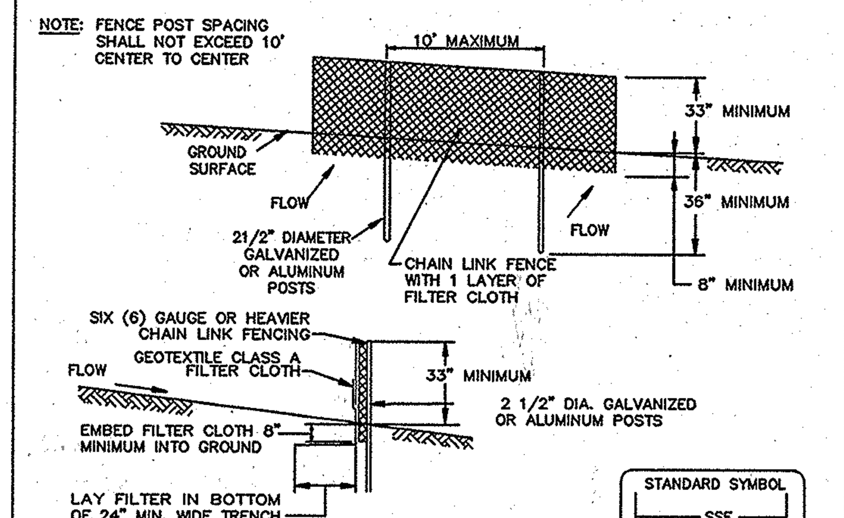

Construction Specifications

1. Fencing shall be 42" in height and constructed in accordance with the latest Maryland State Highway (SHA) Details for Chain Link Fencing. The SHA specifications for a 6 foot fence shall be used, substituting 42" fabric and 6 foot length posts.

2. The posts do not need to be set in concrete.

3. Chain link fence shall be fastened securely to the fence posts with wire ties or staples. The lower tension wire, brace and truss rods, drive anchors and post caps are not required except on the ends of the fence. The chain link fencing shall be six (6) gauge or heavier.

4. Filter cloth shall be fastened securely to the chain link fence with ties spaced every 24" at the top and mid section.

5. Filter cloth shall be embedded a minimum of 8" into the ground.

6. When two sections of geotextile fabric adjoin each other, they shall be overlapped by 6" and folded.

7. Maintenance shall be performed as needed and silt buildups removed when "bulges" develop in the silt fence, or when silt reaches 50% of fence height.

U.S. DEPARTMENT OF AGRICULTURE SOIL CONSERVATION SERVICE	PAGE MODIFIED	MARYLAND DEPARTMENT OF ENVIRONMENT WATER MANAGEMENT ADMINISTRATION

DETAIL 22 – SILT FENCE

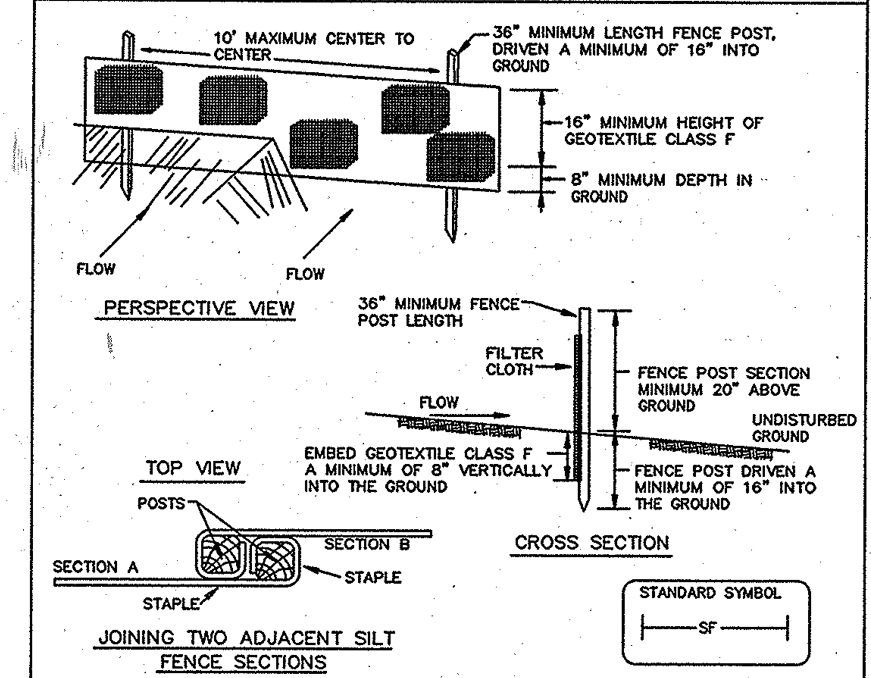

Construction Specifications

1. Fence posts shall be a minimum of 36" long driven 16" minimum into the ground. Wood posts shall be 11/2" x 11/2" square (minimum) cut, or 13/4" diameter (minimum) round and shall be of sound quality hardwood. Steel posts will be standard T or U section weighting not less than 1.00 pond per linear foot.

2. Geotextile shall be fastened securely to each fence post with wire ties or staples at top and mid-section and shall meet the following requirements for Geotextile Class F:

Tensile Strength	50 lbs/in (min.)	Test: MSMT 509
Tensile Modulus	20 lbs/in (min.)	Test: MSMT 509
Flow Rate	0.3 gal ft ²/ minute (max.)	Test: MSMT 322
Filtering Efficiency	75% (min.)	Test: MSMT 322

3. Where ends of geotextile fabric come together, they shall be overlapped, folded and stapled to prevent sediment bypass.

4. Silt Fence shall be inspected after each rainfall event and maintained when bulges occur or when sediment accumulation reached 50% of the fabric height.

U.S. DEPARTMENT OF AGRICULTURE SOIL CONSERVATION SERVICE	PAGE E - 15 - 3	MARYLAND DEPARTMENT OF ENVIRONMENT WATER MANAGEMENT ADMINISTRATION

SILT FENCE

Silt Fence Design Criteria

Slope Steepness	(Maximum) Slope Length	(Maximum) Silt Fence Length
Flatter than 50:1	unlimited	unlimited
50:1 to 10:1	125 feet	1,000 feet
10:1 to 5:1	100 feet	750 feet
5:1 to 3:1	60 feet	500 feet
3:1 to 2:1	40 feet	250 feet
2:1 and steeper	20 feet	125 feet

Note: In areas of less than 2% slope and sandy soils (USDA general classification system, soil Class A) maximum slope length and silt fence length will be unlimited. In these areas a silt fence may be the only perimeter control required.

U.S. DEPARTMENT OF AGRICULTURE SOIL CONSERVATION SERVICE	PAGE E - 15 - 3A	MARYLAND DEPARTMENT OF ENVIRONMENT WATER MANAGEMENT ADMINISTRATION

SUPER SILT FENCE

Design Criteria

Slope	Slope Steepness	Slope Length (maximum)	Silt Fence Length (maximum)
0 – 10%	0 – 10:1	Unlimited	Unlimited
10 – 20%	10:1 – 5:1	200 feet	1,500 feet
20 – 33%	5:1 – 3:1	100 feet	1,000 feet
33 – 50%	3:1 – 2:1	100 feet	500 feet
50% +	2:1 +	50 feet	250 feet

U.S. DEPARTMENT OF AGRICULTURE SOIL CONSERVATION SERVICE	PAGE H - 26 - 3A	MARYLAND DEPARTMENT OF ENVIRONMENT WATER MANAGEMENT ADMINISTRATION

GEOTEXTILE FABRICS

CLASS	APPARENT OPENING SIZE MM. MAX.	GRAB TENSILE STRENGTH LB. MIN.	BURST STRENGTH PSI. MIN.
A	0.30**	250	500
B	0.60	200	320
C	0.30	200	320
D	0.60	90	145
E	0.30	90	145
F(SILT FENCE)	0.40 – 0.80#	90	190

*US STD SIEVE CW-02215 **0.50 mm MAX. FOR SUPER SILT FENCE

The properties shall be determined in accordance with the following procedures:

– Apparent opening size MSMT 323

– Grab tensile strength ASTM D 1682: 4x8" specimen, 1x2" clamps,
12"/min stain rate in both principal directions of geotextile fabric.

– Burst strength ASTM D 3786

The fabric shall be inert to commonly encountered chemicals and hydrocarbons, and will be rot and mildew resistant. It shall be manufactured from fibers consisting of long chin synthetic polymers, and composed of a minimum of 85% by weight of polyolephins, polyesters, or polyamides. The geotextile fabric shall resist deterioration from ultraviolet exposure.

In addition, Classes A through E shall have a 0.01 cm./sec. minimum permeability when tested in accordance with MSMT 507, and an apparent minimum elongation of 20 percent (20%) when tested in accordance with the grab strength requirements listed above.

Silt Fence
Class F geotextile fabrics for silt fence shall have a 50 lb./in. minimum tensile strength and a 20 lb./in. minimum tensile modulus when tested in accordance with MSMT 509. The material shall also have a 0.3 gal./ft.2/min. flow rate and seventy-five percent (75%) minimum filtering efficiency when tested in accordance with MSMT 322.

Geotextile fabrics used in the construction of silt fence shall resist deterioration from ultraviolet exposure. The fabrics shall contain sufficient amounts of ultraviolet ray inhibitors and stabilizers to provide a minimum of 12 months of expected usable construction life at a temperature range of 0 to 120 degrees F.

Maryland Department of the Environment
Best Management Practices for Working in Nontidal Wetlands, the Nontidal Wetland Buffer, Waters of the State and the 100-Year Floodplain

1. No excess fill, construction material, or debris shall be stockpiled or stored in nontidal wetlands, nontidal wetland buffers, waterways, or the 100-year floodplain.
2. Place materials in a location and manner that does not adversely impact surface or subsurface water flow into or out of nontidal wetlands, nontidal wetland buffers, waterways, or the 100-year floodplain.
3. Do not use the excavated material as backfill if it contains waste metal products, unsightly debris, toxic material, or any other deleterious substance. If additional backfill is required, use clean material free of waste metal products, unsightly debris, toxic material, or any other deleterious substance.
4. Place heavy equipment on mats or suitably operate the equipment to prevent damage to nontidal wetlands, nontidal wetland buffers, waterways, or the 100-year floodplain.
5. Repair and maintain any serviceable structure or fill so there is no permanent loss of nontidal wetlands, nontidal wetland buffers, or waterways, or permanent modification of the 100-year floodplain in excess of that lost under the originally authorized structure or fill.
6. Rectify any nontidal wetlands, wetland buffers, waterways, or 100-year floodplain temporarily impacted by any construction.
7. All stabilization in the nontidal wetland and nontidal wetland buffer shall consist of the following species: Annual Ryegrass (*Lolium multiflorum*), Millet (*Setaria italica*), Barley (*Hordeum sp.*), Oats (*Uniola sp.*), and/or Rye (*Secale cereale*). These species will allow for the stabilization of the site while also allowing for the voluntary revegetation of natural wetland species. Other non-persistent vegetation may be acceptable, but must be approved by the Nontidal Wetlands and Waterways Division. **Kentucky 31 fescue shall not be utilized in wetland or buffer areas**. The area should be seeded and mulched to reduce erosion after construction activities have been completed.
8. After installation has been completed, make post-construction grades and elevations the same as the original grades and elevations in temporarily impacted areas.
9. To protect aquatic species, in-stream work is prohibited as determined by the classification of the stream:

   Use I waters: In-stream work shall not be conducted during the period March 1 through June 15, inclusive, during any year.
10. Stormwater runoff from impervious surfaces shall be controlled to prevent the washing of debris into the waterway.
11. Culverts shall be constructed and any riprap placed so as not to obstruct the movement of aquatic species, unless the purpose of the activity is to impound water.

DETAIL 21 – PORTABLE SEDIMENT TANK

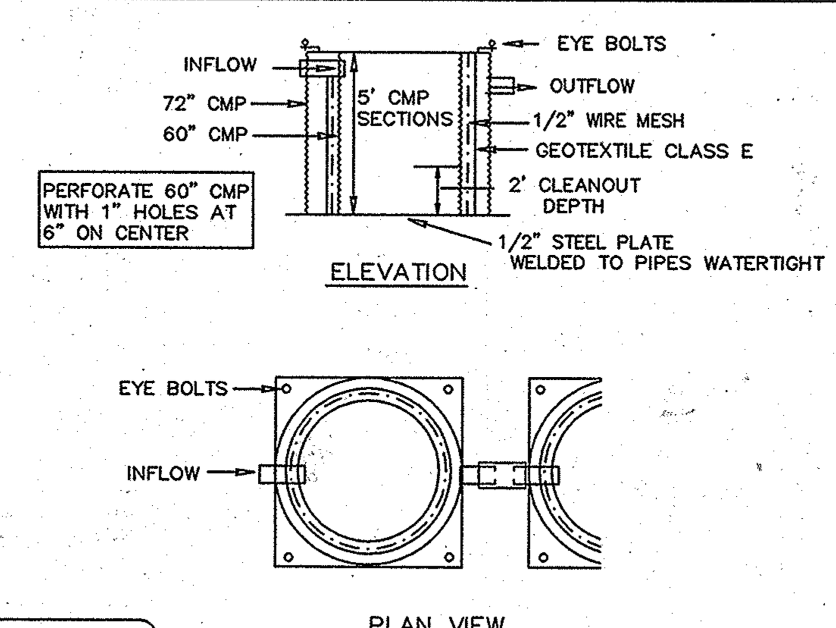

Construction Specifications

1. The following formula should be used in determining the storage volume of the sediment tank: 1 cubic foot of storage for each gallon per minute of pump discharge capacity.

2. An example of a typical sediment tank is shown above. Other container designs can be used if the storage volume is adequate and approval is obtained from the local approving agency.

3. Tanks may be connected in series.

U.S. DEPARTMENT OF AGRICULTURE SOIL CONSERVATION SERVICE	PAGE D - 14 - 2	MARYLAND DEPARTMENT OF ENVIRONMENT WATER MANAGEMENT ADMINISTRATION

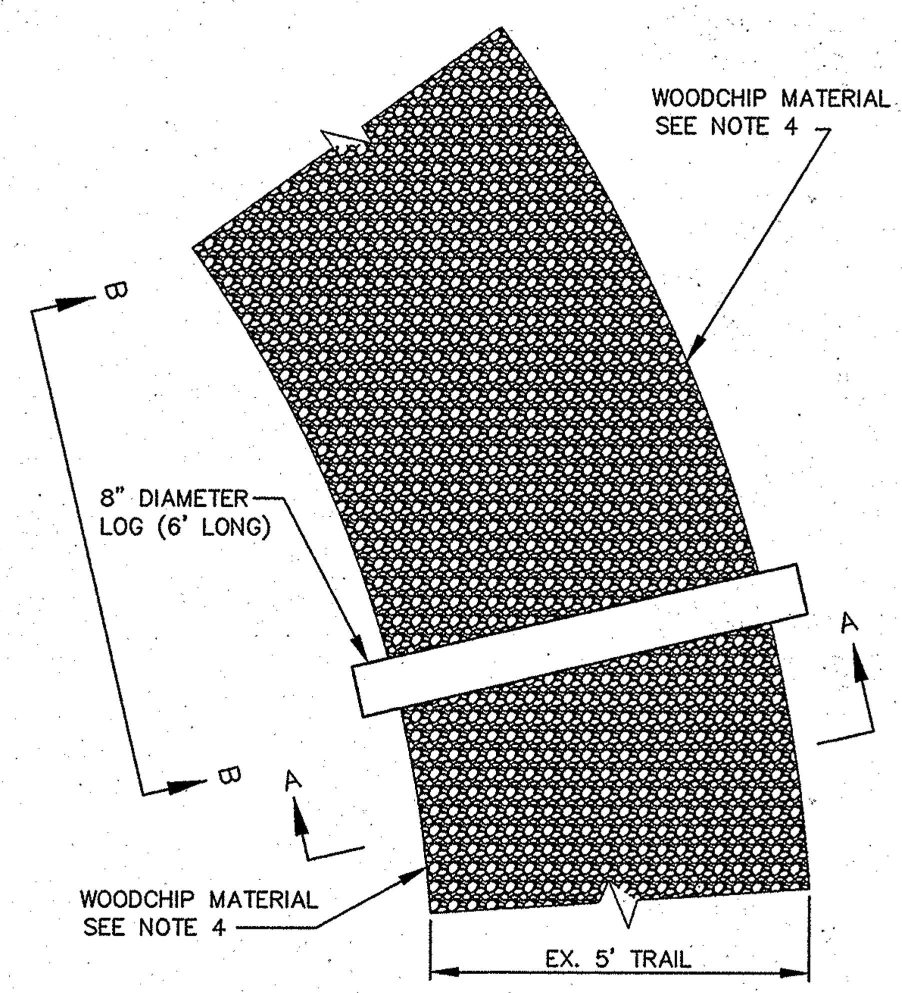

PLAN
NOT TO SCALE

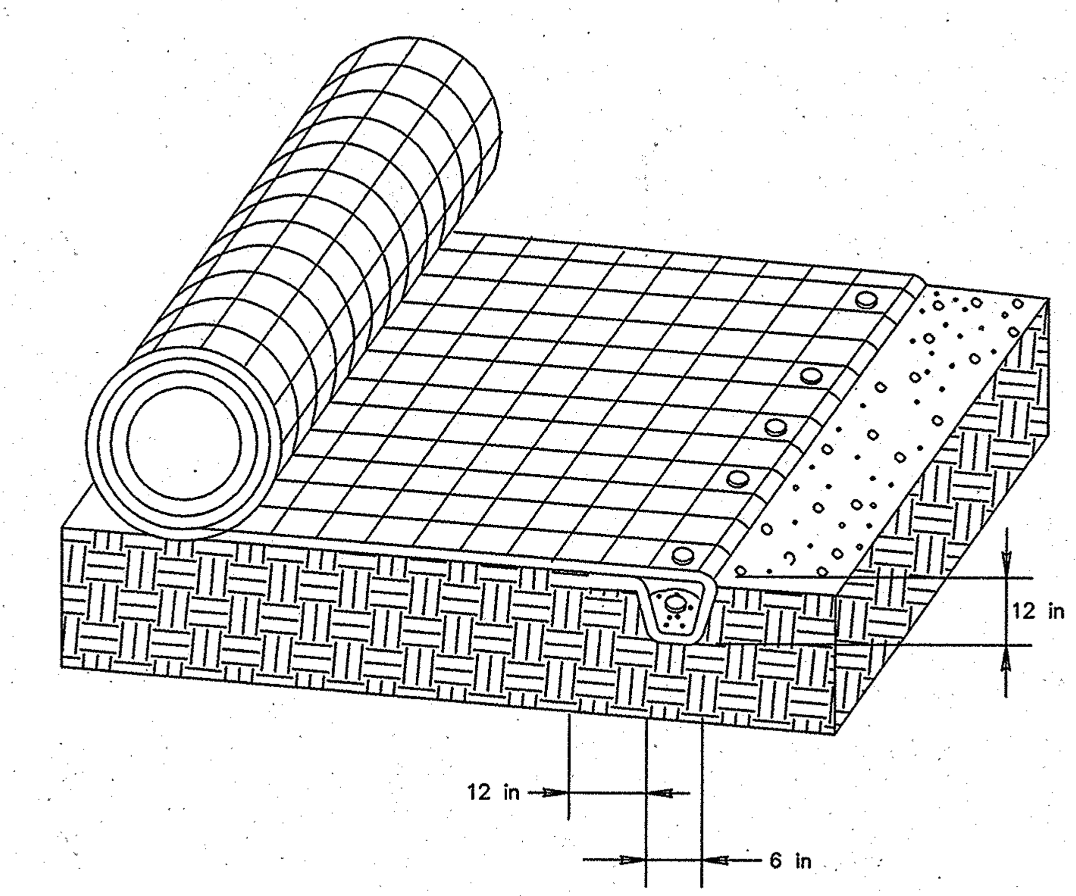

EROSION CONTROL MATTING ANCHOR TRENCH
NOT TO SCALE

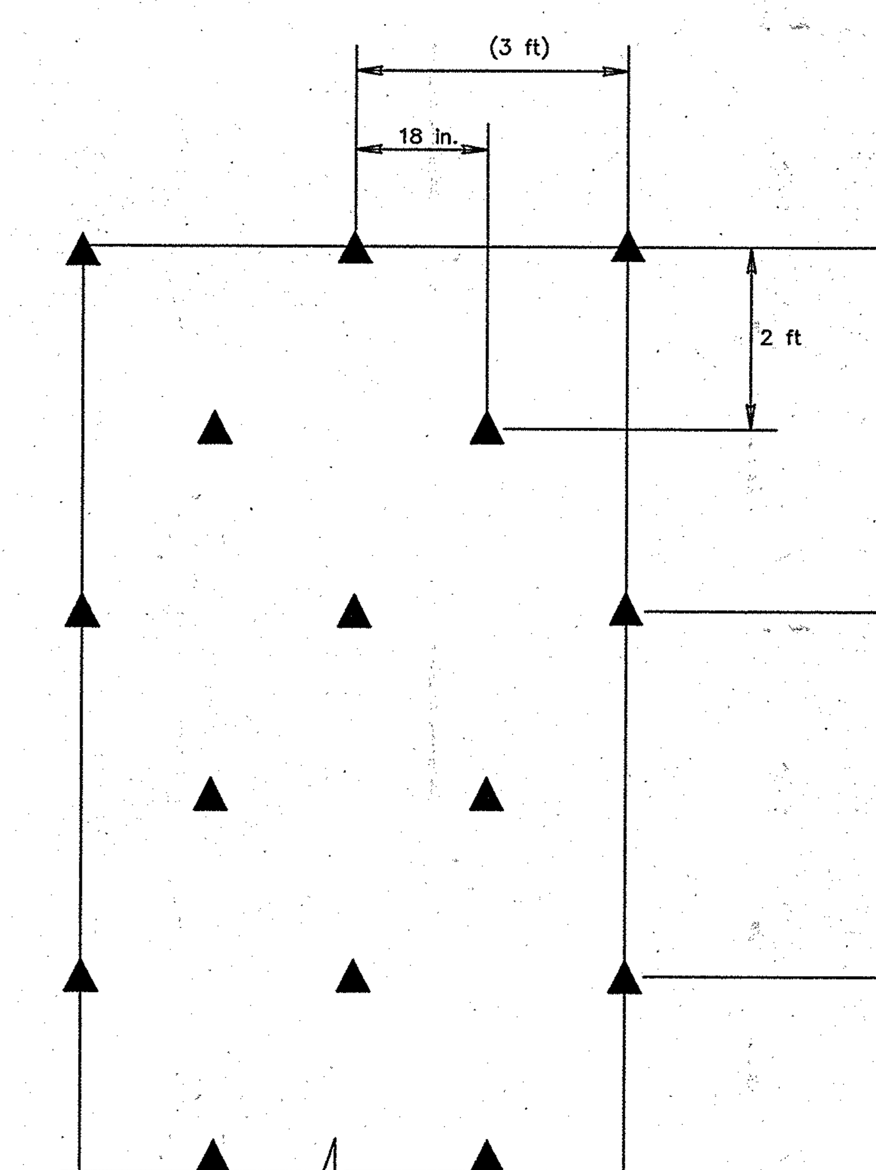

NOTES:
1. ANCHOR PATTERN (2 ANCHORS /Yd^2)
2. U-SHAPED WIRE STAPLES, METAL GEOTEXTILE PINS, TRIANGULAR WOODEN OR PLASTIC STAKES CAN BE USED TO ANCHOR TRMs TO THE GROUND SURFACE
3. CONTRACTOR SHALL INSTALL AND ANCHOR EROSION CONTROL MATTING PER MANUFACTURERS RECOMMENDATIONS AND GUIDELINES.

EROSION CONTROL MATTING ANCHOR PATTERN
NOT TO SCALE

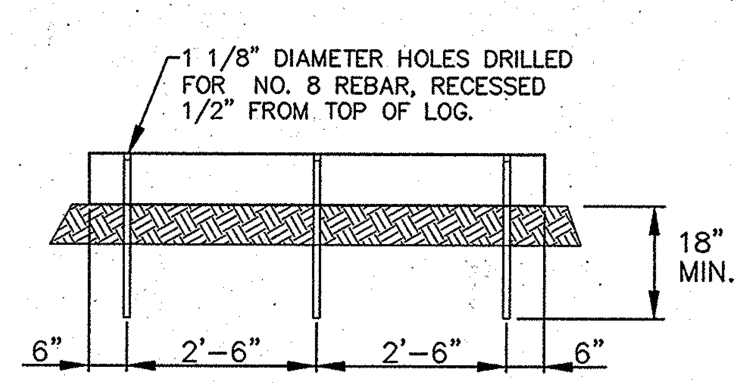

SECTION A–A
NOT TO SCALE

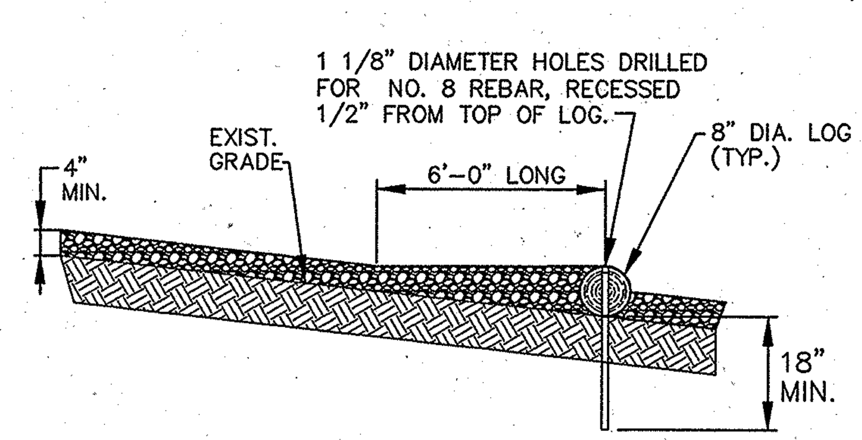

SECTION B–B
NOT TO SCALE

NOTES:
1. LOGS TO BE PERPENDICULAR TO TRAIL.
2. BARK TO BE REMOVED FROM LOGS PRIOR TO INSTALLATION
3. LOG BARRIERS SHALL BE INSTALLED AS DIRECTED BY THE ENGINEER.
4. DEPTH OF WOODCHIPS SHALL VARY FROM 4" MIN. TO 8" MAX.

WOODCHIP TRAIL WITH LOG BARRIER
NOT TO SCALE

PROFESSIONAL CERTIFICATION

I HEREBY CERTIFY THAT THESE DOCUMENTS WERE PREPARED OR APPROVED BY ME, AND THAT I AM A DULY LICENSED PROFESSIONAL ENGINEER UNDER THE LAWS OF THE STATE OF MARYLAND.

LICENSE NO. 8146 EXPIRATION DATE: 10/8/11

AS-BUILT

DEPARTMENT OF PUBLIC WORKS
HOWARD COUNTY, MARYLAND

DIRECTOR OF PUBLIC WORKS — DATE 12/12/08	CHIEF, BUREAU OF ENGINEERING — DATE 12/12/08
CHIEF, BUREAU OF UTILITIES — DATE 12/12/08	CHIEF, UTILITY DESIGN DIVISION — DATE 12/11/08

Patton Harris Rust & Associates, Inc.
Engineers. Surveyors. Planners. Landscape Architects.
PHR+A
8818 Centre Park Drive
Columbia, MD 21045
T 410.997.8900
F 410.997.9282

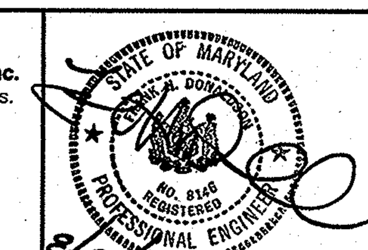

DES: C.H.			
DRN: K.L.B.			
CHK: G.C.L.			12/10
DECEMBER, 2008	BY NO.	REVISION	DATE

SEDIMENT & EROSION CONTROL DETAILS

600' SCALE MAP 47 | BLOCK 10, 16, 17, & 18

LITTLE PATUXENT PARALLEL INTERCEPTOR SEWER
CAPITAL PROJECT S-6175
CONTRACT NO. 20-4532
1ST ELECTION DISTRICT
HOWARD COUNTY, MARYLAND

SCALE AS SHOWN

SHEET 22 OF 27

P:\project\14794\1-0\Env\Plans\Contract 2\AS-BUILT\22--AS-BUILTY-Sediment & Erosion Control Notes & Details.dwg, 7/20/2011 3:40:32 PM, TDS600.pc3