NOTES:

1. CONCRETE SHALL HAVE A COMPRESSIVE STRENGTH OF 4,000 psi @ 28 DAYS.
2. STEEL SHALL HAVE A YIELD STRENGTH OF 60,000 psi.
3. STEEL REINFORCING SHALL HAVE A MINIMUM CLEARANCE OF 2" AND SHALL CONFORM TO ASTM A615, GRADE 60.
4. LAP LENGTH SHALL HAVE BE A MINIMUM OF 24".

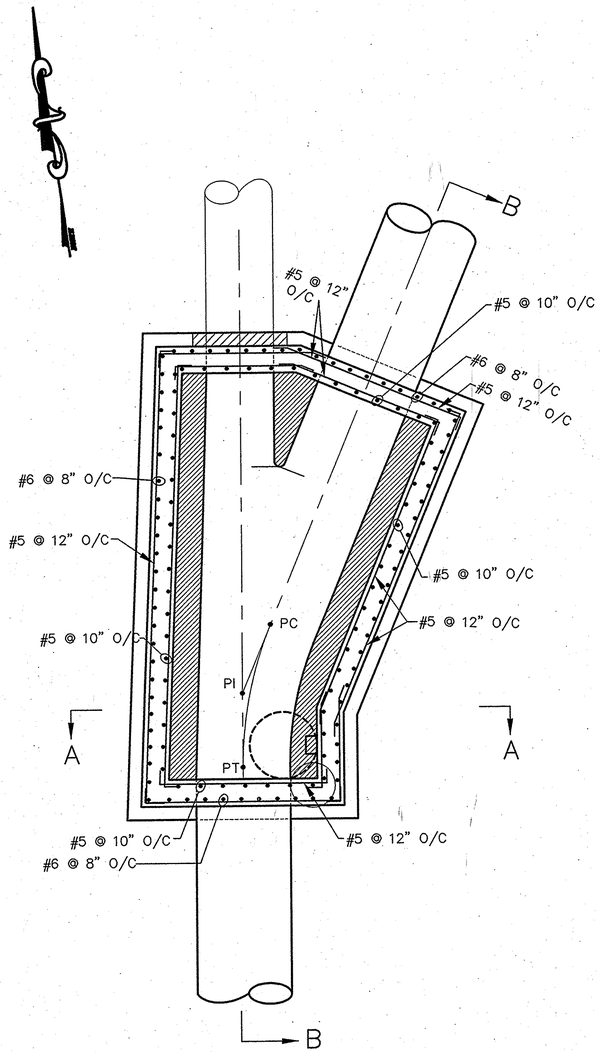

PLAN

3/8"=1'-0"

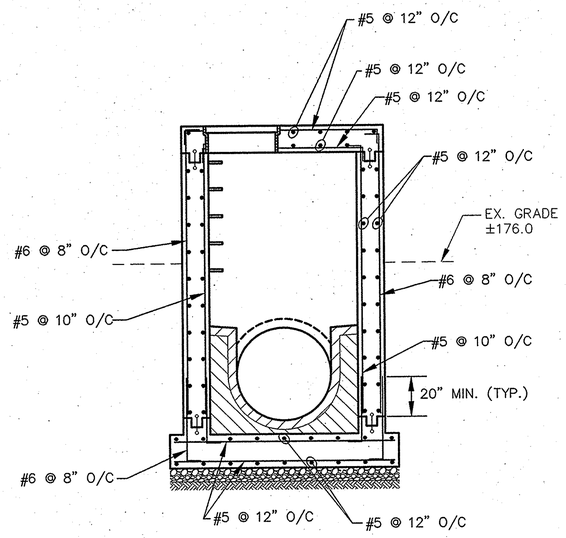

SECTION A–A

3/8"=1'-0"

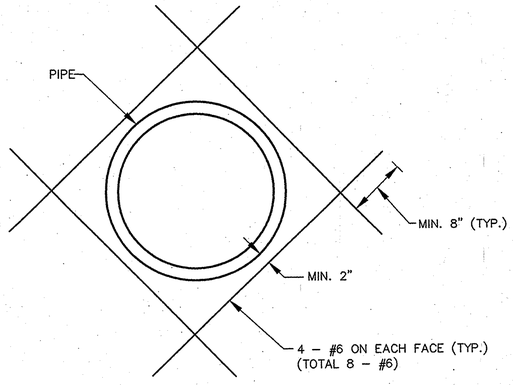

DETAIL 1 – PIPE OPENING IN WALL

NOT TO SCALE

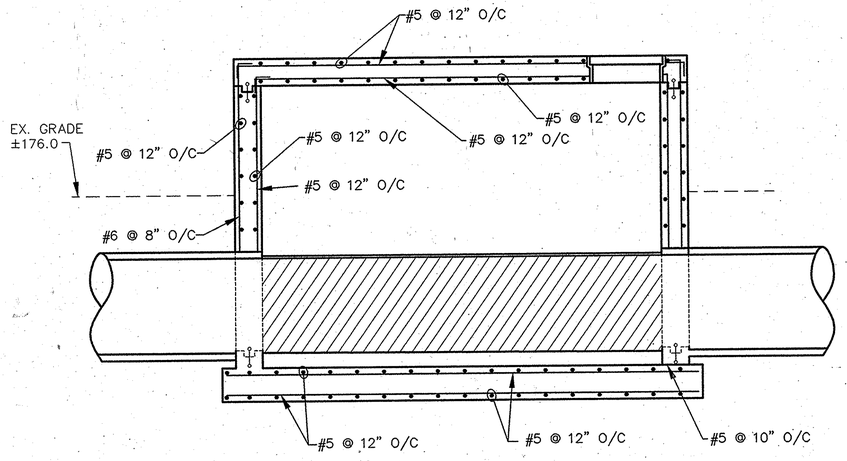

SECTION B–B

3/8"=1'-0"

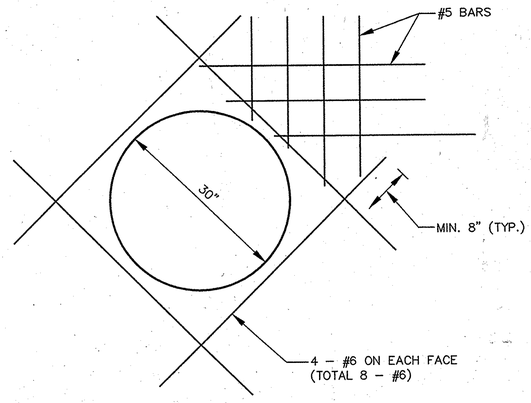

DETAIL 2 – MANHOLE OPENING

NOT TO SCALE

PROFESSIONAL CERTIFICATION

I HEREBY CERTIFY THAT THESE DOCUMENTS WERE PREPARED OR APPROVED BY ME, AND THAT I AM A DULY LICENSED PROFESSIONAL ENGINEER UNDER THE LAWS OF THE STATE OF MARYLAND.

LICENSE NO. 8146 EXPIRATION DATE: 10/8/11

AS–BUILT

DEPARTMENT OF PUBLIC WORKS
HOWARD COUNTY, MARYLAND

DIRECTOR OF PUBLIC WORKS — DATE 12/16/08
CHIEF, BUREAU OF ENGINEERING — DATE 12/12/08
CHIEF, BUREAU OF UTILITIES — DATE 12/12/08
CHIEF, UTILITY DESIGN DIVISION — DATE 12/11/08

Patton Harris Rust & Associates, Inc.
Engineers. Surveyors. Planners. Landscape Architects.
8818 Centre Park Drive
Columbia, MD 21045
T 410.997.8900
F 410.997.9282

PHR+A

STATE OF MARYLAND — GARY L. GOODRICH — NO. 8146 — REGISTERED PROFESSIONAL ENGINEER — 8/8/11

DES: C.H.			
DRN: K.L.B.			
CHK: G.C.L.			
DECEMBER, 2008	R.J.C.	AS–BUILT	12/10
	BY NO.	REVISION	DATE

JUNCTION CHAMBER
STRUCTURAL DETAILS

600' SCALE MAP 47 | BLOCK 10, 16, 17 ,& 18

LITTLE PATUXENT
PARALLEL INTERCEPTOR SEWER
CAPITAL PROJECT S–6175
CONTRACT NO. 20–4532
1ST ELECTION DISTRICT
HOWARD COUNTY, MARYLAND

SCALE AS SHOWN

SHEET 14 OF 27

J:\proj\ect\1479-41-01\Env\Plans\Contract 2\AS-BUILT\14-AS-BUILT-Junction Chamber Structural Details.dwg, 7/19/2011 1:59:57 PM, TD5600.pc3