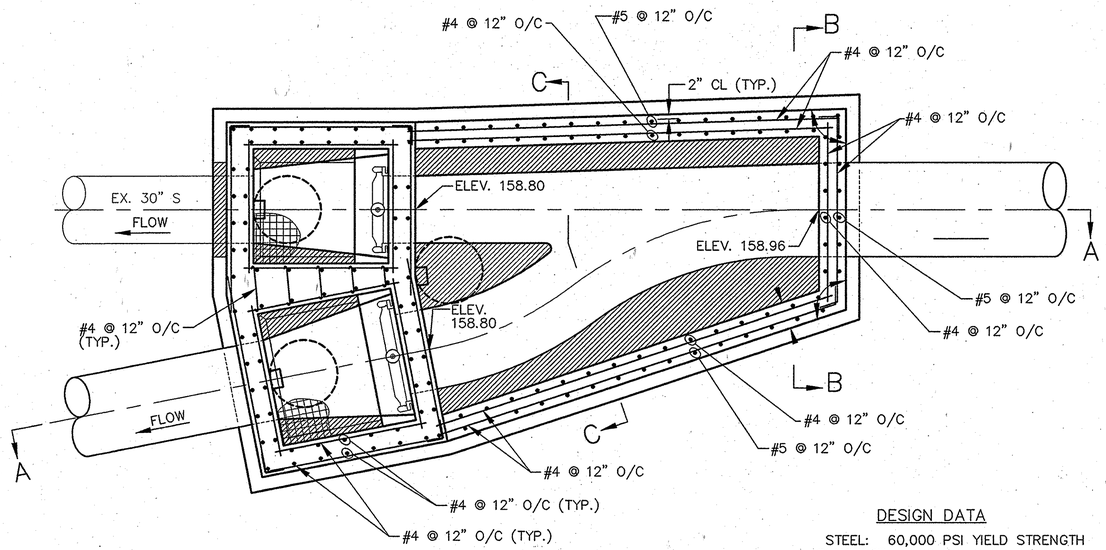

PLAN

3/8"=1'-0"

DESIGN DATA

STEEL: 60,000 PSI YIELD STRENGTH
CONCRETE: 4,000 PSI @ 28 DAYS.

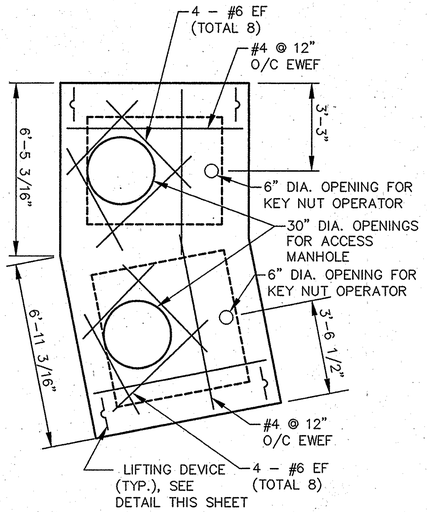

PLAN – REMOVABLE TOP SLAB

3/8"=1'-0"

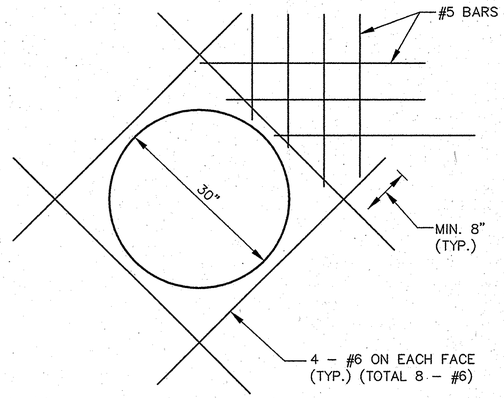

DETAIL 3 – MANHOLE OPENING

NOT TO SCALE

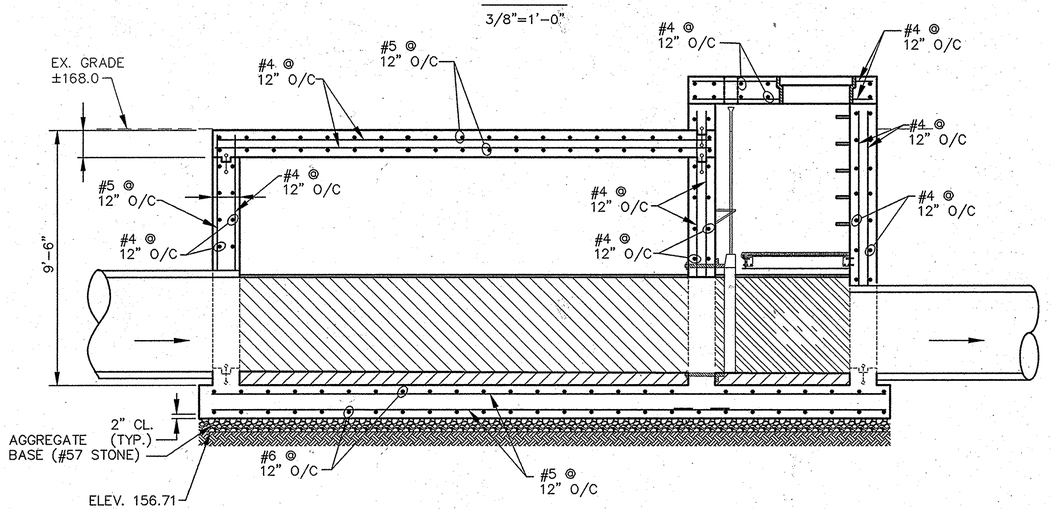

SECTION A–A

3/8"=1'-0"

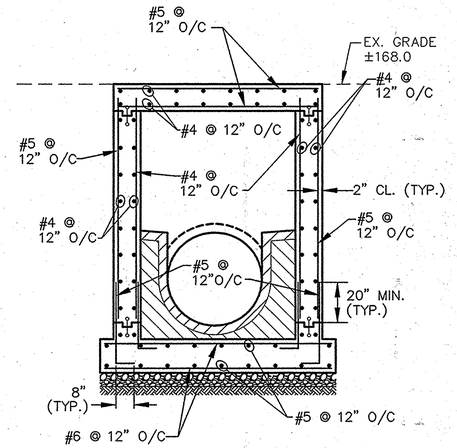

SECTION B–B

3/8"=1'-0"

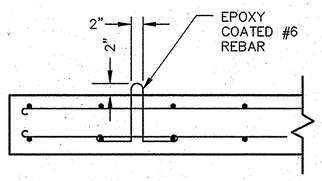

DETAIL 2 – LIFTING DEVICE

NOT TO SCALE

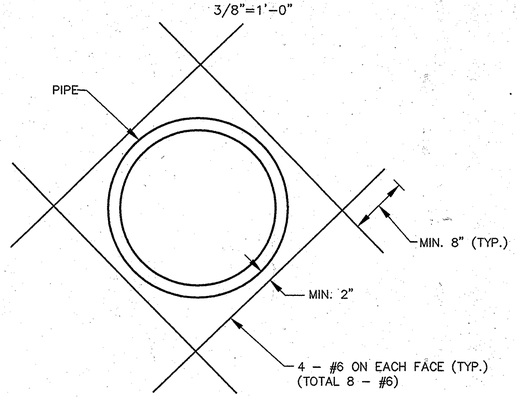

DETAIL 1 – PIPE OPENING IN WALL

NOT TO SCALE

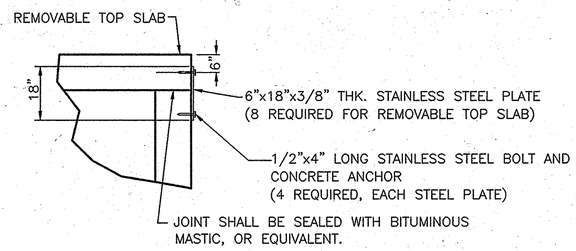

CONNECTION DETAIL

NOT TO SCALE

NOTES:

1.) CONCRETE SHALL HAVE A COMPRESSIVE STRENGTH OF 4,000 psi @ 28 DAYS.

2.) STEEL SHALL HAVE A YIELD STRENGTH OF 60,000 psi.

3.) STEEL REINFORCING SHALL HAVE A MINIMUM CLEARANCE OF 2" AND SHALL CONFORM TO ASTM A615, GRADE 60.

4.) LAP LENGTH SHALL HAVE BE A MINIMUM OF 20".

AS–BUILT

PROFESSIONAL CERTIFICATION

I HEREBY CERTIFY THAT THESE DOCUMENTS WERE PREPARED OR APPROVED BY ME, AND THAT I AM A DULY LICENSED PROFESSIONAL ENGINEER UNDER THE LAWS OF THE STATE OF MARYLAND.

LICENSE NO. 8146 EXPIRATION DATE: 10/8/11

DEPARTMENT OF PUBLIC WORKS
HOWARD COUNTY, MARYLAND

DIRECTOR OF PUBLIC WORKS — DATE 12/16/08 — CHIEF, BUREAU OF ENGINEERING — DATE 12/12/08

CHIEF, BUREAU OF UTILITIES — DATE 12/12/08 — CHIEF, UTILITY DESIGN DIVISION — DATE 12/11/08

Patton Harris Rust & Associates, Inc.
Engineers. Surveyors. Planners. Landscape Architects.
8818 Centre Park Drive
Columbia, MD 21045
T 410.997.8900
F 410.997.9282

PHR+A

STATE OF MARYLAND — KEVIN G. DONOVAN — NO. 8146 — REGISTERED PROFESSIONAL ENGINEER — 8/8/11

DES:	C.H.
DRN:	K.L.B.
CHK:	G.C.L.
DECEMBER, 2008	

BY	NO.	REVISION	DATE
R.J.C.		AS–BUILT	12/10

DIVERSION STRUCTURE
STRUCTURAL DETAILS

600' SCALE MAP 47 — BLOCK 10, 16, 17 ,& 18

LITTLE PATUXENT
PARALLEL INTERCEPTOR SEWER
CAPITAL PROJECT S–6175
CONTRACT NO. 20–4532
1ST ELECTION DISTRICT
HOWARD COUNTY, MARYLAND

SCALE AS SHOWN

SHEET 12 OF 27

I:\projects\479911-01\Dwg\Plans\Contract 2\AS-BUILT\12-AS-BUILT-Diversion Structure Structural Details.dwg, 7/18/2011 1:23:57 PM, TD5500.pc3