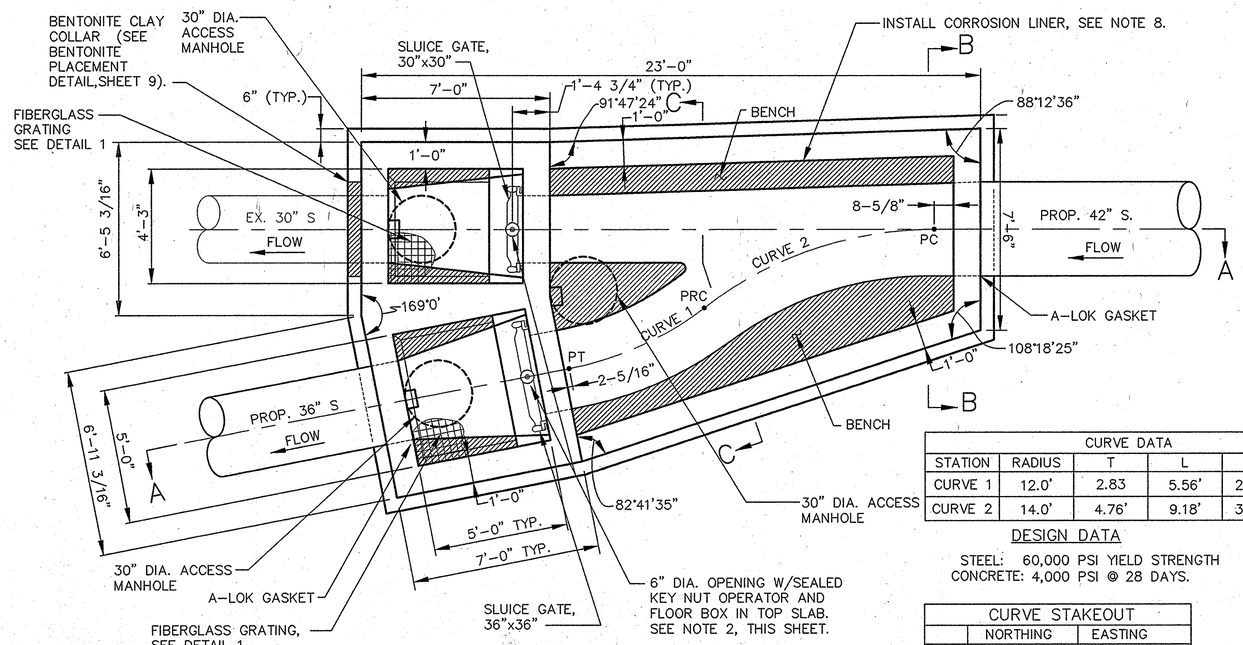

PLAN

3/8"=1'-0"

CURVE DATA				
STATION	RADIUS	T	L	Δ
CURVE 1	12.0'	2.83	5.56'	26°-35'-18"
CURVE 2	14.0'	4.76'	9.18'	37°-35'-18"

DESIGN DATA

STEEL: 60,000 PSI YIELD STRENGTH
CONCRETE: 4,000 PSI @ 28 DAYS.

CURVE STAKEOUT		
	NORTHING	EASTING
PT	534713.05	1360319.50
PRC	534711.69	1360314.14
PC	534710.35	1360305.22

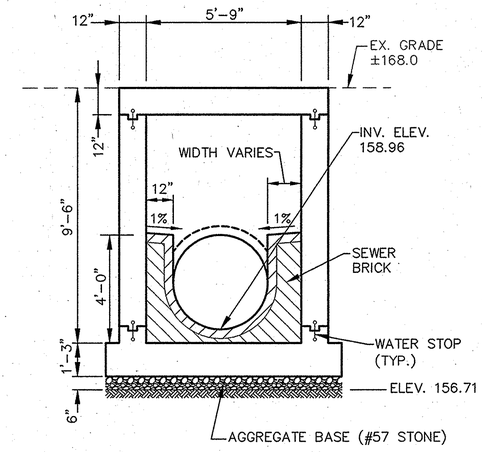

SECTION B-B

3/8"=1'-0"

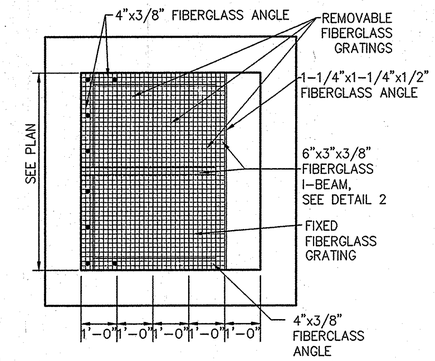

DETAIL-1

NOT TO SCALE

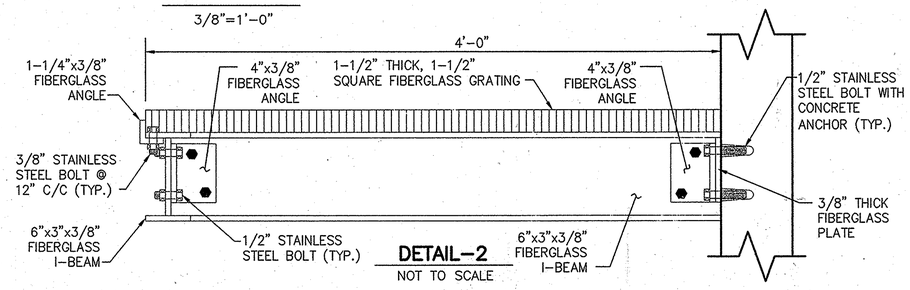

DETAIL-2

NOT TO SCALE

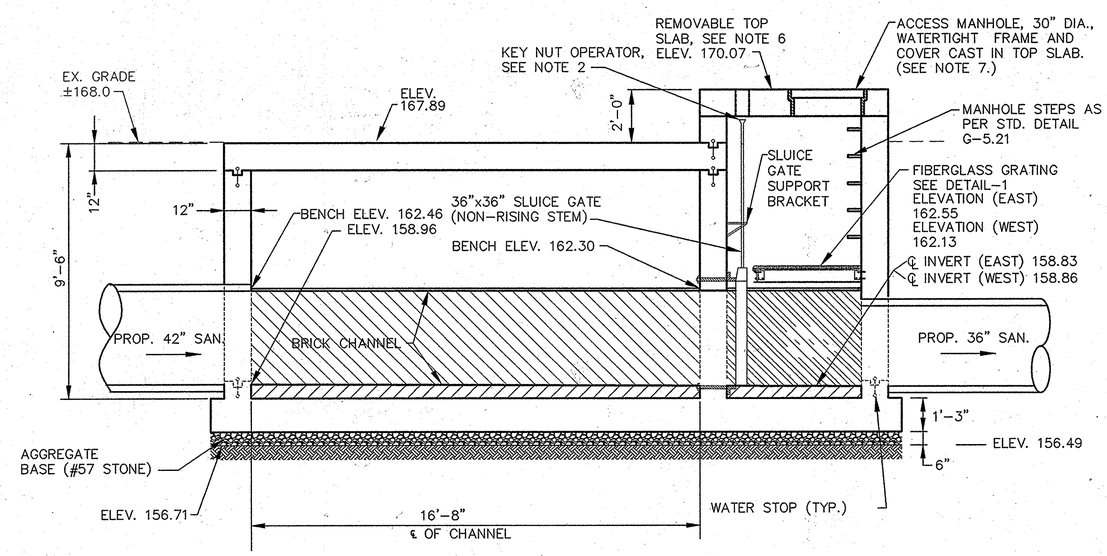

SECTION A-A

3/8"=1'-0"

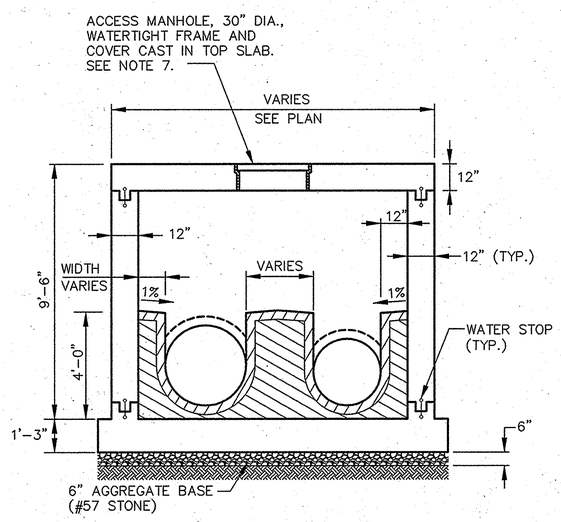

SECTION C-C

3/8"=1'-0"

NOTES:

1. SEE SHEETS 23 AND 24 FOR GRAVITY BYPASS DETAILS.
2. GROUND LEVEL POSITION INDICATOR SHALL BE A SEALED UNIT WITH A STAINLESS STEEL FLOOR BOX. KEY NUT OPERATOR AND OPERATOR AND POSITION INDICATOR SHALL BE GPI-S SERIES AS MANUFACTURED BY DYNATORQUE, INC., OR APPROVED EQUAL.
3. FOR STRUCTURAL DETAILS SEE SHEET 12.
4. A-LOK GASKETS SHALL BE USED AT PIPE ENTRY/EXIT POINTS OF THE DIVERSION STRUCTURE, WHERE INDICATED ON DRAWINGS.
5. SLUICE GATES SHALL BE FONTAINE SERIES 20 MODEL 202-WALL MOUNTED (COMPLETED WITH WALL THIMBLE) AND NON-RISING STEM (NR1) OR APPROVED EQUAL.
6. TOP SLABS ABOVE SLUICE GATES SHALL BE REMOVABLE. LIFT HOOKS SHALL BE INSTALLED IN TOP SLABS, SEE DETAIL 2 SHEET 12. JOINT BETWEEN TOP SLAB AND WALLS SHALL BE SEALED WITH A BITUMINOUS MASTIC OR EQUIVALENT.
7. MANHOLE FRAME AND COVER SHALL BE PER MODEL B-6077 SOLID LID, FURNISHED BOLTED DOWN AND WATERTIGHT, AS MANUFACTURED BY BARRY PATTERN AND FOUNDRY OR APPROVED EQUAL. CONTRACTOR SHALL SUBMIT SHOP DRAWINGS OF THE FRAME AND COVER FOR APPROVAL.
8. CONTRACTOR SHALL LINE THE INTERIOR OF THE STRUCTURE WITH T-LOCK CORROSION LINER AS MANUFACTURED BY AMERON INTERNATIONAL, OR APPROVED EQUAL.

PROFESSIONAL CERTIFICATION

I HEREBY CERTIFY THAT THESE DOCUMENTS WERE PREPARED OR APPROVED BY ME, AND THAT I AM A DULY LICENSED PROFESSIONAL ENGINEER UNDER THE LAWS OF THE STATE OF MARYLAND.

LICENSE NO. 8146 EXPIRATION DATE: 10/8/11

AS-BUILT

DEPARTMENT OF PUBLIC WORKS
HOWARD COUNTY, MARYLAND

DIRECTOR OF PUBLIC WORKS — DATE 12/12/08 — CHIEF, BUREAU OF ENGINEERING — DATE 12/12/08
CHIEF, BUREAU OF UTILITIES — DATE 12/12/08 — CHIEF, UTILITY DESIGN DIVISION — DATE 12/11/08

Patton Harris Rust & Associates, Inc.
Engineers. Surveyors. Planners. Landscape Architects.
8818 Centre Park Drive
Columbia, MD 21045
T 410.997.8900
F 410.997.9282

DES: C.H.
DRN: K.L.B.
CHK: G.C.L.
DECEMBER, 2008

BY	NO.	REVISION	DATE
R.J.C.		AS-BUILT	12/10

DIVERSION STRUCTURE
PLAN & SECTIONS

600' SCALE MAP 47 — BLOCK 10, 16, 17 ,& 18

LITTLE PATUXENT
PARALLEL INTERCEPTOR SEWER
CAPITAL PROJECT S-6175
CONTRACT NO. 20-4532
1ST ELECTION DISTRICT
HOWARD COUNTY, MARYLAND

SCALE AS SHOWN

SHEET 11 OF 27