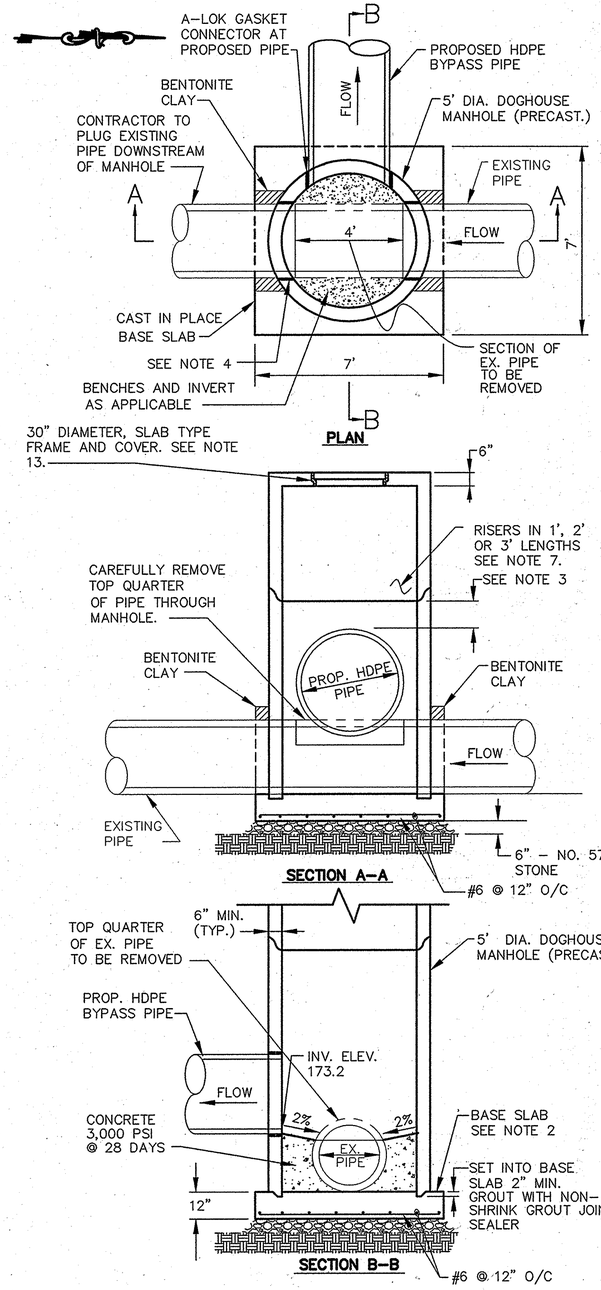

TEMPORARY DOGHOUSE MANHOLE, MH-3 ON EXISTING 27"S

NOT TO SCALE

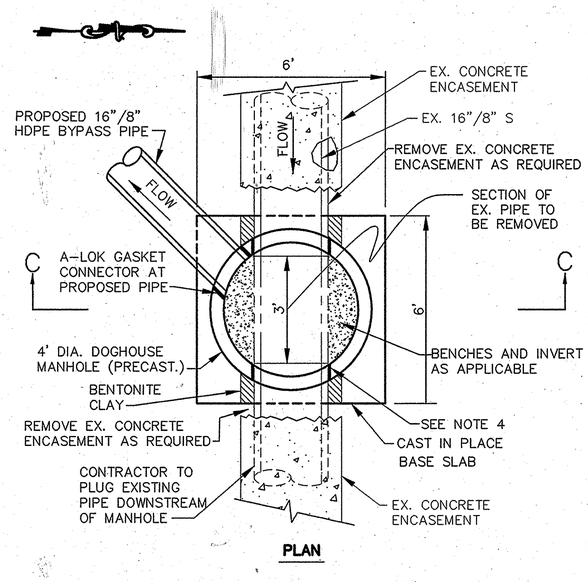

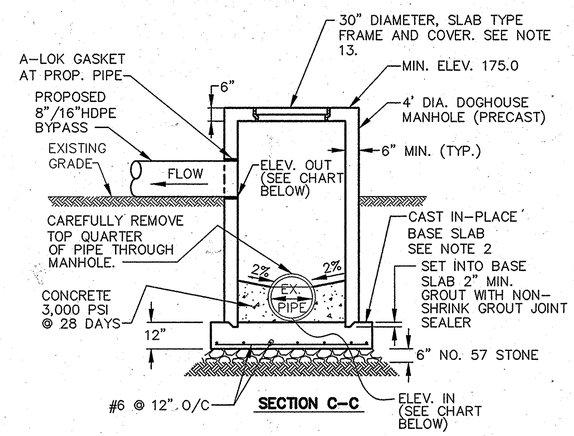

TEMPORARY DOGHOUSE MANHOLES (MH-1 & MH-2)

NOT TO SCALE

MH	ELEV. (OUT)	ELEV. (IN)
MH-1	170.0	165.3
MH-2	170.0	164.6

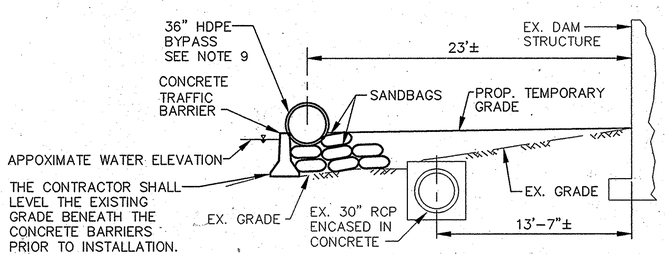

SECTION AT TEMPORARY SANDBAG/CONCRETE BARRIER

SCALE: 1" = 5'

GENERAL NOTES:

1.) PRECAST MANHOLE RISERS SHALL BE FURNISHED AS PER HOWARD COUNTY DETAIL G-5.13.

2.) CONCRETE: BASE SLAB – COMPRESSIVE STRENGTH OF 3,000 PSI @ 28 DAYS (POURED-IN PLACE.) DOGHOUSE RISER – COMPRESSIVE STRENGTH OF 4,000 PSI @ 28 DAYS (PRECAST.)

3.) PROVIDE 12" MINIMUM CLEARANCE FROM PROPOSED PIPE AND FROM DOGHOUSE OPENING TOP(S) TO RISER JOINT.

4.) MINIMUM 1" CLEARANCE SHALL BE MAINTAINED BETWEEN PIPES AND PRECAST DOGHOUSE PIPE OPENINGS. OPENINGS SHALL BE GROUTED WITH NON-SHRINK GROUT JOINT FILLER.

5.) ALL REINFORCING STEEL SHALL CONFORM TO ASTM A-615, GRADE 60.

6.) PRECAST MANHOLE RISER JOINTS: THE MANUFACTURER SHALL FORM MALE AND FEMALE ENDS OF JOINTS USING THEIR WON DESIGN. THE JOINTS SHALL BE SEALED BY THE CONTRACTOR AND MADE WATER TIGHT USING THE MANUFACTURERS RECOMMENDED ASTM OR ASSHTO APPROVED SEALANT.

7.) THE CONTRACTOR SHALL BE RESPONSIBLE FOR DESIGNING, FURNISHING, INSTALLING, OPERATING AND MAINTAINING THE BYPASS SYSTEM, AS PER THE SPECIFICATIONS.

8.) THE CONTRACTOR SHALL BE RESPONSIBLE FOR INCLUDING PAYMENT OF PENALTIES, FOR ANY VIOLATIONS AND SPILLAGE OF SEWAGE.

9.) THE CONTRACTOR SHALL SUPPORT AND ANCHOR THE PIPE TO PREVENT FLOTATION AND MOVEMENT DURING BYPASS OPERATIONS. CONTRACTOR SHALL ALSO ENSURE THAT PIPE MOVEMENT WILL NOT OCCUR AT THE MANHOLE CONNECTION. CONTRACTOR SHALL SUBMIT SHOP DRAWINGS AND DESIGN TO HOWARD COUNTY FOR APPROVAL PRIOR TO CONSTRUCTION. PRIOR TO ACCEPTING FLOWS, THE BYPASS SYSTEM SHALL BE INSPECTED & APPROVED BY THE COUNTY.

10.) CONTRACTOR SHALL VERIFY OUTSIDE DIAMETER AND MATERIAL OF THE EXISTING 16" AND 8" LATERALS PRIOR TO ORDERING MATERIAL.

11.) AFTER THE PROP. SEWER IS COMPLETED, AND THE BYPASS SYSTEM IS REMOVED, THE CONTRACTOR SHALL REPLACE THE TOP QUARTER OF THE EXISTING PIPE. DOGHOUSE MANHOLES SHALL BE REMOVED TO WITHIN 1 FOOT OF THE CROWN OF THE EXISTING PIPE. THE I.D. OF THE REMAINING DOGHOUSE MH SHALL BE FILLED WITH CONCRETE. ONCE CURED, THE REMAINDER OF THE DOGHOUSE MANHOLES SHALL BE BURIED AND BACKFILLED TO EXISTING GRADE.

12.) PRECAST CONCRETE TRAFFIC BARRIERS SHALL BE AS PER MARYLAND STATE HIGHWAY STD. DETAIL MD 104.01-53. CONCRETE BARRIERS SHALL BE CAPABLE OF BEING INTERLOCKED WITH THE ADJACENT BARRIER.

13.) MANHOLE FRAME AND COVER SHALL BE PER MODEL B-6077 SOLID LID, FURNISHED BOLTED DOWN AND WATERTIGHT, AS MANUFACTURED BY BARRY PATTERN AND FOUNDRY OR APPROVED EQUAL. CONTRACTOR SHALL SUBMIT SHOP DRAWINGS OF THE FRAME AND COVER FOR APPROVAL.

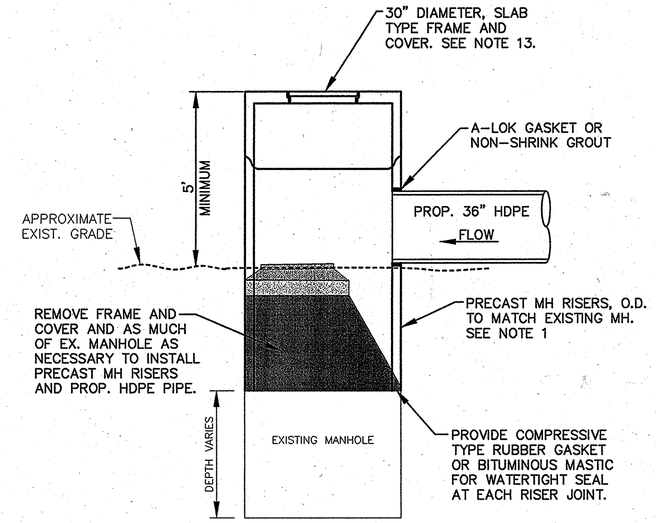

MODIFICATIONS TO EXISTING MANHOLE – 1261

NOT TO SCALE

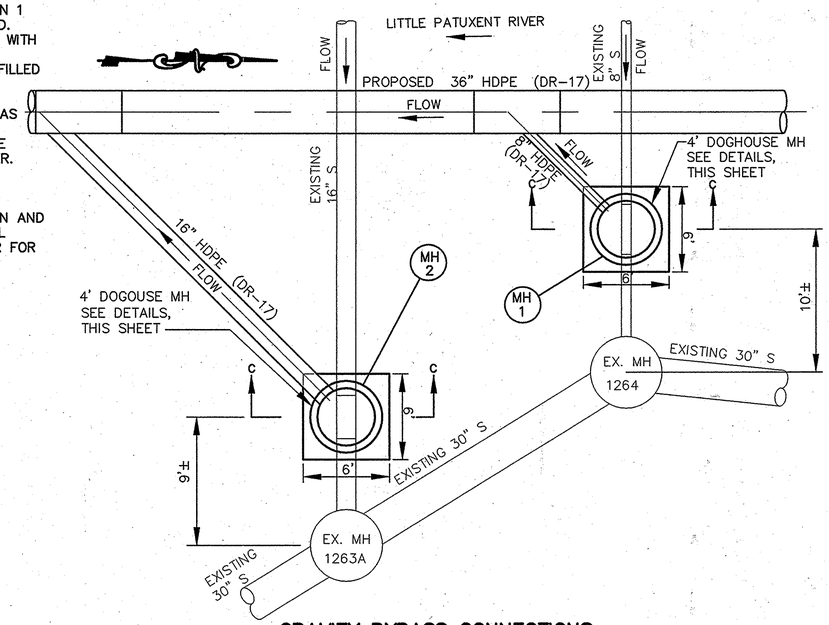

GRAVITY BYPASS CONNECTIONS FOR 8" AND 16" LATERAL SIPHON LINES

SCALE: 1" = 5'

AS-BUILT

PROFESSIONAL CERTIFICATION

I HEREBY CERTIFY THAT THESE DOCUMENTS WERE PREPARED OR APPROVED BY ME, AND THAT I AM A DULY LICENSED PROFESSIONAL ENGINEER UNDER THE LAWS OF THE STATE OF MARYLAND.

LICENSE NO. 8146 EXPIRATION DATE: 10/8/11

DEPARTMENT OF PUBLIC WORKS
HOWARD COUNTY, MARYLAND

DIRECTOR OF PUBLIC WORKS — DATE 12/12/08
CHIEF, BUREAU OF ENGINEERING — DATE 12/12/08
CHIEF, BUREAU OF UTILITIES — DATE 12/12/08
CHIEF, UTILITY DESIGN DIVISION — DATE 12/11/08

Patton Harris Rust & Associates, Inc.
Engineers. Surveyors. Planners. Landscape Architects.
8818 Centre Park Drive
Columbia, MD 21045
T 410.997.8900
F 410.997.9282

PHR+A

DES: C.H.
DRN: K.L.B.
CHK: G.C.L.
DECEMBER, 2008

BY	NO.	REVISION	DATE
			12/10

GRAVITY BYPASS DETAILS

600' SCALE MAP 47 | BLOCK 10, 16, 17, & 18

LITTLE PATUXENT
PARALLEL INTERCEPTOR SEWER
CAPITAL PROJECT S-6175
CONTRACT NO. 20-4532
1ST ELECTION DISTRICT
HOWARD COUNTY, MARYLAND

SCALE AS SHOWN

SHEET 24 OF 27

J:\projects\479411-01\Plans\Contract 2\AS-BUILT\24-AS-BUILT-Bypass Pumping Plan.dwg, 7/20/2011 3:42:16 PM, TDS600.pc3