HOWARD COUNTY, MARYLAND
DEPARTMENT OF PUBLIC WORKS

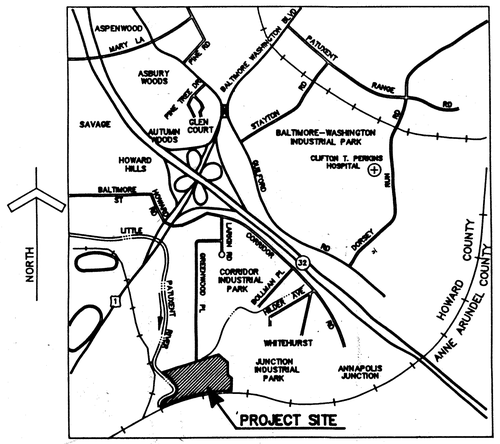

VICINITY MAP

LITTLE PATUXENT
WASTEWATER TREATMENT PLANT
EXPANSION

ADDITION No. 5
CAPITAL PROJECT No. S-6153
CONTRACT No. 20-3082

MDE GRANT NO.S:
NR 01.14
PG 01.04

Record Drawing Notes:
1. All elevations should be field verified before using
2. Weir and water elevations based on post-construction survey by Howard County.

STATE OF MARYLAND
JONATHAN WINTHROP DOANE
No. 15140
REGISTERED PROFESSIONAL ENGINEER

DIRECTOR OF PUBLIC WORKS	3/6/92 DATE	Act. CHIEF, BUREAU OF ENGINEERING	3-6-92 DATE
CHIEF, BUREAU OF ENVIRONMENTAL SERVICES	3/6/92 DATE	Act. CHIEF, UTILITY DESIGN DIVISION	3-6-92 DATE

M&E METCALF & EDDY
14502 GREENVIEW DRIVE
SUITE 500
LAUREL, MARYLAND 20708

SET No.

GENERAL

DRAWING NO.	TITLE
G-1	COVER SHEET
G-2	INDEX
G-3	PROCESS SCHEMATIC
G-4	SOLIDS HANDLING SCHEMATIC
G-5	HYDRAULIC PROFILE

CIVIL

DRAWING NO.	TITLE
C-1	ABBREVIATIONS, LEGEND & GENERAL NOTES
C-2	BORING PLAN I – NORTH
C-3	BORING PLAN II – SOUTH
C-4	SITE DEVELOPMENT PLAN
C-5	SITE DEVELOPMENT & GRADING PLAN I
C-6	SITE DEVELOPMENT & GRADING PLAN II
C-7	SITE DEVELOPMENT & GRADING PLAN III
C-8	SITE DEVELOPMENT & GRADING PLAN IV
C-9	SITE DEVELOPMENT & GRADING PLAN V
C-10	SITE DEVELOPMENT & GRADING PLAN VI
C-11	SITE DEVELOPMENT PROFILES
C-12	EROSION & SEDIMENT CONTROL NOTES AND DETAILS
C-13	YARD PIPING & UNDERGROUND UTILITIES PLAN I
C-14	YARD PIPING & UNDERGROUND UTILITIES PLAN II
C-15	YARD PIPING & UNDERGROUND UTILITIES PLAN III
C-16	YARD PIPING & UNDERGROUND UTILITIES PLAN IV
C-17	YARD PIPING & UNDERGROUND UTILITIES PLAN V
C-18	YARD PIPING & UNDERGROUND UTILITIES PLAN VI
C-19	YARD PIPING & UNDERGROUND UTILITIES PLAN VII
C-20	YARD PIPING & UNDERGROUND UTILITIES PLAN VIII
C-21	YARD PIPING PROFILES I
C-22	YARD PIPING PROFILES II
C-23	YARD PIPING PROFILES III
C-24	YARD PIPING PROFILES IV
C-25	YARD PIPING PROFILES V
C-26	YARD PIPING PROFILES VI
C-27	YARD PIPING PROFILES VII
C-28	YARD PIPING PROFILES VIII
C-29	YARD PIPING PROFILES IX
C-30	TYPICAL DETAILS
C-31	MISCELLANEOUS DETAILS
C-32	DETAILS
C-33	EXCAVATION LIMIT SECTIONS I
C-34	EXCAVATION LIMIT SECTIONS II

ARCHITECTURAL

DRAWING NO.	TITLE
A-1	MAINTENANCE BUILDING – FIRST FLOOR PLAN, REFLECTED CEILING PLAN AND DEMOLITION PLAN
A-2	MAINTENANCE BUILDING – SECOND FLOOR PLAN, REFLECTED CEILING PLAN AND DEMOLITION PLAN
A-3	MAINTENANCE BUILDING – ROOF PLAN, STAIR PLANS AND SECTIONS
A-4	MAINTENANCE BUILDING – ELEVATORS
A-5	MAINTENANCE BUILDING – WALL SECTIONS AND DETAILS
A-6	NORTH AND SOUTH PUMP STATIONS – FLOOR PLANS, ROOF PLAN, SECTIONS AND DETAILS
A-7	MAINTENANCE BUILDING, NORTH PUMP STATION, SOUTH PUMP STATION – FINISH SCHEDULE, DOOR SCHEDULE AND DOOR DETAILS
A-8	MISCELLANEOUS DETAILS

STRUCTURAL

DRAWING NO.	TITLE
S-1	GENERAL NOTES, ABBREVIATIONS AND LEGEND
S-2	FLOW EQUALIZATION BASIN NO. 3 MODIFICATIONS – PLAN, SECTION & DETAILS
S-3	PRIMARY CLARIFIER NO. 2 – PLANS
S-4	PRIMARY CLARIFIER NO. 2 – SECTIONS
S-5	PRIMARY CLARIFIER NO. 1 MODIFICATIONS – PLAN & SECTIONS
S-5A	PROCESS REACTORS – GENERAL PLAN
S-6	SINGLE PASS PROCESS REACTORS NOS. 1 & 2 – FOUNDATION PLAN
S-7	SINGLE PASS PROCESS REACTORS NOS. 1 & 2 – TOP PLAN & SECTIONS
S-8	PROCESS REACTORS – SECTIONS & DETAILS I
S-9	PROCESS REACTORS – SECTIONS & DETAILS II
S-10	PROCESS REACTORS – SECTIONS & DETAILS III
S-11	PROCESS REACTORS – SECTIONS & DETAILS IV
S-12	PROCESS REACTOR MODIFICATIONS – SINGLE PASS – PLAN & SECTIONS
S-13	PROCESS REACTOR MODIFICATIONS – DOUBLE PASS – PLAN & SECTIONS
S-14	FINAL CLARIFIER NO. 2 – PLANS
S-15	FINAL CLARIFIER NO. 2 – SECTIONS
S-16	CHLORINE CONTACT BASIN MODIFICATIONS – PLAN & DETAILS
S-17	CHLORINE BUILDING MODIFICATIONS – PLAN & SECTIONS
S-18	NORTH PUMP STATION – FOUNDATION PLAN, SECTIONS & DETAILS
S-19	NORTH PUMP STATION – FIRST FLOOR FRAMING PLAN, SECTION & BEAM SCHEDULE
S-20	NORTH PUMP STATION – ROOF FRAMING PLAN, SECTIONS & BEAM SCHEDULE
S-21	SOUTH PUMP STATION – FOUNDATION PLAN, SECTION & DETAILS
S-22	SOUTH PUMP STATION – FIRST FLOOR FRAMING PLAN, SECTIONS & BEAM SCHEDULE
S-23	SOUTH PUMP STATION – ROOF FRAMING PLAN, SECTIONS & BEAM SCHEDULE
S-24	34.5 KV MAIN SUBSTATION – FOUNDATION SECTION, PLANS & DETAIL
S-25	DIGESTER NO. 3 – PLAN EL. 128.67, SECTIONS & DETAILS

STRUCTURAL (CONTINUED)

DRAWING NO.	TITLE
S-26	DIGESTER NO. 3 – PLAN EL. 146.33, SECTIONS & DETAILS
S-27	GRAVITY THICKENER NO. 3 – PLAN, SECTIONS AND DETAILS
S-28	DIGESTER NO. 4 – PLAN EL. 128.67, SECTIONS & DETAILS
S-29	DIGESTER NO. 4 – PLAN EL. 146.33, SECTIONS & DETAILS
S-30	GRAVITY THICKENER NO. 4 – PLAN, SECTIONS & DETAILS
S-31	DIGESTER PIPE GALLERY EXTENSION – PLAN, BEAMS & COLUMNS
S-32	DIGESTER PIPE GALLERY EXTENSION – SECTIONS & DETAILS
S-33	SEPTAGE FACILITY – PLAN, SECTIONS & DETAILS
S-34	MAINTENANCE BUILDING – FOUNDATION PLAN & SECTIONS
S-35	MAINTENANCE BUILDING – SECOND FLOOR FRAMING PLANS
S-36	MAINTENANCE BUILDING – ROOF FRAMING PLANS
S-37	MAINTENANCE BUILDING – BEAM SCHEDULE, & DETAILS
S-38	MAINTENANCE BUILDING – COLUMN SCHEDULE, & DETAILS
S-39	MAINTENANCE BUILDING – PENTHOUSE STAIRWAY SECTION
S-40	MAINTENANCE BUILDING – STAIR SECTIONS & DETAILS
S-41	MAINTENANCE BUILDING – MEZZANINE FRAMING PLAN SECTIONS & DETAILS
S-42	MAINTENANCE BUILDING – MISCELLANEOUS SECTIONS & DETAILS
S-43	TYPICAL DETAILS
S-44	MISCELLANEOUS DETAILS
S-45	CONCRETE REHABILITATION – PLANS AND DETAILS
S-46	CONCRETE REHABILITATION – DETAILS

MECHANICAL

DRAWING NO.	TITLE
M-1	LEGEND, SYMBOLS & NOTES
M-2	HEADWORKS PUMP MODIFICATIONS – PLAN
M-3	HEADWORKS PUMP MODIFICATIONS – SECTIONS
M-4	FLOW EQUALIZATION BASIN NO. 3 MODIFICATIONS – DEMOLITION
M-5	FLOW EQUALIZATION BASIN NO. 3 MODIFICATIONS – PLAN, SECTIONS & DETAILS
M-6	PRIMARY METERING CHAMBER MODIFICATIONS – PLAN & SECTIONS
M-7	PRIMARY CLARIFIER NO. 2 – PLAN & SECTIONS
M-8	PRIMARY CLARIFIER NO. 2 – DETAILS
M-9	PRIMARY CLARIFIER NO. 1 MODIFICATIONS – PLAN & SECTIONS
M-10	PROCESS REACTOR GENERAL PLAN
M-11	SINGLE PASS PROCESS REACTOR NOS. 1 & 2 – UPPER PLAN
M-12	SINGLE PASS PROCESS REACTOR NOS. 1 & 2 – LOWER PLAN
M-13	SINGLE PASS PROCESS REACTOR NOS. 1 & 2 – SECTIONS & DETAILS
M-14	SINGLE PASS PROCESS REACTOR MODIFICATIONS – DEMOLITION PLAN
M-15	SINGLE PASS PROCESS REACTOR MODIFICATIONS – UPPER PLAN
M-16	SINGLE PASS PROCESS REACTOR MODIFICATIONS – LOWER PLAN
M-17	SINGLE PASS PROCESS REACTOR MODIFICATIONS – SECTIONS
M-18	SINGLE PASS PROCESS REACTOR MODIFICATIONS – SECTIONS & DETAILS
M-19	DOUBLE PASS PROCESS REACTOR NOS. 7 & 8 MODIFICATIONS – DEMOLITION PLAN
M-20	DOUBLE PASS PROCESS REACTOR NOS. 7 & 8 MODIFICATIONS – UPPER PLAN
M-21	DOUBLE PASS PROCESS REACTOR NOS. 7 & 8 MODIFICATIONS – LOWER PLAN
M-22	DOUBLE PASS PROCESS REACTOR NOS. 7 & 8 MODIFICATIONS – SECTIONS
M-23	DOUBLE PASS PROCESS REACTOR NOS. 7 & 8 MODIFICATIONS – SECTIONS & DETAILS
M-24	EAST PIPE GALLERY MODIFICATIONS – PLANS
M-25	EAST PIPE GALLERY MODIFICATIONS – SECTIONS
M-26	WEST PIPE GALLERY MODIFICATIONS – PLAN
M-27	WEST PIPE GALLERY MODIFICATIONS – SECTIONS
M-28	FINAL CLARIFIER NO. 2 – PLAN
M-29	FINAL CLARIFIER NO. 2 – SECTIONS & DETAILS
M-30	FINAL CLARIFIER NO. 2 – DETAILS
M-31	FINAL CLARIFIER MODIFICATIONS – PLANS & SECTIONS
M-32	FILTER CONTROL BUILDING – PUMP MODIFICATIONS – PLANS & SECTIONS
M-33	54 INCH METER VAULT MODIFICATIONS – PLANS
M-34	CHLORINE BUILDING MODIFICATIONS – OVERALL PLAN
M-35	CHLORINE BUILDING MODIFICATIONS – DEMOLITION PLAN
M-36	CHLORINE BUILDING MODIFICATIONS – STORAGE AREA PLAN
M-37	CHLORINE BUILDING MODIFICATIONS – CHEMICAL FEED ROOM PLAN
M-38	CHLORINE BUILDING MODIFICATIONS – CHEMICAL FEED ROOM SECTIONS
M-39	NORTH PUMP STATION – BASEMENT PLANS
M-40	NORTH PUMP STATION – UPPER PLAN & SECTIONS
M-41	NORTH PUMP STATION – SECTIONS
M-42	SOUTH PUMP STATION – BASEMENT PLANS
M-43	SOUTH PUMP STATION – UPPER PLAN & SECTIONS
M-44	SOUTH PUMP STATION – SECTIONS
M-45	DIGESTERS NOS. 1 & 3 – PLAN
M-46	DIGESTERS NOS. 2 & 4 – PLAN
M-47	DIGESTERS SECTIONS & DETAILS 1
M-48	DIGESTER PIPE GALLERY – MODIFICATIONS – PROCESS PIPING PLAN – DEMOLITION
M-49	DIGESTER PIPE GALLERY – MODIFICATIONS – PROCESS PIPING PLAN
M-50	DIGESTER PIPE GALLERY – AIR PIPING DEMOLITION PLAN
M-51	DIGESTER PIPE GALLERY – AIR PIPING PLAN
M-52	DIGESTER PIPE GALLERY – MODIFICATIONS – SECTIONS
M-53	DIGESTER PIPE GALLERY – EXTENSION PLAN
M-54	DIGESTER PIPE GALLERY – EXTENSION – PLAN DRAIN SYSTEM
M-55	DIGESTER PIPE GALLERY – EXTENSION – SECTIONS & DETAILS 1
M-56	THICKENER PIPE GALLERY – MODIFICATIONS – PLAN & SECTIONS
M-56A	THICKENER PIPE GALLERY – DEMOLITION
M-57	FLUSHING WATER SYSTEM – MODIFICATIONS – PLAN
M-58	FLUSHING WATER SYSTEM – MODIFICATIONS – SECTIONS
M-59	GRAVITY THICKENER NO. 3 – PLAN & SECTIONS
M-60	GRAVITY THICKENER NO. 4 – PLAN & SECTIONS
M-61	SEPTAGE FACILITY PLAN, SECTIONS & DETAILS
M-62	PUMP, GATE AND BLOWER SCHEDULE
M-63	VALVE SCHEDULE I

MECHANICAL (CONTINUED)

DRAWING NO.	TITLE
M-64	VALVE SCHEDULE II
M-65	VALVE SCHEDULE III
M-66	VALVE SCHEDULE IV
M-67	VALVE SCHEDULE V
M-68	PIPE SCHEDULE

HVAC

DRAWING NO.	TITLE
H-1	LEGEND, SYMBOLS AND NOTES
H-2	MAINTENANCE BUILDING – FIRST FLOOR PLANS
H-3	MAINTENANCE BUILDING – SECOND FLOOR PLAN
H-4	MAINTENANCE BUILDING – ROOF PLAN
H-5	SCHEDULES
H-6	NORTH PUMP STATION – PLANS
H-7	NORTH PUMP STATION – SECTIONS
H-8	SOUTH PUMP STATION – PLANS
H-9	SOUTH PUMP STATION – SECTIONS
H-10	DIGESTER PIPE GALLERY – PLAN
H-11	DIGESTER PIPE GALLERY EXTENSION – PLANS

PLUMBING

DRAWING NO.	TITLE
P-1	RISER DIAGRAMS, PLAN & SYMBOLS
P-2	MAINTENANCE BUILDING – SECOND FLOOR PLAN
P-3	MAINTENANCE BUILDING – SECOND FLOOR DEMOLITION PLAN
P-4	MAINTENANCE BUILDING – ROOF AND GARAGE PLANS

INSTRUMENTATION

DRAWING NO.	TITLE
I-1	LEGEND, SYMBOLS & GENERAL NOTES
I-2	LOOP DIAGRAMS I
I-3	LOOP DIAGRAMS II
I-4	LOOP DIAGRAMS III
I-5	LOOP DIAGRAMS IV
I-6	LOOP DIAGRAMS V
I-7	LOOP DIAGRAMS VI

ELECTRICAL

DRAWING NO.	TITLE
E-1	LEGEND, SYMBOLS & GENERAL NOTES
E-2	SITE PLAN
E-3	PLANT ONE LINE DIAGRAM
E-4	ONE LINE DIAGRAM – 34.5 KV MAIN SUBSTATION
E-5	ONE LINE DIAGRAM – PS5 – DIGESTER SUBSTATION
E-6	ONE LINE DIAGRAM – MCC18 – DIGESTER BLOWERS
E-7	ONE LINE DIAGRAM – CC9 – DEWATERING BUILDING
E-8	ONE LINE DIAGRAM – CC10 – DEWATERING BUILDING
E-9	ONE LINE DIAGRAM – MCC20 – PROCESS REACTORS
E-10	ONE LINE DIAGRAM – CC7 – ALUM BUILDING
E-11	ONE LINE DIAGRAM – MCC21 – NORTH PUMP STATION & MCC22 – SOUTH PUMP STATION
E-12	ONE LINE DIAGRAM – CC2 – HEADWORKS BUILDING
E-13	ONE LINE DIAGRAM – CC8 – MAINTENANCE BUILDING
E-14	ONE LINE DIAGRAM – CC11 – FILTER BUILDING
E-15	ONE LINE DIAGRAM – CC12 – CHLORINE BUILDING
E-16	LIGHTING & POWER PLANS – DEWATERING BUILDING & DIGESTER PIPE GALLERY
E-17	LIGHTING & POWER PLANS – DIGESTER PIPE GALLERY ADDITION
E-18	LIGHTING & POWER PLANS – DIGESTERS
E-19	LIGHTING & POWER PLANS – PROCESS REACTORS
E-20	LIGHTING & POWER PLANS – ALUM BUILDING, EAST PIPE GALLERY & SECONDARY BUILDING
E-21	LIGHTING & POWER PLANS – PRIMARY & FINAL CLARIFIERS NO. 2
E-22	LIGHTING & POWER PLANS – NORTH PUMP STATION
E-23	LIGHTING & POWER PLANS – SOUTH PUMP STATION
E-24	LIGHTING & POWER PLANS – MAINTENANCE BUILDING FIRST FLOOR
E-25	LIGHTING & POWER PLANS – MAINTENANCE BUILDING SECOND FLOOR
E-26	LIGHTING & POWER PLANS – FILTER BUILDING, METERING CHAMBER & INFLUENT PUMP STATION
E-27	LIGHTING & POWER PLANS – CHLORINE BUILDING
E-28	RISER DIAGRAMS I
E-29	RISER DIAGRAMS II
E-30	SCHEMATIC DIAGRAMS I
E-31	SCHEMATIC DIAGRAMS II
E-32	SCHEMATIC DIAGRAMS III
E-33	SCHEMATIC DIAGRAMS IV
E-34	EQUIPMENT SCHEDULES I
E-35	EQUIPMENT SCHEDULES II
E-36	CONDUIT & WIRE SCHEDULE I
E-37	CONDUIT & WIRE SCHEDULE II
E-38	CONDUIT & WIRE SCHEDULE III
E-39	CONDUIT & WIRE SCHEDULE IV
E-40	DUCT BANK SECTIONS & DETAILS
E-41	MISCELLANEOUS DETAILS

DEPARTMENT OF PUBLIC WORKS
HOWARD COUNTY, MARYLAND

12/9/91 — DIRECTOR OF PUBLIC WORKS — DATE
12-9-91 — CHIEF, BUREAU OF ENGINEERING — DATE
12/9/91 — CHIEF, BUREAU OF ENVIRONMENTAL SERVICES — DATE
12-9-91 — CHIEF, UTILITY DESIGN DIVISION — DATE

M&E Metcalf & Eddy

12/9/91 — REG. PROF. ENGR. — DATE

STATE OF MARYLAND — JONATHAN WINTHROP DOANE — No. 15140 — REGISTERED PROFESSIONAL ENGINEER

DES: J. HAVEY
DRN: J. PUTNAM / E. BURNETT
CHK: J. HAVEY
DATE: 12/9/91

BY	NO.	REVISION	DATE
		REVISED FOR BIDDING	3/5/92

GENERAL

INDEX

LITTLE PATUXENT WASTEWATER TREATMENT PLANT

LITTLE PATUXENT WASTEWATER TREATMENT PLANT EXPANSION
ADDITION NO. 5
CAPITAL PROJECT S - 6153

CONTRACT NO. 20 - 3082

HOWARD COUNTY, MARYLAND

SCALE AS SHOWN

SHEET 2 OF 226

G-2

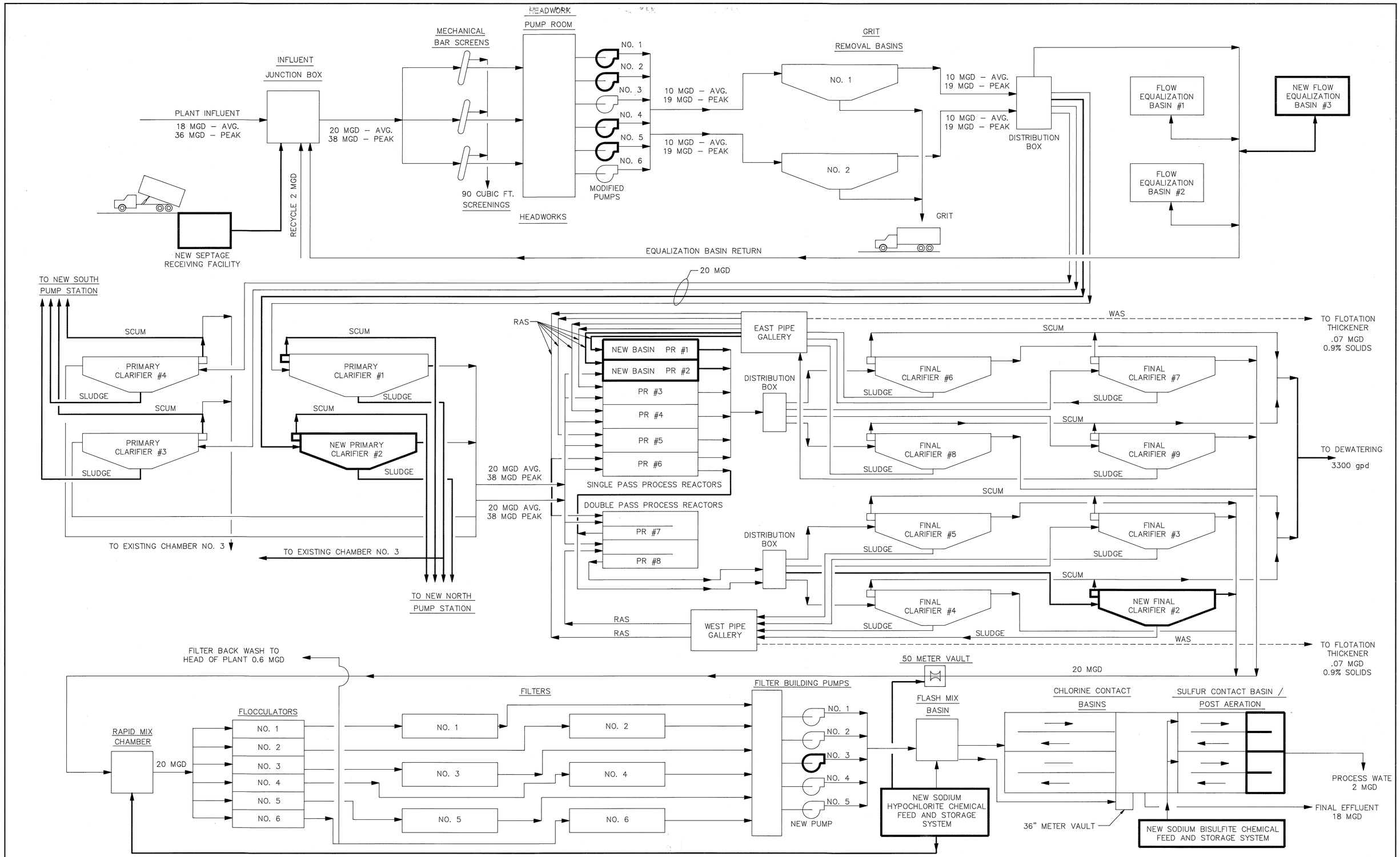

DEPARTMENT OF PUBLIC WORKS
HOWARD COUNTY, MARYLAND

DIRECTOR OF PUBLIC WORKS — DATE 3/6/92
ACT. CHIEF, BUREAU OF ENGINEERING — DATE 3-6-92
CHIEF, BUREAU OF ENVIRONMENTAL SERVICES — DATE 3/6/92
ACT. CHIEF, UTILITY DESIGN DIVISION — DATE 3-6-92

Metcalf & Eddy
REG. PROF. ENGR. — DATE 3/6/92

STATE OF MARYLAND — JONATHAN WINTHROP DOANE — No. 15140 — REGISTERED PROFESSIONAL ENGINEER

DES: S. KARKAR
DRN: E. BURNETT
CHK: J. HARVEY
DATE: 3/6/92

BY	NO.	REVISION	DATE
		REVISED FOR BIDDING	3/6/92

GENERAL

PROCESS SCHEMATIC

LITTLE PATUXENT WASTEWATER TREATMENT PLANT

LITTLE PATUXENT WASTEWATER TREATMENT PLANT EXPANSION
ADDITION NO. 5
CAPITAL PROJECT S - 6153

CONTRACT NO. 20 - 3082
HOWARD COUNTY, MARYLAND

SCALE AS SHOWN
SHEET 3 OF 226
G-3

073159

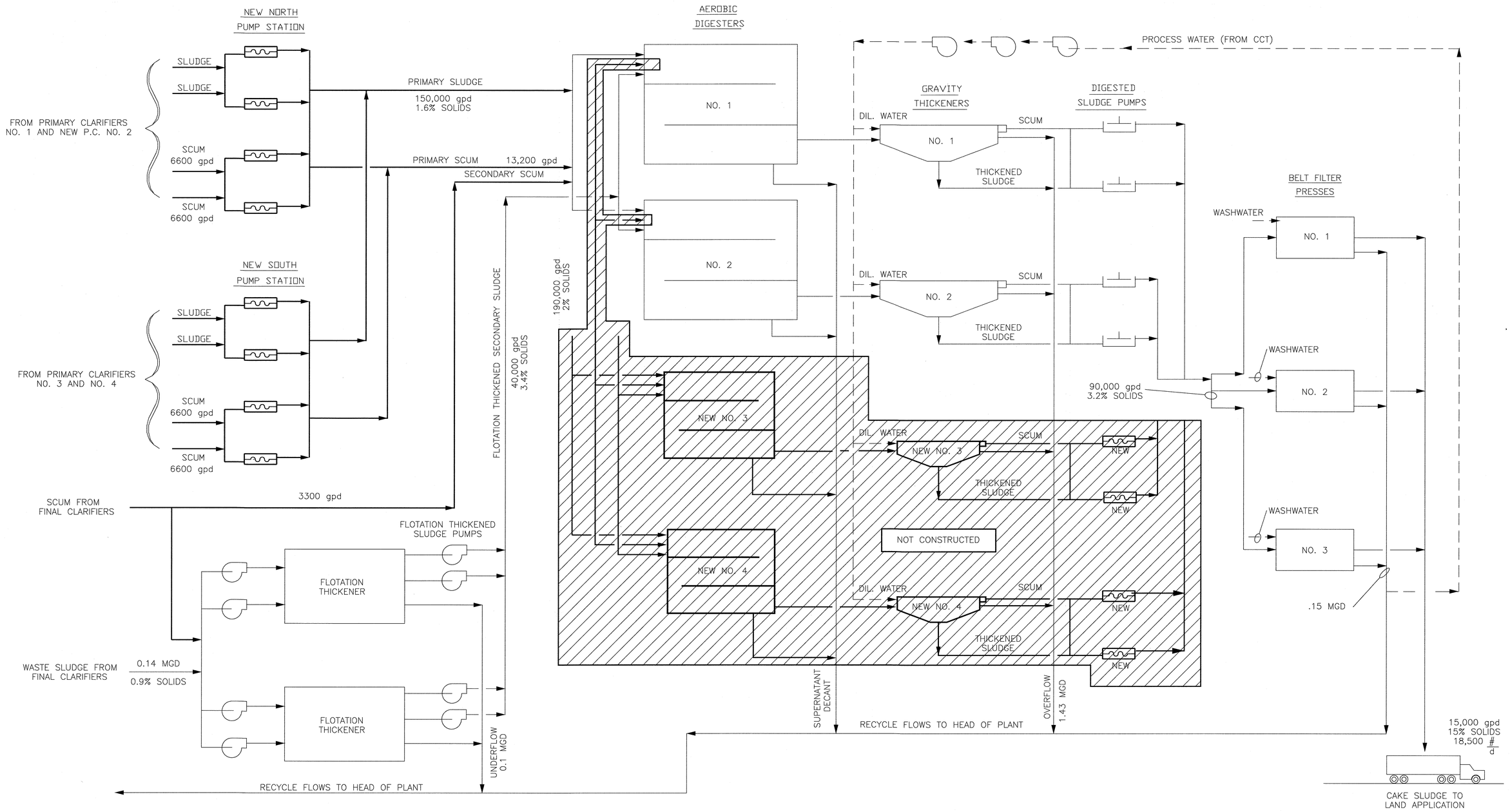

DEPARTMENT OF PUBLIC WORKS
HOWARD COUNTY, MARYLAND

DIRECTOR OF PUBLIC WORKS — DATE 5/7/96
CHIEF, BUREAU OF ENGINEERING — DATE 5/7/96
CHIEF, BUREAU OF ENVIRONMENTAL SERVICES — DATE 5/7/96
CHIEF, UTILITY DESIGN DIVISION — DATE 5-7-96

M&E Metcalf & Eddy

REG. PROF. ENGR. — DATE 5-7-96

STATE OF MARYLAND — JONATHAN WINTHROP DOWNE No. 15140 — REGISTERED PROFESSIONAL ENGINEER

DES:				
DRN:				
CHK:				
DATE:	M.J.C.	1	RECORD DRAWING	11/2/94
	BY	NO.	REVISION	DATE

MECHANICAL

SOLIDS HANDLING SCHEMATIC

LITTLE PATUXENT WASTEWATER TREATMENT PLANT

LITTLE PATUXENT WASTEWATER TREATMENT PLANT EXPANSION
ADDITION NO. 5
CAPITAL PROJECT S-6153

CONTRACT NO. 20-3082
HOWARD COUNTY, MARYLAND

SCALE AS SHOWN

SHEET 4 OF 226

G-4A

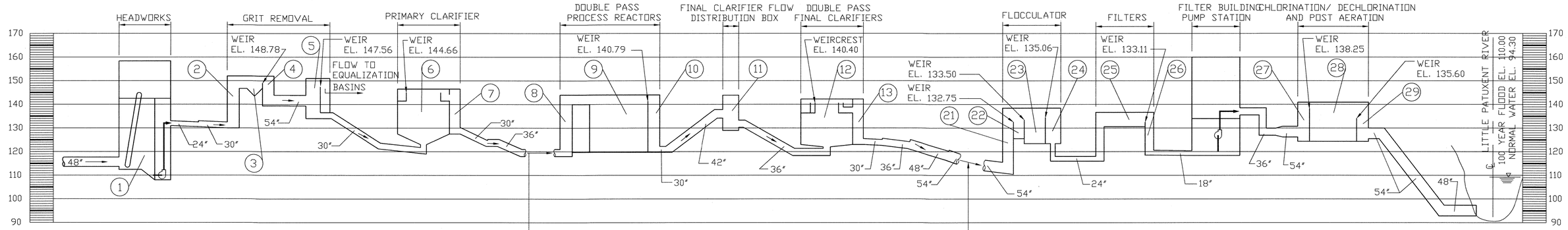

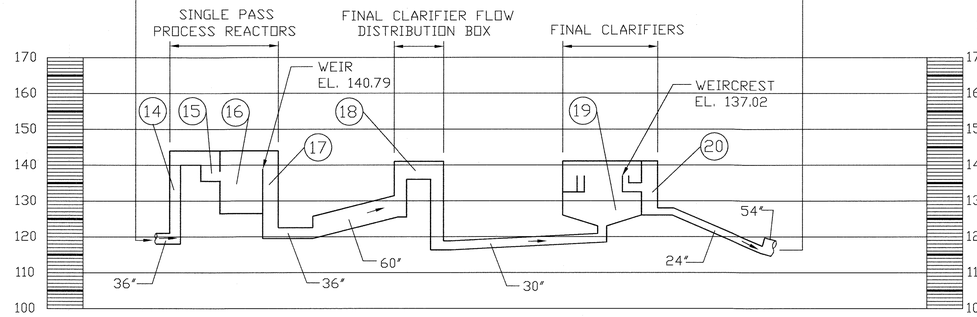

NOTE:

ELEVATIONS FOR LOCATIONS 4 THROUGH 19 ARE BASED ON POST CONSTRUCTION ELEVATIONS PROVIDED BY HOWARD COUNTY SURVEYING DEPARTMENT. OTHER ELEVATIONS BASED ON ELEVATIONS FROM PREVIOUS CONTRACTS WHICH MAY NOT AGREE.

Record Drawing Notes:

1. All elevations should be field verified before use.
2. Weir and water elevations based on post-construction survey by Howard County.

NOTES:

1. WATER SURFACE PROFILE COMPUTED ALONG PATH OF MAXIMUM HEAD LOSS.
2. ONE FOOT OF HEAD LOSS ASSUMED ACROSS FILTER BED.
3. WEIR ELEVATIONS ARE BOTTOM AT NOTCH FOR V-NOTCH TYPE.
4. SLUDGE RECYCLE RATE 75% OF ADF.
5. A 2/0 RECYCLE 150%.
6. ADF - 1 FILTER AND 2 DOUBLE PASS AERATION BASINS OUT OF SERVICE, 1 CCT PASS OUT OF SERVICE, 1 PC OUT OF SERVICE, 1 CLARIFIER OUT OF SERVICE.
7. PEAK - FLOW EQUALIZATION BASINS OUT OF SERVICE, ALL OTHER UNITS IN SERVICE..
8. DIURNAL PEAK = 34.68 MGD.

	LOCATION / FLOW	1	2	3	4	5	6	7	8	9	10	11	12	13	14	15	16	17	18	19	20	21	22	23	24	25	26	27	28	29
WATER SURFACE ELEVATIONS	18 MGD ADF	VARIES	149.46	149.11	148.01	147.93	144.84	142.46	142.11	141.81	140.81	140.58	140.51	135.61	142.11	141.83	141.80	137.51	137.32	137.14	135.67	135.31	135.25	135.23	135.08	134.37	132.62	139.20	137.11	128.83
	36 MGD PEAK	VARIES	149.54	139.13	147.32	147.22	144.92	143.89	142.54	141.95	141.03	140.74	140.56	137.55	140.54	142.00	141.95	138.27	138.01	137.80	137.47	136.34	136.26	136.25	136.24	134.47	132.95	139.71	138.19	132.51

DESIGN CONDITIONS

* PLANT INFLUENT CHARACTERISTICS (INCLUDING 2 MGD RECYCLE FLOW)

AVERAGE DAILY FLOW	20 MGD
PEAK FLOW	38 MGD
SUSPENDED SOLIDS	204 mg/l
BOD	162 mg/l
TKN	29 mg/l
TP	8 mg/l

* SECONDARY INFLUENT CHARACTERISTICS (INCLUDING 2 MGD RECYCLE FLOW)

AVERAGE DAILY FLOW	20 MGD
SUSPENDED SOLIDS	80 mg/l
BOD	90 mg/l
TKN	24 mg/l
TP	6.5 mg/l

MECHANICAL BAR SCREENS

UNIT	EXISTING
NUMBER	3
MAX. CAPACITY / SCREEN	25 MGD
AVERAGE FLOW / SCREEN (2 ONLINE)	10 MGD

GRIT REMOVAL CHAMBERS

UNIT	EXISTING
NUMBER	2
UNIT DIMENSIONS	42'x42'x3' SWD
DESIGN FLOW/BASIN (100 MESH REMOVAL)	25 MGD
DESIGN FLOW/BASIN (65 MESH REMOVAL)	50 MGD

* FLOW EQUALIZATION

UNIT	EXISTING
NUMBER	2
UNIT VOLUME	1.1 MGD
UNIT	NEW
NUMBER	1
UNIT VOLUME	0.6 MG
TOTAL FLOW EQUALIZATION	2.8 MG

* PRIMARY CLARIFIERS

UNIT	EXISTING
NUMBER	2
DIAMETER	90 ft.
UNIT	EXISTING
NUMBER	1
DIAMETER	105 ft.
UNIT	NEW
NUMBER	1
DIAMETER	90 ft.
UNIT SIDEWALL WATER DEPTH	16.67 ft.
AVG. OVERFLOW RATE (3x90 FT. IN SERVICE)	1,050 gpd/sq. ft.
AVERAGE HYDRAULIC DETENTION TIME	2.85 hours
PEAK OVERFLOW RATE (ALL UNITS IN SERVICE)	1.370 gpd/sq. ft.
PEAK HYDRAULIC DETENTION TIME	2.2 hours

* PROCESS REACTORS

NUMBER OF EXISTING TWO PASS TANKS	2
NUMBER OF EXISTING ONE PASS TANKS	4
NEW ONE PASS TANKS	2
DIMENSIONS PER PASS	185'x30'x15' SWD
DESIGN FLOW PER ONE PASS TANK	2 MGD
DESIGN FLOW PER TWO PASS TANK	4 MGD
HYDRAULIC DETENTION TIME AT AVG. FLOW	7.5 HOURS
MLSS CONCENTRATION	2,000 TO 3,500 mg/l
MCRT	13 TO 20 DAYS
TOTAL ANAEROBIC VOLUME	126,000 cu. ft.
TOTAL ANOXIC VOLUME	186,750 cu. ft.
TOTAL SWITCH ZONE VOLUME	103,500 cu. ft.
TOTAL OXIC VOLUME	384,750 cu. ft.
TOTAL DEOXYGENATION ZONE VOLUME	31,500 cu. ft.
ANAEROBIC VOLUME (PERCENT OF TOTAL)	15%
ANOXIC VOLUME (PERCENT OF TOTAL)	35% OR 22%
OXIC VOLUME (PERCENT OF TOTAL)	46% OR 59%
DEOXYGENATION ZONE VOLUME (PERCENT OF TOTAL)	4%

* SECONDARY CLARIFIERS

UNIT	EXISTING
NUMBER	7
UNIT	NEW
NUMBER	1
WEIR LENGTH	440 l. ft.
DIAMETER	90 ft.
AVG. OVERFLOW RATE (ALL UNITS IN SERVICE)	400 gpd/sq. ft.
AVG. WEIR OVERFLOW RATE (ALL UNITS IN SERVICE)	5,700 gpd/l. ft.
PEAK OVERFLOW RATE (ALL UNITS IN SERVICE)	750 gpd/sq. ft.
PEAK WEIR OVERFLOW RATE (ALL UNITS IN SERVICE)	10,800 gpd/l. ft.

FLOCCULATORS

UNIT	EXISTING
NUMBER	6
DIMENSIONS	34.7'x27.6'x11' SWD
VOLUME (EA.)	10,535 cu. ft.

FILTERS

UNIT	EXISTING
NUMBER	6
UNIT AREA	1,760 sq. ft.
UNIT CAPACITY	15 MGD

* CHLORINE CONTACT TANK

UNIT	EXPANDED
NUMBER OF CHLORINE CONTACT CHAMBERS	3
ADDITIONAL TANKAGE	20'x48.75'
EXPANDED CHAMBER DIMENSIONS (2 PASSES)	200'x10'x13.67' SWD
DETENTION TIME AT AVG. FLOW (2 CHAMBERS)	>30 MINUTES
DETENTION TIME AT PEAK FLOW (3 CHAMBERS)	25 MINUTES

* CHLORINATION

UNIT	NEW NaOCl SYSTEM
AVG. NaOCl (15% SOLUTION) DOSAGE	30 gal/hr.
NaOCl (15% SOLUTION) DOSAGE AT PEAK FLOW	60 gal/hr.
AVAILABLE CHLORINE AT PEAK FLOW	5 mg/l

* DECHLORINATION/POST AERATION TANK

UNIT	EXPANDED CHAMBER 4
NUMBER	1
EXPANDED CHAMBER DIMENSIONS (2 PASSES)	20'x48.75
DETENTION TIME	5 MINUTES

* DECHLORINATION

UNIT	NEW $NaHSO_3$ SYSTEM
AVG. OBSERVED RESIDUAL CHLORINE	<0.5 mg/l
AVG. $NaHSO_3$ (38% SOLUTION) DOSAGE	10 gal/hr.
$NaHSO_3$ DOSAGE AT PEAK FLOW	20 gal/hr.
PEAK FLOW CHLORINE RESIDUAL REMOVAL CAPABILITY	5 mg/l

* AEROBIC DIGESTERS

UNIT	EXISTING
NUMBER	2
UNIT VOLUME	159,312 cu. ft.
UNIT	NEW
NUMBER	2
UNIT VOLUME	74,843 cu. ft.
TOTAL DIGESTER VOLUME	468,210 cu. ft.
DIGESTER INFLUENT SLUDGE SOLIDS CONCENTRATION	2%
WINTER DESIGN TEMPERATURE	15° C
WINTER MCRT	32 days
SUMMER DESIGN TEMPERATURE	30° C
SUMMER MCRT	16 days

FLOTATION THICKENERS

UNIT	EXISTING
NUMBER	2
UNIT DIMENSIONS	40'x12'x11 SWD
DESIGN SOLIDS LOADING	20 lb/sq. ft./day

* GRAVITY THICKENERS

UNIT	EXISTING
NUMBER	2
DIAMETER	40 ft.
UNIT	NEW
NUMBER	2
DIAMETER	30 ft.
TOTAL THICKENER SURFACE AREA	3,927 sq. ft.
AVERAGE SOLIDS LOADING RATE	6 lbs/sq. ft./day

BELT FILTER PRESS

UNIT	EXISTING
NUMBER	3
PRESS WIDTH	2 meters
DESIGN SOLIDS LOADING RATE	500 lbs/m/hr.

DEPARTMENT OF PUBLIC WORKS
HOWARD COUNTY, MARYLAND

DIRECTOR OF PUBLIC WORKS — DATE 5/7/96
CHIEF, BUREAU OF ENGINEERING — DATE 5/7/96
CHIEF, BUREAU OF ENVIRONMENTAL SERVICES — DATE 5/7/96
CHIEF, UTILITY DESIGN DIVISION — DATE 5-7-96

M&E Metcalf & Eddy
REG. PROF. ENGR. — DATE 5-7-96

STATE OF MARYLAND — JONATHAN WINTHROP DOANE No. 15140 — REGISTERED PROFESSIONAL ENGINEER

	BY	NO.	REVISION	DATE
DES:				
DRN:				
CHK:				
DATE:	M.J.C.	1	RECORD DRAWING	11/2/94

MECHANICAL

HYDRAULIC PROFILE

LITTLE PATUXENT WASTEWATER TREATMENT PLANT
LITTLE PATUXENT WASTEWATER TREATMENT PLANT EXPANSION
ADDITION NO. 5
CAPITAL PROJECT S-6153
CONTRACT NO. 20-3082
HOWARD COUNTY, MARYLAND

SCALE AS SHOWN
SHEET 5 OF 226
G-5A

NOTES:
1. IN GENERAL, EXISTING STRUCTURES AND FACILITIES ARE NOTED AS "EXISTING" AND ARE SHOWN IN LIGHT LINE WEIGHTS, OR AS SCREENED BACKGROUND. NEW STRUCTURES ARE SHOWN IN HEAVY LINE WEIGHTS.

SITE LEGEND:

A. UTILITIES

	EXISTING	THIS CONTRACT
PIPELINE (6" AND SMALLER)		
(8")		
(10" AND LARGER)		
SANITARY SEWER MANHOLE	(S)	
SANITARY SEWER TERMINAL MANHOLE		
STORM DRAIN MANHOLE	(D)	
INLET, CURB TYPE		
INLET, GRATING TYPE		
INLET,CURB & GRATING TYPE		
WATER MAIN VALVE VAULT	(W)	
WATER METER BOX	(M)	
GATE VALVE		
VALVE,TEE, & CROSS		
WATER REDUCER, Y-BRANCH & BEND		
WATER BLOW-OFF, AIR RELEASE		
WATER FIRE HYDRANT		
FIRE CISTERN		
CONDUITS (ELECTRIC & TELEPHONE)	—C—C—	
GAS MAINS		
GAS METER	(G)	(G)
GAS DRIP, STOP OR PLUG		
YARD HYDRANT	⊕ Y.H.	⊕ Y.H.

B. ROADS AND STREETS

PLAN

CURB		
WALKS (NOTE WIDTH AND TYPE)		
CONCRETE VALLEY GUTTER		
EDGE MACADAM OR CONCRETE ROAD	OR	
RIGHT-OF-WAY LINE (R/W)		
PROPERTY LINE		
CENTERLINE OF R/W OR ROAD		1+00 2+00
PARKING STRIPING		
PARKING CHOCKS		

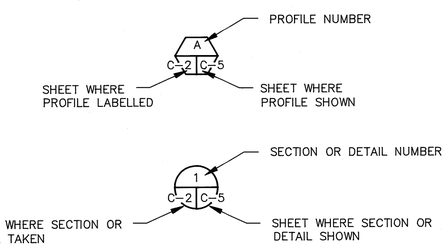

C. MISCELLANEOUS

	EXISTING	THIS CONTRACT
FENCE, WOOD		
FENCE, IRON		
FENCE, WIRE, BARBED OR SMOOTH		
FENCE, HEDGE (SHADE GREEN)		
FENCE, STONE, BRICK, CONCRETE WALLS		
STAIR WAY		
POLES IDENTIFY – G.& E. NO. OR C.& P. NO. OR STREET LIGHT		
SIGN		
EXCAVATION OR CUT		
EMBANKMENT OR FILL		
CONTOUR	400	400
SPOT ELEVATION	100·00	⊗ 100·00
WOODS,UNDERGROWTH AND BRUSH		
TREES		
STREAMS (NOTE DIRECTION OF FLOW)		
DITCHES (NOTE DIRECTION OF FLOW)		
PLUG OR CAP		
EXIST. STRUCTURE/PIPE TO BE REMOVED		
TO BE ABANDONED IN PLACE		
EXISTING TREE TO BE RELOCATED		
TREE PROTECTION		
BUILDING		
PAVING		
CONCRETE		
METAL		
STONE/RIPRAP		
GRAVEL		
SAND		
EARTH		
WOOD		
BORING LOCATION, NUMBER		B-1
BASE LINE	M-1 B M-2	M-1 B M-2
MATCH LINE		
SILT FENCE		S S
LIMIT OF DISTURBED AREA		
STABILIZED CONSTRUCTION ENTRANCE		SCE
INLET PROTECTION		

ABBREVIATIONS

PIPE LINE

A	– AIR
CCBI	– CHLORINE CONTACT BASIN INFLUENT
CL_2	– CLORINE
CMP	– CORRUGATED METAL PIPE
D	– DRAIN
DB	– DUCTBANK
FBI	– FLOCCULATION BASIN INFLUENT
FCI	– FINAL CLARIFIER INFLUENT
FCP	– FLOOD CONTROL PIPE
FEIE	– FLOW EQUALIZATION INFLUENT/EFFLUENT
FM	– FORCE MAIN
FW	– FLUSHING WATER
GBI	– GRIT BASIN INFLUENT
LSTP	– LIME SOLUTION TRANSFER PIPE
OCI	– HYPOCHLORITE
PCI	– PRIMARY CLARIFIER INFLUENT
POR	– PROCESS OVERFLOW RETURN
PRB	– PROCESS REACTOR BYPASS
PRI	– PROCESS REACTOR INFLUENT
PS	– PRIMARY SLUDGE
PSC	– PRIMARY SCUM
PSIS	– PHOSPHROUS STRIPPER INFLUENT SLUDGE
PSS	– PHOSPHORUS STRIPPED SLUDGE
RAS	– RETURN ACTIVATED SLUDGE
RCP	– REINFORCED CONCRETE PIPE
SC	– SCUM
S	– SEWER OR INTERCEPTOR
SD	– STORM DRAIN
SO_2	– SULFUR DIOXIDE
SSC	– SECONDARY SCUM
SES	– STRIPPER ELUTRIANT SUPPLY
SO	– STRIPPER OVERFLOW
SPOR	– SLUDGE PROCESS OVERFLOW RETURN
TD	– TANK DRAIN
TSE	– THICKENED SLUDGE EFFLUENT
UD	– UNDER DRAIN
W	– WATER
WAS	– WASTE ACTIVATED SLUDGE
WE	– WASTE ELUTRIANT
WPS	– WASTE PHOSPHOROUS SLUDGE
WWD	– WASTEWATER DRAIN
SP	– SHEET PILE

MISCELLANEOUS

℄	– BASE LINE
BM	– BENCH MARK
DWG.	– DRAWING
EX.	– EXISTING
I	– INLET
INV.	– INVERT ELEVATION
R	– RADIUS
N	– NORTH
S	– SOUTH
E	– EAST
W	– WEST
℄	– CENTERLINE
RD	– ROAD
FH	– FIRE HYDRANT
FT	– FEET
LP	– LIGHT POLE
YH	– YARD HYDRANT
T.O.W.	– TOP OF WALL
TC	– TOP OF CURB
MH	– MANHOLE
STD.	– STANDARD
TEMP.	– TEMPORARY
VERT	– VETRICAL
HOR.	– HORIZONTAL

APPURTENANCES

C	– CROSS
HB,HOR.BEND	– HORIZONTAL BEND
VB,VERT.BEND	– VERTICAL BEND
G.V.	– GATE VALVE
T	– TEE
V	– VALVE
Y	– WYE

GENERAL NOTES

1. THE LOCATION OF EXISTING UTILITIES WHERE SHOWN ARE APPROXIMATE. THE CONTRACTOR SHALL TAKE ALL NECESSARY PRECAUTIONS TO PROTECT EXISTING LINES AND STRUCTURES AND MAINTAIN UNINTERRUPTED SUPPLY. ANY DAMAGE INCURRED SHALL BE REPAIRED IMMEDIATLY.
2. THE CONTRACTOR SHALL LOCATE EXISTING UTILITIES BY TEST PITS A MINIMUM OF TWO WEEKS IN ADVANCE OF CONSTRUCTION OPERATION IN THE VICINITY OF THE UTILITIES.
3. ALL PIPELINE PROFILE ELEVATIONS ARE INVERT ELEVATIONS, UNLESS OTHERWISE NOTED.
4. THE LOCATION OF ALL VALVES, FITTINGS ETC. SHALL BE LOCATED WHERE SHOWN ON THE DRAWINGS UNLESS OTHERWISE DIRECTED BY THE ENGINEER.
5. FOR STANDARD DETAILS REFER TO HOWARD COUNTY DESIGN MANUAL VOLUME IV– STANDARD SPECIFICATIONS AND DETAILS.
6. ALL FITTINGS SHALL BE BUTTRESSED OR ANCHORED WITH CONCRETE OR RESTRAINED WITH SPECIAL APPROVED DEVICES – SEE SPECIFICATIONS.
7. PIPELINES SHALL BE OF THE MATERIAL LISTED IN THE SPECIFICATIONS. ALL PIPELINES SHALL HAVE A MINIMUM COVER OF 4 FEET UNLESS OTHERWISE SHOWN BY PROFILES OR ELEVATIONS ON PLANS.
8. CLEAR ALL UTILITIES BY A MINIMUM OF 6 INCHES VERTICALLY. ALL PARALLEL PIPE SYSTEMS SHALL HAVE 1.5 FEET MINIMUM HORIZONTAL CLEARANCE UNLESS OTHERWISE DIRECTED BY THE ENGINEER.
9. THE CONTRACTOR SHALL PROVIDE A JOINT IN ALL EXTERIOR LOOSE JOINTED PIPE SYSTEMS WITHIN 2 FEET OF EXTERIOR WALLS.
10. ALL EXISTING VALVE BOXES MANHOLE FRAMES AND COVERS AND SIMILAR APPURTENANCES SHALL BE ADJUSTED TO FINISHED GRADE PRIOR TO RESURFACING.
11. ALL OUTSIDE VALVES IN WATER LINES (POTABLE AND FLUSHING) SHALL BE GATE VALVES. ALL BURIED VALVES SHALL HAVE ROADWAY BOXES WITH CONCRETE SLABS IN ALL AREAS OTHER THAN PAVED AREAS. ALL VALVES SHALL BE THE SAME SIZE AS THE PIPELINE UNLESS OTHERWISE INDICATED.
12. ALL DISTURBED AREAS NOT PAVED OR SODDED SHALL BE FINE GRADED AND SHALL HAVE TOPSOIL, SEED, FERTILIZER, LIME AND MULCH PLACED IN ACCORDANCE WITH THE SPECIFICATIONS.
13. ELEVATIONS AND GRID COORDINATES ARE BASED ON THE MARYLAND STATE SYSTEM. ALL STRUCTURES, BUILDINGS, ROADWAYS, PIPES, CENTERLINES ETC. ARE LOCATED BY CONSTRUCTION COORDINATES. ZERO BASE FOR THE CONSTRUCTION COORDINATED SYSTEM IS AS NOTED ON SHEET C–2, C–3 & THE INTERSECTION OF SURVEY BASELINES.
14. FOR LOCATION OF UTILITIES ENTERING BUILDINGS, SEE MECHANICAL & ELECTRICAL DRAWINGS.
15. CONNECTIONS TO EXISTING PIPELINES MAY BE MADE BY TAPPING EXISTING PIPELINES UNDER PRESSURE OR BY USE OF SLEEVES AND SPACERS WITH SHUT DOWN OF SYSTEM. ATTENTION IS DIRECTED TO THE SPECIFICATIONS FOR PLANT OPERATIONAL REQUIREMENTS WHILE MAKING CONNECTIONS.
16. ALL PIPELINES THAT ARE CAPPED OR PLUGGED SHALL BE FLAGGED WITH STRIPED 2 x 4'S SET 3 FEET INTO GROUND AND 2 FEET ABOVE GRADE IDENTIFIED WITH ALL WEATHER MARKINGS.
17. ALL EXISTING WALKWAYS & PAVED AREAS THAT REQUIRE REMOVAL FOR CONSTRUCTION PURPOSES OR THAT ARE DISTURBED OR DAMAGED BY CONSTRUCTION ACTIVITIES SHALL BE REPLACED.
18. ALL PIPELINES, CONDUITS AND UTILITY SYSTEM INCLUDING STRUCTURES THAT ARE DESIGNATED TO BE ABANDONED SHALL BE REMOVED BY THE CONTRACTOR TO THE DEGREE NECESSARY TO COMPLETE CONSTRUCTION AS DETERMINED BY THE ENGINEER. VOIDS LEFT BY SYSTEMS REMOVED SHALL BE BACKFILLED WITH SELECT MATERIAL AND COMPACTED AS PER THE SPECIFICATIONS. SYSTEMS THAT ARE DESIGNED TO BE ABANDONED AND ALLOWED BY THE ENGINEER TO BE LEFT IN PLACE, SHALL BE PERMANENTLY CAPPED OR SEALED WATERTIGHT AT EACH END. MATERIALS AND APPURTENANCES REMOVED SHALL BE SALVAGED AND BECOME THE PROPERTY OF THE COUNTY UNLESS OTHERWISE DIRECTED BY THE ENGINEER THEN THEY SHALL BECOME THE PROPERTY OF THE CONTRACTOR AND REMOVED FROM THE SITE.
19. EXISTING SITE TOPOGRAPHY, EXISTING UTILITIES AND EXISTING GROUND PROFILES SHOWN ON THESE CONTRACT DRAWINGS ARE A COMPOSITE OF FIELD SURVEYS COMPLETED IN 1974 THRU 1990 AND DESIGN DRAWINGS OF VARIOUS CONSTRUCTION CONTRACTS. IN ADDITION, EXISTING UNDERGROUND UTILITIES THROUGHOUT THE PLANT ARE SIGNIFICANT IN NUMBER, HOWEVER, ONLY A VERY LIMITED AMOUNT HAVE BEEN SHOWN ON THESE DRAWINGS. THE CONTRACTOR'S ATTENTION IS DIRECTED TO THE CONTRACT CONDITIONS IN THIS REGARD.
20. MAINTENANCE STRIP REQUIRED AROUND ALL VESSELS, BUILDINGS AND OTHER STRUCTURES WHERE ADJACENT TO NON–PAVED AREAS. SEE SECTION B, SHEET C–32.
21. ALL TREES AND BUSHES DISTURBED BY OR IN THE WAY OF CONSTRUCTION SHALL BE RELOCATED TO AN ON SITE LOCATION TO BE DETERMINED IN THE FIELD. ALL TREES (4"DIA TRUNK AND LARGER) SHALL BE TRANSPLANTED UNDER THE SUPERVISION OF, AND TO THE REQUIREMENTS OF A CERTIFIED TREE EXPERT. TREES NOT SURVIVING 1 YEAR SHALL BE REPLACED WITH A TREE OF LIKE KIND AND SIZE.
22. WHEN CROSSING WATER LINES PROVIDE CONCRETE ENCASEMENT 10' EACH SIDE OF LINE.

DEPARTMENT OF PUBLIC WORKS
HOWARD COUNTY, MARYLAND

DIRECTOR OF PUBLIC WORKS	DATE 12/9/91	CHIEF, BUREAU OF ENGINEERING	DATE 12-9-91
CHIEF, BUREAU OF ENVIRONMENTAL SERVICES	DATE 12/9/91	CHIEF, UTILITY DESIGN DIVISION	DATE 12-9-91

Metcalf & Eddy
CCJM ENVIRONMENTAL ENGINEERS & SCIENTISTS
Silver Spring, Maryland

STATE OF MARYLAND — DONALD RICHARD AUKAMP No.11180 — REGISTERED PROFESSIONAL ENGINEER

DES: MCJ
DRN: LB
CHK: MCJ
DATE: 12/2/91

BY	NO.	REVISION	DATE
	2	RECORD DRAWING	11/19/92
	1	REVISED FOR BIDDING	3/5/92

CIVIL

ABBREVIATIONS, LEGEND AND GENERAL NOTES

LITTLE PATUXENT WASTEWATER TREATMENT PLANT
LITTLE PATUXENT WASTEWATER TREATMENT PLANT EXPANSION
ADDITION NO. 5
CAPITAL PROJECT S-6153
CONTRACT NO. 20-3082
HOWARD COUNTY, MARYLAND

SCALE AS SHOWN
SHEET 6 OF 226
C–1

FILE: C:\LTPAT2\LPAT-D

P.I. REFERENCES

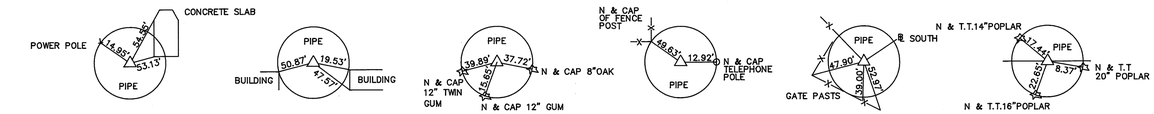

P.I. # M-1 0+00 ℄ EAST

P.I. # M-2 1+85 ℄ EAST 3+75 ℄ SOUTH

P.I. # M-3 5+89.8 ℄ EAST 2+25.72 ℄ "A"

P.I. # M-4 12+00 ℄ EAST

P.I. # M-5 0+00 ℄ SOUTH

P.I. # M-6 P.O.L. 5+75 ℄ SOUTH

P.I. # R-1 0+00 ℄ "A" 28+52.62 ℄ "C"

P.I. # R-2 4+31.72 ℄ "A"

P.I. # R-3 5+85.44 ℄ "A" 0+00 ℄ "B"

P.I. # R-4 12+98.00 ℄ "A"

P.I. # R-16 0+00 ℄ "D"

P.I. # R-21

P.I. # R-13 16+88.89 ℄ "C"

P.I. # R-14 21+36.76 ℄ "C"

P.I. # R-15 23+13.57 ℄ "C"

BASELINE MONUMENTS ESTABLISHED AS FOLLOWS: (IN FIELD)

MONUMENT	STATION NORTH	STATION EAST
M-2	0+00	0+00
M-3	0+00	4+04.8
M-6	2+00	0.00

NOTES:

1. P.I. REFERENENCES ARE REPRODUCED FROM ORIGINAL CONTRACT NO. 502-S SHEET G-4 AND CONTRACT NO.761-S SHEET G-3.
2. ALL NORTH, SOUTH, EAST AND WEST CO-ORDINATES SHOWN IN THIS CONTRACT ARE BASED ON (ON, OE) POINT M-2 AS ORIGIN EXCEPT FOR ℄ "C","D", AND "F".
3. APPROXIMATE LOCATION OF SHEET PILING IS SHOWN FOR THE INFORMATION AND CONVENIENCE OF THE CONTRACTOR. IT SHALL BE THE CONTRACTOR'S RESPONSIBILITY TO DESIGN, INSTALL AND REMOVE SHEET PILING AS APPROPRIATE FOR NEW CONSTRUCTION AND PROTECTION OF EXISTING STRUCTURES AND UTILITIES.
4. NO EXISTING SURVEY MONUMENTS WERE FOUND ON SITE.

LEGEND

PR	PROCESS REACTOR
FEB	FLOW EQUALIZATION BASIN
FC	FINAL CLARIFIER
℄	PROPERTY LINE
PS	PHOSPHORUS STRIPPER
PC	PRIMARY CLARIFIER
RC	REACTOR CLARIFIER
CMBM #	CONSTRUCTION MONUMENT BENCH MARK NUMBER
℄	CONSTRUCTION MONUMENT
	PROPOSED STRUCTURES OR ADDITIONS
	PROPOSED NEW PAVING
	MODIFICATIONS TO EXIST. STRUCTURES
B-2	BORING LOCATION & NO.
	EXIST. CONC. CURB
	NEW CONC. CURB
	EXIST. PAVED ROADS TO BE RESURFACED
	NEW CONCRETE SIDEWALK
	EXIST. CONC. SIDEWALK
SP	APPROXIMATE LOCATION OF SHEET PILING DURING CONSTRUCTION (SEE NOTE 3)
BLDG. OR VESSEL	MAINTENANCE STRIP

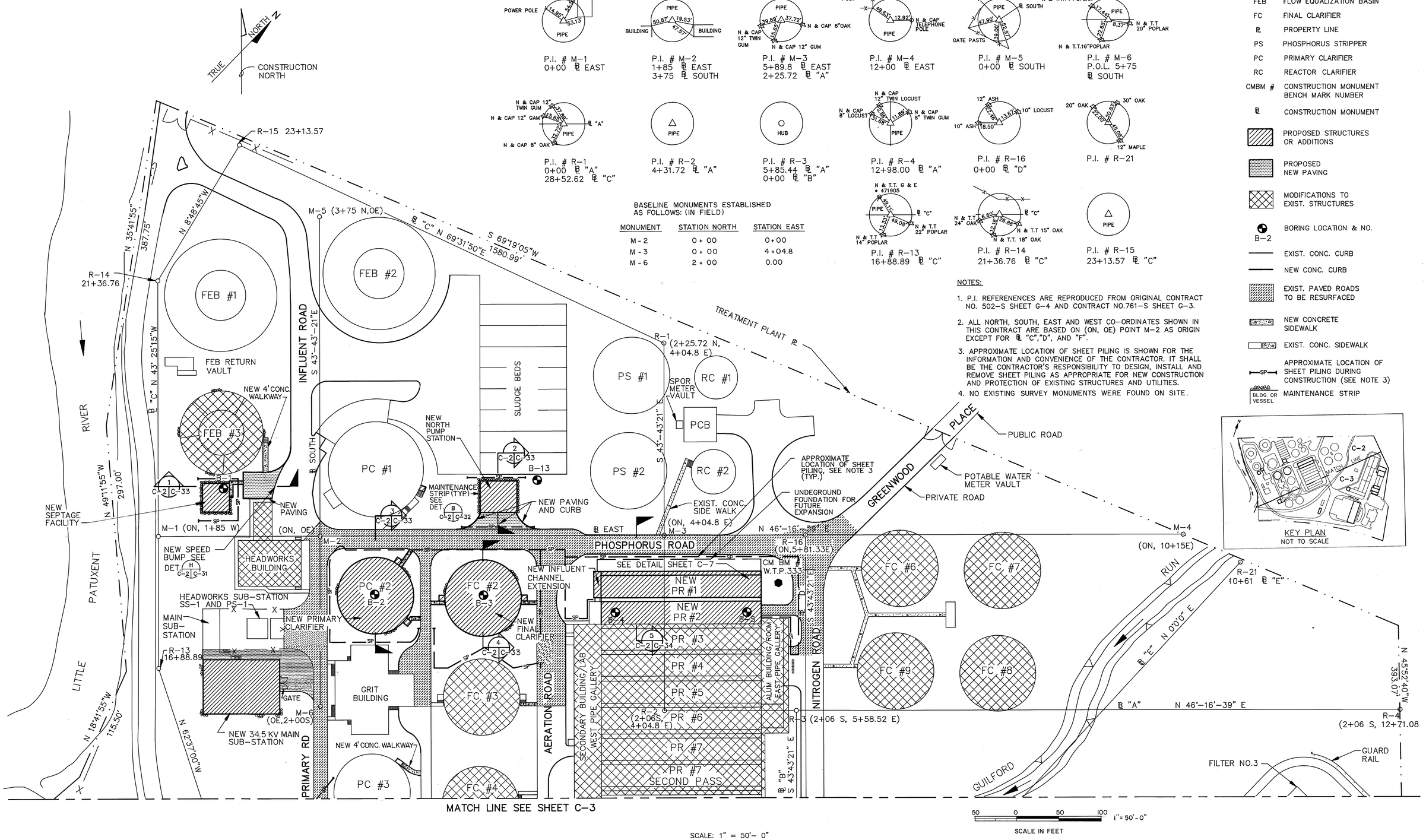

SCALE: 1" = 50'- 0"

FILE: C:\LTPAT2\LPAT10

DEPARTMENT OF PUBLIC WORKS
HOWARD COUNTY, MARYLAND

DIRECTOR OF PUBLIC WORKS — DATE 12/9/91
CHIEF, BUREAU OF ENGINEERING — DATE 12-9-91
CHIEF, BUREAU OF ENVIRONMENTAL SERVICES — DATE 12/9/91
CHIEF, UTILITY DESIGN DIVISION — DATE 12-9-91

Metcalf & Eddy
CCJM ENVIRONMENTAL ENGINEERS & SCIENTISTS
Silver Spring, Maryland

STATE OF MARYLAND — DONALD RICHARD AURAMPP No. 11160 — REGISTERED PROFESSIONAL ENGINEER

DES: MCJ
DRN: LB
CHK: MCJ
DATE: 12/2/91

BY	NO.	REVISION	DATE
CCJM	2	RECORD DRAWING	11/19/92
	1	REVISED FOR BIDDING	3/5/92

CIVIL

BORING PLAN I - NORTH

LITTLE PATUXENT WASTEWATER TREATMENT PLANT

LITTLE PATUXENT WASTEWATER TREATMENT PLANT EXPANSION
ADDITION NO. 5
CAPITAL PROJECT S-6153

CONTRACT NO. 20-3082
HOWARD COUNTY, MARYLAND

SCALE AS SHOWN

SHEET 7 OF 226

C-2

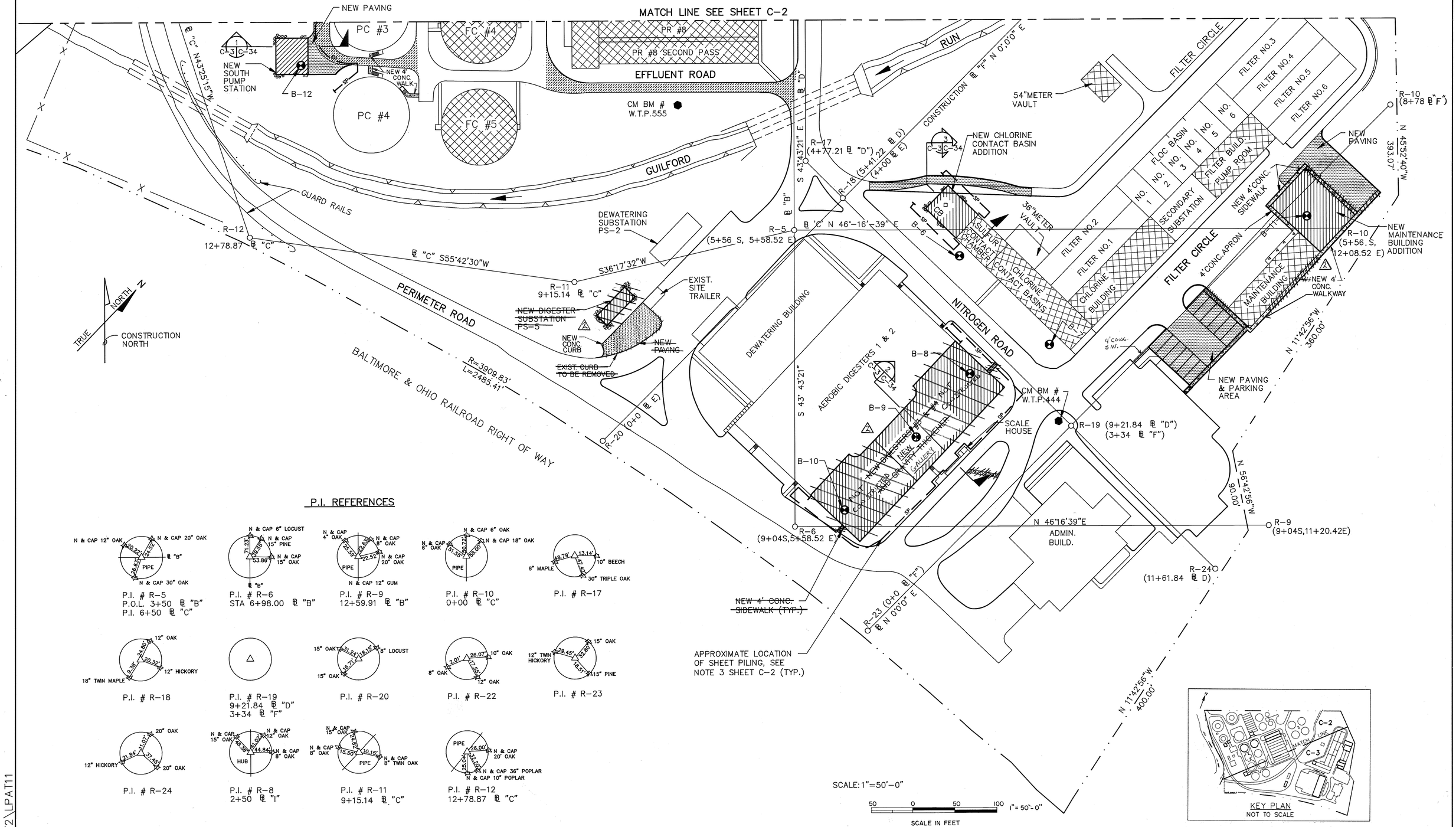

P.I. REFERENCES

DEPARTMENT OF PUBLIC WORKS
HOWARD COUNTY, MARYLAND

DIRECTOR OF PUBLIC WORKS — DATE 12/9/91
CHIEF, BUREAU OF ENGINEERING — DATE 12-9-91
CHIEF, BUREAU OF ENVIRONMENTAL SERVICES — DATE 12/9/91
CHIEF, UTILITY DESIGN DIVISION — DATE 12-9-91

M&E Metcalf & Eddy
CCJM ENVIRONMENTAL ENGINEERS & SCIENTISTS
Silver Spring, Maryland

STATE OF MARYLAND — DONALD RICHARD AUKAMP No. 11193 — REGISTERED PROFESSIONAL ENGINEER

DES: MCJ
DRN: LB
CHK: MCJ
DATE: 12/2/91

BY	NO.	REVISION	DATE
	2.	RECORD DRAWING	11/14/95
	1	REVISED FOR BIDDING	3/5/92

CIVIL

BORING PLAN II – SOUTH

LITTLE PATUXENT WASTEWATER TREATMENT PLANT
LITTLE PATUXENT WASTEWATER TREATMENT PLANT EXPANSION ADDITION NO. 5
CAPITAL PROJECT S-6153
CONTRACT NO. 20-3082
HOWARD COUNTY, MARYLAND

SCALE AS SHOWN
SHEET 8 OF 226
C-3

FILE: C:\LTPAT2\LPAT11

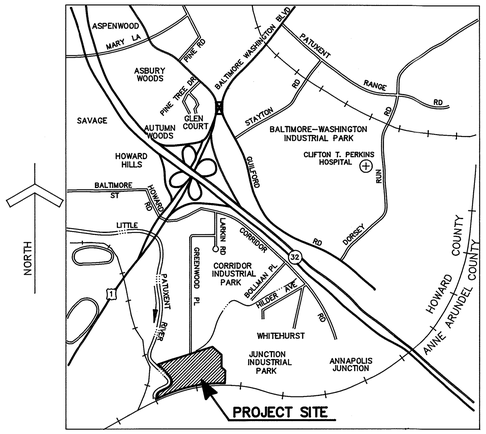

VICINITY MAP

SCALE IN FEET 0 1000 2000 4000 6000
SCALE: 1"= 2000'

HOWARD COUNTY BENCH MARKS

- W.T.P. 333 – CONC.MON.EL.140.87
- W.T.P. 444 – CONC.MON.EL.142.14
- W.T.P. 555 – CONC.MON.EL.140.35

WATER SURFACE ELEVATION LITTLE PATUXENT RIVER – 100 YEAR FLOOD 143.00=FEET.

CONSTRUCTION SEQUENCE

1. OBTAIN GRADING PERMIT.
2. INSTALL ALL SEDIMENT AND EROSION CONTROL MEASURES IN AREAS OF PROPOSED WORK PRIOR TO ANY CONSTRUCTION.
3. CONSTRUCT SEPTAGE FACILITY, NORTH & SOUTH PUMP STATIONS, PRIMARY CLARIFIER, SECONDARY CLARIFIER, PROCESS REACTORS NO.1 & NO.2, CHLORINE CONTACT BASIN, DIGESTERS NO.3, NO.4 AND GRAVITY THICKENERS NO.3, NO.4, MAINTENANCE BUILDING ADDITION AND PARKING ADDITION.
4. FINISH PROPOSED GRADES WITH PERMANENT SEEDING.
5. REPAVE DISTURBED ROADWAYS.
6. DURING CONSTRUCTION AND AFTER EACH RAINFALL, THE CONTRACTOR SHALL INSPECT AND PROVIDE NECESSARY MAINTENANCE OF THE SEDIMENT AND EROSION CONTROLS.

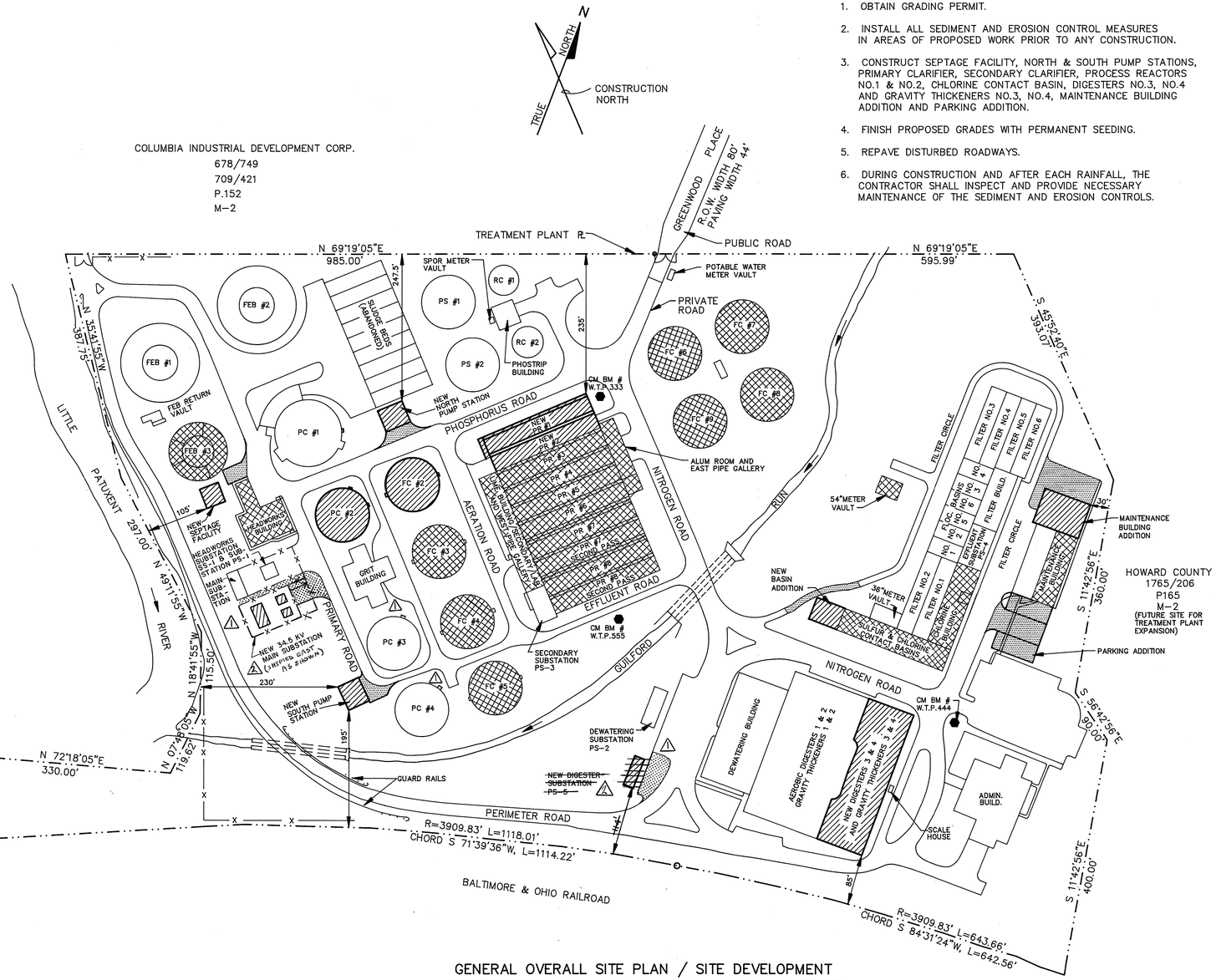

GENERAL OVERALL SITE PLAN / SITE DEVELOPMENT

SCALE IN FEET 0 50 100 200 300
SCALE: 1" = 100'

LEGEND

PR	PROCESS REACTOR
FEB	FLOW EQUALIZATION BASIN
FC	FINAL CLARIFIER
℞	PROPERTY LINE
PS	PHOSPHORUS STRIPPER
PC	PRIMARY CLARIFIER
RC	REACTOR CLARIFIER
CMBM #	CONSTRUCTION MONUMENT BENCH MARK NUMBER
	PROPOSED STRUCTURES OR ADDITIONS
	PROPOSED NEW PAVING
	MODIFICATION TO EXIST. STRUCTURES

GENERAL NOTES:

1. DIMENSIONS TO NEW BUILDINGS ARE PERPENDICULAR TO PROPERTY LINE.
2. THE ENTIRE LITTLE PATUXENT WASTEWATER TREATMENT PLANT SITE IS LOCATED IN THE 100 YEAR FLOODPLAIN.
3. OFFSITE DISPOSAL OF EXCESS MATERIAL WILL BE TO AN APPROVED SITE.

SITE ANALYSIS

A. AREA OF PARCEL/LOT = 38.01 ACRES
B. PRESENT ZONING = M-2
C. NUMBER OF PARKING SPACES ON SITE = 107
D. OPEN SPACES REMAINING = 28.74 AC. 75.63 PERCENT
E. EXISTING BUILDING COVERAGE 7.7 ACRES 20.26 PERCENT
F. PROPOSED BUILDING COVERAGE 1.56 ACRES 4.10 PERCENT
G. TOTAL BUILDING COVERAGE 9.26 ACRES 24.36 PERCENT
H. NUMBER OF EMPLOYEES = 55
I. MAINTENANCE BUILDING ADDITION = 4653 SF

APPROVED: For Public Water and Public Sewerage, Storm Drainage Systems and Public Roads
Howard County Department of Public Works

DIRECTOR — DATE 11/25/91
CHIEF BUREAU OF ENGINEERING — DATE 11-25-91

APPROVED: For Public Water and Public Sewerage Systems
Howard County Health Department

COUNTY HEALTH OFFICER — DATE 11-27-91

ADDRESS CHART	
LOT NUMBER	STREET ADDRESS
PARCEL A	8900 GREENWOOD PLACE

APPROVED: Howard County Dept. of Planning and Zoning

DIRECTOR — DATE 12/9/91
CHIEF, DIVISION OF COMMUNITY PLANNING AND LAND DEVELOPMENT — DATE 12/6/91

DEVELOPER'S CERTIFICATION

"I/We certify that all development and construction will be done according to this plan, and that any responsible personnel involved in the construction project will have a Certificate of Attendance at a Department of Natural Resources Approved Training Program for the Control of Sediment and Erosion before beginning the project." I authorize periodic on-site inspection by the Howard County Soil Conservation District.

BUREAU OF ENGINEERING
DEPARTMENT OF PUBLIC WORKS — DATE 11-25-91

Reviewed for Howard County S.C.D. and meets technical requirements

U.S. SOIL CONSERVATION SERVICE — DATE 11/27/91

This development plan is approved for soil erosion and sediment control by the Howard County Soil Conservation District.

Approved: Date: 11/27/91

ENGINEER'S CERTIFICATION

I certify that this plan for erosion and sediment control represents a practical and workable plan based on my personal knowledge of the site conditions and that it was prepared in accordance with the requirements of the Howard County Soil Conservation District.

Date: NOV 5 1991

SUBDIVISION NAME				SECT./AREA	LOT/PARCEL #
LITTLE PATUXENT WWTP				–	A
PLAT # RO L/F 423/516 618/537	BLOCK # 24	ZONE M-2	TAX/ZONE MAP 47	ELEC.DIST. 6	CENSUS TR. 6064
WATER CODE C04			SEWER CODE 4020000		

*(F-91-72 recorded 12-5-91, Plat # 1014-B)

FILE: C:\LTPAT2\LPAT4

DEPARTMENT OF PUBLIC WORKS
HOWARD COUNTY, MARYLAND

DIRECTOR OF PUBLIC WORKS — DATE 11/25/91
CHIEF, BUREAU OF ENGINEERING — DATE 11-25-91
CHIEF, BUREAU OF ENVIRONMENTAL SERVICES — DATE 11/25/91
CHIEF, UTILITY DESIGN DIVISION — DATE 11-25-91

Metcalf & Eddy
CCJM ENVIRONMENTAL ENGINEERS & SCIENTISTS
Silver Spring, Maryland

STATE OF MARYLAND — DONALD RICHARD AUKAMP No.11160 — REGISTERED PROFESSIONAL ENGINEER

DES: MCJ			
DRN: LB			
CHK: MCJ			
DATE: 11-5-91	2	RECORD DRAWING	1/1/93
	MCJ 1	REVISIONS TO SD-1 TO SD-9 FOR BID	2/28/92
	BY NO.	REVISION	DATE

CIVIL
REVISION TO SDP – 78-55 & 89-62
SITE DEVELOPMENT PLAN

LITTLE PATUXENT WASTEWATER TREATMENT PLANT
LITTLE PATUXENT WASTEWATER TREATMENT PLANT EXPANSION
ADDITION NO. 5
CAPITAL PROJECT S-6153
CONTRACT NO. 20-3082
HOWARD COUNTY, MARYLAND

SCALE AS SHOWN
SHEET 9 OF 226
SD-1 OF 9
C-4

SDP-92-33

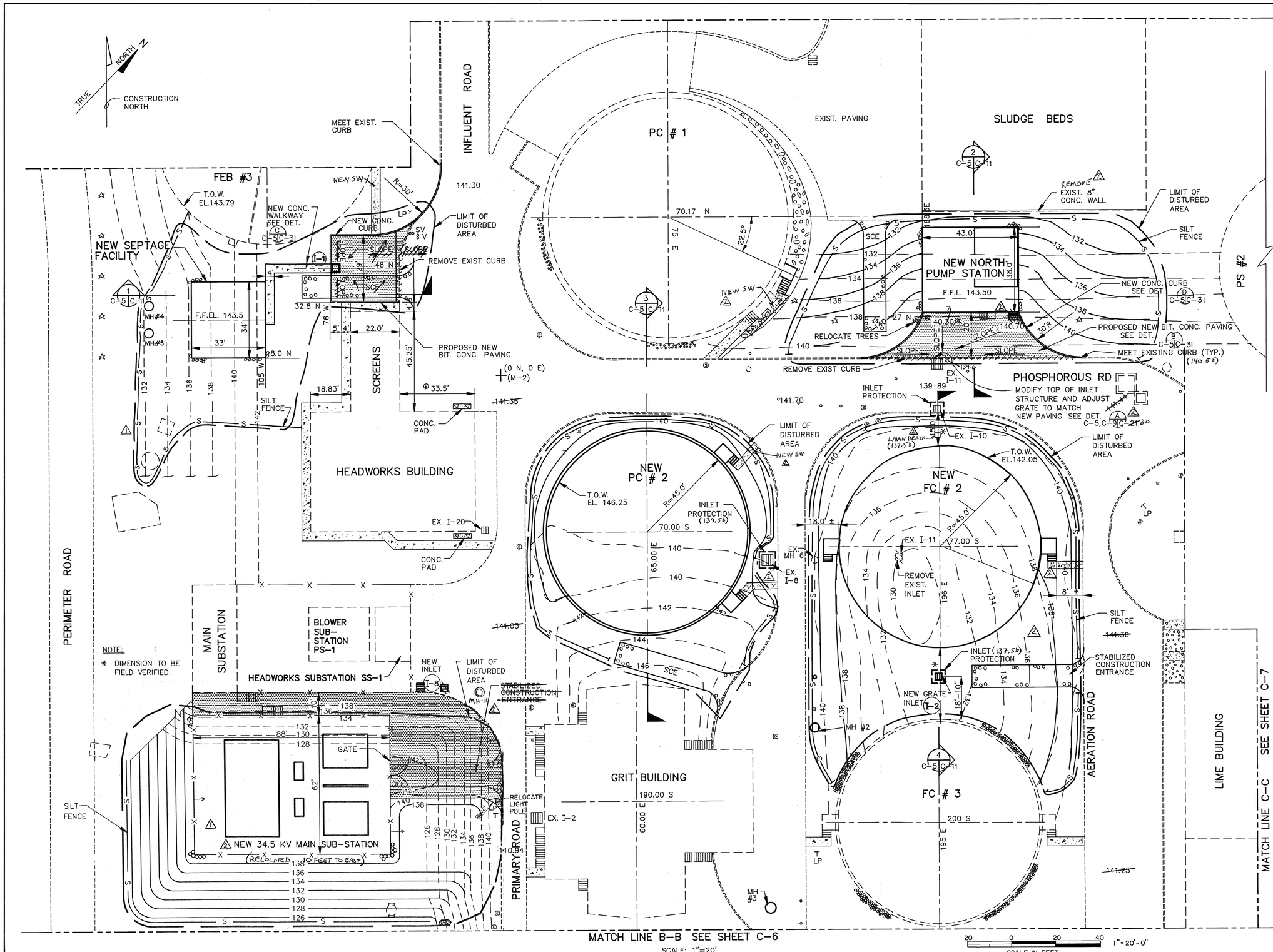

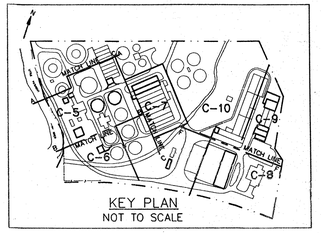

APPROVED: For Public Water and Public Sewerage, Storm Drainage Systems and Public Roads
Howard County Department of Public Works

DIRECTOR — DATE 11/25/91
CHIEF BUREAU OF ENGINEERING — DATE 11-25-91

APPROVED: For Public Water and Public Sewerage Systems
Howard County Health Department

COUNTY HEALTH OFFICER — DATE 11-27-91

ADDRESS CHART	
LOT NUMBER	STREET ADDRESS
PARCEL A	8900 GREENWOOD PLACE

APPROVED: Howard County Dept. of Planning and Zoning

DIRECTOR — DATE 12/9/91
CHIEF, DIVISION OF COMMUNITY PLANNING AND LAND DEVELOPMENT — DATE 12/6/91

DEVELOPER'S CERTIFICATION

"I/We certify that all development and construction will be done according to this plan, and that any responsible personnel involved in the construction project will have a Certificate of Attendance at a Department of Natural Resources Approved Training Program for the Control of Sediment and Erosion before beginning the project." I authorize periodic on-site inspection by the Howard County Soil Conservation District.

BUREAU OF ENGINEERING
DEPARTMENT OF PUBLIC WORKS — DATE 11-25-91

Reviewed for Howard County S.C.D. and meets technical requirements

U.S. SOIL CONSERVATION SERVICE — DATE 11/27/91

This development plan is approved for soil erosion and sediment control by the Howard County Soil Conservation District.

Approved: — Date: 11/27/91

ENGINEER'S CERTIFICATION

I certify that this plan for erosion and sediment control represents a practical and workable plan based on my personal knowledge of the site conditions and that it was prepared in accordance with the requirements of the Howard County Soil Conservation District.

Date: NOV 5 1991

SUBDIVISION NAME			SECT./AREA	LOT/PARCEL #
LITTLE PATUXENT WWTP			-	A
PLAT # RO L/F 423/916 618/537	BLOCK # 24	ZONE M-2	TAX/ZONE MAP 47	ELEC.DIST. 6	CENSUS TR. 6064
WATER CODE C04			SEWER CODE 4020000	

DEPARTMENT OF PUBLIC WORKS
HOWARD COUNTY, MARYLAND

DIRECTOR OF PUBLIC WORKS — DATE 11/25/91
CHIEF, BUREAU OF ENGINEERING — DATE 11-25-91
CHIEF, BUREAU OF ENVIRONMENTAL SERVICES — DATE 11/25/91
CHIEF, UTILITY DESIGN DIVISION — DATE 11-25-91

M&E Metcalf & Eddy
CCJM ENVIRONMENTAL ENGINEERS & SCIENTISTS
Silver Spring, Maryland

STATE OF MARYLAND — DONALD RICHARD AUMANN No. 11960 — REGISTERED PROFESSIONAL ENGINEER

DES: MCJ
DRN: LB
CHK: MCJ
DATE: 11-5-91

BY	NO.	REVISION	DATE
	2	RECORD DRAWING	11/14/95
MCJ	1	REVISIONS TO SD-1 TO SD-9 FOR BID	2/28/92

CIVIL
REVISION TO SDP-78-55 & 89-62
SITE DEVELOPMENT & GRADING PLAN I

LITTLE PATUXENT WASTEWATER TREATMENT PLANT
LITTLE PATUXENT WASTEWATER TREATMENT PLANT EXPANSION
ADDITION NO. 5
CAPITAL PROJECT S-6153
CONTRACT NO. 20-3082
HOWARD COUNTY, MARYLAND

SCALE AS SHOWN
SHEET 10 OF 226
SD-2 OF 9
C-5

SDP-92-33

FILE: D:\DWG\LPAT-A

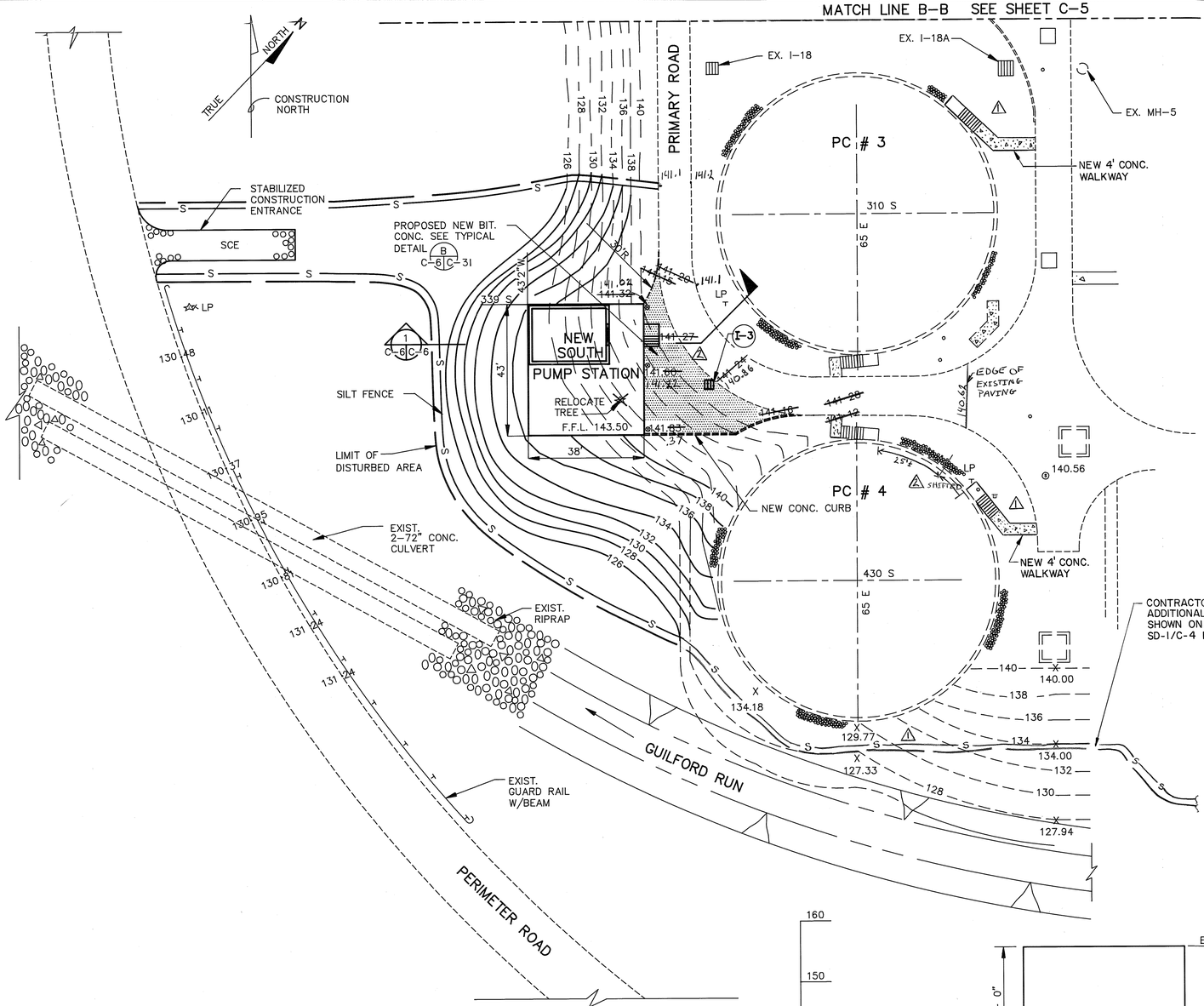

SCALE: 1"=20'

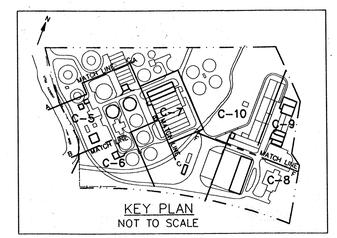

KEY PLAN
NOT TO SCALE

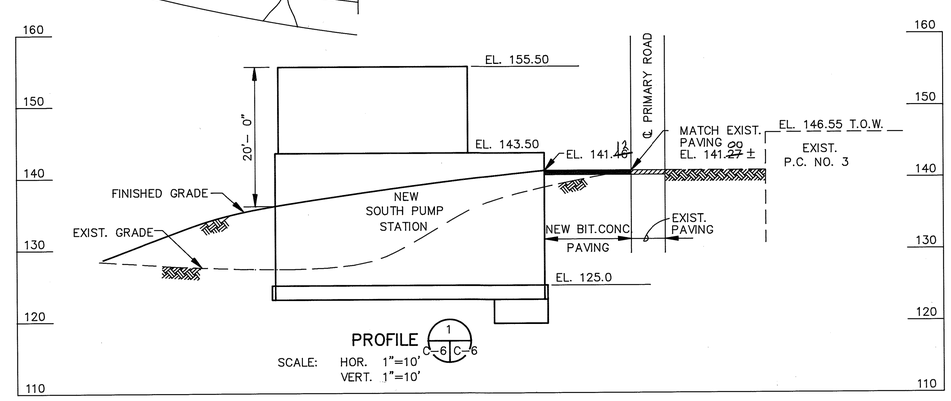

PROFILE 1 C-6 C-6

SCALE: HOR. 1"=10'
VERT. 1"=10'

1"= 10'-0"
10 0 10 20

1"= 20'-0"
20 0 20 40

SCALE IN FEET

APPROVED: For Public Water and Public Sewerage, Storm Drainage Systems and Public Roads
Howard County Department of Public Works

DIRECTOR — DATE 11/25/91
CHIEF BUREAU OF ENGINEERING — DATE 11-25-91

APPROVED: For Public Water and Public Sewerage Systems
Howard County Health Department

COUNTY HEALTH OFFICER — DATE 11-27-91

ADDRESS CHART	
LOT NUMBER	STREET ADDRESS
PARCEL A	8900 GREENWOOD PLACE

APPROVED: Howard County Dept. of Planning and Zoning

DIRECTOR — DATE 12/9/91
CHIEF, DIVISION OF COMMUNITY PLANNING AND LAND DEVELOPMENT — DATE 12/6/91

DEVELOPER'S CERTIFICATION

"I/We certify that all development and construction will be done according to this plan, and that any responsible personnel involved in the construction project will have a Certificate of Attendance at a Department of Natural Resources Approved Training Program for the Control of Sediment and Erosion before beginning the project." I authorize periodic on-site inspection by the Howard County Soil Conservation District.

BUREAU OF ENGINEERING
DEPARTMENT OF PUBLIC WORKS — DATE 11-25-91

Reviewed for Howard County S.C.D. and meets technical requirements

U.S. SOIL CONSERVATION SERVICE — DATE 11/27/91

This development plan is approved for soil erosion and sediment control by the Howard County Soil Conservation District.

Approved: Date: 11/27/91

ENGINEER'S CERTIFICATION

I certify that this plan for erosion and sediment control represents a practical and workable plan based on my personal knowledge of the site conditions and that it was prepared in accordance with the requirements of the Howard County Soil Conservation District.

Date: NOV 8 1991

SUBDIVISION NAME				SECT./AREA	LOT/PARCEL #
LITTLE PATUXENT WWTP				–	A
PLAT # RO L/F	BLOCK #	ZONE	TAX/ZONE MAP	ELEC.DIST.	CENSUS TR.
423/516 818/537	24	M-2	47	6	6064
WATER CODE			SEWER CODE		
C04			4020000		

DEPARTMENT OF PUBLIC WORKS
HOWARD COUNTY, MARYLAND

DIRECTOR OF PUBLIC WORKS — DATE 11/25/91
CHIEF, BUREAU OF ENGINEERING — DATE 11-25-91
CHIEF, BUREAU OF ENVIRONMENTAL SERVICES — DATE 11/25/91
CHIEF, UTILITY DESIGN DIVISION — DATE 11-25-91

M&E Metcalf & Eddy
CCJM ENVIRONMENTAL ENGINEERS & SCIENTISTS
Silver Spring, Maryland

STATE OF MARYLAND — DONALD RICHARD AUKAMP No. 11160 — REGISTERED PROFESSIONAL ENGINEER

DES: MCJ
DRN: LB
CHK: MCJ
DATE: 11-5-91

BY	NO.	REVISION	DATE
	2	RECORD DRAWING	11/14/95
MCJ	1	REVISIONS TO SD-1 TO SD-9 FOR BID	2/28/92

CIVIL
REVISION TO SDP-78-55 & 89-62
SITE DEVELOPMENT & GRADING PLAN II

LITTLE PATUXENT WASTEWATER TREATMENT PLANT
LITTLE PATUXENT WASTEWATER TREATMENT PLANT EXPANSION
ADDITION NO. 5
CAPITAL PROJECT S-6153
CONTRACT NO. 20-3082
HOWARD COUNTY, MARYLAND

SCALE AS SHOWN
SHEET 11 OF 226
SD-3OF 9
C-6

SDP-92-33

FILE: C:\LTPAT2\LPAT-B

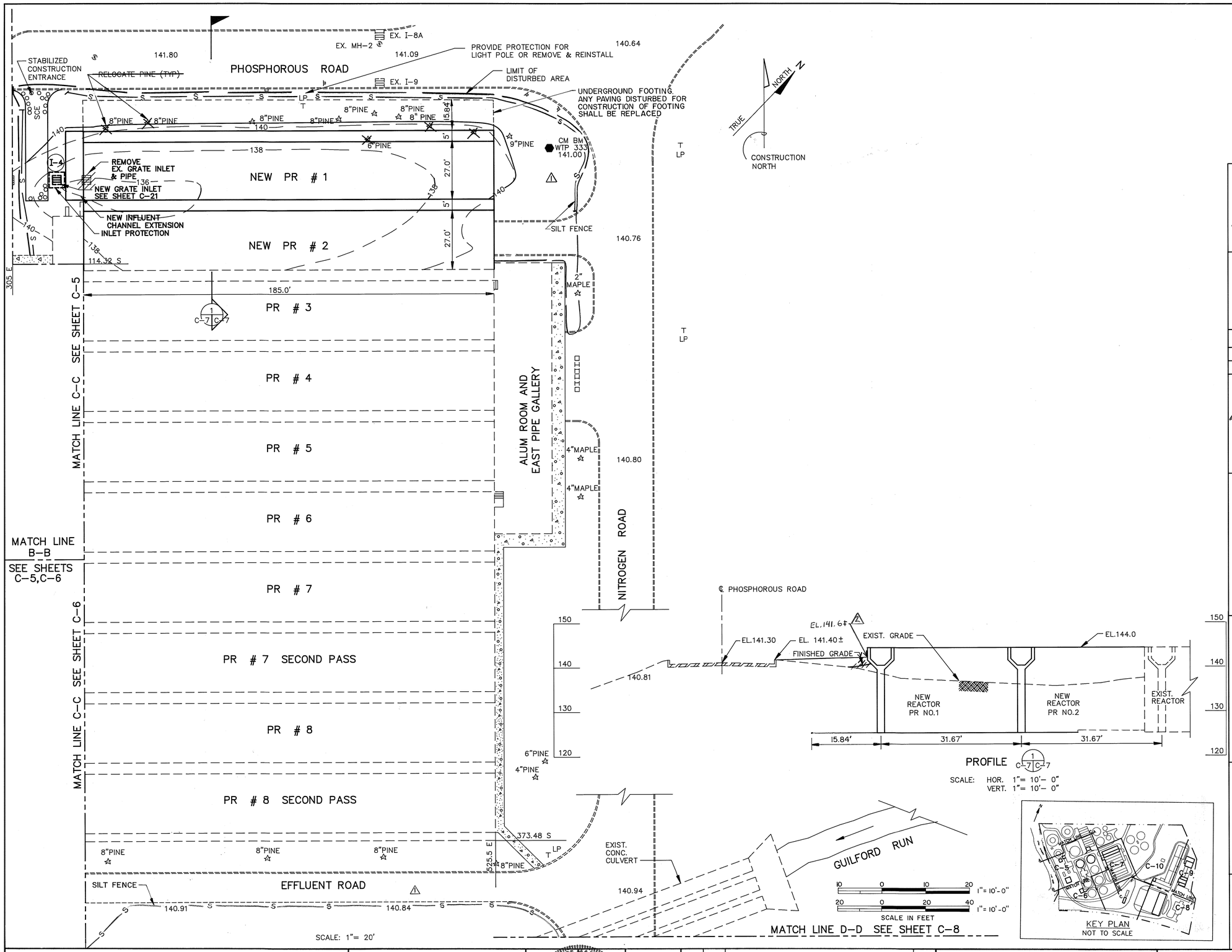

APPROVED: For Public Water and Public Sewerage, Storm Drainage Systems and Public Roads
Howard County Department of Public Works

DIRECTOR — DATE 11/25/91
CHIEF BUREAU OF ENGINEERING — DATE 11-25-91

APPROVED: For Public Water and Public Sewerage Systems
Howard County Health Department

COUNTY HEALTH OFFICER — DATE 11-27-91

ADDRESS CHART

LOT NUMBER	STREET ADDRESS
PARCEL A	8900 GREENWOOD PLACE

APPROVED: Howard County Dept. of Planning and Zoning

DIRECTOR — DATE 12/9/91
CHIEF, DIVISION OF COMMUNITY PLANNING AND LAND DEVELOPMENT — DATE 12/6/91

DEVELOPER'S CERTIFICATION

"I/We certify that all development and construction will be done according to this plan, and that any responsible personnel involved in the construction project will have a Certificate of Attendance at a Department of Natural Resources Approved Training Program for the Control of Sediment and Erosion before beginning the project." I authorize periodic on-site inspection by the Howard County Soil Conservation District.

BUREAU OF ENGINEERING
DEPARTMENT OF PUBLIC WORKS — DATE 11-25-91

Reviewed for Howard County S.C.D. and meets technical requirements

U.S. SOIL CONSERVATION SERVICE — DATE 11/27/91

This development plan is approved for soil erosion and sediment control by the Howard County Soil Conservation District.

Approved: — Date: 11/27/91

ENGINEER'S CERTIFICATION

I certify that this plan for erosion and sediment control represents a practical and workable plan based on my personal knowledge of the site conditions and that it was prepared in accordance with the requirements of the Howard County Soil Conservation District.

Date: NOV 5 1991

SUBDIVISION NAME			SECT./AREA	LOT/PARCEL #
LITTLE PATUXENT WWTP			-	A
PLAT # RO L/F 423/516 618/537	BLOCK # 24	ZONE M-2	TAX/ZONE MAP 47	ELEC.DIST. 6	CENSUS TR. 6064
WATER CODE C04			SEWER CODE 4020000	

DEPARTMENT OF PUBLIC WORKS
HOWARD COUNTY, MARYLAND

DIRECTOR OF PUBLIC WORKS — DATE 11/25/91
CHIEF, BUREAU OF ENGINEERING — DATE 11-25-91
CHIEF, BUREAU OF ENVIRONMENTAL SERVICES — DATE 11/25/91
CHIEF, UTILITY DESIGN DIVISION — DATE 11-25-91

Metcalf & Eddy
CCJM ENVIRONMENTAL ENGINEERS & SCIENTISTS
Silver Spring, Maryland

STATE OF MARYLAND — DONALD RICHARD AUKAMP No. 11460 — REGISTERED PROFESSIONAL ENGINEER

DES: MCJ
DRN: LB
CHK: MCJ
DATE: 11-5-91

BY	NO.	REVISION	DATE
	2	RECORD DRAWING	11/14/93
MCJ	1	REVISION TO SD-1 TO SD-9 FOR BID	2/28/92

CIVIL

REVISION TO SDP-78-55 & 89-62
SITE DEVELOPMENT & GRADING PLAN III

LITTLE PATUXENT WASTEWATER TREATMENT PLANT
LITTLE PATUXENT WASTEWATER TREATMENT PLANT EXPANSION
ADDITION NO. 5
CAPITAL PROJECT S-6153
CONTRACT NO. 20-3082
HOWARD COUNTY, MARYLAND

SCALE AS SHOWN
SHEET 12 OF 226
SD-4 OF 9
C-7

FILE: C:\LTPAT2\LPAT2

SDP-92-33

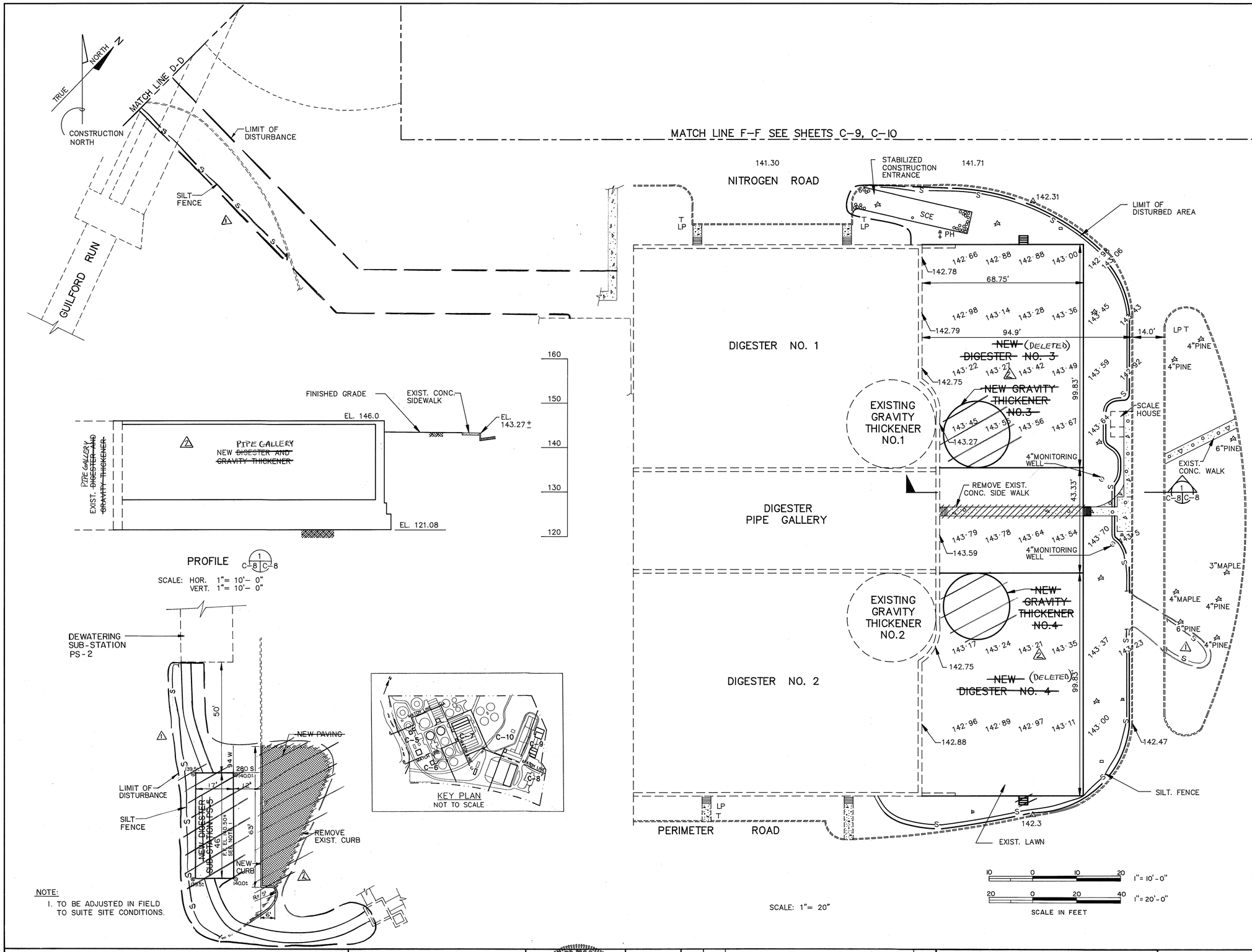

APPROVED: For Public Water and Public Sewerage, Storm Drainage Systems and Public Roads
Howard County Department of Public Works

DIRECTOR — DATE 11/25/91
CHIEF BUREAU OF ENGINEERING — DATE 11-25-91

APPROVED: For Public Water and Public Sewerage Systems
Howard County Health Department

COUNTY HEALTH OFFICER — DATE 11-27-91

ADDRESS CHART	
LOT NUMBER	STREET ADDRESS
PARCEL A	8900 GREENWOOD PLACE

APPROVED: Howard County Dept. of Planning and Zoning

DIRECTOR — DATE 12/9/91
CHIEF, DIVISION OF COMMUNITY PLANNING AND LAND DEVELOPMENT — DATE 12/6/91

DEVELOPER'S CERTIFICATION

"I/We certify that all development and construction will be done according to this plan, and that any responsible personnel involved in the construction project will have a Certificate of Attendance at a Department of Natural Resources Approved Training Program for the Control of Sediment and Erosion before beginning the project." I authorize periodic on-site inspection by the Howard County Soil Conservation District.

BUREAU OF ENGINEERING
DEPARTMENT OF PUBLIC WORKS — DATE 11-25-91

Reviewed for Howard County S.C.D. and meets technical requirements

U.S. SOIL CONSERVATION SERVICE — DATE 11/27/91

This development plan is approved for soil erosion and sediment control by the Howard County Soil Conservation District.

Approved: — Date: 11/27/91

ENGINEER'S CERTIFICATION

I certify that this plan for erosion and sediment control represents a practical and workable plan based on my personal knowledge of the site conditions and that it was prepared in accordance with the requirements of the Howard County Soil Conservation District.

Donald R. Auburn — Date: NOV 5 1991

SUBDIVISION NAME		SECT./AREA	LOT/PARCEL #
LITTLE PATUXENT WWTP		-	A
PLAT # RO L/F	BLOCK #	ZONE	TAX/ZONE MAP	ELEC.DIST.	CENSUS TR.
423/916 618/537	24	M-2	47	6	6064
WATER CODE		SEWER CODE	
C04		4020000	

DEPARTMENT OF PUBLIC WORKS
HOWARD COUNTY, MARYLAND

DIRECTOR OF PUBLIC WORKS — DATE 11/25/91
CHIEF, BUREAU OF ENGINEERING — DATE 11-25-91
CHIEF, BUREAU OF ENVIRONMENTAL SERVICES — DATE 11/25/91
CHIEF, UTILITY DESIGN DIVISION — DATE 11-25-91

M&E Metcalf & Eddy
CCJM ENVIRONMENTAL ENGINEERS & SCIENTISTS
Silver Spring, Maryland

STATE OF MARYLAND — DONALD RICHARD AUBURN No. 11160 — REGISTERED PROFESSIONAL ENGINEER

DES: MCJ			
DRN: LB			
CHK: MCJ		2	RECORD DRAWING — 11/19/95
DATE: 11-5-91	MCJ	1	REVISION TO SD-1 TO SD-9 FOR BID — 2/28/92
	BY	NO.	REVISION — DATE

CIVIL
REVISION TO SDP-78-55 & 89-62
SITE DEVELOPMENT & GRADING PLAN IV

LITTLE PATUXENT WASTEWATER TREATMENT PLANT
LITTLE PATUXENT WASTEWATER TREATMENT PLANT EXPANSION ADDITION NO. 5
CAPITAL PROJECT S-6153
CONTRACT NO. 20-3082
HOWARD COUNTY, MARYLAND

SCALE AS SHOWN
SHEET 13 OF 226
SD-5 OF 9
C-8

FILE: C:\LTPAT2\LPAT3

SDP-92-33

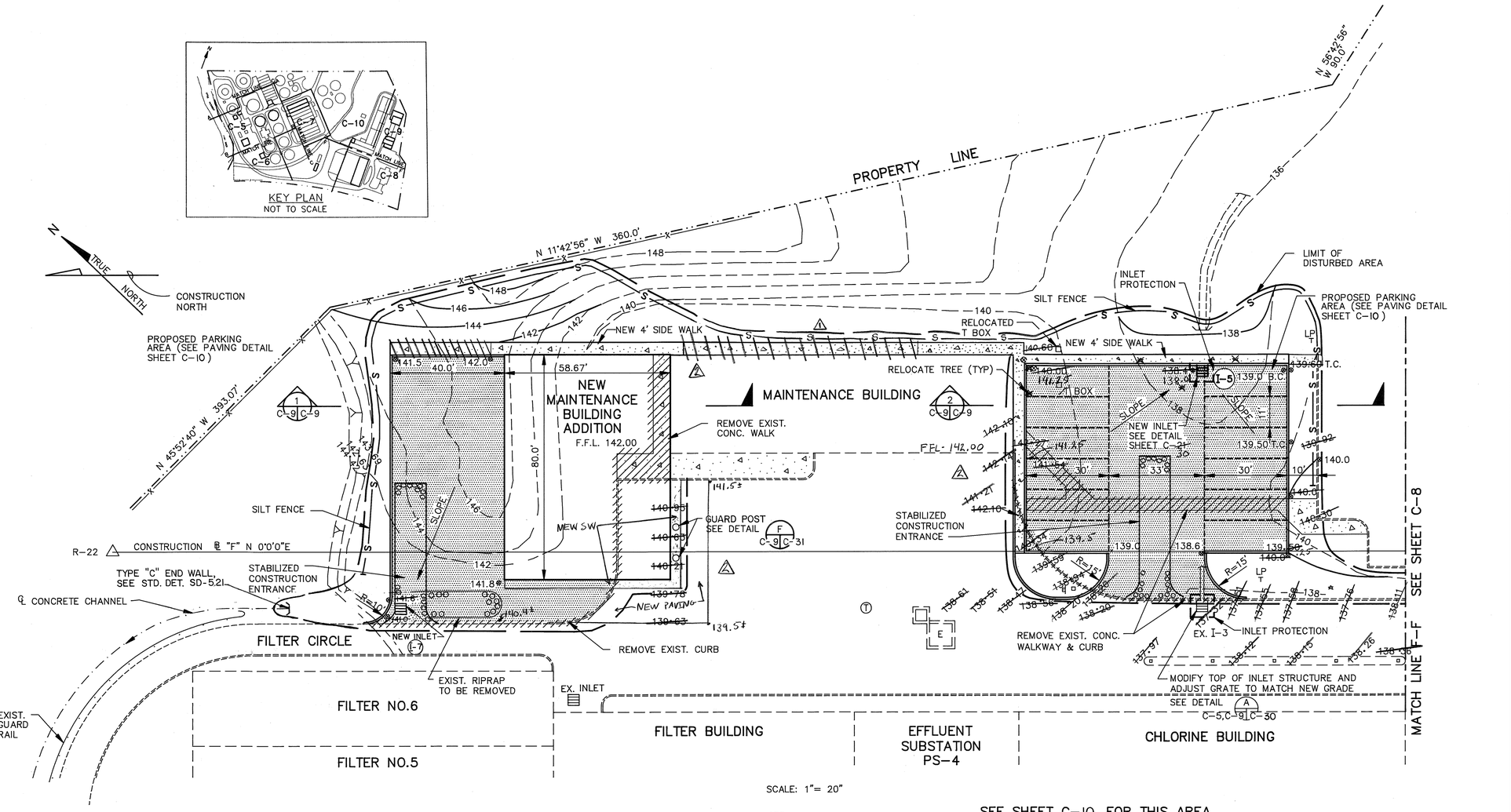

SCALE: 1"= 20"

SEE SHEET C-10 FOR THIS AREA

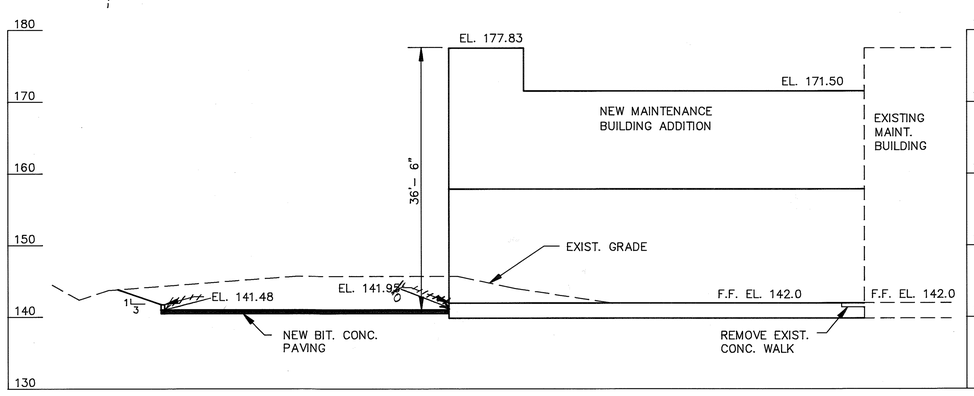

PROFILE 1 C-9 C-9

SCALE: HOR. 1"= 10'- 0"
VERT. 1"= 10'- 0"

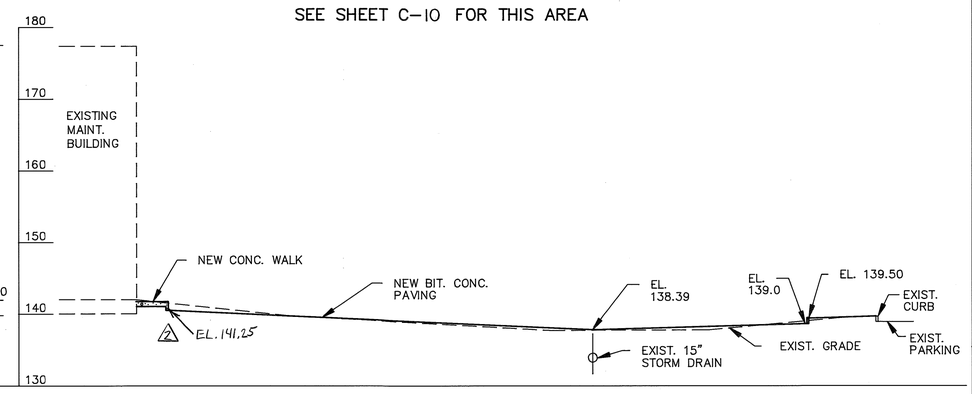

PROFILE 2 C-9 C-9

SCALE: HOR. 1"= 10'- 0"
VERT. 1"= 10'- 0"

10 0 10 20 1"= 10'-0"
20 0 20 40 1"= 20'-0"
SCALE IN FEET

APPROVED: For Public Water and Public Sewerage, Storm Drainage Systems and Public Roads
Howard County Department of Public Works

DIRECTOR — DATE 11/25/91
CHEF BUREAU OF ENGINEERING — DATE 11-25-91

APPROVED: For Public Water and Public Sewerage Systems
Howard County Health Department

COUNTY HEALTH OFFICER — DATE 11-27-91

ADDRESS CHART

LOT NUMBER	STREET ADDRESS
PARCEL A	8900 GREENWOOD PLACE

APPROVED: Howard County Dept. of Planning and Zoning

DIRECTOR — DATE 12/9/91
CHIEF, DIVISION OF COMMUNITY PLANNING AND LAND DEVELOPMENT — DATE 12/6/91

DEVELOPER'S CERTIFICATION

"I/We certify that all development and construction will be done according to this plan, and that any responsible personnel involved in the construction project will have a Certificate of Attendance at a Department of Natural Resources Approved Training Program for the Control of Sediment and Erosion before beginning the project." I authorize periodic on-site inspection by the Howard County Soil Conservation District.

BUREAU OF ENGINEERING
DEPARTMENT OF PUBLIC WORKS — DATE 11-25-91

Reviewed for Howard County S.C.D. and meets technical requirements

U.S. SOIL CONSERVATION SERVICE — DATE 11/27/91

This development plan is approved for soil erosion and sediment control by the Howard County Soil Conservation District.

Approved: Date: 11/27/91

ENGINEER'S CERTIFICATION

I certify that this plan for erosion and sediment control represents a practical and workable plan based on my personal knowledge of the site conditions and that it was prepared in accordance with the requirements of the Howard County Soil Conservation District.

Date: NOV 5 1991

SUBDIVISION NAME				SECT./AREA	LOT/PARCEL #
LITTLE PATUXENT WWTP				–	A
PLAT # RO L/F 423/S16 618/537	BLOCK # 24	ZONE M-2	TAX/ZONE MAP 47	ELEC.DIST. 6	CENSUS TR. 6064
WATER CODE C04			SEWER CODE 4020000		

DEPARTMENT OF PUBLIC WORKS
HOWARD COUNTY, MARYLAND

DIRECTOR OF PUBLIC WORKS — DATE 11/25/91
CHIEF, BUREAU OF ENGINEERING — DATE 11-25-91
CHIEF, BUREAU OF ENVIRONMENTAL SERVICES — DATE 11/25/91
CHIEF, UTILITY DESIGN DIVISION — DATE 11-25-91

M&E Metcalf & Eddy
CCJM ENVIRONMENTAL ENGINEERS & SCIENTISTS
Silver Spring, Maryland

STATE OF MARYLAND — DONALD RICHARD AUMANN No. 11169 — REGISTERED PROFESSIONAL ENGINEER

DES: MCJ			
DRN: L.B			
CHK: MCJ	2	RECORD DRAWING	11/19/95
	1	REVISION TO SD-1 TO SD-9 FOR BID	2/28/92
DATE: 11-5-91	M.J. BY	NO. REVISION	DATE

CIVIL

REVISION TO SDP-78-55 & 89-62
SITE DEVELOPMENT & GRADING PLAN V

LITTLE PATUXENT WASTEWATER TREATMENT PLANT
LITTLE PATUXENT WASTEWATER TREATMENT PLANT EXPANSION
ADDITION NO. 5
CAPITAL PROJECT S-6153
CONTRACT NO. 20-3082
HOWARD COUNTY, MARYLAND

SCALE AS SHOWN
SHEET 14 OF 226
SD-6 OF 9
C-9

SDP-92-33

FILE: D:\LTPAT\LPATTA

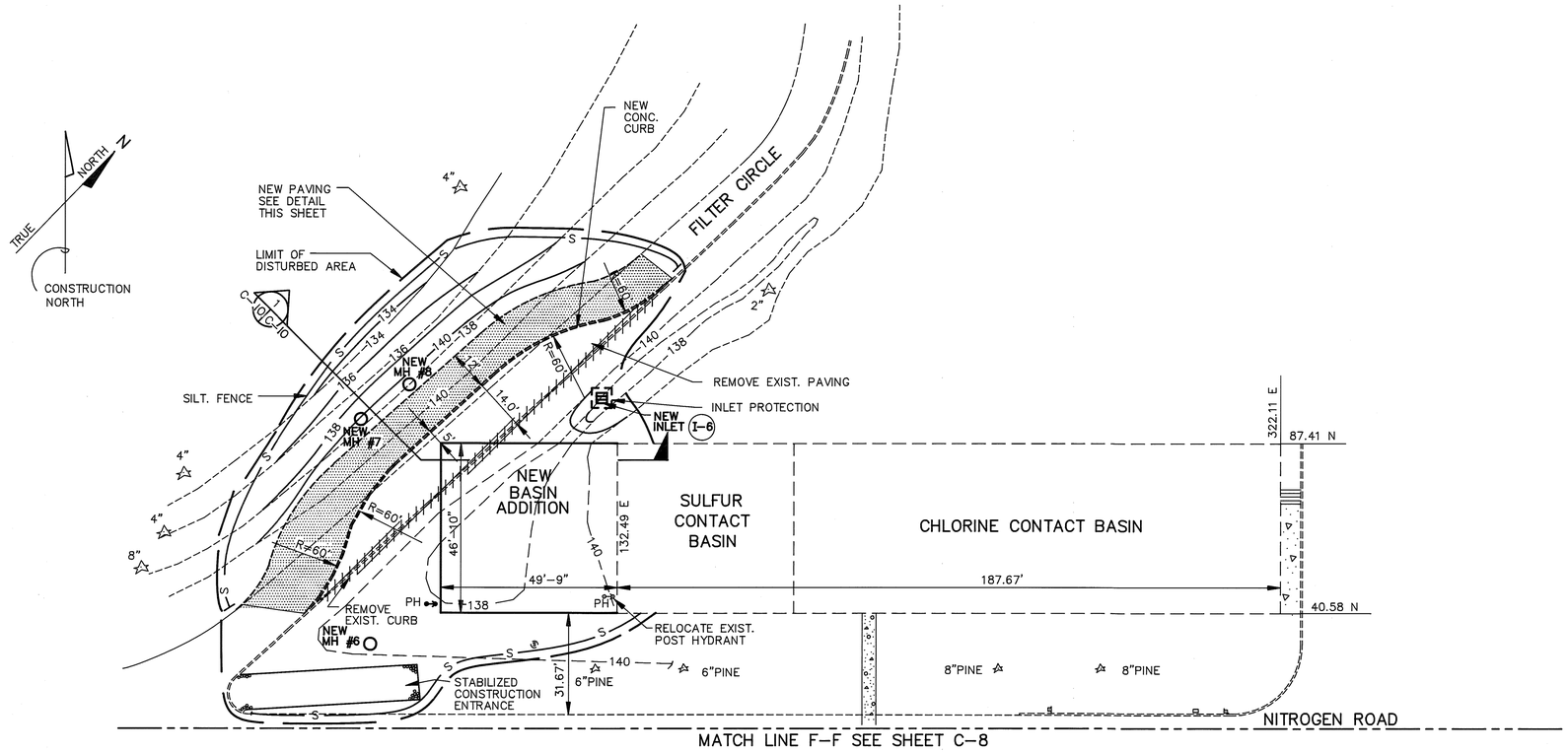

SCALE: 1"= 20'- 0"

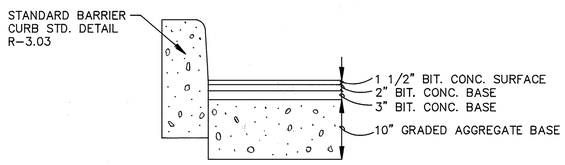

PAVING DETAIL

SCALE: 1"=1'- 0"

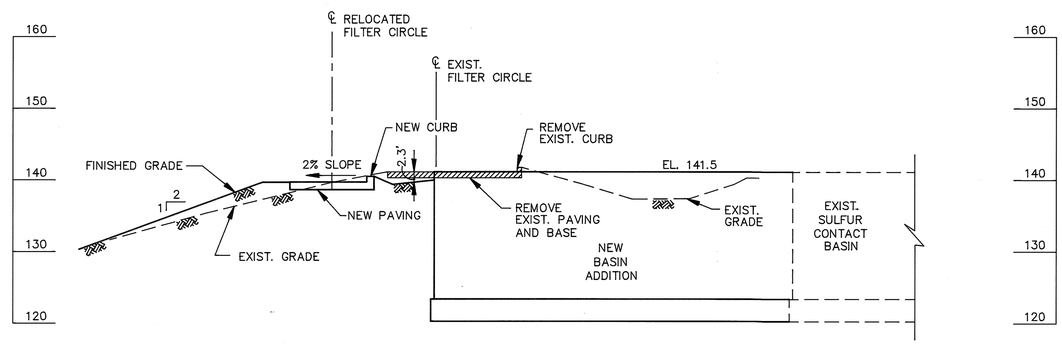

PROFILE C-10

SCALE: HOR. 1"= 10'- 0"
VERT. 1"= 10'- 0"

10 0 10 20 1"= 10'-0"
20 0 20 40 1"= 20'-0"
1 0 1 2 1"= 1'-0"
SCALE IN FEET

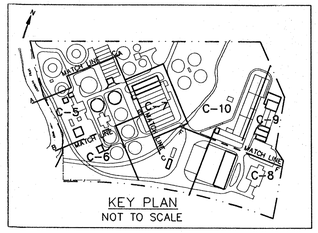

KEY PLAN
NOT TO SCALE

APPROVED: For Public Water and Public Sewerage, Storm Drainage Systems and Public Roads
Howard County Department of Public Works

DIRECTOR — DATE 11/25/91
CHIEF BUREAU OF ENGINEERING — DATE 11-25-91

APPROVED: For Public Water and Public Sewerage Systems
Howard County Health Department

COUNTY HEALTH OFFICER — DATE 11-27-91

ADDRESS CHART	
LOT NUMBER	STREET ADDRESS
PARCEL A	8900 GREENWOOD PLACE

APPROVED: Howard County Dept. of Planning and Zoning

DIRECTOR — DATE 12/9/91
CHIEF, DIVISION OF COMMUNITY PLANNING AND LAND DEVELOPMENT — DATE 12/6/91

DEVELOPER'S CERTIFICATION

"I/We certify that all development and construction will be done according to this plan, and that any responsible personnel involved in the construction project will have a Certificate of Attendance at a Department of Natural Resources Approved Training Program for the Control of Sediment and Erosion before beginning the project." I authorize periodic on-site inspection by the Howard County Soil Conservation District.

BUREAU OF ENGINEERING
DEPARTMENT OF PUBLIC WORKS — DATE 11-25-91

Reviewed for Howard County S.C.D. and meets technical requirements

U.S. SOIL CONSERVATION SERVICE — DATE 11/27/91

This development plan is approved for soil erosion and sediment control by the Howard County Soil Conservation District.

Approved: Date: 11/27/91

ENGINEER'S CERTIFICATION

I certify that this plan for erosion and sediment control represents a practical and workable plan based on my personal knowledge of the site conditions and that it was prepared in accordance with the requirements of the Howard County Soil Conservation District.

Date: NOV 5 1991

SUBDIVISION NAME				SECT./AREA	LOT/PARCEL #
LITTLE PATUXENT WWTP				-	A
PLAT # RO L/F	BLOCK #	ZONE	TAX/ZONE MAP	ELEC.DIST.	CENSUS TR.
423/516 618/537	24	M-2	47	6	6064
WATER CODE			SEWER CODE		
C04			4020000		

DEPARTMENT OF PUBLIC WORKS
HOWARD COUNTY, MARYLAND

DIRECTOR OF PUBLIC WORKS — DATE 11/25/91
CHIEF, BUREAU OF ENGINEERING — DATE 11-25-91
CHIEF, BUREAU OF ENVIRONMENTAL SERVICES — DATE 11/25/91
CHIEF, UTILITY DESIGN DIVISION — DATE 11-25-91

Metcalf & Eddy
CCJM ENVIRONMENTAL ENGINEERS & SCIENTISTS
Silver Spring, Maryland

STATE OF MARYLAND — DONALD RICHARD AUNGARD No. 11169 — REGISTERED PROFESSIONAL ENGINEER

DES: MCJ
DRN: LB
CHK: MCJ
DATE: 11-5-91

BY	NO.	REVISION	DATE
	2	RECORD DRAWING	1/14/95
	1	REVISED FOR BIDDING	3/5/92

CIVIL

REVISION TO SDP – 78-55 & 89-62
SITE DEVELOPMENT &
GRADING PLAN VI

LITTLE PATUXENT WASTEWATER TREATMENT PLANT

LITTLE PATUXENT WASTEWATER TREATMENT PLANT EXPANSION
ADDITION NO. 5
CAPITAL PROJECT S-6153

CONTRACT NO. 20-3082
HOWARD COUNTY, MARYLAND

SCALE AS SHOWN
SHEET 15 OF 226
SD-7 OF 9
C-10

SDP-92-33

FILE: C:/LTPAT2/J

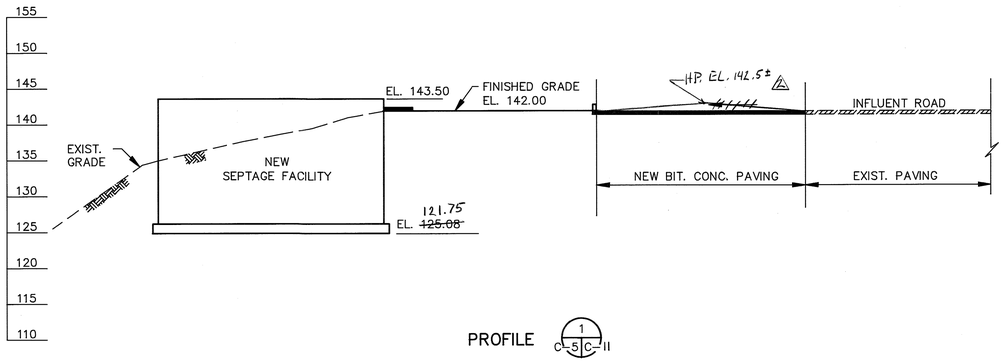

PROFILE 1 C-5 C-11

SCALE: HOR. 1"=10'-0"
VERT. 1"=10'-0"

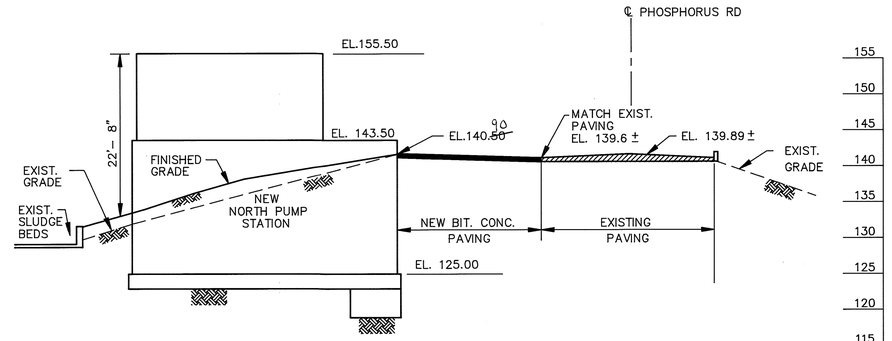

PROFILE 2 C-5 C-11

SCALE: HOR. 1"=10'-0"
VERT. 1"=10'-0"

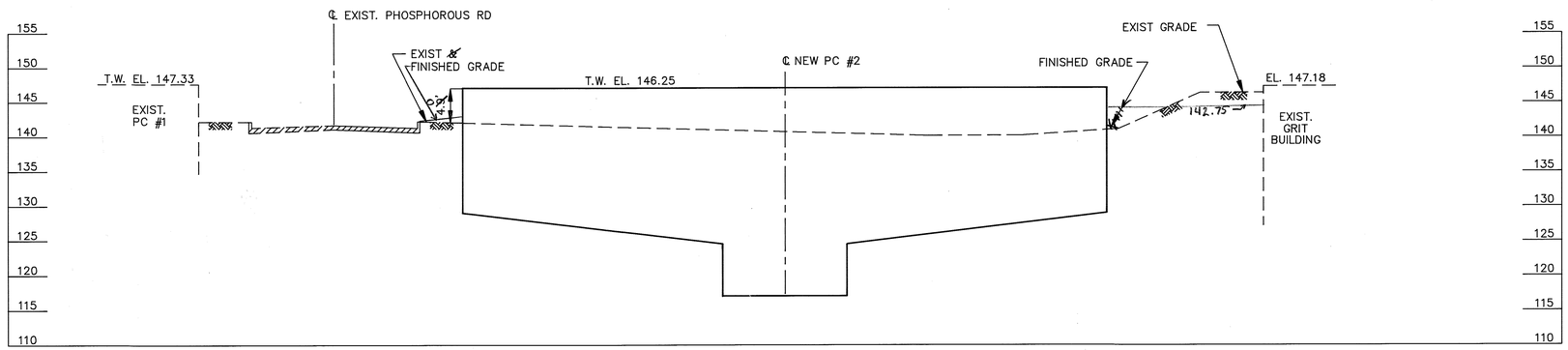

PROFILE 3 C-5 C-11

SCALE: HOR. 1"=10'-0"
VERT. 1"=10'-0"

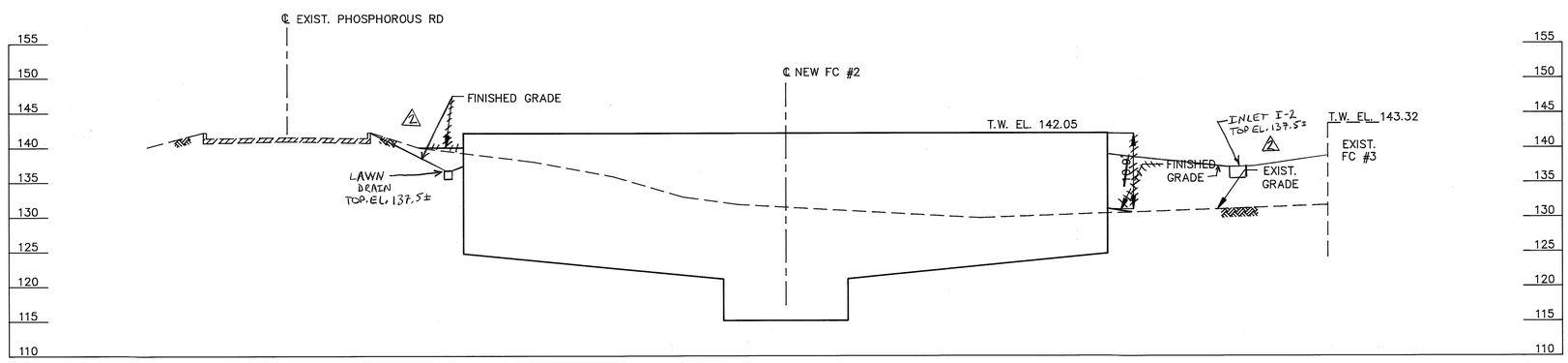

PROFILE 4 C-5 C-11

SCALE: HOR. 1"=10'-0"
VERT. 1"=10'-0"

10 0 10 20 1" = 10' - 0"
SCALE IN FEET

APPROVED: For Public Water and Public Sewerage, Storm Drainage Systems and Public Roads
Howard County Department of Public Works

DIRECTOR — DATE 11/25/91

CHIEF BUREAU OF ENGINEERING — DATE 11-25-91

APPROVED: For Public Water and Public Sewerage Systems
Howard County Health Department

COUNTY HEALTH OFFICER — DATE 11-27-91

ADDRESS CHART

LOT NUMBER	STREET ADDRESS
PARCEL A	8900 GREENWOOD PLACE

APPROVED: Howard County Dept. of Planning and Zoning

DIRECTOR — DATE 12/9/91

CHIEF, DIVISION OF COMMUNITY PLANNING AND LAND DEVELOPMENT — DATE 12/6/91

DEVELOPER'S CERTIFICATION

"I/We certify that all development and construction will be done according to this plan, and that any responsible personnel involved in the construction project will have a Certificate of Attendance at a Department of Natural Resources Approved Training Program for the Control of Sediment and Erosion before beginning the project." I authorize periodic on-site inspection by the Howard County Soil Conservation District.

BUREAU OF ENGINEERING
DEPARTMENT OF PUBLIC WORKS — DATE 11-25-91

Reviewed for Howard County S.C.D. and meets technical requirements

U.S. SOIL CONSERVATION SERVICE — DATE 11/27/91

This development plan is approved for soil erosion and sediment control by the Howard County Soil Conservation District.

Approved: — Date: 11/27/91

ENGINEER'S CERTIFICATION

I certify that this plan for erosion and sediment control represents a practical and workable plan based on my personal knowledge of the site conditions and that it was prepared in accordance with the requirements of the Howard County Soil Conservation District.

Date: NOV 5 1991

SUBDIVISION NAME				SECT./AREA	LOT/PARCEL #
LITTLE PATUXENT WWTP				-	A
PLAT # RO L/F	BLOCK #	ZONE	TAX/ZONE MAP	ELEC.DIST.	CENSUS TR.
423/516 618/537	24	M-2	47	6	6064
WATER CODE			SEWER CODE		
C04			4020000		

DEPARTMENT OF PUBLIC WORKS
HOWARD COUNTY, MARYLAND

DIRECTOR OF PUBLIC WORKS — DATE 11/25/91
CHIEF, BUREAU OF ENGINEERING — DATE 11-25-91
CHIEF, BUREAU OF ENVIRONMENTAL SERVICES — DATE 11/25/91
CHIEF, UTILITY DESIGN DIVISION — DATE 11-25-91

Metcalf & Eddy
CCJM ENVIRONMENTAL ENGINEERS & SCIENTISTS
Silver Spring, Maryland

STATE OF MARYLAND — DONALD RICHARD AUBUMP No. 11160 — REGISTERED PROFESSIONAL ENGINEER

DES: MCJ	
DRN: L.B.	
CHK: MCJ	
DATE: 11-5-91	

BY	NO.	REVISION	DATE
	2	RECORD DRAWING	11/14/96
	1	REVISED FOR BIDDING	3/5/92

CIVIL

REVISION TO SDP-78-55 & 89-62
SITE DEVELOPMENT PROFILES

LITTLE PATUXENT WASTEWATER TREATMENT PLANT

LITTLE PATUXENT WASTEWATER TREATMENT PLANT EXPANSION
ADDITION NO. 5
CAPITAL PROJECT S-6153

CONTRACT NO. 20-3082

HOWARD COUNTY, MARYLAND

SCALE AS SHOWN

SHEET 16 OF 226

SD-8 OF 9

C-11

SDP-92-33

FILE: C:\LTPAT2\PROF1

EROSION AND SEDIMENT CONTROL NOTES

1) A minimum of 24 hours notice must be given to the Howard County Office of Inspection and Permits prior to the start of any construction. (992–2437)

2) All vegetative and structural practices are to be installed according to the provisions of this plan and are to be in conformance with the 1983 MARYLAND STANDARDS AND SPECIFICATIONS FOR SOIL EROSION AND SEDIMENT CONTROL.

3) Following initial soil disturbance or redisturbance, permanent or temporary stabilization shall be completed within: a) 7 calendar days for all perimeter sediment control structures, dikes, perimeter slopes and all slopes greater than 3:1, b) 14 days as to all other disturbed or graded areas on the project site.

4) All sediment traps/basins shown must be fenced and warning signs posted around their perimeter in accordance with Vol. 1, Chapter 12, of the HOWARD COUNTY DESIGN MANUAL, Storm Drainage.

5) All disturbed areas must be stabilized within the time period specified above in accordance with the 1983 MARYLAND STANDARDS AND SPECIFICATIONS FOR SOIL EROSION AND SEDIMENT CONTROL for permanent seedings (Sec. 51), sod (Sec. 54), temporary seeding (Sec. 50) and mulching (Sec. 52). Temporary stabilization mulch alone can only be done when recommended seeding dates do not allow for proper germination and establishment of grasses.

6) All sediment control substances are to remain in place and are to be maintained in operative condition until permission for their removal has been obtained from the Howard County Sediment Control Inspector.

7) Site Analysis:

Total Area of Site	38.01	Acres
Area Disturbed	2.72	Acres
Area to be roofed or paved	9.26	Acres
Area to be vegetatively stabilized	1.15	Acres
Total Cut	42,000	Cu. yds.
Total Fill	550	Cu. yds.
Offsite waste/borrow area location	to be determined during construction	

8) Any sediment control practice which is disturbed by grading activity for placement of utilities must be repaired on the same day of disturbance.

9) Additional sediment controls must be provided, if deemed necessary by the Howard County DPW sediment control inspector.

10) On all site with disturbed areas in excess of 2 acres, approval of the inspection agency shall be requested upon completion of installation of perimeter erosion and sediment controls, but before proceeding with any other earth disturbance or grading. Other building or grading inspection approvals may not be authorized until this initial approval by the inspection agency is made.

PERMANENT SEEDING NOTES

Apply to graded or cleared areas not subject to immediate further disturbance where a permanent long–lived vegetative cover is needed.

Seedbed Preparation: Loosen upper three inches of soil by raking, disking, or other acceptable means before seeding, if not previously loosened.

Soil Amendments: In lieu of soil test recommendations, use one of the following schedules:

1) Preferred – Apply 2 tons per acre dolomitic limestone (92 lbs/ 1000 sq ft) and 600 lbs per acre 10–10–10 fertilizer (14 lbs/1000 sq ft) before seeding. Harrow or disk into upper three inches of soil. At time of seeding, apply 400 lbs per acre 30–0–0 ureaform fertilizer (9 lbs/1000 sq ft).
2) Acceptable – Apply 2 tons per acre dolomitic limestone (92 lbs/1000 sq ft) and 1000 lbs per acre 10–10–10 fertilizer (23 lbs/1000 sq ft) before seeding. Harrow or disk into upper three inches of soil.

Seeding – For the periods March 1 thru April 30, and August 1 thru October 15, seed with 60 lbs per acre (1.4 lbs/1000 sq ft) of Kentucky 31 Tall Fescue. For the period May 1 thru July 31, seed with 60 lbs Kentucky 31 Tall Fescue per acre and 2 lbs per acre (.05 lbs/1000 sq ft) of weeping lovegrass. During the period October 16 thru February 28, protect site by: Option (1) 2 tons per acre of well anchored straw mulch and seed as soon as possible in the spring. Option (2) Use sod. Option (3) Seed with 60 lbs/acre Kentucky 31 Tall Fescue and mulch with 2 tons/acre well anchored straw.

Mulching – Apply 1–1/2 to 2 tons per acre (70 to 90 lbs/sq ft) of unrotted small grain straw immediately after seeding. Anchor mulch immediately after application using mulch anchoring tool or 218 gallons per acre (5 gal/1000 sq ft) of emulsified asphalt on flat areas. On slopes 8 feet or higher, use 348 gallons per acre (8 gal/1000 sq ft) for anchoring.

Maintenance – Inspect all seeded areas and make needed repairs, replacements and reseedings.

TEMPORARY SEEDING NOTES

Apply to graded or cleared areas likely to be redisturbed where a short–term vegetative cover is needed.

Seedbed Preparation: – Loosen upper three inches of soil by raking, disking or other acceptable means before seeding, if not previously loosened.

Soil Amendments: – Apply 60 lbs per acre 10–10–10 fertilizer (14 lbs/1000 sq ft).

Seeding – For periods March 1 thru April 30, and from August 15 thru October 15, seed with 2–1/2 bushel per acre of annual rye (3.2 lbs/1000 sq ft). For the period May 1 thru August 14, seed wtih 3 lbs per acre of weeping lovegrass (.07 lbs/1000sq ft). For the period November 16 thru February 28, protect site by applying 2 tons per acre of well anchored straw mulch and seed as soon as possible in the spring, or use sod.

Mulching: – Apply 1–1/2 to 2 tons per acre (70 to 90 lbs/1000 sq ft) of unrotted small grain straw immediately after seeding. Anchor mulch immediately after application using mulch anchoring tool or 218 gal per acre (5 gal/1000 sq ft) of emulsified asphalt on flat areas. On slopes 8 ft or higher, use 348 gal per acre (8 gal/1000 sq ft) for anchoring.

Refer to the 1983 MARYLAND STANDARDS AND SPECIFICATIONS FOR SOIL AND SEDIMENT CONTROL for rate and methods not covered.

STABILIZED CONSTRUCTION ENTRANCE

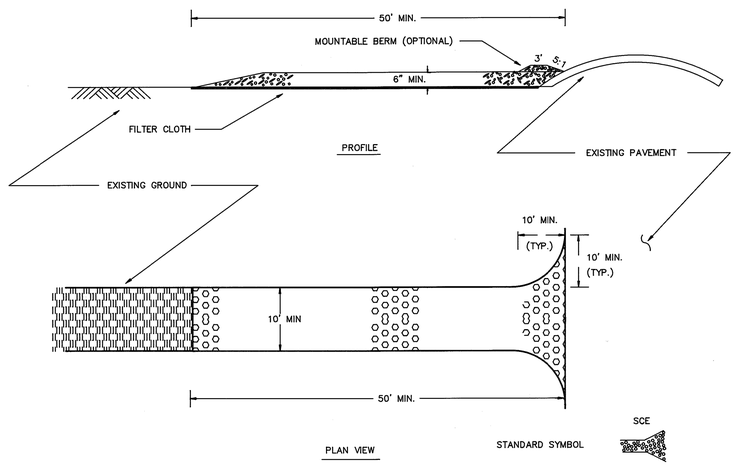

CONSTRUCTION SPECIFICATIONS

1. STONE SIZE – USE 2" STONE, OR RECLAIMED OR RECYCLED CONCRETE EQUIVALENT.
2. LENGTH – AS REQUIRED, BUT NOT LESS THAN 50 FEET.
3. THICKNESS – NOT LESS THAN 6".
4. WIDTH – TEN (10) FT. MINIMUM, BUT NOT LESS THAN THE FULL WIDTH AT POINTS WHERE INGRESS OR EGRESS OCCURS.
5. FILTER CLOTH – WILL BE PLACED OVER THE ENTIRE AREA PRIOR TO PLACING STONE.
6. SURFACE WATER – ALL SURFACE WATER FLOWING OR DIVERTED TOWARD CONSTRUCTION ENTRANCES SHALL BE PIPED ACCROSS THE ENTRANCE. IF PIPING IS IMPRACTICAL, A MOUNTABLE BERM WITH 5:1 SLOPE WILL BE PERMITTED.
7. MAINTENANCE – THE ENTRANCE SHALL BE MAINTAINED IN A CONDITION WHICH WILL PREVENT TRACKING OR FLOWING OF SEDIMENT ONTO PUBLIC RIGHT–OF–WAY. THIS MAY REQUIRE PEROIDIC TOP DRESSING WITH ADDITIONAL STONE AS CONDITIONS DEMAND AND REPAIR AND/OR CLEANOUT OF ANY MEASURES USED TO TRAP SEDIMENT. ALL SEDIMENT DROPPED, SPILLED, WASHED OR TRACKED ONTO PUBLIC RIGHT–OF–WAY MUST BE REMOVED IMMEDIATELY.
8. WASHING – WHEELS SHALL BE CLEANED TO REMOVE SEDIMENT PRIOR TO ENTRANCE ONTO PUBLIC RIGHTS–OF–WAY. WHEN WASHING IS REQUIRED, IT SHALL BE DONE ON AN AREA STABILIZED WITH STONE AND WHICH DRAINS INTO AN APPROVED SEDIMENT TRAPPING DEVICE.
9. PEROIDIC INSPECTION AND NEEDED MAINTENANCE SHALL BE PROVIDED AFTER EACH RAIN.

SILT FENCE

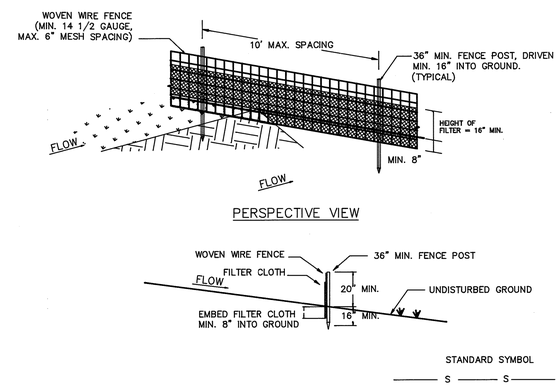

CONSTRUCTION NOTES FOR FABRICATED SILT FRNCE

1. WOVEN WIRE TO BE FASTENED SECURELY TO FENCE POST WITH TIES OR STAPLES.

2. FILTER CLOTH TO BE FASTENED SECURELY TO WOVEN WIRE FENCE WITH TIES SPACED EVERY 24" AT TOP AND MIDSECTION

3. WHEN TWO SECTIONS OF FILTER CLOTH ADJOIN EACH OTHER THEY SHALL BE OVERLAPPED BY 6" AND FOLDED.

4. MAINTENANCE SHALL BE PERFORMED AS NEEDED AND MATERIAL REMOVED WHEN "BULGES" DEVELOP IN THE SILT FENCE.

POST: STEEL EITHER T OR U TYPE OR 2" HARDWOOD

FENCE: WOVEN WIRE, 14 1/2 Ga. 6" MAX MESH OPENING

FILTER CLOTH: FILTER X, MIRAFI 100X, STABILINKA T140N OR APPROVED EQUAL.

PREFABRICATED UNIT: GEOFAB, ENVIROFENCE, OR APPROVED EQUAL.

CURB INLET PROTECTION DETAIL

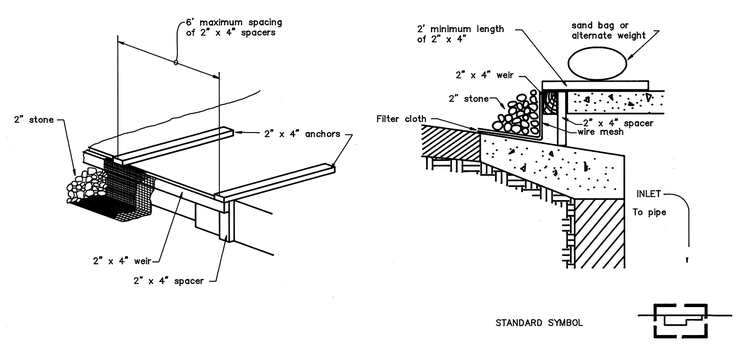

APPROVED: For Public Water and Public Sewerage, Storm Drainage Systems and Public Roads
Howard County Department of Public Works

DIRECTOR — DATE 11/25/91
CHIEF BUREAU OF ENGINEERING — DATE 11-25-91

APPROVED: For Public Water and Public Sewerage Systems
Howard County Health Department

COUNTY HEALTH OFFICER — DATE 11-27-91

ADDRESS CHART	
LOT NUMBER	STREET ADDRESS
PARCEL A	8900 GREENWOOD PLACE

APPROVED: Howard County Dept. of Planning and Zoning

DIRECTOR — DATE 12/9/91
CHIEF, DIVISION OF COMMUNITY PLANNING AND LAND DEVELOPMENT — DATE 12/6/91

DEVELOPER'S CERTIFICATION

"I/We certify that all development and construction will be done according to this plan, and that any responsible personnel involved in the construction project will have a Certificate of Attendance at a Department of Natural Resources Approved Training Program for the Control of Sediment and Erosion before beginning the project." I authorize periodic on–site inspection by the Howard County Soil Conservation District.

BUREAU OF ENGINEERING
DEPARTMENT OF PUBLIC WORKS — DATE 11-25-91

Reviewed for Howard County S.C.D. and meets technical requirements

U.S. SOIL CONSERVATION SERVICE — DATE 11/27/91

This development plan is approved for soil erosion and sediment control by the Howard County Soil Conservation District.

Approved: Date: 11/27/91

ENGINEER'S CERTIFICATION

I certify that this plan for erosion and sediment control represents a practical and workable plan based on my personal knowledge of the site conditions and that it was prepared in accordance with the requirements of the Howard County Soil Conservation District.

Donald R. Aukamp Date: NOV 5 1991

SUBDIVISION NAME				SECT./AREA	LOT/PARCEL #
LITTLE PATUXENT WWTP				–	A
PLAT # RO L/F	BLOCK #	ZONE	TAX/ZONE MAP	ELEC.DIST.	CENSUS TR.
423/516 618/537	24	M–2	47	6	6064
WATER CODE			SEWER CODE		
C04			4020000		

DEPARTMENT OF PUBLIC WORKS
HOWARD COUNTY, MARYLAND

DIRECTOR OF PUBLIC WORKS — DATE 11/25/91
CHIEF, BUREAU OF ENGINEERING — DATE 11-25-91
CHIEF, BUREAU OF ENVIRONMENTAL SERVICES — DATE 11/25/91
CHIEF, UTILITY DESIGN DIVISION — DATE 11-25-91

M&E Metcalf & Eddy
CCJM ENVIRONMENTAL ENGINEERS & SCIENTISTS
Silver Spring, Maryland

STATE OF MARYLAND — DONALD RICHARD AUKAMP No. 11129 — PROFESSIONAL ENGINEER

DES: MCJ
DRN: LB
CHK: MCJ
DATE: 11-5-91

BY	NO.	REVISION	DATE
	2	RECORD DRAWING	11/14/95
	1	REVISED FOR BIDDING	3/5/92

CIVIL

REVISION TO SDP–78–55 & 89–62
EROSION & SEDIMENT CONTROL NOTES AND DETAILS

LITTLE PATUXENT WASTEWATER TREATMENT PLANT
LITTLE PATUXENT WASTEWATER TREATMENT PLANT EXPANSION
ADDITION NO. 5
CAPITAL PROJECT S-6153
CONTRACT NO. 20-3082
HOWARD COUNTY, MARYLAND

SCALE AS SHOWN
SHEET 17 OF 226
SD-9 OF 9
C-12

SDP-92-33

FILE: E:\LB\SEDCNTRL

NOTE:

1. ALL EXISTING PIPING IN THE VICINITY OF NEW SEPTAGE FACILITY ARE NOT SHOWN. CONTRACTOR SHALL REMOVE EXISTING ABANDONED PIPING AS REQUIRED FOR NEW CONSTRUCTION.
2. CONTRACTOR SHALL REMOVE EXISTING ABANDONED METER VAULT AS REQ'D IF IT INTERFERES WITH NEW CONSTRUCTION.

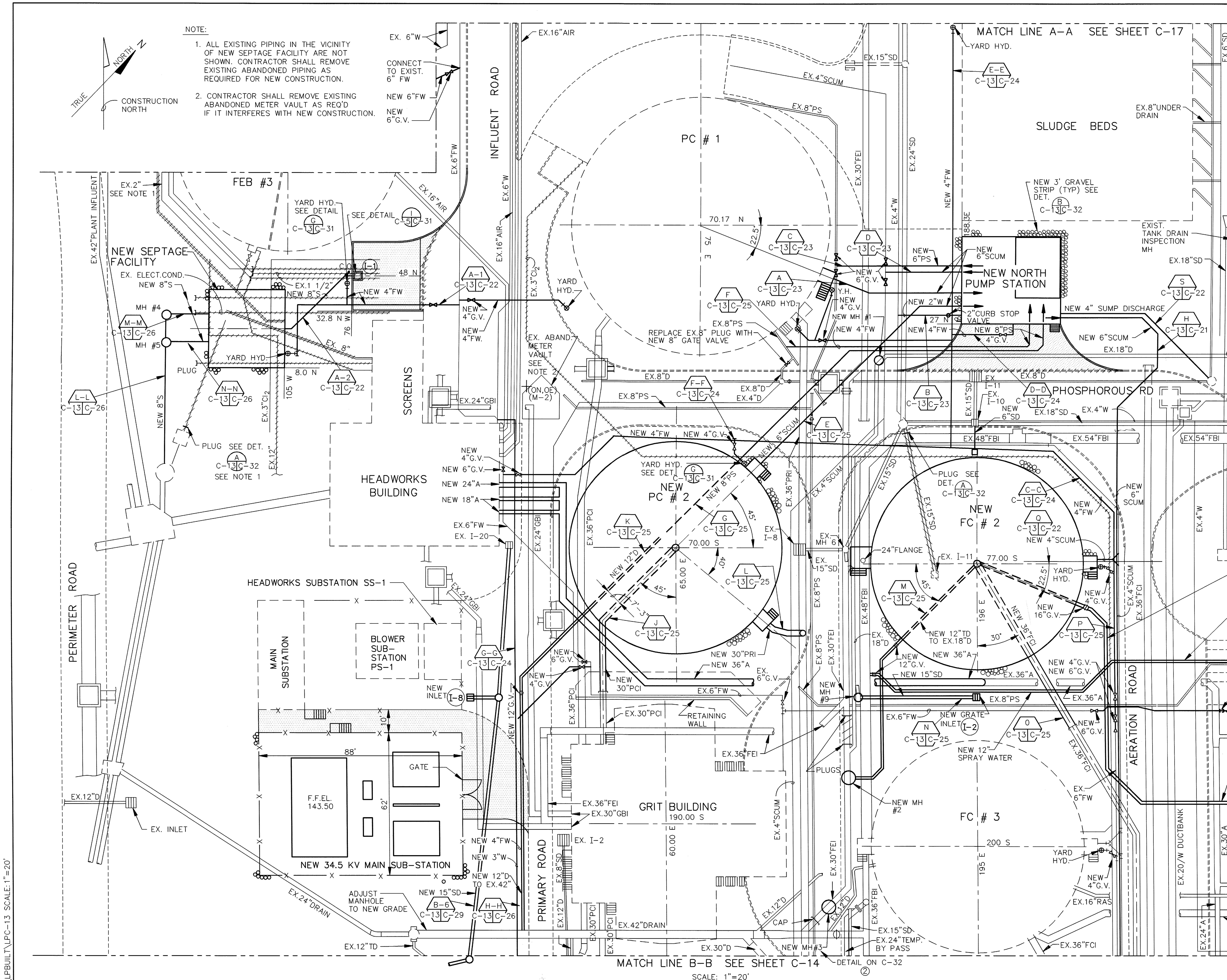

PROFILE/ DESIGNATION	STATION	EAST	WEST	NORTH	SOUTH
A					
45° BEND	0+05	143.00		70.17	
45° BEND	0+46	173.00		40.00	
B					
90° BEND	0+43	187.00		43.00	
E					
45° BEND	0+96	170.00		34.00	
F					
45° BEND	1+15	218.00		16.50	
45° BEND	1+17	219.00		17.50	
G					
45° BEND	1+12	140.50		15.00	
45° BEND	1+93	222.50		15.00	
45° BEND	1+96	225.00		17.00	
H					
45° BEND	0+35	267.00		29.00	
45° BEND	0+45	274.00		22.00	
J					
45° BEND	0+41	33.00			103.00
K					
45° BEND	1+10		2.50		127.50
P					
45° BEND	0+04	252.00			80.00
"Y"	0+08	256.00			82.50
R					
45° BEND	0+15	24.00			116.00
45° BEND	0+29	14.00			106.00
22.5°,11 1/4°BEND	0+97,1+04	14.00			38.00
11 1/4°,22.5°BEND	1+20,1+27	30.00			14.00
S					
45° BEND	0+37	269.00		31.00	
C–C					
45° BEND	0+06		5.00		17.00
45° BEND	0+26	15.00			17.00
45° BEND	0+31	18.50			13.00
CROSS	1+03	91.00			13.00
"T"	1+97	185.00			13.00
"T"	2+23	211.00			13.00
45° BEND	2+60	248.00			13.00
45° BEND	2+70	255.50			21.00
F–F					
45° BEND	0+06	91.00			30.00
CROSS	0+22	91.00			13.00
45° BEND	0+34	91.00			02.00
G–G					
90° BEND	0+08	8.00	5.00		15.00
H–H					
45° BEND	0+05		4.00		121.00
P. O–O					
45° BEND	0+88	300.00			115.00
A–1					
90° BEND	0+05		99.50	15.00	
90° BEND	0+27		99.50	35.50	
"T"	0+48		78.00	35.50	
A–2					
45° BEND	0+03		102.00	25.00	
"Y"	0+36		79.00	48.00	
I–I					
45° BEND	0+43.5	14.00		144.50	
J–J					
45° BEND	0+20	12.50		141.00	
T					
22.5° BEND	0+73	264.00			106.00
45° BEND	0+87	278.00			106.00
45° BEND	0+97	285.00			114.00
45° BEND	1+60	285.00			176.50
45° BEND	1+70	291.00			183.00
M					
45° BEND	0+57	153.00			118.50
45° BEND	0+93	153.00			154.50
45° BEND	0+99	149.00			159.00

Table title: PIPING LOCATION SHEDULE

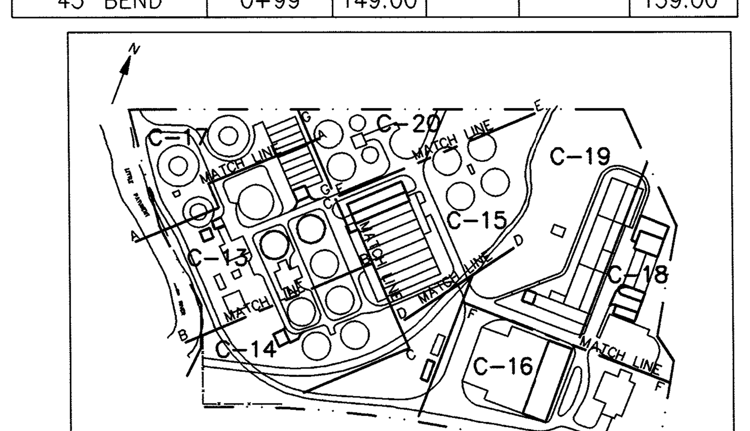

KEY PLAN
NOT TO SCALE

SCALE IN FEET 1"= 20'– 0"

DEPARTMENT OF PUBLIC WORKS
HOWARD COUNTY, MARYLAND

DIRECTOR OF PUBLIC WORKS — DATE 5/7/96
CHIEF, BUREAU OF ENVIRONMENTAL SERVICES — DATE 5/7/96
CHIEF, BUREAU ENGINEERING — DATE 5/7/96
CHIEF, UTILITY DESIGN DIVISION — DATE 5-7-96

M&E Metcalf & Eddy

CCJM ENVIRONMENTAL ENGINEERS & SCIENTISTS SILVER SPRING, MARYLAND

DES: NB
DRN: LB
CHK: MCJ
DATE: 12/2/91

BY	NO.	REVISION	DATE
CCJM	3	RECORD DRAWING	1/14/95
DZG	2	ADDENDUM #3	4/10/92
	1	REVISED FOR BIDDING	3/5/92

CIVIL

YARD PIPING & UNDERGROUND UTILITIES PLAN I

LITTLE PATUXENT WASTEWATER TREATMENT PLANT

LITTLE PATUXENT WASTEWATER TREATMENT PLANT EXPANSION
ADDITION NO.5
CAPITAL PROJECT S–6153
CONTRACT NO. 20–3082
HOWARD COUNTY, MARYLAND

SCALE AS SHOWN

SHEET 18 OF 226

C–13A

FILE: C:\PROJ\LTPAT\LPBUILT\LPC-13 SCALE: 1"=20'

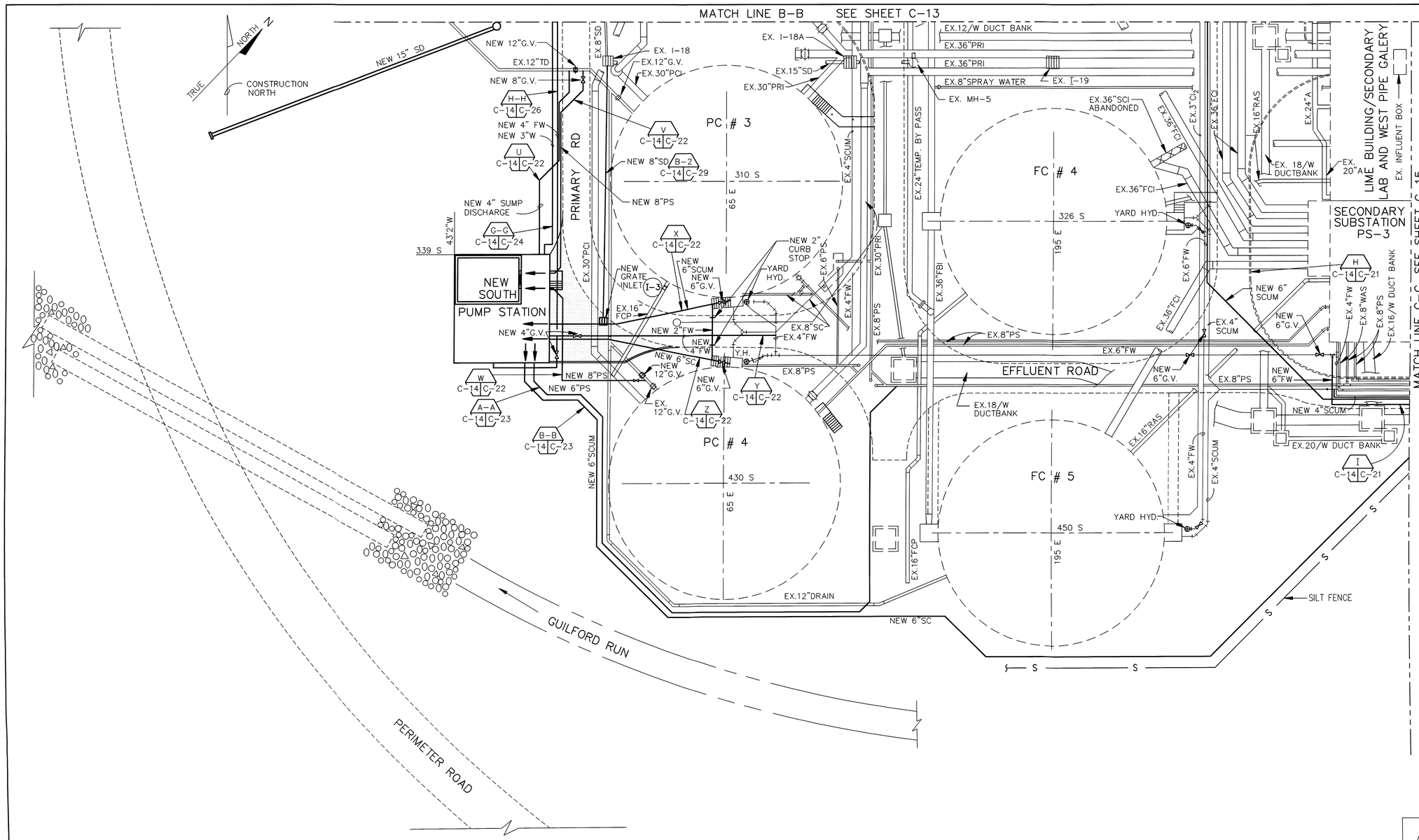

SCALE: 1"=20'

PIPING LOCATION SHEDULE

PROFILE/ DESIGNATION	STATION	EAST	WEST	NORTH	SOUTH
A-A					
45° BEND	0+07		10.50		390.00
45° BEND	0+14		5.00		395.00
45° BEND	0+24	8.00			395.00
45° BEND	0+37	17.00			404.00
45° BEND	0+87	17.00			455.00
45° BEND	1+26	44.50			482.50
45° BEND	2+01	119.00			482.50
45° BEND	2+06	123.00			479.00
45° BEND	3+04	123.00			402.50
P. B-B					
45° BEND	0+07		14.00		390.00
45° BEND	0+17		7.00		397.50
45° BEND	0+26	7.00			397.50
45° BEND	0+36	14.50			405.00
45° BEND	0+86	14.50			456.00
45° BEND	1+26	43.00			484.50
45° BEND	2+36	153.00			484.50
45° BEND	2+58	170.00			501.00
45° BEND	3+46.5	258.00			501.00
G-G					
90° BEND	3+30		3.50		335.00
90° BEND	3+34		6.50		335.00
H-H					
90° BEND	2+77		2.00		384.00
90° BEND	3+04		27.00		384.00
U					
45° BEND	0+29		9.00		310.00
V					
45° BEND	0+20		2.50		347.00
45° BEND	0+50		1.00		345.00
45° BEND	0+46		1.00		305.00
W					
45° BEND	0+20		4.00		353.00
45° BEND	0+70	1.00			356.00
90° BEND	0+38	1.00			390.00
H					
45° BEND	4+52	273.50			384.00
45° BEND	4+72	288.00			398.00
I					
45° BEND	0+70	301.00			396.00
45° BEND	0+12	305.00			400.00

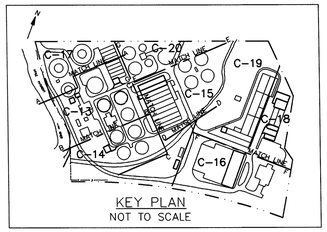

KEY PLAN
NOT TO SCALE

10 0 10 20 1"= 20'- 0"

20 0 20 40 1"= 20'- 0"

SCALE IN FEET

C:\PROJ\LTPAT\LPBUILT\LPC-14 SCALE:1"=20'

DEPARTMENT OF PUBLIC WORKS
HOWARD COUNTY, MARYLAND

DIRECTOR OF PUBLIC WORKS — DATE 5/7/96
CHIEF, BUREAU ENGINEERING — DATE 5/7/96
CHIEF, UTILITY DESIGN DIVISION — DATE 5-7-96
CHIEF, ENVIRONMENTAL SERVICES — DATE

M&E Metcalf & Eddy

CCJM ENVIRONMENTAL ENGINEERS & SCIENTISTS
SILVER SPRING, MARYLAND

DES: NB
DRN: LB
CHK: MCJ
DATE: 12/2/91

BY	NO.	REVISION	DATE
CCJM	2	RECORD DRAWING	1/14/95
	1	REVISED FOR BIDDING	3/5/92

CIVIL
YARD PIPING & UNDERGROUND UTILITIES PLAN II

LITTLE PATUXENT WASTEWATER TREATMENT PLANT
LITTLE PATUXENT WASTEWATER TREATMENT PLANT EXPANSION
ADDITION NO.5
CAPITAL PROJECT S-6153
CONTRACT NO. 20-3082
HOWARD COUNTY, MARYLAND

SCALE AS SHOWN
SHEET 19 OF 226
C-14A

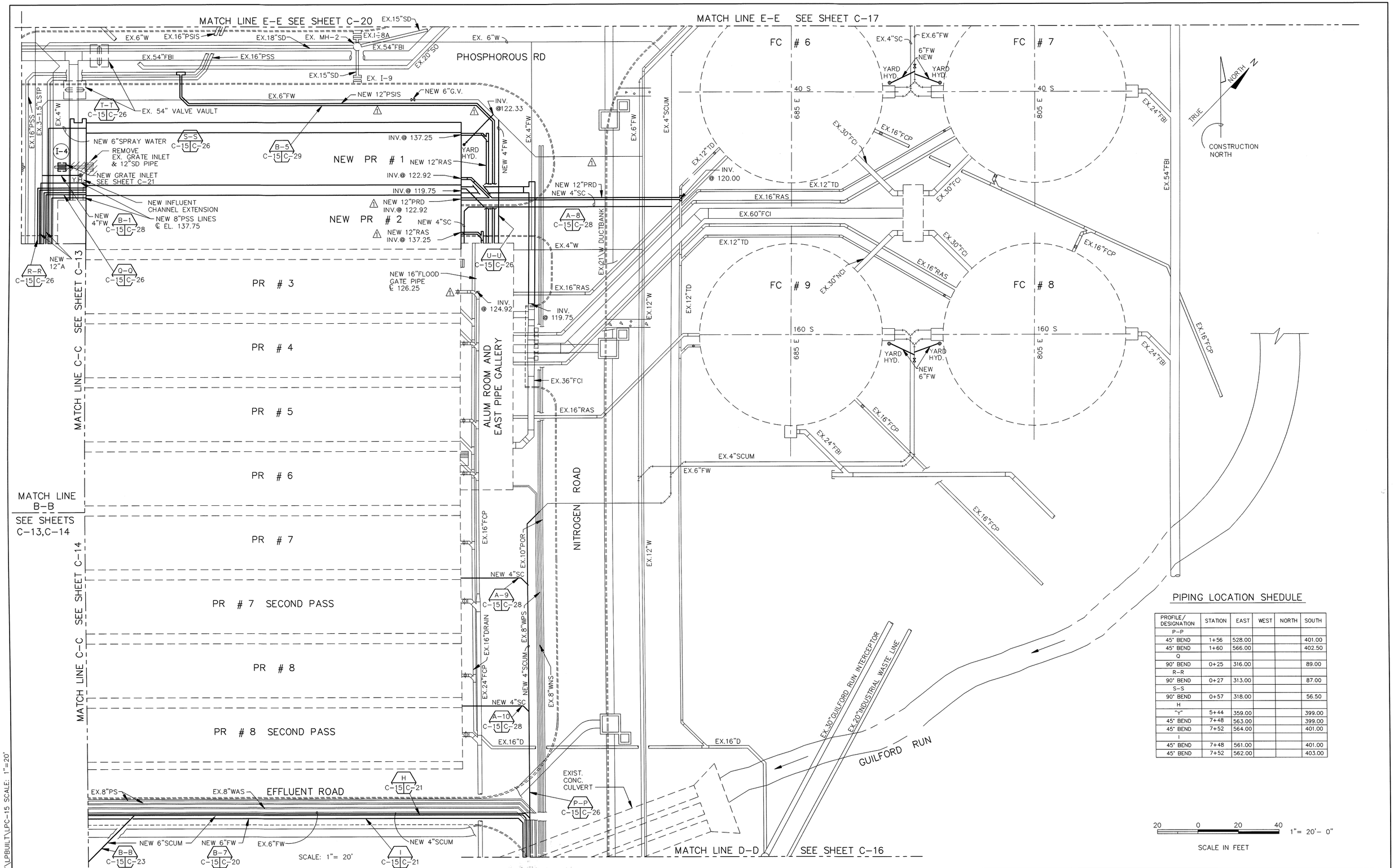

PIPING LOCATION SHEDULE

PROFILE/ DESIGNATION	STATION	EAST	WEST	NORTH	SOUTH
P-P					
45° BEND	1+56	528.00			401.00
45° BEND	1+60	566.00			402.50
Q					
90° BEND	0+25	316.00			89.00
R-R					
90° BEND	0+27	313.00			87.00
S-S					
90° BEND	0+57	318.00			56.50
H					
"Y"	5+44	359.00			399.00
45° BEND	7+48	563.00			399.00
45° BEND	7+52	564.00			401.00
I					
45° BEND	7+48	561.00			401.00
45° BEND	7+52	562.00			403.00

DEPARTMENT OF PUBLIC WORKS
HOWARD COUNTY, MARYLAND

DIRECTOR OF PUBLIC WORKS — DATE 5/7/96
CHIEF, BUREAU OF ENGINEERING — DATE 5/7/96
CHIEF, BUREAU OF ENVIRONMENTAL SERVICES — DATE 5/7/96
CHIEF, UTILITY DESIGN DIVISION — DATE 5-7-96

Metcalf & Eddy
CCJM ENVIRONMENTAL ENGINEERS & SCIENTISTS
SILVER SPRING, MARYLAND

STATE OF MARYLAND — JONATHAN WHITNEY COWIE — No. 15151 — REGISTERED PROFESSIONAL ENGINEER

DES: NB
DRN: LB
CHK: MCJ
DATE: 12/2/91

BY	NO.	REVISION	DATE
CCJM	3	RECORD DRAWING	1/14/95
DZG	2	ADDENDUM #3	4/10/92
	1	REVISED FOR BIDDING	3/5/92

CIVIL
YARD PIPING & UNDERGROUND UTILITIES PLAN III

LITTLE PATUXENT WASTEWATER TREATMENT PLANT
LITTLE PATUXENT WASTEWATER TREATMENT PLANT EXPANSION
ADDITION NO.5
CAPITAL PROJECT S-6153
CONTRACT NO. 20-3082
HOWARD COUNTY, MARYLAND

SCALE AS SHOWN
SHEET 20 OF 226
C-15A

FILE: C:\PROJ\LTPAT\LPBUILT\LPC-15 SCALE: 1"=20'

PIPING LOCATION SHEDULE

PROFILE/ DESIGNATION	STATION	EAST	WEST	NORTH	SOUTH
V–V					
45° BEND	0+02	3.5			160.0
45° BEND	0+20		10.0		146.5
45° BEND	1+36		10.0		54.0
H					
45° BEND	8+95		30.0		56.0
45° BEND	10+03	82.0			56.0
45° BEND	10+08	84.0			56.0
I					
45° BEND	5+26	81.5			58.0
45° BEND	5+31	82.5			59.0
45° BEND	4+18		40.0		58.0

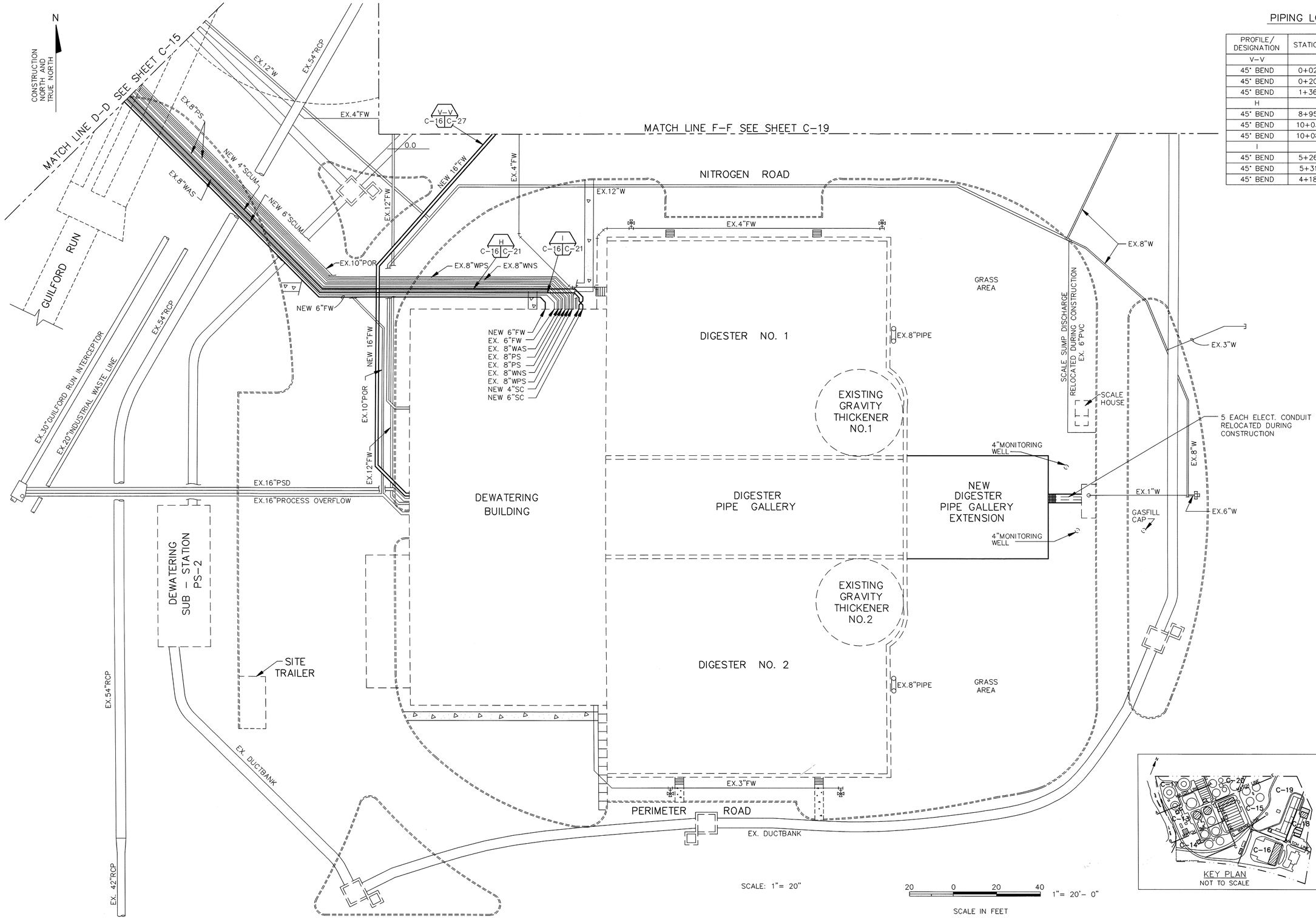

FILE: C:\LTPA\LPBUILT\LPC-16 SCALE: 1"=20'

DEPARTMENT OF PUBLIC WORKS
HOWARD COUNTY, MARYLAND

DIRECTOR OF PUBLIC WORKS — DATE 5/7/96
CHIEF, BUREAU ENGINEERING — DATE 5/7/96
CHIEF, BUREAU OF ENVIRONMENTAL SERVICES — DATE 5/7/96
CHIEF, UTILITY DESIGN DIVISION — DATE 5-7-96

Metcalf & Eddy
CCJM ENVIRONMENTAL ENGINEERS & SCIENTISTS
SILVER SPRING, MARYLAND

STATE OF MASSACHUSETTS — JONATHAN WINTHROP DONNE No. 15140 — REGISTERED PROFESSIONAL ENGINEER

DES: NB
DRN: LB
CHK: MCJ
DATE: 12/2/91

BY	NO.	REVISION	DATE
CCJM	2	RECORD DRAWING	1/14/95
	1	REVISED FOR BIDDING	3/5/92

CIVIL

YARD PIPING & UNDERGROUND UTILITIES PLAN IV

LITTLE PATUXENT WASTEWATER TREATMENT PLANT

LITTLE PATUXENT WASTEWATER TREATMENT PLANT EXPANSION
ADDITION NO.5
CAPITAL PROJECT S-6153
CONTRACT NO. 20-3082
HOWARD COUNTY, MARYLAND

SCALE AS SHOWN

SHEET 21 OF 226

C-16A

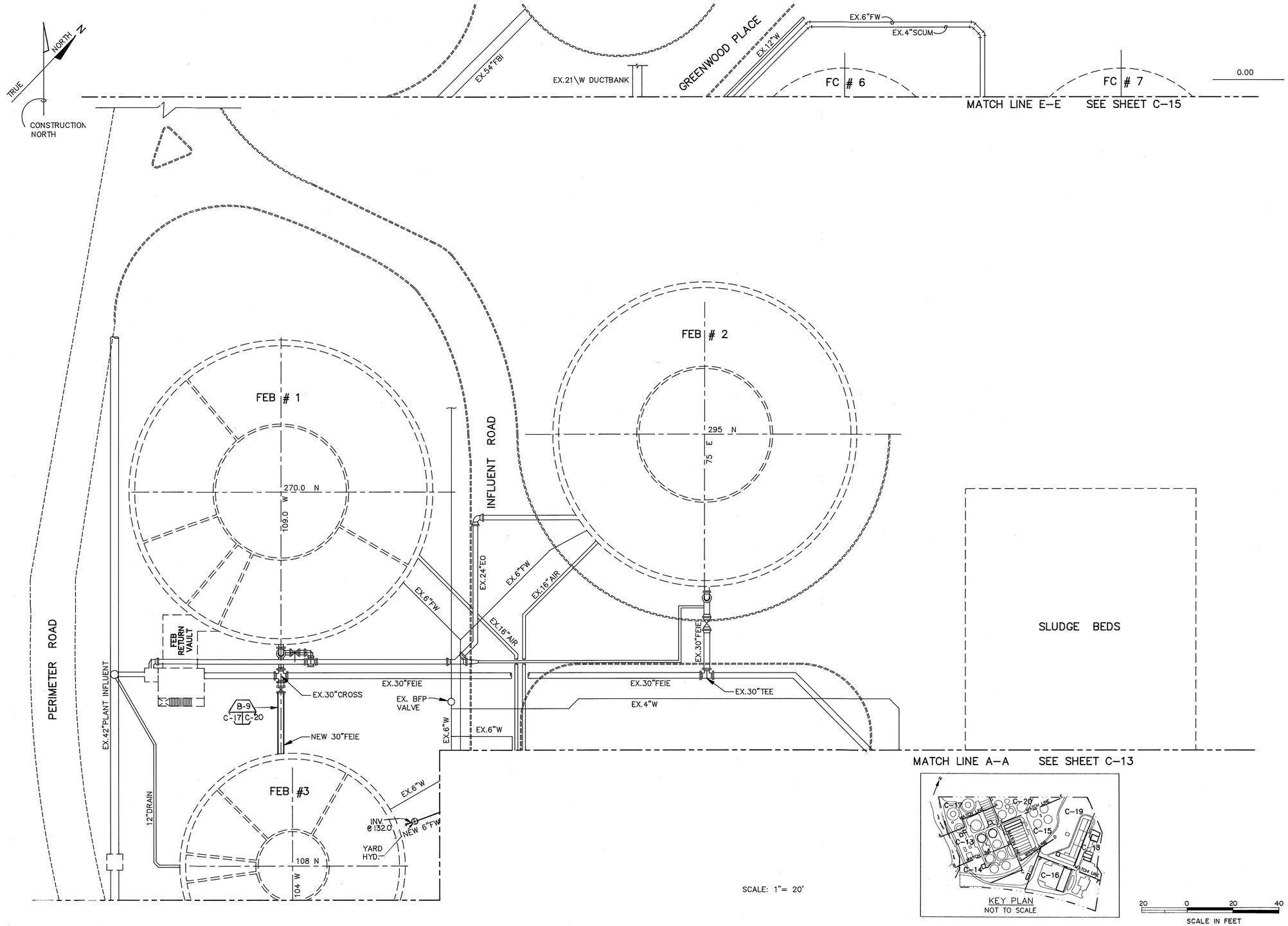

FILE: C:\LTPAT2\LPAT1

DEPARTMENT OF PUBLIC WORKS
HOWARD COUNTY, MARYLAND

DIRECTOR OF PUBLIC WORKS — DATE 12/9/91
CHIEF, BUREAU OF ENGINEERING — DATE 12-9-91
CHIEF, BUREAU OF ENVIRONMENTAL SERVICES — DATE 12/9/91
CHIEF, UTILITY DESIGN DIVISION — DATE 12-9-91

Metcalf & Eddy
CCJM ENVIRONMENTAL ENGINEERS & SCIENTISTS
Silver Spring, Maryland

STATE OF MARYLAND — DONALD RICHARD AUBURN No. 11109 — REGISTERED PROFESSIONAL ENGINEER

DES: NB
DRN: LB
CHK: MCJ
DATE: 12/2/91

BY	NO.	REVISION	DATE
CCJH	2	RECORD DRAWING	1/14/92
	1	REVISED FOR BIDDING	3/5/92

YARD PIPING & UNDERGROUND UTILITIES PLAN V

LITTLE PATUXENT WASTEWATER TREATMENT PLANT
LITTLE PATUXENT WASTEWATER TREATMENT PLANT EXPANSION
ADDITION NO. 5
CAPITAL PROJECT S-6153
CONTRACT NO. 20-3082
HOWARD COUNTY, MARYLAND

SCALE AS SHOWN
SHEET 22 OF 226
C-17

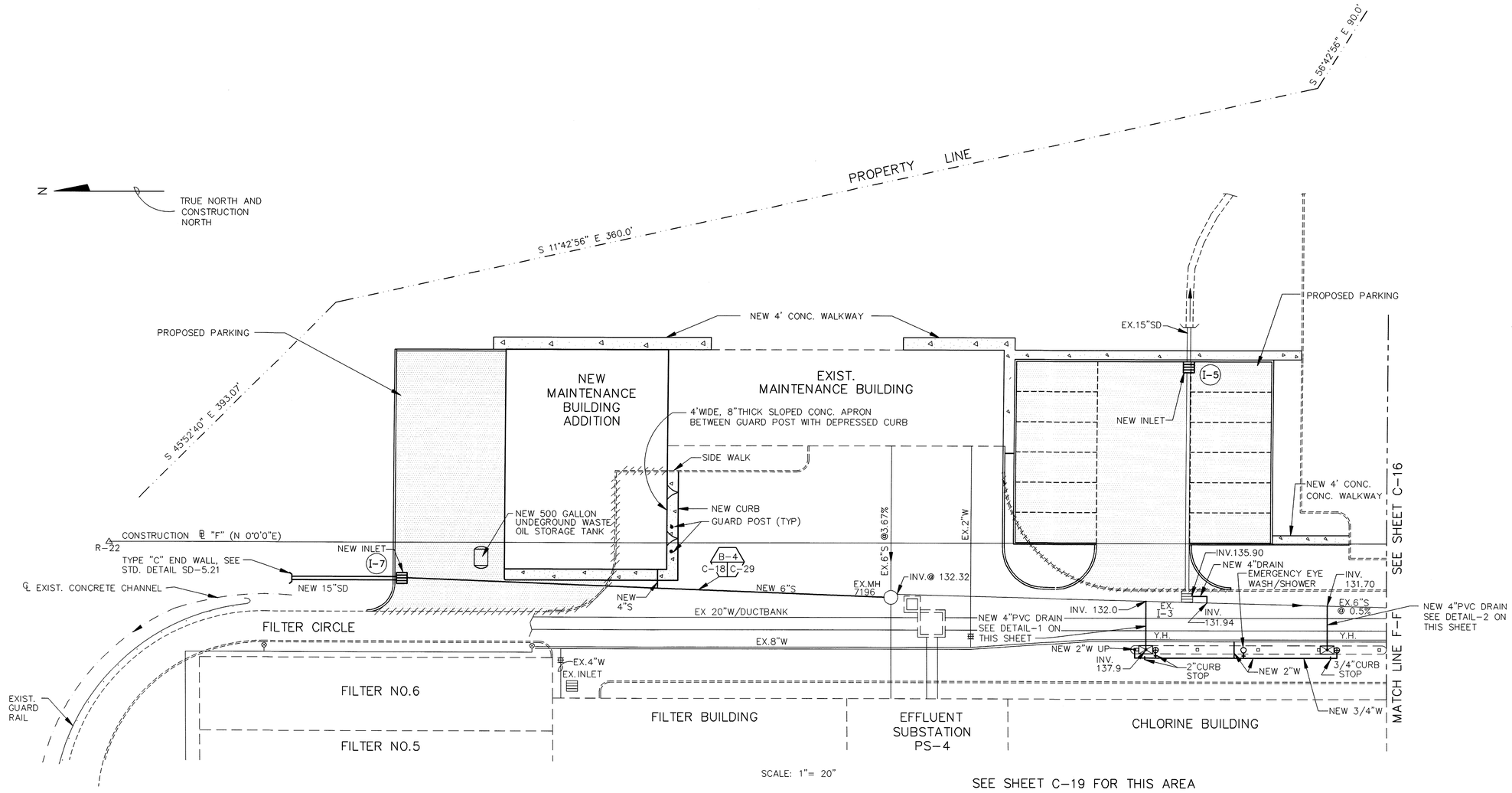

SCALE: 1"= 20"

SEE SHEET C-19 FOR THIS AREA

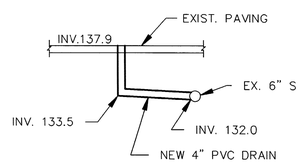

DETAIL-1
NOT TO SCALE

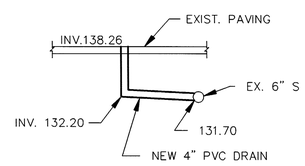

DETAIL-2
NOT TO SCALE

20 0 20 40 1"= 20'- 0"

SCALE IN FEET

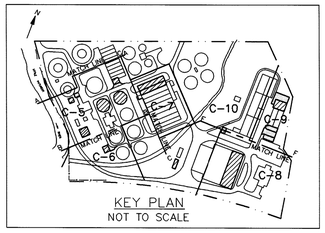

KEY PLAN
NOT TO SCALE

FILE: C:\PROJ\LTPAT\LPBUILT\LPC-18 SCALE: 1"=20'

DEPARTMENT OF PUBLIC WORKS
HOWARD COUNTY, MARYLAND

DIRECTOR OF PUBLIC WORKS — DATE 5/7/96
CHIEF, BUREAU OF ENVIRONMENTAL SERVICES — DATE 5/7/96
CHIEF, BUREAU OF ENGINEERING — DATE 5/7/96
CHIEF, UTILITY DESIGN DIVISION — DATE 5-7-96

M&E Metcalf & Eddy
CCJM ENVIRONMENTAL ENGINEERS & SCIENTISTS, SILVER SPRING, MARYLAND

STATE OF MARYLAND REGISTERED PROFESSIONAL ENGINEER

DES: NB
DRN: LB
CHK: MCJ
DATE: 12/2/91

BY	NO.	REVISION	DATE
CCJM	2	RECORD DRAWING	1/14/95
	1	REVISED FOR BIDDING	3/5/92

CIVIL

YARD PIPING & UNDERGROUND UTILITIES PLAN VI

LITTLE PATUXENT WASTEWATER TREATMENT PLANT

LITTLE PATUXENT WASTEWATER TREATMENT PLANT EXPANSION
ADDITION NO.5
CAPITAL PROJECT S-6153
CONTRACT NO. 20-3082
HOWARD COUNTY, MARYLAND

SCALE AS SHOWN

SHEET 23 OF 226

C-18A

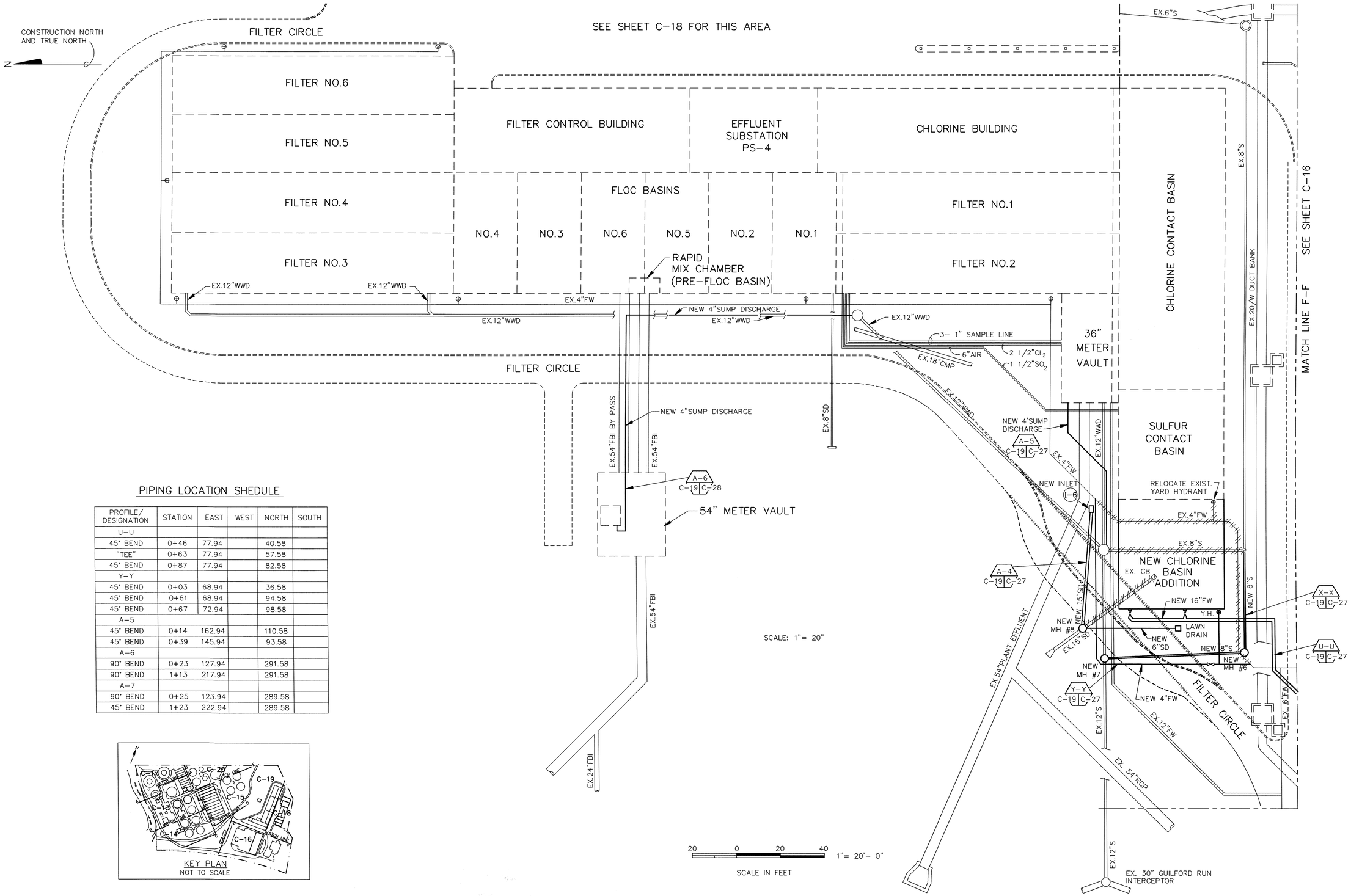

PIPING LOCATION SHEDULE

PROFILE/ DESIGNATION	STATION	EAST	WEST	NORTH	SOUTH
U-U					
45° BEND	0+46	77.94		40.58	
"TEE"	0+63	77.94		57.58	
45° BEND	0+87	77.94		82.58	
Y-Y					
45° BEND	0+03	68.94		36.58	
45° BEND	0+61	68.94		94.58	
45° BEND	0+67	72.94		98.58	
A-5					
45° BEND	0+14	162.94		110.58	
45° BEND	0+39	145.94		93.58	
A-6					
90° BEND	0+23	127.94		291.58	
90° BEND	1+13	217.94		291.58	
A-7					
90° BEND	0+25	123.94		289.58	
45° BEND	1+23	222.94		289.58	

KEY PLAN
NOT TO SCALE

DEPARTMENT OF PUBLIC WORKS
HOWARD COUNTY, MARYLAND

DIRECTOR OF PUBLIC WORKS — DATE 5/6/96
CHIEF, BUREAU OF ENGINEERING — DATE 5/7/96
CHIEF, BUREAU OF ENVIRONMENTAL SERVICES — DATE 5/7/96
CHIEF, UTILITY DESIGN DIVISION — DATE 5-7-96

Metcalf & Eddy
CCJM ENVIRONMENTAL ENGINEERS & SCIENTISTS
SILVER SPRING, MARYLAND

STATE OF MARYLAND — JONATHAN WINTHROP JOHNSON — No. 18161 — REGISTERED PROFESSIONAL ENGINEER

DES: NB
DRN: LB
CHK: MCJ
DATE: 12/2/91

BY	NO.	REVISION	DATE
CCJM	2	RECORD DRAWING	1/14/95
	1	REVISED FOR BIDDING	3/5/92

CIVIL

YARD PIPING & UNDERGROUND UTILITIES PLAN VII

LITTLE PATUXENT WASTEWATER TREATMENT PLANT

LITTLE PATUXENT WASTEWATER TREATMENT PLANT EXPANSION
ADDITION NO.5
CAPITAL PROJECT S-6153
CONTRACT NO. 20-3082
HOWARD COUNTY, MARYLAND

SCALE AS SHOWN

SHEET 24 OF 226

C-19A

FILE:C:\PROJ\LTPAT\LPBUIL\LPC-19 SCALE:1"=20'

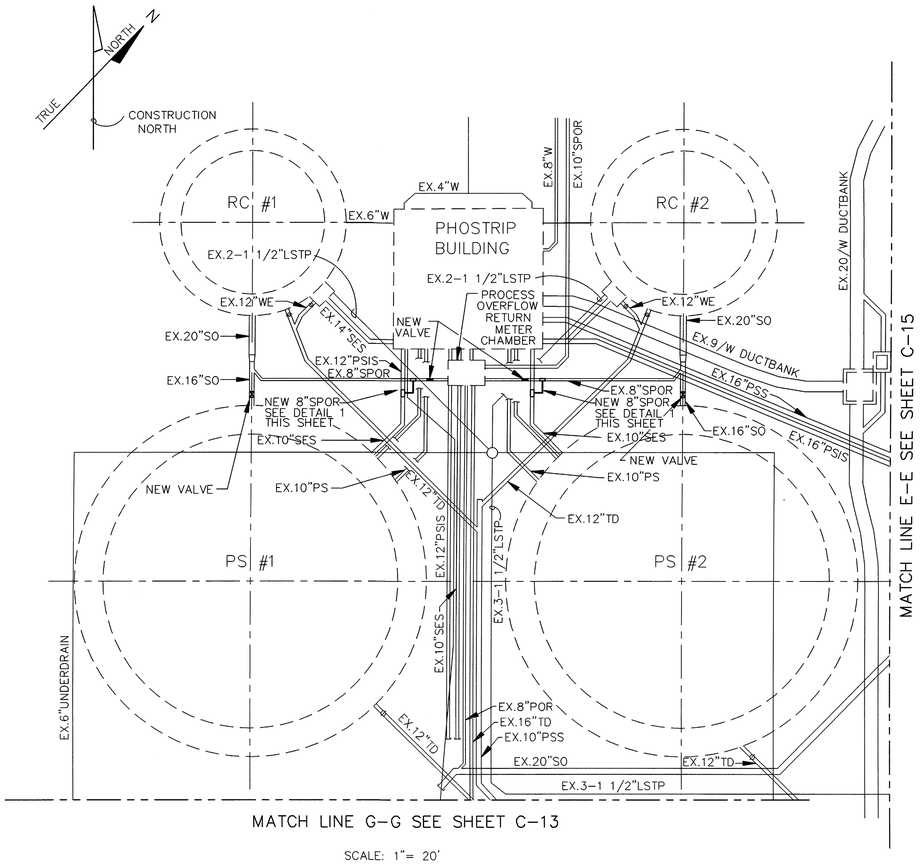

SCALE: 1"= 20'

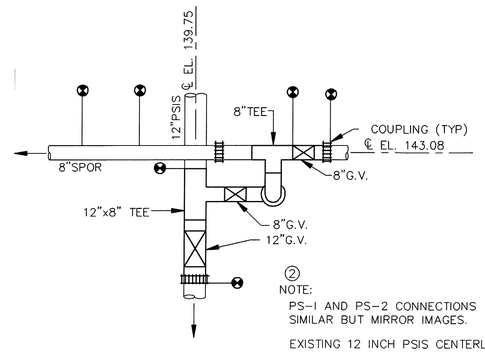

DETAIL 1

NOT TO SCALE

② NOTE:
PS-1 AND PS-2 CONNECTIONS SIMILAR BUT MIRROR IMAGES.

EXISTING 12 INCH PSIS CENTERLINE ELEVATION EQUAL 139.75
EXISTING 8 INCH SPOR CENTERLINE ELEVATION EQUAL 143.08 (FIELD VERIFY).

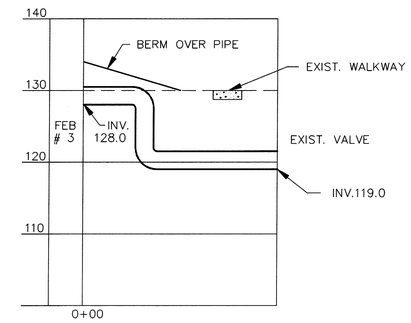

30" FEIE B-9 / C-17 | C-20

SCALE: HORIZ. 1"=10'-0"
VERT. 1"=10'-0"

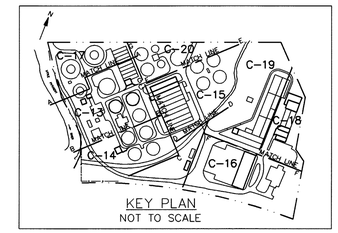

KEY PLAN
NOT TO SCALE

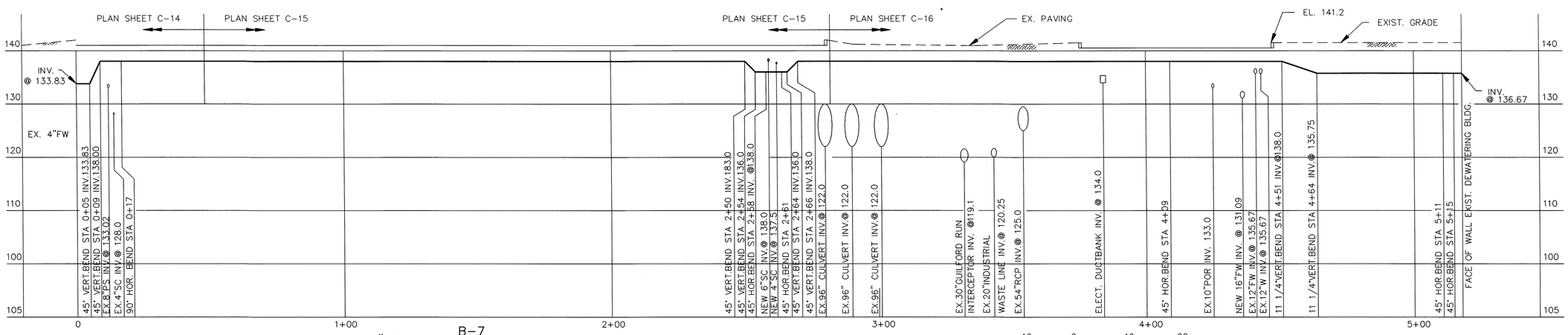

6" FW B-7 / C-14 / C-15 | C-20 / C-16

SCALE: HORIZ. 1"=20'-0"
VERT. 1"=10'-0"

10 0 10 20 1"=10'-0"
20 0 20 40 1"=20'-0"
SCALE IN FEET

FILE: C:\PROJ\LTPAT\LPBUILT\LPC-20 SCALE: 1"=20'

DEPARTMENT OF PUBLIC WORKS
HOWARD COUNTY, MARYLAND

DIRECTOR OF PUBLIC WORKS — DATE 5/7/96
CHIEF, BUREAU OF ENGINEERING — DATE 5/7/96
CHIEF, BUREAU OF ENVIRONMENTAL SERVICES — DATE 5-7-96
CHIEF, UTILITY DESIGN DIVISION — DATE

M&E Metcalf & Eddy
CCJM ENVIRONMENTAL ENGINEERS & SCIENTISTS
SILVER SPRING, MARYLAND

DES: NB
DRN: LB
CHK: MCJ
DATE: 12/2/91

BY	NO.	REVISION	DATE
CCJM	4	RECORD DRAWING	1/14/95
DZG	3	ADDENDUM #5	4/19/92
DZG	2	ADDENDUM #3	4/10/92
	1	REVISED FOR BIDDING	3/5/92

CIVIL
YARD PIPING & UNDER GROUND UTILITIES PLAN VII

LITTLE PATUXENT WASTEWATER TREATMENT PLANT
LITTLE PATUXENT WASTEWATER TREATMENT PLANT EXPANSION
ADDITION NO. 5
CAPITAL PROJECT S-6153
CONTRACT NO. 20-3082
HOWARD COUNTY, MARYLAND

SCALE AS SHOWN
SHEET 25 OF 226
C-20A

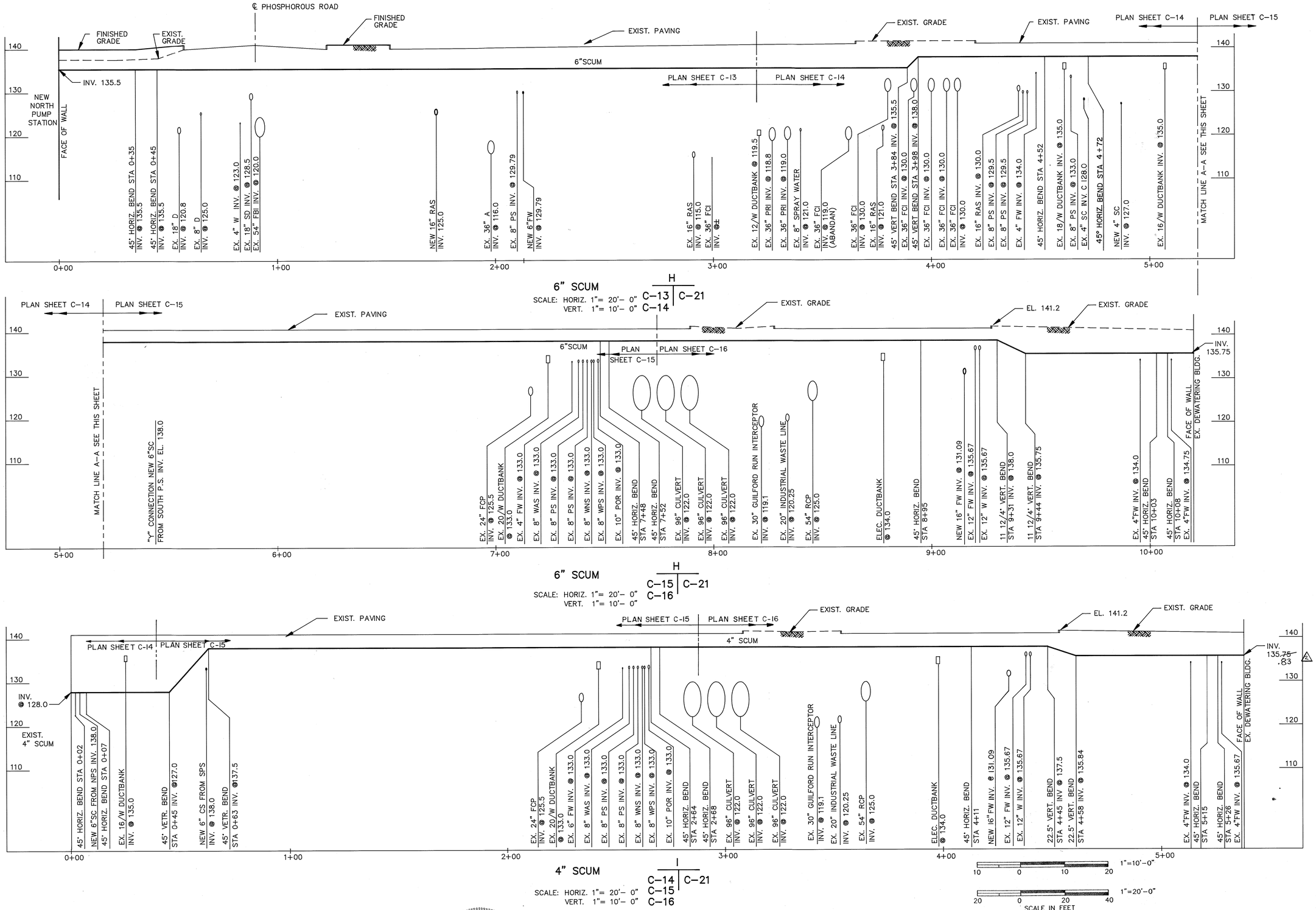

DEPARTMENT OF PUBLIC WORKS
HOWARD COUNTY, MARYLAND

DIRECTOR OF PUBLIC WORKS — DATE 12/9/91
CHIEF, BUREAU OF ENGINEERING — DATE 12-9-91
CHIEF, BUREAU OF ENVIRONMENTAL SERVICES — DATE 12/9/91
CHIEF, UTILITY DESIGN DIVISION — DATE 12-9-91

Metcalf & Eddy
CCJM ENVIRONMENTAL ENGINEERS & SCIENTISTS
Silver Spring, Maryland

STATE OF MARYLAND — DONALD RICHARD JUIGAMP No. 11160 — REGISTERED PROFESSIONAL ENGINEER

DES: NB
DRN: LB
CHK: MCJ
DATE: 12/2/91

BY	NO.	REVISION	DATE
	2.	RECORD DRAWING	11/14/95
	1	REVISED FOR BIDDING	3/5/92

CIVIL

YARD PIPING PROFILES I

LITTLE PATUXENT WASTEWATER TREATMENT PLANT
LITTLE PATUXENT WASTEWATER TREATMENT PLANT EXPANSION
ADDITION NO. 5
CAPITAL PROJECT S - 6153
CONTRACT NO. 20 - 3082
HOWARD COUNTY, MARYLAND

SCALE AS SHOWN
SHEET 26 OF 226
C-21

FILE: C:/LTPAT2/PROF2

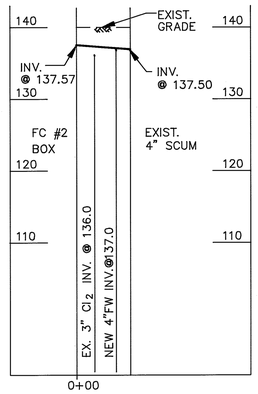

4" SCUM Q
SCALE: HORIZ. 1"= 20'- 0" VERT. 1"= 10'- 0" C-13 | C-22

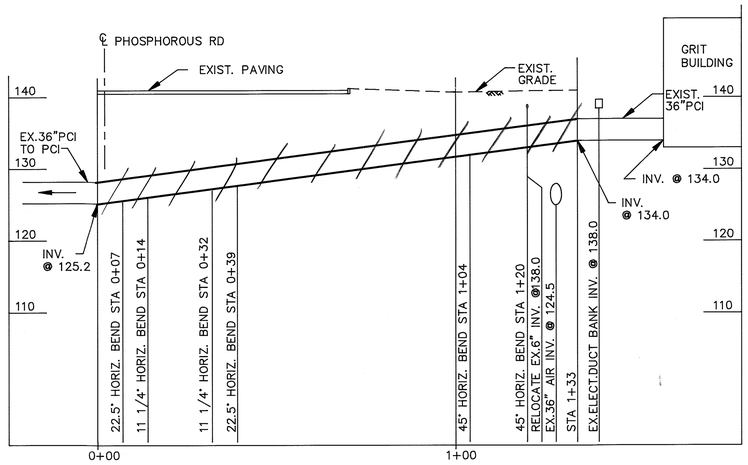

~~RELOCATED 36" PCI~~ R
SCALE: HORIZ. 1"= 20'- 0" VERT. 1"= 10'- 0" C-13 | C-22

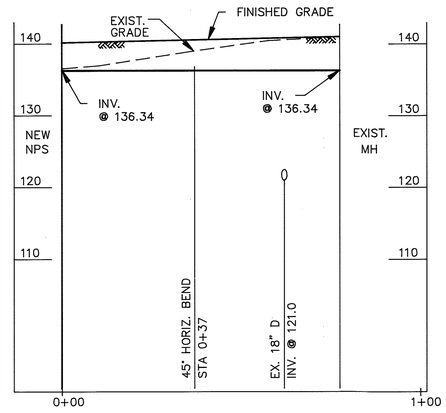

4" SUMP DISCHARGE S
SCALE: HORIZ. 1"= 20'- 0" VERT. 1"= 10'- 0" C-13 | C-22

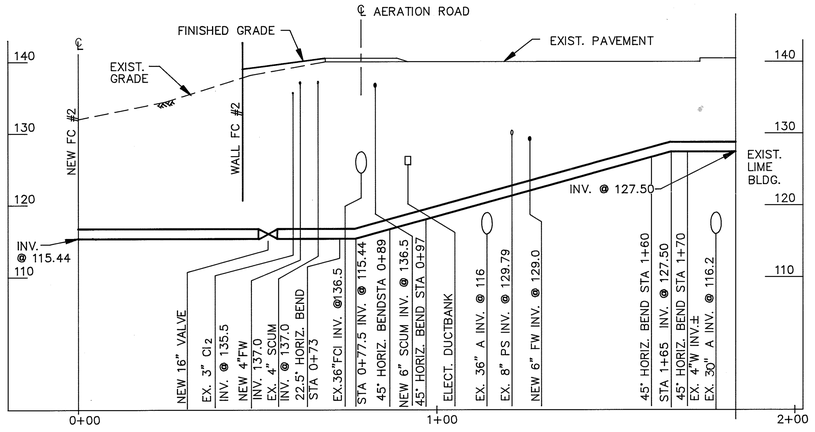

16" RAS T
SCALE: HORIZ. 1"= 20'- 0" VERT. 1"= 10'- 0" C-13 | C-22

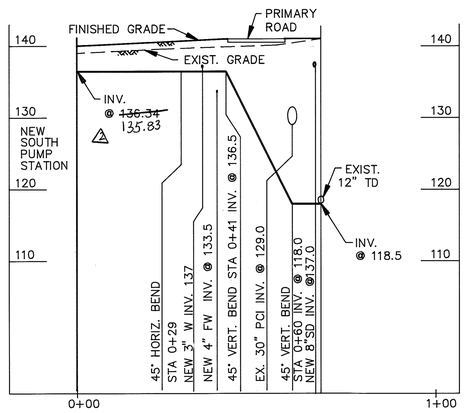

4" SUMP DISCHARGE U
SCALE: HORIZ. 1"= 20'- 0" VERT. 1"= 10'- 0" C-14 | C-22

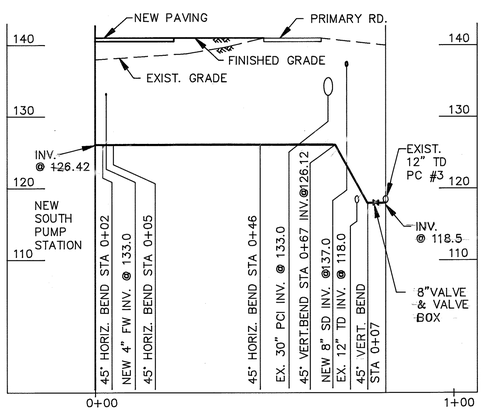

8" PS V
SCALE: HORIZ. 1"= 20'- 0" VERT. 1"= 10'- 0" C-14 | C-22

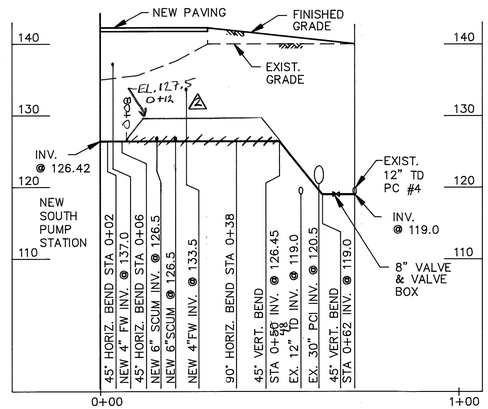

8" PS W
SCALE: HORIZ. 1"= 20'- 0" VERT. 1"= 10'- 0" C-14 | C-22

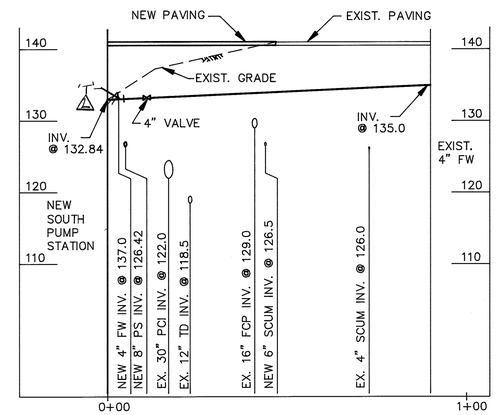

4" FW Y
SCALE: HORIZ. 1"= 20'- 0" VERT. 1"= 10'- 0" C-14 | C-22

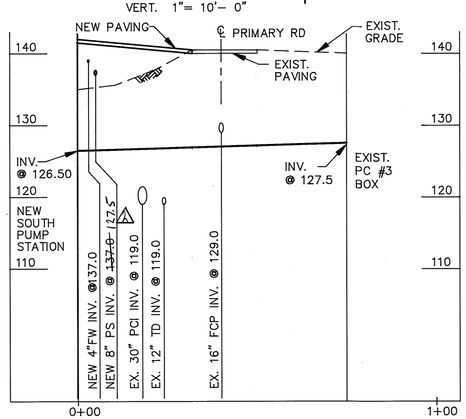

6" SCUM X
SCALE: HORIZ. 1"= 20'- 0" VERT. 1"= 10'- 0" C-14 | C-22

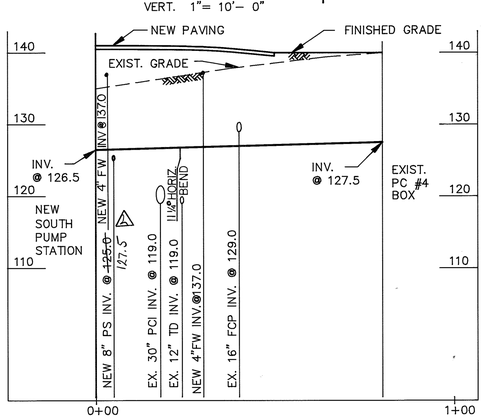

6" SCUM Z
SCALE: HORIZ. 1"= 20'- 0" VERT. 1"= 10'- 0" C-14 | C-22

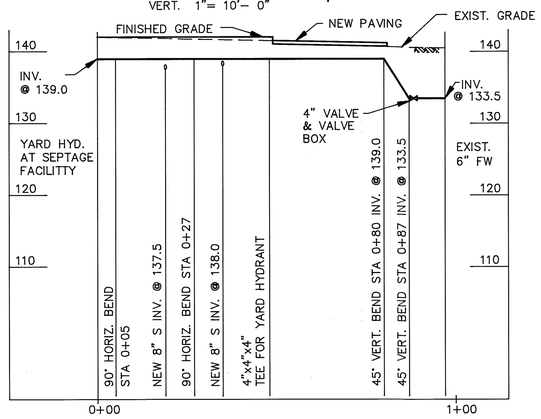

4" FW A-1
SCALE: HORIZ. 1"= 20'- 0" VERT. 1"= 10'- 0" C-13 | C-22

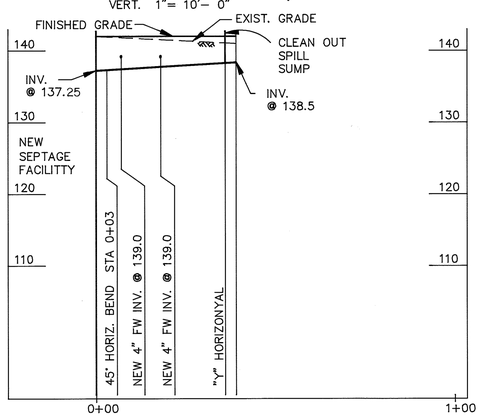

8" S A-2
SCALE: HORIZ. 1"= 20'- 0" VERT. 1"= 10'- 0" C-13 | C-22

1"=10'-0"
10 0 10 20
1"=20'-0"
20 0 20 40
SCALE IN FEET

FILE: D:/LTPAT/PROF5

DEPARTMENT OF PUBLIC WORKS
HOWARD COUNTY, MARYLAND

DIRECTOR OF PUBLIC WORKS — DATE 12/9/91
CHIEF, BUREAU OF ENGINEERING — DATE 12-9-91
CHIEF, BUREAU OF ENVIRONMENTAL SERVICES — DATE 12/9/91
CHIEF, UTILITY DESIGN DIVISION — DATE 12-9-91

M&E Metcalf & Eddy
CCJM ENVIRONMENTAL ENGINEERS & SCIENTISTS
Silver Spring, Maryland

STATE OF MARYLAND — DONALD RICHARD AUBUCHON No.11180 — REGISTERED PROFESSIONAL ENGINEER

DES: NB
DRN: LB
CHK: MCJ
DATE: 12/2/91

BY	NO.	REVISION	DATE
	2	RECORD DRAWING	11/19/95
	1	REVISED FOR BIDDING	3/5/92

CIVIL

YARD PIPING PROFILES II

LITTLE PATUXENT WASTEWATER TREATMENT PLANT
LITTLE PATUXENT WASTEWATER TREATMENT PLANT EXPANSION
ADDITION NO. 5
CAPITAL PROJECT S-6153
CONTRACT NO. 20-3082
HOWARD COUNTY, MARYLAND

SCALE AS SHOWN
SHEET 27 OF 226
C-22

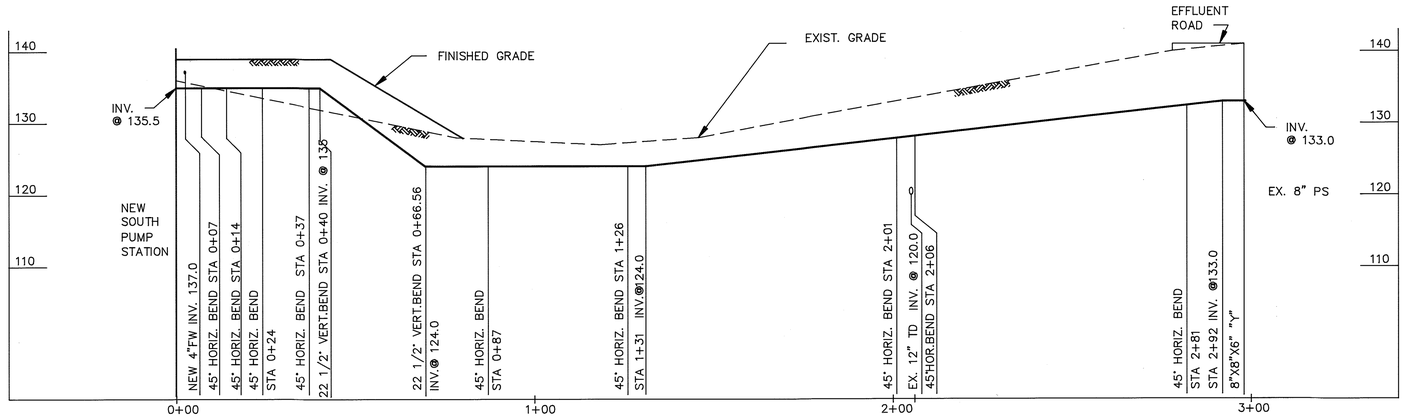

6" PS

A–A
C–14 | C–23

SCALE: HORIZ. 1"= 20'– 0"
VERT. 1"= 10'– 0"

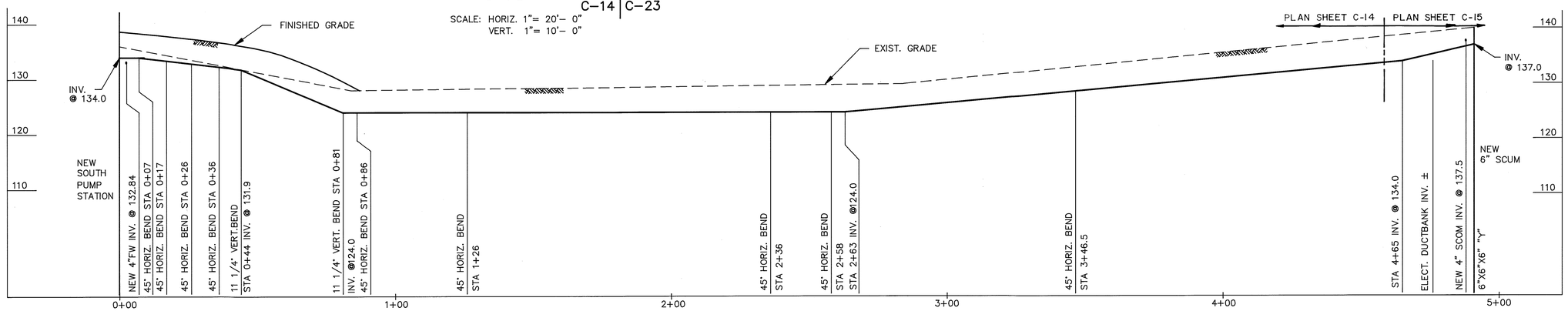

6" SCUM

B–B
C–14 | C–23
C–15

SCALE: HORIZ. 1"= 20'– 0"
VERT. 1"= 10'– 0"

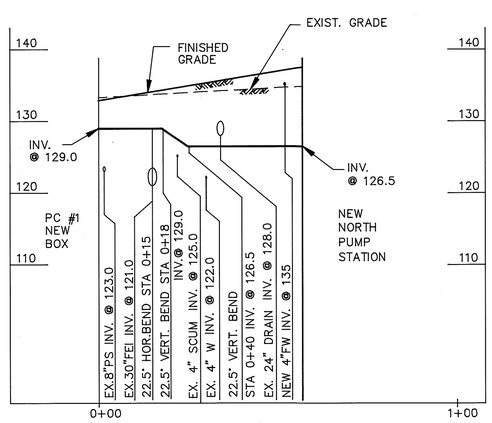

6" SCUM

A
C–13 | C–23

SCALE: HORIZ. 1"= 20'– 0"
VERT. 1"= 10'– 0"

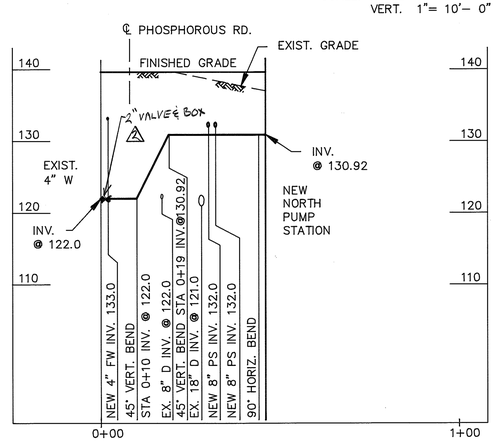

2" W

B
C–13 | C–23

SCALE: HORIZ. 1"= 20'– 0"
VERT. 1"= 10'– 0"

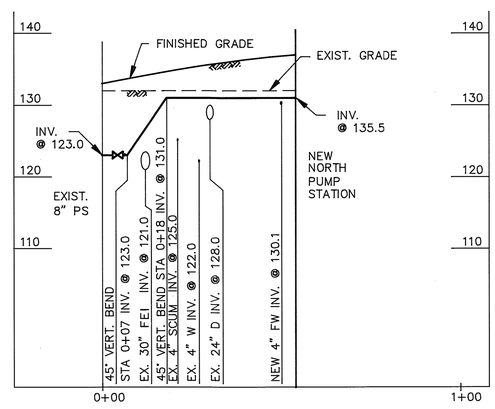

6" PS

C
C–13 | C–23

SCALE: HORIZ. 1"= 20'– 0"
VERT. 1"= 10'– 0"

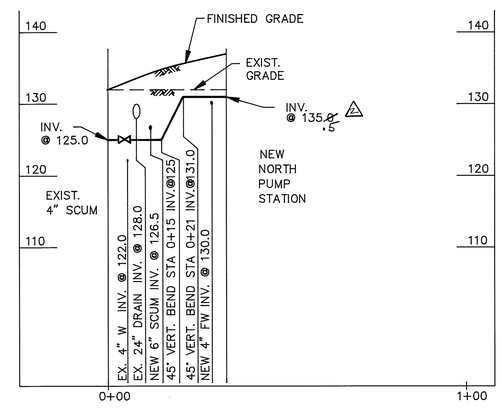

6" SCUM

D
C–13 | C–23

SCALE: HORIZ. 1"= 20'– 0"
VERT. 1"= 10'– 0"

SCALE IN FEET
1"=10'–0"
1"=20'–0"

DEPARTMENT OF PUBLIC WORKS
HOWARD COUNTY, MARYLAND

DIRECTOR OF PUBLIC WORKS — DATE 12/9/91
CHIEF, BUREAU OF ENGINEERING — DATE 12-9-91
CHIEF, BUREAU OF ENVIRONMENTAL SERVICES — DATE 12/9/91
CHIEF, UTILITY DESIGN DIVISION — DATE 12-9-91

Metcalf & Eddy
CCJM ENVIRONMENTAL ENGINEERS & SCIENTISTS
Silver Spring, Maryland

STATE OF MARYLAND — DONALD RICHARD JULIANO No.11160 — REGISTERED PROFESSIONAL ENGINEER

DES: NB
DRN: LB
CHK: MCJ
DATE: 12/2/91

BY	NO.	REVISION	DATE
	2	RECORD DRAWING	11/19/93
	1	REVISED FOR BIDDING	3/5/92

CIVIL

YARD PIPING PROFILES III

LITTLE PATUXENT WASTEWATER TREATMENT PLANT
LITTLE PATUXENT WASTEWATER TREATMENT PLANT EXPANSION
ADDITION NO. 5
CAPITAL PROJECT S-6153
CONTRACT NO. 20-3082
HOWARD COUNTY, MARYLAND

SCALE AS SHOWN

SHEET 28 OF 226

C–23

FILE:C:/LTPAT2/PROF3

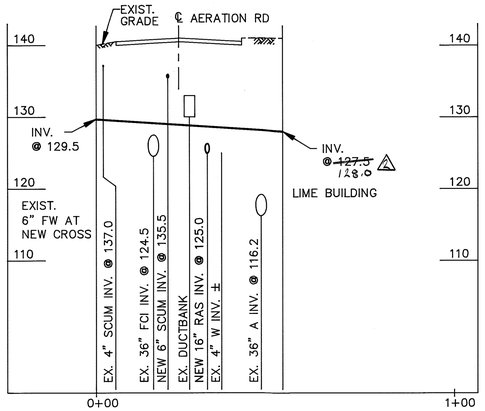

6" FW
SCALE: HORIZ. 1"= 20'- 0"
VERT. 1"= 10'- 0"
A-3 C-13 | C-24

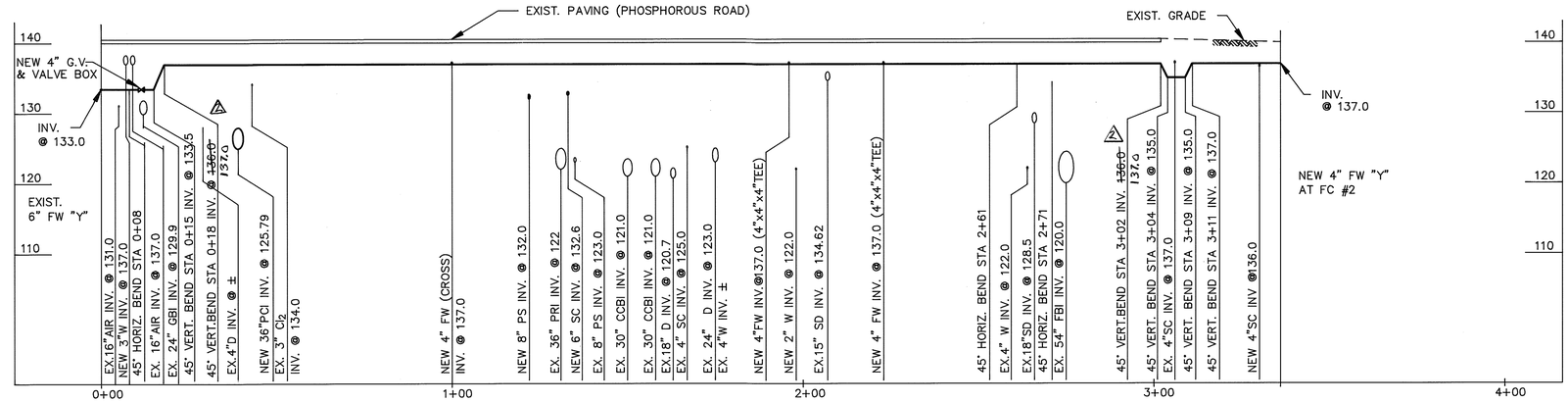

4" FW
SCALE: HORIZ. 1"= 20'- 0"
VERT. 1"= 10'- 0"
C-C C-13 | C-24

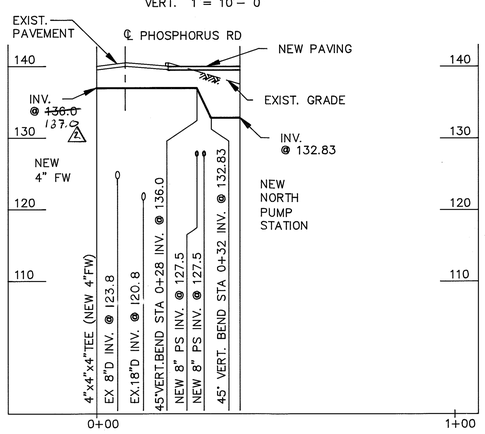

4" FW
SCALE: HORIZ. 1"= 20'- 0"
VERT. 1"= 10'- 0"
D-D C-13 | C-24

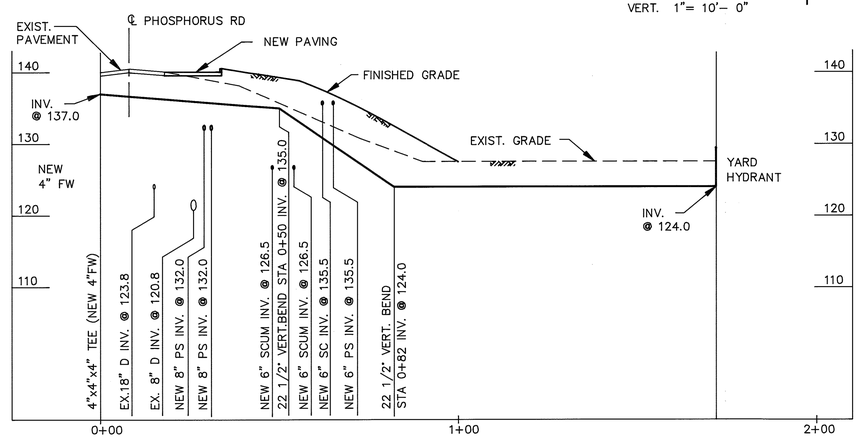

4" FW
SCALE: HORIZ. 1"= 20'- 0"
VERT. 1"= 10'- 0"
E-E C-13 | C-24

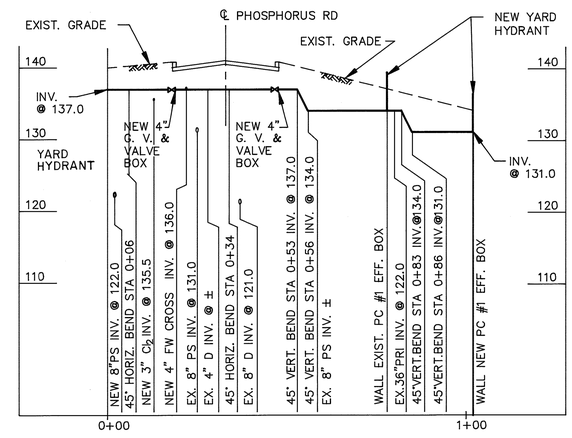

4" FW
SCALE: HORIZ. 1"= 20'- 0"
VERT. 1"= 10'- 0"
F-F C-13 | C-24

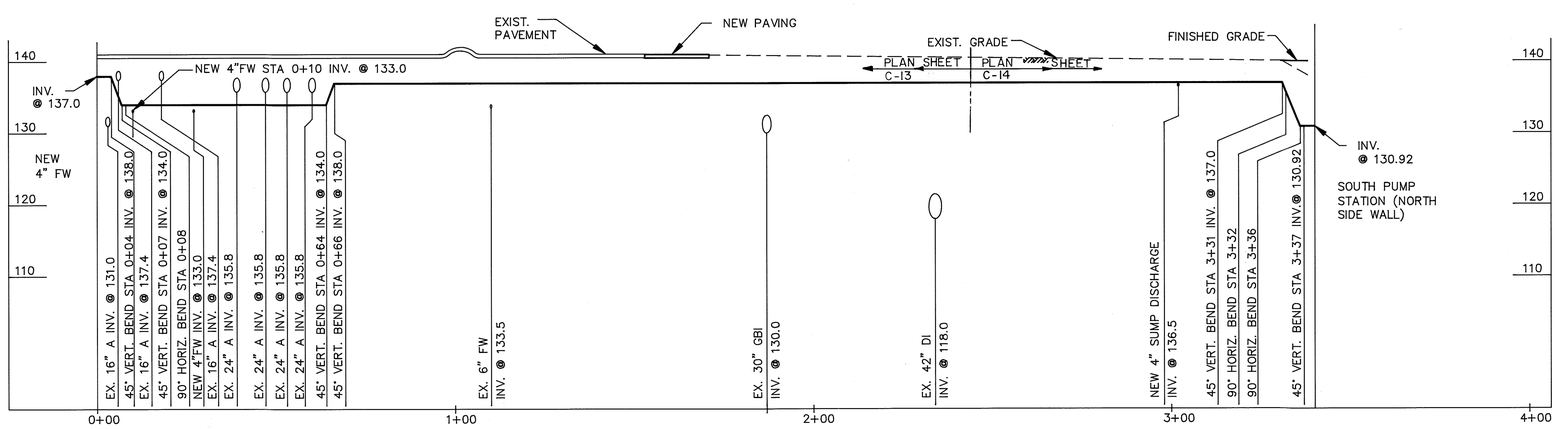

3" W
SCALE: HORIZ. 1"= 20'- 0"
VERT. 1"= 10'- 0"
G-G C-13 | C-24

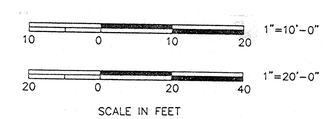

FILE:D:/LTPAT/PROF6

DEPARTMENT OF PUBLIC WORKS
HOWARD COUNTY, MARYLAND

DIRECTOR OF PUBLIC WORKS — DATE 12/9/91
CHIEF, BUREAU OF ENGINEERING — DATE 12-9-91
CHIEF, BUREAU OF ENVIRONMENTAL SERVICES — DATE 12/9/91
CHIEF, UTILITY DESIGN DIVISION — DATE 12-9-91

Metcalf & Eddy
CCJM ENVIRONMENTAL ENGINEERS & SCIENTISTS
Silver Spring, Maryland

STATE OF MARYLAND — DONALD RICHARD AUBURN No.11160 — REGISTERED PROFESSIONAL ENGINEER

DES: NB
DRN: LB
CHK: MCJ
DATE: 12/2/91

BY	NO.	REVISION	DATE
	2	RECORD DRAWING	1/14/93
	1	REVISED FOR BIDDING	3/6/92

CIVIL

YARD PIPING PROFILES IV

LITTLE PATUXENT WASTEWATER TREATMENT PLANT
LITTLE PATUXENT WASTEWATER TREATMENT PLANT EXPANSION
ADDITION NO. 5
CAPITAL PROJECT S - 6153
CONTRACT NO. 20 - 3082
HOWARD COUNTY, MARYLAND

SCALE AS SHOWN
SHEET 29 OF 226
G-24

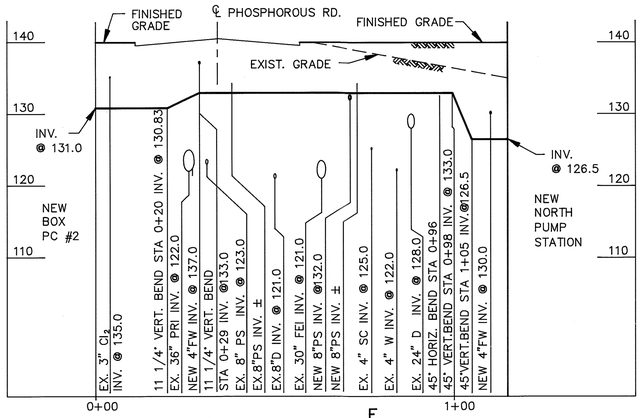

6" SC

SCALE: HORIZ. 1"= 20'- 0"
VERT. 1"= 10'- 0"

E C-13 | C-25

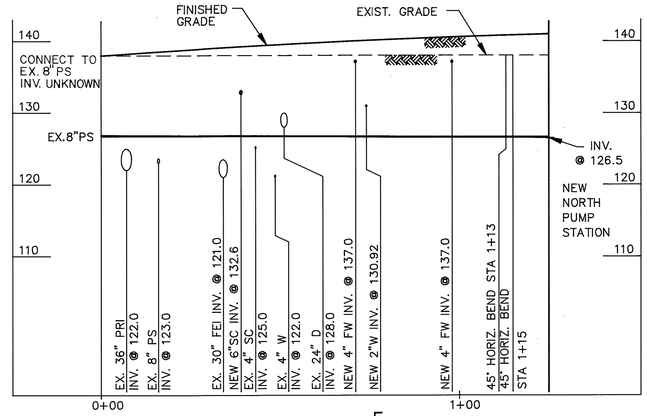

8" PS

SCALE: HORIZ. 1"= 20'- 0"
VERT. 1"= 10'- 0"

F C-13 | C-25

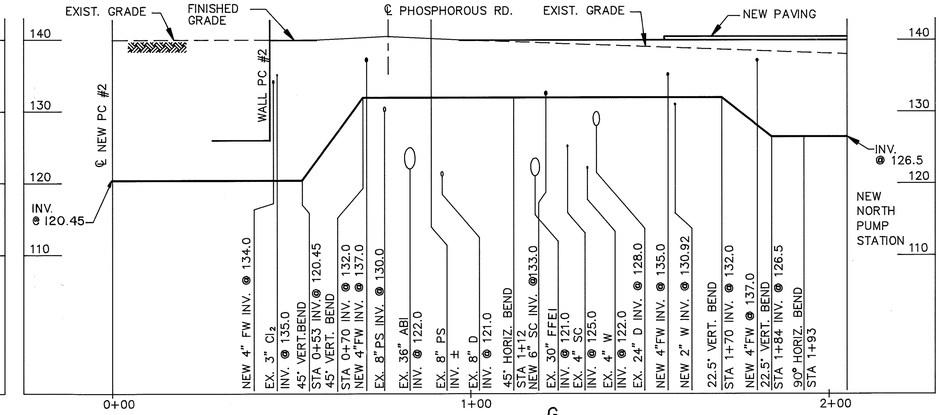

8" PS

SCALE: HORIZ. 1"= 20'- 0"
VERT. 1"= 10'- 0"

G C-13 | C-25

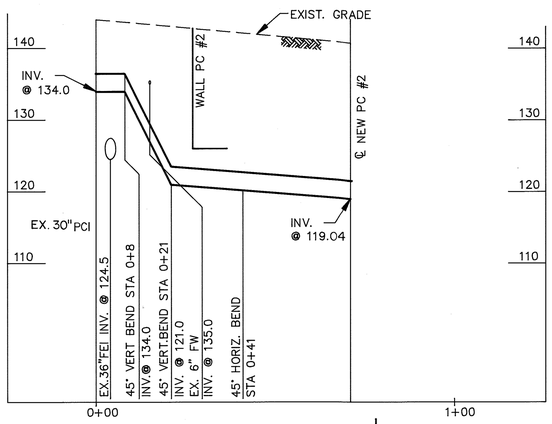

30" PCI

SCALE: HORIZ. 1"= 20'- 0"
VERT. 1"= 10'- 0"

J C-13 | C-25

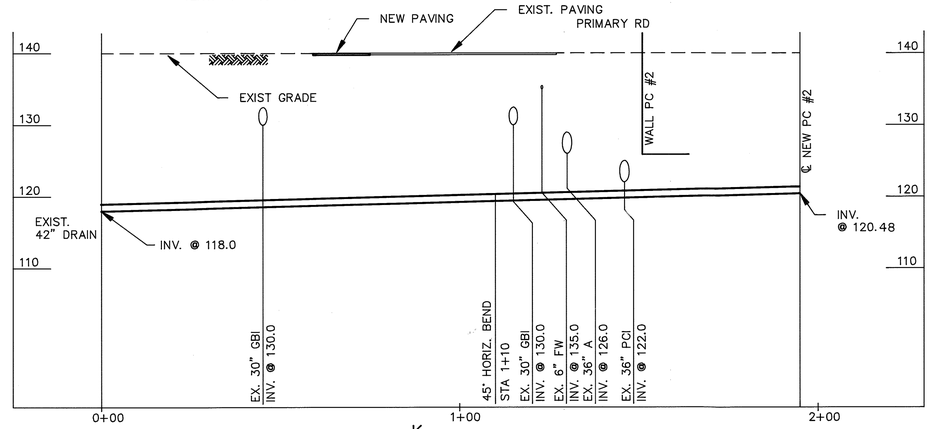

12"D

SCALE: HORIZ. 1"= 20'- 0"
VERT. 1"= 10'- 0"

K C-13 | C-25

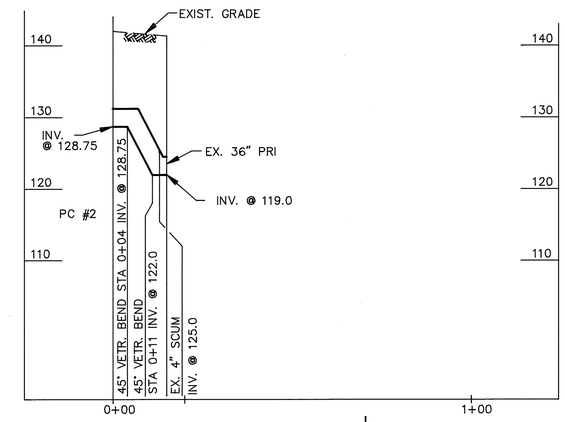

30" PRI

SCALE: HORIZ. 1"= 20'- 0"
VERT. 1"= 10'- 0"

L C-13 | C-25

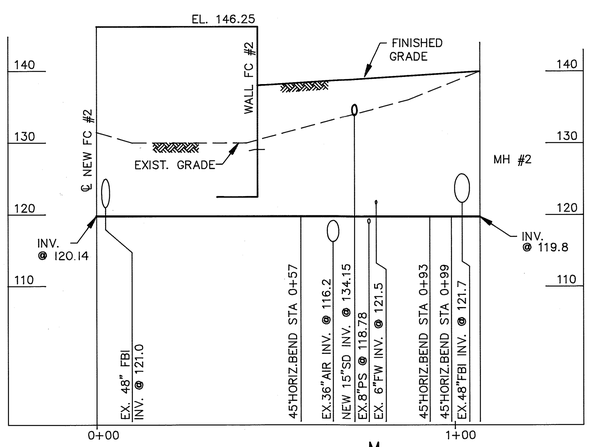

12" D

SCALE: HORIZ. 1"= 20'- 0"
VERT. 1"= 10'- 0"

M C-13 | C-25

1"=10'-0"
10 0 10 20
1"=20'-0"
20 0 20 40
SCALE IN FEET

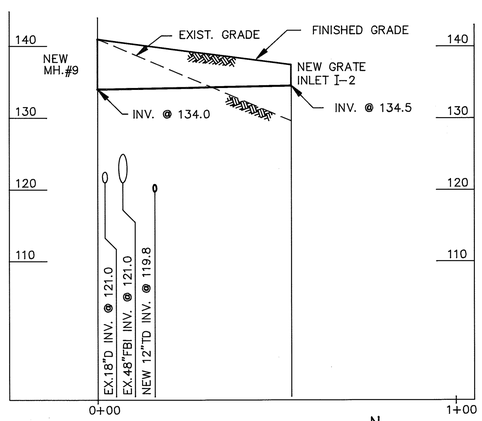

15" SD

SCALE: HORIZ. 1"= 20'- 0"
VERT. 1"= 10'- 0"

N C-13 | C-25

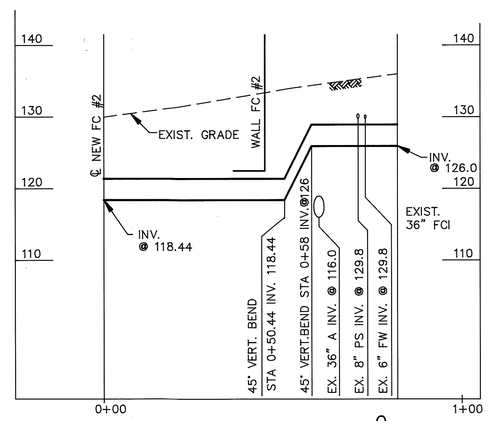

36" FCI

SCALE: HORIZ. 1"= 20'- 0"
VERT. 1"= 10'- 0"

O C-13 | C-25

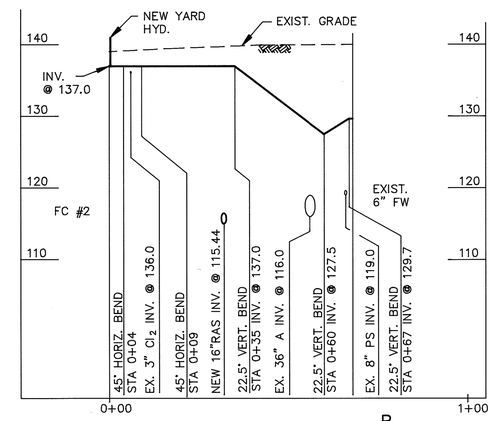

4" FW

SCALE: HORIZ. 1"= 20'- 0"
VERT. 1"= 10'- 0"

P C-13 | C-25

DEPARTMENT OF PUBLIC WORKS
HOWARD COUNTY, MARYLAND

DIRECTOR OF PUBLIC WORKS — DATE 12/9/91
CHIEF, BUREAU OF ENGINEERING — DATE 12-9-91
CHIEF, BUREAU OF ENVIRONMENTAL SERVICES — DATE 12/9/91
CHIEF, UTILITY DESIGN DIVISION — DATE 12-9-91

M&E Metcalf & Eddy

CCJM ENVIRONMENTAL ENGINEERS & SCIENTISTS
Silver Spring, Maryland

STATE OF MARYLAND — DONALD RICHARD JUSKAMP No. 11777 — REGISTERED PROFESSIONAL ENGINEER

DES: NB
DRN: LB
CHK: MCJ
DATE: 12/2/91

BY	NO.	REVISION	DATE
	2	RECORD DRAWING	11/14/95
	1	REVISED FOR BIDDING	3/5/92

CIVIL

YARD PIPING PROFILES V

LITTLE PATUXENT WASTEWATER TREATMENT PLANT
LITTLE PATUXENT WASTEWATER TREATMENT PLANT EXPANSION
ADDITION NO. 5
CAPITAL PROJECT S-6153
CONTRACT NO. 20-3082
HOWARD COUNTY, MARYLAND

SCALE AS SHOWN

SHEET 30 OF 226

C-25

FILE:C:/LTPAT2/PROF4

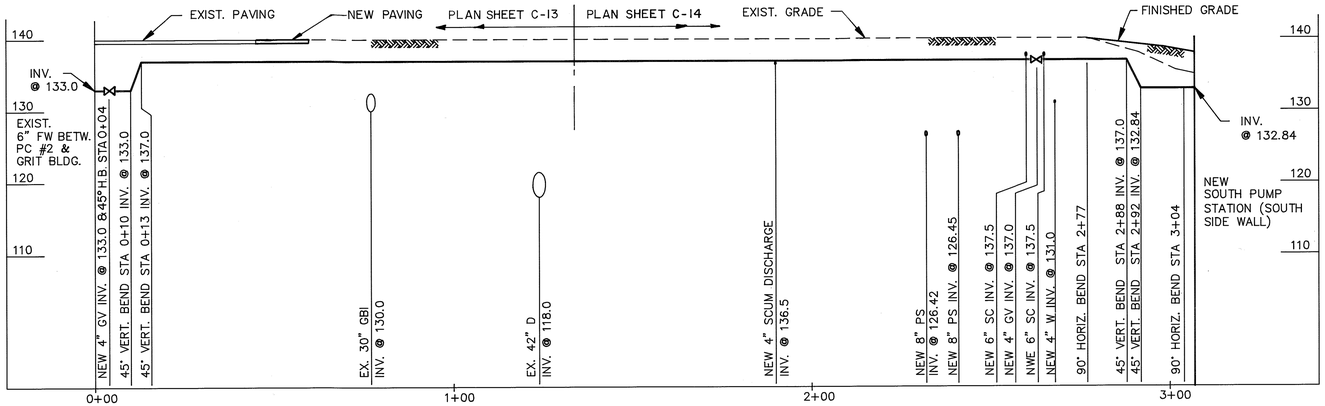

4" FW H–H C–13 | C–26 C–14
SCALE: HORIZ. 1"= 20'– 0"
VERT. 1"= 10'– 0"

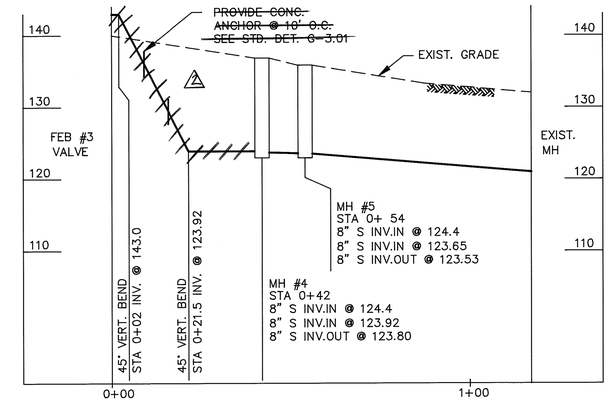

8" S L–L C–13 | C–26
SCALE: HORIZ. 1"= 20'– 0"
VERT. 1"= 10'– 0"

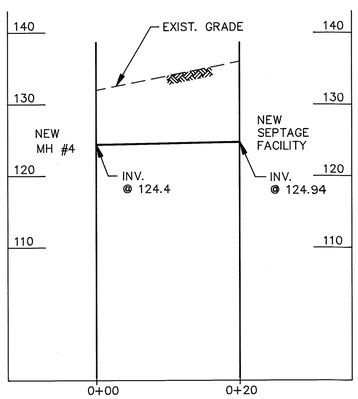

8" S M–M C–13 | C–26
SCALE: HORIZ. 1"= 10'– 0"
VERT. 1"= 10'– 0"

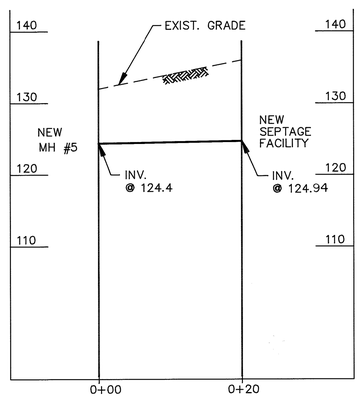

8" S N–N C–13 | C–26
SCALE: HORIZ. 1"= 10'– 0"
VERT. 1"= 10'– 0"

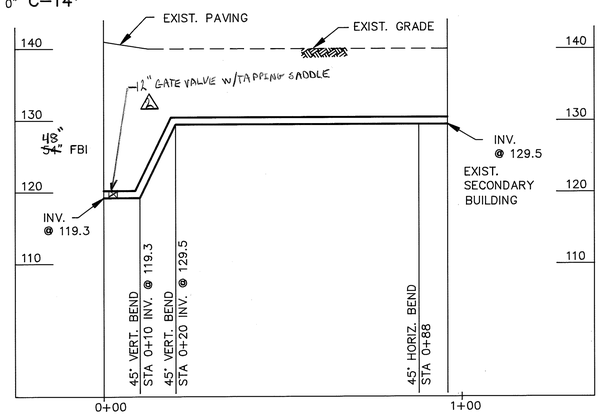

12" SPRAY WATER O–O C–13 | C–26
SCALE: HORIZ. 1"= 20'– 0"
VERT. 1"= 10'– 0"

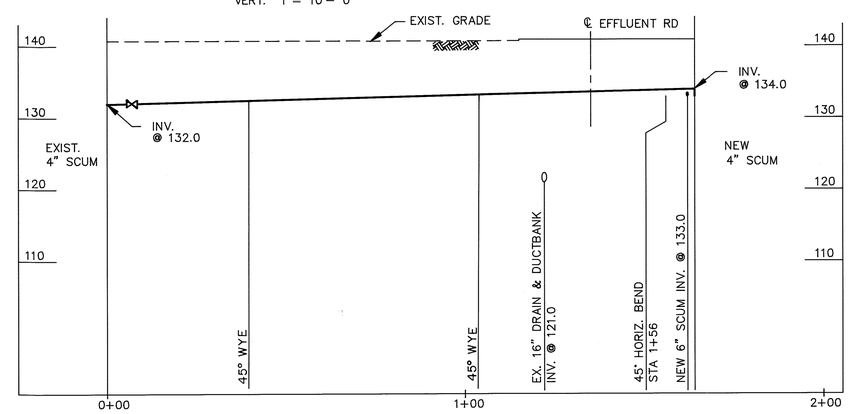

4" SCUM P–P C–15 | C–26
SCALE: HORIZ. 1"= 20'– 0"
VERT. 1"= 10'– 0"

1"=10'–0"
10 0 10 20
1"=20'–0"
20 0 20 40
SCALE IN FEET

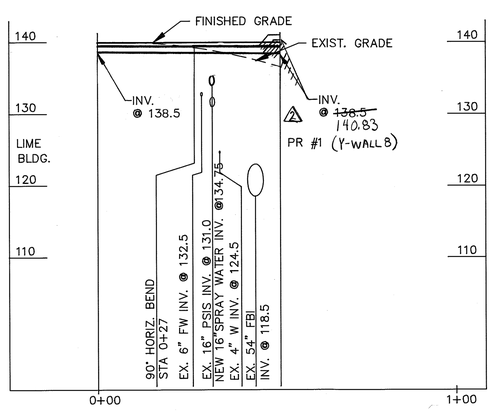

12" AIR R–R C–15 | C–26
SCALE: HORIZ. 1"= 20'– 0"
VERT. 1"= 10'– 0"

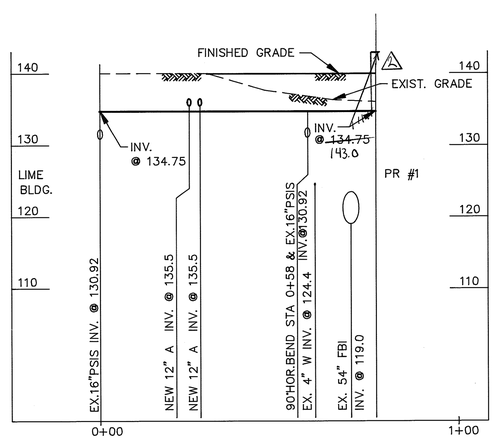

6" SPRAY WATER S–S C–15 | C–26
SCALE: HORIZ. 1"= 20'– 0"
VERT. 1"= 10'– 0"

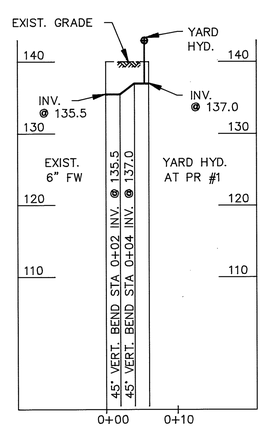

4" FW T–T C–15 | C–26
SCALE: HORIZ. 1"= 10'– 0"
VERT. 1"= 10'– 0"

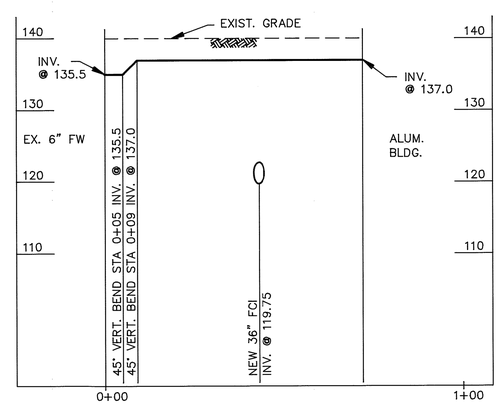

4" FW U–U C–15 | C–26
SCALE: HORIZ. 1"= 20'– 0"
VERT. 1"= 10'– 0"

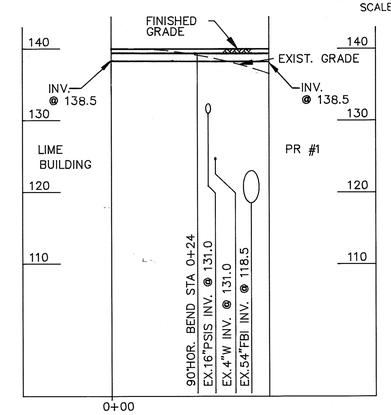

12" AIR Q–Q C–15 | C–26
SCALE: HORIZ. 1"= 20'– 0"
VERT. 1"= 10'– 0"

FILE:D:/LTPAT/PROF7

DEPARTMENT OF PUBLIC WORKS
HOWARD COUNTY, MARYLAND

DIRECTOR OF PUBLIC WORKS	DATE 12/9/91	CHIEF, BUREAU OF ENGINEERING	DATE 12-9-91
CHIEF, BUREAU OF ENVIRONMENTAL SERVICES	DATE 12/9/91	CHIEF UTILITY DESIGN DIVISION	DATE 12-9-91

M&E Metcalf & Eddy
CCJM ENVIRONMENTAL ENGINEERS & SCIENTISTS
Silver Spring, Maryland

STATE OF MARYLAND — DONALD RICHARD ROSSO — No. 4168 — REGISTERED PROFESSIONAL ENGINEER

DES: NB
DRN: LB
CHK: MCJ
DATE: 12/2/91

BY	NO.	REVISION	DATE
	2	RECORD DRAWING	11/14/92
	1	REVISED FOR BIDDING	3/5/92

CIVIL

YARD PIPING PROFILES VI

LITTLE PATUXENT WASTEWATER TREATMENT PLANT
LITTLE PATUXENT WASTEWATER TREATMENT PLANT EXPANSION
ADDITION NO. 5
CAPITAL PROJECT S - 6153
CONTRACT NO. 20 - 3082
HOWARD COUNTY, MARYLAND

SCALE AS SHOWN
SHEET 31 OF 226
C–26

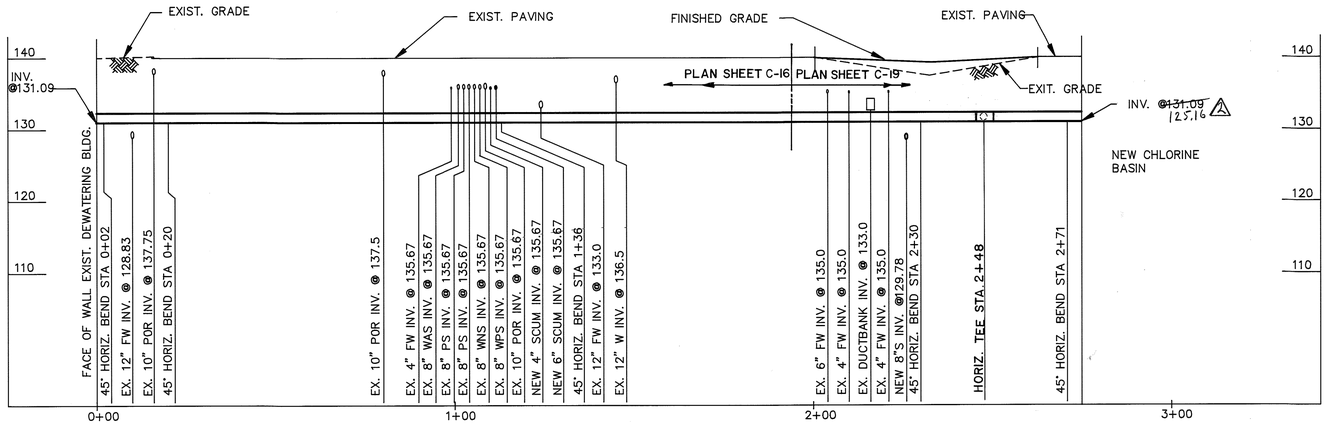

16" FW — U–U (C–16 | C–27)

SCALE: HORIZ. 1"= 20'– 0" VERT. 1"= 10'– 0" C–19

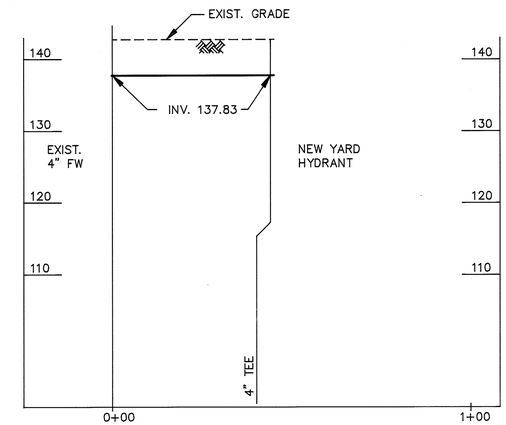

4" FW — V–V (C–16 | C–27)

SCALE: HORIZ. 1"= 20'– 0" VERT. 1"= 10'– 0"

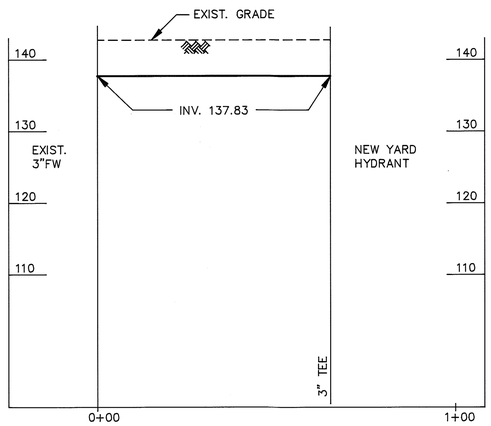

3" FW — W–W (C–16 | C–27)

SCALE: HORIZ. 1"= 20'– 0" VERT. 1"= 10'– 0"

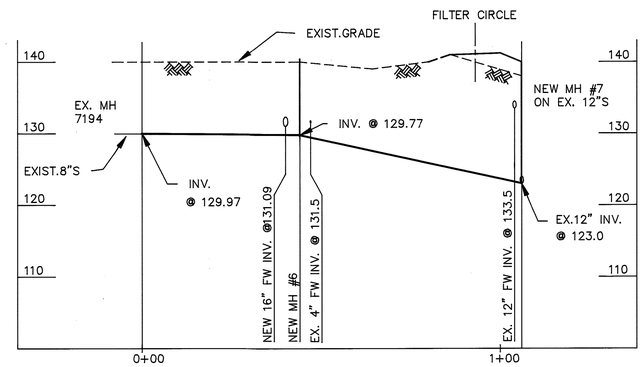

8" S (NEAR CCB) — X–X (C–19 | C–27)

SCALE: HORIZ. 1"= 20'– 0" VERT. 1"= 10'– 0"

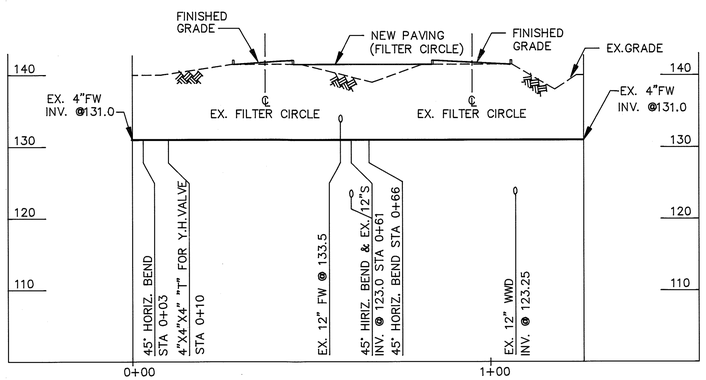

4" FW (NEAR CCB) — Y–Y (C–19 | C–27)

SCALE: HORIZ. 1"= 20'– 0" VERT. 1"= 10'– 0"

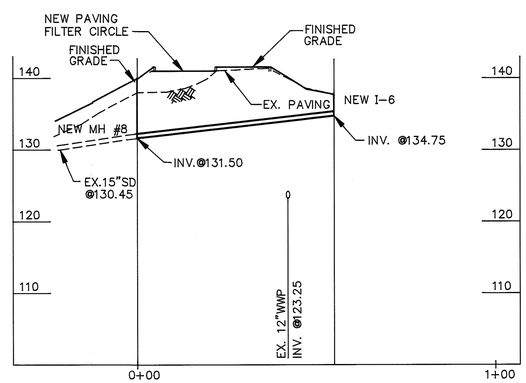

15" D — A–4 (C–19 | C–27)

SCALE: HORIZ. 1"= 20'– 0" VERT. 1"= 10'– 0"

1"=10'–0" (10 0 10 20)

1"=20'–0" (20 0 20 40)

SCALE IN FEET

FILE:D:/LTPAT/PROF8

DEPARTMENT OF PUBLIC WORKS
HOWARD COUNTY, MARYLAND

DIRECTOR OF PUBLIC WORKS — DATE 12/9/91
CHIEF, BUREAU OF ENGINEERING — DATE 12-9-91
CHIEF, BUREAU OF ENVIRONMENTAL SERVICES — DATE 12/5/91
CHIEF, UTILITY DESIGN DIVISION — DATE 12-9-91

Metcalf & Eddy
CCJM ENVIRONMENTAL ENGINEERS & SCIENTISTS
Silver Spring, Maryland

STATE OF MARYLAND — DONALD RICHARD JUKNAVIC No. 11189 — REGISTERED PROFESSIONAL ENGINEER

DES: NB
DRN: LB
CHK: MCJ
DATE: 12/2/91

BY	NO.	REVISION	DATE
	2	RECORD DRAWING	11/14/95
	1	REVISED FOR BIDDING	3/5/92

CIVIL

YARD PIPING PROFILES VII

LITTLE PATUXENT WASTEWATER TREATMENT PLANT
LITTLE PATUXENT WASTEWATER TREATMENT PLANT EXPANSION
ADDITION NO. 5
CAPITAL PROJECT S-6153
CONTRACT NO. 20-3082
HOWARD COUNTY, MARYLAND

SCALE AS SHOWN

SHEET 32 OF 226

C–27

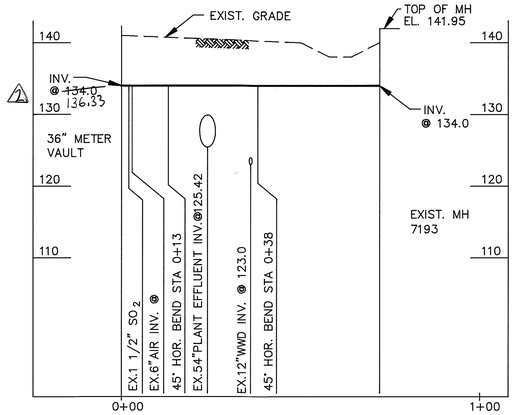

4" SUMP DISCHARGE A–5 / C–19 | C–28

SCALE: HORIZ. 1"= 20'– 0"
VERT. 1"= 10'– 0"

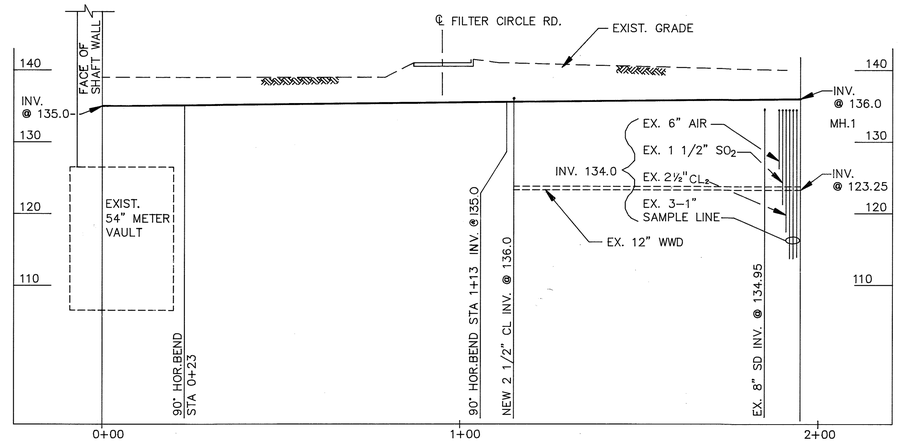

4" SUMP DISCHARGE A–6 / C–19 | C–28

SCALE: HORIZ. 1"= 20'– 0"
VERT. 1"= 10'– 0"

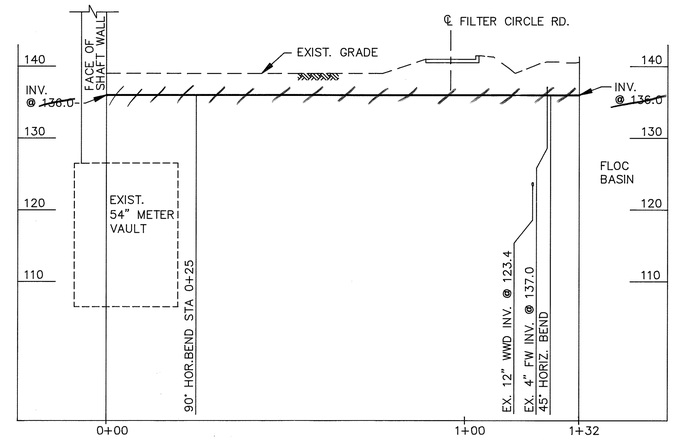

~~2 1/2" CL~~ A–7 / C–19 | C–28

SCALE: HORIZ. 1"= 20'– 0"
VERT. 1"= 10'– 0"

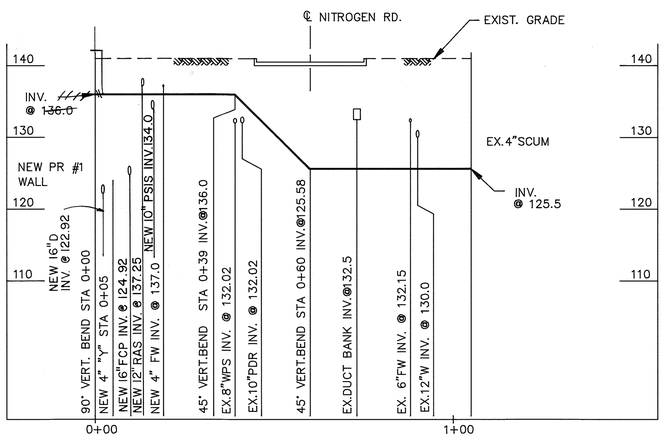

4"SC A–8 / C–15 | C–28

SCALE: HORIZ. 1"= 20'– 0"
VERT. 1"= 10'– 0"

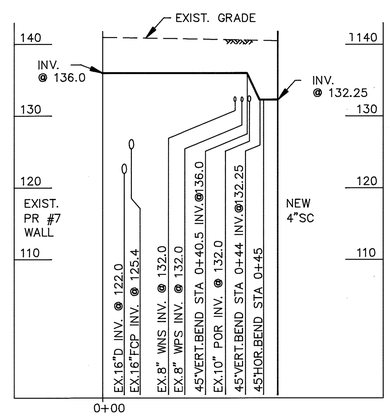

4"SC A–9 / C–15 | C–28

SCALE: HORIZ. 1"= 20'– 0"
VERT. 1"= 10'– 0"

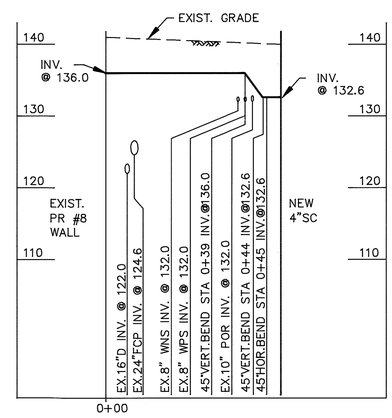

4"SC A–10 / C–15 | C–28

SCALE: HORIZ. 1"= 20'– 0"
VERT. 1"= 10'– 0"

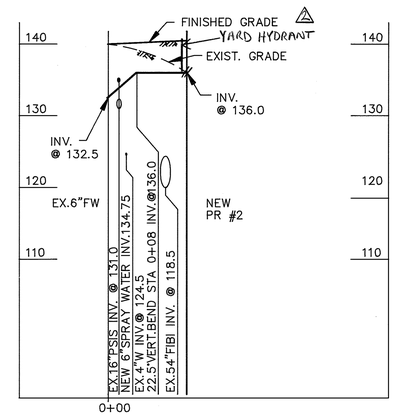

4"FW B–1 / C–15 | C–28

SCALE: HORIZ. 1"= 20'– 0"
VERT. 1"= 10'– 0"

1"=10'–0"
10 0 10 20

1"=20'–0"
20 0 20 40

SCALE IN FEET

FILE: C:/PROJ/LPAT/PROF9

DEPARTMENT OF PUBLIC WORKS
HOWARD COUNTY, MARYLAND

DIRECTOR OF PUBLIC WORKS — DATE 12/9/91
CHIEF, BUREAU OF ENGINEERING — DATE 12-9-91
CHIEF, BUREAU OF ENVIRONMENTAL SERVICES — DATE 12/9/91
CHIEF, UTILITY DESIGN DIVISION — DATE 12-9-91

M&E Metcalf & Eddy
CCJM ENVIRONMENTAL ENGINEERS & SCIENTISTS
Silver Spring, Maryland

STATE OF MARYLAND — DONALD RICHARD JARVIS No. 12970 — REGISTERED PROFESSIONAL ENGINEER

DES: NB
DRN: LB
CHK: MCJ
DATE: 12/2/91

BY	NO.	REVISION	DATE
	2	RECORD DRAWING	11/14/95
	1	REVISED FOR BIDDING	3/5/92

CIVIL

YARD PIPING PROFILES VIII

LITTLE PATUXENT WASTEWATER TREATMENT PLANT
LITTLE PATUXENT WASTEWATER TREATMENT PLANT EXPANSION
ADDITION NO. 5
CAPITAL PROJECT S-6153
CONTRACT NO. 20-3082
HOWARD COUNTY, MARYLAND

SCALE AS SHOWN

SHEET 33 OF 226

C–28

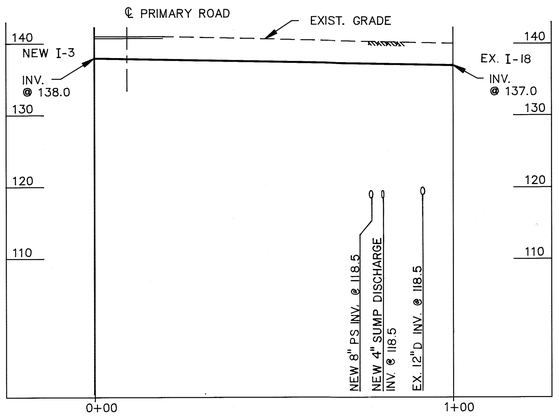

8" SD — B-2 / C-14 | C-29

SCALE: HORIZ. 1"= 20'- 0"
VERT. 1"= 10'- 0"

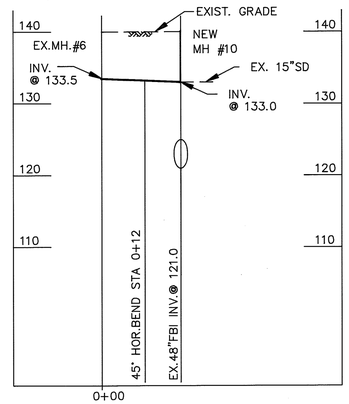

15" SD — B-3 / C-13 | C-29

SCALE: HORIZ. 1"= 20'- 0"
VERT. 1"= 10'- 0"

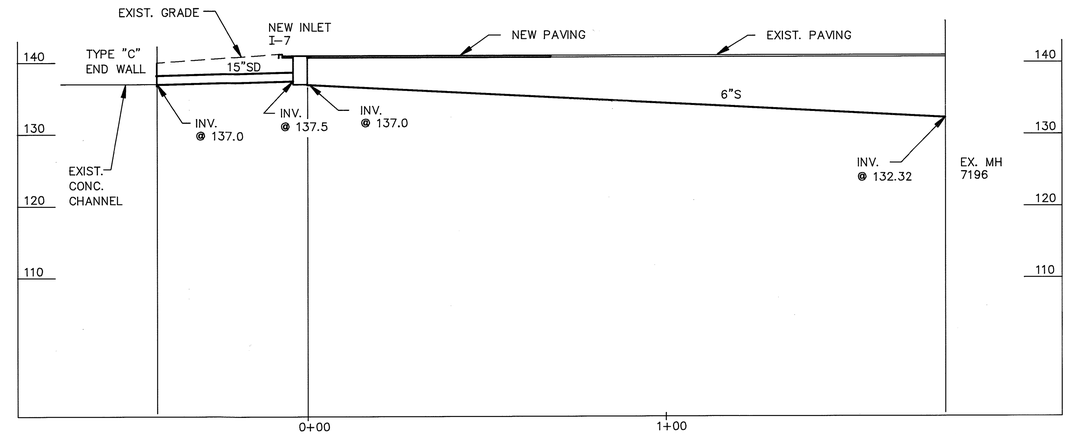

6"S & 15"SD — B-4 / C-13 | C-29

SCALE: HORIZ. 1"= 20'- 0"
VERT. 1"= 10'- 0"

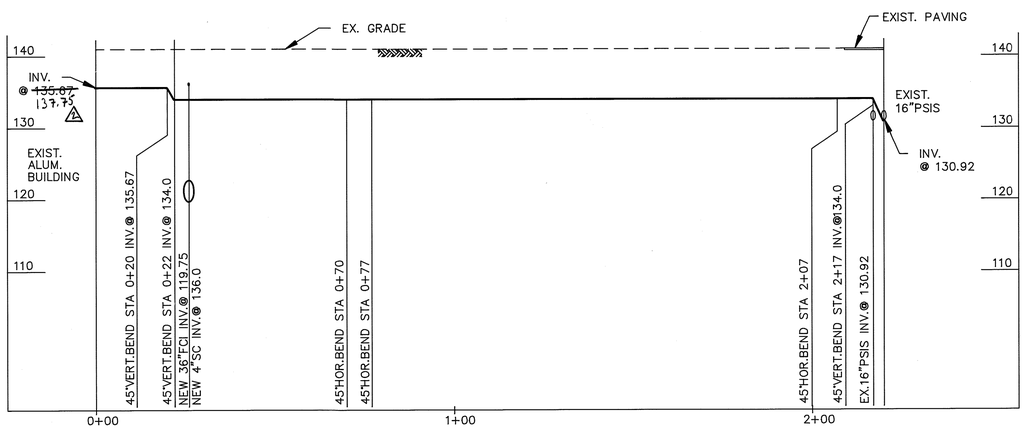

△2 12" ~~10"~~PSIS — B-5 / C-15 | C-29

SCALE: HORIZ. 1"= 20'- 0"
VERT. 1"= 10'- 0"

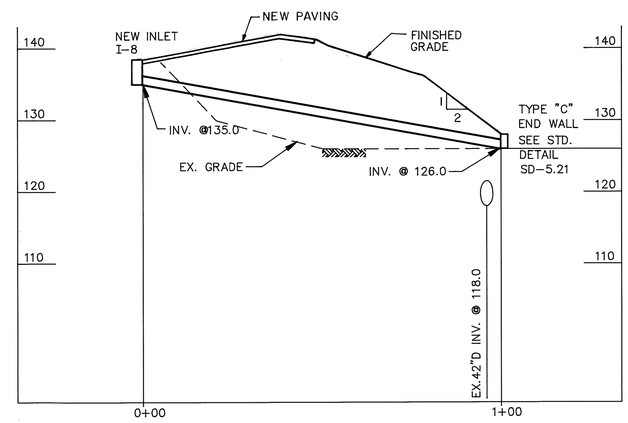

15"SD — B-6 / C-13 | C-29

SCALE: HORIZ. 1"= 20'- 0"
VERT. 1"= 10'- 0"

1"=10'-0"
10 0 10 20

1"=20'-0"
20 0 20 40

SCALE IN FEET

FILE: C:\PROJ\LTPAT\PROF10

DEPARTMENT OF PUBLIC WORKS
HOWARD COUNTY, MARYLAND

DIRECTOR OF PUBLIC WORKS — DATE 12/9/91
CHIEF, BUREAU OF ENGINEERING — DATE 12-9-91
CHIEF, BUREAU OF ENVIRONMENTAL SERVICES — DATE 12/9/91
CHIEF, UTILITY DESIGN DIVISION — DATE 12-9-91

Metcalf & Eddy
CCJM ENVIRONMENTAL ENGINEERS & SCIENTISTS
Silver Spring, Maryland

STATE OF MARYLAND — DONALD RICHARD AUKAMP No. 17907 — REGISTERED PROFESSIONAL ENGINEER

DES: NB
DRN: LB
CHK: MCJ
DATE: 12/2/91

BY	NO.	REVISION	DATE
	2	RECORD DRAWING	11/14/95
	1	REVISED FOR BIDDING	3/5/92

CIVIL

YARD PIPING PROFILES IX

LITTLE PATUXENT WASTEWATER TREATMENT PLANT
LITTLE PATUXENT WASTEWATER TREATMENT PLANT EXPANSION
ADDITION NO. 5
CAPITAL PROJECT S-6153
CONTRACT NO. 20-3082
HOWARD COUNTY, MARYLAND

SCALE AS SHOWN

SHEET 34 OF 226

C-29

STRUCTURE SCHEDULE

NO.	LOCATION	TOP ELEV.	INV. IN	INV. OUT	COMMENT	CO-ORDINATES	
I-1	AT PAVED AREA, NEW SEPTAGE FACILITY	141.50	N.A.	138.25	SEE DETAIL " I " SHEET C-31	48.0 N	73.0 W
I-2	IN GRASS AREA BETWEEN NEW FC #2 & EXIST. FC #3	137.50	N.A.	134.50	TYPE S INLET SEE STD. DETAIL SD-4.22	135.55 N	195.60 E
I-3	PAVED AREA, NEW SOUTH PUMP STATION	140.86 ~~141.20~~ 2	N.A.	138.00	TYPE S INLET SEE STD. DETAIL SD-4.22	365.55 N	16.5 E
I-4	IN GRASS AREA, WEST SIDE NEW PR #1	137.80	N.A.	132.50 ~~134.30~~ 2	TYPE S INLET SEE STD. DETAIL SD-4.22	76.32 S	325.0 E
I-5	PAVED AREA, NEW PARKING ADDITION SOUTH OF EXIST. MAINTENANCE BLDG.	138.00 ~~138.40~~ 2	135.90	135.55	TYPE WR INLET SEE STD. DETAIL SD-4.37	366.0 S	16.0 E
I-6	IN GRASS AREA NORTH OF NEW CHLORINE CONTACT BASIN ADDITION	137.75	N.A.	134.75	TYPE D INLET W/2'-6"x6" THROAT ON NORTH & SOUTH SEE STD. DETAIL SD-4.11	100.0 N	128.5 E
I-7	PAVED AREA, NORTH OF MAINTENANCE BLDG.	~~141.0~~ 140.1 2	– –	137.0 6"S 137.5 15"SD	TYPE S INLET SEE STD.DET.SD-4.22	0.0 N 7+79 ℄ "F"	22.0 W FROM ℄ "F"
I-8	IN PAVED AREA, EAST OF EXIST. MAIN SUB-STATION	~~138.50~~ 139.00 2	–	135.0	TYPE S INLET SEE STD. DETAIL SD-4.22	24.0 W	137.50 S
EX. I-11	PAVED AREA, PHOSPHOROUS ROAD, SOUTH OF NEW NORTH PUMP STATION	139.65	–	EXISTING	REMOVE CURB PORTION AND MODIFY EX.INLET TO MATCH NEW GRADE SEE DET. A C-5,C-9 C-30	4.0 N	195.0 E
EX. I-3	PAVED AREA, SOUTH OF EXIST. MAINTANANCE BLDG.	137.40	–	135.90 4"S 135.90	REMOVE CURB PORTION AND MODIFY EX.INLET TO MATCH NEW GRADE SEE DET. A C-5,C-9 C-30	116.5 N	360.0 E
NEW MH-1	18" DRAIN BETWEEN PC #1 & NEW NORTH PUMP STATION	140.50	120.79	120.79	4'ø, SEE STD. DETAILS G-5.14, G-5.04	0+12 2 ~~100.0~~ N	154.5 E
NEW MH-2	18" DRAIN AT CONNECTION OF 30" CCBI-NW CORNER OF FC #3	140.50	120.25(18"D) 119.80(CCBI)	119.80	4'ø, SEE STD. DETAIL G-5.14	157.0 S	140.0 E
NEW MH-3	36" PRI NEAR SE CORNER OF GRIT BLDG.	140.00	118.00	118.00	5'ø, SEE STD. DETAIL G-5.13	238.0 S	120.0 E
NEW MH-4	NEAR SEPTAGE FACILITY	136.00	124.40 123.92	123.80	4'ø, SEE STD. DETAIL G-5.12	0+33 2 ~~30.0~~ N	1+55 2 ~~156.5~~ W
NEW MH-5	NEAR SEPTAGE FACILITY	136.00	124.40 123.65	123.53	4'ø, SEE STD. DETAIL G-5.12	0+17 2 ~~28.5~~ N	1+55 2 ~~156.5~~ W
NEW MH-6	SW CORNER OF CHLORINE CONTACT BASIN	140.00	129.78	129.78	4'ø, SEE STD. DETAIL G-5.12	31.58 N	76.0 E
NEW MH-7	NW CORNER OF CHLORINE CONTACT BASIN	140.00	125.00 (NEW 8"S) 123.25 EX. 12"S)	123.25	4'ø, SEE STD. DETAIL G-5.12	97.58 2 ~~95.58~~ N	65.7 2 ~~72.0~~ E
NEW MH-8	NW CORNER OF CHLORINE CONTACT BASIN	140.00	131.65	131.40 EX.15"D	4'ø, SEE STD. DETAIL G-5.12	111 2 ~~113~~.58 N	71.7 2 ~~74.0~~ E
NEW MH-9	BETWEEN FC#2 & FC#3 ON EXIST. SD	140.00	134.00	134.00	4'ø, SEE STD. DETAIL G-5.12	134.0 S	141.0 E
NEW MH-10	NEAR FC#2 EFF. BOX ON EXIST. 15"SD	139.65 2 ~~140.00~~	133.0	133.0	4'ø, SEE STD. DETAIL G-5.12	62.0 S	148.0 E
2 NEW MH-11	18" DRAIN, EAST OF NEW NORTH PUMP STATION	140.0	121.15	121.10	4'ø SEE STD. DET. G5.14/5.04	304.3 E	16.0 N

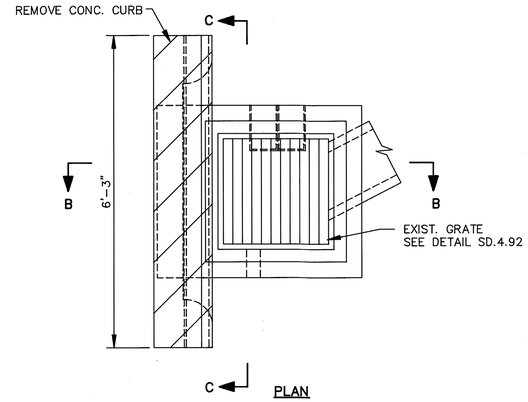

PLAN
NOT TO SCALE

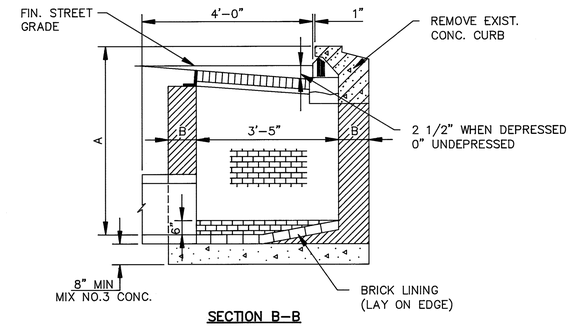

SECTION B-B
NOT TO SCALE

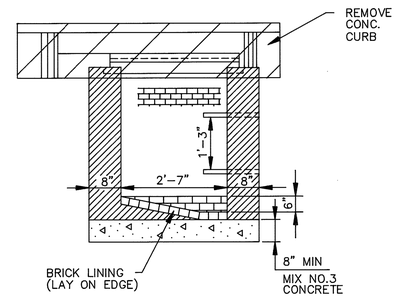

SECTION C-C
NOT TO SCALE

DETAILS OF EXISTING "S" COMB

NOTES:

1. FOR OTHER ADDITIONAL DETAILS SEE STD. DETAIL SD.4.32
2. CONTRACTOR CAN ELECT TO MODIFY EXISTING INLET BY REPLACING EXISTING FRAME AND GRATE WITH NEW LARGER FRAME AND GRATE IN LIEU OF NEW CONCRETE FILLER PIECE AT NO ADDITIONAL COST TO THE COUNTY.

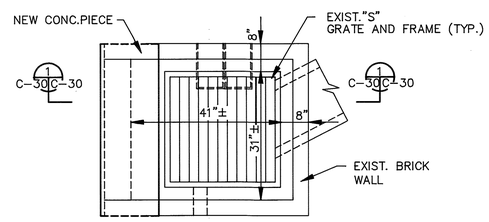

PLAN MODIFIED INLET
NOT TO SCALE

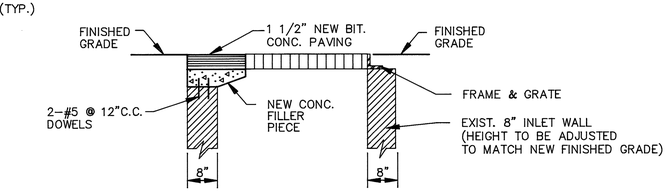

SECTION C-30 1 C-30
NOT TO SCALE

INLET MODIFICATION DETAIL A C-5,C-9 C-30

NOTE:

ALL NEW MANHOLES SHALL BE PROVIDED WITH WATER TIGHT FRAME AND COVER AS PER STD. DETAIL G-5.52.

DEPARTMENT OF PUBLIC WORKS
HOWARD COUNTY, MARYLAND

DIRECTOR OF PUBLIC WORKS — DATE 12/9/91
CHIEF, BUREAU OF ENGINEERING — DATE 12-9-91
CHIEF, BUREAU OF ENVIRONMENTAL SERVICES — DATE 12/9/91
CHIEF, UTILITY DESIGN DIVISION — DATE 12-9-91

Metcalf & Eddy
CCJM ENVIRONMENTAL ENGINEERS & SCIENTISTS
Silver Spring, Maryland

STATE OF MARYLAND — DONALD RICHARD AUBURN No. 11168 — REGISTERED PROFESSIONAL ENGINEER

DES: MCJ
DRN: LB
CHK: MCJ
DATE: 12/2/91

BY	NO.	REVISION	DATE
	2	RECORD DRAWING	11/14/95
	1	REVISED FOR BIDDING	3/5/92

CIVIL

TYPICAL DETAILS

LITTLE PATUXENT WASTEWATER TREATMENT PLANT
LITTLE PATUXENT WASTEWATER TREATMENT PLANT EXPANSION
ADDITION NO. 5
CAPITAL PROJECT S-6153
CONTRACT NO. 20-3082
HOWARD COUNTY, MARYLAND

SCALE AS SHOWN
SHEET 35 OF 226
C-30

FILE: D:\LTPAT\LPAT-E

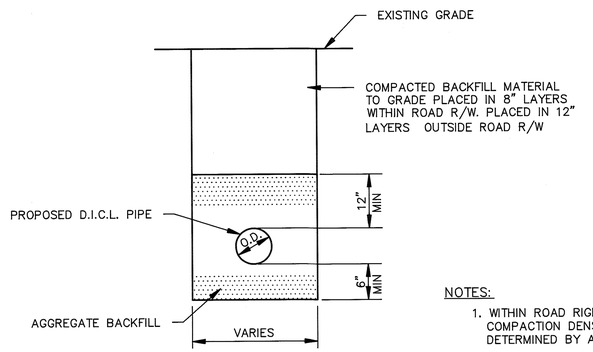

NOTES:

1. WITHIN ROAD RIGHT-OF-WAY, TRENCH COMPACTION DENSITY SHALL BE 95% AS DETERMINED BY A.A.S.H.T.O T-180-A.
2. FOR PAY WIDTHS SEE DETAIL G 2.02-A.

TYPICAL TRENCH SECTION

DETAIL A C-31

NOT TO SCALE

REF: DETAILS G 2.01

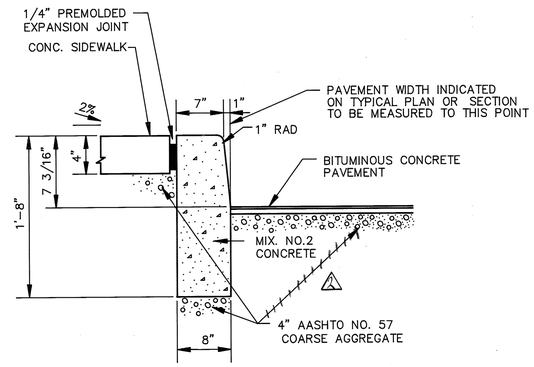

STANDARD STRAIGHT CURB DETAIL D C-5 C-31

NOT TO SCALE

REF: DETAILS R-3.03, R-3.05

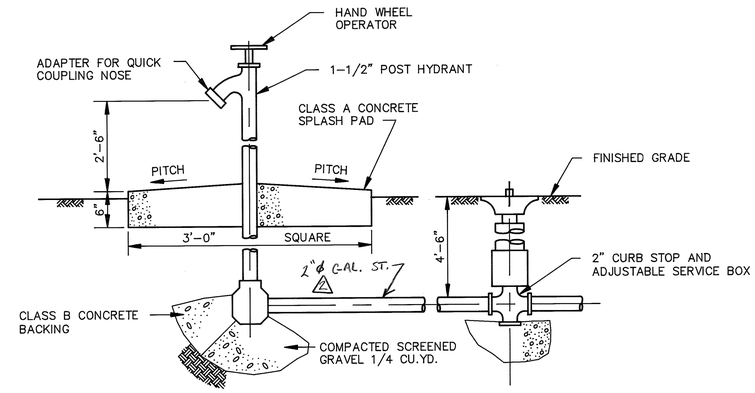

~~EFFLUENT FLUSHING WATER~~ YARD HYDRANT G C-13 C-31

NOT TO SCALE

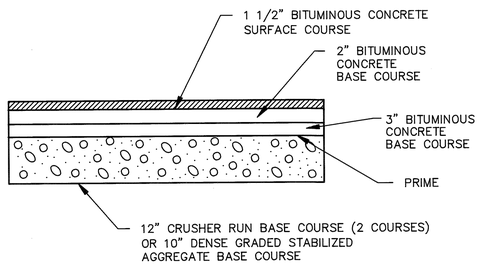

BITUMINOUS CONCRETE PAVEMENT

DETAIL B C-5 C-31

NOT TO SCALE

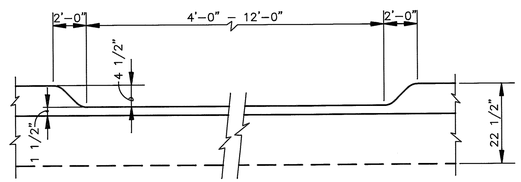

CURB SECTION

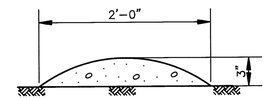

SPEED BUMP DETAIL H C-2 C-31

NOT TO SCALE

STANDARD CURB DEPRESSION & SIDEWALK AT DRIVE

DETAIL E C-31

NOT TO SCALE

REF: DETAIL R-2.06

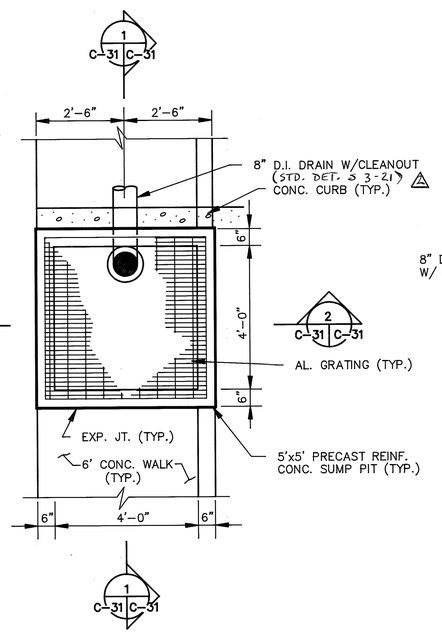

PLAN

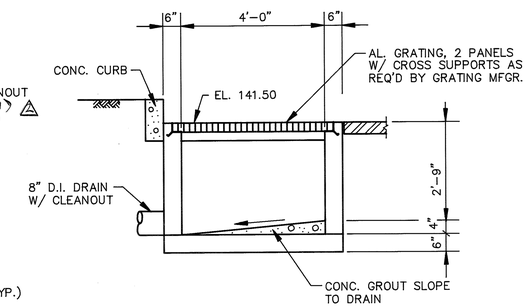

SECTION 1 C-31 C-31

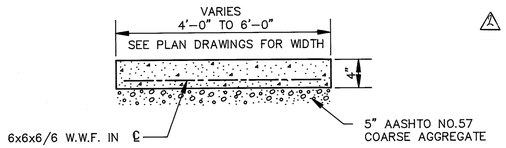

CONCRETE SIDEWALK SECTION

DETAIL C C-5 C-31

NOT TO SCALE

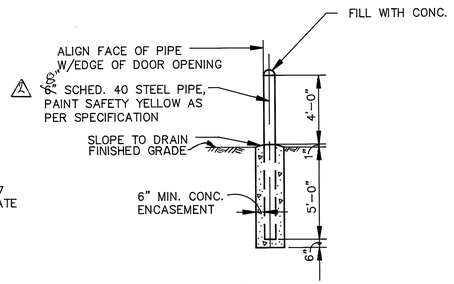

GUARD POST DETAIL F C-9 C-31

NOT TO SCALE

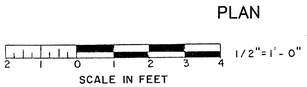

1/2"=1'-0"

SPILL SUMP DETAIL I C-5 C-31

SCALE: 1/2" = 1'- 0"

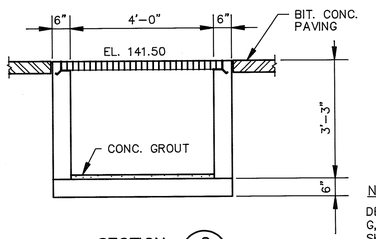

SECTION 2 C-31 C-31

NOTE:

DETAIL NUMBERS REFERENCED (SERIES G, R, SD, S, W) ON THIS AND OTHER SHEETS ARE DETAIL NUMBERS OF HOWARD COUNTY DESIGN MANUAL VOL. 4. DATED APRIL 1989.

FILE: C:\LTPAT2\LPAT-C

DEPARTMENT OF PUBLIC WORKS
HOWARD COUNTY, MARYLAND

DIRECTOR OF PUBLIC WORKS — DATE 12/9/91
CHIEF, BUREAU OF ENGINEERING — DATE 12-9-91
CHIEF, BUREAU OF ENVIRONMENTAL SERVICES — DATE 12/9/91
CHIEF, UTILITY DESIGN DIVISION — DATE 12-9-91

M&E Metcalf & Eddy

CCJM ENVIRONMENTAL ENGINEERS & SCIENTISTS
Silver Spring, Maryland

STATE OF MARYLAND — DONALD RICHARD AUKAMP No. 11190 — REGISTERED PROFESSIONAL ENGINEER

DES: MCJ
DRN: LB
CHK: MCJ
DATE: 12/2/91

BY	NO.	REVISION	DATE
	2	RECORD DRAWING	1/11/93
	1	REVISED FOR BIDDING	3/5/92

CIVIL

MISCELLANEOUS DETAILS

LITTLE PATUXENT WASTEWATER TREATMENT PLANT

LITTLE PATUXENT WASTEWATER TREATMENT PLANT EXPANSION
ADDITION NO. 5
CAPITAL PROJECT S-6153

CONTRACT NO. 20-3082

HOWARD COUNTY, MARYLAND

SCALE AS SHOWN

SHEET 36 OF 226

C-31

NOTES:

1. FOR SEWERS 15" AND SMALLER DIAMETER, DISCONNECT SEWER AS SHOWN, INSERT MECHANICAL PLUGS, PLACE CONCRETE, PARGING AND COAT WITH TWO COATS OF ASPHALT BASED COATING.
2. FOR SEWER 18" AND LARGER DIAMETER SAME AS 15" AND SMALLER EXCEPT MASONRY BULKHEAD MAY BE SUBSTITUTED FOR MECHANICAL PLUG.
3. RESHAPE AND FILL EXISTING CHANNEL AS NECESSARY TO PROVIDE SMOOTH CONTOUR BETWEEN INCOMING AND OUTGOING PIPES.

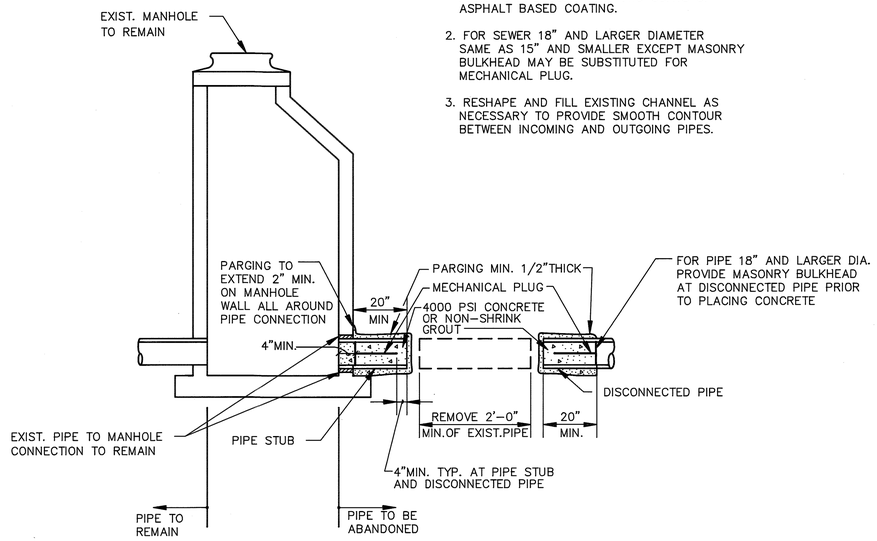

ABANDONMENT OF PIPE AT MANHOLE-STORM & SANITARY SEWER

DETAIL A C-13 C-32

NOT TO SCALE

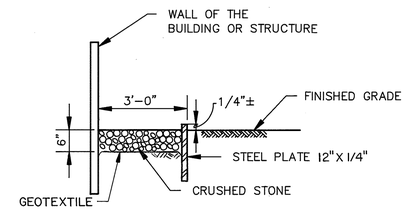

MAINTENANCE STRIP

DETAIL B C-2 C-32 C-13

NOT TO SCALE

DEPARTMENT OF PUBLIC WORKS
HOWARD COUNTY, MARYLAND

DIRECTOR OF PUBLIC WORKS — DATE 12/9/91
CHIEF, BUREAU OF ENGINEERING — DATE 12.9.91
CHIEF, BUREAU OF ENVIRONMENTAL SERVICES — DATE 12/9/91
CHIEF, UTILITY DESIGN DIVISION — DATE 12-9-91

Metcalf & Eddy
CCJM ENVIRONMENTAL ENGINEERS & SCIENTISTS
Silver Spring, Maryland

STATE OF MARYLAND — DONALD RICHARD AUKAMP No. 11990 — REGISTERED PROFESSIONAL ENGINEER

DES: MCJ
DRN: LB
CHK: MCJ
DATE: 12/2/91

BY	NO.	REVISION	DATE
	2	RECORD DRAWING	11/19/95
	1	REVISED FOR BIDDING	3/5/92

CIVIL

DETAILS

LITTLE PATUXENT WASTEWATER TREATMENT PLANT
LITTLE PATUXENT WASTEWATER TREATMENT PLANT EXPANSION
ADDITION NO. 5
CAPITAL PROJECT S-6153
CONTRACT NO. 20-3082
HOWARD COUNTY, MARYLAND

SCALE AS SHOWN
SHEET 37 OF 226
C-32

FILE: C:\PROJ\LTPAT\DETAIL

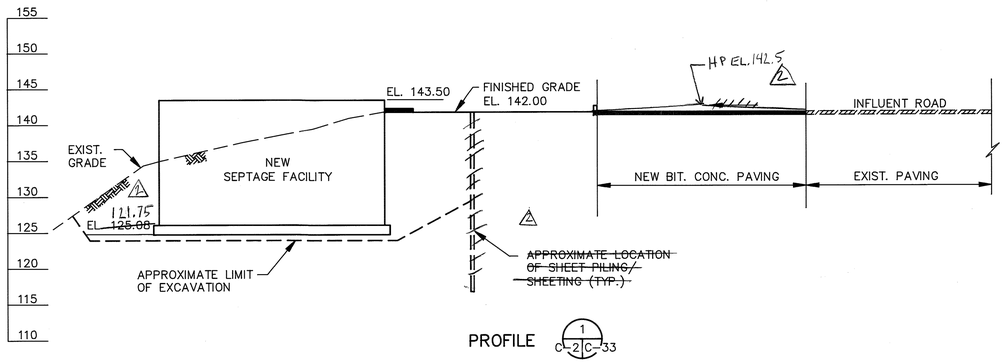

PROFILE 1 C-2 C-33

SCALE: HOR. 1"=10'-0"
VERT. 1"=10'-0"

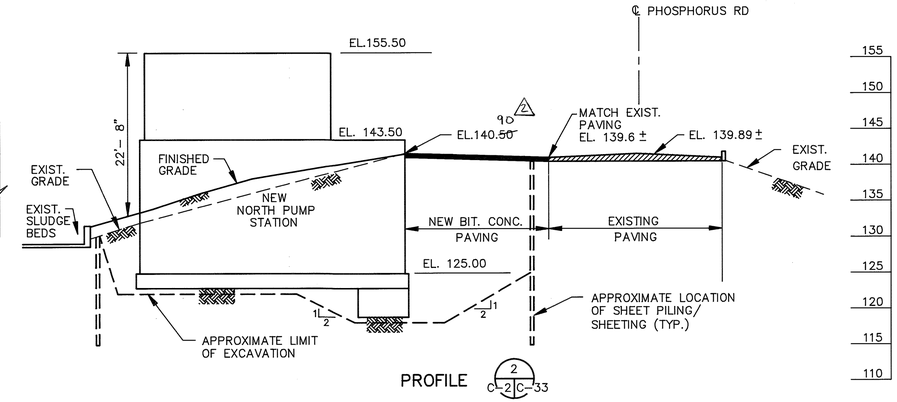

PROFILE 2 C-2 C-33

SCALE: HOR. 1"=10'-0"
VERT. 1"=10'-0"

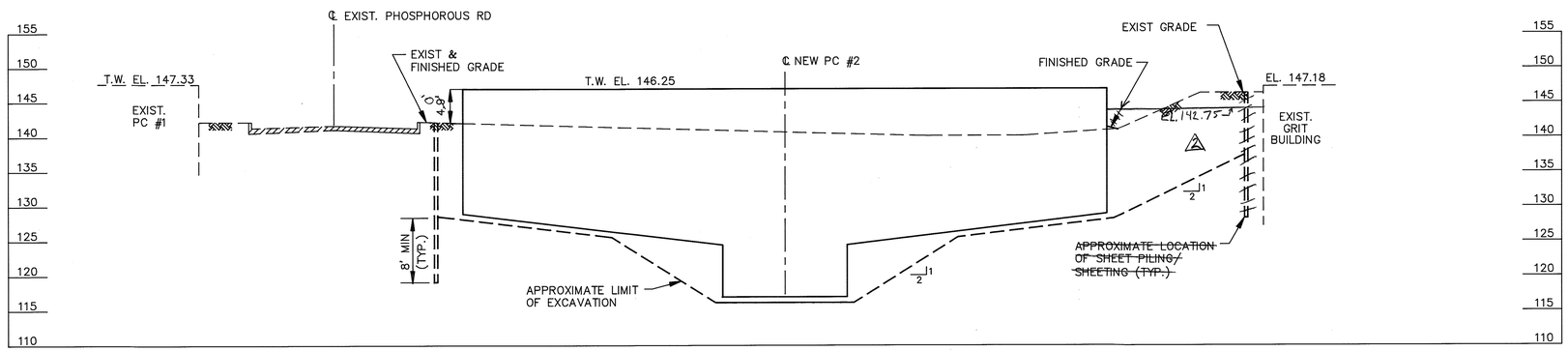

PROFILE 3 C-2 C-33

SCALE: HOR. 1"=10'-0"
VERT. 1"=10'-0"

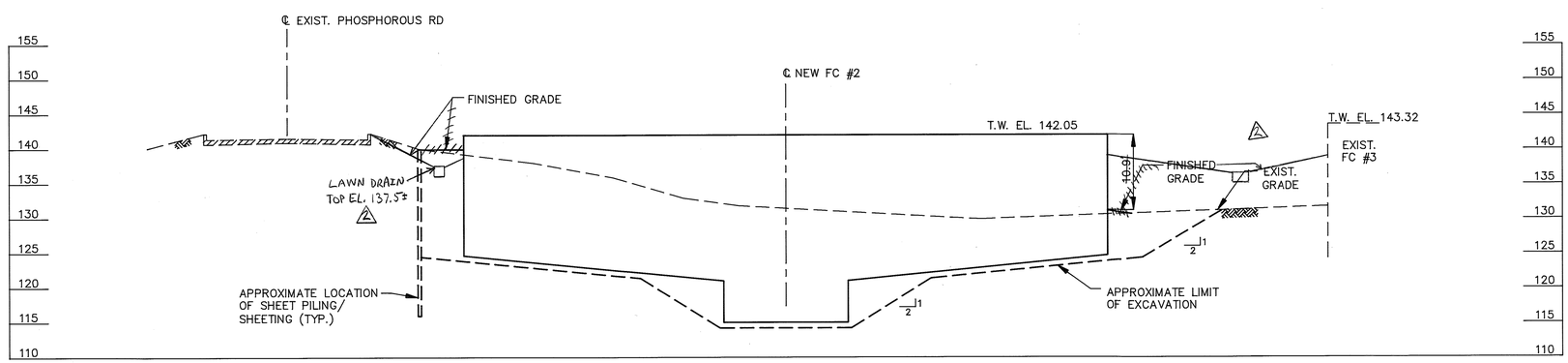

PROFILE 4 C-2 C-33

SCALE: HOR. 1"=10'-0"
VERT. 1"=10'-0"

1"=10'-0"
10 0 10 20
SCALE IN FEET

DEPARTMENT OF PUBLIC WORKS
HOWARD COUNTY, MARYLAND

DIRECTOR OF PUBLIC WORKS — DATE 12/9/91	CHIEF, BUREAU OF ENGINEERING — DATE 12-9-91
CHIEF, BUREAU OF ENVIRONMENTAL SERVICES — DATE 12/9/91	CHIEF, UTILITY DESIGN DIVISION — DATE 12-9-91

M&E Metcalf & Eddy
CCJM ENVIRONMENTAL ENGINEERS & SCIENTISTS
Silver Spring, Maryland

STATE OF MARYLAND — DONALD RICHARD AUKAMP No. 11780 — REGISTERED PROFESSIONAL ENGINEER

DES: MCJ
DRN: LB
CHK: MCJ
DATE: 12/2/91

BY	NO.	REVISION	DATE
	2	RECORD DRAWING	11/14/93
	1	REVISED FOR BIDDING	3/5/92

CIVIL

EXCAVATION LIMIT SECTIONS – I

LITTLE PATUXENT WASTEWATER TREATMENT PLANT
LITTLE PATUXENT WASTEWATER TREATMENT PLANT EXPANSION
ADDITION NO. 5
CAPITAL PROJECT S-6153
CONTRACT NO. 20-3082
HOWARD COUNTY, MARYLAND

SCALE AS SHOWN
SHEET 38 OF 226
C-33

FILE: C:\PROJ\LTPAT\LPAT6

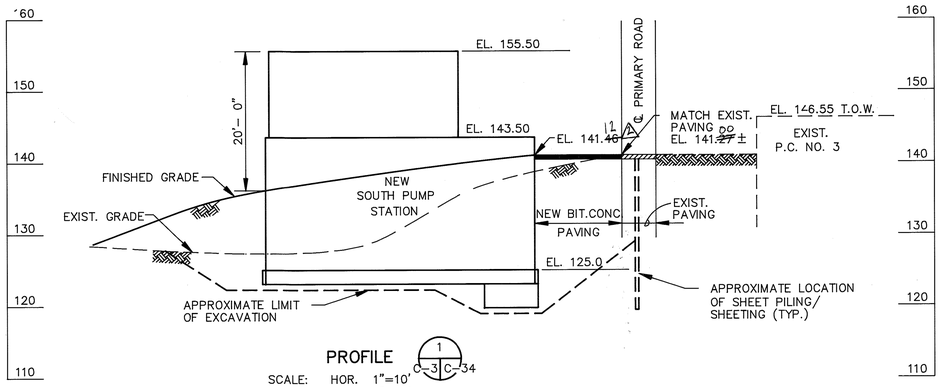

PROFILE 1 C-3 | C-34

SCALE: HOR. 1"=10'
VERT. 1"=10'

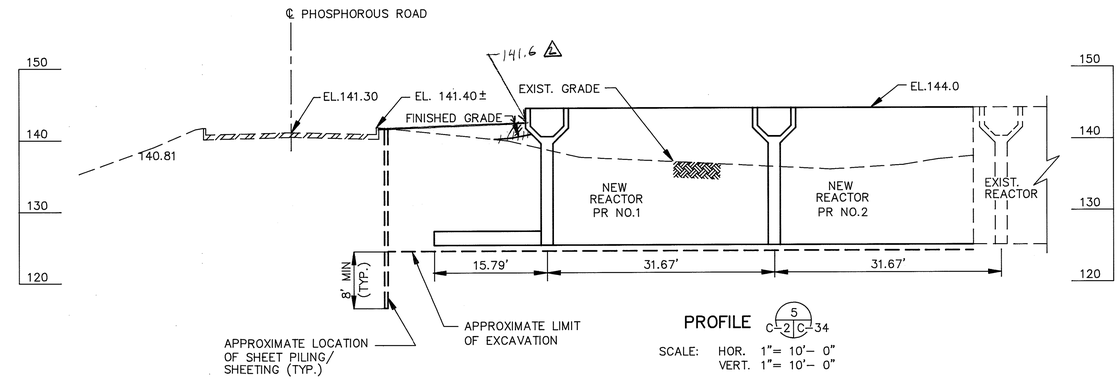

PROFILE 5 C-2 | C-34

SCALE: HOR. 1"= 10'- 0"
VERT. 1"= 10'- 0"

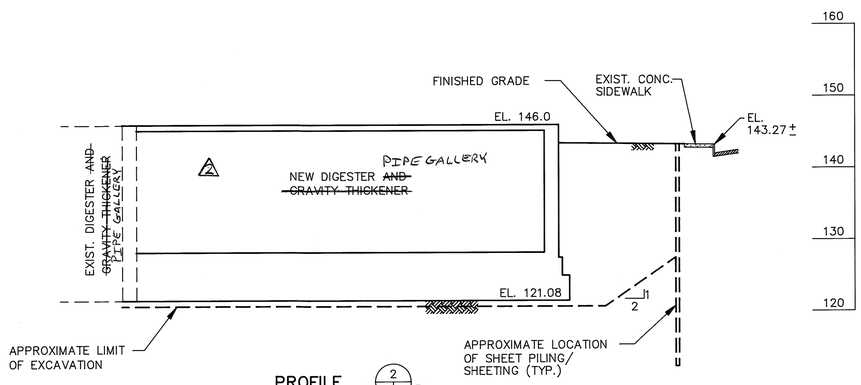

PROFILE 2 C-3 | C-34

SCALE: HOR. 1"= 10'- 0"
VERT. 1"= 10'- 0"

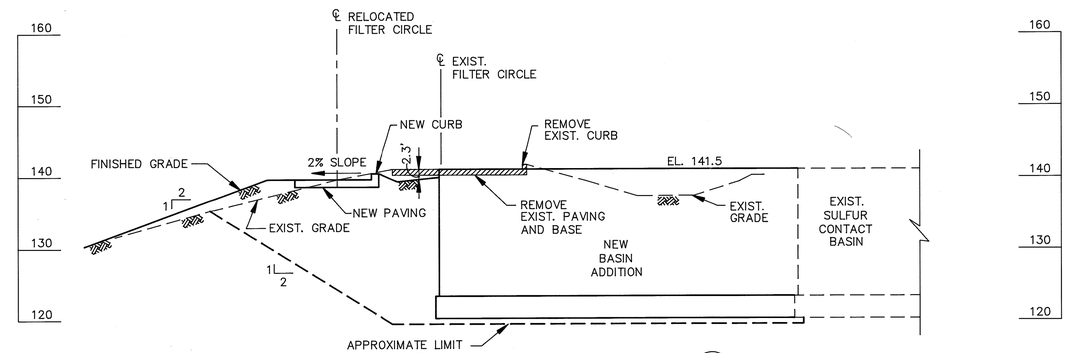

PROFILE 3 C-3 | C-34

SCALE: HOR. 1"= 10'- 0"
VERT. 1"= 10'- 0"

10 0 10 20 1"=10'-0"
SCALE IN FEET

FILE: C:\PROJ\LTPAT\LPAT8

DEPARTMENT OF PUBLIC WORKS
HOWARD COUNTY, MARYLAND

DIRECTOR OF PUBLIC WORKS — DATE 12/9/91
CHIEF, BUREAU OF ENGINEERING — DATE 12-9-91
CHIEF, BUREAU OF ENVIRONMENTAL SERVICES — DATE 12/5/91
CHIEF, UTILITY DESIGN DIVISION — DATE 12-9-91

Metcalf & Eddy
CCJM ENVIRONMENTAL ENGINEERS & SCIENTISTS
Silver Spring, Maryland

STATE OF MARYLAND — DONALD RICHARD AUNAMP No.11160 — REGISTERED PROFESSIONAL ENGINEER

DES: MCJ
DRN: L B
CHK: MCJ
DATE: 12/2/91

BY	NO.	REVISION	DATE
	2	RECORD DRAWING	1/14/93
	1	REVISED FOR BIDDING	3/5/92

CIVIL

EXCAVATION LIMIT SECTIONS II

LITTLE PATUXENT WASTEWATER TREATMENT PLANT
LITTLE PATUXENT WASTEWATER TREATMENT PLANT EXPANSION ADDITION NO. 5
CAPITAL PROJECT S - 6153
CONTRACT NO. 20 - 3082
HOWARD COUNTY, MARYLAND

SCALE AS SHOWN

SHEET 39 OF 226

C-34

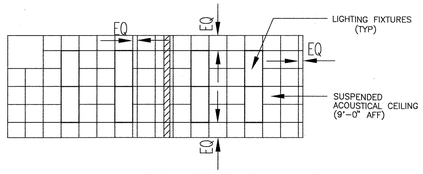

REFLECTED CEILING PLAN
MAINTENANCE SUPERINTENDENT'S OFFICE
SCALE 1/8"= 1'-0"

LEGEND

FACE BRICK
RIGID INSULATION
CONCRETE MASONRY UNITS (CMU)

CONCRETE MASONRY UNITS (CMU)

(9) DENOTES SHOP EQUIPMENT ITEM SEE EQUIPMENT SCHEDULE ON A-2 DWG.

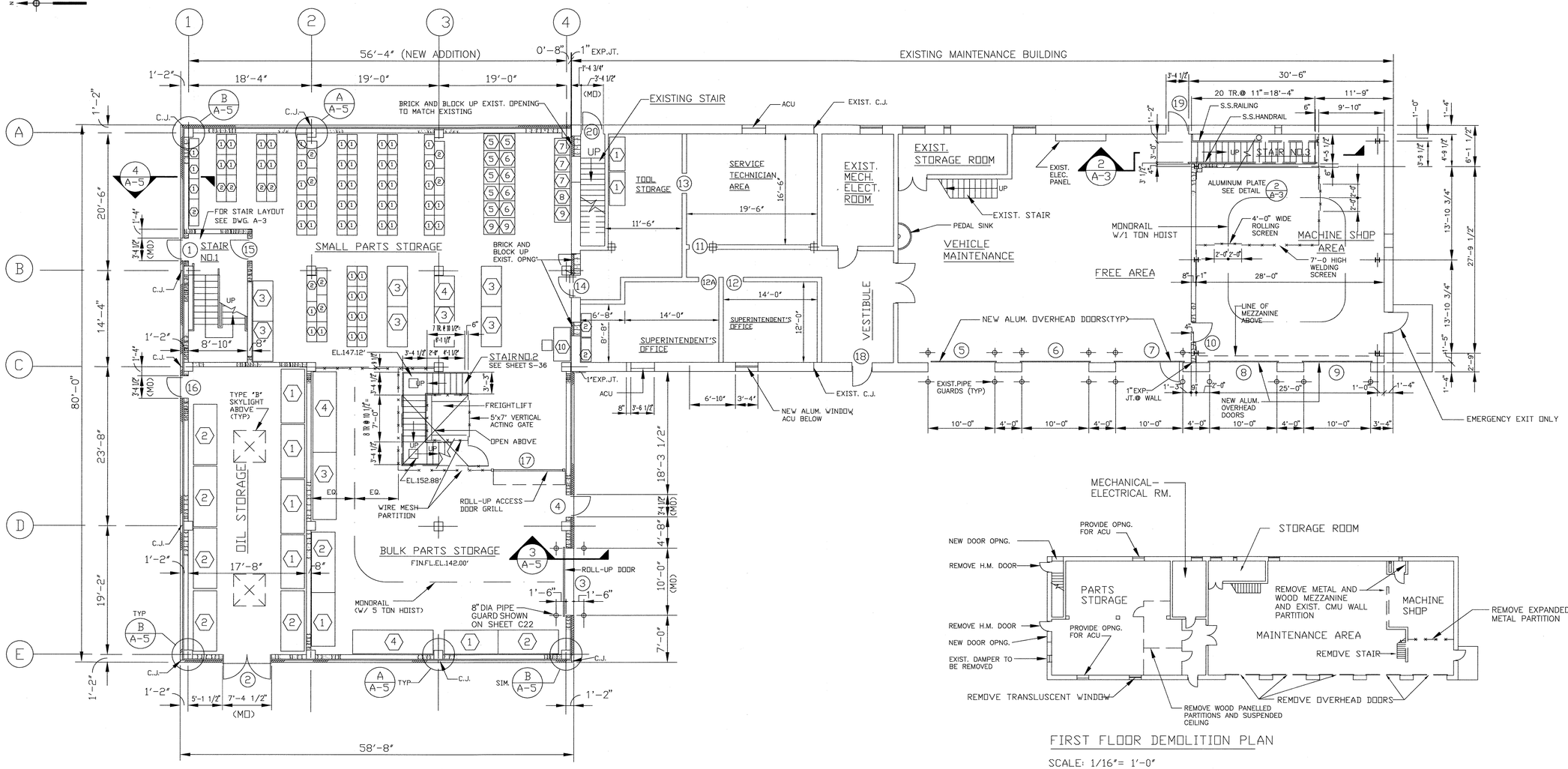

FIRST FLOOR PLAN
SCALE : 1/8"=1'-0"

FIRST FLOOR DEMOLITION PLAN
SCALE: 1/16"= 1'-0"

0 16 32 48
SCALE IN FEET
SCALE: 1/16"=1'-0"

0 4 8 12 16 20 24
SCALE IN FEET
SCALE: 1/8"= 1'-0"

0 4 8 12
SCALE IN FEET
SCALE: 3/8"= 1'-0"

DEPARTMENT OF PUBLIC WORKS
HOWARD COUNTY, MARYLAND

DIRECTOR OF PUBLIC WORKS — DATE 5/1/96
CHIEF, BUREAU OF ENGINEERING — DATE 5/7/96
CHIEF, BUREAU OF ENVIRONMENTAL SERVICES — DATE 5/7/96
CHIEF, UTILITY DESIGN DIVISION — DATE 5-7-96

M&E Metcalf & Eddy
REG. PROF. ENGR. — DATE 5-7-96

STATE OF MARYLAND — JONATHAN WINTHROP DOANE No. 15140 — REGISTERED PROFESSIONAL ENGINEER

DES:				
DRN:				
CHK:				
DATE:	M.J.C.	1	RECORD DRAWING	11/2/94
	BY	NO.	REVISION	DATE

ARCHITECTURAL
MAINTENANCE BUILDING
FIRST FLOOR PLAN
REFLECTED CEILING PLAN
DEMOLITION PLAN

LITTLE PATUXENT WASTEWATER TREATMENT PLANT
LITTLE PATUXENT WASTEWATER TREATMENT PLANT EXPANSION
ADDITION NO. 5
CAPITAL PROJECT S-6153

CONTRACT NO. 20-3082
HOWARD COUNTY, MARYLAND

SCALE AS SHOWN

40 SHEET 168 OF 226

A-1A

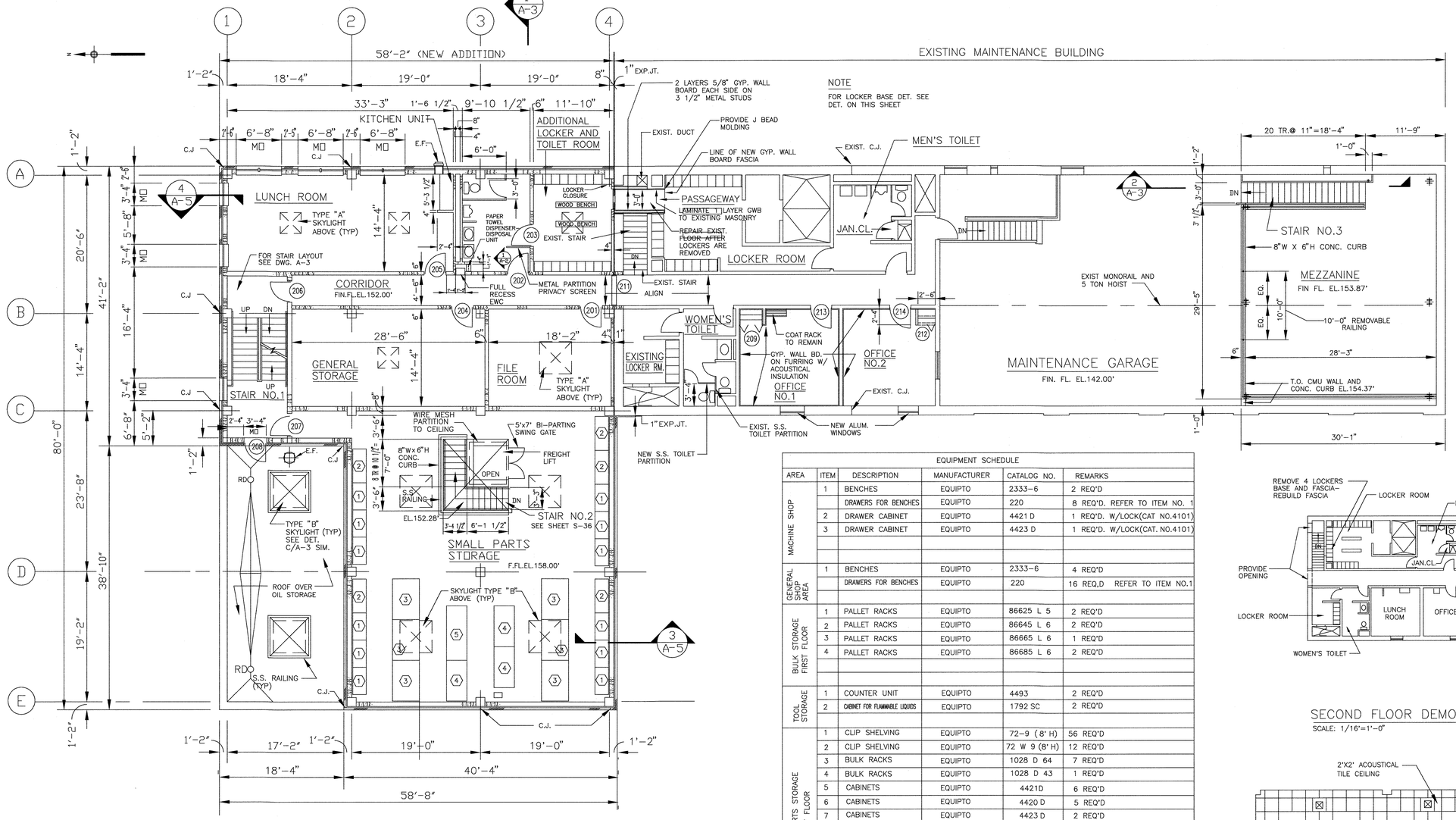

NOTE

FOR LOCKER BASE DET. SEE DET. ON THIS SHEET

SECOND FLOOR PLAN

SCOLE: 1/8"=1'-0"

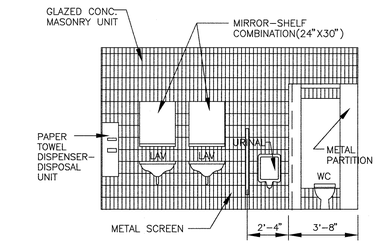

ELEVATION 1/A-2

SCALE: 1/4"=1'-0"

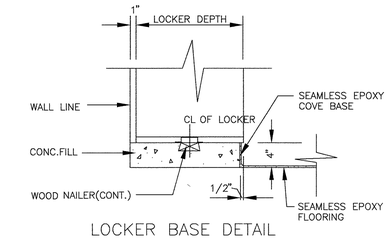

LOCKER BASE DETAIL

SCALE: 1"=1'-0"

EQUIPMENT SCHEDULE					
AREA	ITEM	DESCRIPTION	MANUFACTURER	CATALOG NO.	REMARKS
MACHINE SHOP	1	BENCHES	EQUIPTO	2333-6	2 REQ'D
		DRAWERS FOR BENCHES	EQUIPTO	220	8 REQ'D. REFER TO ITEM NO. 1
	2	DRAWER CABINET	EQUIPTO	4421 D	1 REQ'D. W/LOCK(CAT NO.4101)
	3	DRAWER CABINET	EQUIPTO	4423 D	1 REQ'D. W/LOCK(CAT. NO.4101)
GENERAL SHOP AREA	1	BENCHES	EQUIPTO	2333-6	4 REQ'D
		DRAWERS FOR BENCHES	EQUIPTO	220	16 REQ,D REFER TO ITEM NO.1
BULK STORAGE FIRST FLOOR	1	PALLET RACKS	EQUIPTO	86625 L 5	2 REQ'D
	2	PALLET RACKS	EQUIPTO	86645 L 6	2 REQ'D
	3	PALLET RACKS	EQUIPTO	86665 L 6	1 REQ'D
	4	PALLET RACKS	EQUIPTO	86685 L 6	2 REQ'D
TOOL STORAGE	1	COUNTER UNIT	EQUIPTO	4493	2 REQ'D
	2	CABINET FOR FLAMMABLE LIQUIDS	EQUIPTO	1792 SC	2 REQ'D
SMALL PARTS STORAGE FIRST FLOOR	1	CLIP SHELVING	EQUIPTO	72-9 (8' H)	56 REQ'D
	2	CLIP SHELVING	EQUIPTO	72 W 9 (8' H)	12 REQ'D
	3	BULK RACKS	EQUIPTO	1028 D 64	7 REQ'D
	4	BULK RACKS	EQUIPTO	1028 D 43	1 REQ'D
	5	CABINETS	EQUIPTO	4421D	6 REQ'D
	6	CABINETS	EQUIPTO	4420 D	5 REQ'D
	7	CABINETS	EQUIPTO	4423 D	2 REQ'D
	8	CABINETS	EQUIPTO	4424 D	1 REQ,D
	9	CABINETS	EQUIPTO	4411 D	3 REQ'D
	9A	TWO MODULAR SHELVING	EQUIPTO	4493	2 REQ'D, REFER TO ITEM NO.9
	9B	EXTRA SHELF	EQUIPTO	16300	2 REQ'D, REFER TO ITEM NO 9A
	9C	MAPLE TOP FOR COUNTER TOP	EQUIPTO	12339	1 REQ'D, REFER TO ITEM NO.9
	10	WORKBENCH	EQUIPTO	240-5	1 REQ'D
SMALL PARTS STORAGE SECOND FLOOR	1	BULK RACKS	EQUIPTO	1018 D 42	12 REQ,D
	2	BULK RACKS	EQUIPTO	1018 D 52	5 REQ'D
	3	BULK RACKS	EQUIPTO	1028 D 83	6 REQ'D
	4	BULK RACKS	EQUIPTO	1028 D 63	3 REQ'D
	5	BULK RACKS	EQUIPTO	1028 D 64	1 REQ'D
OIL STORAGE	1	CRADLE RACK	EQUIPTO	84260 J 2	4 REQ'D
	2	CRADLE RACK	EQUIPTO	84260 J 9	5 REQ'D

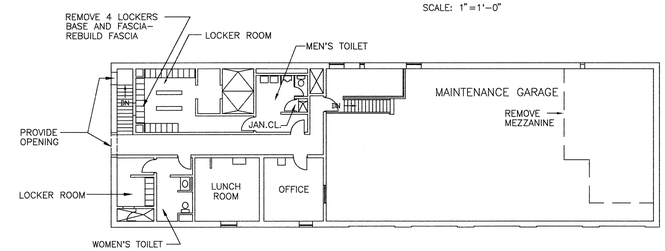

SECOND FLOOR DEMOLITION PLAN

SCALE: 1/16'=1'-0"

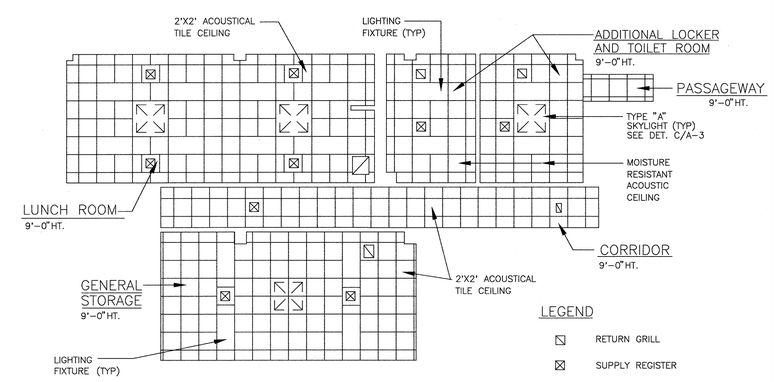

SECOND FLOOR, REFLECTED CEILING PLAN

SCOLE: 1/8"=1'-0"

SCALE IN FEET SCALE 1/8"=1'-0"

SCALE IN FEET SCALE 1/2"=1'-0"

SCALE IN FEET SCALE 1/4"=1"-0"

SCALE IN FEET SCALE 1/16"=1'-0"

SCALE IN FEET SCALE 1"=1'-0"

DEPARTMENT OF PUBLIC WORKS
HOWARD COUNTY, MARYLAND

DIRECTOR OF PUBLIC WORKS — DATE 5/7/96
CHIEF, BUREAU OF ENGINEERING — DATE 5/7/96
CHIEF, BUREAU OF ENVIRONMENTAL SERVICES — DATE 5/7/96
CHIEF, UTILITY DESIGN DIVISION — DATE 5-7-96

M&E Metcalf & Eddy
REQ. PROF. ENGR. — DATE 5-7-96

STATE OF MARYLAND — JONATHAN WINTHROP DOANE No. 15140 — REGISTERED PROFESSIONAL ENGINEER

DES:				
DRN:				
CHK:				
DATE:	M.J.C.	1	RECORD DRAWING	11/2/94
	BY	NO.	REVISION	DATE

ARCHITECTURAL
MAINTENANCE BUILDING
SECOND FLOOR PLAN
REFLECTED CEILING PLAN
AND DEMOLITION PLAN

LITTLE PATUXENT WASTEWATER TREATMENT PLANT
LITTLE PATUXENT WASTEWATER TREATMENT PLANT EXPANSION
ADDITION NO. 5
CAPITAL PROJECT S-6153
CONTRACT NO. 20-3082
HOWARD COUNTY, MARYLAND

SCALE AS SHOWN
41 SHEET 108 OF 226
A-2A

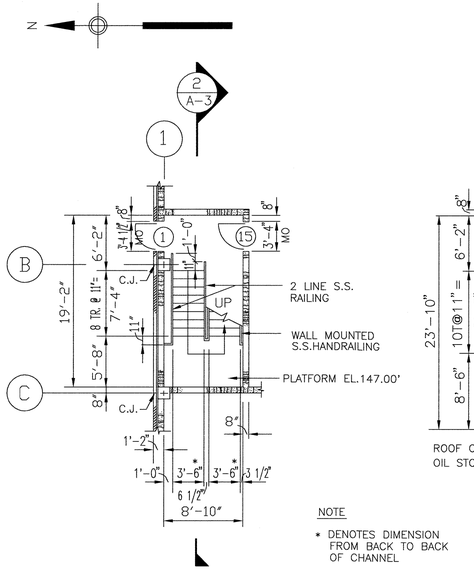

NOTE

* DENOTES DIMENSION FROM BACK TO BACK OF CHANNEL

PLAN-FIRST FLOOR

FL.EL.142.00'

SCALE: 1/8"=1'-0"

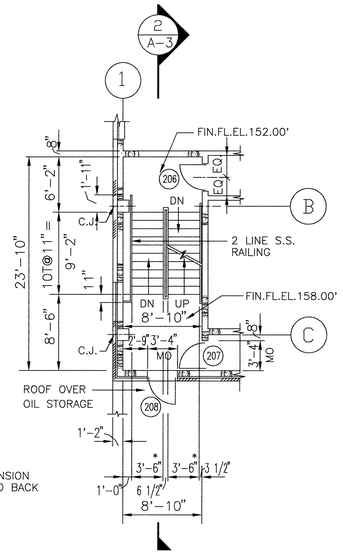

PLAN-SECOND FLOOR

FL.EL.152.00'

SCALE: 1/8"=1'-0"

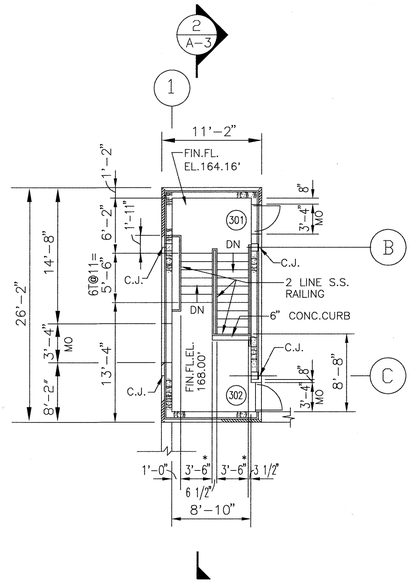

PLAN-PENTHOUSE

FL.EL.168.00'

SCALE: 1/8"=1'-0"

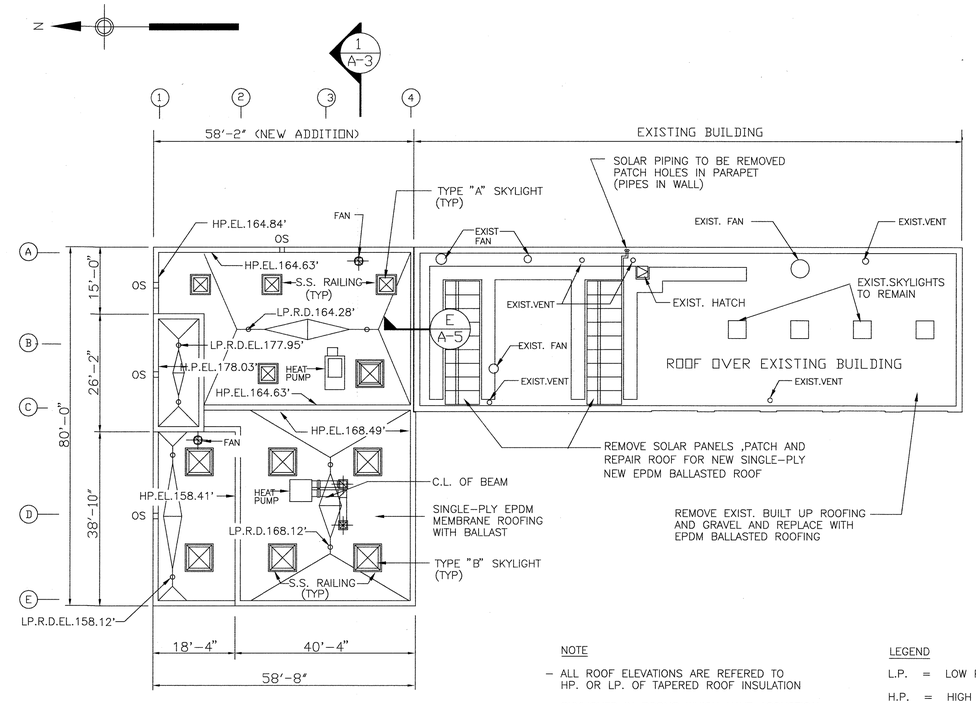

ROOF PLAN

SCALE: 1/16"=1'-0"

NOTE

- ALL ROOF ELEVATIONS ARE REFERED TO HP. OR LP. OF TAPERED ROOF INSULATION
- SKYLIGHTS IN ROOMS WHICH HAVE ACOUSTICAL CEILING ARE TYPE "A" ALL OTHERS SKYLIGHTS ARE TYPE "B"

LEGEND

L.P.	=	LOW POINT
H.P.	=	HIGH POINT
R.D.	=	ROOF DRAIN
EL.	=	ELEVATION
T.O.SL.	=	TOP OF SLAB
OS	=	OVERFLOW SCUPPER

STAIR NO.1

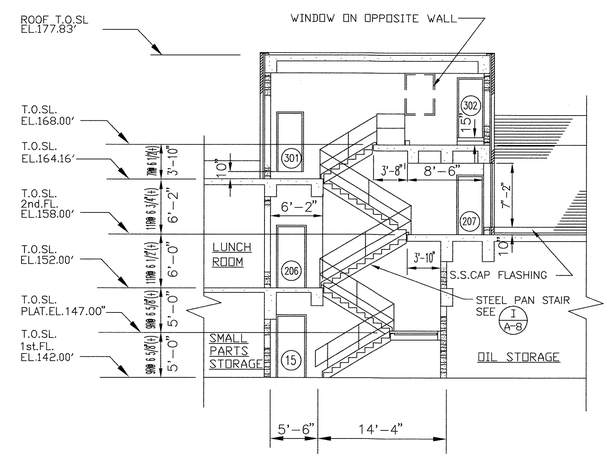

SECTION 2 A-3

SCALE: 1/8"=1'-0"

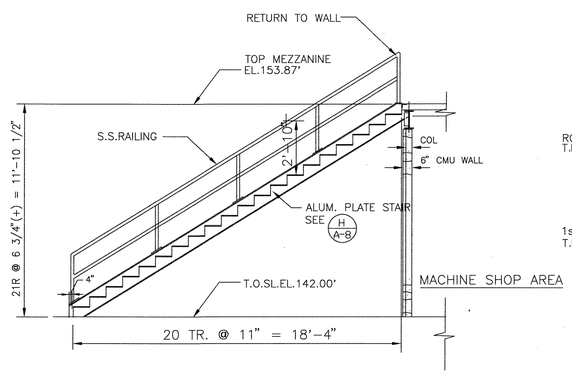

STAIR NO.3

SECTION 2 A-1

SCALE: 1/8"=1'-0"

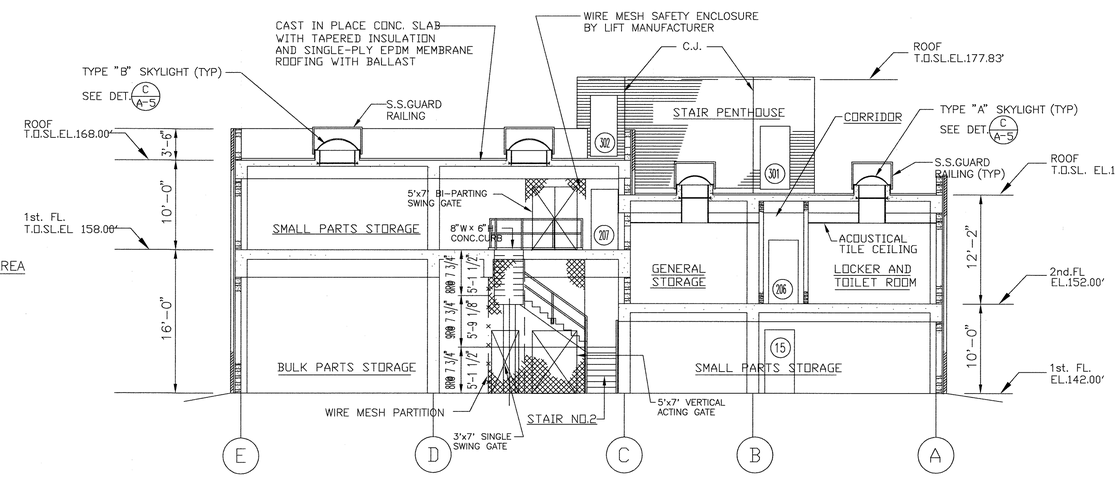

SECTION 1-1 A-1

SCALE: 1/8"=1'-0"

STAIR NO.1 DETAILS
ROOF PLAN AND SECTION 1-1

0 4 8 12 16 20 24
SCALE IN FEET SCALE: 1/8"= 1'-0"

0 16 32 48
SCALE IN FEET SCALE: 1/16"=1'-0"

DEPARTMENT OF PUBLIC WORKS
HOWARD COUNTY, MARYLAND

DIRECTOR OF PUBLIC WORKS — DATE 5/7/96
CHIEF, BUREAU OF ENGINEERING — DATE 5/7/96
CHIEF, BUREAU OF ENVIRONMENTAL SERVICES — DATE 5/7/96
CHIEF, UTILITY DESIGN DIVISION — DATE 5-7-96

M&E Metcalf & Eddy

REG. PROF. ENGR. — DATE 5-7-96

STATE OF MARYLAND — JONATHAN WINTHROP DONNE No. 15140 — REGISTERED PROFESSIONAL ENGINEER

DES:				
DRN:				
CHK:				
DATE:	M.J.C.	1	RECORD DRAWING	11/2/94
	BY	NO.	REVISION	DATE

ARCHITECTURAL

MAINTENANCE BUILDING
ROOF PLAN, STAIR
PLANS AND SECTIONS

LITTLE PATUXENT WASTEWATER TREATMENT PLANT

LITTLE PATUXENT WASTEWATER TREATMENT PLANT EXPANSION
ADDITION NO. 5
CAPITAL PROJECT S-6153

CONTRACT NO. 20-3082
HOWARD COUNTY, MARYLAND

SCALE AS SHOWN

SHEET 168 OF 226

A-3A

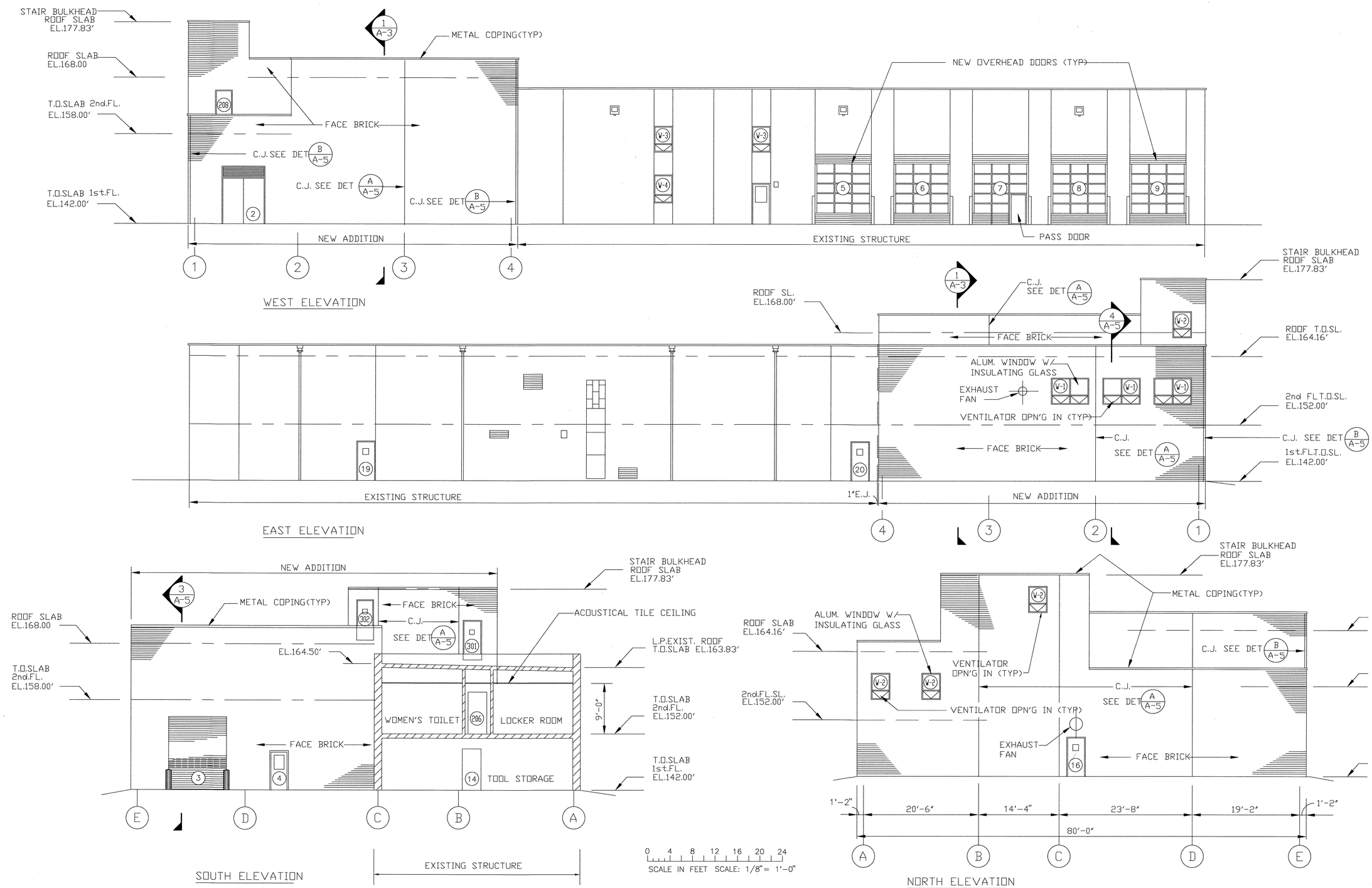

DEPARTMENT OF PUBLIC WORKS
HOWARD COUNTY, MARYLAND

DIRECTOR OF PUBLIC WORKS — DATE 5/6/96
CHIEF, BUREAU OF ENGINEERING — DATE 5/7/96
CHIEF, BUREAU OF ENVIRONMENTAL SERVICES — DATE 5/7/96
CHIEF, UTILITY DESIGN DIVISION — DATE 5-7-96

M&E Metcalf & Eddy

REG. PROF. ENGR. — DATE 5-7-96

STATE OF MARYLAND — JONATHAN WINTHROP DOANE No. 15140 — REGISTERED PROFESSIONAL ENGINEER

DES:				
DRN:				
CHK:				
DATE:	M.J.C.	1	RECORD DRAWING	11/2/94
	BY	NO.	REVISION	DATE

ARCHITECTURAL

MAINTENANCE BUILDING ELEVATIONS

LITTLE PATUXENT WASTEWATER TREATMENT PLANT

LITTLE PATUXENT WASTEWATER TREATMENT PLANT EXPANSION
ADDITION NO. 5
CAPITAL PROJECT S-6153

CONTRACT NO. 20-3082
HOWARD COUNTY, MARYLAND

SCALE AS SHOWN

43 SHEET 108 OF 226

A-4A

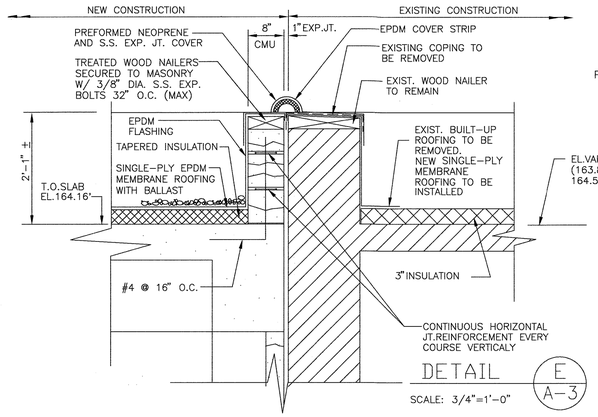

DETAIL E / A-3

SCALE: 3/4"=1'-0"

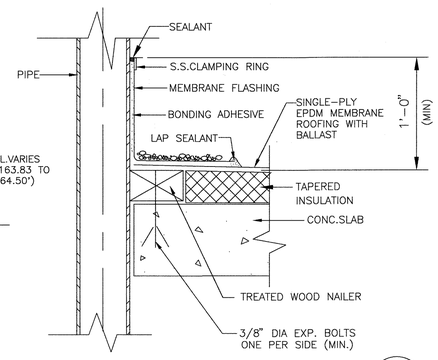

PIPE FLASHING DETAIL D

SCALE NONE

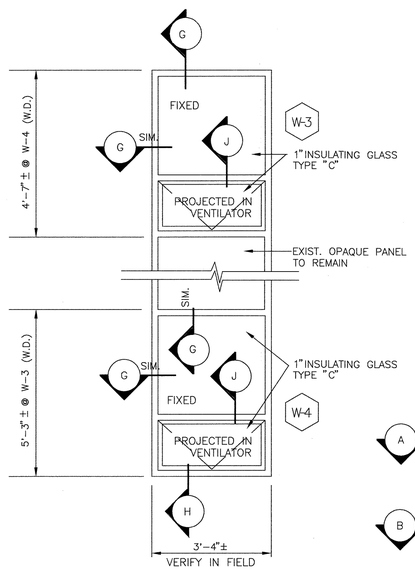

WINDOW ELEVATION @ W-3 & W-4

SCALE: 1/2"=1'-0"

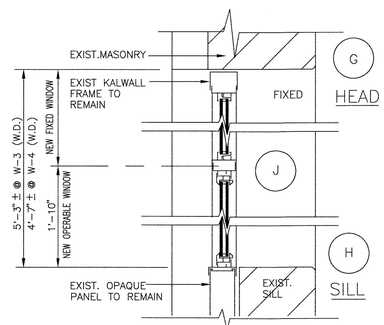

WINDOW DETAILS @ W-3 & W-4

SCALE 1 1/2" = 1'-0"

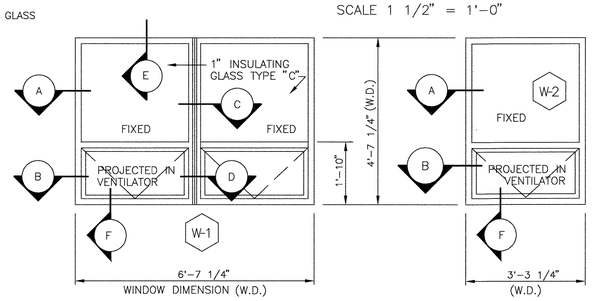

WINDOW ELEVATIONS @ W-1 & W-2

SCALE: 1/2"=1'-0"

NOTE WINDOW TYPE DENOTED THUS W-1

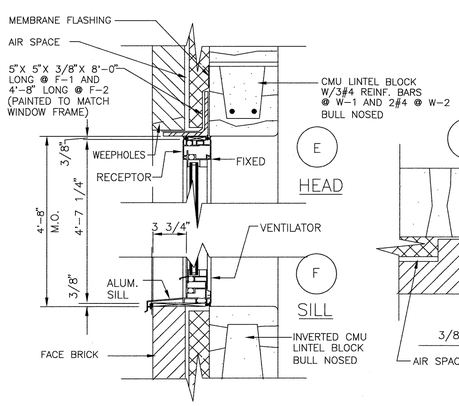

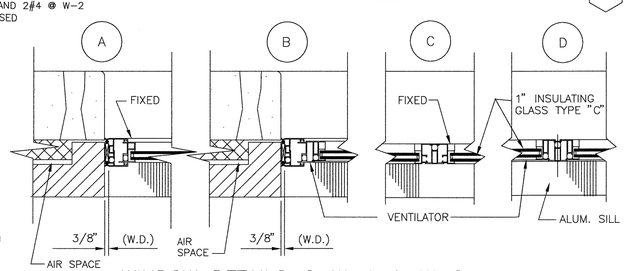

WINDOW DETAILS @ W-1 & W-2

SCALE 1 1/2" = 1'-0"

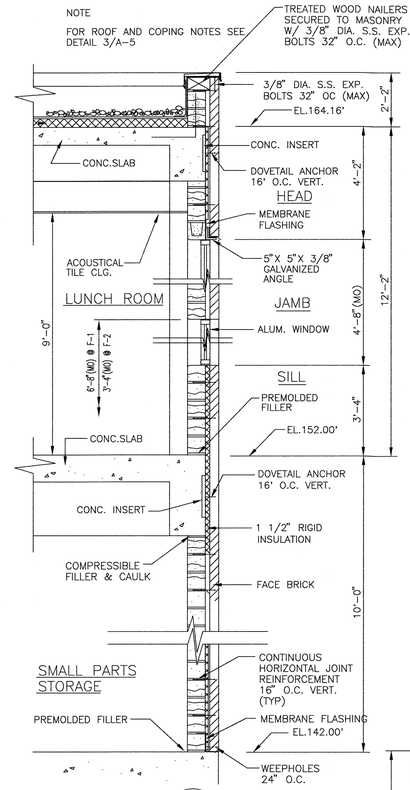

SECTION 4 / A-3

SCALE: 3/8"=1'-0"

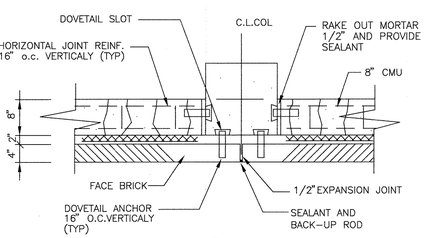

DETAIL A / A-1

SCALE: 3/4"=1'-0"

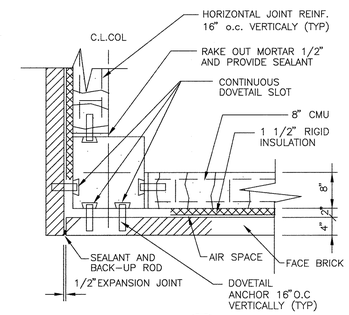

DETAIL B / A-1

SCALE: 3/4"=1'-0"

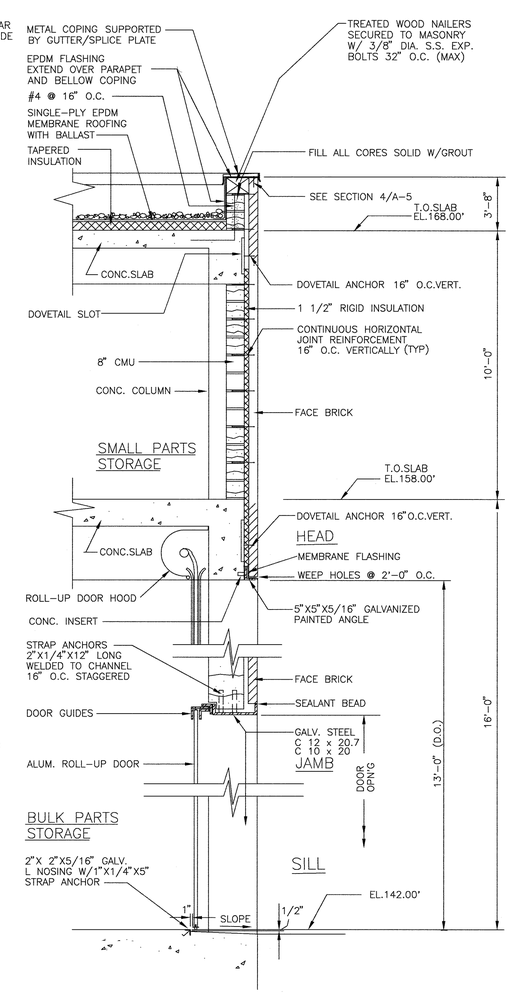

SECTION 3 / A-5

SCALE: 3/8"=1'-0"

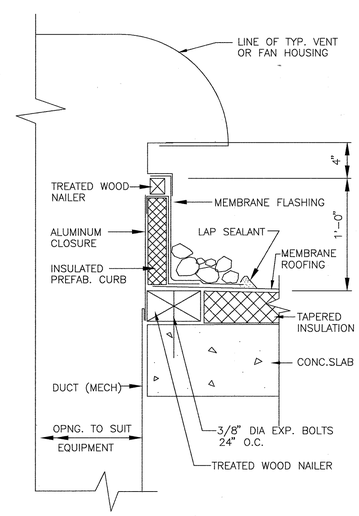

ROOF VENTILATOR FLASHING DETAIL

SCALE NONE

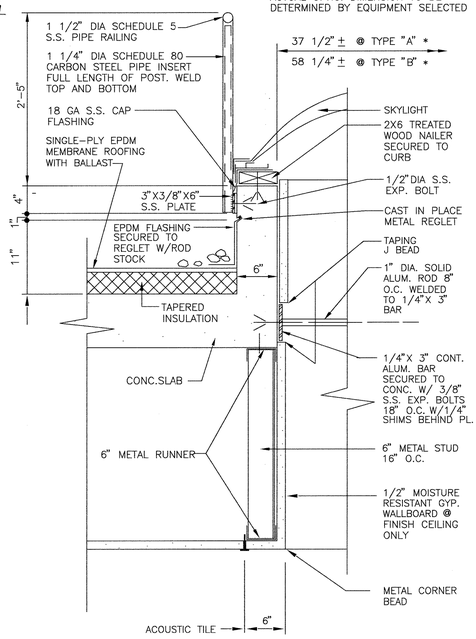

SKYLIGHT DETAIL C / A-3

SCALE: 1"=1'-0"

0 1 2 3 4 5 6

SCALE IN FEET SCALE: 1/2"=1'-0"

0 1 2 3 4

SCALE IN FEET SCALE: 1"= 1'-0"

0 1 2 3 4 5

SCALE IN FEET SCALE: 3/4"= 1'-0"

0 2 4 6 8 10 12

SCALE IN FEET SCALE: 3/8"= 1'-0"

0 1 2 3 4

SCALE IN FEET SCALE: 1 1/2"= 1'-0"

DEPARTMENT OF PUBLIC WORKS
HOWARD COUNTY, MARYLAND

DIRECTOR OF PUBLIC WORKS — DATE 5/7/96
CHIEF, BUREAU OF ENGINEERING — DATE 5/7/96
CHIEF, BUREAU OF ENVIRONMENTAL SERVICES — DATE 5/7/96
CHIEF, UTILITY DESIGN DIVISION — DATE 5-7-96

M&E Metcalf & Eddy
REG. PROF. ENGR. — DATE 5-7-96

STATE OF MARYLAND — JONATHAN WINTHROP DOANE No. 15140 — REGISTERED PROFESSIONAL ENGINEER

	BY	NO.	REVISION	DATE
DES:				
DRN:				
CHK:				
DATE:	M.J.C.	1	RECORD DRAWING	11/2/94

ARCHITECTURAL

MAINTENANCE BUILDING WALL SECTIONS AND DETAILS

LITTLE PATUXENT WASTEWATER TREATMENT PLANT

LITTLE PATUXENT WASTEWATER TREATMENT PLANT EXPANSION
ADDITION NO. 5
CAPITAL PROJECT S-6153

CONTRACT NO. 20-3082
HOWARD COUNTY, MARYLAND

SCALE AS SHOWN

41 SHEET 188 OF 226

A-5A

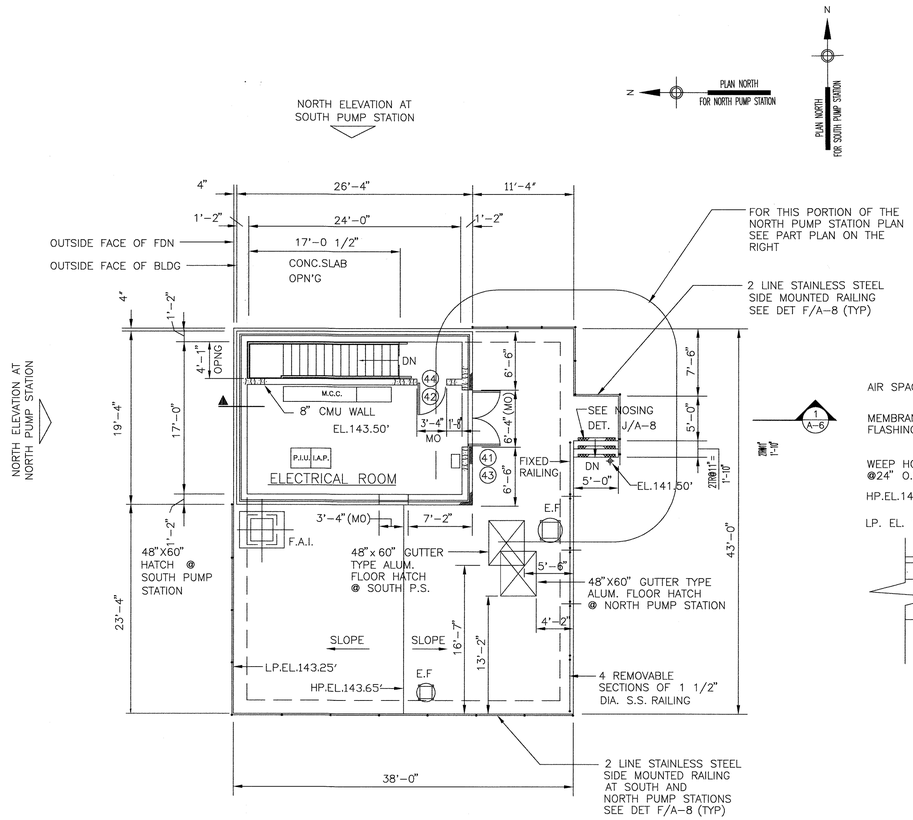

UPPER FLOOR PLAN

SCALE 1/8"=1'-0"

48"X60" GUTTER TYPE ALUM. FLOOR HATCH @ SOUTH PUMP STATION

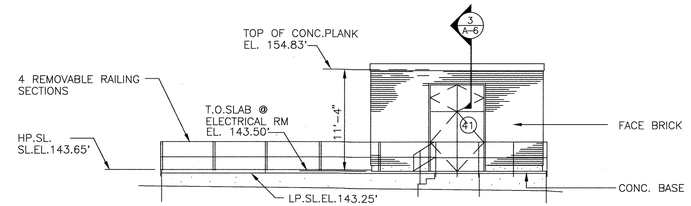

SOUTH PUMP STATION – EAST ELEVATION
NORTH PUMP STATION – SOUTH ELEVATION

SCALE 1/8"=1'-0"

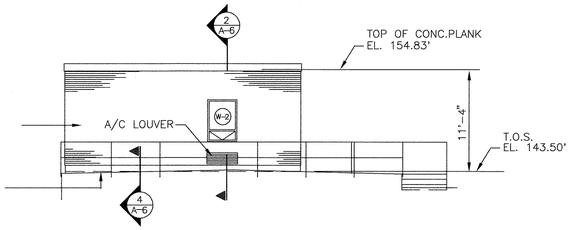

SOUTH PUMP STATION – SOUTH ELEVATION
NORTH PUMP STATION – WEST ELEVATION

SCALE 1/8"=1'-0"

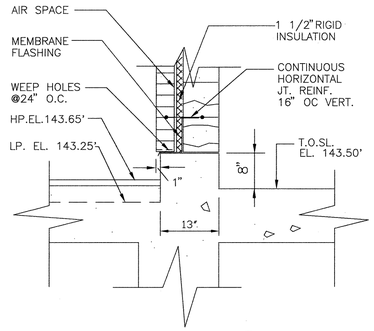

WALL SECTION 4/A-6

SCALE 3/4"=1'-0"

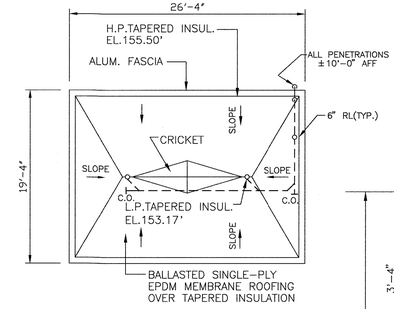

ROOF PLAN

SCALE 1/8"=1'-0"

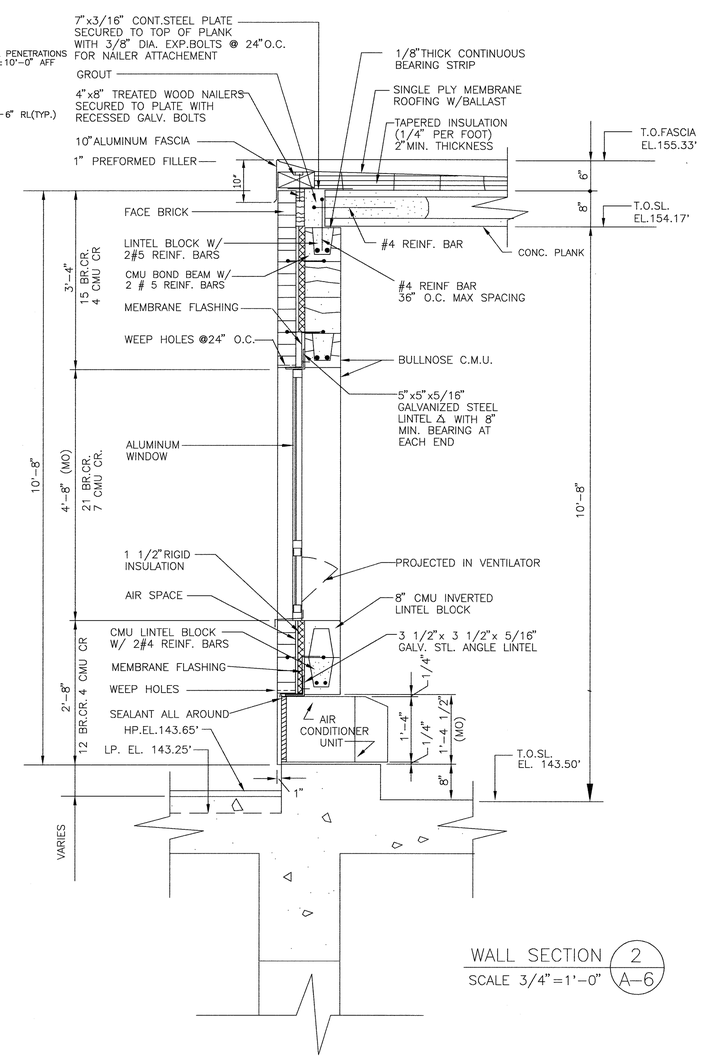

WALL SECTION 2/A-6

SCALE 3/4"=1'-0"

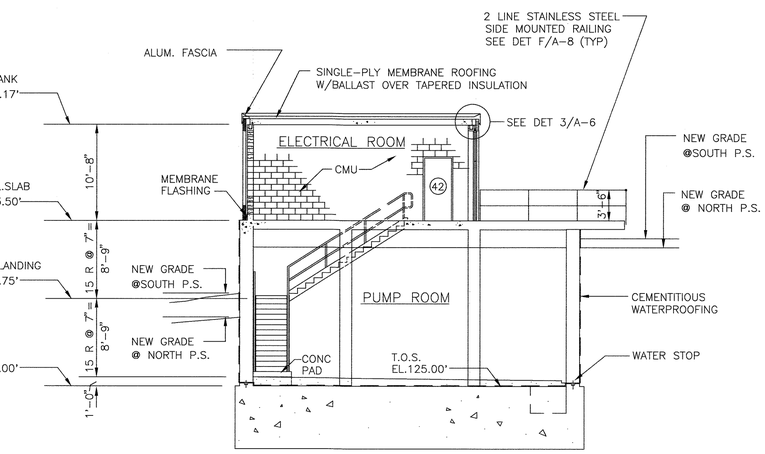

SECTION 1-1/A-6

SCALE 1/8"=1'-0"

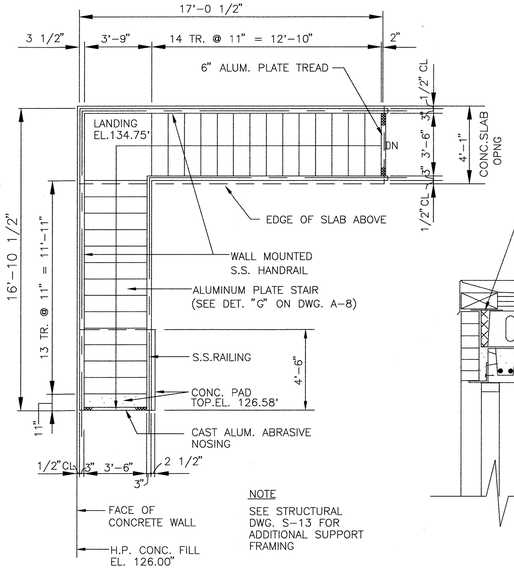

NOTE

SEE STRUCTURAL DWG. S-13 FOR ADDITIONAL SUPPORT FRAMING

PLAN OF STAIR

SCALE 1/4"=1'-0"

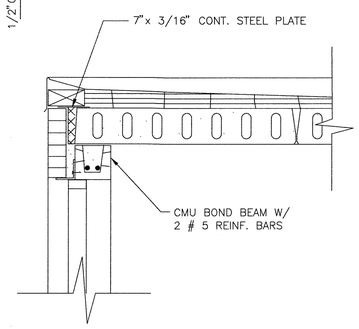

WALL SECTION 3/A-6

SCALE 3/4"=1'-0"

FOR NOTES SEE WALL SECTION 2/A-6

DEPARTMENT OF PUBLIC WORKS HOWARD COUNTY, MARYLAND	Metcalf & Eddy						ARCHITECTURAL	LITTLE PATUXENT WASTEWATER TREATMENT PLANT	SCALE AS SHOWN
DIRECTOR OF PUBLIC WORKS — DATE 5/6/96; CHIEF, BUREAU OF ENGINEERING — DATE 5/7/96	REQ. PROF. ENGR. — DATE 5-7-96	STATE OF MARYLAND — JONATHAN WINTHROP DOANE No. 32140 — REGISTERED PROFESSIONAL ENGINEER	DES:				NORTH AND SOUTH PUMP STATION FLOOR PLANS, ROOF PLAN, SECTIONS AND DETAILS	LITTLE PATUXENT WASTEWATER TREATMENT PLANT EXPANSION ADDITION NO. 5 CAPITAL PROJECT S-6153	45 SHEET 188 OF 226
CHIEF, BUREAU OF ENVIRONMENTAL SERVICES — DATE 5/7/96; CHIEF, UTILITY DESIGN DIVISION — DATE 5-7-96			DRN:					CONTRACT NO. 20-3082 HOWARD COUNTY, MARYLAND	A-6A
			CHK:						
			DATE:	M.J.C.	1	RECORD DRAWING	11/2/94		
				BY	NO.	REVISION	DATE		

FINISH SCHEDULE

BLDG.	ELEV.	LOCATION	FLOOR FINISH	FLOOR COLOR	BASE FINISH	BASE COLOR	WALLS FINISH	WALLS COLOR	CEILING HEIGHT	CEILING FINISH	CEILING COLOR	REMARKS
MAINTENANCE BUILDING	FIRST FLOOR	OIL STORAGE	LH	—	—	—	CMU–P	●		CONC.	●	
		STAIR NO.1	LH	—	—	—	CMU–P	●		CONC.	●	
		BULK PARTS STORAGE	LH	—	—	—	CMU–P	●		CONC.	●	
		SMALL PARTS STORAGE	LH	—	—	—	CMU–P	●		CONC.	●	
		TOOL STORAGE	LH	—	—	—	CMU–P	●		CONC.	●	
	SECOND FLOOR	SMALL PARTS STORAGE	LH	—	—	—	CMU–P	●	VARIES	CONC.	●	
		FILE ROOM	VCT	—	VC	—	CMU–P	●	9'–0"	CONC.	●	
		GENERAL STORAGE	VCT		VC		CMU–P	●	VARIES	MAT	●	PAINT GDW SKYLITE WELLS
		CORRIDOR	VCT		VC		CMU–P	●	9'–0"	MAT	—	
		LUNCH ROOM	VCT		VC		CMU–P	●	9'–0"	MRAT	—	PAINT MRGDW SKYLITE WELLS
		ADDITIONAL LOCKER AND TOILET ROOM	SEF		4" SEF		GCMU	●	9'–0"	MRAT	—	PAINT MRGDW SKYLITE WELLS
		PASSAGEWAY	SEF		VC		MRGDW	●	9'–0"	MRAT	—	
		OFFICE NO.1	EXIST. VCT	—	VC				8'–0"	EXIST.GYP. BOARD	●	
		OFFICE NO.2	EXIST. VCT	—	VC		* VINYL WC ON EXIST.GYP.FURRING		8'–0"	EXIST.GYP. BOARD	●	
	EXISTING BUILDING	MACHINE SHOP AREA	LH	—	—	—	CMU–P	●	11'–0"	METAL DECKING	●	
		SUPERINTENDENTS OFFICE	VCT		VC		VINYL WC ON NEW GYP.BD.	●	9'–0"	MAT	—	VINYL WC ON NEW GYP. BD.
		MEZZANINE	LH	—	—	—	CMU–P	●	9'–0"	CONC.	●	
		SERVICE TECHNICIAN	VCT		VC		CMU–P	●		CONC.	●	PAINT EXISTING WALLS & CEILING
N&S PUMP HOUSE		PUMP ROOM	LH	—	—	—	CONC.	—	17'–6"	CONC.	—	
		ELECTRICAL ROOM	SEF		4" SEF		CMU–P	●	10'–8"	CONC.	●	

L E G E N D:

SEF – SEAMLESS EPOXY FLOOR
CMU–P – CONCRETE MASONRY UNITS, PAINTED
CONC. – CONCRETE, PAINTED
GCMU – GLAZED CONCRETE MASONRY UNIT
GYP.BD.–GYPSUM WALLBOARD
LH – LIQUID FLOOR HARDENER ON TROWELED CONCRETE
MAT – MINERAL ACOUSTICAL TILE
MRAT – MOISTURE RESISTANT ACOUSTIC TILE
VC – VINYL COVE
VCT – VINYL COMPOSITION TILE
WC – WALLCOVERING
MRGDW – MOISTURE RESISTANT GYPSUM DRY–WALL
● – ITEM TO BE PAINTED (COLOR TO BE DETERMINED BY THE ENGINEER)

L E G E N D:

S.S. – STAINLESS STEEL
ALUM – ALUMINUM
HM – HOLLOW METAL
PM – PRESSED METAL
GALV – GALVANIZED STEEL
RH – RIGHT HAND
RHR – RIGHT HAND REVERSE
LH – LEFT HAND
LHR – LEFT HAND REVERSE

DOOR SCHEDULE

BLDG.	ELEV.	LOCATION	DOOR NO.	DOOR OPENING WxH	MATERIAL DOOR	MATERIAL FRAME	DOOR TYPE	DETAILS HEAD	DETAILS JAMB	DETAILS SILL	HARDWARE SET NO.	WEATHER STRIPPING	DOOR SWING	FIRE LABEL	PAINT DOOR	PAINT FRAME	REMARKS
MAINTENANCE BUILDING ADDITION	FIRST FLOOR	STAIR NO.1	1	3'–0"x7'–2"	ALUM	ALUM	B	H–2	J–2	S–1	16	●	LHR	–	–	–	
		OIL STORAGE	2	PR.3'–6"x 8'–0"	ALUM	ALUM	J	H–2A	J–2	S–1	18	●	LHR ACTIVE	–	–	–	
		BULK PARTS STORAGE	3	10'–0"X12'–6"	ALUM	GALV.STL.	F	*	*	S–4		●	—	–	–	–	* SEE DET. 3 ON DWG.A–5
		BULK PARTS STORAGE	4	3'–0"x7'–2"	ALUM	ALUM	C	H–2	J–2	S–1	16A	●	RHR	–	–	–	
		VEHICLE MAINTENANCE	5	10'–0"X12'–6 1/2"	ALUM	GALV.STL.	E	*	*	S–4	—	●	—	–	–	–	* SEE DET. 3 ON DWG.A–5
		VEHICLE MAINTENANCE	6	10'–0"X12'–6 1/2"	ALUM	GALV.STL.	E	*	*	S–4	—	●	—	–	–	–	* SEE DET. 3 ON DWG.A–5
		VEHICLE MAINTENANCE	7	10'–0"X12'–6 1/2"	ALUM	GALV.STL.	E	*	*	S–4	—	●	—	–	–	–	* SEE DET. 3 ON DWG.A–5
		MACHINE SHOP AREA	8	10'–0"X12'–6 1/2"	ALUM	GALV.STL.	E	*	*	S–4	—	●	—	–	–	–	* SEE DET. 3 ON DWG.A–5
		MACHINE SHOP AREA	9	10'–0"X12'–6 1/2"	ALUM	GALV.STL.	E	*	*	S–4	—	●	—	–	–	–	* SEE DET. 3 ON DWG.A–5
		MACHINE SHOP AREA	10	3'–0"x7'–2"	HM	PM	B	H–1	J–1	–	20	–	LH	B	●	●	
		SERVICE TECHNICIAN AREA	11	3'–0"x7'–2"	HM	PM	A	H–1	J–1	S–3	19	–	LH	B	●	●	
		SUPERINTENDENT OFFICE	12	3'–0"x7'–2"	HM	PM	C	H–1	J–1	S–3	20A	–	RH	–	●	●	12A SIMILAR TO 12
		SERVICE TECHNICIAN AREA	13	3'–0"x7'–2"	HM	PM	B	H–1	J–1	S–3	24	–	RH	B	●	●	
		SMALL PARTS STORAGE	14	3'–0"x7'–2"	HM	PM	B	H–3A	J–3A	S–2	24	–	RH	–	●	●	
		STAIR NO.1	15	3'–0"x7'–2"	HM	PM	B	H–1	J–1	–	16	–	RH	B	●	●	
		OIL STORAGE	16	3'–0"x7'–2"	ALUM	ALUM	B	H–2	J–2	S–1	16	●	LHR	–	–	–	
		BULK PARTS STORAGE	17	10'–0"X 11'–0"	ALUM	ALUM	H	*	*	–	–	–	—	–	–	–	* ROLL–UP DOOR GRILL
		VESTIBULE	18	*	–	–	–	–	–	–	21	–	–	–	–	–	* SEE REMARKS @ DOOR #213
		MAINTENANCE GARAGE	19	3'–0"x7'–2"	ALUM	ALUM	B	H–3B	J–2	S–1	16	●	RHR	–	–	–	
		EXISTING STAIR	20	3'–0"x7'–2"	ALUM	ALUM	B	H–3B	J–2	S–1	16	●	RHR	–	–	–	
	SECOND FLOOR	FILE ROOM	201	3'–0"x7'–2"	HM	PM	A	H–1	J–1	–	20	–	LH	–	●	●	
		ADDITIONAL TOILET AND LOCKER RM.	202	3'–0"x7'–2"	HM	PM	A	H–1	J–1	S–3	27	–	RH	–	●	●	
		ADDITIONAL TOILET AND LOCKER RM.	203	3'–0"x7'–2"	HM	PM	A	H–1	J–1	–	28	–	LH	–	●	●	PROVIDE FLOOR MOUNTED HOLD OPEN FEATURE
		GENERAL STORAGE	204	3'–0"x7'–2"	HM	PM	A	H–1	J–1	–	20	–	LH	–	●	●	
		LUNCH ROOM	205	3'–0"x7'–2"	HM	PM	C	H–1	J–1	–	20	–	RH	–	●	●	
		STAIR NO.1	206	3'–0"x7'–2"	HM	PM	B	H–1	J–1	–	16	–	RH	B	●	●	
		STAIR NO.1	207	3'–0"x7'–2"	HM	PM	B	H–1	J–1	–	16	–	LH	B	●	●	
		ROOF OVER OIL STORAGE	208	3'–0"x7'–2"	ALUM	ALUM	B	H–2	J–2	S–5	17	●	LH	B	–	–	
		OFFICE NO.1	209	EXISTING	STL.	–	–	*	*	–	–	–	–	–	●	–	BIFOLD DOORS * SEE DET 5/A–2
		CORRIDOR (DELETED)		4'–2"x7'–2"			–	H–3	J–3	S–2	–	–	–	–	–	●	NO DOOR,FRAME ONLY, VERIFY EXIST.OPNG.IN FIELD
		OFFICE NO.2	212	2'–6"x6'–8"	STL.	–	–	*	*	–	–	–	–	–	●	–	BIFOLD DOORS * SEE DET 5/A–2
		OFFICE NO.1	213	*	–	–	–	–	–	–	21	–	–	–	–	–	* EXIST. DOOR TO REMAIN REPLACE EXIST. STRIKE PLATE WITH HARDWARE SET NO.21
		OFFICE NO.2	214	*	–	–	–	–	–	–	21	–	–	–	–	–	
		STAIR NO.1(ROOF)	301	3'–0"x7'–2"	ALUM	ALUM	B	H–2	J–2	S–5	17	●	LHR	B	–	–	GLASS TYPE B
		STAIR NO.1(ROOF)	302	3'–0"x6'–8"	ALUM	ALUM	B	H–2	J–2	S–5	17	●	RHR	B	–	–	GLASS TYPE B
		LOCKER ROOM PASSAGE			–	–	–	H–4	–	S–2	–						
PUMP STATION		PUMP STATION NORTH	41	PR.3'–0"x9'–10"	ALUM	ALUM	G	H–2	J–2	S–1	14	●	LHR ACTIVE		–	–	
		PUMP STATION NORTH	42	3'–0"x7'–2"	HM	PM	B	H–1	J–1	–	16		LHR		–	–	
		PUMP STATION SOUTH	43	PR.3'–0"x9'–10"	ALUM	ALUM	G	H–2	J–2	S–1	14	●	LHR ACTIVE		–	–	
		PUMP STATION SOUTH	44	3'–0"x7'–2"	HM	PM	B	H–1	J–1	–	16		LHR		–	–	

DOOR TYPES
NO SCALE

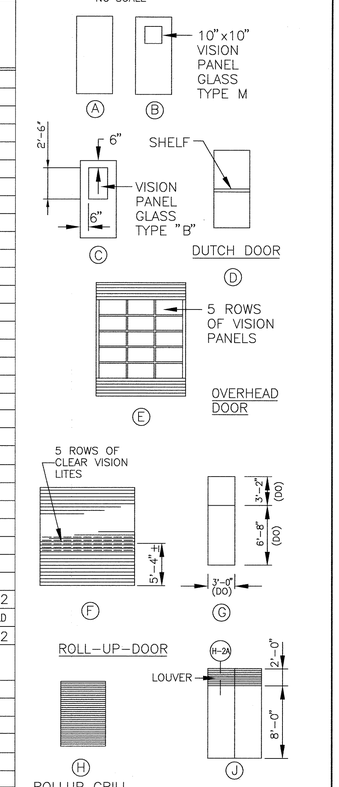

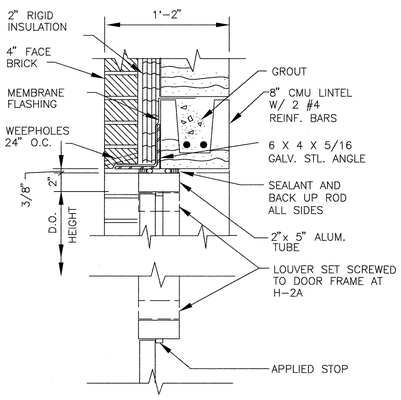

H–2 & H–2A

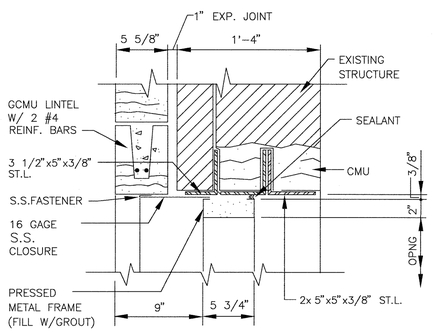

H–3

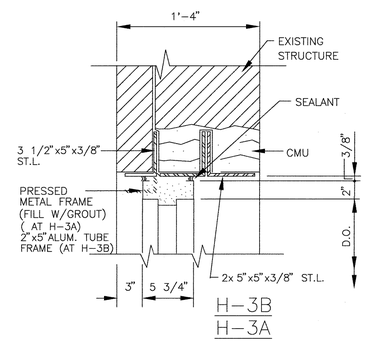

H–3B
H–3A

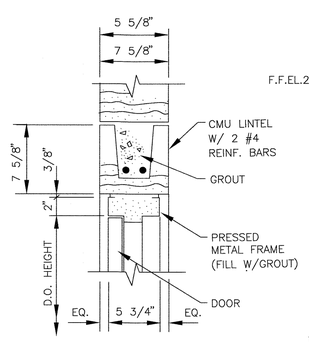

H–1

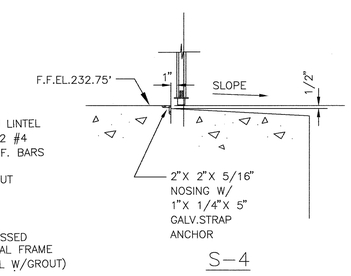

S–4

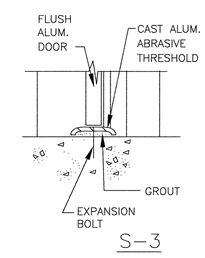

S–3

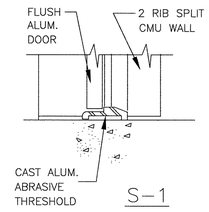

S–1

NOTE: FOR DOOR NO. 41, 42 INSTEAD OF CMU LINTEL THERE IS A CONC. BEAM (SEE SECTION 1–1 ON DWG. A–6)

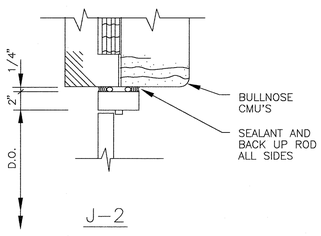

J–2

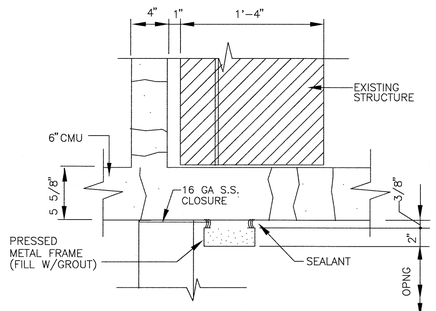

J–3

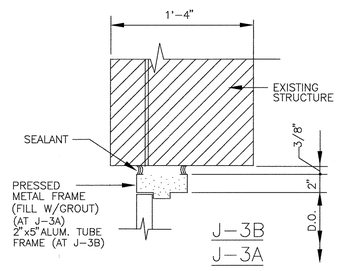

J–3B
J–3A

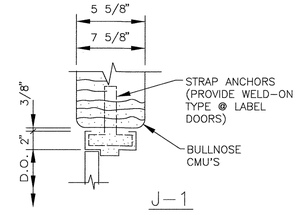

J–1

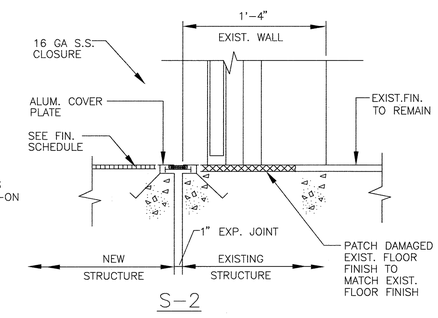

S–2

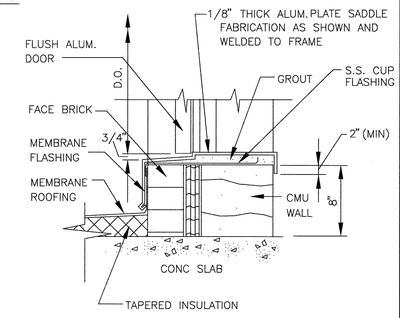

S–5

DEPARTMENT OF PUBLIC WORKS
HOWARD COUNTY, MARYLAND

DIRECTOR OF PUBLIC WORKS — DATE 5/7/96
CHIEF, BUREAU OF ENGINEERING — DATE 5/7/96
CHIEF, BUREAU OF ENVIRONMENTAL SERVICES — DATE 5/7/96
CHIEF, UTILITY DESIGN DIVISION — DATE 5-7-96

M&E Metcalf & Eddy
REG/PROF. ENGR. — DATE 5-7-96

STATE OF MARYLAND — JONATHAN WINTHROP DOANE No. 15140 — REGISTERED PROFESSIONAL ENGINEER

	BY	NO.	REVISION	DATE
DES:				
DRN:				
CHK:				
DATE:	M.J.C.	1	RECORD DRAWING	11/2/94

ARCHITECTURAL
MAINTENANCE BUILDING
NORTH AND SOUTH PUMP STATIONS
FINISH DOOR SCHEDULES AND DOOR DETAILS

LITTLE PATUXENT WASTEWATER TREATMENT PLANT
LITTLE PATUXENT WASTEWATER TREATMENT PLANT EXPANSION
ADDITION NO. 5
CAPITAL PROJECT S-6153
CONTRACT NO. 20-3082
HOWARD COUNTY, MARYLAND

SCALE AS SHOWN
46 SHEET 198 OF 226
A–7A

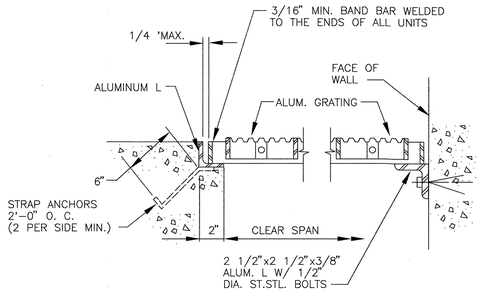

REQUIRED DEPTHS "D" FOR ALUMINUM GRATING							
CLEAR SPANS	UP TO 2'	2'-1" TO 3'	3'-1" TO 4'	4'-1" TO 5'	5'-1" TO 6'	6'-1" TO 6'-6"	6'-7" TO 7'
BEARING BAR	1"	1 1/4"	1 1/2"	1 3/4"	2"	2 1/4"	2 1/2"

CONTINUOUS GRATINGS OVER CHANNELS OF VARIOUS WITH SHALL HAVE THE UNIFORM DEPTH OF BEARING BAR. IT SHALL BE BASED ON LARGEST SPAN.

GRATING DETAIL (A)
SCALE NONE

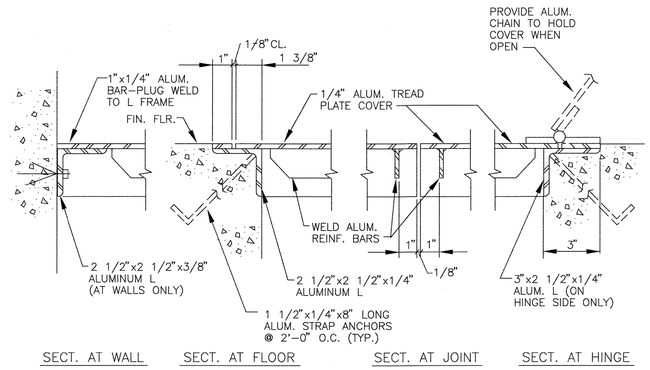

NOTE: PROVIDE LIFT HANDLE AT HINGED COVERS.

PLATE COVER DETAILS (B)
SCALE NONE

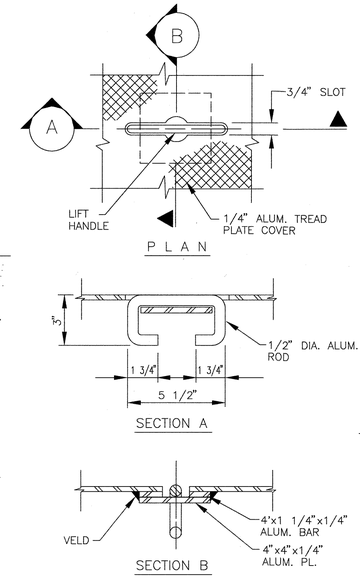

PLATE COVER LIFT HANDLE DETAILS (C)
SCALE NONE

NOTE:
WHERE HANDRAIL IS NOT CALLED OUT AS BEING EITHER SURFACE MOUNTED OR CURB MOUNTED, IT SHALL BE INSTALLED EMBEDED IN THE CONCRETE SIMILAR TO DETAIL E BUT WITH OUT THE CURB.

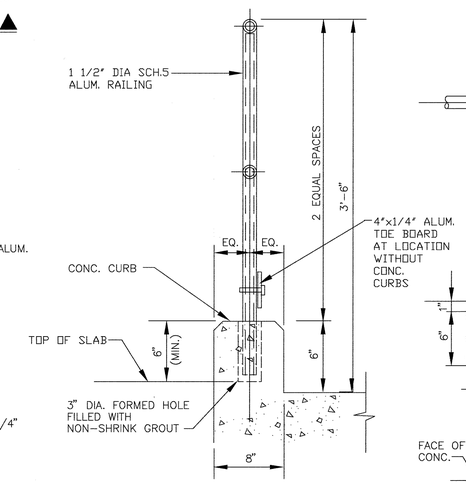

SLEEVE RAILING DETAIL (E)
SCALE NONE

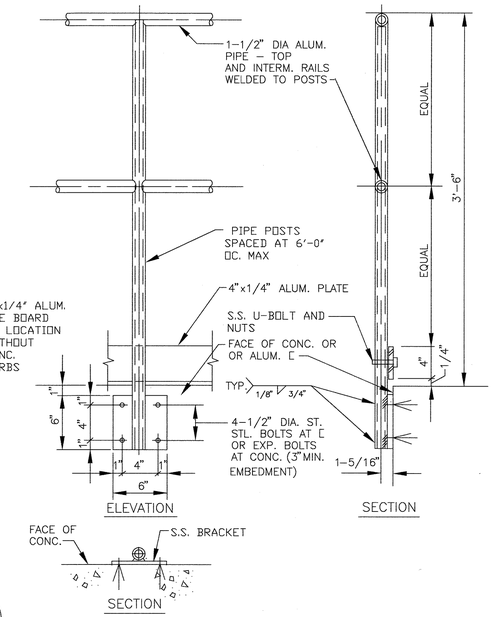

STAINLESS STEEL RAILING DETAILS (F)
SCALE NONE

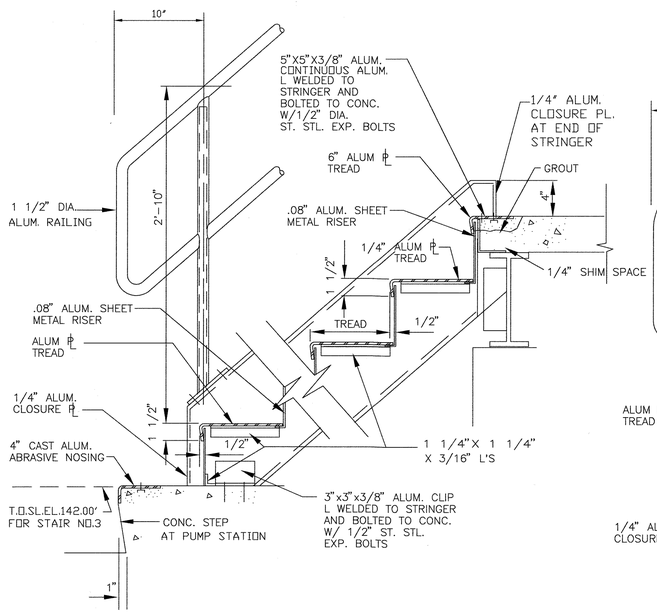

ALUMINUM PLATE STAIR DETAIL (G / A-6)
AT STAIR NO.3
AT NORTH AND SOUTH P.S.
SCALE NONE

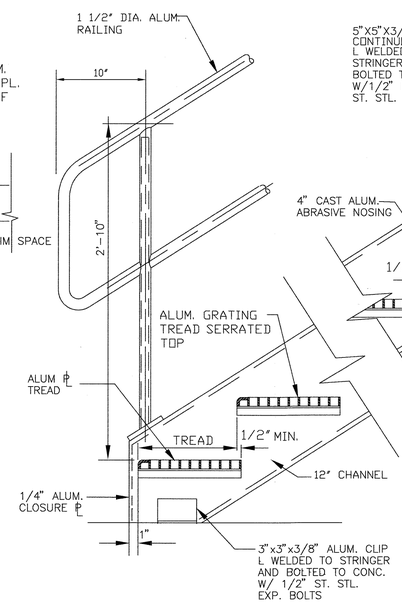

ALUMINUM GRATING STAIR DETAIL (H)
SCALE NONE

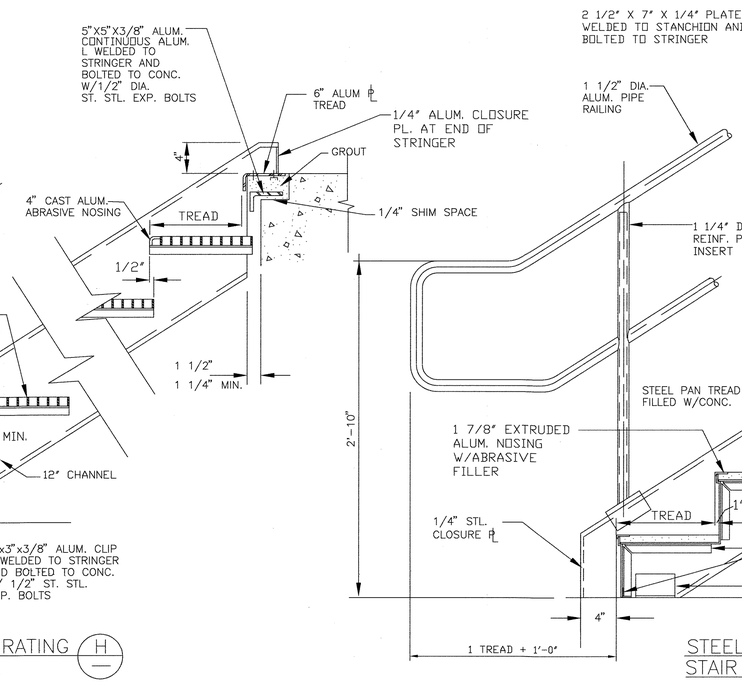

STEEL PAN STAIR DETAIL (I)
AT STAIR NO.1
SCALE NONE

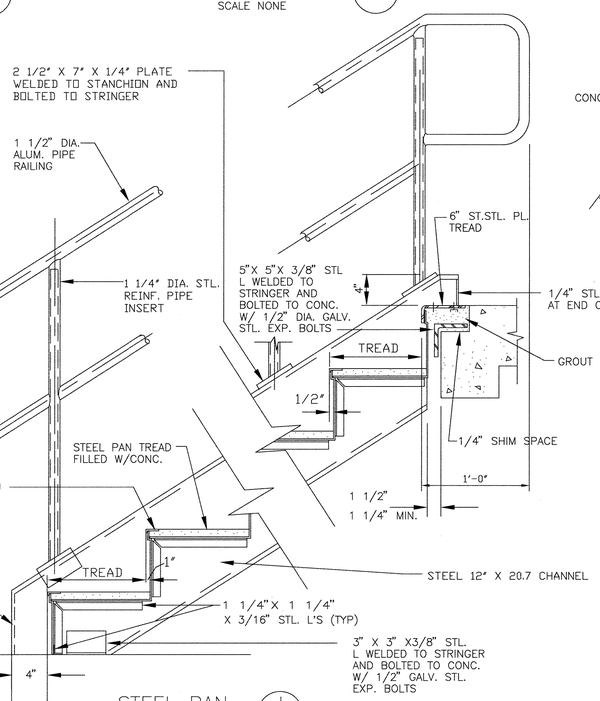

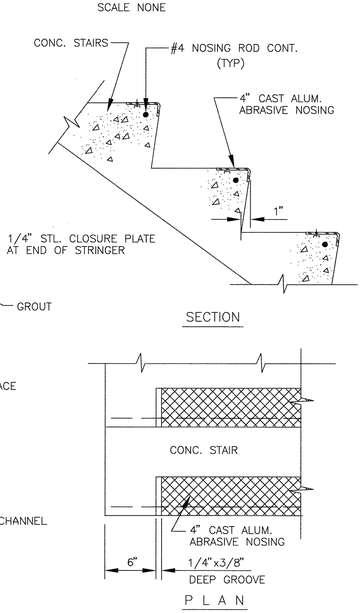

STAIR NOSING DETAIL (J)
SCALE NONE

DEPARTMENT OF PUBLIC WORKS
HOWARD COUNTY, MARYLAND

DIRECTOR OF PUBLIC WORKS — DATE 5/7/96
CHIEF, BUREAU OF ENGINEERING — DATE 5/7/96
CHIEF, BUREAU OF ENVIRONMENTAL SERVICES — DATE 5/1/96
CHIEF, UTILITY DESIGN DIVISION — DATE 5-7-96

M&E Metcalf & Eddy
REGL. PROF. ENGR. — DATE 5-7-96

STATE OF MARYLAND — JONATHAN MINTHROP DOANE No. 15140 — REGISTERED PROFESSIONAL ENGINEER

DES:				
DRN:				
CHK:				
DATE:	M.J.C.	1	RECORD DRAWING	11/2/94
	BY	NO.	REVISION	DATE

ARCHITECTURAL

MISCELLANEOUS DETAILS

LITTLE PATUXENT WASTEWATER TREATMENT PLANT

LITTLE PATUXENT WASTEWATER TREATMENT PLANT EXPANSION
ADDITION NO. 5
CAPITAL PROJECT S-6153

CONTRACT NO. 20-3082
HOWARD COUNTY, MARYLAND

SCALE AS SHOWN

SHEET 47 OF 226

A-8A

STRUCTURAL NOTES

GENERAL:

THE FOLLOWING GENERAL NOTES ARE SHOWN FOR CONVENIENCE AND ARE SUPPLEMENTAL TO THE SPECIFICATIONS.

1. THE CONTRACTOR'S ATTENTION IS DIRECTED TO APPENDIX B OF THE SPECIFICATIONS, WHICH SHOW THE STANDARD STRUCTURAL DETAILS AND WHICH ARE PART OF THE CONTRACT DRAWINGS.
2. THE CONTRACTOR IS RESPONSIBLE FOR THE PROTECTION OF ALL STRUCTURES AGAINST FLOTATION DAMAGE DURING CONSTRUCTION.
3. REFER TO ARCHITECTURAL, MECHANICAL (PROCESS PIPING, PLUMBING, HEATING, VENTILATING, AND AIR CONDITIONING), AND ELECTRICAL DRAWINGS FOR LOCATION AND DIMENSIONS OF ALL CHASES, SLOTS INSERTS, CURBS, OPENINGS, SLEEVE, ANCHOR BOLTS, FLOOR PITCHES, ANGLE FRAMES, SLUICE GATE FRAMES, SLIDE GATE FRAMES, AND ALL OTHER PROJECT REQUIREMENTS.
4. THE CONTRACTOR SHALL FURNISH AND INSTALL ALL ANCHOR BOLTS, GROUT, CONCRETE PADS AND REINFORCING STEEL REQUIRED FOR THE PROPER INSTALLATION OF ALL EQUIPMENT.
5. NINE–INCH P.V.C. WATER STOPS SHALL BE PROVIDED IN ALL CONSTRUCTION AND EXPANSION JOINTS WHERE SHOWN ON THE DRAWINGS. (REFER TO DETAIL 3–3.25.1 IN APPENDIX B OF THE SPECIFICATIONS)
6. DIMENSIONS AND ELEVATIONS SHOWN ON EXISTING STRUCTURES HAVE BEEN OBTAINED FROM CONTRACT DRAWINGS. THE CONTRACTOR SHALL BE RESPONSIBLE FOR VERIFYING WITH FIELD MEASUREMENTS. ALL DIMENSIONS AND ELEVATIONS WHICH WILL RELATE TO FABRICATION AND INSTALLATION OF ADDITIONS TO EXISTING STRUCTURES BEING MADE UNDER THIS CONTRACT.

FOUNDATION CONSTRUCTION:

1. FOUNDATION DESIGNS ARE BASED ON THE ALLOWABLE SOIL BEARING PRESSURES NOTED ON THE DRAWINGS.
2. PERCENT COMPACTION SHALL BE DEFINED AS THE RATIO OF THE FIELD DRY DENSITY AS DETERMINED BY A.S.T.M. D–1556 TO THE MAXIMUM DRY DENSITY DETERMINED BY A.S.T.M. D–1557.
3. ALL BACKFILL UNDER STRUCTURAL SLABS AND FOOTINGS SHALL BE COMPACTED TO 95 PERCENT OF MAXIMUM DENSITY.
4. ALL EMBANKMENTS AND BACKFILL SHALL BE COMPACTED TO 90 PERCENT UNLESS OTHERWISE STATED ON THE DRAWINGS.
5. THE CONTRACTOR SHALL NOT BACKFILL AGAINST WALLS TO BE LATERALLY SUPPORTED BY A FLOOR SLAB UNLESS TEMPORARY SUPPORT IS PROVIDED OR SLABS HAVE BEEN PLACED. BACKFILL AGAINST CANTILEVER WALLS SHALL NOT BE PLACED UNTIL THE CONCRETE HAS GAINED ITS 28 DAY STRENGTH.
6. FOR DETAILS OF BASE PREPARATION FOR FOUNDATIONS AND BACKFILL, SEE APPENDIX B OF THE SPECIFICATIONS. (REFER TO DETAIL 2–9.1.1 IN APPENDIX B OF THE SPECIFICATIONS.) ALL CONC. FOOTINGS, MATS OR SLABS SHALL BE UNDERLAIN WITH A 9 INCH BED OF 3/4" COARSE AGGREGATE.
7. ALL SUBGRADE STRUCTURAL ELEMENTS ARE DESIGNED FOR A LATERAL EARTH PRESSURE OF 90 PCF IN ADDITION, ALL SUBGRADE STRUCTURAL ELEMENTS ARE DESIGNED FOR A UNIFORM LATERAL PRESSURE OF 120 PSF TO APPROXIMATE LIVE LOAD SURCHARGE.
8. ALL EXTERIOR CONCRETE STAIRS, PLATFORMS, ETC. SHALL REST ON 2'–0" OF WELL COMPACTED SCREENED GRAVEL. COMPACT TO 95% DENSITY.

CONCRETE:

1. CONCRETE CONSTRUCTION AND REINFORCING BAR DETAILS SHALL CONFORM TO THE "BUILDING CODE REQUIREMENTS FOR REINFORCED" (ACI–318–83).
2. ALL STRUCTURAL CONCRETE (INCLUDING CONCRETE FILL) SHALL HAVE A MINIMUM COMPRESSIVE STRENGTH OF 4,000 LBS. PER SQ. INCH AT THE END OF 28 DAYS. CONCRETE UNDER FOUNDATIONS MAY BE 2,000 LBS. P.S.I. AT 28 DAYS.
3. REINFORCING SHALL BE GRADE 60, CONFORMING TO A.S.T.M. A615.
4. WELDED WIRE FABRIC SHALL CONFORM TO A.S.T.M. A185. LAP TWO SQUARES AT ALL SPLICES AND TIE AT 3–FOOT CENTERS.
5. CONCRETE FILL 2–INCHES OR MORE THICK SHALL BE REINFORCED WITH WELDED WIRE FABRIC SIZED IN ACCORDANCE WITH APPENDIX B OF THE SPECIFICATIONS, DETAIL 3–3.33.1.
6. UNLESS OTHERWISE INDICATED, ALL CONTINUOUS REINFORCEMENT SHALL HAVE CLASS "C" SPLICES AND SPLICES SHALL BE INCREASED AS REQUIRED FOR "TOP BAR" EFFECT. SEE REINFORCING–SPLICE TABLE ON SHEET S–43.

CONCRETE (CONT.):

7. LAP CONTINUOUS BEAM TOP BARS AT THE CENTER OF A SPAN; LAP CONTINUOUS BEAM BOTTOM BARS AT THE SUPPORT.
8. VERTICAL REINFORCEMENT IN COLUMN SPLICES SHALL BE LAPPED A MINIMUM OF 30 BAR DIAMETERS, UNLESS NOTED OTHERWISE.
9. PROVIDE BAR SUPPORTS, SPACERS AND ACCESSORIES RECOMMENDED IN THE "ACI DETAILING MANUAL" (PUBLICATION SP–66). ALL REINFORCEMENT DETAILING, LAP SPLICE, EMBEDMENT, ETC. SHALL CONFORM TO THIS SAME MANUAL. ALL ACCESSORIES SUCH AS SLAB CHAIRS IN CONTACT WITH EXPOSED SURFACES SHALL BE PLASTIC COATED.
10. FOR CONCRETE BEAMS AND GIRDERS DEEPER THAN 25–INCHES THE CONTRACTOR SHALL PROVIDE CONTINUOUS NO. 5 HORIZONTAL BARS AT NO MORE THAN 12–INCHES OF CENTERS ON EACH SIDE UNLESS OTHER DETAILS ARE INCLUDED IN THE BEAM SCHEDULE.
11. UNLESS OTHERWISE INDICATED, MAIN REINFORCING STEEL SHALL BE PLACED AND MAINTAINED AT THE MINIMUM CLEAR DISTANCE FROM SURFACE OF CONCRETE AS SHOWN IN DETAIL 3–3.1 OF APPENDIX B.
12. THE CONTRACTOR SHALL PROVIDE EXTRA BARS ALONG EACH SIDE OF OPENINGS AS SHOWN IN DETAIL 3–3.23.1 AND 3–3.23.2 OF APPENDIX B, OR AS SHOWN ON THE DRAWING.
    a. ROUGHEN CONCRETE SURFACE AT CONSTRUCTION JOINTS WHERE TAPERED KEYS ARE NOT INDICATED.
    b. ALL CONSTRUCTION JOINTS IN WALLS AND SLABS SHALL BE KEYED WHETHER INDICATED ON THE DRAWINGS OR NOT, SEE DETAIL 3–3.9.1 IN SPECIFICATIONS.
13. CONSTRUCTION JOINTS IN ADDITION TO THOSE SHOWN ON THE DRAWING SHALL BE APPROVED IN WRITING BY THE ENGINEER. NO CONSTRUCTION OR EXPANSION JOINTS TO BE OMITTED.
14. ALL REINFORCING SHALL BE CONTINUOUS THROUGH CONSTRUCTION JOINTS.
15. NON–SHRINK GROUT AS INDICATED ON THE PLANS SHALL BE NON–SHRINK, NON–METALLIC HAVING A MINIMUM COMPRESSIVE STRENGTH OF 5000 PSI AT THE END OF 28 DAYS.
16. VERTICAL CONSTRUCTION JOINTS IN WALLS SHALL BE LOCATED NO FURTHER APART THAN 24–FT., UNLESS SHOWN OTHERWISE ON PLANS.
17. CONSTRUCTION JOINTS IN FLOORS SHALL BE LOCATED NEAR THE MIDDLE OF THE SPANS OF SLABS, BEAMS AND GIRDERS. IF A BEAM INTERSECTS A GIRDER AT THIS POINT THE JOINT IN THE GIRDER SHALL BE OFFSET A DISTANCE EQUAL TO TWICE THE WIDTH OF THE BEAM. IN THIS CASE, PROVISION SHALL BE MADE FOR SHEAR BY THE USE OF INCLINED REINFORCEMENT (SEE DETAIL 3–3.20.1).
18. CONCRETE SHALL NOT BE PLACED IN BEAMS, GIRDERS, OR SLABS UNTIL THE CONCRETE IN THE SUPPORTING COLUMNS OR WALLS HAS OBTAINED ITS INITIAL SET.
19. SLABS AND BEAMS SHALL BE CAST MONOLITHICALLY UNLESS SHOWN OTHERWISE.
20. EXPOSED EDGES OF CONCRETE ELEMENTS SUCH AS COLUMNS, PILASTERS, BEAMS, CURBS AND EQUIPMENT PADS SHALL HAVE 3/4–INCH CHAMFER. CHAMFER WEIR WALLS 1/2–INCH ON THE WEIR PLATE SIDE.
21. CONCRETE FINISH: (SEE SPECIFICATIONS)
    a. THE TOP OF ALL TANK WALLS, WEIR WALLS, LAUNDER WALLS, WALKWAYS, FLOORS, ROOFS AND CONCRETE FILL SHALL BE STEEL TROWELED UNLESS OTHERWISE NOTED.
    b. TOP SURFACES RECEIVING ELASTOMERIC COATING SHALL BE WOOD FLOATED.
22. WHERE CONCRETE FILL IS INDICATED IN STRUCTURES WITH SLUICE GATES, A POCKET SHALL BE LEFT FOR THE INSTALLATION OF THE SLUICE GATE FRAME. POCKET TO BE FILLED WITH BITUMINOUS CONCRETE AFTER INSTALLATION OF SLUICE GATE.
23. CONSTRUCTION JOINTS IN FILL SHALL NOT BE SPACED MORE THAN 30 FEET APART. THEY SHALL BE LOCATED DIRECTLY OVER CONSTRUCTION JOINTS IN STRUCTURAL SLABS, BEAMS, ETC., UNLESS NOTED OTHERWISE.
24. BEAM SOFFITS SHALL MAINTAIN A CONSTANT ELEVATION BELOW THE LOW POINTS NOTED EQUAL TO THE SCHEDULED BEAM DEPTHS. ACTUAL BEAM DEPTHS VARY WITH SLAB SURFACE SLOPES, TYPICAL UNLESS NOTED OTHERWISE.
25. FOR ALL MAT FOUNDATION SLABS (BASE SLABS) LAP CONTINUOUS TOP BARS AT A SUPPORT; LAP CONTINUOUS BOTTOM BARS AT THE CENTER OF A SPAN UNLESS NOTED OTHERWISE.

ALUMINUM:

1. STRUCTURAL ALUMINUM SHALL BE ALLOY 6061–T6 AND SHALL BE DETAILED AND FABRICATED IN ACCORDANCE WITH THE LATEST "SPECIFICATION FOR STRUCTURES OF ALUMINUM ALLOY 6061–T6" PUBLISHED BY A.S.C.E..
2. FIELD CONNECTION, UNLESS NOTED SPECIFICALLY, SHALL BE MADE WITH TYPE 316 STAINLESS STEEL BOLTS.
3. ALUMINUM IN CONTACT WITH CONCRETE SHALL BE PAINTED WITH ASPHALTIC PAINT.
4. PROVIDE DISSIMILAR METAL PROTECTION AT ALL BOLT LOCATION AND OTHER LOCATIONS WHERE THE CONDITION EXISTS. THE PROTECTION SHALL CONSIST OF A ZINC CHROMATE PRIMER ON THE ALUMINUM SURFACE. A COAT OF METAL PRIMING PAINT SHALL BE APPLIED TO THE DISSIMILAR METAL.

CONCRETE ANCHORS:

ANCHORS SHALL CONFORM TO THE REQUIREMENTS OF ANSI/ASTM STANDARD TEST METHODS FOR STRENGTH OF ANCHORS IN CONCRETE AND MASONRY ELEMENTS, DESIGNATION E488–76. THEY SHALL BE INSTALLED SO AS TO DEVELOP THE MAXIMUM PROVEN CAPACITY FOR THEIR TYPE AND SIZE, OR THE CAPACITY SHOWN ON THE DRAWINGS WITH A MINIMUM FACTOR OF SAFETY OF FOUR. INSTALLATION SHALL BE MADE WITH STRICT ADHERENCE TO THE MANUFACTURER'S RECOMMENDATIONS. ALL ANCHORS HAVE STANDARD U.S. THREADS (UNC).

1. STUD TYPE ANCHORS SHALL BE MADE OF TYPE 316 STAINLESS STEEL. EACH ANCHOR SHALL BE PROVIDED WITH A TYPE 316 STAINLESS STEEL NUT AND WASHER OF THE PROPER SIZE. ANCHORS SHALL BE PARABOLT MADE BY USM CORP., TEMPLE PA; KWIK–BOLT MADE BY HILTI FASTENING SYSTEMS, STAMFORD, CT; OR WEDGE TYPE STUD BOLT ANCHOR MADE BY STAR EXPANSION INDUSTRIES CORP., MOUNTAINVILLE, NY. OR APPROVED EQUAL.
2. INTERNALLY THREADED TYPE ANCHORS SHALL BE MADE FROM HIGH–STRENGTH STEEL WITH A RUST RESISTANT COATING. EACH ANCHOR SHALL BE PROVIDED WITH A TYPE 316 STAINLESS STEEL WASHER AND BOLT OF THE PROPER SIZE AND LENGTH UNLESS NOTED OTHERWISE ON THE DRAWINGS. ANCHORS MAY BE SELFDRILLING OR DROP–IN TYPE; SELFDRILL SHIELD OR PLUG TYPE MADE BY STAR EXPANSION INDUSTRIES CORP., MOUNTAINVILLE, NY; HDI DROP–IN ANCHORS MADE BY HILTI FASTENING SYSTEM, STAMFORD, CT; MULTI–SET OR SELFDRILLING ANCHORS MADE BY ITT PHILLIPS DRILL DIVISION, MICHIGAN CITY, IN. OR APPROVED EQUAL.

STRUCTURAL STEEL:

1. ALL STRUCTURAL STEEL SHALL BE A.S.T.M. A36 AND SHALL BE DETAILED AND ERECTED IN ACCORDANCE WITH THE A.I.S.C. "SPECIFICATION FOR THE DESIGN FABRICATION AND ERECTION OF STEEL FOR BUILDINGS". DATED NOVEMBER 1, 1978 WITH COMMENTARY.
2. SHOP AND FIELD WELDING SHALL BE IN ACCORDANCE WITH THE "STRUCTURAL WELDING CODE" OF THE AMERICAN WELDING SOCIETY. FIELD WELDING OF STRUCTURAL MEMBERS, NOT SHOWN ON THE DRAWINGS, SHALL BE ALLOWED ONLY UPON SPECIFIC WRITTEN PERMISSION OF THE ENGINEER.
3. FIELD CONNECTIONS SHALL BE MADE WITH 3/4" DIA. A–325N HIGH–STRENGTH BOLTS UNLESS OTHERWISE NOTED. ONE HARDENED WASHER SHALL BE INSTALLED UNDER THE ELEMENT TURNED IN TIGHTENING. A MINIMUM OF TWO BOLTS SHALL BE USED AT ALL CONNECTIONS. MINIMUM CENTER TO CENTER BOLT SPACING SHALL BE 3" UNLESS NOTED OTHERWISE.
4. SHOP CONNECTIONS SHALL BE WELDED UNLESS OTHERWISE NOTED. ALL WELDING ELECTRODES SHALL BE E70XX.
5. THE CONTRACTOR SHALL FURNISH AND INSTALL ONE WASHER AND ONE HEX NUT WITH ALL ANCHOR BOLTS, UNLESS OTHERWISE NOTED.
6. PROVIDE TEMPORARY TIES AND BRACING WHERE NECESSARY DURING CONSTRUCTION TO RESIST ALL LATERAL AND VERTICAL LOADS.
7. ELEVATIONS OF TOP OF STEEL NOTED ON THE DRAWINGS REFER TO TOP OF FLANGE.
8. WELDING SHALL CONFORM TO AWS D1.1. ALL WELDMENTS SHALL BE MADE BY QUALIFIED WELDERS.

STRUCTURAL ABBREVIATIONS

AB	ANCHOR BOLT	LNTL	LINTEL
ANR	ANCHOR	LONG	LONGITUDINAL
AL	ALUMINUM	LP	LOW POINT
ALTN	ALTERNATE	MAX	MAXIMUM
APVD	APPROVED	MB	MACHINE BOLTS
BOT	BOTTOM	MFR	MANUFACTURER
BF	BOTTOM FACE	MIN	MINIMUM
BM	BEAM	NIC	NOT IN CONTRACT
BRG	BEARING	NTS	NOT TO SCALE
C TO C	CENTER TO CENTER	OC	ON CENTER
CJ	CONSTRUCTION JOINT	OF	OUTSIDE FACE
C, ℄	CENTERLINE	O TO O	OUT TO OUT
CIP	CAST–IN–PLACE	OPNG	OPENING
CLR	CLEARANCE	PJF	PREMOLDED JOINT FILLER
CMU	CONCRETE MASONRY UNIT	PL	PLATE
COL	COLUMN	PRCST	PRECAST
CONC	CONCRETE	PLYWD	PLYWOOD
CONN	CONNECTION	P	PILASTER
CONT	CONTINUOUS	RC	REINFORCED CONCRETE
CTR	CENTER	REINF	REINFORCED
DBA	DEFORMED BAR ANCHOR	RST	REINFORCING STEEL
DIA, DIAM	DIAMETER	SIM	SIMILAR
DIR	DIRECTION	SPECS	SPECIFICATIONS
DP	DEEP	SQ	SQUARE
DWG	DRAWING	STD	STANDARD
DWL	DOWEL	STIF	STIFFENER
EA	EACH	STL	STEEL
EF	EACH FACE	STR	STRAIGHT
EL	ELEVATION	STRUCT	STRUCTURES
EQL SP	EQUALLY SPACED	SYMM	SYMMETRICAL
EW	EACH WAY	T & B	TOP AND BOTTOM
EXP JT	EXPANSION JOINT	TOC	TOP OF CONCRETE
EXST	EXISTING	TF	TOP FACE
FD	FLOOR DRAIN	THK	THICK
FDN	FOUNDATION	THR	THREADED
FG	FINISH GRADE	TRANSV	TRANSVERSE
FTG	FOOTING	TOS	TOP OF STEEL
GALV	GALVANIZE (HOT DIP)	TW	TOP OF WALL
GVL	GRAVEL	TYP	TYPICAL
HAS	HEADED ANCHOR STUD	UNO	UNLESS NOTED OTHERWISE
HDR	HEADER	U/S	UNDERSIDE
HORIZ	HORIZONTAL	VERT	VERTICAL
HP	HIGH POINT	WWF	WELDED WIRE FABRIC
IF	INSIDE FACE	WS	WATER STOP OR WATER SURFACE

NOTE:
FOR ABBREVIATIONS NOT LISTED, SEE "ABBREVIATIONS FOR USE ON DRAWINGS AND TEXT", PUBLISHED BY THE AMERICAN NATIONAL STANDARDS INSTITUTE, INC. (ANSI)

GENERAL LEGEND:

EXISTING FACILITIES

NEW CONSTRUCTION

CONCRETE AND OTHER ITEMS TO BE REMOVED OR DEMOLISHED

* DENOTES DIMENSIONS, ELEVATIONS AND LOCATIONS TO BE VERIFIED OR DETERMINED AFTER FINAL SELECTION OF EQUIPMENT.

1 / S–1 — SECTION NO./SHEET NO. WHERE SHOWN

SECTION 1 / S–1 — SECTION NO./SHEET NO. WHERE TAKEN

DEPARTMENT OF PUBLIC WORKS
HOWARD COUNTY, MARYLAND

DIRECTOR OF PUBLIC WORKS — DATE 3/6/92 — A.C.T. CHIEF, BUREAU OF ENGINEERING — DATE 3-6-92
CHIEF, BUREAU OF ENVIRONMENTAL SERVICES — DATE 3/6/92 — A.C.T. CHIEF, UTILITY DESIGN DIVISION — DATE 3-6-92

Metcalf & Eddy
REG. PROF. ENGR. — DATE 3/6/92

STATE OF MARYLAND — JONATHAN WINTHROP DONAIS No. 15140 — REGISTERED PROFESSIONAL ENGINEER

DES: M. Yu
DRN: E. Bueneth
CHK: M. Yu
DATE: 12/7/91

BY	NO.	REVISION	DATE
RJC	2	RECORD DRAWING SEE SUPPLIMENTAL SHT. S-14	11/1/94
	1	REVISED FOR BIDDING	3/5/92

STRUCTURAL

GENERAL NOTES, ABBREVIATIONS, AND LEGEND

LITTLE PATUXENT WASTEWATER TREATMENT PLANT
LITTLE PATUXENT WASTEWATER TREATMENT PLANT EXPANSION
ADDITION NO. 5
CAPITAL PROJECT S - 6153
CONTRACT NO. 20 - 3082
HOWARD COUNTY, MARYLAND

SCALE AS SHOWN
SHEET 48 OF 226
S–1

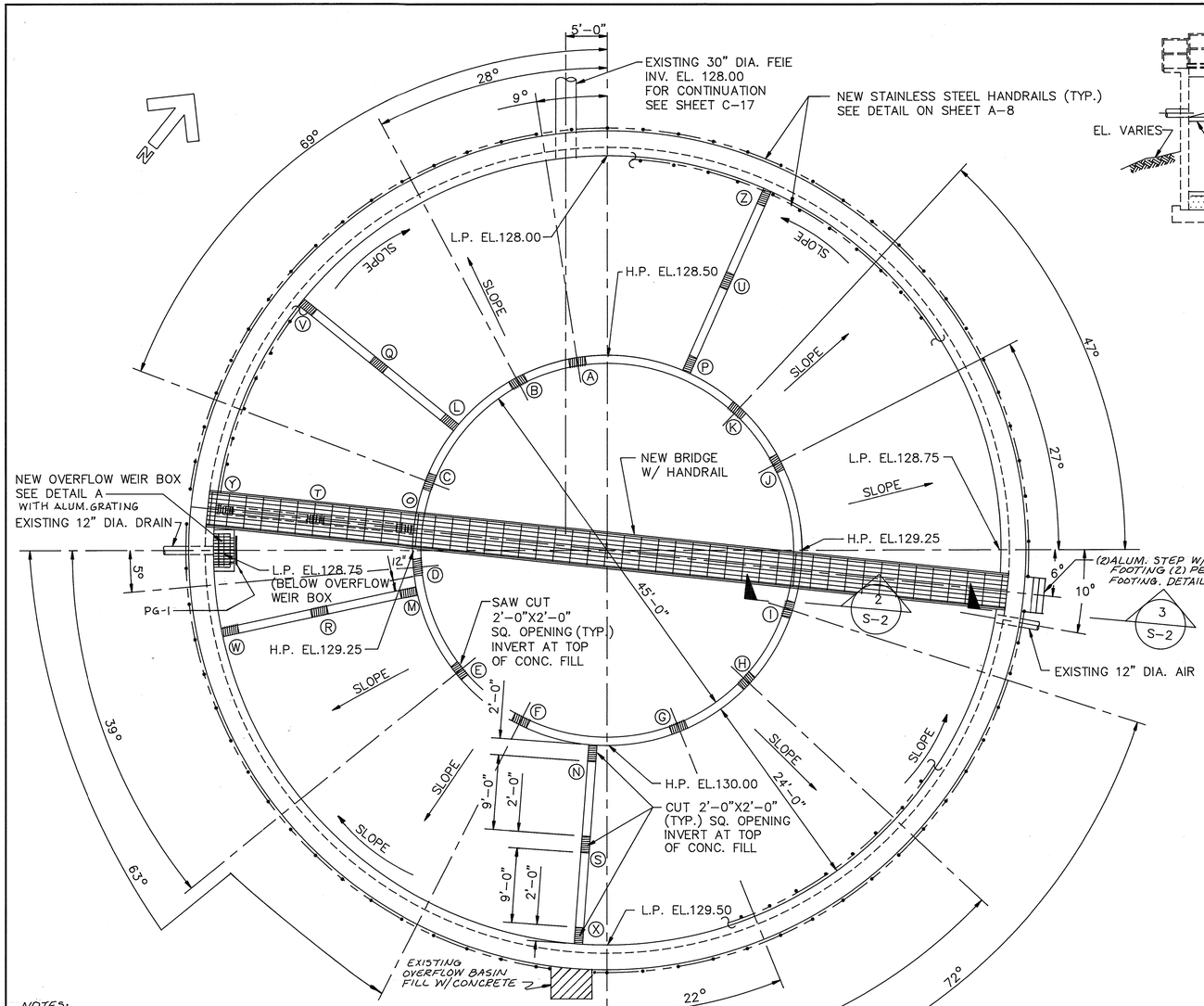

PLAN

SCALE: 1/8"=1'-0"

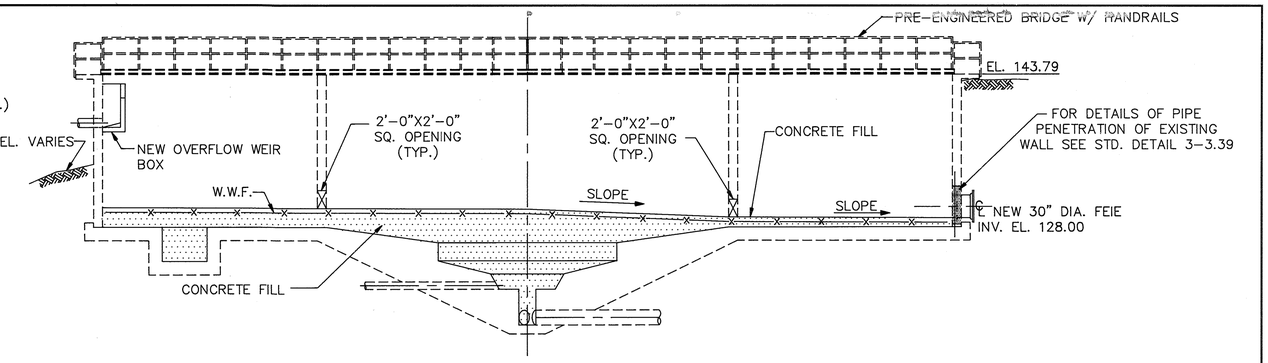

TYPICAL SECTION

SCALE: 1/8"=1'-0"

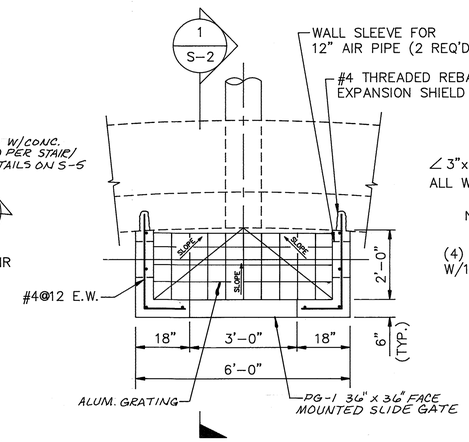

DETAIL A

NEW OVERFLOW WEIR BOX
SCALE: 1/2"=1'-0"

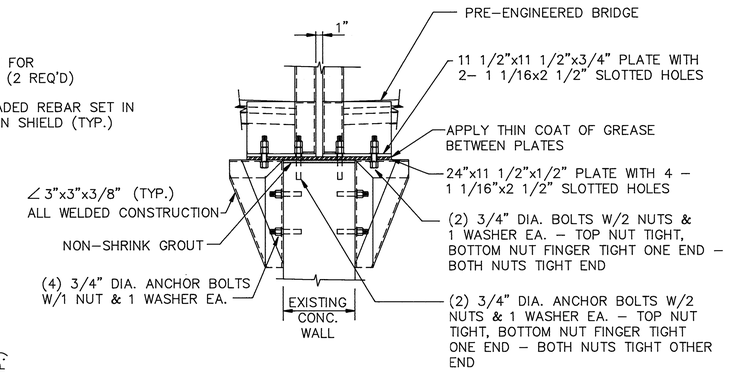

NOTE: SECTION TYPICAL FOR 4 LOCATIONS
(SEE NOTE 3)

SECTION 2 / S-2

SCALE: 1"=1'-0"

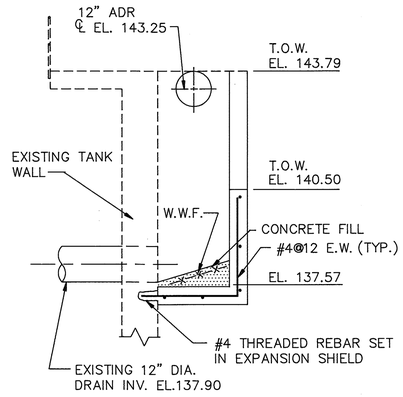

NOTE: OPENING FOR 12" DIA. AIR HEADER NOT SHOWN.
SEE SHEET M-5

SECTION 1 / S-2

SCALE: 1/2"=1'-0"

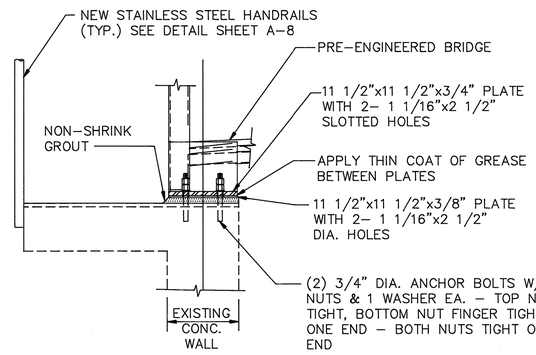

NOTE: SECTION TYPICAL FOR 4 LOCATIONS
(SEE NOTE 3)

SECTION 3 / S-2

SCALE: 1"=1'-0"

NOTES:

1. CONTRACTOR TO REMOVE ALL VEGETATION & SOILS FROM INSIDE THE TANK PRIOR TO POURING CONCRETE FILL & CUTTING WALL OPENINGS.
2. TYPICAL DETAILS TO BE FOUND IN SPECIFICATIONS APPENDIX "B".
3. BRACE SUPPORT BASED ON INFORMATION SUPPLIED BY CONTINENTAL BRIDGE, ALEXANDRIA, MN.
4. ⚠ ALTERNATE DESIGNS TO BE SUBMITTED FOR APPROVAL BY ENGINEER.
5. ALL EXISTING WALL OPENINGS REMAINING AFTER DEMOLITION SHALL HAVE EXPOSED METAL EPOXY COATED & BE FILLED WITH NON-SHRINK GROUT AS SPECIFIED IN GENERAL NOTE 15 ON DWG. S-1.
6. ⚠ THE NEW BRIDGE W/HANDRAIL SHALL BE 4'-0" WIDE WITH SUFFICIENT SPAN TO BRIDGE THE TANK FROM EXTERIOR WALL TO EXTERIOR WALL. BRIDGE MAY BE SEGMENTED INTO NO MORE THAN THREE SECTIONS CORRESPONDING TO THE EXISTING INTERNAL WALLS & SHALL BE DESIGNED FOR A MINIMUM UNIFORM LIVE LOAD OF 100 P.S.I.. BRIDGE SHALL BE FLAT WITH ONLY ENOUGH CAMBER TO OFFSET THE FULL DEAD LOAD DEFLECTION. THE HAND RAIL SHALL BE 3'-6" ABOVE THE DECK. CONSTRUCTION SHALL BE FABRICATED USING ASTM-A-500 GRADE C (FY EQUALS 50,000 PSI.) STRUCTURAL TUBING IN ACCORDANCE WITH (ANSI/AWS D1.1-8 CHAPTER 10). BOLTS SHALL BE ASTM-A-325, TYPE 3, HIGH STRENGTH BOLTS AT SPLICES. DECKING SHALL BE ALUMINUM GRATING AS SPECIFIED ELSEWHERE IN THE SPECIFICATIONS. PROVIDE CONTINUOUS TOE PLATE & CONTINUOUS LIFE SAFETY RAILS WITH MAXIMUM CLEAR OPENINGS OF 8". PREPARE ALL EXTERIOR SURFACES WITH NUMBER 6 COMMERCIAL BLAST CLEANING, SSPC-SP 6-63 & COAT WITH PRIMER & TWO FINISH COATS. BRIDGE MANUFACTURER SHALL REVIEW & APPROVE FOUNDATION DESIGN PRIOR TO INSTALLATION. WRITTEN CERTIFICATION SHALL BE PROVIDED.

AS BUILT ELEVATIONS

PENETRATION	INV. EL.	PENETRATION	INV. EL.
A	128.37	O	128.88
B	128.48	P	128.52
C	128.84	Q	128.34
D	128.99	R	128.90
E	129.25	S	129.75
F	129.55	T	128.70
G	129.67	U	128.22
H	129.46	V	128.00
I	129.24	W	128.59
J	128.79	X	129.47
K	128.69	Y	128.50
L	128.71	Z	128.15
M	128.90		
N	130.00		

Record Drawing Notes:
1. **All elevations should be field verified before using**
2. **Weir and water elevations based on post-construction survey by Howard County.**

DEPARTMENT OF PUBLIC WORKS
HOWARD COUNTY, MARYLAND

DIRECTOR OF PUBLIC WORKS — DATE 3/6/92 — ACT. CHIEF, BUREAU OF ENGINEERING — DATE 3-6-92
CHIEF, BUREAU OF ENVIRONMENTAL SERVICES — DATE 3/6/92 — ACT. CHIEF, UTILITY DESIGN DIVISION — DATE 3-6-92

M&E Metcalf & Eddy

REG. PROF. ENGR. — DATE 3/6/92

STATE OF MARYLAND — JONATHAN WINTHROP DOANE — No. 15140 — REGISTERED PROFESSIONAL ENGINEER

DES: D. Colson
DRN: E. Burnett
CHK: J. Havey
DATE: 12/7/91

BY	NO.	REVISION	DATE
M.C.	4	RECORD DRAWING	
DZG	3	ADDENDUM #5	4/10/92
DZG	2	ADDENDUM #2	4/10/92
	1	REVISED FOR BIDDING	3/5/92

STRUCTURAL

FLOW EQUALIZATION BASIN NO.3
MODIFICATIONS
PLAN, SECTIONS & DETAIL

LITTLE PATUXENT WASTEWATER TREATMENT PLANT

LITTLE PATUXENT WASTEWATER TREATMENT PLANT EXPANSION
ADDITION NO. 5
CAPITAL PROJECT S-6153

CONTRACT NO. 20-3082
HOWARD COUNTY, MARYLAND

SCALE AS SHOWN
SHEET 49 OF 226
S-2

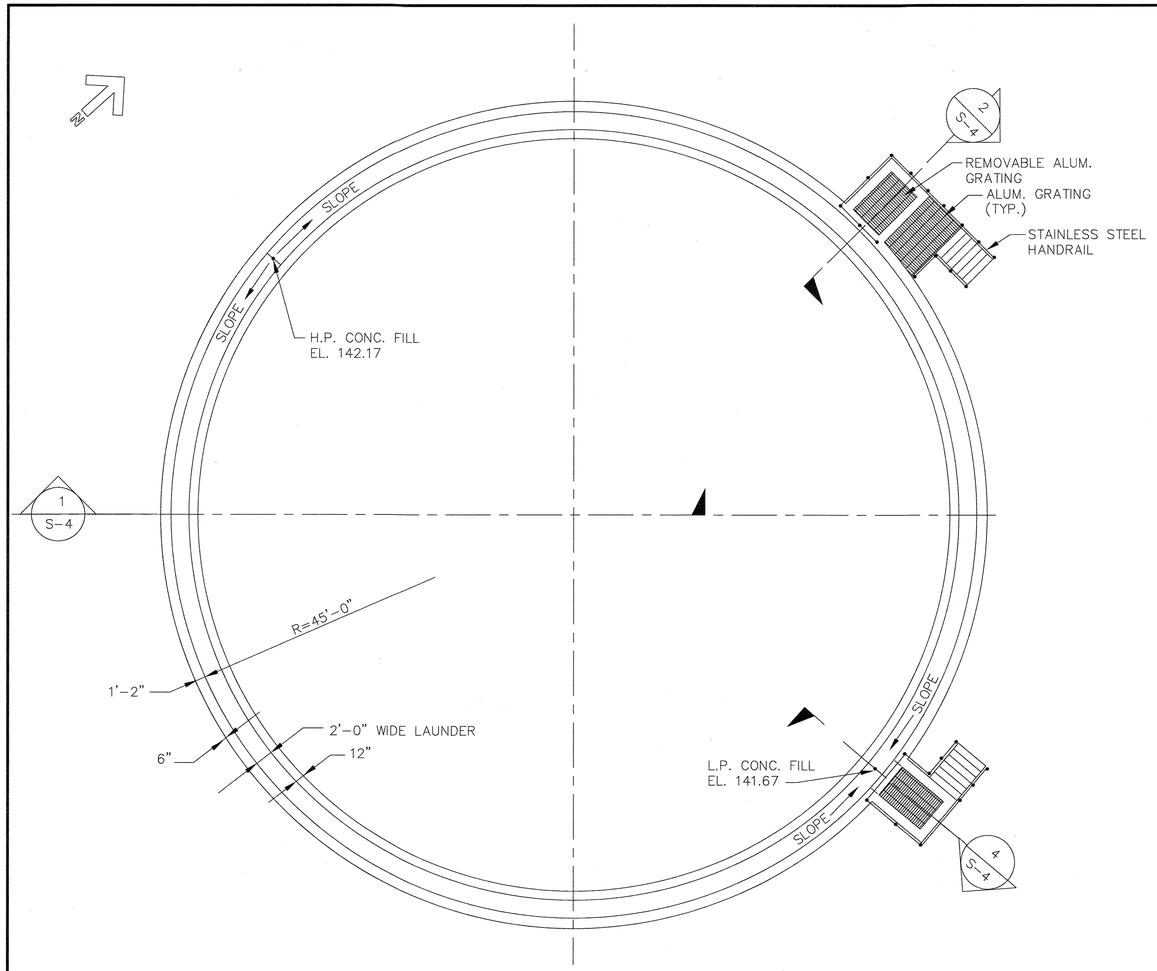

TOP PLAN

SCALE: 1/8"=1'-0"

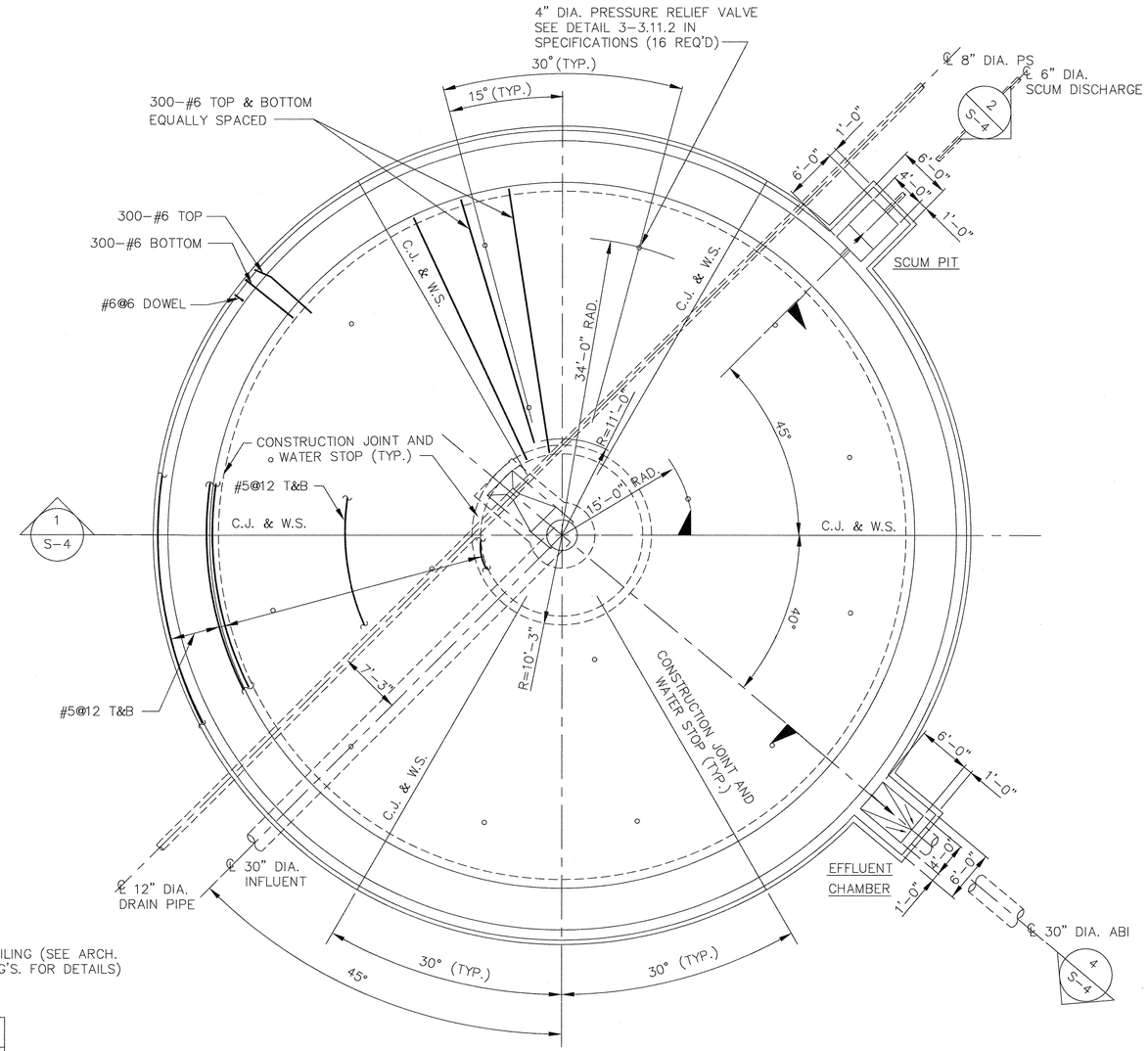

BOTTOM PLAN

SCALE: 1/8"=1'-0"

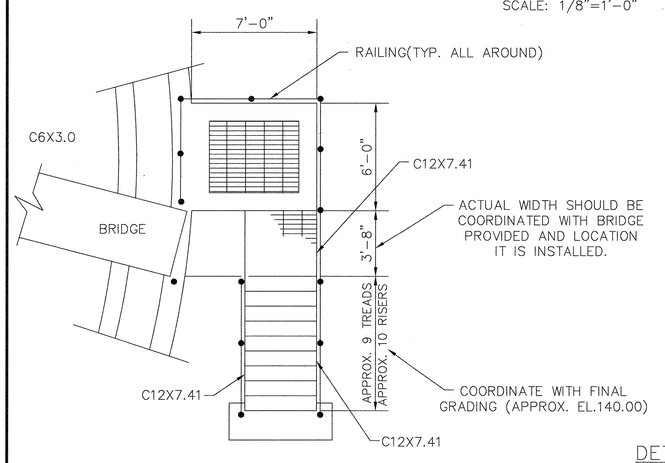

DETAIL "A"

SCALE: NONE

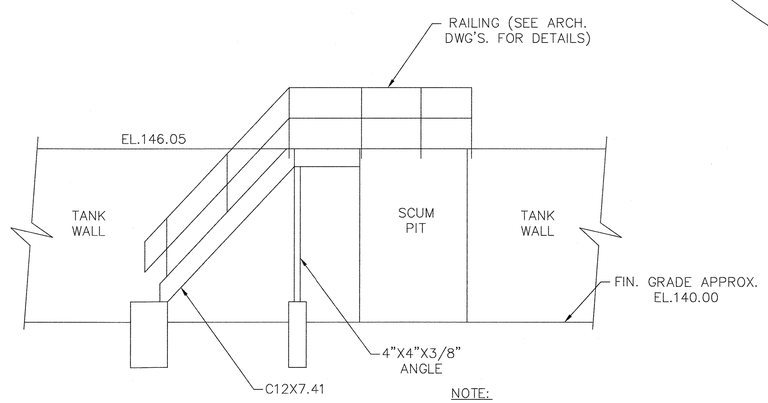

NOTE:

SEE ATTACHMENTS K-1 THRU K-3 OF ADDENDUM NO. 3 FOR CONNECTION DETAILS AND FOOTING DETAILS.

NOTES:

1. TYPICAL DETAILS TO BE FOUND IN SPECIFICATIONS APPENDIX "B".
2. FOUNDATIONS BASED UPON AN ALLOWABLE SOIL BEARING PRESSURE OF 2,000 LBS. PER SQ. FOOT.
3. DESIGN LIVE LOADS:
   a.) ALUMINUM GRATING: 100 PSF
   b.) WASTEWATER: 63 PCF
4. CENTER COLUMN ATTACHMENT PER EQUIPMENT SHOP DRAWINGS.
5. (2) THE HALF SPAN WALKWAY AND HANDRAIL THAT IS TO BE PROVIDED FOR CLARIFIER NO. 2 IS NOT SHOWN ON THE PLAN VIEW. PROVIDE AS SHOWN ON SHEET M-7 AND AS SPECIFIED.

DEPARTMENT OF PUBLIC WORKS
HOWARD COUNTY, MARYLAND

DIRECTOR OF PUBLIC WORKS — DATE 5/7/96
CHIEF, BUREAU OF ENGINEERING — DATE 5/7/96
CHIEF, BUREAU OF ENVIRONMENTAL SERVICES — DATE 5/7/96
CHIEF, UTILITY DESIGN DIVISION — DATE 5-7-96

M&E Metcalf & Eddy
REG. PROF. ENGR. — DATE 5-7-96

STATE OF MARYLAND — JONATHAN WINTHROP DOANE No. 15140 — REGISTERED PROFESSIONAL ENGINEER

DES: DR
DRN: EB
CHK:
DATE:

BY	NO.	REVISION	DATE
MB	1	REVISE FOR BIDDING	3/5/92
MJC	2	RECORD DRAWING	3/5/94

STRUCTURAL

PRIMARY CLARIFIER NO. 2
PLAN

LITTLE PATUXENT WASTEWATER TREATMENT PLANT

LITTLE PATUXENT WASTEWATER TREATMENT EXPANSION
ADDITION NO. 5
CAPITAL PROJECT S-6153

CONTRACT NO. 20-3082

HOWARD COUNTY, MARYLAND

SCALE AS SHOWN

SHEET 50 OF 226

S-3A

FILE-NO.

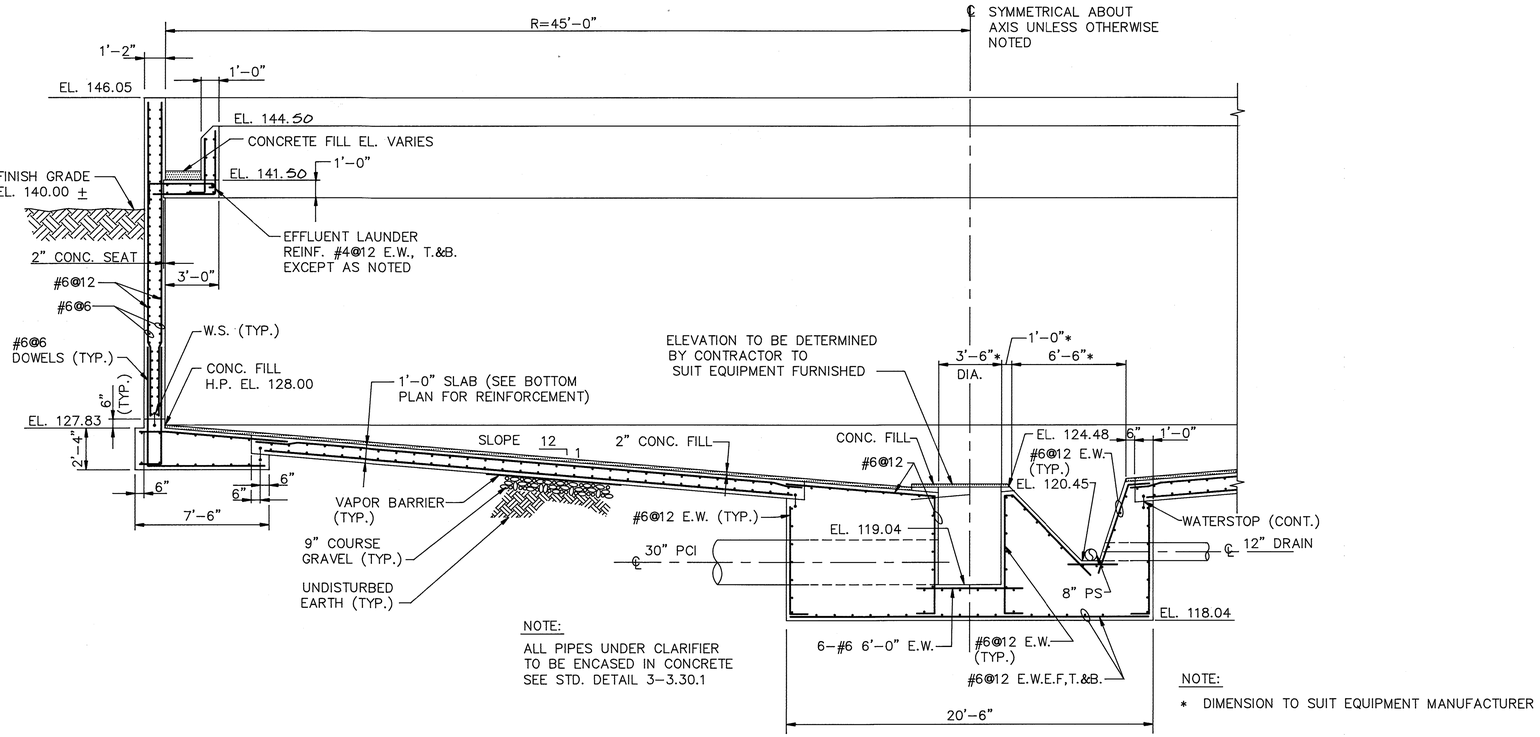

NOTE:
ALL PIPES UNDER CLARIFIER TO BE ENCASED IN CONCRETE SEE STD. DETAIL 3-3.30.1

NOTE:
* DIMENSION TO SUIT EQUIPMENT MANUFACTURER

SECTION 1 / S-3
SCALE: 1/4"=1'-0"

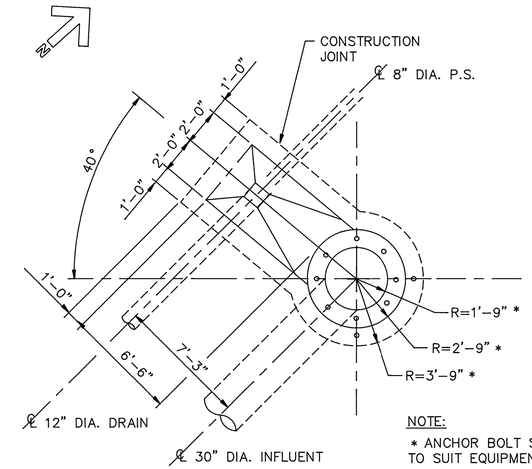

NOTE:
* ANCHOR BOLT SIZE AND LOACATION TO SUIT EQUIPMENT FURNISHED.

PARTIAL PLAN FOR
PRIMARY CLARIFIER NO. 2 CENTER PIER
SCALE: 1/4"=1'-0"

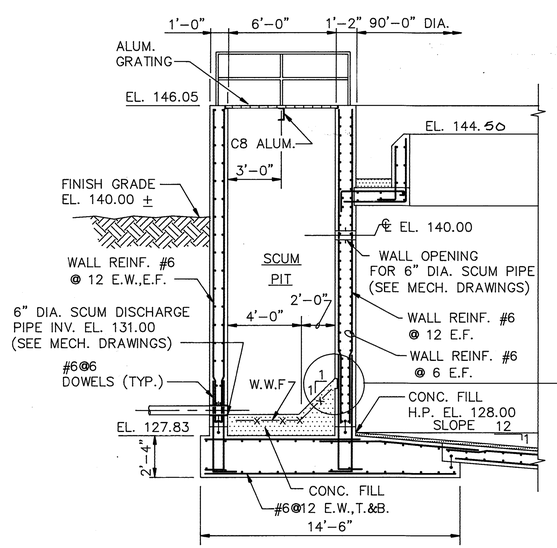

SECTION 2 / S-3
SCALE: 1/4"=1'-0"

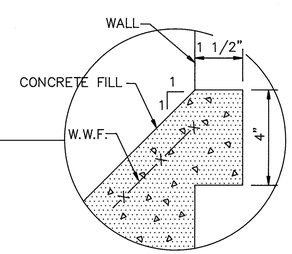

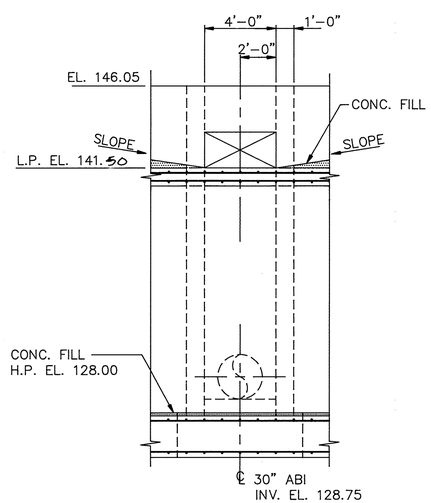

SECTION 3 / S-4
SCALE: 1/4"=1'-0"

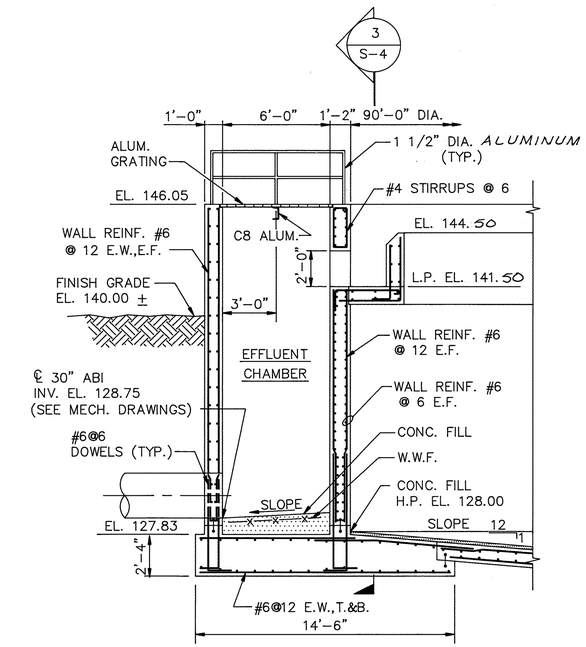

NOTE:
FOR TOP & BOTTOM STAIR LANDINGS SEE SHEET S-5.

SECTION 4 / S-3
SCALE: 1/4"=1'-0"

Record Drawing Notes:
1. **All elevations should be field verified before using.**
2. **Weir and water elevations based on post-construction survey by Howard County.**

DEPARTMENT OF PUBLIC WORKS
HOWARD COUNTY, MARYLAND

DIRECTOR OF PUBLIC WORKS	DATE 3/6/92	ACT. CHIEF, BUREAU OF ENGINEERING	DATE 3-6-92
CHIEF, BUREAU OF ENVIRONMENTAL SERVICES	DATE 3/6/92	ACT. CHIEF, UTILITY DESIGN DIVISION	DATE 3-6-92

Metcalf & Eddy

REG. PROF. ENGR. — DATE 3/6/92

STATE OF MARYLAND — JONATHAN WINTHROP DOANE No. 15140 — REGISTERED PROFESSIONAL ENGINEER

DES: D. Colson
DRN: E. Burnett
CHK: M. Yu
DATE: 12/7/91

BY	NO.	REVISION	DATE
	2	RECORD DRAWING	10/14/92
	1	REVISED FOR BIDDING	3/5/92

STRUCTURAL

PRIMARY CLARIFIER SECTIONS

LITTLE PATUXENT WASTEWATER TREATMENT PLANT

LITTLE PATUXENT WASTEWATER TREATMENT PLANT EXPANSION
ADDITION NO. 5
CAPITAL PROJECT S - 6153

CONTRACT NO. 20 - 3082
HOWARD COUNTY, MARYLAND

SCALE AS SHOWN
SHEET 51 OF 226
S-4

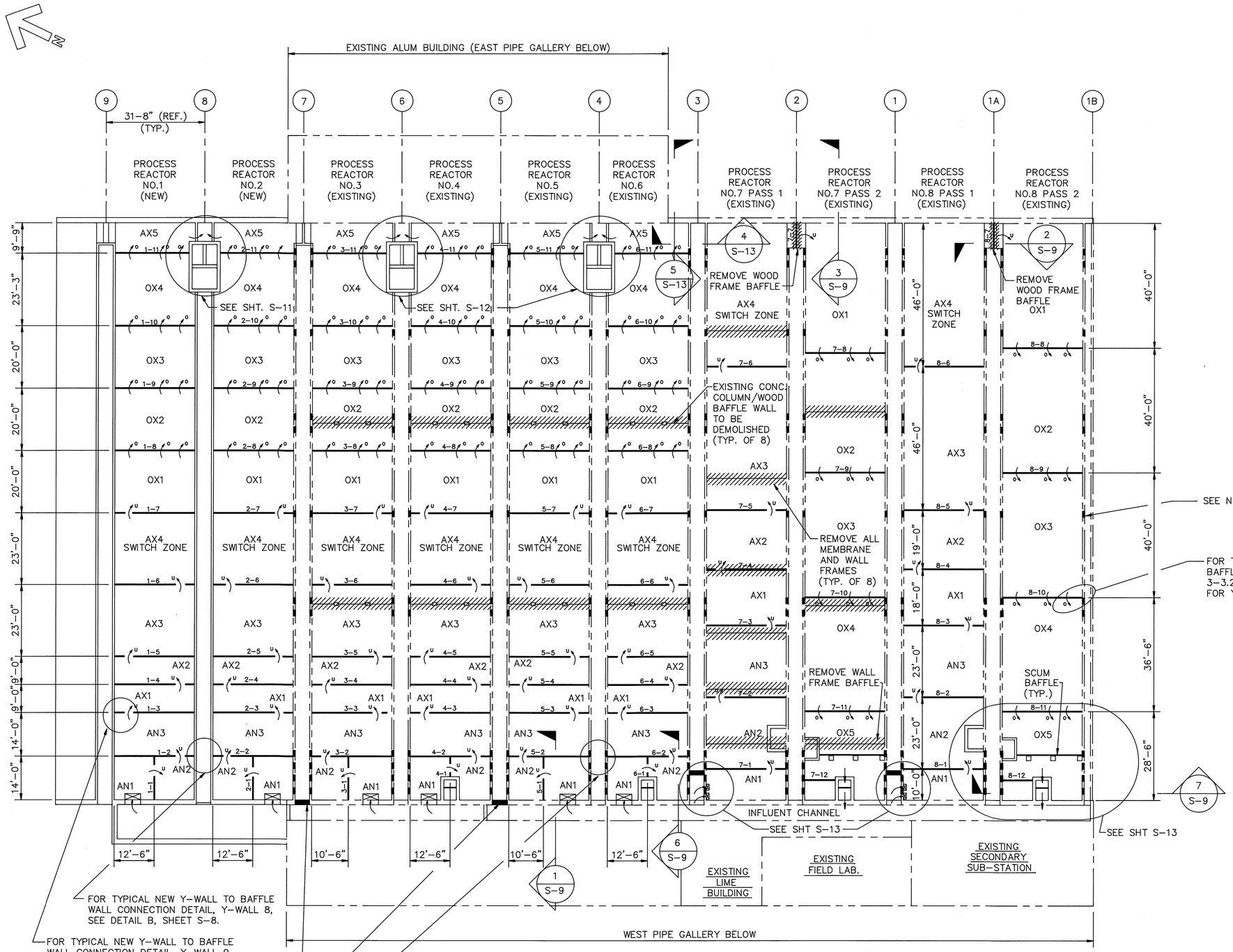

PLAN
SCALE: 1/16"=1'-0"

NOTES:

1. SEE BAFFLE SCHEDULE SHEET M-10.
2. FOR NEW PROCESS REACTORS 1 & 2 STRUCTURAL. SEE SHEETS S-6 THROUGH S-11.
3. FOR STRUCTURAL MODIFICATIONS TO PROCESS REACTORS 3,4,5 & 6, SEE SHEET S-12.
4. FOR STRUCTURAL MODIFICATIONS TO PROCESS REACTORS 7 & 8, SEE SHEET S-13.
5. SEE SECTION 1/S-6 ON SHEET S-8 FOR EXISTING BAFFLE DEMOLITION.
6. SEE DETAIL A SHEET S-8 FOR CONCRETE COLUMN CUTOFF DETAIL.
7. BAFFLE LOCATION DIMENSIONS ARE SHOWN TO CENTERLINES OF BAFFLES.
8. AFTER REMOVAL OF EXISTING BAFFLE AND FRAMES IN PR-7, CUT ALL FASTENING BOLTS BACK TO 1" BELOW SURFACE AND REPAIR CONCRETE FLUSH TO EXISTING SURFACE WITH NON-SHRINK GROUT.
9. FOR OTHER MECHANICAL AND STRUCTURAL DEMOLITION SEE M-14, M-19 AND REFERENCED PLANS AND SECTIONS.
10. ▌ DENOTES EXISTING STOP PLATES IN Y-WALLS TO BE REMOVED AND REPAIRED BY FILLING OPENINGS W/ CONCRETE. SEE SHEET S-7 FOR ADDITIONAL INFORMATION.

LEGEND:

- DENOTES NEW TANK
- BAFFLE WALL
- DENOTES EXISTING TANK
- OVERFLOW BAFFLE OPENING
- UNDERFLOW BAFFLE OPENING

DEPARTMENT OF PUBLIC WORKS
HOWARD COUNTY, MARYLAND

DIRECTOR OF PUBLIC WORKS — DATE 3/6/92
ACT. CHIEF, BUREAU OF ENGINEERING — DATE 3-6-92
CHIEF, BUREAU OF ENVIRONMENTAL SERVICES — DATE 3/6/92
ACT. CHIEF, UTILITY DESIGN DIVISION — DATE 3-6-92

Metcalf & Eddy
REG. PROF. ENGR. — DATE 3/6/92

STATE OF MARYLAND — JONATHAN WINTHROP DOANE No. 15140 — REGISTERED PROFESSIONAL ENGINEER

DES: J. HAVEY
DRN: E Burnett
CHK: HAVEY
DATE: 12/7/91

BY	NO.	REVISION	DATE
AC	2	RECORD DRAWING SEE SUPPLIMENTAL SHT. S-5A-1	11/1/94
	1	REVISED FOR BIDDING	3/6/92

STRUCTURAL
PROCESS REACTORS GENERAL PLAN

LITTLE PATUXENT WASTEWATER TREATMENT PLANT
LITTLE PATUXENT WASTEWATER TREATMENT PLANT EXPANSION ADDITION NO. 5
CAPITAL PROJECT S - 6153
CONTRACT NO. 20 - 3082
HOWARD COUNTY, MARYLAND

SCALE AS SHOWN
SHEET 53 OF 226
S-5A

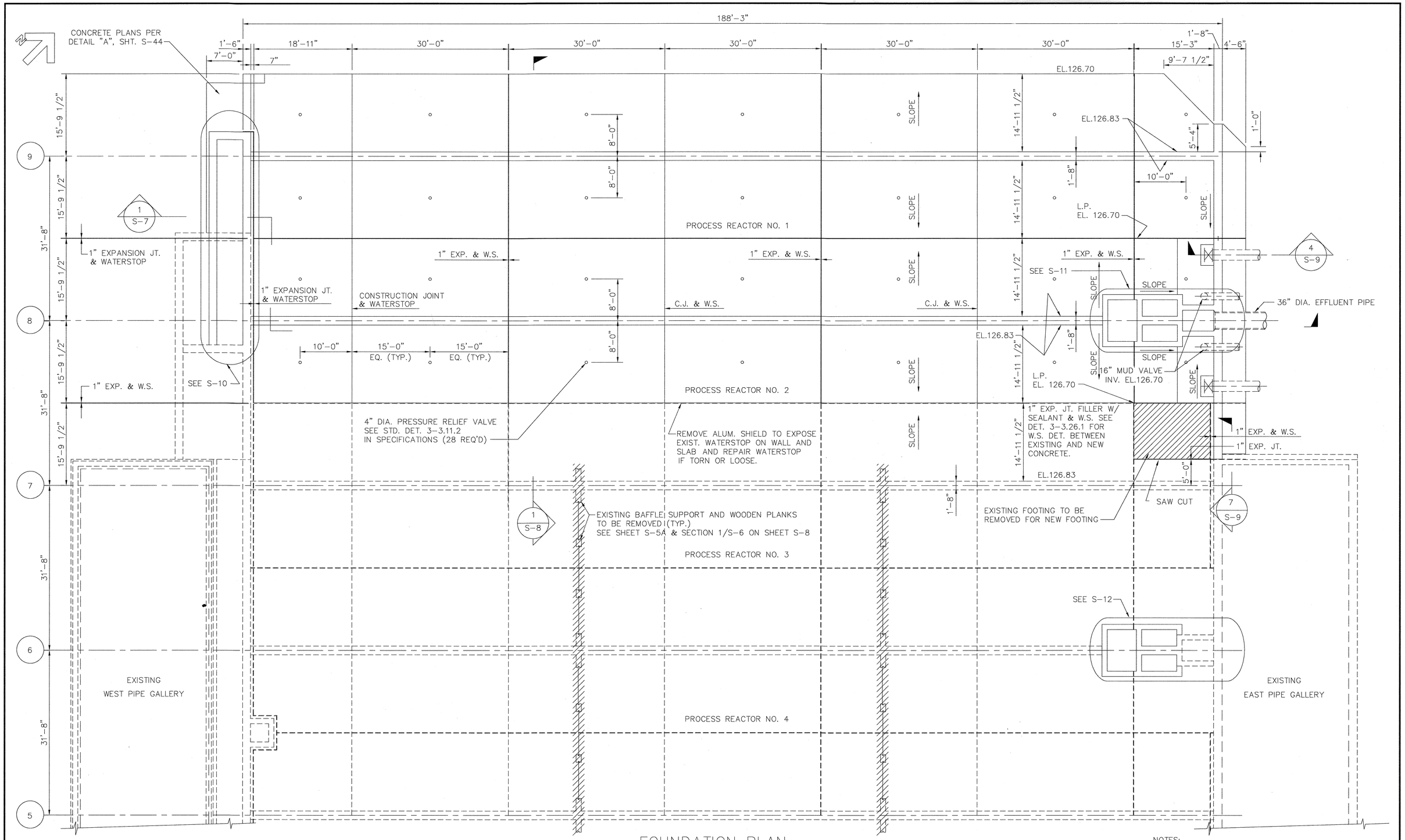

FOUNDATION PLAN

SCALE: 1/8"=1'-0"

NOTES:

1. FOR BAFFLE WALL DETAIL, SEE S-7.
2. FOR ALL BAFFLE WALL LOCATIONS, SEE S-5A.

DEPARTMENT OF PUBLIC WORKS
HOWARD COUNTY, MARYLAND

DIRECTOR OF PUBLIC WORKS — DATE 5/6/96
CHIEF, BUREAU OF ENGINEERING — DATE 5/7/96
CHIEF, BUREAU OF ENVIRONMENTAL SERVICES — DATE 5/7/96
CHIEF, UTILITY DESIGN DIVISION — DATE 5-7-96

M&E Metcalf & Eddy
REG. PROF. ENGR. — DATE 5-7-96

STATE OF MARYLAND — JONATHAN WINTHROP DOANE No. 15140 — REGISTERED PROFESSIONAL ENGINEER

DES: DR
DRN: EB
CHK:
DATE:

BY	NO.	REVISION	DATE
MB	1	REVISE FOR BIDDING	3/5/92
MJC	2	RECORD DRAWING	3/5/94

STRUCTURAL

SINGLE PASS PROCESS REACTOR NOS. 1 & 2 FOUNDATION PLAN

LITTLE PATUXENT WASTEWATER TREATMENT PLANT

LITTLE PATUXENT WASTEWATER TREATMENT EXPANSION ADDITION NO. 5 CAPITAL PROJECT S-6153

CONTRACT NO. 20-3082

HOWARD COUNTY, MARYLAND

SCALE AS SHOWN

SHEET 54 OF 226

S-6A

FILE-NO.

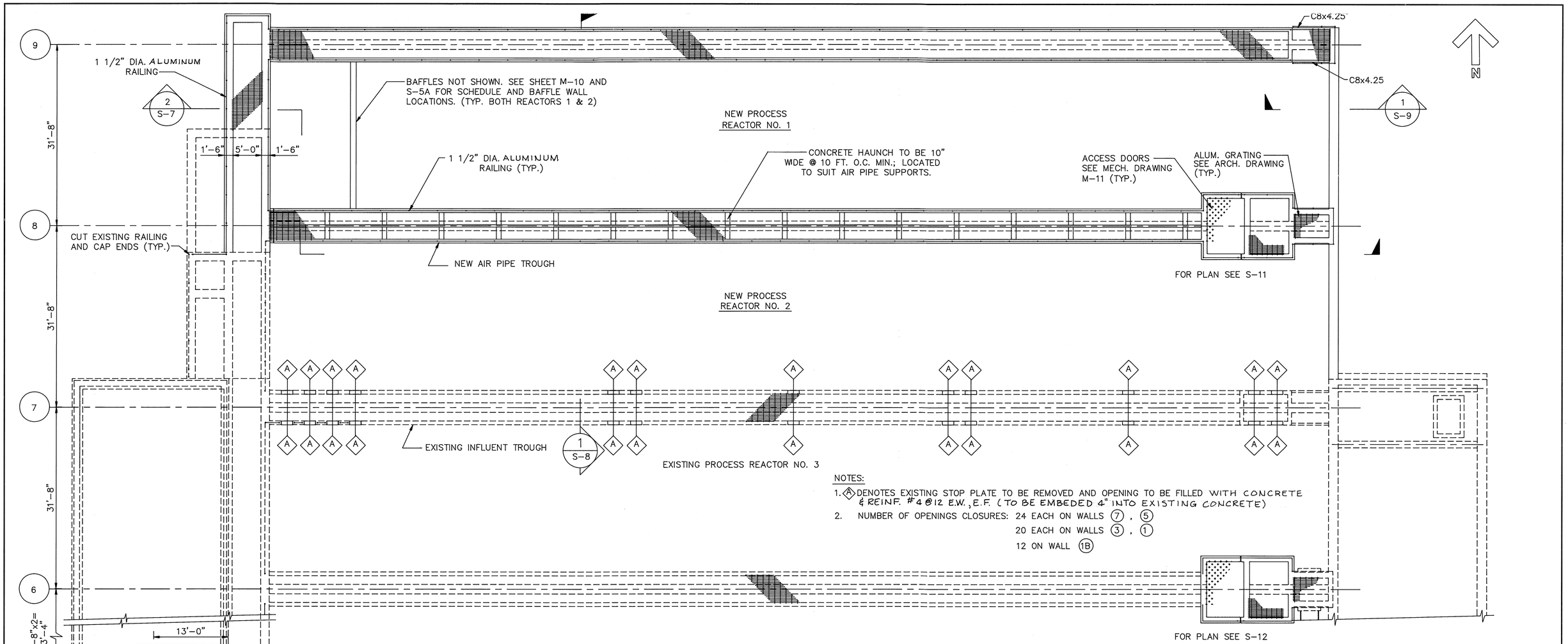

PLAN AT ELEVATION 144.00

SCALE: 1/8"=1'-0"

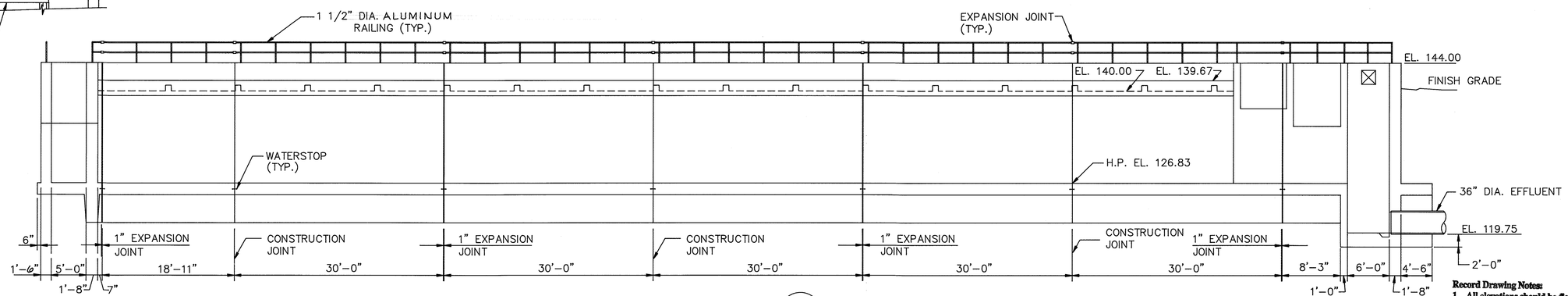

SECTION 2 S-7, S-8

SCALE: 1/8"=1'-0"

Record Drawing Notes:
1. All elevations should be field verified before using
2. Weir and water elevations based on post-construction survey by Howard County.

DEPARTMENT OF PUBLIC WORKS
HOWARD COUNTY, MARYLAND

DIRECTOR OF PUBLIC WORKS — DATE 3/6/92 — ACT CHIEF BUREAU OF ENGINEERING — DATE 3-6-92
CHIEF, BUREAU OF ENVIRONMENTAL SERVICES — DATE 3/6/92 — ACT CHIEF, UTILITY DESIGN DIVISION — DATE 3-6-92

Metcalf & Eddy

REG. PROF. ENGR. — DATE 3/6/92

STATE OF MARYLAND — JONATHAN WINTHROP DOANE No. 15140 — REGISTERED PROFESSIONAL ENGINEER

DES: M. Yu
DRN: E Burnett
CHK: J. HAVEY
DATE: 12/7/91

BY	NO.	REVISION	DATE
	2	RECORD DRAWING	
	1	REVISED FOR BIDDING	3/5/92

STRUCTURAL

SINGLE PASS PROCESS REACTORS NOS. 1 & 2 TOP PLAN AND SECTION

LITTLE PATUXENT WASTEWATER TREATMENT PLANT

LITTLE PATUXENT WASTEWATER TREATMENT PLANT EXPANSION
ADDITION NO. 5
CAPITAL PROJECT S - 6153

CONTRACT NO. 20 - 3082

HOWARD COUNTY, MARYLAND

SCALE AS SHOWN

SHEET 55 OF 226

S-7

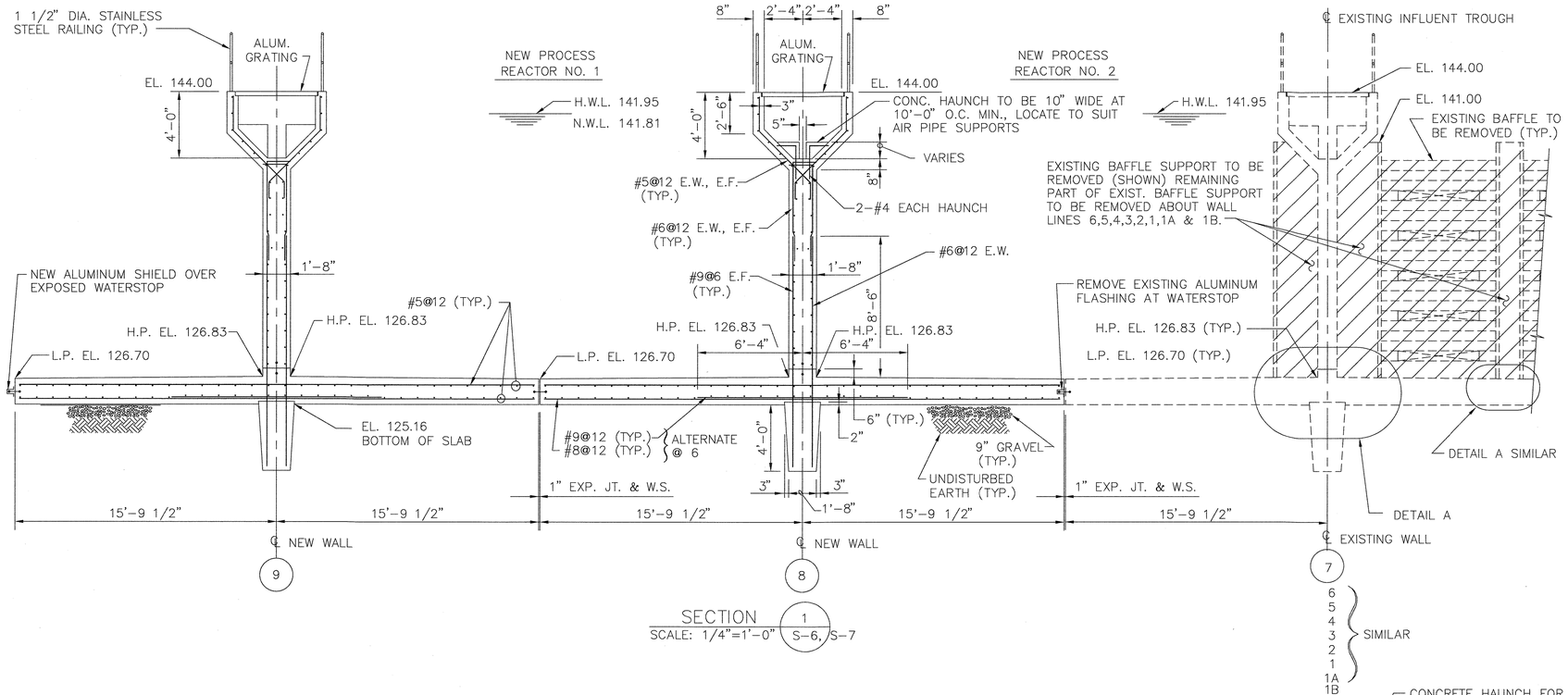

SECTION 1 S-6, S-7
SCALE: 1/4"=1'-0"

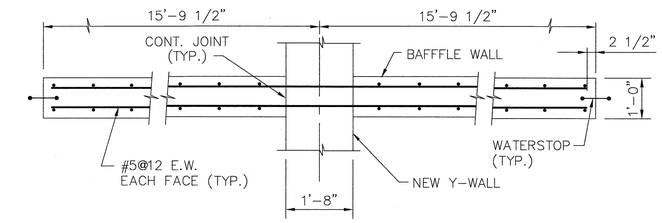

DETAIL B
TYPICAL FOR NEW Y-WALL ⑧
SCALE: 1/2"=1'-0"

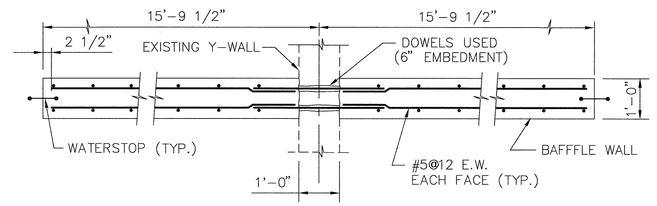

DETAIL C
TYPICAL FOR EXISTING Y-WALL ④⑤⑥⑦
WALLS ①②③ VARY IN THICKNESS FROM 1'-8"± AT BASE TO 1'-0"± AT THE WALL SPLIT
SCALE: 1/2"=1'-0"

TYPICAL BAFFLE WALL DETAIL
SCALE: 1/4"=1'-0"

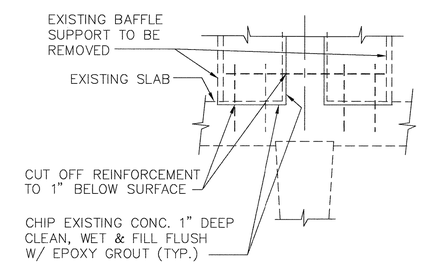

DETAIL A
SCALE: 1/2"=1'-0"

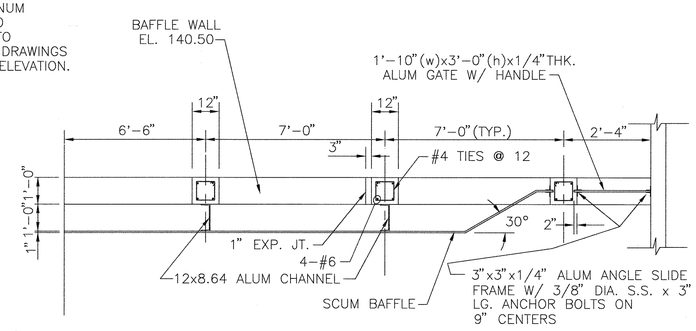

PARTIAL PLAN – SCUM BAFFLE
(BAFFLE WALLS 1-11, 2-11, 3-11, 4-11,5-11)
SCALE: NONE

NOTES:

1. FOR LOCATION OF BAFFLE WALLS, SEE DRAWINGS M-10 & S-5A.
2. FOR BAFFLE OPENINGS, SEE SCHEDULE ON SHEET M-10 AND STANDARD DETAILS 3-3.23.1 AND 3-3.23.2.
3. WATERSTOP IN VERTICAL WALL TO EXTEND TO TOP OF WALL.
4. PROVIDE MATCHING DOWELS INTO EXISTING WALLS, AND FOUNDATION @ 12" O.C.
5. FOR INTERSECTION OF TWO WALLS AND CORNER WALL, SEE ALSO STD. DETAILS 3-3.7.1 AND 3-3.8.1.

RECORD DRAWING
10/14/94

Record Drawing Notes:
1. **All elevations should be field verified before using**
2. **Weir and water elevations based on post-construction survey by Howard County.**

DEPARTMENT OF PUBLIC WORKS
HOWARD COUNTY, MARYLAND

DIRECTOR OF PUBLIC WORKS — DATE 5/7/96
CHIEF, BUREAU OF ENGINEERING — DATE 5/7/96
CHIEF, BUREAU OF ENVIRONMENTAL SERVICES — DATE 5/7/96
CHIEF, UTILITY DESIGN DIVISION — DATE 5-7-96

M&E Metcalf & Eddy
REG. PROF. ENGR. — DATE 5-7-96

STATE OF MARYLAND — JONATHAN WINTHROP DOANE No. 15140 — REGISTERED PROFESSIONAL ENGINEER

DES: DR
DRN: EB
CHK:
DATE:

BY	NO.	REVISION	DATE
MB	1	REVISE FOR BIDDING	3/5/92
MJC	2	RECORD DRAWING	3/5/94

STRUCTURAL
SINGLE PASS PROCESS REACTOR NOS. 1 & 2 SECTIONS & DETAILS I

LITTLE PATUXENT WASTEWATER TREATMENT PLANT
LITTLE PATUXENT WASTEWATER TREATMENT EXPANSION ADDITION NO. 5 CAPITAL PROJECT S-6153
CONTRACT NO. 20-3082
HOWARD COUNTY, MARYLAND

SCALE AS SHOWN
SHEET 56 OF 226
S-8A

FILE-NO.

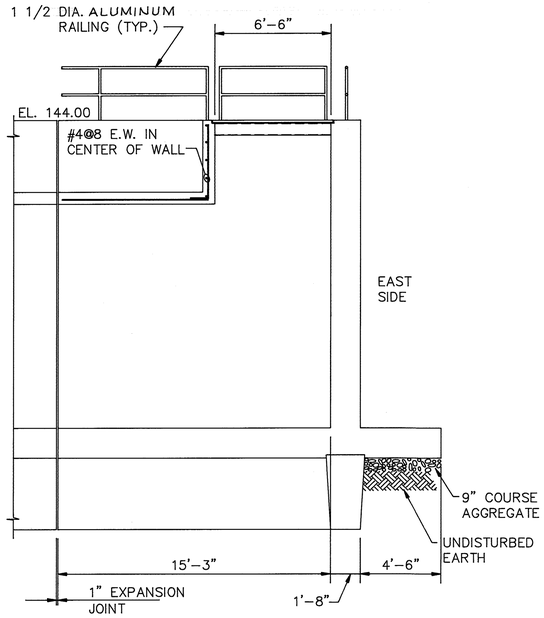

ALONG WALL LINE 9

SECTION 1 / S-7
SCALE: 1/4"=1'-0"

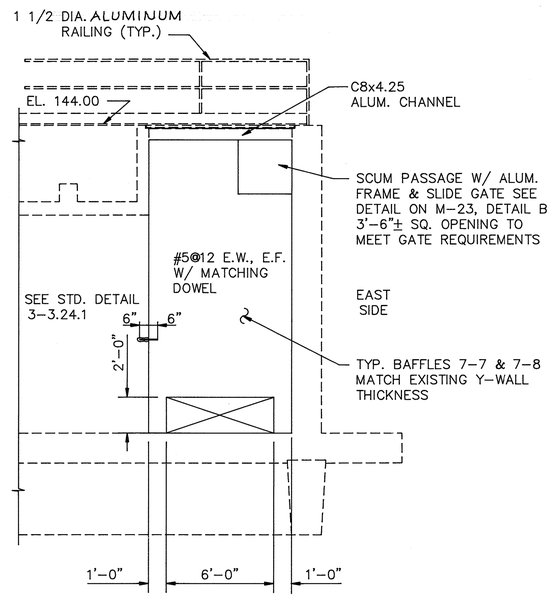

SECTION 3 / S-5A M-10
SCALE: 1/4"=1'-0"

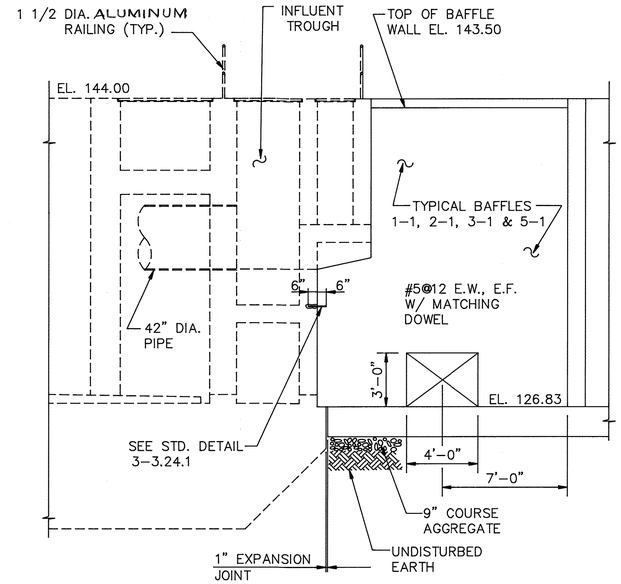

SECTION 1 / S-5A
SCALE: 1/4"=1'-0"

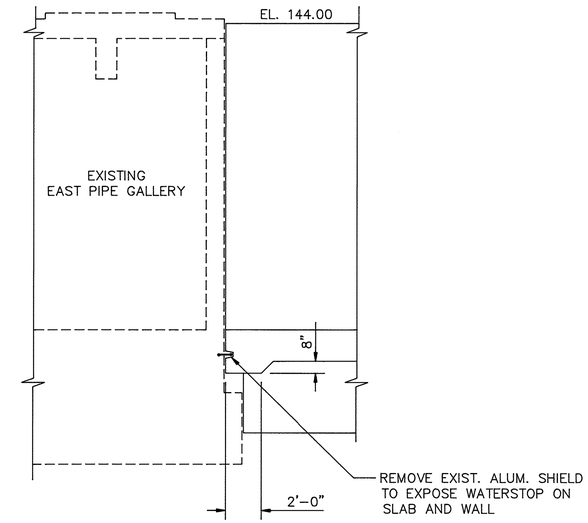

SECTION 7 / S-6
SCALE: 1/4"=1'-0"

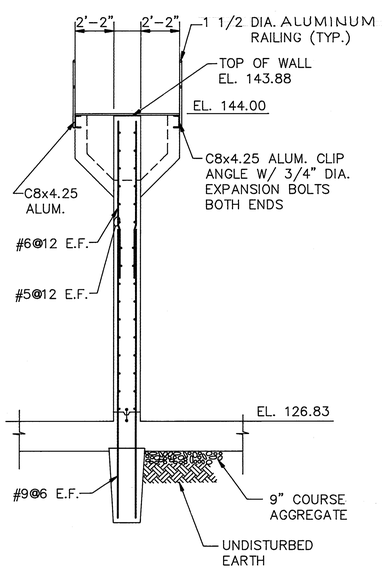

SECTION 2 / S-5A
SCALE: 1/4"=1'-0"

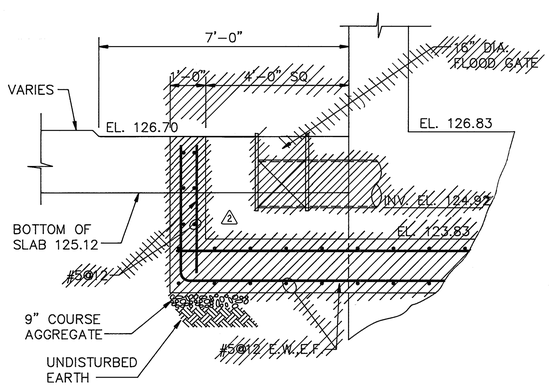

SECTION 4 / S-6
SCALE: 1/4"=1'-0"

NOTE:

1. ALL REINFORCEMENT #5@12 EACH WAY, EXCEPT NOTED OTHERWISE.
2. SEE MECHANICAL DRAWING FOR OPENING SIZE, PIPE SIZE AND BAFFLE WALL LOCATION.
3. WATERSTOP IN VERTICAL WALLSHALL EXTEND TO EL. 143.50.

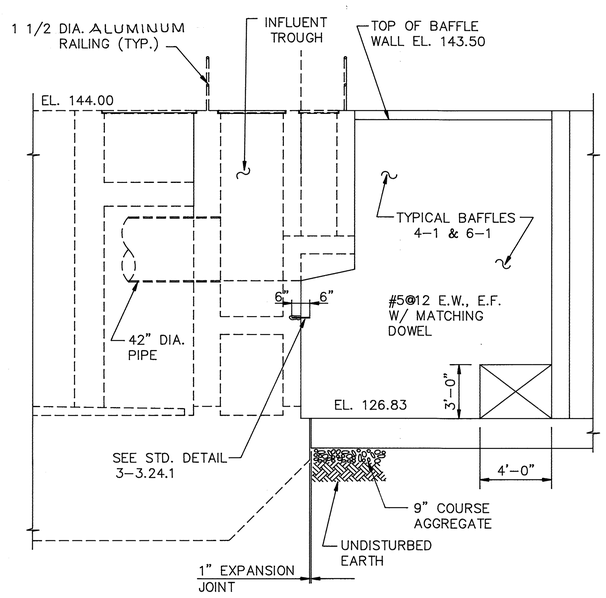

SECTION 6 / S-5A
SCALE: 1/4"=1'-0"

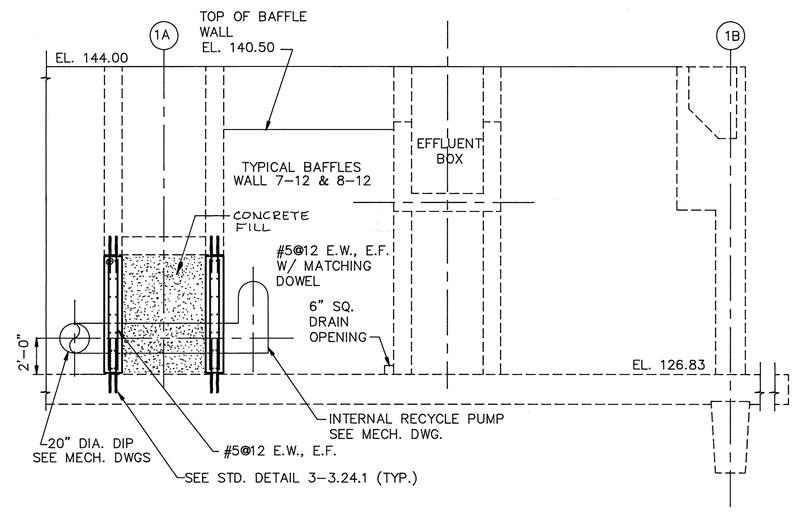

Record Drawing Notes:

1. **All elevations should be field verified before using**
2. **Weir and water elevations based on post-construction survey by Howard County.**

SECTION 7 / S-5A
SCALE: 1/4"=1'-0"

DEPARTMENT OF PUBLIC WORKS
HOWARD COUNTY, MARYLAND

DIRECTOR OF PUBLIC WORKS — DATE 3/6/92
ACT. CHIEF, BUREAU OF ENGINEERING — DATE 3-6-92
CHIEF, BUREAU OF ENVIRONMENTAL SERVICES — DATE 3/6/92
ACT. CHIEF, UTILITY DESIGN DIVISION — DATE 3-6-92

Metcalf & Eddy

REG. PROF. ENGR. — DATE 3/6/92

STATE OF MARYLAND — JONATHAN WINTHROP DOANE No. 15140 — REGISTERED PROFESSIONAL ENGINEER

DES: M. YU
DRN: E. Burnett
CHK: J. HAVEY
DATE: 12/7/91

BY	NO.	REVISION	DATE
MC	3	RECORD DRAWING	
DZG	2	ADDENDUM #3	
	1	REVISED FOR BIDDING	3/5/92

STRUCTURAL

PROCESS REACTORS
SECTIONS AND DETAILS II

LITTLE PATUXENT WASTEWATER TREATMENT PLANT
LITTLE PATUXENT WASTEWATER TREATMENT PLANT EXPANSION
ADDITION NO. 5
CAPITAL PROJECT S - 6153
CONTRACT NO. 20 - 3082
HOWARD COUNTY, MARYLAND

SCALE AS SHOWN
SHEET 57 OF 226
S-9

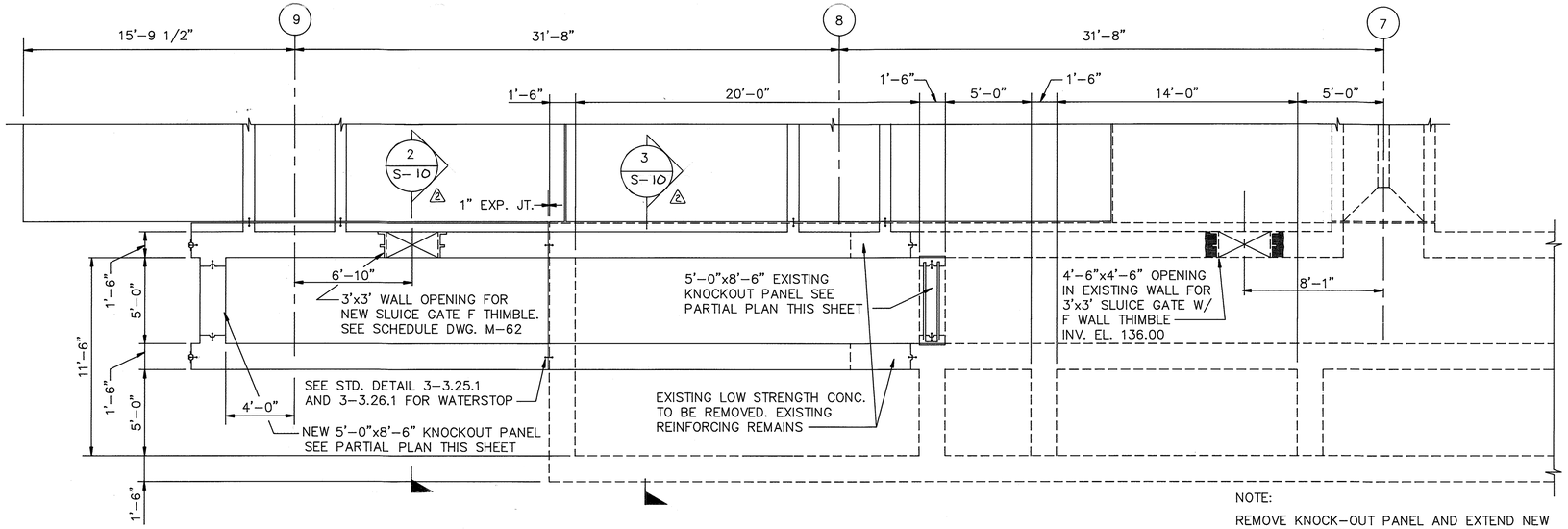

MIXING CHANNEL
SCALE : 1/4"=1'-0"

NOTE:
REMOVE KNOCK-OUT PANEL AND EXTEND NEW GRATING INTO EXISTING INFLUENT TROUGH.

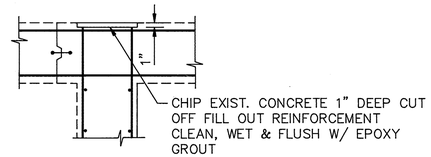

DETAIL A
(N.T.S.)

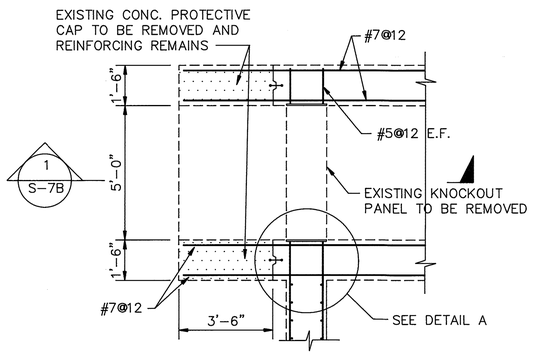

EXISTING KNOCKOUT PANEL
PARTIAL PLAN
SCALE: 3/8"=1'-0"

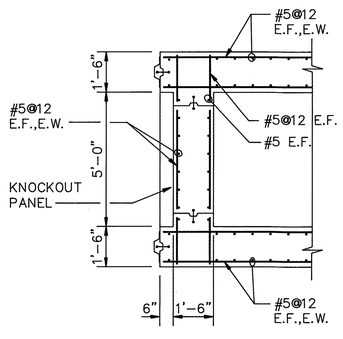

NEW KNOCKOUT PANEL
PARTIAL PLAN
SCALE: 3/8"=1'-0"

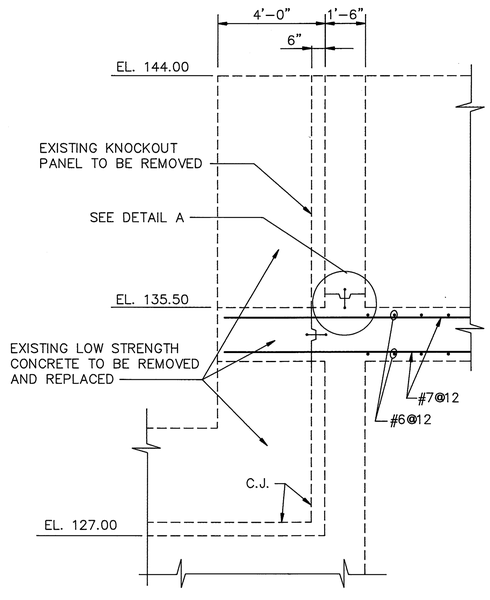

SECTION 1 S-10
N.T.S.

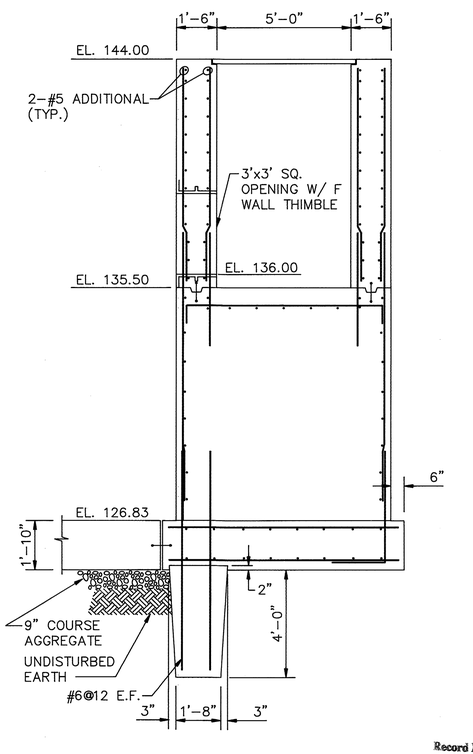

SECTION 2 S-10
SCALE: 3/8"=1'-0"

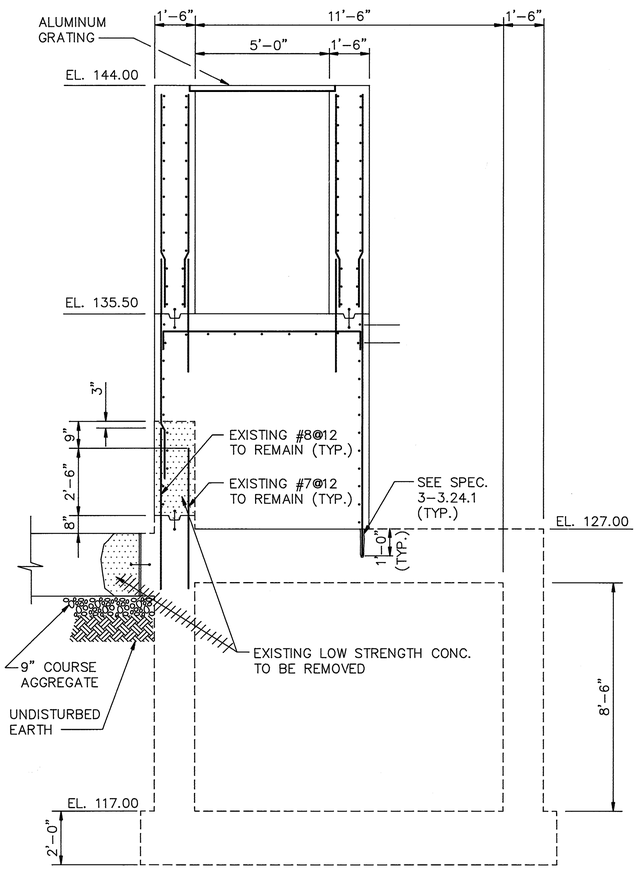

SECTION 3 S-10
SCALE: 3/8"=1'-0"

Record Drawing Notes:
1. **All elevations should be field verified before using**
2. **Weir and water elevations based on post-construction survey by Howard County.**

NOTE:
ALL REINFORCEMENT #5@12 EACH WAY EXCEPT NOTED OTHERWISE

DEPARTMENT OF PUBLIC WORKS
HOWARD COUNTY, MARYLAND

DIRECTOR OF PUBLIC WORKS — DATE 3/6/92 — Act. CHIEF, BUREAU OF ENGINEERING — DATE 3-6-92
CHIEF, BUREAU OF ENVIRONMENTAL SERVICES — DATE 3/6/92 — Act. CHIEF, UTILITY DESIGN DIVISION — DATE 3-6-92

Metcalf & Eddy
REG. PROF. ENGR. — DATE 3/6/92

STATE OF MARYLAND — JONATHAN WINTHROP DOANE No. 15140 — REGISTERED PROFESSIONAL ENGINEER

DES: M. YU
DRN: E. Burnett
CHK: J. HINEY
DATE: 12/7/91

BY	NO.	REVISION	DATE
MC	2	RECORD DRAWING	
	1	REVISED FOR BIDDING	3/5/92

STRUCTURAL

PROCESS REACTORS
SECTIONS AND DETAILS III

LITTLE PATUXENT WASTEWATER TREATMENT PLANT
LITTLE PATUXENT WASTEWATER TREATMENT PLANT EXPANSION
ADDITION NO. 5
CAPITAL PROJECT S-6153
CONTRACT NO. 20-3082
HOWARD COUNTY, MARYLAND

SCALE AS SHOWN
SHEET 58 OF 226
S-10

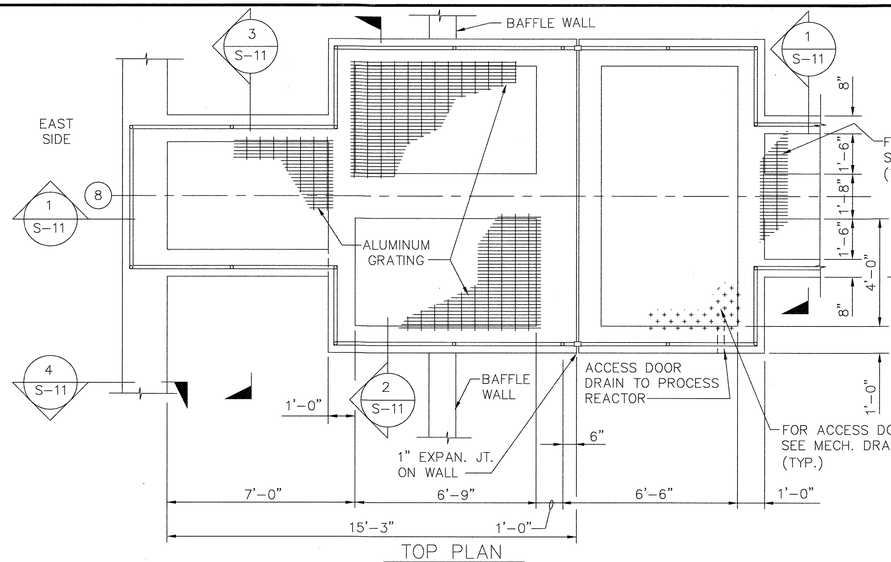

TOP PLAN
SCALE: 3/8"=1'-0"

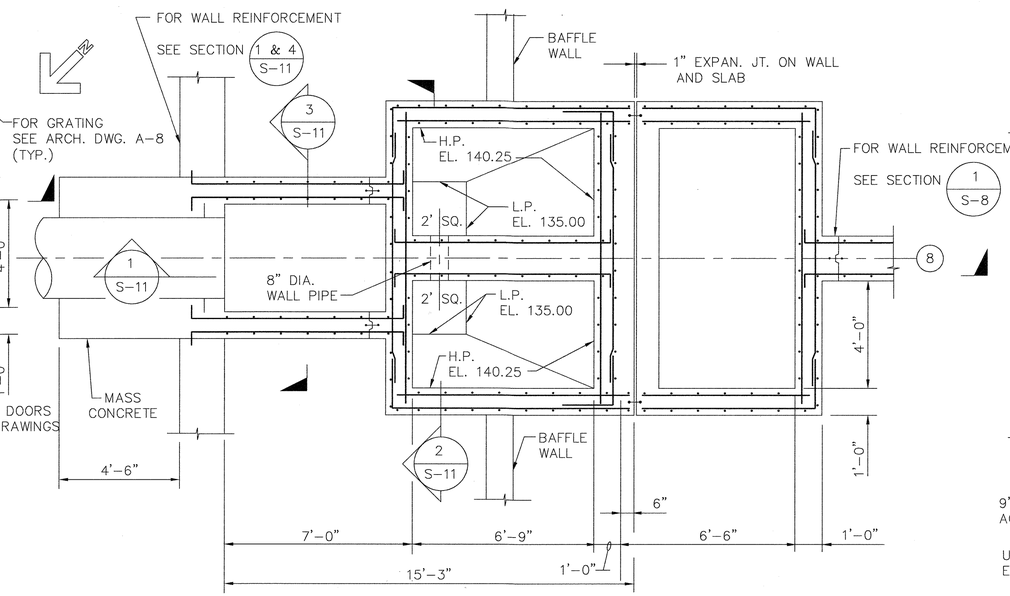

BOTTOM PLAN
SCALE: 3/8"=1'-0"

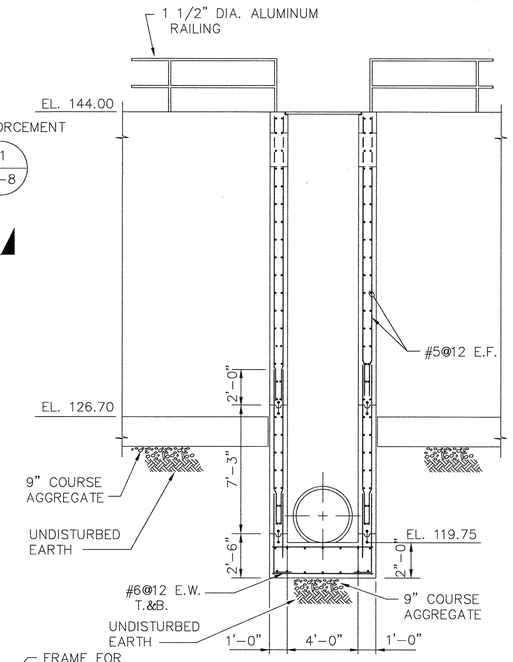

SECTION 3 S-11
SCALE: 1/4"=1'-0"

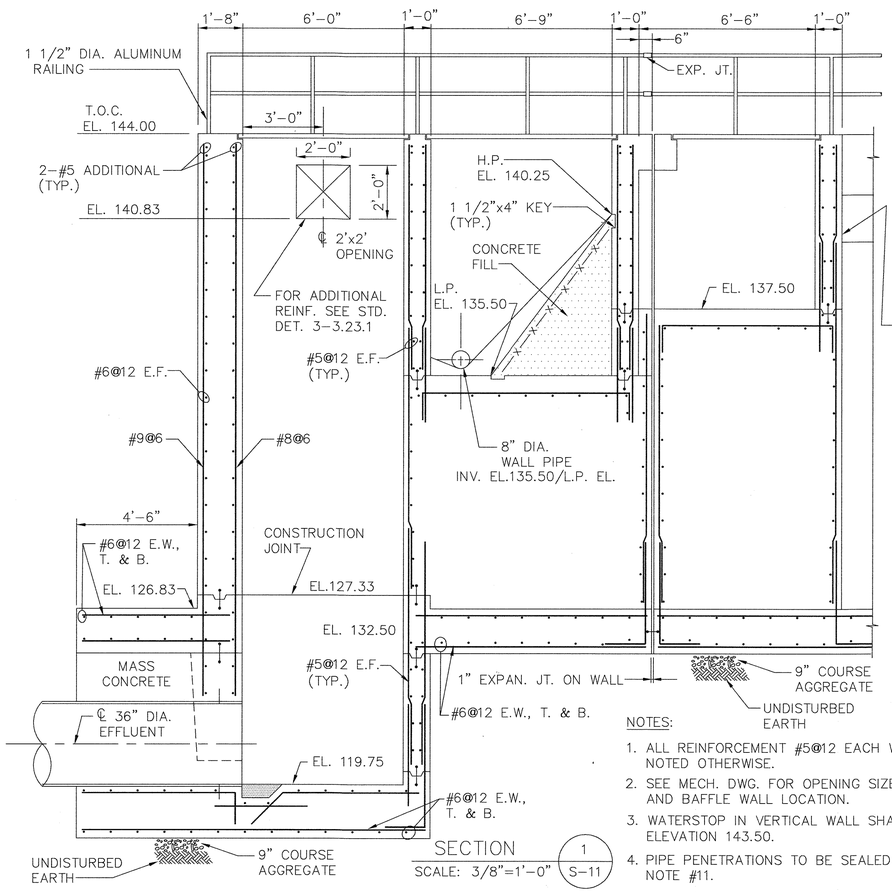

SECTION 1 S-11
SCALE: 3/8"=1'-0"

NOTES:

1. ALL REINFORCEMENT #5@12 EACH WAY, EXCEPT NOTED OTHERWISE.
2. SEE MECH. DWG. FOR OPENING SIZE, PIPE SIZE AND BAFFLE WALL LOCATION.
3. WATERSTOP IN VERTICAL WALL SHALL EXTEND TO ELEVATION 143.50.
4. PIPE PENETRATIONS TO BE SEALED PER DWG. M-10 NOTE #11.

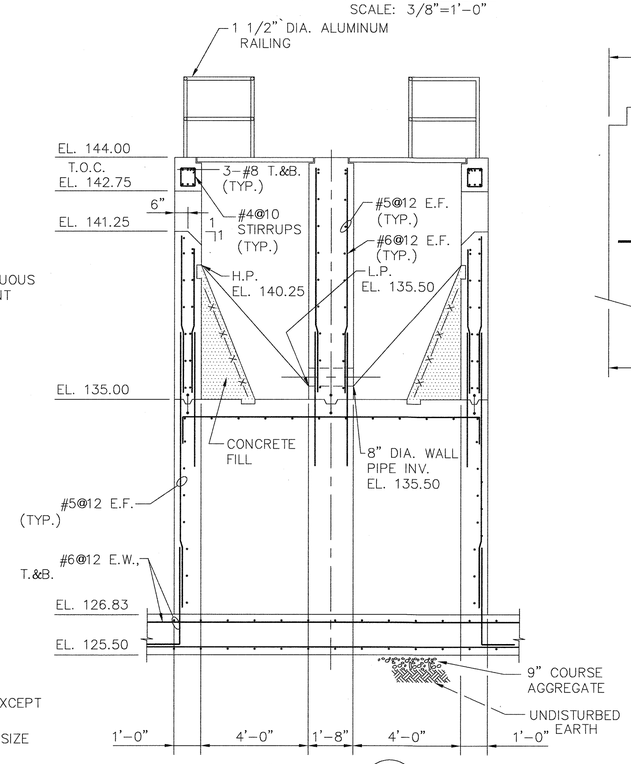

SECTION 2 S-11
SCALE: 3/8"=1'-0"

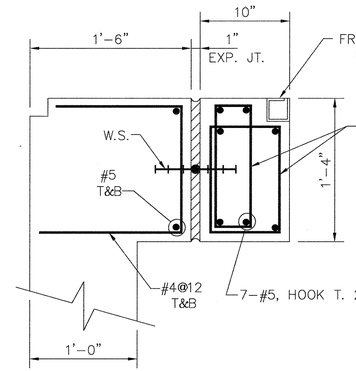

DETAIL @ ACCESS HATCH
SEE SECTION 1 S-11 1 S-12
SCALE: NONE

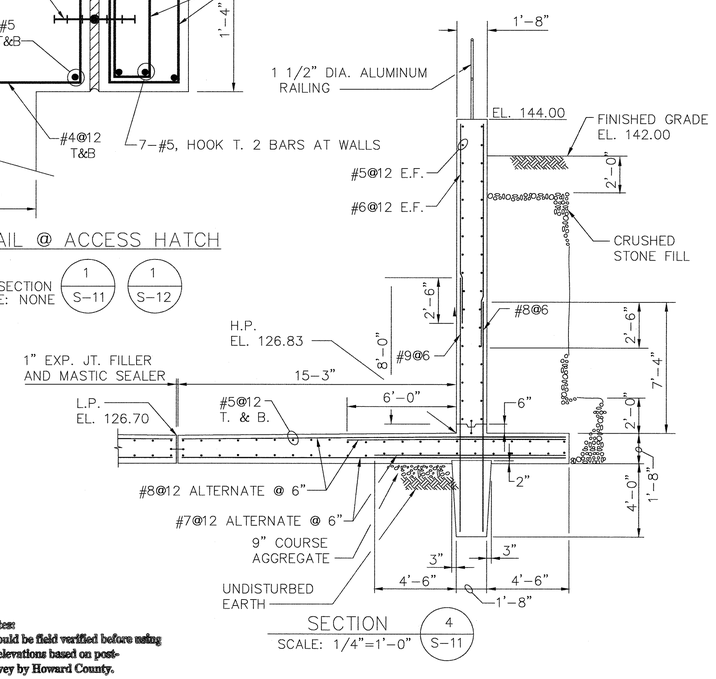

SECTION 4 S-11
SCALE: 1/4"=1'-0"

Record Drawing Notes:

1. **All elevations should be field verified before using**
2. **Weir and water elevations based on post-construction survey by Howard County.**

DEPARTMENT OF PUBLIC WORKS
HOWARD COUNTY, MARYLAND

DIRECTOR OF PUBLIC WORKS — DATE 5/7/96
CHIEF, BUREAU OF ENGINEERING — DATE 5/7/96
CHIEF, BUREAU OF ENVIRONMENTAL SERVICES — DATE 5/7/96
CHIEF, UTILITY DESIGN DIVISION — DATE 5-7-96

M&E Metcalf & Eddy
REG. PROF. ENGR. — DATE 5-7-96

STATE OF MARYLAND — JONATHAN WINTHROP DOANE No. 15140 — REGISTERED PROFESSIONAL ENGINEER

DES: DR
DRN: EB
CHK:
DATE:

BY	NO.	REVISION	DATE
MB	1	REVISE FOR BIDDING	3/5/92
MJC	2	RECORD DRAWING	3/5/94

STRUCTURAL

PROCESS REACTORS
PLANS IV AND SECTIONS IV

LITTLE PATUXENT WASTEWATER TREATMENT PLANT

LITTLE PATUXENT WASTEWATER TREATMENT EXPANSION
ADDITION NO. 5
CAPITAL PROJECT S-6153

CONTRACT NO. 20-3082
HOWARD COUNTY, MARYLAND

SCALE AS SHOWN

SHEET 59 OF 226

S-11A

FILE-NO.

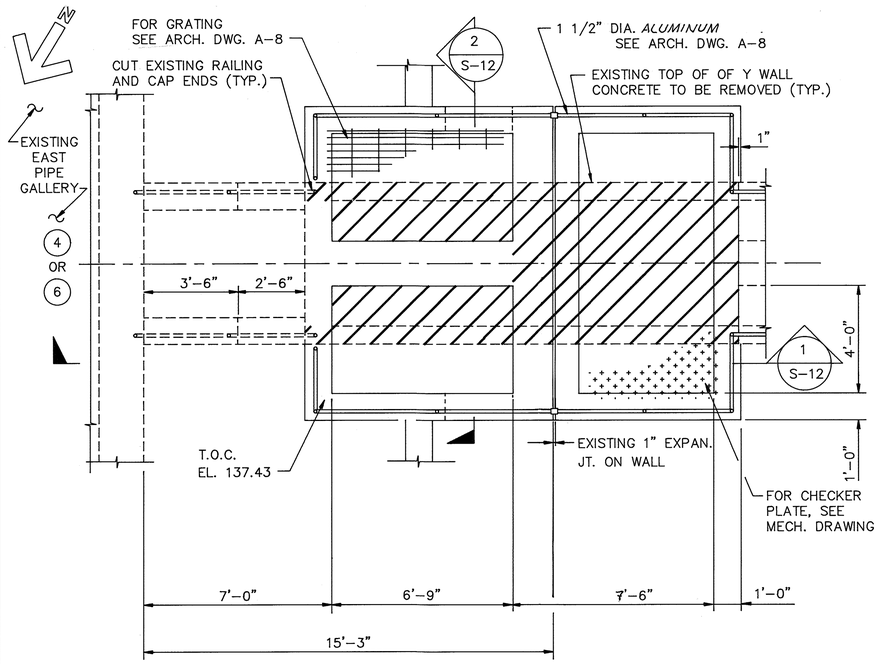

NOTE: SEE S-7 FOR BAFFLE STOP

TOP PLAN

SCALE: 3/8"=1'-0"

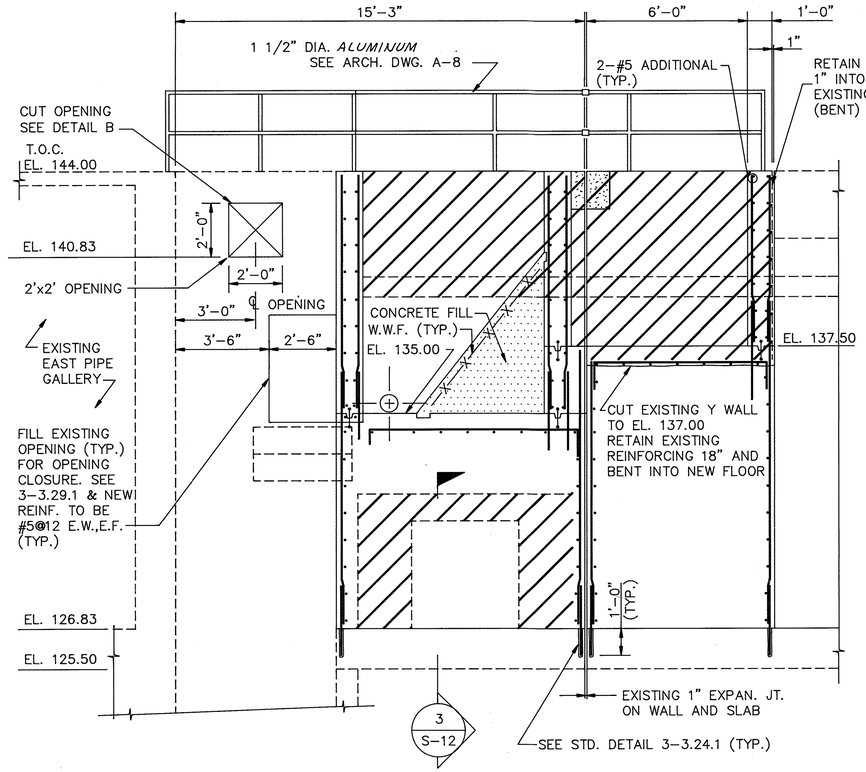

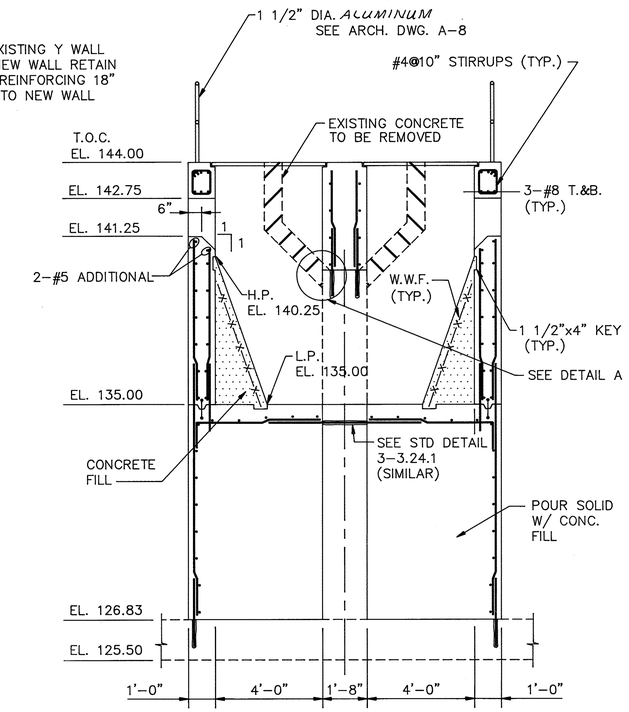

SECTION 2/S-12

SCALE: 3/8"=1'-0"

NOTES:

1. SEE MECHANICAL DRAWING FOR PIPE SIZE AND LOCATION.
2. SEE STD. DETAIL 3-3.39

SECTION 1/S-12

SCALE: 3/8"=1'-0"

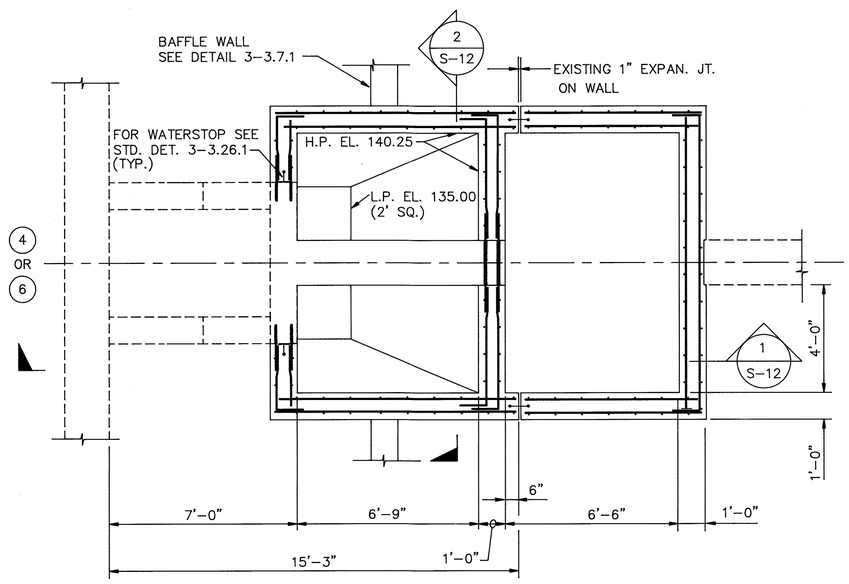

BOTTOM PLAN

SCALE: 3/8"=1'-0"

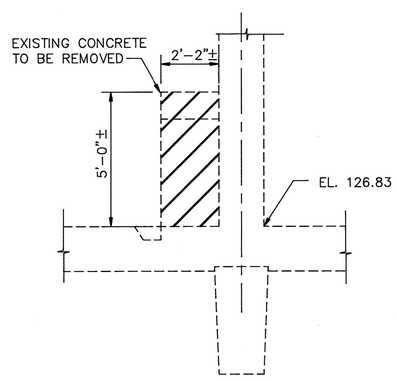

SECTION 3/S-12

SCALE: 3/8"=1'-0"

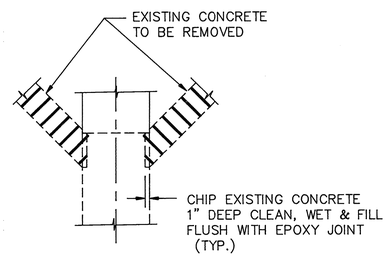

DETAIL A

N.T.S.

Record Drawing Notes:

1. **All elevations should be field verified before using**
2. **Weir and water elevations based on post-construction survey by Howard County.**

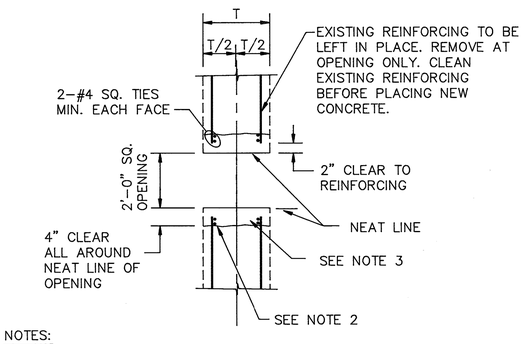

NOTES:

1. THE USE OF HEAVY-DUTY PNEUMATIC HAMMERS ARE NOT PERMITTED TO REMOVE EXISTING CONCRETE FOR NEW OPENING.
2. APPLY BONDING AGENT TO ROUGHENED PREPARED CONCRTE SURFACE IN ACCORDANCE WITH MANUFACTURER'S PRINTED INSTRUCTIONS. BONDING AGENT TO BE LARSEN WELD-CRETE AS MANUFACTURED BY LARSEN PRODUCTS CORPORATION OF ROCKVILLE, MARYLAND OR AN ACCEPTABLE EQUIVALENT PRODUCT.
3. FILL PENETRATION WITH CONCRETE HAVING A MINIMUM COMPRESSIVE STRENGTH OF 4000 LBS. PER SQ. INCH AT THE END OF 28 DAYS.

DETAIL B

N.T.S.

NEW OPENING AT EXISTING WALL

NOTES:

1. ALL REINFORCEMENT #5@12 EACH WAY, EXCEPT NOTED OTHERWISE.
2. SEE MECHANICAL DRAWING FOR OPENING SIZE, PIPE SIZE AND BAFFLE WALL LOCATION.
3. WATERSTOP IN VERTICAL WALL SHALL EXTEND TO EL. 143.50.
4. SEE DETAIL @ ACCESS HATCH ON SHEET S-11.

DEPARTMENT OF PUBLIC WORKS
HOWARD COUNTY, MARYLAND

DIRECTOR OF PUBLIC WORKS — DATE 3/6/92 — ACT. CHIEF, BUREAU OF ENGINEERING — DATE 3-6-92

CHIEF, BUREAU OF ENVIRONMENTAL SERVICES — DATE 3/6/92 — ACT. CHIEF, UTILITY DESIGN DIVISION — DATE 3-6-92

Metcalf & Eddy

REG. PROF. ENGR. — DATE 3/6/92

STATE OF MARYLAND — JONATHAN WINTHROP DOANE No. 15140 — REGISTERED PROFESSIONAL ENGINEER

DES: M. Yu
DRN: E. Burnett
CHK: J. HAVEY
DATE: 12/7/91

BY	NO.	REVISION	DATE
	2	RECORD DRAWING	10/31/94
	1	REVISED FOR BIDDING	3/5/92

STRUCTURAL

PROCESS REACTOR MODIFICATION
SINGLE PASS BASIN
PLANS AND SECTIONS

LITTLE PATUXENT WASTEWATER TREATMENT PLANT

LITTLE PATUXENT WASTEWATER TREATMENT PLANT EXPANSION
ADDITION NO. 5
CAPITAL PROJECT S - 6153

CONTRACT NO. 20 - 3082

HOWARD COUNTY, MARYLAND

SCALE AS SHOWN

SHEET 60 OF 226

S-12

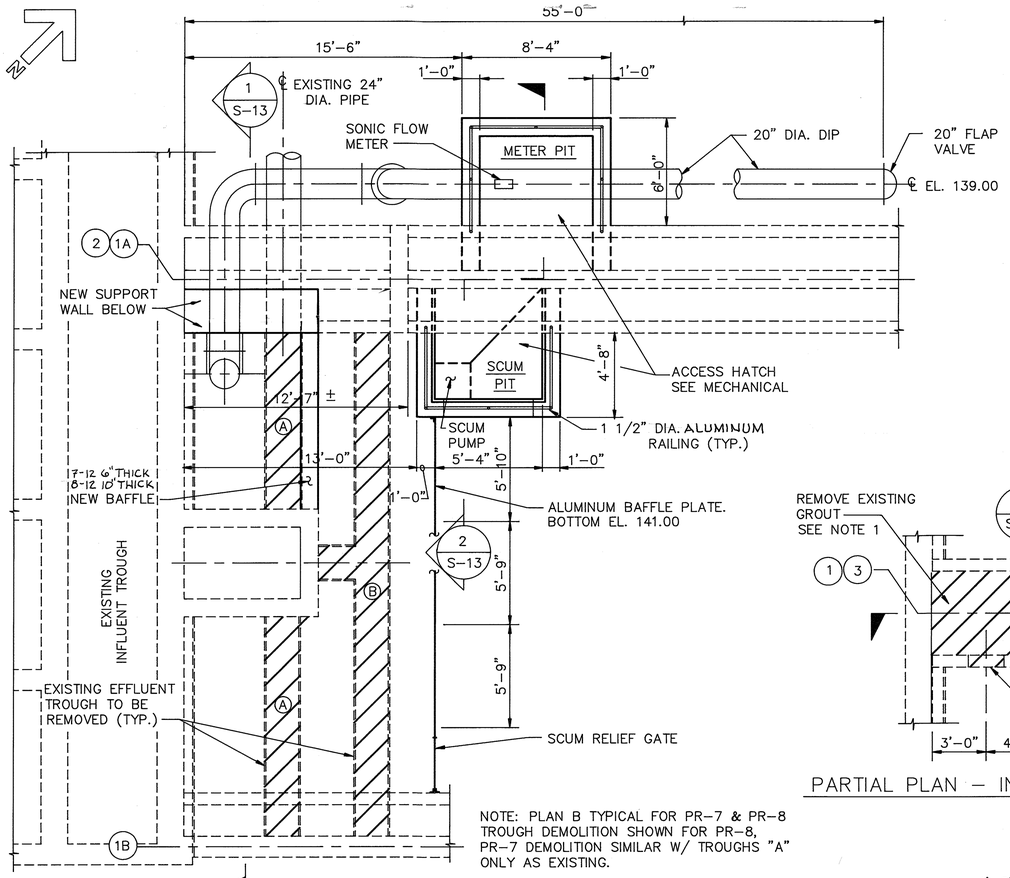

NOTE: PLAN B TYPICAL FOR PR-7 & PR-8 TROUGH DEMOLITION SHOWN FOR PR-8, PR-7 DEMOLITION SIMILAR W/ TROUGHS "A" ONLY AS EXISTING.

PARTIAL PLAN – EFFLUENT TROUGH

SCALE: 1/4"=1'-0"

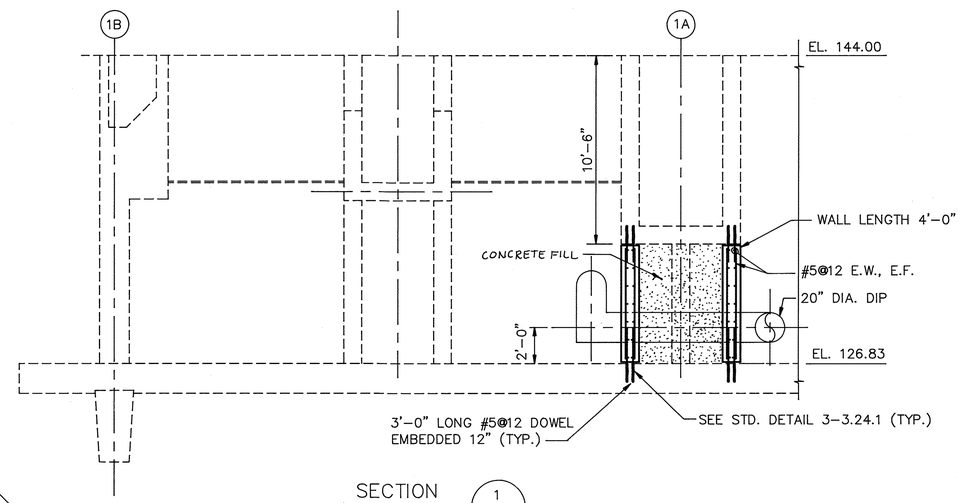

SECTION 1 S-13

SCALE: 1/4"=1'-0"

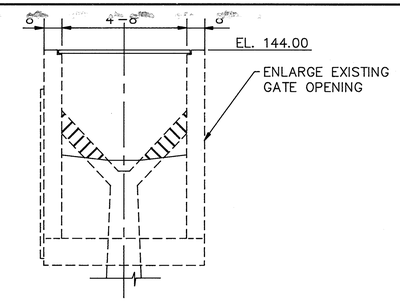

INFLUENT CHANNEL BULKHEAD DETAIL

SECTION 3 S-13

SCALE: 3/8"=1'-0"

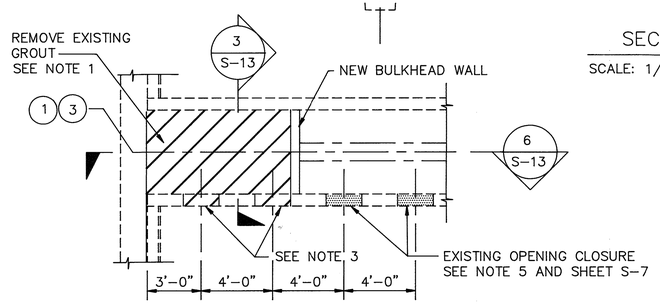

PARTIAL PLAN – INFLUENT CHANNEL TO PR 7 & 8

SCALE: 1/4"=1'-0"

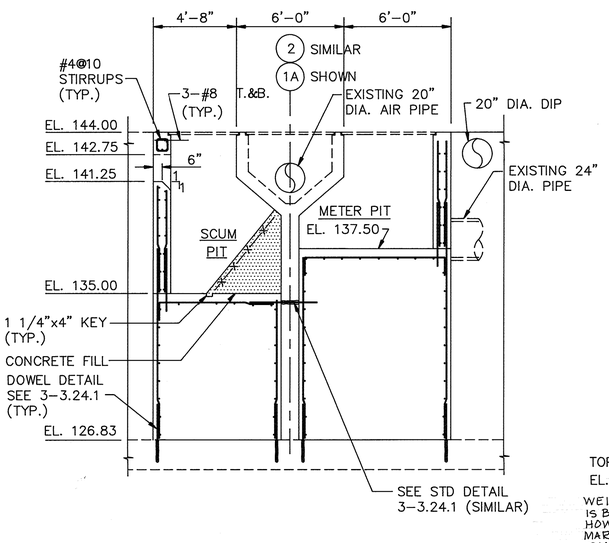

SECTION 2 S-13

SCALE: 1/4"=1'-0"

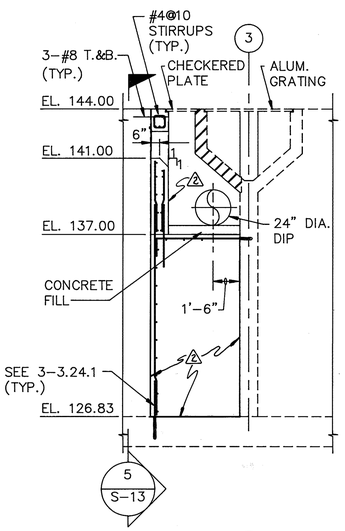

SECTION 4 S-13

SCALE: 1/4"=1'-0"

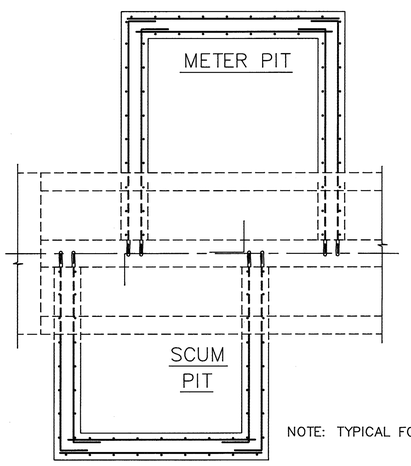

NOTE: TYPICAL FOR PR-7 & PR-8

PARTIAL PLAN – BOTTOM

SCALE: 3/8"=1'-0"

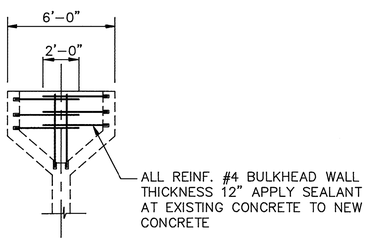

BULKHEAD AT PROCESS REACTOR INFLUENT CHANNELS 1,3,5,7

SCALE: 1/4"=1'-0"

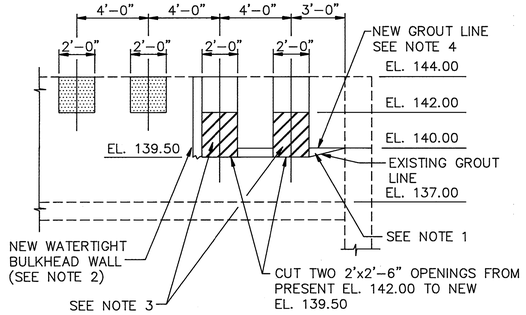

NOTE:

1. REMOVE THE EXISTING CONCRETE GROUT TO INVERT EL. 139.50 ON THE FIRST 8'-6" OF CHANNEL. GROUT REMOVED ONLY AS NEED FOR GATE INSTALLATION.
2. INSTALL NEW BULKHEAD WALL 1'-0" THICK FROM BOTTOM EL. 139.50 TO TOP EL. 143.50 WITH WATERSTOP (SEE STANDARD DETAIL 3-3.26.1)
3. ENLARGE THE EXISTING GATE OPENING BY CUTTING 2'-6" DEEP OPENING FROM THE EXISTING EL. 142.00 TO NEW EL. 139.50.
4. REGROUT THE FIRST 2 FT. SLOPE FROM EL. 140.00 TO EL. 139.67 GROUT TO BULKHEAD WALL @ EL. 139.67.
5. REMOVE THE LAST TWO INFLUENT GATES AND FILL HOLES WITH CONCRETE. SEE STANDARD DETAIL 3-3.29.1 WITH #4@12 E.W. & E.F..

SECTION 6 S-13

SCALE: 1/4"=1'-0"

NOTES:

1. ALL REINFORCEMENT #5@12 EACH WAY, EXCEPT NOTED OTHERWISE.
2. SEE MECH. DRAWING FOR OPENING SIZE, PIPE SIZE AND BAFFLE WALL LOCATION.
3. SEE STANDARD DETAIL 3-3.39 FOR PIPE PENETRATION CLOSURE.
4. WATERSTOP IN VERTICAL WALL SHALL EXTEND TO EL. 143.50.
5. △5 SCUM BAFFLE CONSTRUCTION DETAILS ARE PROVIDED ON ADDENDUM #3 ATTACHMENTS J-1,2,3,4

Record Drawing Notes:
1. All elevations should be field verified before using
2. Weir and water elevations based on post-construction survey by Howard County.

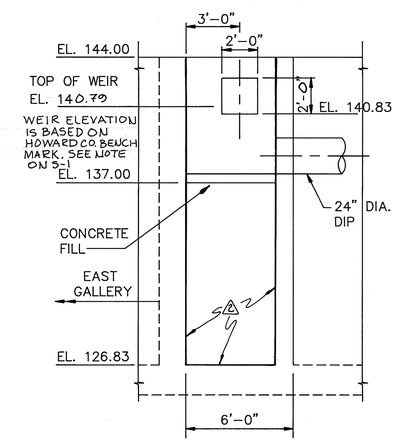

SECTION 5 S-13

SCALE: 1/4"=1'-0"

DEPARTMENT OF PUBLIC WORKS
HOWARD COUNTY, MARYLAND

DIRECTOR OF PUBLIC WORKS — DATE 3/6/92
ACT. CHIEF, BUREAU OF ENGINEERING — DATE 3-6-92
CHIEF, BUREAU OF ENVIRONMENTAL SERVICES — DATE 3/6/92
ACT. CHIEF, UTILITY DESIGN DIVISION — DATE 3-6-92

Metcalf & Eddy

REG. PROF. ENGR. — DATE 3/6/92

STATE OF MARYLAND — JONATHAN WINTHROP DONNE No. 15140 — REGISTERED PROFESSIONAL ENGINEER

DES: M. Yu
DRN: E Burnett
CHK: J. HAVEY
DATE: 12/7/91

BY	NO.	REVISION	DATE
AC	4	RECORD DRAWING	
DZG	3	ADDENDUM #3	
DZG	2	ADDENDUM #2	
	1	REVISED FOR BIDDING	

STRUCTURAL

PROCESS REACTOR MODIFICATION
DOUBLE PASS BASIN
PLAN AND SECTIONS

LITTLE PATUXENT WASTEWATER TREATMENT PLANT

LITTLE PATUXENT WASTEWATER TREATMENT PLANT EXPANSION
ADDITION NO. 5
CAPITAL PROJECT S-6153

CONTRACT NO. 20-3082

HOWARD COUNTY, MARYLAND

SCALE AS SHOWN

SHEET 61 OF 226

S-13

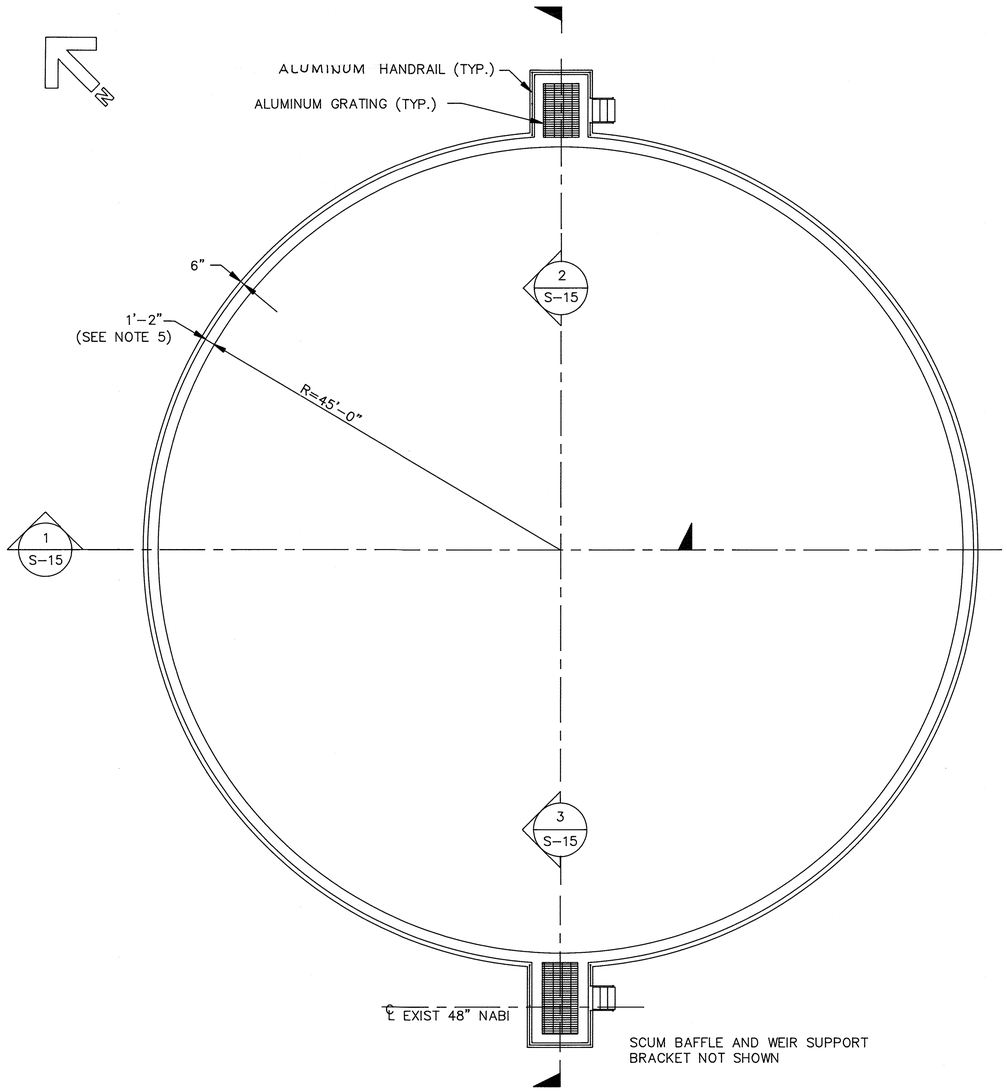

TOP PLAN

SCALE: 1/8"=1'-0"

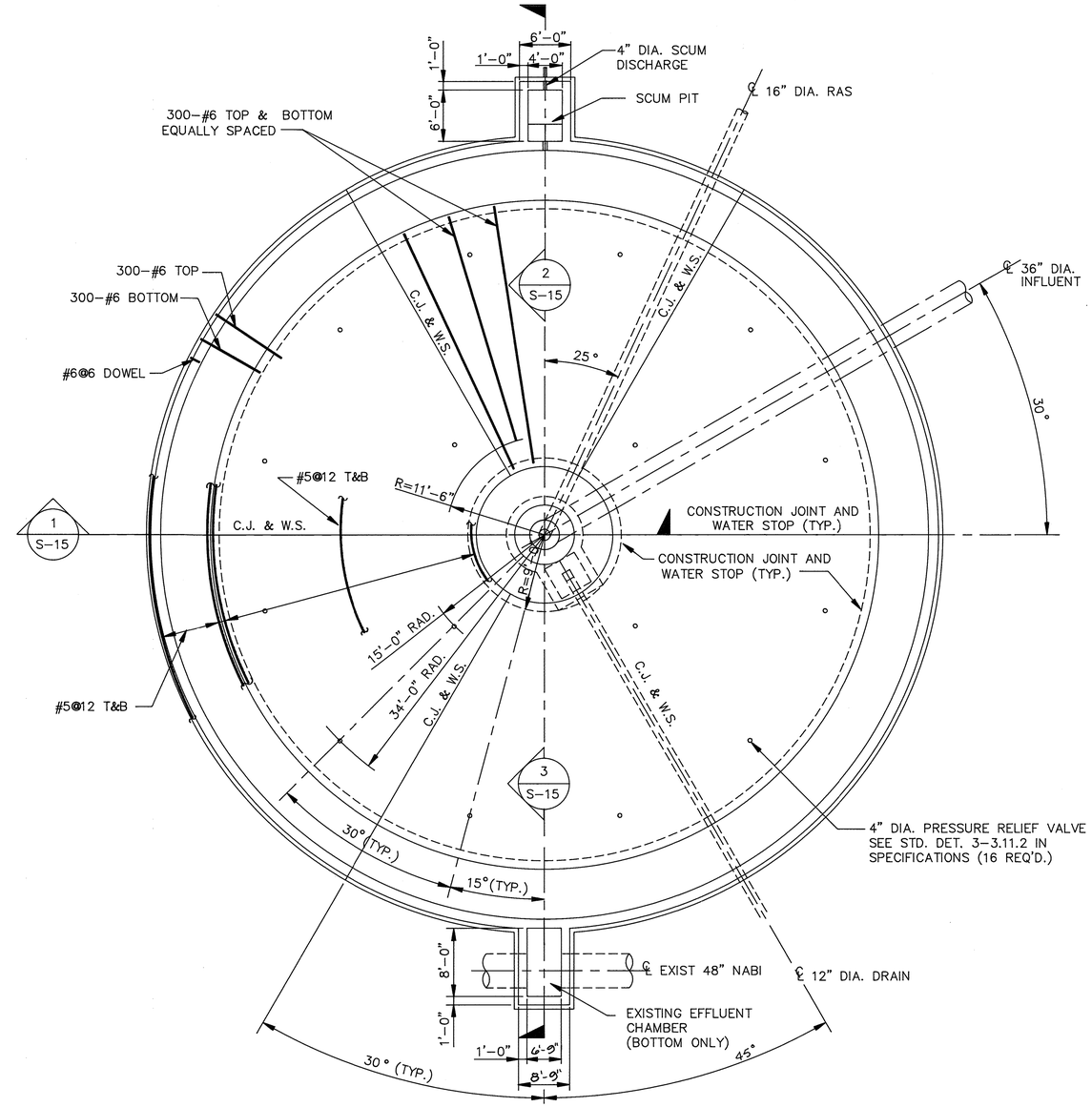

BOTTOM PLAN

SCALE: 1/8"=1'-0"

NOTES:

1. TYPICAL DETAILS TO BE FOUND IN SPECIFICATIONS APPENDIX "B".
2. FOUNDATIONS BASED UPON AN ALLOWABLE SOIL BEARING PRESSURE OF 2,000 LBS. PER SQ. FOOT.
3. DESIGN LIVE LOADS:
   a.) ALUMINUM GRATING: 100 PSF
   b.) WASTEWATER: 63 PCF
4. CENTER COLUMN ATTACHMENT PER EQUIPMENT SHOP DRAWINGS.
5. WALL THICKNESS 1'-2" EXCEPT AT EFFLUENT CHAMBER (SEE SECTION 3)

6" THE PLAN VIEW DOES NOT SHOW THE FULL SPAN WALKWAY & HANDRAIL THAT IS TO BE PROVIDED FOR FINAL CLARIFIER No.2. PROVIDE AS SHOWN ON DETAILS & SHEET M-28.

DEPARTMENT OF PUBLIC WORKS
HOWARD COUNTY, MARYLAND

DIRECTOR OF PUBLIC WORKS — DATE 3/6/92 — Act. CHIEF, BUREAU OF ENGINEERING — DATE 3-6-92
CHIEF, BUREAU OF ENVIRONMENTAL SERVICES — DATE 3/6/92 — Act. CHIEF, UTILITY DESIGN DIVISION — DATE 3-6-92

Metcalf & Eddy
REG. PROF. ENGR. — DATE 3/6/92

STATE OF MARYLAND — JONATHAN WINTHROP DOANE No. 15140 — REGISTERED PROFESSIONAL ENGINEER

DES: D. Colson
DRN: E. Burnett
CHK: M. Yu
DATE: 12/7/91

BY	NO.	REVISION	DATE
MC	3	RECORD DRAWING	10/28/96
DJG	2	ADDENDUM #3	4/10/92
	1	REVISED FOR BIDDING	3/5/92

STRUCTURAL

FINAL CLARIFIER NO. 2
PLAN

LITTLE PATUXENT WASTEWATER TREATMENT PLANT

LITTLE PATUXENT WASTEWATER TREATMENT PLANT EXPANSION
ADDITION NO. 5
CAPITAL PROJECT S-6153

CONTRACT NO. 20-3082

HOWARD COUNTY, MARYLAND

SCALE AS SHOWN

SHEET 62 OF 226

S-14

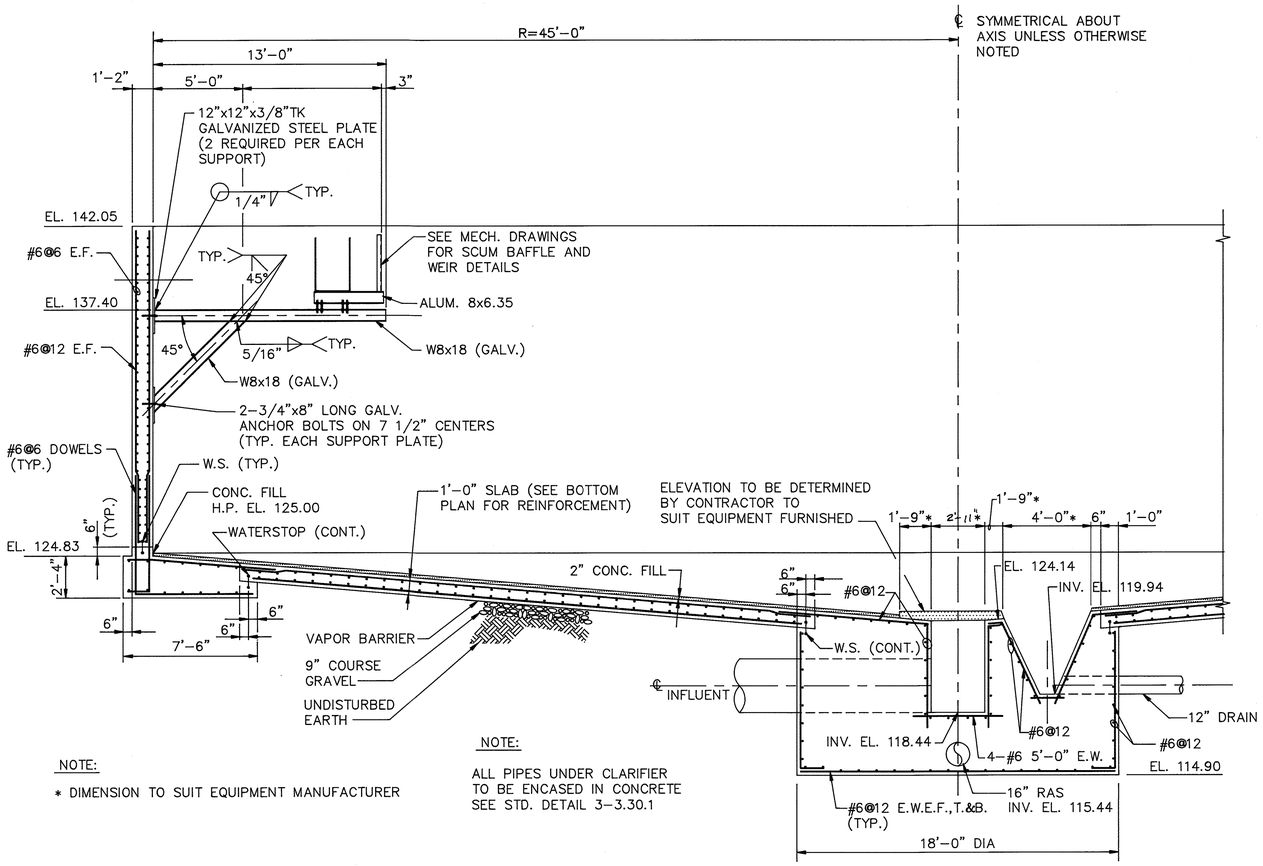

NOTE:

* DIMENSION TO SUIT EQUIPMENT MANUFACTURER

NOTE:

ALL PIPES UNDER CLARIFIER TO BE ENCASED IN CONCRETE SEE STD. DETAIL 3-3.30.1

SECTION 1 / S-14
SCALE: 1/4"=1'-0"

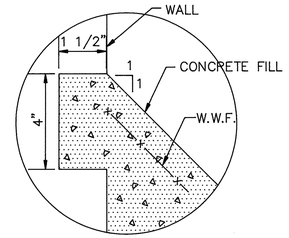

DETAIL A

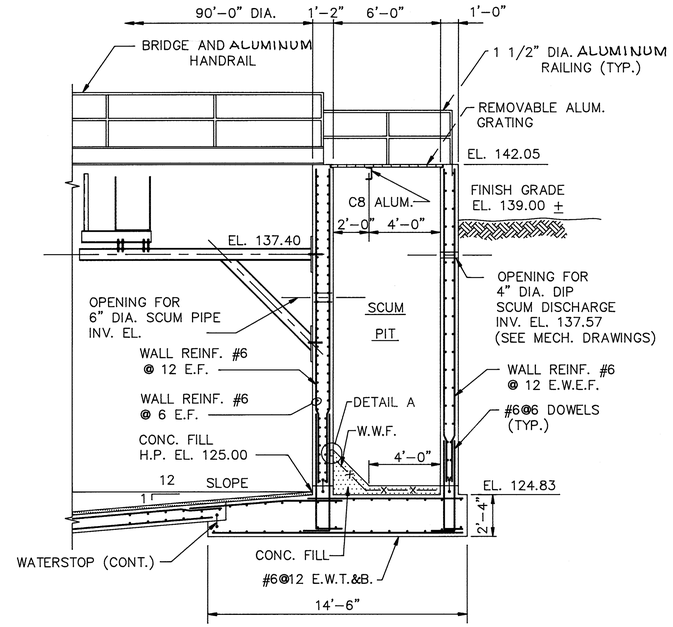

SECTION 2 / S-14
SCALE: 1/4"=1'-0"

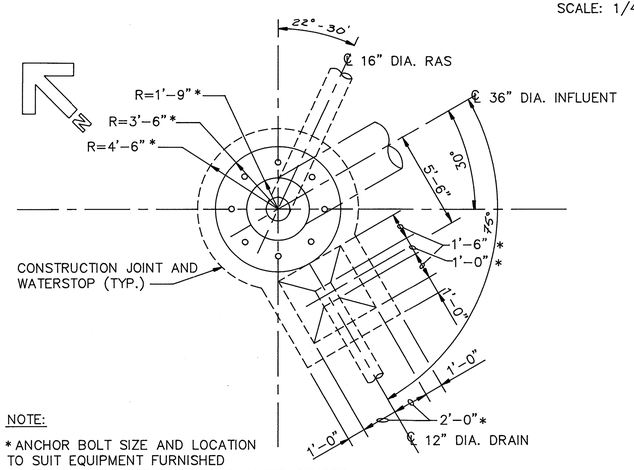

NOTE:

* ANCHOR BOLT SIZE AND LOCATION TO SUIT EQUIPMENT FURNISHED
DIMENSIONS TO SUIT EQUIPMENT MANUFACTURER

PARTIAL PLAN FOR
FINAL CLARIFIER NO. 2 CENTER PIER
SCALE: 1/4"=1'-0"

NOTES:

1. FINAL LOCATION OF CLARIFIER DEPENDANT ON LOCATION OF EXISTING PARTIAL EFFLUENT BOX. CONTRACTOR TO VERIFY.
2. FOR TOP & BOTTOM STAIR LANDINGS SEE SHEET S-5.
3. CLARIFIER WALL 1'-0" THICK AT EFFLUENT CHAMBER ONLY.

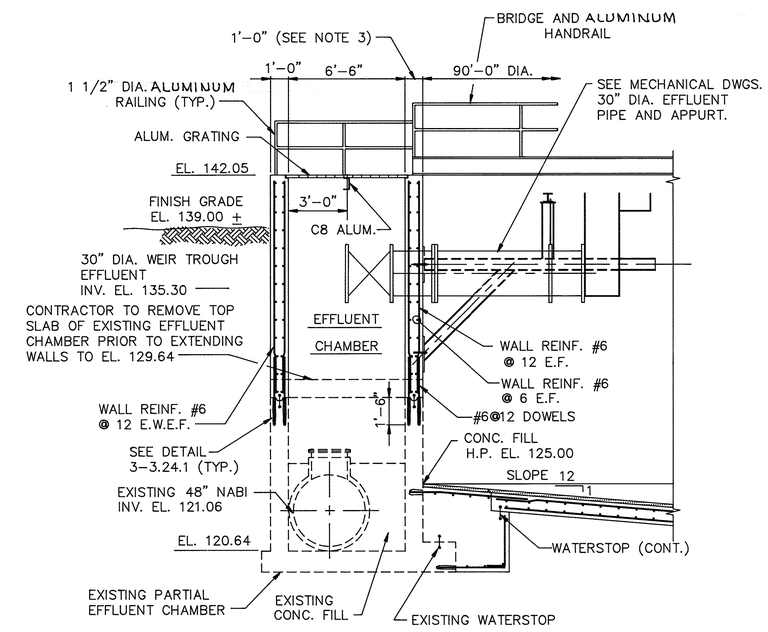

Record Drawing Notes:

1. **All elevations should be field verified before using**
2. **Weir and water elevations based on post-construction survey by Howard County.**

SECTION 3 / S-14
SCALE: 1/4"=1'-0"

DEPARTMENT OF PUBLIC WORKS
HOWARD COUNTY, MARYLAND

DIRECTOR OF PUBLIC WORKS — DATE 3/6/92 — ACT. CHIEF, BUREAU OF ENGINEERING — DATE 3-6-92
CHIEF, BUREAU OF ENVIRONMENTAL SERVICES — DATE 3/6/92 — ACT. CHIEF, UTILITY DESIGN DIVISION — DATE 3-6-92

Metcalf & Eddy
REG. PROF. ENGR. — DATE 3/6/92

STATE OF MARYLAND — JONATHAN WINTHROP DOANE No. 15140 — REGISTERED PROFESSIONAL ENGINEER

DES: D. Colson
DRN: E. Burnett
CHK: M. Yu
DATE: 12/7/91

BY	NO.	REVISION	DATE
	3	RECORD DRAWING	10/2004
DZG	2	ADDENDUM #2	4/2002
	1	REVISED FOR BIDDING	3/6/92

STRUCTURAL

FINAL CLARIFIER NO. 2
SECTIONS

LITTLE PATUXENT WASTEWATER TREATMENT PLANT
LITTLE PATUXENT WASTEWATER TREATMENT PLANT EXPANSION
ADDITION NO. 5
CAPITAL PROJECT S-6153
CONTRACT NO. 20-3082
HOWARD COUNTY, MARYLAND

SCALE AS SHOWN
SHEET 63 OF 226
S-15

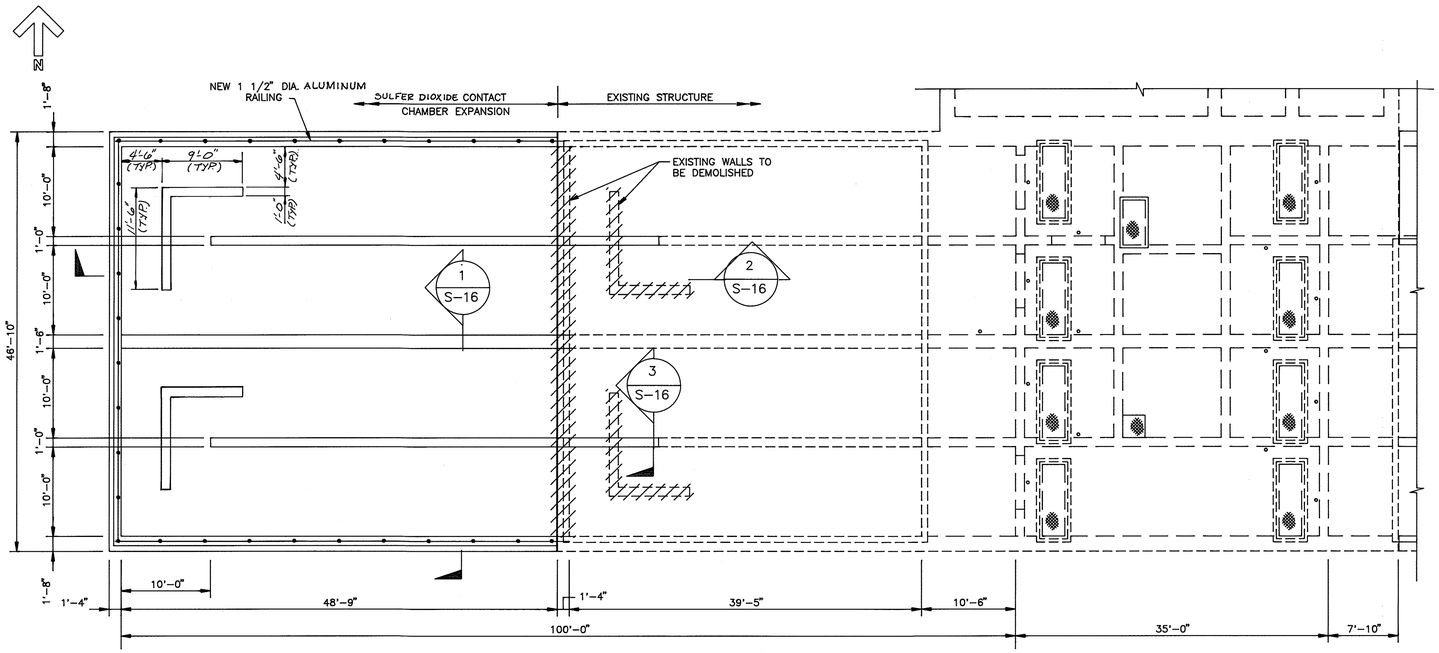

PLAN @ ELEV. 142.00

SCALE: 1/8" = 1'-0"

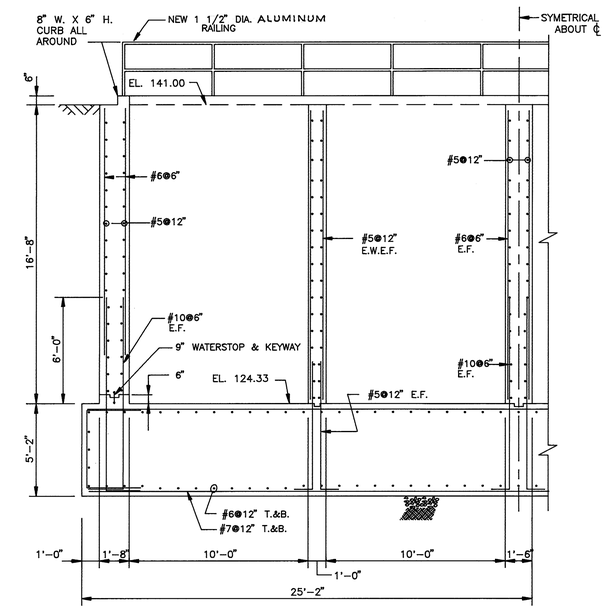

SECTION 1 / S-16

SCALE: 1/4"=1-0"

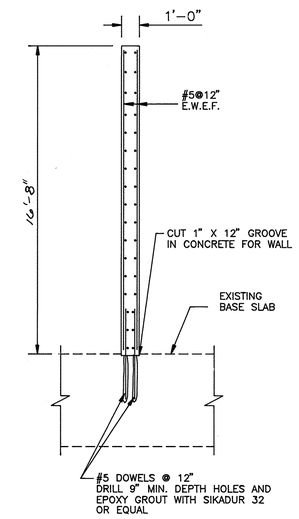

SECTION 3 / S-16

SCALE: 1/4"=1-0"

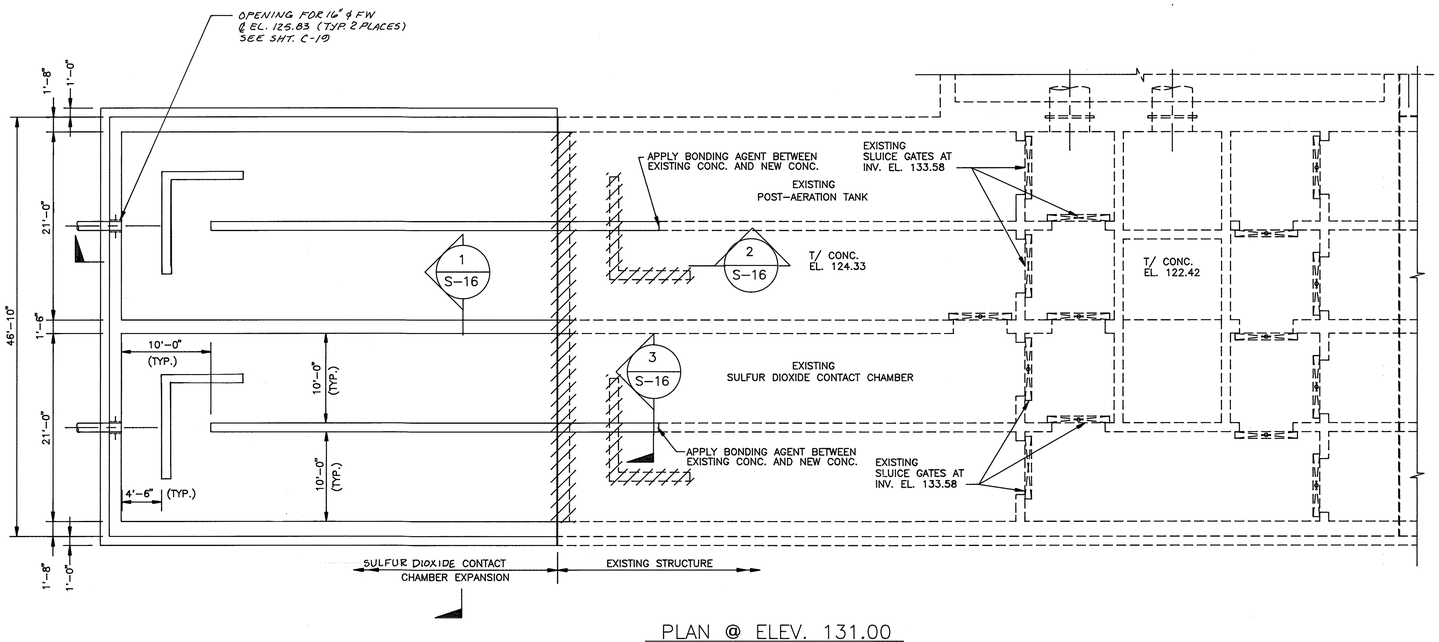

PLAN @ ELEV. 131.00

SCALE: 1/8" = 1'-0"

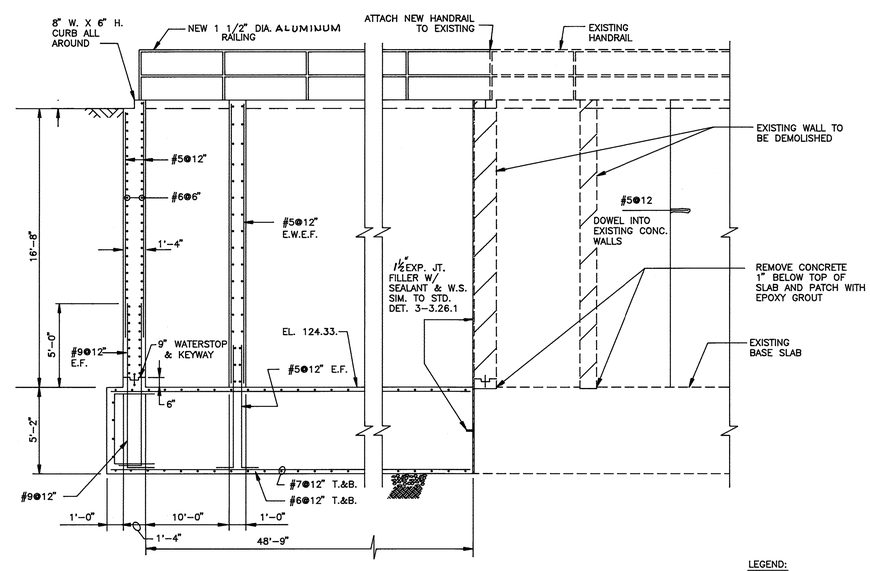

SECTION 2 / S-16

SCALE: 1/4"=1-0"

LEGEND:

NEW CONSTRUCTION

EXISTING STRUCTURES

Record Drawing Notes:

1. **All elevations should be field verified before using**
2. **Weir and water elevations based on post-construction survey by Howard County.**

NOTES

1. FOUNDATION BASED ON ALLOWABLE SOIL BEARING PRESSURE 4000 PSF.
2. SEE STD. DETAIL 2-9.1.1 FOR FOUNDATION PREPARATION.
3. ALL SLUICE GATE INVERTS AT EL. 124.33 UNLESS OTHERWISE NOTED.
4. CONTRACTOR RESPONSIBLE FOR MAINTAINING PLANT FLOW DURING MODIFICATIONS.

DEPARTMENT OF PUBLIC WORKS
HOWARD COUNTY, MARYLAND

DIRECTOR OF PUBLIC WORKS — DATE 3/6/92
ACT. CHIEF, BUREAU OF ENGINEERING — DATE 3-6-92
CHIEF, BUREAU OF ENVIRONMENTAL SERVICES — DATE 3/6/92
ACT. CHIEF, UTILITY DESIGN DIVISION — DATE 3-6-92

Metcalf & Eddy

REG. PROF. ENGR. — DATE 3/6/92

STATE OF MARYLAND — JONATHAN WINTHROP DOANE No. 15149 — REGISTERED PROFESSIONAL ENGINEER

DES: D. Kettmeier
DRN: E. Burnett
CHK: M. Yu
DATE: 12/7/91

BY	NO.	REVISION	DATE
	2	RECORD DRAWING	6/21/94
	1	REVISED FOR BIDDING	3/5/92

STRUCTURAL

SULFUR CONTACT BASIN MODIFICATIONS PLAN AND SECTIONS

LITTLE PATUXENT WASTEWATER TREATMENT PLANT

LITTLE PATUXENT WASTEWATER TREATMENT PLANT EXPANSION
ADDITION NO. 5
CAPITAL PROJECT S - 6153

CONTRACT NO. 20 - 3082

HOWARD COUNTY, MARYLAND

SCALE AS SHOWN

SHEET 64 OF 226

S-16

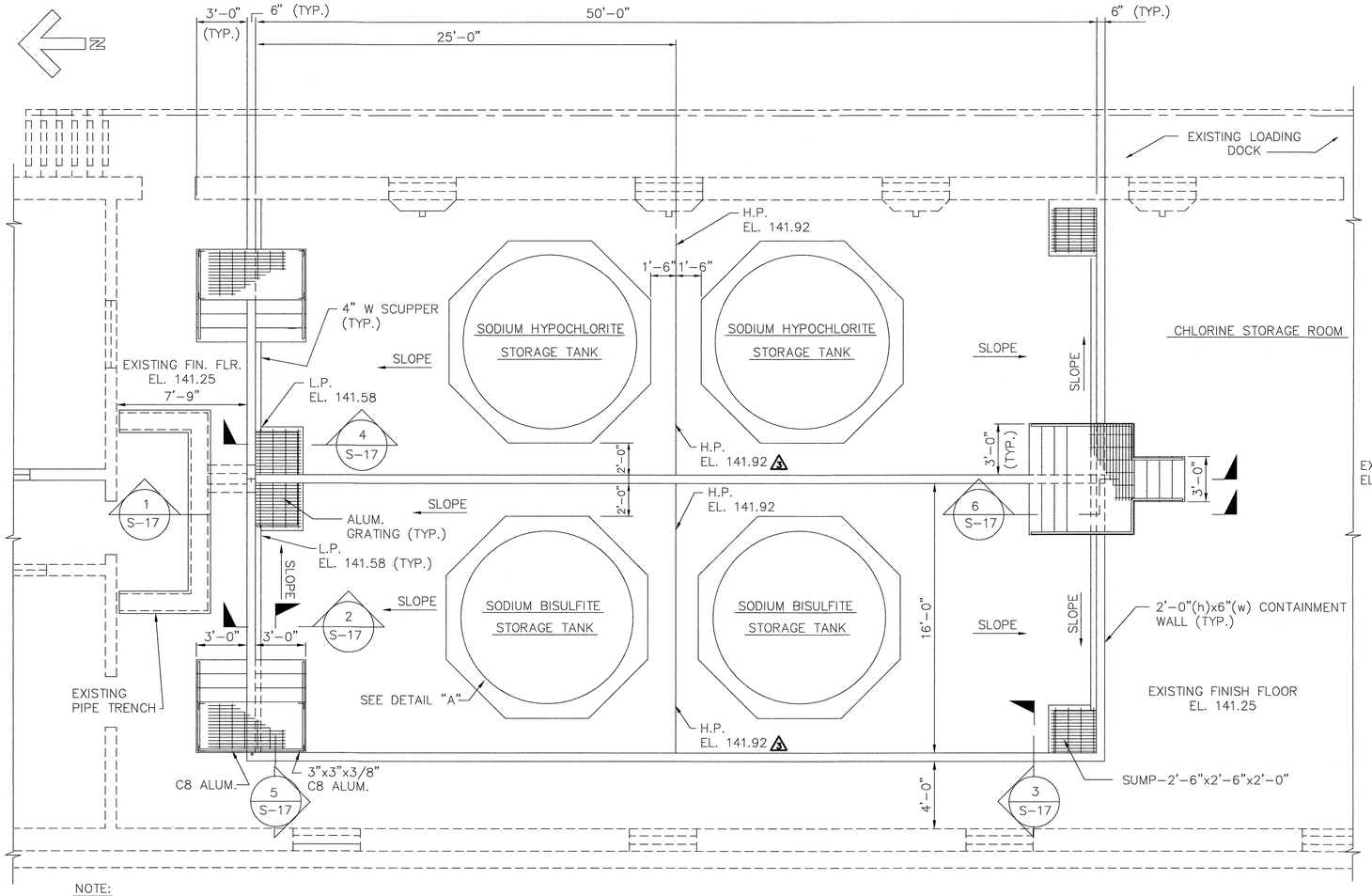

NEW LAYOUT PLAN
SCALE: 1/4"=1'-0"

NOTE:

SEE SHEET S-24 FOR ADDITIONAL STRUCTURAL WORK OUTSIDE CHLORINE BUILDING.

CONTRACTOR RESPONSIBLE FOR ALL CMU WALL PENETRATIONS FOR CHEMICAL TANK FILL AND VENT PIPING. SEE DRAWING M-36. 3

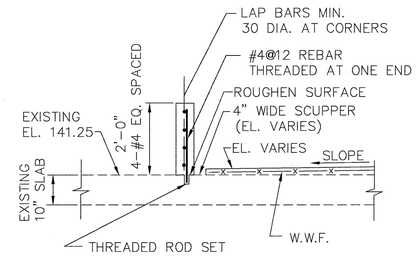

SECTION 2 S-17
SCALE: 1/2"=1'-0"

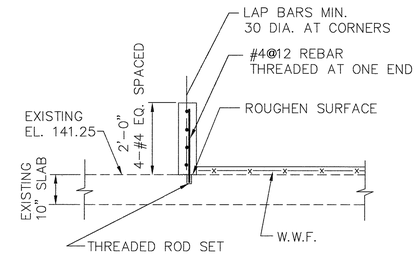

SECTION 3 S-17
SCALE: 1/2"=1'-0"

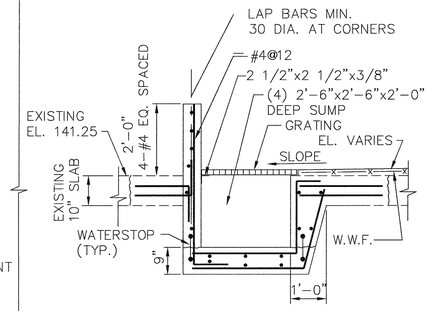

SECTION 4 S-17
SCALE: 1/2"=1'-0"

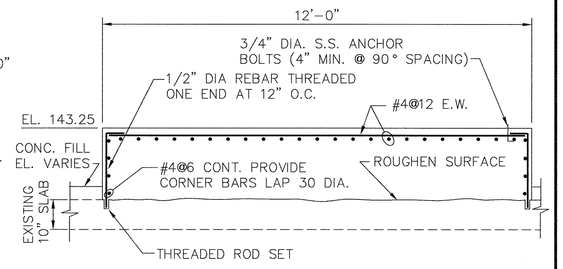

DETAIL A
SCALE: 1/2"=1'-0"

3 CONTRACT DRAWING S-17 – THE FOLLOWING LIST IS TO CLARIFY WHAT NEW ITEMS ARE INDICATED ON DRAWING S-17, CHLORINE BUILDING MODIFICATION STORAGE AREA PLAN AND SECTION:
- 2-FT CONTAINMENT WALLS
- SUMP PITS
- ACCESS STAIRS
- TANK FOUNDATION PADS
- CONCRETE FILL (FOR FLOOR SLOPE)
- TWO SLEEVES ENCASED IN EXISTING FLOOR SLAB FROM CONTAINMENT AREA TO EXISTING PIPE TRENCH THAT WILL ACCOMODATE NEW CHEMICAL PIPING WITHOUT COMPROMISING THE INTEGRITY OF THE CONTAINMENT AREA

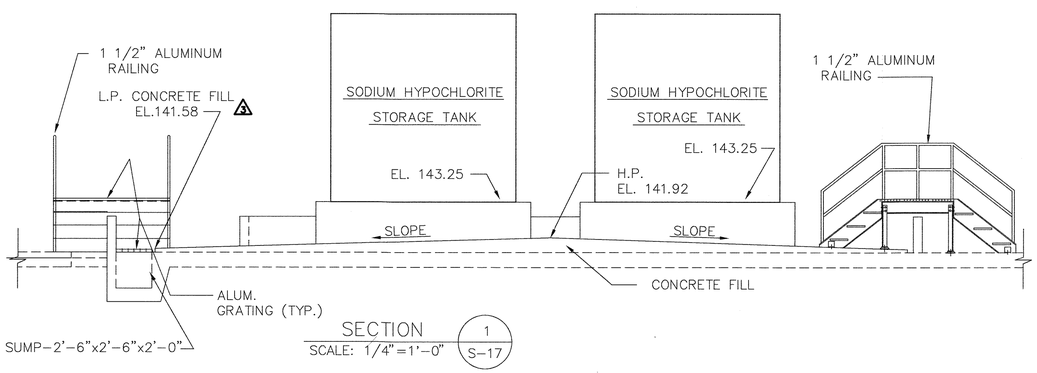

SECTION 1 S-17
SCALE: 1/4"=1'-0"

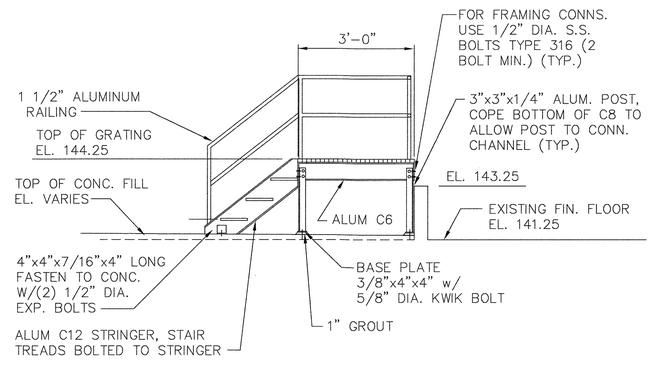

SECTION 5 S-17
SCALE: 1/2"=1'-0"

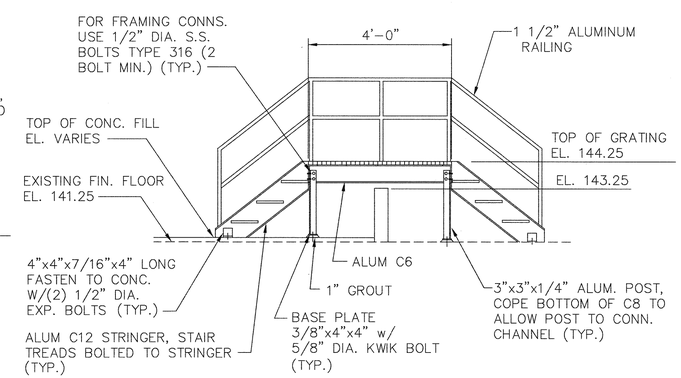

SECTION 6 S-17
SCALE: 1/2"=1'-0"

DEPARTMENT OF PUBLIC WORKS
HOWARD COUNTY, MARYLAND

DIRECTOR OF PUBLIC WORKS — DATE 5-7-96
CHIEF, BUREAU OF ENGINEERING — DATE 5/7/96
CHIEF, BUREAU OF ENVIRONMENTAL SERVICES — DATE 5/7/96
CHIEF, UTILITY DESIGN DIVISION — DATE 5-7-96

M&E Metcalf & Eddy
REG. PROF. ENGR. — DATE 5-7-96

STATE OF MARYLAND — JONATHAN WINTHROP DOANE No. 15140 — REGISTERED PROFESSIONAL ENGINEER

DES: DR
DRN: EB
CHK:
DATE:

BY	NO.	REVISION	DATE
MB	1	REVISE FOR BIDDING	3/5/92
MJC	2	RECORD DRAWING	3/5/94

STRUCTURAL

CHLORINE BUILDING MODIFICATIONS STORAGE AREA PLAN AND SECTION

LITTLE PATUXENT WASTEWATER TREATMENT PLANT

LITTLE PATUXENT WASTEWATER TREATMENT EXPANSION ADDITION NO. 5 CAPITAL PROJECT S-6153

CONTRACT NO. 20-3082

HOWARD COUNTY, MARYLAND

SCALE AS SHOWN

SHEET 65 OF 226

S-17A

FILE-NO.

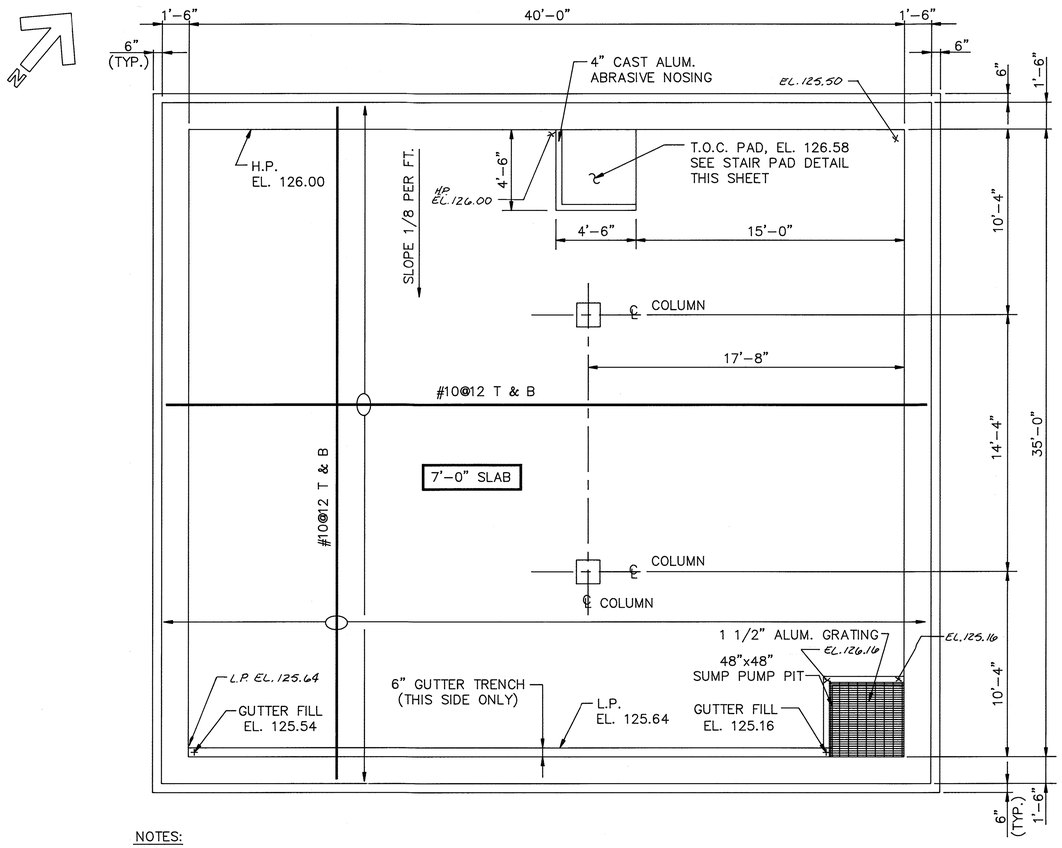

NOTES:

1. FOUNDATION BASED UPON AN ALLOWABLE SOIL BEARING PRESSURE OF 2,000 LBS PER SQ. FT..
2. STANDARD DETAILS TO BE FOUND IN SPECIFICATIONS.
3. TYPICAL DETAILS TO BE FOUND ON SHEET S-40.

FOUNDATION PLAN
SCALE: 1/4"=1'-0"

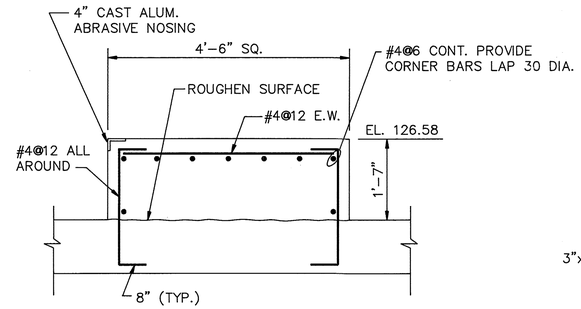

STAIR PAD DETAIL
SCALE: 3/4"=1'-0"

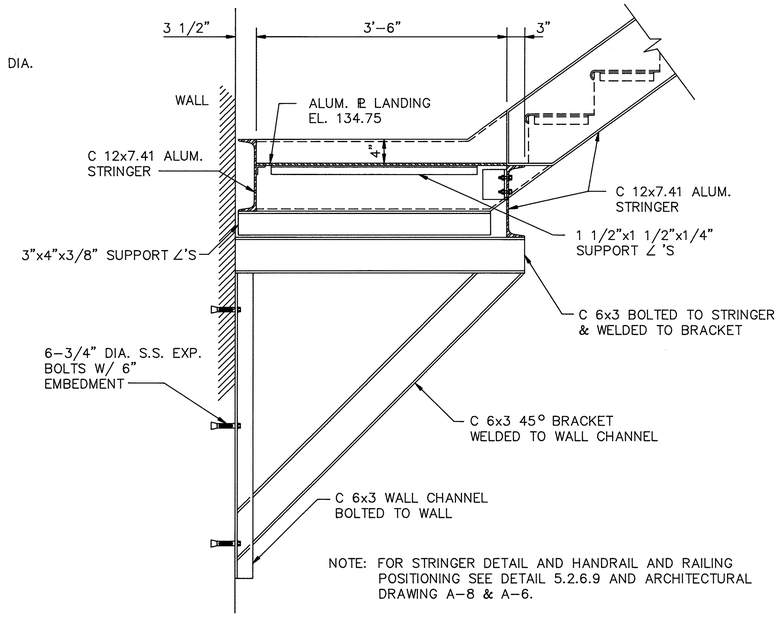

NOTE: FOR STRINGER DETAIL AND HANDRAIL AND RAILING POSITIONING SEE DETAIL 5.2.6.9 AND ARCHITECTURAL DRAWING A-8 & A-6.

SECTION 1 / S-18
SCALE: 1"=1'-0"

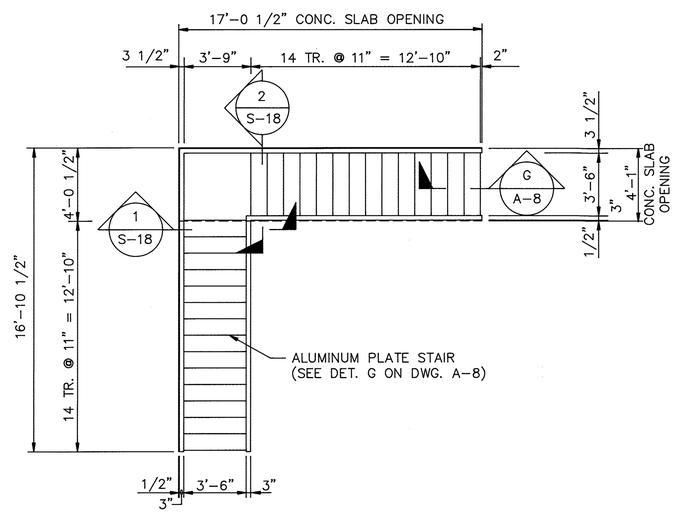

PLAN OF STAIR
SCALE: 1/4"=1'-0"

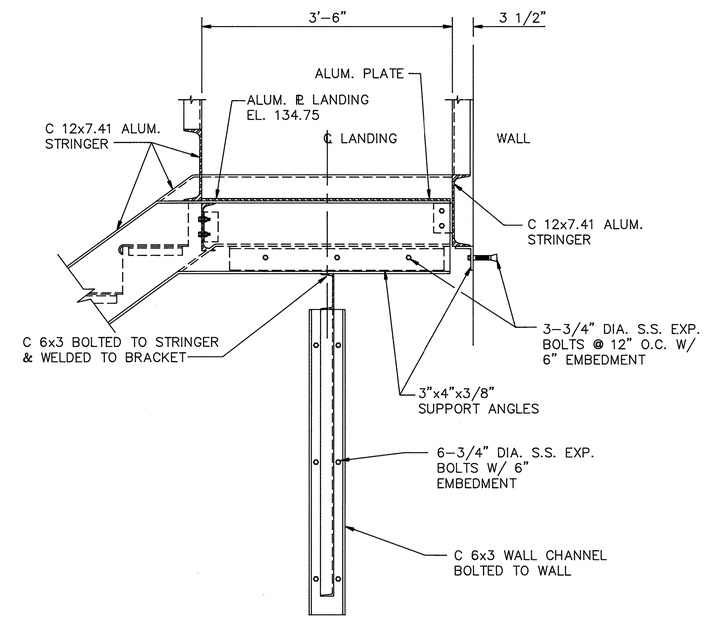

SECTION 2 / S-18
SCALE: 1"=1'-0"

DEPARTMENT OF PUBLIC WORKS
HOWARD COUNTY, MARYLAND

DIRECTOR OF PUBLIC WORKS	3/6/92 DATE	ACT. CHIEF, BUREAU OF ENGINEERING	3-6-92 DATE
CHIEF, BUREAU OF ENVIRONMENTAL SERVICES	3/6/92 DATE	ACT. CHIEF, UTILITY DESIGN DIVISION	3-6-92 DATE

Metcalf & Eddy

REG. PROF. ENGR. — 3/6/92 DATE

STATE OF MARYLAND — JONATHAN WINTHROP DOANE No. 15140 — REGISTERED PROFESSIONAL ENGINEER

DES: M. YU
DRN: E. Burnett
CHK: M. YU
DATE: 12/7/91

BY	NO.	REVISION	DATE
	2	RECORD DRAWING	10/21/94
	1	REVISED FOR BIDDING	3/5/92

STRUCTURAL

NORTH PUMP STATION FOUNDATION PLAN AND SECTIONS

LITTLE PATUXENT WASTEWATER TREATMENT PLANT
LITTLE PATUXENT WASTEWATER TREATMENT PLANT EXPANSION ADDITION NO. 5
CAPITAL PROJECT S - 6153
CONTRACT NO. 20 - 3082
HOWARD COUNTY, MARYLAND

SCALE AS SHOWN
SHEET 66 OF 226
S-18

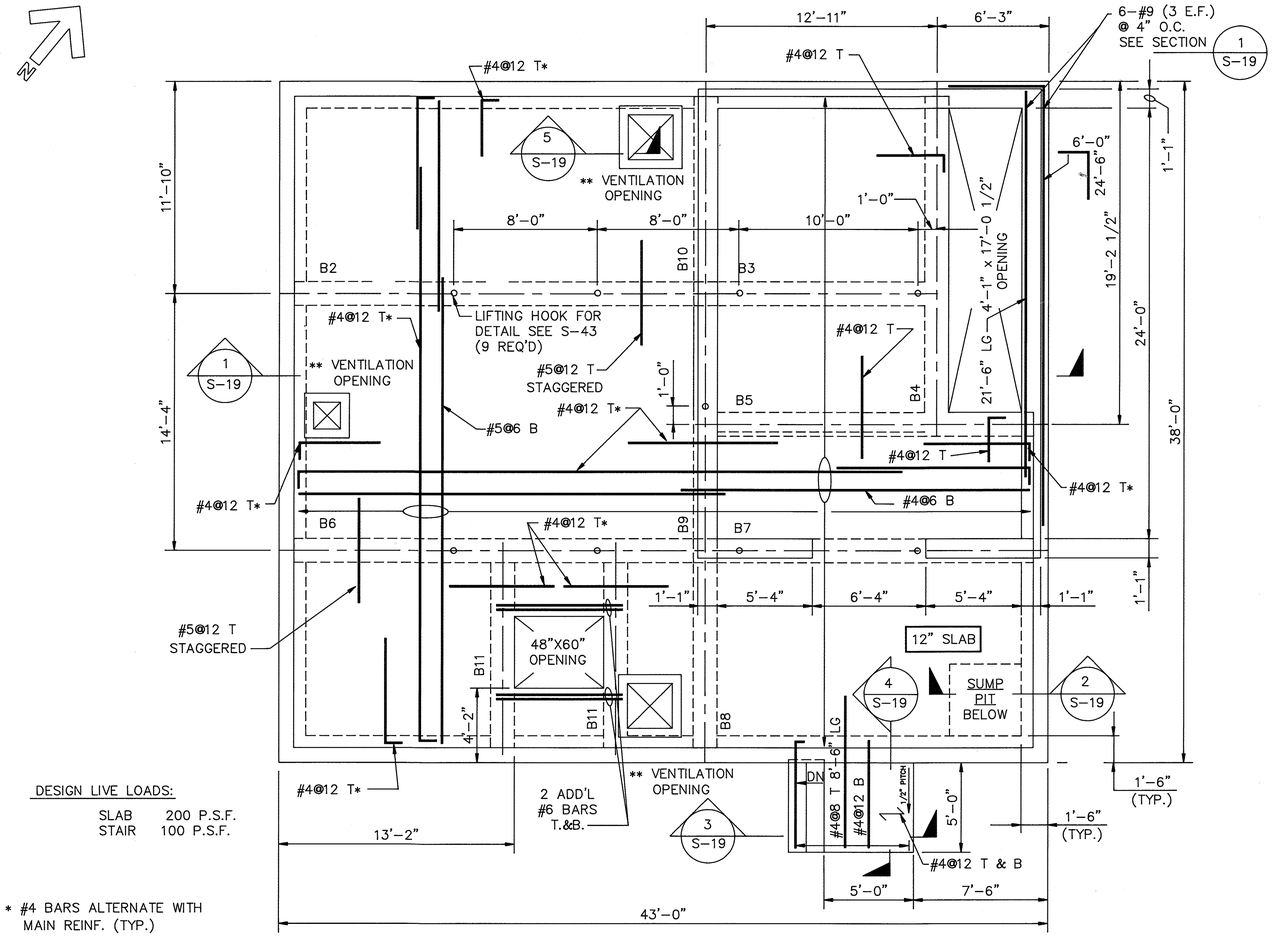

DESIGN LIVE LOADS:

SLAB 200 P.S.F.
STAIR 100 P.S.F.

* #4 BARS ALTERNATE WITH MAIN REINF. (TYP.)

** FOR SIZE AND LOCATION OF VENTILATION OPENING, COORDINATE WITH DRAWING H-6.

NOTE: SEE ARCHITECTURAL DRAWING A-6 FOR SLAB TOP ELEVATIONS AND FOR HANDRAIL POSITIONING.

FIRST FLOOR FRAMING PLAN

SCALE: 1/4"=1'-0"

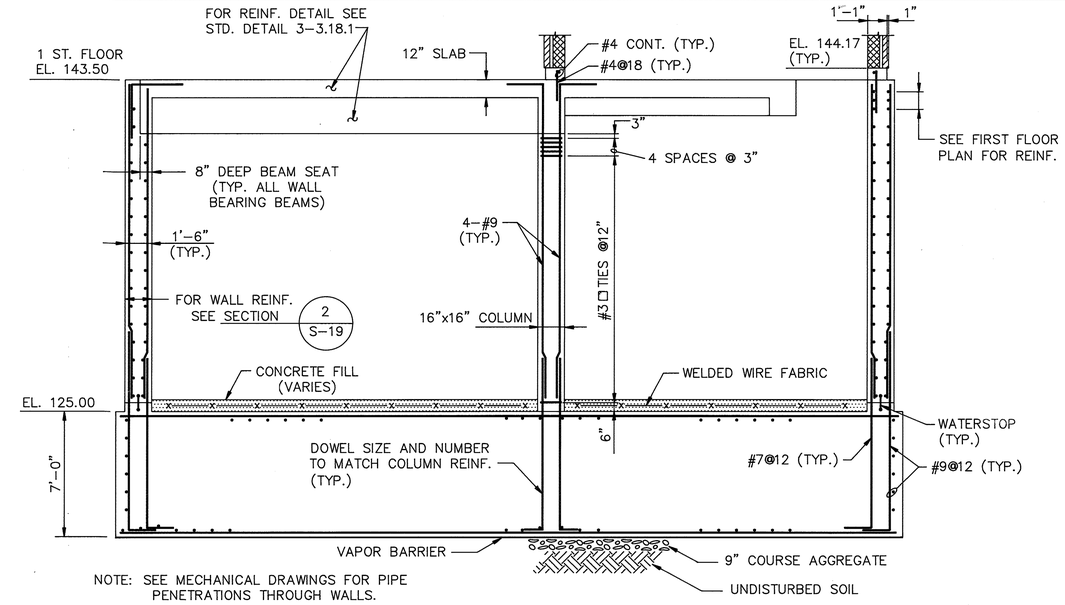

NOTE: SEE MECHANICAL DRAWINGS FOR PIPE PENETRATIONS THROUGH WALLS.

SECTION 1 S-19
SCALE: 1/4"=1'-0"

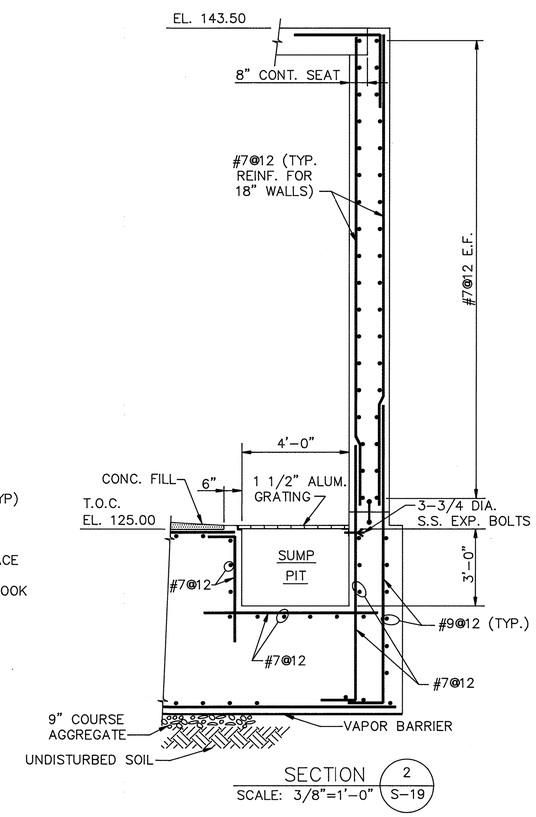

SECTION 2 S-19
SCALE: 3/8"=1'-0"

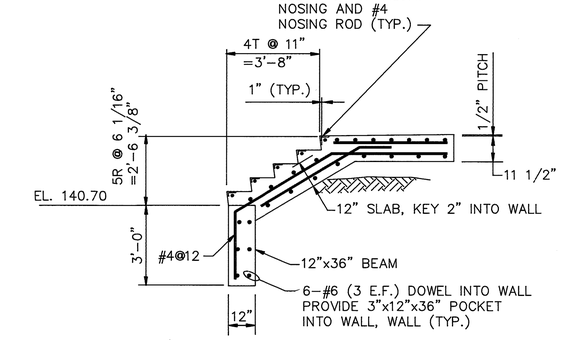

SECTION 3 S-19
SCALE: 3/8"=1'-0"

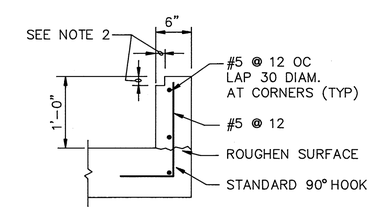

SECTION 5 S-19 S-22
SCALE: 3/8"=1'-0"

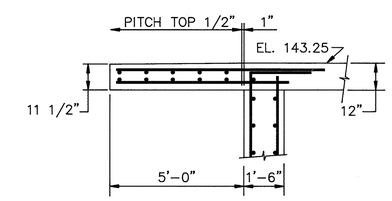

SECTION 4 S-19
SCALE: 3/8"=1'-0"

BEAM SCHEDULE										BEAM MARK ON PLAN WILL BE DESIGNATED ON LEFT SIDE OF BEAM WORK WITH STD. DETAIL 3-3.18.1
1 ST. FLOOR										
MARK	SIZE: WIDTH X DEPTH (MIN.)	REINFORCEMENT					STIRRUPS			REMARKS
		BOTTOM		TOP						
		CONT.	ADD.	ADD. LEFT	CONT.	ADD. RIGHT	TYPE	SIZE	SPACING	
B1	–	–	–	–	–	–	–	–	–	NOT USED
B2	16x36	2-#9	3-#9	–	2-#9	2-#9	□	#3	1@2", BAL.@10	
B3	16x24	2-#9	–	–	3-#9	–	⊔	#3	1@2", BAL.@10	
B4	16x24	3-#9	–	–	3-#9	–	□	#3	1@2", BAL.@10	
B5	16x24	2-#9	2-#9	–	2-#9	1-#9	□	#3	1@2", BAL.@10	
B6	16x36	2-#9	3-#9	–	2-#9	3-#9	⊔	#3	1@2", BAL.@10	
B7	16x36	2-#9	1-#9	–	3-#9	–	⊔	#3	1@2", BAL.@10	
B8	16x36	2-#9	–	–	2-#9	2-#9	⊔	#3	1@2", BAL.@10	
B9	16x36	2-#9	2-#9	–	2-#9	2-#9	□	#3	1@2", BAL.@10	
B10	16x36	2-#9	–	–	2-#9	–	⊔	#3	1@2", BAL.@10	
B11	16x24	2-#9	–	–	2-#9	–	□	#3	1@2", BAL.@10	2 BEAMS

NOTES:
1. FOR ADDITIONAL REINF., SEE STD. DETAIL 3-3.23.1.
2. DIMENSIONS SHALL BE SUITED TO EQUIPMENT FURNISHED.

DEPARTMENT OF PUBLIC WORKS
HOWARD COUNTY, MARYLAND

DIRECTOR OF PUBLIC WORKS — DATE 3/6/92
ACT. CHIEF, BUREAU OF ENGINEERING — DATE 3-6-92
CHIEF, BUREAU OF ENVIRONMENTAL SERVICES — DATE 3/6/92
ACT. CHIEF, UTILITY DESIGN DIVISION — DATE 3-6-92

Metcalf & Eddy

REG. PROF. ENGR. — DATE 3/6/92

STATE OF MARYLAND — JONATHAN WINTHROP DOANE No. 15140 — REGISTERED PROFESSIONAL ENGINEER

DES: M. Yu
DRN: E. Burnett
CHK: M. Yu
DATE: 12/7/91

BY	NO.	REVISION	DATE
	2	RECORD DRAWING	11/1/94
	1	REVISED FOR BIDDING	3/5/92

STRUCTURAL

NORTH PUMP STATION
FIRST FLOOR FRAMING PLAN
AND SECTIONS

LITTLE PATUXENT WASTEWATER TREATMENT PLANT

LITTLE PATUXENT WASTEWATER TREATMENT PLANT EXPANSION
ADDITION NO. 5
CAPITAL PROJECT S - 6153

CONTRACT NO. 20 - 3082
HOWARD COUNTY, MARYLAND

SCALE AS SHOWN

SHEET 67 OF 226

S-19

C

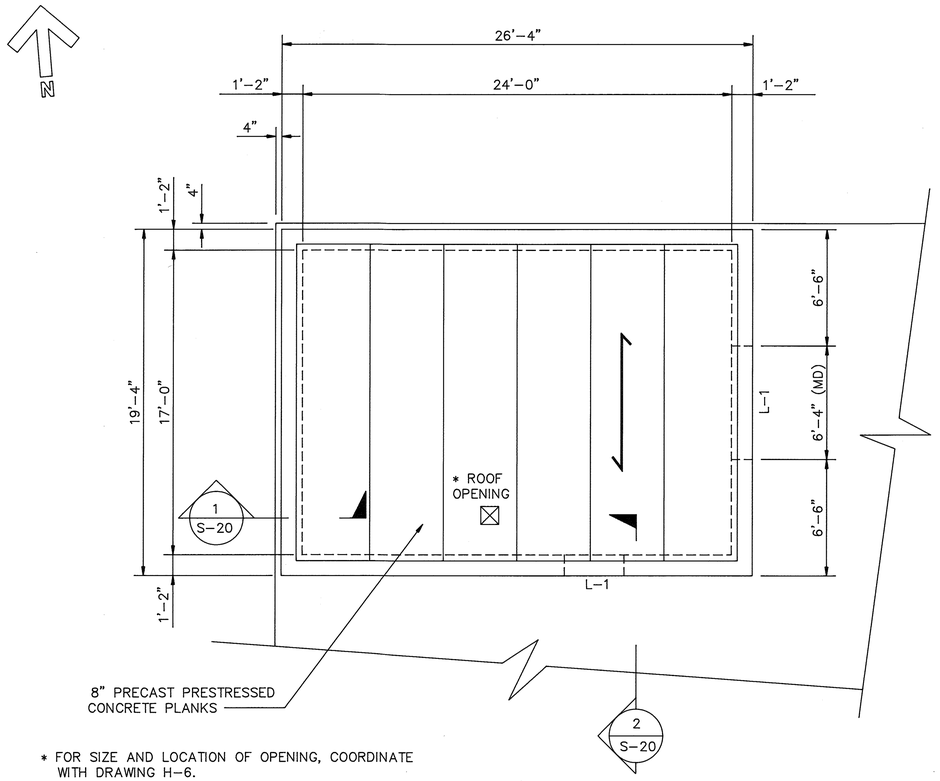

* FOR SIZE AND LOCATION OF OPENING, COORDINATE WITH DRAWING H-6.

DESIGN LIVE LOAD:

1. ROOF SNOW LOAD = 30 PSF
2. SUPERIMPOSED DL = 20 PSF

ROOF FRAMING PLAN

SCALE: 1/4"=1'-0"

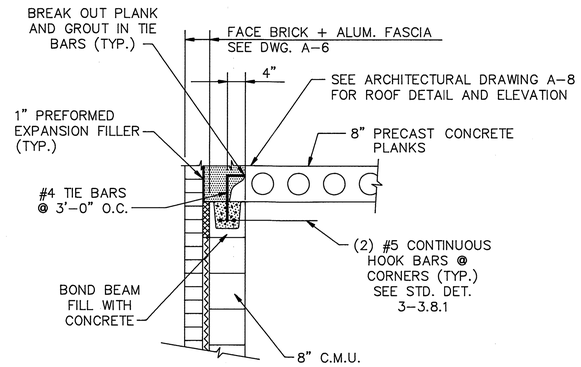

SECTION 1 / S-20

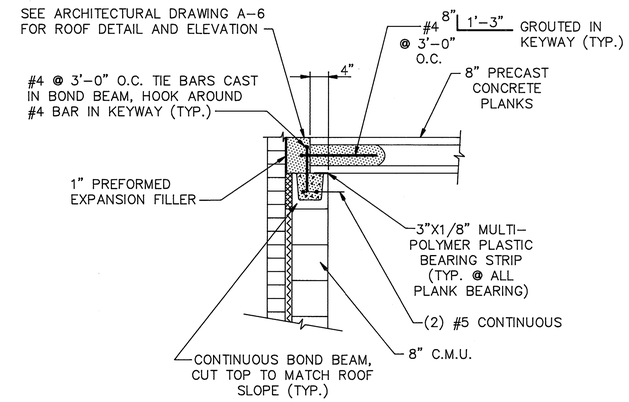

SECTION 2 / S-20

PRECAST CONCRETE LINTEL SCHEDULE

MARK	SIZE WIDTH X DEPTH	REINFORCING	MINIMUM END BEARING	REMARKS
L-1	7 5/8" X 7 5/8"	(2) #5 CONTINUOUS	8" MINIMUM	SEE NOTE 2

NOTES:

1. FILL BLOCK UNDER BEARING ENDS OF LINTELS WITH #5 BAR AND MORTAR DOWN TO THE FIRST FLOOR.
2. PROVIDE L5"x5"x5/16" (HOT DIPPED GALVANIZED) ATTACHED TO CONCRETE LINTEL AS SHOWN ON STD. DETAIL 3-3.31.1 .

DEPARTMENT OF PUBLIC WORKS
HOWARD COUNTY, MARYLAND

DIRECTOR OF PUBLIC WORKS — DATE 12/9/91
CHIEF, BUREAU OF ENGINEERING — DATE 12-9-91
CHIEF, BUREAU OF ENVIRONMENTAL SERVICES — DATE 12/9/91
CHIEF, UTILITY DESIGN DIVISION — DATE 12-9-91

Metcalf & Eddy
REG. PROF. ENGR. — DATE 12/9/91

STATE OF MARYLAND — JONATHAN WINTHROP DOANE No. 15140 — REGISTERED PROFESSIONAL ENGINEER

DES: M. Yu
DRN: E. Burnett
CHK: M. Yu
DATE: 12/7/91

BY	NO.	REVISION	DATE
MC	2	RECORD DRAWING	11/1/94
	1	REVISED FOR BIDDING	3/5/92

STRUCTURAL

NORTH PUMP STATION
ROOF FRAMING PLAN

LITTLE PATUXENT WASTEWATER TREATMENT PLANT
LITTLE PATUXENT WASTEWATER TREATMENT PLANT EXPANSION
ADDITION NO. 5
CAPITAL PROJECT S - 6153
CONTRACT NO. 20 - 3082
HOWARD COUNTY, MARYLAND

SCALE AS SHOWN
SHEET 68 OF 226
S-20

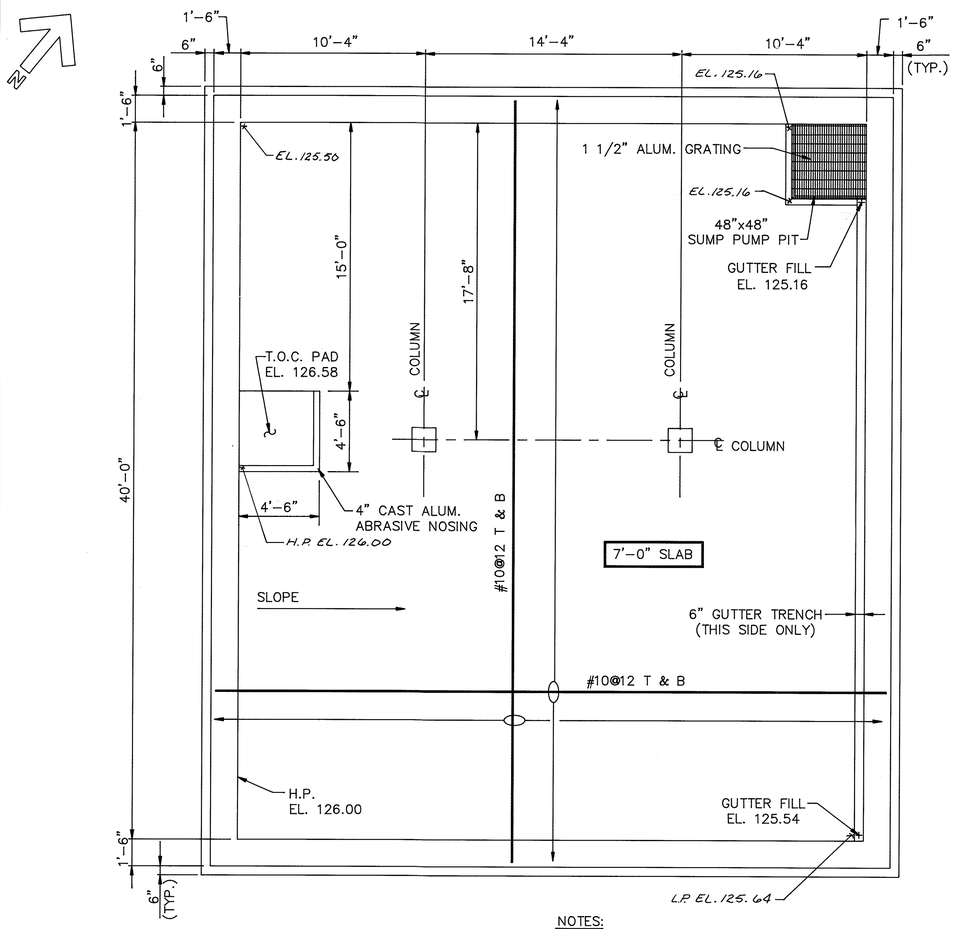

NOTES:

1. FOUNDATION BASED UPON AN ALLOWABLE SOIL BEARING PRESSURE OF 2,000 LBS PER SQ. FT..
2. STANDARD DETAILS TO BE FOUND IN SPECIFICATIONS.
3. TYPICAL DETAILS TO BE FOUND IN SHEET S-39.

FOUNDATION PLAN
SCALE: 1/4"=1'-0"

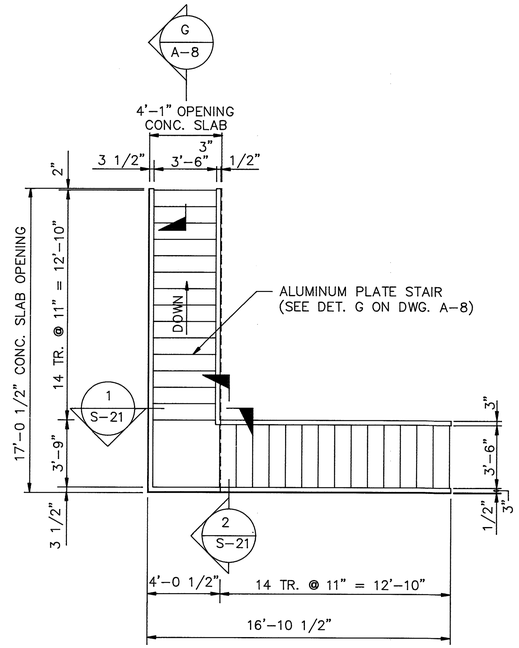

PLAN OF STAIR
SCALE: 1/4"=1'-0"

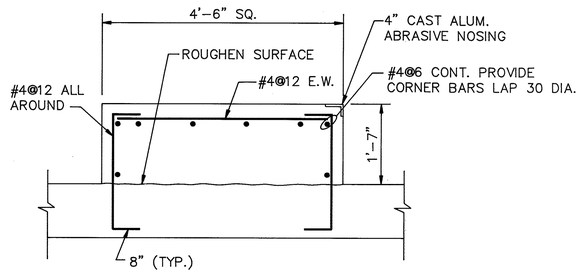

STAIR PAD DETAIL
SCALE: 3/4"=1'-0"

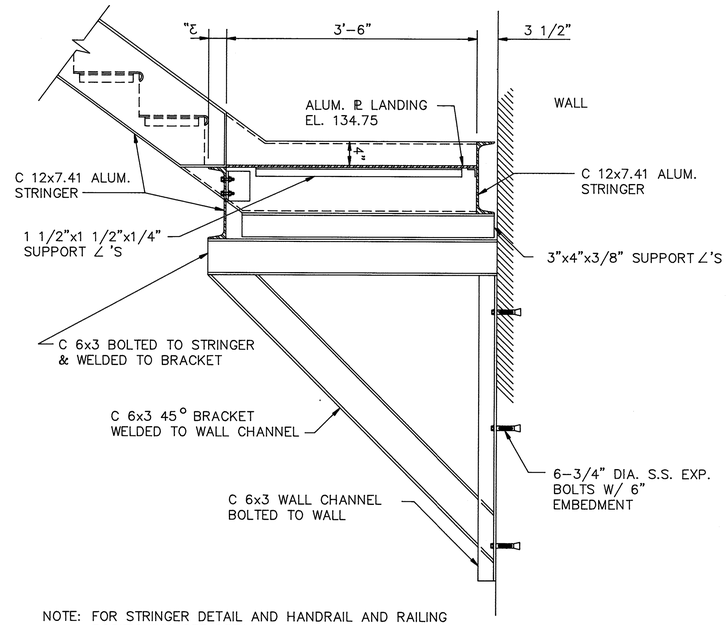

NOTE: FOR STRINGER DETAIL AND HANDRAIL AND RAILING POSITIONING SEE DETAIL 5.2.6.9 AND ARCHITECTURAL DRAWING SECTION A-8 & A-6.

SECTION 1 / S-21
SCALE: 1"=1'-0"

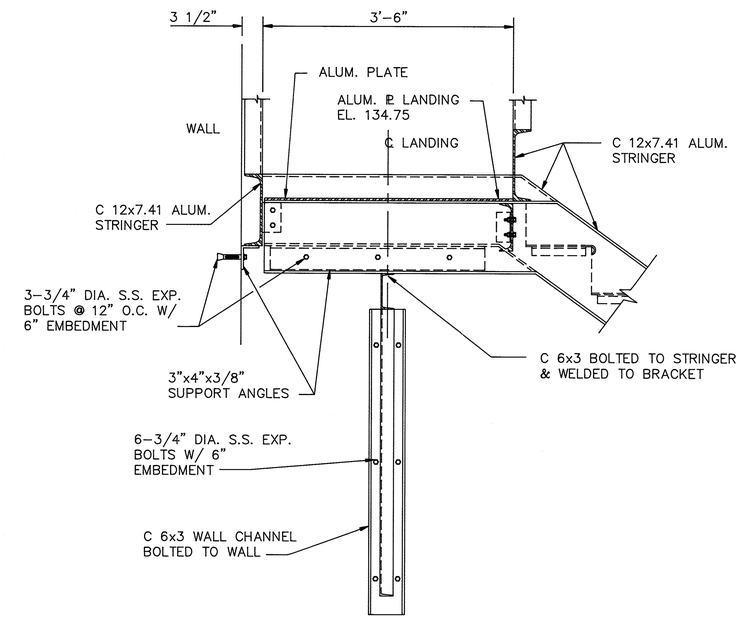

SECTION 2 / S-21
SCALE: 1"=1'-0"

DEPARTMENT OF PUBLIC WORKS
HOWARD COUNTY, MARYLAND

DIRECTOR OF PUBLIC WORKS — DATE 3/6/92 — Act. CHIEF, BUREAU OF ENGINEERING — DATE 3-6-92
CHIEF, BUREAU OF ENVIRONMENTAL SERVICES — DATE 3/6/92 — Act. CHIEF, UTILITY DESIGN DIVISION — DATE 3-6-92

Metcalf & Eddy
REG. PROF. ENGR. — DATE 3/6/92

STATE OF MARYLAND — JONATHAN WINTHROP DOANE No. 15140 — REGISTERED PROFESSIONAL ENGINEER

DES: M. Yu
DRN: E Burnett
CHK: M. Yu
DATE: 12/7/91

BY	NO.	REVISION	DATE
AL	2	RECORD DRAWING	
	1	REVISED FOR BIDDING	

STRUCTURAL

SOUTH PUMP STATION
FOUNDATION PLAN, SECTION
AND STAIR

LITTLE PATUXENT WASTEWATER TREATMENT PLANT
LITTLE PATUXENT WASTEWATER TREATMENT PLANT EXPANSION
ADDITION NO. 5
CAPITAL PROJECT S - 6153
CONTRACT NO. 20 - 3082
HOWARD COUNTY, MARYLAND

SCALE AS SHOWN
SHEET 69 OF 226
S-21

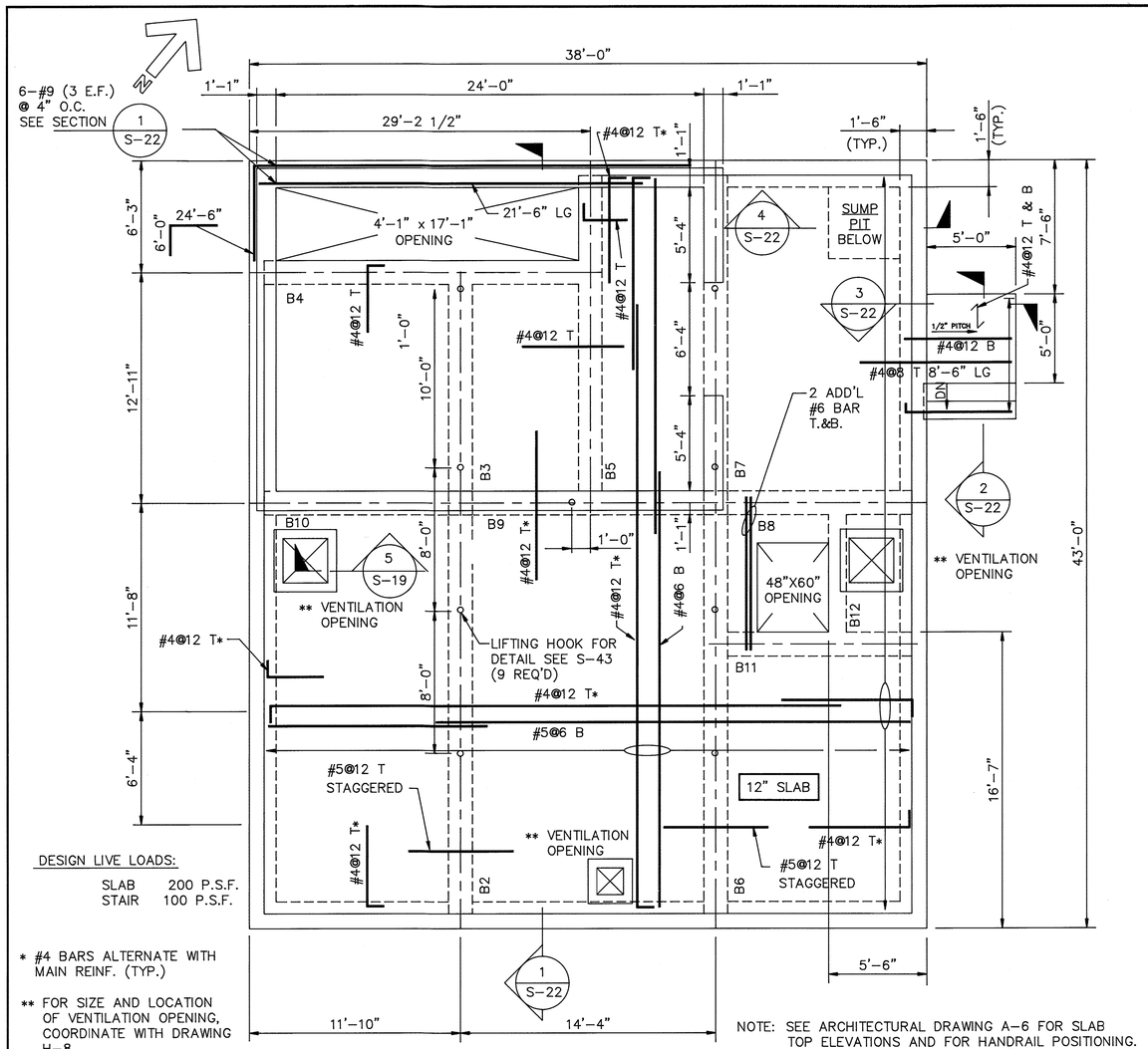

DESIGN LIVE LOADS:

SLAB 200 P.S.F.
STAIR 100 P.S.F.

* #4 BARS ALTERNATE WITH MAIN REINF. (TYP.)

** FOR SIZE AND LOCATION OF VENTILATION OPENING, COORDINATE WITH DRAWING H-8.

NOTE: SEE ARCHITECTURAL DRAWING A-6 FOR SLAB TOP ELEVATIONS AND FOR HANDRAIL POSITIONING.

FIRST FLOOR FRAMING PLAN

SCALE: 1/4"=1'-0"

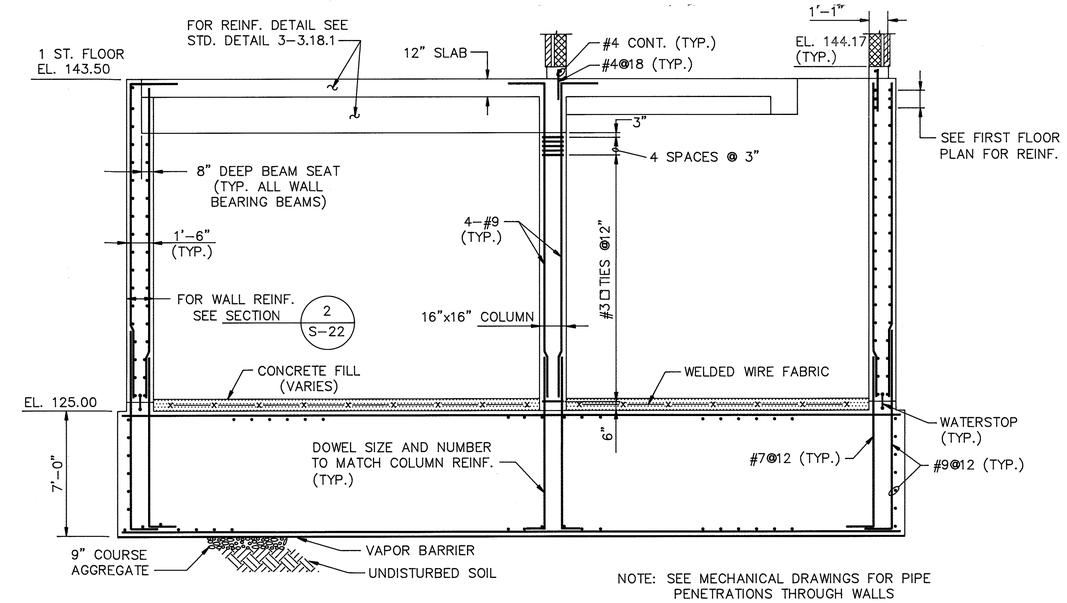

NOTE: SEE MECHANICAL DRAWINGS FOR PIPE PENETRATIONS THROUGH WALLS

SECTION 1 S-22

SCALE: 1/4"=1'-0"

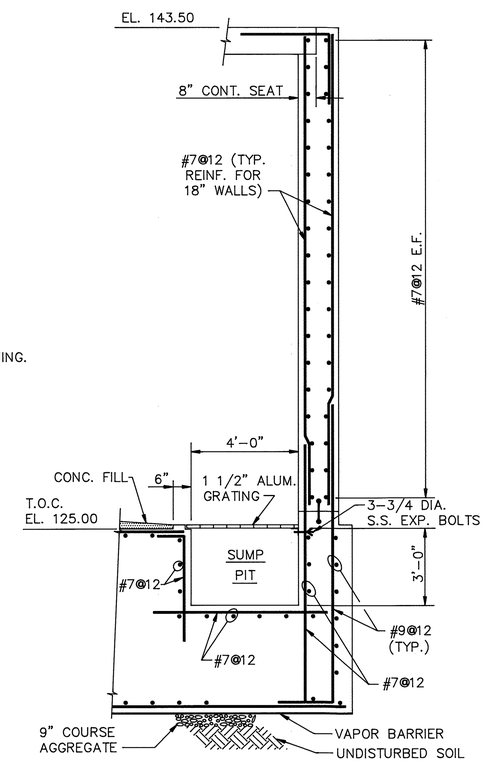

SECTION 4 S-22

SCALE: 3/8"=1'-0"

BEAM SCHEDULE

BEAM MARK ON PLAN WILL BE DESIGNATED ON LEFT SIDE OF BEAM WORK WITH STD. DET. 3-3.18.1

1 ST. FLOOR

MARK	SIZE: WIDTH X DEPTH (MIN.)	REINFORCEMENT					STIRRUPS			REMARKS
		BOTTOM		TOP						
		CONT.	ADD.	ADD. LEFT	CONT.	ADD. RIGHT	TYPE	SIZE	SPACING	
B1	–	–	–	–	–	–	–	–	–	NOT USED
B2	16x36	2-#9	3-#9	–	2-#9	2-#9	□	#3	1@2", BAL.@10	
B3	16x24	2-#9	–	–	3-#9	–	⊔	#3	1@2", BAL.@10	
B4	16x24	3-#9	–	–	3-#9	–	□	#3	1@2", BAL.@10	
B5	16x24	2-#9	2-#9	–	2-#9	1-#9	□	#3	1@2", BAL.@10	
B6	16x36	2-#9	3-#9	–	2-#9	3-#9	⊔	#3	1@2", BAL.@10	
B7	16x36	2-#9	1-#9	–	3-#9	–	⊔	#3	1@2", BAL.@10	
B8	16x36	2-#9	–	–	2-#9	2-#9	□	#3	1@2", BAL.@10	
B9	16x36	2-#9	2-#9	–	2-#9	2-#9	□	#3	1@2", BAL.@10	
B10	16x36	2-#9	–	–	2-#9	–	⊔	#3	1@2", BAL.@10	
B11	16x24	2-#9	–	–	2-#9	–	□	#3	1@2", BAL.@10	
B12	16x24	2-#9	–	–	2-#9	–	□	#3	1@2", BAL.@10	

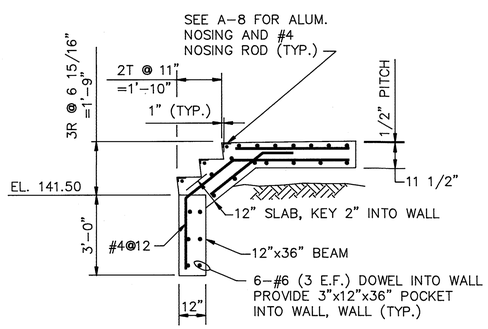

SECTION 2 S-22

SCALE: 3/8"=1'-0"

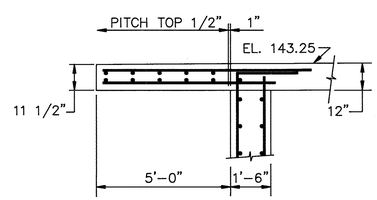

SECTION 3 S-22

SCALE: 3/8"=1'-0"

DEPARTMENT OF PUBLIC WORKS
HOWARD COUNTY, MARYLAND

DIRECTOR OF PUBLIC WORKS — DATE 3/6/92
ACT. CHIEF, BUREAU OF ENGINEERING — DATE 3-6-92
CHIEF, BUREAU OF ENVIRONMENTAL SERVICES — DATE 3/6/92
ACT. CHIEF, UTILITY DESIGN DIVISION — DATE 3-6-92

Metcalf & Eddy

REG. PROF. ENGR. — DATE 3/6/92

STATE OF MARYLAND — JONATHAN WINTHROP DOANE No. 15140 — REGISTERED PROFESSIONAL ENGINEER

DES: M. Yu
DRN: E Burnett
CHK: M. Yu
DATE: 12/7/91

BY	NO.	REVISION	DATE
	2	RECORD DRAWING	11/1/94
	1	REVISED FOR BIDDING	3/5/92

STRUCTURAL

SOUTH PUMP STATION
FIRST FLOOR FRAMING PLAN AND SECTIONS

LITTLE PATUXENT WASTEWATER TREATMENT PLANT

LITTLE PATUXENT WASTEWATER TREATMENT PLANT EXPANSION ADDITION NO. 5
CAPITAL PROJECT S-6153

CONTRACT NO. 20-3082

HOWARD COUNTY, MARYLAND

SCALE AS SHOWN

SHEET 10 OF 226

S-22

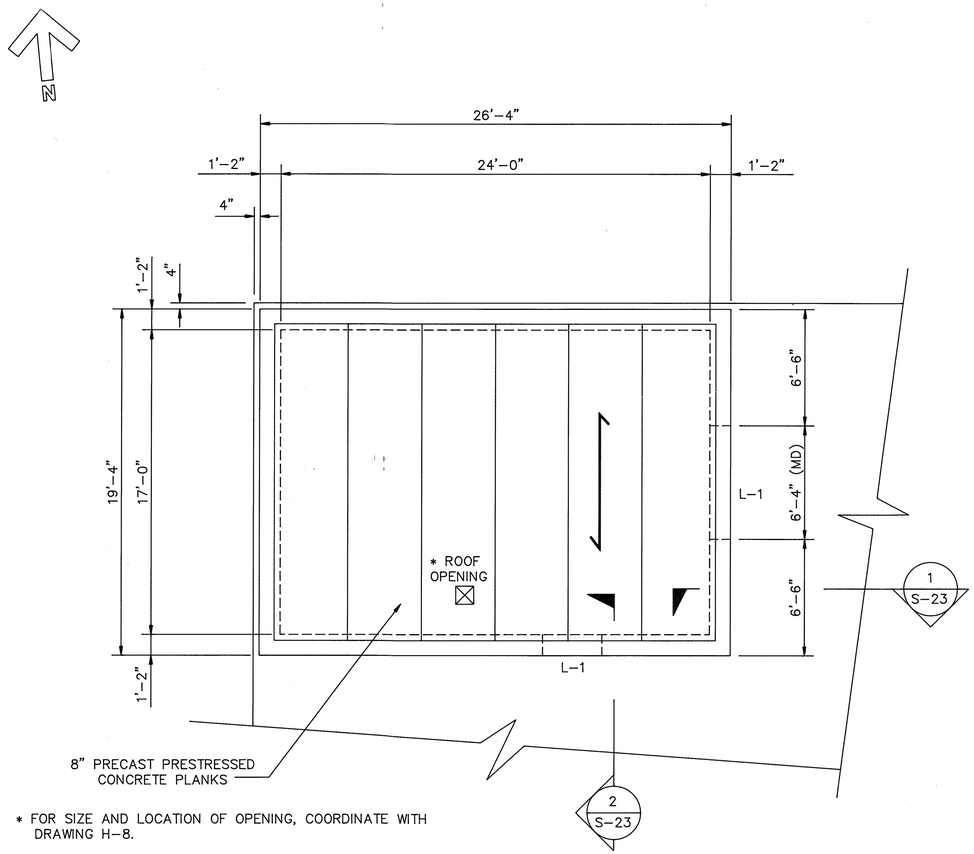

* FOR SIZE AND LOCATION OF OPENING, COORDINATE WITH DRAWING H-8.

DESIGN LIVE LOAD: 1. ROOF SNOW LOAD = 30 PSF
2. SUPERIMPOSED DL = 20 PSF

ROOF FRAMING PLAN

SCALE: 1/4"=1'-0"

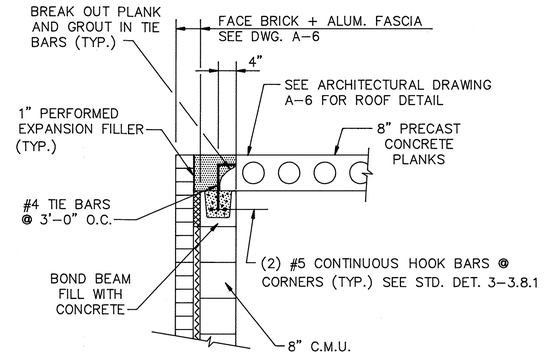

SECTION 1 / S-23

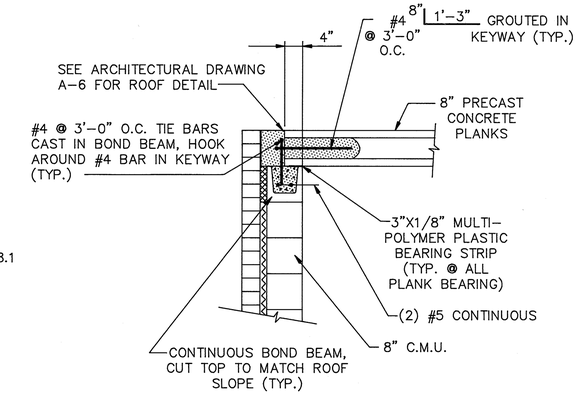

SECTION 2 / S-23

PRECAST CONCRETE LINTEL SCHEDULE

MARK	SIZE WIDTH X DEPTH	REINFORCING	MINIMUM END BEARING	REMARKS
L-1	7 5/8" X 7 5/8"	(2) #5 CONTINUOUS	8" MINIMUM	SEE NOTE 2

NOTES:

1. FILL BLOCK UNDER BEARING ENDS OF LINTELS WITH #5 BAR AND MORTAR DOWN TO THE FIRST FLOOR.
2. PROVIDE L5"x5"x5/16" (HOT DIPPED GALVANIZED) ATTACHED TO CONCRETE LINTEL AS SHOWN ON STD. DETAIL 3-3.31.1 .

DEPARTMENT OF PUBLIC WORKS
HOWARD COUNTY, MARYLAND

DIRECTOR OF PUBLIC WORKS — DATE 12/9/91
CHIEF, BUREAU OF ENGINEERING — DATE 12-9-91
CHIEF, BUREAU OF ENVIRONMENTAL SERVICES — DATE 12/9/91
CHIEF, UTILITY DESIGN DIVISION — DATE 12-9-91

Metcalf & Eddy
REG. PROF. ENGR. — DATE 12/9/91

STATE OF MARYLAND — JONATHAN WINTHROP DOANE No. 16140 — REGISTERED PROFESSIONAL ENGINEER

DES: M.Yu
DRN: E.Burnett
CHK: M.Yu
DATE: 12/7/91

BY	NO.	REVISION	DATE
	2	RECORD DRAWING	11/1/94
	1	REVISED FOR BIDDING	3/5/92

STRUCTURAL

SOUTH PUMP STATION
ROOF FRAMING PLAN

LITTLE PATUXENT WASTEWATER TREATMENT PLANT
LITTLE PATUXENT WASTEWATER TREATMENT PLANT EXPANSION
ADDITION NO. 5
CAPITAL PROJECT S - 6153
CONTRACT NO. 20 - 3082
HOWARD COUNTY, MARYLAND

SCALE AS SHOWN
SHEET 71 OF 226
S-23

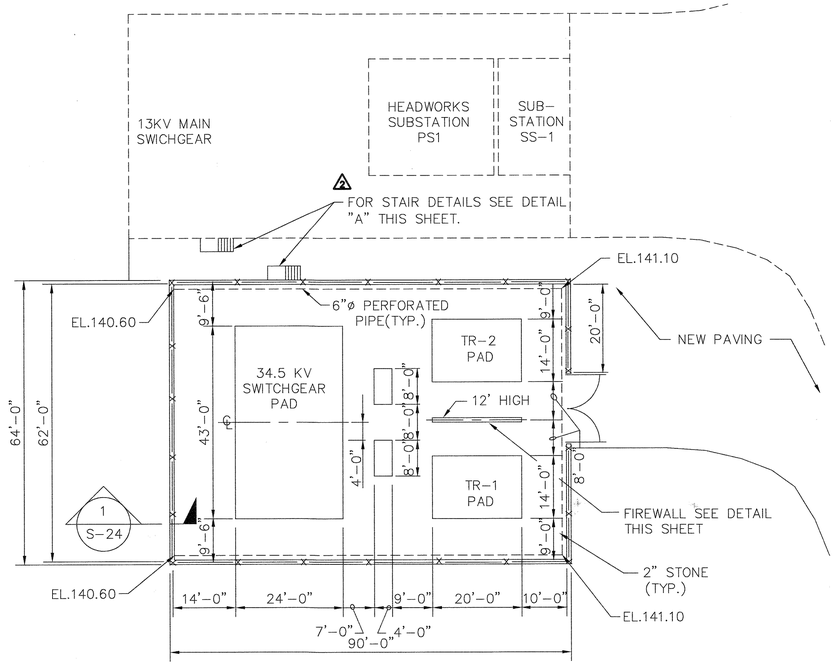

NOTE:

1. SEE TYPICAL PAD DETAIL THIS SHEET.
2. SEE CIVIL DRAWINGS.
3. PAD RELOCATED 10'-0' FORWARD. NEW PERIMETER FRONT WALL LINES UP WITH EXISTING SUB-STATION FRONT WALL.

PAD LOCATIONS

SCALE: 1/16"=1'-0"

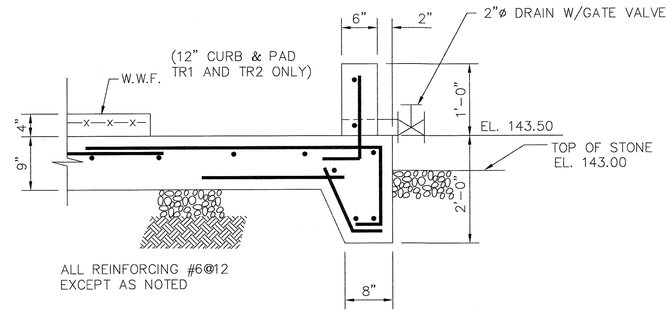

TYPICAL PAD DETAIL

SCALE: 1"=1'-0"

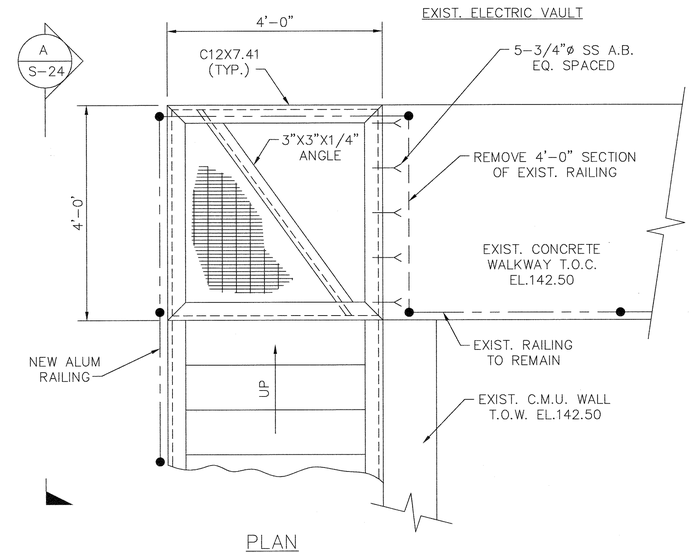

PLAN

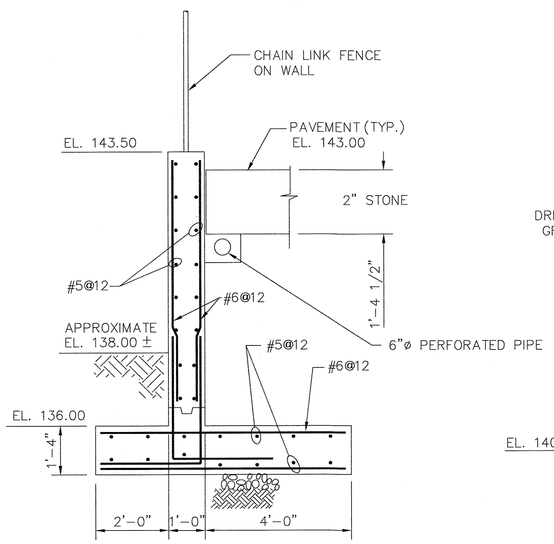

SECTION 1

RETAINING WALL

SCALE: 1/2"=1'-0"

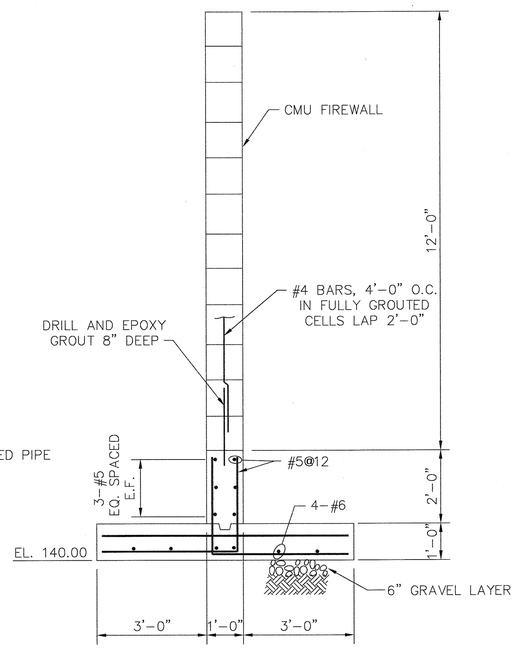

FIREWALL DETAIL

SCALE: 1/2"=1'-0"

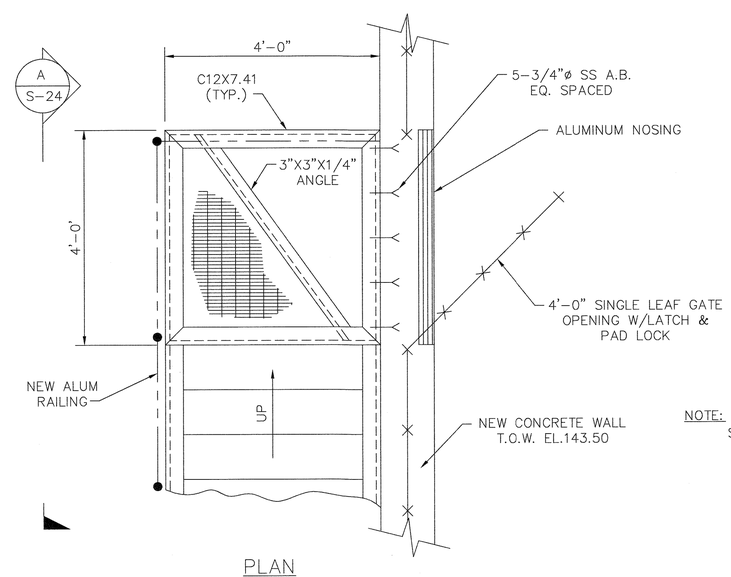

PLAN

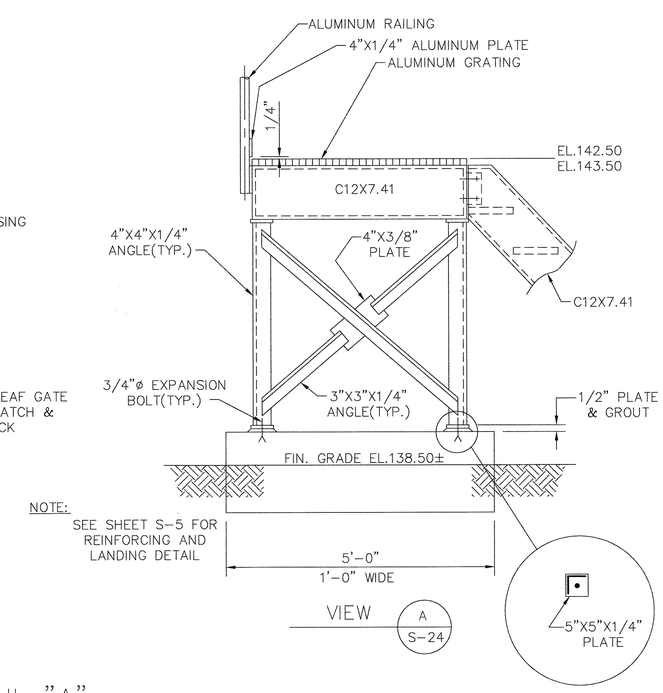

NOTE:

SEE SHEET S-5 FOR REINFORCING AND LANDING DETAIL

VIEW A S-24

DETAIL "A"

SCALE: NONE

DEPARTMENT OF PUBLIC WORKS

HOWARD COUNTY, MARYLAND

DIRECTOR OF PUBLIC WORKS — DATE 5/7/96

CHIEF, BUREAU OF ENGINEERING — DATE 5/7/96

CHIEF, BUREAU OF ENVIRONMENTAL SERVICES — DATE 5/7/96

CHIEF, UTILITY DESIGN DIVISION — DATE 5-7-96

M&E Metcalf & Eddy

REG. PROF. ENGR. — DATE 5-7-96

STATE OF MARYLAND — JONATHAN WINTHROP DOANE No. 15140 — REGISTERED PROFESSIONAL ENGINEER

DES:	DR
DRN:	EB
CHK:	
DATE:	

BY	NO.	REVISION	DATE
MB	1	REVISE FOR BIDDING	3/5/92
MJC	2	RECORD DRAWING	3/5/94

STRUCTURAL

34.5 KV MAIN SUBSTATION FOUNDATION PLANS, SECTIONS, AND DETAIL

LITTLE PATUXENT WASTEWATER TREATMENT PLANT

LITTLE PATUXENT WASTEWATER TREATMENT EXPANSION ADDITION NO. 5 CAPITAL PROJECT S-6153

CONTRACT NO. 20-3082

HOWARD COUNTY, MARYLAND

SCALE AS SHOWN

SHEET 72 OF 226

S-24A

FILE-NO.

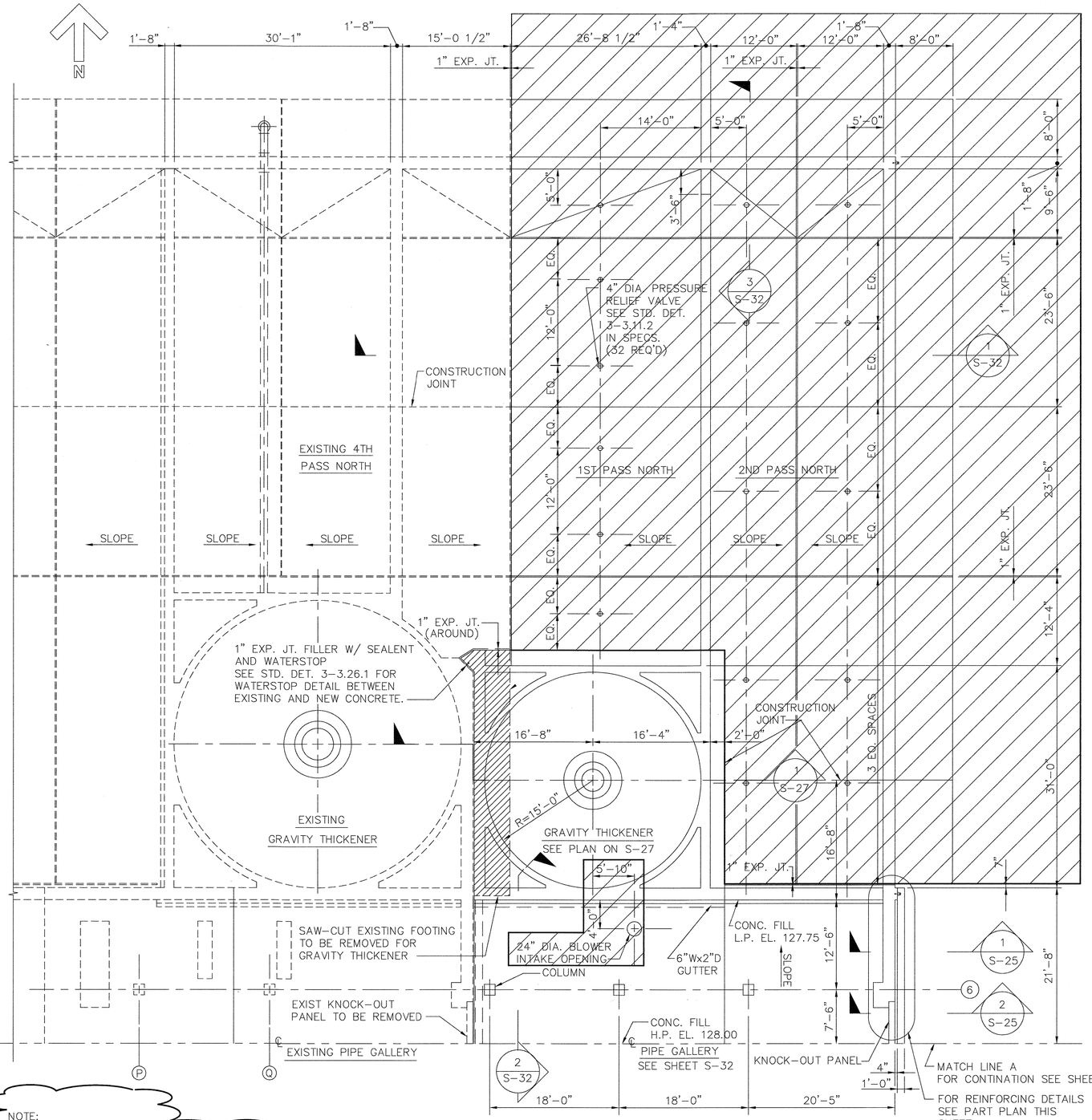

NOTE:

DIGESTER NO.3 DELETED FROM CONTRACT.
GRAVITY THICKENER & SLAB ONLY CONSTRUCTED.

PLAN AT EL. 128.67

SCALE: 1/8"=1'-0"

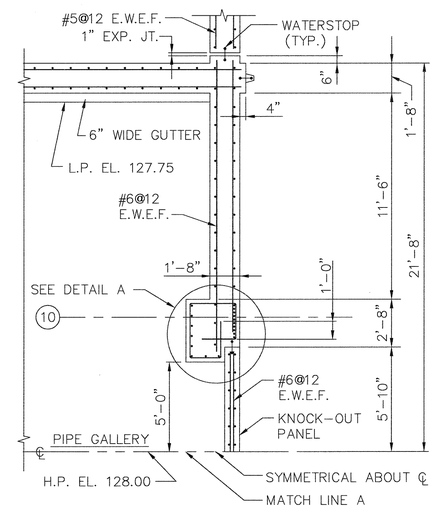

PART PLAN – EL. 128.00

SCALE: 1/4"=1'-0"

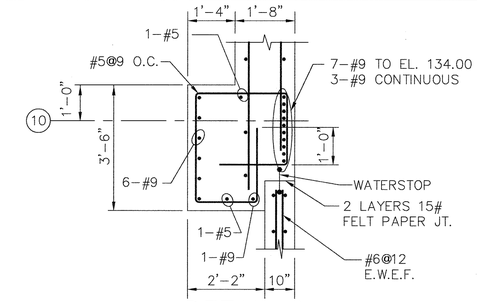

DETAIL A

SCALE: 1/2"=1'-0"

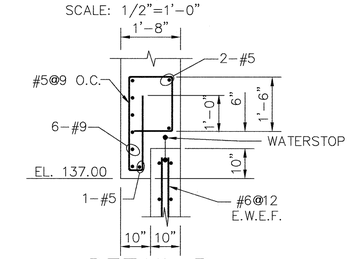

DETAIL B

SCALE: 1/2"=1'-0"

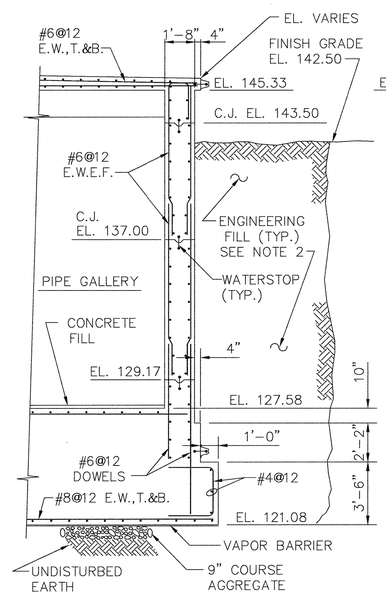

SECTION 1 / S-25

SCALE: 1/4"=1'-0"

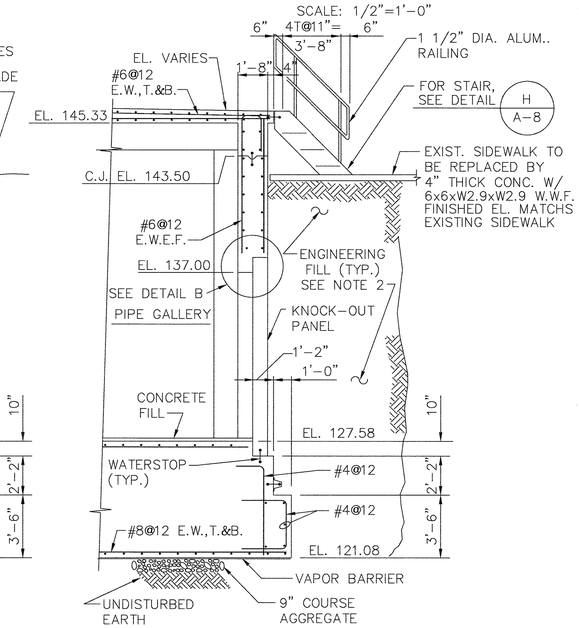

SECTION 2 / S-25

SCALE: 1/4"=1'-0"

NOTES:

1. FOUNDATION BASED UPON AN ALLOWABLE SOIL BEARING PRESSURE OF 3,000 LBS PER SQ. FT..
2. ENGINEERING FILL TO A MIN. 5 FT. FROM STRUCTURE WALL ALL AROUND DIGESTER AND TANKS. PLACED IN 8" LIFTS (MAT) AND DENSIFIED TO AT LEAST 95% OF ASTM D-1556 STD. DENSITY WHILE SOIL HAS ± 3% OF OPTIMUM MOISTURE CONTENT.
3. STANDARD DETAILS TO BE FOUND IN SPECIFICATIONS APPENDIX "B".
4. TYPICAL DETAILS TO BE FOUND ON DRAWING S-43.

RECORD DRAWING
10/17/94

DEPARTMENT OF PUBLIC WORKS
HOWARD COUNTY, MARYLAND

DIRECTOR OF PUBLIC WORKS — DATE 5/7/96
CHIEF, BUREAU OF ENGINEERING — DATE 5/7/96
CHIEF, BUREAU OF ENVIRONMENTAL SERVICES — DATE 5/7/96
CHIEF, UTILITY DESIGN DIVISION — DATE 5-7-96

M&E Metcalf & Eddy
REG. PROF. ENGR. — DATE 5-7-96

STATE OF MARYLAND — JONATHAN WINTHROP DOANE No. 15140 — REGISTERED PROFESSIONAL ENGINEER

DES: DR
DRN: EB
CHK:
DATE:

BY	NO.	REVISION	DATE
MB	1	REVISE FOR BIDDING	3/5/92
MJC	2	RECORD DRAWING	3/5/94

STRUCTURAL

DIGESTER NO. 3
PLAN EL. 128.67

LITTLE PATUXENT WASTEWATER TREATMENT PLANT

LITTLE PATUXENT WASTEWATER TREATMENT EXPANSION
ADDITION NO. 5
CAPITAL PROJECT S-6153

CONTRACT NO. 20-3082

HOWARD COUNTY, MARYLAND

SCALE AS SHOWN

SHEET 73 OF 226

S-25A

FILE-NO.

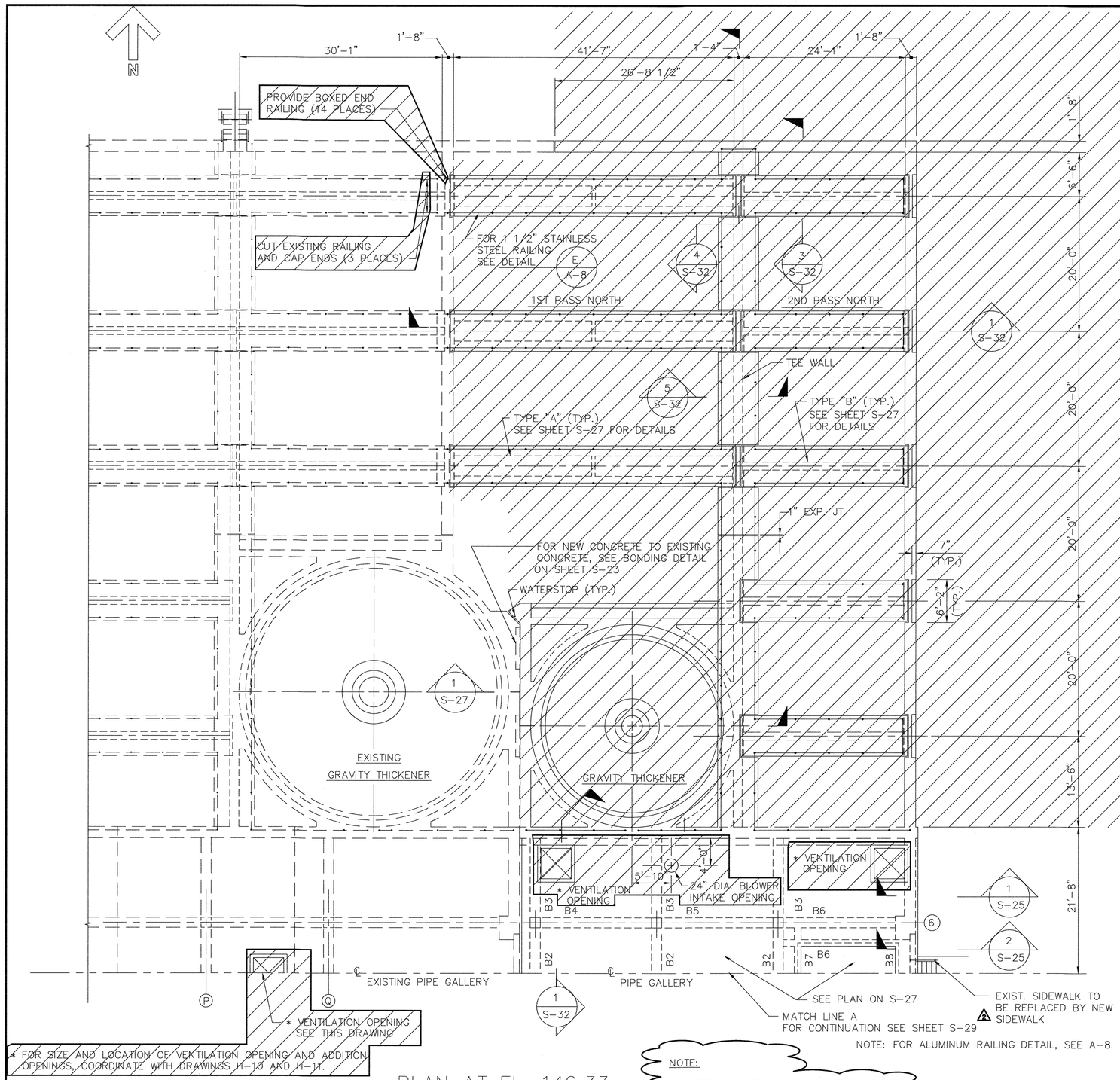

* FOR SIZE AND LOCATION OF VENTILATION OPENING AND ADDITION OPENINGS, COORDINATE WITH DRAWINGS H-10 AND H-11.

PLAN AT EL. 146.33

SCALE: 1/8"=1'-0"

NOTE:

DIGESTER AND GRAVITY THICKENERS DELETED FROM CONTRACT

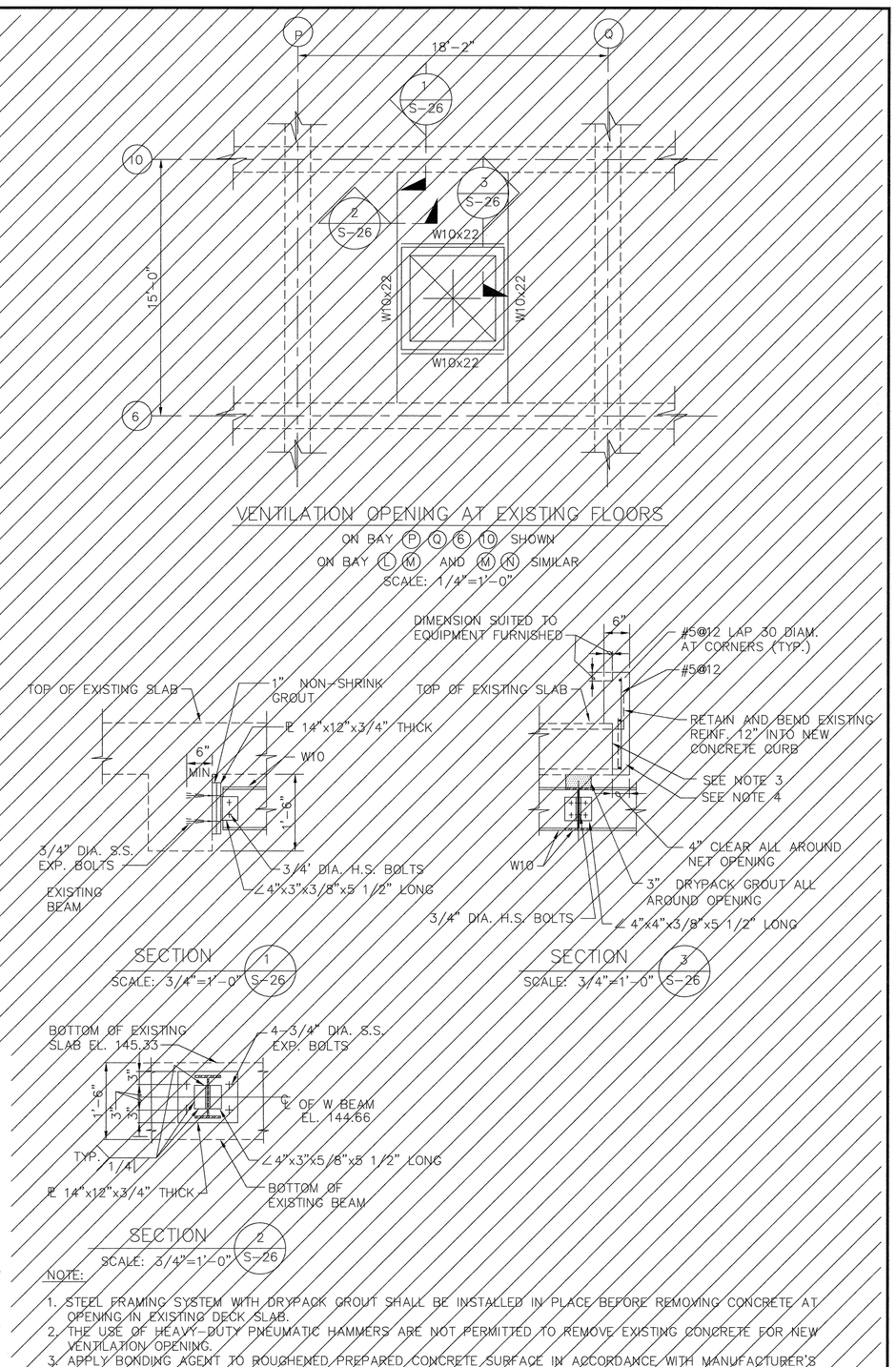

VENTILATION OPENING AT EXISTING FLOORS

ON BAY (P)(Q)(6)(10) SHOWN
ON BAY (L)(M) AND (M)(N) SIMILAR
SCALE: 1/4"=1'-0"

SECTION 1/S-26

SCALE: 3/4"=1'-0"

SECTION 3/S-26

SCALE: 3/4"=1'-0"

SECTION 2/S-26

SCALE: 3/4"=1'-0"

NOTE:

1. STEEL FRAMING SYSTEM WITH DRYPACK GROUT SHALL BE INSTALLED IN PLACE BEFORE REMOVING CONCRETE AT OPENING IN EXISTING DECK SLAB.
2. THE USE OF HEAVY-DUTY PNEUMATIC HAMMERS ARE NOT PERMITTED TO REMOVE EXISTING CONCRETE FOR NEW VENTILATION OPENING.
3. APPLY BONDING AGENT TO ROUGHENED PREPARED CONCRETE SURFACE IN ACCORDANCE WITH MANUFACTURER'S PRINTED INSTRUCTIONS. BONDING AGENT TO BE LARSEN WELD-CRETE AS MANUFACTURED BY LARSEN PRODUCTS CORP. OF ROCKVILLE, MARYLAND OR AN ACCEPTABLE EQUIVALENT PRODUCT.
4. FILL CURB WITH CONCRETE HAVING A MINIMUM COMPRESSIVE STRENGTH OF 4000 LBS. PER SQ. INCH AT THE END OF 28 DAYS.

DEPARTMENT OF PUBLIC WORKS
HOWARD COUNTY, MARYLAND

DIRECTOR OF PUBLIC WORKS — DATE 5/6/96
CHIEF, BUREAU OF ENGINEERING — DATE 5/7/96
CHIEF, BUREAU OF ENVIRONMENTAL SERVICES — DATE 5/7/96
CHIEF, UTILITY DESIGN DIVISION — DATE 5-7-96

M&E Metcalf & Eddy

REG. PROF. ENGR. — DATE 5-7-96

STATE OF MARYLAND — JONATHAN WINTHROP DOANE No. 15140 — REGISTERED PROFESSIONAL ENGINEER

DES: DR
DRN: EB
CHK:
DATE:

BY	NO.	REVISION	DATE
MB	1	REVISE FOR BIDDING	3/5/92
MJC	2	RECORD DRAWING	3/5/94

STRUCTURAL

DIGESTER NO. 3
PLAN EL. 146.33
SECTIONS AND DETAILS

LITTLE PATUXENT WASTEWATER TREATMENT PLANT

LITTLE PATUXENT WASTEWATER TREATMENT EXPANSION
ADDITION NO. 5
CAPITAL PROJECT S-6153

CONTRACT NO. 20-3082
HOWARD COUNTY, MARYLAND

SCALE AS SHOWN

SHEET 74 OF 226

S-26A

FILE-NO.

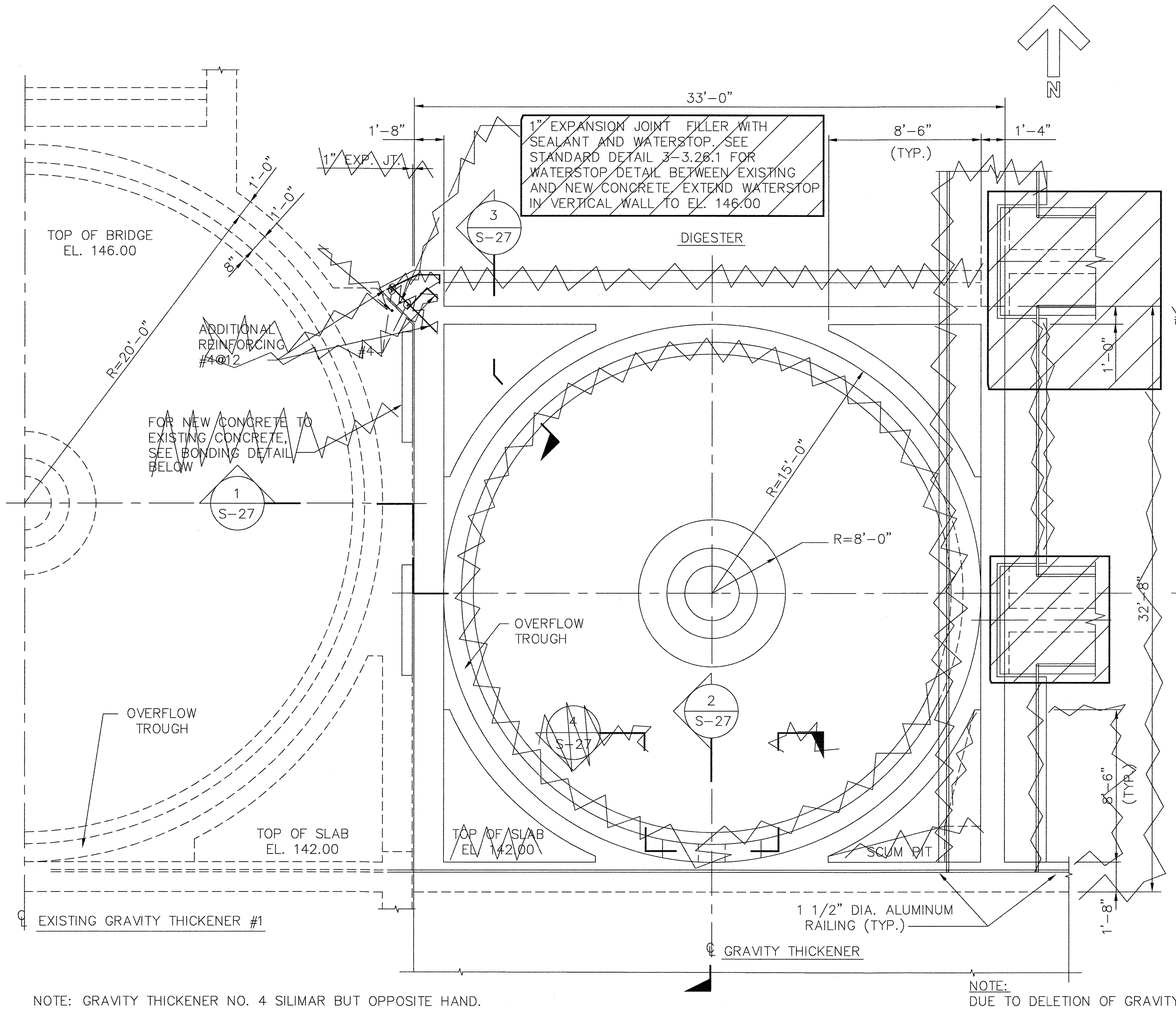

NOTE: GRAVITY THICKENER NO. 4 SILIMAR BUT OPPOSITE HAND.

PLAN – NEW GRAVITY THICKENER NO. 3

SCALE: 1/4"=1'-0"

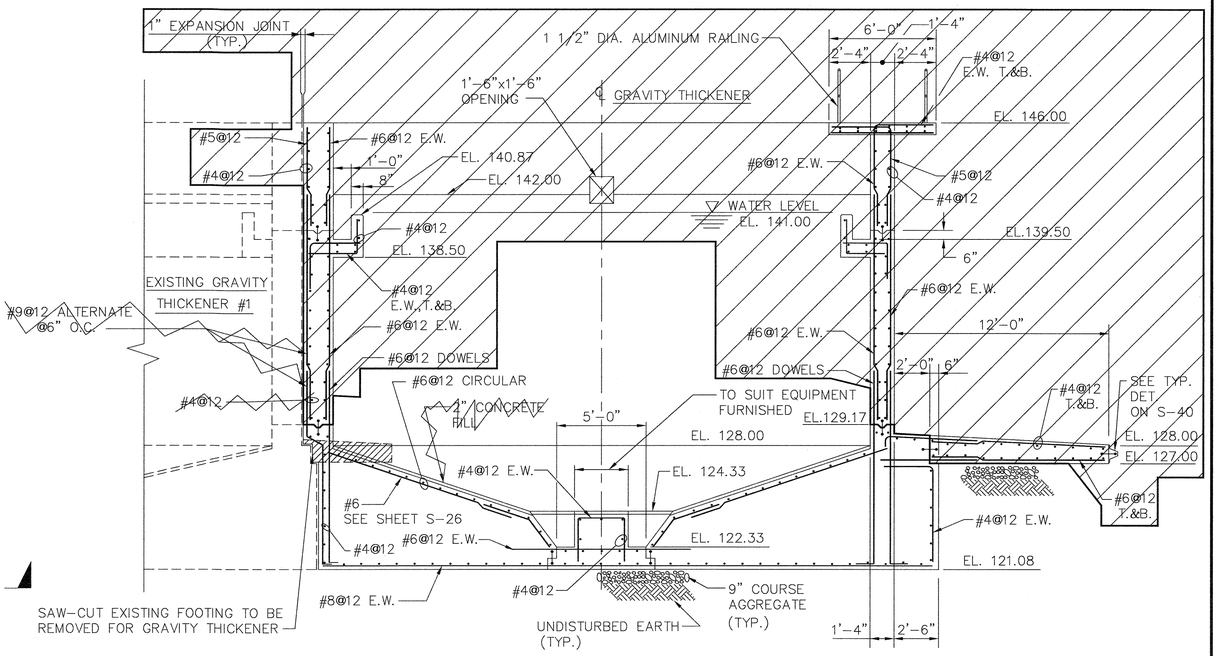

SECTION 1 / S-25, S-26, S-28, S-29, S-30

SCALE: 1/4"=1'-0"

NOTE:
ONLY THE GRAVITY THICKENER SLAB WAS CONSTRUCTED. THE DIGESTERS AND GRAVITY THICKENERS WERE DELETED FROM THE CONTRACT.

FOUNDATION BASED UPON AN ALLOWABLE SOIL BEARING PRESSURE OF 3,000 LBS PER SQ. FT.

NOTE:
DUE TO DELETION OF GRAVITY THICKENER WALLS, THE #6@12 O.C. INDICATED FOR COMMON WALLS BETWEEN G.T. 3&4 & PIPE GALLERY. WAS SUPPLEMENTED WITH #7@12 O.C. DOWELED 18" INTO GALLERY STARTER WALL & EXTEND VERTICALLY TO EL.139.00 A TOTAL OF 36 BARS ARE INSTALLED IN EACH WALL.

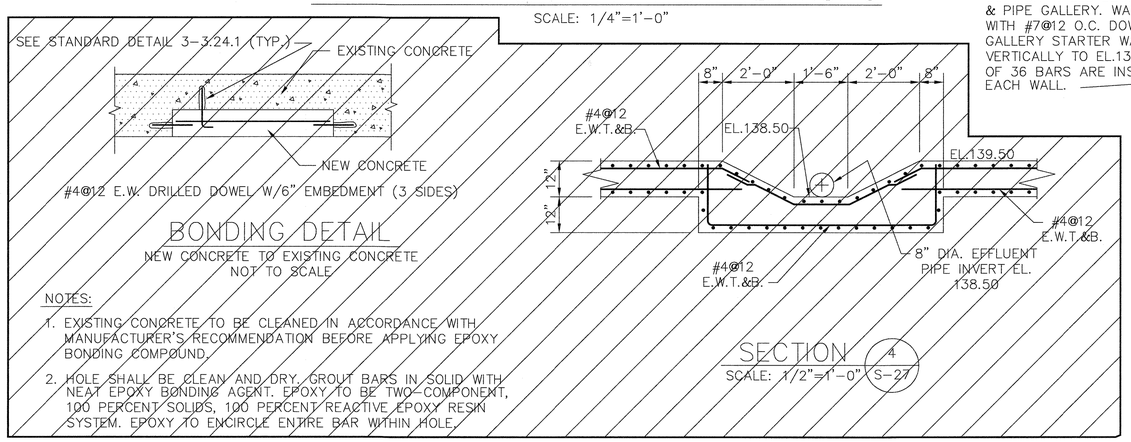

BONDING DETAIL

NEW CONCRETE TO EXISTING CONCRETE
NOT TO SCALE

NOTES:

1. EXISTING CONCRETE TO BE CLEANED IN ACCORDANCE WITH MANUFACTURER'S RECOMMENDATION BEFORE APPLYING EPOXY BONDING COMPOUND.
2. HOLE SHALL BE CLEAN AND DRY. GROUT BARS IN SOLID WITH NEAT EPOXY BONDING AGENT. EPOXY TO BE TWO-COMPONENT, 100 PERCENT SOLIDS, 100 PERCENT REACTIVE EPOXY RESIN SYSTEM. EPOXY TO ENCIRCLE ENTIRE BAR WITHIN HOLE.

SECTION 4 / S-27

SCALE: 1/2"=1'-0"

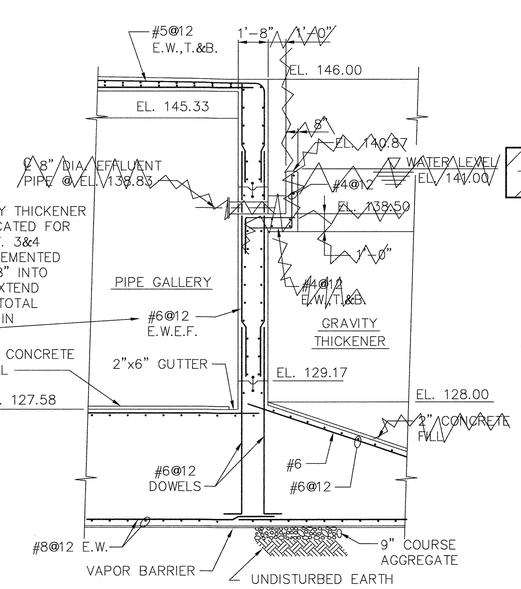

SECTION 2 / S-27

SCALE: 1/4"=1'-0"

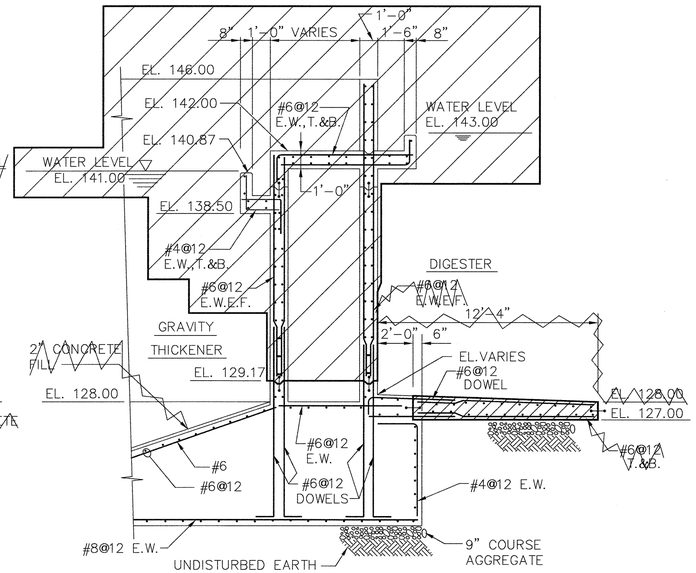

SECTION 3 / S-27

SCALE: 1/4"=1'-0"

DEPARTMENT OF PUBLIC WORKS
HOWARD COUNTY, MARYLAND

DIRECTOR OF PUBLIC WORKS — DATE 5/6/96
CHIEF, BUREAU OF ENGINEERING — DATE 5/7/96
CHIEF, BUREAU OF ENVIRONMENTAL SERVICES — DATE 5/7/96
CHIEF, UTILITY DESIGN DIVISION — DATE 5-7-96

M&E Metcalf & Eddy

REG. PROF. ENGR. — DATE 5-7-96

STATE OF MARYLAND — JONATHAN WINTHROP DOANE No. 15140 — REGISTERED PROFESSIONAL ENGINEER

DES: DR
DRN: EB
CHK:
DATE:

BY	NO.	REVISION	DATE
MB	1	REVISE FOR BIDDING	3/5/92
MJC	2	RECORD DRAWING	3/5/94

STRUCTURAL

GRAVITY THICKENER NO. 3
PLAN, SECTIONS AND DETAIL

LITTLE PATUXENT WASTEWATER TREATMENT PLANT

LITTLE PATUXENT WASTEWATER TREATMENT EXPANSION
ADDITION NO. 5
CAPITAL PROJECT S-6153

CONTRACT NO. 20-3082

HOWARD COUNTY, MARYLAND

SCALE AS SHOWN

SHEET 75 OF 226

S-27A

FILE-NO.

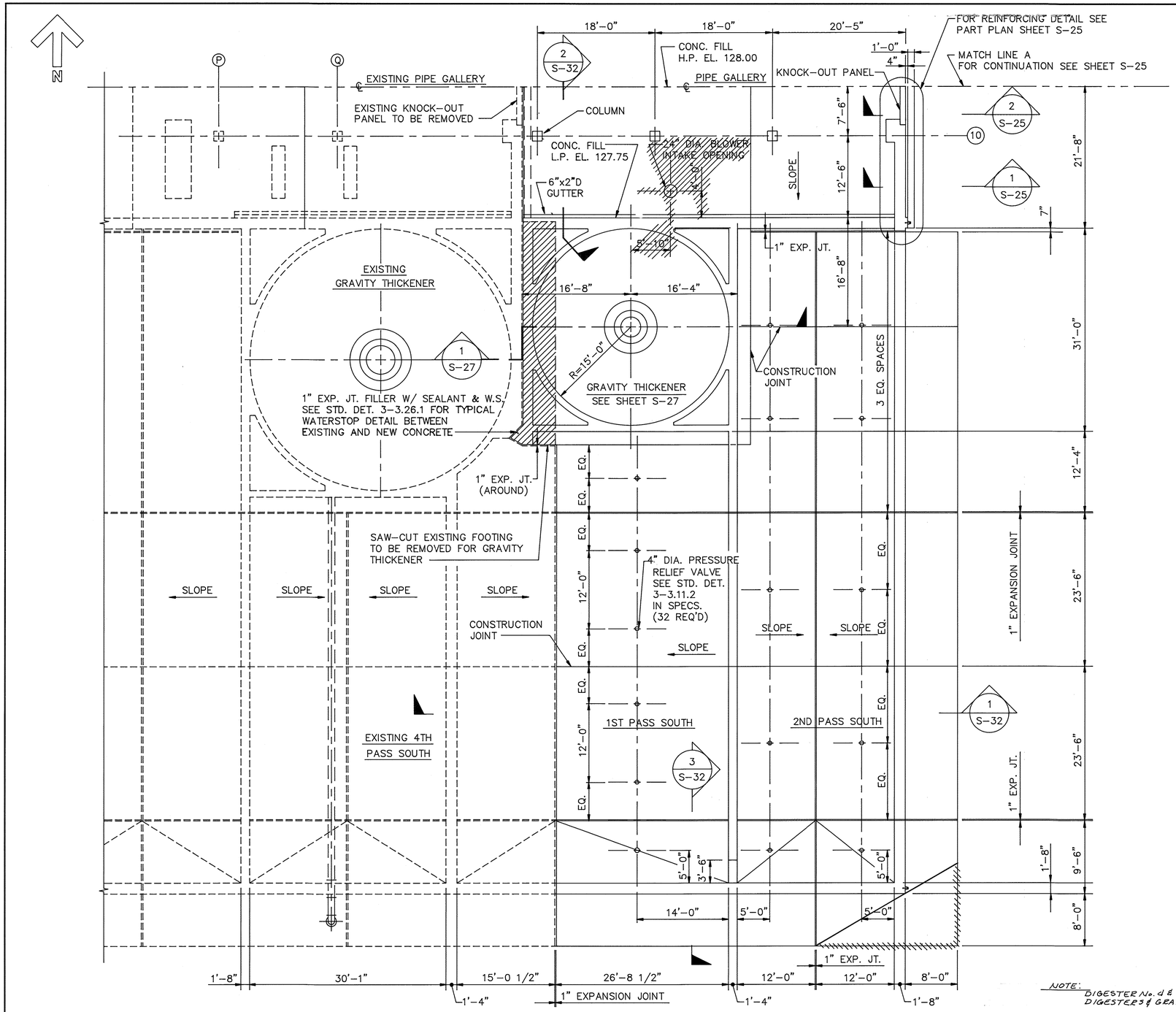

PLAN AT EL. 128.67

SCALE: 1/8"=1'-0"

NOTE:
DIGESTER No. 4 & GRAVITY THICKENER No. 4 SLAB ONLY CONSTRUCTED.
DIGESTER 3 & GRAVITY THICKENERS DELETED FROM CONTRACT.

DEPARTMENT OF PUBLIC WORKS
HOWARD COUNTY, MARYLAND

DIRECTOR OF PUBLIC WORKS	DATE 12/9/91	CHIEF, BUREAU OF ENGINEERING	DATE 12-9-91
CHIEF, BUREAU OF ENVIRONMENTAL SERVICES	DATE 12/9/91	CHIEF, UTILITY DESIGN DIVISION	DATE 12-9-91

Metcalf & Eddy

REG. PROF. ENGR. — DATE 12/5/91

STATE OF MARYLAND — JONATHAN WINTHROP DONNE No. 15140 — REGISTERED PROFESSIONAL ENGINEER

DES: M.Y.H.
DRN: E. Burnett
CHK: M.Y.H.
DATE: 12/7/91

BY	NO.	REVISION	DATE
JC	2	RECORD DRAWING	10/3/94
	1	REVISED FOR BIDDING	3/5/92

STRUCTURAL

DIGESTER NO. 4
PLAN EL. 128.67

LITTLE PATUXENT WASTEWATER TREATMENT PLANT

LITTLE PATUXENT WASTEWATER TREATMENT PLANT EXPANSION
ADDITION NO. 5
CAPITAL PROJECT S - 6153

CONTRACT NO. 20 - 3082

HOWARD COUNTY, MARYLAND

SCALE AS SHOWN

SHEET 26 OF 226

S-28

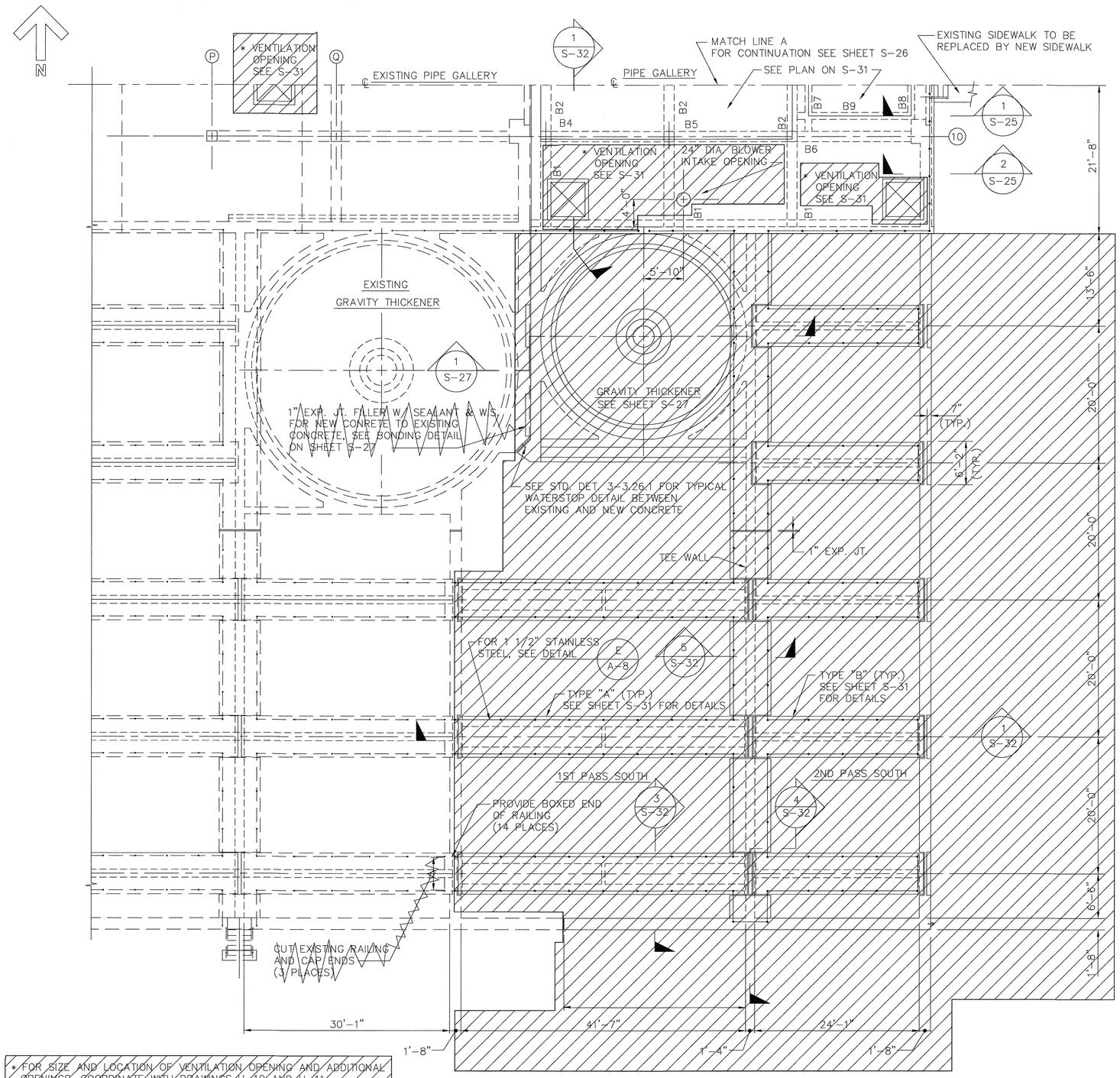

* FOR SIZE AND LOCATION OF VENTILATION OPENING AND ADDITIONAL OPENINGS, COORDINATE WITH DRAWINGS H-10 AND H-11.

PLAN AT EL. 146.33

SCALE: 1/8"=1'-0"

THIS WORK WAS DELETED FROM THE CONTRACT

DEPARTMENT OF PUBLIC WORKS
HOWARD COUNTY, MARYLAND

DIRECTOR OF PUBLIC WORKS — DATE 5/7/96
CHIEF, BUREAU OF ENGINEERING — DATE 5/7/96
CHIEF, BUREAU OF ENVIRONMENTAL SERVICES — DATE 5/7/96
CHIEF, UTILITY DESIGN DIVISION — DATE 5-7-96

M&E Metcalf & Eddy
REG. PROF. ENGR. — DATE 5-7-96

STATE OF MARYLAND — JONATHAN WINTHROP DOANE No. 15140 — REGISTERED PROFESSIONAL ENGINEER

DES: DR
DRN: EB
CHK:
DATE:

BY	NO.	REVISION	DATE
MB	1	REVISE FOR BIDDING	3/5/92
MJC	2	RECORD DRAWING	3/5/94

STRUCTURAL

DIGESTER NO. 4
PLAN EL. 146.33
SECTIONS & DETAILS

LITTLE PATUXENT WASTEWATER TREATMENT PLANT

LITTLE PATUXENT WASTEWATER TREATMENT EXPANSION
ADDITION NO. 5
CAPITAL PROJECT S-6153

CONTRACT NO. 20-3082

HOWARD COUNTY, MARYLAND

SCALE AS SHOWN

SHEET 77 OF 226

S-29A

FILE-NO.

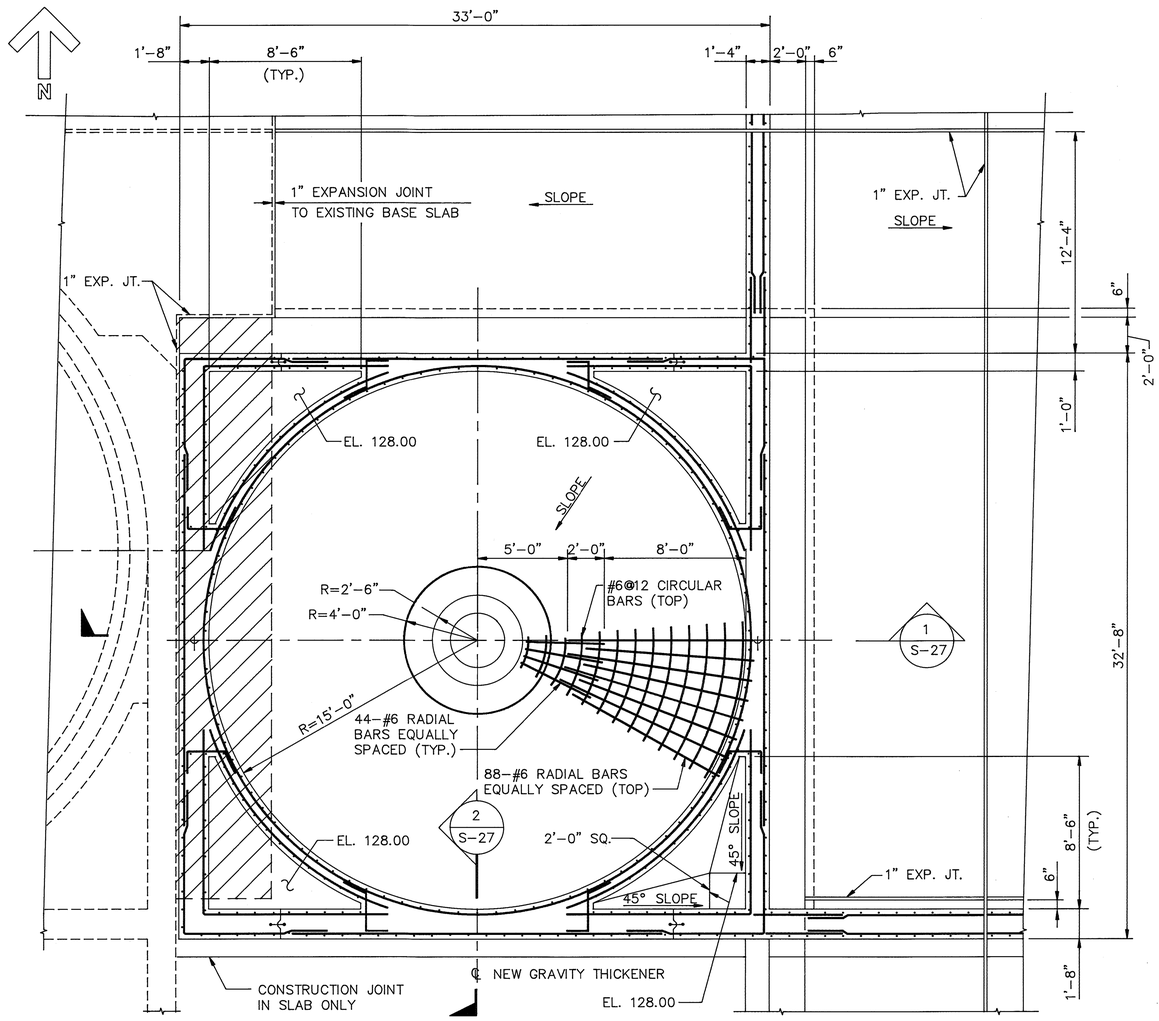

NOTES:

1. SAW CUT THE EXISTING CONCRETE FOUNDATION IN CROSS-HATCHED AREAS.
2. REMOVE CONCRETE IN CROSS-HATCHED AREAS.
3. SEE STD. DET. 3-3.26.1 FOR TYPICAL DETAIL BETWEEN EXISTING AND NEW CONCRETE.

NOTE: GRAVITY THICKENER NO. 4 SIMILAR BUT OPPOSITE HAND.

PLAN AT EL. 130.00 – GRAVITY THICKENER NO. 3

SCALE: 1/4"=1'-0"

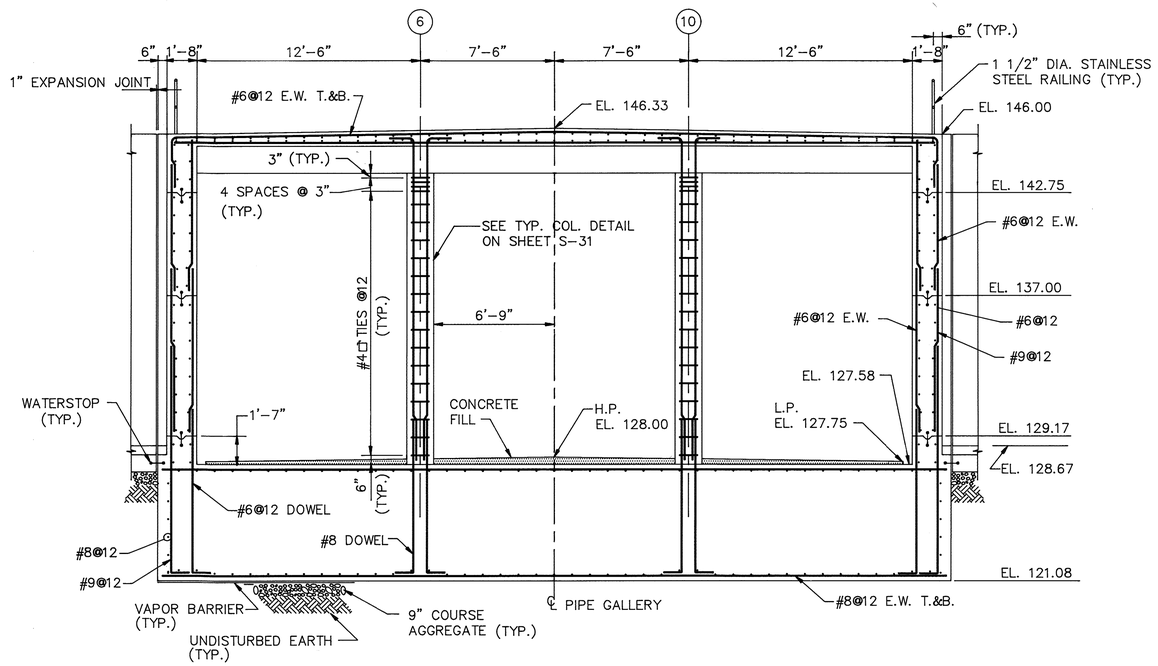

FOUNDATION BASED UPON AN ALLOWABLE SOIL PRESSURE OF 3,000 LBS PER SQ. FT.

SECTION 1/S-31

SCALE: 1/4"=1'-0"

DEPARTMENT OF PUBLIC WORKS HOWARD COUNTY, MARYLAND			
DIRECTOR OF PUBLIC WORKS	DATE 12/9/91	CHIEF, BUREAU OF ENGINEERING	DATE 12-9-91
CHIEF, BUREAU OF ENVIRONMENTAL SERVICES	DATE 12/9/91	CHIEF, UTILITY DESIGN DIVISION	DATE 12-9-91

Metcalf & Eddy

REG. PROF. ENGR. — DATE 12/9/91

STATE OF MARYLAND — JONATHAN WINTHROP DOANE No. 15140 — REGISTERED PROFESSIONAL ENGINEER

DES: M. Yu
DRN: E. Burnett
CHK: M. Yu
DATE: 12/1/91

BY	NO.	REVISION	DATE
	2	RECORD DRAWING SEE SUPPLIMENTAL SHT. S-30A	11/1/94
	1	REVISED FOR BIDDING	3/5/92

STRUCTURAL

GRAVITY THICKENER NO. 3
PLAN, SECTION AND DETAILS

LITTLE PATUXENT WASTEWATER TREATMENT PLANT
LITTLE PATUXENT WASTEWATER TREATMENT PLANT EXPANSION
ADDITION NO. 5
CAPITAL PROJECT S - 6153
CONTRACT NO. 20 - 3082
HOWARD COUNTY, MARYLAND

SCALE AS SHOWN

SHEET 78 OF 226

S-30

C

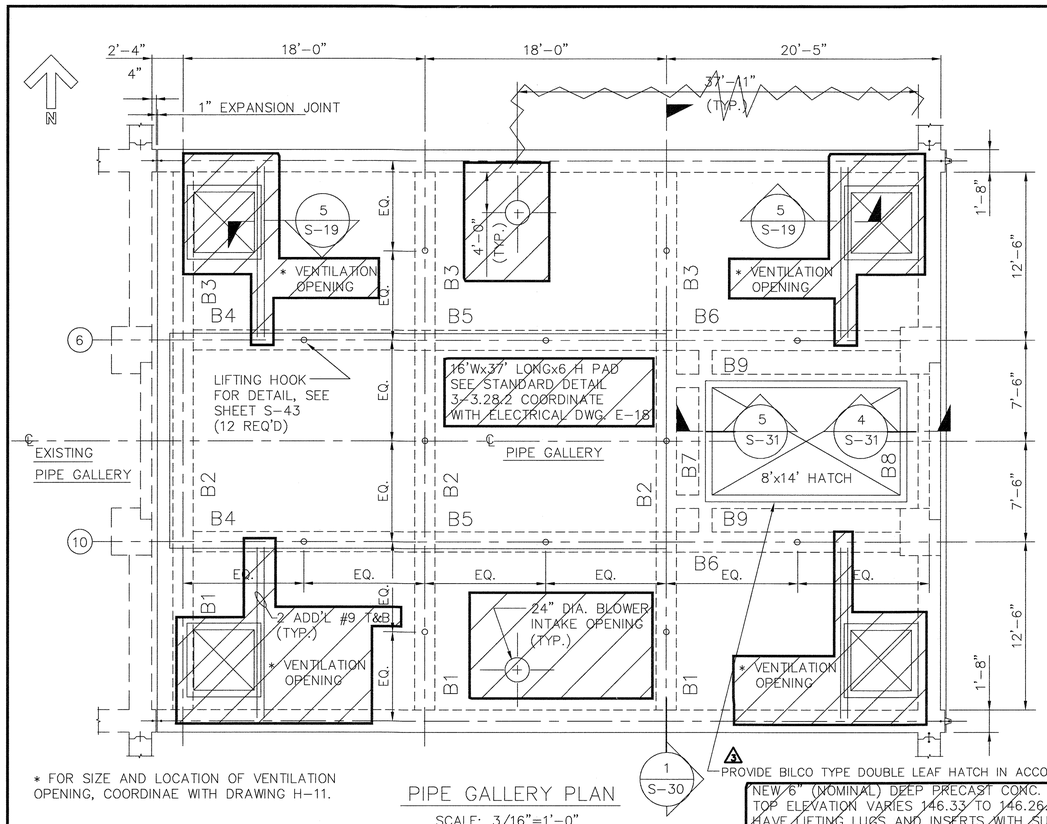

* FOR SIZE AND LOCATION OF VENTILATION OPENING, COORDINAE WITH DRAWING H-11.

PIPE GALLERY PLAN

SCALE: 3/16"=1'-0"

1
S-30

PROVIDE BILCO TYPE DOUBLE LEAF HATCH IN ACCORDANCE WITH SHT. M-53

NEW 6" (NOMINAL) DEEP PRECAST CONC. SLABS LL 250 PSF, TOP ELEVATION VARIES 146.33 TO 146.26 EACH SLABS SHALL HAVE LIFTING LUGS AND INSERTS WITH SUFFICIENT STRENGTH FOR REMOVING AND RE-INSTALLING OF SLABS. THEY SHALL BE FLUSH WITH TOP OF SURFACE AND SHALL BE EMBEDDED IN AREA WHERE SOLID CORES ARE PROVIDED. DETAILS AND CALCULATIONS SHALL BE INCLUDED WITH SHOP DWG. SUBMITTAL.

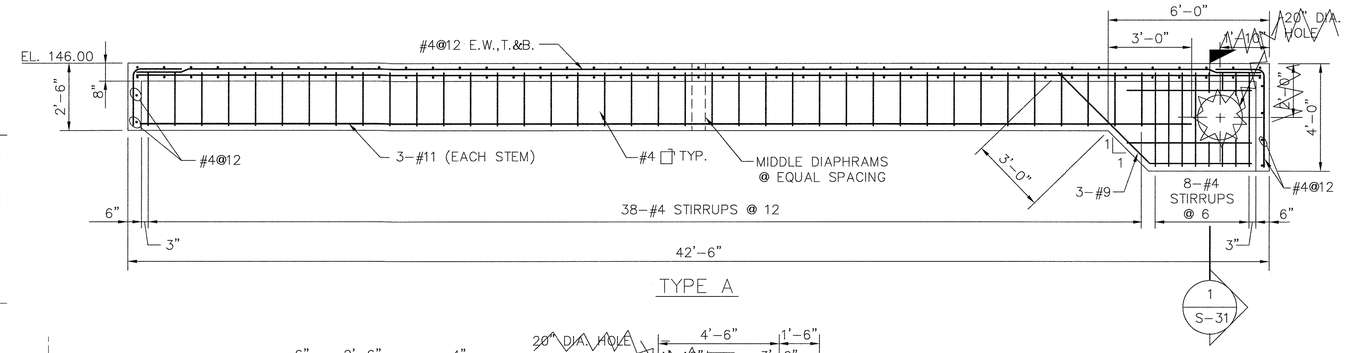

TYPE A

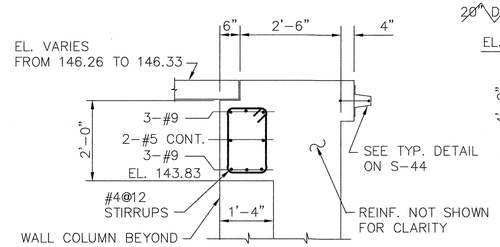

SECTION

SCALE: 1/2"=1'-0"

4
S-31

TYPICAL FOR BEAM 8

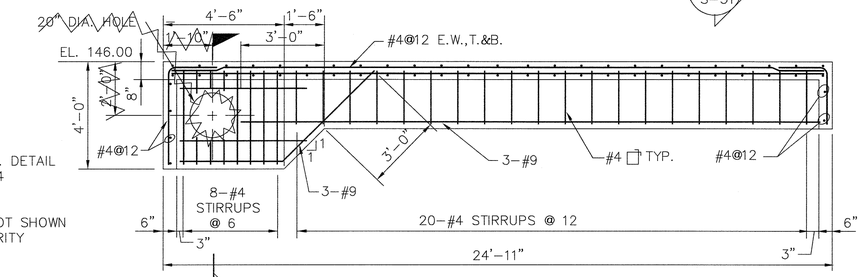

TYPE B

CROSSWALK BEAMS

SCALE: 3/8"=1'-0"

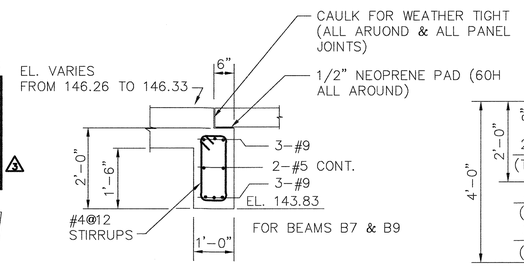

SECTION

SCALE: 1/2"=1'-0"

5
S-31

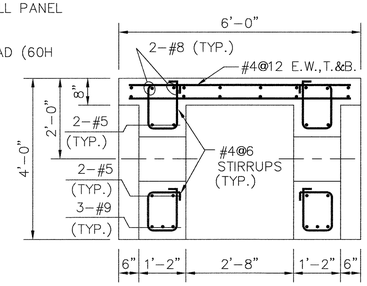

SECTION

SCALE: 1/2"=1'-0"

1
S-31

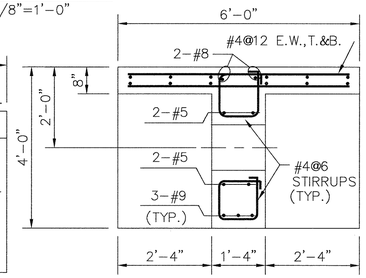

SECTION

SCALE: 1/2"=1'-0"

2
S-31

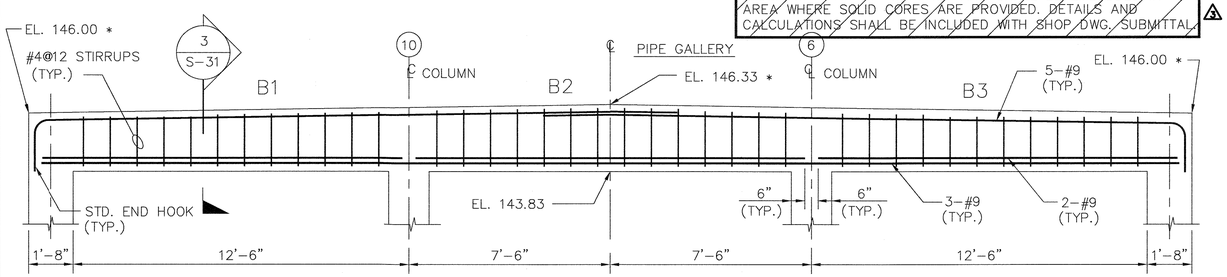

* TOP ELEVATIONS MATCH TO EXISTING

BEAMS B1, B2 & B3

SCALE: 3/8"=1'-0"

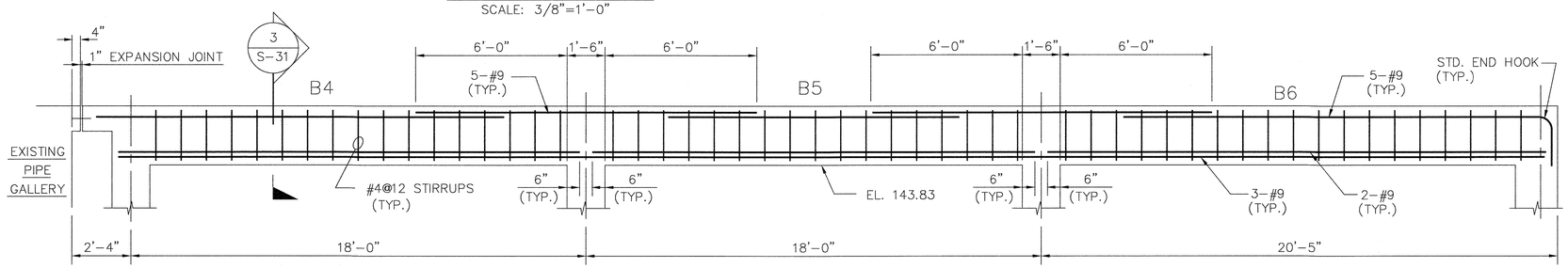

BEAMS B4, B5 & B6

SCALE: 3/8"=1'-0"

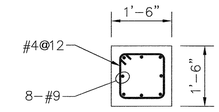

TYPICAL COLUMN DETAIL

SCALE: 1/2"=1'-0"

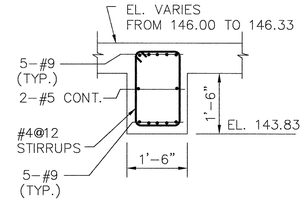

SECTION

SCALE: 1/2"=1'-0"

3
S-31

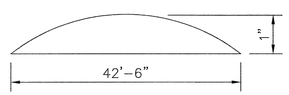

CAMBER DIAPHRAM

NOT TO SCALE

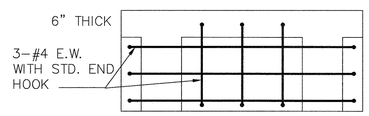

MIDDLE DIAPHRAM

SCALE: 1/2"=1'-0"

DEPARTMENT OF PUBLIC WORKS
HOWARD COUNTY, MARYLAND

DIRECTOR OF PUBLIC WORKS — DATE 5/7/96
CHIEF, BUREAU OF ENGINEERING — DATE 5/7/96
CHIEF, BUREAU OF ENVIRONMENTAL SERVICES — DATE 5/7/96
CHIEF, UTILITY DESIGN DIVISION — DATE 5-7-96

Metcalf & Eddy

REG. PROF. ENGR. — DATE 5-7-96

STATE OF MARYLAND — JONATHAN WINTHROP DOANE No. 15140 — REGISTERED PROFESSIONAL ENGINEER

DES: DR
DRN: EB
CHK:
DATE:

BY	NO.	REVISION	DATE
MB	1	REVISE FOR BIDDING	3/5/92
MJC	2	RECORD DRAWING	3/5/94

STRUCTURAL

DIGESTER AND GRAVITY THICKENERS BEAMS AND COLUMNS

LITTLE PATUXENT WASTEWATER TREATMENT PLANT

LITTLE PATUXENT WASTEWATER TREATMENT EXPANSION ADDITION NO. 5 CAPITAL PROJECT S-6153

CONTRACT NO. 20-3082

HOWARD COUNTY, MARYLAND

SCALE AS SHOWN

SHEET 79 OF 226

S-31A

FILE-NO.

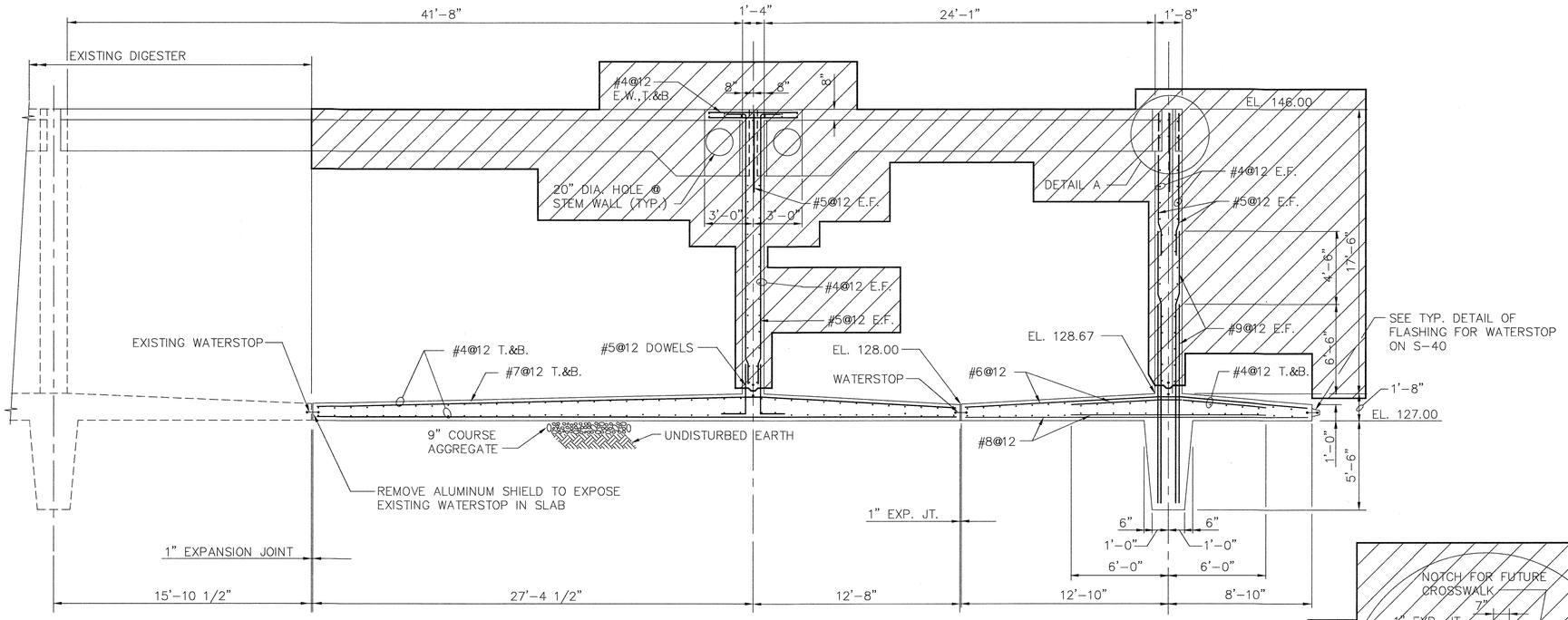

SECTION (1) S-25, S-26,S-28,S-29
SCALE: 1/4"=1'-0"

EAST WALL

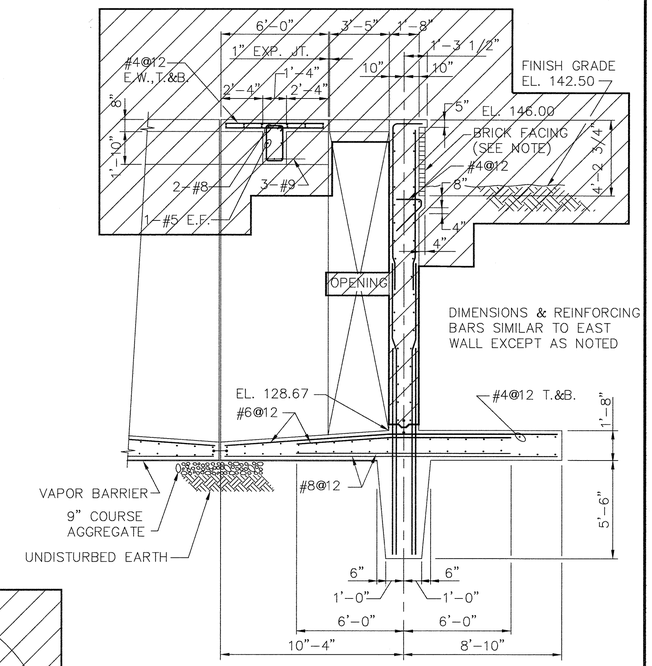

NORTH WALL, SOUTH WALL

NOTE: PROVIDE GALV. DOVE TAIL SLOTS @ 24" O.C., HORIZONTALLY AND GALV. DOVE TAIL ANCHORS @ 16" O.C., VERTICALLY AT BRICK FACING (TYP.)

SECTION (3) S-25, S-26,S-28,S-29
SCALE: 1/4"=1'-0"

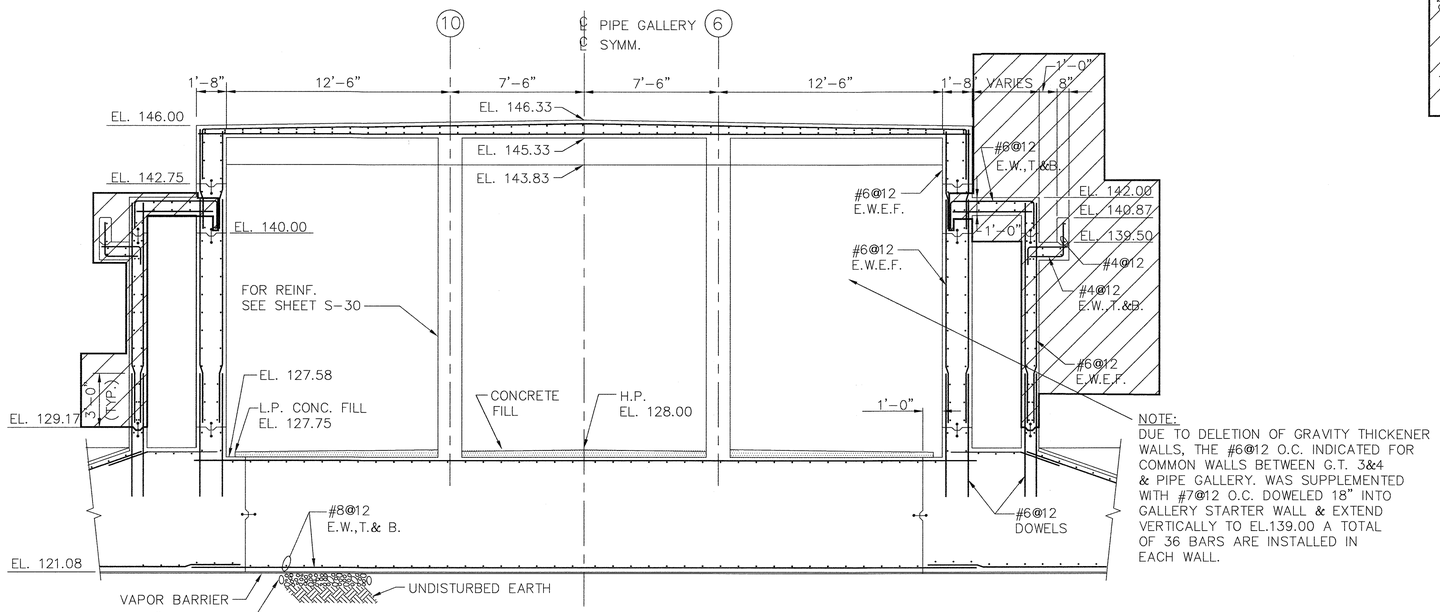

NOTE:
DUE TO DELETION OF GRAVITY THICKENER WALLS, THE #6@12 O.C. INDICATED FOR COMMON WALLS BETWEEN G.T. 3&4 & PIPE GALLERY. WAS SUPPLEMENTED WITH #7@12 O.C. DOWELED 18" INTO GALLERY STARTER WALL & EXTEND VERTICALLY TO EL.139.00 A TOTAL OF 36 BARS ARE INSTALLED IN EACH WALL.

SECTION (2) S-25, S-26,S-28,S-29
SCALE: 1/4"=1'-0"

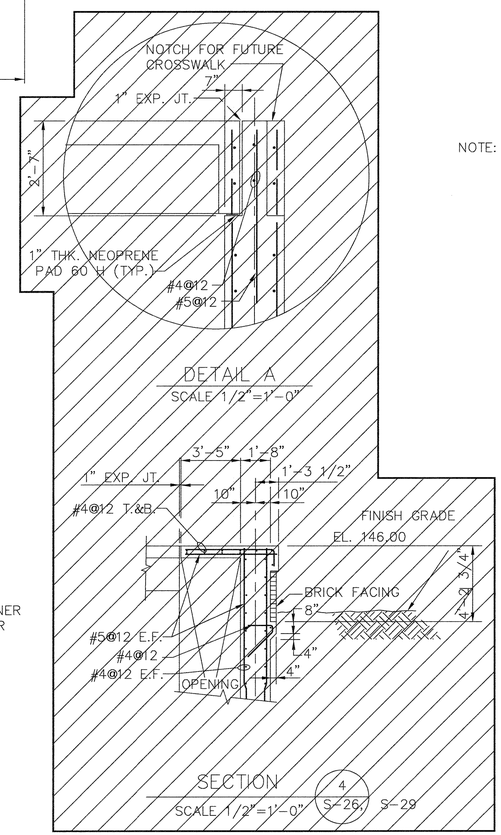

DETAIL A
SCALE 1/2"=1'-0"

SECTION (4) S-26, S-29
SCALE 1/2"=1'-0"

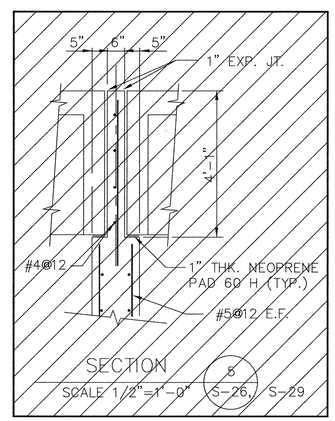

SECTION (5) S-26, S-29
SCALE 1/2"=1'-0"

DEPARTMENT OF PUBLIC WORKS
HOWARD COUNTY, MARYLAND

DIRECTOR OF PUBLIC WORKS — DATE 5/7/96
CHIEF, BUREAU OF ENGINEERING — DATE 5/7/96
CHIEF, BUREAU OF ENVIRONMENTAL SERVICES — DATE 5/7/96
CHIEF, UTILITY DESIGN DIVISION — DATE 5-7-96

M&E Metcalf & Eddy

REG. PROF. ENGR. — DATE 5-7-96

STATE OF MARYLAND — JONATHAN WINTHROP DONNE No. 15140 — REGISTERED PROFESSIONAL ENGINEER

DES: DR
DRN: EB
CHK:
DATE:

BY	NO.	REVISION	DATE
MB	1	REVISE FOR BIDDING	3/5/92
MJC	2	RECORD DRAWING	3/5/94

STRUCTURAL

DIGESTER AND PIPE GALLERY SECTIONS AND DETAILS

LITTLE PATUXENT WASTEWATER TREATMENT PLANT

LITTLE PATUXENT WASTEWATER TREATMENT EXPANSION
ADDITION NO. 5
CAPITAL PROJECT S-6153

CONTRACT NO. 20-3082

HOWARD COUNTY, MARYLAND

SCALE AS SHOWN

SHEET 80 OF 226

S-32A

FILE-NO.

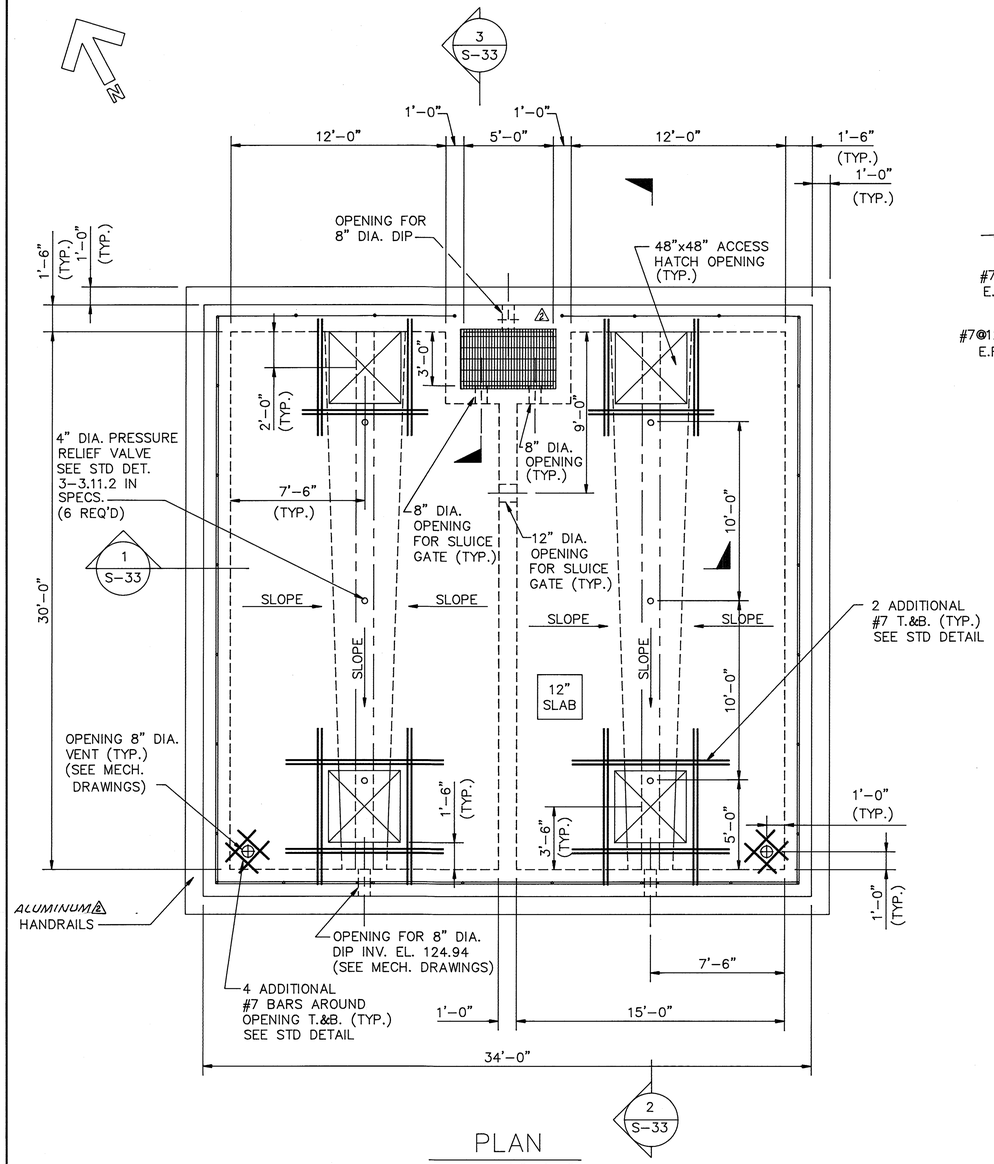

PLAN

SCALE: 1/4"=1'-0"

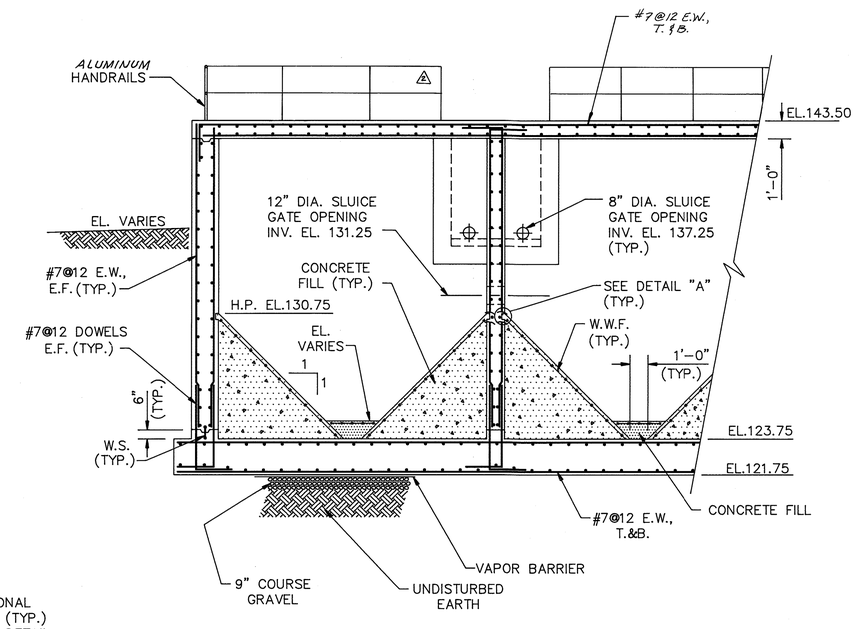

SECTION

SCALE: 1/4"=1'-0"

1
S-33

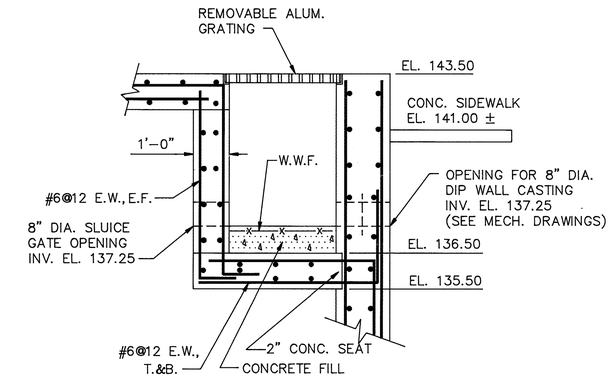

SECTION

SCALE: NONE

3
S-33

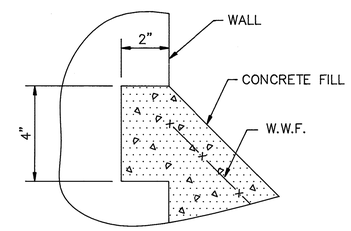

DETAIL A

SCALE: NONE

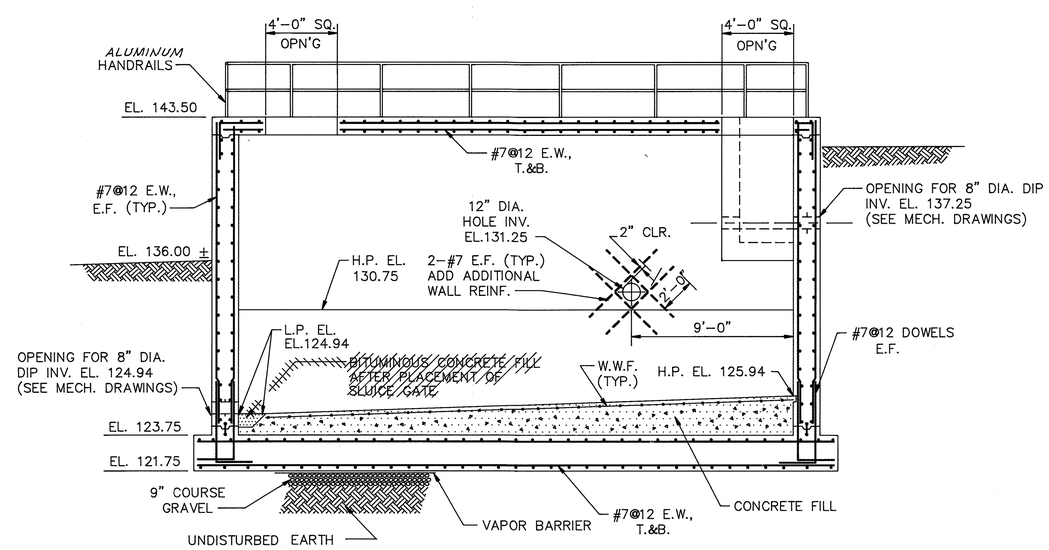

SECTION

SCALE: 1/4"=1'-0"

2
S-33

NOTES:

1. SEE ADDITIONAL REINFORCING DETAILS IN APPENDIX "B"
2. FOUNDATION BASED UPON ALLOWABLE SOIL BEARING PRESSURE OF 1500 P.S.F.
3. DESIGN LIVE LOADS:
   A. TOP SLAB: 200 LBS. PER SQUARE FOOT
   B. SEPTAGE: 65 LBS. PER CUBIC FOOT
4. CONTRACTOR TO PROVIDE ADDITIONAL OPENING FOR SLUICE GATE STEM OPERATORS.

DEPARTMENT OF PUBLIC WORKS
HOWARD COUNTY, MARYLAND

DIRECTOR OF PUBLIC WORKS — DATE 3/6/92
ACT. CHIEF, BUREAU OF ENGINEERING — DATE 3-6-92
CHIEF, BUREAU OF ENVIRONMENTAL SERVICES — DATE 3/6/92
ACT. CHIEF, UTILITY DESIGN DIVISION — DATE 3-6-92

Metcalf & Eddy
REG. PROF. ENGR. — DATE 3/6/92

STATE OF MARYLAND — JONATHAN WINTHROP DOANE No. 15140 — REGISTERED PROFESSIONAL ENGINEER

DES: DColson
DRN: E Burnett
CHK: M Yu
DATE: 12/7/91

BY	NO.	REVISION	DATE
RC	3	RECORD DRAWING	12/4/94
DEG	2	ADDENDUM #3	4/10/92
	1	REVISED FOR BIDDING	3/5/92

STRUCTURAL

SEPTAGE RECEIVING FACILITY PLAN, SECTIONS, AND DETAIL

LITTLE PATUXENT WASTEWATER TREATMENT PLANT
LITTLE PATUXENT WASTEWATER TREATMENT PLANT EXPANSION
ADDITION NO. 5
CAPITAL PROJECT S - 6153
CONTRACT NO. 20 - 3082
HOWARD COUNTY, MARYLAND

SCALE AS SHOWN

SHEET 81 OF 226

S-33

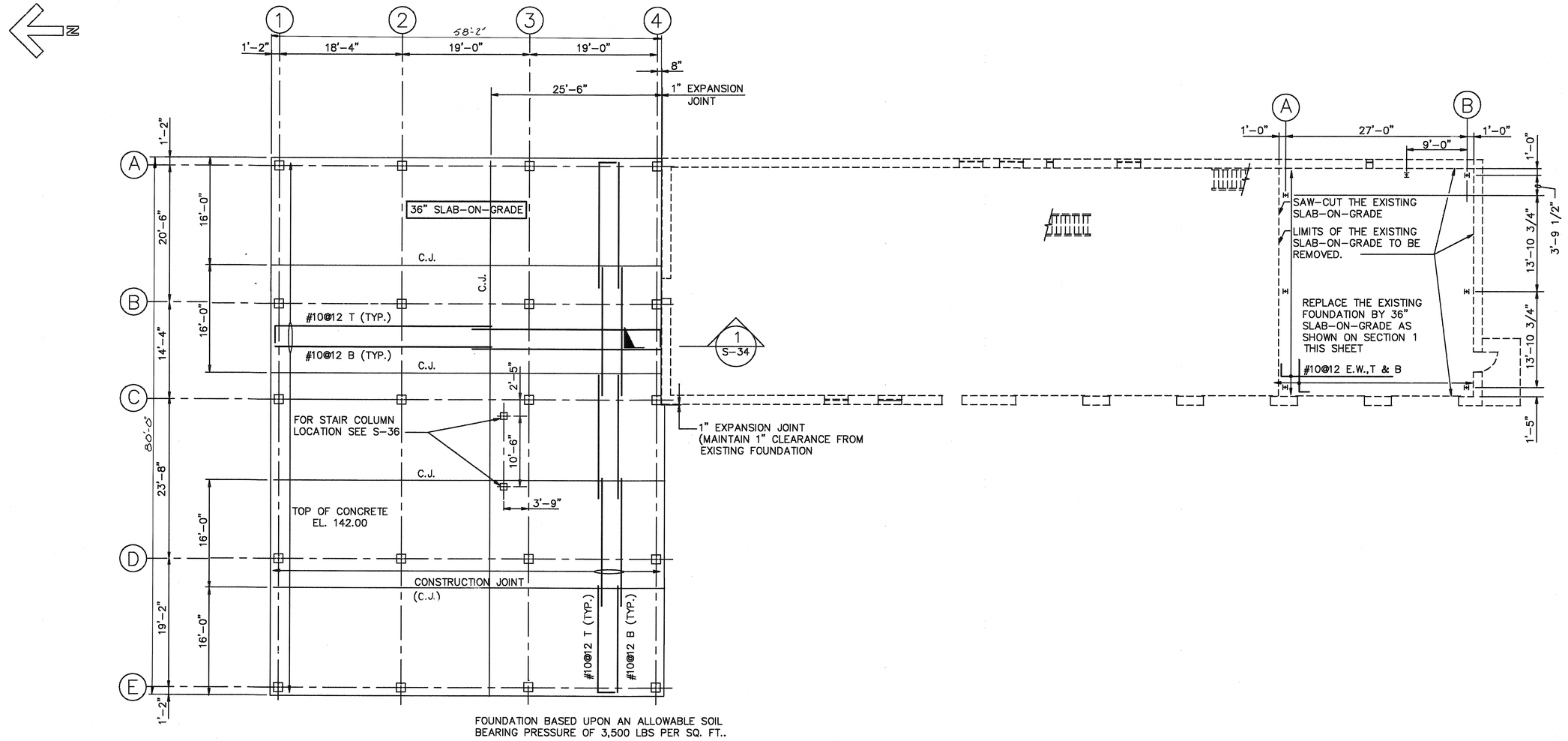

FOUNDATION BASED UPON AN ALLOWABLE SOIL BEARING PRESSURE OF 3,500 LBS PER SQ. FT..

FOUNDATION PLAN

SCALE: 1/8"=1'-0"

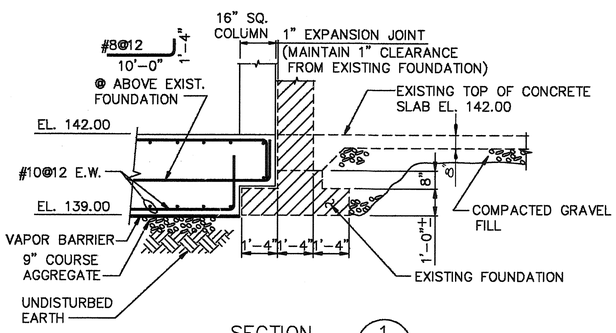

SECTION 1 / S-34

SCALE: 3/8"=1'-0"

DEPARTMENT OF PUBLIC WORKS
HOWARD COUNTY, MARYLAND

DIRECTOR OF PUBLIC WORKS — DATE 12/9/91
CHIEF, BUREAU OF ENGINEERING — DATE 12-9-91
CHIEF, BUREAU OF ENVIRONMENTAL SERVICES — DATE 12/9/91
CHIEF, UTILITY DESIGN DIVISION — DATE 12-9-91

Metcalf & Eddy

REG./PROF. ENGR. — DATE 12/9/91

STATE OF MARYLAND — JONATHAN WINTHROP DOANE — No. 15140 — REGISTERED PROFESSIONAL ENGINEER

DES: M.Y.Y.
DRN: E. Burnett
CHK: M.Y.Y.
DATE: 12/7/91

BY	NO.	REVISION	DATE
JC	3	RECORD DRAWING	11/1/94
DEG	2	ADDENDUM #5	4/14/92
	1	REVISED FOR BIDDING	3/5/92

STRUCTURAL

MAINTENANCE BUILDING FOUNDATION PLAN AND SECTION

LITTLE PATUXENT WASTEWATER TREATMENT PLANT

LITTLE PATUXENT WASTEWATER TREATMENT EXPANSION
ADDITION NO. 5
CAPITAL PROJECT S-6153

CONTRACT NO. 20-3082

HOWARD COUNTY, MARYLAND

SCALE AS SHOWN

SHEET 82 OF 226

S-34

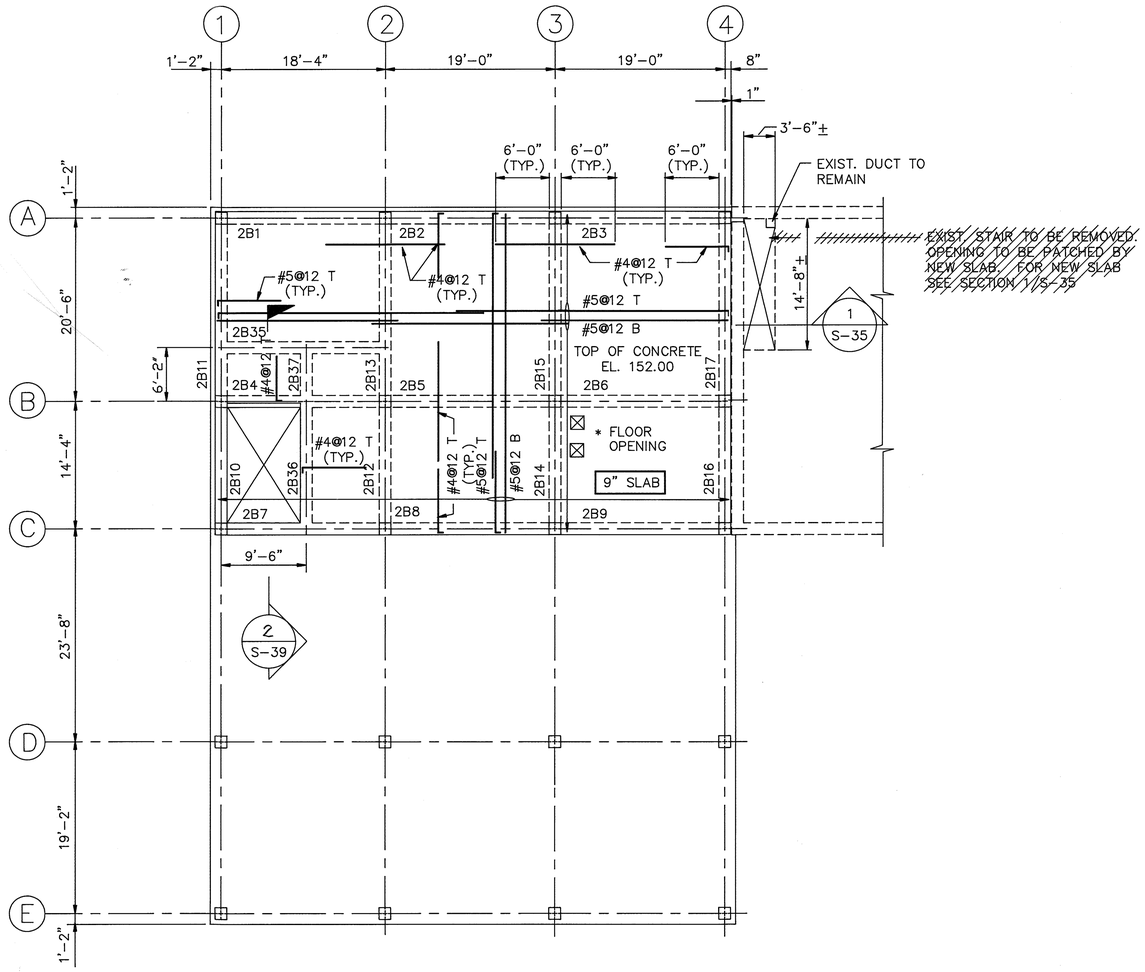

* FOR SIZE AND LOCATION OF OPENING, COORDINATE WITH DRAWINGS H-3 AND H-4.

PARTIAL 2ND FLOOR FRAMING @ EL. 152.00

SCALE: 1/8"=1'-0"

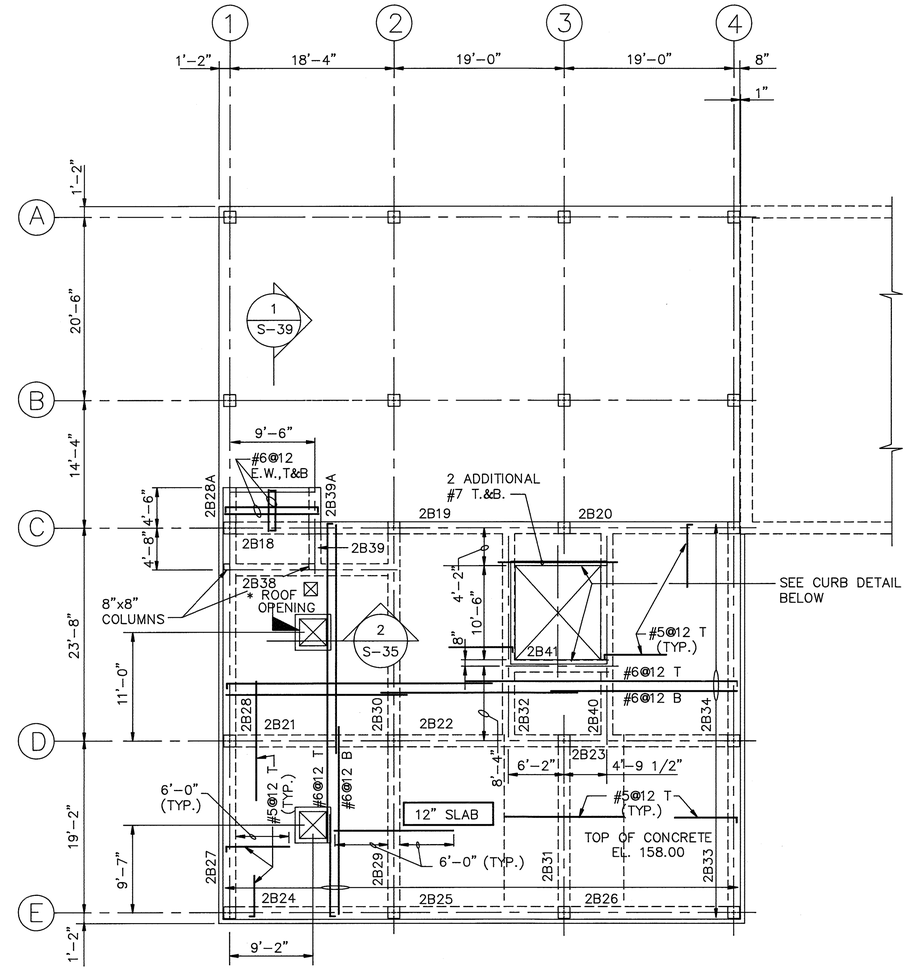

PARTIAL 2ND FLOOR FRAMING @ EL. 158.00

SCALE: 1/8"=1'-0"

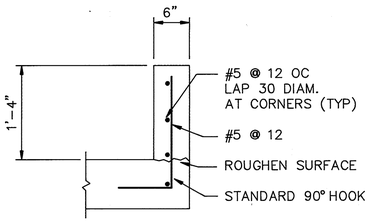

SECTION 2/S-35

SCALE: 1"=1'-0"

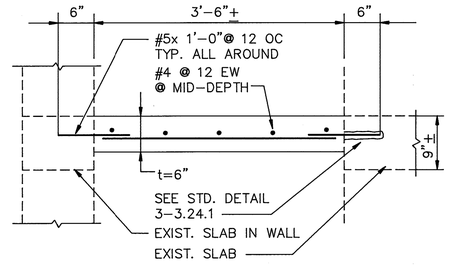

SECTION 1/S-35

SCALE: 1"=1'-0"

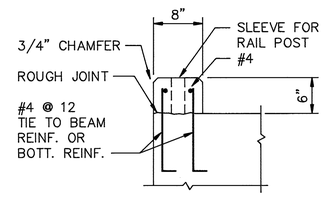

CURB DETAIL

DESIGN LIVE LOADS:

1. SMALL PARTS STORAGE AREA: 300 PSF
2. OTHERS: 100 PSF

NOTES:

1. FOR ADDITIONAL REINF., SEE STD. DETAIL 3-3.23.1
2. FOR MORE INFORMATION, SEE SKYLIGHT DETAIL C/A-5

DEPARTMENT OF PUBLIC WORKS
HOWARD COUNTY, MARYLAND

DIRECTOR OF PUBLIC WORKS — DATE 3/6/92 — ACT. CHIEF, BUREAU OF ENGINEERING — DATE 3-6-92
CHIEF, BUREAU OF ENVIRONMENTAL SERVICES — DATE 3/6/92 — ACT. CHIEF, UTILITY DESIGN DIVISION — DATE 3-6-92

Metcalf & Eddy

REG. PROF. ENGR. — DATE 3/6/92

STATE OF MARYLAND — JONATHAN WINTHROP DOANE No. 15140 — REGISTERED PROFESSIONAL ENGINEER

DES: M. YU
DRN: E Burnett
CHK: M. YU
DATE: 12/7/91

BY	NO.	REVISION	DATE
MC	2	RECORD DRAWING	11/1/94
	1	REVISED FOR BIDDING	3/5/92

STRUCTURAL

MAINTENANCE BUILDING
SECOND FLOOR
FRAMING PLANS

LITTLE PATUXENT WASTEWATER TREATMENT PLANT
LITTLE PATUXENT WASTEWATER TREATMENT PLANT EXPANSION
ADDITION NO. 5
CAPITAL PROJECT S-6153
CONTRACT NO. 20-3082
HOWARD COUNTY, MARYLAND

SCALE AS SHOWN
SHEET 83 OF 226
S-35

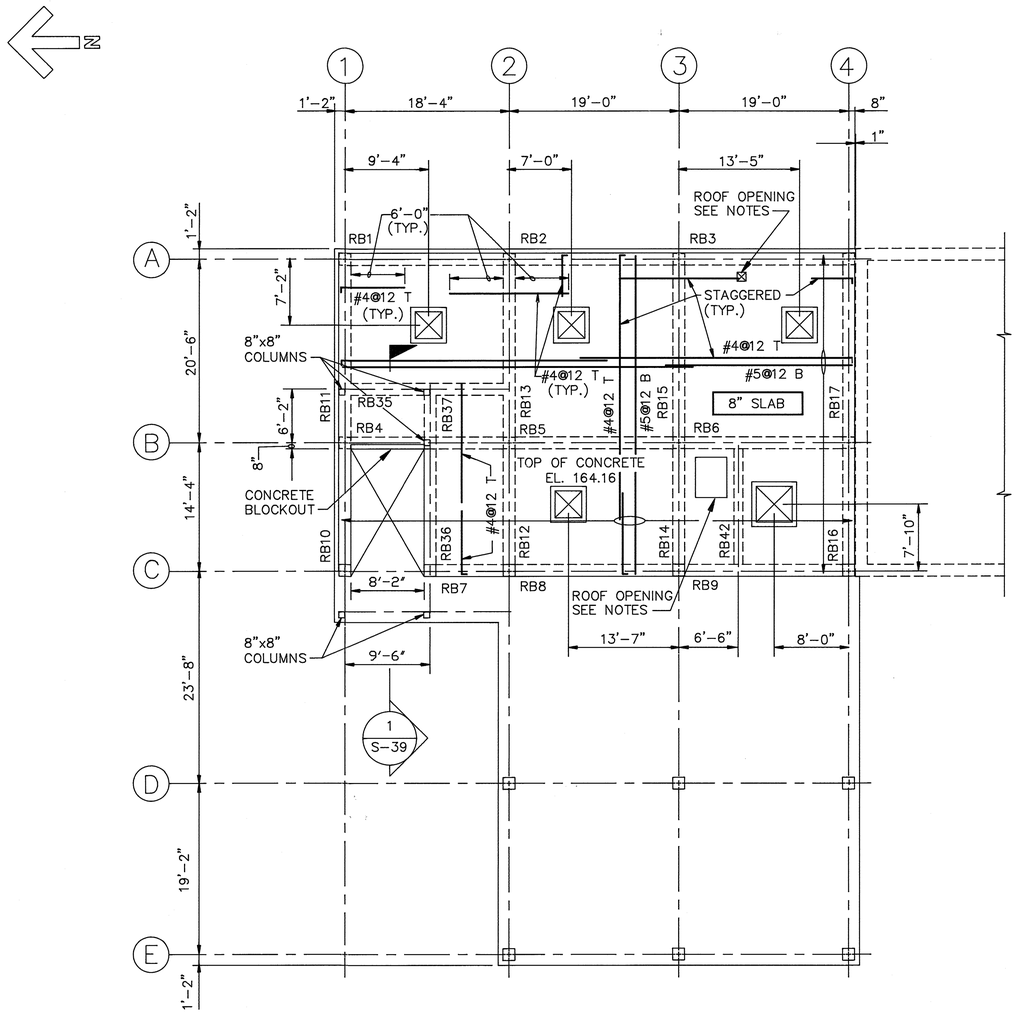

ROOF FRAMING PLAN
@ EL. 164.16
SCALE: 1/8"=1'-0"

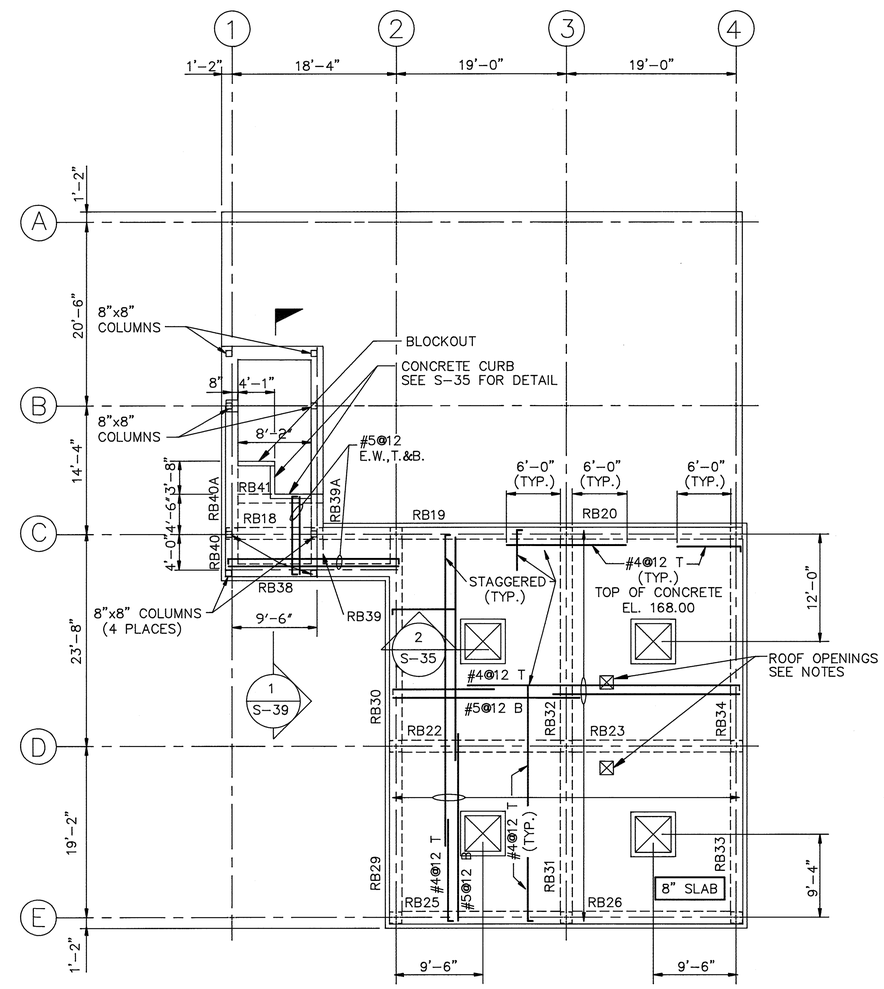

ROOF FRAMING PLAN
@ EL. 168.00
SCALE: 1/8"=1'-0"

DESIGN LIVE LOADS:

1. ROOF SNOW LOAD 30 PSF
2. SUPERIMPOSED DL 20 PSF

NOTES:

1. FOR SIZE AND LOCATION OF OPENINGS, COORDINATE WITH DRAWING H-4.
2. ALL ROOF OPENINGS ARE WITH PREFAB ROOF CURB, EXCEPT SKYLIGHT OPENING.

DEPARTMENT OF PUBLIC WORKS
HOWARD COUNTY, MARYLAND

DIRECTOR OF PUBLIC WORKS — DATE 3/6/92
Act. CHIEF, BUREAU OF ENGINEERING — DATE 3-6-92
CHIEF, BUREAU OF ENVIRONMENTAL SERVICES — DATE 3/6/92
Act. CHIEF, UTILITY DESIGN DIVISION — DATE 3-6-92

Metcalf & Eddy

REG. PROF. ENGR. — DATE 3/6/92

STATE OF MARYLAND — JONATHAN WINTHROP DOANE No. 15140 — REGISTERED PROFESSIONAL ENGINEER

DES: M. Yu			
DRN: E. Burnett			
CHK: M. Yu	2	RECORD DRAWING	11/1/94
DATE: 12/7/91	1	REVISED FOR BIDDING	3/5/92
BY	NO.	REVISION	DATE

STRUCTURAL

MAINTENANCE BUILDING
ROOF FRAMING PLANS

LITTLE PATUXENT WASTEWATER TREATMENT PLANT

LITTLE PATUXENT WASTEWATER TREATMENT PLANT EXPANSION
ADDITION NO. 5
CAPITAL PROJECT S - 6153

CONTRACT NO. 20 - 3082

HOWARD COUNTY, MARYLAND

SCALE AS SHOWN

SHEET 84 OF 226

S-36

BEAM SCHEDULE

BEAM MARK ON PLAN WILL BE DESIGNATED ON LEFT SIDE OF BEAM

2 ND. FLOOR

MARK	SIZE: WIDTH X DEPTH	REINFORCEMENT BOTTOM CONT.	BOTTOM ADD.	TOP ADD. LEFT	TOP CONT.	TOP ADD. RIGHT	STIRRUPS TYPE	STIRRUPS SIZE	STIRRUPS SPACING	REMARKS
2B1	16x24	2-#9	-	-	2-#9	1-#9	⊓	#4	1@2", BAL.@10	
2B2	16x24	2-#9	-	-	2-#9	1-#9	⊓	#4	1@2", BAL.@10	
2B3	16x24	2-#9	-	-	2-#9	-	⊓	#4	1@2", BAL.@10	
2B4	16x24	2-#9	-	-	2-#9	1-#9	⊓	#4	1@2", BAL.@10	
2B5	16x24	2-#9	-	-	2-#9	1-#9	⊔	#4	1@2", BAL.@10	
2B6	16x24	2-#9	-	-	2-#9	-	⊔	#4	1@2", BAL.@10	
2B7	16x24	2-#9	1-#9	-	2-#9	1-#9	⊓	#4	1@2", BAL.@10	
2B8	16x24	2-#9	-	-	2-#9	-	⊓	#4	1@2", BAL.@10	
2B9	16x24	2-#9	-	-	2-#9	-	⊓	#4	1@2", BAL.@10	
2B10	16x24	2-#9	-	-	2-#9	1-#9	⊓	#4	1@2", BAL.@10	
2B11	16x24	2-#9	-	-	2-#9	-	⊓	#4	1@2", BAL.@10	
2B12	16x24	2-#9	-	-	2-#9	2-#9	⊔	#4	1@2", BAL.@10	
2B13	16x24	2-#9	1-#9	-	2-#9	1-#9	⊓	#4	1@2", BAL.@10	
2B14	16x24	2-#9	-	-	2-#9	2-#9	⊔	#4	1@2", BAL.@10	
2B15	16x24	2-#9	1-#9	-	2-#9	1-#9	⊔	#4	1@2", BAL.@10	
2B16	16x24	2-#9	-	-	2-#9	1-#9	⊓	#4	1@2", BAL.@10	
2B17	16x24	2-#9	-	-	2-#9	-	⊓	#4	1@2", BAL.@10	
2B18	16x36	2-#9	2-#9	-	2-#9	2-#9	⊓	#4	1@2", BAL.@12	
2B19	16x36	2-#9	1-#9	-	2-#9	1-#9	⊓	#4	1@2", BAL.@12	
2B20	16x36	2-#9	-	-	2-#9	-	⊓	#4	1@2", BAL.@12	
2B21	16x36	2-#9	-	-	2-#9	2-#9	⊔	#4	1@2", BAL.@16	
2B22	16x36	3-#9	2-#9	-	2-#9	2-#9	⊓	#4	1@2", BAL.@12	
2B23	16x36	2-#9	2-#9	-	2-#9	-	⊓	#4	1@2", BAL.@12	
2B24	16x36	2-#9	-	-	2-#9	-	⊓	#4	1@2", BAL.@16	
2B25	16x36	2-#9	-	-	2-#9	1-#9	⊓	#4	1@2", BAL.@16	
2B26	16x36	2-#9	-	-	2-#9	-	⊓	#4	1@2", BAL.@16	
2B27	16x36	2-#9	-	-	2-#9	2-#9	⊓	#4	1@2", BAL.@16	
2B28	16x36	4-#9	-	-	2-#9	-	⊓	#4	1@2", BAL.@16	
2B28A	16x36	4-#9	-	-	2-#9	-	⊓	#4	1@2", BAL.@16	
2B29	16x36	2-#9	-	-	2-#9	3-#9	⊔	#4	1@2",8@11", BAL.@16	
2B30	16x36	3-#9	2-#9	-	3-#9	-	⊓	#4	1@2",8@11", BAL.@16	
2B31	16x36	3-#9	2-#9	-	5-#9	-	⊓	#4	1@2",8@11", BAL.@16	
2B32	16x36	3-#9	2-#9	-	5-#9	-	⊓	#4	1@2",8@11", BAL.@16	
2B33	16x36	2-#9	-	-	2-#9	2-#9	⊓	#4	1@2", BAL.@16	
2B34	16x36	2-#9	1-#9	-	2-#9	-	⊓	#4	1@2", BAL.@16	
2B35	16x24	2-#9	1-#9	-	2-#9	-	⊓	#4	1@2", BAL.@10	
2B36	16x24	2-#9	1-#9	-	2-#9	-	⊓	#4	1@2", BAL.@10	
2B37	16x24	2-#9	-	-	2-#9	-	⊔	#4	1@2", BAL.@10	
2B38	16x36	2-#9	-	-	2-#9	-	⊓	#4	1@2", BAL.@16	
2B39	16x36	2-#9	-	-	2-#9	-	⊓	#4	1@2", BAL.@16	
2B39A	16x36	2-#9	-	-	2-#9	-	⊓	#4	1@2", BAL.@16	
2B40	16x36	2-#9	2-#9	-	4-#9	-	⊓	#4	1@2", BAL.@12	
2B41	16x36	2-#9	-	-	2-#9	-	⊓	#4	1@2", BAL.@16	

ROOF

MARK	SIZE: WIDTH X DEPTH	REINFORCEMENT BOTTOM CONT.	BOTTOM ADD.	TOP ADD. LEFT	TOP CONT.	TOP ADD. RIGHT	STIRRUPS TYPE	STIRRUPS SIZE	STIRRUPS SPACING	REMARKS
RB1	16x24	2-#9	-	-	2-#9	-	⊓	#4	1@2",BAL@10	
RB2	16x24	2-#9	-	-	2-#9	-	⊓	#4	1@2",BAL@10	
RB3	16x24	2-#9	-	-	2-#9	-	⊓	#4	1@2",BAL@10	
RB4	16x24	3-#9	-	-	2-#9	1-#9	⊓	#4	1@2",BAL@10	
RB5	16x24	2-#9	-	-	2-#9	-	⊔	#4	1@2",BAL@10	
RB6	16x24	2-#9	-	-	2-#9	-	⊓	#4	1@2",BAL@10	
RB7	16x24	3-#9	-	-	2-#9	1-#9	⊓	#4	1@2",BAL@10	
RB8	16x24	2-#9	-	-	2-#9	-	⊓	#4	1@2",BAL@10	
RB9	16x24	2-#9	-	-	2-#9	-	⊓	#4	1@2",BAL@10	
RB10	16x24	2-#9	-	-	2-#9	1-#9	⊓	#4	1@2",BAL@10	
RB11	16x24	2-#9	-	-	2-#9	-	⊓	#4	1@2",BAL@10	
RB12	16x24	2-#9	-	-	2-#9	1-#9	⊔	#4	1@2",BAL@10	
RB13	16x24	2-#9	-	-	2-#9	-	⊓	#4	1@2",BAL@10	
RB14	16x24	2-#9	-	-	2-#9	1-#9	⊔	#4	1@2",BAL@10	
RB15	16x24	2-#9	-	-	2-#9	-	⊔	#4	1@2",BAL@10	
RB16	16x24	2-#9	-	-	2-#9	-	⊓	#4	1@2",BAL@10	
RB17	16x24	2-#9	-	-	2-#9	-	⊓	#4	1@2",BAL@10	
RB18	16x24	2-#9	-	-	2-#9	-	⊓	#4	1@2",BAL@10	
RB19	16x24	2-#9	-	-	2-#9	-	⊓	#4	1@2",BAL@10	
RB20	16x24	2-#9	-	-	2-#9	-	⊓	#4	1@2",BAL@10	
RB21										NOT USED
RB22	16x24	2-#9	-	-	2-#9	-	⊔	#4	1@2",BAL@10	
RB23	16x24	2-#9	-	-	2-#9	-	⊔	#4	1@2",BAL@10	
RB24										NOT USED
RB25	16x24	2-#9	-	-	2-#9	-	⊓	#4	1@2",BAL@10	
RB26	16x24	2-#9	-	-	2-#9	-	⊓	#4	1@2",BAL@10	
RB27	16x24	2-#9			2-#9		⊓	#4	1@2",BAL@10	~~NOT USED~~
RB28	16x24	2-#9			2-#9		⊓	#4	1@2",BAL@10	~~NOT USED~~
RB29	16x24	2-#9	-	-	2-#9	-	⊓	#4	1@2",BAL@10	
RB30	16x24	2-#9	-	-	2-#9	-	⊓	#4	1@2",BAL@10	
RB31	16x24	2-#9	-	-	2-#9	2-#9	⊔	#4	1@2",BAL@10	
RB32	16x24	2-#9	-	-	2-#9	-	⊔	#4	1@2",BAL@10	
RB33	16x24	2-#9	-	-	2-#9	1-#9	⊓	#4	1@2",BAL@10	
RB34	16x24	2-#9	-	-	2-#9	-	⊓	#4	1@2",BAL@10	
RB35	16x24	2-#9	-	-	2-#9	1-#9	⊓	#4	1@2",BAL@10	
RB36	16x24	2-#9	-	-	2-#9	1-#9	⊓	#4	1@2",BAL@10	
RB37	16x24	2-#9	-	-	2-#9	1-#9	⊔	#4	1@2",BAL@10	
RB38	16x24	2-#9	-	-	2-#9	-	⊓	#4	1@2",BAL@10	
RB39	16x24	2-#9	-	-	2-#9	-	⊓	#4	1@2",BAL@10	
RB39A	16x24	2-#9	-	-	2-#9	-	⊓	#4	1@2",BAL@10	
RB40	16x24	2-#9	-	-	2-#9	-	⊓	#4	1@2",BAL@10	
RB40A	16x24	2-#9	-	-	2-#9	-	⊓	#4	1@2",BAL@10	
RB41	16x24	2-#9	-	-	2-#9	-	⊓	#4	1@2",BAL@10	
RB42	16x24	2-#9	-	-	2-#9	-	⊓	#4	1@2",BAL@10	

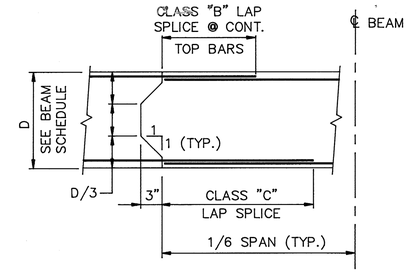

TYP. BEAM CONSTRUCTION JOINT

NOT TO SCALE

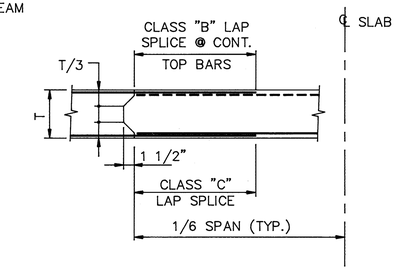

TYP. SLAB CONSTRUCTION JOINT

NOT TO SCALE

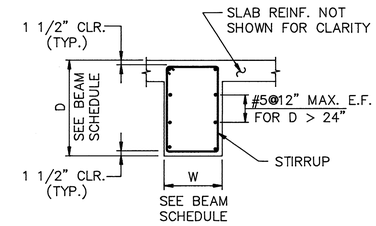

TYPICAL BEAM SECTION

NOT TO SCALE

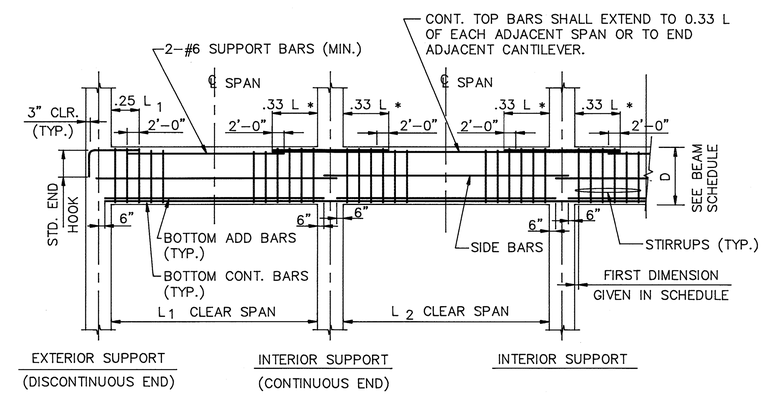

TYPICAL CONCRETE BEAM DETAIL

NOT TO SCALE

NOTES:

1. LARGER OF ADJACENT BEAM TOP BAR SHALL GOVERN.
2. L * IS THE GREATER OF ADJACENT SPANS L_1 OR L_2.

NOTES:

1. POSITION OF SCHEDULED LEFT AND RIGHT END TOP REINFORCEMENT IS DETERMINED BY THE ORIENTATION OF BEAM MARKED ON PLAN.
2. CONT. MEANS CONTINUOUS TOP REINFORCEMENT EXTENDED TO L/3 OF EACH ADJACENT SPAN OR TO END OF ADJACENT CANTILEVER.

DEPARTMENT OF PUBLIC WORKS
HOWARD COUNTY, MARYLAND

DIRECTOR OF PUBLIC WORKS — DATE 12/9/91
CHIEF, BUREAU OF ENGINEERING — DATE 12-9-91
CHIEF, BUREAU OF ENVIRONMENTAL SERVICES — DATE 12/9/91
CHIEF, UTILITY DESIGN DIVISION — DATE 12-9-91

Metcalf & Eddy

REG. PROF. ENGR. — DATE 12/9/91

DES: M.Y.H
DRN: E. Burnett
CHK: M.Y.H
DATE: 12/7/91

BY	NO.	REVISION	DATE
	2	RECORD DRAWING	11/1/94
	1	REVISED FOR BIDDING	3/5/92

STRUCTURAL

MAINTENANCE BUILDING
BEAM SCHEDULE
AND DETAILS

LITTLE PATUXENT WASTEWATER TREATMENT PLANT
LITTLE PATUXENT WASTEWATER TREATMENT PLANT EXPANSION
ADDITION NO. 5
CAPITAL PROJECT S - 6153
CONTRACT NO. 20 - 3082
HOWARD COUNTY, MARYLAND

SCALE AS SHOWN

SHEET 85 OF 226

S-37

COLUMN SCHEDULE

COLUMN MARK / LEVEL EL. TO TOP OF STRUCT. (U.N.O.)	A–1 A–2 A–3 A–4 B–2 B–3 B–4	C–1 C–4	C–2 C–3	D–2 D–4	D–3	D–1 E–1	B–1 E–2 E–3 E–4	C.2–1 C.2–1.5	B–1 C–1 C–1.5	B–1.5 A.7–1 A.7–1.5	C–1.5	C.5–2.8	C.1–2.8
PENTHOUSE LEVEL VARIES EL 177.83 ±													
ROOF EL. VARIES HIGH LEVEL EL. 168.00 ± LOW LEVEL EL. 164.16 ±								8"x8" 4–#7 #3@8	8"x8" 4–#7 #3@8	8"x8" 4–#7 #3@8			
		16"x16" 8–#8 #3@12	16"x16" 8–#7 #3@12	16"x16" 4–#9 #3@12	16"x16" 4–#9 #3@12		16"x16" 4–#9 #3@12	8"x8" 4–#7 #3@8			16"x16" 4–#9 #3@12		
SECOND FLOOR HIGH LEVEL EL. 158.00 ± LOW LEVEL EL. 152.00 ±	16" x 16" 4–#9 #3@12											TOP OF LANDING EL. 152.88	
		16"x16" 8–#8 #3@12	16"x16" 8–#9 #3@12	16"x16" 8–#9 #3@12	16"x16" 12–#10 #3@12	16"x16" 4–#8 #3@12	16"x16" 4–#9 #3@12					16"x16" 4–#9 #3@12	TOP OF LANDING EL. 147.12
FIRST FLOOR EL. 142.00 ±	16" x 16" 4–#9 #3@12												16"x16" 4–#9 #3@12
DOWELS	4–#9	8–#8	8–#9	8–#9	12–#10	4–#8	4–#9					4–#9	4–#9

NOTE:

INDICATES TRANSFER BEAM AT THE FLOOR LEVEL SHOWN.

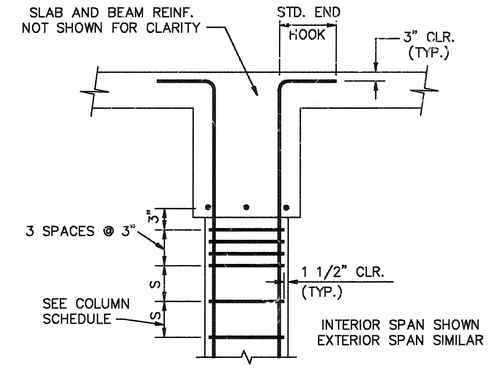

TYPICAL TOP COLUMN DETAIL

NOT TO SCALE

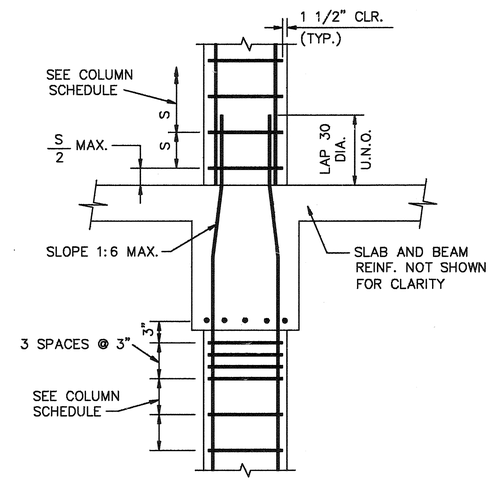

TYPICAL COLUMN SPLICE DETAIL

NOT TO SCALE

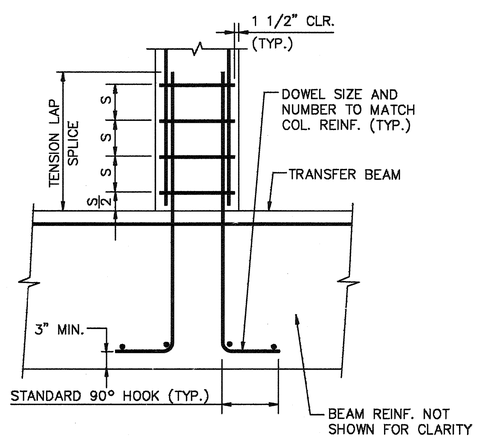

SPLICE DETAIL AT TRANSFER BEAM

NOT TO SCALE

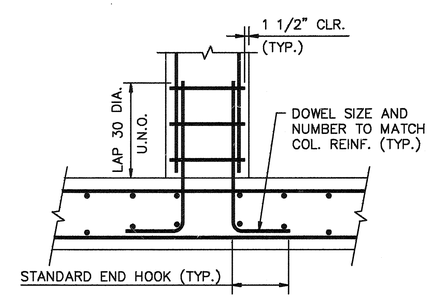

NOTE:

FOR DIMENSIONS AND REINFORCEMENT SEE COLUMN SCHEDULE.

TYPICAL BOTTOM COLUMN DETAIL

NOT TO SCALE

DEPARTMENT OF PUBLIC WORKS
HOWARD COUNTY, MARYLAND

DIRECTOR OF PUBLIC WORKS — DATE 12/9/91
CHIEF, BUREAU OF ENGINEERING — DATE 12-9-91
CHIEF, BUREAU OF ENVIRONMENTAL SERVICES — DATE 12/9/91
CHIEF, UTILITY DESIGN DIVISION — DATE 12-9-91

Metcalf & Eddy

REG. PROF. ENGR. — DATE 12/2/91

STATE OF MARYLAND — JONATHAN WINTHROP DOANE No. 15140 — REGISTERED PROFESSIONAL ENGINEER

DES: M. Yu
DRN: E. Burnett
CHK: M. Yu
DATE: 12/7/91

BY	NO.	REVISION	DATE
	2	RECORD DRAWING	11/1/94
	1	REVISED FOR BIDDING	3/5/92

STRUCTURAL

MAINTENANCE BUILDING COLUMN SCHEDULE AND DETAILS

LITTLE PATUXENT WASTEWATER TREATMENT PLANT

LITTLE PATUXENT WASTEWATER TREATMENT EXPANSION
ADDITION NO. 5
CAPITAL PROJECT S–6153

CONTRACT NO. 20–3082

HOWARD COUNTY, MARYLAND

SCALE AS SHOWN

SHEET 86 OF 226

S–38

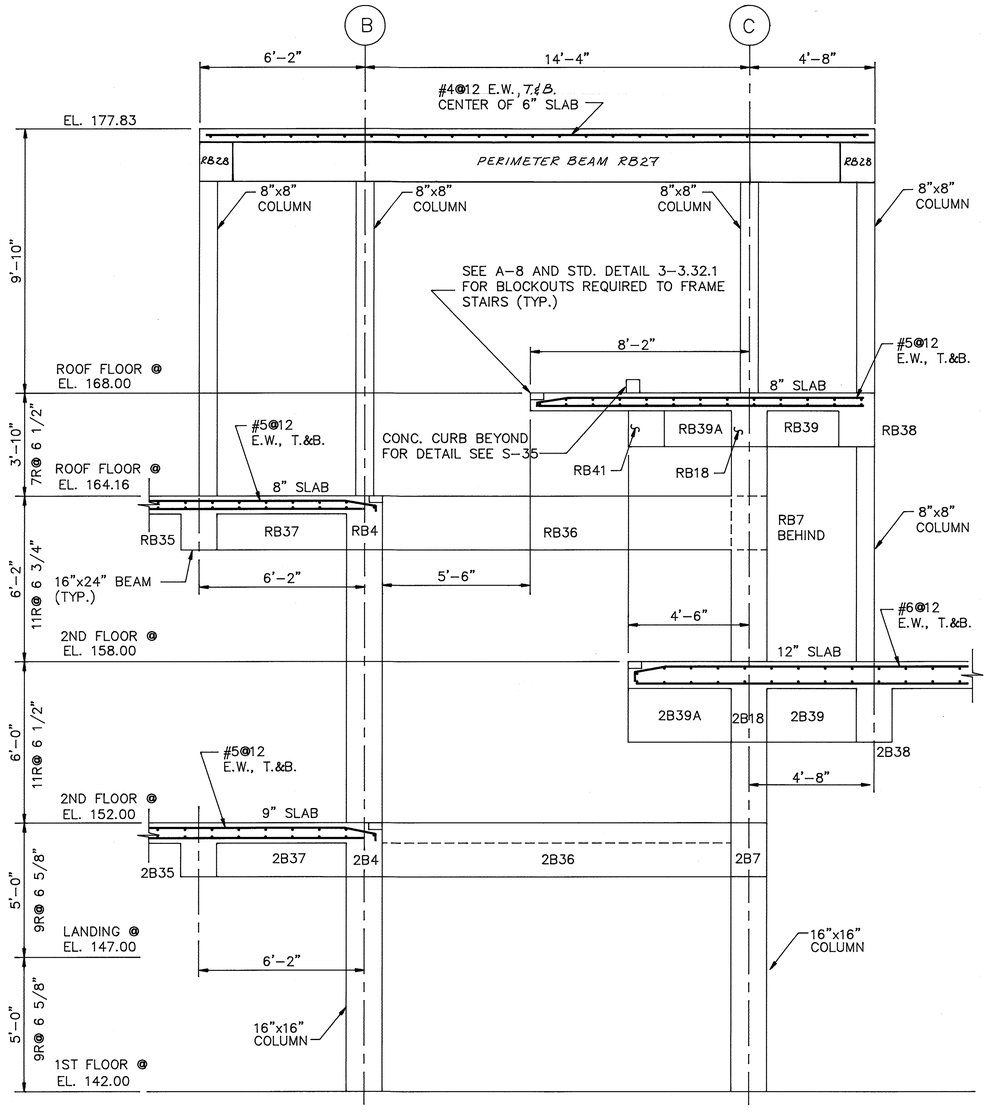

SECTION 1
PENTHOUSE STAIRWAY SECTION S-35, S-36
SCALE: 3/8"=1'-0"

NOTES:

1. SEE ARCHITECTURAL DRAWINGS A-3 & A-8 FOR STAIR PLANS AND DETAILS.
2. ALUMINUM STAIRS SHALL BE DESIGNED BY THE CONTRACTOR FOR A LIVE LOAD OF 100 PSF. THE CONTRACTOR SHALL SUBMIT CALCULATIONS FOR REVIEW BY THE ENGINEER. ALL EMBEDMENT NEEDED FOR THE CONNECTION WITH THE FRAME SHALL BE COORDINATED BY THE CONTRACTOR.

DEPARTMENT OF PUBLIC WORKS
HOWARD COUNTY, MARYLAND

DIRECTOR OF PUBLIC WORKS — DATE 12/9/91
CHIEF, BUREAU OF ENGINEERING — DATE 12-9-91
CHIEF, BUREAU OF ENVIRONMENTAL SERVICES — DATE 12/9/91
CHIEF, UTILITY DESIGN DIVISION — DATE 12-9-91

Metcalf & Eddy
REG. PROF. ENGR. — DATE 12/7/91

STATE OF MARYLAND — JONATHAN WINTHROP DOANE No. 15140 — REGISTERED PROFESSIONAL ENGINEER

DES: M Yu
DRN: E. Burkett
CHK: M. Yu
DATE: 12/7/91

BY	NO.	REVISION	DATE
RJC	2	RECORD DRAWING	11/1/94
	1	REVISED FOR BIDDING	3/5/92

STRUCTURAL

MAINTENANCE BUILDING
PENTHOUSE STAIRWAY
SECTION

LITTLE PATUXENT WASTEWATER TREATMENT PLANT
LITTLE PATUXENT WASTEWATER TREATMENT PLANT EXPANSION
ADDITION NO. 5
CAPITAL PROJECT S-6153
CONTRACT NO. 20-3082
HOWARD COUNTY, MARYLAND

SCALE AS SHOWN
SHEET 87 OF 226
S-39

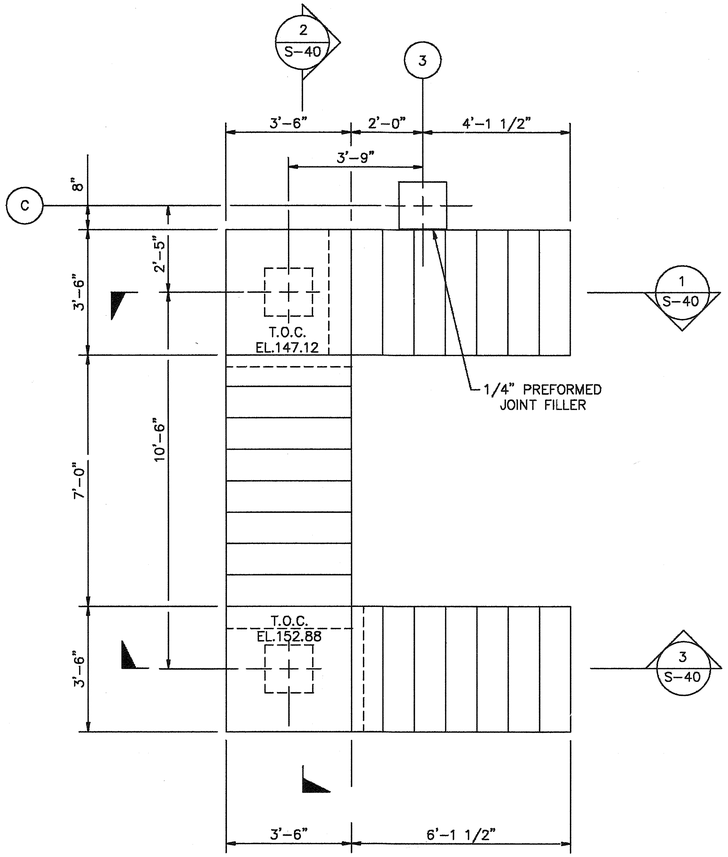

PLAN

SCALE: 1/2"=1'-0"

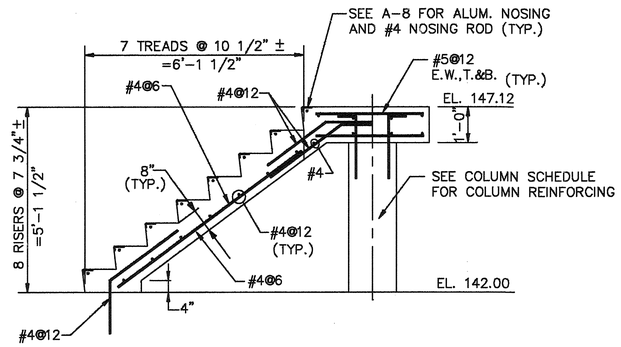

SECTION 1 S-40

SCALE: 1/2"=1'-0"

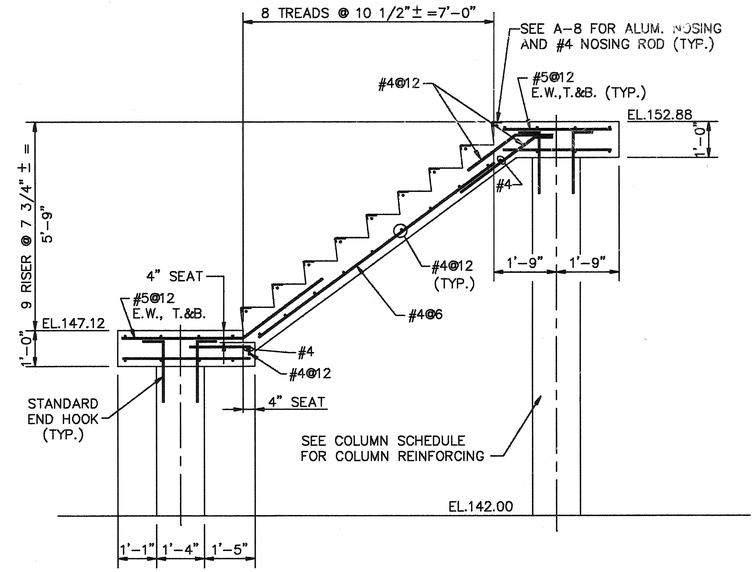

SECTION 2 S-40

SCALE: 1/2"=1'-0"

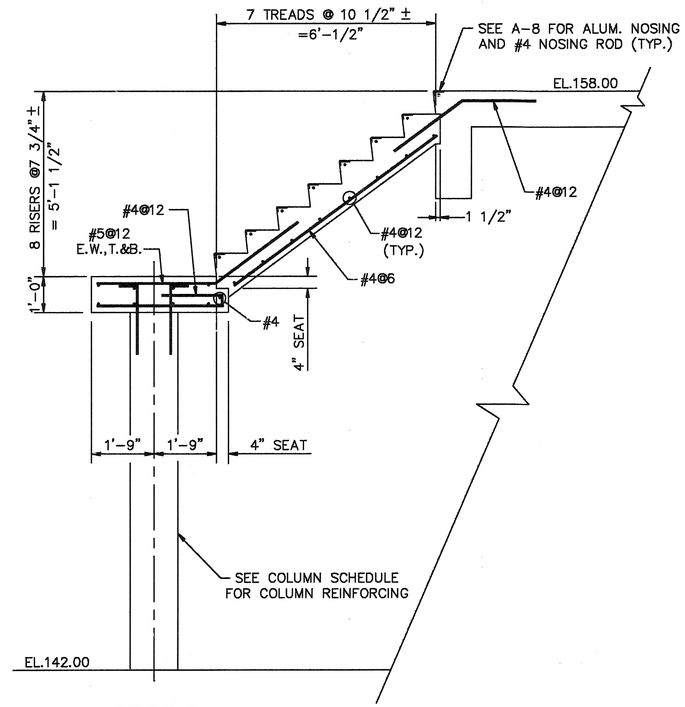

SECTION 3 S-40

SCALE: 1/2"=1'-0"

DEPARTMENT OF PUBLIC WORKS
HOWARD COUNTY, MARYLAND

DIRECTOR OF PUBLIC WORKS — DATE 12/9/91
CHIEF, BUREAU OF ENGINEERING — DATE 12-9-91
CHIEF, BUREAU OF ENVIRONMENTAL SERVICES — DATE 12/9/91
CHIEF, UTILITY DESIGN DIVISION — DATE 12-9-91

Metcalf & Eddy

REG. PROF. ENGR. — DATE 12/9/91

STATE OF MARYLAND — JONATHAN WINTHROP DOANE No. 15140 — REGISTERED PROFESSIONAL ENGINEER

DES: M.YM
DRN: E. Burnett
CHK: M.YM
DATE: 12/7/91

BY	NO.	REVISION	DATE
MC	2	RECORD DRAWING	11/1/94
	1	REVISED FOR BIDDING	3/5/92

STRUCTURAL

MAINTENANCE BUILDING
STAIR PLAN
AND SECTIONS

LITTLE PATUXENT WASTEWATER TREATMENT PLANT

LITTLE PATUXENT WASTEWATER TREATMENT EXPANSION
ADDITION NO. 5
CAPITAL PROJECT S-6153

CONTRACT NO. 20-3082

HOWARD COUNTY, MARYLAND

SCALE AS SHOWN

SHEET 88 OF 226

S-40

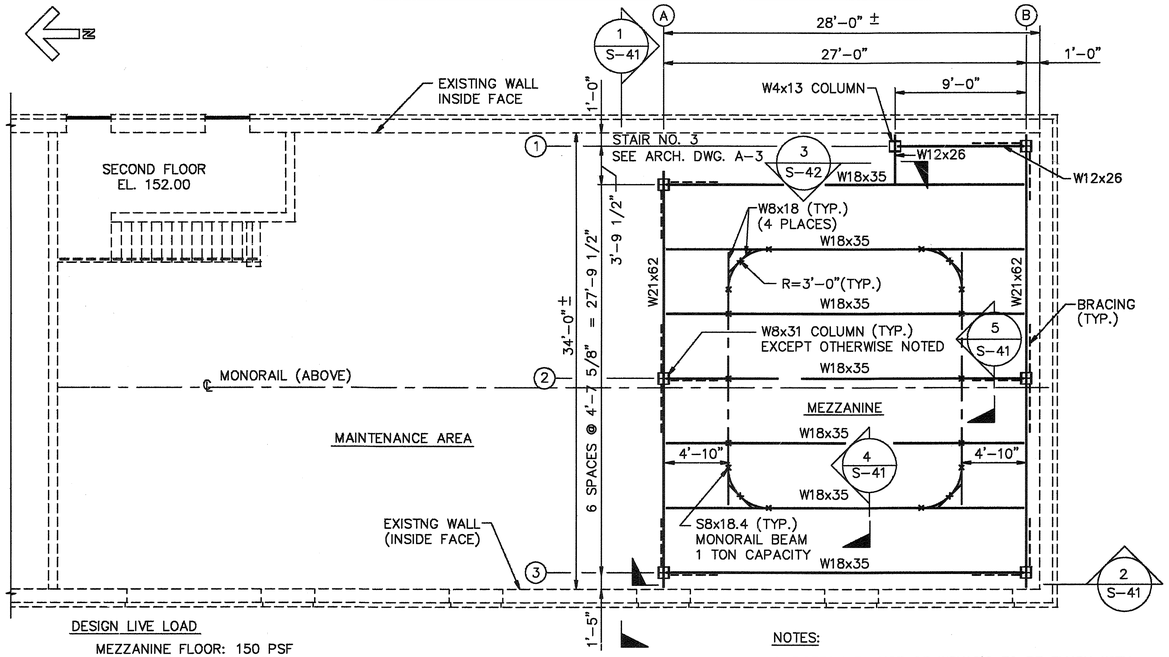

DESIGN LIVE LOAD

MEZZANINE FLOOR: 150 PSF
STAIR: 100 PSF

MEZZANINE LEVEL FRAMING

SCALE: 3/16"=1'-0"

NOTES:

1. BOTTOM FLANGE OF W8X18'S TO BE FLUSH WITH BOTTOM FLANGE OF W18x35'S.
2. × = MONORAIL SUPPORT.
3. PROVIDE 3/8" THICK GUSSET AS REQUIRED.
4. MINIMUM 2-3/4" DIA. BOLTS PER CONNECTION.

STEEL DECK:

1. STEEL DECK SHALL CONFORM TO ASTM A446 WITH MINIMUM YEILD STRESS OF 33 KSI.
2. STEEL DECK SHALL BE CONTINUOUS OVER MINIMUM OF THREE SPANS UNLESS OTHERWISE NOTED.
3. STEEL DECK SHALL BE WIDE RIB TYPE. MATERIALS AND INSTALLATION SHALL MEET THE REQUIREMENTS OF THE STEEL DECK INSTITUTE'S "DESIGN MANUAL FOR COMPOSITE DECKS, FORM DECKS, AND ROOF DECKS" UNLESS OTHERWISE NOTED.
4. DECKING CONTRACTOR SHALL FURNISH AND INSTALL CLOSURES AT DECK ENDS, EDGES AND OPENINGS.
5. STEEL DECK WELDING SHALL BE PERFORMED BY WELDERS CERTIFIED FOR LIGHT GAGE WELDING PER AWS DI.3.

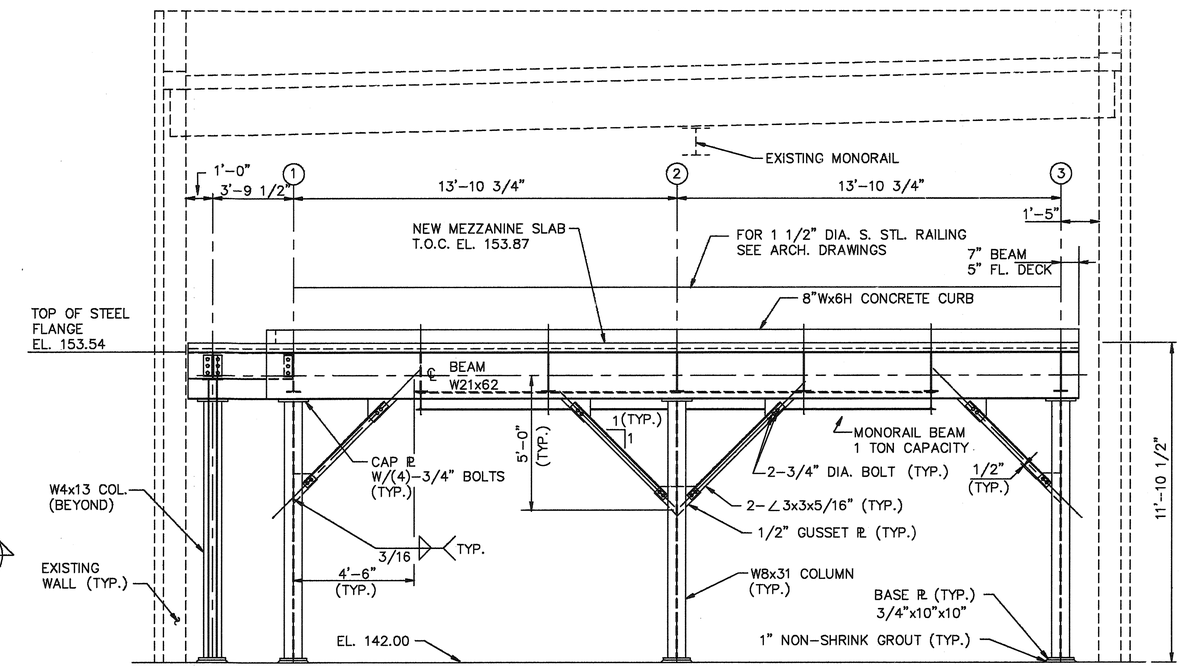

SECTION 1 S-41

SCALE: 3/8"=1'-0"

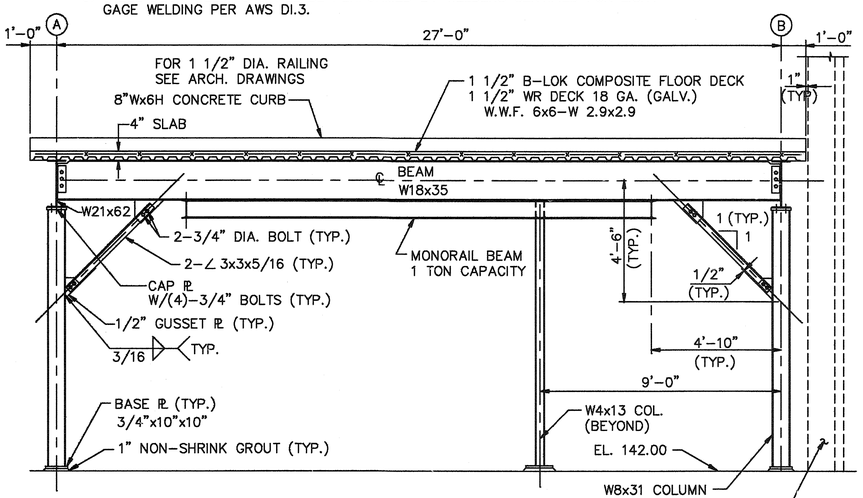

SECTION 2 S-41

SCALE: 3/8"=1'-0"

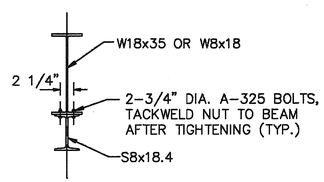

SECTION 4 S-41

SCALE: 3/4"=1'-0"

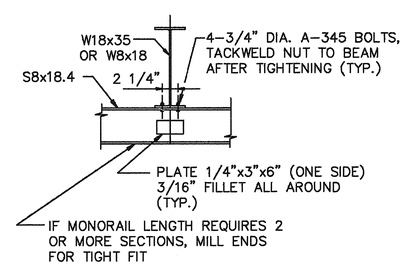

SECTION 5 S-41

SCALE: 3/4"=1'-0"

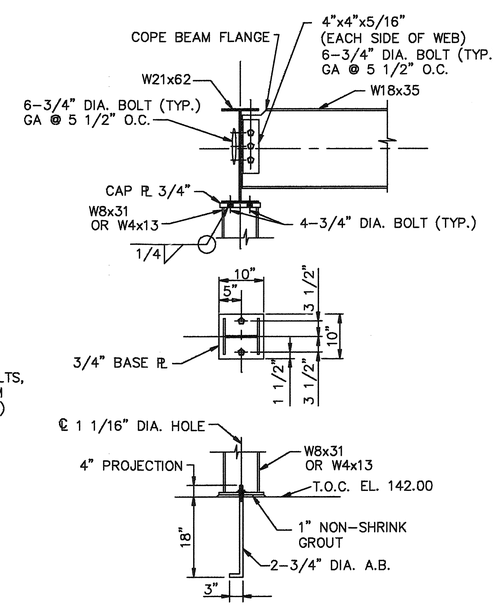

TYPICAL COLUMN BASE DETAIL

SCALE: 3/4"=1'-0"

TYPICAL DECK SPLICE

SCALE: 3/4"=1'-0"

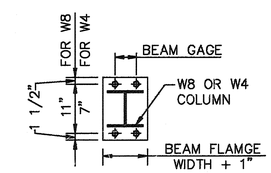

CAP PLATE DETAIL

SCALE: 3/4"=1'-0"

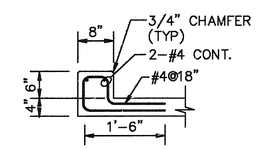

CONC. CURB DETAIL

SCALE: 3/4"=1'-0"

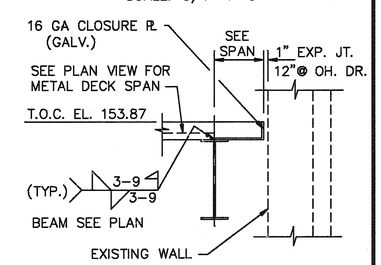

END DECK DETAIL

SCALE: 3/4"=1'-0"

DEPARTMENT OF PUBLIC WORKS
HOWARD COUNTY, MARYLAND

DIRECTOR OF PUBLIC WORKS — DATE 12/9/91
CHIEF, BUREAU OF ENGINEERING — DATE 12-9-91
CHIEF, BUREAU OF ENVIRONMENTAL SERVICES — DATE 12/9/91
CHIEF, UTILITY DESIGN DIVISION — DATE 12-9-91

Metcalf & Eddy

REG. PROF. ENGR. — DATE 12/9/91

STATE OF MARYLAND — JONATHAN WINTHROP DOANE No. 15140 — REGISTERED PROFESSIONAL ENGINEER

DES: M. YU
DRN: E. BURNETT
CHK: M. YU
DATE: 12/7/91

BY	NO.	REVISION	DATE
MC	2	RECORD DRAWING	11/14/94
	1	REVISED FOR BIDDING	3/5/92

STRUCTURAL

MAINTENANCE BUILDING
MEZZANINE LEVEL FRAMING

LITTLE PATUXENT WASTEWATER TREATMENT PLANT

LITTLE PATUXENT WASTEWATER TREATMENT EXPANSION
ADDITION NO. 5
CAPITAL PROJECT S-6153

CONTRACT NO. 20-3082

HOWARD COUNTY, MARYLAND

SCALE AS SHOWN

SHEET 89 OF 226

S-41

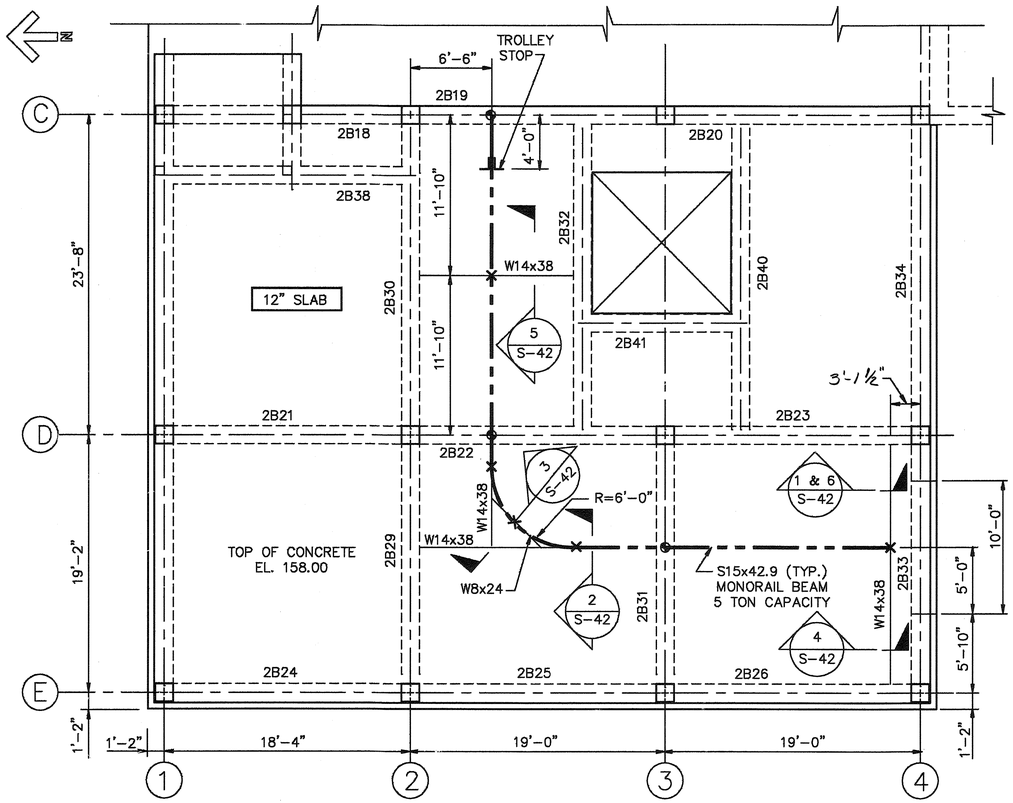

NOTES:

1. BOTTOM FLANGE OF W8x24'S TO BE FLUSH WITH BOTTOM FLANGE OF W14x38'S.
2. × = MONORAIL SUPPORT.
3. PROVIDE 3/8" THICK GUSSET AS REQUIRED.
4. MINIMUM 2 BOLTS PER CONNECTION.
5. SEE S-33 FOR BEAM SCHEDULE

MONORAIL SUPPORT FRAMING PLAN

TOP OF MONORAIL EL. 155.00

SCALE: 3/16"=1'-0"

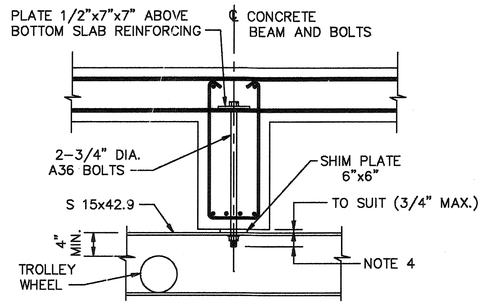

ELEVATION

SCALE: 3/4"=1'-0"

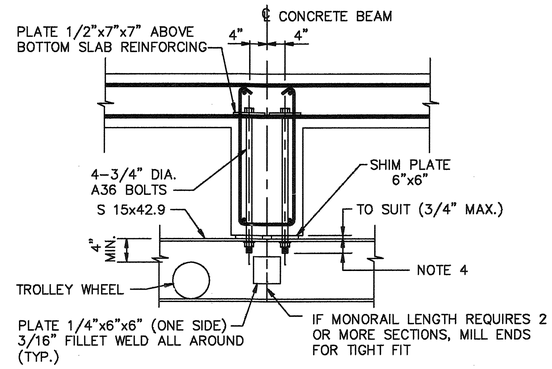

ELEVATION

SCALE: 3/4"=1'-0"

NOTES:

1. STEEL MONORAIL BEAMS SHALL BE BOLTED TO EACH CONCRETE BEAM INDICATED THUS ⊕ ON PLAN.
2. FIELD MEASURE ℄ TO ℄ OF BOLTS IN EACH DIRECTION BEFORE BEAM FABRICATION.
3. AT 3/4" BOLTS PROVIDE WASHER, LOCK WASHER AND HEAVY HEX NUT. SPACE BOLTS AT BEAM FLANGE GAGE.
4. PROJECTION OF BOLTS SHALL BE VERIFIED BY THE CONTRACTOR FOR TROLLEY WHEEL CLEARANCE.

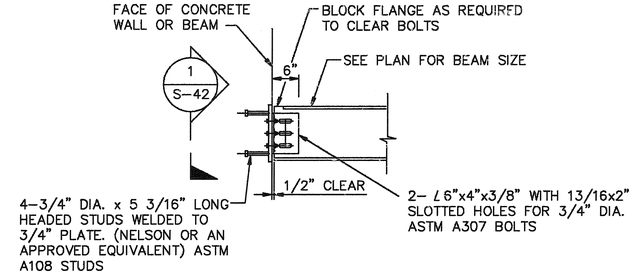

ELEVATION

SCALE: 3/4"=1'-0"

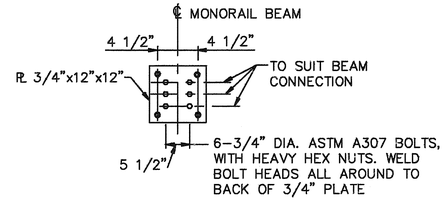

SECTION 1 S-42

SCALE: 3/4"=1'-0"

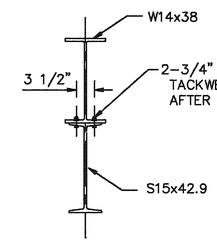

SECTION 2 S-42

SCALE: 1"=1'-0"

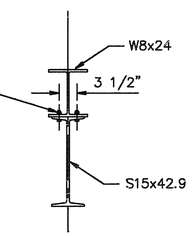

SECTION 3 S-42

SCALE: 1"=1'-0"

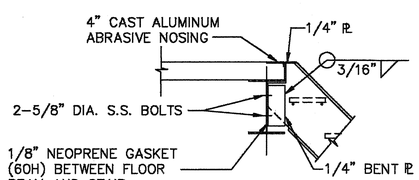

SECTION 3 S-41

SCALE: 3/4"=1'-0"

NOTES:

1. ALUMINUM STAIRS SHALL BE DESIGNED BY THE CONTRACTOR FOR A LIVE LOAD OF 100 PSF. THE CONTRACTOR SHALL SUBMIT CALCULATIONS FOR REVIEW BY THE ENGINEER. ALL EMBEDMENT NEEDED FOR THE CONNECTION WITH THE FRAME SHALL BE COORDINATED BY THE CONTRACTOR.
2. FOR STRINGER DETAIL, SEE STANDARD DETAIL 5-2.6.9.

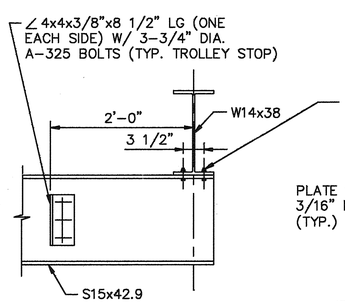

SECTION 4 S-42

SCALE: 1"=1'-0"

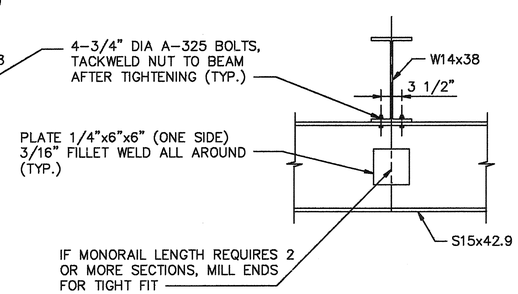

SECTION 5 S-42

SCALE: 1"=1'-0"

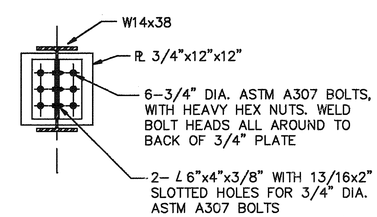

SECTION 6 S-42

SCALE: 1"=1'-0"

DEPARTMENT OF PUBLIC WORKS
HOWARD COUNTY, MARYLAND

DIRECTOR OF PUBLIC WORKS — DATE 12/9/91
CHIEF, BUREAU OF ENGINEERING — DATE 12-9-91
CHIEF, BUREAU OF ENVIRONMENTAL SERVICES — DATE 12/9/91
CHIEF, UTILITY DESIGN DIVISION — DATE 12-9-91

M&E Metcalf & Eddy

REG. PROF. ENGR. — DATE 12/9/91

STATE OF MARYLAND — JONATHAN WINTHROP DOANE No. 15140 — REGISTERED PROFESSIONAL ENGINEER

DES: M. Yu
DRN: E. Burnett
CHK: M. Yu
DATE: 12/7/91

BY	NO.	REVISION	DATE
	2	RECORD DRAWING	11/11/94
	1	REVISED FOR BIDDING	3/5/92

STRUCTURAL

MAINTENANCE BUILDING
MISCELLANOUS
SECTIONS AND DETAILS

LITTLE PATUXENT WASTEWATER TREATMENT PLANT

LITTLE PATUXENT WASTEWATER TREATMENT EXPANSION
ADDITION NO. 5
CAPITAL PROJECT S-6153

CONTRACT NO. 20-3082

HOWARD COUNTY, MARYLAND

SCALE AS SHOWN

SHEET 90 OF 226

S-42

REINFORCING – SPLICE TABLE											GRADE 60 REINF. 4000 PSI CONC.
BAR SIZE			#3	#4	#5	#6	#7	#8	#9	#10	#11
TOP BARS	CLASS	"B"	1'–1"	1'–5"	1'–10"	2'–2"	2'–9"	3'–8"	4'–7"	5'–10"	7'–2"
		"C"	1'–5"	1'–11"	2'–5"	2'–10"	3'–7"	4'–10"	5'–11"	7'–8"	9'–5"
OTHER BARS	CLASS	"B"	1'–0"	1'–0"	1'–4"	1'–7"	2'–0"	2'–7"	3'–3"	4'–2"	5'–2"
		"C"	1'–0"	1'–4"	1'–8"	2'–0"	2'–7"	3'–5"	4'–4"	5'–5"	6'–9"

NOTES:

1. TOP BARS ARE ALL HORIZONTAL REINFORCEMENT SO PLACED THAT MORE THAN 12" OF CONCRETE IS CAST IN THE MEMBER BELOW THE BAR. THIS INCLUDES HORIZONTAL WALL REINFORCEMENT.
2. WHERE BARS OF DIFFERENT SIZES ARE LAP SPLICED, USE LAP LENGTH REQUIRED FOR LARGER BAR.
3. FOR BARS SPACED CLOSER THAN 6" ON CENTER, INCREASE SPLICE LENGTHS BY 25%.
4. UNLESS OTHERWISE SPECIFIED, LAP SPLICES SHALL BE CLASS "B" WHERE NO MORE THAN 1/2 THE BARS ARE LAP SPLICED AND CLASS "C" WHERE MORE THAN 1/2 THE BARS ARE LAP SPLICED.

1

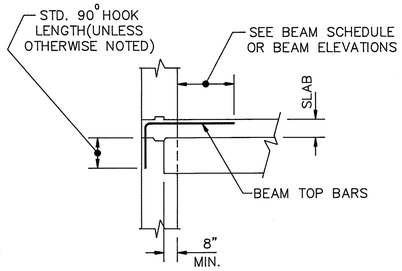

BEAM POCKET DETAIL

4

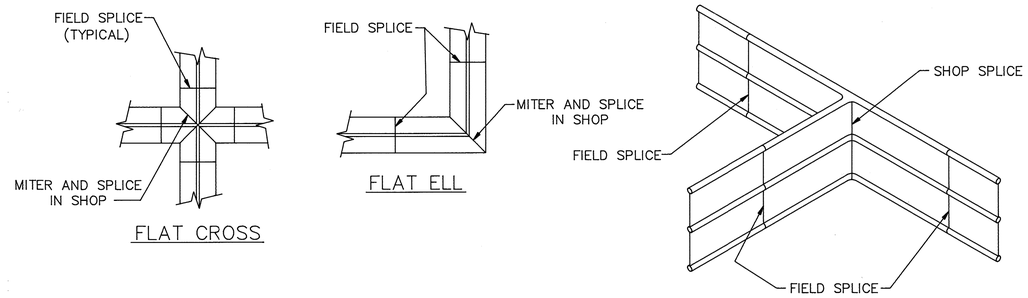

6 WATERSTOP SPLICE DETAIL AT INTERSECTION

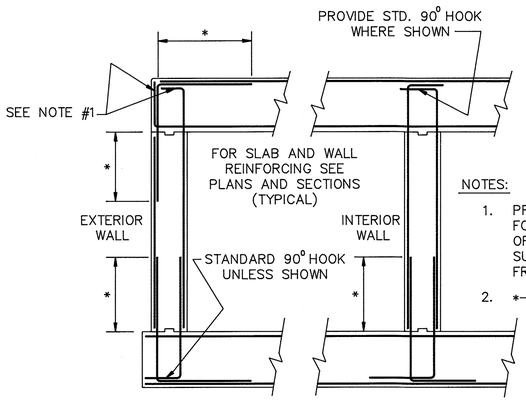

NOTES:

1. PROVIDE STANDARD 90° HOOK FOR SLAB AND WALL REINF. OF TANKS AND CONDUITS SUBJECT TO FLUID PRESSURE FROM INSIDE.
2. *–SEE SPLICE TABLE.

WALL REINFORCEMENT PLACING DIAGRAM ELEVATION

2

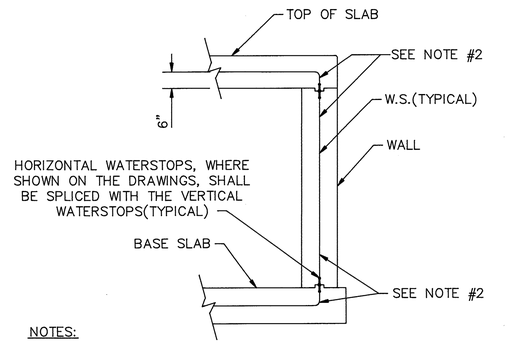

NOTES:

1. W.S. DENOTES WATERSTOP
2. EXTEND W.S. 6" OR SPLICE WITH A HORIZONTAL W.S. WHERE USED.
3. W.S. SHALL BE SPLICED AT CORNERS SO AS TO BE CONTINUOUS OR MAY BE PLACED IN ONE PIECE.

WATERSTOP PLACING DETAIL

5

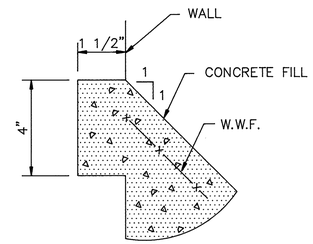

DETAIL A

8

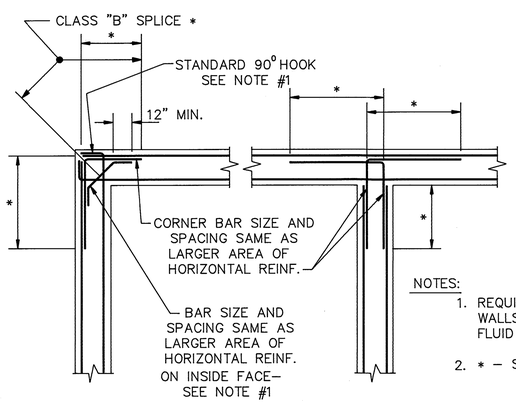

NOTES:

1. REQUIRED ONLY WHERE WALLS ARE SUBJECT TO FLUID PRESSURE FROM INSIDE.
2. * – SEE SPLICE TABLE.

HORIZONTAL CORNER BAR DETAIL PLAN

3

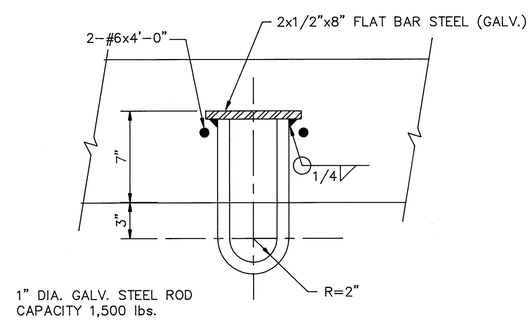

LIFTING HOOK DETAIL

7

Record Drawing Notes:
1. All elevations should be field verified before using
2. Weir and water elevations based on post-construction survey by Howard County.

DEPARTMENT OF PUBLIC WORKS
HOWARD COUNTY, MARYLAND

DIRECTOR OF PUBLIC WORKS — DATE 12/7/91
CHIEF, BUREAU OF ENGINEERING — DATE 12-9-91
CHIEF, BUREAU OF ENVIRONMENTAL SERVICES — DATE 12/6/91
CHIEF, UTILITY DESIGN DIVISION — DATE 12-9-91

Metcalf & Eddy
REG. PROF. ENGR. — DATE 12/7/91

STATE OF MARYLAND — JONATHAN WINTHROP DOANE No. 15140 — REGISTERED PROFESSIONAL ENGINEER

DES: M. Yu
DRN: E. Burnett
CHK: M. Yu
DATE: 12/7/91

BY	NO.	REVISION	DATE
	2	RECORD DRAWING	11/1/94
	1	REVISED FOR BIDDING	3/5/92

STRUCTURAL

TYPICAL DETAILS

LITTLE PATUXENT WASTEWATER TREATMENT PLANT
LITTLE PATUXENT WASTEWATER TREATMENT PLANT EXPANSION
ADDITION NO. 5
CAPITAL PROJECT S - 6153
CONTRACT NO. 20 - 3082
HOWARD COUNTY, MARYLAND

SCALE AS SHOWN
SHEET 91 OF 226
S–43

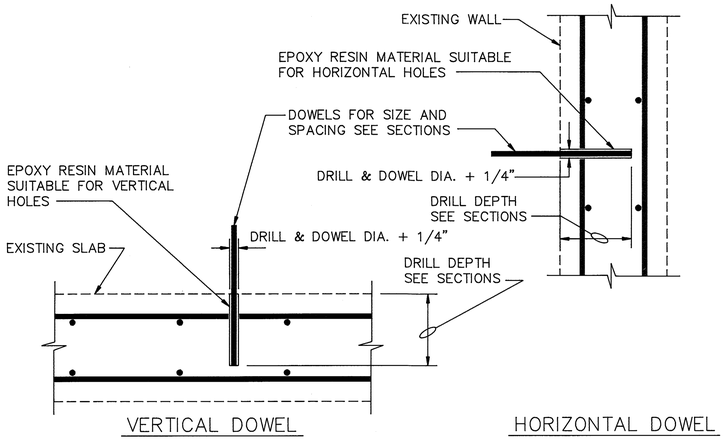

NOTE:

LOCATE EXISTING REINFORCEMENT & DRILL INTO EXISTING CONCRETE USING ROTARY PERCUSSION EQUIPMENT TO PRODUCE CLEAN, DRY, ROUGHENED HOLES. DO NOT DRILL THRU EXISTING REINFORCING PLACE DOWELS IN EPOXY RESIN MATERIAL IN STRICT ACCORDANCE WITH MANUFACTURER'S RECOMMENDATIONS.

DOWEL GROUTING DETAIL

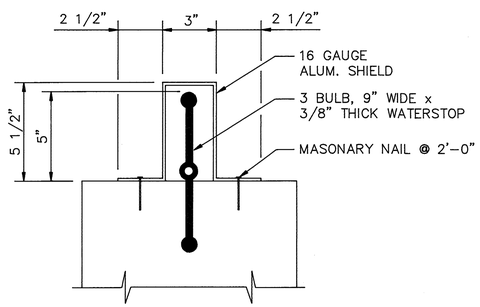

NOTE:

ALUMINUM FLASHING SHALL BE USED TO 2'-0" BELOW GRADE WHERE THE WATERSTOP IS EXPOSED FOR POSSIBLE FUTURE EXTENSION.

TYPICAL DETAIL OF FLASHING FOR WATERSTOP

SCALE: 3"=1'-0"

Record Drawing Notes:
1. All elevations should be field verified before using
2. Weir and water elevations based on post-construction survey by Howard County.

DEPARTMENT OF PUBLIC WORKS
HOWARD COUNTY, MARYLAND

DIRECTOR OF PUBLIC WORKS — DATE 12/9/91
CHIEF, BUREAU OF ENGINEERING — DATE 12-9-91
CHIEF, BUREAU OF ENVIRONMENTAL SERVICES — DATE 12/9/91
CHIEF, UTILITY DESIGN DIVISION — DATE 12-8-91

Metcalf & Eddy
REG. PROF. ENGR. — DATE 12/9/91

STATE OF MARYLAND — JONATHAN WINTHROP DOANE No. 15140 — REGISTERED PROFESSIONAL ENGINEER

DES: M. Yu
DRN: E. Burnett
CHK: M. Yu
DATE: 12/7/91

BY	NO.	REVISION	DATE
	2	RECORD DRAWING	11/1/94
	1	REVISED FOR BIDDING	3/5/92

STRUCTURAL

MISCELLANOUS DETAILS

LITTLE PATUXENT WASTEWATER TREATMENT PLANT
LITTLE PATUXENT WASTEWATER TREATMENT PLANT EXPANSION
ADDITION NO. 5
CAPITAL PROJECT S - 6153
CONTRACT NO. 20 - 3082
HOWARD COUNTY, MARYLAND

SCALE AS SHOWN
SHEET 92 OF 226
S-44

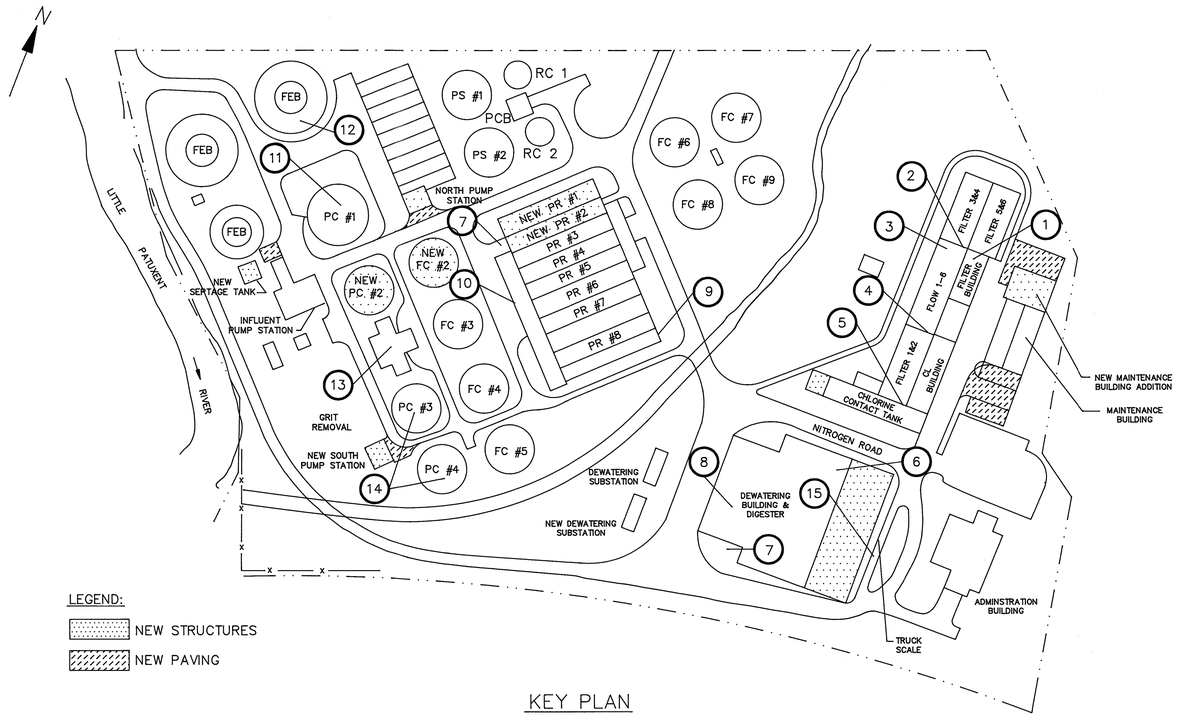

KEY PLAN
NOT TO SCALE

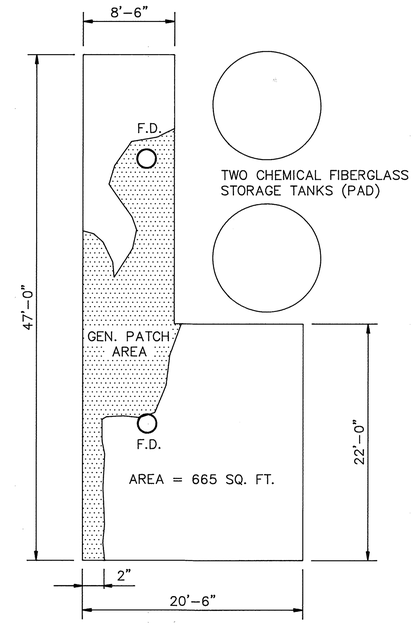

LOCATION 1 – FILTER CONTROL BUILDING
SCALE: NOT TO SCALE
NOTE: AREA HAS BEEN PATCHED WITH CEMENTITIOUS MATERIAL.

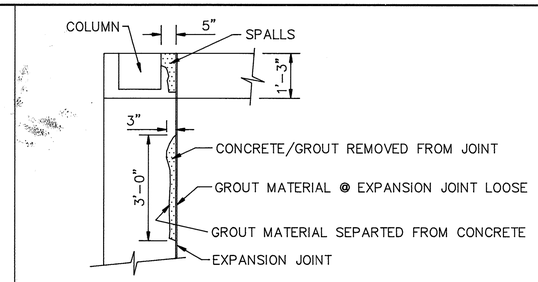

LOCATION 2 – SOUTH END OF FILTER NO. 4
SCALE: NOT TO SCALE

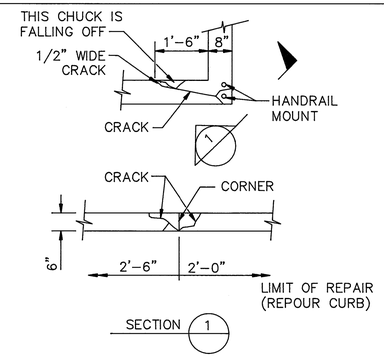

LOCATION 3 – NW CORNER OF FLOCCULATION BASIN 6
SCALE: NOT TO SCALE

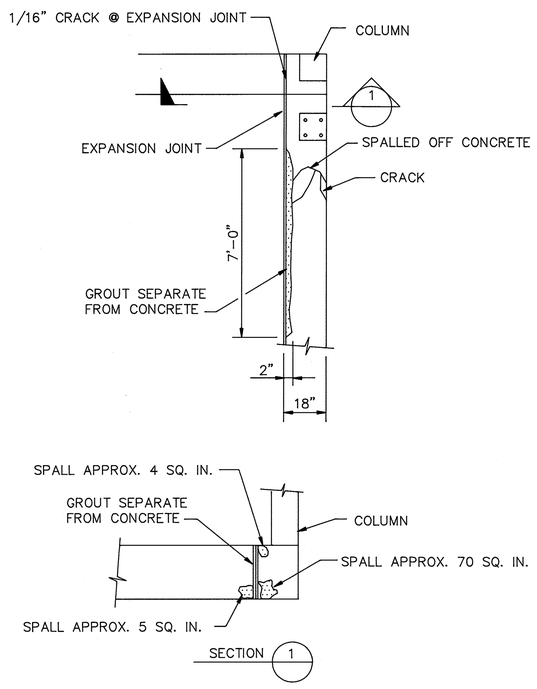

LOCATION 4 – NORTH END OF FILTER NO. 2
SCALE: NOT TO SCALE

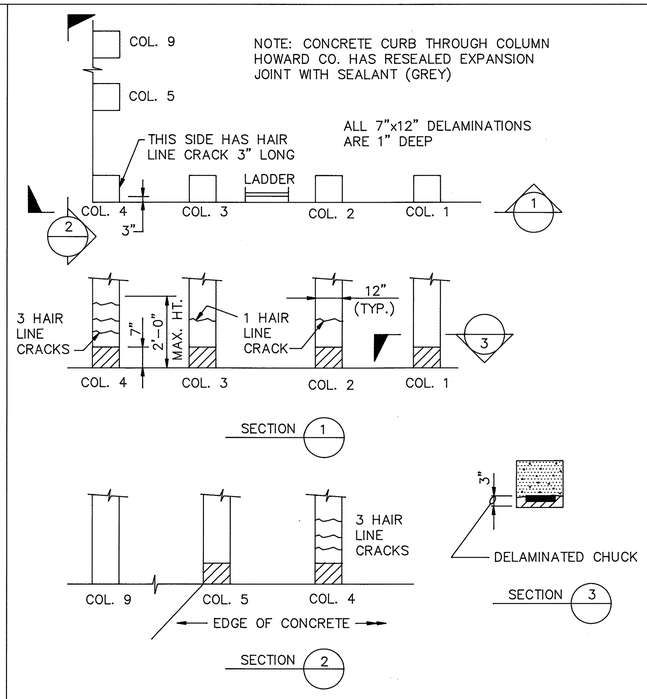

LOCATION 5 – FILTER BUILDING
SCALE: NOT TO SCALE

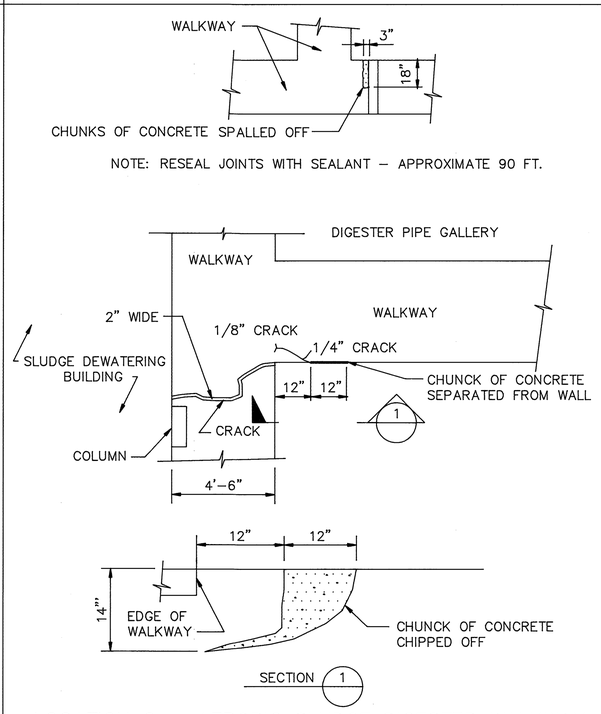

LOCATION 6 – AEROBIC SLUDGE DIGESTER WALKWAY
SCALE: NOT TO SCALE

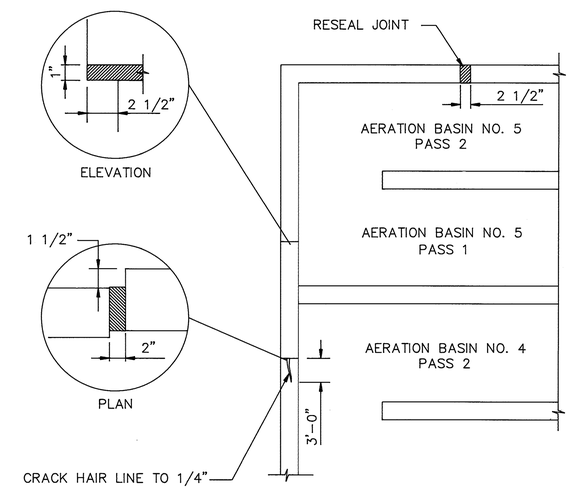

Record Drawing Notes:
1. All elevations should be field verified before using.
2. Weir and water elevations based on post-construction survey by Howard County.

LOCATION 9 – AERATION BASIN NO. 5
SCALE: NOT TO SCALE

DEPARTMENT OF PUBLIC WORKS
HOWARD COUNTY, MARYLAND

DIRECTOR OF PUBLIC WORKS — DATE 12/9/91	CHIEF, BUREAU OF ENGINEERING — DATE 12-9-91
CHIEF, BUREAU OF ENVIRONMENTAL SERVICES — DATE 12/9/91	CHIEF, UTILITY DESIGN DIVISION — DATE 12-8-91

Metcalf & Eddy

REG. PROF. ENGR. — DATE 12/7/91

STATE OF MARYLAND — JONATHAN WINTHROP DOANE No. 15140 — REGISTERED PROFESSIONAL ENGINEER

DES: D.Colson
DRN: E. Burnett
CHK: M. Yu
DATE: 12/7/91

BY	NO.	REVISION	DATE
	2	RECORD DRAWING (SEE TABLE - S-46)	11/1/94
	1	REVISED FOR BIDDING	3/5/92

STRUCTURAL

CONCRETE REHABILITATION
KEY PLAN AND DETAILS

LITTLE PATUXENT WASTEWATER TREATMENT PLANT
LITTLE PATUXENT WASTEWATER TREATMENT PLANT EXPANSION
ADDITION NO. 5
CAPITAL PROJECT S - 6153
CONTRACT NO. 20 - 3082
HOWARD COUNTY, MARYLAND

SCALE AS SHOWN
SHEET 93 OF 226
S-45

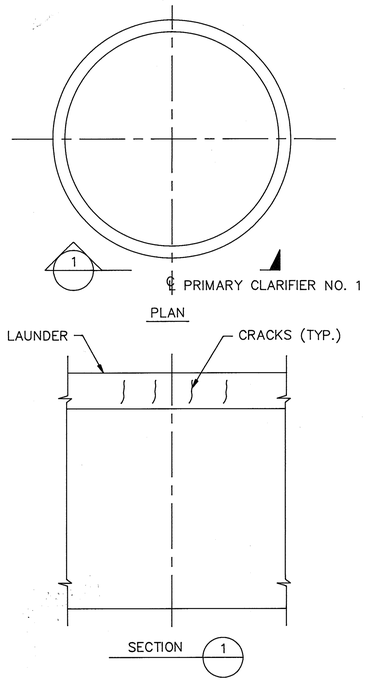

LOCATION 11 & 14 – PRIMARY CLARIFIERS NO. 1

SCALE: NOT TO SCALE
SEE SHEET S–45 FOR KEY PLAN

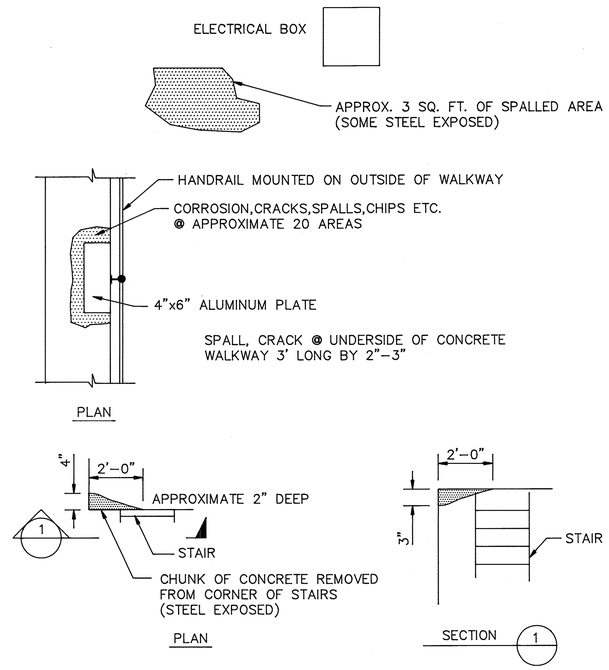

LOCATION 12 – FLOW EQUALIZATION BASIN NO. 2

SCALE: NOT TO SCALE
SEE SHEET S–45 FOR KEY PLAN

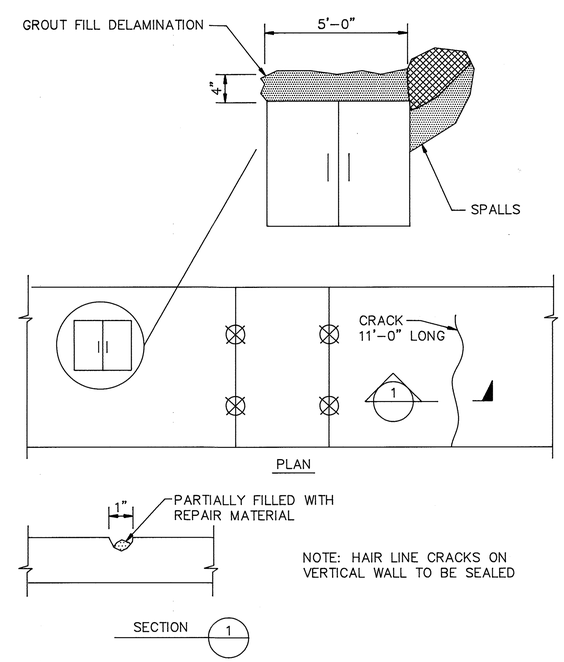

LOCATION 13 – GRID BASIN METER CHAMBER

SCALE: NOT TO SCALE
SEE SHEET S–45 FOR KEY PLAN

CONCRETE DETERIORATION

LOCATION	ITEMS / STRUCTURE	CRACK IN. FT. x MAX. CRACK WIDTH * SURFACE SEAL	ROUT AND SEAL	PRESSURE INJECTION	SPALLS	CORROSION IN. SQ. FT.	EXPANSION JOINT IN. FT. x SIZE	OTHERS	REMARKS
1	FILTER CONTROL BUILDING					665 SQ. FT.			AREA HAS BEEN PATCHED: NEEDS PROTECTIVE COATING
2	FILTER NO. 4				~~1.25 SQ. FT.~~ ⊛				REPLACE LOOSE GROUT AT EXPANSION JOINT
3	FLOCCULATION BASIN							~~8"wx6"hx4' 6" CURB~~	REPOUR CURB
4	FILTER NO. 2								REPAIR SPALLED MATERIAL AND EXPANSION JOINT
5	FILTER BUILDING	~~12FT.x1/16"~~ ⊛			~~3.5 SQ. FT.~~ ⊛				DELAMINATIONS ARE 3" DEEP
~~6~~	~~AEROBIC SLUDGE DIGESTERS~~	~~5FT.x2" 1FT.x1/4"~~			~~0.5 SQ. FT.~~			~~90 LF SEALANT~~	
7	SOLIDS PROCESSING BUILDING								REMOVBE SIDEWALK, BACKFILL AREA, COMPACT AND REPLACE 30 SQ. FT.
~~8~~	~~DEWATERING BUILDING~~								~~AREA HAS BEEN REPAIRED AND COATED~~
9	AERATION BASIN NO. 5								AREA NEEDS FURTHER EVALVATION
10	NITRIFICATION BASIN NO. 3								STAIRS AND JIB CRANE AREA, NO REPAIR REQ'D
~~11~~	~~PRIMARY CLARIFIER NO. 1~~	~~48FT.x1/8"~~							~~SURFACE SEAL VERT. & HORIZ. CRACKS IN LAUNDER~~
~~12~~	~~FLOW EQUALIZATION BASIN NO. 2~~							~~5 SQ. FT.~~	~~GENERAL REPAIR~~
13	GRIT BASIN METER CHAMBER	~~11FT.x1"~~ ⊛			~~4 SQ. FT. @ HATCH~~ ⊛			~~8 SQ. FT.~~ ⊛	HAIR LINE CRACKS ON VERTICAL WALL
~~14~~	~~PRIMARY CLARIFIER NOS. 3 & 4~~	~~50FT.x1/8"~~							~~PC 3 HAS BEEN REPAIRED/PC 4 HAS NOT~~
~~15~~	~~TRUCK SCALE~~								~~NO REPAIR REQUIRED AT PRESENT TIME~~

* MAXIMUM CRACK WIDTH IN TERMS OF 1/4", 1/8", 1/16" OR HAIR LINE CRACK.

⊛ QUANTITIES INCREASED DURING CONSTRUCTION, NOT MEASURED.

Record Drawing Notes:
1. All elevations should be field verified before using
2. Weir and water elevations based on post-construction survey by Howard County.

DEPARTMENT OF PUBLIC WORKS
HOWARD COUNTY, MARYLAND

DIRECTOR OF PUBLIC WORKS — DATE 12/9/91
CHIEF, BUREAU OF ENGINEERING — DATE 12-9-91
CHIEF, BUREAU OF ENVIRONMENTAL SERVICES — DATE 12/9/91
CHIEF, UTILITY DESIGN DIVISION — DATE 12-9-91

Metcalf & Eddy

REG. PROF. ENGR. — DATE 12/7/91

STATE OF MARYLAND — JONATHAN WINTHROP DOANE No. 15140 — REGISTERED PROFESSIONAL ENGINEER

DES: D Colson
DRN: E. Burkett
CHK: M. Yu
DATE: 12/7/91

BY	NO.	REVISION	DATE
	2	RECORD DRAWING	11/1/94
	1	REVISED FOR BIDDING	3/5/92

STRUCTURAL

CONCRETE REHABILITATION DETAILS

LITTLE PATUXENT WASTEWATER TREATMENT PLANT
LITTLE PATUXENT WASTEWATER TREATMENT PLANT EXPANSION
ADDITION NO. 5
CAPITAL PROJECT S - 6153
CONTRACT NO. 20 - 3082
HOWARD COUNTY, MARYLAND

SCALE AS SHOWN

SHEET 94 OF 226

S–46

DWG. ABBREV.	ITEM	SYMBOL	NOTES
	GATE VALVE		
	KNIFE GATE	K	
	PLUG VALVE		FLOW DIAGRAM ONLY
	BUTTERFLY VALVE		
	BALL VALVE		
	3-WAY BALL VALVE		
	BALL CHECK VALVE		
	DIAPHRAGM VALVE		
HG	HOSE GATE	HG	
	PRESSURE REDUCING VALVE		
	BACK-PRESSURE VALVE		
	PRESSURE REGULATING VALVE		
	RELIEF VALVE		
	GLOBE VALVE		
	3-WAY VALVE		
	ANGLE VALVE		
	CHECK VALVE		
	PINCH VALVE		
	ROTAMETER		
	SCREWED UNION		
	FLANGED UNION		
	FLEXIBLE COUPLING		
	INSECT SCREEN		
	FLEXIBLE HOSE		
SG	SLUICE GATE		
PG	PREFABRICATED SLIDE GATE		
	WEIR	W	FLOW DIAGRAM ONLY
	MIXER		
	PULSATION DAMPER		
	CALIBRATION STAND PIPE		
	QUICK-DISCONNECT COUPLING		
	STATIC MIXER		
	TELESCOPING VALVE	T	
	FLAP VALVE		
	MUD VALVE		
WS	WATER SURFACE		
	ORIFACE PLATE		
	SCREW CONVEYOR		

DWG. ABBREV.	ITEM	SYMBOL	NOTES
	PIPE: 2"DIA.& SMALLER		
	PIPE: 3"DIA.& LARGER		
	FLANGE		
BF	BLIND FLANGE		
MJ	MECHANICAL JOINT		
	SLEEVE COUPLING		
	RESTRAINED COUPLING		
	VENTURI FLOW ELEMENT		
	WELDED PIPE		
	EXISTING PIPE AND FACILITIES		
	PROPOSED PIPE AND EQUIPMENT		
	EXISTING PIPE TO BE REMOVED		
	INSULATION PIPE: 2"DIA.& SMALLER		
	INSULATION PIPE: 3"DIA.& LARGER		
	SPLIT COUPLING		
	Y-STRAINER		
	DUPLEX STRAINER		
	GAUGE		
	DIRECTION OF FLOW		
	PITCH PIPE DOWN IN DIRECTION OF ARROW		
	CONCENTRIC REDUCER		
	ECCENTRIC REDUCER FLAT ON TOP	F.O.T.	
	ECCENTRIC REDUCER FLAT ON BOTTOM	F.O.B.	
	ANCHOR		
	DIAPHRAGM SEAL		
	SONIC METER		
	MAGNETIC FLOWMETER		
	LIMITS OF WORK (TRADE,CONTRACT,ETC.)		
	POINT OF CONNECTION -NEW WORK TO EXIST.WORK		
	MOTOR OPERATED ACTUATOR	M	
	SOLENOID OPERATED ACTUATOR	S	
	DIAPHRAGM ACTUATOR	D	
	CYLINDER-PNEUMATIC ACTUATOR	H	

DWG. ABBREV.	ITEM	SYMBOL	NOTES
	CYLINDER-PNEUMATIC ACTUATOR	P	
	EQUIPMENT MOTOR	M	
	WALL CASTINGS		
FLG & MJ	FLANGE & MECHANICAL JOINT	WATERSTOP	
MJ & MJ	MECHANICAL JOINT & MECHANICAL JOINT		
M & PE	MECHANICAL JOINT & PLAIN END		
FLG & FLG	FLANGE & FLANGE		
FLG & PE	FLANGE & PLAIN END		
	BELL & BELL		
BELL & FLG	BELL & FLANGE		
BELL & PE	BELL & PLAIN END		
	FITTINGS		
	TEE		
90° ELL	90° ELBOW		
45° ELL	45° ELBOW		
BASE ELL	BASE ELBOW		
	CROSS		
	LATERAL		
	CONCENTRIC REDUCER		
	EXCENTRIC REDUCER		

GENERAL NOTES

1. THE CONTRACTOR'S ATTENTION IS DIRECTED TO APPENDIX B OF THE SPECIFICATIONS WHICH ARE PART OF THE CONTRACT DOCUMENTS MANY OF THE DETAILS REFERRED TO ON THESE DRAWINGS MAY BE FOUND THEREINADDITIONAL PERTINENT DETAILS ARE IN HOWARD COUNTY DESIGN MANUAL IV.
2. UNLESS OTHERWISE INDICATED, LIQUID PIPING SHALL HAVE 3/4" LOW POINT DRAINS AND 3/4" HIGH POINT VENTS.
3. IN-LINE INSTRUMENTATION SHALL BE PROVIDED WITH ISOLATED PRESSURE TAPS.
4. THE CONTRACTOR SHALL MAKE ALL REQUIRED FIELD MEASUREMENTS TO VERIFY EXISTING AND CONTRACT INTERFACE DIMENIONS, LOCATIONS, ELEVATIONS, AND OTHER CONDITIONS.
5. REFER TO ARCHITECTURAL AND STRUCTURAL DRAWINGS FOR COVER PLATES, HATCHES, GRATING AND RAILING DETAILS.
6. REFER TO INSTRUMENTION DRAWINGS FOR INSTRUMENTION AND CONTROL SYSTEMS: INSTRUMENT LOCATIONS ARE INDICATED ON MECHANICAL PROCESS DRAWINGS IN APPROXIMATE LOCATION ONLY.
7. SMALL PIPING (SAMPLE, SERVICE WATER, ETC.) IS SHOWN DIAGRAMATICALLY: FIELD-ROUTING SUBJECT TO APPROVAL OF THE ENGINEER.
8. WALL AND FLOOR SLEEVES SHALL BE LARGE ENOUGH TO ACCOMMODATE FLANGES . FLOOR SLEEVES SHALL PROJECT AT LEAST 2" ABOVE FINISHED FLOOR. UNLESS OTHERWISE SHOWN. REFER TO DETAILS.
9. SLEEVE OR SPLIT COUPLINGS ARE TO BE USED AS SHOWN, TO FACILITATE PIPING INSTALLATION.
10. ALL FLEXIBLE CONNECTORS, INCLUDING EXPANSION JOINTS AND SLEEVE COUPLINGS SUBJECT TO PRESSURE, SHALL BE RESTRAINED AS INDICATED FOR EXPANSION AND FLEXIBILITY.
11. ALL PIPE PENETRATIONS THROUGH INTERIOR AND EXTERIOR WALLS AND FLOORS SHALL BE SEALED WATERTIGHT.
12. ALL PROCESS EQUIPMENT, INCLUDING PUMPS AND COMPRESSORS, SHALL BE ISOLATED FROM PIPING LOADS AND DYNAMICS BY FLEXIBLE CONNECTORS IN ACCORDANCE WITH MANUFACTURER'S REQUIREMENTS, EXCEPT AS OTHERWISE SHOWN. ALL MECHANICAL EQUIPMENT SHALL BE PROVIDED WITH TEFLON OR OTHER APPROVED PADS TO MINIMIZE VIBRATION AND\OR NOISE TRANSMISSION.
13. PORTIONS OF NON-PROCESS PIPING (PLUMBING, HVAC, CIVIL) ARE SHOWN FOR CLARITY OF DESIGN ONLY: REFER TO APPROPRITE DRAWINGS AND SPECIFICATIONS FOR REQUIREMENTS.
14. PROVIDE WALL MOUNTED SIGNS IN ACCORDANCE WITH SPECIFIED ARCHITECTURAL REQUIREMENTS FOR ALL EXTERIOR WALL PENETRATIONS, INDICATING PIPE ORIGIN OR DESTINATION AND PIPE ELEVATION.
15. ALL DIMENSIONS LOCATING EQUIPMENT ARE FROM FINISHED WALL SURFACES.

CHEMICAL NOTES

1. ALL EQUIPMENT PADS EXCEPT STORAGE TANKS SHALL BE THE SAME HEIGHT AS THE HEIGHT OF CONTAINMENT CURBS UNLESS OTHERWISE INDICATED ON DRAWINGS.
2. ALL VERTICAL PIPE PENETRATIONS IN CURBED AREAS SHALL HAVE SLEEVES OF THE SAME HEIGHT AS THE HEIGHT OF CURBS. FOR ADDITIONAL INFORMATION ON SLEEVES, REFER TO DETAIL 15-4.18 IN APPENDIX B SECTION OF THE SPECIFICATIONS.
3. HORIZONTAL RUNS OF POLYVINYLCHLORIDE PIPE SHALL BE SUPPORTED ON EPOXY-COATED LIGHTWEIGHT STEEL CHANNEL WITH A MAXIMUM CHANNEL HANGER SPACING OF 5 FT. AND VERTICAL RUNS SUPPORTED WITH CLAMPS AT A MAXIMUM SPACING OF 3 FT. CENTER.
4. ALL EQUIPMENT REQUIRING VENTING TO ATMOSPHERE SHALL HAVE VENTS LOCATED AWAY FROM ANY BUILDING OPENINGS.
5. PIPE UNIONS SHALL BE PROVIDED AT ALL PIPING CONNECTIONS TO AND FROM EQUIPMENT AND AS SHOWN ON THE PIPING DIAGRAMS.

ABBREVIATIONS LEGEND

A	AIR	INV.	INVERT
AHP	AIR HIGH PRESSURE	JT	JOINT
APPROX.	APPROXIMATE	L	LIME
BLDG.	BUILDING	L.P.	LOW POINT
BOTT.	BOTTOM	LR	LONG RADIUS
℄	CENTER LINE	MH	MANHOLE
CONC.	CONCRETE	MIN.	MINIMUM
CONN.	CONNECTION	MAX.	MAXIMUM
CONT.	CONTINUATION	NO.	NUMBER
DIA.	DIAMETER	N.T.S.	NOT TO SCALE
DN	DOWN	NWS	NON-POTABLE WATER SUPPLY
DSL	DEWATERED SLUDGE	O.C.	ON CENTER
ECC.	ECCENTRIC	OD	OUTSIDE DIAMETER
EL.	ELEVATION	OPN'G	OPENING
ELL	ELBOW	ℙ	PLATE
EXIST.	EXISTING	R	RADIUS
FIN.GR.	FINISHED GRADE	RED.	REDUCER OR REDUCING FITTING
FLEX.	FLEXIBLE	SHT.	SHEET
FLOCC.	FLOCCULATOR	S.S.	STAINLESS STEEL
FLG.	FLANGE	T.O.C.	TOP OF CONCRETE
H.P.	HIGH POINT	TS	THICKENED SLUDGE
I.D.	INSIDE DIAMETER	TYP.	TYPICAL
AN	ANAEROBIC	W/	WITH
AX	ANOXIC	W.S.	WATER SURFACE
D	DRAIN	PSIS	PHOSPHORUS STRIPPER INFLUENT SLUDGE
FW	FLUSHING WATER	PSS	PHOSPHORUS STIPPED SLUDGE
IR	INTERNAL RECYCLE	PR	PROCESS REACTOR
OX	OXIC	RAS	RETURN ACTIVATED SLUDGE
PG	PREFABRICATED GATE	WL	WATER LEVEL
		WCS	WASTE CHEMICAL SLUDGE

GENERAL NOTES CONTINUED

16. CONTRACTOR SHALL SURVEY AND RECORD ALL EFFLUENT WEIR CREST ELEVATIONS ON THE THREE EXISTING PRIMARY CLARIFIERS AND SEVEN EXISTING FINAL CLARIFIERS. EIGHT ELEVATIONS SHALL BE TAKEN ON EACH CLARIFIER AT 45 DEGREE INTERVALS AROUND THE CIRCUMFERENCE OF THE CLARIFIER. THE SURVEY INFORMATION SHALL BE PRESENTED TO THE ENGINEER WHO WILL THEN ESTABLISH FINAL WEIR CREST ELEVATIONS FOR ALL EXISTING AND NEW CLARIFIERS. THE CONTRACTOR SHALL THEN SET ALL WEIRS TO THE ASSIGNED ELEVATIONS. THE BID SHALL BE BASED UPON AN ASSUMPTION THAT THE ENTIRE WEIR LENGTH FOR ONE PRIMARY WILL REQUIRE WEIR ELEVATION ADJUSTMENTS BEYOND THE CURRENT ADJUSTMENT RANGE OF THE WEIR SLOT OR HOLE AND, AS SUCH, WILL REQUIRE THE REMOVAL OF EACH WEIR PLATE SECTION AND EXTENSION OF THE SLOT OR HOLE.
17. SCEDULE OF PIPE PENETRATIONS:
    a. DUCTILE IRON, STEEL OR PVC CARRYING LIQUID THROUGH NEW WALL-STD. DETAIL 15-4.18.1.
    b. DUCTILE IRON, STEEL OR PVC CARRYING LIQUID THROUGH EXISTING WALL EXCEPT Y WALLS-STD. DETAIL 3-3.39.
    b. DUCTILE IRON, STEEL OR PVC CARRYING LIQUID THROUGH EXISTING Y WALLS-STD. DETAIL 3-3.39.
    d. AIR PIPING THROUGH NEW WALLS-STD. DETAIL 15-4.18.1.
    e. AIR PIPING THROUGH EXISTING WALLS EXCEPT Y WALLS-ADDENDUM NO.2 ATTACHMENT H.
    f. AIR PIPING THROUGH EXISTING Y WALLS-ADDENDUM NO.2 ATTACHMENT H.
18. ELEVATIONS INDICATED ON THESE AND PREVIOUS CONTRACT DRAWINGS ARE NOT RELATIVE TO THE HOWARD COUNTY BENCH MARK. DURING CONSTRUCTRUCTION, NEW STRUCTURES WERE LOCATED SUCH THAT THEY PROPERLY TIE INTO EXISTING STRUCTURES. WEIR ELEVATIONS AND HIGH AND NORMAL WATER ELEVATIONS HAVE BEEN CORRECTED SO THAT THEY ARE BASED ON THE HOWARD COUNTY BENCH MARK.

DEPARTMENT OF PUBLIC WORKS
HOWARD COUNTY, MARYLAND

DIRECTOR OF PUBLIC WORKS — DATE 5/6/96
CHIEF, BUREAU OF ENGINEERING — DATE 5/7/96
CHIEF, BUREAU OF ENVIRONMENTAL SERVICES — DATE 5/7/96
CHIEF, UTILITY DESIGN DIVISION — DATE 5-7-96

M&E Metcalf & Eddy
REG. PROF. ENGR. — DATE 5-7-96

STATE OF MARYLAND — JONATHAN WINTHROP DOANE No. 15140 — REGISTERED PROFESSIONAL ENGINEER

DES:
DRN: M.J.C.
CHK: J.H.
DATE:

BY	NO.	REVISION	DATE
M.J.C.	1	RECORD DRAWING	11/2/94

MECHANICAL

LEGEND, SYMBOLS & NOTES

LITTLE PATUXENT WASTEWATER TREATMENT PLANT

LITTLE PATUXENT WASTEWATER TREATMENT PLANT EXPANSION
ADDITION NO. 5
CAPITAL PROJECT S-6153

CONTRACT NO. 20-3082
HOWARD COUNTY, MARYLAND

SCALE AS SHOWN

SHEET 95 OF 226

M-1A

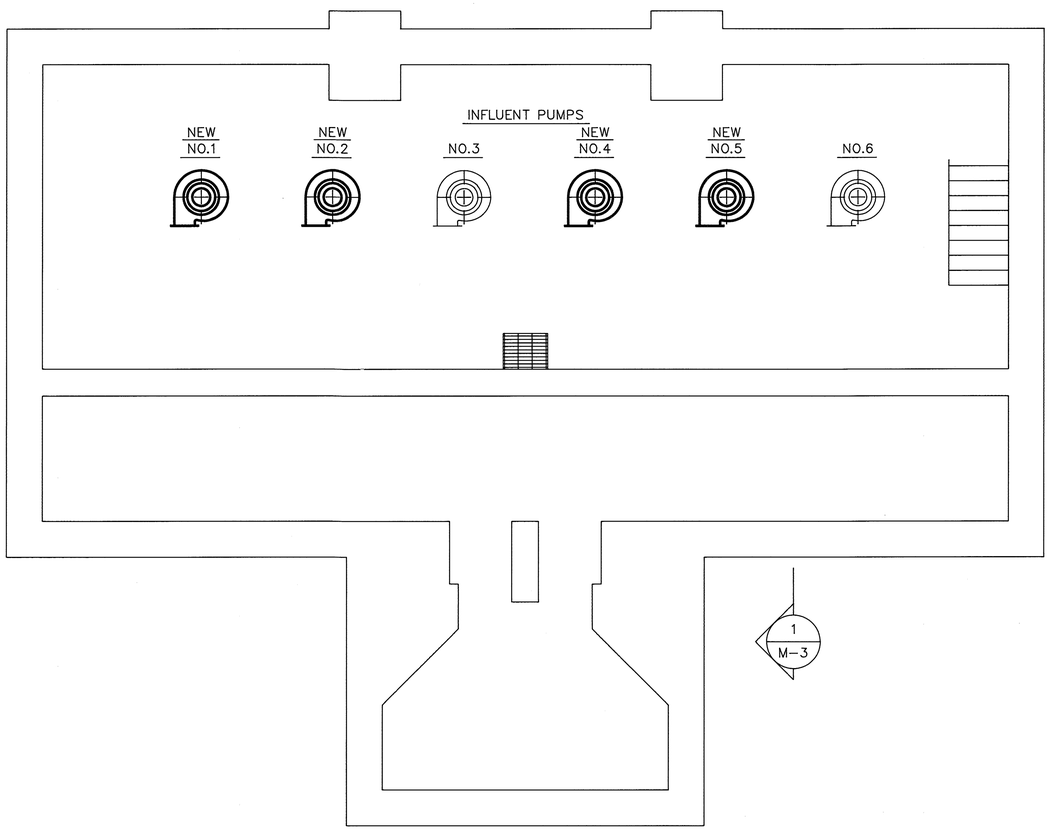

PLAN @ EL. 125.00

SCALE: 1/4"=1'-0"

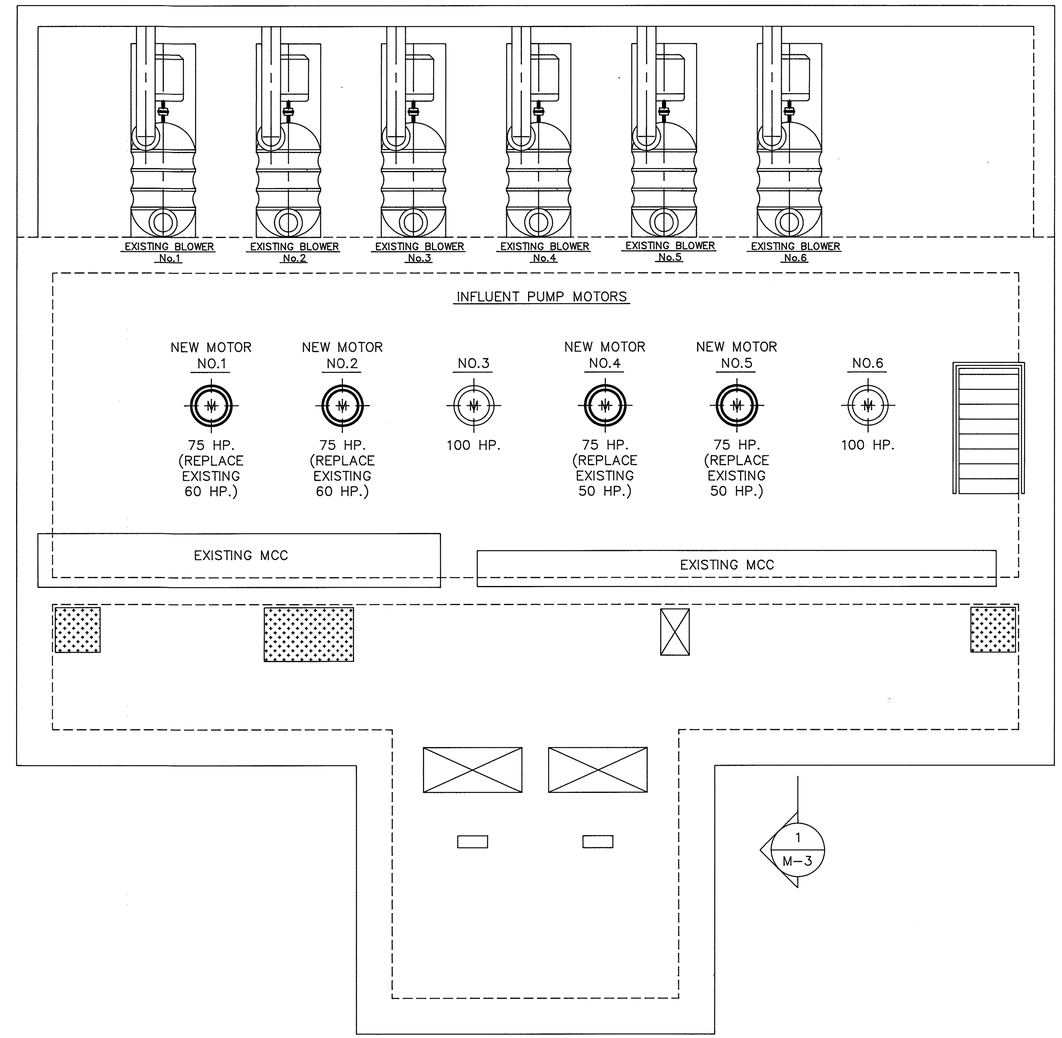

PLAN @ EL. 142.50

SCALE: 1/4"=1'-0"

NOTES:

1. NEW PUMP ASSEMBLIES MUST BE SET TO MATCH CENTER LINES OF EXISTING ASSEMBLIES BEING REPLACED BOTH IN PLAN AND ELEVATION.
2. NO MORE THAN ONE PUMP MAY BE TAKEN OUT OF SERVICE AT ANY ONE TIME.
3. ADD NEW MOTOR OPERATORS ON EXISTING BLOWERS 4, 5,& 6.

Record Drawing Notes:
1. **All elevations should be field verified before using**
2. **Weir and water elevations based on post-construction survey by Howard County.**

LEGEND:

DENOTES EXISTING EQUIPMENT

DENOTES NEW EQUIPMENT

DEPARTMENT OF PUBLIC WORKS
HOWARD COUNTY, MARYLAND

DIRECTOR OF PUBLIC WORKS — DATE 3/6/92
ACT. CHIEF, BUREAU OF ENGINEERING — DATE 3-6-92
CHIEF, BUREAU OF ENVIRONMENTAL SERVICES — DATE 3/6/92
ACT. CHIEF, UTILITY DESIGN DIVISION — DATE 3-6-92

Metcalf & Eddy

REG. PROF. ENGR. — DATE 3/6/92

STATE OF MARYLAND — JONATHAN WINTHROP DOANE No. 15140 — REGISTERED PROFESSIONAL ENGINEER

DES: P Stephey
DRN: M. Clifts
CHK: P Stephey
DATE: 3/6/92

BY	NO.	REVISION	DATE
	2	RECORD DRAWING	
	1	REVISED FOR BIDDING	3/6/92

MECHANICAL

HEADWORKS PUMP MODIFICATIONS PLANS

LITTLE PATUXENT WASTEWATER TREATMENT PLANT

LITTLE PATUXENT WASTEWATER TREATMENT PLANT EXPANSION
ADDITION NO. 5
CAPITAL PROJECT S - 6153

CONTRACT NO. 20 - 3082

HOWARD COUNTY, MARYLAND

SCALE AS SHOWN

SHEET 26 OF 226

M-2

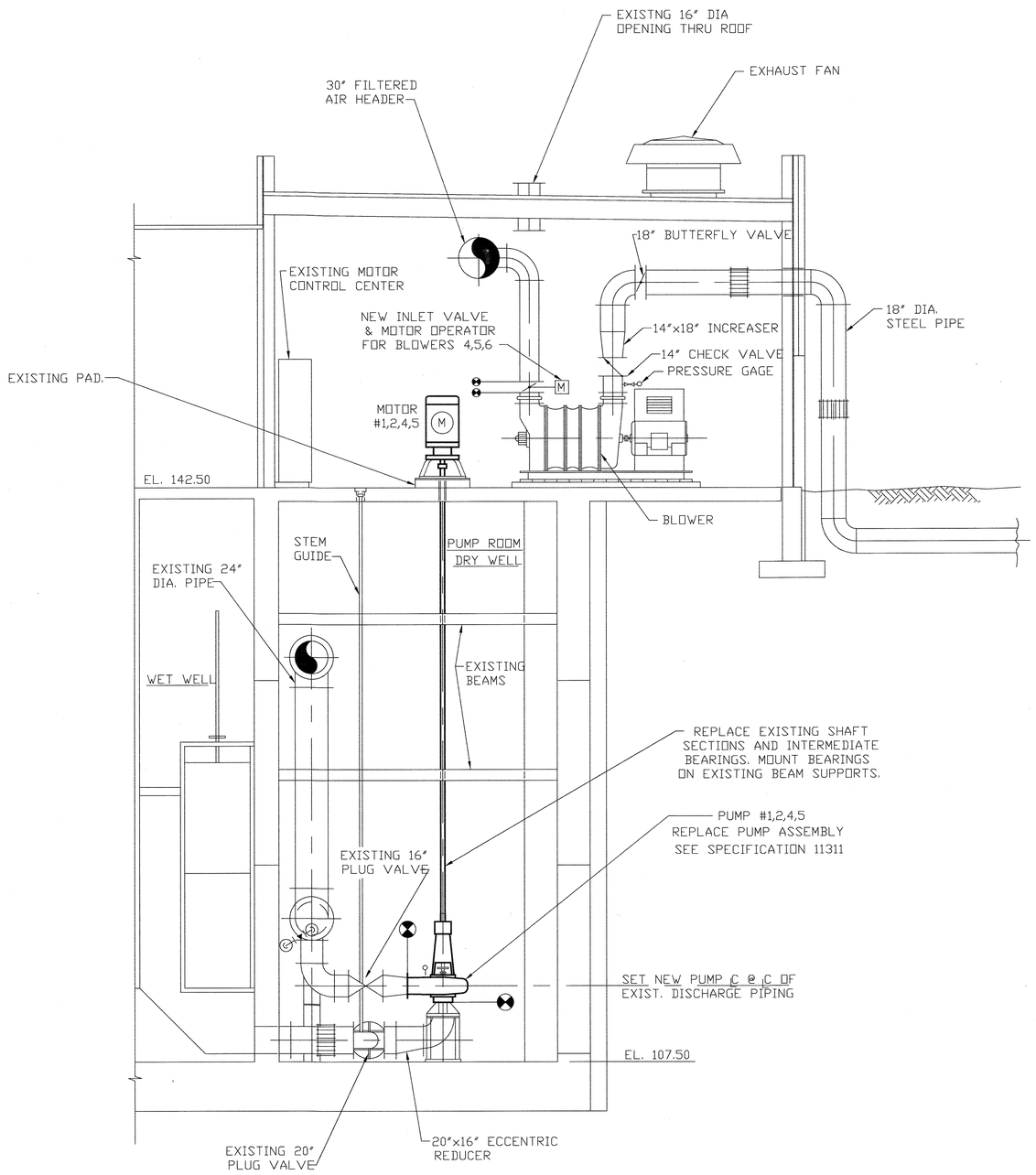

SECTION 1 / M-2

SCALE: 1/4"=1'-0"

LEGEND:

DENOTES EXISTING EQUIPMENT

DENOTES NEW EQUIPMENT

Record Drawing Notes:
1. All elevations should be field verified before using
2. Weir and water elevations based on post-construction survey by Howard County.

DEPARTMENT OF PUBLIC WORKS
HOWARD COUNTY, MARYLAND

DIRECTOR OF PUBLIC WORKS — DATE 5/7/96
CHIEF, BUREAU OF ENGINEERING — DATE 5/7/96
CHIEF, BUREAU OF ENVIRONMENTAL SERVICES — DATE 5/7/96
CHIEF, UTILITY DESIGN DIVISION — DATE 5-7-96

Metcalf & Eddy

REG. PROF. ENGR. — DATE 5-7-96

STATE OF MARYLAND — JONATHAN WINTHROP DOANE No. 15140 — REGISTERED PROFESSIONAL ENGINEER

DES:
DRN: M.J.C.
CHK: J.H.
DATE:

BY	NO.	REVISION	DATE
M.J.C.	1	RECORD DRAWING	11/2/94

MECHANICAL

HEADWORKS PUMP
MODIFICATIONS
SECTIONS

LITTLE PATUXENT WASTEWATER TREATMENT PLANT

LITTLE PATUXENT WASTEWATER TREATMENT PLANT EXPANSION
ADDITION NO. 5
CAPITAL PROJECT S-6153

CONTRACT NO. 20-3082
HOWARD COUNTY, MARYLAND

SCALE AS SHOWN

SHEET 97 OF 226

M-3A

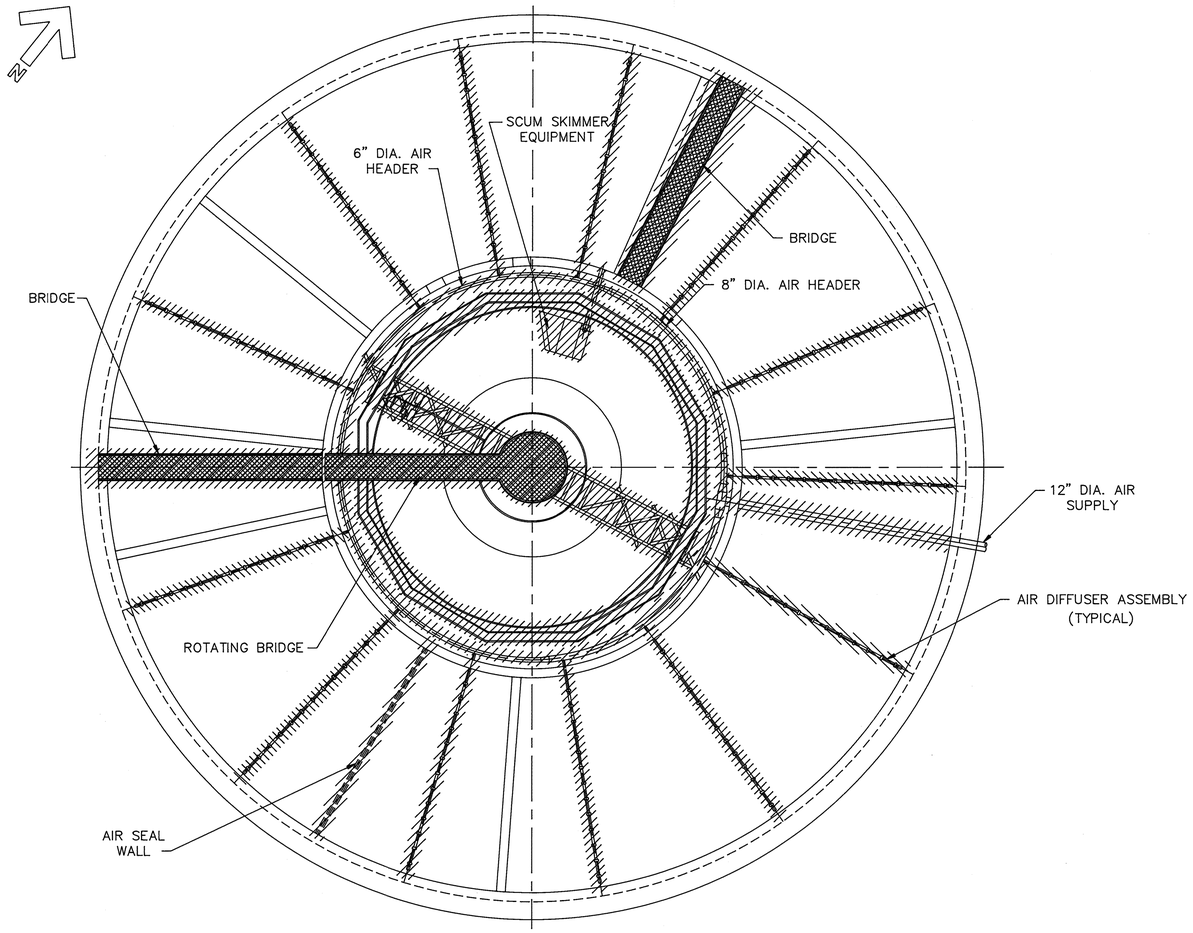

PLAN

SCALE: 1/8"=1'-0"

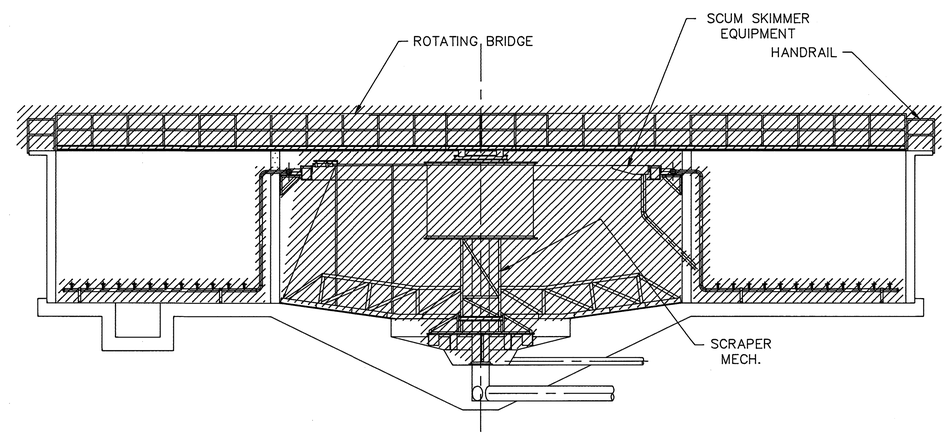

TYPICAL SECTION

SCALE: 1/8"=1'-0"

NOTES:

1. CONTRACTOR TO REMOVE ALL DEBRIS FROM INSIDE TANK INCLUDING, SOIL, VEGETATION, SLUDGE, GRIT, AND TRASH.
2. SEE DWG. S-3 FOR LOCATION OF NEW 24"X24" OPENINGS.

Record Drawing Notes:
1. **All elevations should be field verified before using**
2. **Weir and water elevations based on post-construction survey by Howard County.**

LEGEND:

TO BE DEMOLISHED

DEPARTMENT OF PUBLIC WORKS
HOWARD COUNTY, MARYLAND

DIRECTOR OF PUBLIC WORKS — DATE 3/6/92
ACT. CHIEF, BUREAU OF ENGINEERING — DATE 3-6-92
CHIEF, BUREAU OF ENVIRONMENTAL SERVICES — DATE 3/6/92
ACT. CHIEF, UTILITY DESIGN DIVISION — DATE 3-6-92

Metcalf & Eddy

REG. PROF. ENGR. — DATE 3/6/92

STATE OF MARYLAND — JONATHAN WINTHROP DOANE No. 15140 — REGISTERED PROFESSIONAL ENGINEER

DES:
DRN: N. Cotter
CHK: R. Stephens
DATE: 3/6/92

BY	NO.	REVISION	DATE
	2	RECORD DRAWING	
	1	REVISED FOR BIDDING	3/6/92

MECHANICAL

FLOW EQUALIZATION BASIN NO.3
MODIFICATIONS
DEMOLITION

LITTLE PATUXENT WASTEWATER TREATMENT PLANT

LITTLE PATUXENT WASTEWATER TREATMENT PLANT EXPANSION
ADDITION NO. 5
CAPITAL PROJECT S - 6153

CONTRACT NO. 20 - 3082

HOWARD COUNTY, MARYLAND

SCALE AS SHOWN

SHEET 98 OF 226

M-4

073139

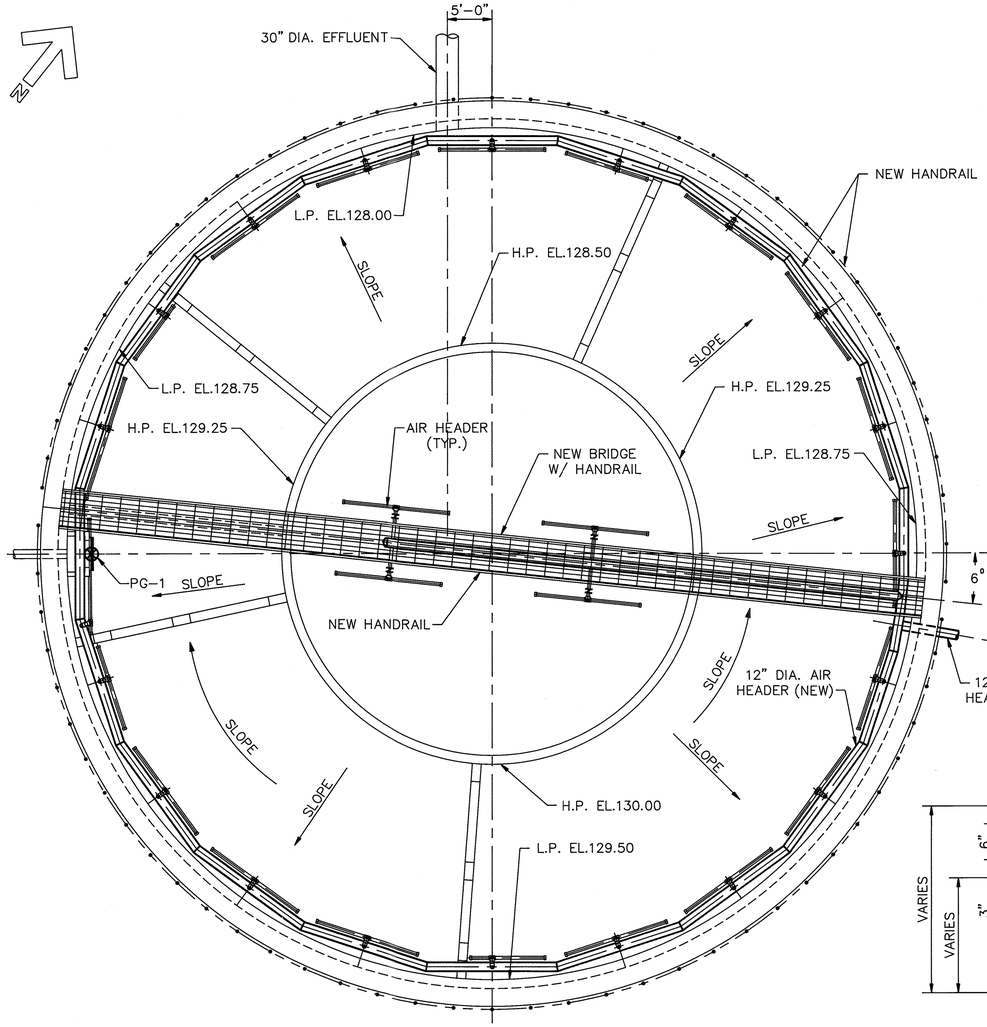

PLAN

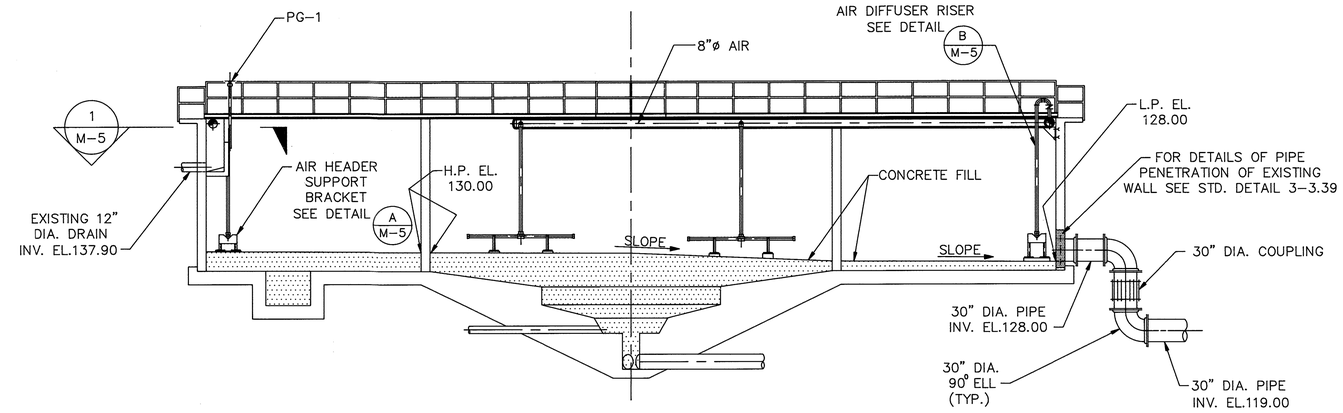

TYPICAL SECTION

SCALE: 1/8"=1'-0"

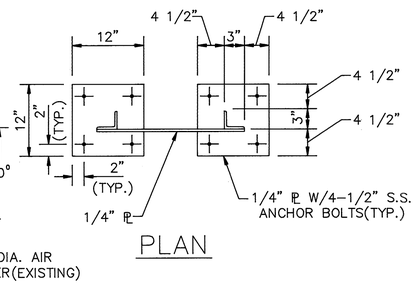

PLAN

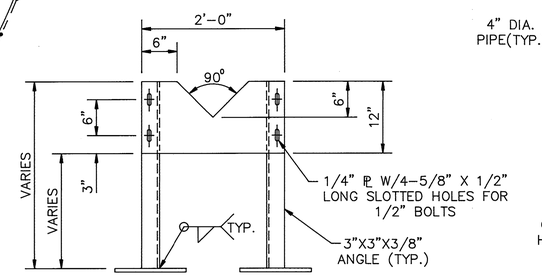

DETAIL A M-5

SCALE: 1"=1'-0"

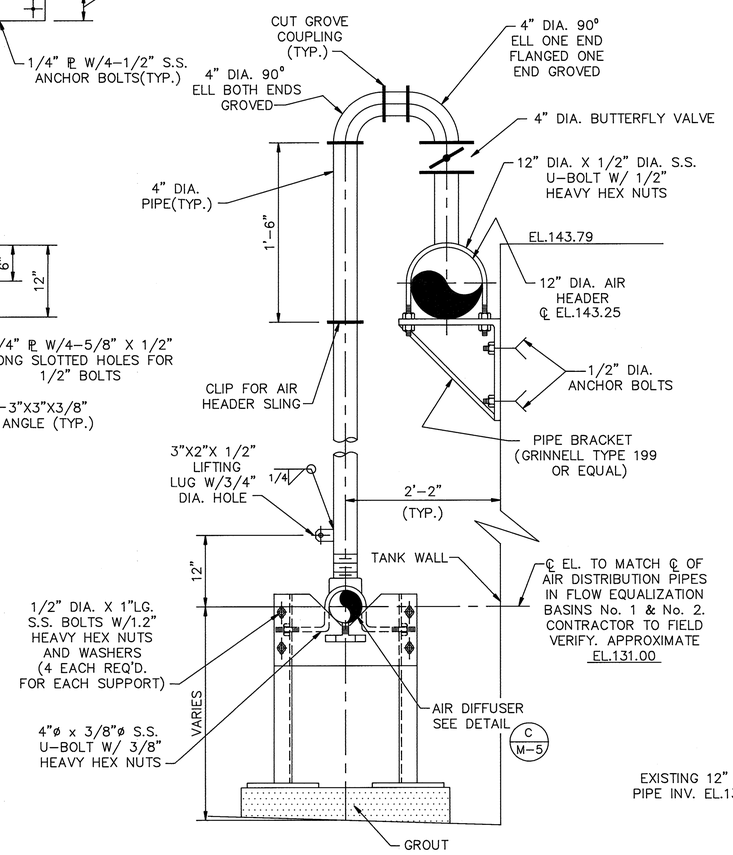

DETAIL B M-5

SCALE: 1"=1'-0"

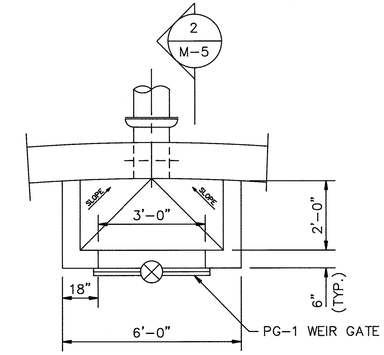

SECTION 1 M-5

SCALE: NONE

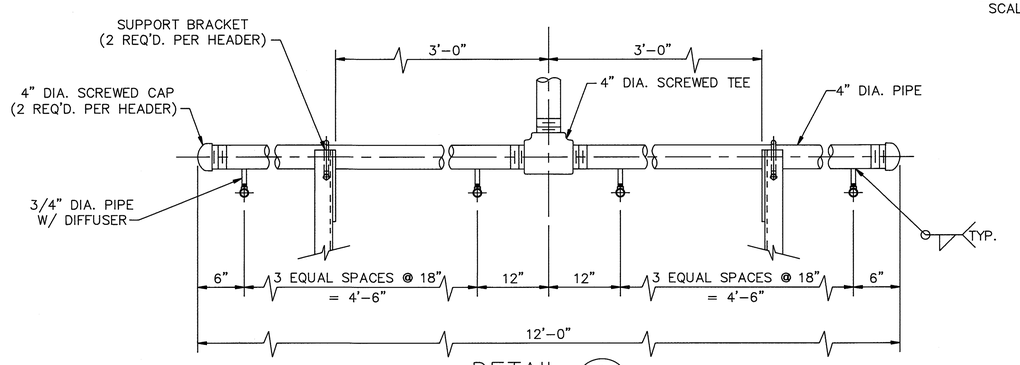

DETAIL C M-5

SCALE: 1"=1'-0"

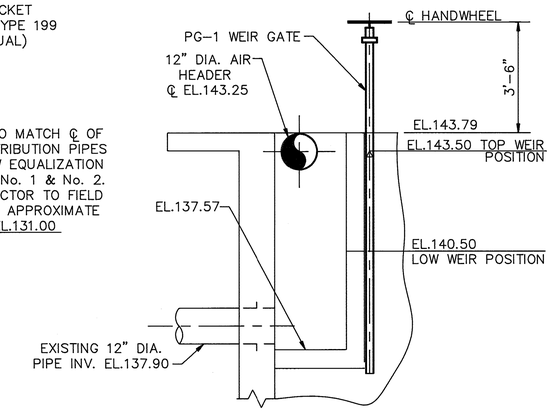

SECTION 2 M-5

SCALE: NONE

Record Drawing Notes:
1. All elevations should be field verified before using
2. Weir and water elevations based on post-construction survey by Howard County.

DEPARTMENT OF PUBLIC WORKS
HOWARD COUNTY, MARYLAND

DIRECTOR OF PUBLIC WORKS — DATE 3/6/92
ACT. CHIEF, BUREAU OF ENGINEERING — DATE 3-6-92
CHIEF, BUREAU OF ENVIRONMENTAL SERVICES — DATE 3/6/92
ACT. CHIEF, UTILITY DESIGN DIVISION — DATE 3-6-92

Metcalf & Eddy

(REG. PROF. ENGR.) — DATE 3/6/92

STATE OF MARYLAND — JONATHAN WINTHROP DOANE No. 15140 — REGISTERED PROFESSIONAL ENGINEER

DES: P. Stephens
DRN: M. Clifton
CHK: P. Stephens
DATE: 3/6/92

BY	NO.	REVISION	DATE
	2	RECORD DRAWING	11/12/94
	1	REVISED FOR BIDDING	3/6/92

MECHANICAL

FLOW EQUALIZATION BASIN NO.3 MODIFICATIONS
PLAN, SECTIONS & DETAILS

LITTLE PATUXENT WASTEWATER TREATMENT PLANT

LITTLE PATUXENT WASTEWATER TREATMENT PLANT EXPANSION
ADDITION NO. 5
CAPITAL PROJECT S - 6153

CONTRACT NO. 20 - 3082
HOWARD COUNTY, MARYLAND

SCALE AS SHOWN

SHEET 99 OF 226

M-5

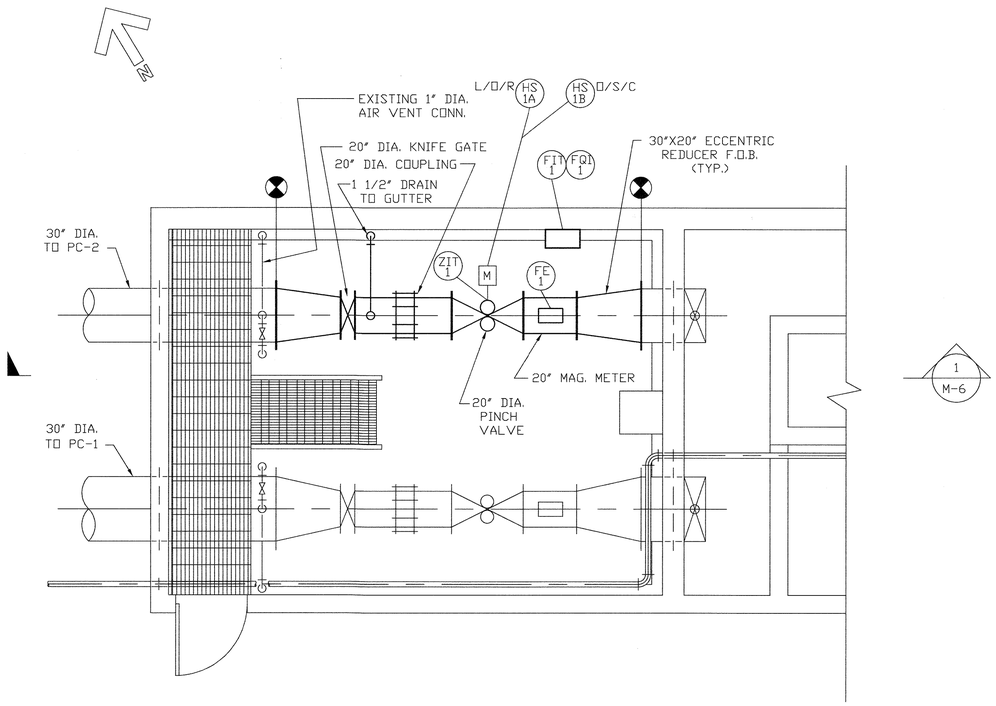

PLAN
SCALE: 3/8"=1'-0"

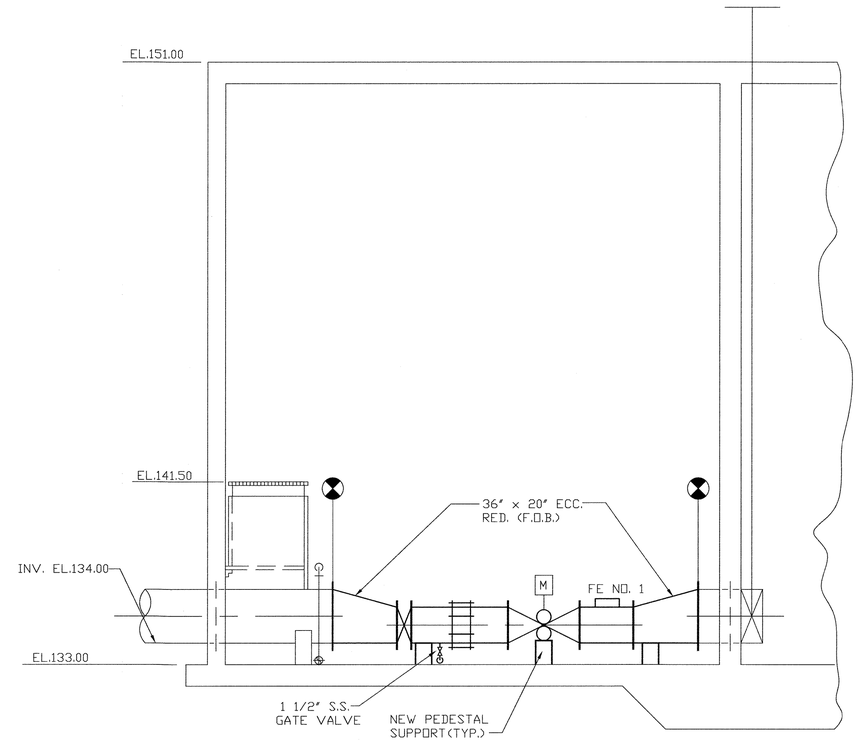

SECTION 1/M-6
SCALE: 1/4"=1'-0"

LEGEND:

DENOTES EXISTING EQUIPMENT

DENOTES NEW EQUIPMENT

Record Drawing Notes:
1. All elevations should be field verified before using
2. Weir and water elevations based on post-construction survey by Howard County.

DEPARTMENT OF PUBLIC WORKS
HOWARD COUNTY, MARYLAND

DIRECTOR OF PUBLIC WORKS — DATE 5/7/96
CHIEF, BUREAU OF ENGINEERING — DATE 5/7/96
CHIEF, BUREAU OF ENVIRONMENTAL SERVICES — DATE 5/7/96
CHIEF, UTILITY DESIGN DIVISION — DATE 5-7-96

M&E Metcalf & Eddy

REG. PROF. ENGR. — DATE 5-7-96

STATE OF MARYLAND — JONATHAN WINTHROP DOANE No. 15140 — REGISTERED PROFESSIONAL ENGINEER

DES:				
DRN: M.J.C.				
CHK: J.H.				
DATE:	M.J.C.	1	RECORD DRAWING	11/2/94
	BY	NO.	REVISION	DATE

MECHANICAL

PRIMARY METERING CHAMBER
MODIFICATIONS
PLAN AND SECTIONS

LITTLE PATUXENT WASTEWATER TREATMENT PLANT

LITTLE PATUXENT WASTEWATER TREATMENT PLANT EXPANSION
ADDITION NO. 5
CAPITAL PROJECT S-6153

CONTRACT NO. 20-3082
HOWARD COUNTY, MARYLAND

SCALE AS SHOWN

SHEET 100 OF 226

M-6A

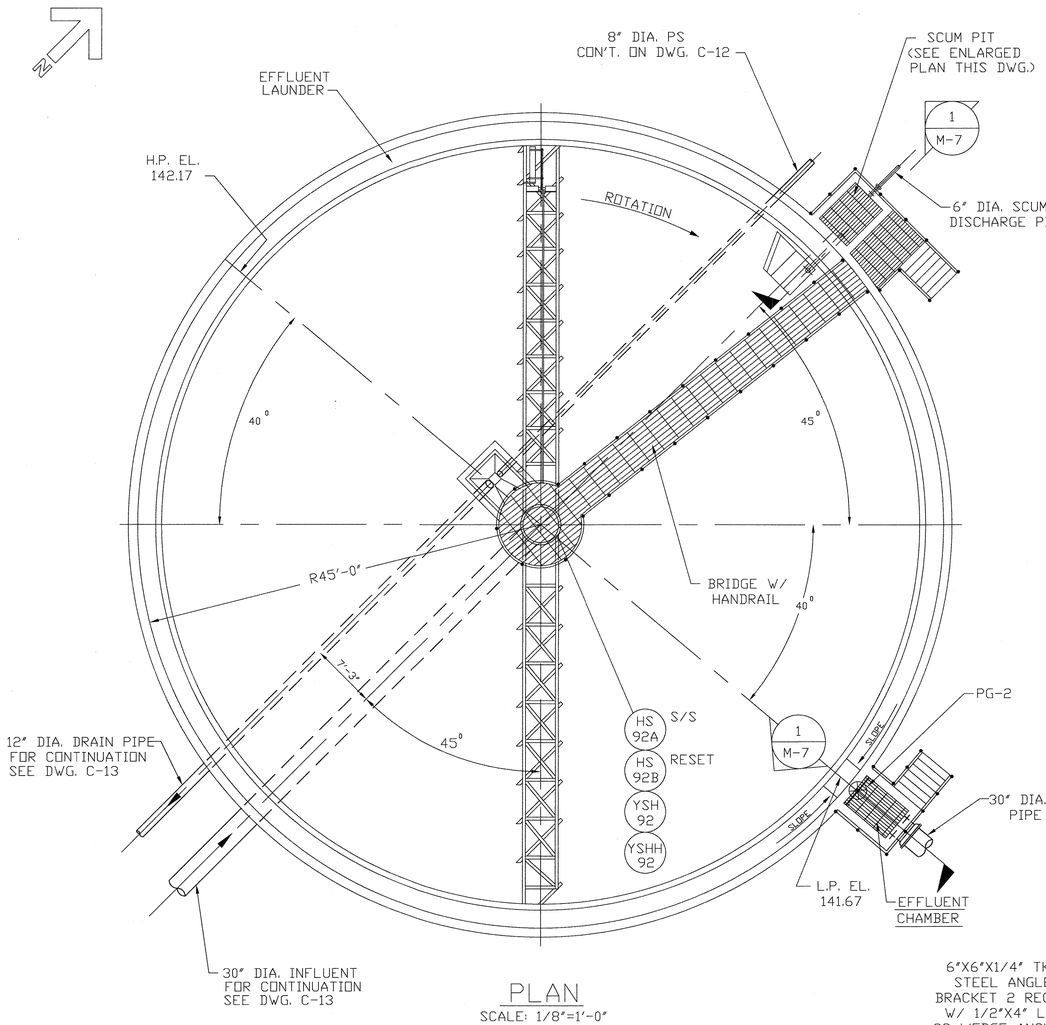

PLAN

SCALE: 1/8"=1'-0"

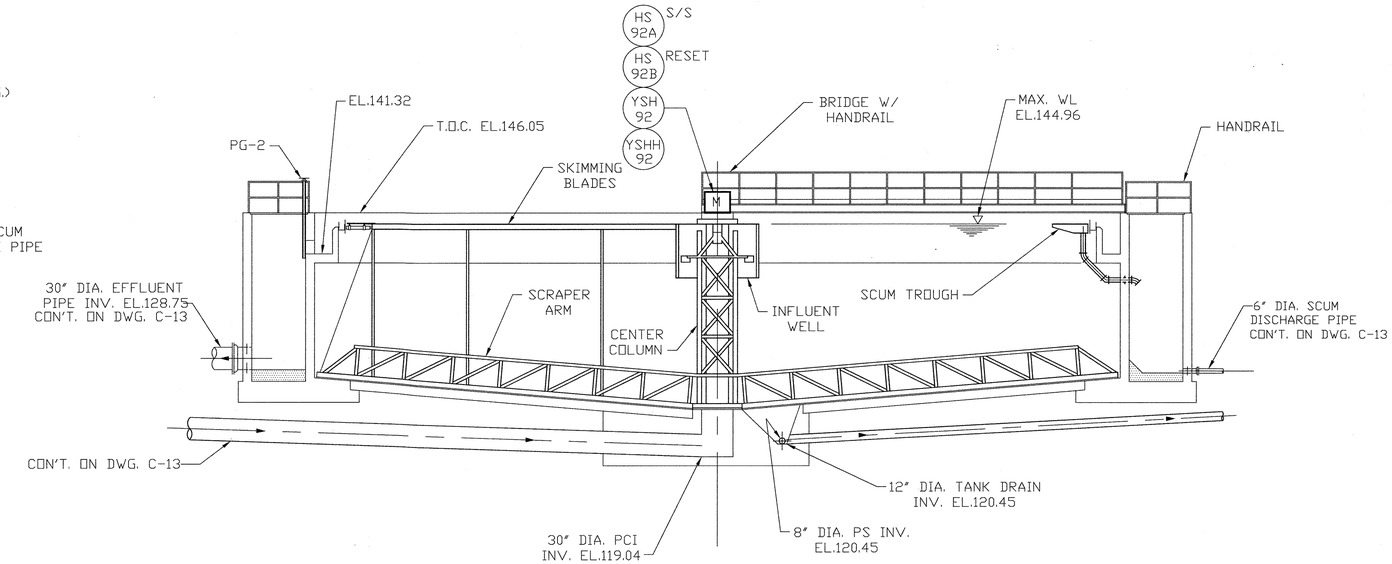

TYPICAL SECTION

SCALE: 1/8"=1'-0"

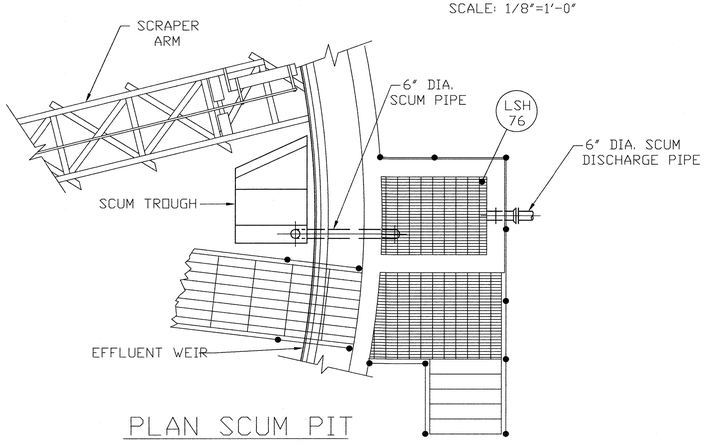

PLAN SCUM PIT

SCALE: 1/4"=1'-0"

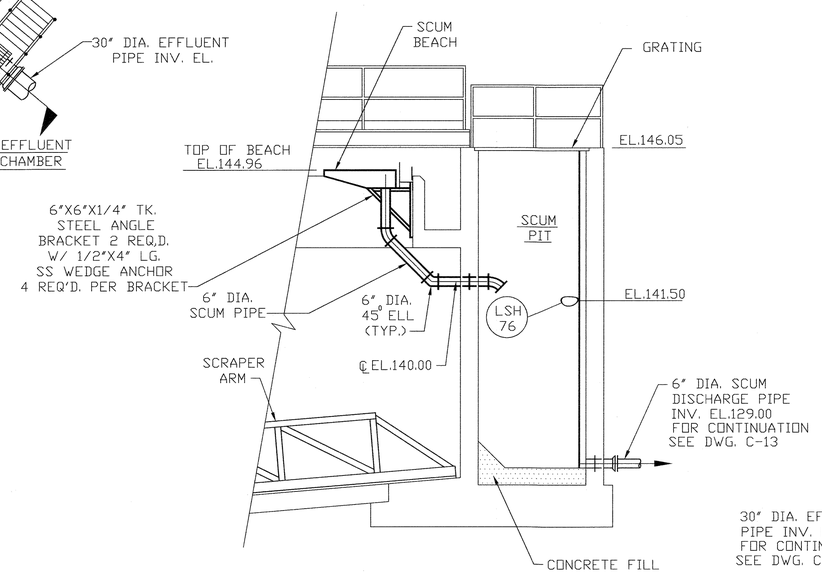

SECTION 1 / M-7

SCALE: 1/4"=1'-0"

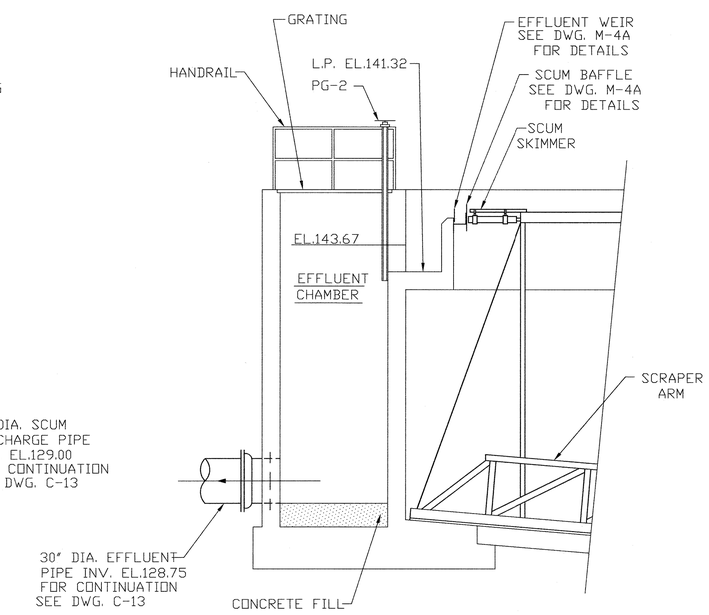

SECTION 2 / M-7

SCALE: 1/4"=1'-0"

Record Drawing Notes:

1. All elevations should be field verified before using
2. Weir and water elevations based on post-construction survey by Howard County.

DEPARTMENT OF PUBLIC WORKS
HOWARD COUNTY, MARYLAND

DIRECTOR OF PUBLIC WORKS — DATE 5/7/96
CHIEF, BUREAU OF ENGINEERING — DATE 5/7/96
CHIEF, BUREAU OF ENVIRONMENTAL SERVICES — DATE 5/7/96
CHIEF, UTILITY DESIGN DIVISION — DATE 5-7-96

M&E Metcalf & Eddy

REQ. PROF. ENGR. — DATE 5-7-96

STATE OF MARYLAND — JONATHAN WINTHROP DOANE No. 15140 — REGISTERED PROFESSIONAL ENGINEER

DES:
DRN: M.J.C.
CHK: J.H.
DATE:

BY	NO.	REVISION	DATE
M.J.C.	1	RECORD DRAWING	11/2/94

MECHANICAL

PRIMARY CLARIFIER NO. 2
PLAN AND SECTIONS

LITTLE PATUXENT WASTEWATER TREATMENT PLANT

LITTLE PATUXENT WASTEWATER TREATMENT PLANT EXPANSION
ADDITION NO. 5
CAPITAL PROJECT S-6153

CONTRACT NO. 20-3082
HOWARD COUNTY, MARYLAND

SCALE AS SHOWN

SHEET 101 OF 226

M-7A

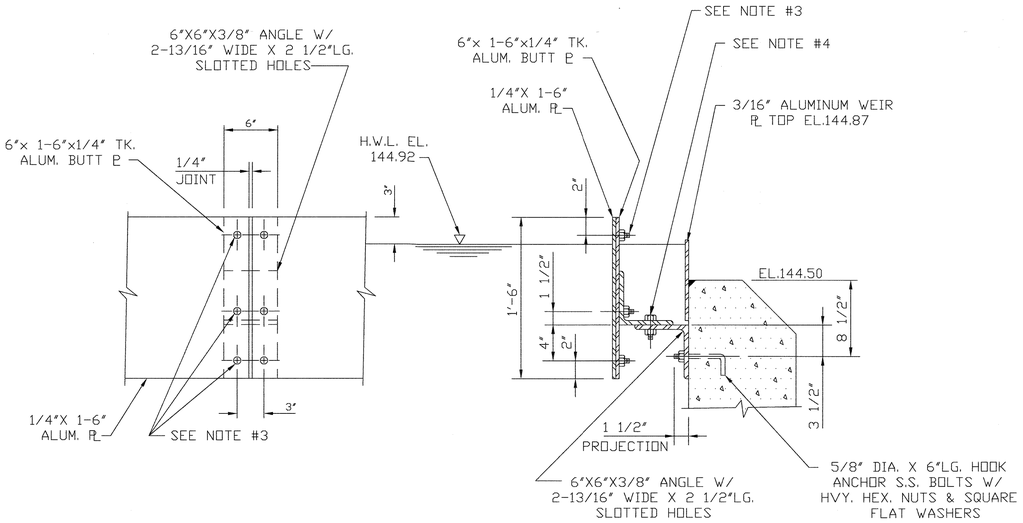

BAFFLE JOINT DETAIL

SCALE: 1 1/2"=1'-0"

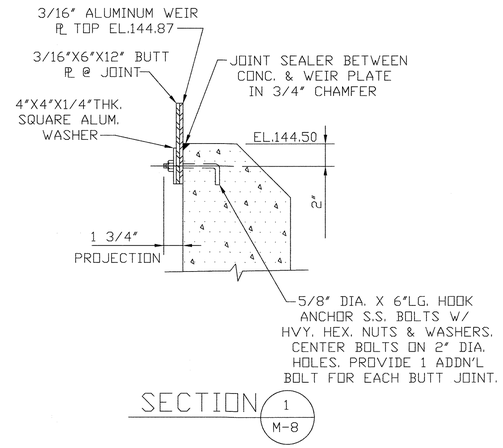

SECTION 1 / M-8

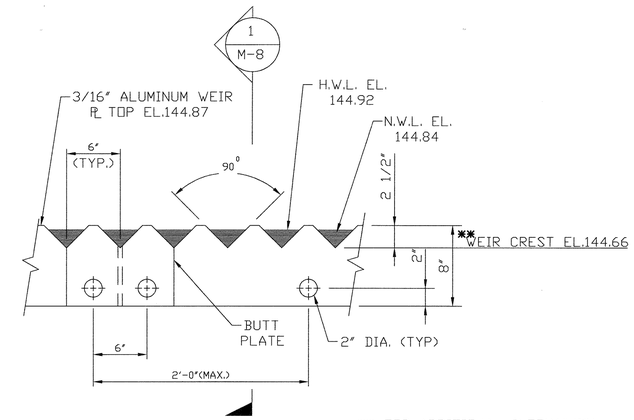

** FOR ADDITIONAL INFOMATION
SEE DWG. M-1 GENERAL NOTE 16

WEIR PLATE ELEVATION

EFFLUENT WEIR DETAIL

SCALE: 1 1/2"=1'-0"

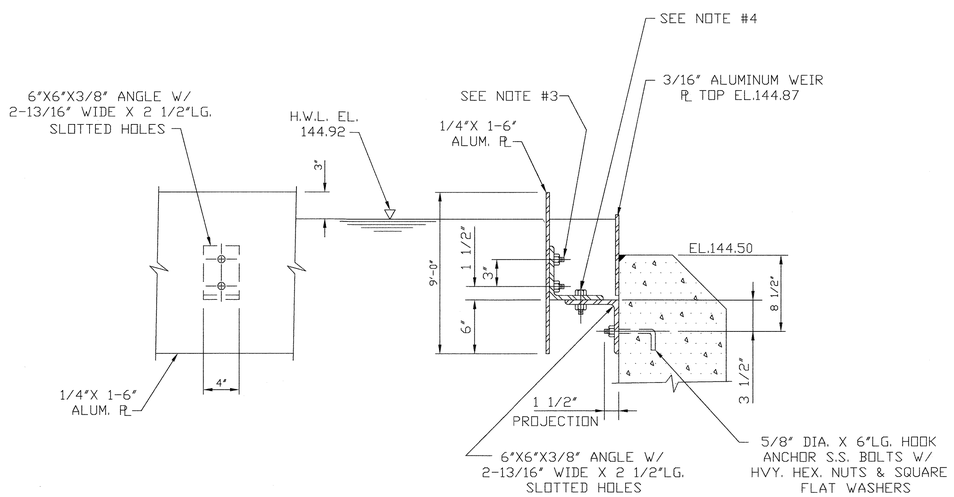

SCUM BAFFLE DETAILS

SCALE: 1 1/2"=1'-0"

NOTES:

1. SCUM BAFFLE ANGLE AND PLATES TO BE ALUMINUM ALLOY 6061-T6.
2. SETTING OF ANCHOR BOLTS TO BE EXACT WITH BOLTS FIXED FIRMLY IN PLACE TO ELIMINATE MOVEMENT DURNING CONCRETE POUR. ALL ANCHOR BOLTS TO BE STAINLESS STEEL.
3. 1/2" DIA. X 1 3/4"LG. FLATHEAD STAINLESS STEEL BOLTS WITH HEAVY HEX NUTS AND ROUND FLAT WASHERS.
4. 3/4" DIA. X 2"LG. STAINLESS STEEL MACHINE BOLTS WITH HEAVY HEX NUTS AND WASHERS FOR 13/16" WIDE X 2" SLOTS.
5. SEE NOTES ON M-1.

Record Drawing Notes:
1. All elevations should be field verified before using
2. Weir and water elevations based on post-construction survey by Howard County.

DEPARTMENT OF PUBLIC WORKS
HOWARD COUNTY, MARYLAND

DIRECTOR OF PUBLIC WORKS — DATE 5/7/96
CHIEF, BUREAU OF ENGINEERING — DATE 5/7/96
CHIEF, BUREAU OF ENVIRONMENTAL SERVICES — DATE 5/7/96
CHIEF, UTILITY DESIGN DIVISION — DATE 5-7-96

M&E Metcalf & Eddy
REG. PROF. ENGR. — DATE 5-7-96

STATE OF MARYLAND — JONATHAN WINTHROP DOANE No. 18140 — REGISTERED PROFESSIONAL ENGINEER

DES:				
DRN: M.J.C.				
CHK: J.H.				
DATE:	M.J.C.	1	RECORD DRAWING	11/2/94
	BY	NO.	REVISION	DATE

MECHANICAL

PRIMARY CLARIFIER NO. 2
DETAILS

LITTLE PATUXENT WASTEWATER TREATMENT PLANT

LITTLE PATUXENT WASTEWATER TREATMENT PLANT EXPANSION
ADDITION NO. 5
CAPITAL PROJECT S-6153

CONTRACT NO. 20-3082
HOWARD COUNTY, MARYLAND

SCALE AS SHOWN

SHEET 102 OF 226

M-8A

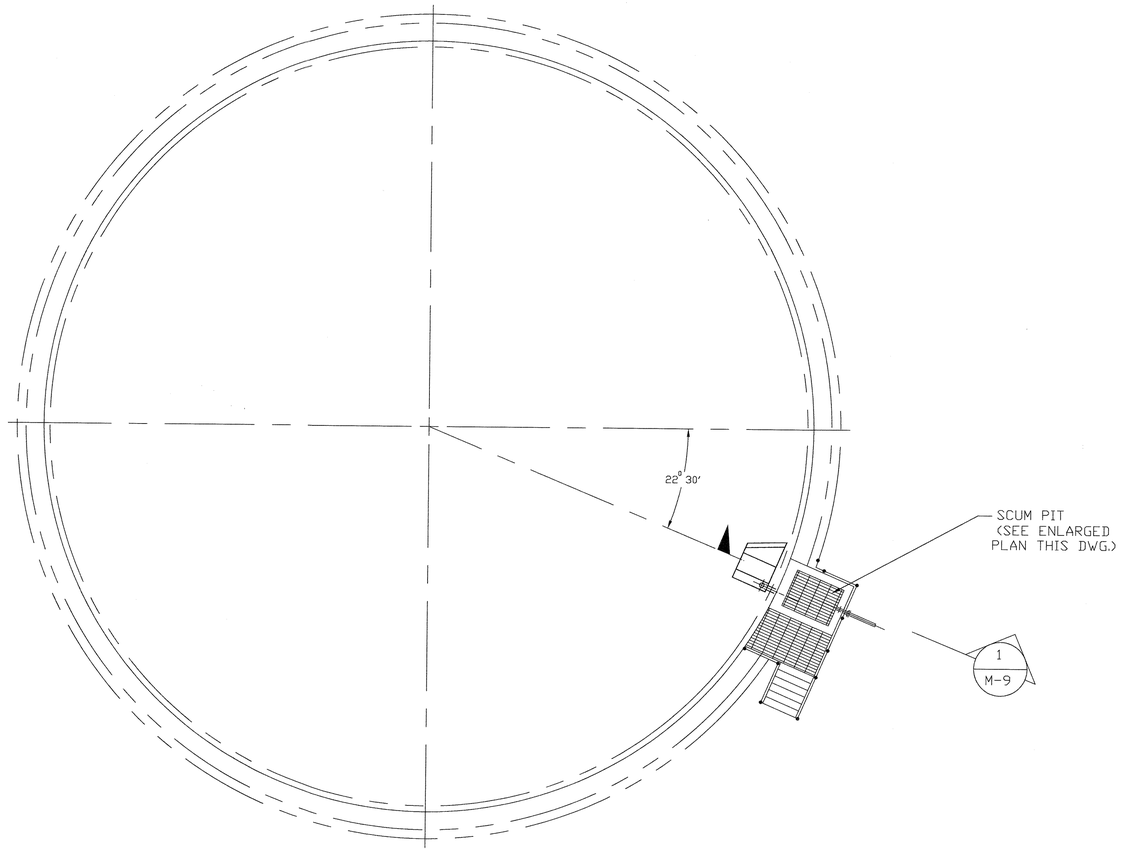

PLAN OF PRIMARY CLARIFIER No.1

SCALE: NONE

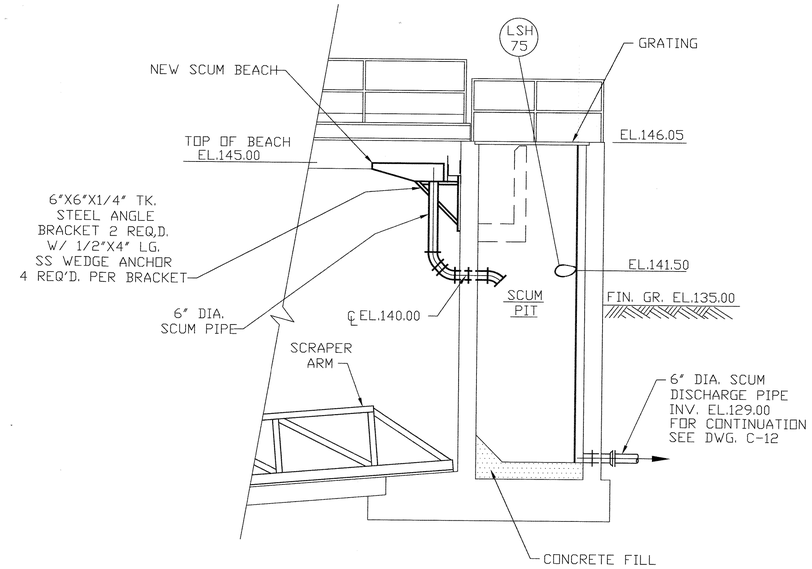

SECTION 1/M-9

SCALE: 1/4"=1'-0"

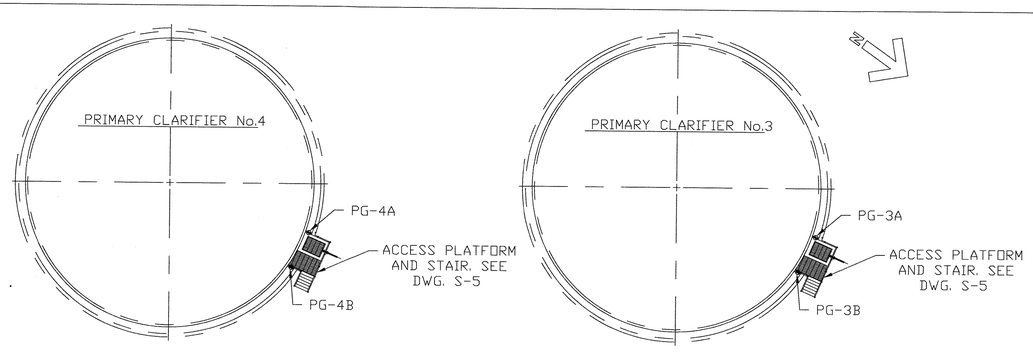

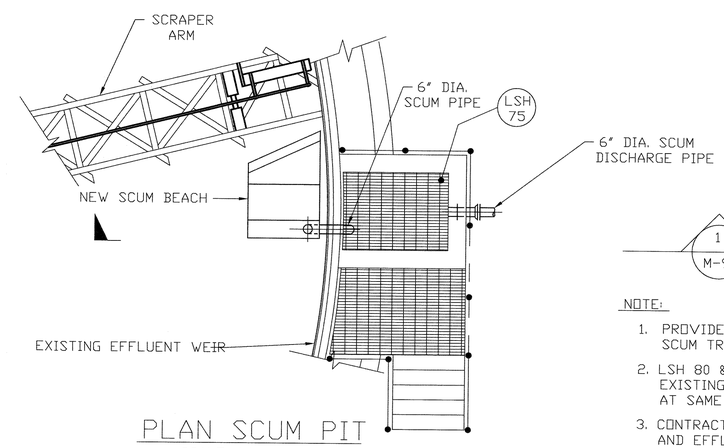

PLAN SCUM PIT

SCALE: 1/4"=1'-0"

1/M-9

NOTE:

1. PROVIDE NEW FULL RADIUS SKIMMER AND SCUM TROUGH PER SPECIFICATION 11357
2. LSH 80 & LSH 81 TO BE INSTALLED IN EXISTING PRIMARY CLARIFIERS 3 & 4 AT SAME ELEVATION.
3. CONTRACTOR SHALL SET SCUM TROUGH AND EFFLUENT WEIR LEVELS ON ALL CLARIFIERS SUCH THAT ALL ARE AT THE SAME ELEVATION. SEE M-1 GENERAL NOTE 16 FOR ADDITIONAL REQUIREMENTS.
4. WEIRS ARE SET AT 144.66 RELATIVE TO HOWARD COUNTY BENCH MRK.

Record Drawing Notes:

1. All elevations should be field verified before using
2. Weir and water elevations based on post-construction survey by Howard County.

DEPARTMENT OF PUBLIC WORKS
HOWARD COUNTY, MARYLAND

DIRECTOR OF PUBLIC WORKS — DATE 5/7/96
CHIEF, BUREAU OF ENGINEERING — DATE 5/7/96
CHIEF, BUREAU OF ENVIRONMENTAL SERVICES — DATE 5/7/96
CHIEF, UTILITY DESIGN DIVISION — DATE 5-7-96

M&E Metcalf & Eddy

REG. PROF. ENGR. — DATE 5-7-96

STATE OF MARYLAND — JONATHAN WINTHROP DOANE No. 15140 — REGISTERED PROFESSIONAL ENGINEER

DES:			
DRN: M.J.C.			
CHK: J.H.			
DATE:	M.J.C.	1	RECORD DRAWING	11/2/94
	BY	NO.	REVISION	DATE

MECHANICAL

PRIMARY CLARIFIER NO. 1
PLAN AND SECTIONS
MODIFICATIONS

LITTLE PATUXENT WASTEWATER TREATMENT PLANT

LITTLE PATUXENT WASTEWATER TREATMENT PLANT EXPANSION
ADDITION NO. 5
CAPITAL PROJECT S-6153

CONTRACT NO. 20-3082
HOWARD COUNTY, MARYLAND

SCALE AS SHOWN

SHEET 103 OF 226

M-9A

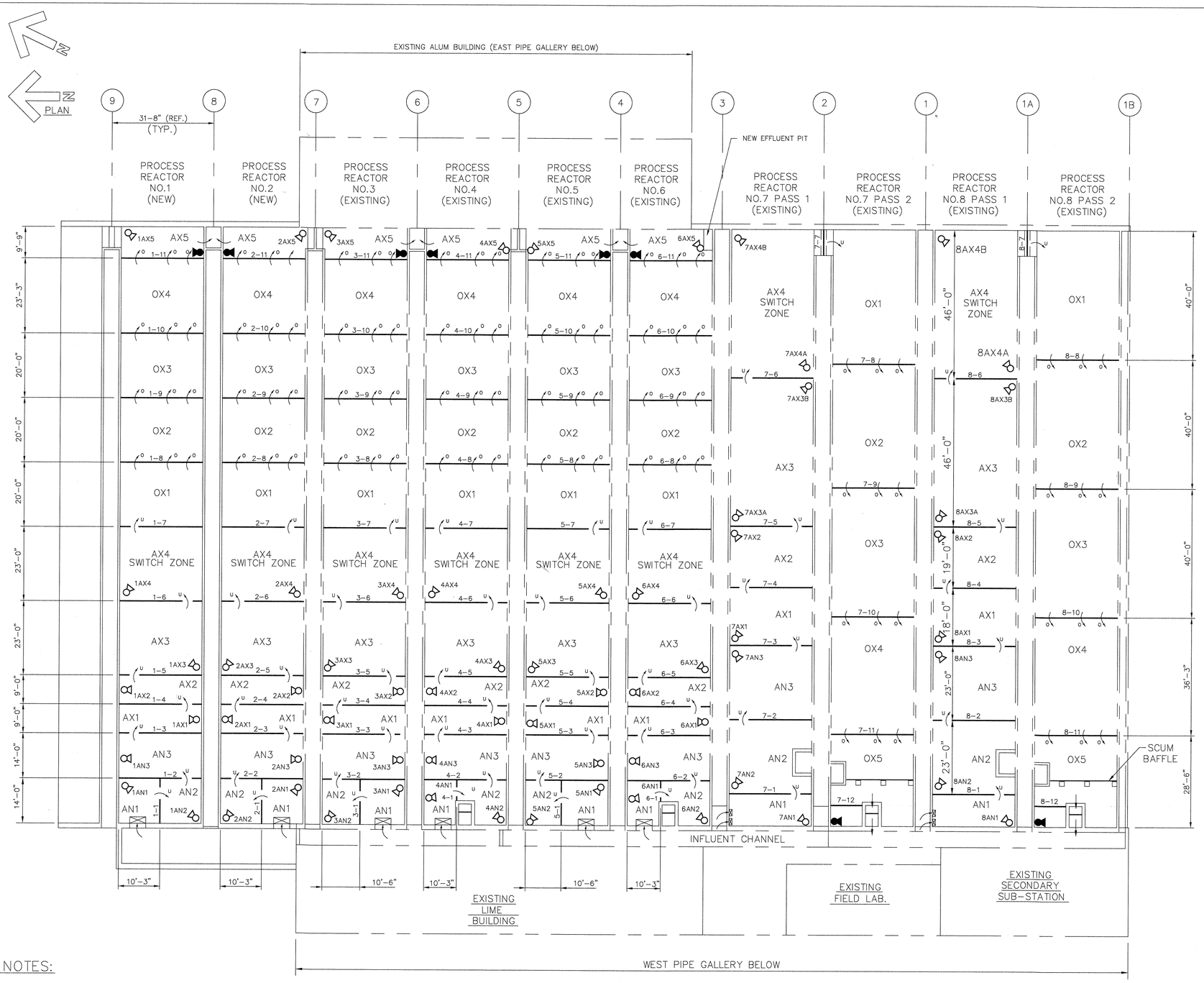

PROCESS REACTOR INTERNAL BAFFLE WALL SCHEDULE

WALL TYPE	BAFFLE WALL DESIGNATION	LOCATION OF OPENING IN BAFFLE WALL	SIZE OF OPENINGS W x H (FT)	TOP OF BAFFLE ELEVATION
1	1–1, 2–1, 3–1, 5–1	EAST END BOTTOM	6 x 2	143.50
2	4–1, 6–1	EAST END BOTTOM	3 x 4	143.50
3	1–4, 1–6, 2–5, 3–5 4–4, 4–6, 5–5, 6–4, 6–6	SOUTH END BOTTOM	6 x 2	143.50
4	1–5, 2–4, 2–6, 3–4, 3–6, 4–5, 5–4 5–6, 6–5	NORTH END BOTTOM	6 x 2	143.50
5	1–8, 1–9, 1–10, 2–8, 2–9 2–10, 3–8, 3–9, 3–10, 4–8 4–9, 4–10, 5–8, 5–9, 5–10 6–8, 6–9, 6–10	FULL WIDTH TOP. 1 BOTTOM OPENINGS CENTERED	1.5X1.5	140.50
6	7–1, 7–5, 8–1, 8–5	SOUTH END BOTTOM	6 x 4	143.50
7	7–2, 7–4, 7–6, 8–2, 8–4 8–6	NORTH END BOTTOM	6 x 4	143.50
8	7–8, 7–9, 7–10, 7–11, 8–8 8–9, 8–10, 8–11	FULL WIDTH TOP. 1 BOTTOM OPENINGS CENTERED	2 x 2	140.50
9	1–11, 2–11, 3–11, 4–11, 5–11, 6–11	FULL WIDTH TOP W/SCUM BAFFLE	–	140.50
10	1–7, 4–7, 6–7, 1–3, 4–3 6–3	NORTH END BOTTOM	2 x 2	143.50
11	7–7, 8–7	CENTERED BOTTOM	6 x 2	143.50
12	2–3, 3–3, 5–3, 2–7, 3–7 5–7	SOUTH END BOTTOM	2 x 2	143.50
13	7–3, 8–3	SOUTH END BOTTOM	4 x 2	143.50
14	7–12, 8–12	FULL WIDTH TOP W/1 BOTTOM SOUTH END	0.5 X 0.5	140.50
15	1–2, 4–2, 6–2	NORTH END BOTTOM	6 x 2	143.50
16	2–2, 3–2, 5–2	SOUTH END BOTTOM	6 x 2	143.50

SUBMERSIBLE MIXER SCHEDULE

MIXER DESIGNATION	LOCATION OF MIXER IN ZONE	MIXER DIRECTION OF PUMPING	MIXER HP/RPM
1AN1, 1AX5 3AX5, 5AX5	NORTHEAST CORNER	45° SOUTHWEST	1.5 /1130
7AN1, 8AN1, 1AN2, 4AN2 6AN2	SOUTHEAST CORNER	45° NORTHEAST	1.5 /1130
1AN3, 4AN3, 6AN3, 2AX1 3AX1, 5AX1, 1AX2, 4AX2 6AX2, 6AN1, 4AN1	NORTH WALL CENTER	SOUTH	1.5 /1130
1AX4, 2AX3, 3AX3, 4AX4 5AX3, 6AX4, 7AN2, 7AX1 7AX3A, 8AN2, 8AX1, 8AX3A	NORTHWEST CORNER	45° SOUTHEAST	3.2 /1700
1AX3, 4AX3, 5AX4, 6AX3 7AX4A, 8AX4A, 2AX4, 3AX4	SOUTHWEST CORNER	45° NORTHEAST	3.2 /1700
7AX3B, 8AX3B	SOTHHEAST CORNER	45° NORTHWEST	3.2 /1700
1AX1, 2AN3, 2AX2, 3AN3 3AX2, 4AX1, 5AN3, 5AX2 6AX1	SOUTH WALL CENTER	NORTH	1.5 /1130
2AN2, 3AN2, 5AN2	NORTHEAST CORNER	45° SOUTHEAST	1.5 /1130
2AN1, 3AN1, 5AN1, 2AX5, 4AX5, 6AX5	SOUTHEAST CORNER	45° NORTHWEST	1.5 /1130
7AN3, 7AX2, 7AX4B, 8AN3 8AX2, 8AX4B	NORTHEAST CORNER	45° SOUTHWEST	3.2 /1700
TOTAL QUANTITY 1.5 HP UNITS	38 INSTALLED + 10 SHELF SPARES		
TOTAL QUANTITY 3.2 HP UNITS	28 INSTALLED (SPARES EXISTING)		

NOTES:

1. PIPING, FLOW METERS & VALVES NOT SHOWN FOR CLARITY. ALL PUMP & MIXER LOCATIONS ARE APPROXIMATE. FOR LOCATIONS OF PIPING, METERS & VALVES SEE SPECIFIC REACTOR DRAWINGS.

PLAN
SCALE: 1/16"=1'-0"

LEGEND:

- DENOTES NEW TANK
- BAFFLE WALL
- MIXER
- INTERNAL RECYCLE PUMP
- DENOTES EXISTING TANK
- OVERFLOW BAFFLE OPENING
- UNDERFLOW BAFFLE OPENING

DEPARTMENT OF PUBLIC WORKS
HOWARD COUNTY, MARYLAND

DIRECTOR OF PUBLIC WORKS — DATE 5/7/96
CHIEF, BUREAU OF ENGINEERING — DATE 5/7/96
CHIEF, BUREAU OF ENVIRONMENTAL SERVICES — DATE 5/7/96
CHIEF, UTILITY DESIGN DIVISION — DATE 5-7-96

M&E Metcalf & Eddy
REG. PROF. ENGR. — DATE 5-7-96

STATE OF MARYLAND — JONATHAN WINTHROP DOANE No. 15140 — REGISTERED PROFESSIONAL ENGINEER

DES:				
DRN: M.J.C.				
CHK: J.H.				
DATE:	M.J.C.	1	RECORD DRAWING	11/2/94
	BY	NO.	REVISION	DATE

MECHANICAL

PROCESS REACTORS GENERAL PLAN

LITTLE PATUXENT WASTEWATER TREATMENT PLANT
LITTLE PATUXENT WASTEWATER TREATMENT PLANT EXPANSION
ADDITION NO. 5
CAPITAL PROJECT S-6153
CONTRACT NO. 20-3082
HOWARD COUNTY, MARYLAND

SCALE AS SHOWN
SHEET 104 OF 226
M-10A

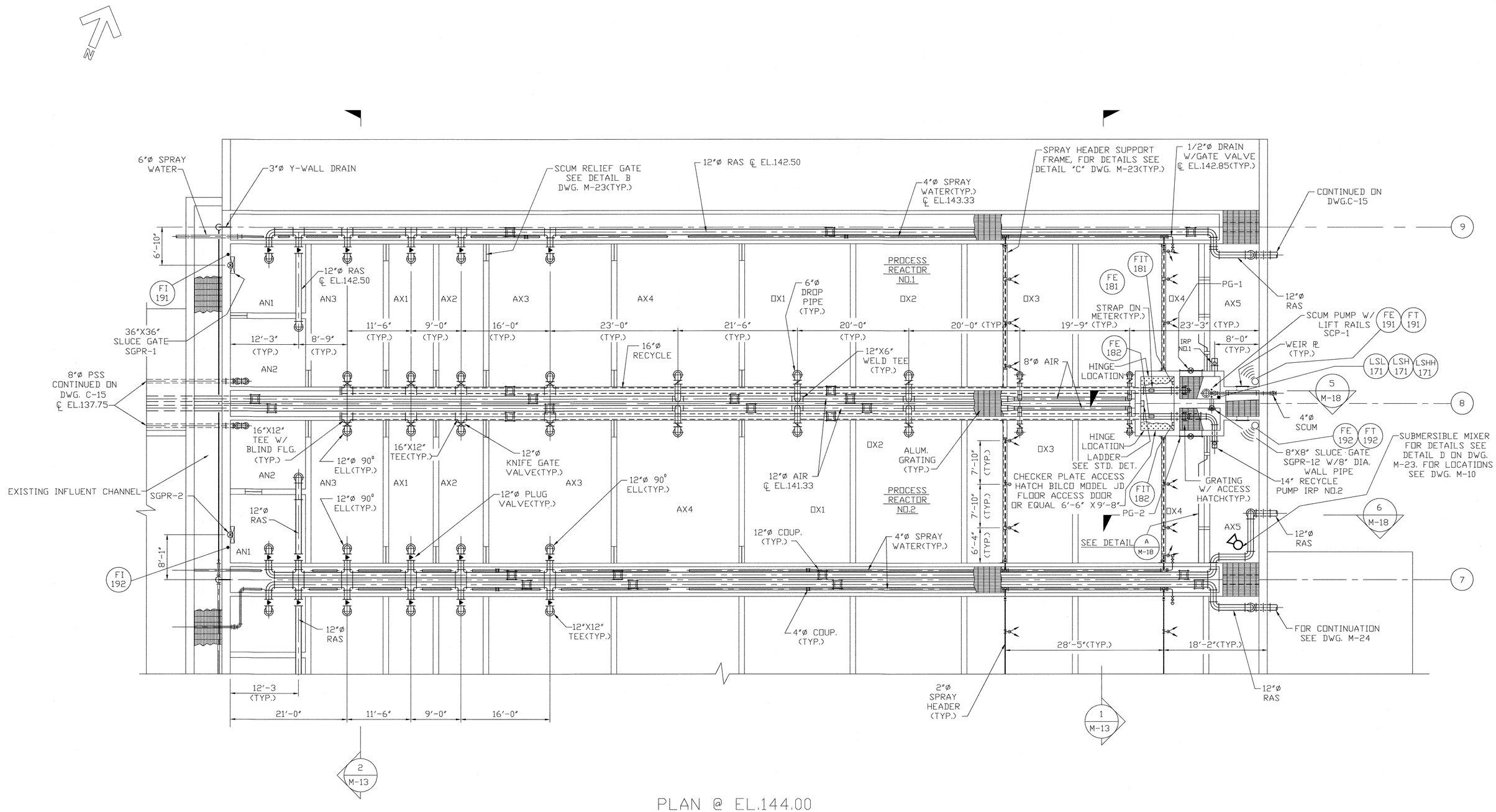

PLAN @ EL.144.00

SCALE:1/8"=1'-0"

Record Drawing Notes:

1. All elevations should be field verified before using
2. Weir and water elevations based on post-construction survey by Howard County.

DEPARTMENT OF PUBLIC WORKS
HOWARD COUNTY, MARYLAND

DIRECTOR OF PUBLIC WORKS — DATE 5/7/96
CHIEF, BUREAU OF ENGINEERING — DATE 5/7/96
CHIEF, BUREAU OF ENVIRONMENTAL SERVICES — DATE 5/7/96
CHIEF, UTILITY DESIGN DIVISION — DATE 5-7-96

M&E Metcalf & Eddy

REG/PROF. ENGR. — DATE 5-7-96

STATE OF MARYLAND — JONATHAN WINTHROP DOANE No. 15140 — REGISTERED PROFESSIONAL ENGINEER

	BY	NO.	REVISION	DATE
DES:				
DRN:				
CHK:				
DATE:	M.J.C.	1	RECORD DRAWING	11/2/94

MECHANICAL

SINGLE PASS PROCESS REACTORS 1 AND 2 UPPER PLAN

LITTLE PATUXENT WASTEWATER TREATMENT PLANT

LITTLE PATUXENT WASTEWATER TREATMENT PLANT EXPANSION
ADDITION NO. 5
CAPITAL PROJECT S-6153

CONTRACT NO. 20-3082
HOWARD COUNTY, MARYLAND

SCALE AS SHOWN

SHEET 105 OF 226

M-11A

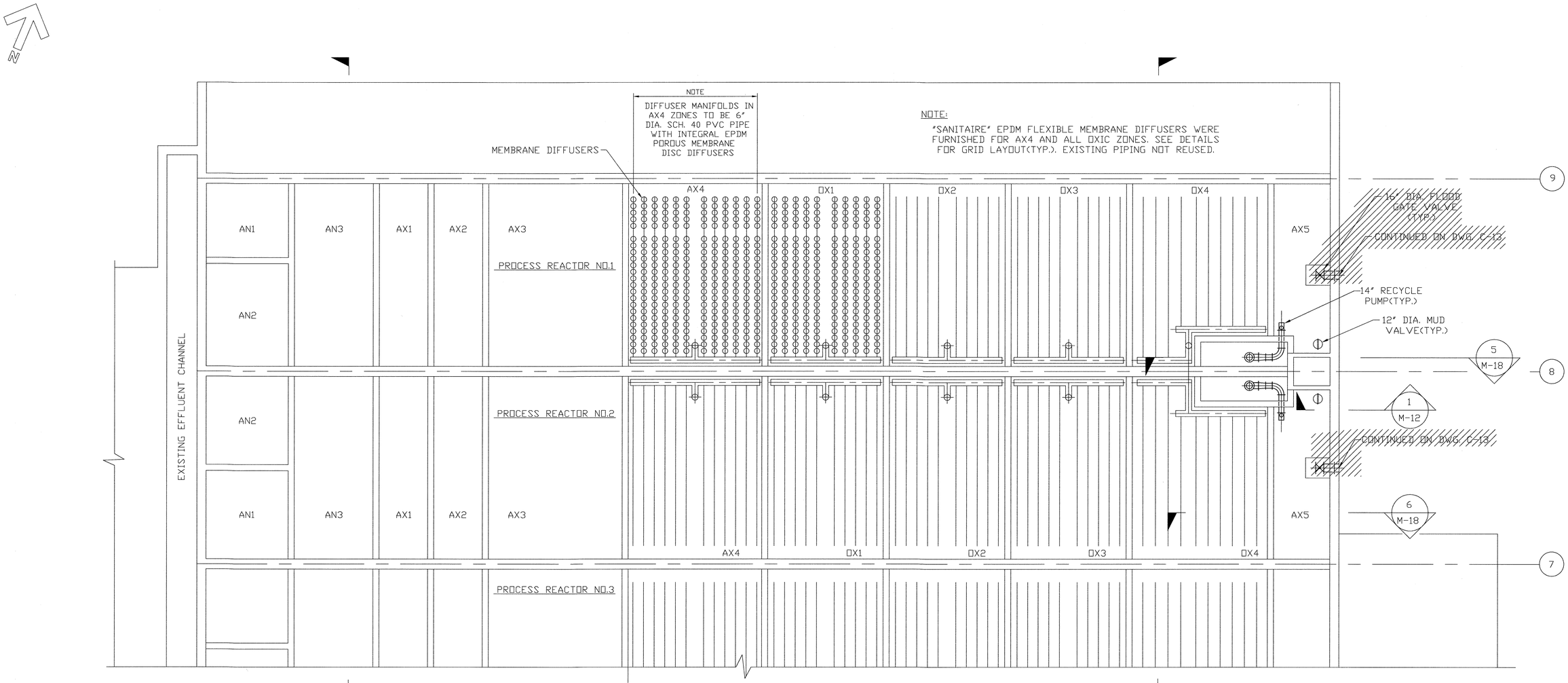

PLAN @ EL.130.00

SCALE:1/8"=1'-0"

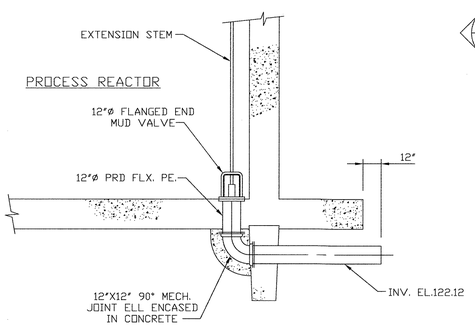

SECTION 1 / M-12

SCALE: NONE

Record Drawing Notes:
1. All elevations should be field verified before using
2. Weir and water elevations based on post-construction survey by Howard County.

DEPARTMENT OF PUBLIC WORKS HOWARD COUNTY, MARYLAND DIRECTOR OF PUBLIC WORKS 5/7/96 DATE CHIEF, BUREAU OF ENGINEERING 5/7/96 DATE CHIEF, BUREAU OF ENVIRONMENTAL SERVICES 5/7/96 DATE CHIEF, UTILITY DESIGN DIVISION 5-7-96 DATE	M&E Metcalf & Eddy REG. PROF. ENGR. 5-7-96 DATE	STATE OF MARYLAND JONATHAN WINTHROP DOANE No. 15140 REGISTERED PROFESSIONAL ENGINEER	DES: DRN: M.J.C. CHK: J.H. DATE:	BY: M.J.C. NO.: 1 REVISION: RECORD DRAWING DATE: 11/2/94	MECHANICAL SINGLE PASS PROCESS REACTORS 1 AND 2 LOWER PLAN

LITTLE PATUXENT WASTEWATER TREATMENT PLANT

LITTLE PATUXENT WASTEWATER TREATMENT PLANT EXPANSION
ADDITION NO. 5
CAPITAL PROJECT S-6153

CONTRACT NO. 20-3082
HOWARD COUNTY, MARYLAND

SCALE AS SHOWN

SHEET 106 OF 226

M-12A

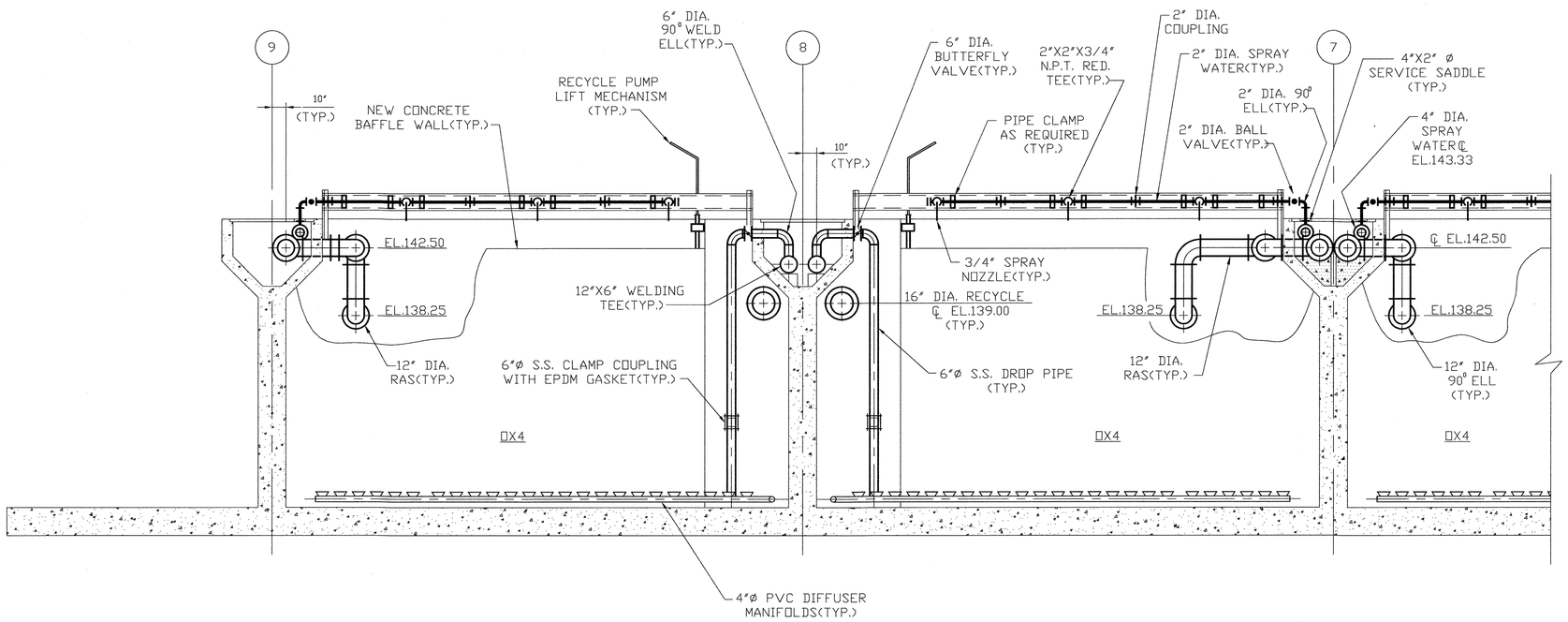

SECTION 1 (M-11, M-12)
SCALE:1/4"=1'-0"

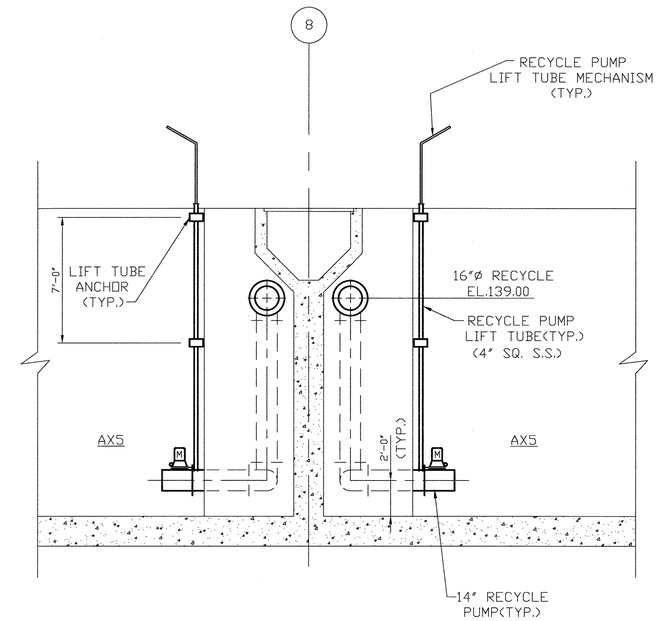

PARTIAL SECTION
IN ZONE AX5
SCALE:1/4"=1'-0"

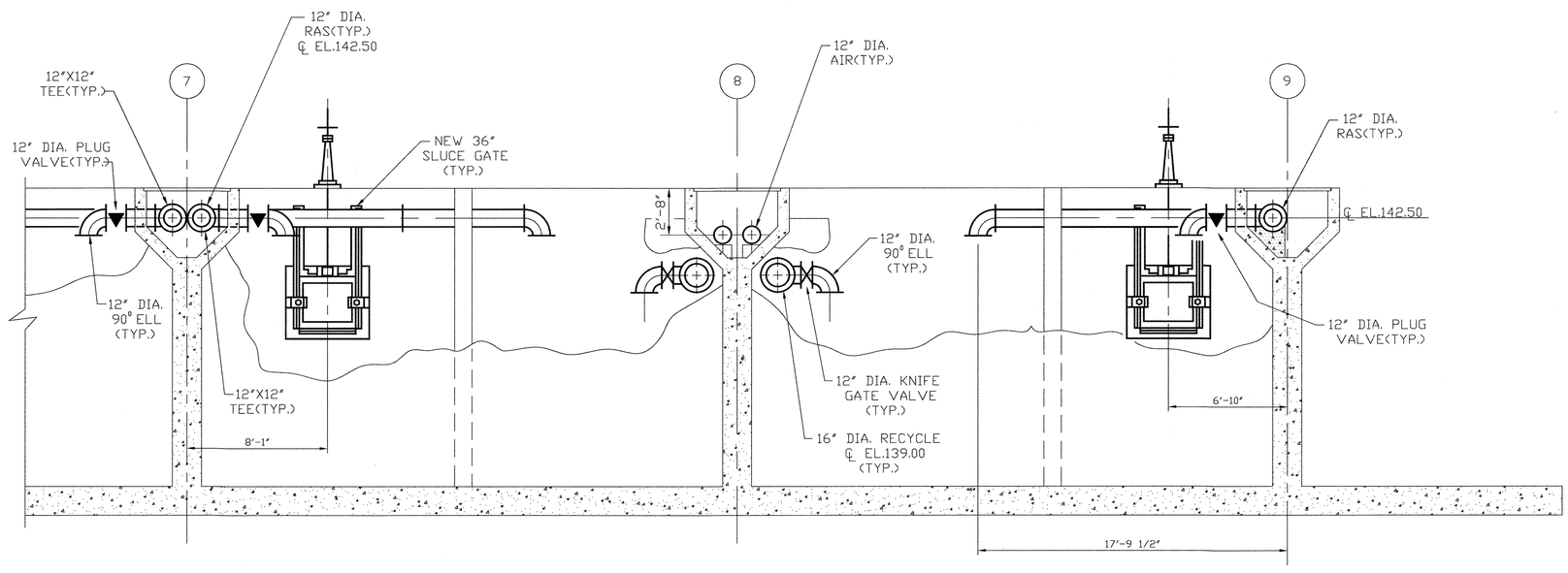

SECTION 2 (M-11, M-12)
SCALE:1/4"=1'-0"

Record Drawing Notes:
1. All elevations should be field verified before using
2. Weir and water elevations based on post-construction survey by Howard County.

DEPARTMENT OF PUBLIC WORKS
HOWARD COUNTY, MARYLAND

DIRECTOR OF PUBLIC WORKS — DATE 5/7/96
CHIEF, BUREAU OF ENGINEERING — DATE 5/7/96
CHIEF, BUREAU OF ENVIRONMENTAL SERVICES — DATE 5/7/96
CHIEF, UTILITY DESIGN DIVISION — DATE 5-7-96

M&E Metcalf & Eddy
REG. PROF. ENGR. — DATE 5-7-96

STATE OF MARYLAND — JONATHAN WINTHROP DOANE No. 15140 — REGISTERED PROFESSIONAL ENGINEER

DES:				
DRN: M.J.C.				
CHK: J.H.				
DATE:	M.J.C.	1	RECORD DRAWING	11/2/94
	BY	NO.	REVISION	DATE

MECHANICAL

SINGLE PASS PROCESS
REACTORS 1 AND 2
SECTIONS

LITTLE PATUXENT WASTEWATER TREATMENT PLANT

LITTLE PATUXENT WASTEWATER TREATMENT PLANT EXPANSION
ADDITION NO. 5
CAPITAL PROJECT S-6153

CONTRACT NO. 20-3082
HOWARD COUNTY, MARYLAND

SCALE AS SHOWN

SHEET 107 OF 226

M-13A

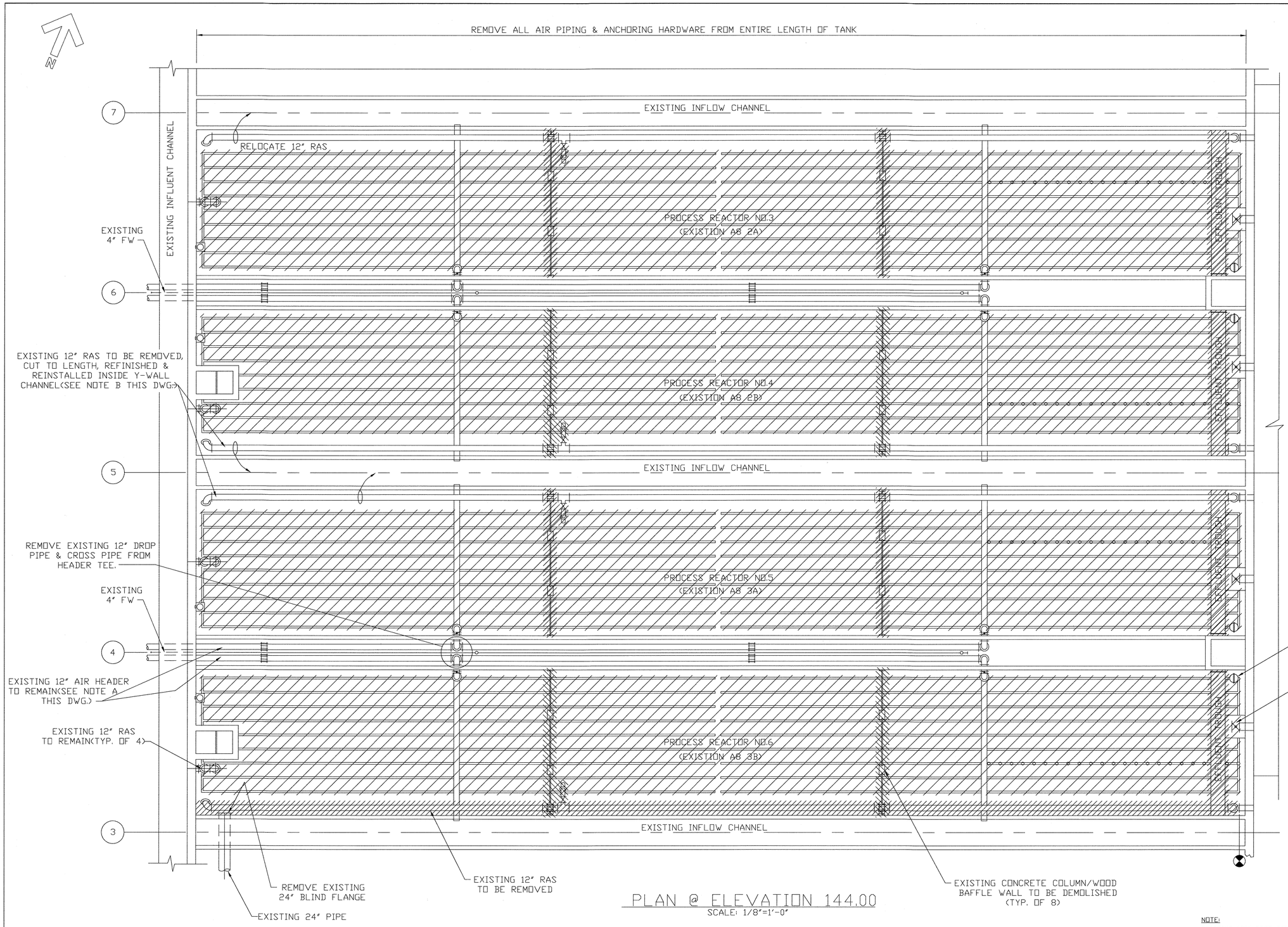

PLAN @ ELEVATION 144.00

SCALE: 1/8"=1'-0"

NOTES:

A. REUSE OF EXISTING AIR PIPING AND DIFFUSERS

1) ALL EXISTING 20"? AND 12"? AIR PIPING (Y-WALLS)HEADERS NOW IN USE IN THE EXISTING AERATION BASINS SHALL BE REUSED IN THIS CONTRACT.

B. REUSE OF EXISTING 12" DIA. RAS PIPING

2) EXISTING 12" DIA. D.I.P. RAS PIPING SHALL BE REMOVED, SANDBLASTED AND REPAINTED PER SPECIFICATION 09941. THIS PIPE SHALL SERVE AS STOCK TO BE CUT TO LENGTH, COUPLED, FITTED AND VALVED AS SHOWN ON DWG. M-15. IN ADDITION, PROVIDE NEW RAS PIPING, FITTINGS AND VALVES NECESSARY TO COMPLETE THE CONFIGURATIONS SHOWN ON DWG. M-15.

3) 12" RAS PIPING TO BE REINSTALLED INSIDE Y WALLS AND NEW 12" PIPING INSIDE Y WALLS MAY BE CONNECTED USING CUT GROOVE COUPLINGS PER SPECIFICATION 02615. ALL 12" RAS PIPING OUTSIDE THE "Y" WALL SHALL BE FLANGED.

4) ALL REUSED PIPING SHALL BE PROVIDED WITH NEW GASKETS AND BOLTS.

5) SEE SALVAGE REQUIREMENTS FOR DOME DIFFUSERS IN CONTRACT SPEC. SECT.02050,3.03.

6) CONTRACTOR SHALL DEMOLISH AND REMOVE ALL CONCRETE SADDLES SUPPORTING THE EXISTING CROSS PIPES (4 SADDLES PER CROSS PIPE). IDENTICAL SADDLES SHALL BE CONSTRUCTED UNDER ALL NEW AND RELOCATED CROSS PIPES.

NOTE:

EXISTING 12"Ø DROP PIPES WERE REUSED IN PROCESS REACTORS 7&8 ONLY. NO OTHER DROP PIPES, CROSS HEADERS, OR DEFUSERS WERE REUSED-ALL WERE DEMOLISHED AND REMOVED FROM JOBSITE, EPDM FLEXIBLE MEMBRANE DIFFUSERS AND PVC MANIFOLDS WERE FURNISHED IN ALL AERATED ZONES.

DEPARTMENT OF PUBLIC WORKS
HOWARD COUNTY, MARYLAND

DIRECTOR OF PUBLIC WORKS — DATE 5/7/96
CHIEF, BUREAU OF ENGINEERING — DATE 5/7/96
CHIEF, BUREAU OF ENVIRONMENTAL SERVICES — DATE 5/7/96
CHIEF, UTILITY DESIGN DIVISION — DATE 5-7-96

M&E Metcalf & Eddy

REG. PROF. ENGR. — DATE 5-7-96

STATE OF MARYLAND — JONATHAN WINTHROP DOANE No. 15140 — REGISTERED PROFESSIONAL ENGINEER

DES:				
DRN: M.J.C.				
CHK: J.H.				
DATE:	M.J.C.	1	RECORD DRAWING	11/2/94
	BY	NO.	REVISION	DATE

MECHANICAL

SINGLE PASS PROCESS REACTOR MODIFICATIONS DEMOLITION PLAN

LITTLE PATUXENT WASTEWATER TREATMENT PLANT

LITTLE PATUXENT WASTEWATER TREATMENT PLANT EXPANSION ADDITION NO. 5
CAPITAL PROJECT S-6153

CONTRACT NO. 20-3082
HOWARD COUNTY, MARYLAND

SCALE AS SHOWN

SHEET 109 OF 226

M-14A

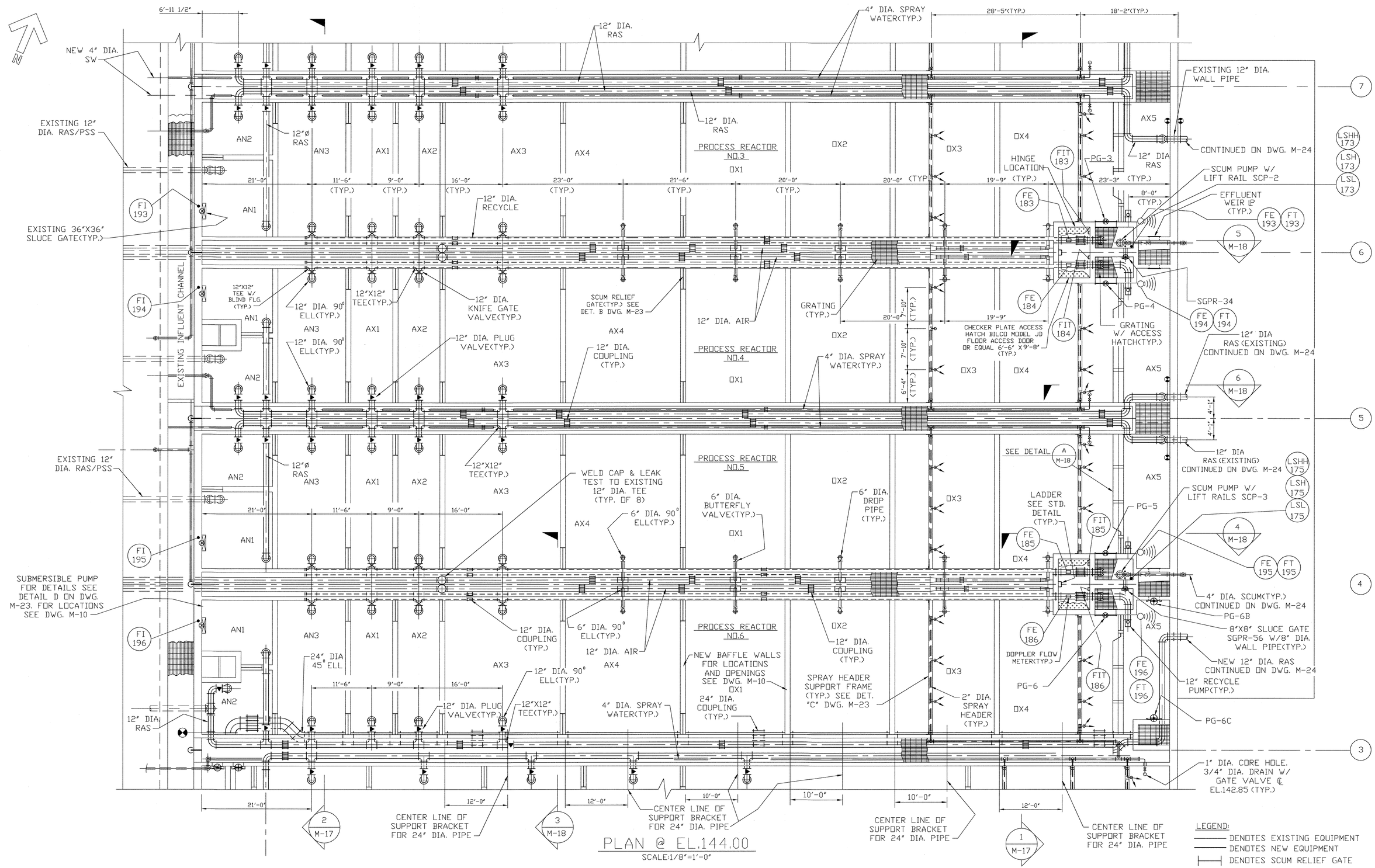

DEPARTMENT OF PUBLIC WORKS HOWARD COUNTY, MARYLAND	Metcalf & Eddy	STATE OF MARYLAND JONATHAN WINTHROP DOANE No. 15140 REGISTERED PROFESSIONAL ENGINEER	DES:				MECHANICAL	LITTLE PATUXENT WASTEWATER TREATMENT PLANT	SCALE AS SHOWN
DIRECTOR OF PUBLIC WORKS 5/7/96 DATE; CHIEF, BUREAU OF ENGINEERING 5/7/96 DATE			DRN: M.J.C.				SINGLE PASS PROCESS REACTOR MODIFICATIONS UPPER PLAN	LITTLE PATUXENT WASTEWATER TREATMENT PLANT EXPANSION ADDITION NO. 5 CAPITAL PROJECT S-6153	SHEET 109 OF 226
CHIEF, BUREAU OF ENVIRONMENTAL SERVICES 5/7/96 DATE; CHIEF, UTILITY DESIGN DIVISION 5-7-96 DATE	REG. PROF. ENGR. 5-7-96 DATE		CHK: J.H.					CONTRACT NO. 20-3082 HOWARD COUNTY, MARYLAND	M-15A
			DATE:	M.J.C. BY	1 NO.	RECORD DRAWING REVISION	11/2/94 DATE		

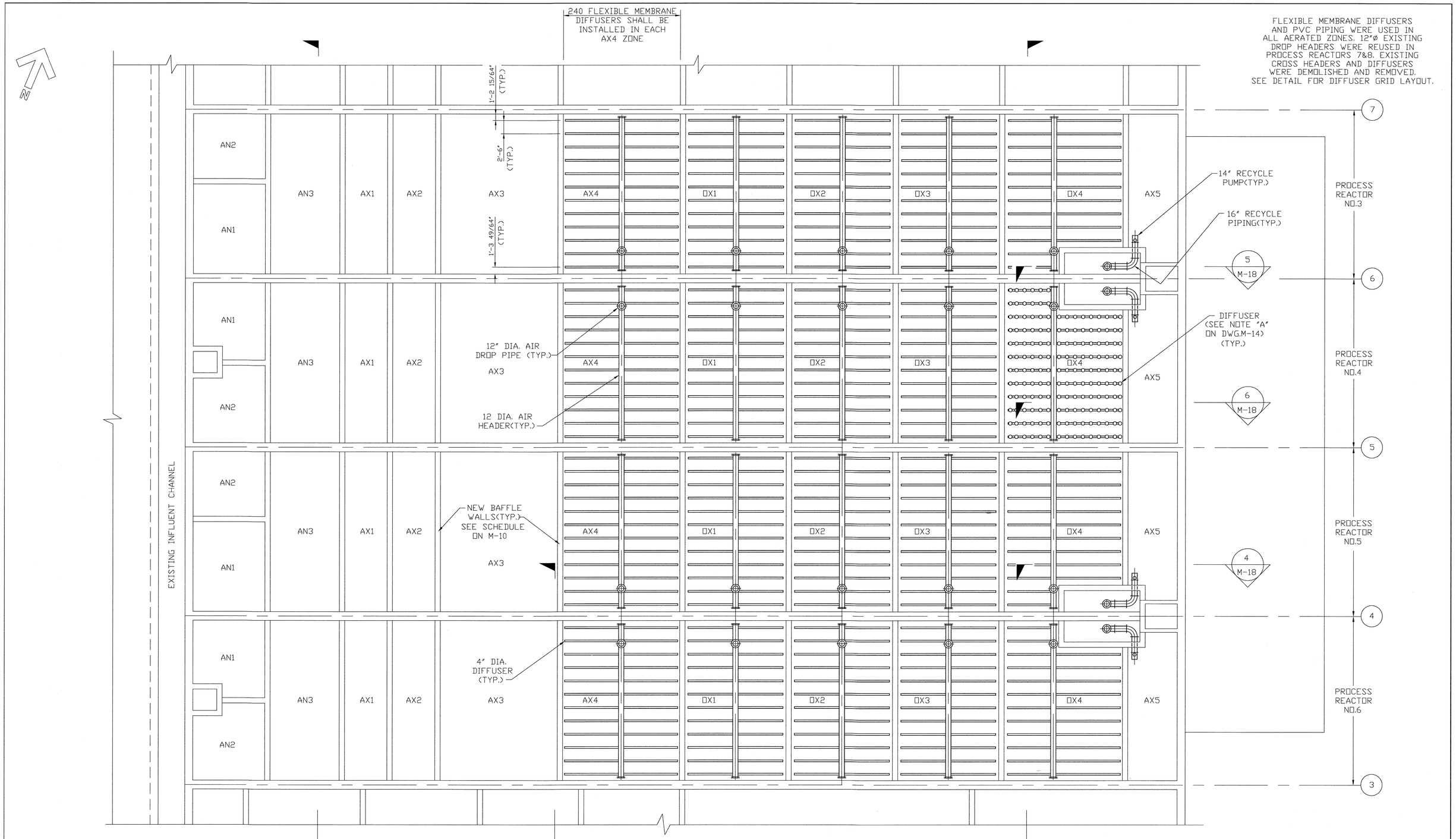

PLAN @ EL.130.00

SCALE:1/8"=1'-0"

Record Drawing Notes:

1. **All elevations should be field verified before using**
2. **Weir and water elevations based on post-construction survey by Howard County.**

DEPARTMENT OF PUBLIC WORKS
HOWARD COUNTY, MARYLAND

DIRECTOR OF PUBLIC WORKS — DATE 5/7/96
CHIEF, BUREAU OF ENGINEERING — DATE 5/7/96
CHIEF, BUREAU OF ENVIRONMENTAL SERVICES — DATE 5/7/96
CHIEF, UTILITY DESIGN DIVISION — DATE 5-7-96

M&E Metcalf & Eddy

REG. PROF. ENGR. — DATE 5-7-96

STATE OF MARYLAND — JONATHAN WINTHROP DOANE No. 15140 — REGISTERED PROFESSIONAL ENGINEER

DES:				
DRN: M.J.C.				
CHK: J.H.				
DATE:	M.J.C.	1	RECORD DRAWING	11/2/94
	BY	NO.	REVISION	DATE

MECHANICAL

SINGLE PASS PROCESS REACTOR MODIFICATIONS LOWER PLAN

LITTLE PATUXENT WASTEWATER TREATMENT PLANT

LITTLE PATUXENT WASTEWATER TREATMENT PLANT EXPANSION ADDITION NO. 5 CAPITAL PROJECT S-6153

CONTRACT NO. 20-3082
HOWARD COUNTY, MARYLAND

SCALE AS SHOWN

SHEET 110 OF 226

M-16A

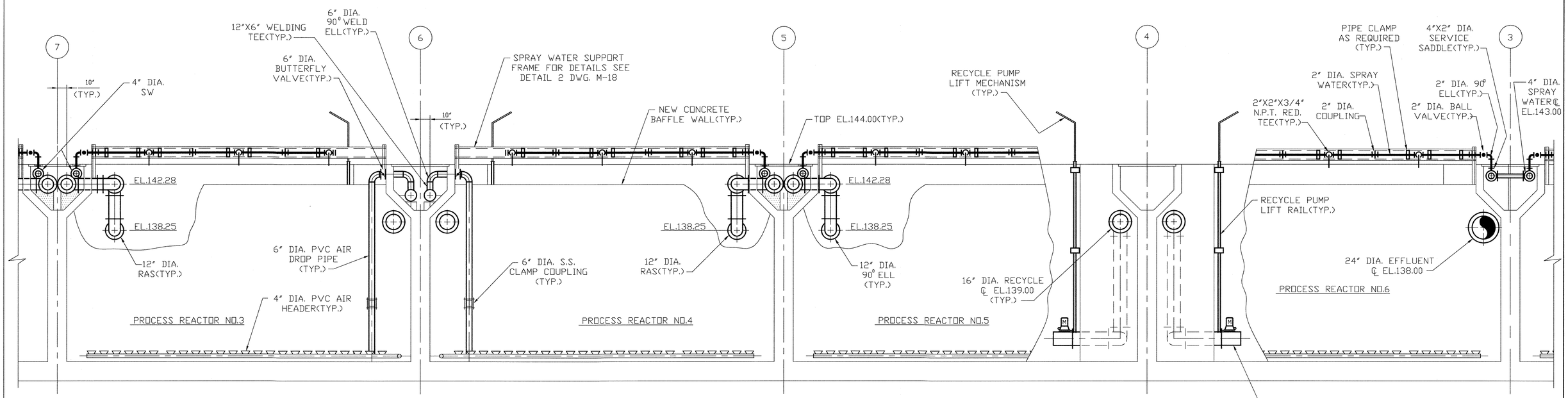

SECTION 1 (M-15, M-16)
SCALE:1/4"=1'-0"

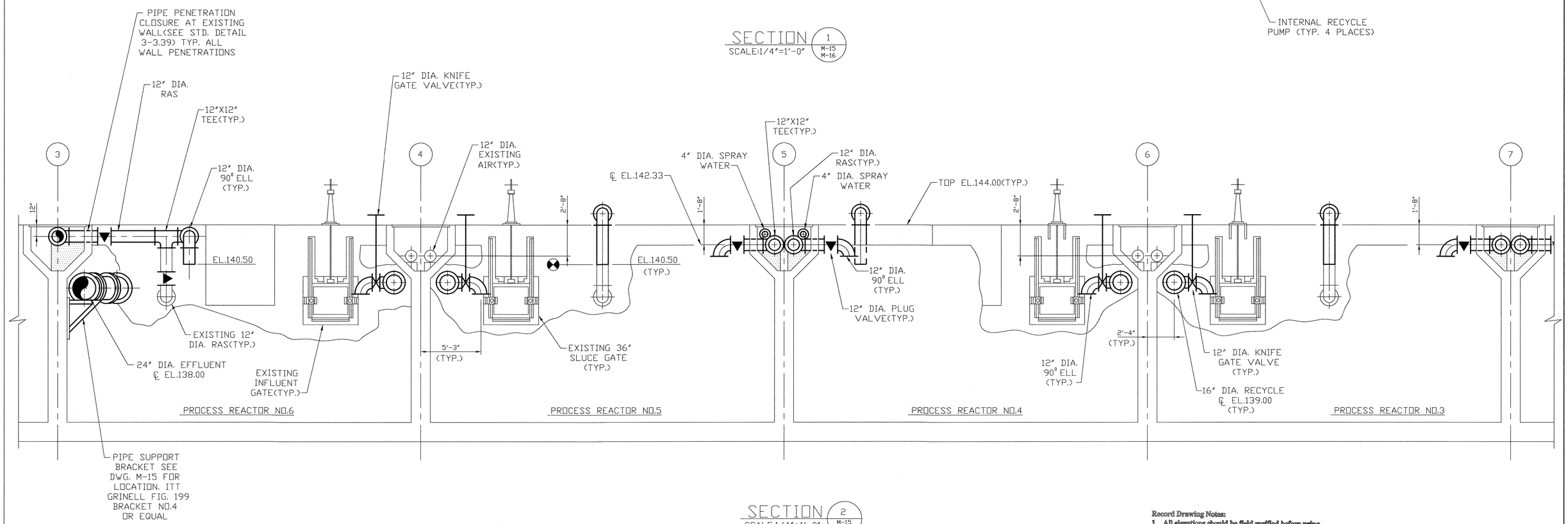

SECTION 2 (M-15, M-16)
SCALE:1/4"=1'-0"

Record Drawing Notes:
1. **All elevations should be field verified before using**
2. **Weir and water elevations based on post-construction survey by Howard County.**

DEPARTMENT OF PUBLIC WORKS
HOWARD COUNTY, MARYLAND

DIRECTOR OF PUBLIC WORKS — DATE 5/7/96
CHIEF, BUREAU OF ENGINEERING — DATE 5/7/96
CHIEF, BUREAU OF ENVIRONMENTAL SERVICES — DATE 5/7/96
CHIEF, UTILITY DESIGN DIVISION — DATE 5-7-96

Metcalf & Eddy
REG. PROF. ENGR. — DATE 5-7-96

STATE OF MARYLAND — JONATHAN WINTHROP DOANE — No. 15140 — REGISTERED PROFESSIONAL ENGINEER

DES:				
DRN: M.J.C.				
CHK: J.H.				
DATE:	M.J.C.	1	RECORD DRAWING	11/2/94
	BY	NO.	REVISION	DATE

MECHANICAL

SINGLE PASS PROCESS REACTOR MODIFICATIONS SECTIONS

LITTLE PATUXENT WASTEWATER TREATMENT PLANT

LITTLE PATUXENT WASTEWATER TREATMENT PLANT EXPANSION
ADDITION NO. 5
CAPITAL PROJECT S-6153

CONTRACT NO. 20-3082
HOWARD COUNTY, MARYLAND

SCALE AS SHOWN

SHEET 111 OF 226

M-17A

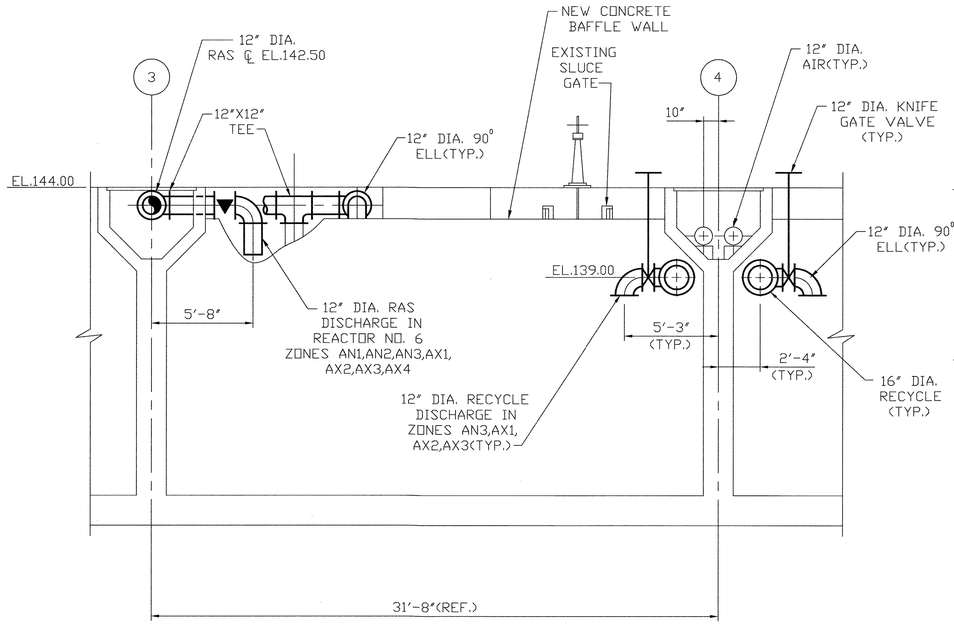

SECTION 3 (M-15, M-16)
SCALE:1/4"=1'-0"

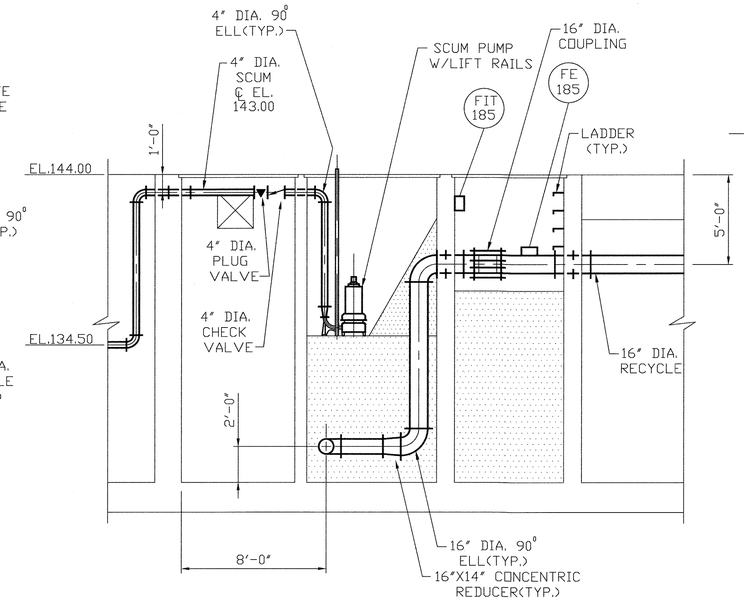

SECTION 5 (M-11, M-12, M-15, M-16)
SCALE: NONE

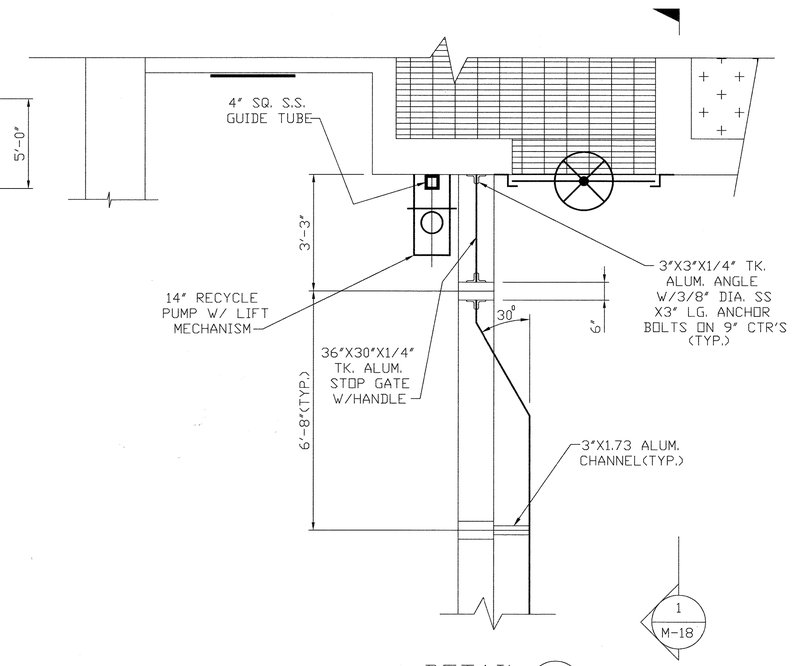

DETAIL A (M-15)
SCALE: 1/2"=1'-0"

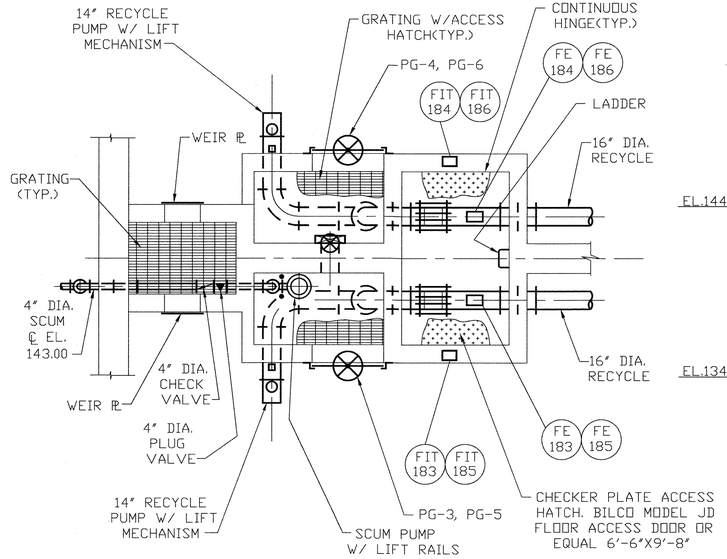

TYPICAL PLAN
SCUM PIT & METER VAULT
SCALE: NONE

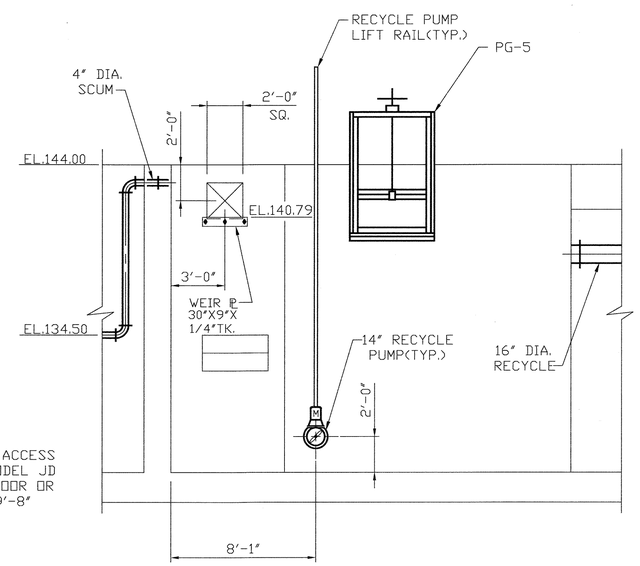

SECTION 4 (M-15, M-16)
SCALE:1/4"=1'-0"

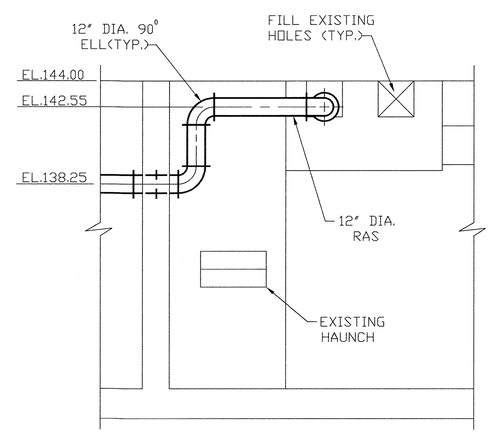

SECTION 6 (M-11, M-12, M-15, M-16)
SCALE:1/4"=1'-0"

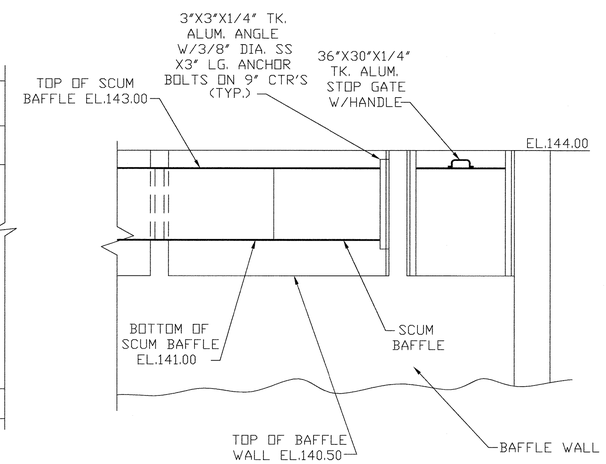

SECTION 1 (M-18)
SCALE:1/2"=1'-0"

Record Drawing Notes:
1. All elevations should be field verified before using
2. Weir and water elevations based on post-construction survey by Howard County.

DEPARTMENT OF PUBLIC WORKS HOWARD COUNTY, MARYLAND	Metcalf & Eddy						MECHANICAL	LITTLE PATUXENT WASTEWATER TREATMENT PLANT	SCALE AS SHOWN
DIRECTOR OF PUBLIC WORKS — DATE 5/7/96	REG. PROF. ENGR. — DATE 5-7-96	STATE OF MARYLAND — JONATHAN WINTHROP DOANE No. 15140 — REGISTERED PROFESSIONAL ENGINEER	DES:				SINGLE PASS PROCESS REACTOR MODIFICATIONS SECTIONS AND DETAILS	LITTLE PATUXENT WASTEWATER TREATMENT PLANT EXPANSION ADDITION NO. 5 CAPITAL PROJECT S-6153	SHEET 112 OF 226
CHIEF, BUREAU OF ENGINEERING — DATE 5/7/96			DRN: M.J.C.					CONTRACT NO. 20-3082 HOWARD COUNTY, MARYLAND	M-18A
CHIEF, BUREAU OF ENVIRONMENTAL SERVICES — DATE 5/7/96			CHK: J.H.						
CHIEF, UTILITY DESIGN DIVISION — DATE 5-7-96			DATE:	M.J.C. (BY)	1 (NO.)	RECORD DRAWING (REVISION)	11/2/94 (DATE)		

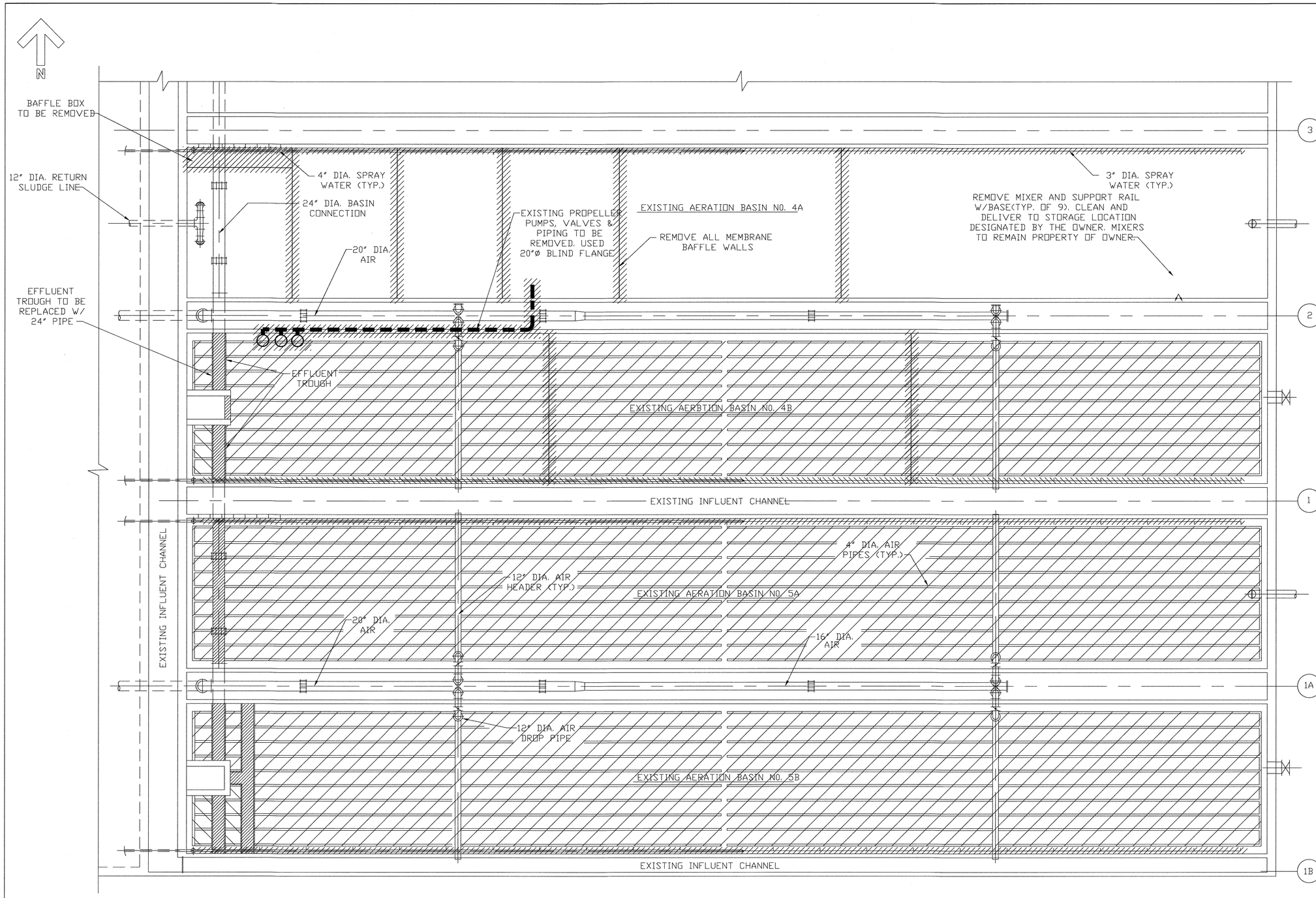

PLAN @ EL.144.00

SCALE:1/8"=1'-0"

NOTES:

A. REUSE OF EXISTING AIR PIPING AND DIFFUSERS

1) ALL EXISTING 20"? AND 12"? AIR PIPING HEADERS NOW IN USE IN THE EXISTING AERATION BASINS SHALL BE REUSED IN THIS CONTRACT.

2) 40 12" DIA. DROP PIPES WITH 40 BOTTOM CROSS PIPES ARE REQUIRED IN THE NEW PROCESS REACTORS. OF THESE, 38 ARE TO BE PROVIDED NEW AND 12 ARE TO CONSIST OF EXISTING 12" DIA. DROP/CROSS PIPE COMBINATIONS NOW IN PLACE IN THE EXISTING AERATION BASINS. THESE SHALL BE REINSTALLED AT NEW LOCATIONS SHOWN ON THE DRAWINGS. ALL MAIN AIR HEADER OPENINGS REMAINING AFTER RELOCATION OF DROP/CROSS PIPES SHALL BE CAPPED AND TESTED FOR LEAKAGE.

3) WITH THE EXCEPTION OF AX4 ZONES, ALL DIFFUSERS AND DIFFUSER PIPING SHOWN IN NEW PROCESS REACTORS 1 THRU 8 SHALL CONSIST OF THE EXISTING DIFFUSERS AND PIPES NOW INSTALLED IN THE EXISTING AERATION BASINS. THE EXISTING DIFFUSER ASSEMBLIES SHALL BE REMOVED, CUT TO THE NEW LENGTHS INDICATED ON PROCESS REACTOR DRAWINGS, CAPPED AND REINSTALLED USING EXISTING ANCHOR BRACKETS WITH NEW S.S. BOLTS.

4) DIFFUSER MANIFOLDS IN ALL AX4 ZONES SHALL CONSIST OF 4" SCHEDULE 40 PVC PIPE WITH INTEGRAL EPDM POROUS MEMBRANE DIFFUSERS.

B. REUSE OF EXISTING 12" DIA. RAS PIPING

1) EXISTING 12" DIA. D.I.P. RAS PIPING SHALL BE REMOVED, SANDBLASTED AND REPAINTED PER SPECIFICATION 09941. THIS PIPE SHALL SERVE AS STOCK TO BE CUT TO LENGTH, COUPLED, FITTED AND VALVED AS SHOWN ON DWG. M-15. IN ADDITION, PROVIDE NEW RAS PIPING, FITTINGS AND VALVES NECESSARY TO COMPLETE THE CONFIGURATIONS SHOWN ON DWG. M-15.

2) 12" RAS PIPING TO BE REINSTALLED INSIDE Y WALLS AND NEW 12" PIPING INSIDE Y WALLS MAY BE CONNECTED USING CUT GROOVE COUPLINGS PER SPECIFICATION 02615. ALL 12" RAS PIPING OUTSIDE THE "Y" WALL SHALL BE FLANGED.

3) ALL REUSED PIPING SHALL BE PROVIDED WITH NEW GASKETS AND BOLTS.

NOTE:

EXISTING CROSS HEADERS AND DIFFUSERS WERE NOT REUSED. FLEXIBLE MEMBRANE DIFFUSERS AND PVC PIPING WERE INSTALLED IN ALL AERATED ZONES. 12"Ø STAINLESS STEEL DROP HEADERS WERE REUSED IN PR 7 & 8 ONLY.

DEPARTMENT OF PUBLIC WORKS
HOWARD COUNTY, MARYLAND

DIRECTOR OF PUBLIC WORKS — DATE 5/7/96
CHIEF, BUREAU OF ENGINEERING — DATE 5/7/96
CHIEF, BUREAU OF ENVIRONMENTAL SERVICES — DATE 5/7/96
CHIEF, UTILITY DESIGN DIVISION — DATE 5-7-96

M&E Metcalf & Eddy

REG/PROF. ENGR. — DATE 5-7-96

STATE OF MARYLAND — JONATHAN WINTHROP DOANE No. 15140 — REGISTERED PROFESSIONAL ENGINEER

DES:				
DRN: M.J.C.				
CHK: J.H.				
DATE:	M.J.C.	1	RECORD DRAWING	11/2/94
	BY	NO.	REVISION	DATE

MECHANICAL

DOUBLE PASS PROCESS REACTOR MODIFICATIONS PLAN, DEMOLITION

LITTLE PATUXENT WASTEWATER TREATMENT PLANT

LITTLE PATUXENT WASTEWATER TREATMENT PLANT EXPANSION ADDITION NO. 5
CAPITAL PROJECT S-6153

CONTRACT NO. 20-3082
HOWARD COUNTY, MARYLAND

SCALE AS SHOWN

SHEET 113 OF 226

M-19A

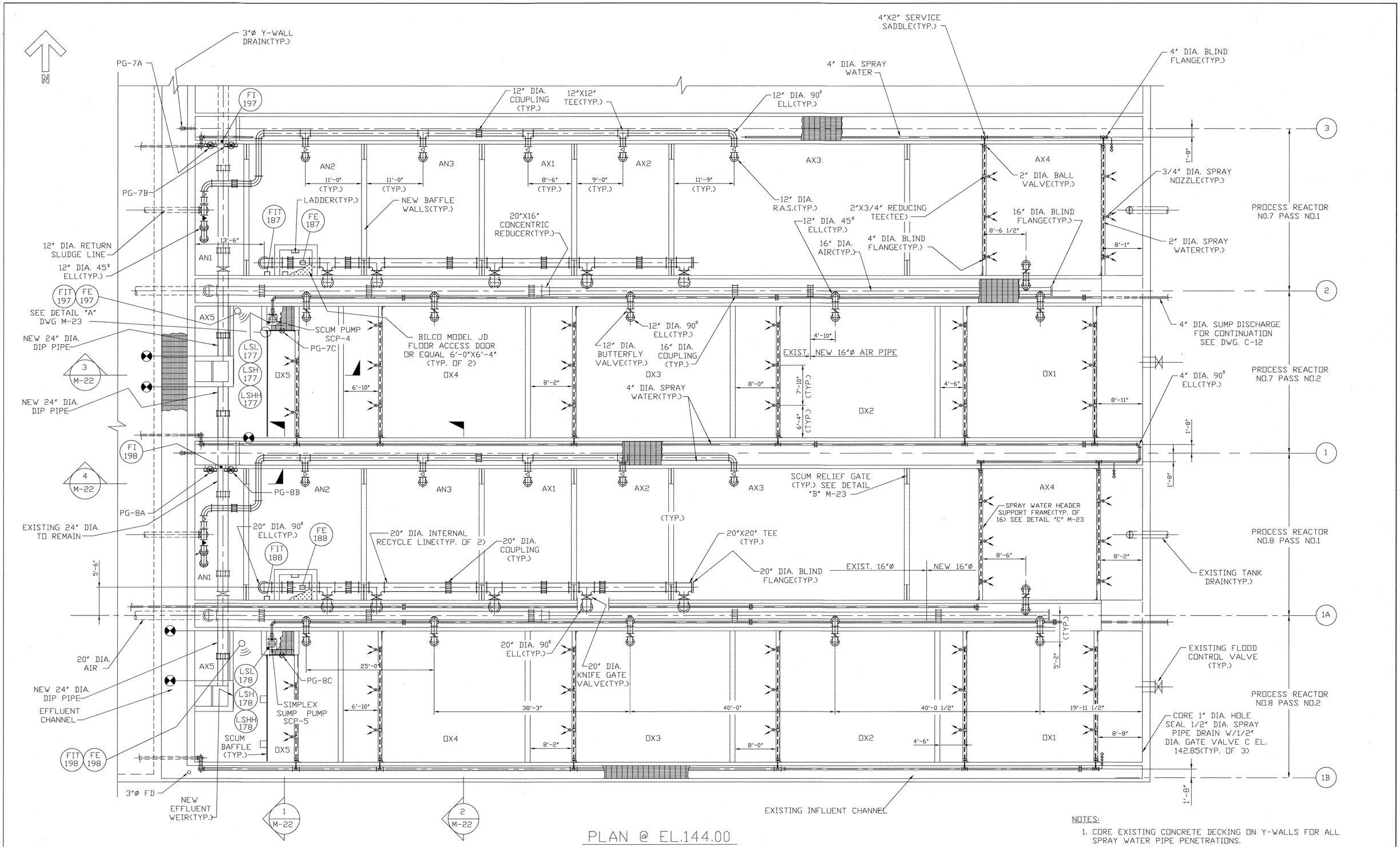

PLAN @ EL.144.00

SCALE:1/8"=1'-0"

NOTES:

1. CORE EXISTING CONCRETE DECKING ON Y-WALLS FOR ALL SPRAY WATER PIPE PENETRATIONS.
2. INSULATE AND HEAT TRACE SCUM PUMP DISCHARGE PIPING ON ALL PROCESS REACTORS.

DEPARTMENT OF PUBLIC WORKS
HOWARD COUNTY, MARYLAND

DIRECTOR OF PUBLIC WORKS — DATE 5/7/96
CHIEF, BUREAU OF ENGINEERING — DATE 5/7/96
CHIEF, BUREAU OF ENVIRONMENTAL SERVICES — DATE 5/7/96
CHIEF, UTILITY DESIGN DIVISION — DATE 5-7-96

M&E Metcalf & Eddy
REG. PROF. ENGR. — DATE 5-7-96

STATE OF MARYLAND — JONATHAN WINTHROP DOANE No. 15140 — REGISTERED PROFESSIONAL ENGINEER

DES:			
DRN: M.J.C.			
CHK: J.H.			
DATE:	M.J.C.	1	RECORD DRAWING	11/2/94
	BY	NO.	REVISION	DATE

MECHANICAL

DOUBLE PASS PROCESS REACTOR MODIFICATIONS UPPER PLAN

LITTLE PATUXENT WASTEWATER TREATMENT PLANT

LITTLE PATUXENT WASTEWATER TREATMENT PLANT EXPANSION
ADDITION NO. 5
CAPITAL PROJECT S-6153

CONTRACT NO. 20-3082
HOWARD COUNTY, MARYLAND

SCALE AS SHOWN

SHEET 114 OF 226

M-20A

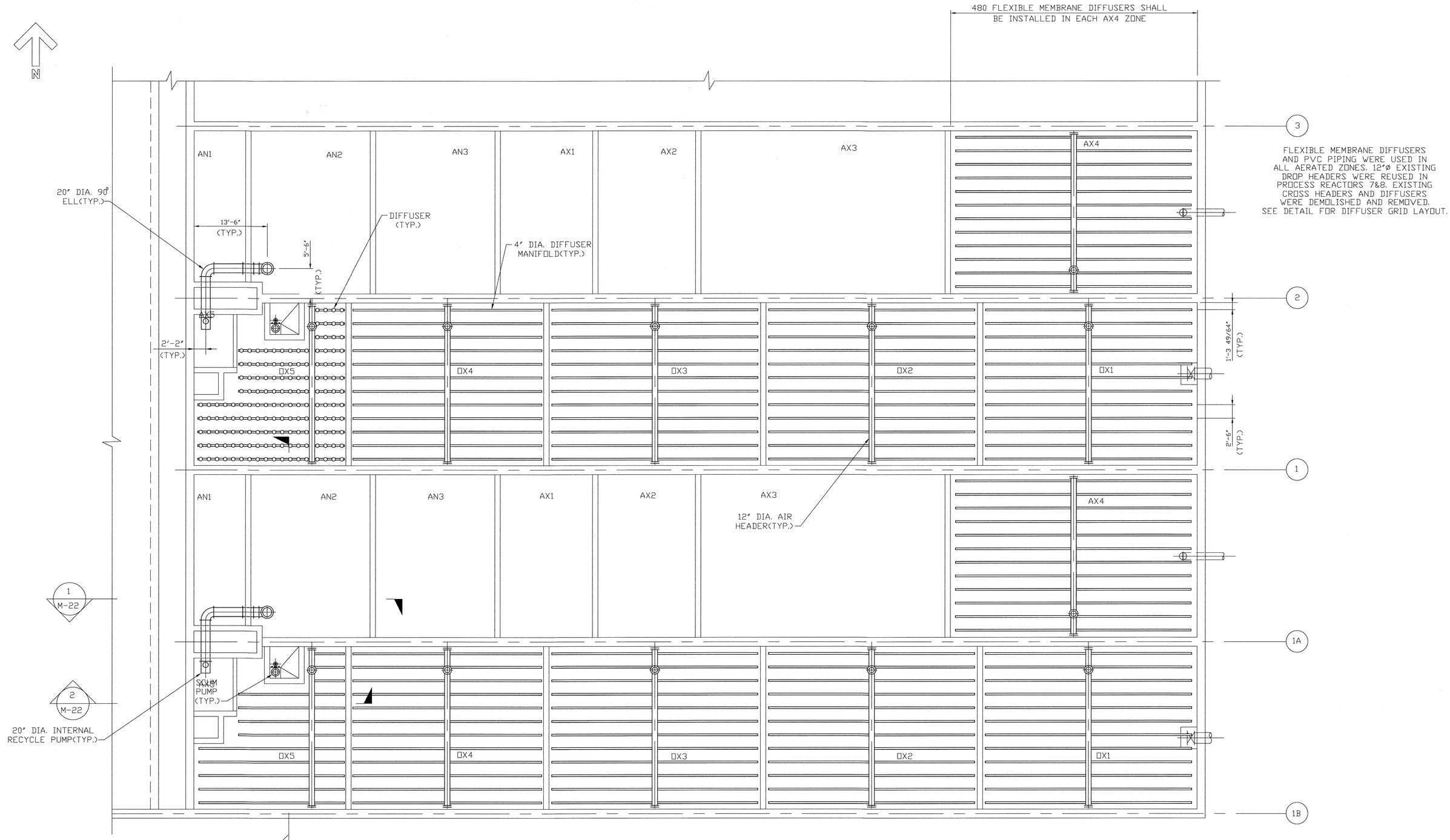

PLAN @ EL.136.00

SCALE:1/8"=1'-0"

DEPARTMENT OF PUBLIC WORKS
HOWARD COUNTY, MARYLAND

DIRECTOR OF PUBLIC WORKS — DATE 5/7/96
CHIEF, BUREAU OF ENGINEERING — DATE 5/7/96
CHIEF, BUREAU OF ENVIRONMENTAL SERVICES — DATE 5/7/96
CHIEF, UTILITY DESIGN DIVISION — DATE 5-7-96

M&E Metcalf & Eddy

REG. PROF. ENGR. — DATE 5-7-96

STATE OF MARYLAND — JONATHAN WINTHROP DOANE — No. 15140 — REGISTERED PROFESSIONAL ENGINEER

DES:				
DRN: M.J.C.				
CHK: J.H.				
DATE:	M.J.C.	1	RECORD DRAWING	11/2/94
	BY	NO.	REVISION	DATE

MECHANICAL

DOUBLE PASS PROCESS REACTOR MODIFICATIONS LOWER PLAN

LITTLE PATUXENT WASTEWATER TREATMENT PLANT

LITTLE PATUXENT WASTEWATER TREATMENT PLANT EXPANSION ADDITION NO. 5 CAPITAL PROJECT S-6153

CONTRACT NO. 20-3082
HOWARD COUNTY, MARYLAND

SCALE AS SHOWN

SHEET 115 OF 226

M-21A

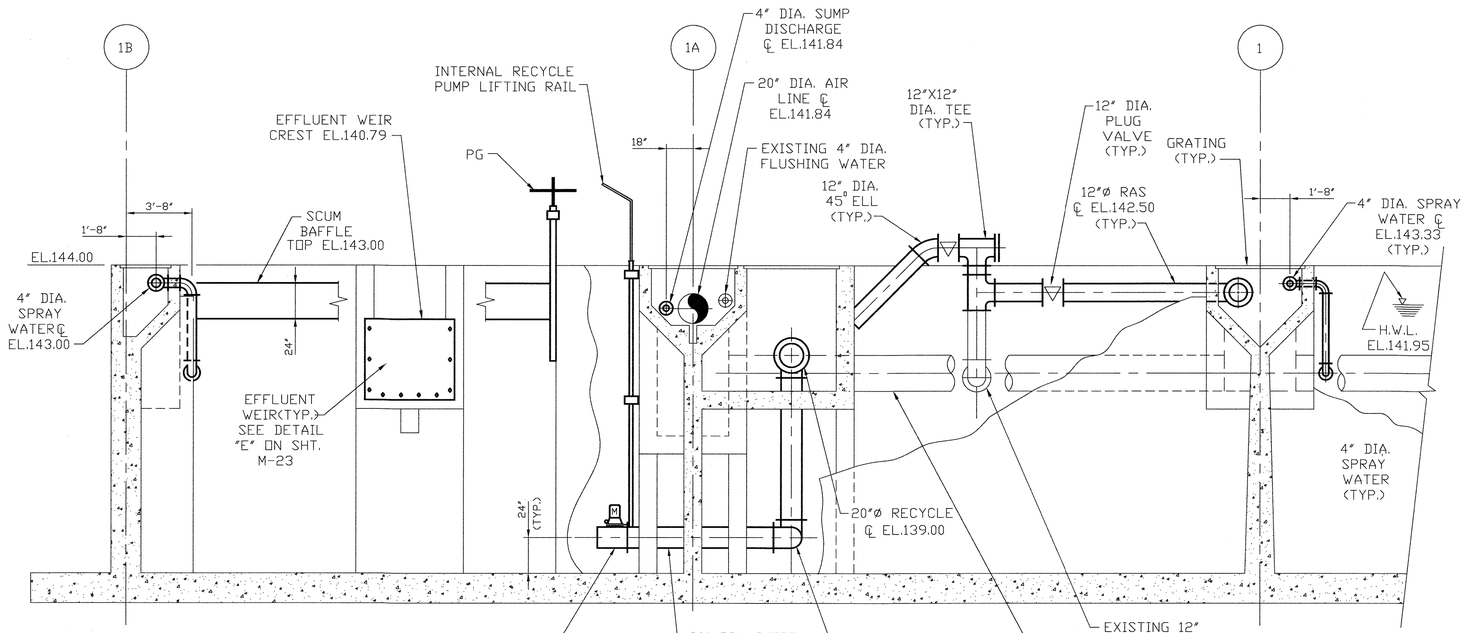

SECTION 1 / M-20
SCALE:1/4"=1'-0"

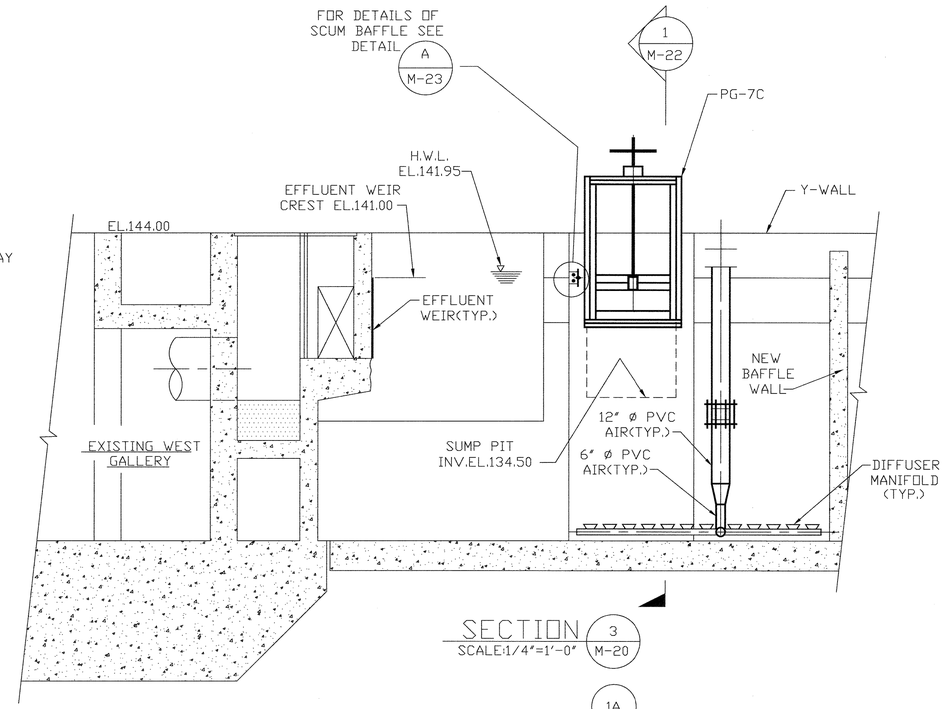

SECTION 3 / M-20
SCALE:1/4"=1'-0"

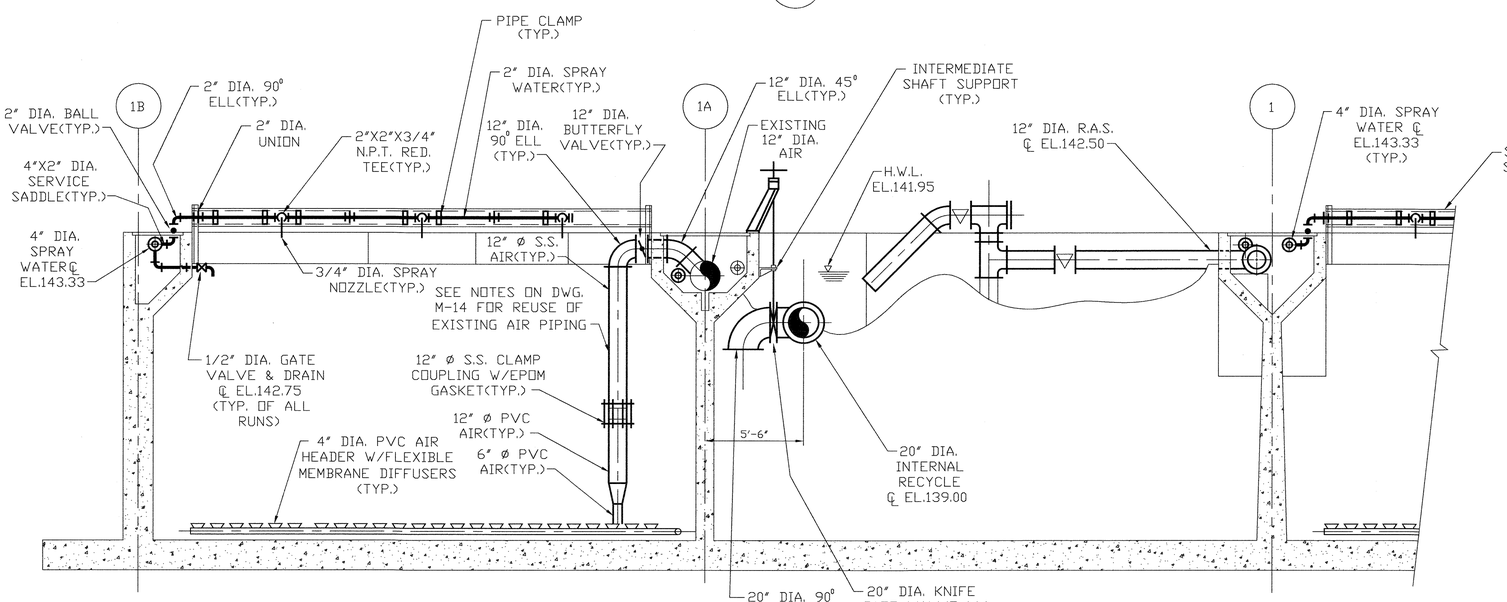

SECTION 2 / M-20
SCALE:1/4"=1'-0"

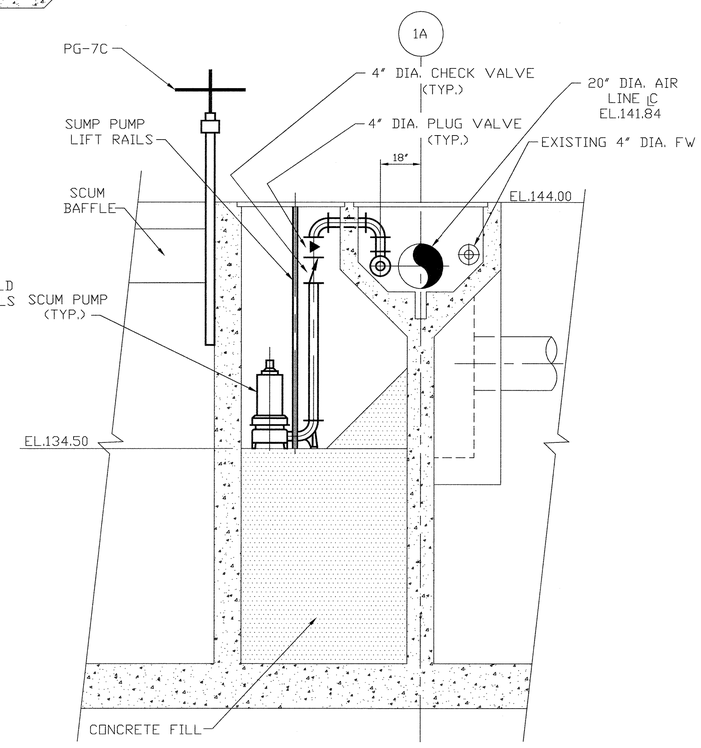

SECTION 1 / M-22
SCALE:3/8"=1'-0"

Record Drawing Notes:
1. All elevations should be field verified before using.
2. Weir and water elevations based on post-construction survey by Howard County.

DEPARTMENT OF PUBLIC WORKS HOWARD COUNTY, MARYLAND DIRECTOR OF PUBLIC WORKS — DATE 5/7/96 CHIEF, BUREAU OF ENGINEERING — DATE 5/7/96 CHIEF, BUREAU OF ENVIRONMENTAL SERVICES — DATE 5/7/96 CHIEF, UTILITY DESIGN DIVISION — DATE 5-7-96	M&E Metcalf & Eddy REQ. PROF. ENGR. — DATE 5-7-96	STATE OF MARYLAND JONATHAN WINTHROP DOANE No. 15140 REGISTERED PROFESSIONAL ENGINEER	DES: DRN: M.J.C. CHK: J.H. DATE:	BY: M.J.C. NO.: 1 REVISION: RECORD DRAWING DATE: 11/2/94	MECHANICAL DOUBLE PASS PROCESS REACTOR MODIFICATIONS SECTIONS

LITTLE PATUXENT WASTEWATER TREATMENT PLANT
LITTLE PATUXENT WASTEWATER TREATMENT PLANT EXPANSION
ADDITION NO. 5
CAPITAL PROJECT S-6153
CONTRACT NO. 20-3082
HOWARD COUNTY, MARYLAND

SCALE AS SHOWN
SHEET 116 OF 226
M-22A

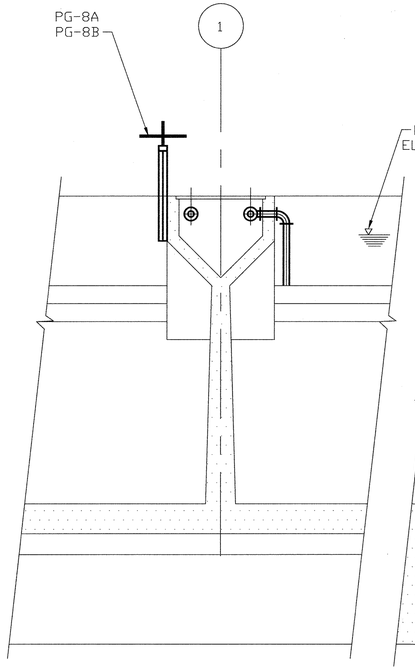

SECTION 1/M-23
SCALE:1/4"=1'-0"

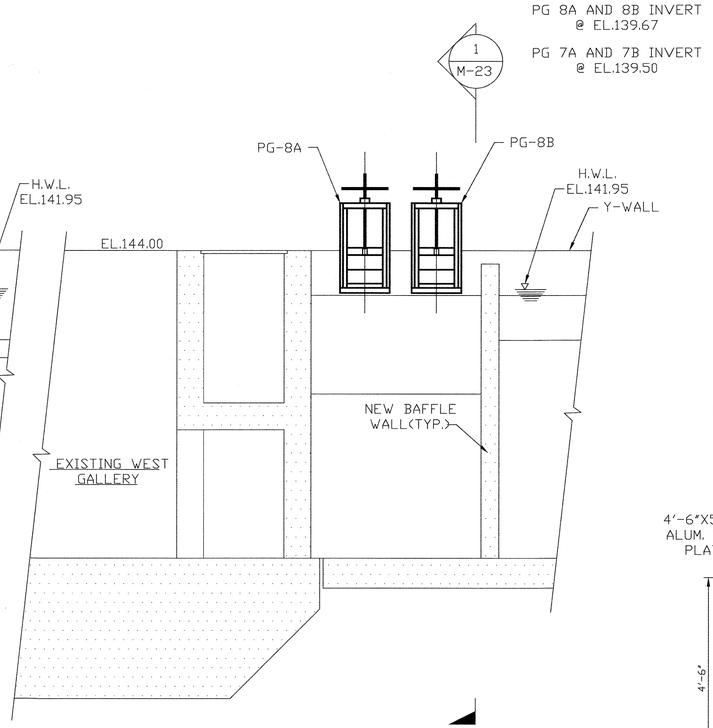

SECTION 4/M-20
SCALE:1/4"=1'-0"

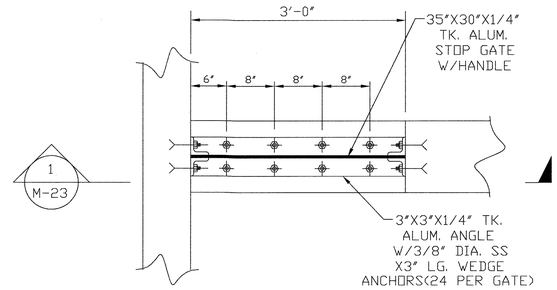

DETAIL "B"
SCUM RELIEF GATE
SCALE: 1"=1'-0"

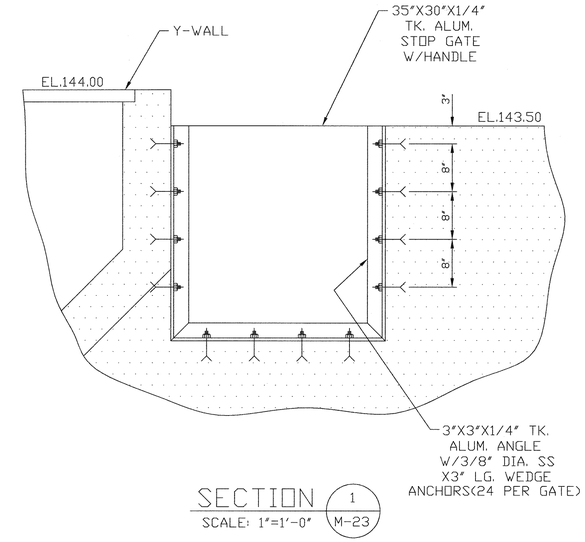

SECTION 1/M-23
SCALE: 1"=1'-0"

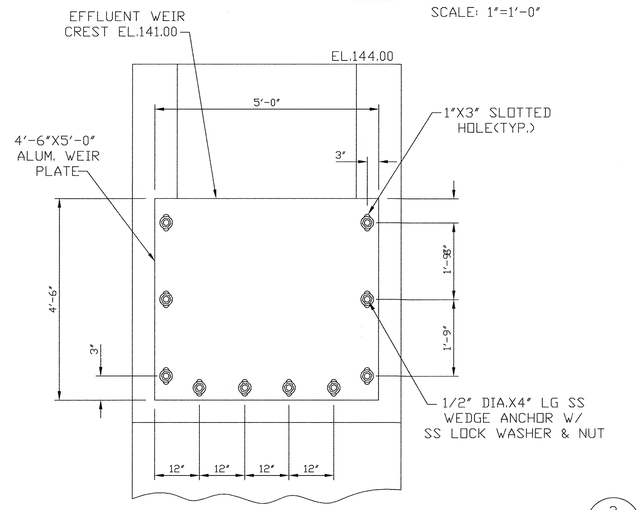

DETAIL "E"
EFFLUENT WEIR
SCALE: NONE

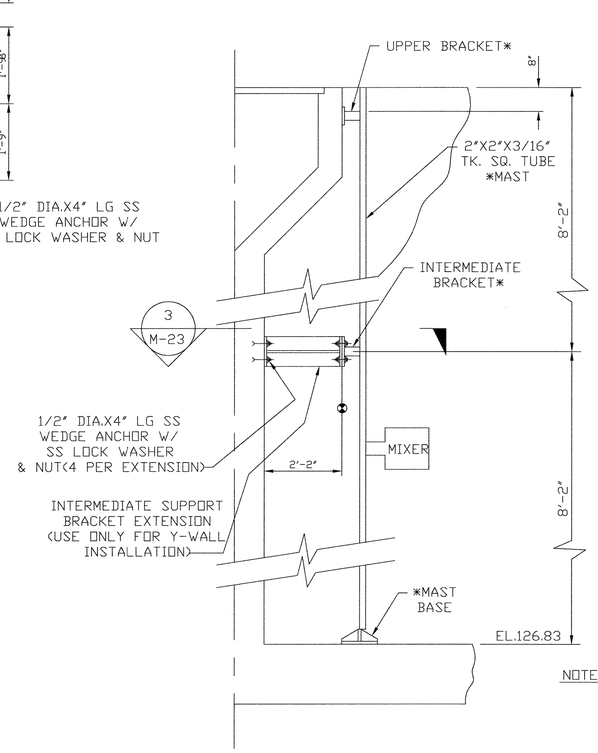

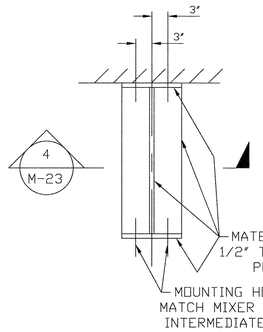

SECTION 3/M-23
SCALE: 1"=1'-0"

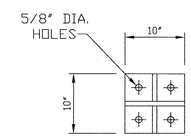

SECTION 4/M-23
SCALE: 1"=1'-0"

NOTES:

1. ITEMS WITH ASTERISK TO BE PROVIDED BY MIXER SUPPLIER
2. MAST TO INCLUDE 10 POSITION LOCKABLE POSITIONER PLATE AND HOIST SOCKET TO ATTACH TO UPPER SUPPORT BRACKET.

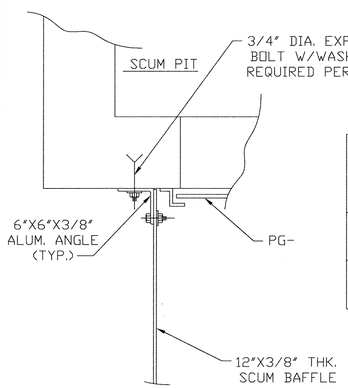

PLAN

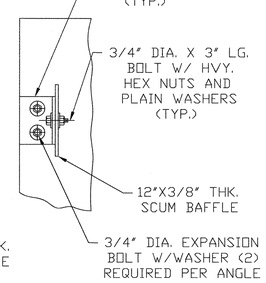

ELEVATION

DETAIL A/M-22
SCALE:1"-1'-0"

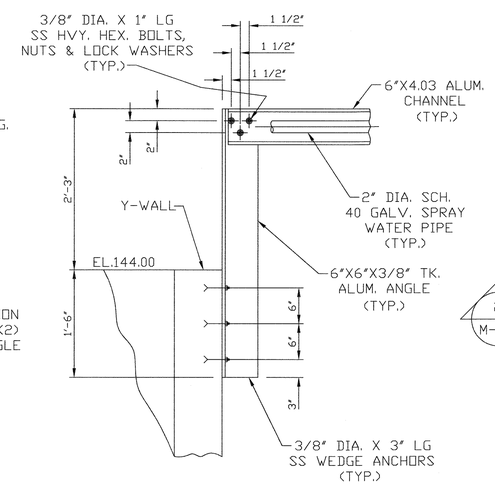

SECTION 2/M-23
SCALE: 1"=1'-0"

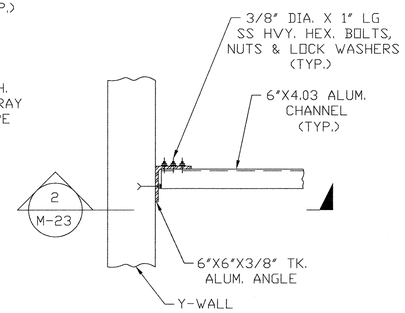

DETAIL "C"
SPRAY WATER
SUPPORT FRAME
SCALE: 1"=1'-0"

Record Drawing Notes:
1. All elevations should be field verified before using.
2. Weir and water elevations based on post-construction survey by Howard County.

DETAIL "D"
SUBMERSIBLE MIXER
LIFTOUT SYSTEM
SCALE: 1/2"=1'-0"

DEPARTMENT OF PUBLIC WORKS HOWARD COUNTY, MARYLAND DIRECTOR OF PUBLIC WORKS 5/7/96 DATE; CHIEF, BUREAU OF ENGINEERING 5/7/96 DATE CHIEF, BUREAU OF ENVIRONMENTAL SERVICES 5/7/96 DATE; CHIEF, UTILITY DESIGN DIVISION 5-7-96 DATE	M&E Metcalf & Eddy REG. PROF. ENGR. 5-7-96 DATE	STATE OF MARYLAND JONATHAN WINTHROP DOANE No. 15140 REGISTERED PROFESSIONAL ENGINEER	DES: DRN: M.J.C. CHK: J.H. DATE:	M.J.C. 1 RECORD DRAWING 11/2/94 BY NO. REVISION DATE	MECHANICAL DOUBLE PASS PROCESS REACTOR MODIFICATIONS SECTIONS AND DETAILS

LITTLE PATUXENT WASTEWATER TREATMENT PLANT
LITTLE PATUXENT WASTEWATER TREATMENT PLANT EXPANSION
ADDITION NO. 5
CAPITAL PROJECT S-6153
CONTRACT NO. 20-3082
HOWARD COUNTY, MARYLAND

SCALE AS SHOWN
SHEET 117 OF 226
M-23A

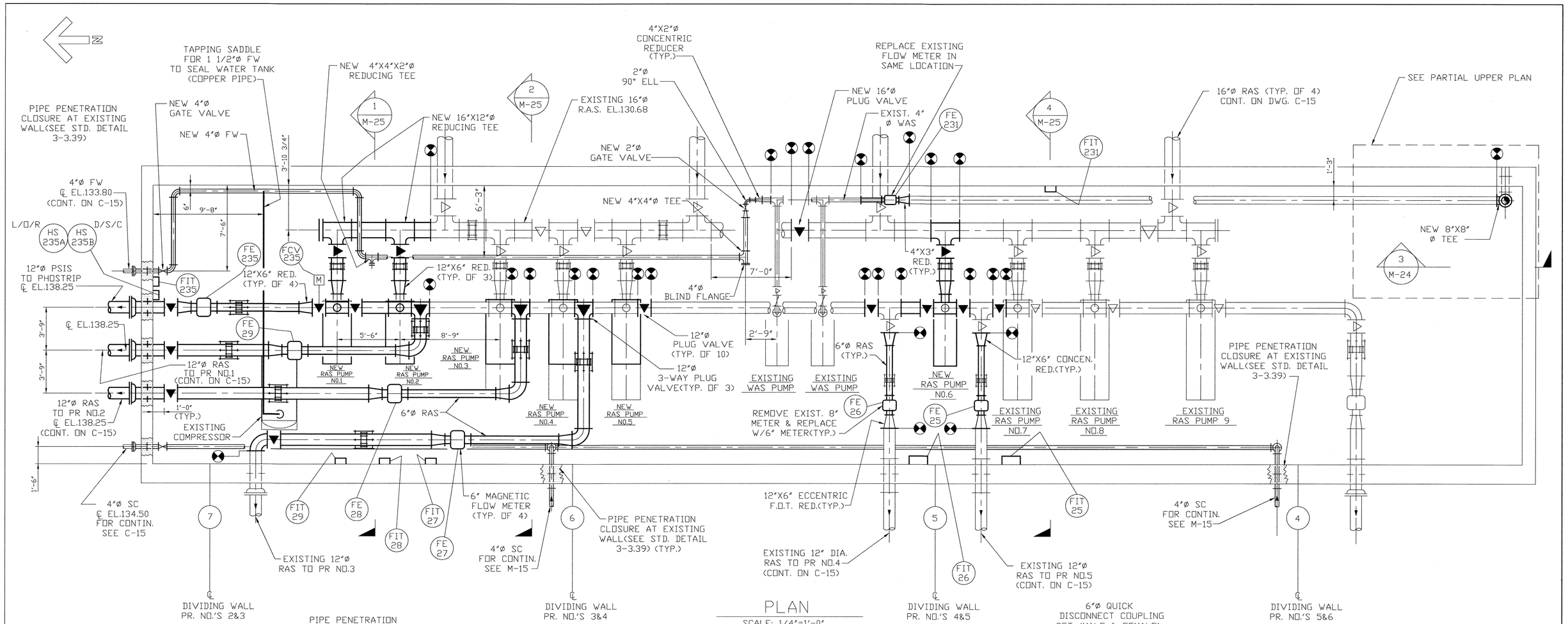

PLAN

SCALE: 1/4"=1'-0"

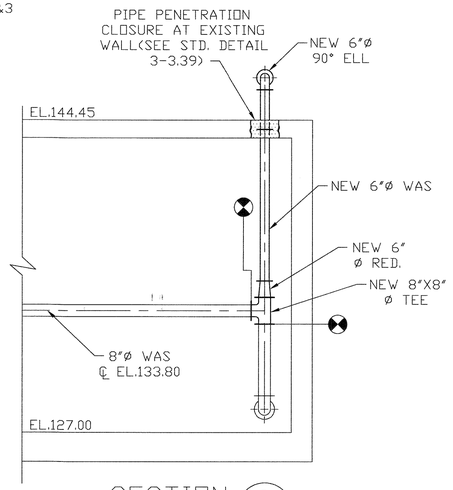

SECTION 3 M-24

SCALE: 1/4"=1'-0"

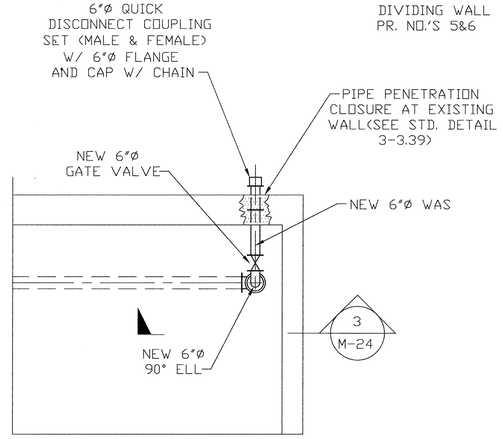

PARTIAL UPPER PLAN

SCALE: 1/4"=1'-0"

Record Drawing Notes:

1. All elevations should be field verified before using
2. Weir and water elevations based on post-construction survey by Howard County.

LEGEND:

——— DENOTES EXISTING EQUIPMENT
——— DENOTES NEW EQUIPMENT

DEPARTMENT OF PUBLIC WORKS
HOWARD COUNTY, MARYLAND

DIRECTOR OF PUBLIC WORKS — DATE 5/7/96
CHIEF, BUREAU OF ENGINEERING — DATE 5/7/96
CHIEF, BUREAU OF ENVIRONMENTAL SERVICES — DATE 5/7/96
CHIEF, UTILITY DESIGN DIVISION — DATE 5-7-96

M&E Metcalf & Eddy
REG./PROF. ENGR. — DATE 5-7-96

STATE OF MARYLAND — JONATHAN WHITTROP DOANE No. 15140 — REGISTERED PROFESSIONAL ENGINEER

DES:				
DRN: M.J.C.				
CHK: J.H.				
DATE:	M.J.C.	1	RECORD DRAWING	11/2/94
	BY	NO.	REVISION	DATE

MECHANICAL

EAST PIPE GALLERY MODIFICATIONS PLANS

LITTLE PATUXENT WASTEWATER TREATMENT PLANT

LITTLE PATUXENT WASTEWATER TREATMENT PLANT EXPANSION ADDITION NO. 5 CAPITAL PROJECT S-6153

CONTRACT NO. 20-3082
HOWARD COUNTY, MARYLAND

SCALE AS SHOWN

SHEET 118 OF 226

M-24A

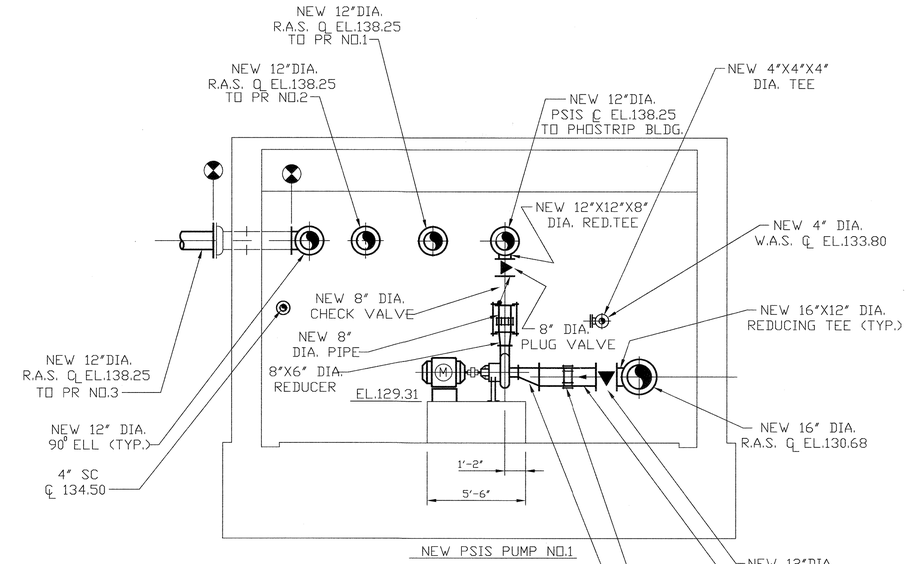

NOTE:
PUMP, PUMP PAD, SUCTION PIPING AND DISCHARGE PIPING ALSO APPLY TO NEW RAS PUMP NO.'S 1 & 5 EAST PIPE GALLERY.

SECTION 1 / M-24
SCALE: 1/4"=1'-0"

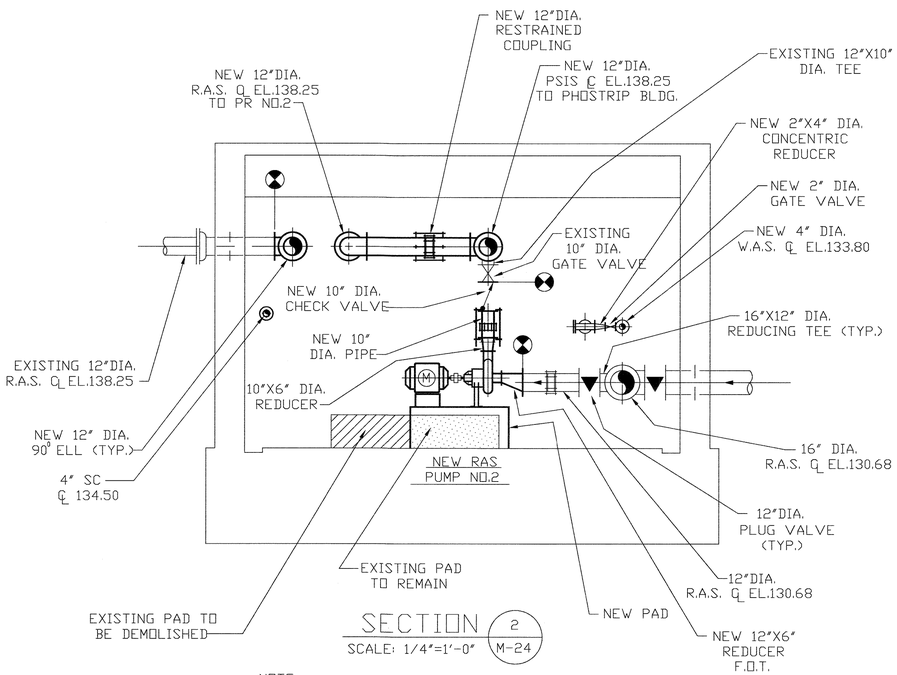

SECTION 2 / M-24
SCALE: 1/4"=1'-0"

NOTE:
PUMP, SUCTION PIPING, PAD & DISCHARGE PIPING ALSO APPLY TO NEW RAS PUMP NO.'S 3 & 4 IN EAST PIPE GALLERY AND RAS PUMP NO. 4 IN WEST PIPE GALLERY.

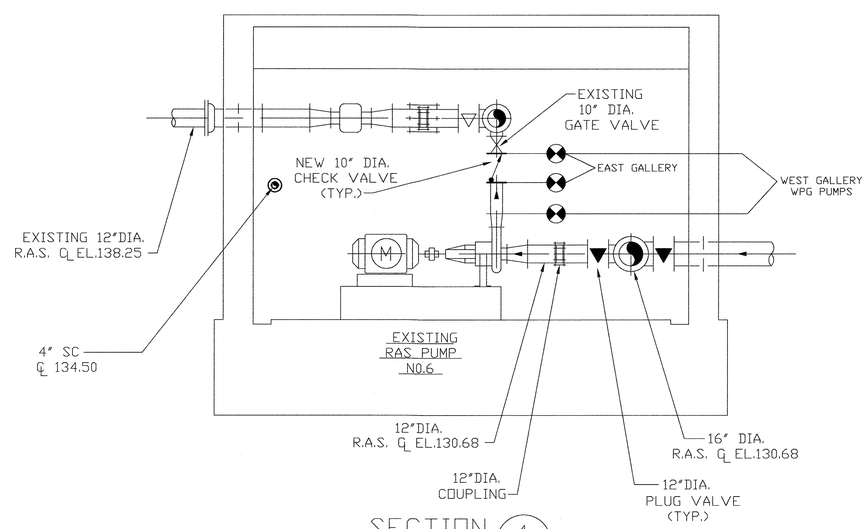

SECTION 4 / M-24
SCALE: 1/4"=1'-0"

NOTE:
SECTION ALSO APPLIES TO PUMP NO.'S 17, 15, 14, 12 & 11 IN WEST GALLERY

Record Drawing Notes:
1. All elevations should be field verified before using.
2. Weir and water elevations based on post-construction survey by Howard County.

LEGEND:
DENOTES EXISTING EQUIPMENT
DENOTES NEW EQUIPMENT
CONNECTION OF EXISTING TO NEW

DEPARTMENT OF PUBLIC WORKS
HOWARD COUNTY, MARYLAND

DIRECTOR OF PUBLIC WORKS — DATE 5/7/96
CHIEF, BUREAU OF ENGINEERING — DATE 5/7/96
CHIEF, BUREAU OF ENVIRONMENTAL SERVICES — DATE 5/7/96
CHIEF, UTILITY DESIGN DIVISION — DATE 5-7-96

M&E Metcalf & Eddy
REG. PROF. ENGR. — DATE 5-7-96

STATE OF MARYLAND — JONATHAN WINTHROP DOANE No. 15140 — REGISTERED PROFESSIONAL ENGINEER

DES:				
DRN: M.J.C.				
CHK: J.H.				
DATE:	M.J.C.	1	RECORD DRAWING	11/2/94
	BY	NO.	REVISION	DATE

MECHANICAL

EAST PIPE GALLERY MODIFICATIONS SECTIONS

LITTLE PATUXENT WASTEWATER TREATMENT PLANT
LITTLE PATUXENT WASTEWATER TREATMENT PLANT EXPANSION
ADDITION NO. 5
CAPITAL PROJECT S-6153
CONTRACT NO. 20-3082
HOWARD COUNTY, MARYLAND

SCALE AS SHOWN
SHEET 119 OF 226
M-25A

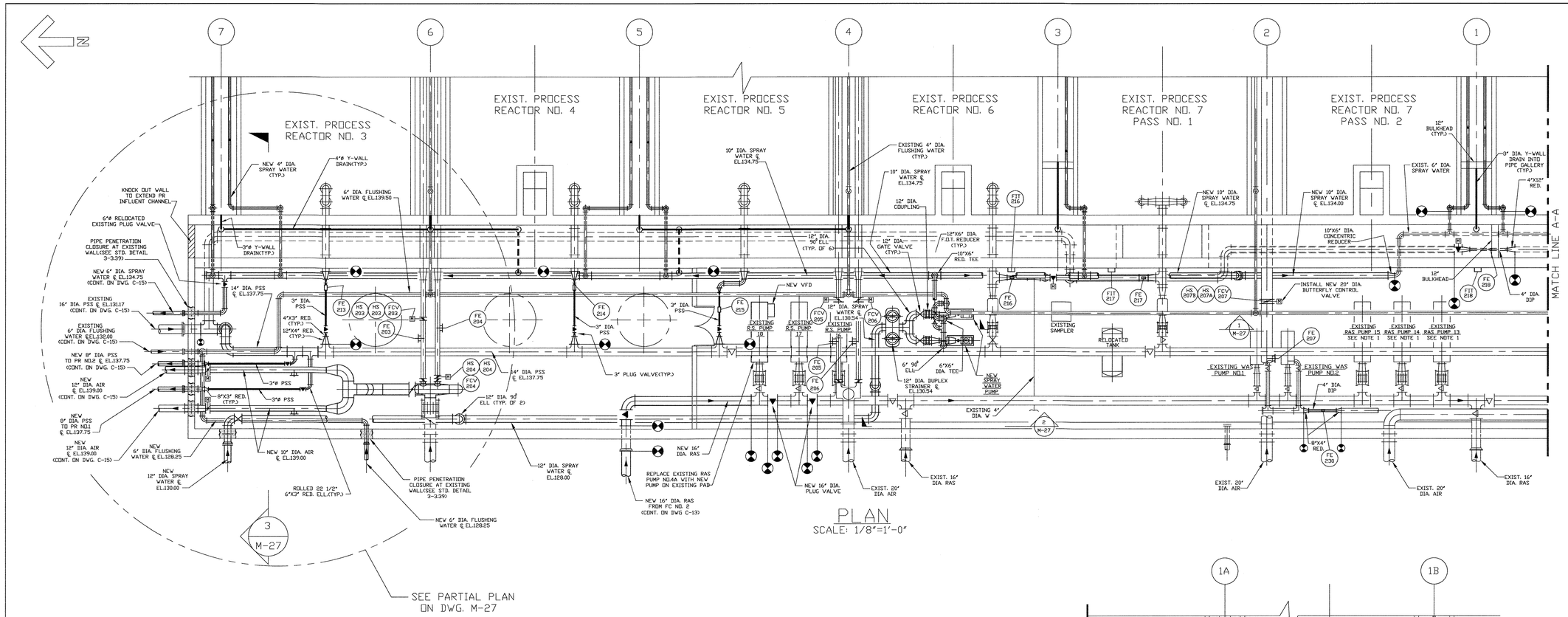

PLAN
SCALE: 1/8"=1'-0"

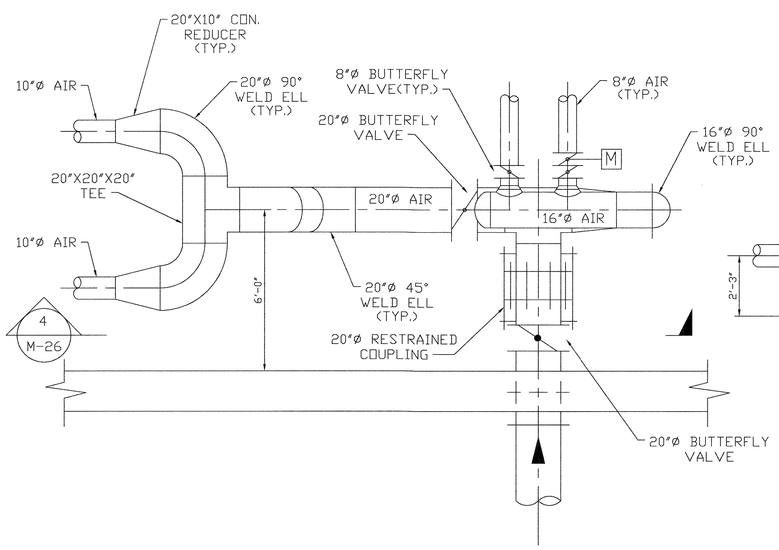

DETAIL OF 20"Ø AIR
PLAN
SCALE: 3/8"=1'-0"

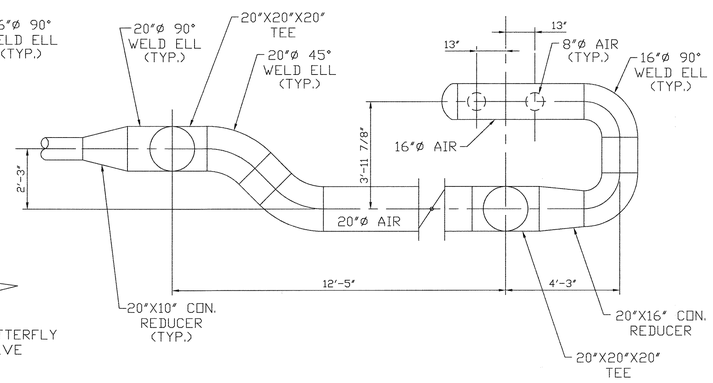

SECTION 4 M-26
SCALE: 3/8"=1'-0"

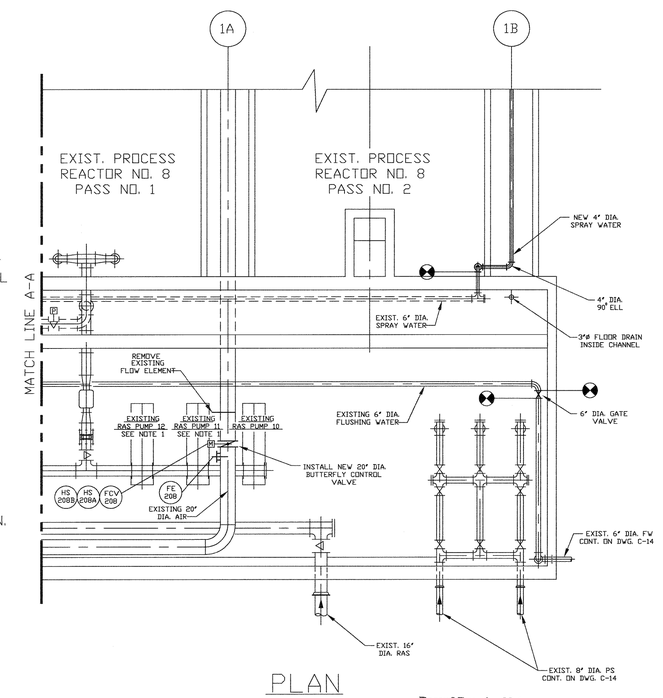

PLAN
SCALE: 1/8"=1'-0"

Record Drawing Notes:
1. All elevations should be field verified before using
2. Weir and water elevations based on post-construction survey by Howard County.

NOTE:
1. INSTALL NEW 10" DIA. CHECK VALVES IN DISCHARGE LINES OF RAS PUMP NO.'S 17, 15, 14, 12 & 11.
2. EXISTING SPRAY WATER AND EQUIPMENT WAS COMPLETELY REMOVED.

LEGEND:
——— DENOTES EXISTING EQUIPMENT
——— DENOTES NEW EQUIPMENT

DEPARTMENT OF PUBLIC WORKS
HOWARD COUNTY, MARYLAND

DIRECTOR OF PUBLIC WORKS	DATE 5/7/96
CHIEF, BUREAU OF ENGINEERING	DATE 5/7/96
CHIEF, BUREAU OF ENVIRONMENTAL SERVICES	DATE 5/7/96
CHIEF, UTILITY DESIGN DIVISION	DATE 5-7-96

M&E Metcalf & Eddy
REG./PROF. ENGR. — DATE 5-7-96

STATE OF MARYLAND — JONATHAN WINTHROP DOANE No. 19190 — REGISTERED PROFESSIONAL ENGINEER

DES:				
DRN: M.J.C.				
CHK: J.H.				
DATE:	M.J.C.	1	RECORD DRAWING	11/2/94
	BY	NO.	REVISION	DATE

MECHANICAL

WEST PIPE GALLERY MODIFICATIONS PLAN & SECTION

LITTLE PATUXENT WASTEWATER TREATMENT PLANT

LITTLE PATUXENT WASTEWATER TREATMENT PLANT EXPANSION
ADDITION NO. 5
CAPITAL PROJECT S-6153

CONTRACT NO. 20-3082
HOWARD COUNTY, MARYLAND

SCALE AS SHOWN

SHEET 120 OF 226

M-26A

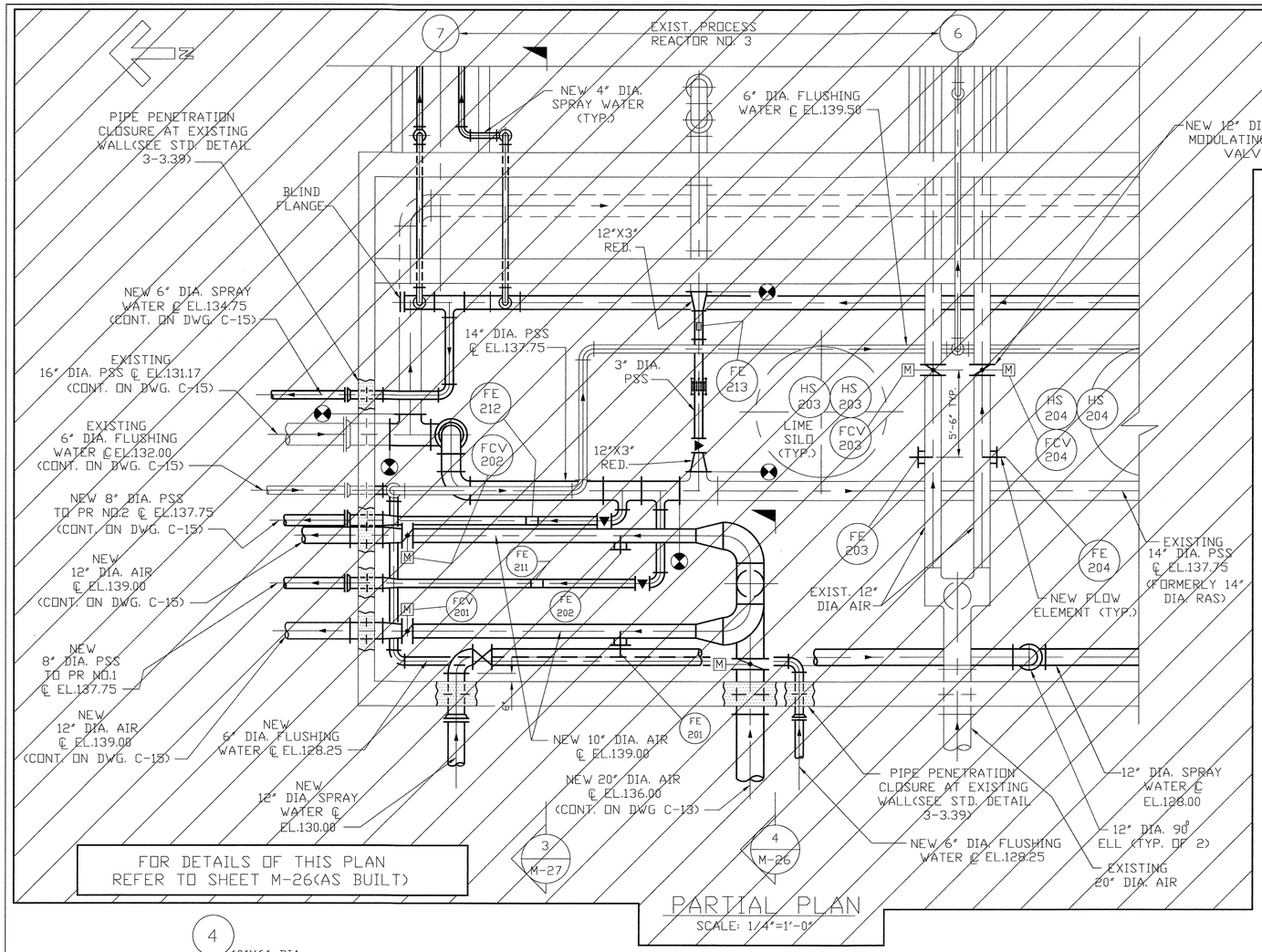

PARTIAL PLAN
SCALE: 1/4"=1'-0"

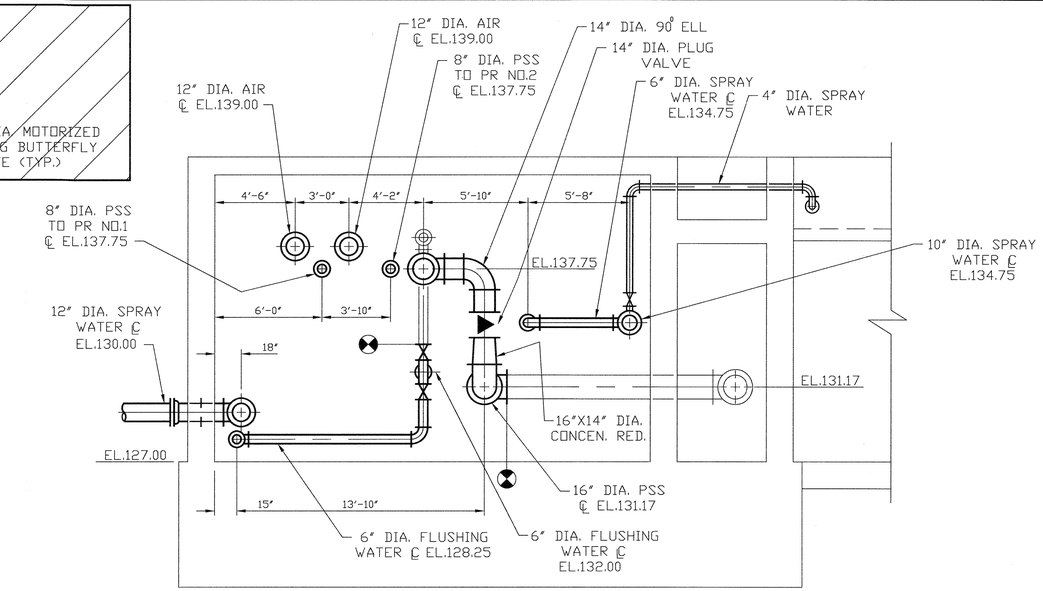

SECTION 3 (M-26, M-27)
SCALE: 1/4"=1'-0"

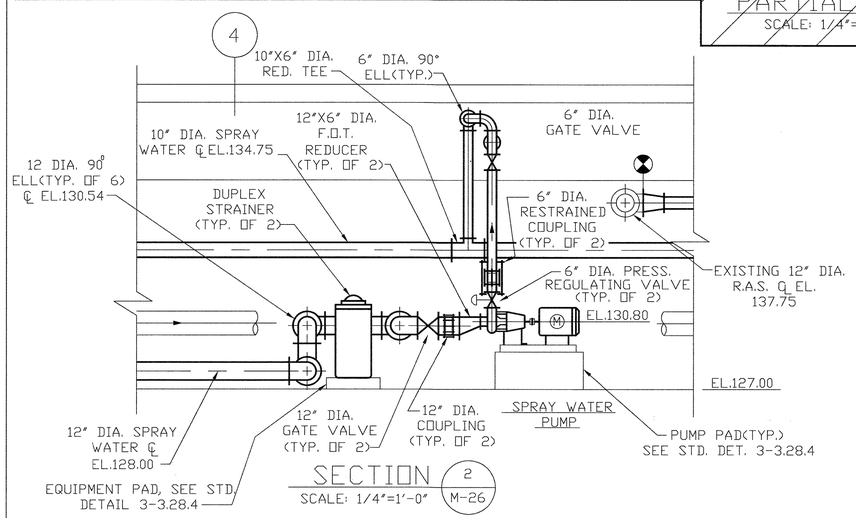

SECTION 2 (M-26)
SCALE: 1/4"=1'-0"

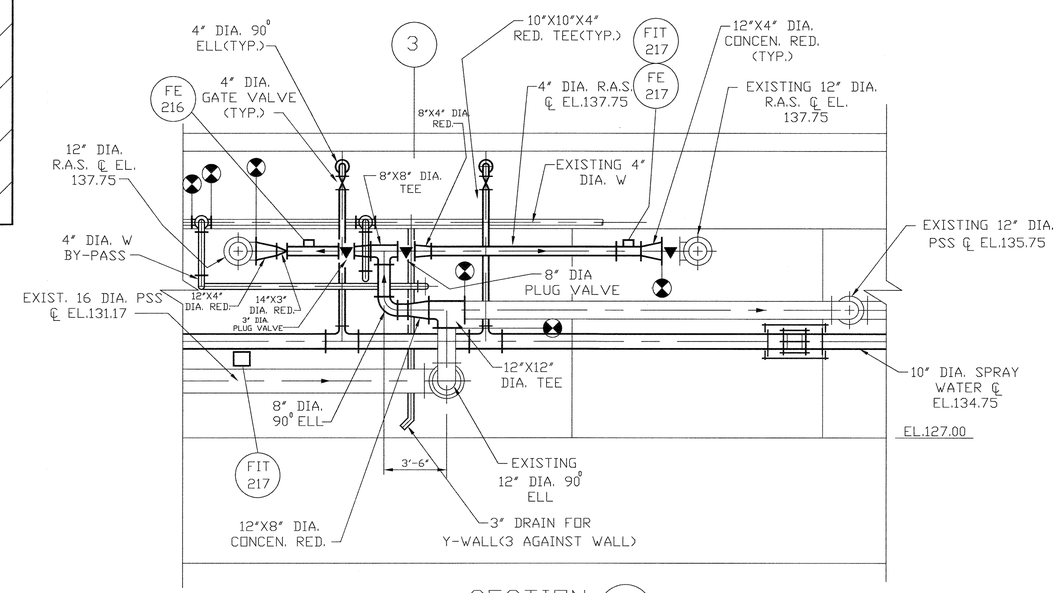

SECTION 1 (M-26)
SCALE: 1/4"=1'-0"

Record Drawing Notes:
1. All elevations should be field verified before using
2. Weir and water elevations based on post-construction survey by Howard County.

DEPARTMENT OF PUBLIC WORKS
HOWARD COUNTY, MARYLAND

DIRECTOR OF PUBLIC WORKS — DATE 5/7/96
CHIEF, BUREAU OF ENGINEERING — DATE 5/7/96
CHIEF, BUREAU OF ENVIRONMENTAL SERVICES — DATE 5/7/96
CHIEF, UTILITY DESIGN DIVISION — DATE 5-7-96

M&E Metcalf & Eddy

REG./PROF. ENGR. — DATE 5-7-96

STATE OF MARYLAND — JONATHAN WINTHROP DOWNS — No. 15149 — REGISTERED PROFESSIONAL ENGINEER

DES:
DRN: M.J.C.
CHK: J.H.
DATE:

BY	NO.	REVISION	DATE
M.J.C.	1	RECORD DRAWING	11/2/94

MECHANICAL

WEST PIPE GALLERY MODIFICATIONS SECTIONS

LITTLE PATUXENT WASTEWATER TREATMENT PLANT

LITTLE PATUXENT WASTEWATER TREATMENT PLANT EXPANSION
ADDITION NO. 5
CAPITAL PROJECT S-6153

CONTRACT NO. 20-3082
HOWARD COUNTY, MARYLAND

SCALE AS SHOWN

SHEET 121 OF 226

M-27A

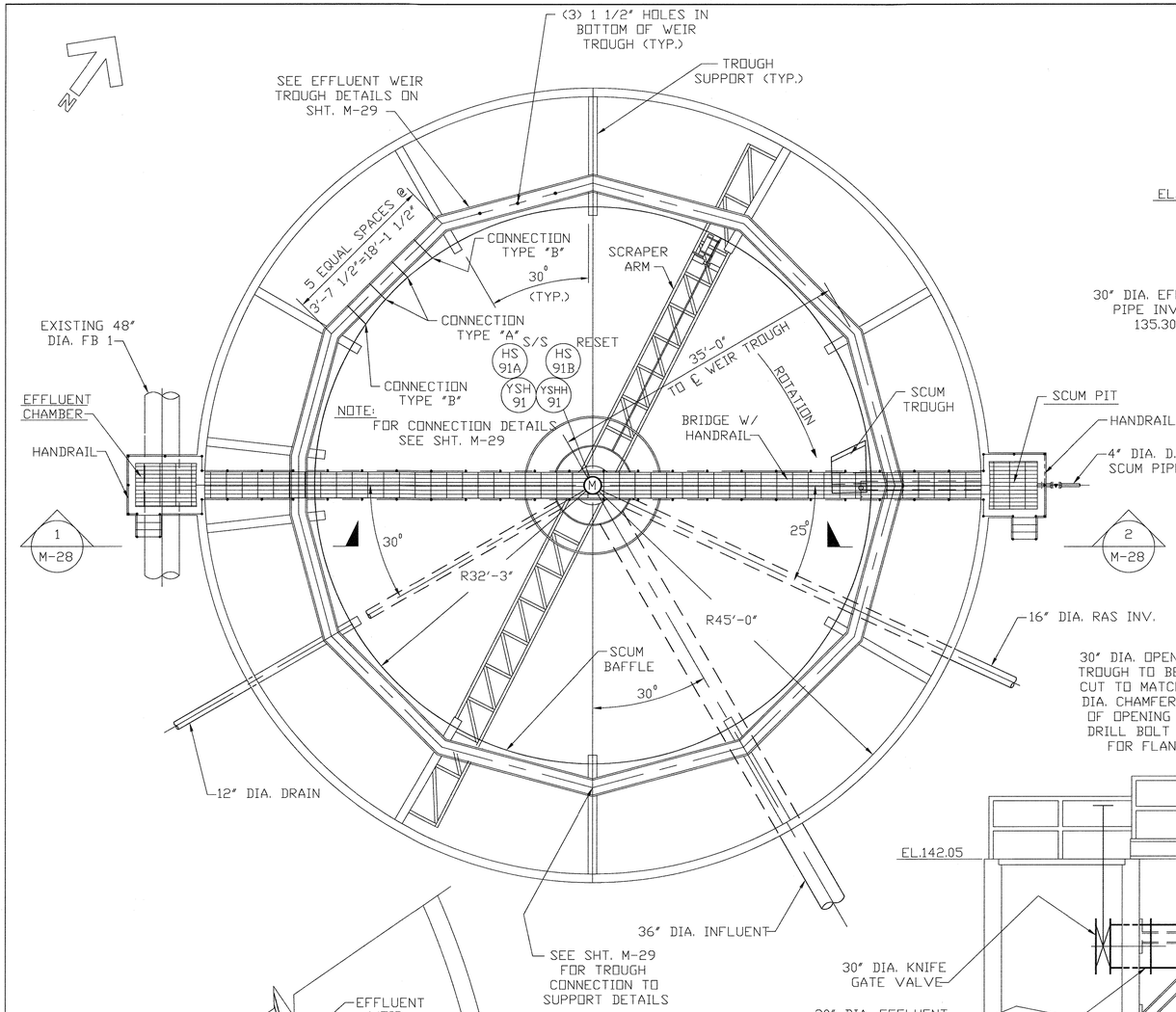

PLAN

SCALE: 1/8"=1'-0"

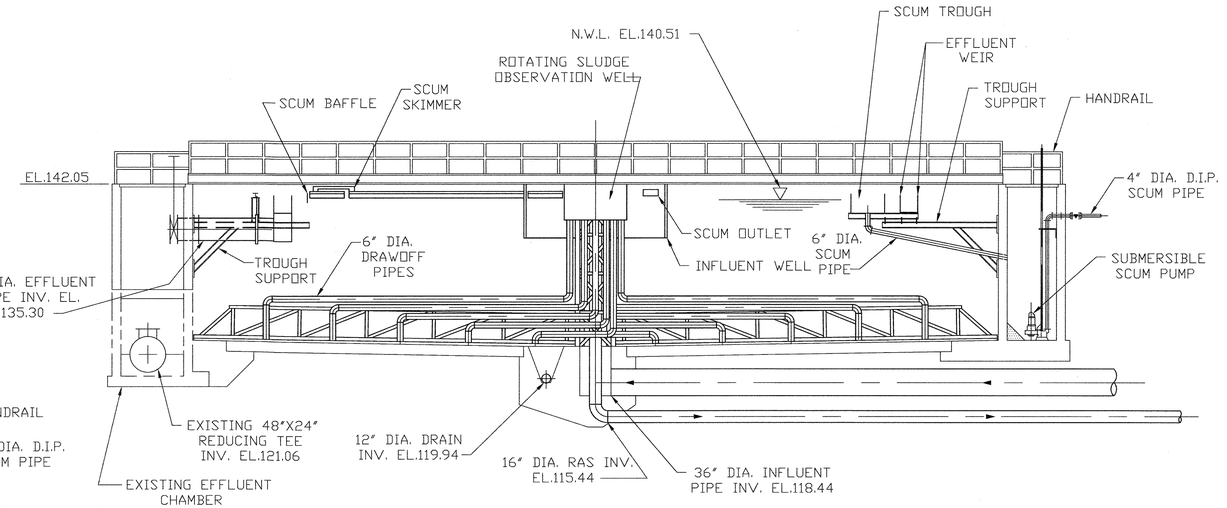

TYPICAL SECTION

SCALE: 1/8"=1'-0"

NOTE:
FINAL CLARIFIER NO. 2 WEIR ELEV. IS SET AT 140.40 RELATIVE TO HOWARD CO. BENCH MARK CORRESPONDING HIGH & NORMAL WATER ELEVATIONS ARE 140.56 & 140.51 RESPECTIVLY. SEE NOTE ON M-1.

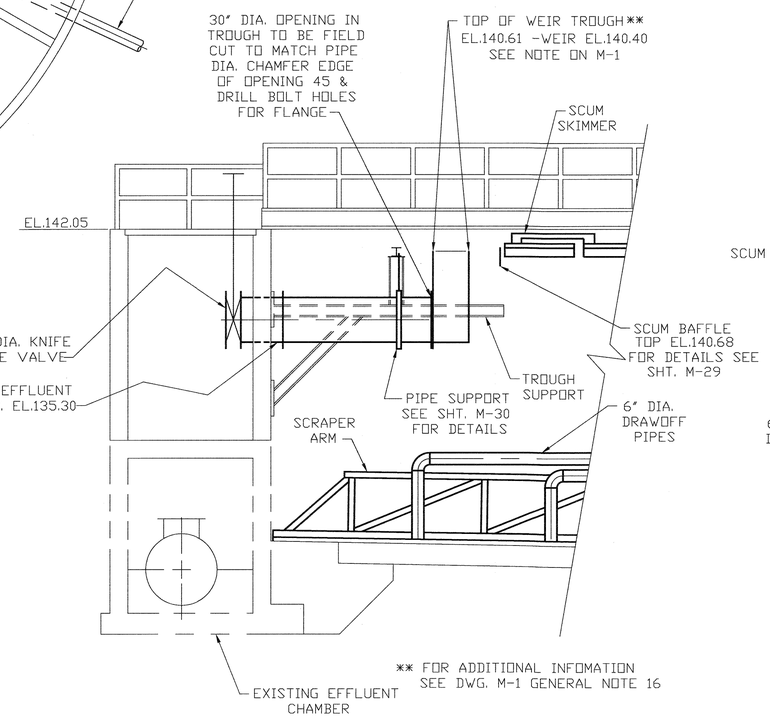

** FOR ADDITIONAL INFOMATION SEE DWG. M-1 GENERAL NOTE 16

SECTION 1 / M-28

SCALE: 1/4"=1'-0"

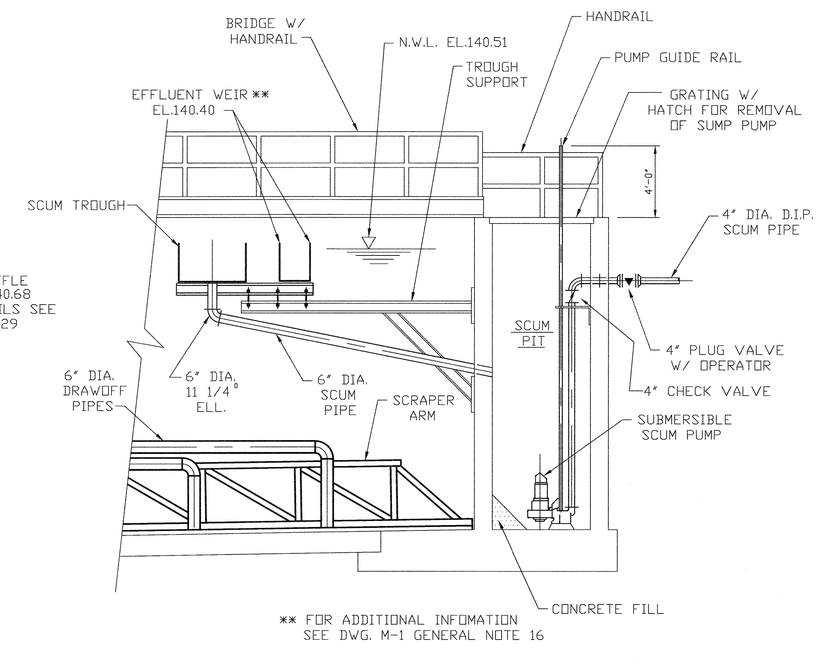

** FOR ADDITIONAL INFOMATION SEE DWG. M-1 GENERAL NOTE 16

SECTION 2 / M-28

SCALE: 1/4"=1'-0"

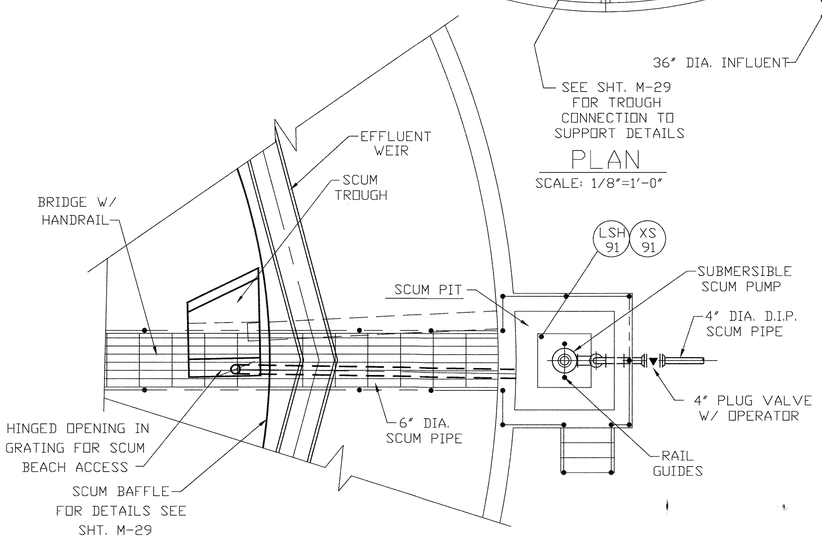

PARTIAL PLAN OF SCUM PIT

SCALE: 1/4"=1'-0"

Record Drawing Notes:
1. All elevations should be field verified before using
2. Weir and water elevations based on post-construction survey by Howard County.

DEPARTMENT OF PUBLIC WORKS
HOWARD COUNTY, MARYLAND

DIRECTOR OF PUBLIC WORKS — DATE 5/7/96
CHIEF, BUREAU OF ENGINEERING — DATE 5/7/96
CHIEF, BUREAU OF ENVIRONMENTAL SERVICES — DATE 5/7/96
CHIEF, UTILITY DESIGN DIVISION — DATE 5-7-96

M&E Metcalf & Eddy

REG. PROF. ENGR. — DATE 5-7-96

STATE OF MARYLAND — JONATHAN WINTHROP BOANE — No. 15140 — REGISTERED PROFESSIONAL ENGINEER

DES:				
DRN: M.J.C.				
CHK: J.H.				
DATE:	M.J.C.	1	RECORD DRAWING	11/2/94
	BY	NO.	REVISION	DATE

MECHANICAL

FINAL CLARIFIER NO. 2
PLAN & SECTIONS

LITTLE PATUXENT WASTEWATER TREATMENT PLANT

LITTLE PATUXENT WASTEWATER TREATMENT PLANT EXPANSION
ADDITION NO. 5
CAPITAL PROJECT S-6153

CONTRACT NO. 20-3082
HOWARD COUNTY, MARYLAND

SCALE AS SHOWN

SHEET 122 OF 226

M-28A

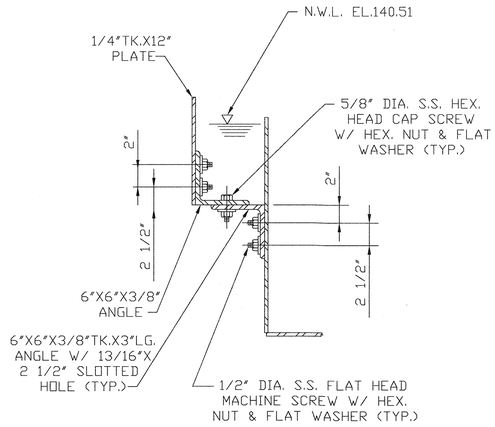

TYPE "A"

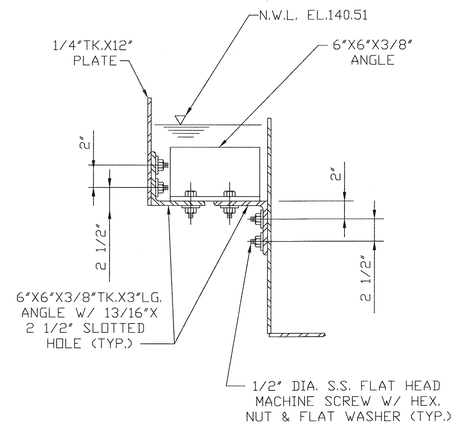

TYPE "B"

NOTE:
ALL ANGLES & PLATES SHALL BE ALUMINUM ALLOY 6061-T6

SCUM BAFFLE CONNECTION DETAILS

SCALE: 1 1/2"=1'-0"

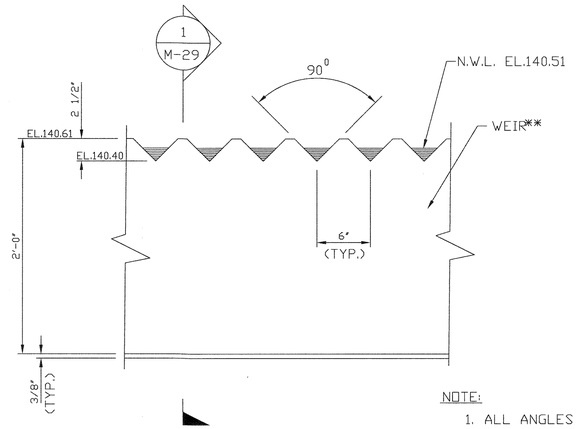

ELEVATION

NOTE:
1. ALL ANGLES & PLATES SHALL BE ALUMINUM ALLOY 6061-T6.
2. WEIR ℄ NOTCHES TO BE FREE OF ALL BURRS.

** FOR ADDITIONAL INFOMATION SEE DWG. M-1 GENERAL NOTE 16

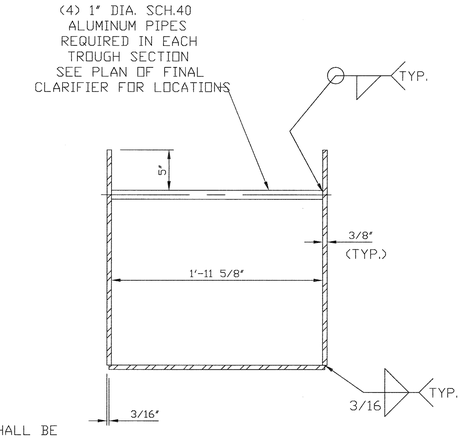

SECTION 1 / M-29

WEIR TROUGH DETAILS

SCALE: 1 1/2"=1'-0"

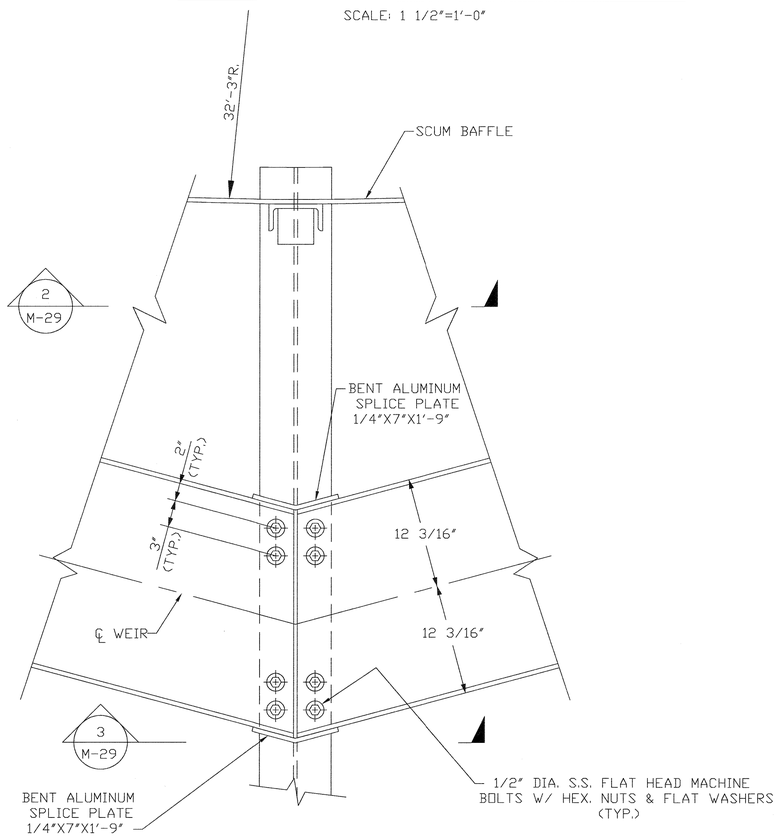

PART PLAN TROUGH SUPPORT
TROUGH CONNECTION TO SUPPORT DETAIL

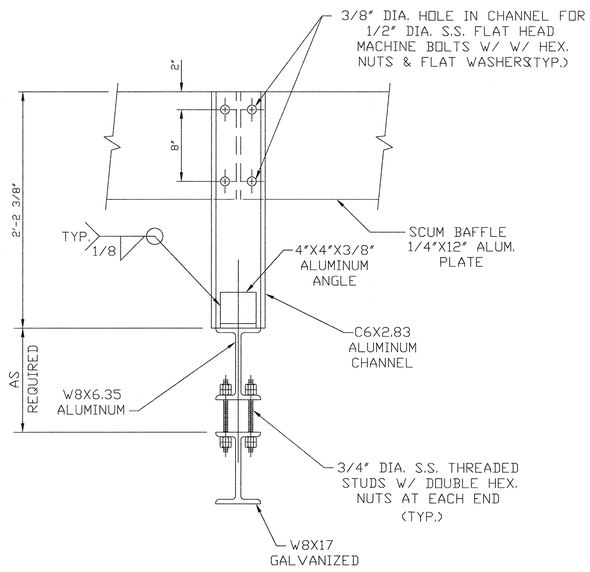

SECTION 2 / M-29
SCALE: 1 1/2"=1'-0"

FINAL CLARIFIER 2 WEIRS ARE SET AT 140.40 RELATIVE TO HOWARD COUNTY BENCH MARK. CORRESPONDING HIGH AND NORMAL WATER ELEVATIONS ARE 140.56 AND 140.51 RESPECTIVLY. SEE NOTE ON M-1.

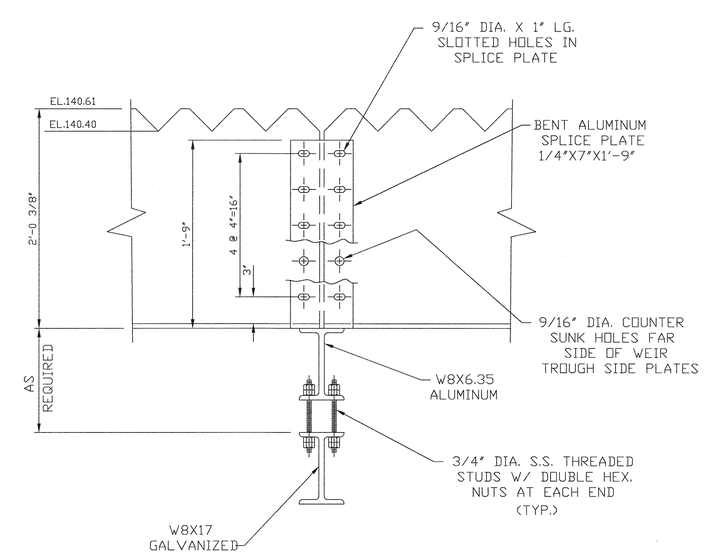

SECTION 3 / M-29
SCALE: 1 1/2"=1'-0"

Record Drawing Notes:
1. All elevations should be field verified before using
2. Weir and water elevations based on post-construction survey by Howard County.

DEPARTMENT OF PUBLIC WORKS HOWARD COUNTY, MARYLAND DIRECTOR OF PUBLIC WORKS 5/7/96 DATE CHIEF, BUREAU OF ENGINEERING 5/7/96 DATE CHIEF, BUREAU OF ENVIRONMENTAL SERVICES 5/7/96 DATE CHIEF, UTILITY DESIGN DIVISION 5-7-96 DATE	M&E Metcalf & Eddy REQ. PROF. ENGR. 5-7-96 DATE	STATE OF MARYLAND JONATHAN WHITFORD DUNNE No. 15140 REGISTERED PROFESSIONAL ENGINEER	DES: DRN: M.J.C. CHK: J.H. DATE:	M.J.C. 1 RECORD DRAWING 11/2/94 BY NO. REVISION DATE	MECHANICAL FINAL CLARIFIER NO. 2 SECTIONS AND DETAILS

LITTLE PATUXENT WASTEWATER TREATMENT PLANT
LITTLE PATUXENT WASTEWATER TREATMENT PLANT EXPANSION
ADDITION NO. 5
CAPITAL PROJECT S-6153
CONTRACT NO. 20-3082
HOWARD COUNTY, MARYLAND

SCALE AS SHOWN
SHEET 123 OF 226
M-29A

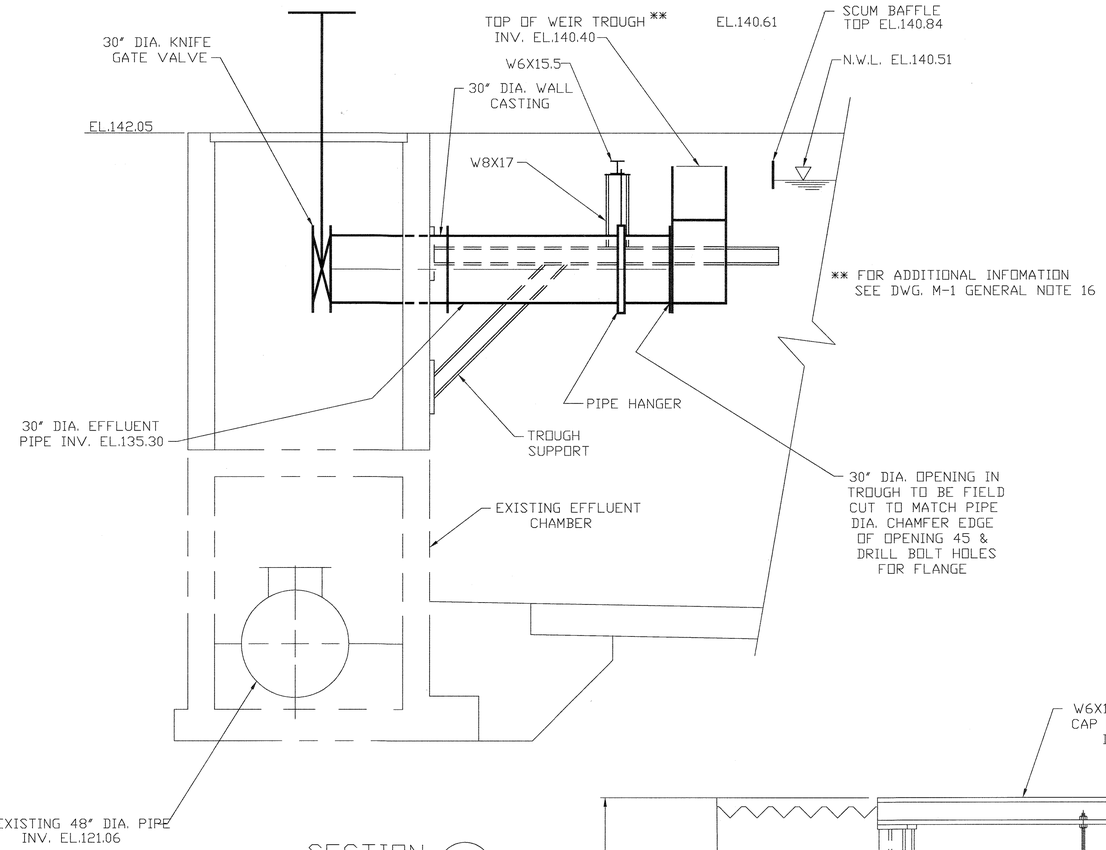

SECTION 1 / M-30
SCALE: 1/2"=1'-0"

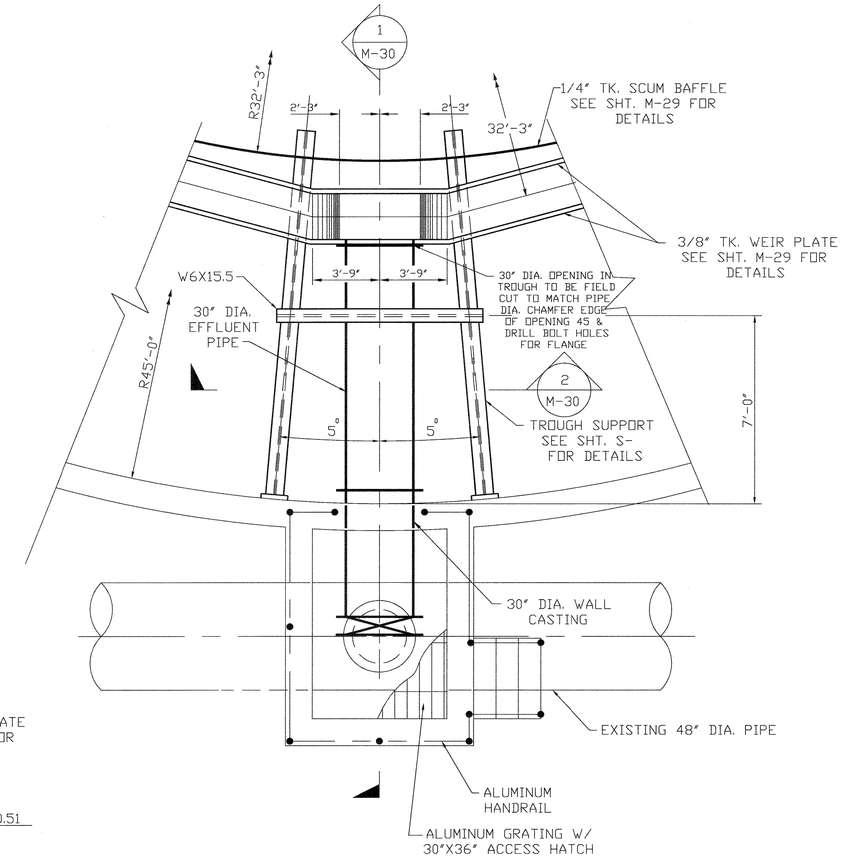

EFFLUENT CHAMBER PLAN
SCALE: 1/2"=1'-0"

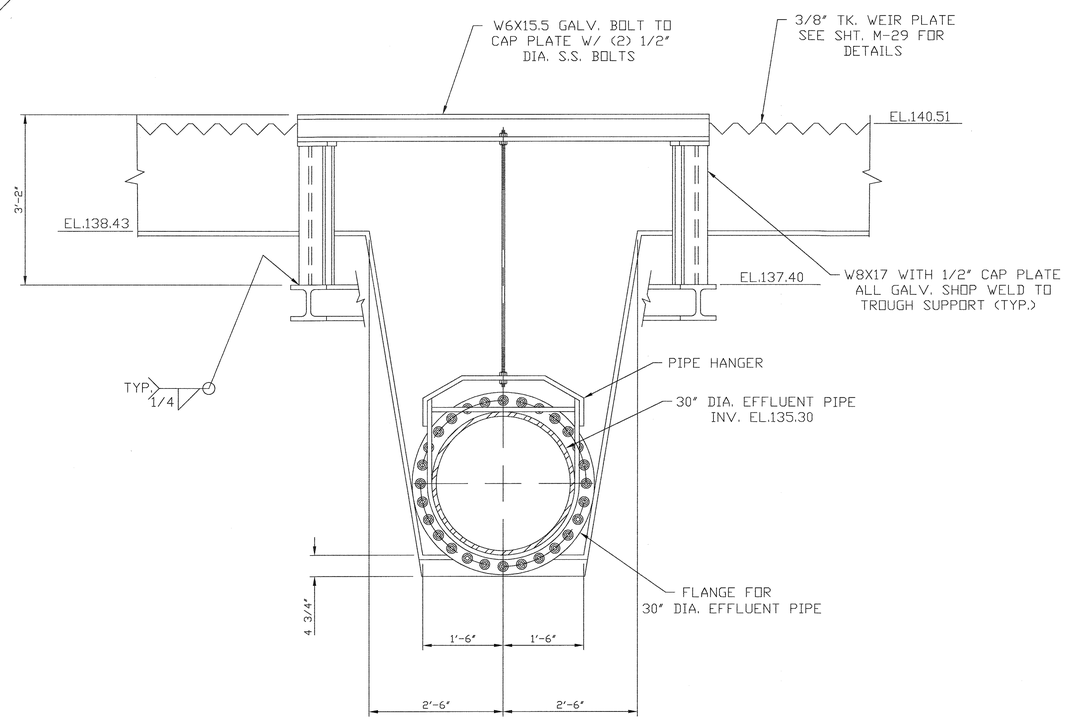

SECTION 2 / M-30
SCALE: 1/2"=1'-0"

Record Drawing Notes:
1. All elevations should be field verified before using
2. Weir and water elevations based on post-construction survey by Howard County.

DEPARTMENT OF PUBLIC WORKS
HOWARD COUNTY, MARYLAND

DIRECTOR OF PUBLIC WORKS — DATE 5/7/96
CHIEF, BUREAU OF ENGINEERING — DATE 5/7/96
CHIEF, BUREAU OF ENVIRONMENTAL SERVICES — DATE 5/7/96
CHIEF, UTILITY DESIGN DIVISION — DATE 5-7-96

M&E Metcalf & Eddy
REG./PROF. ENGR. — DATE 5-7-96

STATE OF MARYLAND — JONATHAN WHITLEY DOME No. 15140 — REGISTERED PROFESSIONAL ENGINEER

DES:				
DRN: M.J.C.				
CHK: J.H.				
DATE:	M.J.C.	1	RECORD DRAWING	11/2/94
	BY	NO.	REVISION	DATE

MECHANICAL

FINAL CLARIFIER NO.2 DETAILS

LITTLE PATUXENT WASTEWATER TREATMENT PLANT

LITTLE PATUXENT WASTEWATER TREATMENT PLANT EXPANSION
ADDITION NO. 5
CAPITAL PROJECT S-6153

CONTRACT NO. 20-3082
HOWARD COUNTY, MARYLAND

SCALE AS SHOWN

SHEET 124 OF 226

M-30A

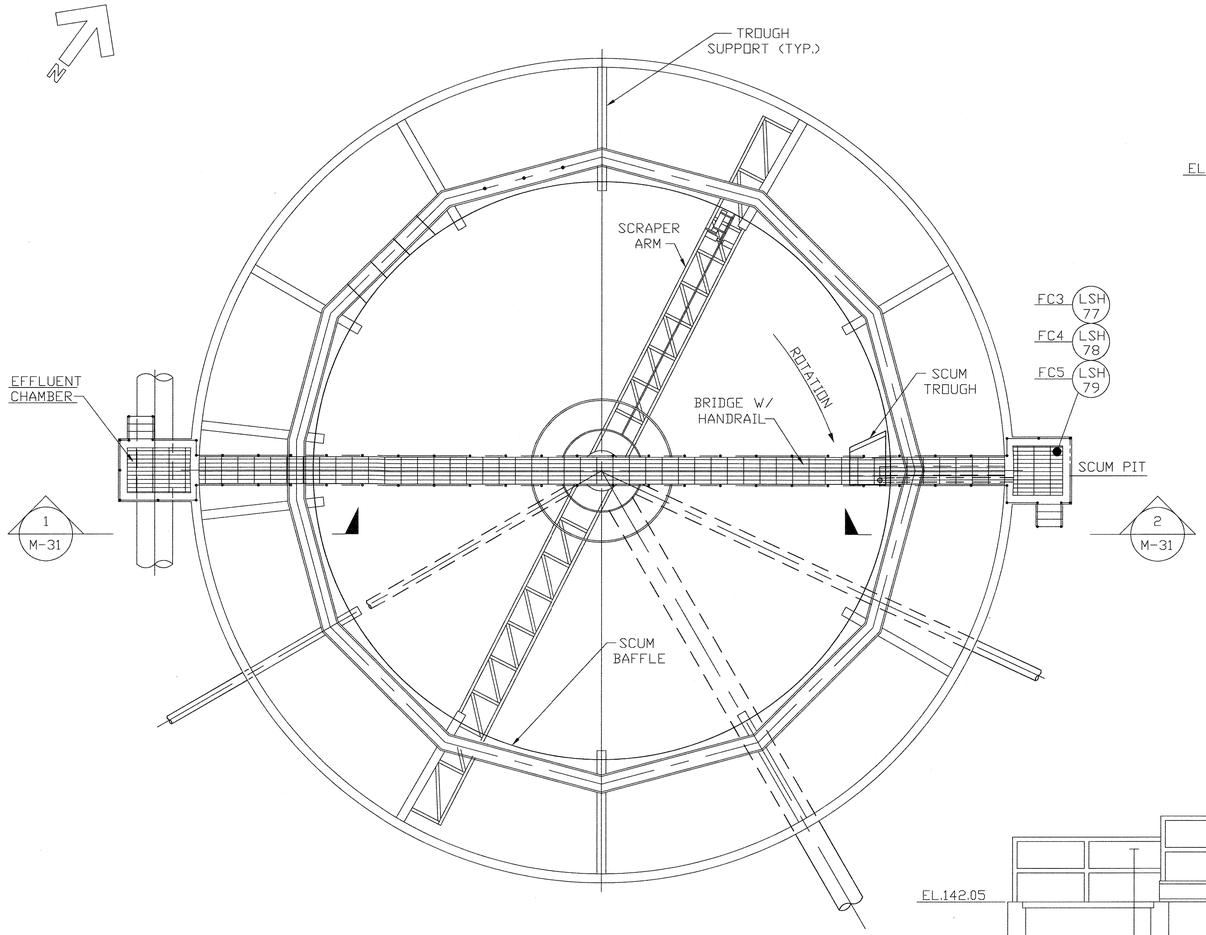

PLAN
SCALE: 1/8"=1'-0"

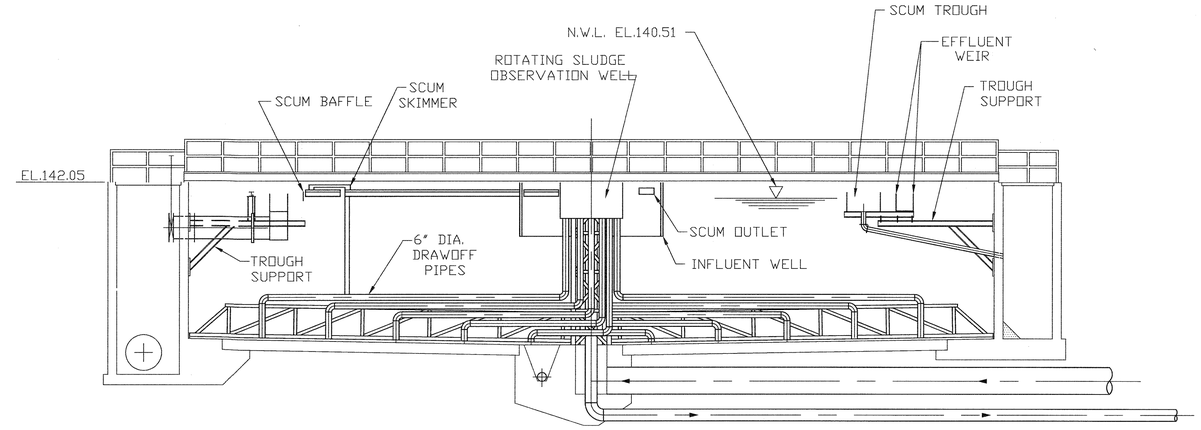

NOTES:

1. THE CONTRACTOR SHALL REMOVE THE EXISTING 8"ø SLUDGE DRAWOFF PIPES LEAVING SUFFICIENT PIPE EXTENDING BELOW THE ROTATING SLUDGE OBSERVATION WELL TO ALLOW FOR TRANSITION FROM THE EXISTING 8"ø TO THE NEW 6"ø. THE TRANSITION FITTING SHALL BE AS CLOSE AS PRACTICAL TO THE ROTATING SLUDGE OBSERVATION WELL & BE SECURELY SUPPORTED.
2. FC 6-9 EXISTING DRAWOFF PIPES/VALVES IN OBSERVATION WELL 8"ø. TOTAL OF 10 DRAFT TUBES PER TANK REPLACED WITH "ø PIPE.
3. FC 2 CONSTRUCTED WITH 10-6"ø DRAFT TUBES.
4. FC 3, FC 5 EXISTING 10" DRAFT TUBES REPLACED WITH 6"ø. TOTAL OF 8 PER TANK.
5. FC 4 EXISTING 12", 10", 8", 6" DRAFT TUBES REPLACED WITH 6"ø. TOTAL OF 10 PER TANK.

TYPICAL SECTION
SCALE: 1/8"=1'-0"

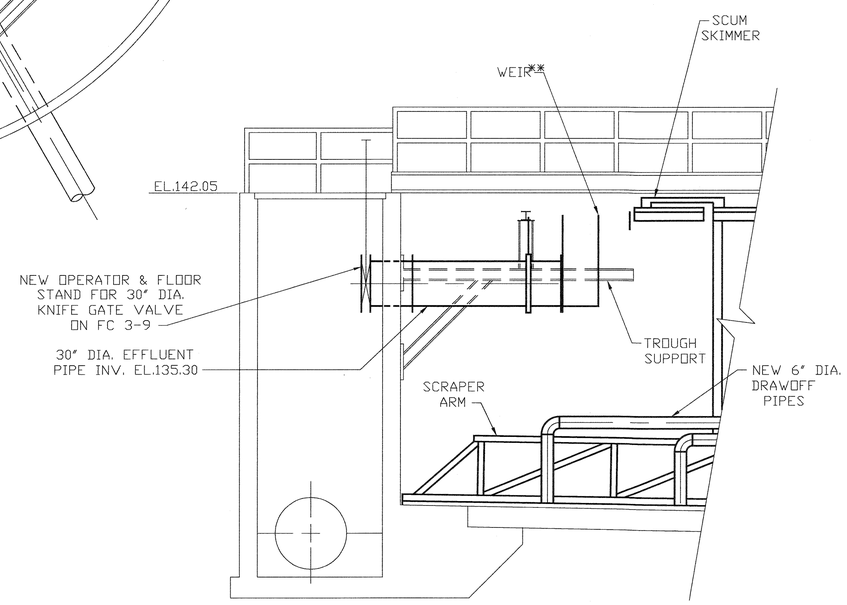

SECTION 1 M-31
SCALE: 1/4"=1'-0"

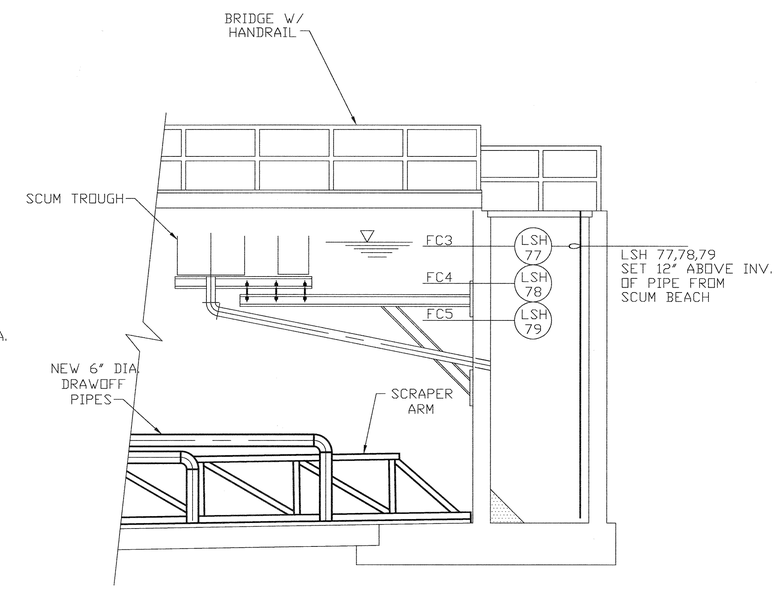

SECTION 2 M-31
SCALE: 1/4"=1'-0"

NOTE:
CONTRACTOR TO BALANCE ALL WEIRS
** FOR ADDITIONAL INFOMATION SEE DWG. M-1 GENERAL NOTE 16
FC #6,7,8,9 ADJUST WEIR INVERT EL. TO 137.02
FC #2,3,4,5 ADJUST WEIR INVERT EL. TO 140.40
RELATIVE TO COUNTY BENCH MARK. SEE NOTE ON M-11.

Record Drawing Notes:
1. All elevations should be field verified before using
2. Weir and water elevations based on post-construction survey by Howard County.

DEPARTMENT OF PUBLIC WORKS
HOWARD COUNTY, MARYLAND

DIRECTOR OF PUBLIC WORKS	5/7/96 DATE	CHIEF, BUREAU OF ENGINEERING	5/7/96 DATE
CHIEF, BUREAU OF ENVIRONMENTAL SERVICES	5/7/96 DATE	CHIEF, UTILITY DESIGN DIVISION	5-7-96 DATE

M&E Metcalf & Eddy
REG. PROF. ENGR. 5-7-96 DATE

STATE OF MARYLAND — JONATHAN WINTHROP COWNE No. 15140 — REGISTERED PROFESSIONAL ENGINEER

DES:				
DRN: M.J.C.				
CHK: J.H.				
DATE:	M.J.C.	1	RECORD DRAWING	11/2/94
	BY	NO.	REVISION	DATE

MECHANICAL
FINAL CLARIFIER MODIFICATIONS
PLAN & SECTIONS
(FINAL CLARIFIERS 1,3,4,5,6,7,8)

LITTLE PATUXENT WASTEWATER TREATMENT PLANT
LITTLE PATUXENT WASTEWATER TREATMENT PLANT EXPANSION
ADDITION NO. 5
CAPITAL PROJECT S-6153
CONTRACT NO. 20-3082
HOWARD COUNTY, MARYLAND

SCALE AS SHOWN
SHEET 125 OF 226
M-31A

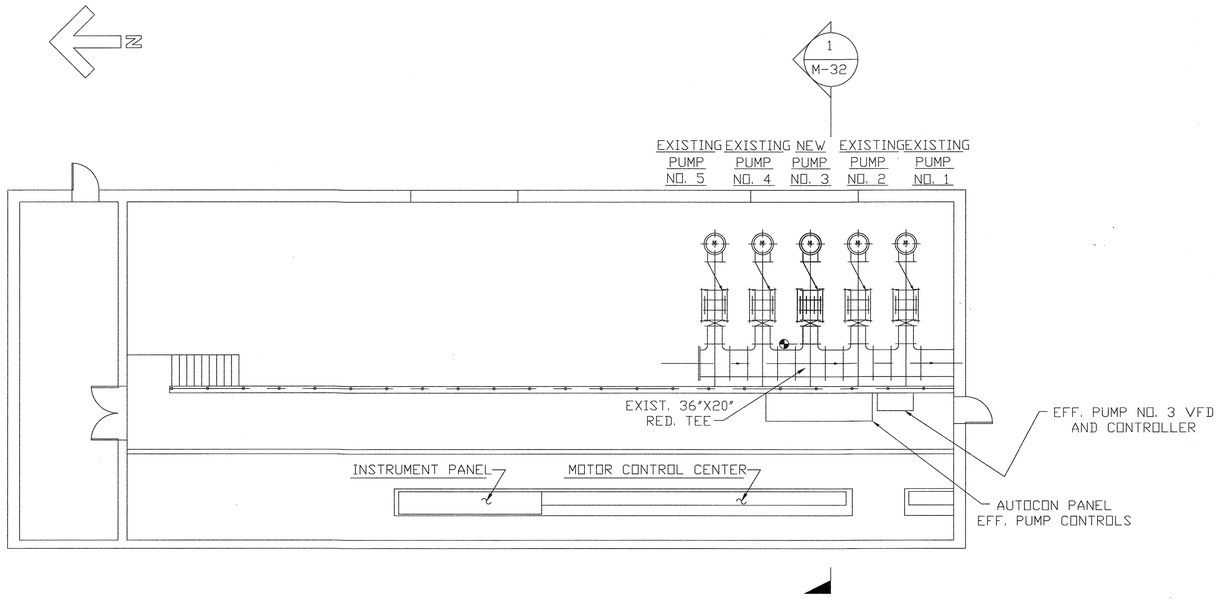

PLAN AT EL. 141.00

SCALE: 1/8"=1'-0"

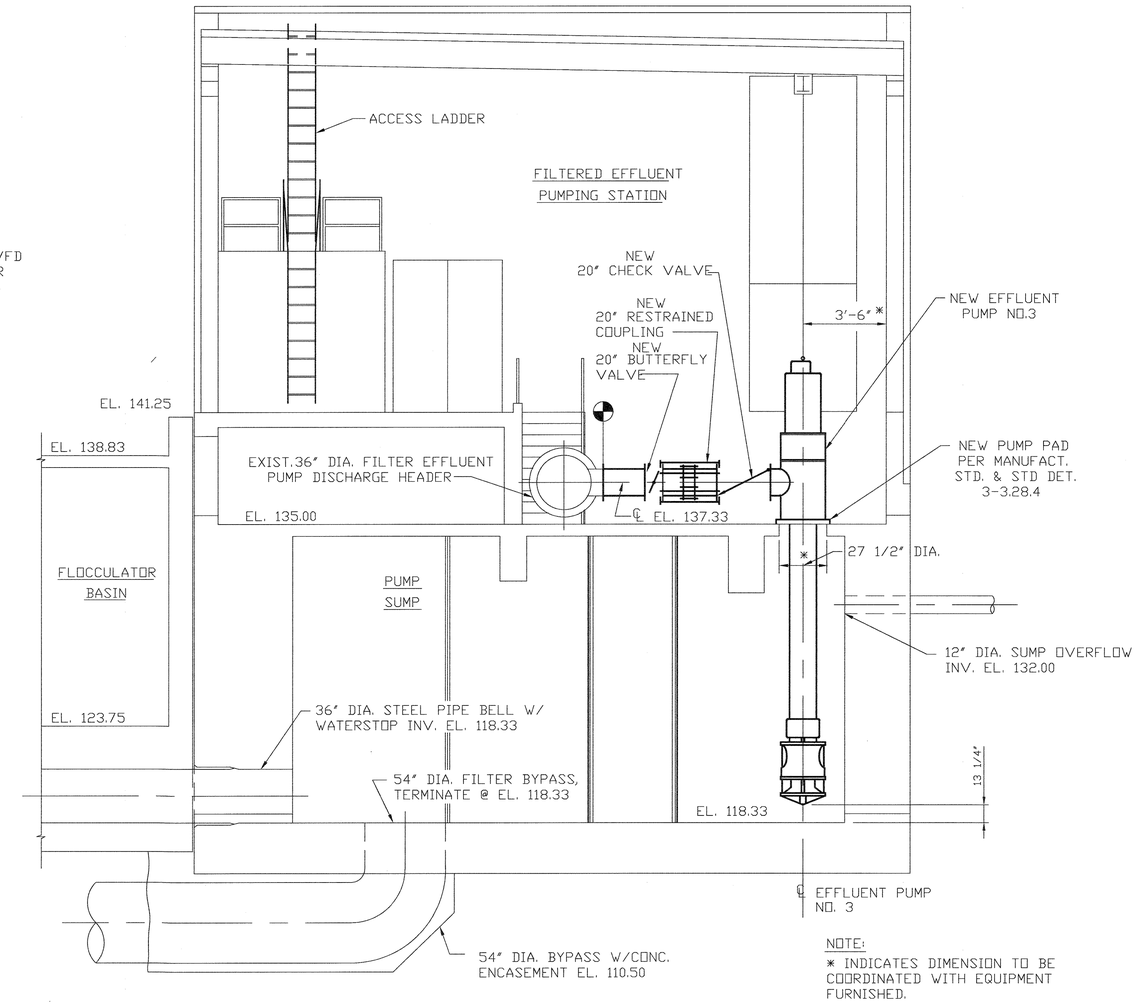

NOTE:
* INDICATES DIMENSION TO BE COORDINATED WITH EQUIPMENT FURNISHED.

SECTION 1 / M-32

SCALE: 1/4"=1'-0"

LEGEND:

——— DENOTES EXISTING EQUIPMENT

——— DENOTES NEW EQUIPMENT

DEPARTMENT OF PUBLIC WORKS
HOWARD COUNTY, MARYLAND

DIRECTOR OF PUBLIC WORKS — DATE 5/7/96
CHIEF, BUREAU OF ENGINEERING — DATE 5/7/96
CHIEF, BUREAU OF ENVIRONMENTAL SERVICES — DATE 5/7/96
CHIEF, UTILITY DESIGN DIVISION — DATE 5-7-96

M&E Metcalf & Eddy

REG. PROF. ENGR. — DATE 5-7-96

STATE OF MARYLAND — JONATHAN WINTHROP DOANE No. 15140 — REGISTERED PROFESSIONAL ENGINEER

DES:				
DRN: M.J.C.				
CHK: J.H.				
DATE:	M.J.C.	1	RECORD DRAWING	11/2/94
	BY	NO.	REVISION	DATE

MECHANICAL

FILTER CONTROL BUILDING
PUMP MODIFICATIONS
PLAN AND SECTION

LITTLE PATUXENT WASTEWATER TREATMENT PLANT

LITTLE PATUXENT WASTEWATER TREATMENT PLANT EXPANSION
ADDITION NO. 5
CAPITAL PROJECT S-6153

CONTRACT NO. 20-3082
HOWARD COUNTY, MARYLAND

SCALE AS SHOWN

SHEET 126 OF 226

M-32A

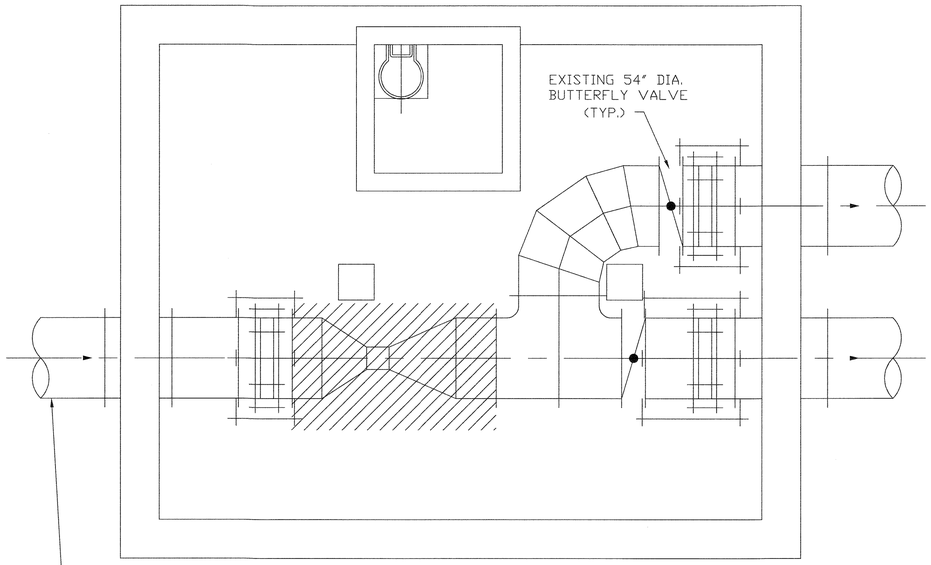

DEMOLITION PLAN

SCALE: 1/4"=1'-0"

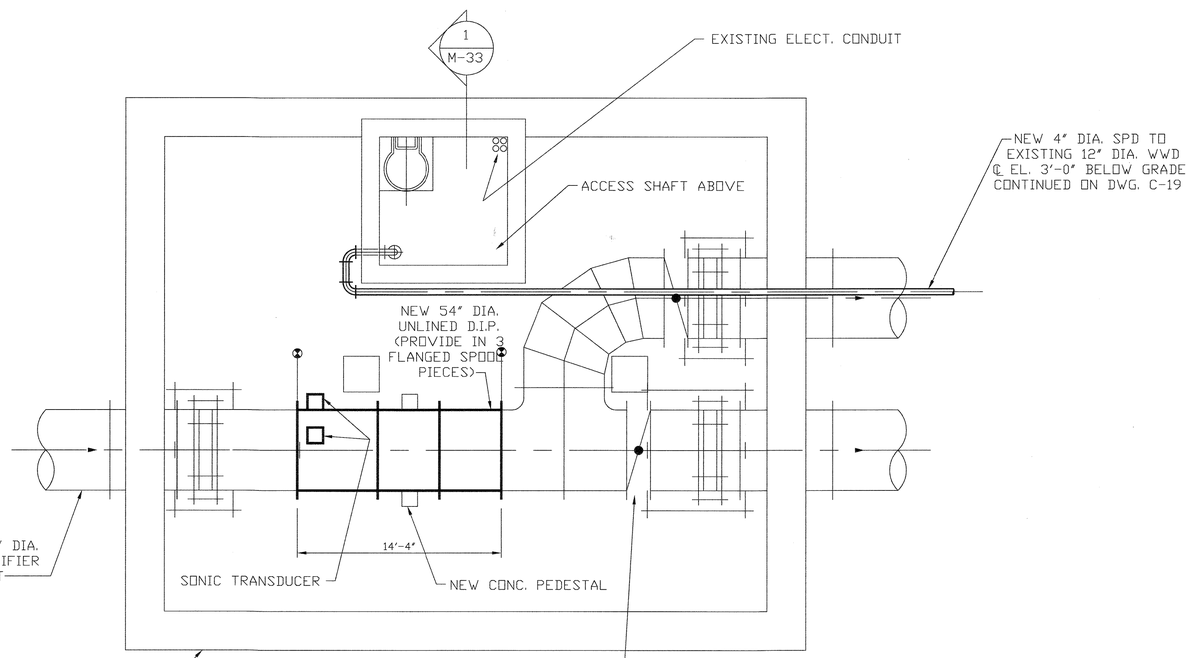

PLAN

SCALE: 1/4"=1'-0"

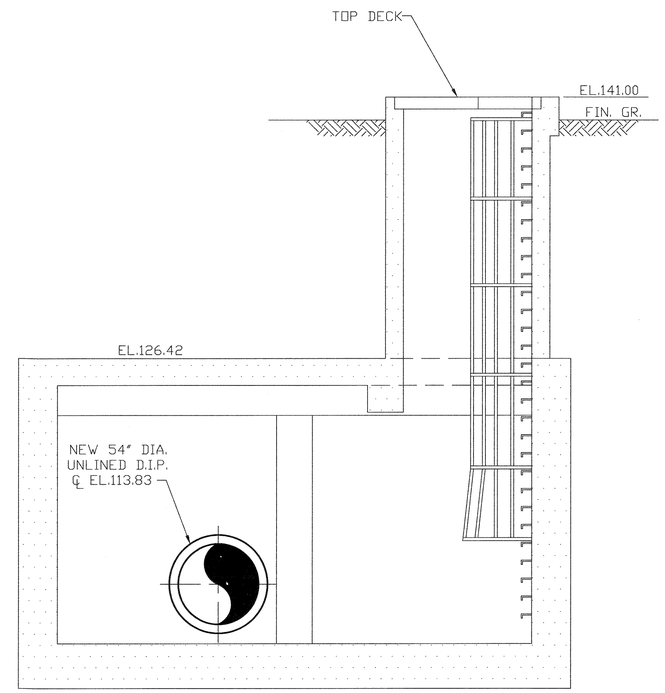

SECTION 1/M-33

SCALE: 1/4"=1'-0"

NOTE:

1. CONTRACTOR SHALL REMOVE TOP DECK, REINSTALL, AND SEAL UPON COMPLETION OF WORK.
2. CONTRACTOR SHALL INSTALL NEW 54" DIA. PIPE IN FLANGED SECTIONS OF SUCH LENGTHS WHICH MAY BE LOWERED THROUGH EXISTING ACCESS SHAFT WITHOUT REMOVING LADDER CAGE OR ELECTRICAL CONDUIT.

LEGEND:

- DENOTES EXISTING EQUIPMENT
- DENOTES NEW EQUIPMENT
- TO BE DEMOLISHED

DEPARTMENT OF PUBLIC WORKS
HOWARD COUNTY, MARYLAND

DIRECTOR OF PUBLIC WORKS — DATE 5/7/96
CHIEF, BUREAU OF ENGINEERING — DATE 5/7/96
CHIEF, BUREAU OF ENVIRONMENTAL SERVICES — DATE 5/7/96
CHIEF, UTILITY DESIGN DIVISION — DATE 5-7-96

M&E Metcalf & Eddy

REG. PROF. ENGR. — DATE 5-7-96

STATE OF MARYLAND — JONATHAN WINTHROP DOANE — No. 19140 — REGISTERED PROFESSIONAL ENGINEER

DES:
DRN: M.J.C.
CHK: J.H.
DATE:

BY	NO.	REVISION	DATE
M.J.C.	1	RECORD DRAWING	11/2/94

MECHANICAL

54" METER VAULT MODIFICATIONS
PLANS, SECTIONS AND DETAILS

LITTLE PATUXENT WASTEWATER TREATMENT PLANT

LITTLE PATUXENT WASTEWATER TREATMENT PLANT EXPANSION
ADDITION NO. 5
CAPITAL PROJECT S-6153

CONTRACT NO. 20-3082
HOWARD COUNTY, MARYLAND

SCALE AS SHOWN

SHEET 127 OF 226

M-33A

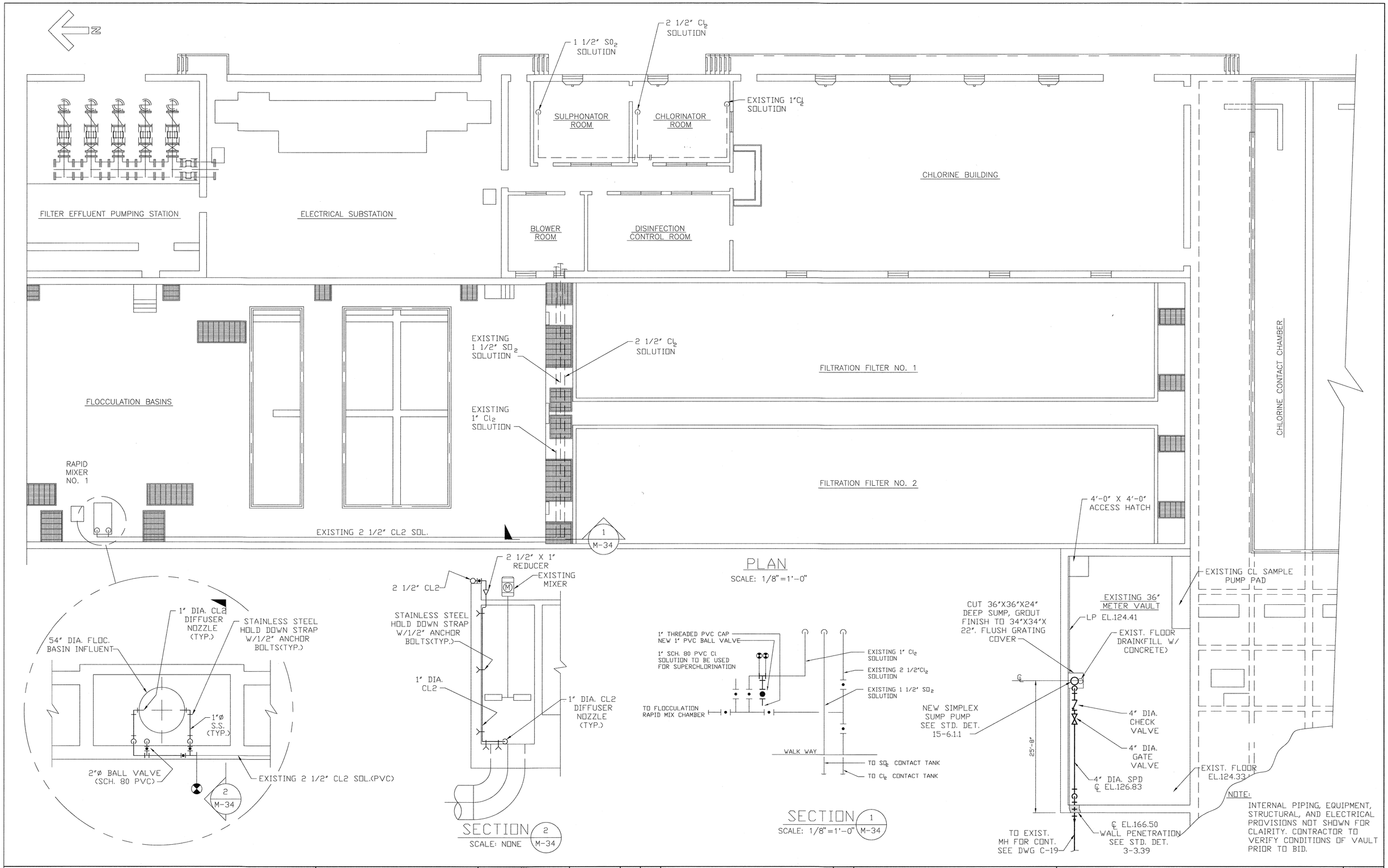

DEPARTMENT OF PUBLIC WORKS
HOWARD COUNTY, MARYLAND

DIRECTOR OF PUBLIC WORKS — DATE 5/7/96
CHIEF, BUREAU OF ENGINEERING — DATE 5/7/96
CHIEF, BUREAU OF ENVIRONMENTAL SERVICES — DATE 5/7/96
CHIEF, UTILITY DESIGN DIVISION — DATE 5-7-96

Metcalf & Eddy
REG. PROF. ENGR. — DATE 5-7-96

STATE OF MARYLAND — JONATHAN WINTHROP DOANE No. 15143 — REGISTERED PROFESSIONAL ENGINEER

DES:				
DRN: M.J.C.				
CHK: J.H.				
DATE:	M.J.C.	1	RECORD DRAWING	11/2/94
	BY	NO.	REVISION	DATE

MECHANICAL

CHLORINE BUILDING MODIFICATIONS OVERALL PLAN

LITTLE PATUXENT WASTEWATER TREATMENT PLANT
LITTLE PATUXENT WASTEWATER TREATMENT PLANT EXPANSION
ADDITION NO. 5
CAPITAL PROJECT S-6153
CONTRACT NO. 20-3082
HOWARD COUNTY, MARYLAND

SCALE AS SHOWN

SHEET 128 OF 226

M-34A

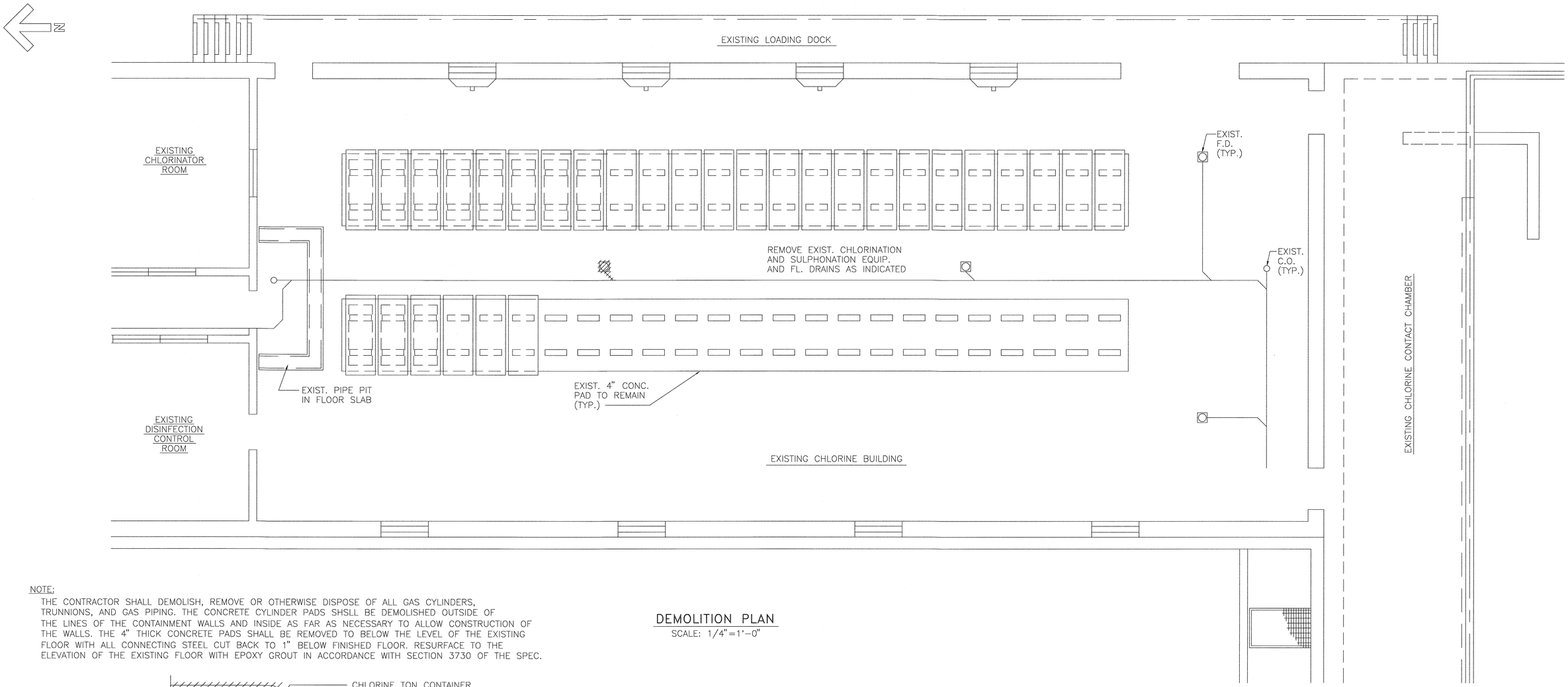

NOTE:

THE CONTRACTOR SHALL DEMOLISH, REMOVE OR OTHERWISE DISPOSE OF ALL GAS CYLINDERS, TRUNNIONS, AND GAS PIPING. THE CONCRETE CYLINDER PADS SHSLL BE DEMOLISHED OUTSIDE OF THE LINES OF THE CONTAINMENT WALLS AND INSIDE AS FAR AS NECESSARY TO ALLOW CONSTRUCTION OF THE WALLS. THE 4" THICK CONCRETE PADS SHALL BE REMOVED TO BELOW THE LEVEL OF THE EXISTING FLOOR WITH ALL CONNECTING STEEL CUT BACK TO 1" BELOW FINISHED FLOOR. RESURFACE TO THE ELEVATION OF THE EXISTING FLOOR WITH EPOXY GROUT IN ACCORDANCE WITH SECTION 3730 OF THE SPEC.

DEMOLITION PLAN

SCALE: 1/4"=1'-0"

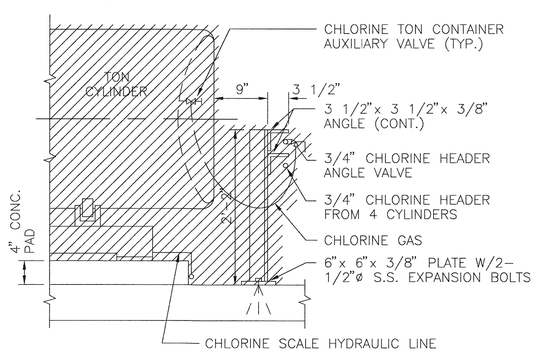

DETAIL TON CHLORINE CYLINDER CONNECTION DEMOLITION

SCALE: 1"= 1'-0"

DEPARTMENT OF PUBLIC WORKS
HOWARD COUNTY, MARYLAND

DIRECTOR OF PUBLIC WORKS — DATE 5/7/96
CHIEF, BUREAU OF ENGINEERING — DATE 5/7/96
CHIEF, BUREAU OF ENVIRONMENTAL SERVICES — DATE 5/7/96
CHIEF, UTILITY DESIGN DIVISION — DATE 5-7-96

M&E Metcalf & Eddy

REG. PROF. ENGR. — DATE 5-7-86

STATE OF MARYLAND — JONATHAN WINTHROP DOANE No. 15140 — REGISTERED PROFESSIONAL ENGINEER

DES:				
DRN: M.J.C.				
CHK: J.H.				
DATE:	M.J.C.	1	RECORD DRAWING	11/2/94
	BY	NO.	REVISION	DATE

MECHANICAL

CHLORINE BUILDING MODIFICATIONS DEMOLITION PLAN

LITTLE PATUXENT WASTEWATER TREATMENT PLANT

LITTLE PATUXENT WASTEWATER TREATMENT PLANT EXPANSION
ADDITION NO. 5
CAPITAL PROJECT S-6153

CONTRACT NO. 20-3082
HOWARD COUNTY, MARYLAND

SCALE AS SHOWN

SHEET 129 OF 226

M-35A

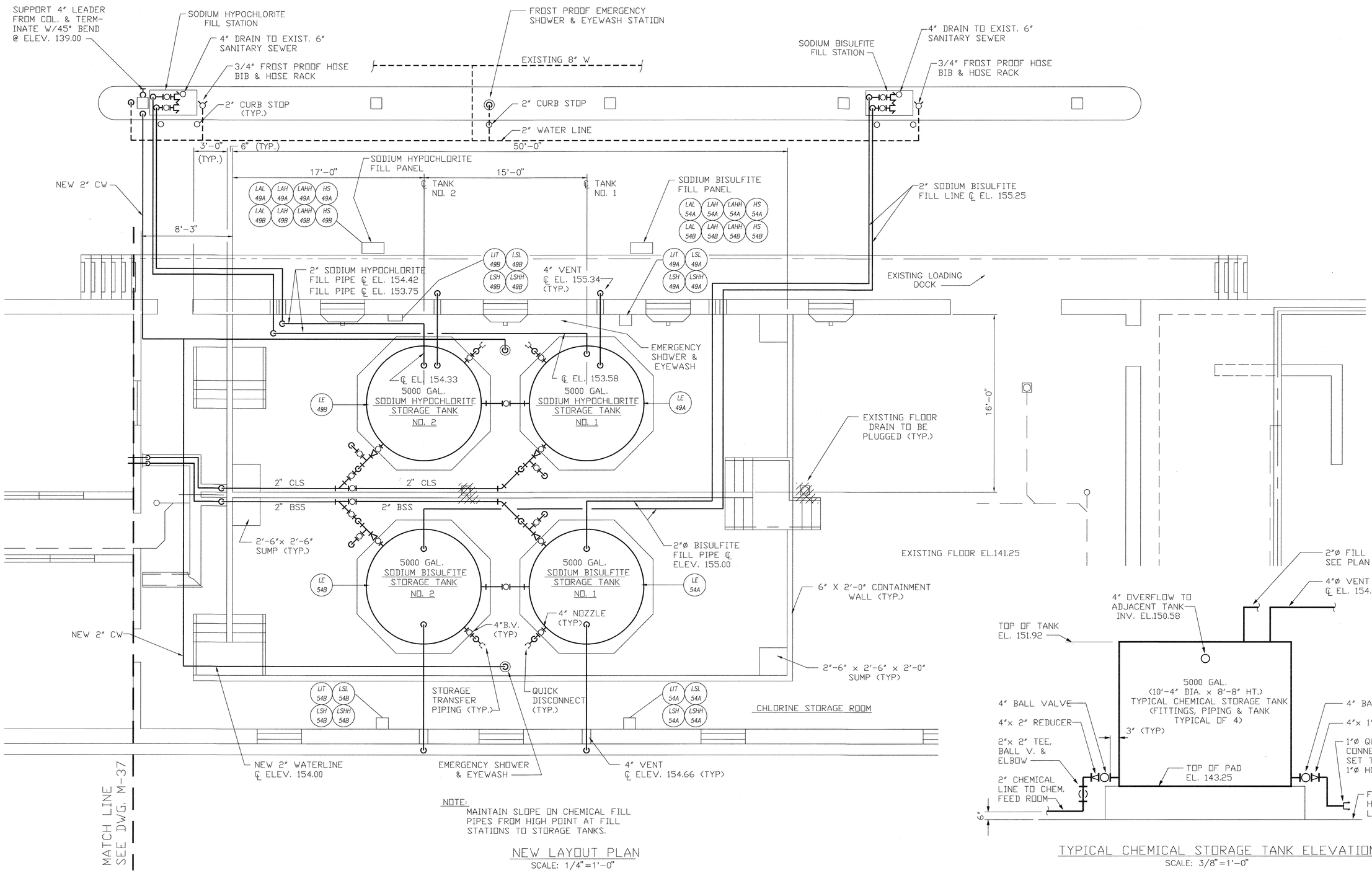

NOTE:
MAINTAIN SLOPE ON CHEMICAL FILL PIPES FROM HIGH POINT AT FILL STATIONS TO STORAGE TANKS.

NEW LAYOUT PLAN
SCALE: 1/4"=1'-0"

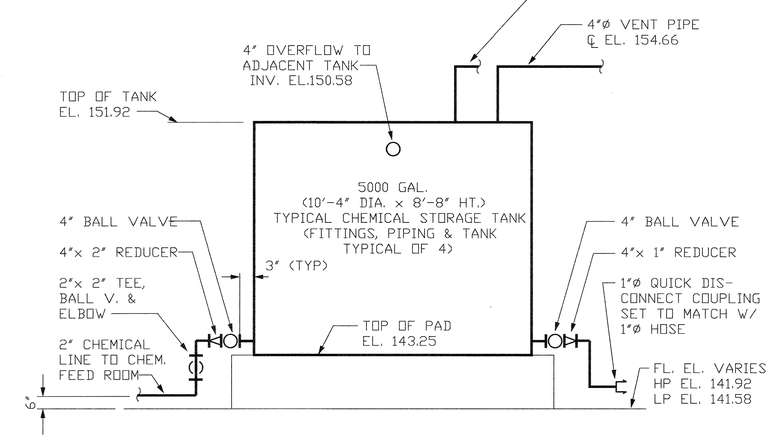

TYPICAL CHEMICAL STORAGE TANK ELEVATION
SCALE: 3/8"=1'-0"

DEPARTMENT OF PUBLIC WORKS
HOWARD COUNTY, MARYLAND

DIRECTOR OF PUBLIC WORKS — DATE 5/7/96
CHIEF, BUREAU OF ENGINEERING — DATE 5/7/96
CHIEF, BUREAU OF ENVIRONMENTAL SERVICES — DATE 5/7/96
CHIEF, UTILITY DESIGN DIVISION — DATE 5-7-96

M&E Metcalf & Eddy
REG./PROF. ENGR. — DATE 5-7-96

STATE OF MARYLAND — JONATHAN WINTHROP DOANE — No. 15140 — REGISTERED PROFESSIONAL ENGINEER

DES:
DRN: M.J.C.
CHK: J.H.
DATE:

BY	NO.	REVISION	DATE
M.J.C.	1	RECORD DRAWING	11/2/94

MECHANICAL

CHLORINE BUILDING MODIFICATIONS STORAGE AREA PLAN

LITTLE PATUXENT WASTEWATER TREATMENT PLANT
LITTLE PATUXENT WASTEWATER TREATMENT PLANT EXPANSION
ADDITION NO. 5
CAPITAL PROJECT S-6153
CONTRACT NO. 20-3082
HOWARD COUNTY, MARYLAND

SCALE AS SHOWN
SHEET 130 OF 226
M-36A

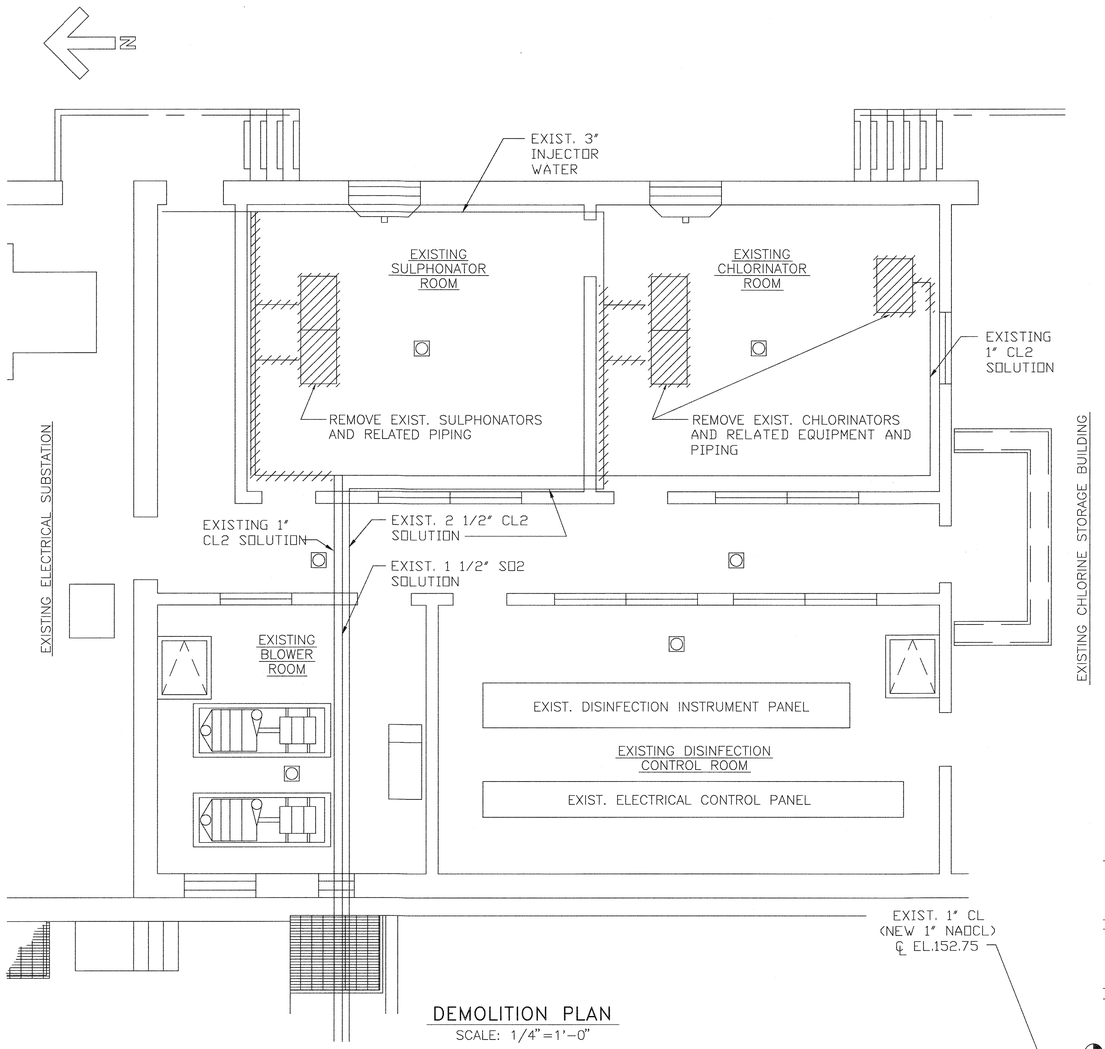

DEMOLITION PLAN
SCALE: 1/4"=1'-0"

NOTE:
A VENT STANDPIPE, STRAINER, BYPASS AND VALVES WERE INSTALLED ON EACH PUMP SUCTION LINE.

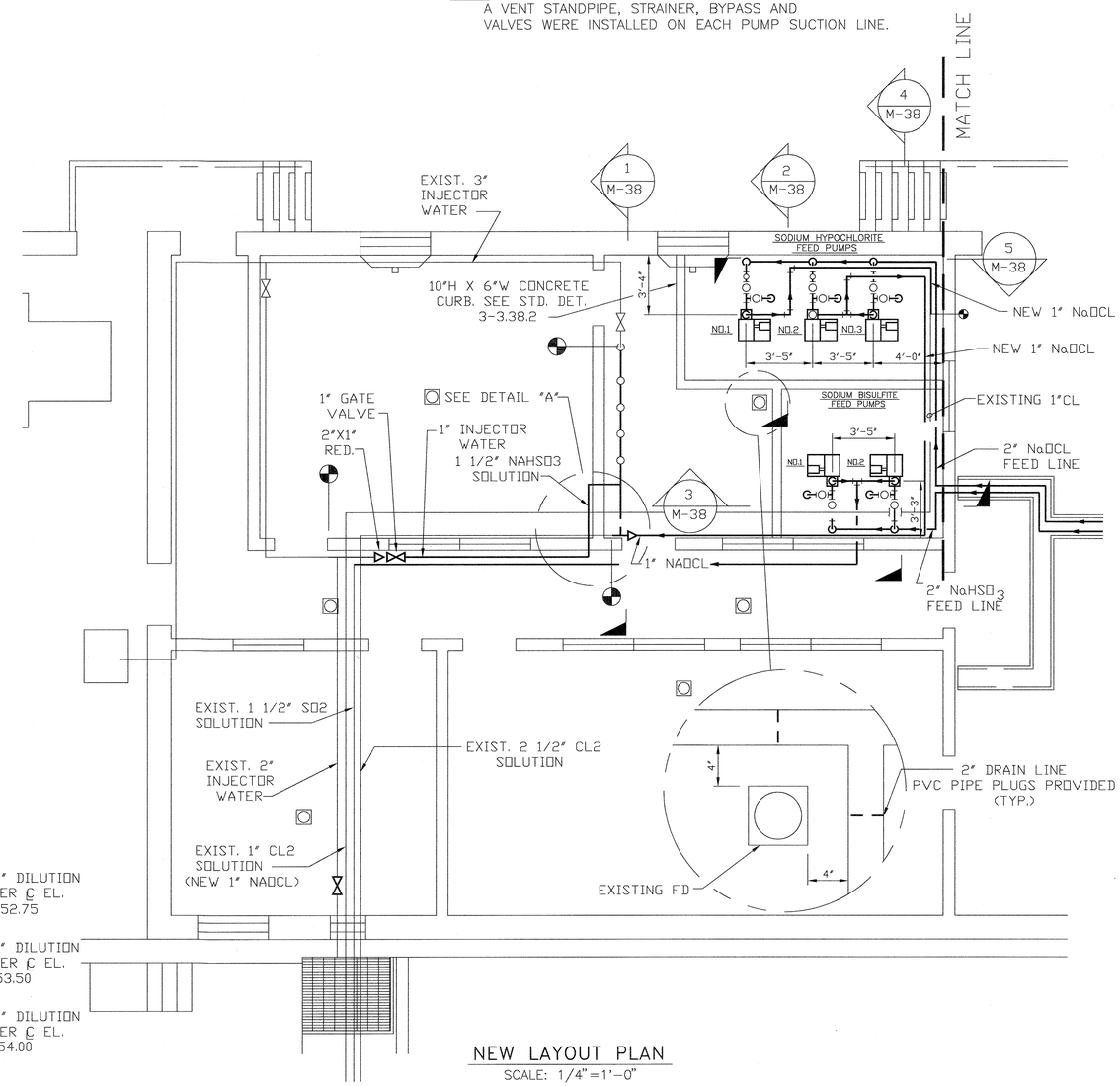

NEW LAYOUT PLAN
SCALE: 1/4"=1'-0"

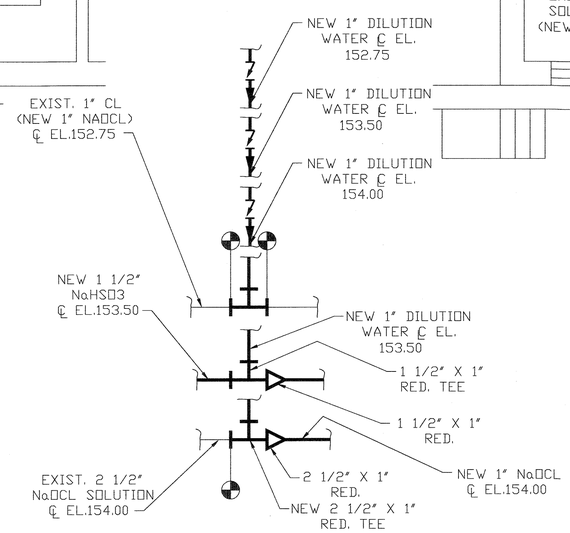

DETAIL "A"
SCALE: NONE

NOTE:
TEES AND BALL VALVES WERE INSTALLED ON EACH OF THE THREE CHENICAL DISCHARGE AND TWO CHEMICAL SUCTION LINES AND ON THE INJECTOR WATER LINE FOR TEMPORY USE DURING CONSTRUCTION. THESE CONNECTIONS WERE CAPPED WITH THREADED PVC PIPE PLUGS AND ABANDONED IN PLACE.

DEPARTMENT OF PUBLIC WORKS
HOWARD COUNTY, MARYLAND

DIRECTOR OF PUBLIC WORKS — DATE 5/7/96
CHIEF, BUREAU OF ENGINEERING — DATE 5/7/96
CHIEF, BUREAU OF ENVIRONMENTAL SERVICES — DATE 5/7/96
CHIEF, UTILITY DESIGN DIVISION — DATE 5-7-96

M&E Metcalf & Eddy
REG. PROF. ENGR. — DATE 5-7-96

STATE OF MARYLAND — JONATHAN WINTHROP DOANE No. 13140 — REGISTERED PROFESSIONAL ENGINEER

DES:				
DRN: M.J.C.				
CHK: J.H.				
DATE:	M.J.C.	1	RECORD DRAWING	11/2/94
	BY	NO.	REVISION	DATE

MECHANICAL

CHLORINE BUILDING MODIFICATIONS
CHEMICAL FEED RM PLANS

LITTLE PATUXENT WASTEWATER TREATMENT PLANT

LITTLE PATUXENT WASTEWATER TREATMENT PLANT EXPANSION ADDITION NO. 5
CAPITAL PROJECT S-6153

CONTRACT NO. 20-3082
HOWARD COUNTY, MARYLAND

SCALE AS SHOWN

SHEET 131 OF 226

M-37A

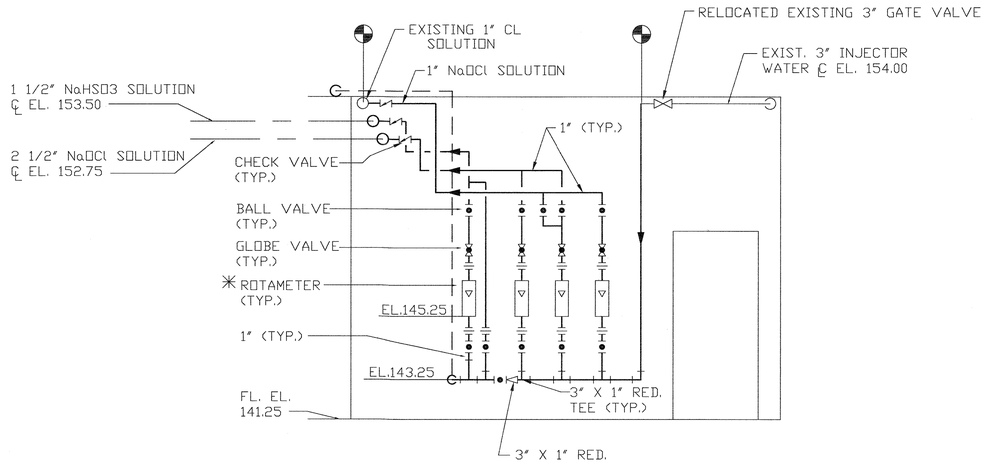

✳ FOR SIZE OF ROTAMETER SEE SPECIFICATION SECTION 15342. 0 TO 5 GPM

SECTION 1 / M-37
SCALE: 3/8"=1'-0"

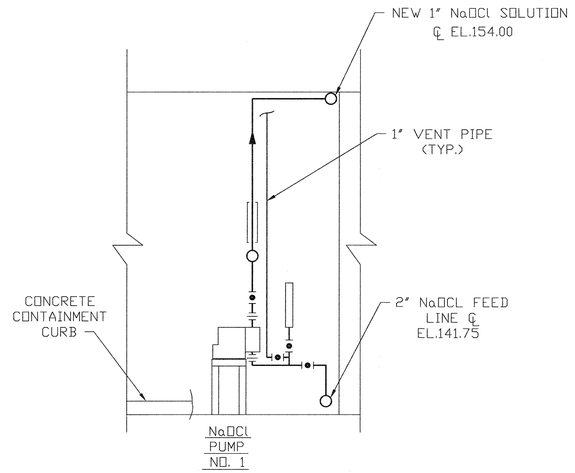

SECTION 2 / M-37
SCALE: 3/8"=1'-0"

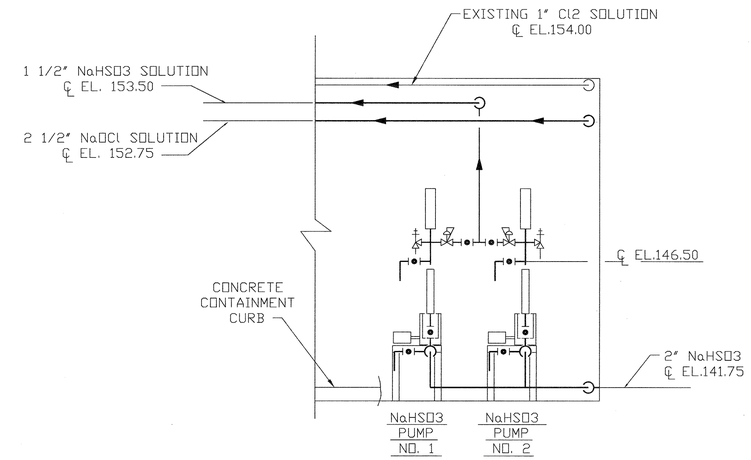

SECTION 3 / M-37
SCALE: 3/8"=1'-0"

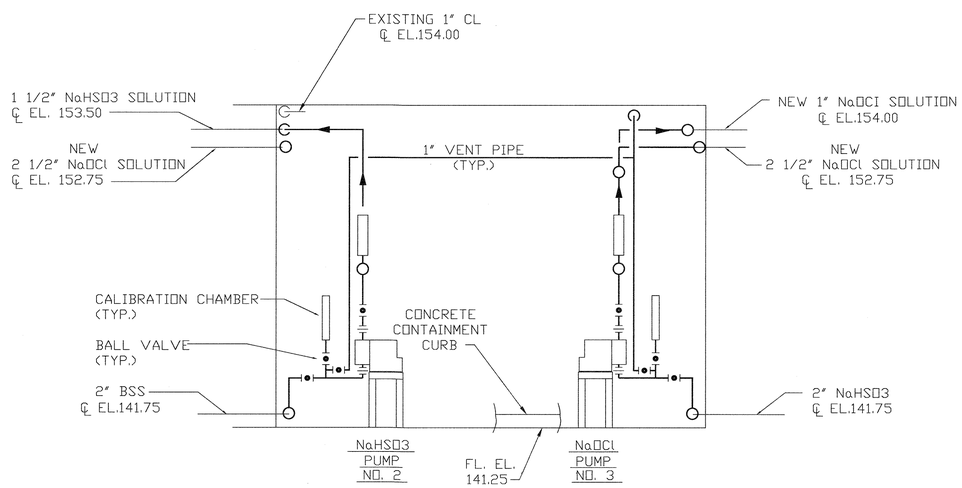

SECTION 4 / M-37
SCALE: 3/8"=1'-0"

NOTE:
A 1"ø VENT STANDPIPE,STRAINER,STRAINER BYPASS, AND VALVES WERE INSTALLED ON EACH PUMP SUCTION LINE.

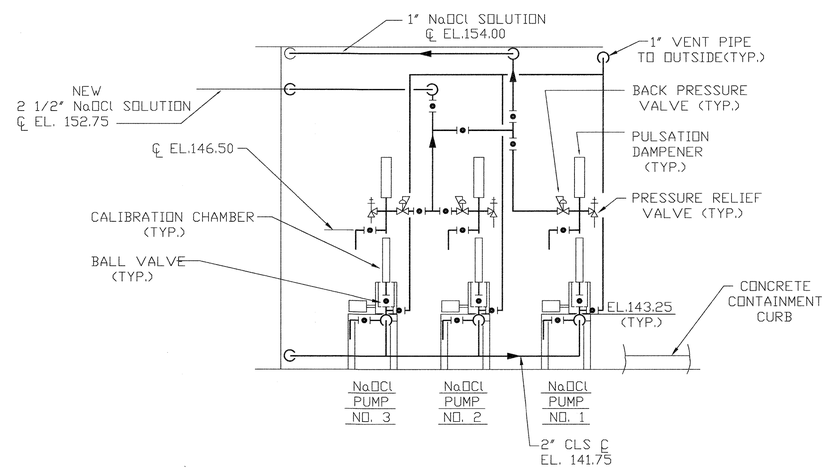

SECTION 5 / M-37
SCALE: 3/8"=1'-0"

DEPARTMENT OF PUBLIC WORKS
HOWARD COUNTY, MARYLAND

DIRECTOR OF PUBLIC WORKS — DATE 5/7/96
CHIEF, BUREAU OF ENGINEERING — DATE 5/7/96
CHIEF, BUREAU OF ENVIRONMENTAL SERVICES — DATE 5/7/96
CHIEF, UTILITY DESIGN DIVISION — DATE 5-7-96

M&E Metcalf & Eddy
REG. PROF. ENGR. — DATE 5-7-96

STATE OF MARYLAND — JONATHAN WINTHROP DOANE No. 15140 — REGISTERED PROFESSIONAL ENGINEER

DES:				
DRN: M.J.C.				
CHK: J.H.				
DATE:	M.J.C.	1	RECORD DRAWING	11/2/94
	BY	NO.	REVISION	DATE

MECHANICAL
CHLORINE BUILDING MODIFICATIONS CHEMICAL FEED ROOM SECTIONS

LITTLE PATUXENT WASTEWATER TREATMENT PLANT
LITTLE PATUXENT WASTEWATER TREATMENT PLANT EXPANSION
ADDITION NO. 5
CAPITAL PROJECT S-6153
CONTRACT NO. 20-3082
HOWARD COUNTY, MARYLAND

SCALE AS SHOWN
SHEET 132 OF 226
M-38A

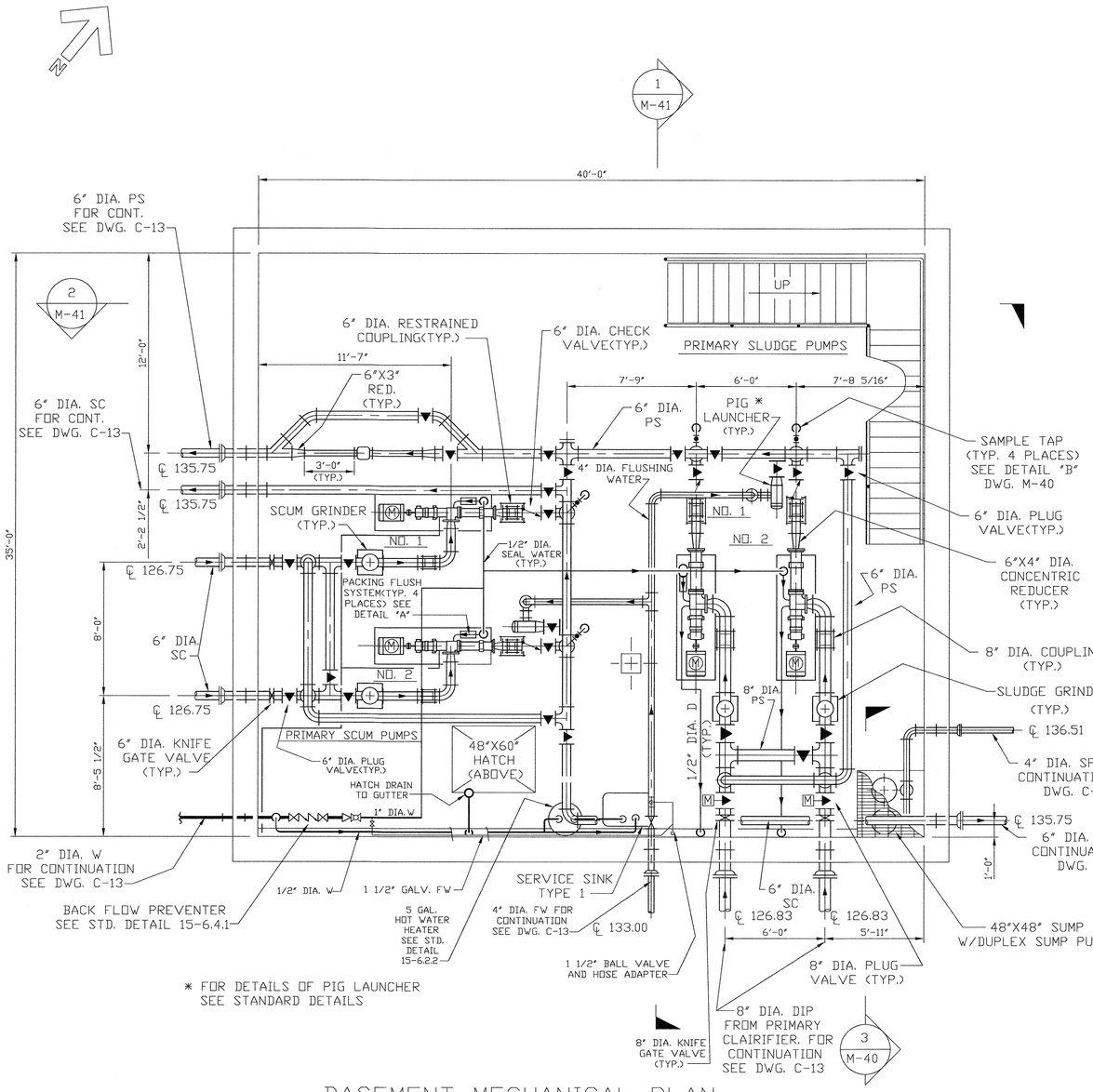

BASEMENT MECHANICAL PLAN

SCALE:1/4"=1'-0"

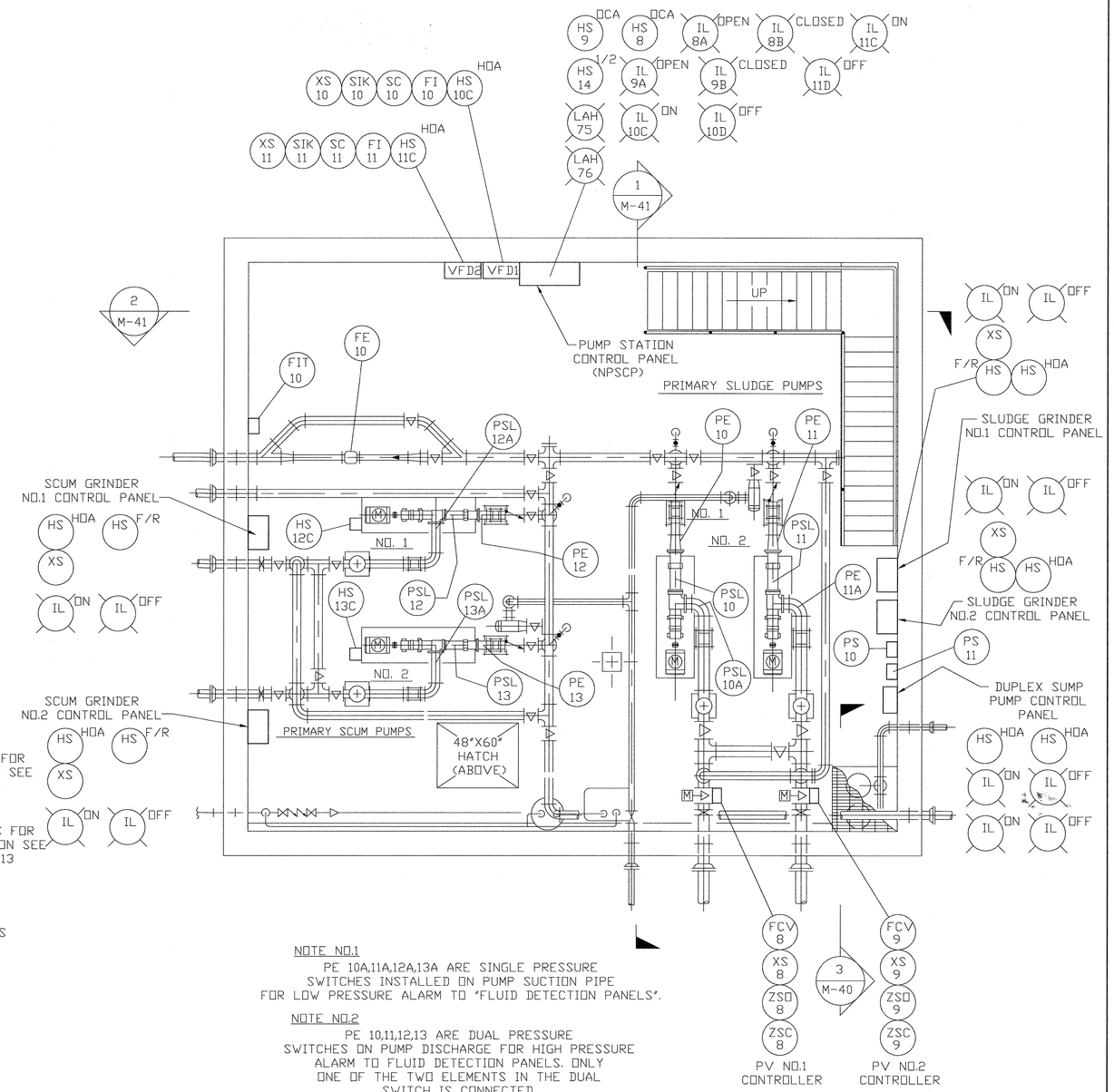

NOTE NO.1

PE 10,A,11A,12A,13A ARE SINGLE PRESSURE SWITCHES INSTALLED ON PUMP SUCTION PIPE FOR LOW PRESSURE ALARM TO "FLUID DETECTION PANELS".

NOTE NO.2

PE 10,11,12,13 ARE DUAL PRESSURE SWITCHES ON PUMP DISCHARGE FOR HIGH PRESSURE ALARM TO FLUID DETECTION PANELS. ONLY ONE OF THE TWO ELEMENTS IN THE DUAL SWITCH IS CONNECTED.

BASEMENT INSTRUMENTATION PLAN

SCALE:1/4"=1'-0"

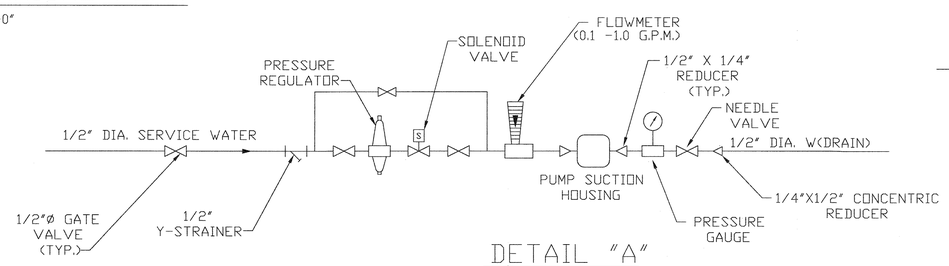

DETAIL "A" PACKING FLUSH SYSTEM

DEPARTMENT OF PUBLIC WORKS
HOWARD COUNTY, MARYLAND

DIRECTOR OF PUBLIC WORKS — DATE 5/7/96
CHIEF, BUREAU OF ENGINEERING — DATE 5/7/96
CHIEF, BUREAU OF ENVIRONMENTAL SERVICES — DATE 5/7/96
CHIEF, UTILITY DESIGN DIVISION — DATE 5-7-96

M&E Metcalf & Eddy
REG. PROF. ENGR. — DATE 5-7-96

STATE OF MARYLAND — JONATHAN WINTHROP DOANE No. 15140 — REGISTERED PROFESSIONAL ENGINEER

DES:				
DRN: M.J.C.				
CHK: J.H.				
DATE:	M.J.C.	1	RECORD DRAWING	11/2/94
	BY	NO.	REVISION	DATE

MECHANICAL

NORTH PUMP STATION BASEMENT PLANS

LITTLE PATUXENT WASTEWATER TREATMENT PLANT

LITTLE PATUXENT WASTEWATER TREATMENT PLANT EXPANSION
ADDITION NO. 5
CAPITAL PROJECT S-6153

CONTRACT NO. 20-3082
HOWARD COUNTY, MARYLAND

SCALE AS SHOWN

SHEET 133 OF 226

M-39A

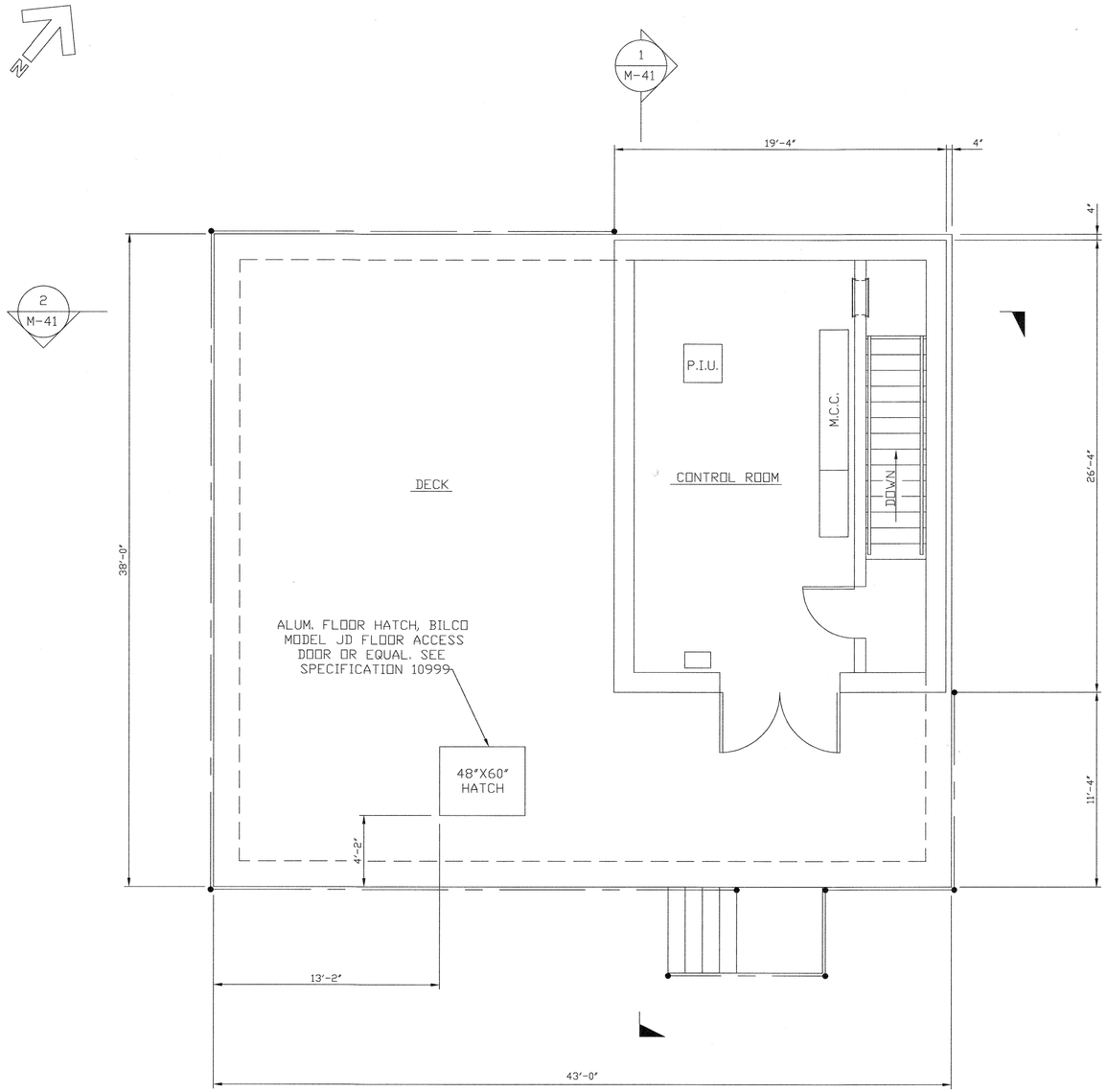

UPPER PLAN

SCALE:1/4"=1'-0"

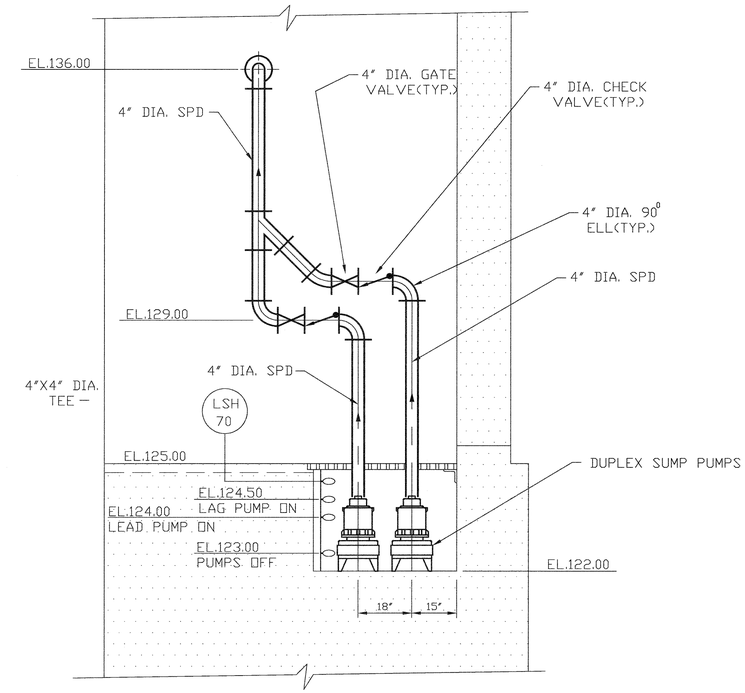

SECTION 3/M-39 3/M-44

SCALE:1/2"=1'-0"

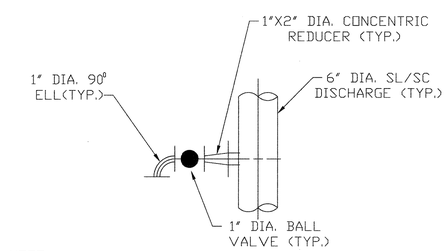

NOTE:

SAMPLE TAP, TYPICAL (4)PLACES.

DETAIL B/M-39

SCALE:NONE

DEPARTMENT OF PUBLIC WORKS
HOWARD COUNTY, MARYLAND

DIRECTOR OF PUBLIC WORKS — DATE 5/7/96
CHIEF, BUREAU OF ENGINEERING — DATE 5/7/96
CHIEF, BUREAU OF ENVIRONMENTAL SERVICES — DATE 5/7/96
CHIEF, UTILITY DESIGN DIVISION — DATE 5-7-96

M&E Metcalf & Eddy

REG. PROF. ENGR. — DATE 5-7-96

STATE OF MARYLAND — JONATHAN WINTHROP DOANE No. 15140 — REGISTERED PROFESSIONAL ENGINEER

DES:				
DRN: M.J.C.				
CHK: J.H.				
DATE:	M.J.C.	1	RECORD DRAWING	11/2/94
	BY	NO.	REVISION	DATE

MECHANICAL

NORTH PUMP STATION
UPPER PLAN AND SECTIONS

LITTLE PATUXENT WASTEWATER TREATMENT PLANT

LITTLE PATUXENT WASTEWATER TREATMENT PLANT EXPANSION
ADDITION NO. 5
CAPITAL PROJECT S-6153

CONTRACT NO. 20-3082
HOWARD COUNTY, MARYLAND

SCALE AS SHOWN

SHEET 134 OF 226

M-40A

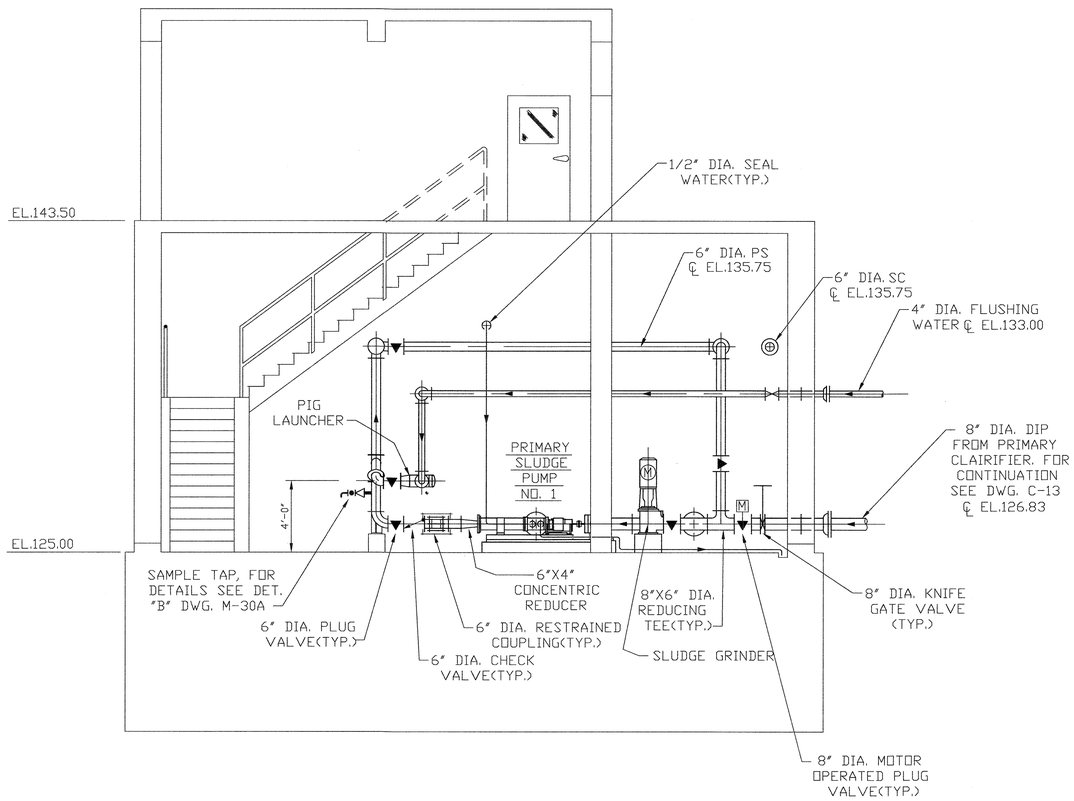

SECTION 1 / M-39
SCALE:1/4"=1'-0"

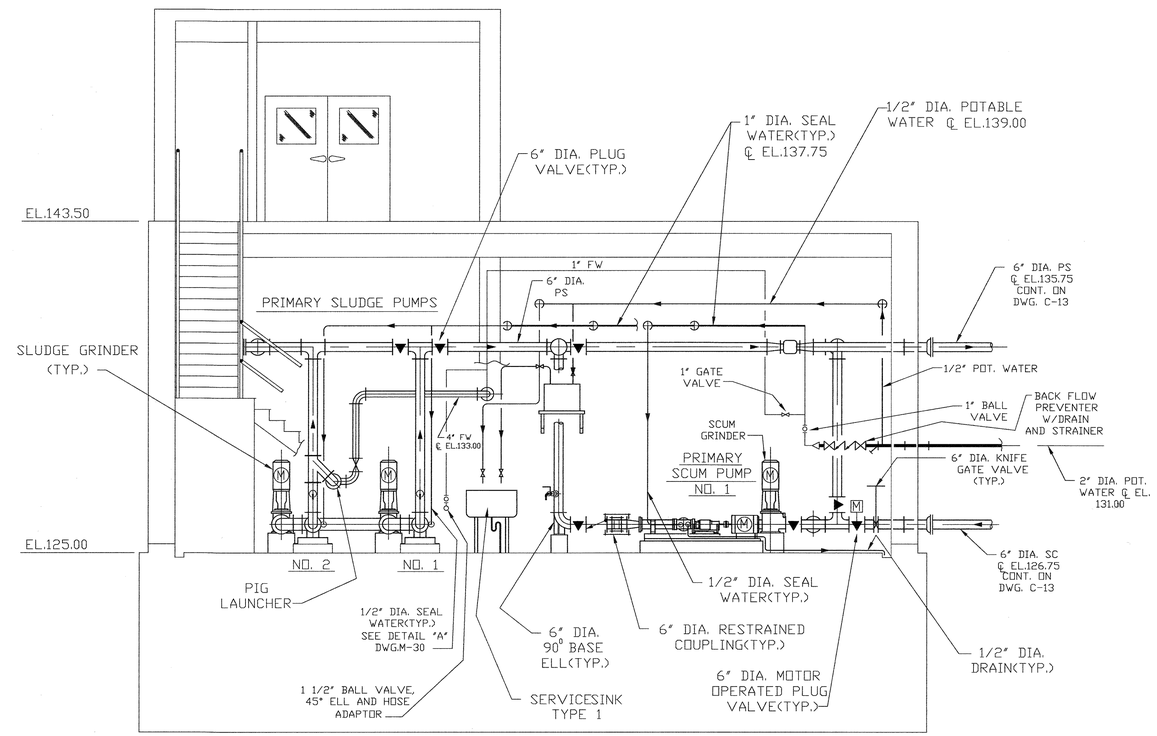

SECTION 2 / M-39
SCALE:1/4"=1'-0"

DEPARTMENT OF PUBLIC WORKS
HOWARD COUNTY, MARYLAND

DIRECTOR OF PUBLIC WORKS — DATE 5/7/96
CHIEF, BUREAU OF ENGINEERING — DATE 5/7/96
CHIEF, BUREAU OF ENVIRONMENTAL SERVICES — DATE 5/7/96
CHIEF, UTILITY DESIGN DIVISION — DATE 5-7-96

M&E Metcalf & Eddy
REG. PROF. ENGR. — DATE 5-7-96

STATE OF MARYLAND — JONATHAN WINTHROP DOANE No. 15140 — REGISTERED PROFESSIONAL ENGINEER

DES:
DRN: M.J.C.
CHK: J.H.
DATE:

BY	NO.	REVISION	DATE
M.J.C.	1	RECORD DRAWING	11/2/94

MECHANICAL

NORTH PUMP STATION SECTIONS

LITTLE PATUXENT WASTEWATER TREATMENT PLANT

LITTLE PATUXENT WASTEWATER TREATMENT PLANT EXPANSION ADDITION NO. 5 CAPITAL PROJECT S-6153

CONTRACT NO. 20-3082
HOWARD COUNTY, MARYLAND

SCALE AS SHOWN

SHEET 135 OF 226

M-41A

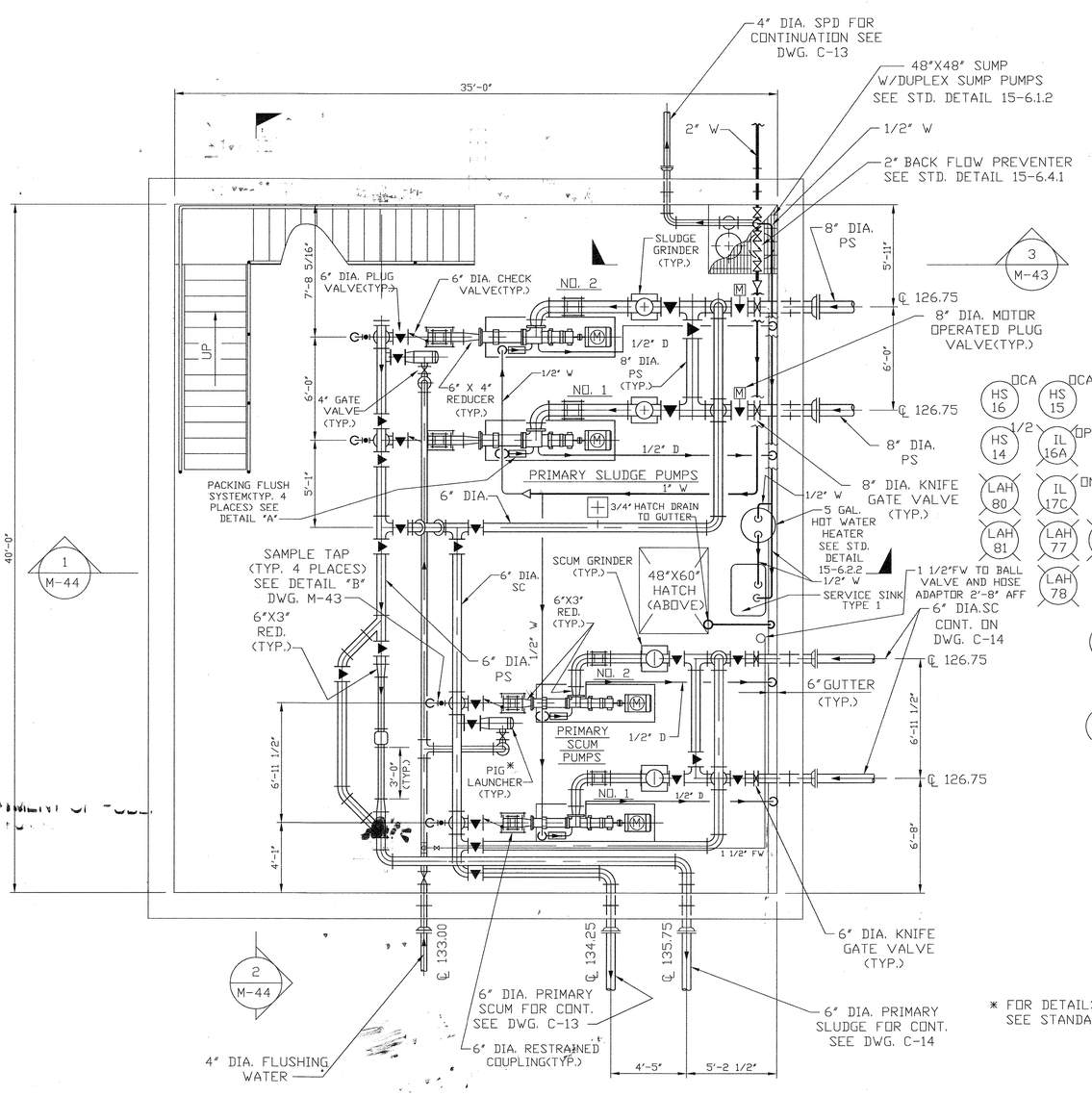

BASEMENT MECHANICAL PLAN

SCALE:1/4"=1'-0"

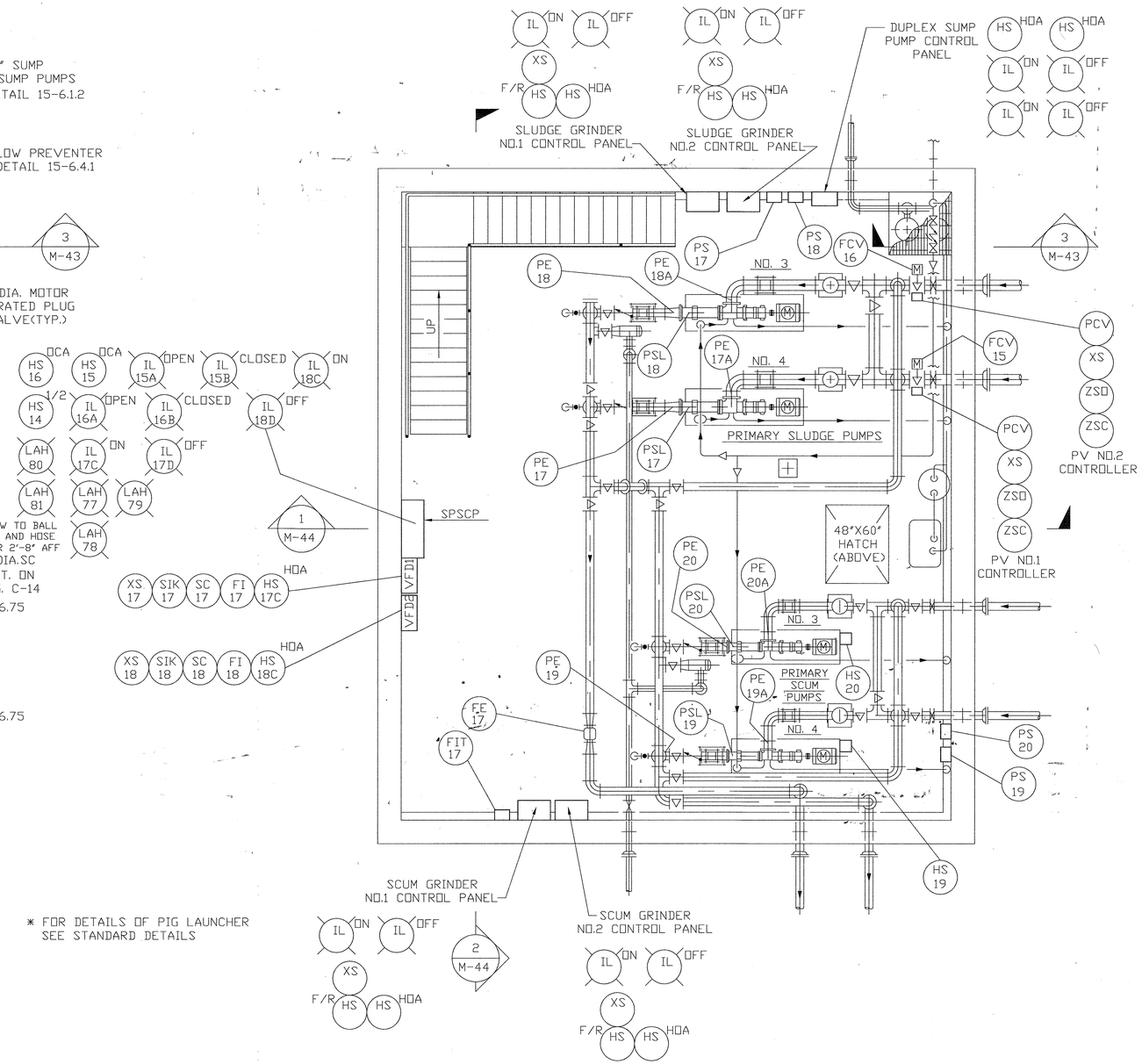

BASEMENT INSTRUMENTATION PLAN

SCALE:1/4"=1'-0"

* FOR DETAILS OF PIG LAUNCHER SEE STANDARD DETAILS

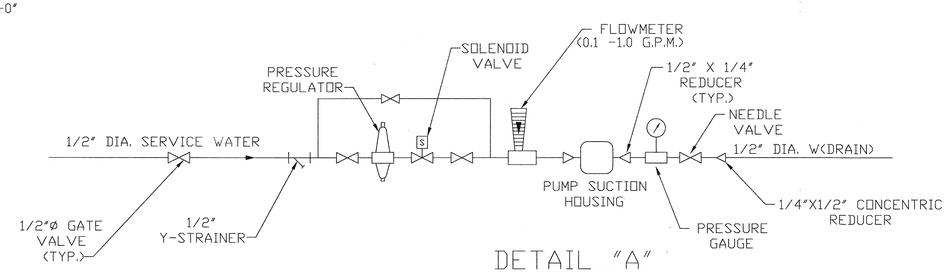

DETAIL "A"
PACKING FLUSH SYSTEM

NOTE NO.1

PE 17A,18A,19A,20A ARE SINGLE PRESSURE SWITCHES INSTALLED ON PUMP SUCTION PIPE FOR LOW PRESSURE ALARM TO "FLUID DETECTION PANELS".

NOTE NO.2

PE 17,18,19,20 ARE DUAL PRESSURE SWITCHES ON PUMP DISCHARGE FOR HIGH PRESSURE ALARM TO FLUID DETECTION PANELS. ONLY ONE OF THE TWO ELEMENTS IN THE DUAL SWITCH IS CONNECTED.

DEPARTMENT OF PUBLIC WORKS
HOWARD COUNTY, MARYLAND

DIRECTOR OF PUBLIC WORKS — DATE 5/7/96
CHIEF, BUREAU OF ENGINEERING — DATE 5/7/96
CHIEF, BUREAU OF ENVIRONMENTAL SERVICES — DATE 5/7/96
CHIEF, UTILITY DESIGN DIVISION — DATE 5-7-96

M&E Metcalf & Eddy
REG. PROF. ENGR. — DATE 5-7-96

STATE OF MARYLAND — JONATHAN WINTHROP DOWE — No. 15140 — REGISTERED PROFESSIONAL ENGINEER

DES:				
DRN: M.J.C.				
CHK: J.H.				
DATE:	M.J.C.	1	RECORD DRAWING	11/2/94
	BY	NO.	REVISION	DATE

MECHANICAL

SOUTH PUMP STATION BASEMENT PLANS

LITTLE PATUXENT WASTEWATER TREATMENT PLANT

LITTLE PATUXENT WASTEWATER TREATMENT PLANT EXPANSION
ADDITION NO. 5
CAPITAL PROJECT S-6153

CONTRACT NO. 20-3082
HOWARD COUNTY, MARYLAND

SCALE AS SHOWN

SHEET 136 OF 226

M-42A

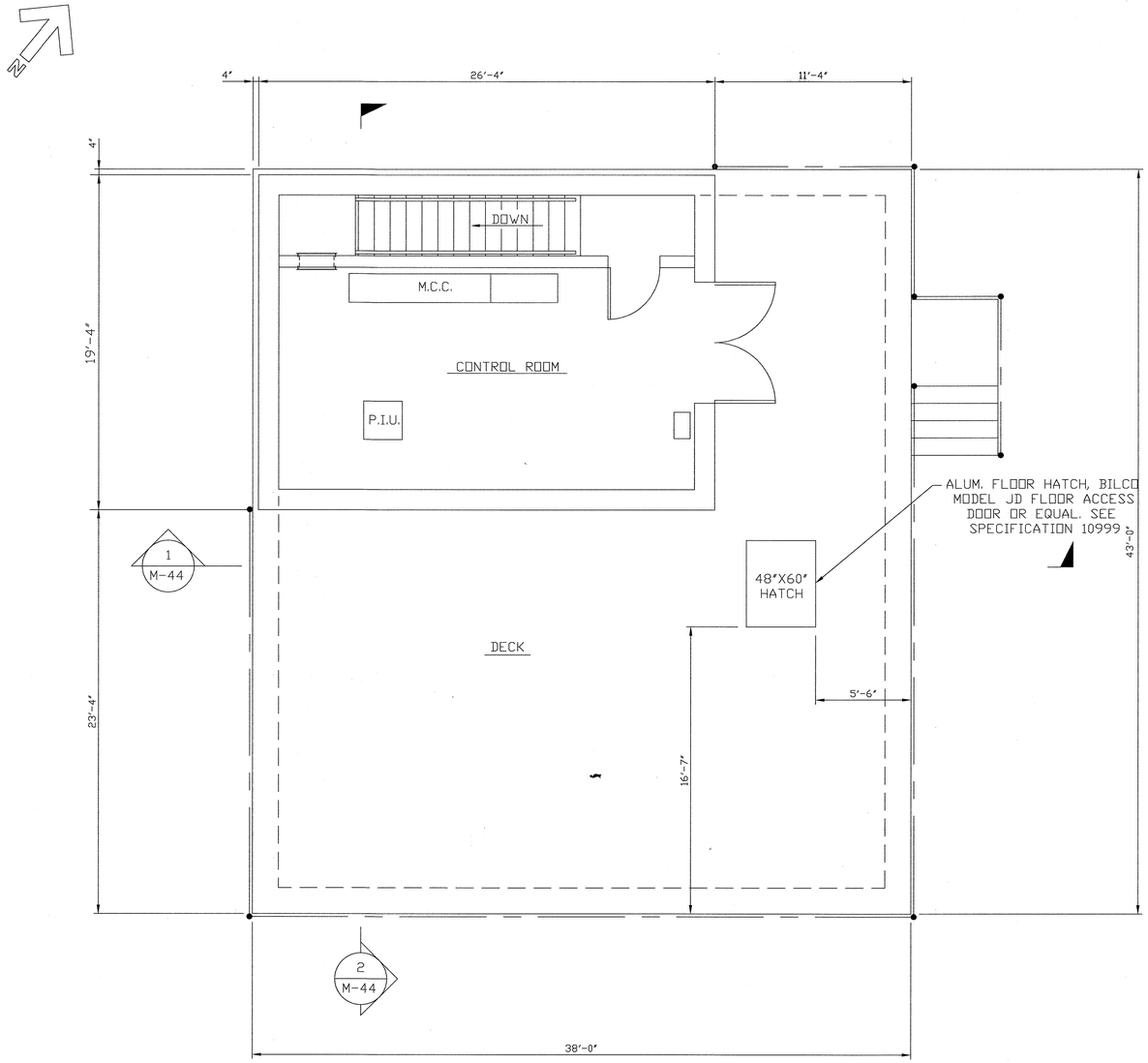

UPPER PLAN
SCALE:1/4"=1'-0"

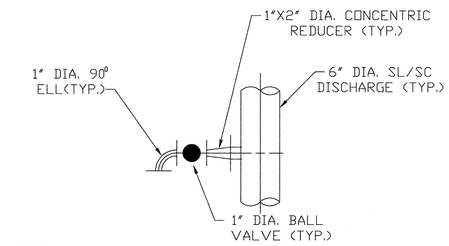

NOTE:
SAMPLE TAP, TYPICAL (4)PLACES.

DETAIL B / M-44
SCALE:NONE

DEPARTMENT OF PUBLIC WORKS
HOWARD COUNTY, MARYLAND

DIRECTOR OF PUBLIC WORKS — DATE 5/7/96
CHIEF, BUREAU OF ENGINEERING — DATE 5/7/96
CHIEF, BUREAU OF ENVIRONMENTAL SERVICES — DATE 5/7/96
CHIEF, UTILITY DESIGN DIVISION — DATE 5-7-96

Metcalf & Eddy
REG. PROF. ENGR. — DATE 5-7-96

STATE OF MARYLAND — JONATHAN WINTHROP COOKE — No. 15140 — REGISTERED PROFESSIONAL ENGINEER

DES:				
DRN: M.J.C.				
CHK: J.H.				
DATE:	M.J.C.	1	RECORD DRAWING	11/2/94
	BY	NO.	REVISION	DATE

MECHANICAL

SOUTH PUMP STATION
UPPER PLAN AND SECTIONS

LITTLE PATUXENT WASTEWATER TREATMENT PLANT

LITTLE PATUXENT WASTEWATER TREATMENT PLANT EXPANSION
ADDITION NO. 5
CAPITAL PROJECT S-6153

CONTRACT NO. 20-3082
HOWARD COUNTY, MARYLAND

SCALE AS SHOWN

SHEET 137 OF 226

M-43A

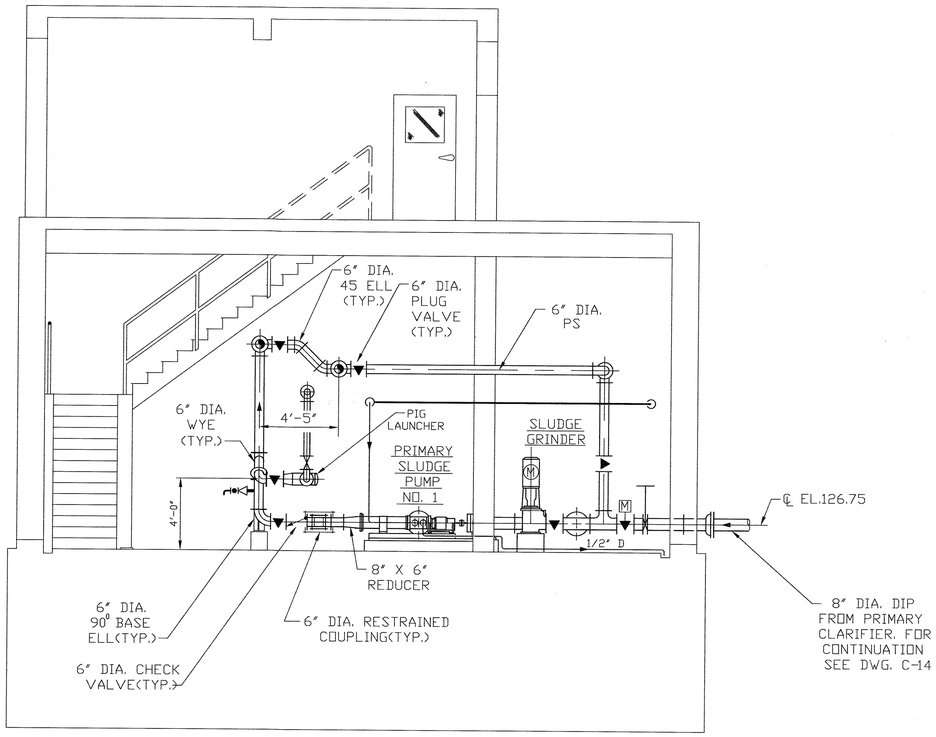

SECTION 1 M-42
SCALE:1/4"=1'-0"

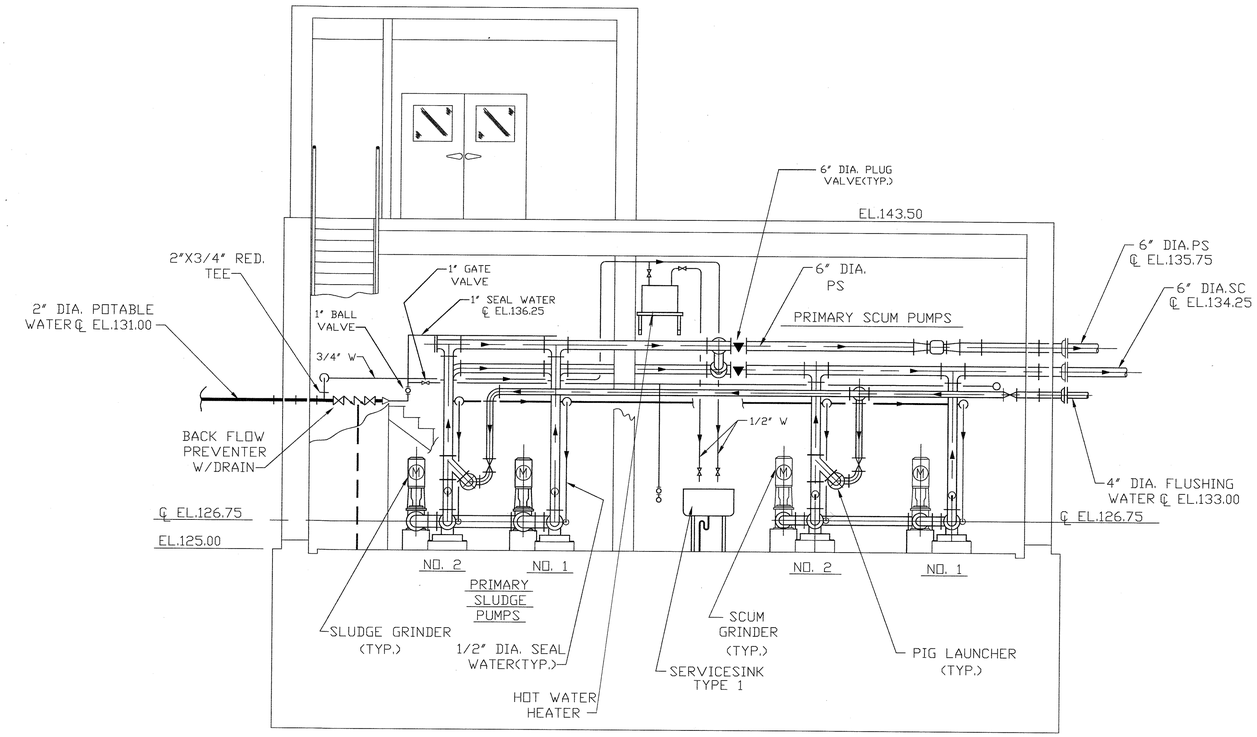

SECTION 2 M-42
SCALE:1/4"=1'-0"

DEPARTMENT OF PUBLIC WORKS
HOWARD COUNTY, MARYLAND

DIRECTOR OF PUBLIC WORKS — DATE 5/7/96
CHIEF, BUREAU OF ENGINEERING — DATE 5/7/96
CHIEF, BUREAU OF ENVIRONMENTAL SERVICES — DATE 5/7/96
CHIEF, UTILITY DESIGN DIVISION — DATE 5-7-96

M&E Metcalf & Eddy
REG. PROF. ENGR. — DATE 5-7-96

STATE OF MARYLAND — JONATHAN WINTHROP DOANE No. 15140 — REGISTERED PROFESSIONAL ENGINEER

DES:
DRN: M.J.C.
CHK: J.H.
DATE:

BY	NO.	REVISION	DATE
M.J.C.	1	RECORD DRAWING	11/2/94

MECHANICAL

SOUTH PUMP STATION SECTIONS

LITTLE PATUXENT WASTEWATER TREATMENT PLANT

LITTLE PATUXENT WASTEWATER TREATMENT PLANT EXPANSION ADDITION NO. 5
CAPITAL PROJECT S-6153

CONTRACT NO. 20-3082
HOWARD COUNTY, MARYLAND

SCALE AS SHOWN

SHEET 138 OF 226

M-44A

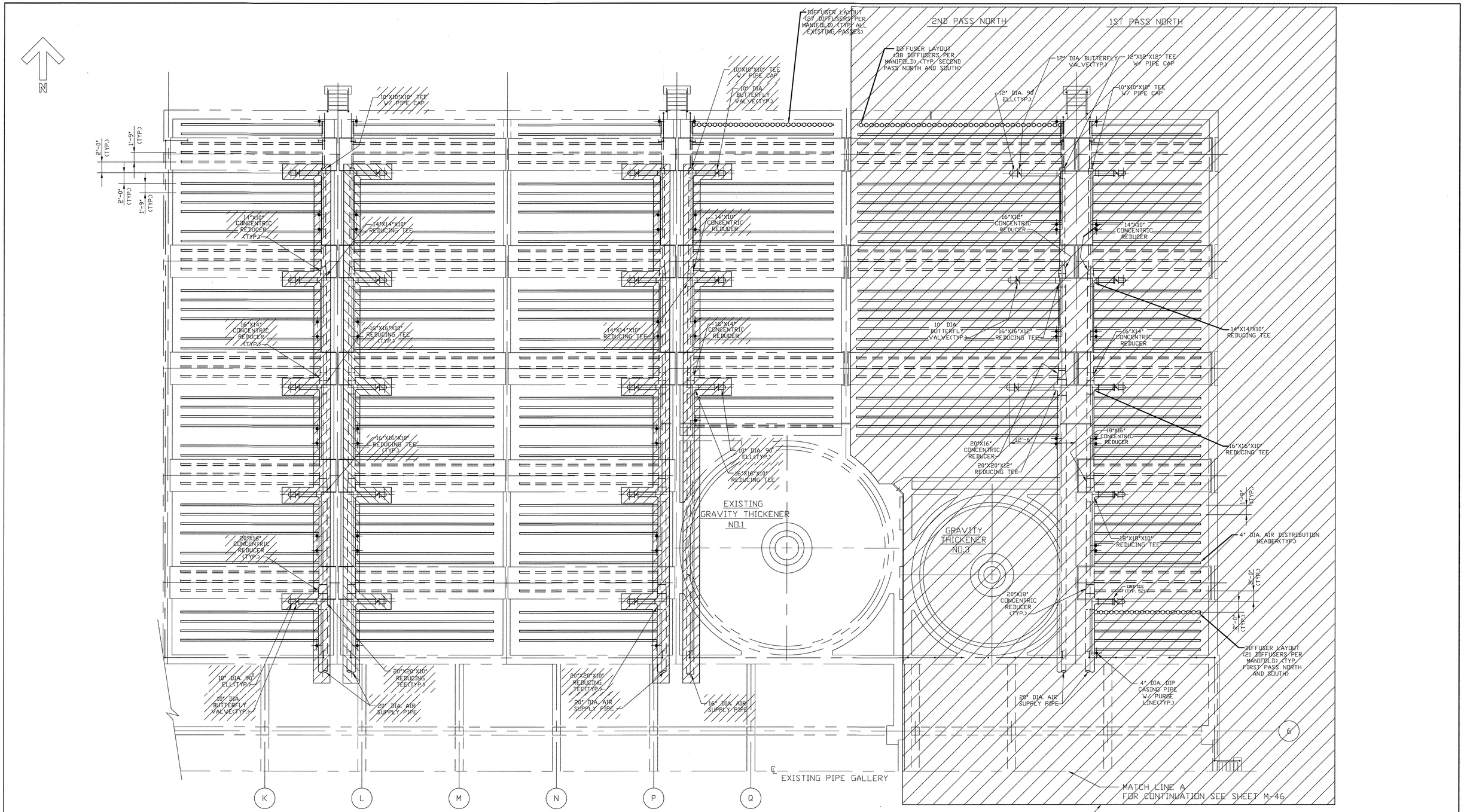

NOT CONSTRUCTED

PLAN AT EL. 146.33

SCALE: 1/8"=1'-0"

NOTE:

REMOVE ALL EXISTING DIFFUSER ASSEMBLIES.

NOTE:

DIGESTER NO. 4 AND GRAVITY THICKENER NO. 4 NOT CONSTRUCTED. SEE SHEET M-47A FOR MODIFICATIONS TO DIGESTER NO. 2 DIFFUSER ASSEMBLY.

LEGEND:

- DENOTES EXISTING TANK
- DENOTES NEW TANK
- DENOTES NEW EQUIPMENT
- DENOTES HIDDEN LINES

DEPARTMENT OF PUBLIC WORKS
HOWARD COUNTY, MARYLAND

DIRECTOR OF PUBLIC WORKS — DATE 5/7/96
CHIEF, BUREAU OF ENGINEERING — DATE 5/7/96
CHIEF, BUREAU OF ENVIRONMENTAL SERVICES — DATE 5/7/96
CHIEF, UTILITY DESIGN DIVISION — DATE 5-7-96

M&E Metcalf & Eddy

REG. PROF. ENGR. — DATE 5-7-96

STATE OF MARYLAND — JONATHAN WINTHROP DOANE No. 15140 — REGISTERED PROFESSIONAL ENGINEER

DES:
DRN: M.J.C.
CHK: J.H.
DATE:

BY	NO.	REVISION	DATE
M.J.C.	1	RECORD DRAWING	11/2/94

MECHANICAL

DIGESTERS NO'S. 1 & 3
PLAN

LITTLE PATUXENT WASTEWATER TREATMENT PLANT

LITTLE PATUXENT WASTEWATER TREATMENT PLANT EXPANSION
ADDITION NO. 5
CAPITAL PROJECT S-6153

CONTRACT NO. 20-3082
HOWARD COUNTY, MARYLAND

SCALE AS SHOWN

SHEET 139 OF 226

M-45A

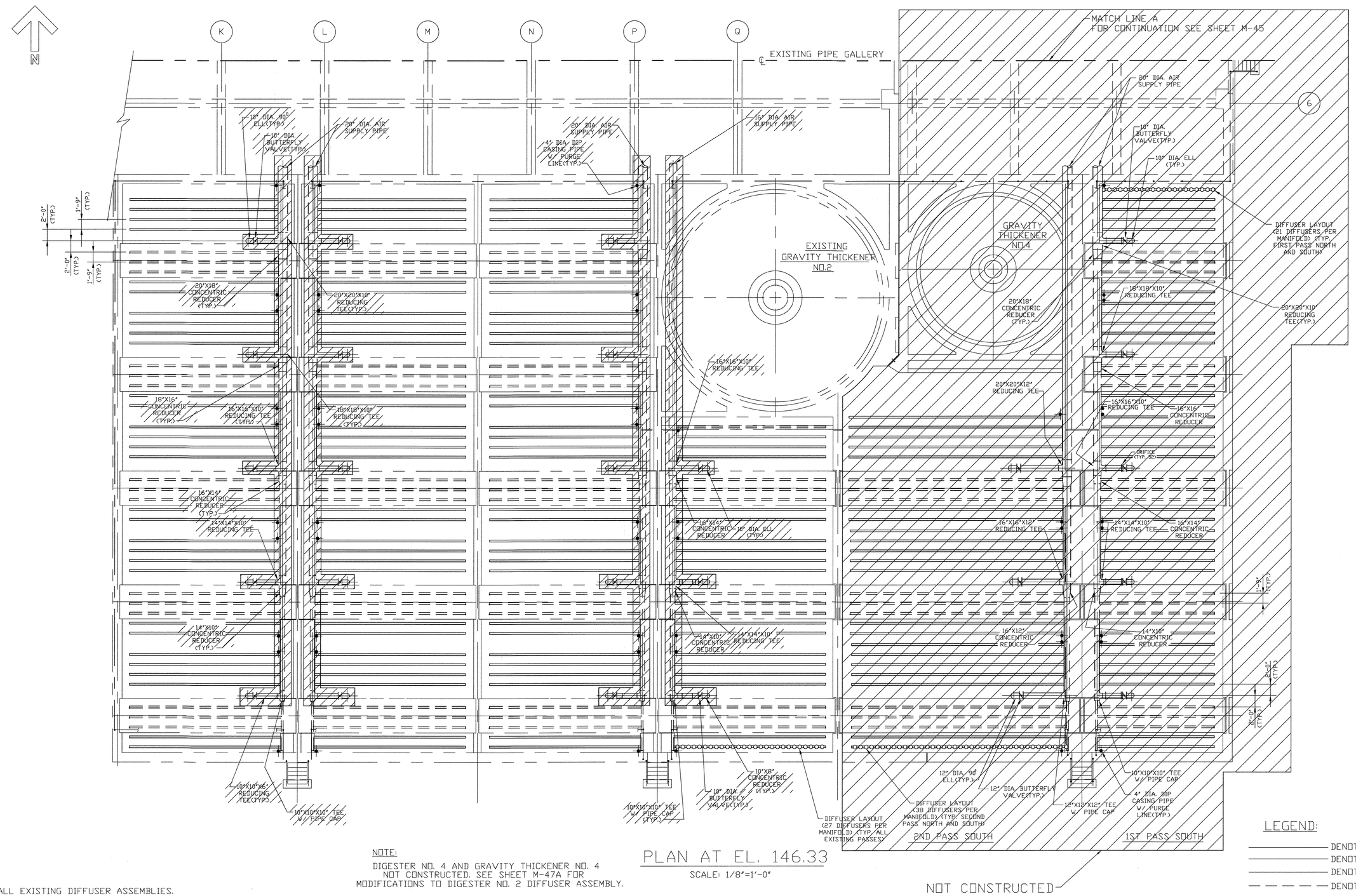

NOTE:

REMOVE ALL EXISTING DIFFUSER ASSEMBLIES.

NOTE:

DIGESTER NO. 4 AND GRAVITY THICKENER NO. 4 NOT CONSTRUCTED. SEE SHEET M-47A FOR MODIFICATIONS TO DIGESTER NO. 2 DIFFUSER ASSEMBLY.

PLAN AT EL. 146.33

SCALE: 1/8"=1'-0"

LEGEND:

- DENOTES EXISTING TANK
- DENOTES NEW TANK
- DENOTES NEW EQUIPMENT
- DENOTES HIDDEN LINES

DEPARTMENT OF PUBLIC WORKS
HOWARD COUNTY, MARYLAND

DIRECTOR OF PUBLIC WORKS — DATE 5/7/96
CHIEF, BUREAU OF ENGINEERING — DATE 5/7/96
CHIEF, BUREAU OF ENVIRONMENTAL SERVICES — DATE 5/7/96
CHIEF, UTILITY DESIGN DIVISION — DATE 5-7-96

M&E Metcalf & Eddy

REG. PROF. ENGR. — DATE 5-7-96

STATE OF MARYLAND — JONATHAN WINTHROP DOANE No. 15140 — REGISTERED PROFESSIONAL ENGINEER

DES:				
DRN: M.J.C.				
CHK: J.H.				
DATE:	M.J.C.	1	RECORD DRAWING	11/2/94
	BY	NO.	REVISION	DATE

MECHANICAL

DIGESTERS NO'S. 2 & 4
PLAN

LITTLE PATUXENT WASTEWATER TREATMENT PLANT

LITTLE PATUXENT WASTEWATER TREATMENT PLANT EXPANSION
ADDITION NO. 5
CAPITAL PROJECT S-6153

CONTRACT NO. 20-3082
HOWARD COUNTY, MARYLAND

SCALE AS SHOWN

SHEET 140 OF 226

M-46A

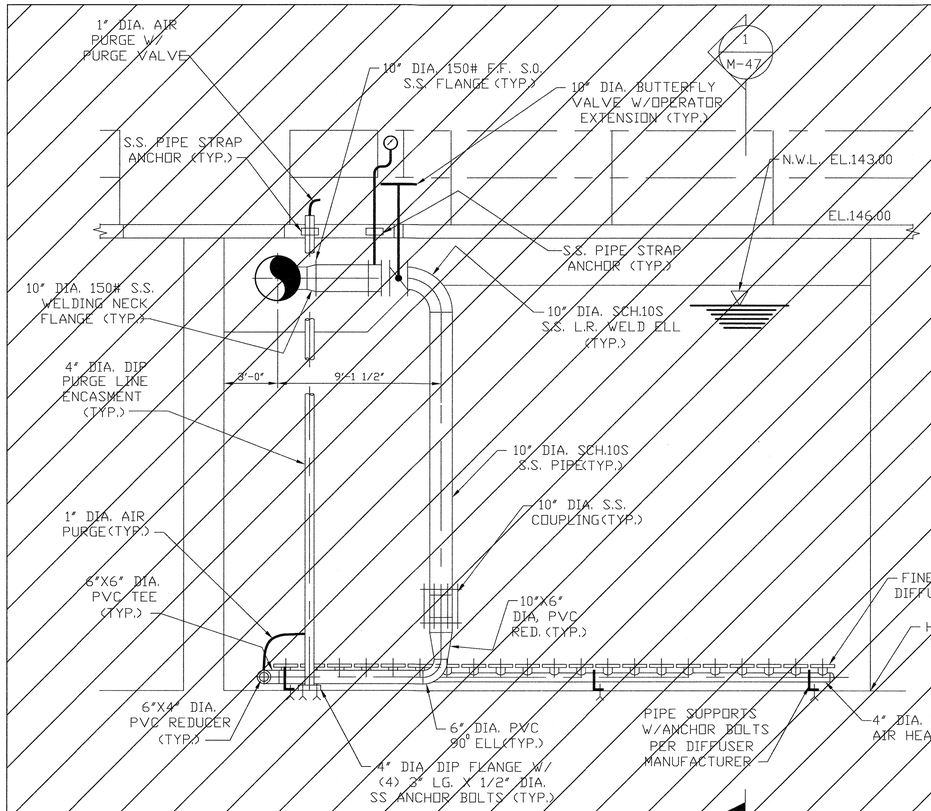

TYPICAL DIFFUSER SECTION

SCALE: 3/8"=1'-0"

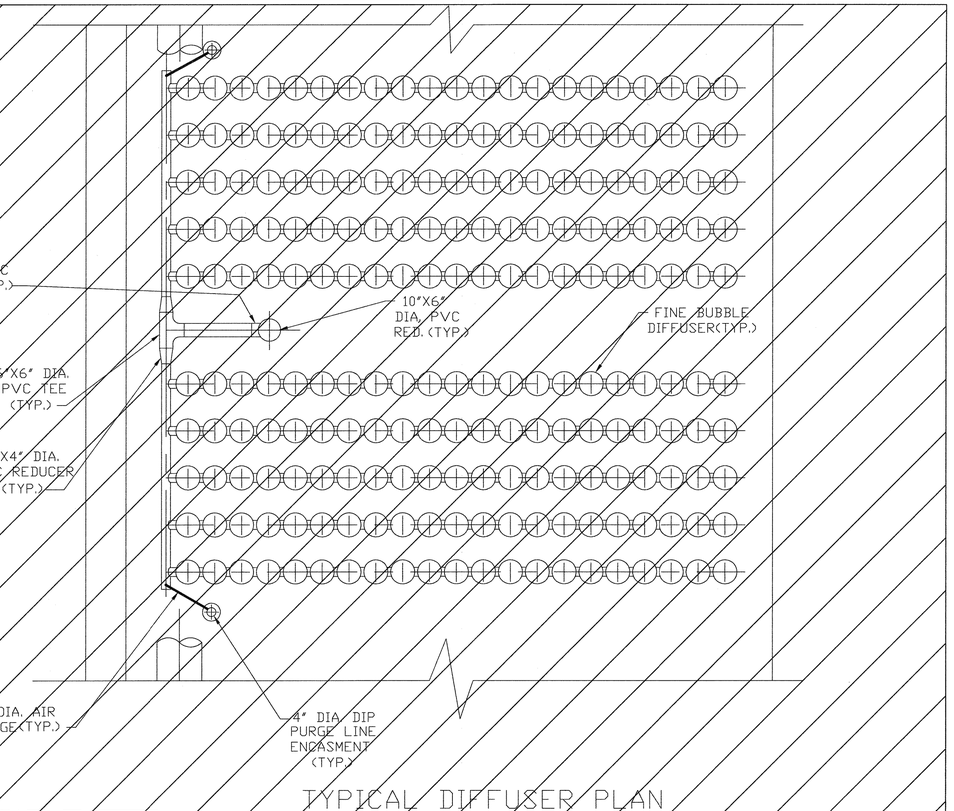

TYPICAL DIFFUSER PLAN

SCALE: 3/8"=1'-0"

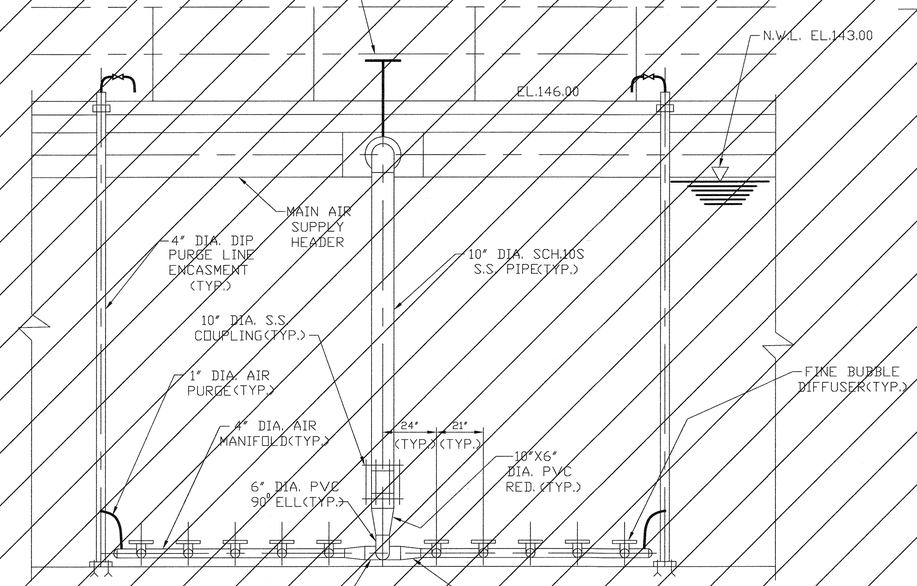

SECTION 1 M-47

SCALE: 3/8"=1'-0"

NOT CONSTRUCTED

DEPARTMENT OF PUBLIC WORKS
HOWARD COUNTY, MARYLAND

DIRECTOR OF PUBLIC WORKS — DATE 5/7/96
CHIEF, BUREAU OF ENGINEERING — DATE 5/7/96
CHIEF, BUREAU OF ENVIRONMENTAL SERVICES — DATE 5/7/96
CHIEF, UTILITY DESIGN DIVISION — DATE 5-7-96

M&E Metcalf & Eddy

REG./PROF. ENGR. — DATE 5-7-96

STATE OF MARYLAND — JONATHAN WINTHROP DOANE No. 15140 — REGISTERED PROFESSIONAL ENGINEER

DES:			
DRN: M.J.C.			
CHK: J.H.			
M.J.C.	1	RECORD DRAWING	11/2/94
DATE: BY	NO.	REVISION	DATE

MECHANICAL

DIGESTERS
SECTION AND DETAILS 1

LITTLE PATUXENT WASTEWATER TREATMENT PLANT

LITTLE PATUXENT WASTEWATER TREATMENT PLANT EXPANSION
ADDITION NO. 5
CAPITAL PROJECT S-6153

CONTRACT NO. 20-3082
HOWARD COUNTY, MARYLAND

SCALE AS SHOWN

SHEET 141 OF 226

M-47A

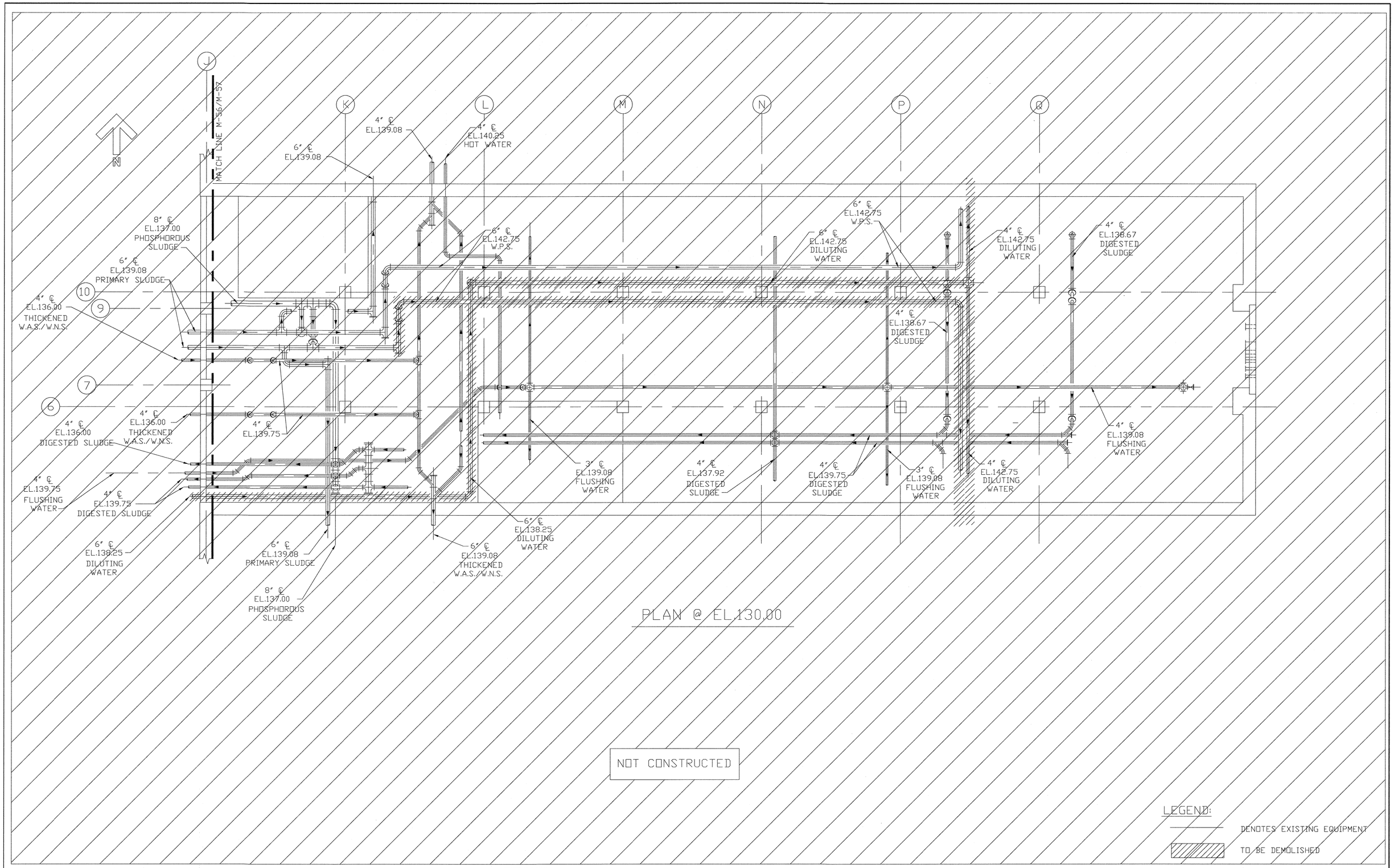

DEPARTMENT OF PUBLIC WORKS
HOWARD COUNTY, MARYLAND

DIRECTOR OF PUBLIC WORKS — DATE 5/2/96
CHIEF, BUREAU OF ENGINEERING — DATE 5/7/96
CHIEF, BUREAU OF ENVIRONMENTAL SERVICES — DATE 5/2/96
CHIEF, UTILITY DESIGN DIVISION — DATE 5-7-96

M&E Metcalf & Eddy

REG. PROF. ENGR. — DATE 5-7-96

STATE OF MARYLAND — JONATHAN WINTHROP DOANE No. 15140 — REGISTERED PROFESSIONAL ENGINEER

DES:				
DRN: M.J.C.				
CHK: J.H.				
DATE:	M.J.C.	1	RECORD DRAWING	11/2/94
	BY	NO.	REVISION	DATE

MECHANICAL
DIGESTER PIPE GALLERY MODIFICATIONS
PROCESS PIPING PLAN
DEMOLITION

LITTLE PATUXENT WASTEWATER TREATMENT PLANT
LITTLE PATUXENT WASTEWATER TREATMENT PLANT EXPANSION
ADDITION NO. 5
CAPITAL PROJECT S-6153
CONTRACT NO. 20-3082
HOWARD COUNTY, MARYLAND

SCALE AS SHOWN
SHEET 142 OF 226
M-48A

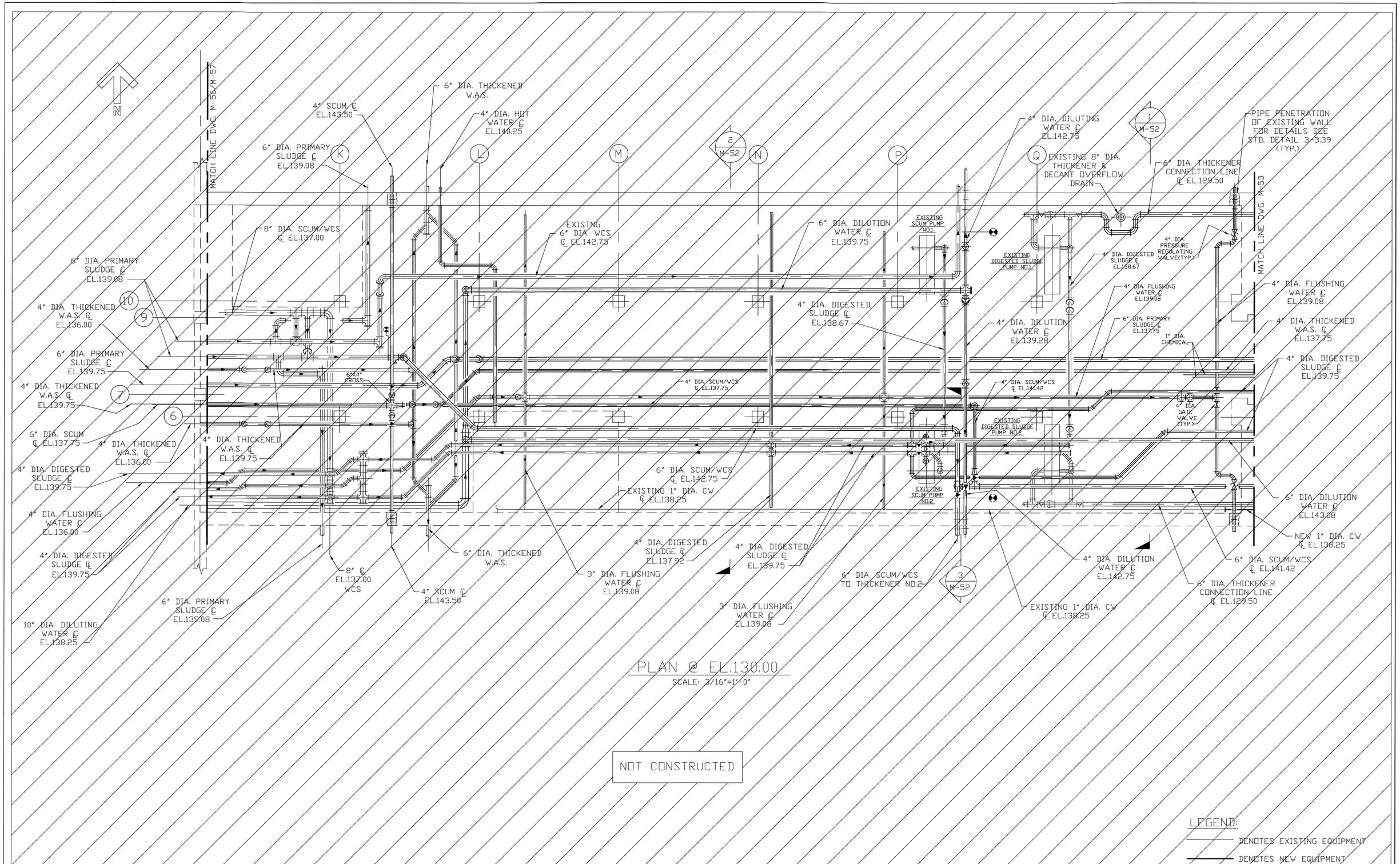

DEPARTMENT OF PUBLIC WORKS
HOWARD COUNTY, MARYLAND

DIRECTOR OF PUBLIC WORKS — DATE 5/7/96
CHIEF, BUREAU OF ENGINEERING — DATE 5/7/96
CHIEF, BUREAU OF ENVIRONMENTAL SERVICES — DATE 5/7/96
CHIEF, UTILITY DESIGN DIVISION — DATE 5-7-96

Metcalf & Eddy
REG. PROF. ENGR. — DATE 5-7-96

STATE OF MARYLAND — JONATHAN WINTHROP DOANE No. 15140 — REGISTERED PROFESSIONAL ENGINEER

	BY	NO.	REVISION	DATE
DES:				
DRN: M.J.C.				
CHK: J.H.				
DATE:	M.J.C.	1	RECORD DRAWING	11/2/94

MECHANICAL

DIGESTER PIPE GALLERY MODIFICATIONS

PROCESS PIPING PLAN

LITTLE PATUXENT WASTEWATER TREATMENT PLANT

LITTLE PATUXENT WASTEWATER TREATMENT PLANT EXPANSION
ADDITION NO. 5
CAPITAL PROJECT S-6153

CONTRACT NO. 20-3082
HOWARD COUNTY, MARYLAND

SCALE AS SHOWN

SHEET 143 OF 226

M-49A

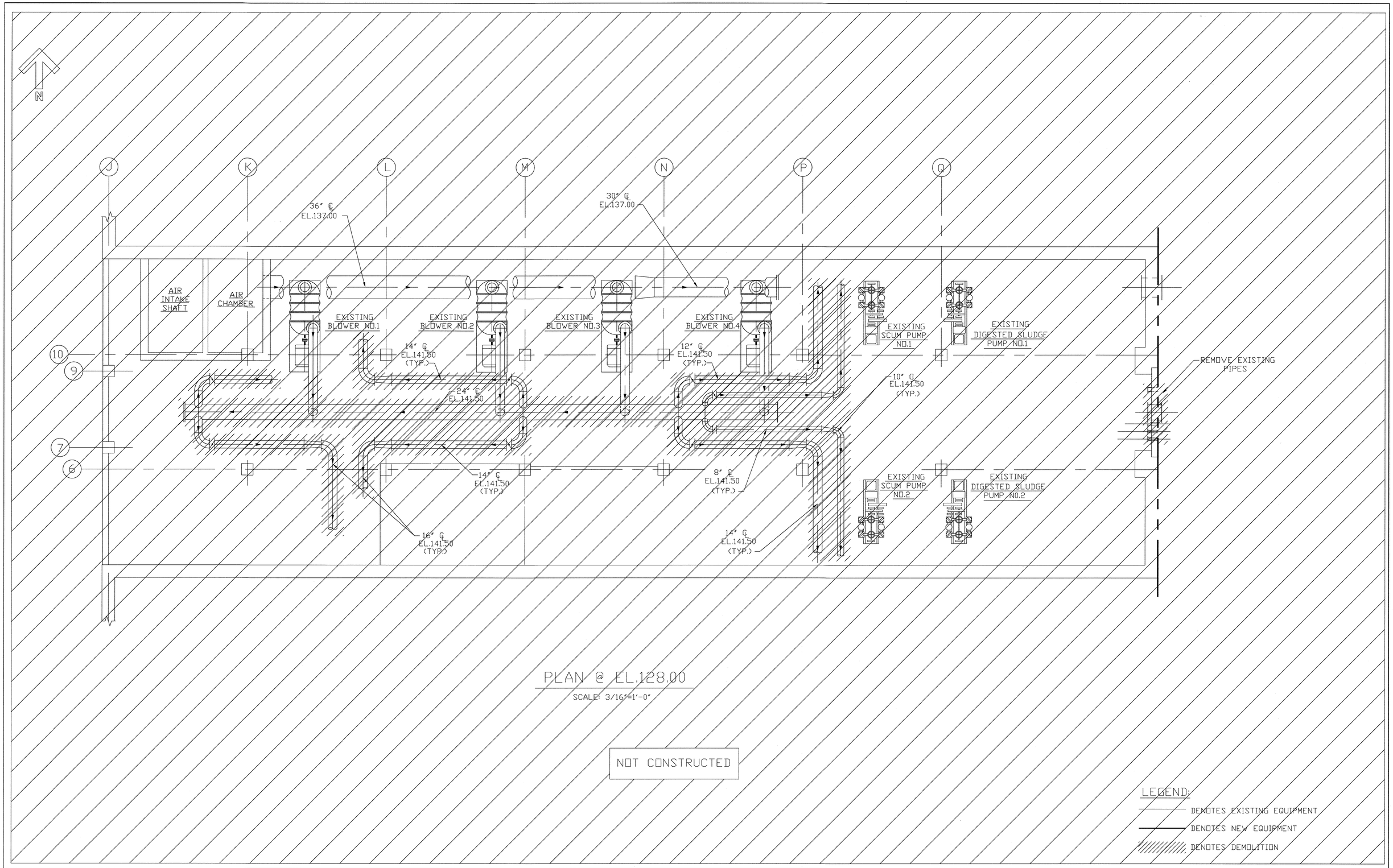

DEPARTMENT OF PUBLIC WORKS
HOWARD COUNTY, MARYLAND

DIRECTOR OF PUBLIC WORKS — DATE 5/7/96
CHIEF, BUREAU OF ENGINEERING — DATE 5/7/96
CHIEF, BUREAU OF ENVIRONMENTAL SERVICES — DATE 5/7/96
CHIEF, UTILITY DESIGN DIVISION — DATE 5-7-96

Metcalf & Eddy

REG./PROF. ENGR. — DATE 5-7-96

STATE OF MARYLAND — JONATHAN WINTHROP DOANE — No. 19140 — REGISTERED PROFESSIONAL ENGINEER

DES:				
DRN: M.J.C.				
CHK: J.H.				
DATE:	M.J.C.	1	RECORD DRAWING	11/2/94
	BY	NO.	REVISION	DATE

MECHANICAL

DIGESTER PIPE GALLERY
AIR PIPING DEMOLITION PLAN

LITTLE PATUXENT WASTEWATER TREATMENT PLANT

LITTLE PATUXENT WASTEWATER TREATMENT PLANT EXPANSION
ADDITION NO. 5
CAPITAL PROJECT S-6153

CONTRACT NO. 20-3082
HOWARD COUNTY, MARYLAND

SCALE AS SHOWN

SHEET 144 OF 226

M-50A

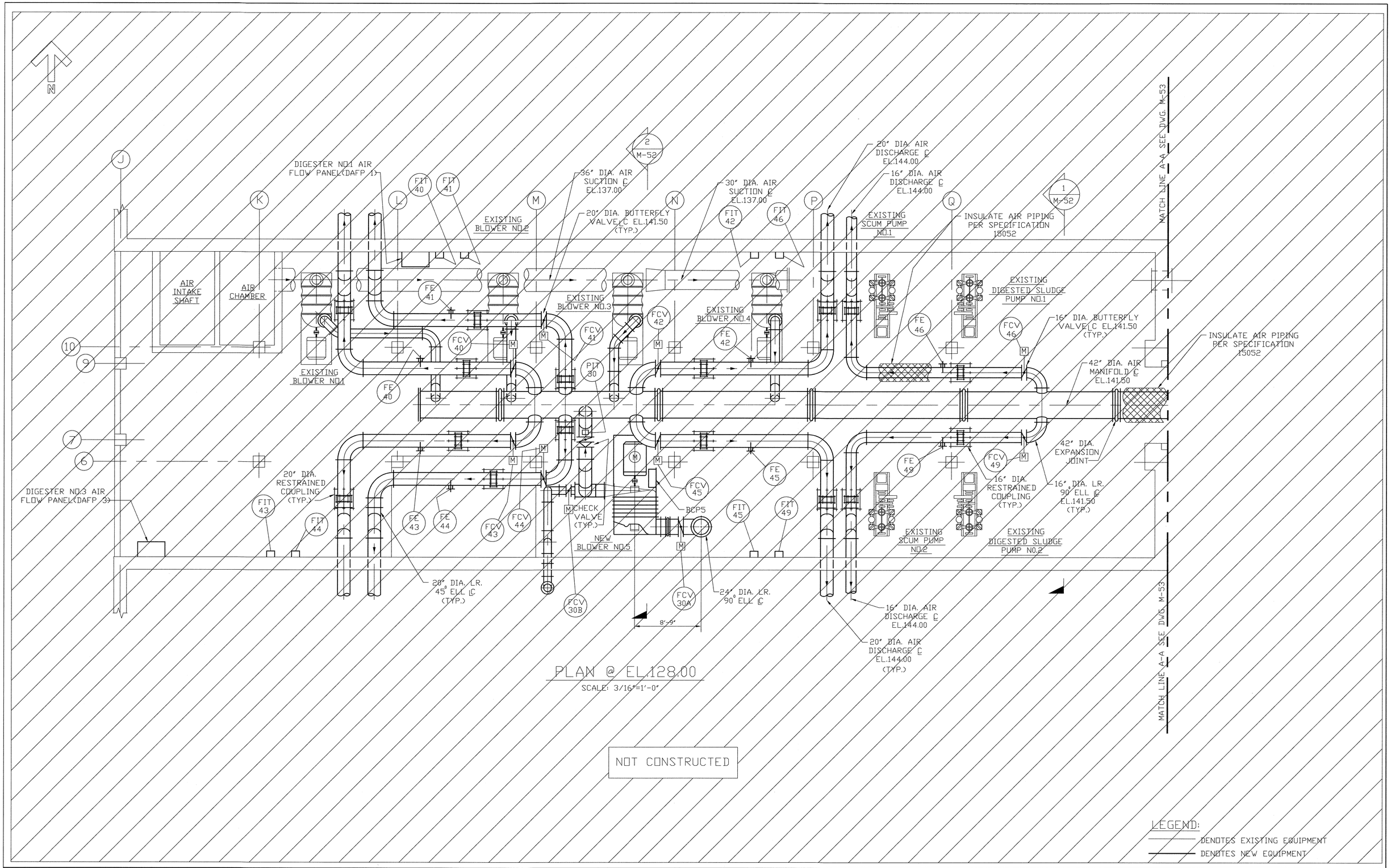

DEPARTMENT OF PUBLIC WORKS
HOWARD COUNTY, MARYLAND

DIRECTOR OF PUBLIC WORKS — DATE 5/7/96
CHIEF, BUREAU OF ENGINEERING — DATE 5/7/96
CHIEF, BUREAU OF ENVIRONMENTAL SERVICES — DATE 5/7/96
CHIEF, UTILITY DESIGN DIVISION — DATE 5-7-96

M&E Metcalf & Eddy

REG. PROF. ENGR. — DATE 5-7-96

STATE OF MARYLAND — JONATHAN WINTHROP DOWNE No. 15143 — REGISTERED PROFESSIONAL ENGINEER

DES:				
DRN: M.J.C.				
CHK: J.H.				
DATE:	M.J.C.	1	RECORD DRAWING	11/2/94
	BY	NO.	REVISION	DATE

MECHANICAL

DIGESTER PIPE GALLERY AIR PIPING PLAN

LITTLE PATUXENT WASTEWATER TREATMENT PLANT

LITTLE PATUXENT WASTEWATER TREATMENT PLANT EXPANSION
ADDITION NO. 5
CAPITAL PROJECT S-6153

CONTRACT NO. 20-3082
HOWARD COUNTY, MARYLAND

SCALE AS SHOWN

SHEET 145 OF 226

M-51A

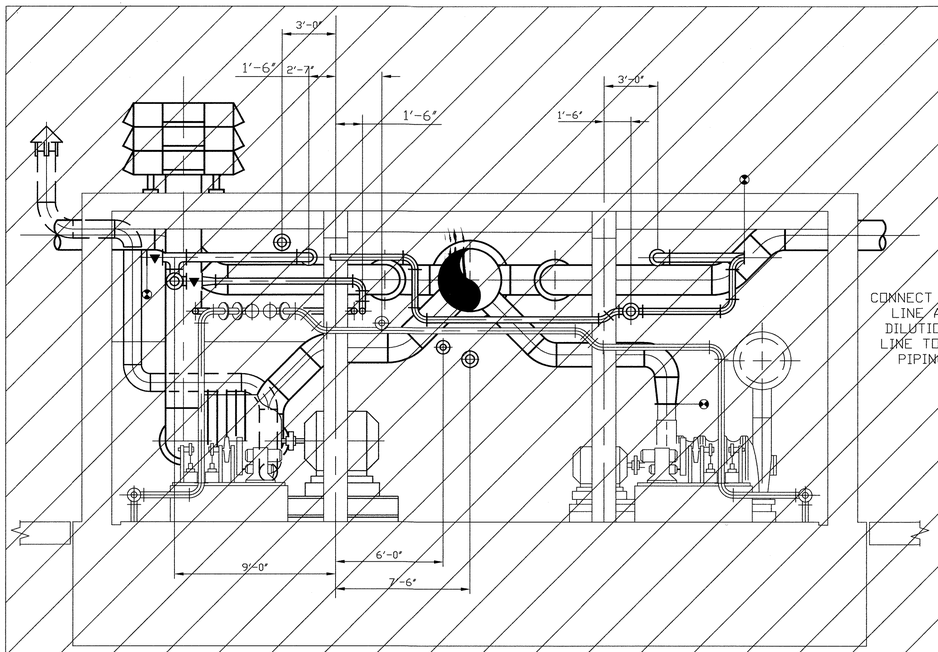

SECTION 1 (M-49, M-51)
SCALE: 1/4"=1'-0"
(DIMENSIONS)

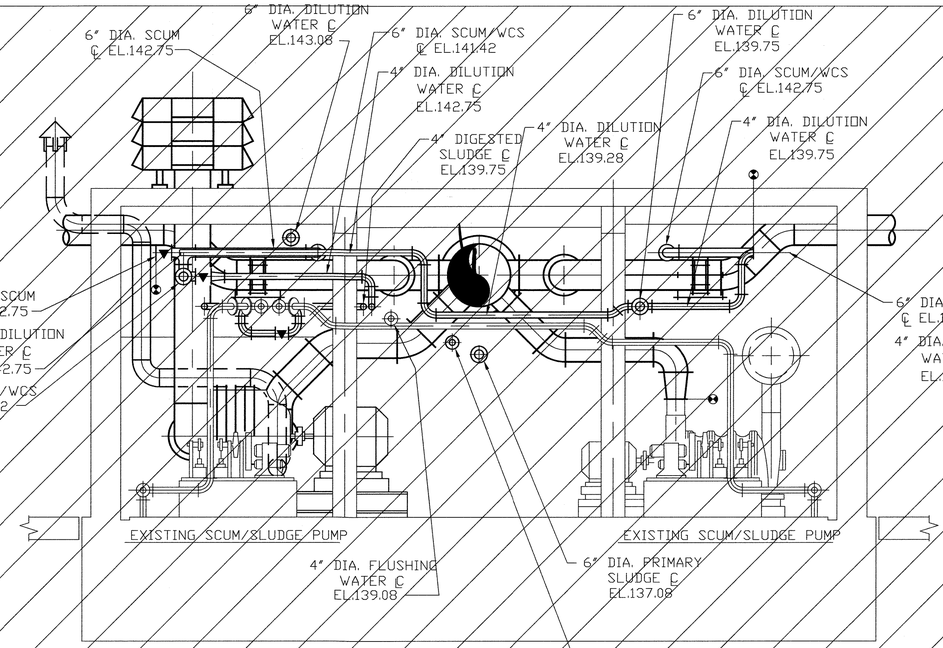

SECTION 1 (M-49, M-51)
SCALE: 1/4"=1'-0"
(NOMENCLATURE)

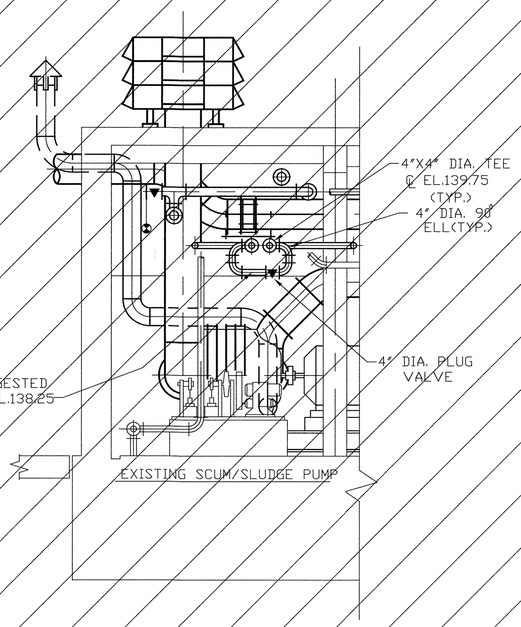

NOT CONSTRUCTED

SECTION 3 (M-49)
SCALE: 1/4"=1'-0"

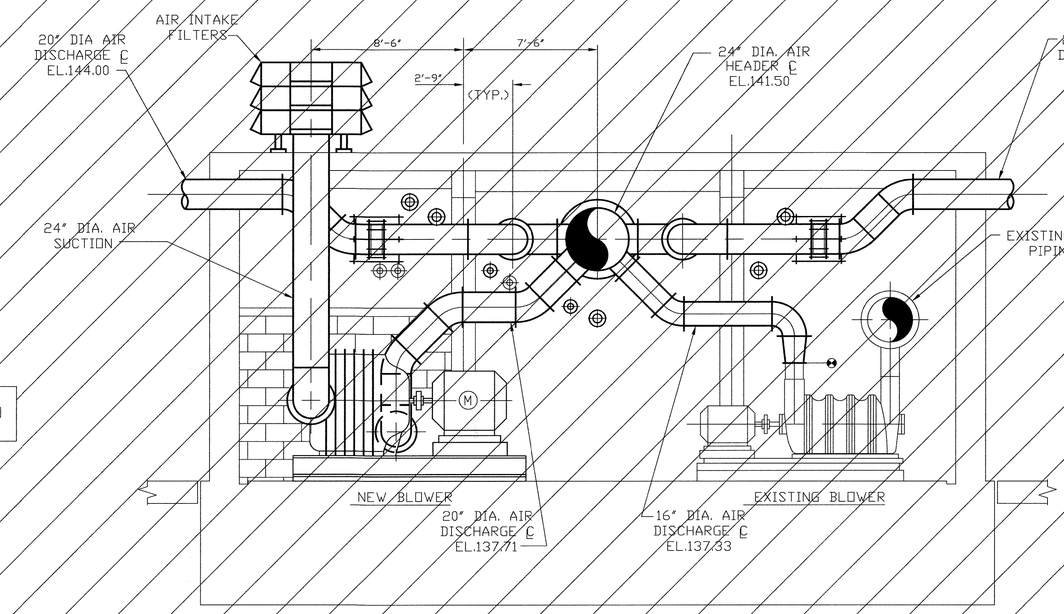

SECTION 2 (M-49, M-51)
SCALE: 1/4"=1'-0"
(AIR PIPING)

LEGEND:
DENOTES EXISTING EQUIPMENT
DENOTES NEW EQUIPMENT

DEPARTMENT OF PUBLIC WORKS
HOWARD COUNTY, MARYLAND

DIRECTOR OF PUBLIC WORKS — DATE 5/7/96
CHIEF, BUREAU OF ENGINEERING — DATE 5/7/96
CHIEF, BUREAU OF ENVIRONMENTAL SERVICES — DATE 5/7/96
CHIEF, UTILITY DESIGN DIVISION — DATE 5-7-96

M&E Metcalf & Eddy
REG. PROF. ENGR. — DATE 5-7-96

STATE OF MARYLAND — JONATHAN WINTHROP DOANE No. 15143 — REGISTERED PROFESSIONAL ENGINEER

DES:				
DRN: M.J.C.				
CHK: J.H.				
DATE:	M.J.C.	1	RECORD DRAWING	11/2/94
	BY	NO.	REVISION	DATE

MECHANICAL

DIGESTER PIPE GALLERY MODIFICATIONS SECTIONS

LITTLE PATUXENT WASTEWATER TREATMENT PLANT

LITTLE PATUXENT WASTEWATER TREATMENT PLANT EXPANSION ADDITION NO. 5 CAPITAL PROJECT S-6153

CONTRACT NO. 20-3082
HOWARD COUNTY, MARYLAND

SCALE AS SHOWN

SHEET 146 OF 226

M-52A

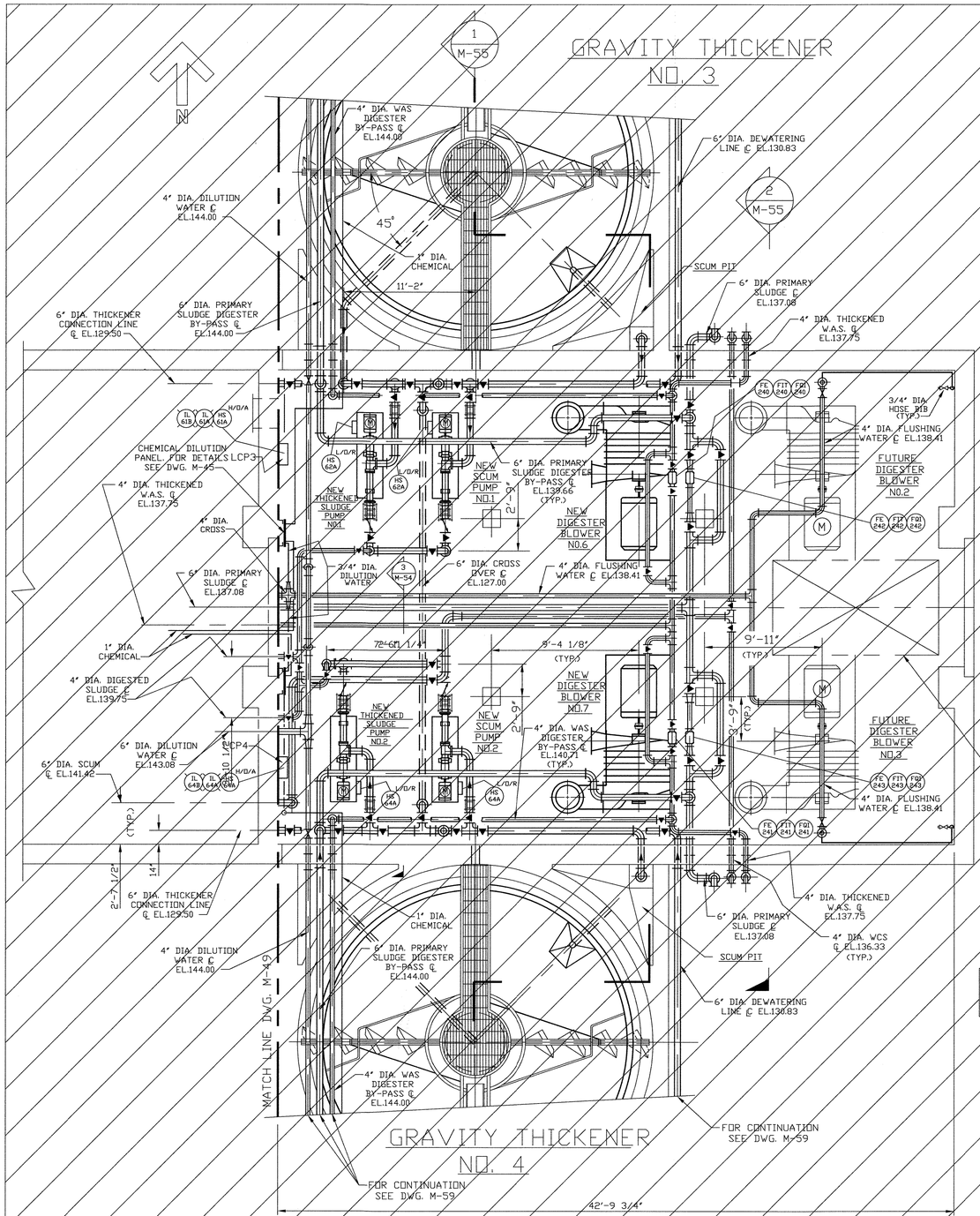

DEPARTMENT OF PUBLIC WORKS
HOWARD COUNTY, MARYLAND

DIRECTOR OF PUBLIC WORKS — DATE 5/7/96
CHIEF, BUREAU OF ENGINEERING — DATE 5/7/96
CHIEF, BUREAU OF ENVIRONMENTAL SERVICES — DATE 5/7/96
CHIEF, UTILITY DESIGN DIVISION — DATE 5-7-96

M&E Metcalf & Eddy
REG. PROF. ENGR. — DATE 5-7-96

STATE OF MARYLAND — JONATHAN WINTHROP DOANE No. 15140 — REGISTERED PROFESSIONAL ENGINEER

DES:				
DRN: M.J.C.				
CHK: J.H.				
DATE:	M.J.C.	1	RECORD DRAWING	11/2/94
	BY	NO.	REVISION	DATE

MECHANICAL

DIGESTER PIPE GALLERY EXTENSION - PLAN

LITTLE PATUXENT WASTEWATER TREATMENT PLANT
LITTLE PATUXENT WASTEWATER TREATMENT PLANT EXPANSION
ADDITION NO. 5
CAPITAL PROJECT S-6153
CONTRACT NO. 20-3082
HOWARD COUNTY, MARYLAND

SCALE AS SHOWN

SHEET 147 OF 226

M-53A

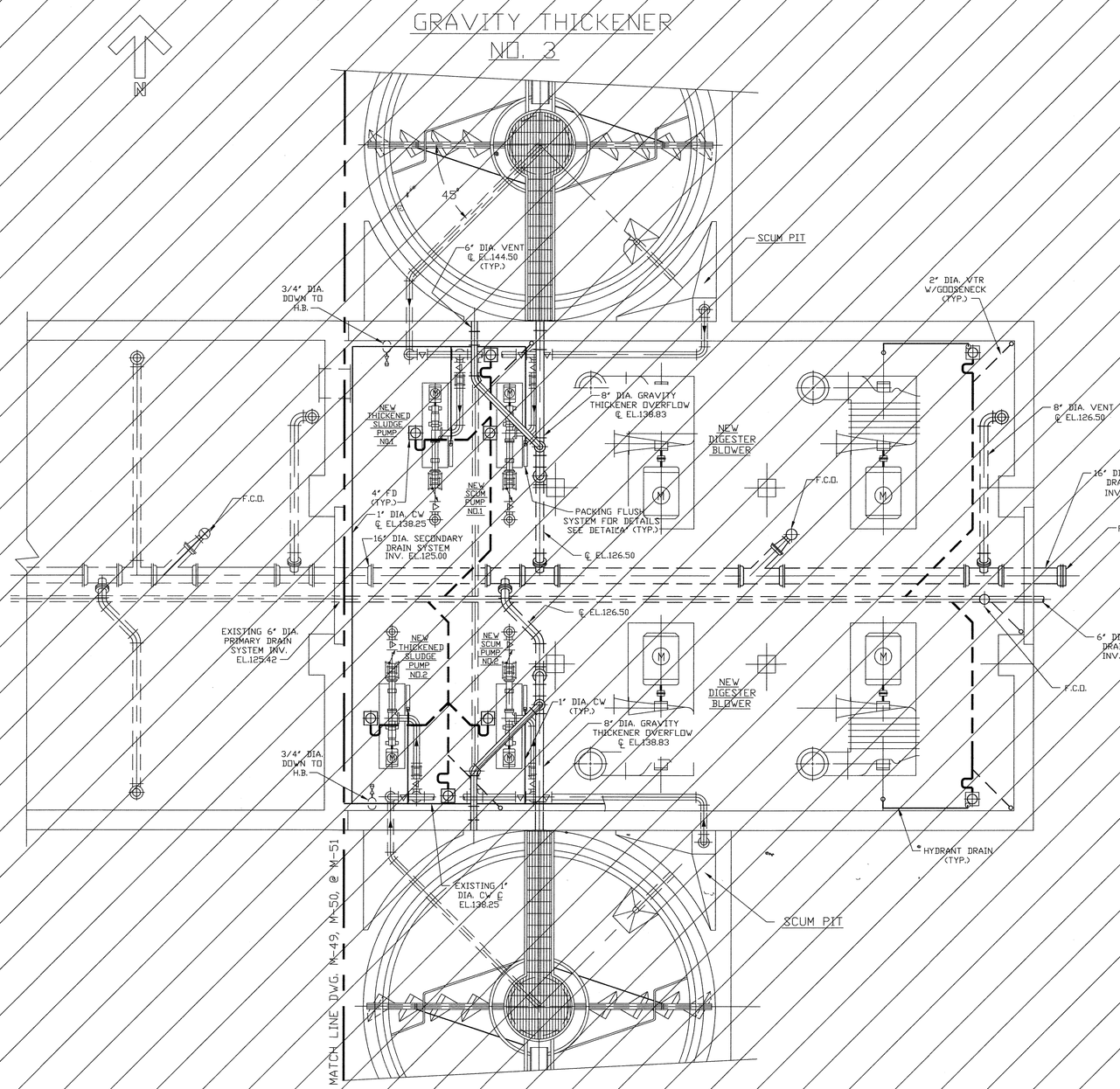

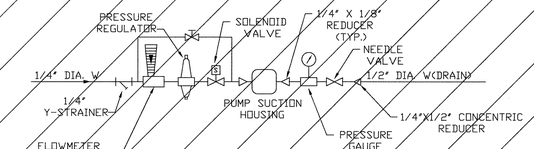

DETAIL "A"
PACKING FLUSH SYSTEM

NOT CONSTRUCTED

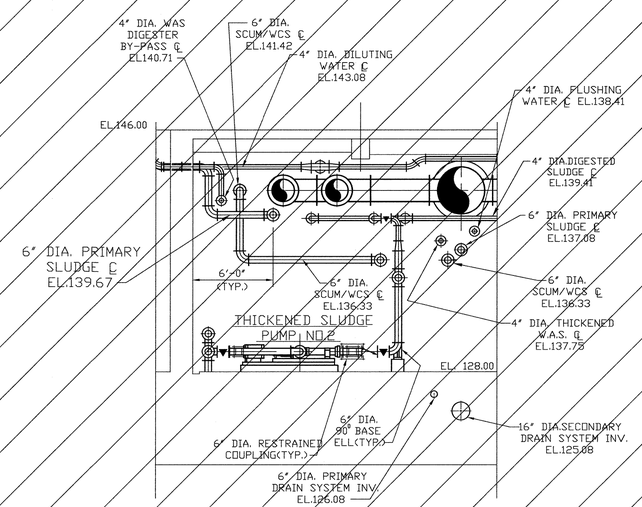

SECTION 3 / M-53
SCALE: 3/16"=1'-0"

LEGEND:

DENOTES EXISTING EQUIPMENT

DENOTES NEW EQUIPMENT

DEPARTMENT OF PUBLIC WORKS
HOWARD COUNTY, MARYLAND

DIRECTOR OF PUBLIC WORKS — DATE 5/7/96
CHIEF, BUREAU OF ENGINEERING — DATE 5/7/96
CHIEF, BUREAU OF ENVIRONMENTAL SERVICES — DATE 5/7/96
CHIEF, UTILITY DESIGN DIVISION — DATE 5-7-96

Metcalf & Eddy
REQ. PROF. ENGR. — DATE 5-7-96

STATE OF MARYLAND — JONATHAN WINTHROP DOANE No. 15140 — REGISTERED PROFESSIONAL ENGINEER

DES:				
DRN: M.J.C.				
CHK: J.H.				
DATE:	M.J.C.	1	RECORD DRAWING	11/2/94
	BY	NO.	REVISION	DATE

MECHANICAL

DIGESTER PIPE GALLERY
EXTENSION - PLAN
DRAIN SYSTEM

LITTLE PATUXENT WASTEWATER TREATMENT PLANT

LITTLE PATUXENT WASTEWATER TREATMENT PLANT EXPANSION
ADDITION NO. 5
CAPITAL PROJECT S-6153

CONTRACT NO. 20-3082
HOWARD COUNTY, MARYLAND

SCALE AS SHOWN

SHEET 148 OF 226

M-54A

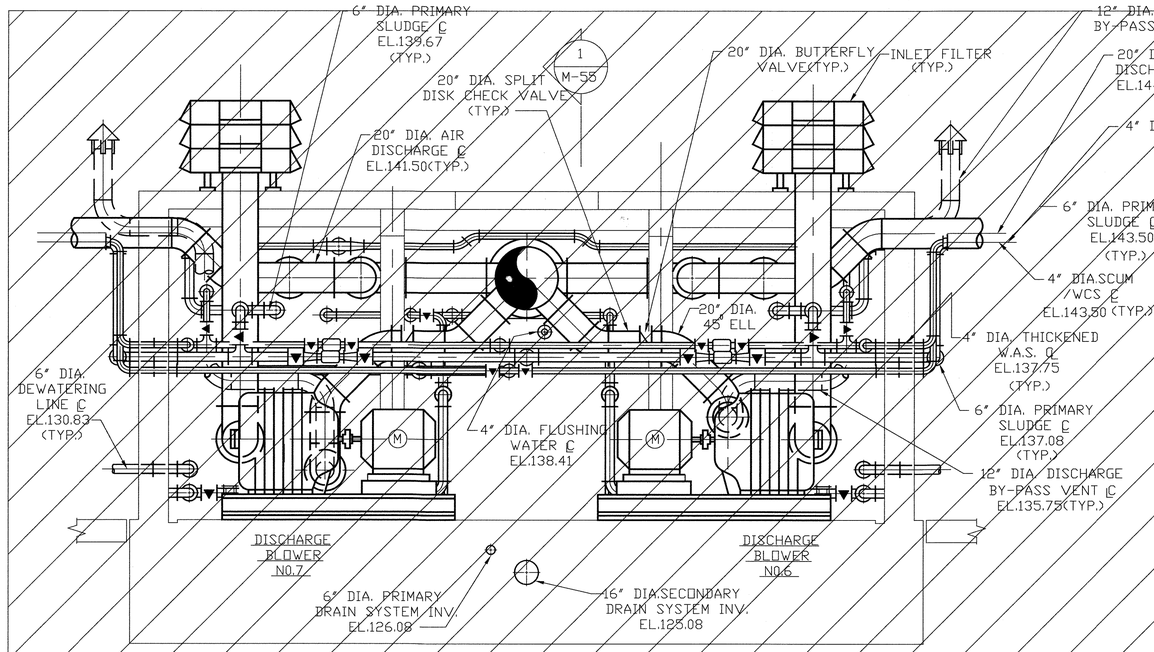

SECTION 2 M-53
SCALE: 1/4"=1'-0"

NOT CONSTRUCTED

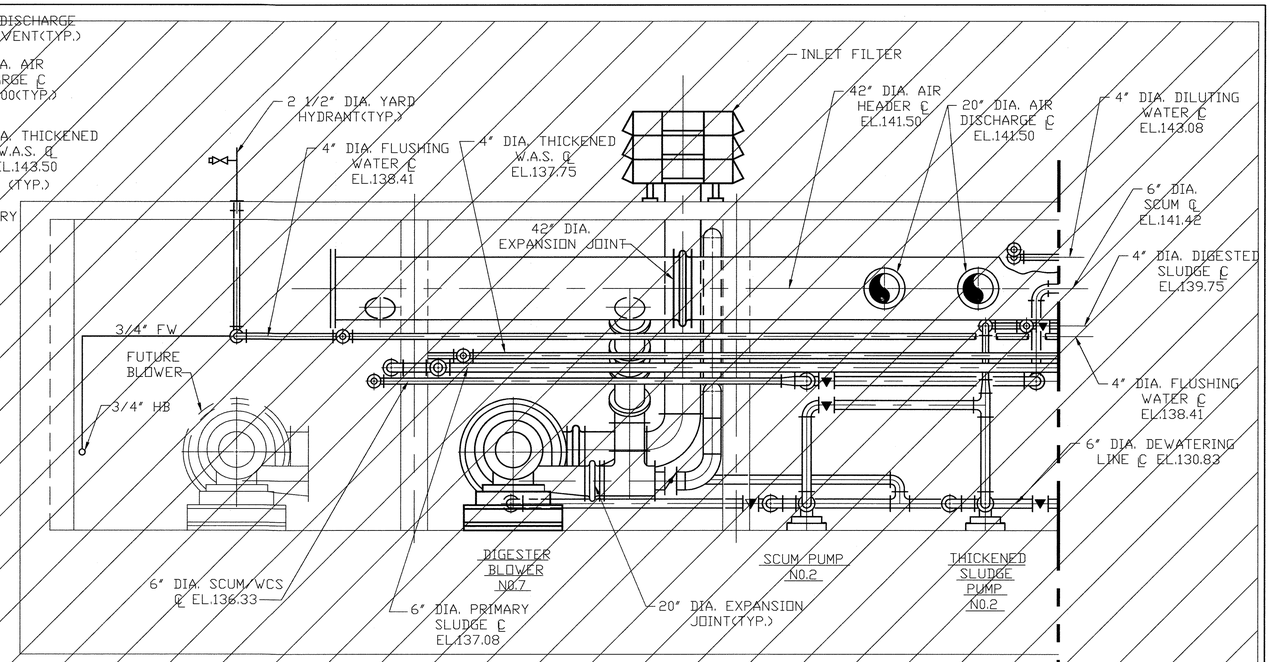

SECTION 1 M-55
SCALE: 1/4"=1'-0"

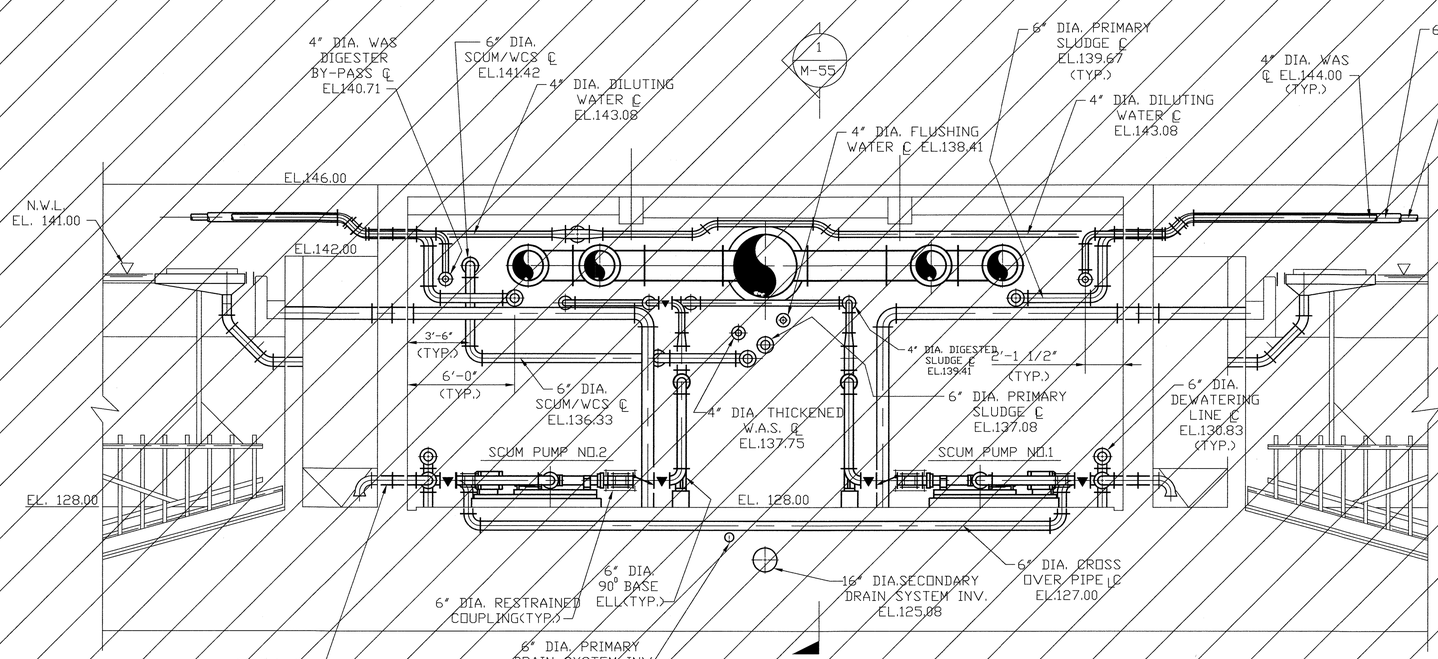

SECTION 1 M-53
SCALE: 1/4"=1'-0"

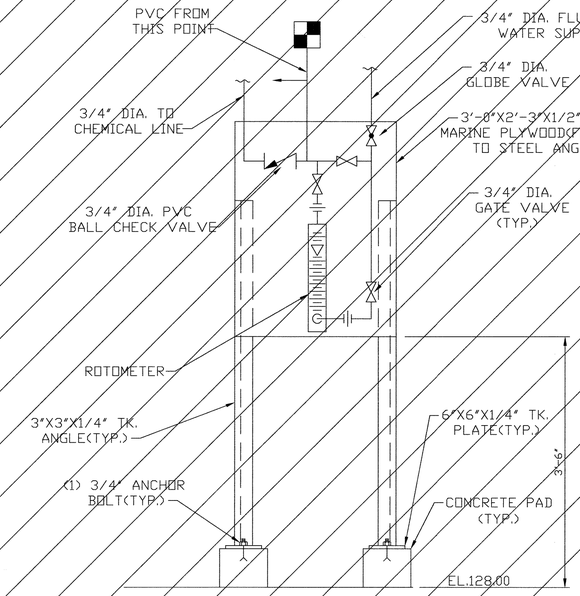

CHEMICAL DILUTION PANEL
SCALE:1"=1'-0"

DEPARTMENT OF PUBLIC WORKS
HOWARD COUNTY, MARYLAND

DIRECTOR OF PUBLIC WORKS — DATE 5/7/96
CHIEF, BUREAU OF ENGINEERING — DATE 5/7/96
CHIEF, BUREAU OF ENVIRONMENTAL SERVICES — DATE 5/7/96
CHIEF, UTILITY DESIGN DIVISION — DATE 5-7-96

M&E Metcalf & Eddy
REG. PROF. ENGR. — DATE 5-7-96

STATE OF MARYLAND — JONATHAN WOLFF DOANE No. 15149 — REGISTERED PROFESSIONAL ENGINEER

DES:				
DRN: M.J.C.				
CHK: J.H.				
DATE:	M.J.C.	1	RECORD DRAWING	11/2/94
	BY	NO.	REVISION	DATE

MECHANICAL

DIGESTER PIPE GALLERY EXTENSION
SECTIONS AND DETAILS 1

LITTLE PATUXENT WASTEWATER TREATMENT PLANT

LITTLE PATUXENT WASTEWATER TREATMENT PLANT EXPANSION
ADDITION NO. 5
CAPITAL PROJECT S-6153

CONTRACT NO. 20-3082
HOWARD COUNTY, MARYLAND

SCALE AS SHOWN

SHEET 149 OF 226

M-55A

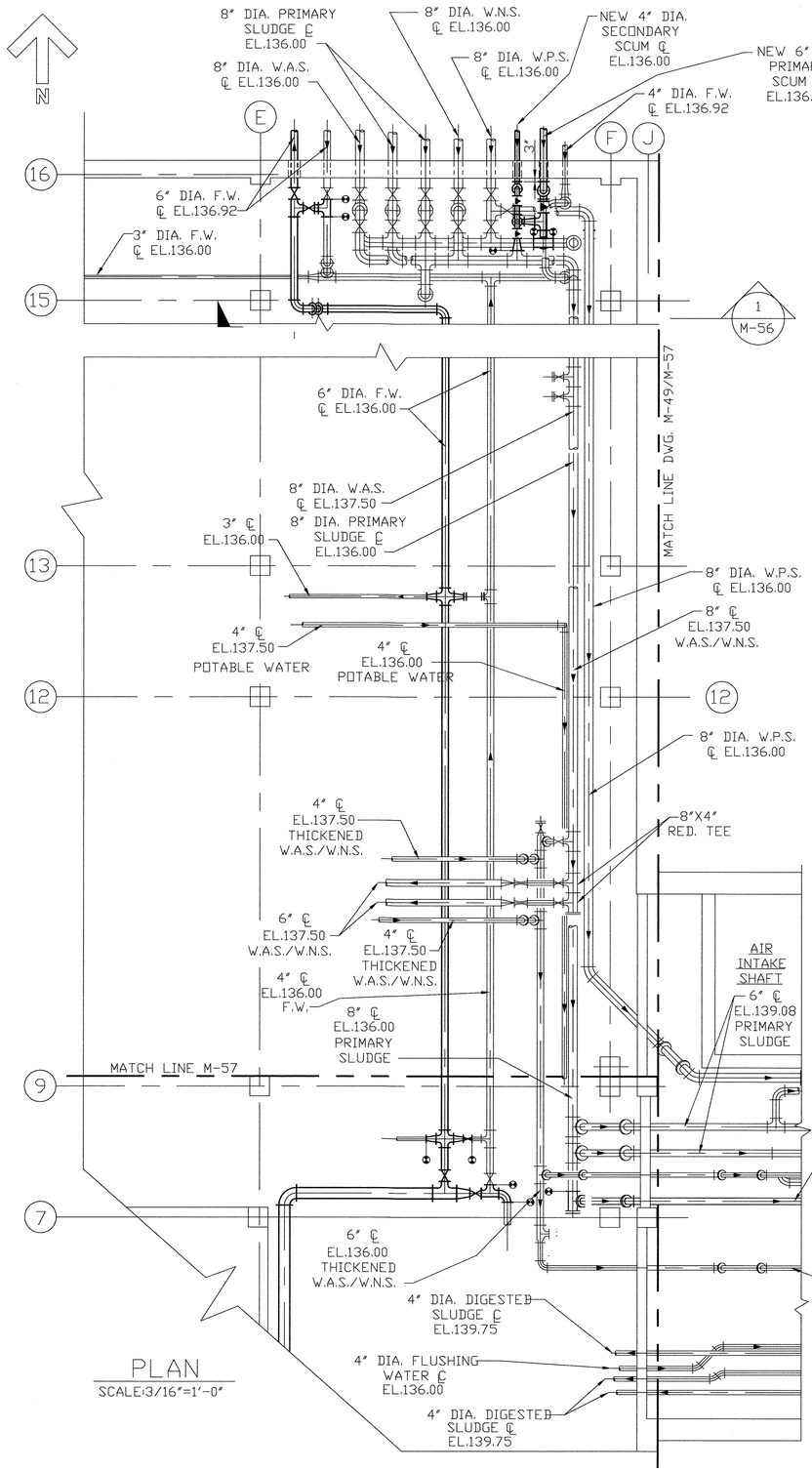

PLAN
SCALE:3/16"=1'-0"

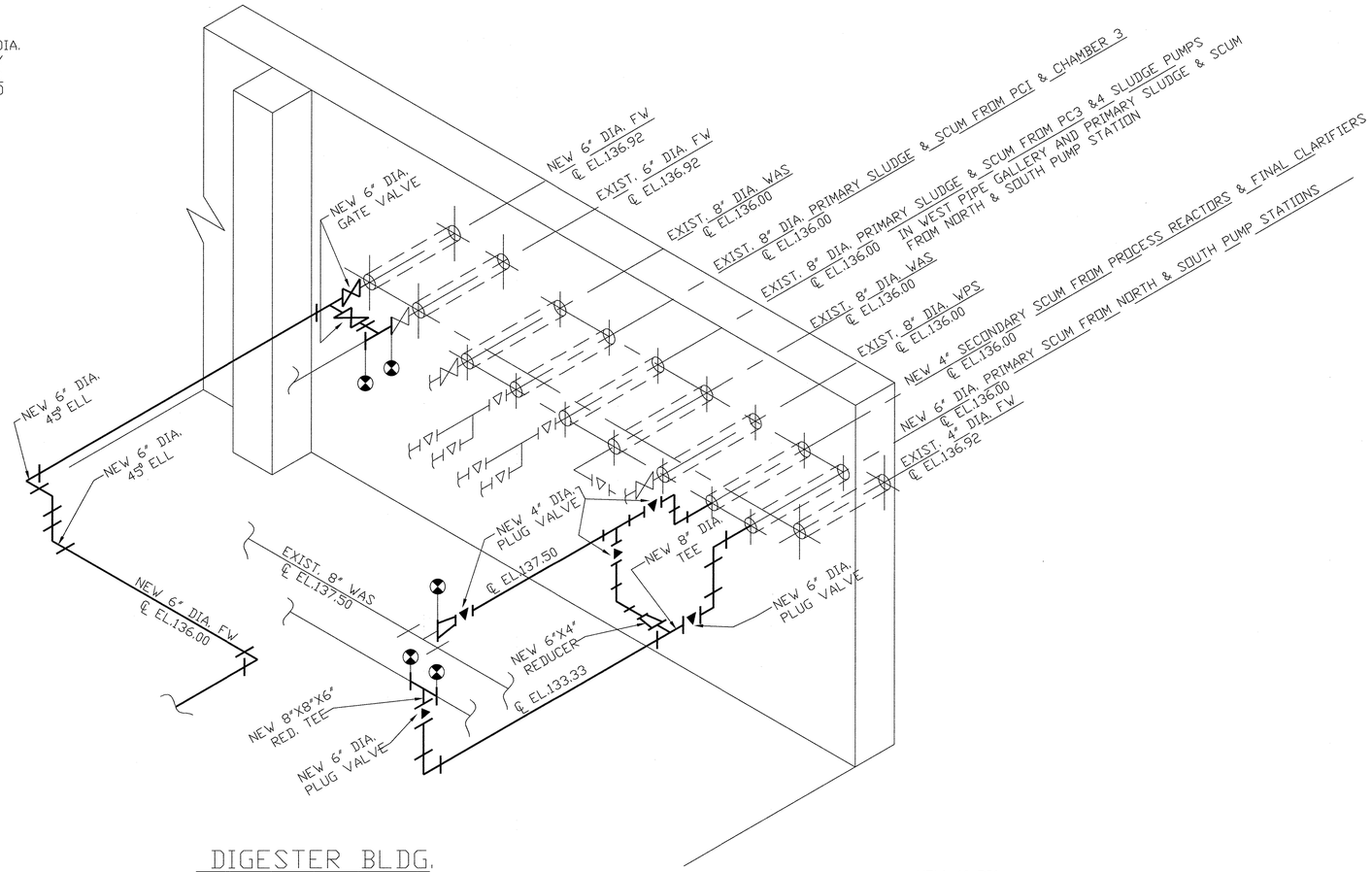

DIGESTER BLDG.
PIPING ISOMETRIC
NORTH WALL BASEMENT
SCALE: NONE

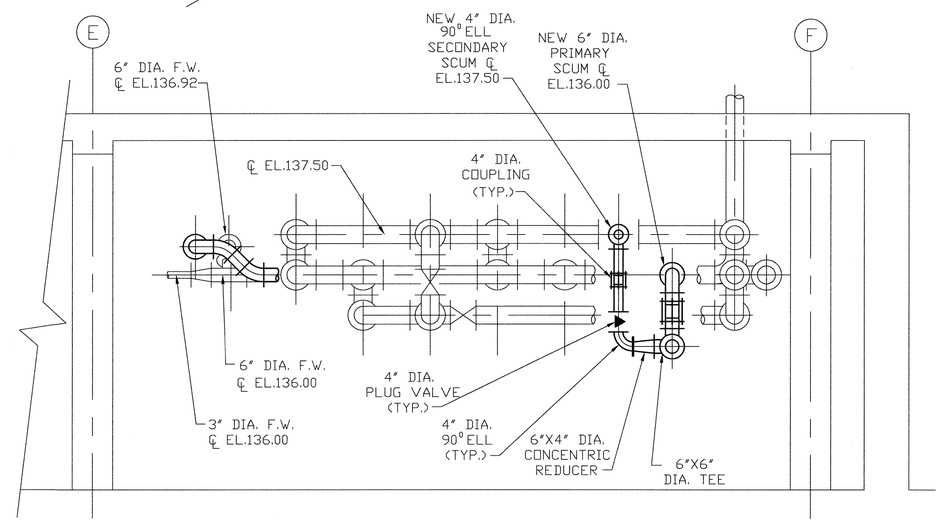

SECTION 1 / M-56
SCALE:3/8"=1'-0"

LEGEND:

- DENOTES EXISTING EQUIPMENT
- DENOTES NEW EQUIPMENT
- DENOTES LIMITS OF CONSTRUCTION

DEPARTMENT OF PUBLIC WORKS
HOWARD COUNTY, MARYLAND

DIRECTOR OF PUBLIC WORKS — DATE 5/7/96
CHIEF, BUREAU OF ENGINEERING — DATE 5/7/96
CHIEF, BUREAU OF ENVIRONMENTAL SERVICES — DATE 5/7/96
CHIEF, UTILITY DESIGN DIVISION — DATE 5-7-96

M&E Metcalf & Eddy
REQ. PROF. ENGR. — DATE 5-7-96

STATE OF MARYLAND — JONATHAN WINTHROP DOANE No. 15140 — REGISTERED PROFESSIONAL ENGINEER

DES:
DRN: M.J.C.
CHK: J.H.
DATE:

BY	NO.	REVISION	DATE
M.J.C.	1	RECORD DRAWING	11/2/94

MECHANICAL

THICKENER PIPE GALLERY MODIFICATIONS PLAN AND SECTIONS

LITTLE PATUXENT WASTEWATER TREATMENT PLANT
LITTLE PATUXENT WASTEWATER TREATMENT PLANT EXPANSION
ADDITION NO. 5
CAPITAL PROJECT S-6153
CONTRACT NO. 20-3082
HOWARD COUNTY, MARYLAND

SCALE AS SHOWN
SHEET 150 OF 226
M-56A1

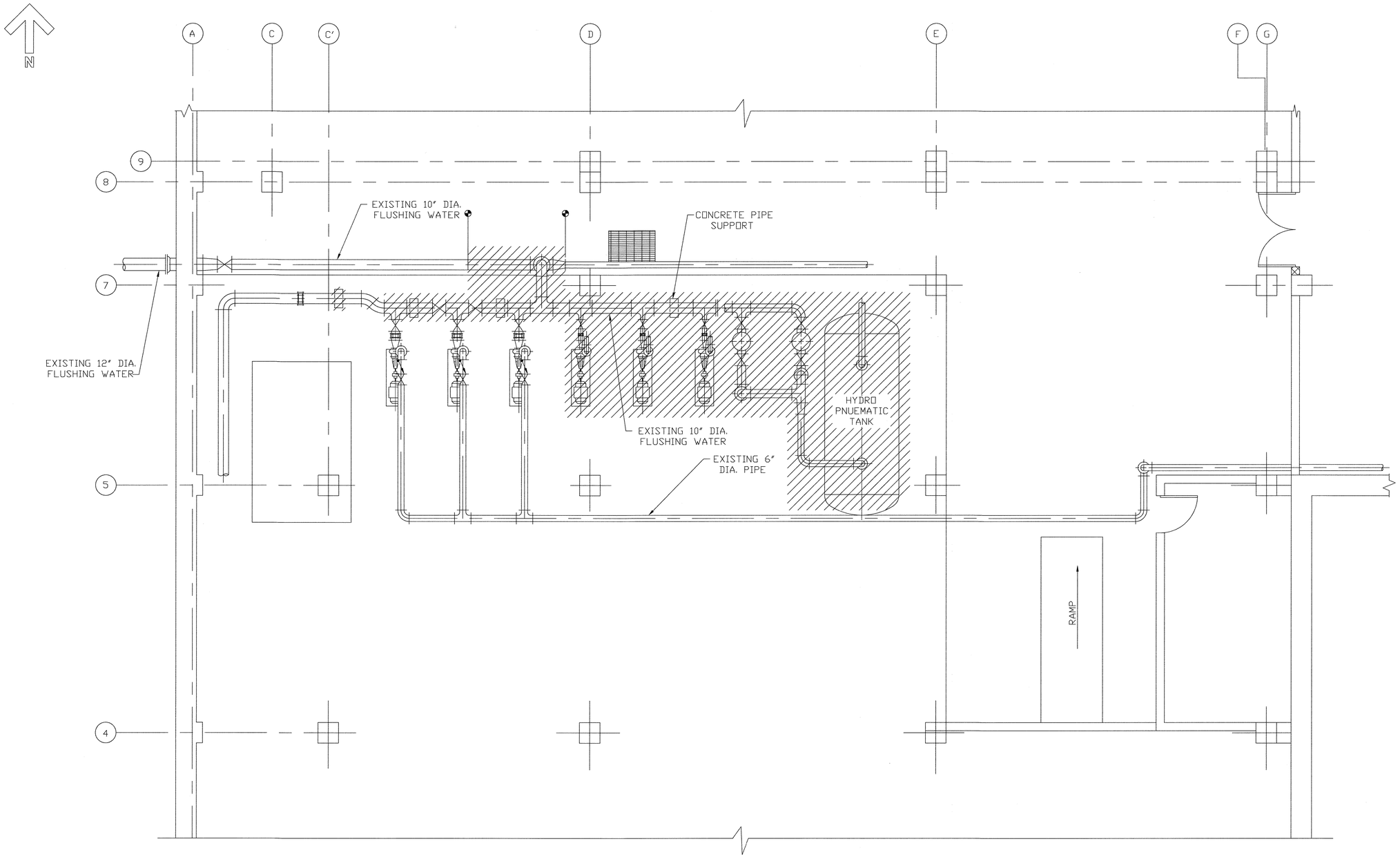

PLAN @ EL.140.00

SCALE: 1/4"=1'-0"

LEGEND:

- DENOTES EXISTING EQUIPMENT
- DENOTES NEW EQUIPMENT
- INDICATES EQUIPMENT TO BE DEMOLISHED

DEPARTMENT OF PUBLIC WORKS
HOWARD COUNTY, MARYLAND

DIRECTOR OF PUBLIC WORKS — DATE 5/7/96
CHIEF, BUREAU OF ENGINEERING — DATE 5/7/96
CHIEF, BUREAU OF ENVIRONMENTAL SERVICES — DATE 5/7/96
CHIEF, UTILITY DESIGN DIVISION — DATE 5-7-96

M&E Metcalf & Eddy

REG. PROF. ENGR. — DATE 5-7-96

STATE OF MARYLAND — JONATHAN WINTHROP DOANE No. 15140 — REGISTERED PROFESSIONAL ENGINEER

DES:				
DRN: M.J.C.				
CHK: J.H.				
DATE:	M.J.C.	1	RECORD DRAWING	11/2/94
	BY	NO.	REVISION	DATE

MECHANICAL
DEWATERING BUILDING
FLUSHING WATER SYSTEM
MODIFICATIONS
DEMOLITION PLAN

LITTLE PATUXENT WASTEWATER TREATMENT PLANT

LITTLE PATUXENT WASTEWATER TREATMENT PLANT EXPANSION
ADDITION NO. 5
CAPITAL PROJECT S-6153

CONTRACT NO. 20-3082
HOWARD COUNTY, MARYLAND

SCALE AS SHOWN

SHEET 151 OF 226

M-56B

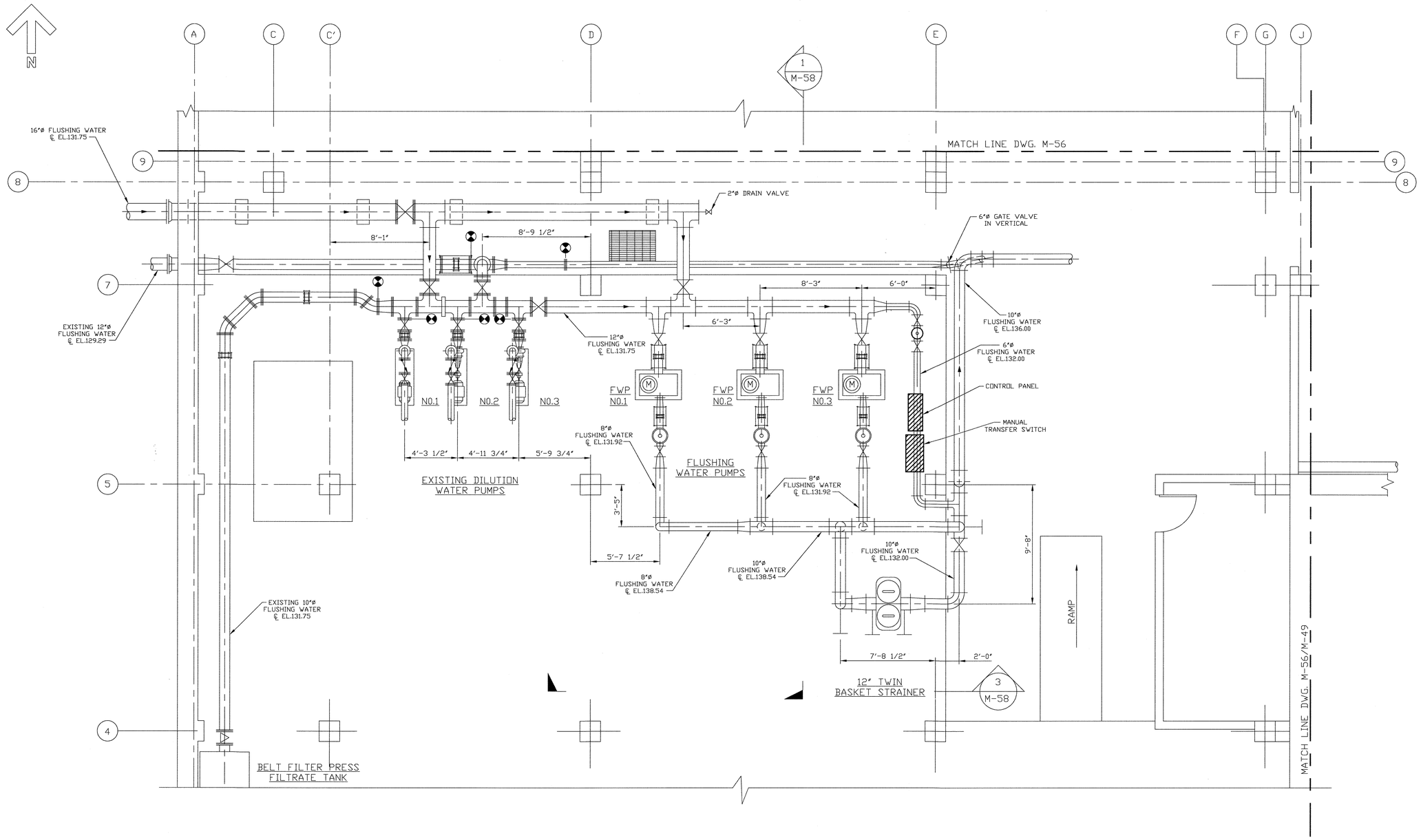

PLAN @ EL.130.00

SCALE: 1/4"=1'-0"

LEGEND:

DENOTES FLANGED FITTINGS

DENOTES SPLIT COUPLING FITTINGS

DEPARTMENT OF PUBLIC WORKS
HOWARD COUNTY, MARYLAND

DIRECTOR OF PUBLIC WORKS — DATE 5/7/96
CHIEF, BUREAU OF ENGINEERING — DATE 5/7/96
CHIEF, BUREAU OF ENVIRONMENTAL SERVICES — DATE 5/7/96
CHIEF, UTILITY DESIGN DIVISION — DATE 5-7-96

M&E Metcalf & Eddy

REG. PROF. ENGR. — DATE 5-7-96

STATE OF MARYLAND — JONATHAN WINTHROP DOANE No. 15140 — REGISTERED PROFESSIONAL ENGINEER

DES:				
DRN: M.J.C.				
CHK: J.H.				
DATE:	BY	NO.	REVISION	DATE

MECHANICAL
DEWATERING BUILDING
FLUSHING WATER SYSTEM
MODIFICATIONS
PLAN

LITTLE PATUXENT WASTEWATER TREATMENT PLANT
LITTLE PATUXENT WASTEWATER TREATMENT PLANT EXPANSION
ADDITION NO. 5
CAPITAL PROJECT S-6153

CONTRACT NO. 20-3082
HOWARD COUNTY, MARYLAND

SCALE AS SHOWN

SHEET 152 OF 226

M-57A

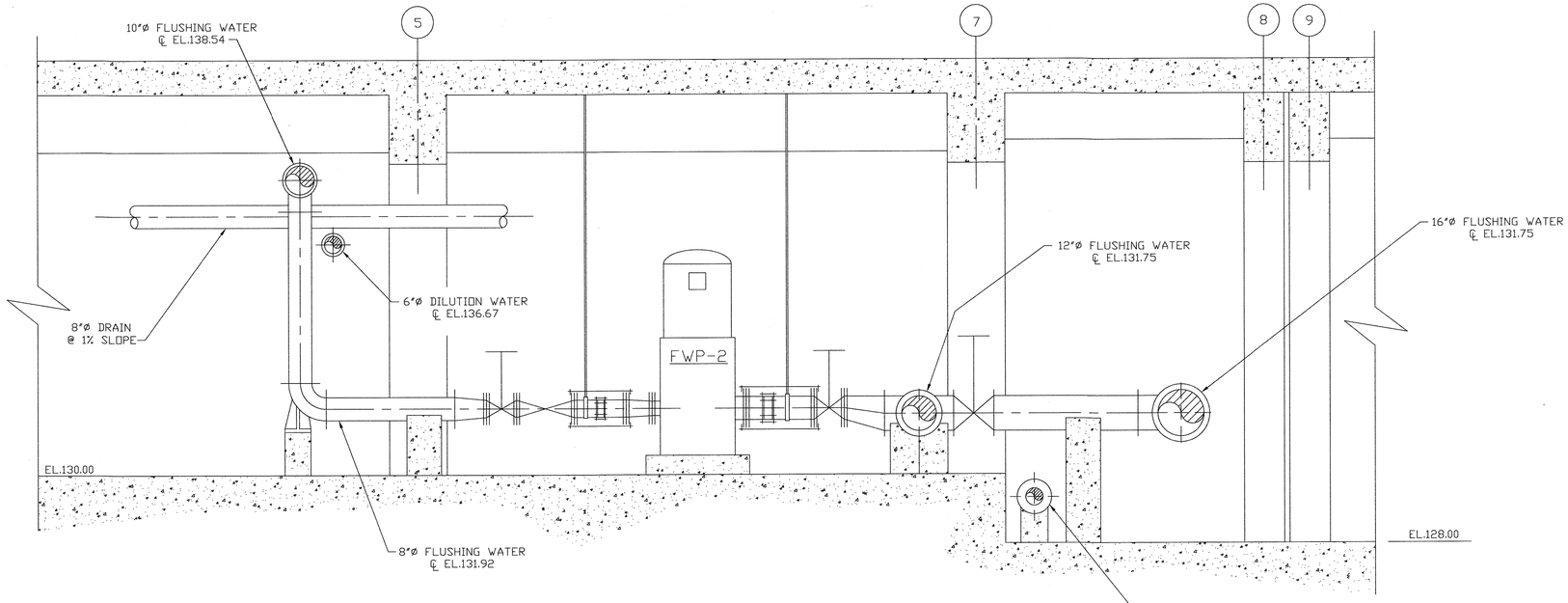

SECTION 1 / M-57
SCALE: 1/2"=1'-0"

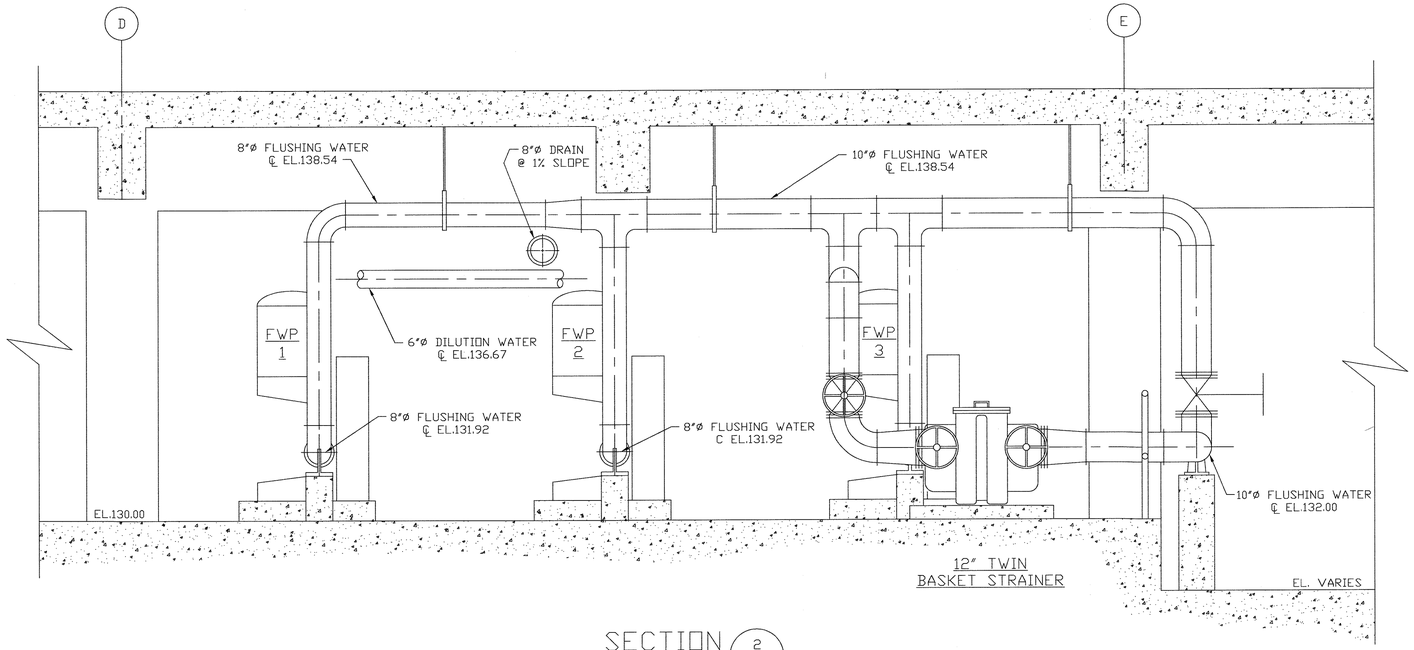

SECTION 2 / M-57
SCALE: 1/2"=1'-0"

LEGEND:

DENOTES FLANGED FITTINGS

DENOTES SPLIT COUPLING FITTINGS

DEPARTMENT OF PUBLIC WORKS
HOWARD COUNTY, MARYLAND

DIRECTOR OF PUBLIC WORKS — DATE 5/7/96
CHIEF, BUREAU OF ENGINEERING — DATE 5/7/96
CHIEF, BUREAU OF ENVIRONMENTAL SERVICES — DATE 5/7/96
CHIEF, UTILITY DESIGN DIVISION — DATE 5-7-96

M&E Metcalf & Eddy

REG. PROF. ENGR. — DATE 5-7-96

STATE OF MARYLAND — JONATHAN WINTHROP DOWNE No. 15140 — REGISTERED PROFESSIONAL ENGINEER

DES:
DRN: M.J.C.
CHK: J.H.
DATE:

BY	NO.	REVISION	DATE

MECHANICAL
DEWATERING BUILDING
FLUSHING WATER SYSTEM
MODIFICATIONS
SECTIONS

LITTLE PATUXENT WASTEWATER TREATMENT PLANT
LITTLE PATUXENT WASTEWATER TREATMENT PLANT EXPANSION
ADDITION NO. 5
CAPITAL PROJECT S-6153

CONTRACT NO. 20-3082
HOWARD COUNTY, MARYLAND

SCALE AS SHOWN

SHEET 153 OF 226

M-58A

NOTE:
DEMOLISH ALL EXISTING DECANT PIPING

2"X4" DIA. REDUCER
4" DIA. 45° ELL
2" DIA. SPRAY HEADER SEE DWG. M-23 DET. "C"
DIGESTER
SPRAY NOZZLE(TYP.) SEE DWG. M-17 FOR FITTINGS & MOUNTING DETAILS
4'-0" (TYP.)
INFLUENT WEIR
INFLUENT TROUGH
6" DIA. WALL PIPE
6" DIA. DEWATERING LINE ℄ EL.130.83
WALKWAY FOR DETAILS SEE STRUCTURAL DRAWINGS
HANDRAIL
2" DIA. BALL VALVE(TYP.)
TOP OF SLAB EL. 142.00
1" DIA. CHEMICAL
CONTINUOUS EFFLUENT WEIR
ROTARY CENTER INFLUENT WELL SEE DETAIL THIS SHEET
4" DIA. WAS DIGESTER BY-PASS ℄ EL.144.00
SKIMMER (TYP.)
SCRAPER
EXISTING GRAVITY THICKENER #1
4" DIA. DILUTION WATER ℄ EL.144.00
TOP OF SLAB EL. 142.00
OVERFLOW TROUGH
45°
45°
S/S RESET
HS 60A
HS 60B
VSH 60
VSHL 60
5'-0" SCUM TROUGH
SCUM PIT
EL. 128.00
SCUM BAFFLE
6" DIA. PRIMARY SLUDGE DIGESTER BY-PASS ℄ EL.144.00
LSL 60
LSH 60
LSHH 60
11"
6" DIA. SCUM PIPE
6" DIA. SLUGE DRAW-OFF
SEE DETAIL 4 M-59
2 M-59
3 M-59
1 M-59

PLAN - NEW GRAVITY THICKENER NO. 3
SCALE: 1/4"=1'-0"

8" 2'-0" 1'-6" 2'-0" 8"
EL.138.50
EL.139.50
12"
3"
8" DIA. EFFLUENT PIPE INVERT EL. 138.50

DETAIL 4 M-59
SCALE: 1/2"=1'-0"

EFFLUENT WEIR
EL.146.00
N.W.L. EL. 141.00
SCUM TROUGH
EL.142.00
6" DIA. SCUM PIPE
SCRAPER MECHANISM
6" DIA. ℄ EL.129.50
EL. 128.00

SECTION 3 M-59
SCALE: 1/4"=1'-0"

SCUM BAFFEL
EXISTING GRAVITY THICKENER #1
EL. 128.00
HANDRAIL
ROTARY CENTER INFLUENT WELL
EL. 146.00
1'-6"x1'-6" OPENING INV. EL.141.50
SKIMMER BLADE
N.W.L. EL. 141.00
EFFLUENT WEIR
CENTER CAGE
30'-0" DIA.
SCRAPER MECHANISM
SKIMMER SUPPORT
EL. 121.08

NOT CONSTRUCTED

SECTION 1 M-59
SCALE: 1/4"=1'-0"

EFFLUENT WEIR
N.W.L. EL. 141.00
HANDRAIL
SPRAY HEADER
EL. 146.00
8" DIA. WALL CASTING W/ WATERSTOP ℄ EL.138.83
INFLUENT TROUGH
INFLUENT WEIR
INV. EL.141.50
SCUM BAFFLE
ROTARY CENTER INFLUENT WELL
30'-0" DIA.
CENTER CAGE
6" DIA. ℄ EL.129.50
EL. 128.00
EL. 121.08
6" DIA. SLUGE DRAW-OFF PIPE. INV.EL.122.33

SECTION 2 M-59
SCALE: 1/4"=1'-0"

6" DIA. PRIMARY SLUDGE DIGESTER
4" DIA. DILUTION WATER
4" DIA. WAS DIGESTER BY-PASS
ROTATE 90° ELLS @ 45° ANGLE(TYP.)
MAX. WL. EL.143.00
1" DIA. CHEMICAL
EL.143.25
1'-6"
EL.141.50
INFLUENT TROUGH

INFLUENT TROUGH DETAIL
SCALE: NONE

3'-6"
SCUM DISCHARGE OPENING 12" LG.X 5" HIGH, TYP. 4 PLACES
SKIMMER BLADE 9" HIGH
INFLUENT TROUGH INV. EL.141.50
4'-0"
CENTER CAGE
8'-0"

ELEVATION

SKIMMER BLADE 9" HIGH
ROTATION
CENTER CAGE
3/8" STEEL PLATE
INFLUENT TROUGH
CENTER COLUMN
45°
FOR DETAIL SEE STRUCTURAL DRAWINGS
LEAVE A MINIMUM OF 1" BETWEEN BAFFEL AND CENTER COLUMN
SCUM DISCHARGE OPENING 12" LG.X 5" HIGH, TYP. 4 PLACES

PLAN

ROTARY INFLUENT WELL DETAIL

LEGEND:
DENOTES EXISTING TANK
DENOTES NEW TANK

DEPARTMENT OF PUBLIC WORKS
HOWARD COUNTY, MARYLAND
DIRECTOR OF PUBLIC WORKS — DATE 5/7/96
CHIEF, BUREAU OF ENGINEERING — DATE 5/7/96
CHIEF, BUREAU OF ENVIRONMENTAL SERVICES — DATE 5/7/96
CHIEF, UTILITY DESIGN DIVISION — DATE 5-7-96

M&E Metcalf & Eddy
REG. PROF. ENGR. — DATE 5-7-96

STATE OF MARYLAND — JONATHAN WRIGHT DRAKE No. 15149 — REGISTERED PROFESSIONAL ENGINEER

DES:			
DRN: M.J.C.			
CHK: J.H.			
DATE:	M.J.C.	1	RECORD DRAWING 11/2/94
	BY	NO.	REVISION DATE

MECHANICAL
GRAVITY THICKENER NO. 3
PLAN AND SECTIONS

LITTLE PATUXENT WASTEWATER TREATMENT PLANT
LITTLE PATUXENT WASTEWATER TREATMENT PLANT EXPANSION
ADDITION NO. 5
CAPITAL PROJECT S-6153
CONTRACT NO. 20-3082
HOWARD COUNTY, MARYLAND

SCALE AS SHOWN
SHEET 154 OF 226
M-59A

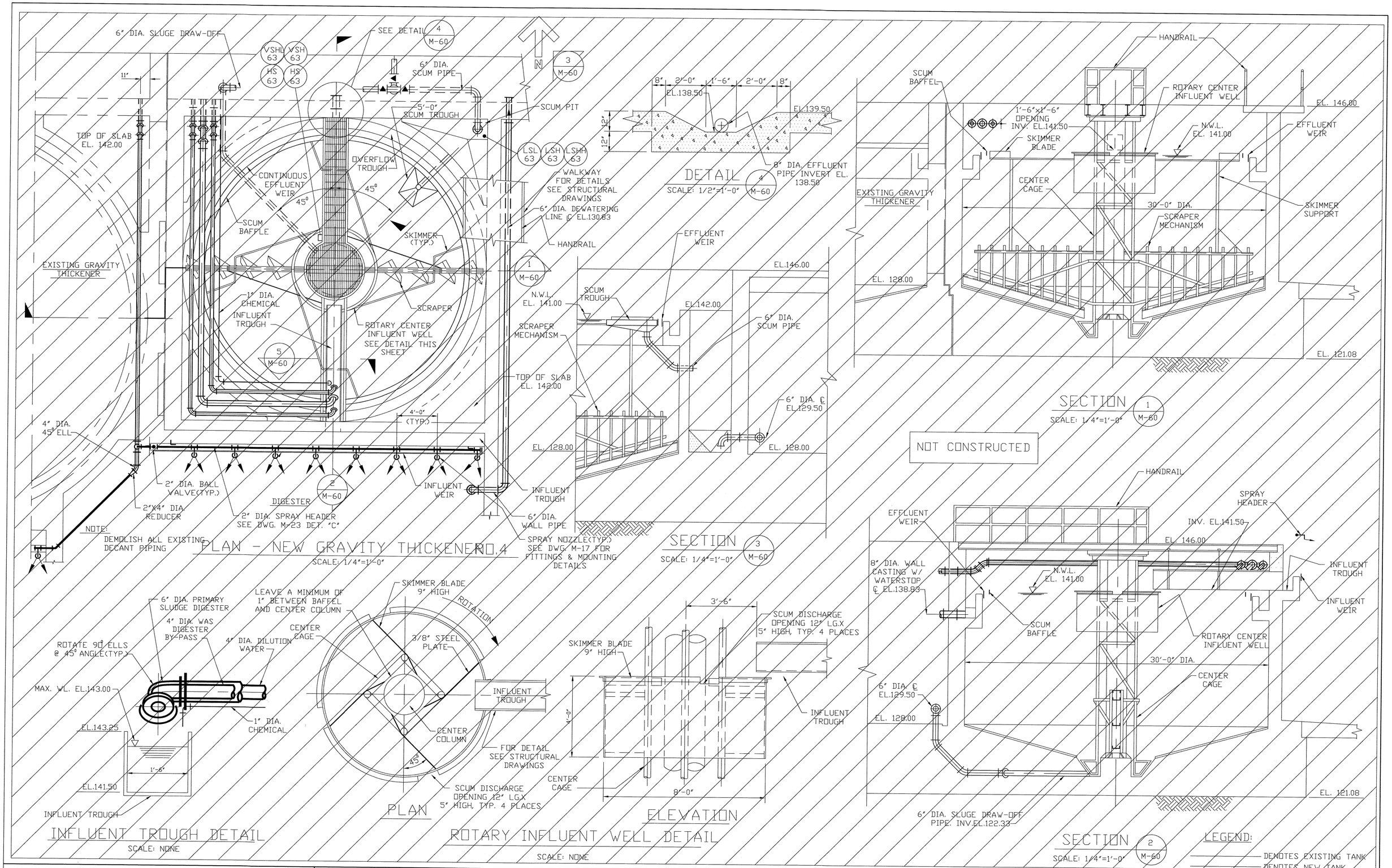

DEPARTMENT OF PUBLIC WORKS
HOWARD COUNTY, MARYLAND

DIRECTOR OF PUBLIC WORKS — DATE 5/7/96
CHIEF, BUREAU OF ENGINEERING — DATE 5/7/96
CHIEF, BUREAU OF ENVIRONMENTAL SERVICES — DATE 5/7/96
CHIEF, UTILITY DESIGN DIVISION — DATE 5-7-96

M&E Metcalf & Eddy

REG. PROF. ENGR. — DATE 5-7-96

STATE OF MARYLAND — JONATHAN WHITTHORP DONNE — No. 15146 — REGISTERED PROFESSIONAL ENGINEER

DES:
DRN: M.J.C.
CHK: J.H.
DATE:

BY	NO.	REVISION	DATE
M.J.C.	1	RECORD DRAWING	11/2/94

MECHANICAL

GRAVITY THICKENER NO. 4
PLAN AND SECTIONS

LITTLE PATUXENT WASTEWATER TREATMENT PLANT

LITTLE PATUXENT WASTEWATER TREATMENT PLANT EXPANSION
ADDITION NO. 5
CAPITAL PROJECT S-6153

CONTRACT NO. 20-3082
HOWARD COUNTY, MARYLAND

SCALE AS SHOWN

SHEET 155 OF 226

M-60A

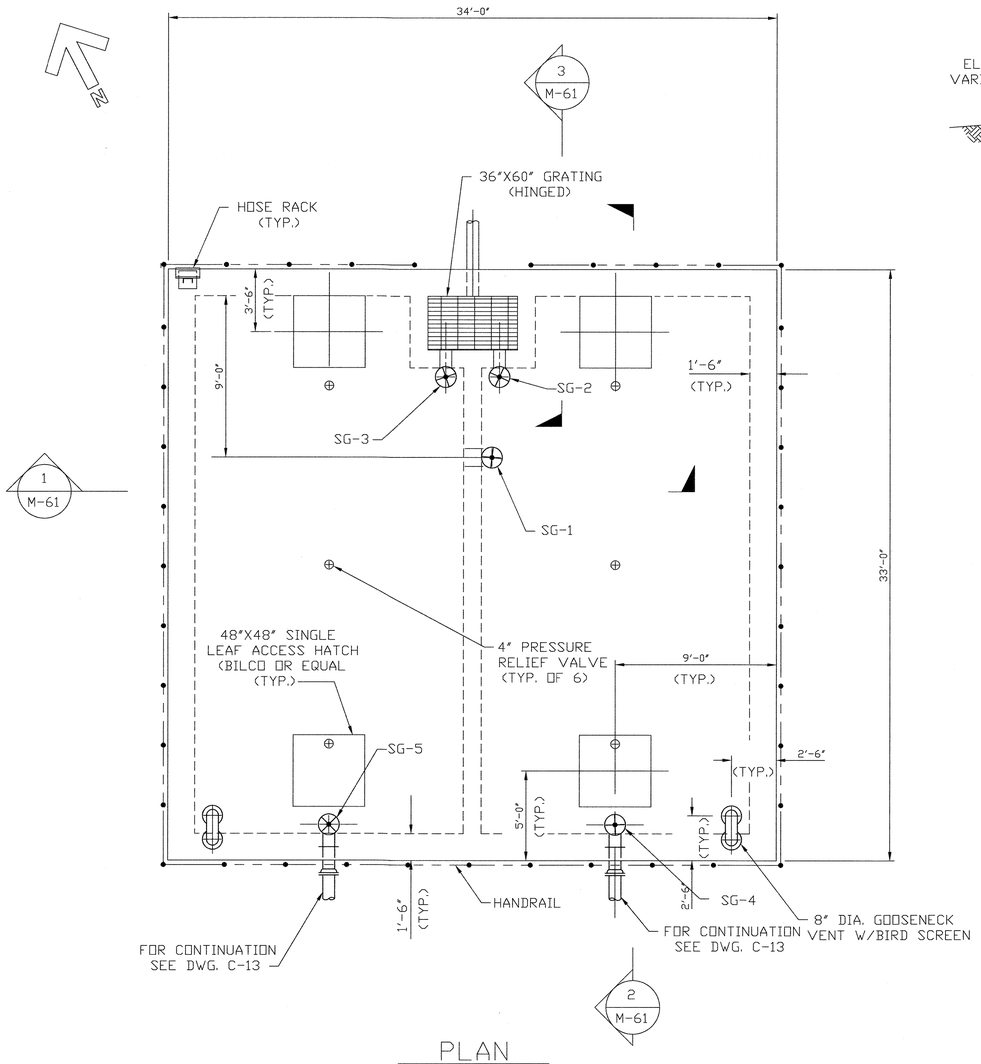

PLAN
SCALE: 1/4"=1'-0"

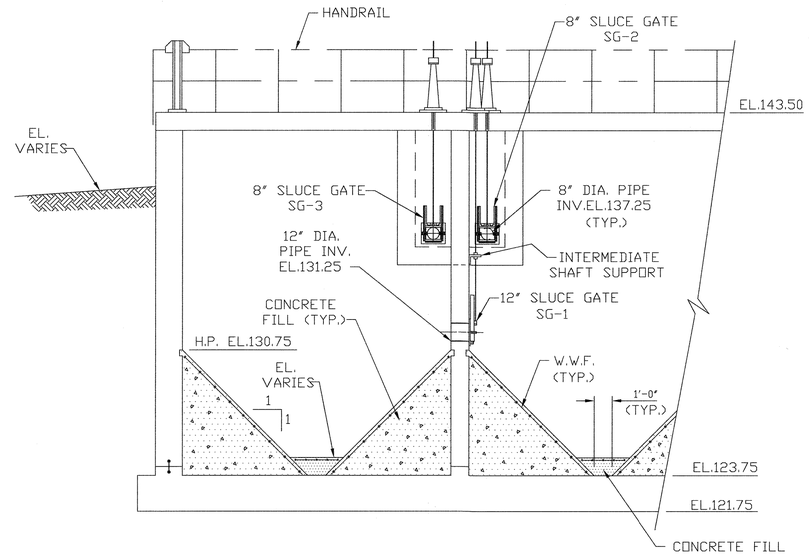

SECTION 1 M-61
SCALE: 1/4"=1'-0"

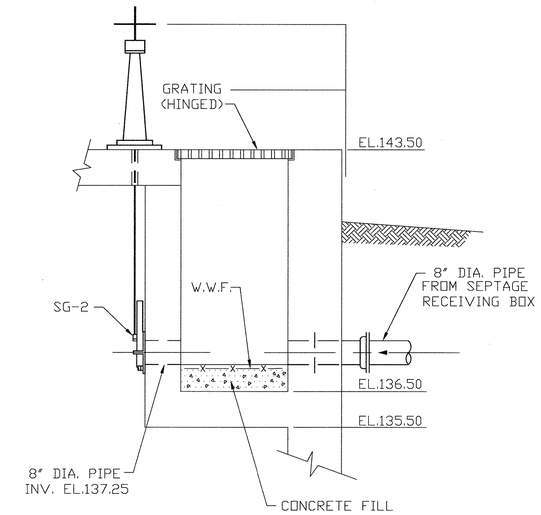

SECTION 3 M-61
SCALE: NONE

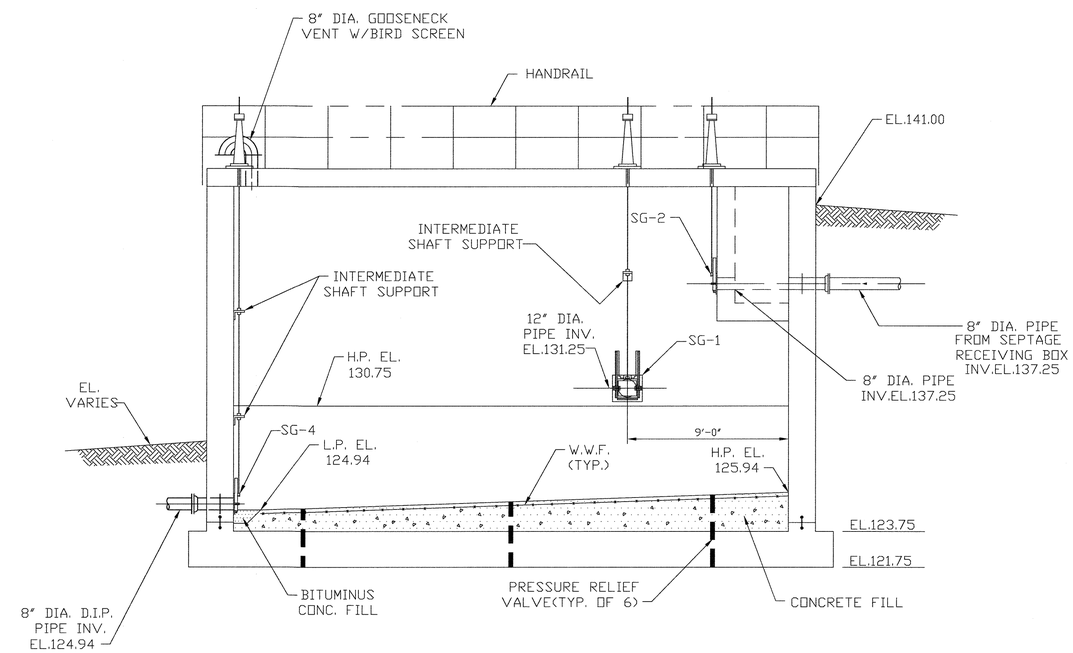

SECTION 2 M-61
SCALE: 1/4"=1'-0"

DEPARTMENT OF PUBLIC WORKS HOWARD COUNTY, MARYLAND	Metcalf & Eddy	STATE OF MARYLAND JONATHAN WINTHROP DONNE No. 15140 REGISTERED PROFESSIONAL ENGINEER	DES:				MECHANICAL	LITTLE PATUXENT WASTEWATER TREATMENT PLANT	SCALE AS SHOWN
DIRECTOR OF PUBLIC WORKS — DATE 5/7/96 CHIEF, BUREAU OF ENGINEERING — DATE 5/7/96			DRN: M.J.C.				SEPTAGE FACILITY PLAN, SECTIONS AND DETAILS	LITTLE PATUXENT WASTEWATER TREATMENT PLANT EXPANSION ADDITION NO. 5 CAPITAL PROJECT S-6153	SHEET 156 OF 226
CHIEF, BUREAU OF ENVIRONMENTAL SERVICES — DATE 5/7/96 CHIEF, UTILITY DESIGN DIVISION — DATE 5-7-96	REQ. PROF. ENGR. — DATE 5-7-96		CHK: J.H.					CONTRACT NO. 20-3082 HOWARD COUNTY, MARYLAND	M-61A
			DATE:	M.J.C.	1	RECORD DRAWING	11/2/94		
				BY	NO.	REVISION	DATE		

PUMP SCHEDULE

TAG NO.	PUMP DESIGNATION	LOCATION	PUMP TYPE	RATING POINT			MIN. SUCTION / DISCHARGE SIZE (IN.)	PUMP RPM MAX.	SEAL TYPE	MOTOR			DRIVE TYPE	SPEC. SECTION NO.	REMARKS
				CAPACITY GPM	HEAD FT.	MIN. EFF. %				HP	RPM MAX.	ENCL. TYPE			
IP 1,2,4,5	INFLUENT PUMP	INFLUENT PUMP STA.	VERTICAL CENTRIFUGAL	4750	45	82	-	700	WATER	75	700	-	DIRECT	11311	REPLACE EXISTING PUMPS, SHAFTS, MOTORS
EP 3	EFFLUENT PUMP	FILTER BUILDING	VERTICAL TURBINE	8200	16	84	20/20	880	WATER	50	702	ODP/WPI	VFD	11302	ADD ONE PUMP, SAME SIZE EXIST. PEERLESS
PSLP 1,2	PRIMARY SLUDGE PUMP	NORTH PUMP STA.	PROGRESSIVE CAVITY	125	50	-	8/8	244	WATER	10.0	1750	TEFC SEVERE	VFD	11310	PROVIDE ONE COMPLETE PUMP, REDUCER, MOTOR ASSEMBLY AS SPARE
PSCP 1,2	PRIMARY SCUM PUMP	NORTH PUMP STA.	PROGRESSIVE CAVITY	25	35	-	6/6	111	WATER	3	1750	TEFC	DIRECT	11310	PRIMARY SCUM, 6% SOLIDS
PSLP 3,4	PRIMARY SLUDGE PUMP	SOUTH PUMP STA.	PROGRESSIVE CAVITY	125	50	-	8/8	244	WATER	10.0	1750	TEFC SEVERE	VFD	11310	PRIMARY SLUDGE, 3-5% SOLIDS
PSCP 3,4	PRIMARY SCUM PUMP	SOUTH PUMP STA.	PROGRESSIVE CAVITY	25	35	-	8/8	111	WATER	3	155	-	DIRECT	11310	PRIMARY SCUM, 6% SOLIDS
RASP 2,3 4,5,6	RETURN ACTIVATED SLUDGE	EAST PIPE GALLERY	NON-CLOG CENTRIFUGAL	1200	18	-	6/6	1150	WATER	10	1150	TEFC	VFD	11306	
RASP 18	RETURN ACTIVATED SLUDGE	WEST PIPE GALLERY	CENTRIFUGAL	1200	18	-	6/6	1150	WATER	10	1150	TEFC	VFD	11306	
RASP 1	PHOS. STRIPPER INFLUENT SLUDGE PUMP	EAST PIPE GALLERY	CENTRIFUGAL	1200	18	-	6/6	1150	WATER	10	1150	TEFC	VFD	11306	
SWP 1,2	SPRAY WATER PUMPS	WEST PIPE GALLERY	CENTRIFUGAL	1200	100	82	6/6	-	MECH	40	1750	TEFC	DIRECT	11303	COMPLETE VARIABLE DEMAND, CONSTANT PRESSURE SYSTEM
SCP 1,2,3,4,5	PROCESS REACTOR SCUM PUMP	PROCESS REACTORS	SUBMERSIBLE	100	90	60	-/4	1750	MECH	10	1750	SUBMERSIBLE	DIRECT	11304	PUMP NO. 6 TO BE COMPLETE SHELF SPARE
DSCP 3	SCUM PUMP	DIGESTER NO. 3	PROGRESSIVE CAVITY	100	80	-	6/6	315	WATER	7.5	1750	TEFC	VFD	11310	FURNISHED BUT NOT INSTALLED. WORK DELETED FROM CONTRACT.
DSLP 3	SLUDGE PUMP	DIGESTER NO. 3	PROGRESSIVE CAVITY	100	80	-	6/6	315	WATER	7.5	1750	TEFC	VFD	11310	FURNISHED BUT NOT INSTALLED. WORK DELETED FROM CONTRACT.
DSCP 4	SCUM PUMP	DIGESTER NO. 4	PROGRESSIVE CAVITY	100	80	-	6/6	315	WATER	7.5	1750	TEFC	VFD	11310	FURNISHED BUT NOT INSTALLED. WORK DELETED FROM CONTRACT.
DSLP 4	SLUDGE PUMP	DIGESTER NO. 4	PROGRESSIVE CAVITY	100	80	-	6/6	315	WATER	7.5	1750	TEFC	VFD	11310	FURNISHED BUT NOT INSTALLED. WORK DELETED FROM CONTRACT.
IRP 1,2,3, IRP 4,5,6	INTERNAL RECYCLE PUMPS	SINGLE PASS AERATION	SUBMERSIBLE PROPELLER	730 MIN. TO 2200 MAX.	0.5 MIN. 2.5 MAX.	-	-	850	MECH	7.5	700	SUBMERSIBLE	VFD	11305	
IRP 7,8	INTERNAL RECYCLE PUMPS	DOUBLE PASS AERATION	SUBMERSIBLE PROPELLER	1500 MIN. TO 4500 MAX.	0.5 MIN. 4.0 MAX.	-	-	500	MECH	15	2125	SUBMERSIBLE	VFD	11305	
SP 1&2	DUPLEX SUMP PUMP	NORTH PUMP STA.	NON-CLOG SUBMERSIBLE	130	20	40	-/4	1750	MECH	2	1750	SUBMERSIBLE	DIRECT	11304	COMPLETE DUPLEX SYSTEM W/ CONTROLS AND LIFT OUT RAILS
SP 3&4	DUPLEX SUMP PUMP	SOUTH PUMP STA.	NON-CLOG SUBMERSIBLE	130	20	40	-/4	1750	MECH	2	1750	SUBMERSIBLE	DIRECT	11304	
SCP 6	SCUM PUMP	FINAL CLAR. NO. 2	SUBMERSIBLE	100	90	-	-/4	-	-	10	1750	SUBMERSIBLE	DIRECT	11304	
FWP 1,2,3	FLUSHING WATER PUMP	DEWATERING BUILDING	VERTICAL CENTRIFUGAL	1000	150	70	8/6	1750	MECH	60	1750	TEFC	DIRECT	11303	COMPLETE VARIABLE DEMAND, CONSTANT PRESSURE SYSTEM WITH AUTO CONTROL MULTIPUMP SERVICE
NAOCLP 1,2,3	HYPOCHLORITE CHEMICAL FEED PUMPS	CHLORINE BUILDING	DIAPHRAM METERING PUMP	1	231	-	2/ 1 1/2	100	MECH	1/4	1725	TENV	-	11352	
HSOP 1&2	BISULFITE CHEMICAL FEED PUMPS	CHLORINE BUILDING	DIAPHRAM METERING PUMP	1/3	231	-	2/ 1 1/2	100	MECH	1/4	1725	TENV	-	11352	
CWP 1	CHEMICAL FEED SYSTEM CARRIER WATER PUMP	36" METER VAULT	CENTRIFUGAL	35	120	82	2/ 1 1/2	1800	MECH	5	1800	TEFC	DIRECT	11301	
SP 5	SUMP PUMP	36" METER VAULT	NON-CLOG SUBMERSIBLE	100	20	40	-/3	1750	MECH	2	1150	SUBMERSIBLE	DIRECT	11304	

SLUICE GATE SCHEDULE

TAG NO.	LOCATION	GATE SIZE W(IN.)xH(IN.)	FULL OPEN PORT W(IN.)xH(IN.)	OPENING INVERT ELEV.	OPERATION FLOOR ELEV.	CHANNEL DEPTH (IN.)	FRAME HEIGHT (IN.)	FRAME TYPE	OPERATOR TYPE	REMARKS
SG SF-1	SEPTAGE RECEIVING FAC.	12"x12"	12" DIA.	131.25	-	-	-	CIRCULAR FRAME	WALL BRACKETTED FLOOR STAND W/HANDWHEEL	
SG SF-2,3	SEPTAGE RECEIVING FAC.	8"x8"	8" DIA.	137.25	143.50	-	-	CIRCULAR FRAME	WALL BRACKETTED FLOOR STAND W/HANDWHEEL	
SG SF-4,5	SEPTAGE RECEIVING FAC.	8"x8"	8" DIA.	124.94	143.50	-	-	CIRCULAR FRAME FLANGE MOUNT	WALL BRACKETTED FLOOR STAND W/HANDWHEEL	
SG PR-1,2	PROCESS REACTORS	36"x36"	36"x36"	136.00	144.00	-	-	INTEGRAL FRAME F THIMBLE TYPE	WALL BRACKETTED FLOOR STAND W/GEAR REDUCER	
SG PR 1,2, 3,4,5,6	PROCESS REACTORS	8"x8"	8" DIA.	135.30	144.00	-	-	CIRCULAR FRAME FLANGE MOUNT	FLOOR STAND W/HANDWHEEL	

PREFABRICATED SLIDE GATE SCHEDULE

TAG NO.	LOCATION	GATE SIZE W(IN.)xH(IN.)	FULL OPEN PORT W(IN.)xH(IN.)	OPENING INVERT ELEV.	OPERATION FLOOR ELEV.	CHANNEL DEPTH (IN.)	FRAME HEIGHT (FT.)	FRAME TYPE	OPERATOR TYPE	REMARKS
PG 7A,7B,	PROCESS REACTOR NO. 7	24"x50"	24"x48"	139.50	144.00	3 FT	7'-9"	FACE MOUNTED	FRAME MOUNTED HANDWHEEL	WHEN CLOSED, TOP OF GATE ELEV. IS 143.67 W.R.T. TOP OF WALL EL.144.00
PG 8A,8B,	PROCESS REACTOR NO. 8	24"x50"	24"x48"	139.50	144.00	3 FT	7'-9"	FACE MOUNTED	FRAME MOUNTED HANDWHEEL	
PG 7C,8C	PROCESS REACTORS 7 & 8	5'Wx2'H WEIR GATE	N/A	141.25	144.00	N/A	6'-10"	FACE MOUNTED	FRAME MOUNTED HANDWHEEL	SCUM PIT GATE
PG 1-6	PROCESS REACTORS 1-6	2.5'Wx1.5'H WEIR GATE	N/A	141.25	144.00	N/A	6'-10"	FACE MOUNTED	FRAME MOUNTED HANDWHEEL	SCUM PIT GATE
PG-1	FLOW EQUALIZATION BASIN 3	36"x36" WEIR GATE	N/A	140.50	143.79	N/A	8'-7 1/2"	FACE MOUNTED	FRAME MOUNTED HANDWHEEL	
PG-2	PRIMARY CLARIFIERS 2	48"x30"	48"x24"	141.67	146.25	N/A	5'-2 1/2"	FACE MOUNTED	FRAME MOUNTED HANDWHEEL	
PG 3A,3B PG 4A,4B	PRIMARY CLARIFIERS 3&4	24"x42"	24"x36"	141.67	146.25	VARIABLE	8'-8 1/2"	CHANNEL SIDES FACE BOTTOM	FRAME MOUNTED HANDWHEEL	SPECIAL FRAME
PG 6B,6C	PROCESS REACTOR NO. 6 EFFLUENT GATES	24"x24"		140.83	144.00	N/A	6'-8"	FACE MOUNTED	FRAME MOUNTED HANDWHEEL	MOUNTED INSIDE EFFLUENT PITS

GRINDER, BLOWER SCHEDULE

TAG NO.	EQUIPMENT NAME	TYPE OF EQUIPMENT	LOCATION	NO. OF UNITS	DESIGN INFORMATION			SPEC. SECTION	REMARKS
					HP	RPM	CAPACITY		
PSLG 1,2	PRIM. SLUDGE GRINDER	IN-LINE GRINDER	NORTH PUMP STATION	2	3	1800	125 GPM	11319	
PSCG 1,2	PRIM. SCUM GRINDER	IN-LINE GRINDER	NORTH PUMP STATION	2	3	1800	25 GPM	11319	
PSLG 3,4	PRIM. SLUDGE GRINDER	IN-LINE GRINDER	SOUTH PUMP STATION	2	3	1800	125 GPM	11319	
PSCG 3,4	PRIM. SCUM GRINDER	IN-LINE GRINDER	SOUTH PUMP STATION	2	3	1800	25 GPM	11319	

LEAKAGE ALLOWANCES:

(A) ZERO LEAKAGE

(B) LEAKAGE NOT TO EXCEED 0.15 GALLONS PER HOUR PER INCH OF DIAMETER PER 100 OF PIPE.

(C) PRESSURE LOSS NOT TO EXCEED 5%.

(D) VACCUM LOSS NOT TO EXCEED 4" MERCURY COLUMN.

DEPARTMENT OF PUBLIC WORKS
HOWARD COUNTY, MARYLAND

DIRECTOR OF PUBLIC WORKS — DATE 5/7/96
CHIEF, BUREAU OF ENGINEERING — DATE 5/7/96
CHIEF, BUREAU OF ENVIRONMENTAL SERVICES — DATE 5/7/96
CHIEF, UTILITY DESIGN DIVISION — DATE 5-7-96

M&E Metcalf & Eddy

REG. PROF. ENGR. — DATE 5-7-96

STATE OF MARYLAND — JONATHAN WINTHROP DOANE No. 15140 — REGISTERED PROFESSIONAL ENGINEER

DES:				
DRN: M.J.C.				
CHK: J.H.				
DATE:	M.J.C.	1	RECORD DRAWING	11/2/94
	BY	NO.	REVISION	DATE

MECHANICAL

SCHEDULE

LITTLE PATUXENT WASTEWATER TREATMENT PLANT

LITTLE PATUXENT WASTEWATER TREATMENT PLANT EXPANSION
ADDITION NO. 5
CAPITAL PROJECT S-6153

CONTRACT NO. 20-3082
HOWARD COUNTY, MARYLAND

SCALE AS SHOWN

SHEET 157 OF 226

M-62A

VALVE SCHEDULE

TAG NO.	LOCATION	TYPE	SIZE (IN.)	RATING (PSI)	SERVICE	OPERATOR TYPE	END TYPE	REFERENCE DRAWING	REFERENCE SPECIFICATION	REMARKS
FCV 1	PRIMARY METERING CHAMBER	PINCH	20	125	WASTEWATER	MOTOR CONTROL WITH MODULATOR	FLANGE	M-6	15101-2.11	MULTI TURN CLOSURE
WAS-1	EAST PIPE GALLERY	GATE	6	175	WAS	HANDWHEEL	FLANGE	M-24	15101-2.02	
IRS	EAST PIPE GALLERY	PLUG	16	150	RAS	HANDWHEEL & GEAR OPERATOR	FLANGE	M-24	15101-2.06	
PSIS 1	EAST PIPE GALLERY	PLUG	12	175	RAS	HANDWHEEL & GEAR OPERATOR	FLANGE	M-24	15101-2.06	
S 1-3	EAST PIPE GALLERY	PLUG	12	175	RAS	HANDWHEEL & GEAR OPERATOR	FLANGE	M-24	15101-2.06	
D 1-10	EAST PIPE GALLERY	PLUG	12	175	RAS	CHAINWHEEL & GEAR OPERATOR	FLANGE	M-24	15101-2.06	
FCV-235	EAST PIPE GALLERY	PLUG	12	175	RAS	MOTOR CONTROL WITH MODULATOR	FLANGE	M-24	15101-2.06	MULTI TURN CLOSURE
FW-1 SC-1	EAST PIPE GALLERY	GATE	4	175	WATER	CHAINWHEEL	FLANGE	M-24	15101-2.02	
PSIS	EAST PIPE GALLERY	CHECK	8	175	RAS	SWING	FLANGE	M-25	15101-2.04	
RAS 1-3	EAST PIPE GALLERY	3-WAY PLUG	12	175	RAS	HANDWHEEL WITH GEAR	FLANGE	M-24	15101-2.06	
RAS PUMP 1	EAST PIPE GALLERY	CHECK	8	175	RAS	SWING	FLANGE	M-25	15101-2.04	
RAS PUMP 5	EAST PIPE GALLERY	CHECK	8	175	RAS	SWING	FLANGE	M-25	15101-2.04	
PSIS	EAST PIPE GALLERY	PLUG	8	175	PSIS	CHAINWHEEL	FLANGE	M-25	15101-2.06	
RAS 2, 3, 4, 6	EAST PIPE GALLERY	CHECK	10	175	RAS	SWING	FLANGE	M-25	15101-2.04	
FMBP 1-2	NORTH P.S. PUMP STATION	PLUG	6	175	SLUDGE	CHAINWHEEL	FLANGE	M-39	15101-2.06	
FW 1-2	NORTH P.S. PUMP STATION	GATE	4	175	WATER	HANDWHEEL	FLANGE	M-39	15101-2.02	PROVIDE CHAINWHEEL AS REQUIRED
BFP	NORTH P.S. PUMP STATION	BACKFLOW PREVENTION	4	175	POTABLE WATER		FLANGE	M-39	15410-2.16	
PSS 1-2	NORTH P.S. PUMP STATION	KNIFE GATE	8	175	SLUDGE	HANDWHEEL	FLANGE	M-39	15101-2.02	
PSCUM 1-2	NORTH P.S. PUMP STATION	KNIFE GATE	6	175	SLUDGE	HANDWHEEL	FLANGE	M-39	15101-2.02	
FCV 8-9	NORTH P.S. PUMP STATION	PLUG	8	175	SLUDGE	MOTOR CONTROL OPEN/CLOSE	FLANGE	M-39	15101-2.08	
PSCUM C 1-2	NORTH P.S. PUMP STATION	PLUG	6	175	SLUDGE	HANDWHEEL WITH GEAR OPERATOR	FLANGE	M-39	15101-2.08	PROVIDE CHAINWHEEL AS REQUIRED
PDISCH 1-3	NORTH P.S. PUMP STATION	PLUG	8	175	SLUDGE	HANDWHEEL WITH GEAR OPERATOR	FLANGE	M-39	15101-2.08	PROVIDE CHAINWHEEL AS REQUIRED
SDISCH 1-16	NORTH P.S. PUMP STATION	PLUG	6	175	SLUDGE	HANDWHEEL WITH GEAR OPERATOR	FLANGE	M-39	15101-2.08	PROVIDE CHAINWHEEL AS REQUIRED
CHK 1-2	NORTH P.S. PUMP STATION	CHECK	8	175	SLUDGE	SWING TYPE	FLANGE	M-39	15101-2.04	
CHK 3-4	NORTH P.S. PUMP STATION	CHECK	6	175	SLUDGE	SWING TYPE	FLANGE	M-39	15101-2.04	
FMBP 1-2	SOUTH P.S. PUMP STATION	PLUG	6	175	SLUDGE	CHAINWHEEL	FLANGE	M-39	15101-2.06	
PSS 1-2	SOUTH P.S. PUMP STATION	KNIFE GATE	8	175	SLUDGE	HANDWHEEL	FLANGE	M-42	15101-2.02	
PSCUM 1-2	SOUTH P.S. PUMP STATION	KNIFE GATE	6	175	SLUDGE	HANDWHEEL	FLANGE	M-42	15101-2.02	
FCV 15-16	SOUTH P.S. PUMP STATION	PLUG	8	175	SLUDGE	MOTOR CONTROL OPEN/CLOSE	FLANGE	M-42	15101-2.06	
SCUM C 1-2	SOUTH P.S. PUMP STATION	PLUG	6	175	SLUDGE	HANDWHEEL WITH GEAR OPERATOR	FLANGE	M-42	15101-2.06	PROVIDE CHAINWHEEL AS REQUIRED
PDISCH 1-3	SOUTH P.S. PUMP STATION	PLUG	8	175	SLUDGE	HANDWHEEL WITH GEAR OPERATOR	FLANGE	M-42	15101-2.06	PROVIDE CHAINWHEEL AS REQUIRED
SDISCH 1-19	SOUTH P.S. PUMP STATION	PLUG	6	175	SLUDGE	HANDWHEEL WITH GEAR OPERATOR	FLANGE	M-42	15101-2.06	PROVIDE CHAINWHEEL AS REQUIRED
FW 1-3	SOUTH P.S. PUMP STATION	GATE	4	175	WATER	HANDWHEEL	FLANGE	M-42	15101-2.02	PROVIDE CHAINWHEEL AS REQUIRED
BFP	SOUTH P.S. PUMP STATION	BACKFLOW PREVENTION	3	175	POTABLE WATER	HANDWHEEL	FLANGE	M-42	15410-2.16	

NOTE: VALVE SCHEDULES IS FOR CLARIFICATION. CONTRACTOR IS RESPONSIBLE FOR PROVIDING ALL VALVES PER MECHANICAL DRAWINGS.

DEPARTMENT OF PUBLIC WORKS
HOWARD COUNTY, MARYLAND

DIRECTOR OF PUBLIC WORKS — DATE 5/7/96
CHIEF, BUREAU OF ENGINEERING — DATE 5/7/96
CHIEF, BUREAU OF ENVIRONMENTAL SERVICES — DATE 5/7/96
CHIEF, UTILITY DESIGN DIVISION — DATE 5-7-96

M&E Metcalf & Eddy
REG. PROF. ENGR. — DATE 5-7-96

STATE OF MARYLAND — JONATHAN WINTHROP DOWNE No. 15140 — REGISTERED PROFESSIONAL ENGINEER

DES:
DRN: M.J.C.
CHK: J.H.
DATE:

BY	NO.	REVISION	DATE
M.J.C.	1	RECORD DRAWING	11/2/94

MECHANICAL

VALVE SCHEDULE 1

LITTLE PATUXENT WASTEWATER TREATMENT PLANT
LITTLE PATUXENT WASTEWATER TREATMENT PLANT EXPANSION
ADDITION NO. 5
CAPITAL PROJECT S-6153
CONTRACT NO. 20-3082
HOWARD COUNTY, MARYLAND

SCALE AS SHOWN

SHEET 158 OF 226

M-63A

VALVE SCHEDULE (CONTINUED)

TAG NO.	LOCATION	TYPE	SIZE (IN.)	RATING (PSI)	SERVICE	OPERATOR TYPE	END TYPE	REFERENCE DRAWING	REFERENCE SPECIFICATION	REMARKS
FWS	DEWATERING BUILDING	GATE	16	150	WATER	HANDWHEEL	FLANGE	M-57	15101-2.02	
FWSM 1-3	DEWATERING BUILDING	GATE	12	175	WATER	HANDWHEEL	FLANGE	M-57	15101-2.02	
FWD 1-4	DEWATERING BUILDING	GATE	10	175	WATER	HANDWHEEL	FLANGE	M-57	15101-2.02	
FWD 5-8	DEWATERING BUILDING	GATE	8	175	WATER	HANDWHEEL	FLANGE	M-57	15101-2.02	
FWD 9-17	DEWATERING BUILDING	GATE	6	175	WATER	HANDWHEEL	FLANGE	M-57	15101-2.02	
FW PUMP 1-3	DEWATERING BUILDING	PRESSURE RELIEF	6	200	WATER	HYDRAULIC/PILOT CONTROL	FLANGE	M-57	15101-2.15	
FW PUMP 1-3	DEWATERING BUILDING	PUMP CONTROL	6	200	WATER	SOLINOID CONTROL	FLANGE	M-57	15101-2.37	
PSS-9	WEST PIPE GALLERY	PLUG	14	175	SLUDGE	CHAINWHEEL WITH GEAR OPERATOR	FLANGE	M-27	15101-2.06	
WPG RAS PUMPS 4B, 5A, 5B, 6A, 6B	WEST PIPE GALLERY	CHECK	10	175	RAS	SWING	FLANGE	M-25	15101-2.04	
FCV-208	WEST PIPE GALLERY	BUTTERFLY	20	25	AIR	MOTOR CONTROL WITH MODULATOR		M-26	15101-2.09	
FCV-207	WEST PIPE GALLERY	BUTTERFLY	20	25	AIR	MOTOR CONTROL WITH MODULATOR		M-26	15101-2.09	
WPG PR NEW	WEST PIPE GALLERY	BUTTERFLY	20	25	AIR	CHAINWHEEL WITH GEAR OPERATOR		M-26	15101-2.09	
FCV-201	WEST PIPE GALLERY	BUTTERFLY	10	25	AIR	MOTOR CONTROL WITH MODULATOR		M-26	15101-2.09	
FCV-202	WEST PIPE GALLERY	BUTTERFLY	10	25	AIR	MOTOR CONTROL WITH MODULATOR		M-26	15101-2.09	
WPG SPRAY 1-5	WEST PIPE GALLERY	GATE	12	175	WASTEWATER	HANDWHEEL	FLANGE	M-26	15101-2.02	
WPG PSS 1-6	WEST PIPE GALLERY	PLUG	3	175	SLUDGE	GEAR OPERATOR WITH CHAINWHEEL	FLANGE	M-26	15101-2.06	
WPG PSS 7,8	WEST PIPE GALLERY	PLUG	4	175	SLUDGE	GEAR OPERATOR WITH CHAINWHEEL	FLANGE	M-26	15101-2.06	
WPG SPRAY 6-7	WEST PIPE GALLERY	PRESSURE RELIEF & PRESSURE REGULATING	6	200	SPRAY WATER	HYDRAULIC/PILOT CONTROL	FLANGE	M-27	15101-2.15	
FCV-203, 204 205, 206	WEST PIPE GALLERY	BUTTERFLY	8	25	AIR	MOTOR CONTROL WITH MODULATOR		M-26	15101-2.09	
RAS 1-3	WEST GALLERY	PLUG	16	175	RAS	GEAR OPERATOR WITH HANDWHEEL	FLANGE	M-26	15101-2.06	
FW 1-4	WEST GALLERY	GATE	6	175	FW	HANDWHEEL	FLANGE	M-26, M-27	15101-2.02	
SPRAY 1-2	WEST GALLERY	GATE	6	175	WASTEWATER	HANDWHEEL	FLANGE	M-27	15101-2.02	
SPRAY 1-5	WEST GALLERY	GATE	12	175	WASTEWATER	HANDWHEEL	FLANGE	M-26, M-27	15101-2.02	
SPRAY 3-10	WEST GALLERY	GATE	4	175	WASTEWATER	CHAINWHEEL	FLANGE	M-26, M-27	15101-2.02	
FEB3 1-24	FLOW E.Q. BASIN #3	BUTTERFLY	4	25	AIR	LEVER WITH 10 POSITION LOCK		M-5	15101-2.08	

NOTE: VALVE SCHEDULES ARE FOR CLARIFICATION. CONTRACTOR IS RESPONSIBLE FOR PROVIDING ALL VALVES AS PER MECHANICAL DRAWINGS.

DEPARTMENT OF PUBLIC WORKS
HOWARD COUNTY, MARYLAND

DIRECTOR OF PUBLIC WORKS — DATE 5/7/96
CHIEF, BUREAU OF ENGINEERING — DATE 5/7/96
CHIEF, BUREAU OF ENVIRONMENTAL SERVICES — DATE 5/7/96
CHIEF, UTILITY DESIGN DIVISION — DATE 5-7-96

M&E Metcalf & Eddy
REG. PROF. ENGR. — DATE 5-7-96

STATE OF MARYLAND — JONATHAN WINTHROP DOANE No. 15140 — REGISTERED PROFESSIONAL ENGINEER

DES:			
DRN: M.J.C.			
CHK: J.H.			
DATE:	M.J.C.	1	RECORD DRAWING 11/2/94
	BY	NO.	REVISION DATE

MECHANICAL

VALVE SCHEDULE II

LITTLE PATUXENT WASTEWATER TREATMENT PLANT
LITTLE PATUXENT WASTEWATER TREATMENT PLANT EXPANSION
ADDITION NO. 5
CAPITAL PROJECT S-6153
CONTRACT NO. 20-3082
HOWARD COUNTY, MARYLAND

SCALE AS SHOWN

SHEET 159 OF 226

M-64A

VALVE SCHEDULE (CONTINUED)

TAG NO.	LOCATION	TYPE	SIZE (IN.)	RATING (PSI)	SERVICE	OPERATOR TYPE	END TYPE	REFERENCE DRAWING	REFERENCE SPECIFICATION	REMARKS
PR1-RAS 1-6	PROCESS REACTOR #1	PLUG	12	175	RAS	HANDWHEEL WITH GEAR	FLANGE	M-15	15101-2.06	
PR2-RAS 1-6	PROCESS REACTOR #2	PLUG	12	175	RAS	HANDWHEEL WITH GEAR	FLANGE	M-15	15101-2.06	
PR3-RAS 1-6	PROCESS REACTOR #3	PLUG	12	175	RAS	HANDWHEEL WITH GEAR	FLANGE	M-15	15101-2.06	
PR4-RAS 1-6	PROCESS REACTOR #4	PLUG	12	175	RAS	HANDWHEEL WITH GEAR	FLANGE	M-15	15101-2.06	
PR5-RAS 1-6	PROCESS REACTOR #5	PLUG	12	175	RAS	HANDWHEEL WITH GEAR	FLANGE	M-15	15101-2.06	
PR6-RAS 1-8	PROCESS REACTOR #6	PLUG	12	175	RAS	HANDWHEEL WITH GEAR	FLANGE	M-15	15101-2.06	
PR7-RAS 1-7	PROCESS REACTOR #7	PLUG	12	175	RAS	HANDWHEEL WITH GEAR	FLANGE	M-20	15101-2.06	
PR8-RAS 1-7	PROCESS REACTOR #8	PLUG	12	175	RAS	HANDWHEEL WITH GEAR	FLANGE	M-20	15101-2.06	
PR1-IR 1-4	PROCESS REACTOR #1	KNIFE GATE	12	175	WASTEWATER	HANDWHEEL	FLANGE	M-15	15101-2.02	ALL STAINLESS STEEL
PR2-IR 1-4	PROCESS REACTOR #2	KNIFE GATE	12	175	WASTEWATER	HANDWHEEL	FLANGE	M-15	15101-2.02	ALL STAINLESS STEEL
PR3-IR 1-4	PROCESS REACTOR #3	KNIFE GATE	12	175	WASTEWATER	HANDWHEEL	FLANGE	M-15	15101-2.02	ALL STAINLESS STEEL
PR4-IR 1-4	PROCESS REACTOR #4	KNIFE GATE	12	175	WASTEWATER	HANDWHEEL	FLANGE	M-15	15101-2.02	ALL STAINLESS STEEL
PR5-IR 1-4	PROCESS REACTOR #5	KNIFE GATE	12	175	WASTEWATER	HANDWHEEL	FLANGE	M-15	15101-2.02	ALL STAINLESS STEEL
PR6-IR 1-4	PROCESS REACTOR #6	KNIFE GATE	12	175	WASTEWATER	HANDWHEEL	FLANGE	M-15	15101-2.02	ALL STAINLESS STEEL
PR7-IR 1-5	PROCESS REACTOR #7	KNIFE GATE	20	150	WASTEWATER	HANDWHEEL	FLANGE	M-20	15101-2.02	ALL STAINLESS STEEL
PR8-IR 1-5	PROCESS REACTOR #8	KNIFE GATE	20	150	WASTEWATER	HANDWHEEL	FLANGE	M-20	15101-2.02	ALL STAINLESS STEEL
PR1-AIR 1-5	PROCESS REACTOR #1	BUTTERFLY	6	25	AIR	HANDWHEEL WITH GEAR OPERATOR		M-15	15101-2.09	
PR2-AIR 1-5	PROCESS REACTOR #2	BUTTERFLY	6	25	AIR	HANDWHEEL WITH GEAR OPERATOR		M-15	15101-2.09	
PR3-AIR 1-5	PROCESS REACTOR #3	BUTTERFLY	6	25	AIR	HANDWHEEL WITH GEAR OPERATOR		M-15	15101-2.09	
PR4-AIR 1-5	PROCESS REACTOR #4	BUTTERFLY	6	25	AIR	HANDWHEEL WITH GEAR OPERATOR		M-15	15101-2.09	
PR5-AIR 1-5	PROCESS REACTOR #5	BUTTERFLY	6	25	AIR	HANDWHEEL WITH GEAR OPERATOR		M-15	15101-2.09	
PR6-AIR 1-5	PROCESS REACTOR #6	BUTTERFLY	6	25	AIR	HANDWHEEL WITH GEAR OPERATOR		M-15	15101-2.09	
PR7-AIR 1-6	PROCESS REACTOR #7	BUTTERFLY	12	25	AIR	HANDWHEEL WITH GEAR OPERATOR		M-20	15101-2.09	
PR8-AIR 1-6	PROCESS REACTOR #8	BUTTERFLY	12	25	AIR	HANDWHEEL WITH GEAR OPERATOR		M-20	15101-2.09	
PR MV 1	PROCESS REACTOR #1	MUD VALVE	12	150	DRAIN	RISING STEM WITH WALL BRACKETS AND HANDWHEEL	FLANGED	M-12	15101-2.22	
PR MV 2	PROCESS REACTOR #2	MUD VALVE	12	150	DRAIN	RISING STEM WITH WALL BRACKETS AND HANDWHEEL	FLANGED	M-12	15101-2.22	
PR FG 1	PROCESS REACTOR #1	FLOOD GATE	16	150	DRAIN	OPERATOR EXTENSION WITH WALL BRACKETS AND HANDWHEEL	FLANGED	M-12	15101-2.02	NOT CONSTRUCTED
PR FG 2	PROCESS REACTOR #2	FLOOD GATE	16	150	DRAIN	OPERATOR EXTENSION WITH WALL BRACKETS AND HANDWHEEL	FLANGED	M-12	15101-2.02	NOT CONSTRUCTED

NOTE: VALVE SCHEDULES ARE FOR CLARIFICATION. CONTRACTOR IS RESPONSIBLE FOR PROVIDING ALL VALVES AS PER MECHANICAL DRAWINGS.

DEPARTMENT OF PUBLIC WORKS
HOWARD COUNTY, MARYLAND

DIRECTOR OF PUBLIC WORKS — DATE 5/7/96
CHIEF, BUREAU OF ENGINEERING — DATE 5/7/96
CHIEF, BUREAU OF ENVIRONMENTAL SERVICES — DATE 5/7/96
CHIEF, UTILITY DESIGN DIVISION — DATE 5-7-96

Metcalf & Eddy
REG. PROF. ENGR. — DATE 5-7-96

STATE OF MARYLAND — JONATHAN WINTHROP DOANE No. 15140 — REGISTERED PROFESSIONAL ENGINEER

DES:
DRN: M.J.C.
CHK: J.H.
DATE:

BY	NO.	REVISION	DATE
M.J.C.	1	RECORD DRAWING	11/2/94

MECHANICAL

VALVE SCHEDULE III

LITTLE PATUXENT WASTEWATER TREATMENT PLANT
LITTLE PATUXENT WASTEWATER TREATMENT PLANT EXPANSION
ADDITION NO. 5
CAPITAL PROJECT S-6153
CONTRACT NO. 20-3082
HOWARD COUNTY, MARYLAND

SCALE AS SHOWN
SHEET 160 OF 226
M-65A

VALVE SCHEDULE (CONTINUED)

TAG NO.	LOCATION	TYPE	SIZE (IN.)	RATING (PSI)	SERVICE	OPERATOR TYPE	END TYPE	REFERENCE DRAWING	REFERENCE SPECIFICATION	REMARKS
AD1, 1-18	AEROBIC DIGESTER #1	BUTTERFLY	10	25	AIR	HANDWHEEL WITH GEAR OPERATOR	FLANGE	M-45	15101-2.09	
AD2, 1-18	AEROBIC DIGESTER #2	BUTTERFLY	10	25	AIR	HANDWHEEL WITH GEAR OPERATOR	FLANGE	M-46	15101-2.09	
AD3, 1-5	AEROBIC DIGESTER #3	BUTTERFLY	10	25	AIR	HANDWHEEL WITH GEAR OPERATOR	FLANGE	M-45	15101-2.09	
AD4, 1-5	AEROBIC DIGESTER #4	BUTTERFLY	10	25	AIR	HANDWHEEL WITH GEAR OPERATOR	FLANGE	M-46	15101-2.09	
AD3, 1-3	AEROBIC DIGESTER #3	BUTTERFLY	12	25	AIR	HANDWHEEL WITH GEAR OPERATOR	FLANGE	M-45	15101-2.09	
AD4, 1-3	AEROBIC DIGESTER #4	BUTTERFLY	12	25	AIR	HANDWHEEL WITH GEAR OPERATOR	FLANGE	M-46	15101-2.09	
FCV 40,41,42	DIGESTER PIPE GALLERY (EXISTING)	BUTTERFLY	20	25	AIR	MOTOR CONTROL WITH MODULATOR	FLANGE	M-53	15101-2.09	
FCV 46	DIGESTER PIPE GALLERY (EXISTING)	BUTTERFLY	16	25	AIR	MOTOR CONTROL WITH MODULATOR	FLANGE	M-53	15101-2.09	
FCV 43,44,45	DIGESTER PIPE GALLERY (EXISTING)	BUTTERFLY	20	25	AIR	MOTOR CONTROL WITH MODULATOR	FLANGE	M-53	15101-2.09	
FCV 49	DIGESTER PIPE GALLERY (EXISTING)	BUTTERFLY	16	25	AIR	MOTOR CONTROL WITH MODULATOR	FLANGE	M-53	15101-2.09	
FCV 47,48	DIGESTER PIPE GALLERY (NEW)	BUTTERFLY	20	25	AIR	MOTOR CONTROL WITH MODULATOR	FLANGE	M-53	15101-2.09	
FCV 50,51	DIGESTER PIPE GALLERY (NEW)	BUTTERFLY	20	25	AIR	MOTOR CONTROL WITH MODULATOR	FLANGE	M-53	15101-2.09	
BLOWER #5	DIGESTER PIPE GALLERY	SPLIT DISC CHECK	20	25	AIR		FLANGE	M-51	15101-2.05	
BLOWER #6	DIGESTER PIPE GALLERY	SPLIT DISC CHECK	20	25	AIR	NOT CONSTRUCTED	FLANGE	M-53	15101-2.05	
BLOWER #7	DIGESTER PIPE GALLERY	SPLIT DISC CHECK	20	25	AIR		FLANGE	M-53	15101-2.05	
BCWBRA #5	DIGESTER PIPE GALLERY	BUTTERFLY	24	25	AIR	MOTOR CONTROL WITH MODULATOR	FLANGE	M-51	15101-2.09	
FCV 31A	DIGESTER PIPE GALLERY	BUTTERFLY	24	25	AIR	MOTOR CONTROL WITH MODULATOR	FLANGE	M-53	15101-2.09	
FCV 32A	DIGESTER PIPE GALLERY	BUTTERFLY	24	25	AIR	MOTOR CONTROL WITH MODULATOR	FLANGE	M-53	15101-2.09	
BCWBRB #5	DIGESTER PIPE GALLERY	BUTTERFLY	12	25	AIR	MOTOR CONTROL WITH MODULATOR	FLANGE	M-51	15101-2.09	
FCV 31B	DIGESTER PIPE GALLERY	BUTTERFLY	12	25	AIR	MOTOR CONTROL WITH MODULATOR	FLANGE	M-53	15101-2.09	
FCV 32B	DIGESTER PIPE GALLERY	BUTTERFLY	12	25	AIR	MOTOR CONTROL WITH MODULATOR	FLANGE	M-53	15101-2.09	
BLOWER #5	DIGESTER PIPE GALLERY	BUTTERFLY	20	25	AIR	GEAR OPERATOR WITH CHAIN WHEEL	FLANGE	M-51	15101-2.09	
BLOWER #6	DIGESTER PIPE GALLERY	BUTTERFLY	20	25	AIR	GEAR OPERATOR WITH CHAIN WHEEL	FLANGE	M-53	15101-2.09	
BLOWER #7	DIGESTER PIPE GALLERY	BUTTERFLY	20	25	AIR	GEAR OPERATOR WITH CHAIN WHEEL	FLANGE	M-53	15101-2.09	

NOTE: VALVE SCHEDULES ARE FOR CLARIFICATION. CONTRACTOR IS RESPONSIBLE FOR PROVIDING ALL VALVES PER MECHANICAL DRAWINGS.

DEPARTMENT OF PUBLIC WORKS
HOWARD COUNTY, MARYLAND

DIRECTOR OF PUBLIC WORKS — DATE 5/7/96
CHIEF, BUREAU OF ENGINEERING — DATE 5/7/96
CHIEF, BUREAU OF ENVIRONMENTAL SERVICES — DATE 5/7/96
CHIEF, UTILITY DESIGN DIVISION — DATE 5-7-96

M&E Metcalf & Eddy
REG. PROF. ENGR. — DATE 5-7-96

STATE OF MARYLAND — JONATHAN WINTHROP DOANE No. 15140 — REGISTERED PROFESSIONAL ENGINEER

DES:
DRN: M.J.C.
CHK: J.H.
DATE:

BY	NO.	REVISION	DATE
M.J.C.	1	RECORD DRAWING	11/2/94

MECHANICAL

VALVE SCHEDULE IV

LITTLE PATUXENT WASTEWATER TREATMENT PLANT
LITTLE PATUXENT WASTEWATER TREATMENT PLANT EXPANSION
ADDITION NO. 5
CAPITAL PROJECT S-6153
CONTRACT NO. 20-3082
HOWARD COUNTY, MARYLAND

SCALE AS SHOWN

SHEET 161 OF 226

M-66A

VALVE SCHEDULE (CONTINUED)

TAG NO.	LOCATION	TYPE	SIZE (IN)	RATING (PSI)	SERVICE	OPERATOR TYPE	END TYPE	REFERENCE DRAWING	REFERENCE SPECIFICATION	REMARKS
TSSP #1, 1-11	DIGESTER PIPE GALLERY (NEW)	PLUG	6	175	SLUDGE	2 INCH NUT	FLANGE	M-53	15101-2.06	DELETED FROM CRONTRACT
TSSP #1, 11	DIGESTER PIPE GALLERY (NEW)	PLUG	6	175	SLUDGE	GEAR OPERATOR WITH CHAINWHEEL	FLANGE	M-53	15101-2.06	
TSSP #1, 12-13	DIGESTER PIPE GALLERY (NEW)	PLUG	4	175	SLUDGE	GEAR OPERATOR WITH CHAINWHEEL	FLANGE	M-53	15101-2.06	
TSSP #2, 1-11	DIGESTER PIPE GALLERY (NEW)	PLUG	6	175	SLUDGE	2 INCH NUT	FLANGE	M-53	15101-2.06	
TSSP #2, 11-12	DIGESTER PIPE GALLERY (NEW)	PLUG	6	175	SLUDGE	GEAR OPERATOR WITH CHAINWHEEL	FLANGE	M-53	15101-2.06	
TSSP #2, 13-15	DIGESTER PIPE GALLERY (NEW)	PLUG	4	175	SLUDGE	GEAR OPERATOR WITH CHAINWHEEL	FLANGE	M-53	15101-2.06	
GT SPRAY 1-2	DIGESTER PIPE GALLERY	PRESSURE REDUCING	4	200	WATER	PILOT	FLANGE	M-49	15101-2.14	
WCS/SC 1-3	DIGESTER PIPE GALLERY	PLUG	6	175	SLUDGE	GEAR OPERATOR WITH CHAINWHEEL	FLANGE	M-49, M-53	15101-2.06	
AD3 PS, 1-5	DIGESTER PIPE GALLERY (NEW)	PLUG	6	175	SLUDGE	GEAR OPERATOR WITH CHAINWHEEL	FLANGE	M-53	15101-2.06	
AD3 WAS, 1-5	DIGESTER PIPE GALLERY (NEW)	PLUG	4	175	SLUDGE	GEAR OPERATOR	FLANGE	M-53	15101-2.06	
AD4 PS, 1-5	DIGESTER PIPE GALLERY (NEW)	PLUG	6	175	SLUDGE	GEAR OPERATOR	FLANGE	M-53	15101-2.06	
AD4 WAS, 1-5	DIGESTER PIPE GALLERY (NEW)	PLUG	4	175	SLUDGE	GEAR OPERATOR	FLANGE	M-53	15101-2.06	
ADFW, 1-2	DIGESTER PIPE GALLERY (NEW)	GATE	4	175	WATER	HANDWHEEL	FLANGE	M-53	15101-2.02	
ADDW, 1-2	DIGESTER PIPE GALLERY (NEW)	GATE	4	175	WATER	HANDWHEEL	FLANGE	M-53	15101-2.02	
PSL 1,2,3,4	DIGESTER BLDG. NORTH WALL (FLOTATION THICKENER GALLERY)	PLUG	8	175	SLUDGE	GEAR OPERATOR WITH CHAINWHEEL	FLANGE	M-56	15101-2.06	
ADGTS, 1-2	DIGESTER PIPE GALLERY (EXISTING)	GATE	4	175	FW	CHAINWHEEL	FLANGE	M-49	15101-2.02	DELETED FROM CRONTRACT
ADSC, 1-4	DIGESTER PIPE GALLERY	GATE	4	175	SLUDGE	GEAR OPERATOR WITH CHAINWHEEL	FLANGE	M-49	15101-2.02	
ADWCS 1	DIGESTER PIPE GALLERY	PLUG	6	175	SLUDGE	GEAR OPERATOR	FLANGE	M-49	15101-2.06	
GT1 1-2	DIGESTER PIPE GALLERY (EXISTING)	PLUG	4	175	SLUDGE	GEAR OPERATOR WITH CHAINWHEEL	FLANGE	M-49	15101-2.06	
GT2 2-1	DIGESTER PIPE GALLERY (EXISTING)	PLUG	4	175	SLUDGE	GEAR OPERATOR WITH CHAINWHEEL	FLANGE	M-49	15101-2.06	
FEP 3	FILTER EFFLUENT PUMP STATION	BUTTERFLY	20	25	WATER	HANDWHEEL WITH GEAR OPERATOR	FLANGE	M-32	15101-2.08	
FEP 3	FILTER EFFLUENT PUMP STATION	CHECK	20	175	WATER	SWING	FLANGE	M-32	15101-2.04	
FCV 4,5,6	HEADWORKS BUILDING	BUTTERFLY	14	25	AIR	MOTOR CONTROL WITH MODULATOR		M-3	15101-2.09	

NOTE: VALVE SCHEDULES ARE FOR CLARIFICATION. CONTRACTOR IS RESPONSIBLE FOR PROVIDING ALL VALVES AS PER MECHANICAL DRAWINGS.

DEPARTMENT OF PUBLIC WORKS
HOWARD COUNTY, MARYLAND

DIRECTOR OF PUBLIC WORKS — DATE 5/7/96
CHIEF, BUREAU OF ENGINEERING — DATE 5/7/96
CHIEF, BUREAU OF ENVIRONMENTAL SERVICES — DATE 5/7/96
CHIEF, UTILITY DESIGN DIVISION — DATE 5-7-96

M&E Metcalf & Eddy
REG./PROF. ENGR. — DATE 5-7-96

STATE OF MARYLAND — JONATHAN WINTHROP DOANE No. 15140 — REGISTERED PROFESSIONAL ENGINEER

DES:			
DRN: M.J.C.			
CHK: J.H.			
DATE:	M.J.C.	1	RECORD DRAWING 11/2/94
	BY	NO.	REVISION DATE

MECHANICAL

VALVE SCHEDULE V

LITTLE PATUXENT WASTEWATER TREATMENT PLANT
LITTLE PATUXENT WASTEWATER TREATMENT PLANT EXPANSION
ADDITION NO. 5
CAPITAL PROJECT S-6153
CONTRACT NO. 20-3082
HOWARD COUNTY, MARYLAND

SCALE AS SHOWN

SHEET 162 OF 226

M-67A

PIPE SCHEDULE

SYSTEM ID ABBREVIATION	NAME	PIPE MATERIAL SCHEDULE/CLASS	MINIMUM PRESSURE (PSI)	TEST MEDIUM	DURATION (MINUTES)	LEAKAGE ALLOWANCE	SPECIFICATION SECTION NO.	REMARKS
PSC	PRIMARY SCUM	DI	150	WATER	60	A	02615	
P.S.	PRIMARY SLUDGE	DI	150	WATER	60	A	02615	
PRI/PRD	PROCESS REACTOR INFLUENT/ PROCESS REACTOR DRAIN	DI	150	WATER	60	A	02615	
IR	PROCESS REACTOR INTERNAL RECYCLE	DI		WATER	60	A	02615	
RAS	RETURN ACTIVATED SLUDGE	DI	150	WATER	60	A	02615	
PSS	PHOSPHORUS STRIPPED SLUDGE	DI	150	WATER	60	A	02615	
BAS	BURIED AIR SERVICE	DI	25	AIR	120	A,C	02615	
EASO	EXPOSED AIR SERVICE OUTSIDE		25	AIR	120	A,C	15066	SEE SPEC. SCHEDULE ON PAGE 15066-6 FOR SCHEDULE, GAGE AND PLATE THICKNESS
EASI	EXPOSED AIR SERVICE INSIDE	STEEL SCH 40	25	AIR	120	A,C	15066	SEE SPEC. SCHEDULE ON PAGE 15066-6 FOR SCHEDULE, GAGE AND PLATE THICKNESS
SAS	SUBMERGED AIR SERVICE	SS SCH 10	25	AIR	120	A,C	15066	SEE SPEC. SCHEDULE ON PAGE 15066-6 FOR SCHEDULE, GAGE AND PLATE THICKNESS
ADM	AERATION DIFFUSER MANIFOLD	SDR 26	25	AIR	120	A,C	15817	
SSPWE	SURFACE SPRAY WATER EXPOSED	DI	150	WATER	60	A	15370/02615	PROVIDE SCH. 40 STEEL FOR ALL LINES LESS THAN 4"ø
SPWB	SPRAY WATER BURIED	DI	150	WATER	60	A	02615	
SPD	SUMP PUMP DISCHARGE	DI	150	WATER	60	A	02615	
PW	PLANT WATER (NON-POTABLE)	DI	150	WATER	60	A	02615	INSULATE INSIDE STRUCTURES
FW	FLUSHING WATER	DI	150	WATER	60	A	02615	
W	POTABLE WATER	COPPER	150	WATER	60	A	15410	INSULATE INSIDE STRUCTURES
V	VENT	DWV	5	WATER	60	A	15410	
D	DRAIN	DWV	5	WATER	60	A	15410	
S	SANITARY SEWER	SDR 35	_	WATER	1440	B	15370	UP TO 6"ø
SD	STORM DRAIN	RCP CLASS IV	–	WATER	1440	B	02609	8"ø USED PVC SDR
CRS	CHLORINE RESIDUAL SAMPLE	PVC SCH 80	120	WATER	240	A	15370	INSULATE INSIDE STRUCTURES
CCF	CONCENTRATED CHEMICAL FEED	PVC SCH 80	110	WATER	60	A	15370	
HWD	HEATING WATER DISCHARGE	PVC SCH 80	110	WATER	60	A	15370	INSULATE INSIDE STRUCTURES
PCI	PRIMARY CLARIFIER INFLUENT/EFFLUENT	DI	150	WATER	60	A	02615	
FCI	FINAL CLARIFIER INFLUENT/EFFLUENT	DI	150	WATER	60	A	02615	
CFO	CHEMICAL FILL OUTSIDE	PVC SCH 80	110	WATER	60	A	15066	
CFI	CHEMICAL FILL INSIDE	PVC SCH 80	110	WATER	60	A	15370	
FCP	FLOOD CONTROL PIPE	DI	150	WATER	60	A	02615	
FEIE	FLOW EQUALIZATION INFLUENT/EFFLUENT	DI	150	WATER	60	A	02615	
FBI	FLOCULATION BASIN INFLUENT	DI	150	WATER	60	A	02615	54" METER VAULT SPOOL PIECE

LEAKAGE ALLOWANCES:

(A) ZERO LEAKAGE

(B) LEAKAGE NOT TO EXCEED 0.15 GALLONS PER HOUR PER INCH OF DIAMETER PER 100 OF PIPE.

(C) PRESSURE LOSS NOT TO EXCEED 5%.

(D) VACUUM LOSS NOT TO EXCEED 4" MERCURY COLUMN.

DEPARTMENT OF PUBLIC WORKS
HOWARD COUNTY, MARYLAND

DIRECTOR OF PUBLIC WORKS — DATE 5/6/96
CHIEF, BUREAU OF ENGINEERING — DATE 5/7/96
CHIEF, BUREAU OF ENVIRONMENTAL SERVICES — DATE 5/7/96
CHIEF, UTILITY DESIGN DIVISION — DATE 5-7-96

M&E Metcalf & Eddy
REG. PROF. ENGR. — DATE 5-7-96

STATE OF MARYLAND — JONATHAN WINTHROP DOANE No. 15140 — REGISTERED PROFESSIONAL ENGINEER

DES:
DRN: M.J.C.
CHK: J.H.
DATE:

BY	NO.	REVISION	DATE
M.J.C.	1	RECORD DRAWING	11/2/94

MECHANICAL

PIPE SCHEDULE

LITTLE PATUXENT WASTEWATER TREATMENT PLANT

LITTLE PATUXENT WASTEWATER TREATMENT PLANT EXPANSION
ADDITION NO. 5
CAPITAL PROJECT S-6153

CONTRACT NO. 20-3082
HOWARD COUNTY, MARYLAND

SCALE AS SHOWN

SHEET 163 OF 226

M-68A

DWG. ABBREV.	ITEM	SYMBOL	NOTES
	PRESSURE REGULATING VALVE LINE TO SIDE REGULATED		
	BALL VALVE		
	GLOBE VALVE		
	CHECK VALVE		
	GATE VALVE		
	FLANGED JOINT		
	SCREWED UNION		
	CONCENTRIC REDUCER		
	STRAINER		
	ELECTRIC UNIT HEATER	EUH	
	ELECTRIC CABINET UNIT HEATER	ECUH	
	ROUND DUCT UP		
	MOTOR FOR M.O.D.	MD	
	THERMOSTAT W/# OF DEVICE CONTROLLED AND FUNCTION	HEAT/COOL HP-8 T	
	FRP DUCT SUPPORT NUMBER		
	SUPPLY/OUTSIDE AIR DUCT UP		
	RETURN/EXHAUST AIR DUCT UP		
	SUPPLY/OUTSIDE AIR DUCT DOWN		
	RETURN/EXHAUST AIR DUCT DOWN		
	TURNING VANES IN ELBOW		
	FLEXIBLE CONNECTION		
	TRANSITION(RECTANGULAR TO RECTANGULAR)	T	
	VOLUME DAMPER	VD	
	SWITCH W/# OF DEVICE CONTROLLED AND FUNCTION	S SOF EF-4	
	FLANGED PIPE/DUCT		
	ELECTRIC BASEBOARD HEATER		
	FIRE STAT W/# OF DEVICE	FS	
	SMOKE DETECTOR W/# OF DEVICE	SD	

ABBREVIATIONS

A	AIR
AFF	ABOVE FINISHED FLOOR
ALUM.	ALUMINUM
BDD	BACK DRAFT DAMPER
BF	BLIND FLANGE
B.O.D.	BOTTOM OF DUCT
CD	CEILING DIFFUSER
CFM	CUBIC FEET PER MINUTE
℄ EL.	CENTERLINE ELEVATION
D,VD	VOLUME DAMPER
DR	DRAIN
Ø,DIA.	DIAMETER
EAG	EXHAUST AIR GRILLE
ECUH	ELECTRIC CABINET UNIT HEATER
EDH	ELECTRIC DUCT HEATER
EUH	ELECTRIC UNIT HEATER
EXH.	EXHAUST
EF-1	EXHAUST FAN AND NO.
FAI	FRESH AIR INTAKE
F.D.	FIRE DAMPER
FLEX.	FLEXIBLE CONNECTION
FLG.	FLANGE
F.O.B.	FLAT ON BOTTOM
F.O.T.	FLAT ON TOP
FRP	FIBER REINFORCED POLYESTER
GBD	GRAVITY BACKDRAFT DAMPER
GALV.	GALVANIZED
H.O.A.	HAND OFF AUTO
H.O.R.	HAND OFF REMOTE
HP-1	HEAT PUMP AND NO.
HVU-1	HEATER VENTILATION UNIT AND NUMBER
HVAC	HEATER VENTILATION & AIR CONDITIONING UNIT
△ RAR	RETURN AIR REGISTER
HWD	HEATING WATER DISCHARGE
HWS	HEATING WATER SUPPLY
M.O.D.	MOTOR OPERATED DAMPER
NaOH	SODIUM HYDROXIDE
NaOCl	SODIUM HYPOCHLORIDE
N.C.	NORMALLY CLOSED
NK.	NECK
N.O.	NORMALLY OPEN
OA	OUTSIDE AIR
PH	PERCENT HYDROGEN ION CONCENTRATION
PVC	POLYVINYLCHLORIDE
PW	PLANT WATER
POT.W	POTABLE WATER
RAG	RETURN AIR GRILLE (ALSO EXHAUST AIR)
SAD	SUPPLY AIR DIFFUSER
SAG	SUPPLY AIR GRILLE
SF-1	SUPPLY FAN AND NO.
S.O.F.	SLOW,OFF,FAST
S.P.	STATIC PRESSURE
S.S.	STAINLESS STEEL
SQ.	SQUARE
T.O.C.	TOP OF CONCRETE ELEVATION
T.O.D.	TOP OF DUCT ELEVATION
TSTAT	THERMOSTAT
TYP.	TYPICAL
W/	WITH
*	BASED ON EQUIPMENT FURNISHED

DEPARTMENT OF PUBLIC WORKS
HOWARD COUNTY, MARYLAND

DIRECTOR OF PUBLIC WORKS — DATE 12/9/91
CHIEF, BUREAU OF ENGINEERING — DATE 12-9-91
CHIEF, BUREAU OF ENVIRONMENTAL SERVICES — DATE 12/9/91
CHIEF, UTILITY DESIGN DIVISION — DATE 12-9-91

Metcalf & Eddy
REG. PROF. ENGR. — DATE 12/9/91

STATE OF MARYLAND — JONATHAN WINTHROP DOANE No. 15140 — REGISTERED PROFESSIONAL ENGINEER

DES: J.S. Hughes
DRN: P. Madrick
CHK: J.S. Hughes
DATE: 12/2/91

BY	NO.	REVISION	DATE
JC	3	RECORD DRAWING	11/5/94
DZG	2	ADDENDUM #5	4/12/92
	1	REVISED FOR BIDDING	3/5/92

HVAC

LEGEND, SYMBOLS & NOTES

LITTLE PATUXENT WASTEWATER TREATMENT PLANT
LITTLE PATUXENT WASTEWATER TREATMENT PLANT EXPANSION
ADDITION NO. 5
CAPITAL PROJECT S-6153
CONTRACT NO. 20-3082
HOWARD COUNTY, MARYLAND

SCALE AS SHOWN

SHEET 164 OF 226

H-1

073119

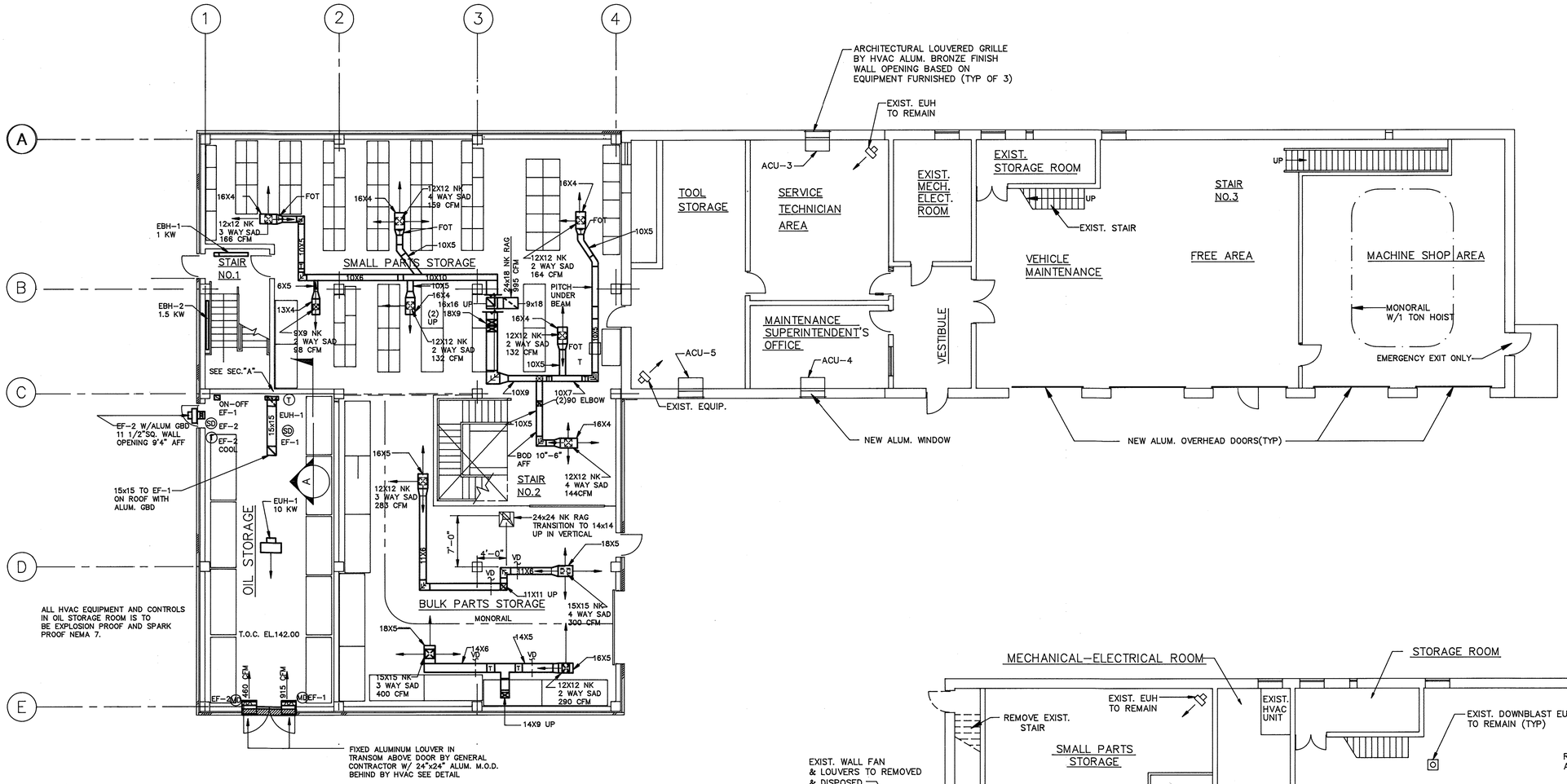

FIRST FLOOR PLAN

SCALE : 1/8"=1'-0"

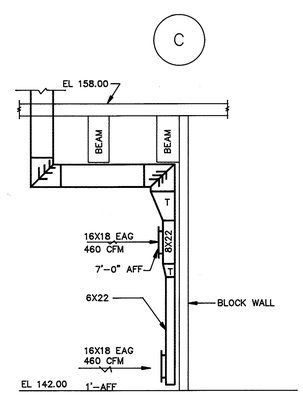

SECTION A

SCALE:1/4"=1'-0"

NOTES:

1. ALL DUCTWORK IN OIL STORAGE AREA TO BE ALUMINUM 24 B & S GAGE MIMIMUM.
2. DUCTWORK IN THE REMAINDER OF THE BUILDING SHALL BE GALVANIZED STEEL 26 GAUGE MINIMUM.

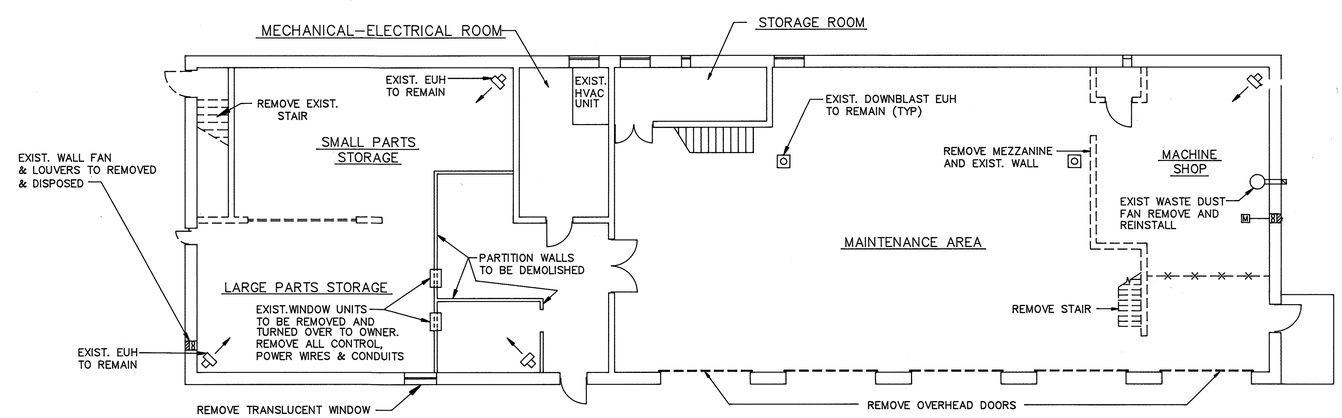

FIRST FLOOR DEMOLITION PLAN

SCALE: 1/8"= 1'-0"

DEPARTMENT OF PUBLIC WORKS
HOWARD COUNTY, MARYLAND

DIRECTOR OF PUBLIC WORKS — DATE 12/9/91
CHIEF, BUREAU OF ENGINEERING — DATE 12-9-91
CHIEF, BUREAU OF ENVIRONMENTAL SERVICES — DATE 12/9/91
CHIEF, UTILITY DESIGN DIVISION — DATE 12-9-91

Metcalf & Eddy

REG. PROF. ENGR. — DATE 12/9/91

STATE OF MARYLAND — JONATHAN WINTHROP DOANE No. 15140 — REGISTERED PROFESSIONAL ENGINEER

DES: J.S. Hughes
DRN: P. Mandolia
CHK: J.S. Hughes
DATE: 12/7/91

BY	NO.	REVISION	DATE
MC	3	RECORD DRAWING SEE SUPPLEMENTAL SHT. H-2A	11/3/94
DZG	2	ADDENDUM #5	4/12/92
	1	REVISED FOR BIDDING	3/5/92

HVAC
MAINTENANCE BUILDING
FIRST FLOOR PLANS

LITTLE PATUXENT WASTEWATER TREATMENT PLANT
LITTLE PATUXENT WASTEWATER TREATMENT PLANT EXPANSION
ADDITION NO. 5
CAPITAL PROJECT S - 6153
CONTRACT NO. 20 - 3082
HOWARD COUNTY, MARYLAND

SCALE AS SHOWN
SHEET 165 OF 226
H-2

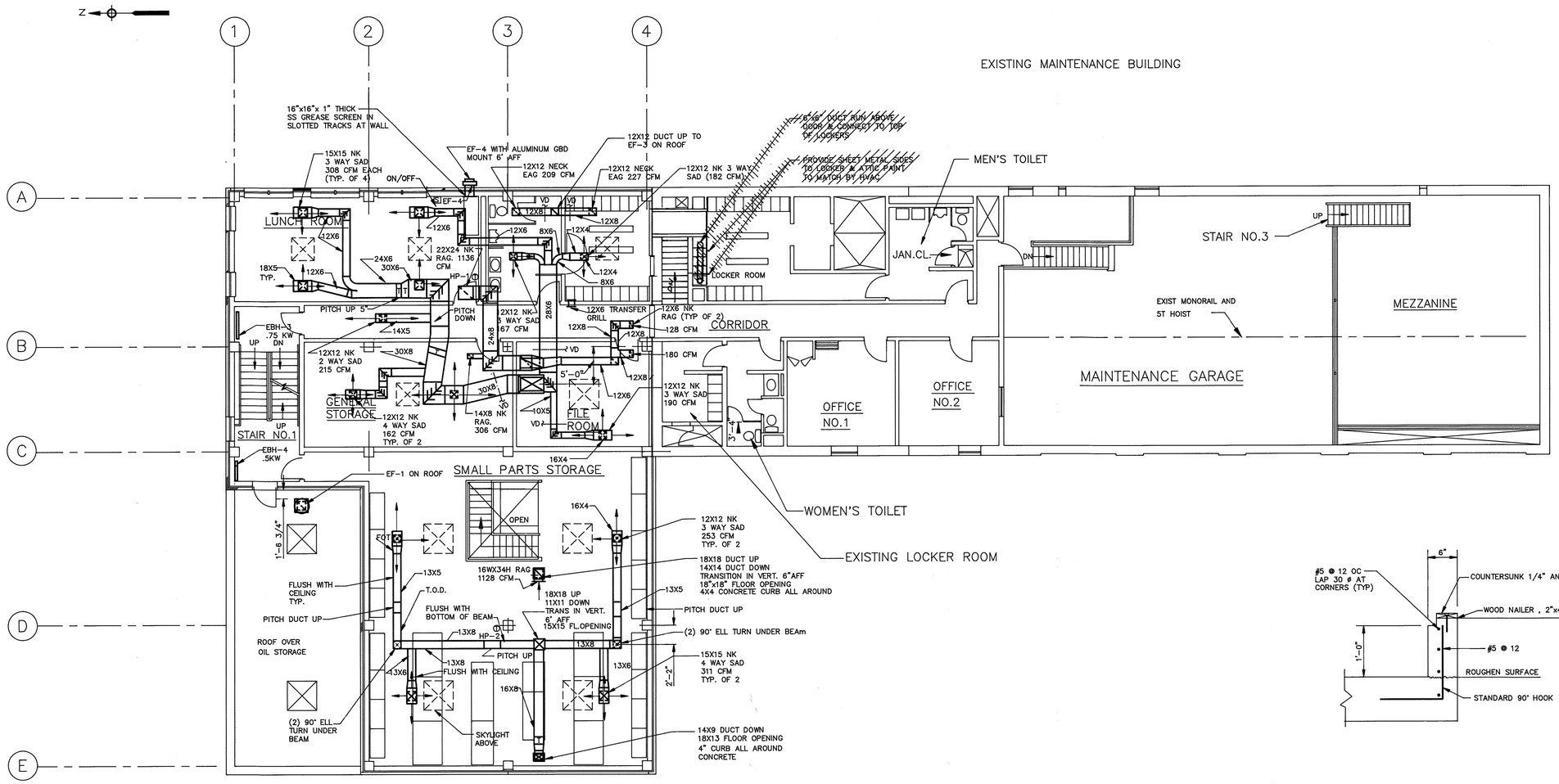

SECOND FLOOR PLAN
SCALE: 1/8"=1'-0"

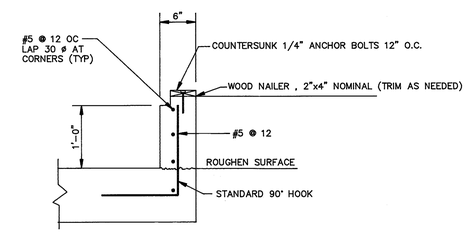

CONCRETE ROOF CURB
DETAIL "D"
SCALE: 1"=1'-0"

NOTES:

1. DUCTWORK AT SECOND FLOOR TO BE GALVANIZED STEEL EXCEPT DUCT THROUGH WALL AT EF-4 TO BE ALUMINUM.
2. SEE SECTIONS "B" AND "C" ON SHEET H-4 FOR DUCTWORK BELOW HP-1.

DEPARTMENT OF PUBLIC WORKS
HOWARD COUNTY, MARYLAND

DIRECTOR OF PUBLIC WORKS — DATE 12/9/91
CHIEF, BUREAU OF ENGINEERING — DATE 12-9-91
CHIEF, BUREAU OF ENVIRONMENTAL SERVICES — DATE 12/9/91
CHIEF, UTILITY DESIGN DIVISION — DATE 12-9-91

Metcalf & Eddy

REG. PROF. ENGR. — DATE 12/9/91

STATE OF MARYLAND — JONATHAN WINTHROP DOANE No. 15140 — REGISTERED PROFESSIONAL ENGINEER

DES: J.S. Hughes
DRN: P. Imielski
CHK: J.S. Hughes
DATE: 12/7/91

BY	NO.	REVISION	DATE
	2	RECORD DRAWING	11/3/94
	1	REVISED FOR BIDDING	9/5/92

HVAC
MAINTENANCE BUILDING
SECOND FLOOR PLAN

LITTLE PATUXENT WASTEWATER TREATMENT PLANT
LITTLE PATUXENT WASTEWATER TREATMENT PLANT EXPANSION
ADDITION NO. 5
CAPITAL PROJECT S - 6153
CONTRACT NO. 20 - 3082
HOWARD COUNTY, MARYLAND

SCALE AS SHOWN
SHEET 166 OF 226
H-3

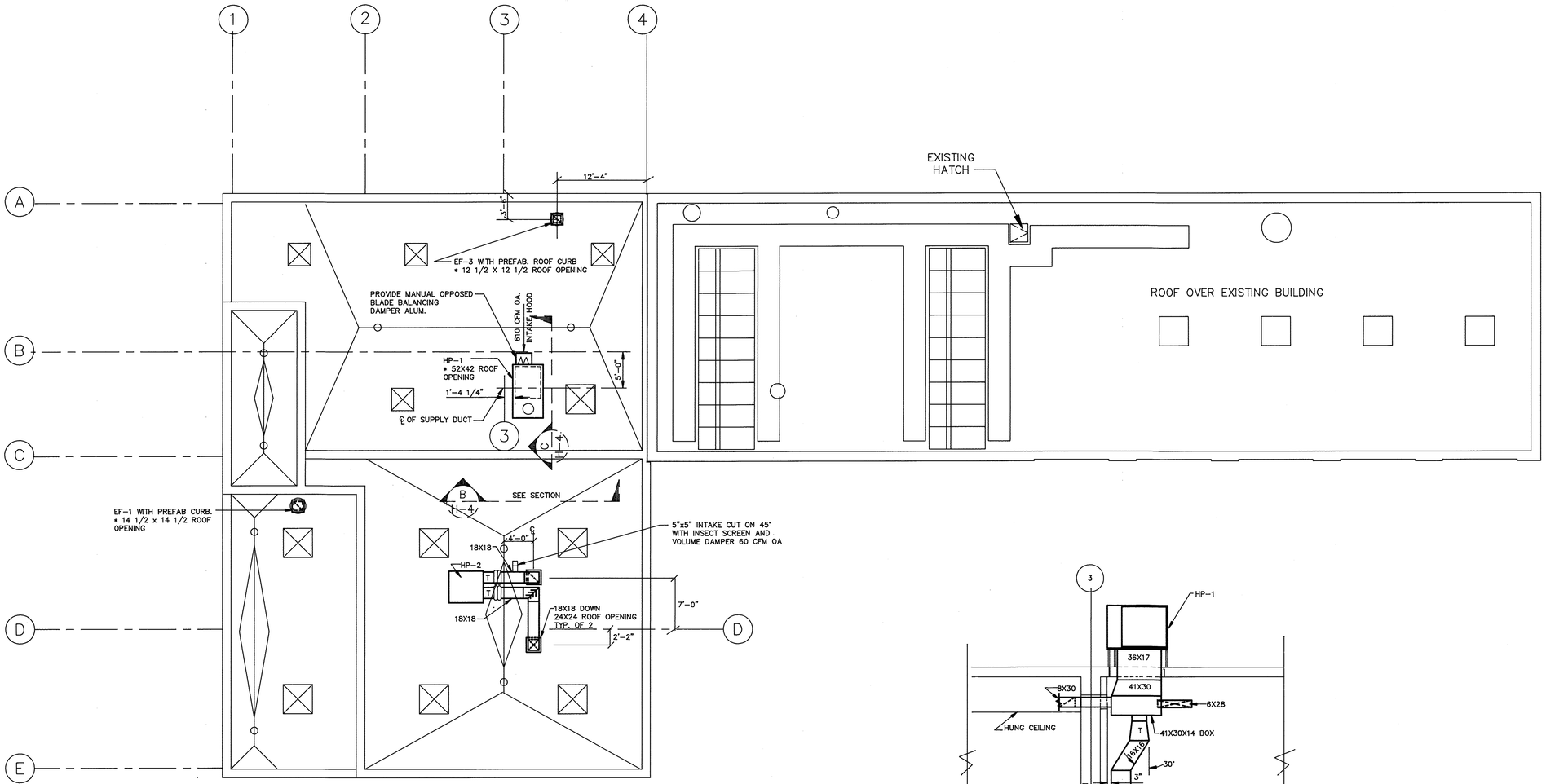

* BASED ON EQUIPMENT FURNISHED

ROOF PLAN

SCALE: 1/8" =1'-0"

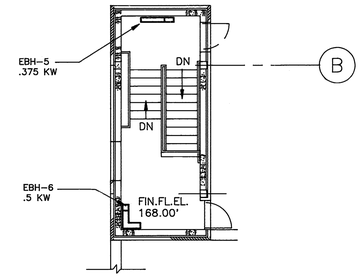

PLAN-PENTHOUSE

FL.EL.168.00'

SCALE: 1/8"=1'-0"

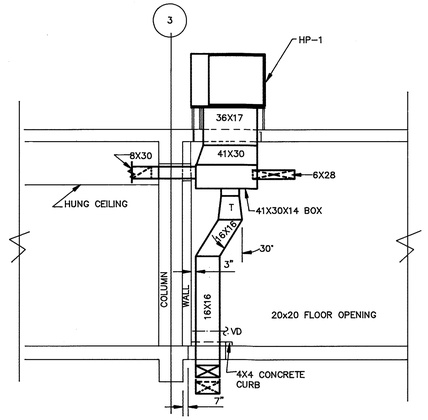

SECTION B

SCALE: 1/4" =1'-0"

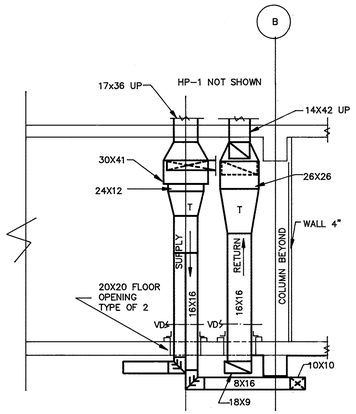

SECTION C

SCALE: 1/4" =1'-0"

DEPARTMENT OF PUBLIC WORKS
HOWARD COUNTY, MARYLAND

DIRECTOR OF PUBLIC WORKS	12/9/91 DATE	CHIEF, BUREAU OF ENGINEERING	12-9-91 DATE
CHIEF, BUREAU OF ENVIRONMENTAL SERVICES	12/9/91 DATE	CHIEF, UTILITY DESIGN DIVISION	12-9-91 DATE

M&E Metcalf & Eddy

REG. PROF. ENGR. — 12/9/91 DATE

STATE OF MARYLAND — JONATHAN WINTHROP DOANE No. 15140 — REGISTERED PROFESSIONAL ENGINEER

DES: J.S. Hughes
DRN: P. Mendiola
CHK: J.S. Hughes
DATE: 12/7/91

BY	NO.	REVISION	DATE
	2	RECORD DRAWING	11/3/94
	1	REVISED FOR BIDDING	3/5/92

HVAC

MAINTENANCE BUILDING
ROOF PLAN

LITTLE PATUXENT WASTEWATER TREATMENT PLANT

LITTLE PATUXENT WASTEWATER TREATMENT PLANT EXPANSION
ADDITION NO. 5
CAPITAL PROJECT S - 6153

CONTRACT NO. 20 - 3082

HOWARD COUNTY, MARYLAND

SCALE AS SHOWN

SHEET 167 OF 226

H-4

FAN SCHEDULE

MARK NO.	LOCATION AND AREA SERVED	CAPACITY CFM	STATIC PRESSURE IN. H20	FAN SPEED MAX.	MIN WHEEL SIZE	MOTOR HP	ELECT. V,PH,HZ	MOTOR SPEED	REMARKS
EF-1	MAINTENANCE BUILDING OIL STORAGE ROOM	915	1/4	1248	10"	1/4	120,1,60	1800	CENTRIFUGAL UP BLAST, ROOF MOUNT, BELT DRIVE, EXPLOSION PROOF
EF-2	MAINTENANCE BUILDING OIL STORAGE ROOM	458	1/4	1550	8.5"	1/20	120,1,60	1550	CENTRIFUGAL SIDEWALL, DIRECT DRIVE, EXPLOSION PROOF
EF-3	MAINTENANCE BUILDING TOILET AND LOCKER ROOMS	436	1/4	1550	8.5"	1/4	120,1,60	1550	CENTRIFUGAL, ROOF MOUNT, DIRECT DRIVE, ODP
EF-4	MAINTENANCE BUILDING LUNCH ROOM	95	3/8	1550	6.5"	1/30	120,1,60	1550	CENTRIFUGAL SIDEWALL, DIRECT DRIVE, EXPLOSION PROOF
EF-5	SOUTH PUMP STATION BASEMENT	4620	1/2	659	24"	1	480,3,60	1800	CENTRIFUGAL ROOF MOUNT, BELT DRIVE, ODP
EF-6	SOUTH PUMP STATION BASEMENT	2490	1/2	831	18"	1/2	480,3,60	1800	CENTRIFUGAL ROOF MOUNT, BELT DRIVE, 2 SPEED
SF-7	SOUTH PUMP STATION ELECTRICAL ROOM	545	3/8	1550	12"	1/12	120,1,60	1550	PROPELLER ROOF SUPPLY, DIRECT 2 SPEED,ODP
EF-8	NORTH PUMP STATION BASEMENT	4620	1/2	659	24"	1	480,3,60	1800	CENTRIFUGAL ROOF MOUNT, BELT DRIVE, ODP
EF-9	NORTH PUMP STATION BASEMENT	2490	1/2	831	18"	1/2	480,3,60	1800	CENTRIFUGAL ROOF MOUNT, BELT DRIVE, 2 SPEED
SF-10	NORTH PUMP STATION ELECTRICAL ROOM	545	3/8	1550	12"	1/12	120,1,60	1550	PROPELLER ROOF SUPPLY, DIRECT 2 SPEED,ODP
EF-11 A&B	DIGESTER PIPE GALLERY EXTENSION	28,850	1/8	638	48"	5	480,3,60	1800	PROPELLER ROOF EXHAUST, BELT DRIVE, ODP, MOTOR SERVICE FACTOR 1.15 6 BLADE PROPELLER
SF-12 A&B	DIGESTER PIPE GALLERY EXTENSION	28,850	1/8	756	48"	5	480,3,60	1800	PROPELLER ROOF EXHAUST, BELT DRIVE, ODP, MOTOR SERVICE FACTOR 1.15 6 BLADE PROPELLER
EF-13 A&B	EXISTING DIGESTER GALLERY	22,700	1/4	408	48"	5	480,3,60	1800	CENTRIFUGAL ROOF MOUNT, BELT DRIVE, ODP, MOTOR SERVICE FACTOR 1.15
SF-14	EXISTING DIGESTER GALLERY	55,000	1/8	565	60"	10	480,3,60	1800	PROPELLER ROOF SUPPLY, BELT DRIVE, ODP, MOTOR SERVICE FACTOR 1.15

ELECTRICAL UNIT HEATER SCHEDULE

MARK NO.	LOCATION	LOAD	ELECTRICAL V,PH,HZ	REMARKS
EUH-1	MAINTENANCE BUILDING OIL STORAGE	10 KW	480,3,60	EXPLOSION PROOF SPARK PROOF
EUH-2	SOUTH PUMP STATION BASEMENT	20 KW	480,3,60	
EUH-3	SOUTH PUMP STATION BASEMENT	20 KW	480,3,60	
EUH-4	NORTH PUMP STATION BASEMENT	20 KW	480,3,60	
EUH-5	NORTH PUMP STATION BASEMENT	20 KW	480,3,60	

AIR CONDITIONING AND HEAT PUMP SCHEDULE

	WINTER CONDITIONS						SUMMER CONDITIONS						FAN CAPACITY				
MARK NO.	HEAT CAP. MBTU/ HR.	INLET AIR TEMP F	OUTLET AIR TEMP F	HEAT PUMP KW	BACK UP ELECTR. STAGES	BACK UP ELECTR. KW	COOL CAP MBTU/ HR	INLET AIR TEMP. F DRY BULB	INLET AIR TEMP. F WET BULB	OUTLET AIR TEMP. F DRY BULB	OUTLET AIR TEMP. F WET BULB	COMPRESSOR KW	FLOW CFM	EXT. S.P. H20	RPM	MOTOR HP	LOCATION
HP-1	64.6 *	58.9	76.8	10.4	2	27	90.9	81.0	67.0	–	–	10.4	3300	.50	1052	2	MAINTENANCE BUILDING
HP-2	43.1 *	68.5	85.0	6.9	1	15	64.2	78.4	65.2	–	–	6.9	2400	.50	950	1	MAINTENANCE BUILDING
ACU-1	12.2**	60.0	95.0	1.49	2	5.0	13.5	–	–	–	–	0.48	320	–	–	1/8	SOUTH PUMP STATION
ACU-2	12.2**	60.0	95.0	1.49	2	5.0	13.5	–	–	–	–	0.48	320	–	–	1/8	NORTH PUMP STATION
ACU-3	6.0**	60.0	80.0	0.63	2	2.3	6.8	–	–	–	–	0.21	280	–	–	1/15	MAINTENANCE BUILDING
ACU-4	6.0**	60.0	80.0	0.63	2	2.3	6.8	–	–	–	–	0.21	280	–	–	1/15	MAINTENANCE BUILDING
ACU-5	6.0**	60.0	80.0	0.63	2	2.3	6.8	–	–	–	–	0.21	280	–	–	1/15	MAINTENANCE BUILDING
												0.21	280	–	–	1/15	MAINTENANCE BUILDING

* BASED ON 37 F OUTSIDE AIR TEMPERATURE.
** BASED ON 47° OUTSIDE AIR TEMPERATURE

ACU-1 THROUGH ACU-5 ARE TERMINAL PACKAGED HEAT PUMP WITH BACK UP ELECTRIC AND TWO-STAGE HEATING AND COOLING. 280V, 1PH, 60HZ

ELECTRIC HEATER SCHEDULE

MARK NO.	LOCATION	TYPE	CAPACITY	ELECTRICAL V,PH,HZ	REMARKS
EBH-1	MAINTENANCE BUILDING STAIRWELL NO. 1	BASEBOARD	1 KW	208,1,60	4 FT X 250 WATTS/FT
EBH-2	MAINTENANCE BUILDING STAIRWELL NO. 1	BASEBOARD	1.5 KW	208,1,60	6 FT X 250 WATTS/FT
EBH-3	MAINTENANCE BUILDING STAIRWELL NO. 1	BASEBOARD	.75 KW	208,1,60	3 FT X 250 WATTS/FT
EBH-4	MAINTENANCE BUILDING STAIRWELL NO. 1	BASEBOARD	.5 KW	208,1,60	2 FT X 250 WATTS/FT
EBH-5	MAINTENANCE BUILDING STAIRWELL NO. 1	BASEBOARD	.375 KW	208,1,60	3 FT X 125 WATTS/FT
EBH-6	MAINTENANCE BUILDING STAIRWELL NO. 1	BASEBOARD	.50 KW	208,1,60	4 FT X 125 WATTS/FT CORNER UNIT.
EDH-1	SOUTH PUMP STATION ELECTRICAL ROOM	DUCT HEATER	5 KW	480,3,60	3 STAGE
EDH-2	NORTH PUMP STATION ELECTRICAL ROOM	DUCT HEATER	5 KW	480,3,60	3 STAGE

1. ALL EBH'S WITH INTEGRAL THERMOSTATS RATED FOR FULL VOLTAGE
2. EDH 1 & 2 WITH 3 STAGE THERMOSTATS FOR 480V, 3PH POWER

DEPARTMENT OF PUBLIC WORKS
HOWARD COUNTY, MARYLAND

DIRECTOR OF PUBLIC WORKS — DATE 3/6/92
ACT. CHIEF, BUREAU OF ENGINEERING — DATE 3-6-92
CHIEF, BUREAU OF ENVIRONMENTAL SERVICES — DATE 3/6/92
ACT. CHIEF, UTILITY DESIGN DIVISION — DATE 3-6-92

Metcalf & Eddy

REG. PROF. ENGR. — DATE 3/6/92

STATE OF MARYLAND — JONATHAN WINTHROP DOANE No. 15140 — REGISTERED PROFESSIONAL ENGINEER

DES: J.S. HUGHES
DRN: R.INGENITA
CHK: J.S. HUGHES
DATE: 12/7/91

BY	NO.	REVISION	DATE
	2	RECORD DRAWING	11/3/94
	1	REVISED FOR BIDDING	3/6/92

HVAC

SCHEDULES

LITTLE PATUXENT WASTEWATER TREATMENT PLANT

LITTLE PATUXENT WASTEWATER TREATMENT PLANT EXPANSION
ADDITION NO. 5
CAPITAL PROJECT S - 6153

CONTRACT NO. 20 - 3082
HOWARD COUNTY, MARYLAND

SCALE AS SHOWN

SHEET 168 OF 226

H-5

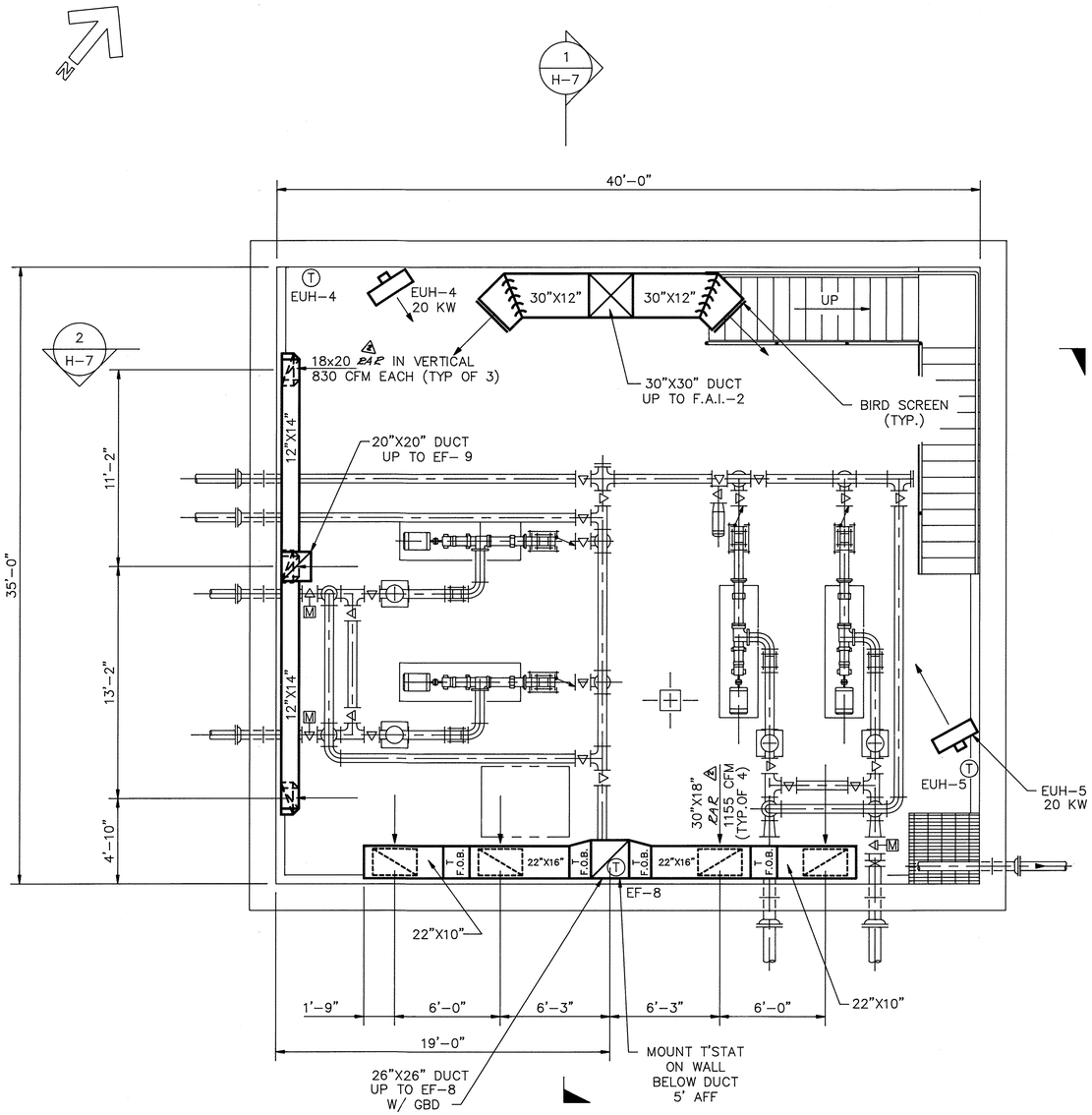

BASEMENT PLAN
SCALE: 1/4"=1'-0"

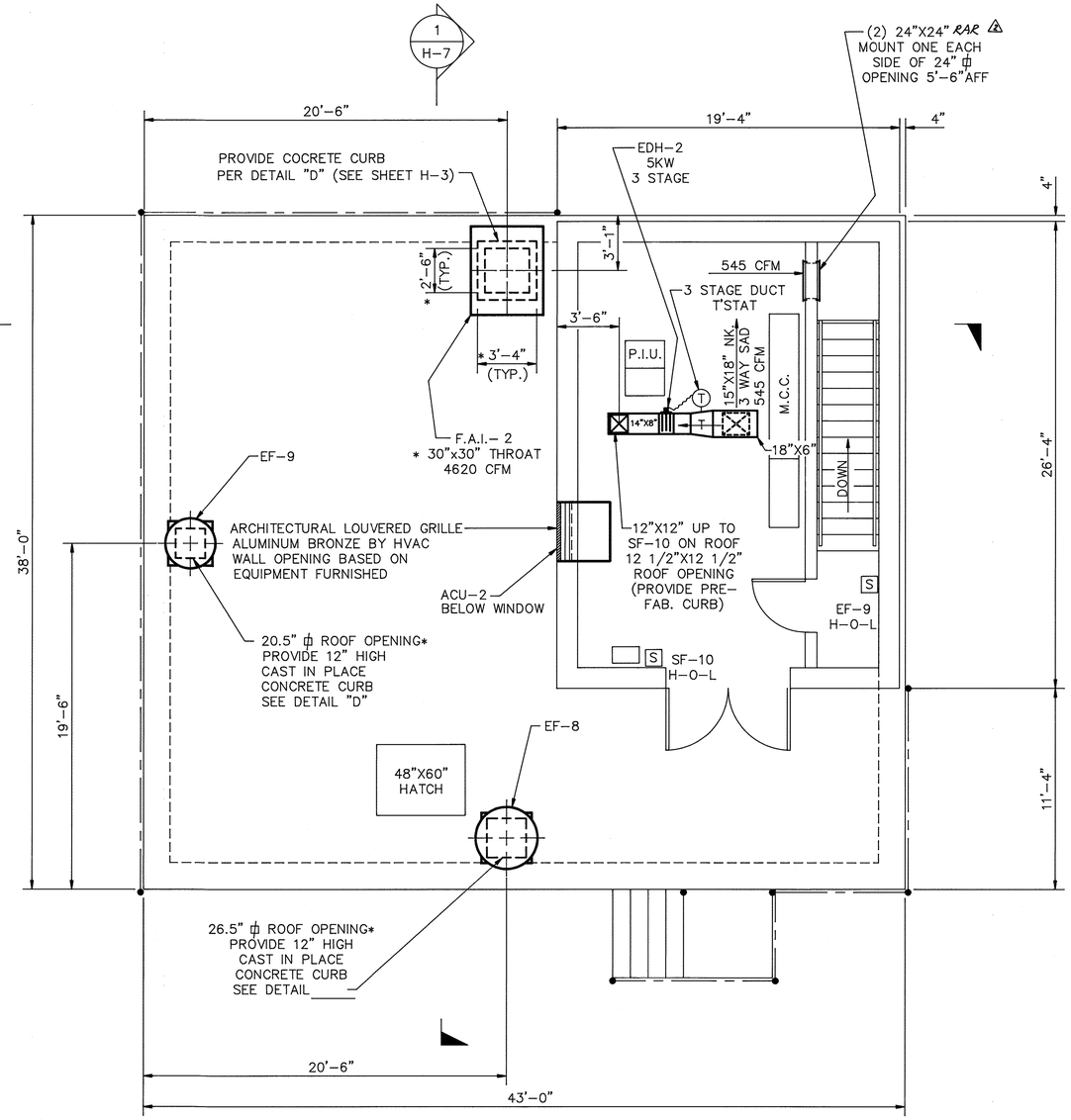

NOTE: * ACTUAL DIMENSION BASED UPON EQUIPMENT FURNISHED.

UPPER PLAN
SCALE: 1/4"=1'-0"

NOTE:
1. ALL DUCTWORK TO BE ALUMINUM 22 B&S GAUGE MINIMUM.

DEPARTMENT OF PUBLIC WORKS
HOWARD COUNTY, MARYLAND

DIRECTOR OF PUBLIC WORKS — DATE 12/9/91
CHIEF, BUREAU OF ENGINEERING — DATE 12-9-91
CHIEF, BUREAU OF ENVIRONMENTAL SERVICES — DATE 12/9/91
CHIEF, UTILITY DESIGN DIVISION — DATE 12-9-91

Metcalf & Eddy
REG. PROF. ENGR. — DATE 12/9/91

STATE OF MARYLAND — JONATHAN WINTHROP DOANE No. 15140 — REGISTERED PROFESSIONAL ENGINEER

DES: J.S. Hughes
DRN: R. Mendolia
CHK: J.S. Hughes
DATE: 12/7/91

BY	NO.	REVISION	DATE
	3	RECORD DRAWING	11/3/94
DEG	2	ADDENDUM #5	4/16/92
	1	REVISED FOR BIDDING	3/6/92

HVAC
NORTH PUMP STATION
PLANS

LITTLE PATUXENT WASTEWATER TREATMENT PLANT
LITTLE PATUXENT WASTEWATER TREATMENT PLANT EXPANSION
ADDITION NO. 5
CAPITAL PROJECT S - 6153
CONTRACT NO. 20 - 3082
HOWARD COUNTY, MARYLAND

SCALE AS SHOWN
SHEET 169 OF 226
H-6

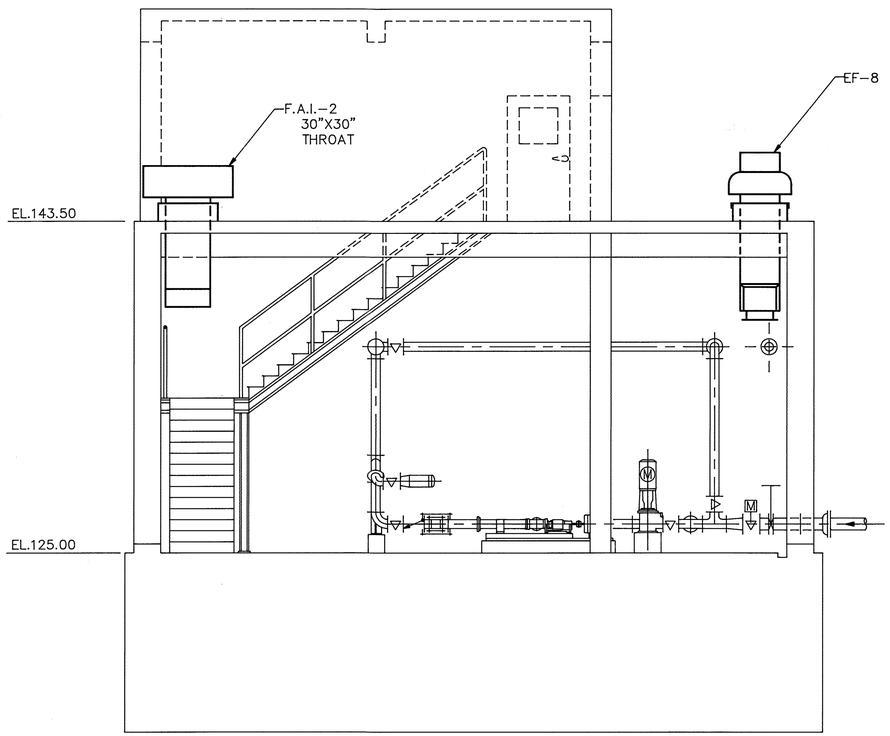

SECTION 1 / H-6
SCALE: 1/4"=1'-0"

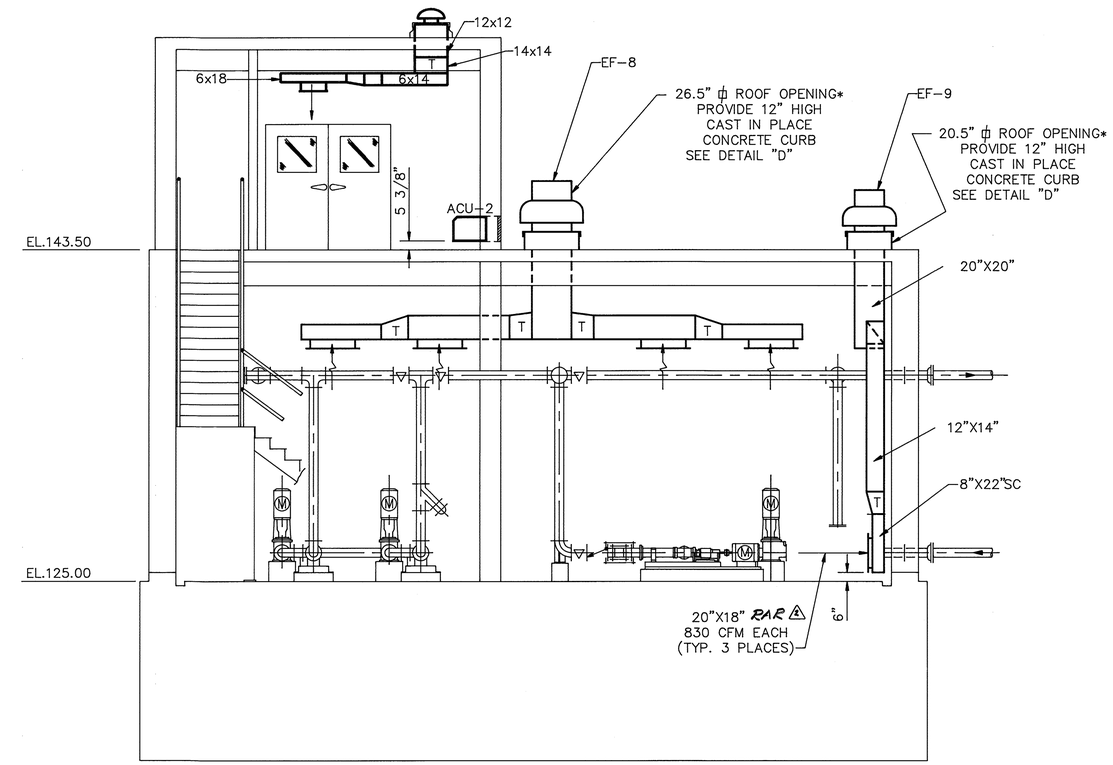

NOTE: * ACTUAL DIMENSION BASED UPON EQUIPMENT FURNISHED.

SECTION 2 / H-6
SCALE: 1/4"=1'-0"

DEPARTMENT OF PUBLIC WORKS
HOWARD COUNTY, MARYLAND

DIRECTOR OF PUBLIC WORKS — DATE 12/9/91
CHIEF, BUREAU OF ENGINEERING — DATE 12-9-91
CHIEF, BUREAU OF ENVIRONMENTAL SERVICES — DATE 12/9/91
CHIEF, UTILITY DESIGN DIVISION — DATE 12-9-91

Metcalf & Eddy

REG. PROF. ENGR. — DATE 12/9/91

STATE OF MARYLAND — JONATHAN WINTHROP DOANE No. 15140 — REGISTERED PROFESSIONAL ENGINEER

DES: J.S. Hughes
DRN: R. Mandeiln
CHK: J.S. Hughes
DATE: 12/7/91

BY	NO.	REVISION	DATE
AL	3	RECORD DRAWING	11/3/94
DEG	2	ADDENDUM #5	4/14/92
	1	REVISED FOR BIDDING	3/5/92

HVAC

NORTH PUMP STATION
SECTIONS

LITTLE PATUXENT WASTEWATER TREATMENT PLANT
LITTLE PATUXENT WASTEWATER TREATMENT PLANT EXPANSION
ADDITION NO. 5
CAPITAL PROJECT S - 6153
CONTRACT NO. 20 - 3082
HOWARD COUNTY, MARYLAND

SCALE AS SHOWN
SHEET 170 OF 226
H-7

073159

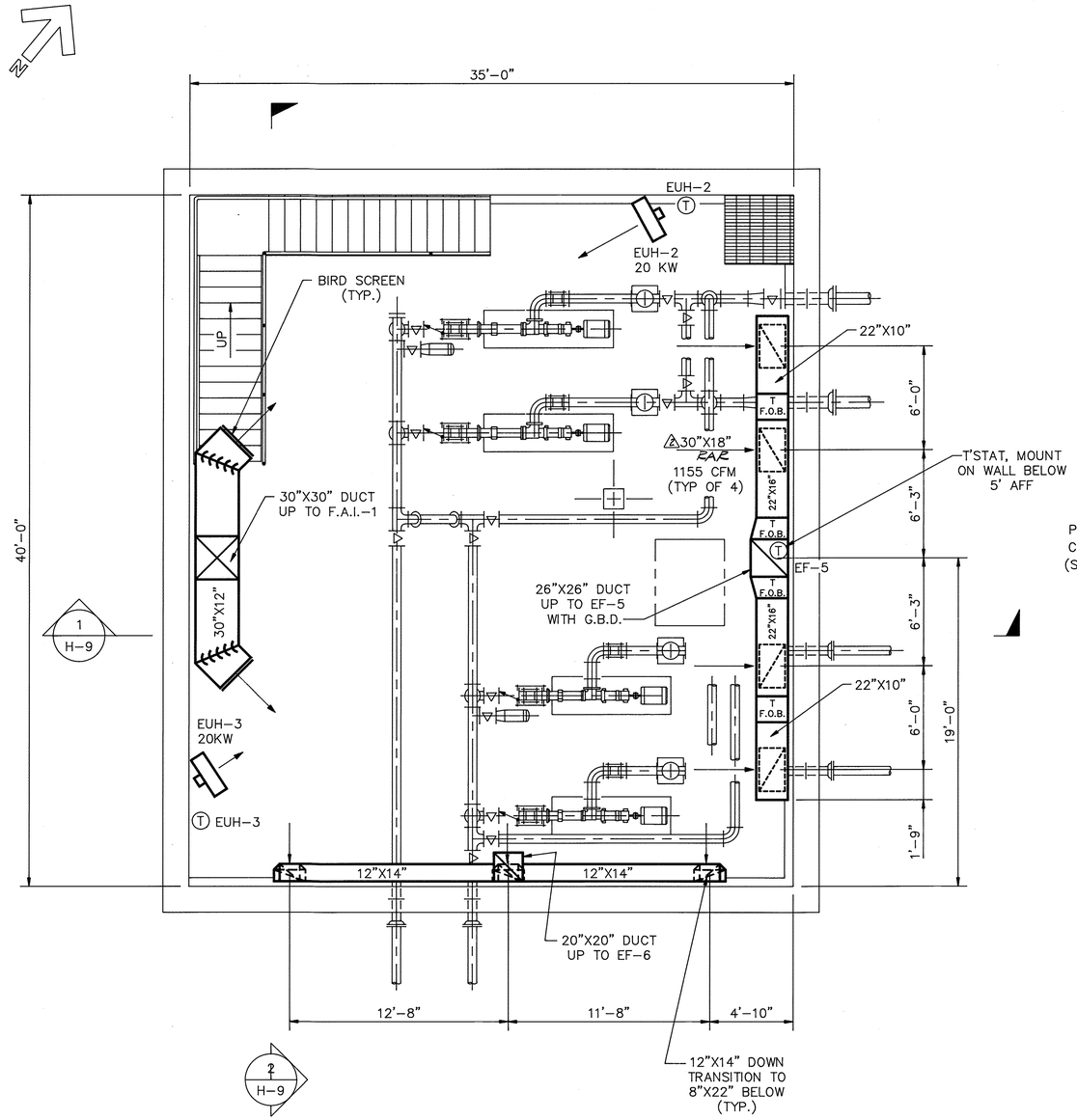

BASEMENT PLAN

SCALE: 1/4"=1'-0"

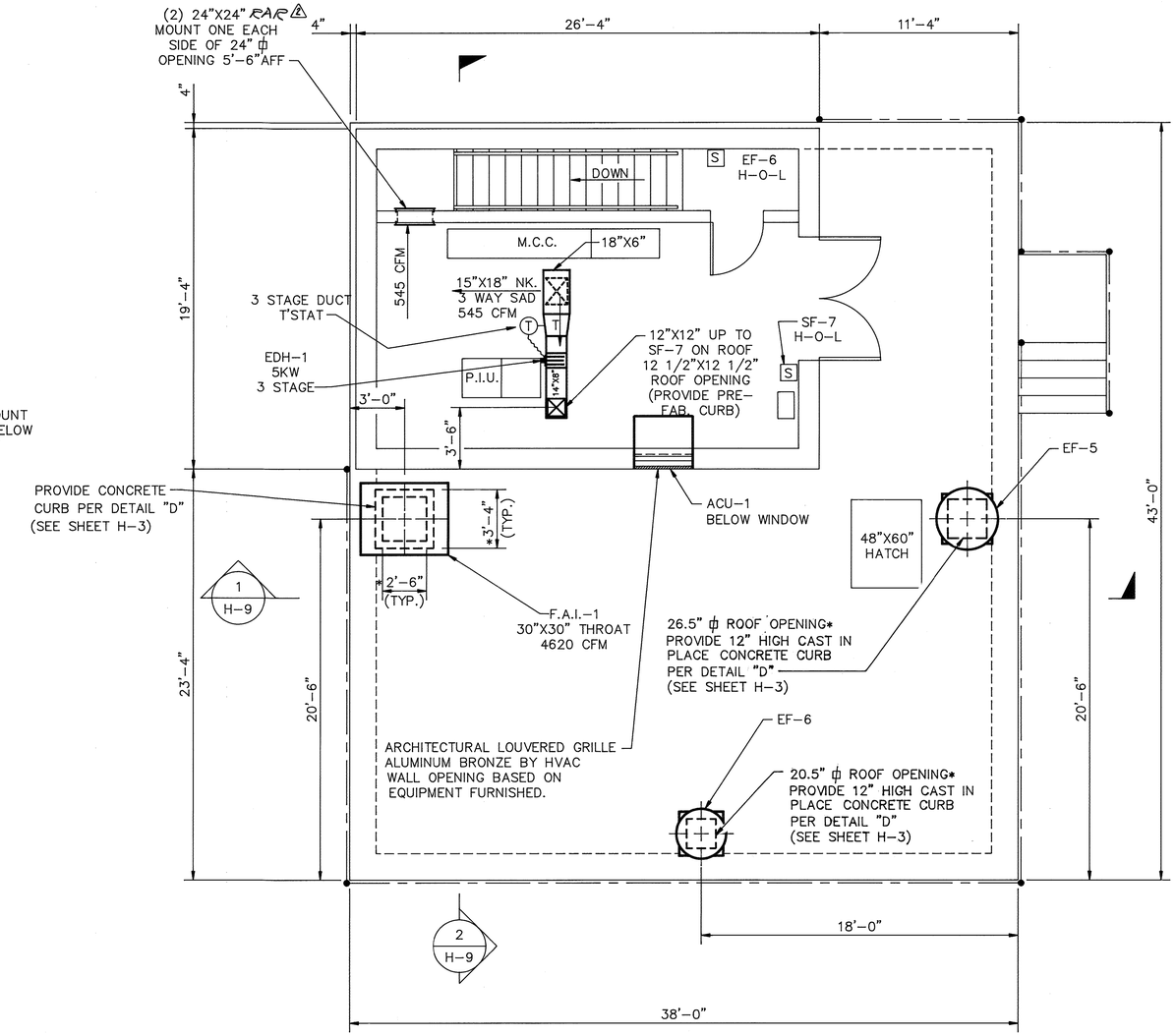

UPPER PLAN

SCALE: 1/4"=1'-0"

NOTE: * ACTUAL DIMENSION BASED UPON EQUIPMENT FURNISHED.

NOTES:

1. ALL DUCTWORK TO BE ALUMINUM 22 B&S GAGE MINIMUM.

DEPARTMENT OF PUBLIC WORKS
HOWARD COUNTY, MARYLAND

DIRECTOR OF PUBLIC WORKS — DATE 12/9/91
CHIEF, BUREAU OF ENGINEERING — DATE 12-9-91
CHIEF, BUREAU OF ENVIRONMENTAL SERVICES — DATE 12/9/91
CHIEF, UTILITY DESIGN DIVISION — DATE 12-9-91

Metcalf & Eddy
REG. PROF. ENGR. — DATE 12/9/91

STATE OF MARYLAND — JONATHAN WINTHROP DOANE — No. 15140 — REGISTERED PROFESSIONAL ENGINEER

DES: J.S. Hughes
DRN: P. Mendiola
CHK: J.S. Hughes
DATE: 12/7/91

BY	NO.	REVISION	DATE
RC	3	RECORD DRAWING	11/3/94
DEG	2	ADDENDUM #5	4/11/92
	1	REVISED BY BIDDING	3/5/92

HVAC
SOUTH PUMP STATION
PLANS

LITTLE PATUXENT WASTEWATER TREATMENT PLANT
LITTLE PATUXENT WASTEWATER TREATMENT PLANT EXPANSION
ADDITION NO. 5
CAPITAL PROJECT S-6153
CONTRACT NO. 20-3082
HOWARD COUNTY, MARYLAND

SCALE AS SHOWN
SHEET 171 OF 226
H-8

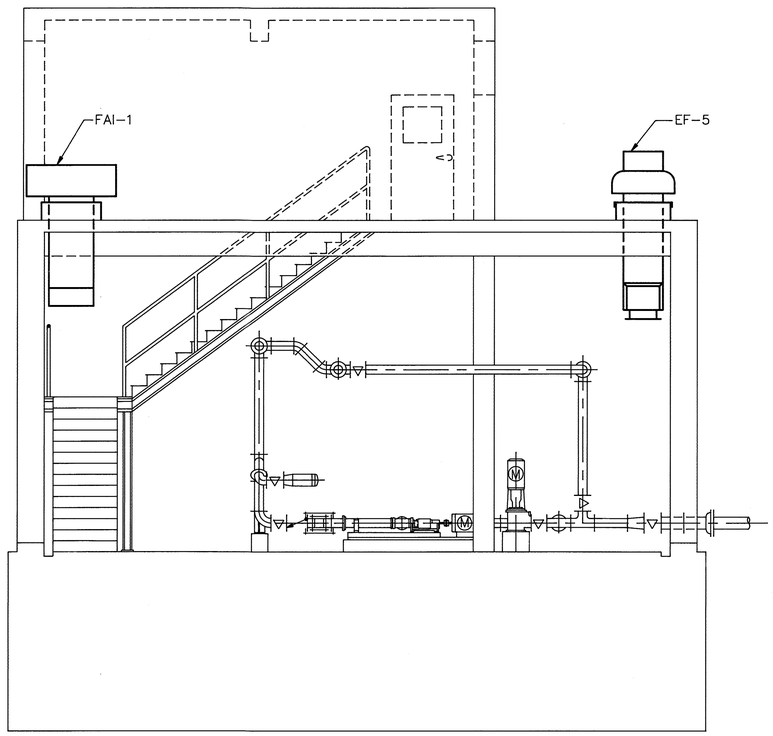

SECTION 1 / H-8
SCALE: 1/4"=1'-0"

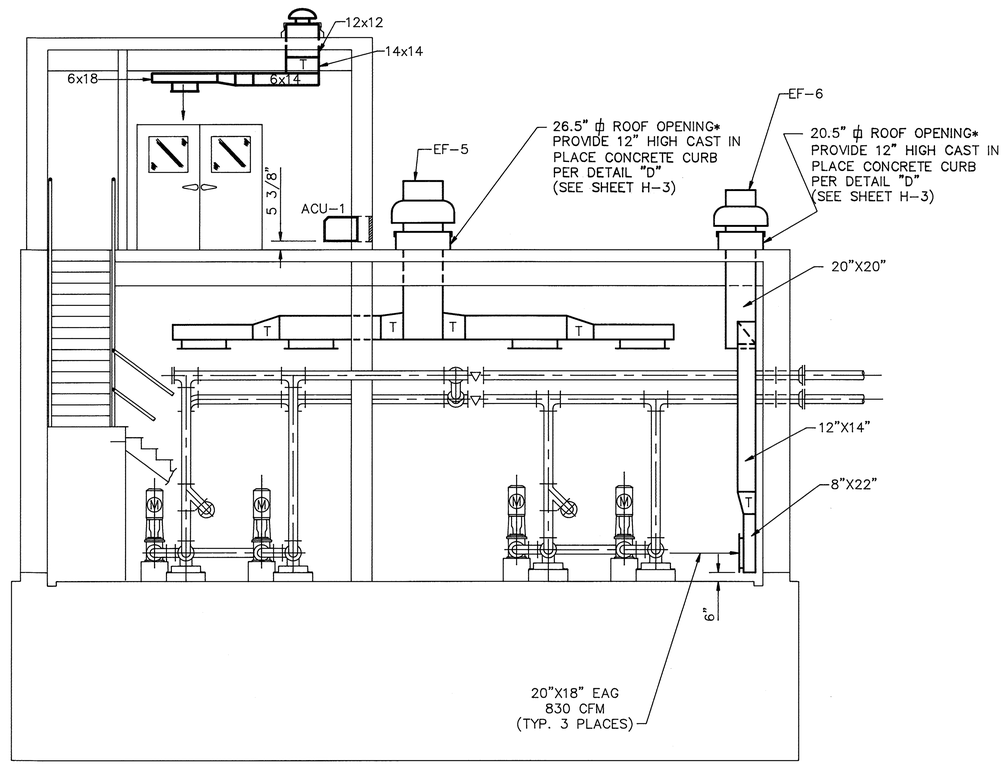

NOTE: * ACTUAL DIMENSION BASED UPON EQUIPMENT FURNISHED.

SECTION 2 / H-8
SCALE: 1/4"=1'-0"

DEPARTMENT OF PUBLIC WORKS HOWARD COUNTY, MARYLAND DIRECTOR OF PUBLIC WORKS — DATE 12/9/91 CHIEF, BUREAU OF ENGINEERING — DATE 12-9-91 CHIEF, BUREAU OF ENVIRONMENTAL SERVICES — DATE 12/9/91 CHIEF, UTILITY DESIGN DIVISION — DATE 12-9-91	Metcalf & Eddy REG. PROF. ENGR. — DATE 12/9/91	STATE OF MARYLAND JONATHAN WINTHROP DOANE No. 15140 REGISTERED PROFESSIONAL ENGINEER	DES: J.S. Hoglas DRN: R Mendoola CHK: J.S. Hoglas DATE: 12/7/91	BY / NO. / REVISION / DATE MC / 2 / RECORD DRAWING 1 / REVISED FOR BIDDING / 7/8/92	HVAC SOUTH PUMP STATION SECTIONS	LITTLE PATUXENT WASTEWATER TREATMENT PLANT LITTLE PATUXENT WASTEWATER TREATMENT PLANT EXPANSION ADDITION NO. 5 CAPITAL PROJECT S - 6153 CONTRACT NO. 20 - 3082 HOWARD COUNTY, MARYLAND	SCALE AS SHOWN SHEET 172 OF 226 H-9

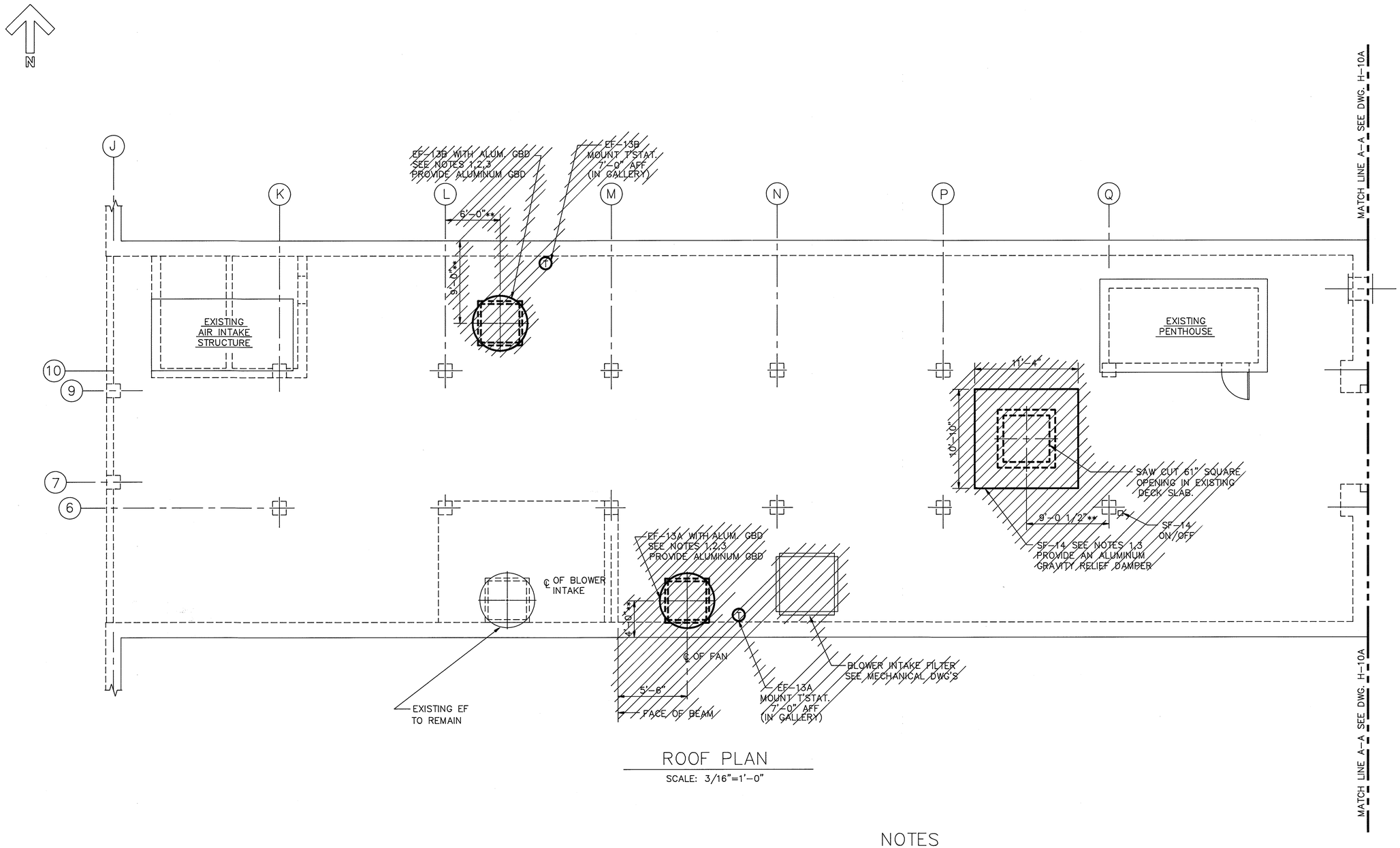

ROOF PLAN

SCALE: 3/16"=1'-0"

NOTES

1. REMOVE ALL EXISTING ELECTRICAL CONDUIT SUPPORTS BELOW FAN AND RE-INSTALL ON ADJACENT SIDES OF OPENING.
2. SAW CUT 50 1/2" SQUARE OPENING IN EXISTING CONCRETE DECK. PROVIDE TEMPORARY BRACING OF SLAB AND PROTECT ALL EXISTING PIPE, CONDUIT, AND EQUIPMENT BELOW.
3. INSTALL NEW 12" TALL CONCRETE CURB PER DETAIL "D".
4. ** APPROXIMATE LOCATION. TO BE FIELD LOCATED LOCATED TO MINIMIZE CONFLICT WITH SUPPORTS BELOW.

LEGEND:

DENOTES EXISTING EQUIPMENT

DENOTES NEW EQUIPMENT

DEPARTMENT OF PUBLIC WORKS
HOWARD COUNTY, MARYLAND

DIRECTOR OF PUBLIC WORKS — DATE 3/6/92 — ACT. CHIEF/BUREAU OF ENGINEERING — DATE 3-6-92
CHIEF, BUREAU OF ENVIRONMENTAL SERVICES — DATE 3/6/92 — ACT. CHIEF, UTILITY DESIGN DIVISION — DATE 3-6-92

Metcalf & Eddy

REG. PROF. ENGR. — DATE 3/6/92

STATE OF MARYLAND — JONATHAN WINTHROP DOANE No. 15140 — REGISTERED PROFESSIONAL ENGINEER

DES: S.S. HUGHES
DRN: R. ANGUSTIDA
CHK: S.S. HUGHES
DATE: 12/7/91

BY	NO.	REVISION	DATE
AC	3	RECORD DRAWING	11/3/94
DEG	2	ADDENDUM #5	4/14/92
	1	REVISED FOR BIDDING	3/7/92

HVAC

DIGESTER PIPE GALLERY PLAN

LITTLE PATUXENT WASTEWATER TREATMENT PLANT

LITTLE PATUXENT WASTEWATER TREATMENT PLANT EXPANSION
ADDITION NO. 5
CAPITAL PROJECT S-6153

CONTRACT NO. 20-3082

HOWARD COUNTY, MARYLAND

SCALE AS SHOWN

SHEET 173 OF 226

H-10

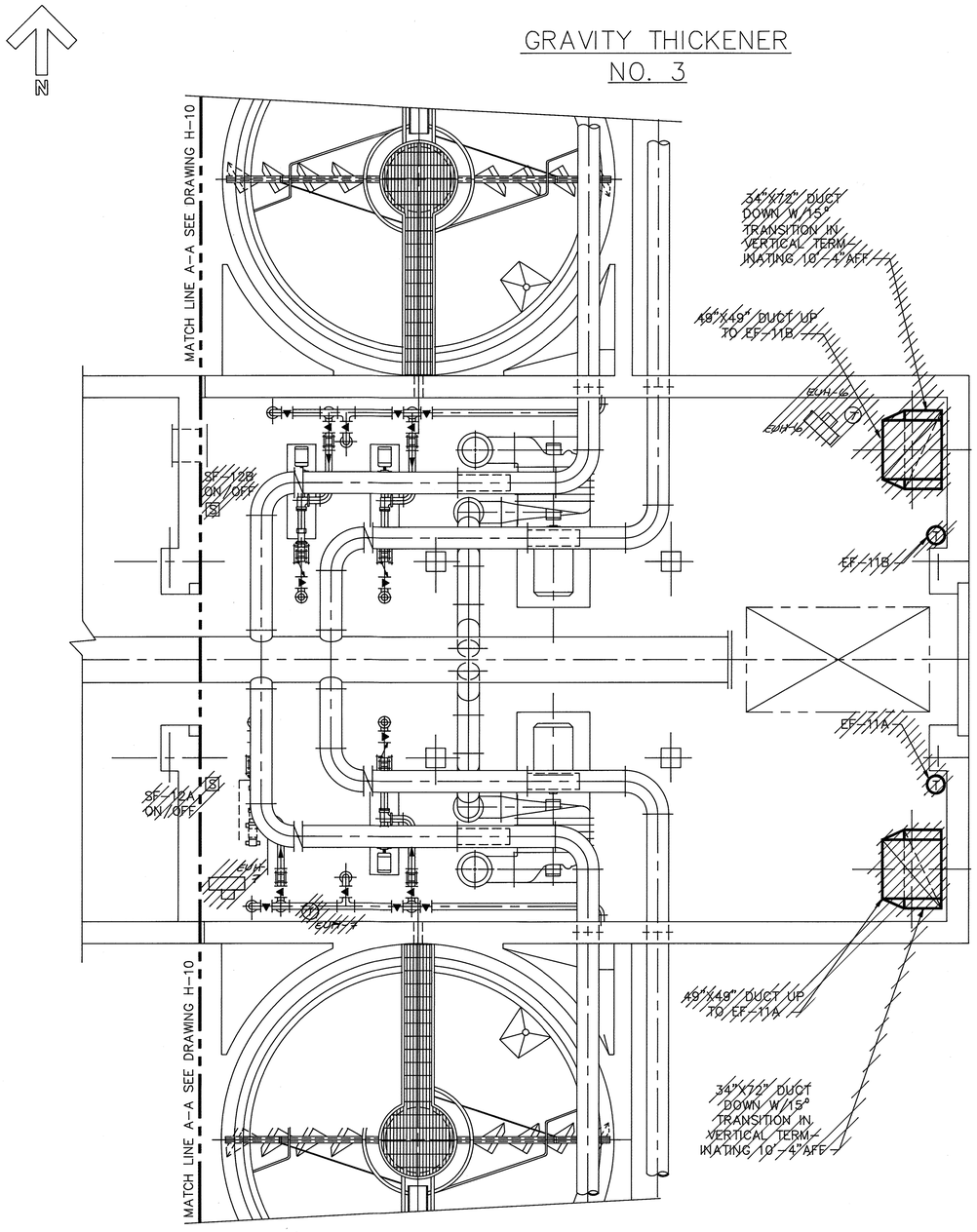

HVAC DUCTING PLAN

SCALE: 3/16"=1'-0"

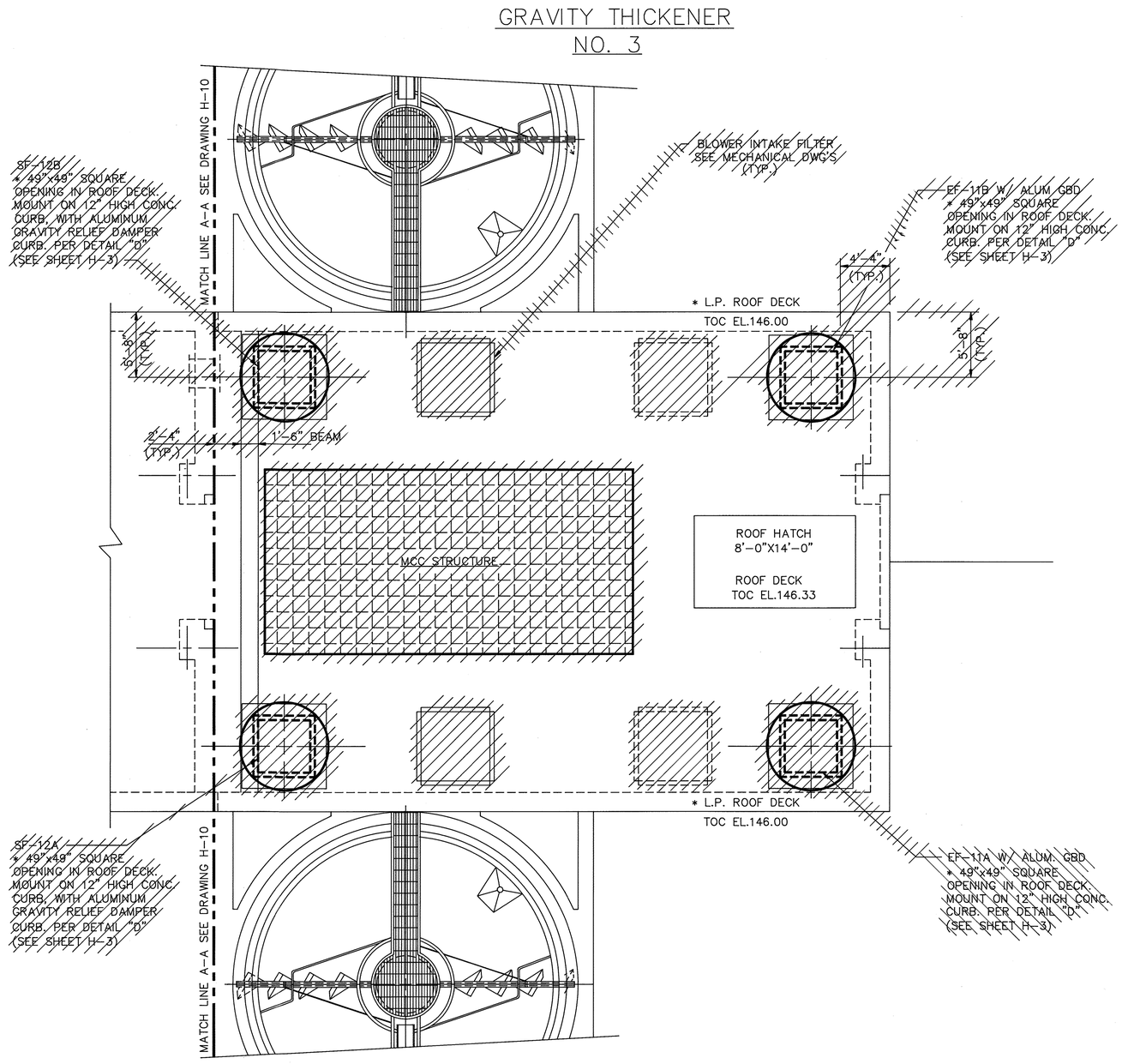

HVAC ROOF PLAN

SCALE: 3/16"=1'-0"

NOTE:

1. ALL DUCTWORK TO BE ALUMINUM 22 B&S GAGE MINIMUM.
2. ALL MECHANICAL & ELECTRICAL WORK SHOWN ON THIS DRAWING WAS DELETED. ONLY THE STRUCTURAL WORK WAS CONSTRUCTED.
3. FANS & UNIT HEATERS WERE DELETED. ELECTRICAL WORK FOR UNIT HEATERS 6 & 7 WAS INSTALLED.

LEGEND:

DENOTES EXISTING EQUIPMENT

DENOTES NEW EQUIPMENT

DEPARTMENT OF PUBLIC WORKS
HOWARD COUNTY, MARYLAND

DIRECTOR OF PUBLIC WORKS — DATE 3/6/92 — ACT. CHIEF, BUREAU OF ENGINEERING — DATE 3-6-92

CHIEF, BUREAU OF ENVIRONMENTAL SERVICES — DATE 3/6/92 — ACT. CHIEF, UTILITY DESIGN DIVISION — DATE 3-6-92

Metcalf & Eddy

REG. PROF. ENGR. — DATE 3/6/92

STATE OF MARYLAND — JONATHAN WINTHROP DOANE No. 15140 — REGISTERED PROFESSIONAL ENGINEER

DES: J.S. HUGHES
DRN: P. MENDOZA
CHK: J.S. HUGHES
DATE: 12/7/91

BY	NO.	REVISION	DATE
JC	3	RECORD DRAWING	11/3/92
DZG	2	ADDENDUM #5	9/16/92
	1	REVISED FOR BIDDING	3/5/92

HVAC

DIGESTER PIPE GALLERY EXTENSION – PLANS

LITTLE PATUXENT WASTEWATER TREATMENT PLANT

LITTLE PATUXENT WASTEWATER TREATMENT PLANT EXPANSION
ADDITION NO. 5
CAPITAL PROJECT S-6153

CONTRACT NO. 20-3082

HOWARD COUNTY, MARYLAND

SCALE AS SHOWN

SHEET 174 OF 226

H-11

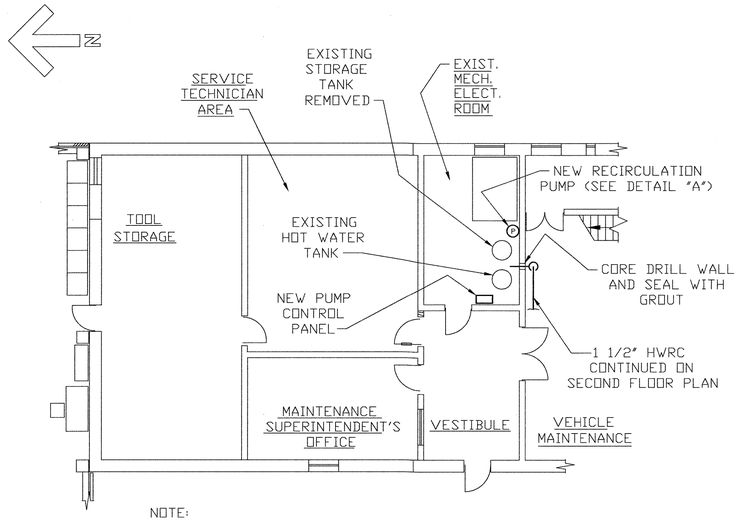

NOTE:
FOR PIPING AND VALVING IN EXISTING MECHANICAL ROOM SEE WATER DETAIL "A".

PARTIAL PLAN FIRST FLOOR

SCALE:NONE

ABBREVIATIONS

C.O.	CLEANOUT
CW	COLD WATER (POTABLE)
HW	HOT WATER (POTABLE)
HWRC	HOT WATER RECIRCULATION (POTABLE)
W	WASTE (SANITARY SEWER)
V	VENT
RL	RAIN LEADER
VTR	VENT THROUGH ROOF
P-1	FIXTURE TYPE NUMBER SEE SPECIFICATIONS
FD-1	FLOOR DRAIN TYPE NUMBER SEE SPECIFICATIONS
FCO	FLOOR CLEANOUT
WC	WATER CLOSET
WCO	WALL CLEANOUT
FLG	FLANGES (PAIR)
RD-1	ROOF DRAIN AND TYPE NUMBER

SYMBOLS

- FLOOR DRAIN
- ROOF DRAIN
- P-TRAP
- CLEANOUT WITH CAP
- VENT THROUGH ROOF
- GATE VALVE
- CHECK VALVE
- CIRCUIT SETTER
- AQUASTAT
- PUMP
- WATER HAMMER ARRESTOR
- LIMIT OF CONTRACT
- DENOTES EXISTING EQUIPMENT
- DENOTES NEW EQUIPMENT
- DIELECTRIC CONNECTOR

NOTE:
REFER TO DWG. M-1 AND H-1 FOR OTHER SYMBOLS AND ABBREVIATIONS.

GENERAL NOTES (ALL DRAWINGS):

1. PROVIDE SLEEVES AT ALL WALL AND FLOOR PENETRATIONS BY PIPES IN AREAS OF NEW CONSTRUCTION.
2. PROVIDE ESCUTCHEONS AT ALL WALL PENETRATIONS.
3. CORE DRILL OR SAW CUT ALL PENETRATIONS THROUGH EXISTING WALLS OR SLABS.

NOTES:

1. REMOVE EXISTING SOLAR COLLECTOR SUPPLY AND RETURN LINES FROM THE STORAGE TANK TO SOLAR COLLECTOR. FLUSH THESE PIPES AND STORAGE TANK (HEAT EXCHANGER) WITH FRESH WATER, DRAIN AND CAP PIPES.
2. PROVIDE DIELECTRIC CONNECTORS BETWEEN NEW AND EXISTING PIPES.
3. PROVIDE ANGLE KNEE BRACE SUPPORT FOR NEW PUMP.
4. EXISTING SUPPLY PIPE TO SOLAR COLLECTOR THAT IS TO BE REMOVED CONTAINS A ONE QUART EXPANSION TANK, RELIEF PIPE AND RECIRCULATION PUMP. REMOVE WIRE AND CONDUIT BACK TO EXISTING PANEL ON WALL. REMOVE PANEL AND TERMINATE WIRES.
5. PROVIDE NEW NEMA 12 PUMP CONTROL PANEL. RUN WIRES AND CONDUIT FROM PUMP AND AQUASTST TO THE CONTROL PANEL.

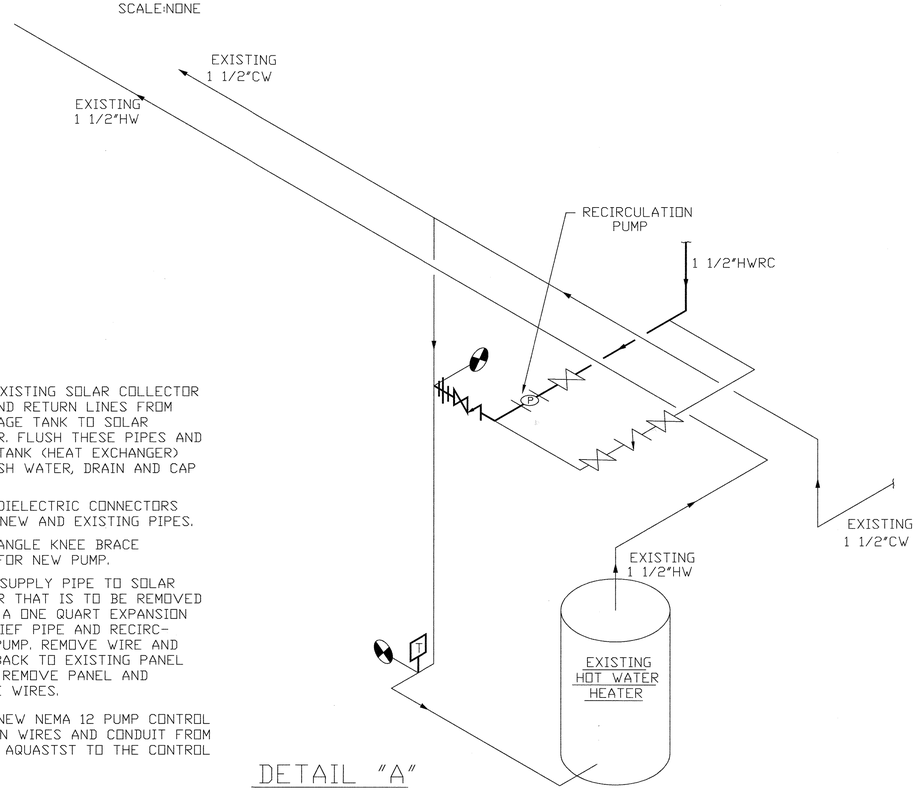

DETAIL "A"

WATER PIPING SCHEMATIC
EXISTING MECHANICAL ROOM
SCALE:NONE

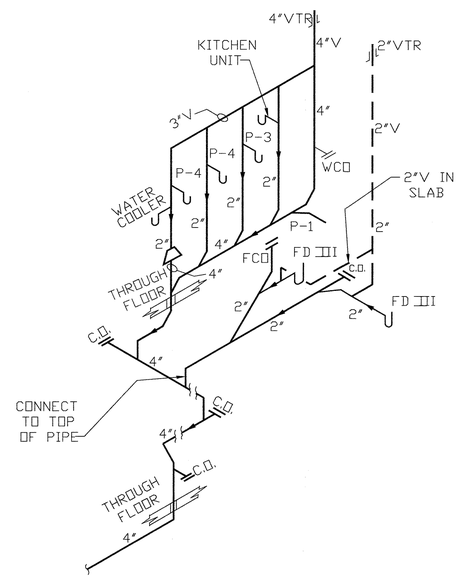

DETAIL "B"

SANITARY RISER DIAGRAM
SCALE:NONE

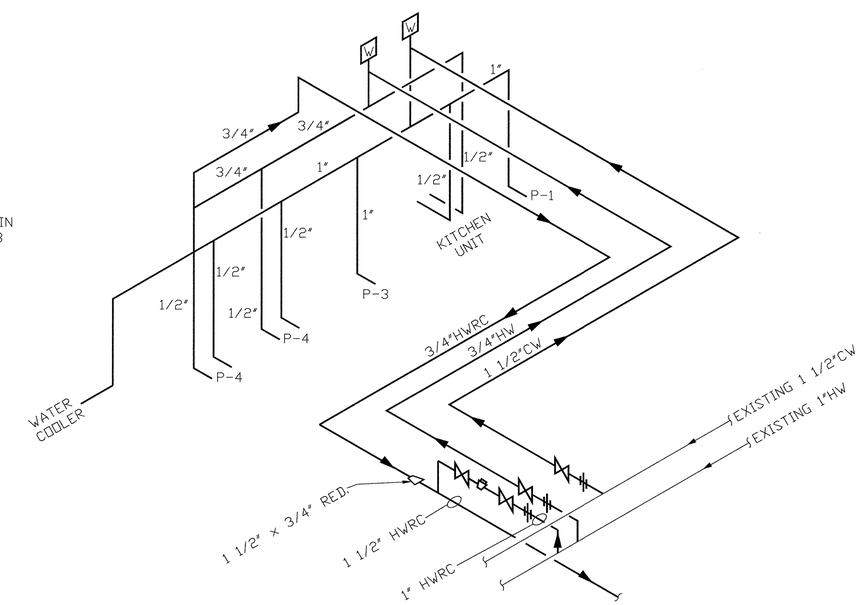

DETAIL "C"

WATER RISER DIAGRAM
SCALE:NONE

DEPARTMENT OF PUBLIC WORKS
HOWARD COUNTY, MARYLAND

DIRECTOR OF PUBLIC WORKS — DATE 5/2/96
CHIEF, BUREAU OF ENGINEERING — DATE 5/7/96
CHIEF, BUREAU OF ENVIRONMENTAL SERVICES — DATE 5/2/96
CHIEF, UTILITY DESIGN DIVISION — DATE 5-7-96

M&E Metcalf & Eddy
REG./PROF. ENGR. — DATE 5-7-96

STATE OF MARYLAND — JONATHAN WINTHROP DOANE No. 15140 — REGISTERED PROFESSIONAL ENGINEER

DES:	
DRN:	M.J.C.
CHK:	J.H.
DATE:	

BY	NO.	REVISION	DATE
M.J.C.	1	RECORD DRAWING	11/2/94

MECHANICAL

RISER DIAGRAMS
PLAN AND SYMBOLS

LITTLE PATUXENT WASTEWATER TREATMENT PLANT

LITTLE PATUXENT WASTEWATER TREATMENT PLANT EXPANSION
ADDITION NO. 5
CAPITAL PROJECT S-6153

CONTRACT NO. 20-3082
HOWARD COUNTY, MARYLAND

SCALE AS SHOWN

SHEET 175 OF 226

P-1A

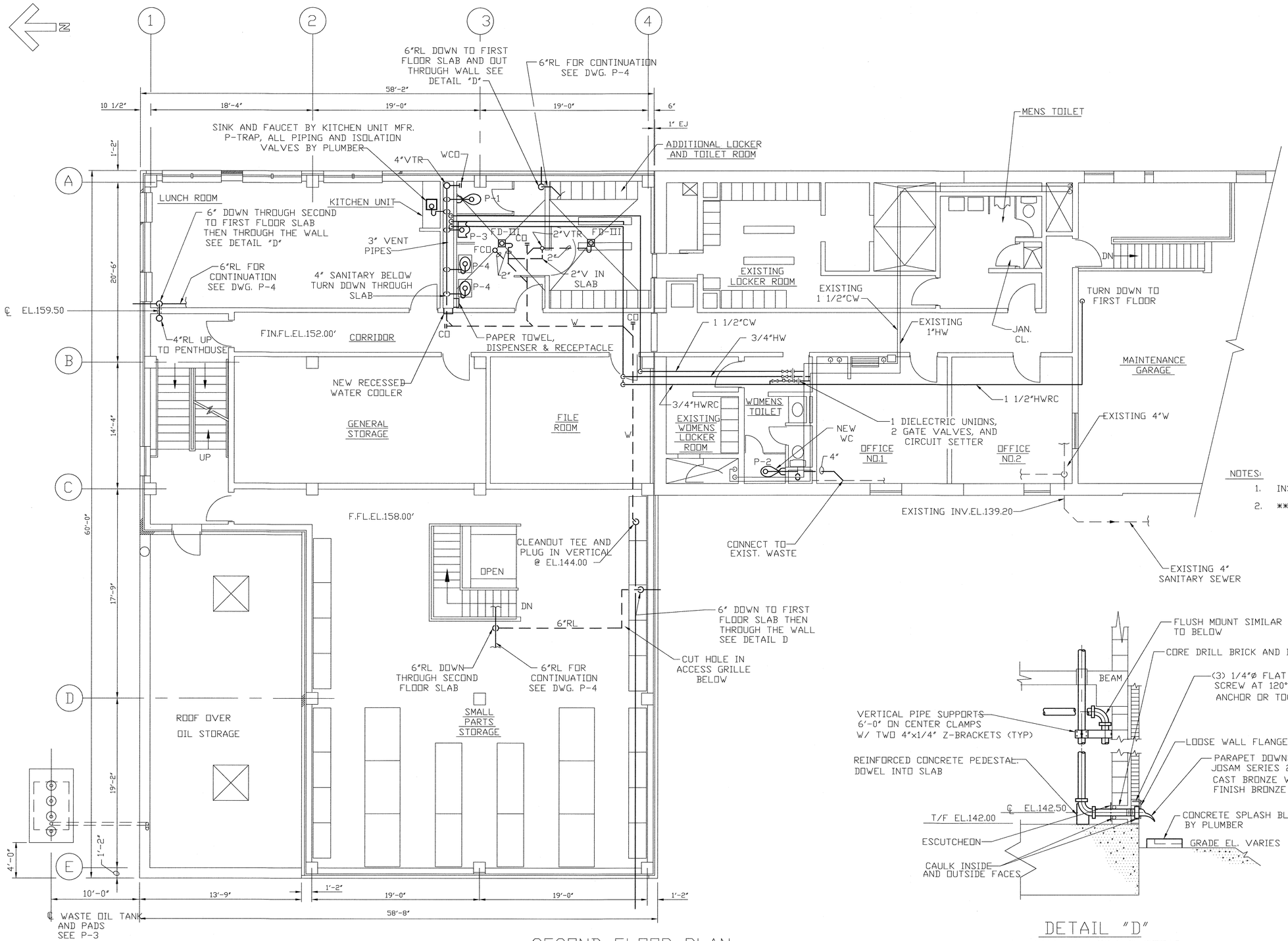

SECOND FLOOR PLAN

SCALE:3/16"=1'-0"

NOTES:

1. INSTALL 4" SANITARY BEFORE POURING NEW ADDITION SLAB.
2. ** FIELD VERIFY AND LOCATE.

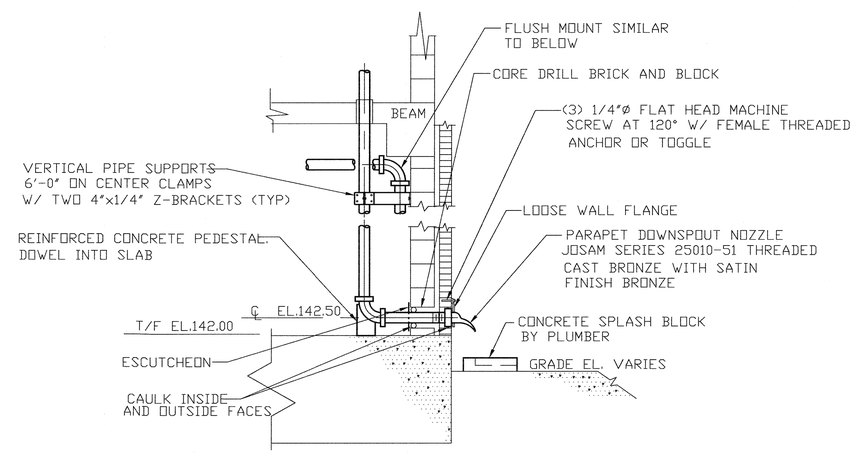

DETAIL "D"

DOWNSPOUT NOZZLE DETAIL

SCALE:1/2"=1'-0"

DEPARTMENT OF PUBLIC WORKS HOWARD COUNTY, MARYLAND	Metcalf & Eddy						MECHANICAL	LITTLE PATUXENT WASTEWATER TREATMENT PLANT	SCALE AS SHOWN
DIRECTOR OF PUBLIC WORKS — DATE 5/7/96 CHIEF, BUREAU OF ENGINEERING — DATE 5/7/96	REG. PROF. ENGR. — DATE 5-7-96	STATE OF MARYLAND — JONATHAN WINTHROP DOANE No. 15140 — REGISTERED PROFESSIONAL ENGINEER	DES:				MAINTENANCE BUILDING SECOND FLOOR PLAN	LITTLE PATUXENT WASTEWATER TREATMENT PLANT EXPANSION ADDITION NO. 5 CAPITAL PROJECT S-6153	SHEET 176 OF 226
CHIEF, BUREAU OF ENVIRONMENTAL SERVICES — DATE 5/7/96 CHIEF, UTILITY DESIGN DIVISION — DATE 5-7-96			DRN: M.J.C.					CONTRACT NO. 20-3082 HOWARD COUNTY, MARYLAND	P-2A
			CHK: J.H.						
			DATE:	M.J.C. / BY	1 / NO.	RECORD DRAWING / REVISION	11/2/94 / DATE		

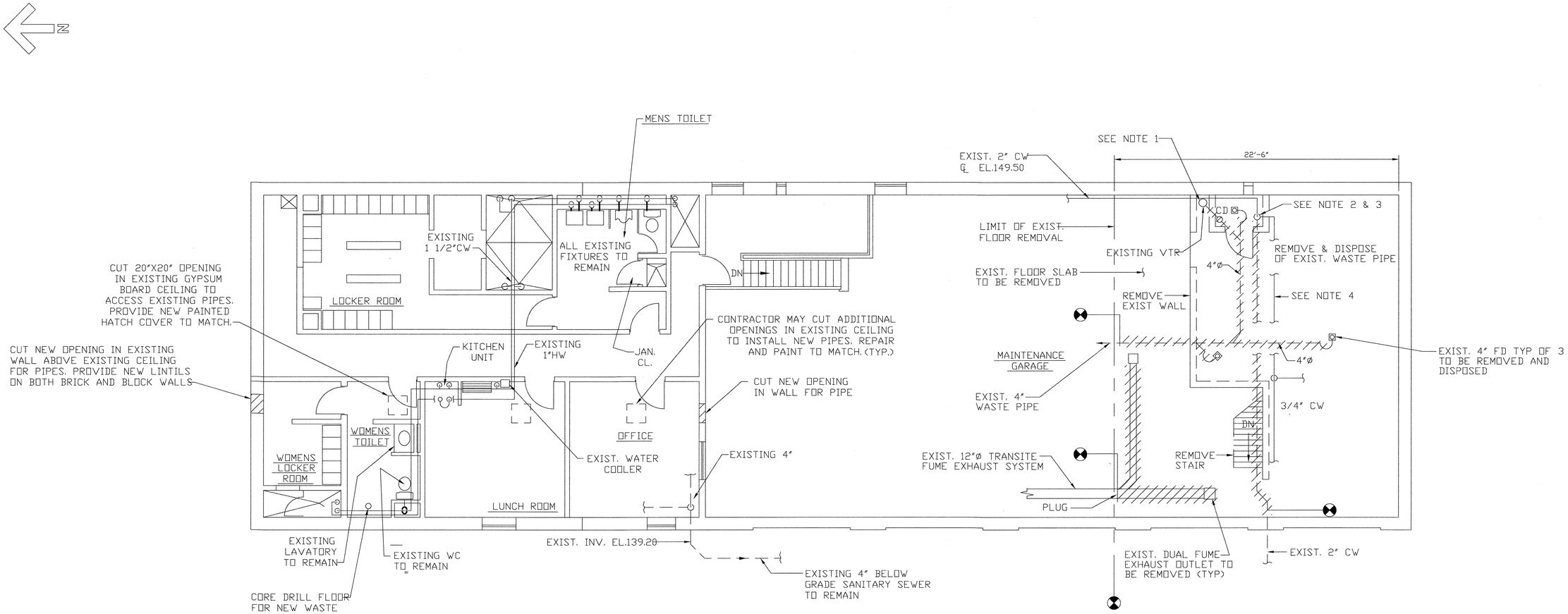

SECOND FLOOR DEMOLITION PLAN

SCALE:3/16"=1'-0"

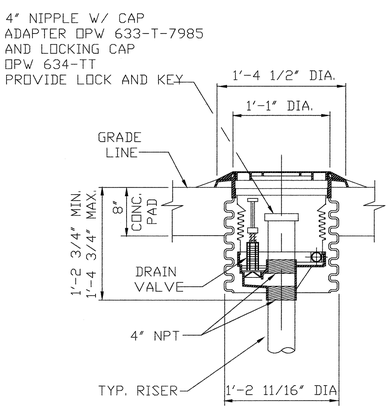

DETAIL E

SCALE: 1"=1'-0"

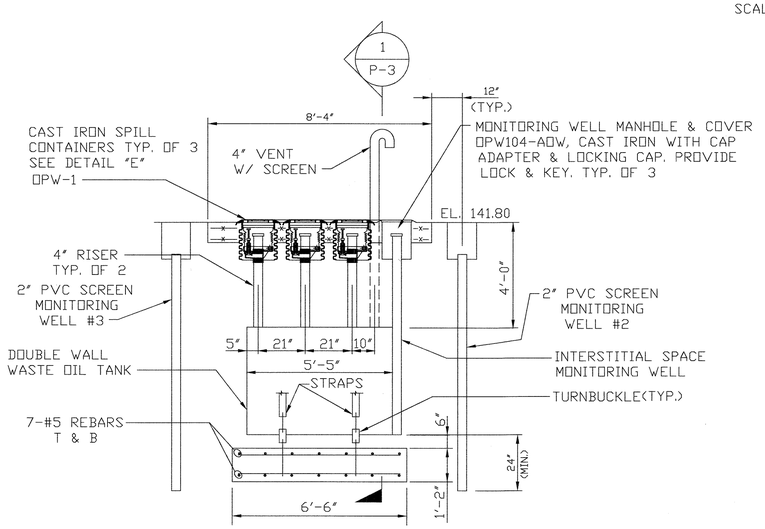

DETAIL F

SCALE: 3/4"=1'-0"

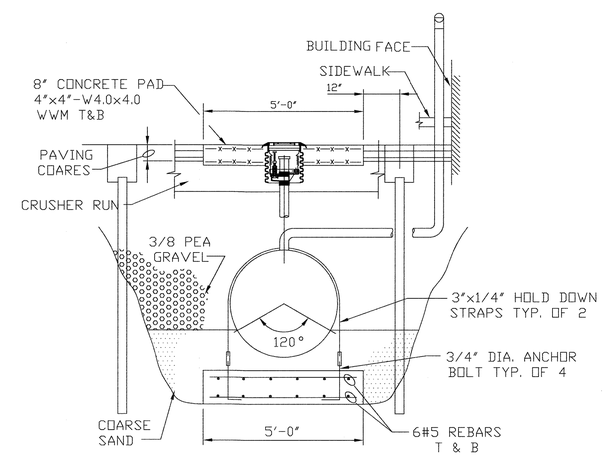

SECTION

SCALE: 3/4"=1'-0"

NOTES:

1. CUT EXISTING PIPE ONE FOOT ABOVE FIRST FLOOR SLAB AND DEMOLISH WASTE PIPES BELOW GRADE.
2. CUT EXISTING 2" CW PIPE ONE FOOT ABOVE FIRST FLOOR SLAB AND TWO FEET ABOVE MEZZANINE LEVEL AT OUTSIDE WALL. REMOVE VERTICAL SECTION. CAP EXISTING PIPE UNTIL WATER SUPPLY IS RECONNECTED.
3. WATER SUPPLY TO BUILDING MUST BE MAINTAINED AT ALL TIMES. IF DEMOLITION & REPLACEMENT OF EXISTING PIPE CAUSES A SHUTDOWN OF OVER TWO HOURS, PROVIDE TEMPORARY WATER PIPING TO MAINTAIN BUILDING SERVICE.
4. REMOVE EXPOSED 1" & 3/4" CW PIPING.

DEPARTMENT OF PUBLIC WORKS
HOWARD COUNTY, MARYLAND

DIRECTOR OF PUBLIC WORKS — DATE 5/7/96
CHIEF, BUREAU OF ENGINEERING — DATE 5/7/96
CHIEF, BUREAU OF ENVIRONMENTAL SERVICES — DATE 5/7/96
CHIEF, UTILITY DESIGN DIVISION — DATE 5-7-96

M&E Metcalf & Eddy
REQ. PROF. ENGR. — DATE 5-7-96

STATE OF MARYLAND — JONATHAN WINTHROP DOANE No. 15140 — REGISTERED PROFESSIONAL ENGINEER

DES:				
DRN: M.J.C.				
CHK: J.H.				
DATE:	M.J.C.	1	RECORD DRAWING	11/2/94
	BY	NO.	REVISION	DATE

MECHANICAL

MAINTENANCE BUILDING
SECOND FLOOR
DEMOLITION PLAN

LITTLE PATUXENT WASTEWATER TREATMENT PLANT
LITTLE PATUXENT WASTEWATER TREATMENT PLANT EXPANSION
ADDITION NO. 5
CAPITAL PROJECT S-6153
CONTRACT NO. 20-3082
HOWARD COUNTY, MARYLAND

SCALE AS SHOWN
SHEET 177 OF 226
P-3A

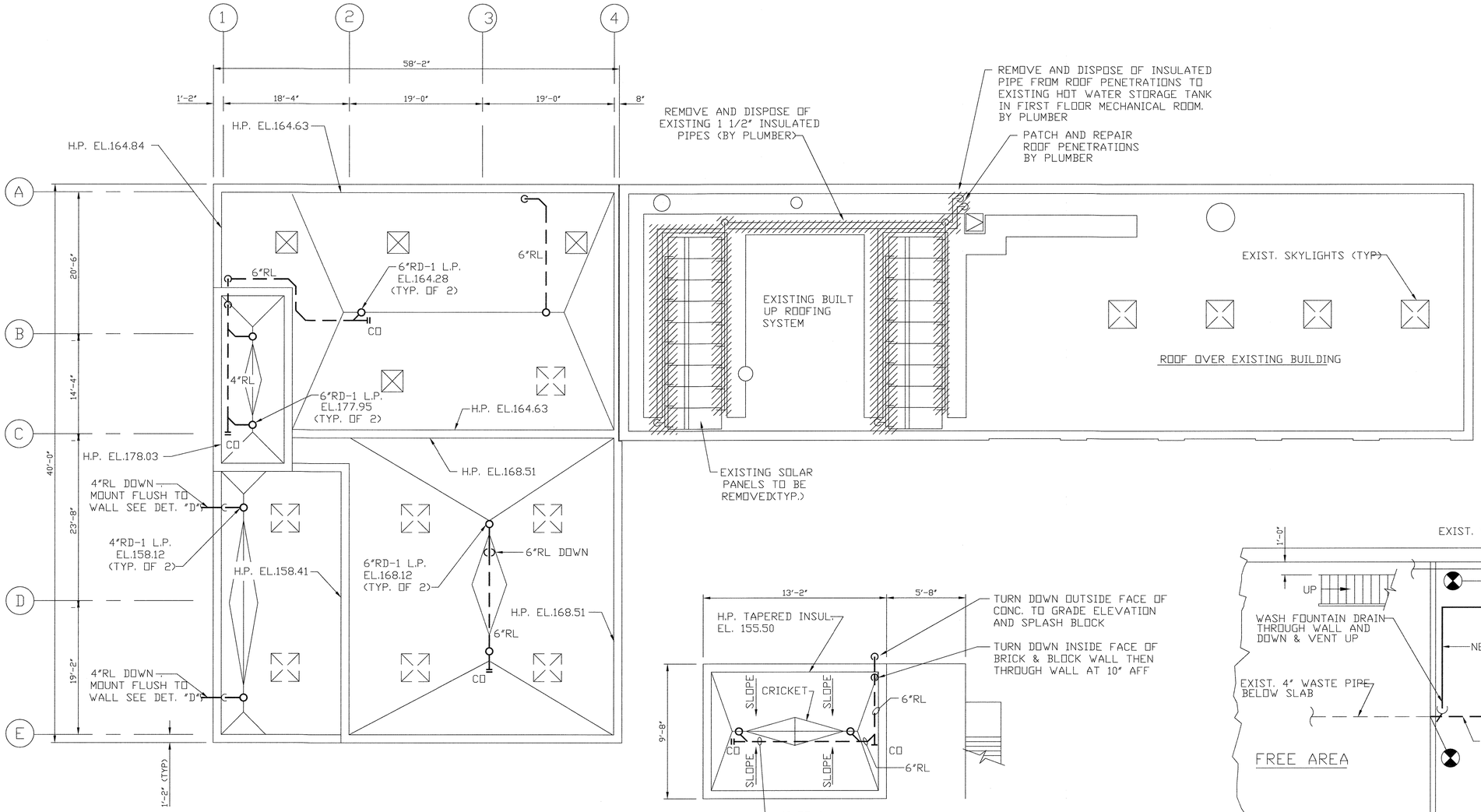

ROOF PLAN

SCALE:1/8"=1'-0"

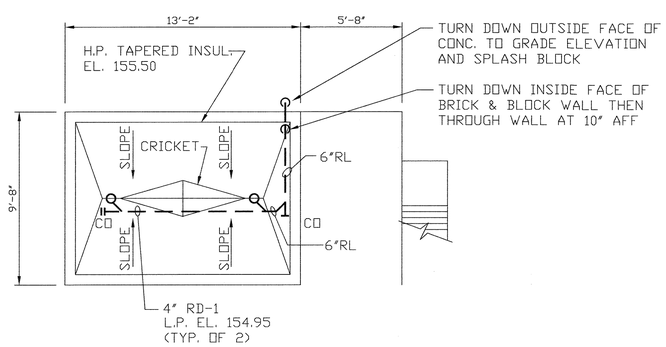

NORTH AND SOUTH PUMP STATIONS

ROOF PLAN

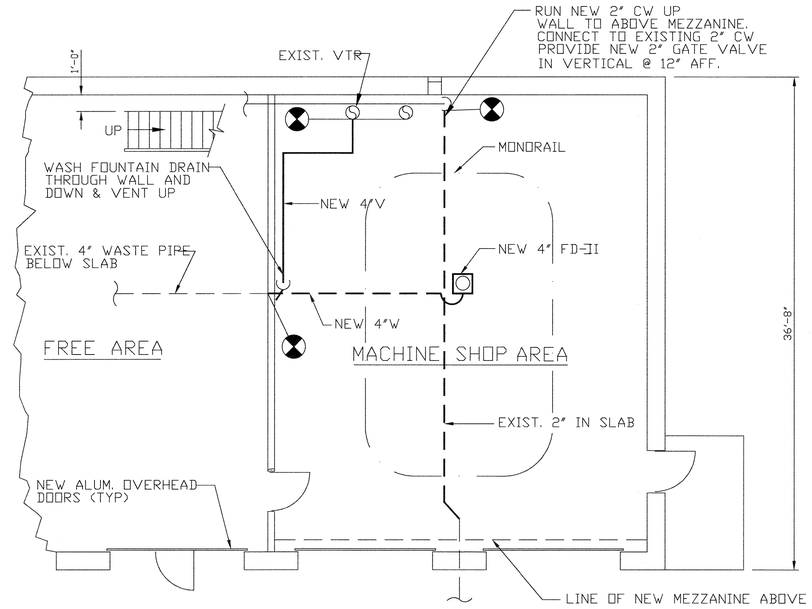

GARAGE FIRST

FLOOR PLAN

SCALE:3/16" =1'-0"

LEGEND:

- DENOTES EXISTING EQUIPMENT
- DENOTES NEW EQUIPMENT
- TO BE DEMOLISHED

DEPARTMENT OF PUBLIC WORKS
HOWARD COUNTY, MARYLAND

DIRECTOR OF PUBLIC WORKS — DATE 5/7/96
CHIEF, BUREAU OF ENGINEERING — DATE 5/7/96
CHIEF, BUREAU OF ENVIRONMENTAL SERVICES — DATE 5/7/96
CHIEF, UTILITY DESIGN DIVISION — DATE 5-7-96

M&E Metcalf & Eddy

REGI. PROF. ENGR. — DATE 5-7-96

STATE OF MARYLAND — JONATHAN WINTHROP DOANE No. 15140 — REGISTERED PROFESSIONAL ENGINEER

DES:				
DRN: M.J.C.				
CHK: J.H.				
DATE:	M.J.C.	1	RECORD DRAWING	11/2/94
	BY	NO.	REVISION	DATE

MECHANICAL

MAINTENANCE BUILDING
ROOF AND GARAGE PLANS

LITTLE PATUXENT WASTEWATER TREATMENT PLANT

LITTLE PATUXENT WASTEWATER TREATMENT PLANT EXPANSION
ADDITION NO. 5
CAPITAL PROJECT S-6153

CONTRACT NO. 20-3082
HOWARD COUNTY, MARYLAND

SCALE AS SHOWN

SHEET 178 OF 226

P-4A

MEANINGS OF IDENTIFICATION LETTERS

THIS TABLE APPLIES ONLY TO THE FUNCTIONAL IDENTIFICATION OF INSTRUMENTS

	FIRST LETTER		SUCCEEDING LETTERS		
	MEASURED OR INITIATING VARIABLE	MODIFIER	READOUT OR PASSIVE FUNCTION	OUTPUT FUNCTION	MODIFIER
A	ANALYSIS	ANALOG	ALARM		
B	BURNER FLAME		USER'S CHOICE	USER'S CHOICE	USER'S CHOICE
C	CONDUCTIVITY (ELECTRICAL)			CONTROL	
D	DENSITY (MASS) OR SPECIFIC GRAVITY	DIFFERENTIAL OR DIGITAL			
E	VOLTAGE (EMF)		PRIMARY ELEMENT		
F	FLOW RATE	RATIO (FRACTION)			
G	GAGING (DIMENSIONAL)		GLASS		
H	HAND (MANUALLY INITIATED)				HIGH
I	CURRENT (ELECTRICAL)		INDICATE OR INPUT		
J	POWER	SCAN			
K	TIME OR TIME SCHEDULE			CONTROL STATION	
L	LEVEL		LIGHT (PILOT)		LOW
M	MOISTURE OR HUMIDITY				MIDDLE OR INTERMEDIATE
N	VIBRATION		USER'S CHOICE	USER'S CHOICE	USER'S CHOICE
O	USER'S CHOICE		ORIFICE (RESTRICTION)		
P	PRESSURE OR VACUUM		POINT (TEST CONNECTION)		
Q	QUANTITY OR EVENT	INTEGRATE OR TOTALIZE			
R	RADIOACTIVITY	RELIEF	RECORD OR PRINT		
S	SPEED OR FREQUENCY	SAFETY		SWITCH	
T	TEMPERATURE			TRANSMIT	
U	MULTIVARIABLE		MULTIFUNCTION	MULTIFUNCTION	MULTIFUNCTION
V	VISCOSITY			VALVE, DAMPER OR LOUVER	
W	WEIGHT OR FORCE		WELL		
X	UNCLASSIFIED		UNCLASSIFIED	UNCLASSIFIED	UNCLASSIFIED
Y	USER'S CHOICE			RELAY OR COMPUTE	
Z	POSITION			DRIVE, ACTUATE OR UNCLASSIFIED FINAL CONTROL ELEMENT	

THE FOLLOWING DESIGNATIONS ARE USED TO BETTER IDENTIFY AN INSTRUMENT CONTROL FUNCTION

I/P	CURRENT TO PNEUMATIC CONVERTER	f(x)	CHARACTERISTIC
E/I	VOLTAGE TO CURRENT CONVERTER	P	PROPORTIONAL CONTROL MODE
I/I	CURRENT TO CURRENT CONVERTER	D	DERIVATIVE
Σ	ADD OR TOTALIZE	∫	INTEGRAL CONTROL MODE
△	DIFFERENCE	DO	DISSOLVED OXYGEN
√	SQUARE ROOT	pH	HYDROGEN ION CONCENTRATION
X	MULTIPLY	VSD/SCR	VARIABLE SPEED DRIVE
o/o	DIVIDE	VFD	VARIABLE FREQUENCY DRIVE
>	HIGH SELECT	(I)	FURNISHED BY INSTRUMENTATION
<	LOW SELECT	(M)	FURNISHED BY MECHANICAL
PV	PROCESS VARIABLE	(E)	FURNISHED BY ELECTRICAL
SP	SET POINT		

SYMBOLS

HYDRAULIC CONTROL LINES
ELECTRIC INSTRUMENT LINES
PNEUMATIC SIGNAL
PROCESS FLOW
CAPILLARY TUBING
BALL VALVE
CHECK VALVE
BUTTERFLY VALVE, DAMPER, OR LOUVER
PLUG VALVE
GATE VALVE
DIAPHRAGM VALVE
GLOBE VALVE
FLOAT VALVE
3-WAY VALVE
SOLENOID VALVE
SELF-OPERATING BACK PRESSURE REGULATOR VALVE
SELF-OPERATING PRESSURE REGULATOR VALVE
PRESSURE REDUCING REGULATOR VALVE W/EXTERNAL PRESSURE TAP
PINCH VALVE

HOSE CONNECTION
DRAIN
CALIBRATION STANDPIPE
PULSATION DAMPENER
HOSE
SLUICE GATE
SLIDE GATE

ACTUATORS

MOTOR
SOLENOID
DIAPHRAGM ACTUATOR WITH POSITIONER

CENTRIFUGAL PUMP OR BLOWER
METERING PUMP
POSITIVE DISPLACEMENT PUMP
MIXER
FLOW RATE CONTROLLER
FLOW ELEMENT (VENTURI)
ORIFICE PLATE
MAGNETIC FLOWMETER
INSERT FLOW ELEMENT (VENTURI)
ROTAMETER
PARSHALL FLUME
WEIR
ACCOUSTIC OR ULTRASONIC SENSOR

PANEL NAMES

AP	EXISTING AUTOTRON PANEL
BCP5	BLOWER CONTROL PANEL 5
BCP6	BLOWER CONTROL PANEL 6
BCP7	BLOWER CONTROL PANEL 7
BCPRP	BLOWER CONTROL FOR PROCESS REACTOR PANEL
BFP	BELT FILTER PRESS PANEL
DAFP	DIGESTER AIR FLOW PANEL
LCP5	LOCAL CONTROL PANEL 5
NPSCP	NORTH PUMP STATION CONTROL PANEL
PRAP	PROCESS REACTOR AIR FLOW PANEL
PRPSP	PROCESS REACTOR PHOSPHOROUS STRIP PANEL
SBFP	SODIUM BISULFITE FILL PANEL
SCP1	SPEED CONTROL PANEL 1
SPSCP	SOUTH PUMP STATION CONTROL PANEL
SHFP	SODIUM HYPOCHLORITE FILL PANEL
SIP	SIGNAL ISOLATION PANEL

HAND SWITCH POSITION SYMBOLS

(UNLABELLED SWITCHES ARE TO BE ON-OFF)

A	AUTOMATIC
C	CLOSE
F	FAST OR FORWARD
H	HAND
J	JOG
L	LOCAL
M	MANUAL
O	OPEN OR OFF
R	REMOTE OR REVERSE
E/S	EMERGENCY STOP
S/S	START/STOP
S	SLOW OR START

THESE SYMBOLS MAY BE COMBINED TO INDICATE MULTIPLE POSITION SELECTOR SWITCHES. E.G. L/O/R IS A LOCAL/OFF/REMOTE SELECTOR SWITCH.

INSTRUMENT SYMBOLS

FUNCTIONAL IDENTIFICATION (SEE LEGEND TABLE)
LOOP IDENTIFICATION NUMBER
PSL 34C L PI
HAND SWITCH POSITION SYMBOL (SEE LEGEND)
LOCATION

FRONT PANEL MOUNTED
PANEL NAME
REAR PANEL MOUNTED
PANEL NAME
FIELD MOUNTED

COMPUTER CONTROL SYSTEM CONFIGURABLE FUNCTION (DISPLAYED ON CRT)
COMPUTER CONTROL SYSTEM CONFIGURABLE FUNCTION (NOT DISPLAYED ON CRT)
STATUS INDICATION

SPECIFIC LOOP NUMBER
24 21
DUPLICATE LOOP IDENTIFICATION SYMBOL
REFERENCE LOOP NUMBER
120 VAC POWER SUPPLY

COMPUTER INPUT/OUTPUT SYMBOLS

COMPUTER ANALOG INPUT
COMPUTER ANALOG OUTPUT
COMPUTER DISCRETE INPUT
COMPUTER DISCRETE OUTPUT

DEPARTMENT OF PUBLIC WORKS
HOWARD COUNTY, MARYLAND

James M. Irvin 3/6/92 DIRECTOR OF PUBLIC WORKS — DATE
Ord Dom Lieu 3-6-92 CHIEF, BUREAU OF ENGINEERING — DATE
John J. O'Hara 3/6/92 CHIEF, BUREAU OF ENVIRONMENTAL SERVICES — DATE
Robert A. Rigg 3-6-92 CHIEF, UTILITY DESIGN DIVISION — DATE

Metcalf & Eddy

Jonathan W. Doane 3/6/92 REG. PROF. ENGR. — DATE

STATE OF MARYLAND — JONATHAN WINTHROP DOANE No. 15140 — REGISTERED PROFESSIONAL ENGINEER

DES: SZOTTFRIED	BY	NO.	REVISION	DATE
DRN: S. COOK	MB	1	REVISE FOR BIDDING	3/5/92
CHK: F. BAILEY			REVISED FOR BIDDING	3/5/92
DATE: 3/6/92				

INSTRUMENTATION LEGEND, SYMBOLS, & GENERAL NOTES

LITTLE PATUXENT WASTEWATER TREATMENT PLANT

LITTLE PATUXENT WASTEWATER TREATMENT EXPANSION
ADDITION NO. 5
CAPITAL PROJECT S-6153

CONTRACT NO. 20-3082
HOWARD COUNTY, MARYLAND

SCALE AS SHOWN
SHEET 179 OF 226
I-1

4821M3

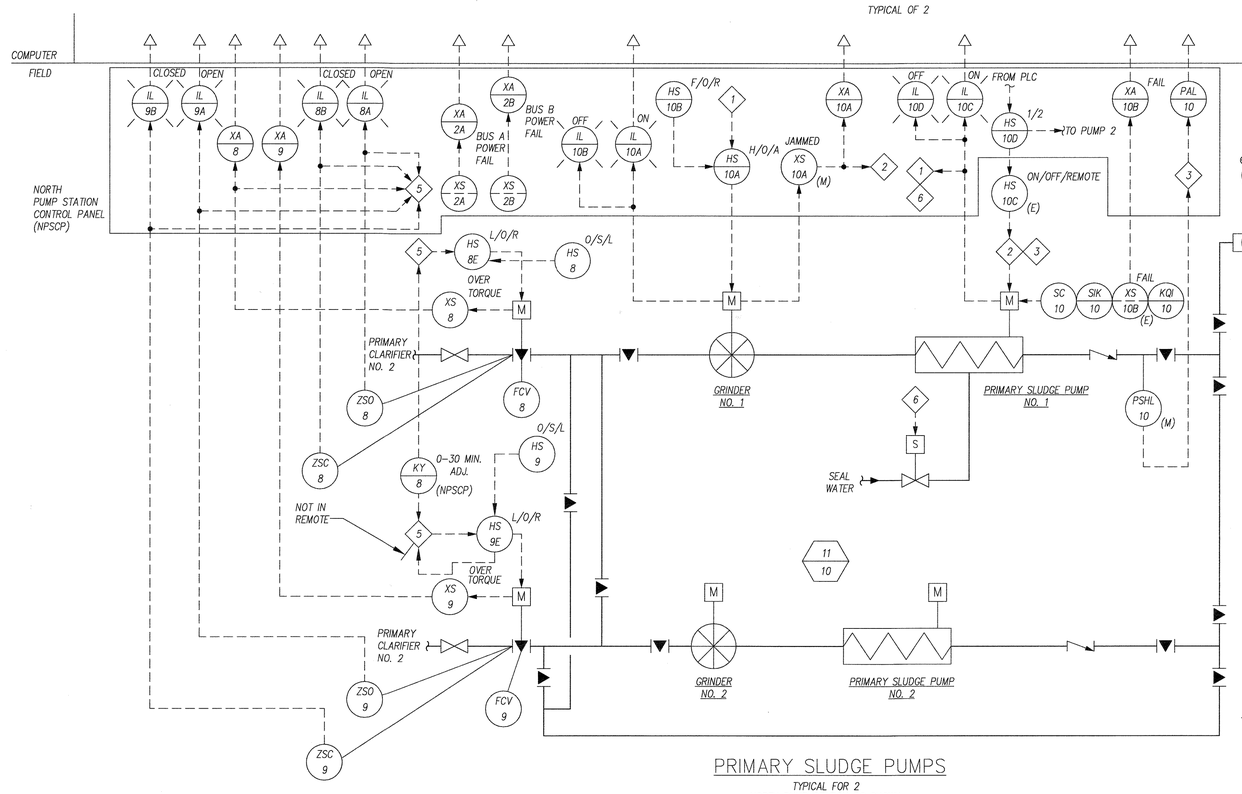

PRIMARY SLUDGE PUMPS

TYPICAL FOR 2
NORTH PUMP STATION AS SHOWN,
SOUTH PUMP STATION, LOOPS 15, 16, 17 AND 18AND POWER FAIL LOOP 3
PRIMARY CLARIFIERS NO. 3 AND NO. 4, LCP 4

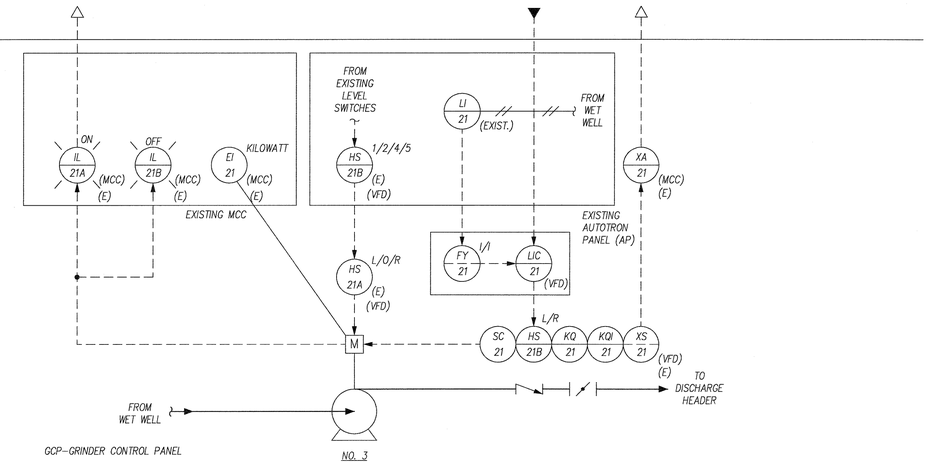

EFFLUENT PUMP

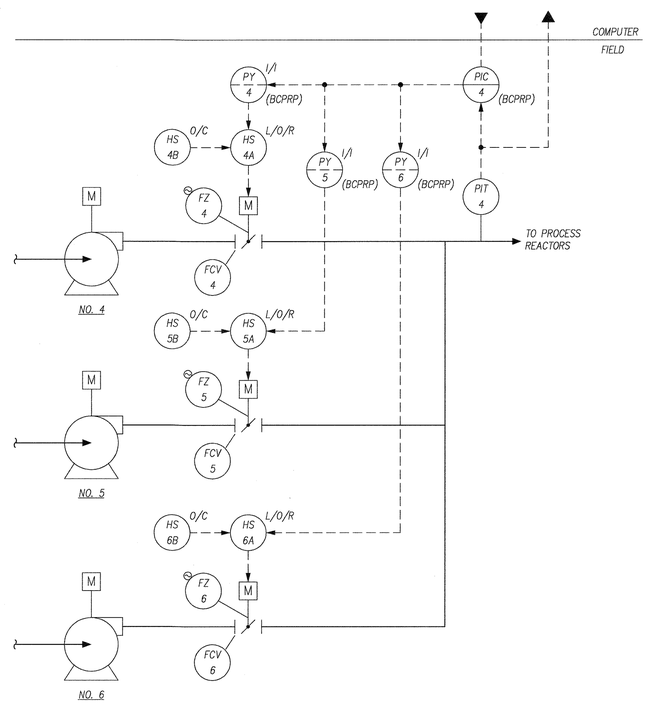

EXISTING PROCESS REACTOR BLOWERS

LOCATED AT HEADWORKS BUILDING

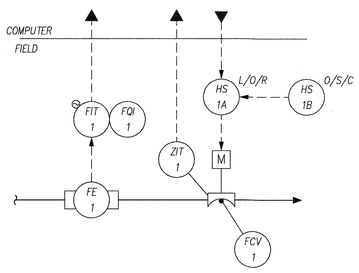

PRIMARY INFLUENT FLOW

LOCATED IN PRIMARY METERING CHAMBER

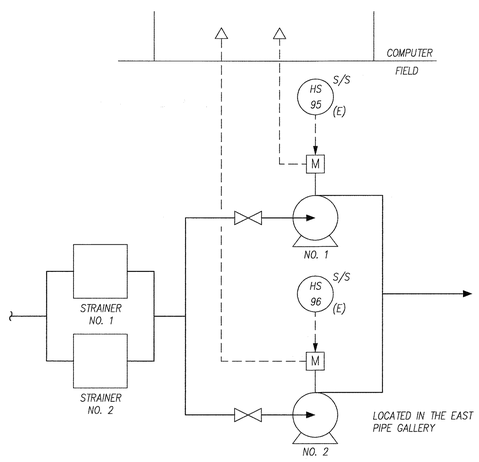

SPRAY WATER PUMPS

SIMILAR FOR 3 SPRAY WATER PUMPS,
LOCATED IN THE WEST PIPE GALLERY, LOOPS 97, 98, AND 99

INTERLOCK SCHEDULE

1. WHEN IN AUTOMATIC, START GRINDER WHEN DEDICATED PUMP STARTS. STOP WHEN PUMP STOPS.
2. STOP PUMP IF GRINDER IS JAMMED.
3. STOP PUMP ON HIGH OR LOW DISCHARGE PRESSURE AFTER A TIME DELAY.
4. SHUT DOWN DRIVE ON HIGH-HIGH TORQUE. MANUAL RESET.
5. WHEN IN AUTO VALVES SHALL ALTERNATE ON 0-30 MINUTE INTERVALS (ADJUSTABLE). WHEN SWITCHOVER IS PERFORMED ONE VALVE SHALL ALWAYS REMAIN OPEN TO KEEP MOTOR RUNNING.
6. OPEN SOLENOID VALVE WHEN PUMP IS IN OPERATION.

DEPARTMENT OF PUBLIC WORKS
HOWARD COUNTY, MARYLAND

DIRECTOR OF PUBLIC WORKS — DATE 5/7/96
CHIEF, BUREAU OF ENGINEERING — DATE 5/7/96
CHIEF, BUREAU OF ENVIRONMENTAL SERVICES — DATE 5/7/96
CHIEF, UTILITY DESIGN DIVISION — DATE 5-7-96

Metcalf & Eddy
REG. PROF. ENGR. — DATE 5-7-96

STATE OF MARYLAND — JONATHAN WINTHROP DOANE No. 15140 — REGISTERED PROFESSIONAL ENGINEER

DES: SZOTTFRIED
DRN: S. COOK
CHK:
DATE:

BY	NO.	REVISION	DATE
MB	1	REVISE FOR BIDDING	3/5/92
MJC	2	RECORD DRAWING	2/5/95

INSTRUMENTATION LOOP DIAGRAMS I

LITTLE PATUXENT WASTEWATER TREATMENT PLANT

LITTLE PATUXENT WASTEWATER TREATMENT EXPANSION
ADDITION NO. 5
CAPITAL PROJECT S-6153

CONTRACT NO. 20-3082
HOWARD COUNTY, MARYLAND

SCALE AS SHOWN
SHEET 180 OF 226
I-2A

FILE-NO.

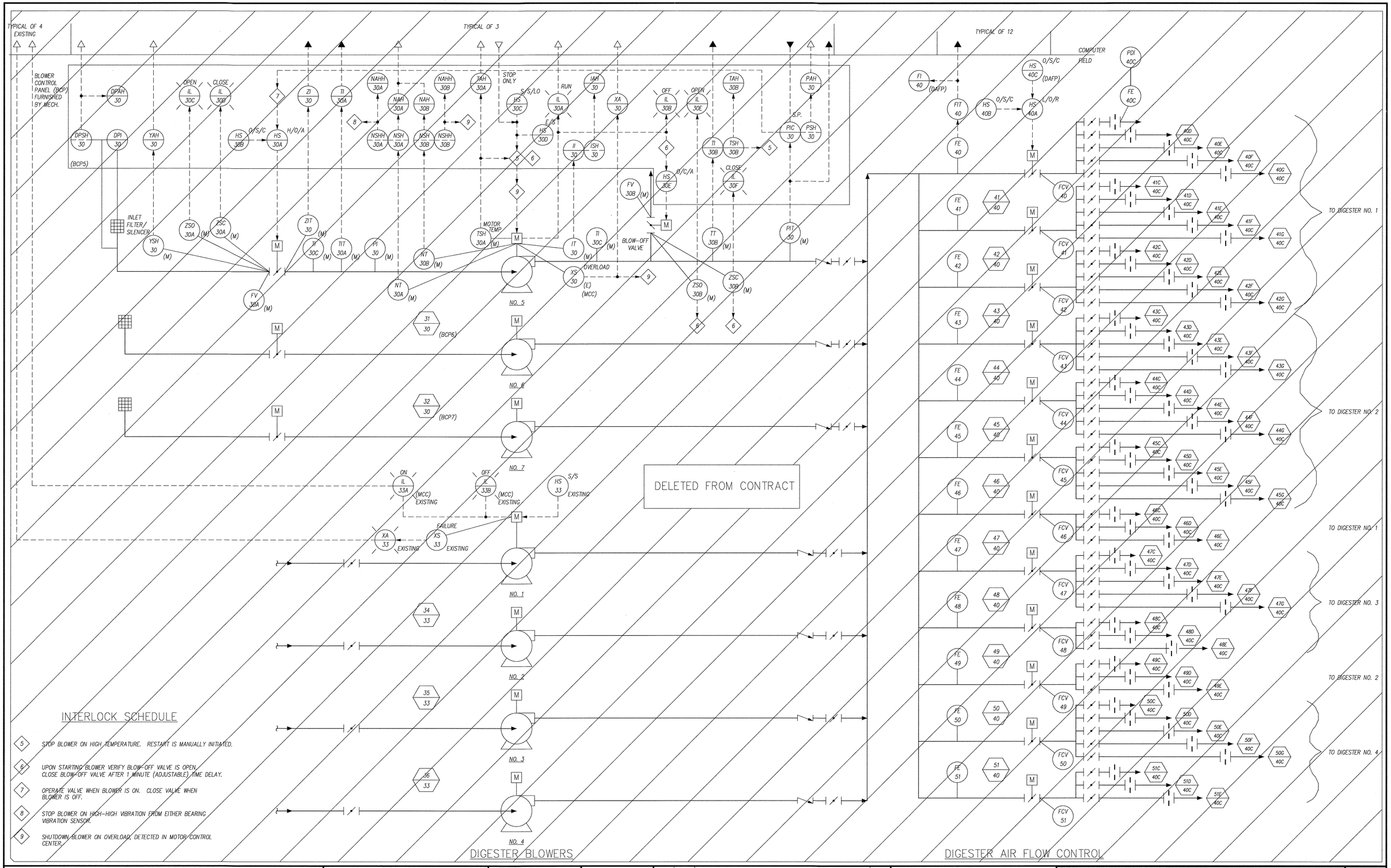

INTERLOCK SCHEDULE

5. STOP BLOWER ON HIGH TEMPERATURE. RESTART IS MANUALLY INITIATED.
6. UPON STARTING BLOWER VERIFY BLOW-OFF VALVE IS OPEN, CLOSE BLOW-OFF VALVE AFTER 1 MINUTE (ADJUSTABLE) TIME DELAY.
7. OPERATE VALVE WHEN BLOWER IS ON. CLOSE VALVE WHEN BLOWER IS OFF.
8. STOP BLOWER ON HIGH-HIGH VIBRATION FROM EITHER BEARING VIBRATION SENSOR.
9. SHUTDOWN BLOWER ON OVERLOAD, DETECTED IN MOTOR CONTROL CENTER.

DEPARTMENT OF PUBLIC WORKS
HOWARD COUNTY, MARYLAND

DIRECTOR OF PUBLIC WORKS — DATE 5/7/96
CHIEF, BUREAU OF ENGINEERING — DATE 5/7/96
CHIEF, BUREAU OF ENVIRONMENTAL SERVICES — DATE 5/7/96
CHIEF, UTILITY DESIGN DIVISION — DATE 5-7-96

Metcalf & Eddy
REG. PROF. ENGR. — DATE 5-7-96

STATE OF MARYLAND — JONATHAN WINTHROP DOANE No. 15140 — REGISTERED PROFESSIONAL ENGINEER

DES: SZOTTFRIED
DRN: S. COOK
CHK:
DATE:

BY	NO.	REVISION	DATE
MB	1	REVISE FOR BIDDING	3/5/92
MJC	2	RECORD DRAWING	2/5/95

INSTRUMENTATION LOOP DIAGRAMS II

LITTLE PATUXENT WASTEWATER TREATMENT PLANT

LITTLE PATUXENT WASTEWATER TREATMENT EXPANSION ADDITION NO. 5 CAPITAL PROJECT S-6153

CONTRACT NO. 20-3082

HOWARD COUNTY, MARYLAND

SCALE AS SHOWN

SHEET 181 OF 226

I-3A

FILE-NO.

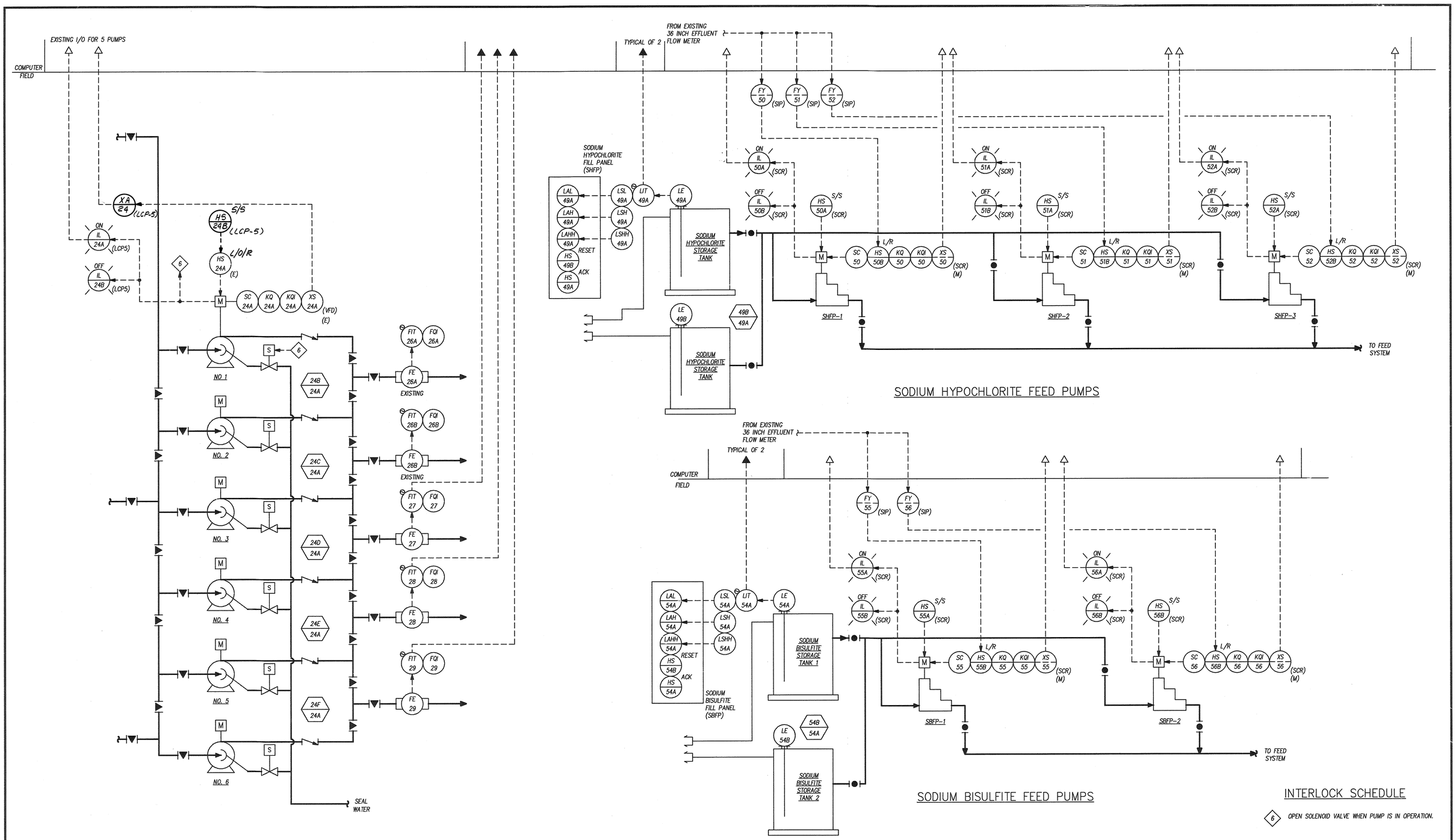

DEPARTMENT OF PUBLIC WORKS
HOWARD COUNTY, MARYLAND

DIRECTOR OF PUBLIC WORKS — DATE 3/6/92 — CHIEF, BUREAU OF ENGINEERING — DATE 3-6-92
CHIEF, BUREAU OF ENVIRONMENTAL SERVICES — DATE 3/6/92 — CHIEF, UTILITY DESIGN DIVISION — DATE 3-6-92

M&E Metcalf & Eddy
REG. PROF. ENGR. — DATE 3/6/92

STATE OF MARYLAND — JONATHAN WINTHROP DOANE No. 15140 — REGISTERED PROFESSIONAL ENGINEER

DES: SZOTTFRIED
DRN: S. COOK
CHK: F BAILEY
DATE: 3/6/92

BY	NO.	REVISION	DATE
MB	1	REVISE FOR BIDDING	3/5/92
		REVISED FOR BIDDING	3/6/92

INSTRUMENTATION LOOP DIAGRAMS III

LITTLE PATUXENT WASTEWATER TREATMENT PLANT
LITTLE PATUXENT WASTEWATER TREATMENT EXPANSION ADDITION NO. 5 CAPITAL PROJECT S-6153
CONTRACT NO. 20-3082
HOWARD COUNTY, MARYLAND

SCALE AS SHOWN
SHEET 182 OF 226
I-4

4-321M4

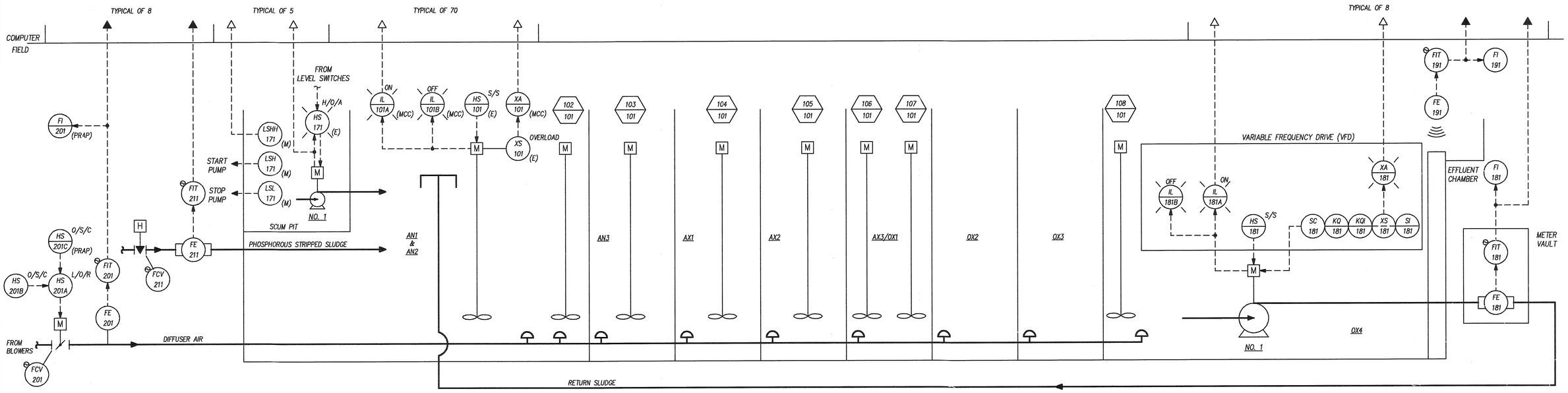

SCUM PUMP FOR PROCESS REACTORS

TYPICAL OF 8

LOOP 171 PUMP NO. 1, NEW PROCESS REACTOR NO. 1
LOOP 173 PUMP NO. 3, EXISTING PROCESS REACTOR NO. 3
LOOP 175 PUMP NO. 5, EXISTING PROCESS REACTOR NO. 5
LOOP 177 PUMP NO. 7, EXISTING PROCESS REACTOR NO. 7
LOOP 178 PUMP NO. 8, EXISTING PROCESS REACTOR NO. 8

PHOSPHOROUS STRIPPER SLUDGE FLOW

TYPICAL OF 8

LOOP 211, NEW PROCESS REACTOR NO. 1
LOOP 212, NEW PROCESS REACTOR NO. 2
LOOP 213, EXISTING PROCESS REACTOR NO. 3
LOOP 214, EXISTING PROCESS REACTOR NO. 4
LOOP 215, EXISTING PROCESS REACTOR NO. 5
LOOP 216, EXISTING PROCESS REACTOR NO. 6
LOOP 217, EXISTING PROCESS REACTOR NO. 7
LOOP 218, EXISTING PROCESS REACTOR NO. 8

PROCESS REACTOR MIXERS

TYPICAL OF 70

MIXER LOOPS 101 THRU 108, NEW PROCESS REACTOR NO. 1
MIXER LOOPS 109 THRU 116, NEW PROCESS REACTOR NO. 2
MIXER LOOPS 117 THRU 124, EXISTING PROCESS REACTOR NO. 3
MIXER LOOPS 125 THRU 132, EXISTING PROCESS REACTOR NO. 4
MIXER LOOPS 133 THRU 140, EXISTING PROCESS REACTOR NO. 5
MIXER LOOPS 141 THRU 148, EXISTING PROCESS REACTOR NO. 6
MIXER LOOPS 149 THRU 159, EXISTING PROCESS REACTOR NO. 7
MIXER LOOPS 160 THRU 170, EXISTING PROCESS REACTOR NO. 8

PROCESS REACTORS 1 THRU 6

PROCESS REACTORS 7 AND 8 SIMILAR
EXCEPT DOUBLE SIZED

AIR FLOW CONTROL FOR PROCESS REACTORS

TYPICAL OF 8

LOOP 201, FLOW FOR NEW PROCESS REACTOR NO. 1
LOOP 202, FLOW FOR NEW PROCESS REACTOR NO. 2
LOOP 203, FLOW FOR EXISTING PROCESS REACTOR NO. 3
LOOP 204, FLOW FOR EXISTING PROCESS REACTOR NO. 4
LOOP 205, FLOW FOR EXISTING PROCESS REACTOR NO. 5
LOOP 206, FLOW FOR EXISTING PROCESS REACTOR NO. 6
LOOP 207, FLOW FOR EXISTING PROCESS REACTOR NO. 7
LOOP 208, FLOW FOR EXISTING PROCESS REACTOR NO. 8

RECIRCULATION PUMPS

TYPICAL OF 8

LOOP 181, NEW PROCESS REACTOR NO. 1, VFD 1
LOOP 182, NEW PROCESS REACTOR NO. 2, VFD 2
LOOP 183, EXISTING PROCESS REACTOR NO. 3, VFD 3
LOOP 184, EXISTING PROCESS REACTOR NO. 4, VFD 4
LOOP 185, EXISTING PROCESS REACTOR NO. 5, VFD 5
LOOP 186, EXISTING PROCESS REACTOR NO. 6, VFD 6
LOOP 187, EXISTING PROCESS REACTOR NO. 7, VFD 7
LOOP 188, EXISTING PROCESS REACTOR NO. 8, VFD 8

RECIRCULATION PUMPS

TYPICAL OF 8

LOOP 191, EFFLUENT FLOW PROCESS REACTOR NO. 1
LOOP 192, EFFLUENT FLOW PROCESS REACTOR NO. 2
LOOP 193, EFFLUENT FLOW PROCESS REACTOR NO. 3
LOOP 194, EFFLUENT FLOW PROCESS REACTOR NO. 4
LOOP 195, EFFLUENT FLOW PROCESS REACTOR NO. 5
LOOP 196, EFFLUENT FLOW PROCESS REACTOR NO. 6
LOOP 197, EFFLUENT FLOW PROCESS REACTOR NO. 7
LOOP 198, EFFLUENT FLOW PROCESS REACTOR NO. 8

DEPARTMENT OF PUBLIC WORKS
HOWARD COUNTY, MARYLAND

DIRECTOR OF PUBLIC WORKS — DATE 3/6/92
ACT. CHIEF, BUREAU OF ENGINEERING — DATE 3-6-92
CHIEF, BUREAU OF ENVIRONMENTAL SERVICES — DATE 3/6/92
ACT. CHIEF, UTILITY DESIGN DIVISION — DATE 3-6-92

M&E Metcalf & Eddy
REG. PROF. ENGR. — DATE 3/6/92

STATE OF MARYLAND — JONATHAN WINTHROP DOANE No. 15140 — REGISTERED PROFESSIONAL ENGINEER

DES: SZOTTFRIED
DRN: S. COOK
CHK: F. BAILEY
DATE: 3/6/92

BY	NO.	REVISION	DATE
MB	1	REVISE FOR BIDDING	3/5/92
		REVISED FOR BIDDING	3/6/92

INSTRUMENTATION
LOOP DIVAGRAMS IV

LITTLE PATUXENT WASTEWATER TREATMENT PLANT

LITTLE PATUXENT WASTEWATER TREATMENT EXPANSION
ADDITION NO. 5
CAPITAL PROJECT S-6153

CONTRACT NO. 20-3082
HOWARD COUNTY, MARYLAND

SCALE AS SHOWN
SHEET 183 OF 226
I-5

4821M1

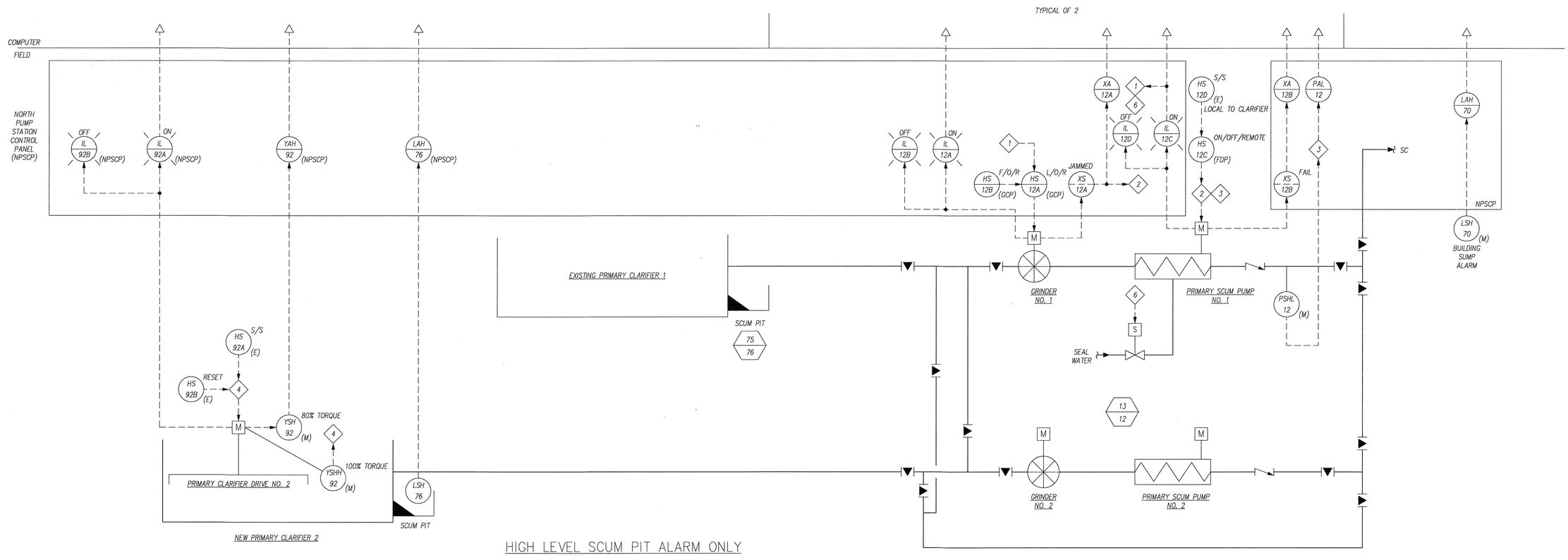

HIGH LEVEL SCUM PIT ALARM ONLY

TYPICAL OF 4
EXISTING FINAL CLARIFIER NO. 3 SIMILAR, LOOP 77
EXISTING FINAL CLARIFIER NO. 4 SIMILAR, LOOP 78, ALARMS INDICATED ON SPSCP
EXISTING FINAL CLARIFIER NO. 5 SIMILAR, LOOP 79, ALARMS INDICATED ON SPSCP
EXISTING PRIMARY CLARIFIER NO. 1 SIMILAR, LOOP 75
EXISTING PRIMARY CLARIFIER NO. 3 SIMILAR, LOOP 80
EXISTING PRIMARY CLARIFIER NO. 4 SIMILAR, LOOP 81
EXISTING FINAL CLARIFIER NO. 1, SIMILAR, LOOP 82
EXISTING FINAL CLARIFIER NO. 6, SIMILAR, LOOP 83
EXISTING FINAL CLARIFIER NO. 7, SIMILAR, LOOP 84
EXISTING FINAL CLARIFIER NO. 8, SIMILAR, LOOP 85
EXISTING FINAL CLARIFIER NO. 9, SIMILAR, LOOP 86

PRIMARY SCUM PUMPS

TYPICAL FOR 2
NORTH PUMP STATION AS SHOWN
SOUTH PUMP STATION, LOOPS 19 AND 20, PRIMARY CLARIFIERS NO. 3 AND NO. 4, (SPSCP), LOOP 95 AND LOOP 94 AND BUILDING SUMP ALARM, LSH-71.
PRIMARY CLARIFIER NO. 2 DRIVE, LOOP 93

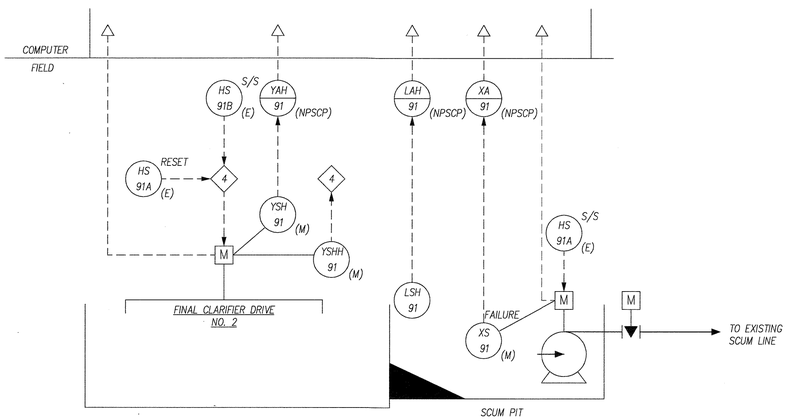

FINAL CLARIFIER DRIVE AND SCUM PUMP

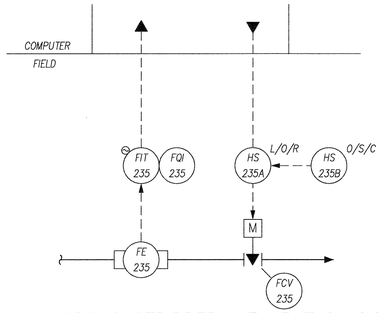

PHOSPHOROUS STRIPPER INFLUENT SLUDGE

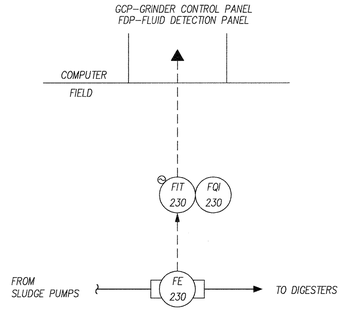

SLUDGE FEED FLOW

TYPICAL FOR 5
LOOP 231, WASTE ACTIVATED SLUDGE
LOOP 240, PRIMARY SLUDGE
LOOP 241, PRIMARY SLUDGE
LOOP 242, WASTE ACTIVATED SLUDGE
LOOP 243, WASTE ACTIVATED SLUDGE

INTERLOCK SCHEDULE

1. WHEN IN AUTOMATIC, START GRINDER WHEN DEDICATED PUMP STARTS. STOP WHEN PUMP STOPS.
2. STOP PUMP IF GRINDER IS JAMMED.
3. STOP PUMP ON HIGH OR LOW DISCHARGE PRESSURE AFTER A TIME DELAY.
4. SHUT DOWN DRIVE ON HIGH-HIGH TORQUE. MANUAL RESET.
6. OPEN SOLENOID VALVE WHEN PUMP IS IN OPERATION.

DEPARTMENT OF PUBLIC WORKS
HOWARD COUNTY, MARYLAND

DIRECTOR OF PUBLIC WORKS — DATE 5/7/96
CHIEF, BUREAU OF ENGINEERING — DATE 5/7/96
CHIEF, BUREAU OF ENVIRONMENTAL SERVICES — DATE 5/7/96
CHIEF, UTILITY DESIGN DIVISION — DATE 5-7-96

Metcalf & Eddy
REG. PROF. ENGR. — DATE 5-7-96

STATE OF MARYLAND — JONATHAN WINTHROP DOANE No. 15140 — REGISTERED PROFESSIONAL ENGINEER

DES: SZOTTFRIED
DRN: S. COOK
CHK:
DATE:

BY	NO.	REVISION	DATE
MB	1	REVISE FOR BIDDING	3/5/92
MJC	2	RECORD DRAWING	2/5/95

INSTRUMENTATION LOOP DIAGRAMS V

LITTLE PATUXENT WASTEWATER TREATMENT PLANT

LITTLE PATUXENT WASTEWATER TREATMENT EXPANSION
ADDITION NO. 5
CAPITAL PROJECT S-6153

CONTRACT NO. 20-3082
HOWARD COUNTY, MARYLAND

SCALE AS SHOWN
SHEET 184 OF 226
I-6A

FILE-NO.

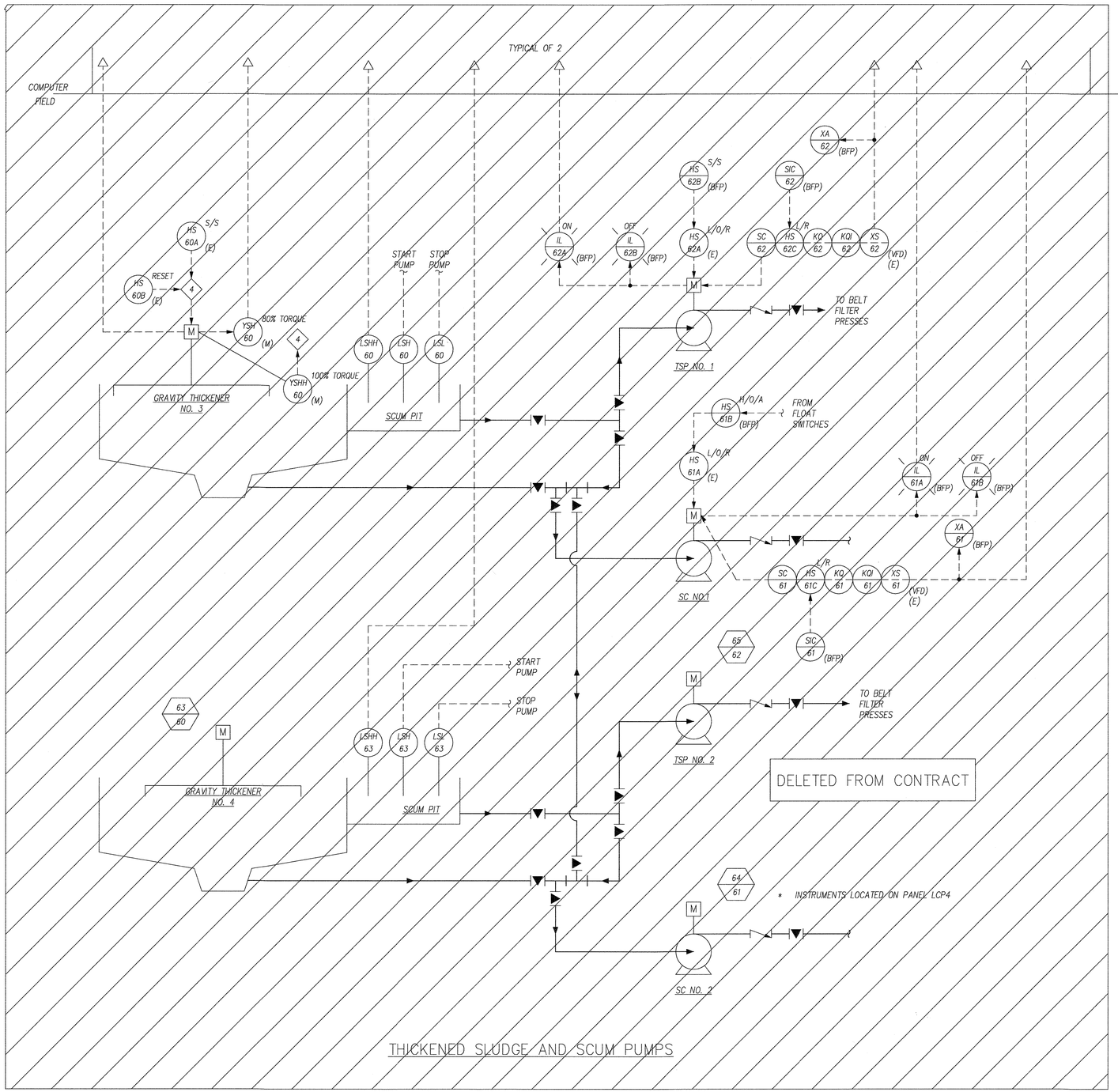

THICKENED SLUDGE AND SCUM PUMPS

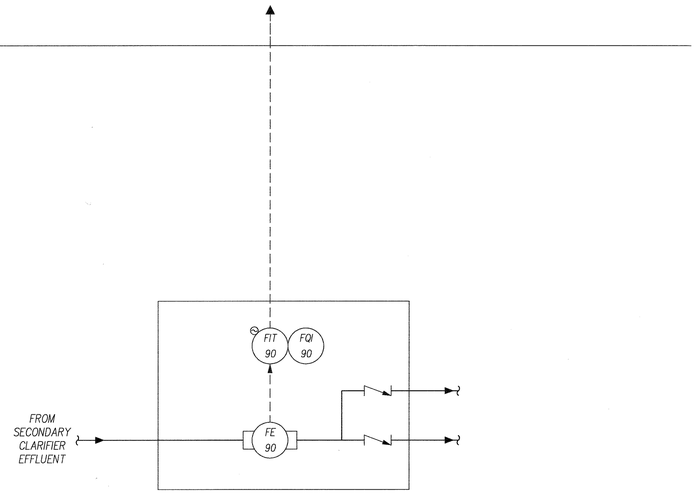

54" METER VAULT

DEPARTMENT OF PUBLIC WORKS
HOWARD COUNTY, MARYLAND

DIRECTOR OF PUBLIC WORKS — DATE 5/7/96
CHIEF, BUREAU OF ENGINEERING — DATE 5/7/96
CHIEF, BUREAU OF ENVIRONMENTAL SERVICES — DATE 5/7/96
CHIEF, UTILITY DESIGN DIVISION — DATE 5-7-96

M&E Metcalf & Eddy

REG. PROF. ENGR. — DATE 5-7-96

STATE OF MARYLAND — JONATHAN WINTHROP DOANE No. 15140 — REGISTERED PROFESSIONAL ENGINEER

DES: SZOTTFRIED
DRN: S. COOK
CHK:
DATE:

BY	NO.	REVISION	DATE
MB	1	REVISE FOR BIDDING	3/5/92
MJC	2	RECORD DRAWING	2/5/95

INSTRUMENTATION LOOP DIAGRAMS VI

LITTLE PATUXENT WASTEWATER TREATMENT PLANT

LITTLE PATUXENT WASTEWATER TREATMENT EXPANSION
ADDITION NO. 5
CAPITAL PROJECT S-6153

CONTRACT NO. 20-3082

HOWARD COUNTY, MARYLAND

SCALE AS SHOWN

SHEET 185 OF 226

I-7A

FILE-NO.

FOR PLAN VIEW ONLY

- SURFACE, RECESSED OR PENDANT MOUNTED INCANDESCENT OR HIGH INTENSITY DISCHARGE LIGHTING FIXTURE
- SURFACE, RECESSED OR PENDANT MOUNTED FLUORESCENT LIGHTING FIXTURE
- WALL MOUNTED INCANDESCENT OR HIGH INTENSITY DISCHARGE LIGHTING FIXTURE

LETTER "A" DENOTES TYPE OF FIXTURE; "3" DENOTES PANELBOARD BRANCH CIRCUIT NO. 3; "a" DENOTES CONTROLLED BY LOCAL SWITCH "a".

- EXISTING LIGHTING FIXTURES
- POLE OR POST–TOP MOUNTED LIGHTING UNIT
- ROADWAY LIGHTING UNIT
- WALL MOUNTED EXIT LIGHT
- CEILING OR PENDANT MOUNTED EXIT LIGHT
- REMOTE MOUNTED AUXILIARY LIGHTING HEAD MOUNT 7'–6" ABOVE FLOOR
- Sa SINGLE POLE SWITCH CONTROLS FIXTURES MARKED "a"
- S3c THREE–WAY SWITCH CONTROLS FIXTURES MARKED "c"
- S4b FOUR–WAY SWITCH CONTROLS FIXTURES MARKED "b"
- DUPLEX RECEPTACLE (GROUND TYPE)
- SINGLE RECEPTACLE (GROUND TYPE)
- SPECIAL PURPOSE RECEPTACLE, TYPE AND AMPERE RATING AS INDICATED ON PLAN
- DENOTES DEVICE OR EQUIPMENT – FLUSH MOUNTED
- DENOTES DEVICE OR EQUIPMENT – SURFACE MOUNTED
- CLOCK RECEPTACLE MOUNTED 7'–6" ABOVE FINISHED FLOOR
- MANUAL MOTOR STARTER
- MAGNETIC MOTOR STARTER
- MAGNETIC MOTOR STARTER AND DISCONNECT SWITCH
- REDUCED VOLTAGE MOTOR STARTER
- TWO SPEED MOTOR STARTER
- MAGNETIC CONTACTOR
- DISCONNECT SWITCH
- WALL MOUNTED THERMOSTAT – MOUNTED 5'–0" ABOVE FINISHED FLOOR UNLESS OTHERWISE NOTED
- PANELBOARD
- POWER DISTRIBUTION PANEL
- UH = UNIT HEATER – FOR FAN HORSEPOWER, SEE PANELBOARD SCHEDULE
  EUH = ELECTRIC UNIT HEATER – FOR KW RATING, SEE SINGLE LINE DIAGRAM
- MOTOR – FOR HORSEPOWER RATING, SEE PANELBOARD SCHEDULE OR SINGLE LINE DIAGRAM
- D = DAMPER MOTOR
  M = MOTORIZED VALVE
- TELEPHONE TERMINAL CABINET
- TELEPHONE OUTLET, WALL MOUNTED
- JUNCTION BOX
- GROUND ROD – TYPE AND SIZE AS INDICATED ON PLAN
- CONTROL STATION
- BATTERY OPERATED AUXILIARY LIGHTING UNIT MOUNT 7'–6" ABOVE FINISHED FLOOR UNLESS OTHERWISE NOTED
- BATTERY OPERATED EMERGENCY AND EXIT LIGHTING UNIT. 7'–6" ABOVE FINISHED FLOOR UNLESS OTHERWISE NOTED

LETTER DENOTES TYPE OF FIXTURE; NUMBER DENOTES PANELBOARD BRANCH CIRCUIT

FOR PLAN VIEW ONLY (CONT.)

- EXPLOSIONPROOF SEALING FITTING
- CONDUIT FITTING–E DENOTES EXPANSION FITTING
- CONDUIT RUNS CONCEALED IN FLOOR, WALL AND UNDERGROUND
- CONDUIT RUNS EXPOSED
- CONDUIT TURNING UP OR TOWARD OBSERTVER
- CONDUIT TURNING DOWN OR AWAY FROM OBSERVER
- FLEXIBLE CONDUIT
- DIRECT BURIAL CABLE
- G GROUNDING CABLE
- T CONDUIT FOR TELEPHONE COMPANY'S WIRING
- F CONDUIT FOR FIRE ALARM SYSTEM
- LP–22,3 HOMERUN TO PANELBOARD – LETTERS AND NUMERALS DENOTE PANELBOARD AND CIRCUIT NUMBERS. ARROWS INDICATE NUMBER OF CIRCUITS (SEE GENERAL NOTE 4).
- DENOTES SECTION NO. OR DETAIL LETTER
  DENOTES SHEET NO. ON WHICH SECTIONS OR DETAIL IS EITHER SHOWN AND/OR TAKEN
- C–506 CONDUIT NUMBER FOR WIRING – SEE SCHEDULE
- A.F.F. ABOVE FINISHED FLOOR
- W DENOTES WATERTIGHT EQUIPMENT
- WP DENOTES WEATHERPROOF EQUIPMENT
- XP DENOTES EXPLOSIONPROOF EQUIPMENT
- SV SOLENOID VALVE
- CWS CONDUIT WALL ENTRANCE SEAL
- EWC ELECTRIC WATER COOLER
- P.B. PULL BOX
  CTB = CONTROL WIRING TERMINAL BOX
  STB = SIGNAL WIRING TERMINAL BOX

FIRE ALARM SYSTEM

- FA FIRE ALARM CONTROL PANEL
- FAA FIRE ALARM ANNUNCIATOR PANEL
- FB 6" FIRE ALARM BELL, NUMBER DENOTES SIZE
- F MANUAL FIRE ALARM STATION
- F MANUAL FIRE ALARM STATION AND ALARM BELL
- F FIRE ALARM DISCONNECT SWITCH
- F FIRE ALARM HORN
- F FIRE DETECTOR
- SD SMOKE DETECTOR
- HD HEAT DETECTOR

INTERCOM SYSTEM

- IW INTERCOM TELEPHONE WALL OUTLET
- D DESK TYPE
  IW WALL MOUNTED
- TRUMPET TYPE LOUDSPEAKER, WALL MOUNTED
- TRUMPET, BI–DIRECTIONAL TYPE LOUDSPEAKER, WALL MOUNTED
- TERMINAL BOX
- H HORN

SECURITY SYSTEM

- BL DOOR LOOCK
- DS DOOR ALARM DOOR SWITCH
- KS DOOR ALARM KEY BYPASS SWITCH
- KP KEY PAD
- CR CARD READER
- CS CARD SENSOR
- MD MOTION DETECTOR
- SSCP SECURITY SYSTEM CONTROL PANEL

FOR SINGLE LINE DIAGRAM AND PLAN VIEW CONTROL DEVICES

SL	STOP–PUSHBUTTON, MOMENTARY–CONTACT TYPE WITH LOCKOUT LATCH
SS	START–STOP PUSHBUTTON, MOMENTARY–CONTACT TYPE
SSL	START–STOP PUSHBUTTON, MOMENTARY–CONTACT TYPE WITH LOCKOUT LATCH
SSI	START–STOP PUSHBUTTON, MOMENTARY–CONTACT TYPE WITH RED (RUN) AND GREEN (OFF) INDICATING LIGHTS
SF	SLOW–FAST PUSHBUTTON, MOMENTARY–CONTACT TYPE
SFS	SLOW–FAST–STOP PUSHBUTTON, MOMENTARY–CONTACT TYPE
SC	SPEED CONTROLLER
JOC	JOG–OPEN–CLOSE PUSHBUTTON, MOMENTARY–CONTACT TYPE
JSSL	JOG–START–STOP PUSHBUTTON, MOMENTARY–CONTACT TYPE WITH LOCKOUT SWITCH
JSL	JOG–STOP PUSHBUTTON, WITH LOCKOUT
FSR	FORWARD–STOP–REVERSE PUSHBUTTON, MOMENTARY–CONTACT TYPE
FSRL	FORWARD–STOP–REVERSE PUSHBUTTON, MOMENTARY–CONTACT TYPE WITH LOCKOUT LATCH
FOH	FAN–OF–HEATER SELECTOR SWITCH
RTM	RUNNING TIME METER
HOA	HAND–OFF–AUTOMATIC SELECTOR SWITCH
LR	LOCAL–REMOTE SELECTOR SWITCH
LOR	LOCAL–OFF–REMOTE SELECTOR SWITCH
OC	OPEN–CLOSE SWITCH
OCA	OPEN–CLOSE–AUTO SELECTOR SWITCH
OSC	OPEN–STOP–CLOSE PUSHBUTTON
SSM	START–STOP PUSHBUTTON, MAINTAINED–CONTACT TYPE
ES	EMERGENCY STOP SWITCH
FS	FLOAT SWITCH
TS	TIME SWITCH
LS	LIMIT SWITCH
PS	PRESSURE SWITCH
SV	SOLENOID VALVE
VPS	VACUUM PRESSURE SWITCH
TQ	TORQUE ALARM SWITCH
PHL	PHOTOELECTRIC SWITCH
PE	PNEUMATIC ELECTRIC
T	THERMOSTAT
HWT	HIGH WATER TEMPERATURE SWITCH
SQ	SEQUENCE SELECTOR SWITCH
SEL	SELECTOR SWITCH
BTD	BEARING TEMPERATURE DETECTOR
BTS	BEARING TEMPERATURE SWITCH
CV	CONE VALVE
EOV	ELECTRICALLY OPERATED VALVE
EUH	ELECTRIC UNIT HEATER
FC	FLOW CONTROLLER
FE	FLOW ELEMENT
FIT	FLOW INDICATING TRANSMITTER
FT	FLOW TRANSMITTER
LC	LEVEL CONTROLLER
LE	LEVEL ELEMENT
LI	LEVEL INDICATOR
LIT	LEVEL INDICATING TRANSMITTER
LLS	LOW LEVEL SHUTDOWN
LT	LEVEL TRANSMITTER
MCC	MOTOR CONTROL CENTER
MSD	MOISTURE SENSING DETECTION PANEL
MTP	MOTOR THERMAL PROTECTOR (BUILT–IN)
MOV	MOTOR OPERATED VALVE
RB	RESET BUTTON
SI	SPEED INDICATOR
SCR	SILICON CONTROL RECTIFIER
SWSV	SEAL WATER SOLENOID VALVE
TI	TIMER
HOS	HAND–OFF–STANDBY SELECTOR SWITCH
MHC	MECHANICALLY HELD LIGHTING CONTACTOR
SH	SPACE HEATER

FOR SINGLE LINE DIAGRAMS

- 100/15 MOLDED CASE CIRCUIT BREAKER, THERMAL MAGNETIC TRIP, WITH CURRENT LIMITING FUSES, 3–POLE UNLESS OTHERWISE NOTED. UPPER NUMERAL INDICATES FRAME SIZE, LOWER NUMERAL INDICATES TRIP SETTING.
- 100/15 MOLDED CASE CIRCUIT BREAKER, THERMAL MAGNETIC TRIP, 3–POLE UNLESS OTHERWISE NOTED. UPPER NUMERAL INDICATES FRAME SIZE. LOWER NUMERAL INDICATES TRIP SETTING.
- MCP/7 MOTOR CIRCUIT PROTECTOR. NUMERAL INDICATES CONTINUOUS CURRENT RATING. MCPL = WITH CURRENT LIMITING FUSES.
- E 1600/800 LOW VOLTAGE POWER CIRCUIT BREAKER, DRAWOUT TYPE, MANUALLY OR ELECTRICALLY OPERATED WITH STATIC TRIP DEVICES AND GROUND SENSOR. UPPER NUMERAL INDICATES FRAME SIZE, LOWER NUMERAL INDICATES TRIP SETTING. "E" INDICATES ELECTRICALLY OPERATED.
- 100 UNFUSED DISCONNECT SWITCH. NUMERAL DENOTES AMPERE RATING.
- 100/70 FUSED DISCONNECT SWITCH, 3–POLE UNLESS OTHERWISE NOTED. UPPER NUMERAL INDICATES FUSE CLIP AMPERE SIZE. LOWER NUMERAL INDICATES FUSE RATING.
- 3 CT = CURRENT TRANSFORMER, NUMERAL DENOTES QUANTITY.
- 2PT PT = POTENTIAL TRANSFORMER, DRAWOUT TYPE
  NUMERAL DENOTES QUANTITY.
  CPT = CONTROL POWER TRANSFORMER, DRAWOUT TYPE WITH FUSE.
- 2PT PT = POTENTIAL TRANSFORMER, NUMERAL DENOTES QUANTITY.
  CPT = CONTROL POWER TRANSFORMER WITH FUSE.
- FUSED DISCONNECT SWITCH DRAWOUT TYPE
- TRANSFORMER, SIZE AS NOTED

MAGNETIC STARTER

FVNR 1a 1b 2

- FVNR = FULL VOLTAGE, NON–REVERSING
- FVR = FULL VOLTAGE, REVERSING
- FVTS = FULL VOLTAGE TWO SPEED
- RVNR = REDUCED VOLTAGE, NON–REVERSING AUTO–TRANSFORMER TYPE
- PW = PART WINDING
- C = MAGNETIC CONTACTOR (WITHOUT OL.)
- AUXILIARY CONTACTS: 1a = ONE NORMALLY OPEN, 1b = ONE NORMALLY CLOSED
- NUMERAL INDICATES NEMA SIZE

- 100 SINCHRONOUS MOTOR. NUMERAL DENOTES HORSEPOWER.
- 5 SQUIRREL CAGE INDUCTION MOTOR. NUMERAL DENOTES HORSEPOWER.
- 500 WOUND ROTOR INDUCTION MOTOR. NUMERAL DENOTES HORSEPOWER. SC=SECONDARY CONTROL
- A

A = AMMETER	RT = RUNNING TIME METER
V = VOLTMETER	TA = TACHOMETER
W = WATTMETER	TG = TACHOMETER GENERATOR
WH = WATTHOUR METER	PF = POWER FACTOR METER
D = DEMAND METER	VAR = VARMETER
EX = EXCITER	VR = VOLTAGE REGULATOR
F = FREQUENCY METER	KWH = KILOWATTHOUR METER

- CLF FUSE–CLF DENOTES CURRENT LIMITING TYPE
- R INDICATING LIGHTS:
  R=RED, B=BLUE, G=GREEN, A=AMBER
- ELECTRIC UNIT HEATER
  KW RATING AS NOTED
- ---E--- ELECTRICALLY INTERLOCKED
- ---K--- MECHANICALLY INTERLOCKED
- NORMALLY OPEN CONTACT (DEENERGIZED POSITION)
- NORMALLY CLOSED CONTACT (DEENERGIZED POSITION)
- ATS AUTOMATIC TRANSFER SWITCH
- AL ALARM
- AN ANNUNCIATOR
- CR CONTROL RELAY
- TD TIME DELAY RELAY
- OL'S MOTOR OVERLOADS
- MCP MOTOR CIRCUIT PROTECTOR
- GFO GRINDER FAILURE OVERRIDE
- SPF SHEAR PIN FAILURE
- VS VOLTMETER SELECTOR SWITCH
- AS AMMETER SELECTOR SWITCH
- TS TEST BLOCK
- SURGE PROTECTIVE EQUIPMENT
- 3 LIGHTNING ARRESTER, NUMERAL DENOTES QUANTITY
- 52 HIGH VOLTAGE POWER CIRCUIT BREAKER, DRAWOUT TYPES, ELECTRICALLY OPERATED, STORED–ENERGY TYPE, 125 VOLT D.C. CLOSE AND TRIP.
- GF GROUND FAULT PROTECTION

GENERAL NOTES

1. ALL CONDUIT AND EQUIPMENT SHALL BE INSTALLED AND GROUNDED IN ACCORDANCE WITH THE LATEST RULES AND REGULATIONS OF THE NATIONAL ELECTRICAL CODE AND APPLICABLE LOCAL CODES.
2. CONDUIT RUNS ARE SHOWN DIAGRAMMATICALLY ONLY AND SHALL BE INSTALLED IN A MANNER TO PREVENT CONFLICTS WITH EQUIPMENT AND STRUCTURAL CONDITIONS. EXPOSED CONDUITS SHALL BE INSTALLED PARALLEL TO BEAMS AND WALLS.
3. CONDUITS SHALL BE TERMINATED SO AS TO PERMIT NEAT CONNECTIONS TO MOTORS AND OTHER EQUIPMENT.
4. NO CONDUIT SMALLER THEN 3/4" PIPE SIZE NOR WIRE SMALLER THAN NO.12 A.W.G. SHALL BE USED UNLESS OTHERWISE NOTED.
5. THE WIRING DIAGRAMS, QUANTITY AND SIZE OF WIRES AND CONDUIT REPRESENT A SUGGESTED ARRANGEMENT BASED UPON SELECTED STANDARD COMPONENTS OF ELECTRICAL EQUIPMENT. MODIFICATIONS ACCEPTABLE TO THE ENGINEER MAY BE MADE BY THE CONTRACTOR TO ACCOMMODATE EQUIPMENT ACTUALLY PURCHASED. THE BASIC SEQUENCE AND METHOD OF CONTROL MUST BE MAINTAINED AS INDICATED ON THE DRAWINGS AND/OR SPECIFICATIONS.
6. SWITCHES SHALL BE MOUNTED 4'–6" ABOVE FINISHED FLOOR, UNLESS OTHERWISE NOTED. RECEPTACLES SHALL BE MOUNTED 4'–0" ABOVE FINISHED FLOOR UNLESS OTHERWISE NOTED, EXCEPT RECEPTACLES IN OFFICES OR AREAS WITH HUNG CEILINGS SHALL BE MOUNTED 1'–6" ABOVE FINISHED FLOOR UNLESS OTHERWISE NOTED.
7. ALL SURFACE MOUNTED PANELS AND PANELBOARDS ON THE INSIDE OF THE EXTERIOR WALLS ABOVE GRADE, OR IN OTHER LOCATIONS CONSIDERED AS DAMP, SHALL BE MOUNTED SO AS TO MAINTAIN A 1/4" AIR SPACE BETWEEN THE ENCLOSURE AND THE WALL.
8. ALL PANELBOARDS SHALL BE MOUNTED SO THAT THE DISTANCE FROM THE TOP CIRCUIT BREAKER OPERATING HANDLE TO THE FLOOR SHALL NOT EXCEED 6'–6".
9. LIGHTING FIXTURES SHALL BE MOUNTED ACCORDING TO THE MOUNTING HEIGHT GIVEN ON THE DRAWINGS, WITH THE DISTANCE BEING MEASURED FROM THE BOTTOM OF THE LIGHTING FIXTURE TO THE FINISHED FLOOR.
10. CONDUIT AND WIRE (NOT SHOWN) FOR THE HVAC CONTROL EQUIPMENT AND MISCELLANEOUS DEVICES SHALL BE FURNISHED AND INSTALLED UNDER OTHER SECTIONS OF THE SPECIFICATIONS AND SHALL BE:
    a. 3/4" (MIN.) STEEL CONDUIT.
    b. NO.12 COPPER WIRE (SEE SPECIFICATIONS). QUANTITY OF WIRES AS REQUIRED.
11. CONDUIT AND WIRE (NOT SHOWN) FOR THE LIGHTING FIXTURES, SWITCHES AND/OR RECEPTACLES SHALL BE FURNISHED AND INSTALLED BY THE ELECTRICAL CONTRACTOR AND SHALL BE:
    a. 3/4" (MIN.) RIGID STEEL CONDUIT RUN.
        1. EXPOSED IN UNFINISHED AREAS.
        2. CONCEALED ABOVE HUNG CEILINGS AND IN WALLS IN FINISHED AREAS.
    b. NO.12 COPPER WIRE (MIN.) TYPE "THW". QUANTITY OF WIRES AS REQUIRED.
12. OUTLET, SWITCH, JUNCTION, PULL AND TERMINAL BOXES SHALL BE PROVIDED WITH NEMA ENCLOSURES AS INDICATED IN THE SPECIFICATIONS.
13. ALL CONDUIT RUNS CROSSING EXPANSION JOINTS SHALL HAVE EXPANSION OR EXPANSION AND DEFLECTION TYPE FITTINGS AS REQUIRED. FOR EXACT LOCATIONS OF EXPANSION JOINTS SEE STRUCTURAL DRAWINGS.
14. SWITCHGEAR AND MCC COMPARTMENT DESIGNATIONS AS INDICATED BELOW:
    BLANK – NOT INTENDED FOR USE–PLATE ONLY
    SPACE – CONTAINS NECESSARY BUS AND HARDWARE FOR FUTURE ADDITION OF BREAKERS OR STARTERS WITHEN SIZE RANGE SHOWN.
    SPARE – CONTAINS A COMPLETE BREAKER OR STARTER INSTALLED, SIZE AS INDICATED, AVAILABLE FOR FUTURE USE.
15. ALL MOTOR STARTER CONTROL TRANSFORMERS SHALL BE SIZED TO PROVIDE SUFFICIENT VOLT–AMPERE CAPACITY FOR OPERATING ALL ELECTRICAL DEVICES ASSOCIATED WITH CONTROL OF THE MOTOR; IN ADDITION TO THE STARTER COIL, IT SHALL INCLUDE RELAYS, TIMERS, MOTOR HEATERS, INDICATING LIGHTS, ETC.
16. DUCTLINE CONDUIT SIZES ARE GIVEN IN THE DUCTLINE SECTIONS WHERE THE SAME CONDUIT NUMBER IS USED BOTH IN THE DUCTLINE AND IN THE BUILDING. THE CONDUIT SIZE GIVEN IN THE CONDUIT SCHEDULE APPLIES TO THE CONDUIT IN THE BUILDING ONLY.
17. ALL UNDERGROUND CONDUIT SHALL BE ENCASED IN CONCRETE AS SPECIFIED AND SHOWN ON SHT. E–40 UNLESS OTHERWISE INDICATED.
18. FOR EXPLANATION OF INSTRUMENTATION SYMBOLS SHOWN ON ELECTRICAL DRAWINGS, SEE INSTRUMENTATION LEGEND AND NOTES SHEET.

DEPARTMENT OF PUBLIC WORKS
HOWARD COUNTY, MARYLAND

DIRECTOR OF PUBLIC WORKS — DATE 5/7/96
CHIEF, BUREAU OF ENGINEERING — DATE 5/7/96
CHIEF, BUREAU OF ENVIRONMENTAL SERVICES — DATE 5/7/96
CHIEF, UTILITY DESIGN DIVISION — DATE 5-7-96

M&E Metcalf & Eddy
REQ. PROF. ENGR. — DATE 5-7-96

STATE OF MARYLAND — JONATHAN WINTHROP DONNE No. 15140 — REGISTERED PROFESSIONAL ENGINEER

DES:				
DRN: M.J.C.				
CHK: J.E.H.				
DATE:	M.J.C.	1	RECORD DRAWING	4/3/95
	BY	NO.	REVISION	DATE

ELECRTICAL

LEGEND, SYMBOLS & GENERAL NOTES

LITTLE PATUXENT WASTEWATER TREATMENT PLANT
LITTLE PATUXENT WASTEWATER TREATMENT PLANT EXPANSION
ADDITION NO. 5
CAPITAL PROJECT S-6153
CONTRACT NO. 20-3082
HOWARD COUNTY, MARYLAND

SCALE AS SHOWN
SHEET 186 OF 226
E-1R

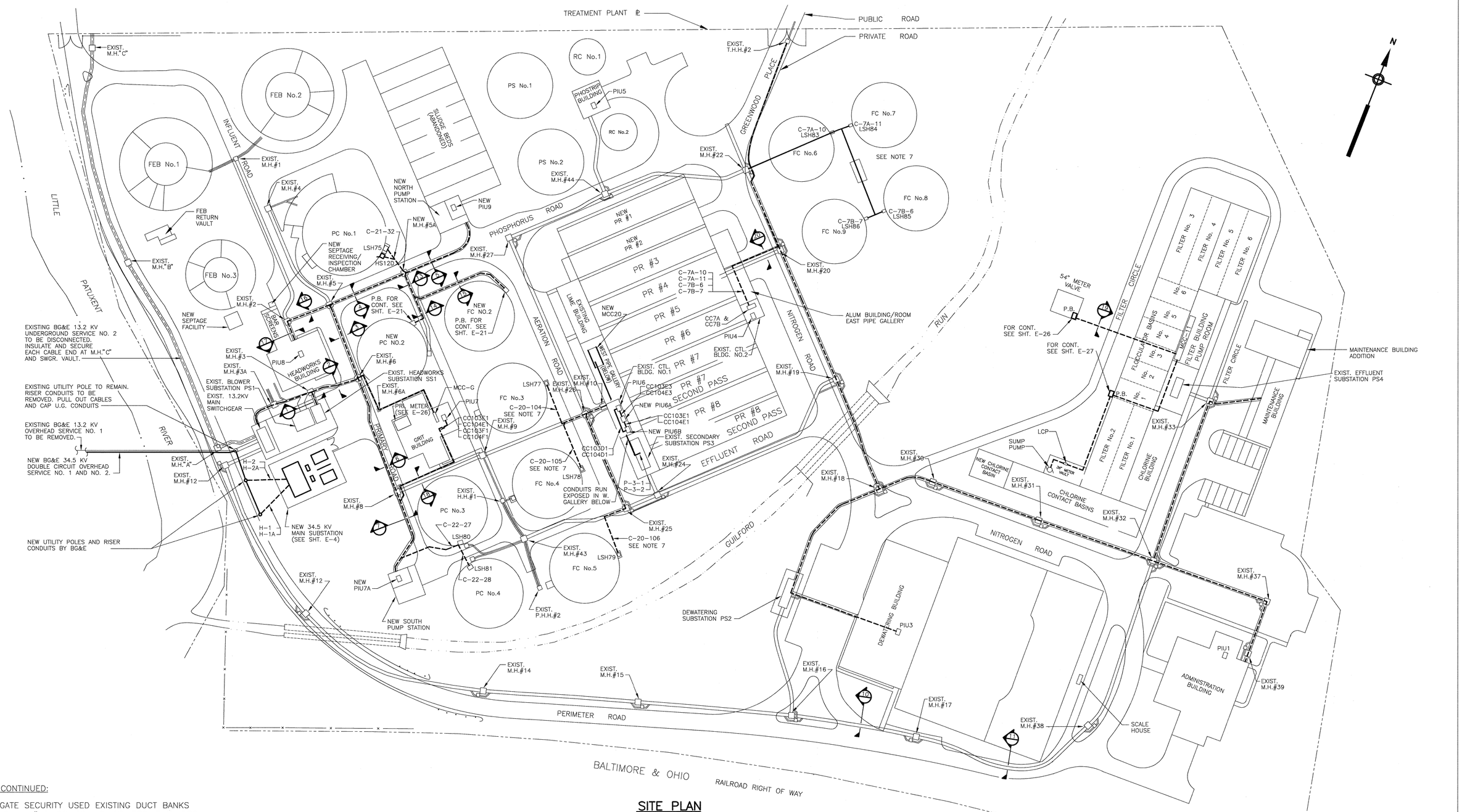

SITE PLAN

SCALE: 1"=60'-0"

NOTES CONTINUED:

5. NEW GATE SECURITY USED EXISTING DUCT BANKS THROUGH MH# 2, 22, 20, 19, 18, PS2, PIV3, PS2, 18, 30, 31, 32, 37, 39.
6. NEW MAIN BUILDING SECURITY AND FIRE PROTECTION USED EXISTING DUCT BANKS THROUGH MH# 33, 32, 37, 39.
7. CONDUITS C-7A-10,11 AND C-7B-6,7 AND C-20-104, 105, 106 WERE DELETED. EXISTING CONDUIT WAS USED.
8. DIGESTERS, GRAVITY THICKENERS, MCC-18, PS5 WERE DELETED FROM CONTRACT.

NOTES:

1. FOR GENERAL NOTES AND SYMBOLS SEE SHT. E-1.
2. FOR CONDUIT AND WIRE SCHEDULE SEE SHT. E-37, E-38 & E-39.
3. FOR DUCT BANK SECTIONS SEE SHT. E-40.
4. NPS & SPS TEL. WIRES(T-21-37,T-22-31) TERMINATE AT THE TEL. BOX IN THE 13.2 KV SUBSTATION. THE WIRES USE EXISTING DUCT BANKS THROUGH MH# 3, 3A.

DEPARTMENT OF PUBLIC WORKS
HOWARD COUNTY, MARYLAND

DIRECTOR OF PUBLIC WORKS — DATE 5/7/96
CHIEF, BUREAU OF ENGINEERING — DATE 5/7/96
CHIEF, BUREAU OF ENVIRONMENTAL SERVICES — DATE 5/7/96
CHIEF, UTILITY DESIGN DIVISION — DATE 5-7-96

M&E Metcalf & Eddy
REG. PROF. ENGR. — DATE 5-7-96

STATE OF MARYLAND — JONATHAN WINTHROP DOANE No. 15140 — REGISTERED PROFESSIONAL ENGINEER

DES:				
DRN:				
CHK:				
DATE:	M.J.C.	1	RECORD DRAWING	4/3/95
	BY	NO.	REVISION	DATE

ELECTRICAL

SITE PLAN

LITTLE PATUXENT WASTEWATER TREATMENT PLANT

LITTLE PATUXENT WASTEWATER TREATMENT PLANT EXPANSION
ADDITION NO. 5
CAPITAL PROJECT S-6153

CONTRACT NO. 20-3082
HOWARD COUNTY, MARYLAND

SCALE AS SHOWN

SHEET 187 OF 226

E-2R

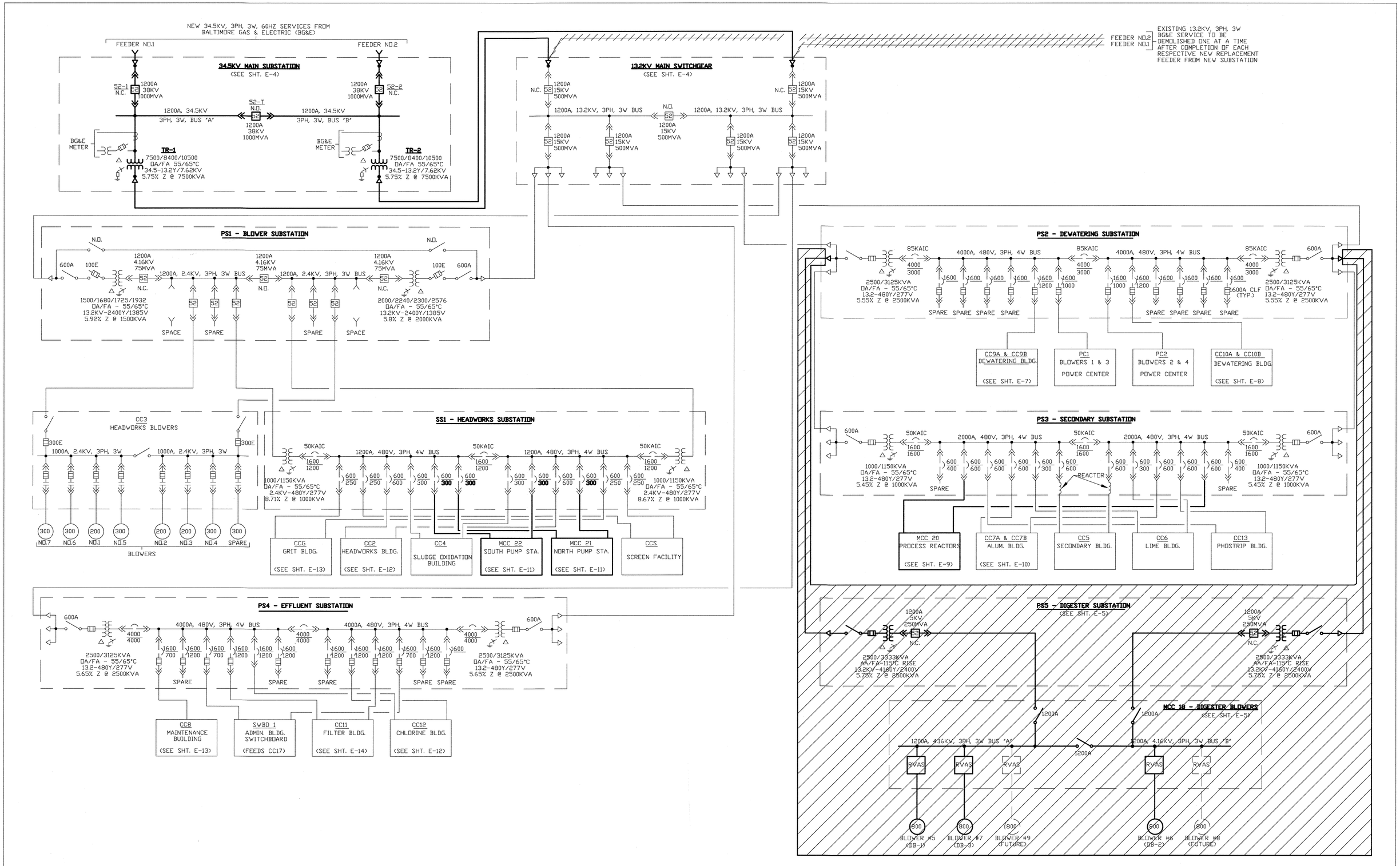

DEPARTMENT OF PUBLIC WORKS
HOWARD COUNTY, MARYLAND

DIRECTOR OF PUBLIC WORKS — DATE 5/7/96
CHIEF, BUREAU OF ENGINEERING — DATE 5/7/96
CHIEF, BUREAU OF ENVIRONMENTAL SERVICES — DATE 5/7/96
CHIEF, UTILITY DESIGN DIVISION — DATE 5-7-96

M&E Metcalf & Eddy
REG. PROF. ENGR. — DATE 5-7-96

STATE OF MARYLAND — JONATHAN WINTHROP DOANE No. 15140 — REGISTERED PROFESSIONAL ENGINEER

	BY	NO.	REVISION	DATE
DES:				
DRN:				
CHK:				
DATE:	M.J.C.	1	RECORD DRAWING	4/2/95

ELECTRICAL

PLANT ONE LINE DIAGRAM

LITTLE PATUXENT WASTEWATER TREATMENT PLANT
LITTLE PATUXENT WASTEWATER TREATMENT PLANT EXPANSION
ADDITION NO. 5
CAPITAL PROJECT S-6153
CONTRACT NO. 20-3082
HOWARD COUNTY, MARYLAND

SCALE AS SHOWN

SHEET 188 OF 226

E-3R

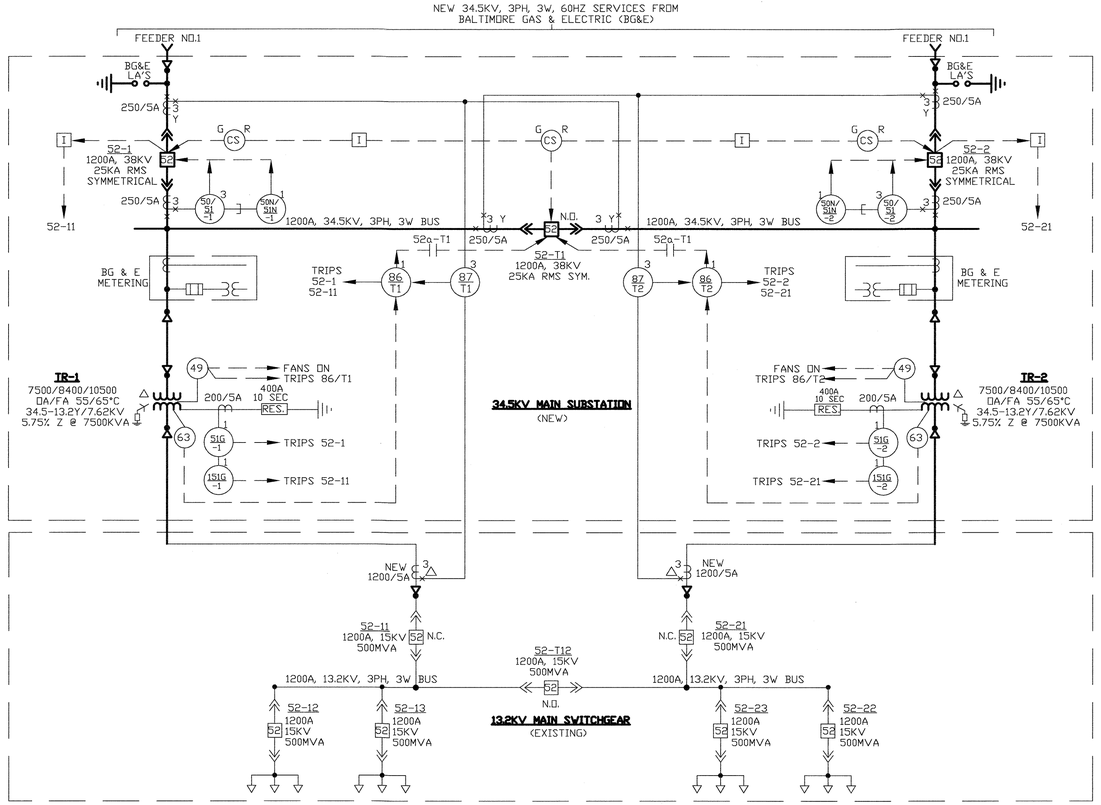

MAIN ONE LINE DIAGRAM

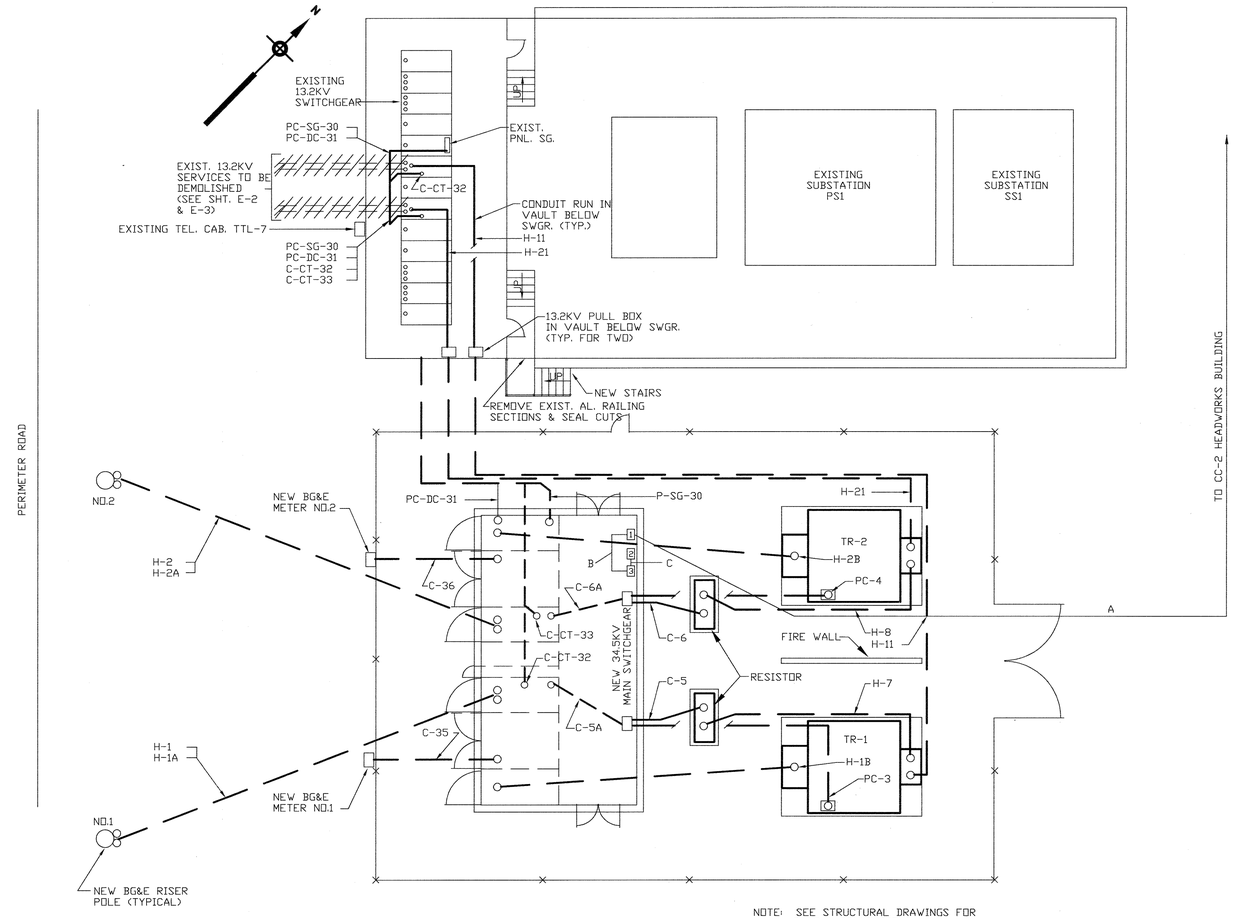

NOTE: SEE STRUCTURAL DRAWINGS FOR PADS & FOUNDATIONS.

EXISTING AND NEW MAIN SUBSTATIONS
SCALE: 1"=10'-0"

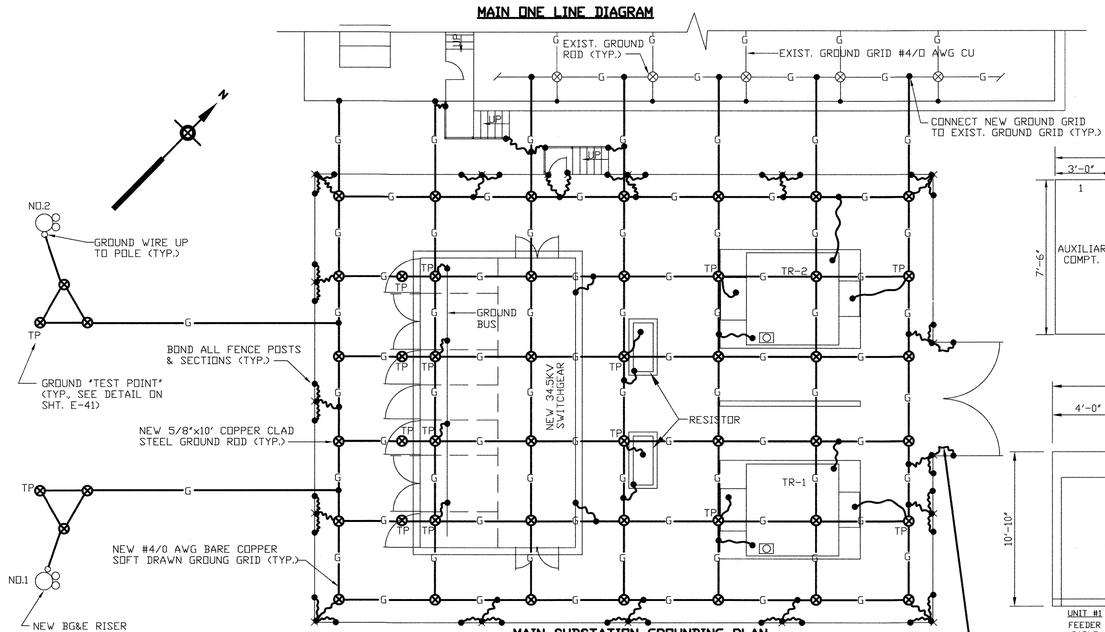

MAIN SUBSTATION GROUNDING PLAN
SCALE: 1"=10'-0"

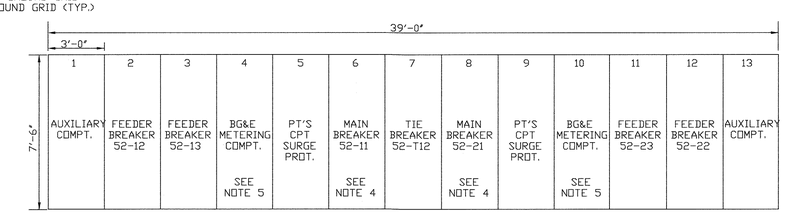

FRONT ELEVATION - EXISTING 13.2KV MAIN SWITCHGEAR
INDOOR ENCLOSURE ONLY - NO SCALE

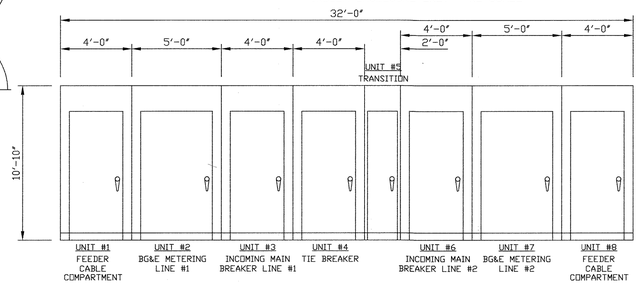

FRONT ELEVATION - NEW 34.5KV MAIN SWITCHGEAR
SEE NOTE 3, OUTDOOR ENCLOSURE NOT SHOWN - NO SCALE

CONDUITS:

A - 2" C 3-#3/0 CCZ TO 480 V PNL
1-#2
B - 1" C 3-#4 480 V PNL TO XFRM
1-#8
C - 2" C 3-#3/0 XFRM TO 240/120 PNL
1-#2
PC - DC-31 SPARE

NOTES:

1. FOR GENERAL NOTES AND SYMBOLS SEE SHT. E-1.
2. FOR CONDUIT AND WIRE SCHEDULE SEE SHT. E-39.
3. DIMENSIONS & ARRANGEMENT SHOWN ARE APPROXIMATE AND MAY BE SLIGHTLY MODIFIED, WITH ENGINEER'S & BG&E'S PRIOR APPROVALS, BASED ON MANUFACTURER'S STANDARDS.
4. REMOVE EXISTING BG&E SERVICE & CONNECT NEW CABLES FROM NEW SUBSTATION. FURNISH & INSTALL THREE NEW 1200/5A CURRENT TRANSFORMERS FOR EACH MAIN BREAKER AS SHOWN ON ONE LINE DIAGRAM.
5. REMOVE EXISTING CT'S & PT'S AND RETURN TO BG&E. PROVIDE NEW BUS LINKS & INSULATION TO MATCH EXISTING METAL CLAD DESIGN. REMOVE ALSO EXISTING BG&E WATTHOUR METERS (NOT SHOWN) & RETURN TO BG&E.
6. TELEPHONE CONDUIT T-1,T-2 WERE DELETED.

DEPARTMENT OF PUBLIC WORKS
HOWARD COUNTY, MARYLAND

DIRECTOR OF PUBLIC WORKS — DATE 5/7/96
CHIEF, BUREAU OF ENGINEERING — DATE 5/7/96
CHIEF, BUREAU OF ENVIRONMENTAL SERVICES — DATE 5/7/96
CHIEF, UTILITY DESIGN DIVISION — DATE 5-7-96

M&E Metcalf & Eddy
REG. PROF. ENGR. — DATE 5-7-96

STATE OF MARYLAND — JONATHAN WINTHROP DOANE No. 15140 — REGISTERED PROFESSIONAL ENGINEER

DES:
DRN:
CHK:
DATE:

BY	NO.	REVISION	DATE
M.J.C.	1	RECORD DRAWING	4/2/95

ELECTRICAL

ONE LINE DIAGRAM
34.5KV MAIN SUBSTATION

LITTLE PATUXENT WASTEWATER TREATMENT PLANT
LITTLE PATUXENT WASTEWATER TREATMENT PLANT EXPANSION
ADDITION NO. 5
CAPITAL PROJECT S-6153
CONTRACT NO. 20-3082
HOWARD COUNTY, MARYLAND

SCALE AS SHOWN
SHEET 189 OF 226
E-4R

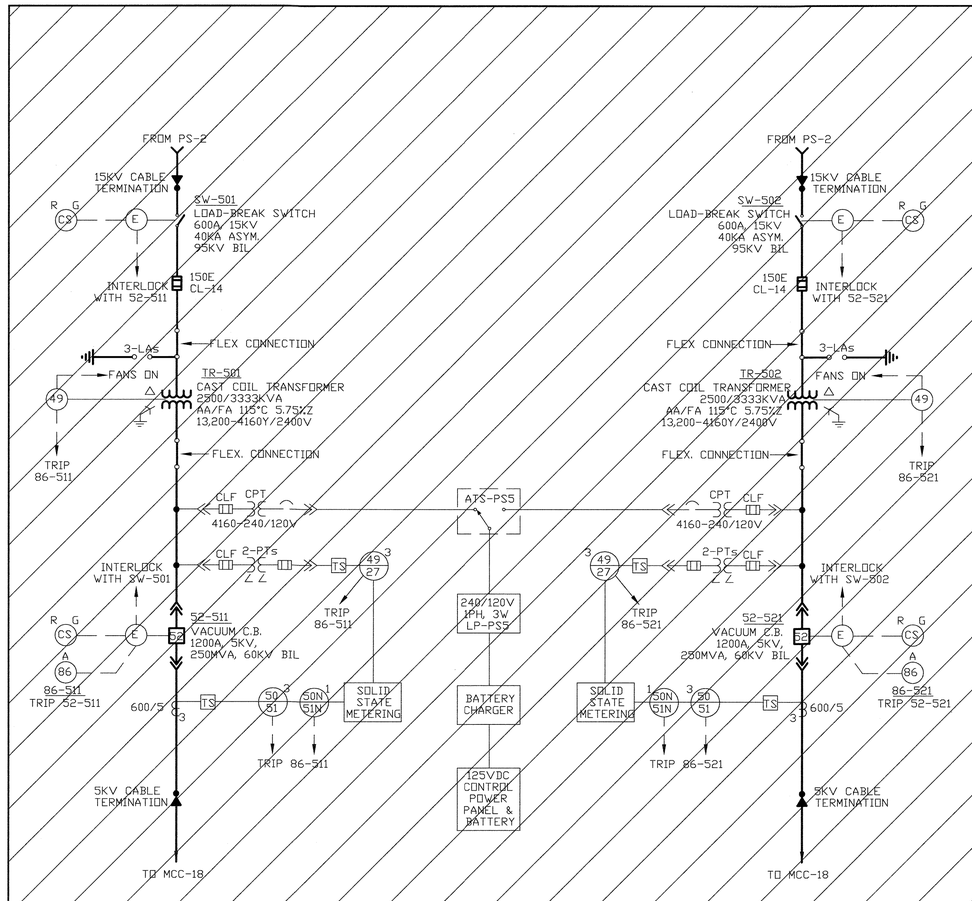

ONE LINE DIAGRAM

SCALE: NONE

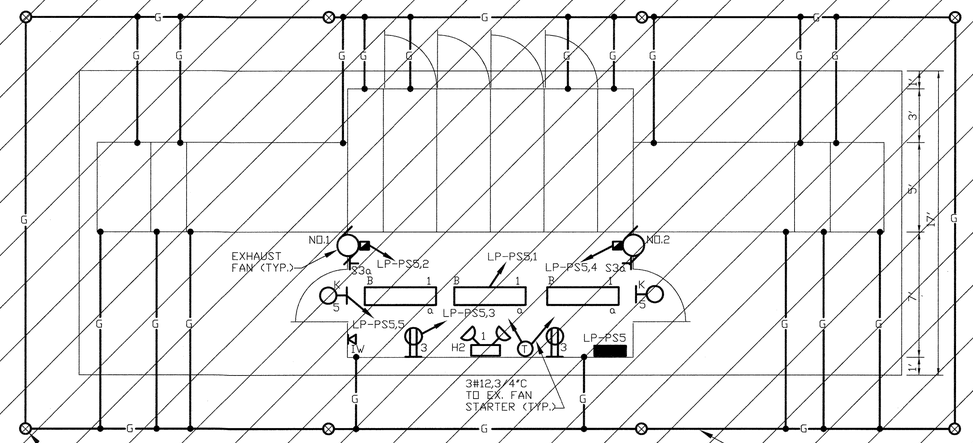

PLAN

SCALE: 1/4"=1'-0"

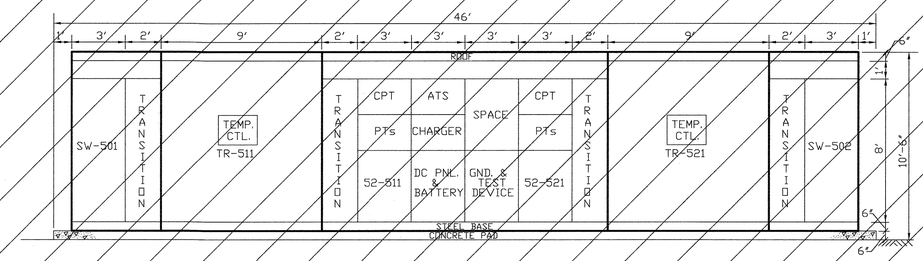

ELEVATION (AISLE REMOVED)

SCALE: 1/4"=1'-0"

DELETED FROM CONTRACT

NOTES:

1. FOR GENERAL NOTES AND SYMBOLS SEE SHT. E-1.

DEPARTMENT OF PUBLIC WORKS
HOWARD COUNTY, MARYLAND

DIRECTOR OF PUBLIC WORKS — DATE 5/7/96
CHIEF, BUREAU OF ENGINEERING — DATE 5/7/96
CHIEF, BUREAU OF ENVIRONMENTAL SERVICES — DATE 5/7/96
CHIEF, UTILITY DESIGN DIVISION — DATE 5-7-96

M&E Metcalf & Eddy
REG. PROF. ENGR. — DATE 5-7-96

STATE OF MARYLAND — JONATHAN WINTHROP DOANE No. 15140 — REGISTERED PROFESSIONAL ENGINEER

	BY	NO.	REVISION	DATE
DES:				
DRN:				
CHK:				
DATE:	M.J.C.	1	RECORD DRAWING	4/2/95

ELECTRICAL

ONE LINE DIAGRAM - PS5 - DIGESTER SUBSTATION

LITTLE PATUXENT WASTEWATER TREATMENT PLANT
LITTLE PATUXENT WASTEWATER TREATMENT PLANT EXPANSION
ADDITION NO. 5
CAPITAL PROJECT S-6153
CONTRACT NO. 20-3082
HOWARD COUNTY, MARYLAND

SCALE AS SHOWN
SHEET 190 OF 226
E-5R

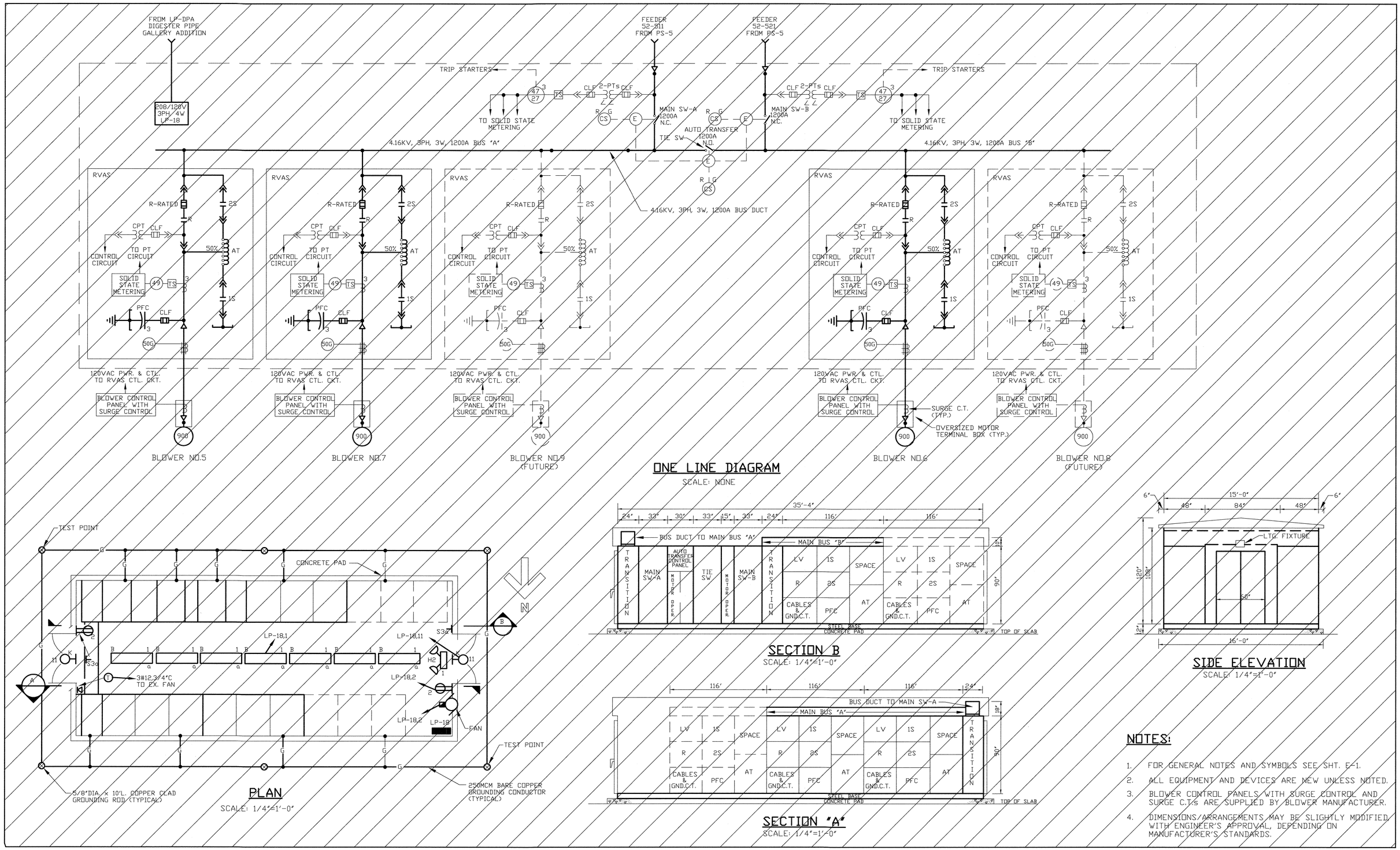

NOTES:

1. FOR GENERAL NOTES AND SYMBOLS SEE SHT. E-1.
2. ALL EQUIPMENT AND DEVICES ARE NEW UNLESS NOTED.
3. BLOWER CONTROL PANELS WITH SURGE CONTROL AND SURGE C.T.s ARE SUPPLIED BY BLOWER MANUFACTURER.
4. DIMENSIONS/ARRANGEMENTS MAY BE SLIGHTLY MODIFIED WITH ENGINEER'S APPROVAL, DEPENDING ON MANUFACTURER'S STANDARDS.

DELETED FROM CONTRACT

DEPARTMENT OF PUBLIC WORKS
HOWARD COUNTY, MARYLAND

DIRECTOR OF PUBLIC WORKS — DATE 5/7/96
CHIEF, BUREAU OF ENGINEERING — DATE 5/7/96
CHIEF, BUREAU OF ENVIRONMENTAL SERVICES — DATE 5/7/96
CHIEF, UTILITY DESIGN DIVISION — DATE 5-7-96

M&E Metcalf & Eddy

REG. PROF. ENGR. — DATE 5-7-96

STATE OF MARYLAND — JONATHAN WINTHROP DOANE No. 15140 — REGISTERED PROFESSIONAL ENGINEER

DES:			
DRN:			
CHK:			
DATE:	M.J.C.	1	RECORD DRAWING	4/2/95
	BY	NO.	REVISION	DATE

ELECTRICAL

ONE LINE DIAGRAM - MCC18 -DIGESTER BLOWERS

LITTLE PATUXENT WASTEWATER TREATMENT PLANT

LITTLE PATUXENT WASTEWATER TREATMENT PLANT EXPANSION
ADDITION NO. 5
CAPITAL PROJECT S-6153

CONTRACT NO. 20-3082
HOWARD COUNTY, MARYLAND

SCALE AS SHOWN

SHEET 191 OF 226

E-6R

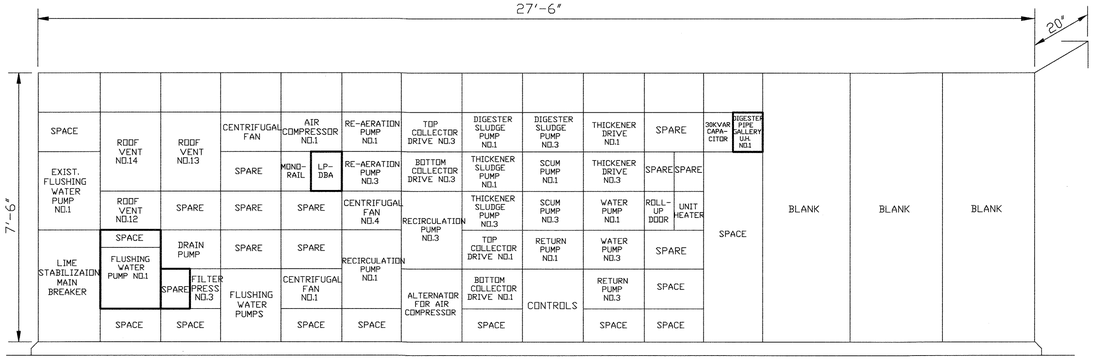

CC9 - REAR ELEVATION

(MCC 9B)

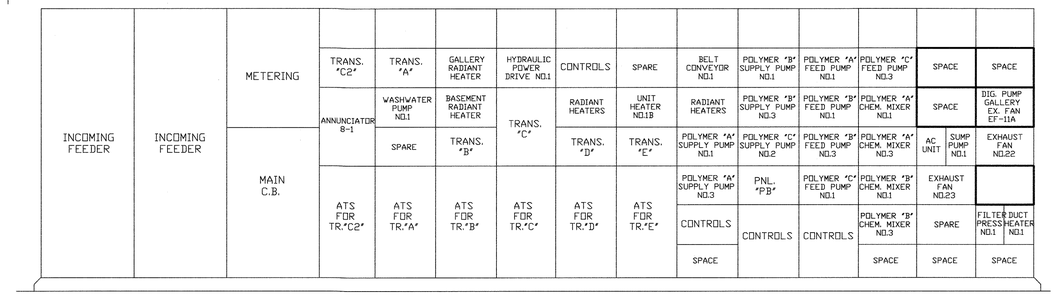

CC9 - FRONT ELEVATION

(MCC 9A)

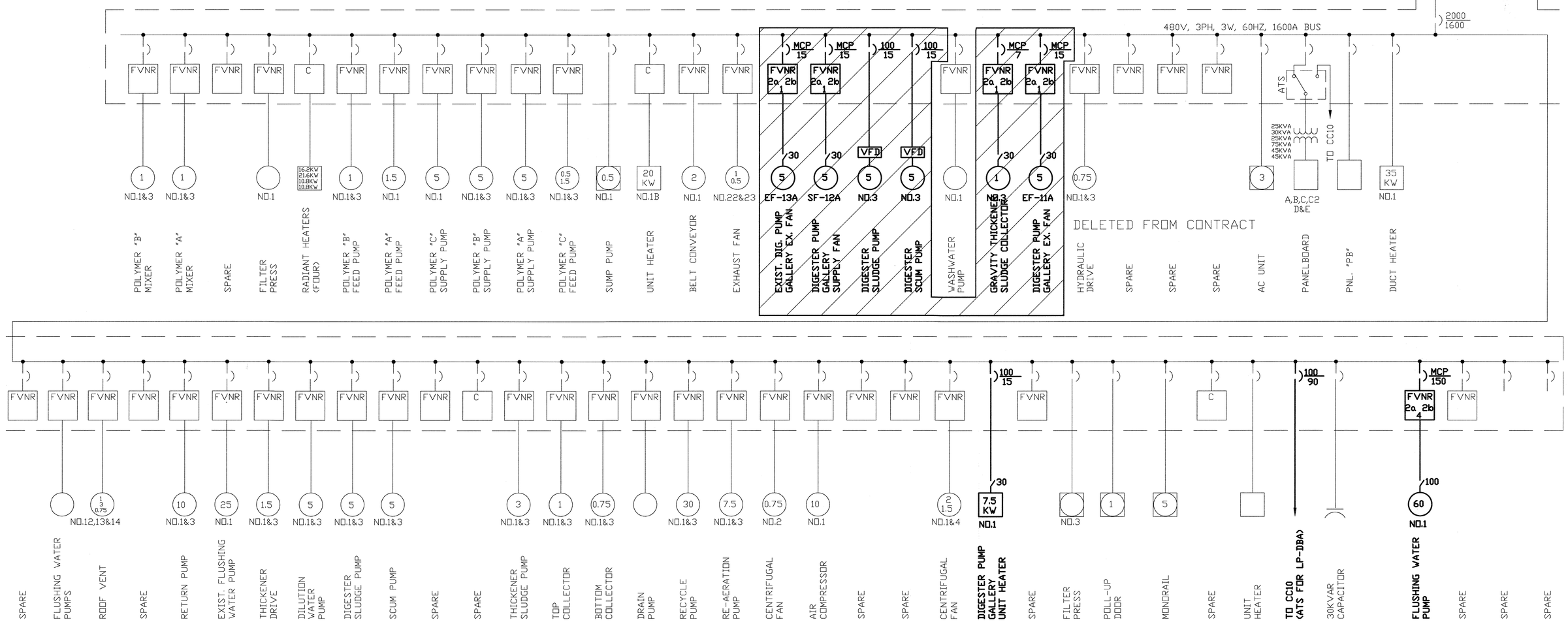

ONE LINE DIAGRAM

DEPARTMENT OF PUBLIC WORKS
HOWARD COUNTY, MARYLAND

DIRECTOR OF PUBLIC WORKS — DATE 5/7/96
CHIEF, BUREAU OF ENGINEERING — DATE 5/7/96
CHIEF, BUREAU OF ENVIRONMENTAL SERVICES — DATE 5/7/96
CHIEF, UTILITY DESIGN DIVISION — DATE 5-7-96

M&E Metcalf & Eddy

REG. PROF. ENGR. — DATE 5-7-96

STATE OF MARYLAND — JONATHAN WINTHROP DOANE No. 15140 — REGISTERED PROFESSIONAL ENGINEER

	BY	NO.	REVISION	DATE
DES:				
DRN:				
CHK:				
DATE:	M.J.C.	1	RECORD DRAWING	4/2/95

ELECTRICAL

ONE LINE DIAGRAM - CC9
-DEWATERING BUILDING

LITTLE PATUXENT WASTEWATER TREATMENT PLANT

LITTLE PATUXENT WASTEWATER TREATMENT PLANT EXPANSION
ADDITION NO. 5
CAPITAL PROJECT S-6153

CONTRACT NO. 20-3082
HOWARD COUNTY, MARYLAND

SCALE AS SHOWN

SHEET 192 OF 226

E-7R

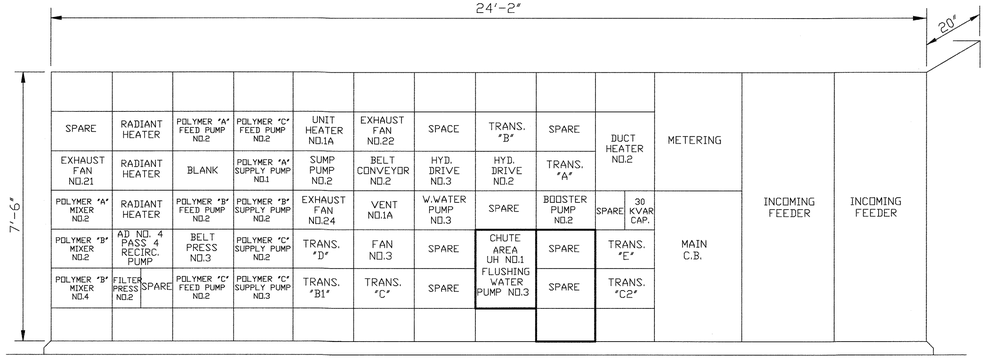

MCC10 - FRONT ELEVATION

(MCC 10A)

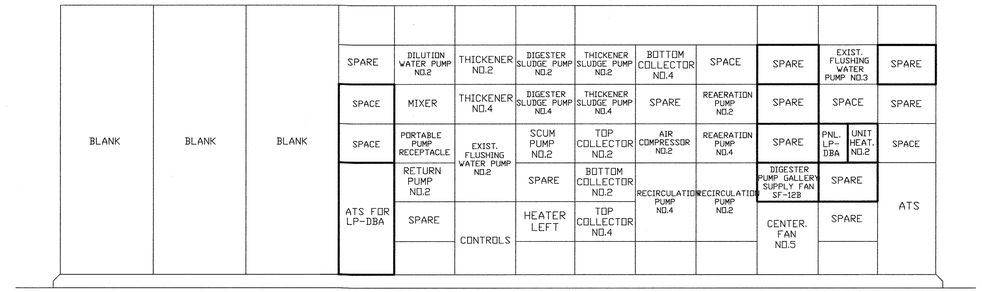

MCC10 - REAR ELEVATION

(MCC 10B)

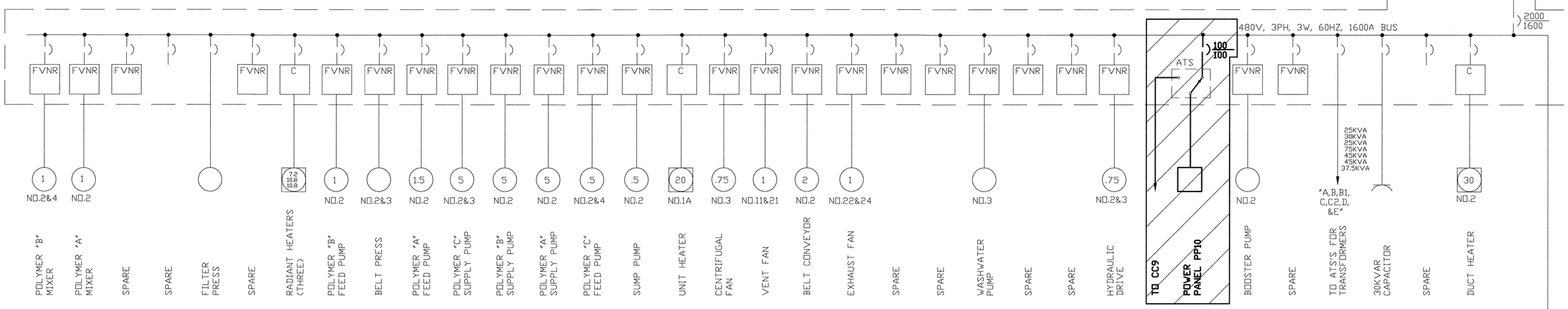

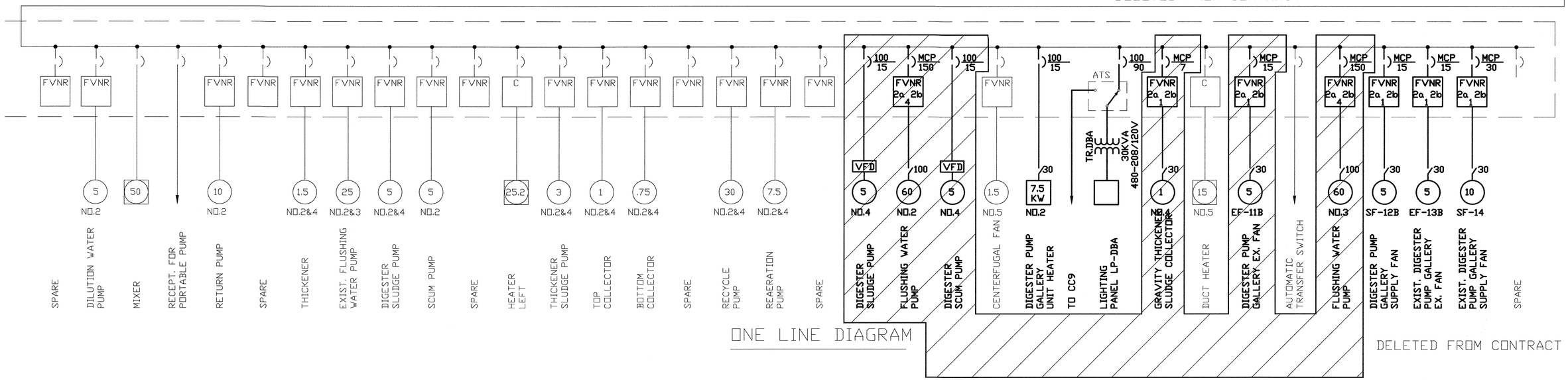

ONE LINE DIAGRAM

DEPARTMENT OF PUBLIC WORKS
HOWARD COUNTY, MARYLAND

DIRECTOR OF PUBLIC WORKS — DATE 5/7/96
CHIEF, BUREAU OF ENGINEERING — DATE 5/7/96
CHIEF, BUREAU OF ENVIRONMENTAL SERVICES — DATE 5/7/96
CHIEF, UTILITY DESIGN DIVISION — DATE 5-7-96

M&E Metcalf & Eddy
REG. PROF. ENGR. — DATE 5-7-96

STATE OF MARYLAND — JONATHAN WINTHROP DOANE No. 15140 — REGISTERED PROFESSIONAL ENGINEER

DES:				
DRN:				
CHK:				
DATE:	M.J.C.	1	RECORD DRAWING	4/2/95
	BY	NO.	REVISION	DATE

ELECTRICAL

ONE LINE DIAGRAM - CC10
-DEWATERING BUILDING

LITTLE PATUXENT WASTEWATER TREATMENT PLANT
LITTLE PATUXENT WASTEWATER TREATMENT PLANT EXPANSION
ADDITION NO. 5
CAPITAL PROJECT S-6153

CONTRACT NO. 20-3082
HOWARD COUNTY, MARYLAND

SCALE AS SHOWN

SHEET 193 OF 226

E-8R

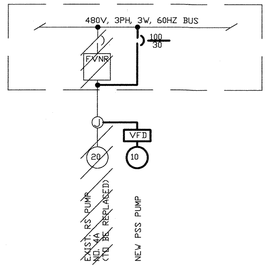

PART OF EXIST. CC6 - ONE LINE DIAGRAM

NONE

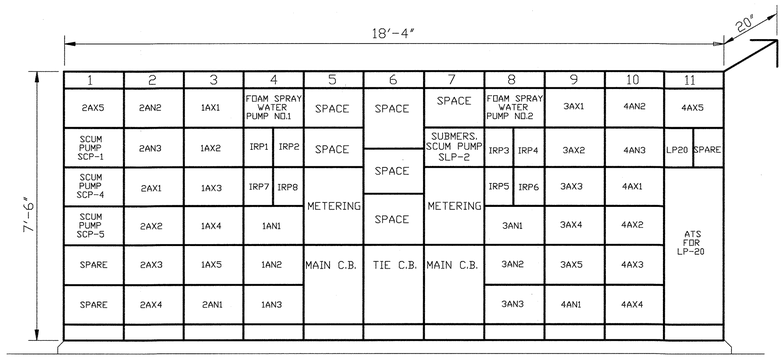

MCC 20 - FRONT ELEVATION

NONE

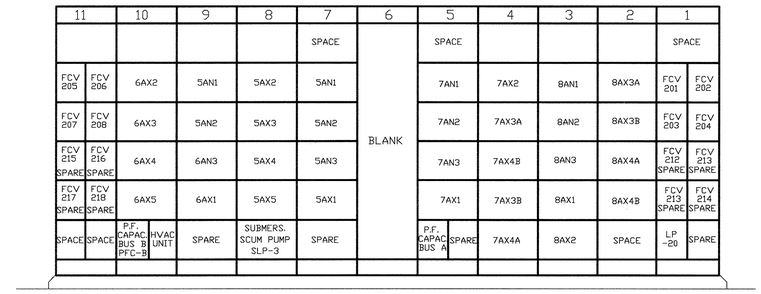

MCC 20 - REAR ELEVATION

NONE

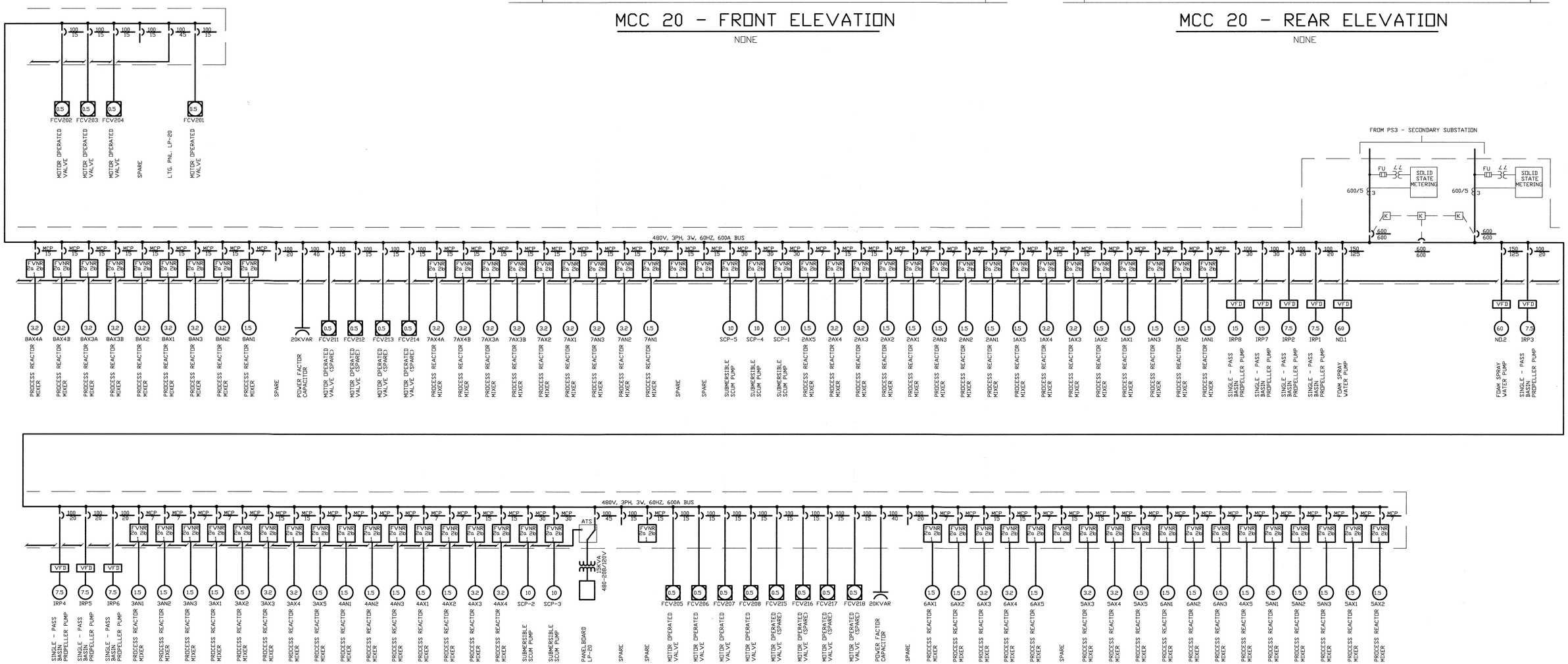

ONE LINE DIAGRAM

NONE

NOTES:

1. SEE SHT. E-20 FOR MCC20 OUTDOOR WALK-IN ENCLOSURE.

DEPARTMENT OF PUBLIC WORKS
HOWARD COUNTY, MARYLAND

DIRECTOR OF PUBLIC WORKS — DATE 5/7/96
CHIEF, BUREAU OF ENGINEERING — DATE 5/7/96
CHIEF, BUREAU OF ENVIRONMENTAL SERVICES — DATE 5/7/96
CHIEF, UTILITY DESIGN DIVISION — DATE 5-7-96

M&E Metcalf & Eddy
REG. PROF. ENGR. — DATE 5-7-96

STATE OF MARYLAND — JONATHAN WHITTHROP DOANE No. 16140 — REGISTERED PROFESSIONAL ENGINEER

	BY	NO.	REVISION	DATE
DES:				
DRN:				
CHK:				
DATE:	M.J.C.	1	RECORD DRAWING	4/2/95

ELECTRICAL

ONE LINE DIAGRAM - MCC20 - PROCESS REACTORS

LITTLE PATUXENT WASTEWATER TREATMENT PLANT
LITTLE PATUXENT WASTEWATER TREATMENT PLANT EXPANSION
ADDITION NO. 5
CAPITAL PROJECT S-6153
CONTRACT NO. 20-3082
HOWARD COUNTY, MARYLAND

SCALE AS SHOWN

SHEET 194 OF 226

E-9R

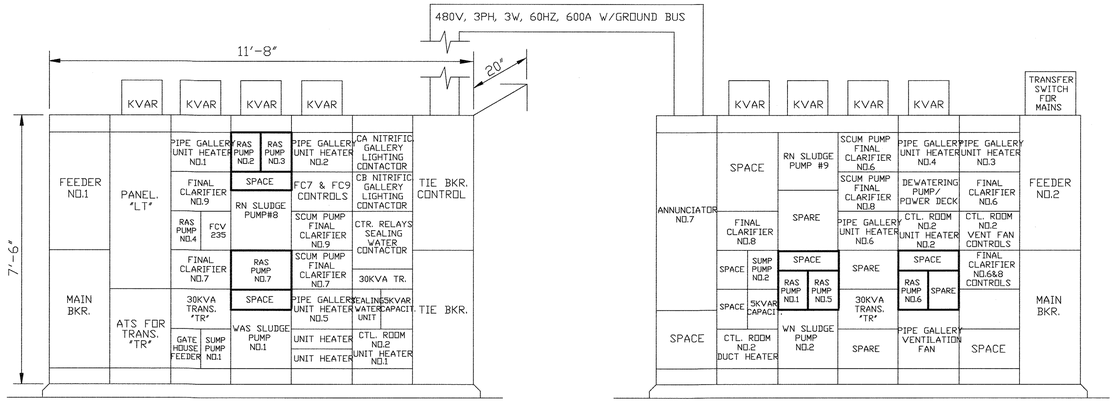

(CC7A)

(CC7B)

CC7 - ELEVATION

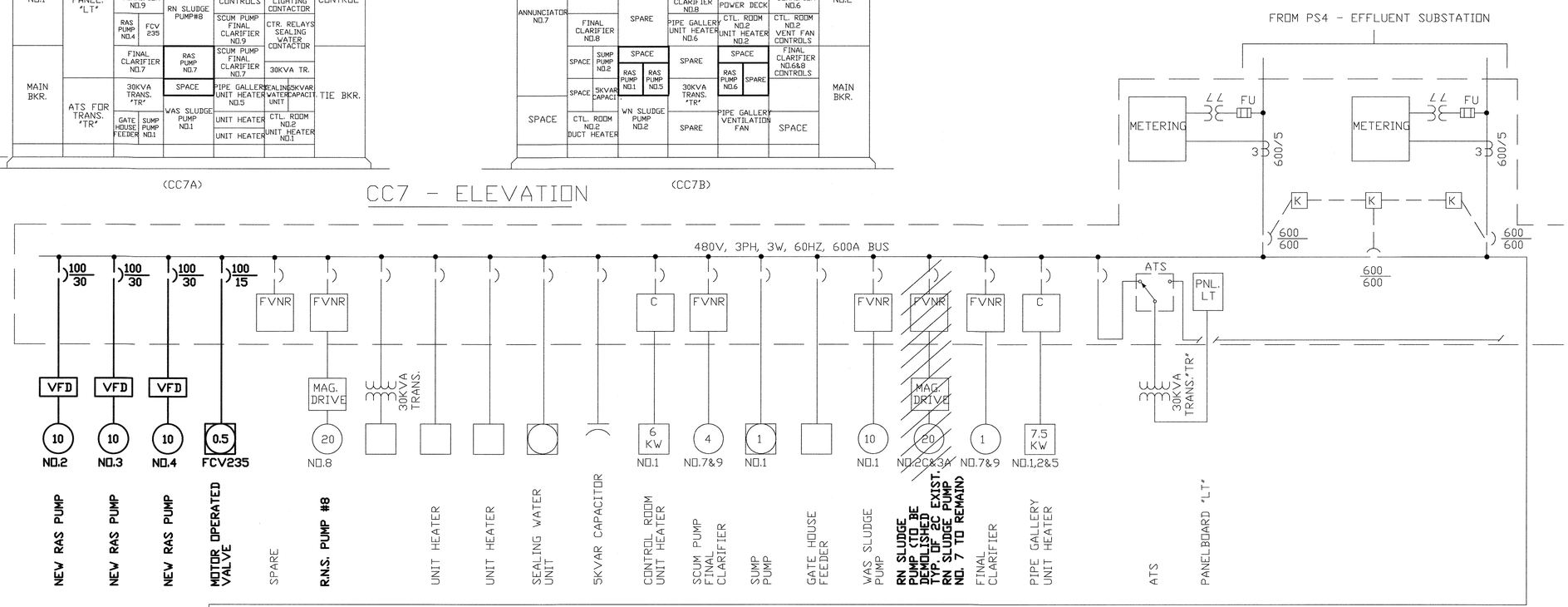

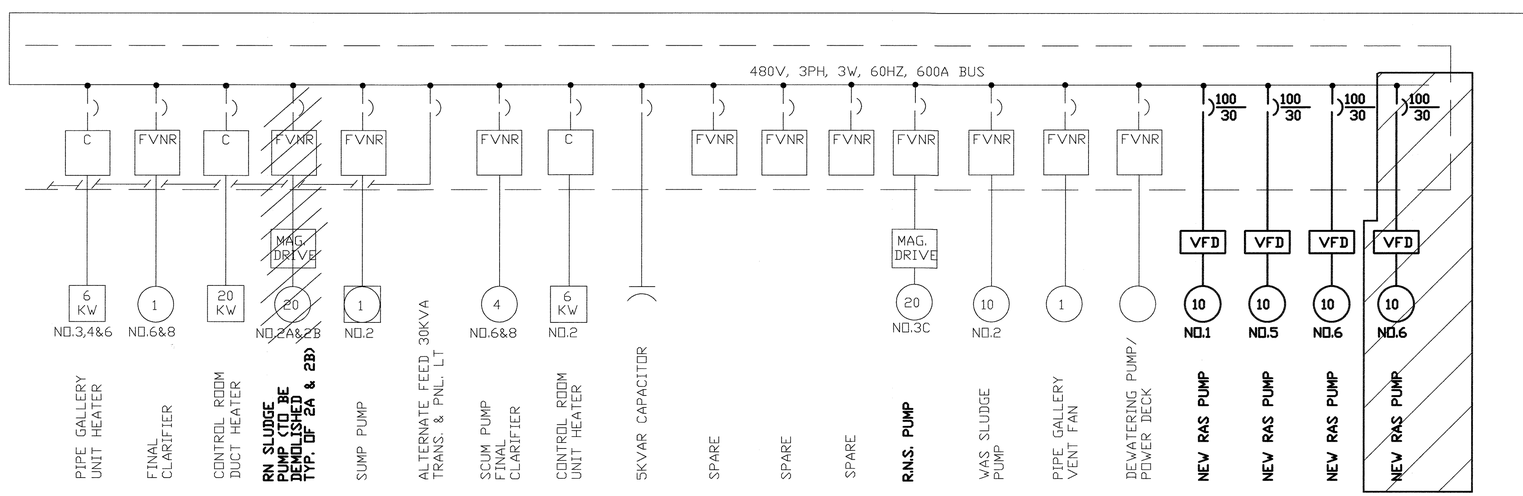

ONE LINE DIAGRAM

DEPARTMENT OF PUBLIC WORKS
HOWARD COUNTY, MARYLAND

DIRECTOR OF PUBLIC WORKS — DATE 5/7/96
CHIEF, BUREAU OF ENGINEERING — DATE 5/7/96
CHIEF, BUREAU OF ENVIRONMENTAL SERVICES — DATE 5/7/96
CHIEF, UTILITY DESIGN DIVISION — DATE 5-7-96

M&E Metcalf & Eddy
REG. PROF. ENGR. — DATE 5-7-96

STATE OF MARYLAND — JONATHAN WINTHROP DOANE No. 15140 — REGISTERED PROFESSIONAL ENGINEER

	BY	NO.	REVISION	DATE
DES:				
DRN:				
CHK:				
DATE:	M.J.C.	1	RECORD DRAWING	4/4/95

ELECTRICAL

ONE LINE DIAGRAM - CC7 - ALUM BUILDING

LITTLE PATUXENT WASTEWATER TREATMENT PLANT
LITTLE PATUXENT WASTEWATER TREATMENT PLANT EXPANSION
ADDITION NO. 5
CAPITAL PROJECT S-6153
CONTRACT NO. 20-3082
HOWARD COUNTY, MARYLAND

SCALE AS SHOWN
SHEET 195 OF 226
E-10R

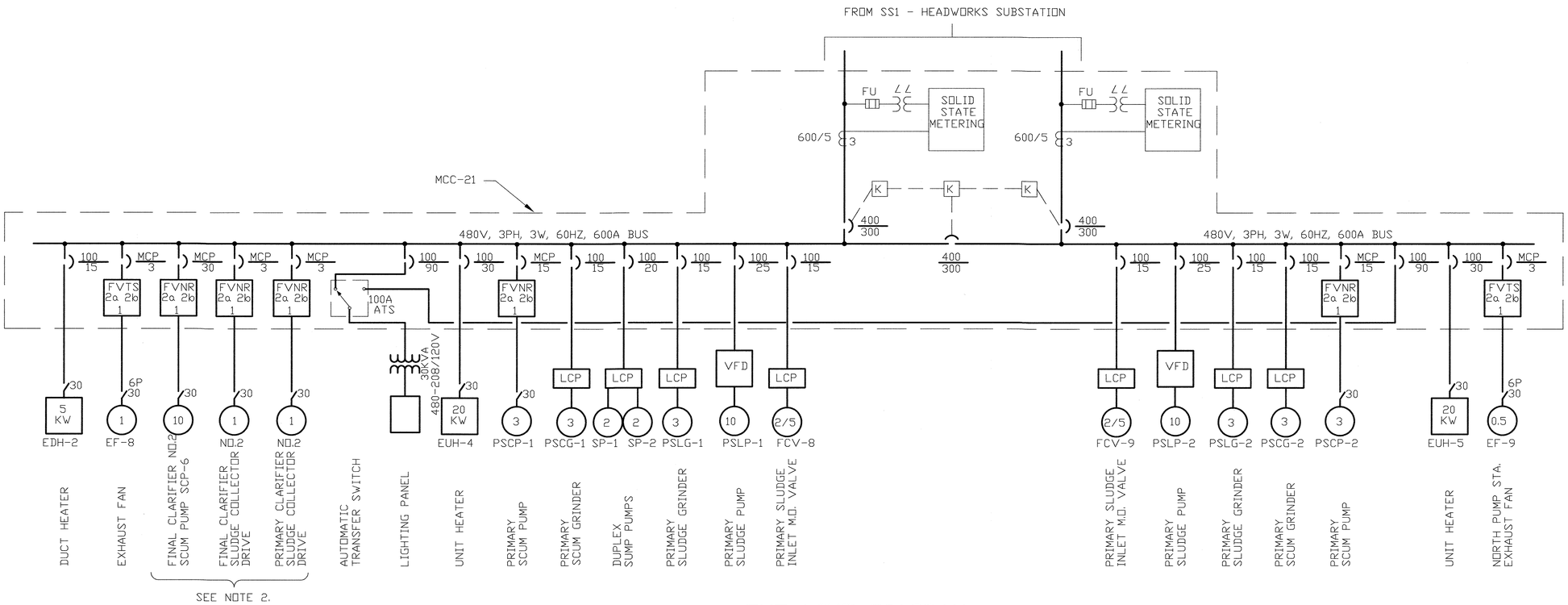

ONE LINE DIAGRAM

SEE NOTE 3

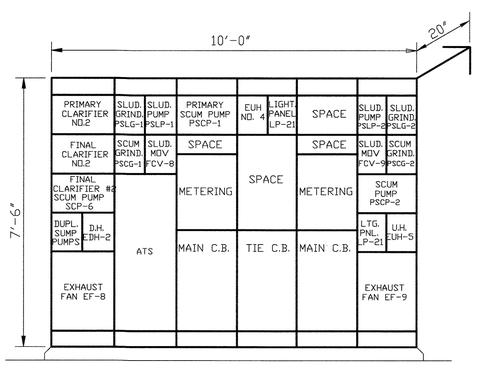

MCC 21 - ELEVATION

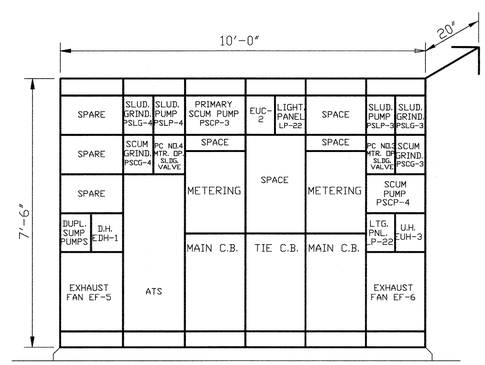

MCC 22 - ELEVATION

NOTES:

1. FOR GENERAL NOTES AND SYMBOLS SEE SHEET E-1
2. LOADS FOR MCC 21 ONLY. SPARE STARTERS FOR MCC 22. SEE ALSO MCC ELEVATIONS THIS SHEET.
3. ONE LINE DIAGRAM IS TYPICAL FOR NORTH & SOUTH PUMP STATIONS EXCEPT NOTE 2 ABOVE.

DEPARTMENT OF PUBLIC WORKS
HOWARD COUNTY, MARYLAND

DIRECTOR OF PUBLIC WORKS — DATE 5/6/96
CHIEF, BUREAU OF ENGINEERING — DATE 5/7/96
CHIEF, BUREAU OF ENVIRONMENTAL SERVICES — DATE 5/7/96
CHIEF, UTILITY DESIGN DIVISION — DATE 5-7-96

M&E Metcalf & Eddy
REQ/PROF. ENGR. — DATE 5-7-96

STATE OF MARYLAND — JONATHAN WINTHROP DOANE No. 15140 — REGISTERED PROFESSIONAL ENGINEER

DES:
DRN:
CHK:
DATE:

BY	NO.	REVISION	DATE
M.J.C.	1	RECORD DRAWING	4/4/95

ELECTRICAL

ONE LINE DIAGRAM - MCC21 - NORTH PUMP STA. & MCC22 - SOUTH PUMP STA.

LITTLE PATUXENT WASTEWATER TREATMENT PLANT
LITTLE PATUXENT WASTEWATER TREATMENT PLANT EXPANSION
ADDITION NO. 5
CAPITAL PROJECT S-6153
CONTRACT NO. 20-3082
HOWARD COUNTY, MARYLAND

SCALE AS SHOWN
SHEET 196 OF 226
E-11R

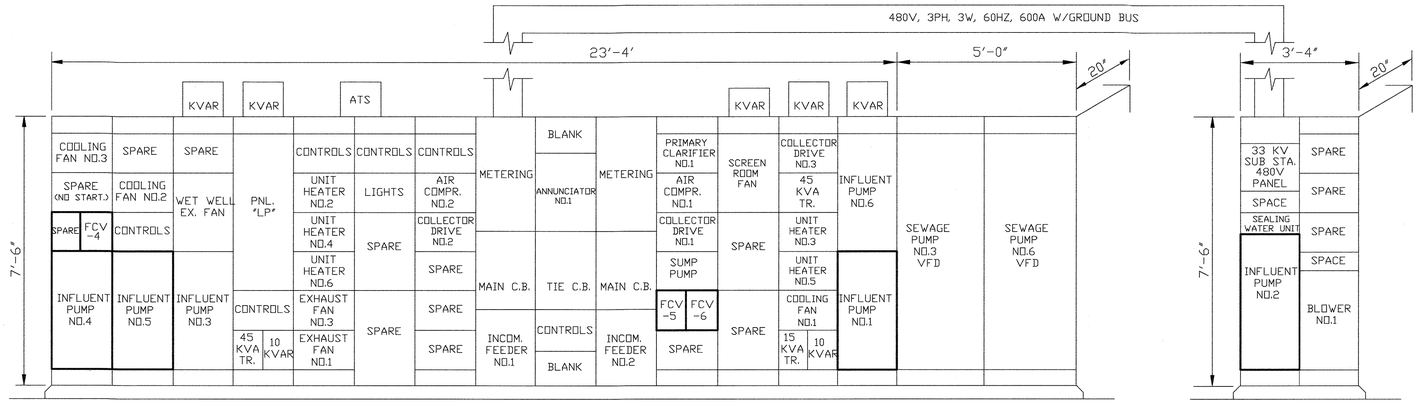

MCC2 - ELEVATION

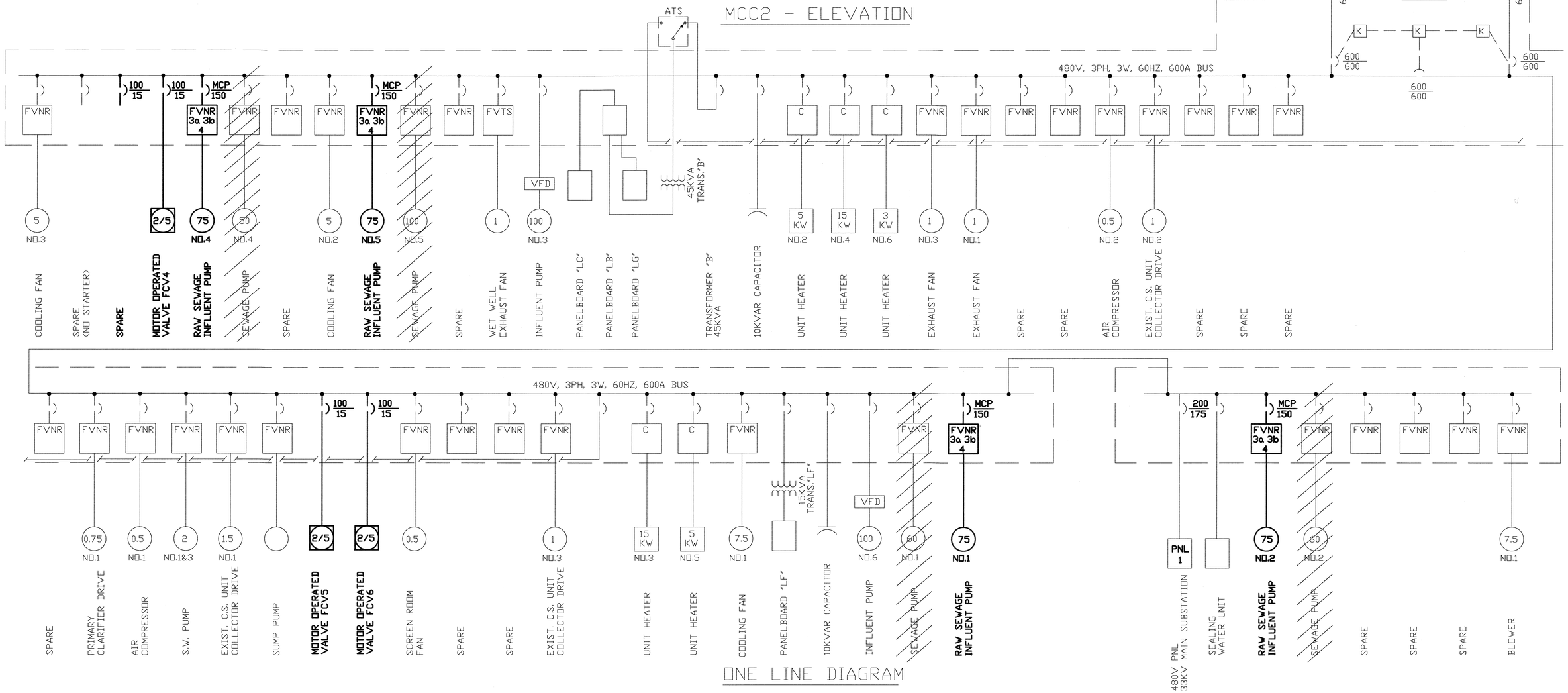

ONE LINE DIAGRAM

DEPARTMENT OF PUBLIC WORKS
HOWARD COUNTY, MARYLAND

DIRECTOR OF PUBLIC WORKS — DATE 5/7/96
CHIEF, BUREAU OF ENGINEERING — DATE 5/7/96
CHIEF, BUREAU OF ENVIRONMENTAL SERVICES — DATE 5/7/96
CHIEF, UTILITY DESIGN DIVISION — DATE 5-7-96

M&E Metcalf & Eddy
REG. PROF. ENGR. — DATE 5-7-96

STATE OF MARYLAND — JONATHAN WINTHROP DOANE No. 18140 — REGISTERED PROFESSIONAL ENGINEER

DES:				
DRN:				
CHK:				
DATE:	M.J.C.	1	RECORD DRAWING	4/10/95
	BY	NO.	REVISION	DATE

ELECTRICAL

ONE LINE DIAGRAM - CC2
-HEADWORKS BUILDING

LITTLE PATUXENT WASTEWATER TREATMENT PLANT
LITTLE PATUXENT WASTEWATER TREATMENT PLANT EXPANSION
ADDITION NO. 5
CAPITAL PROJECT S-6153
CONTRACT NO. 20-3082
HOWARD COUNTY, MARYLAND

SCALE AS SHOWN
SHEET 197 OF 226
E-12R

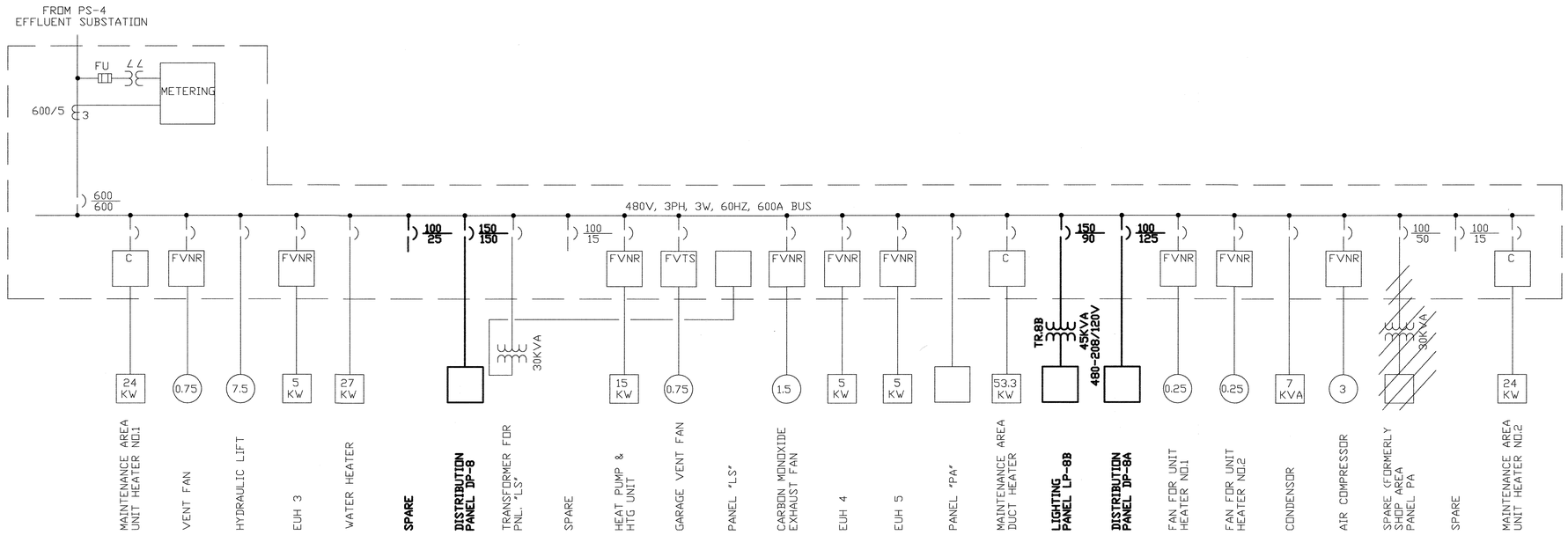

CC8 - ONE LINE DIAGRAM

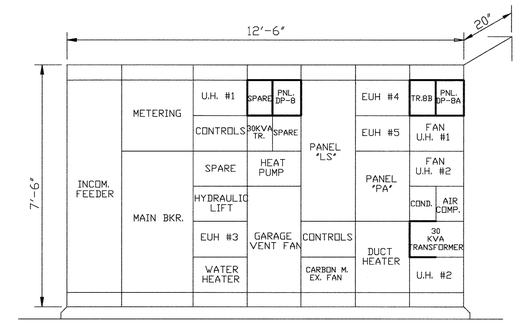

CC 8 - ELEVATION

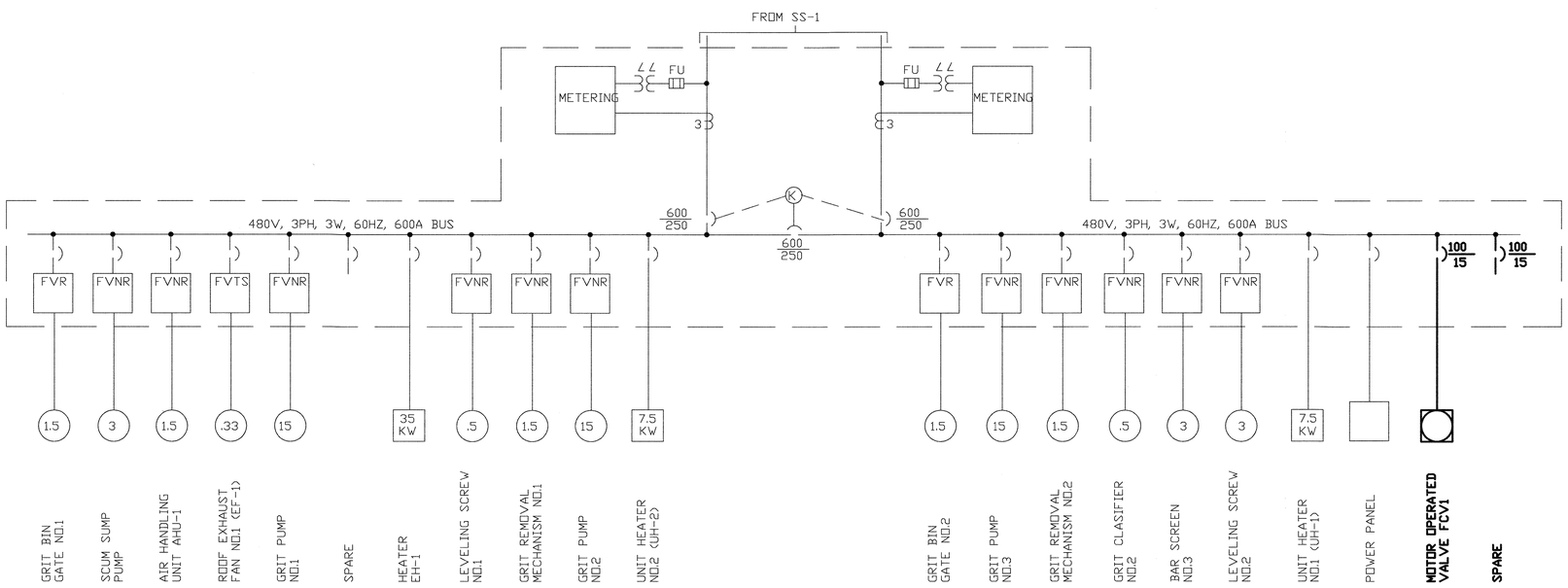

CCG - ONE LINE DIAGRAM

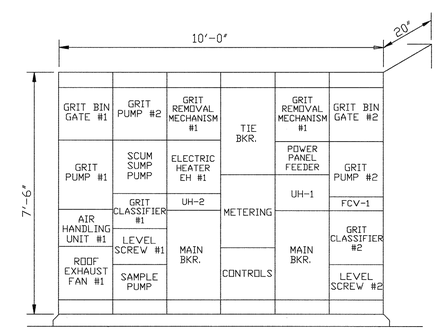

CCG - ELEVATION

DEPARTMENT OF PUBLIC WORKS
HOWARD COUNTY, MARYLAND

DIRECTOR OF PUBLIC WORKS — DATE 5/7/96
CHIEF, BUREAU OF ENGINEERING — DATE 5/7/96
CHIEF, BUREAU OF ENVIRONMENTAL SERVICES — DATE 5/7/96
CHIEF, UTILITY DESIGN DIVISION — DATE 5-7-96

M&E Metcalf & Eddy

REG. PROF. ENGR. — DATE 5-7-96

STATE OF MARYLAND — JONATHAN WINTHROP DOANE No. 15140 — REGISTERED PROFESSIONAL ENGINEER

DES:				
DRN:				
CHK:				
DATE:	M.J.C.	1	RECORD DRAWING	4/10/95
	BY	NO.	REVISION	DATE

ELECTRICAL

ONE LINE DIAGRAM - CC8 - MAINTENANCE BUILDING & CCG - GRIT FACILITY

LITTLE PATUXENT WASTEWATER TREATMENT PLANT

LITTLE PATUXENT WASTEWATER TREATMENT PLANT EXPANSION
ADDITION NO. 5
CAPITAL PROJECT S-6153

CONTRACT NO. 20-3082
HOWARD COUNTY, MARYLAND

SCALE AS SHOWN

SHEET 198 OF 226

E-13R

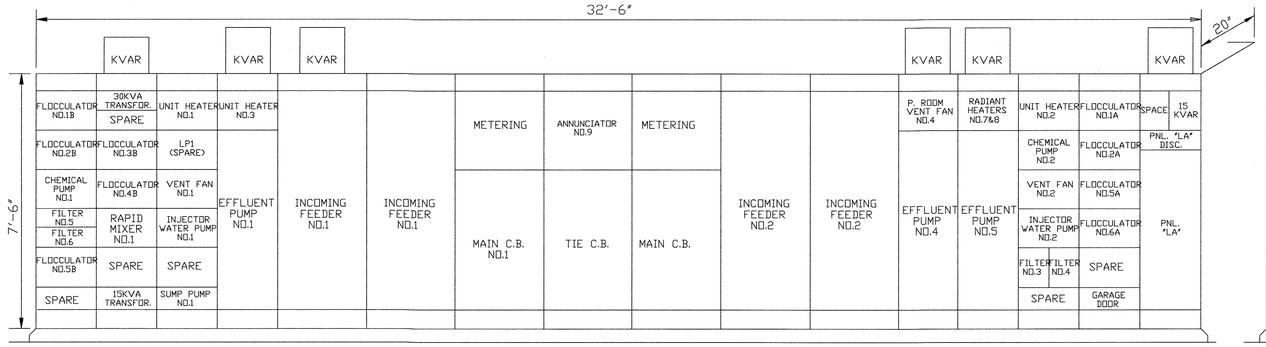

MCC 11 - FRONT ELEVATION

SCALE: NONE

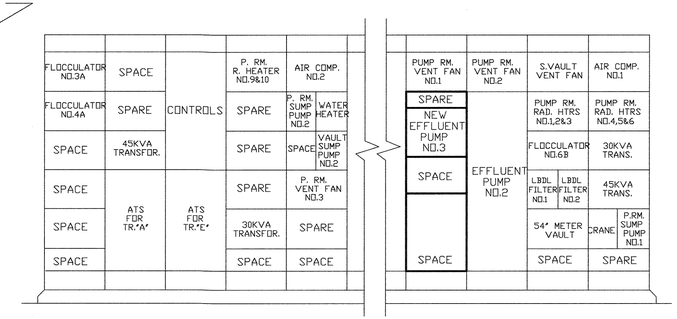

MCC 11 - REAR ELEVATION

SCALE: NONE

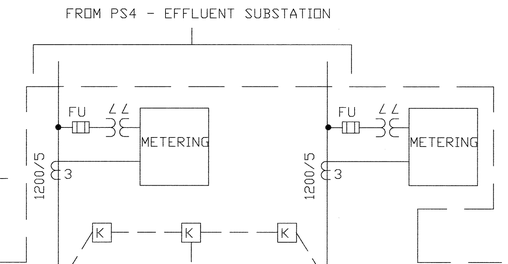

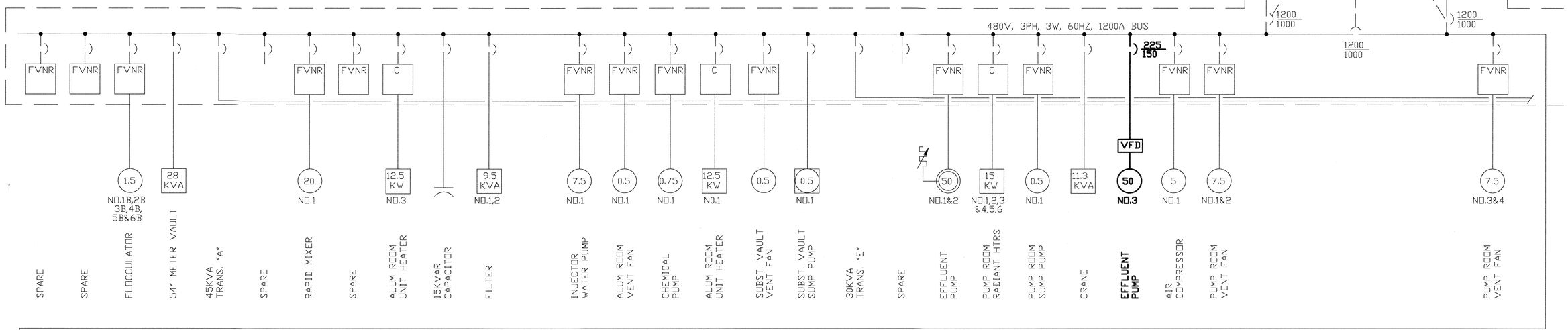

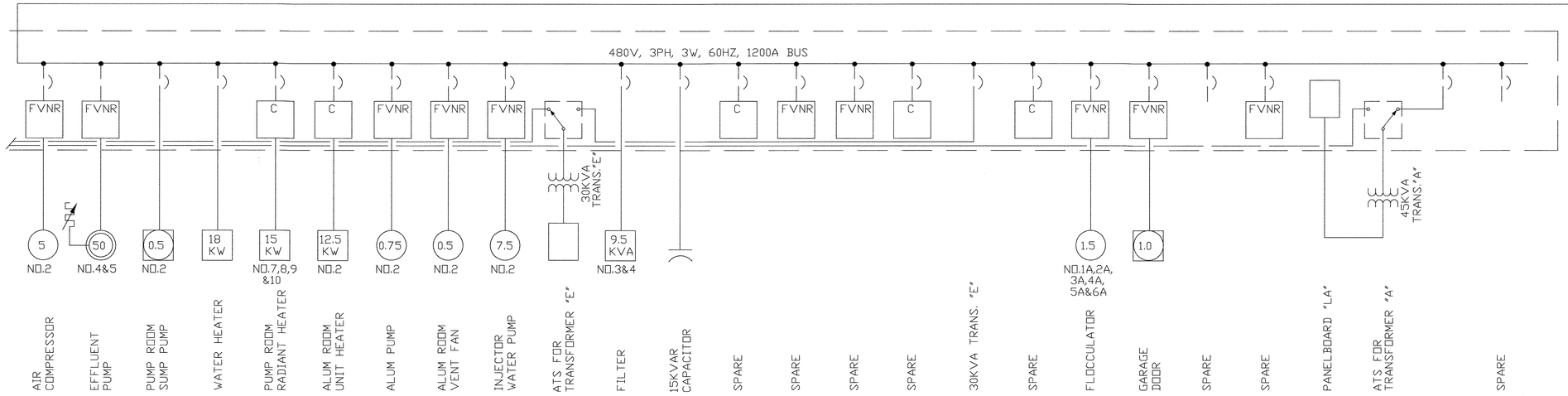

ONE LINE DIAGRAM

SCALE: NONE

DEPARTMENT OF PUBLIC WORKS
HOWARD COUNTY, MARYLAND

DIRECTOR OF PUBLIC WORKS — DATE 5/7/96
CHIEF, BUREAU OF ENGINEERING — DATE 5/7/96
CHIEF, BUREAU OF ENVIRONMENTAL SERVICES — DATE 5/7/96
CHIEF, UTILITY DESIGN DIVISION — DATE 5-7-96

M&E Metcalf & Eddy

REG. PROF. ENGR. — DATE 5-7-96

STATE OF MARYLAND — JONATHAN WINTHROP DONNE No. 15140 — REGISTERED PROFESSIONAL ENGINEER

DES:				
DRN:				
CHK:				
DATE:				
M.J.C.	1	RECORD DRAWING	4/10/95	
BY	NO.	REVISION	DATE	

ELECTRICAL

ONE LINE DIAGRAM - CC11 - FILTER BUILDING

LITTLE PATUXENT WASTEWATER TREATMENT PLANT

LITTLE PATUXENT WASTEWATER TREATMENT PLANT EXPANSION
ADDITION NO. 5
CAPITAL PROJECT S-6153

CONTRACT NO. 20-3082
HOWARD COUNTY, MARYLAND

SCALE AS SHOWN

SHEET 199 OF 226

E-14R

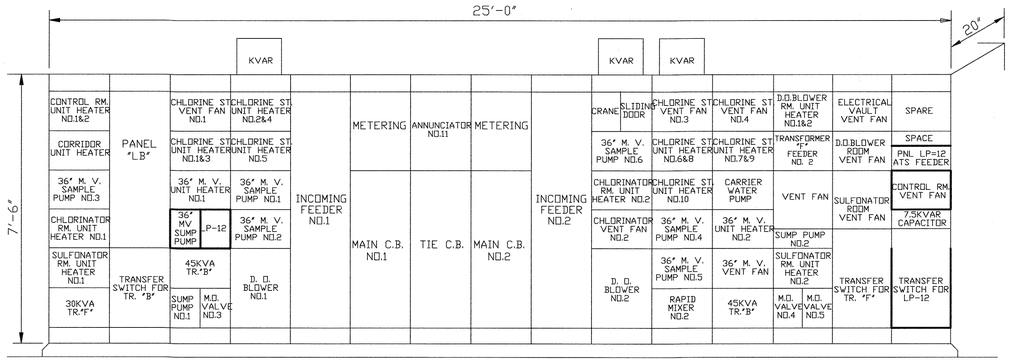

MCC12 - ELEVATION

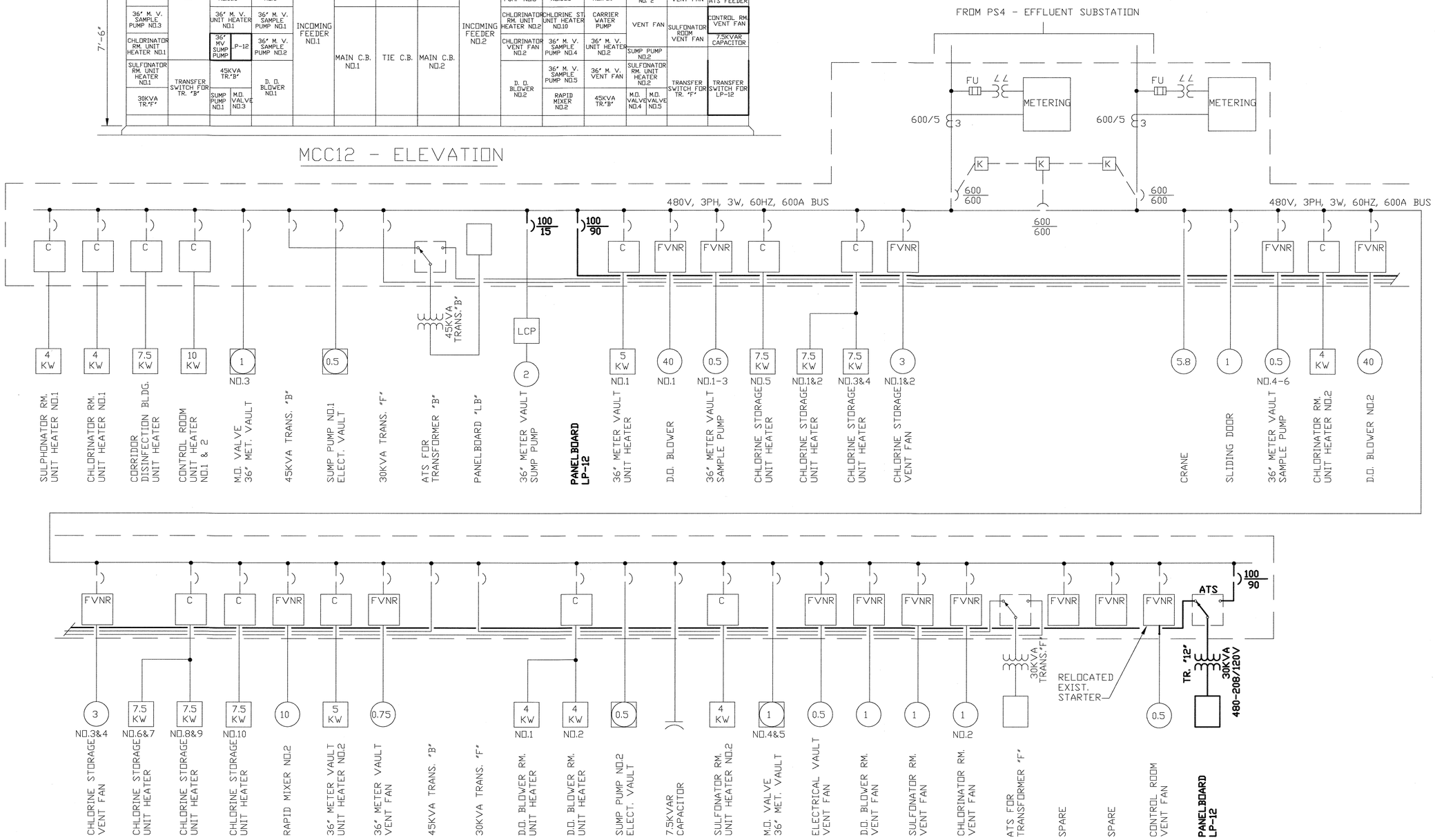

ONE LINE DIAGRAM

NOTE:

NEW CHEMICAL FEED SYSTEM CARRIER WATER PUMP (5HP) INSTALLED IN 36" METER VAULT TO REPLACE EXISTING SULFONATOR INJECTOR PUMP. EXISTING BREAKER, WIRING AND LOCAL HAND SWITCH REUSED.

DEPARTMENT OF PUBLIC WORKS
HOWARD COUNTY, MARYLAND

DIRECTOR OF PUBLIC WORKS — DATE 5/7/96
CHIEF, BUREAU OF ENGINEERING — DATE 5/7/96
CHIEF, BUREAU OF ENVIRONMENTAL SERVICES — DATE 5/7/96
CHIEF, UTILITY DESIGN DIVISION — DATE 5-7-96

M&E Metcalf & Eddy
REG. PROF. ENGR. — DATE 5-7-96

STATE OF MARYLAND — JONATHAN WINTHROP DOANE No. 15140 — REGISTERED PROFESSIONAL ENGINEER

DES:
DRN:
CHK:
DATE:

BY	NO.	REVISION	DATE
M.J.C.	1	RECORD DRAWING	4/10/95

ELECTRICAL

ONE LINE DIAGRAM - CC12
-CHLORINE BUILDING

LITTLE PATUXENT WASTEWATER TREATMENT PLANT

LITTLE PATUXENT WASTEWATER TREATMENT PLANT EXPANSION
ADDITION NO. 5
CAPITAL PROJECT S-6153

CONTRACT NO. 20-3082
HOWARD COUNTY, MARYLAND

SCALE AS SHOWN

SHEET 200 OF 226

E-15R

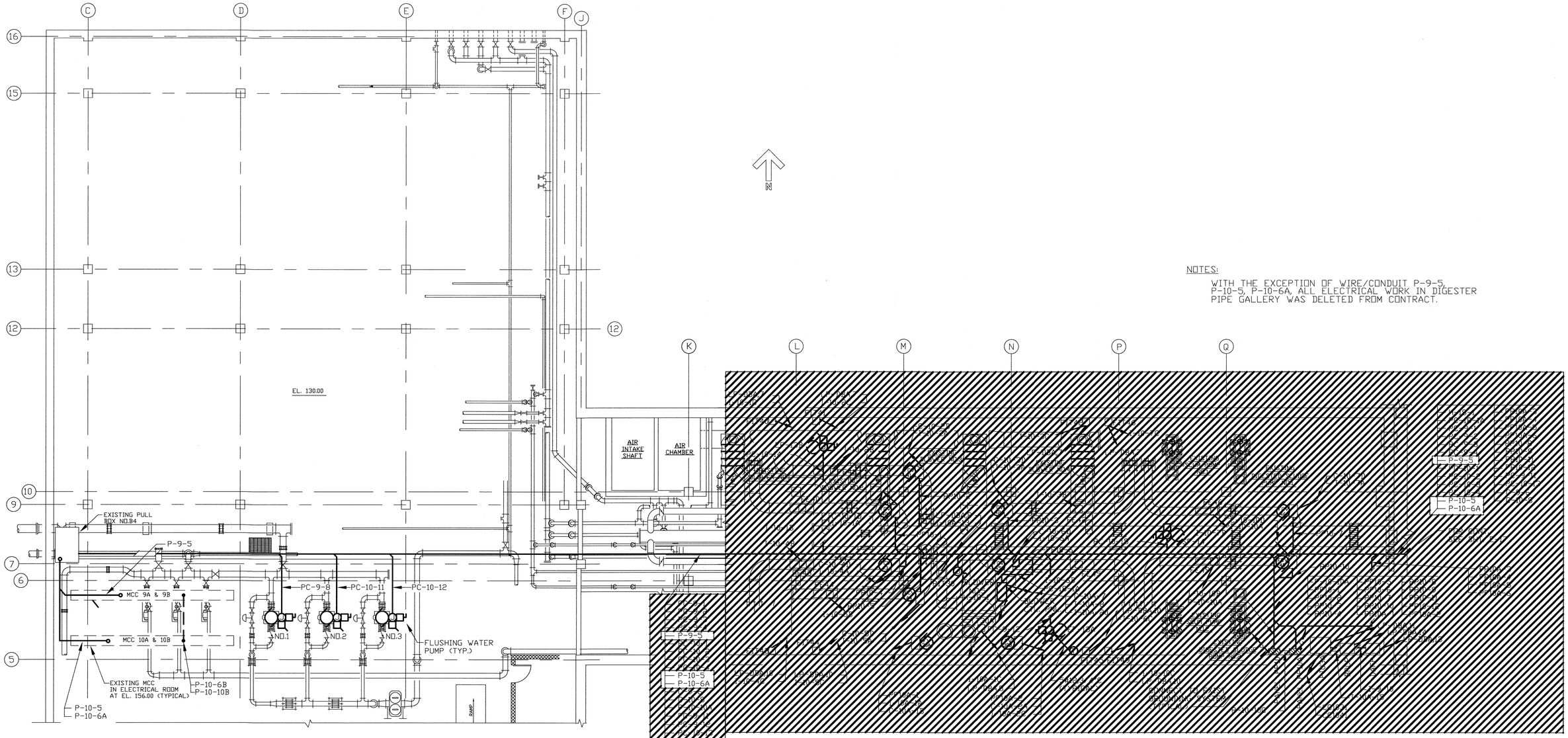

NOTES:

WITH THE EXCEPTION OF WIRE/CONDUIT P-9-5, P-10-5, P-10-6A, ALL ELECTRICAL WORK IN DIGESTER PIPE GALLERY WAS DELETED FROM CONTRACT.

PLAN @ EL.128.00

SCALE: 1/8"=1'-0"

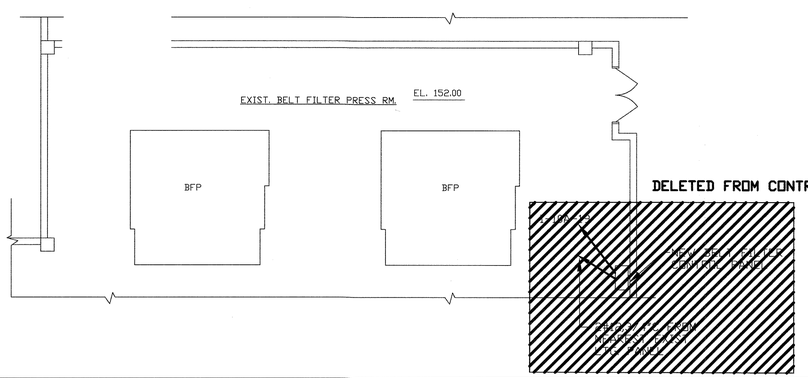

DELETED FROM CONTRACT.

NOTES:

1. FOR GENERAL NOTES AND SYMBOLS SEE SHT. E-1.
2. FOR CONDUIT AND WIRE SCHEDULE SEE SHT. E-38 AND SHT. E-39.
3. FOR PANEL SCHEDULES SEE SHT. E-34 AND SHT. E-35.

DEPARTMENT OF PUBLIC WORKS
HOWARD COUNTY, MARYLAND

DIRECTOR OF PUBLIC WORKS — DATE 5/7/96
CHIEF, BUREAU OF ENGINEERING — DATE 5/7/96
CHIEF, BUREAU OF ENVIRONMENTAL SERVICES — DATE 5/7/96
CHIEF, UTILITY DESIGN DIVISION — DATE 5-7-96

M&E Metcalf & Eddy

REG. PROF. ENGR. — DATE 5-7-96

STATE OF MARYLAND — JONATHAN WINTHROP DOANE No. 15140 — REGISTERED PROFESSIONAL ENGINEER

DES:				
DRN:				
CHK:				
DATE:	M.J.C.	1	RECORD DRAWING	4/10/95
	BY	NO.	REVISION	DATE

ELECTRICAL

LIGHTING AND POWER PLANS -DEWATERING BUILDING & DIGESTER PIPE GALLERY

LITTLE PATUXENT WASTEWATER TREATMENT PLANT

LITTLE PATUXENT WASTEWATER TREATMENT PLANT EXPANSION
ADDITION NO. 5
CAPITAL PROJECT S-6153

CONTRACT NO. 20-3082
HOWARD COUNTY, MARYLAND

SCALE AS SHOWN

SHEET 201 OF 226

E-16R

NOTE:
ALL ELECTRICAL WORK WAS DELETED FROM CONTRACT EXCEPT AS FOLLOWS:

DIGESTER GALLERY LIGHTING
LTG. PNL. LP-DBA
TRANSFORMER DBA

WIRE AND CONDUIT
FOR TRANSFORMER, LIGHTING PANEL, UNTI HEATERS, THERMOSTATS.
P-10-6A
P-10-6C
P-9-5
P-10-5

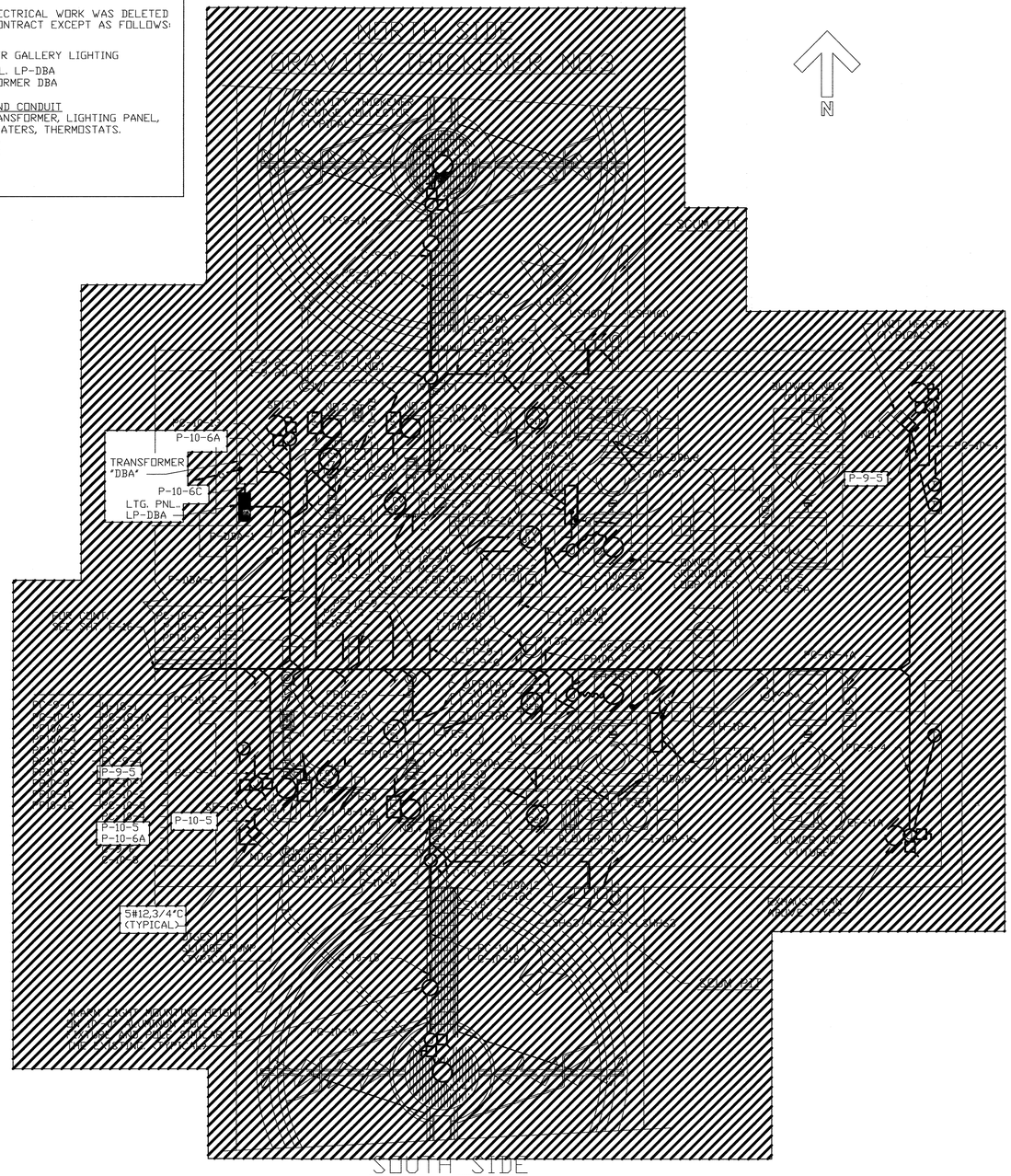

SOUTH SIDE
GRAVITY THICKENER NO.4

POWER - PLAN

SCALE: 3/16"=1'-0"

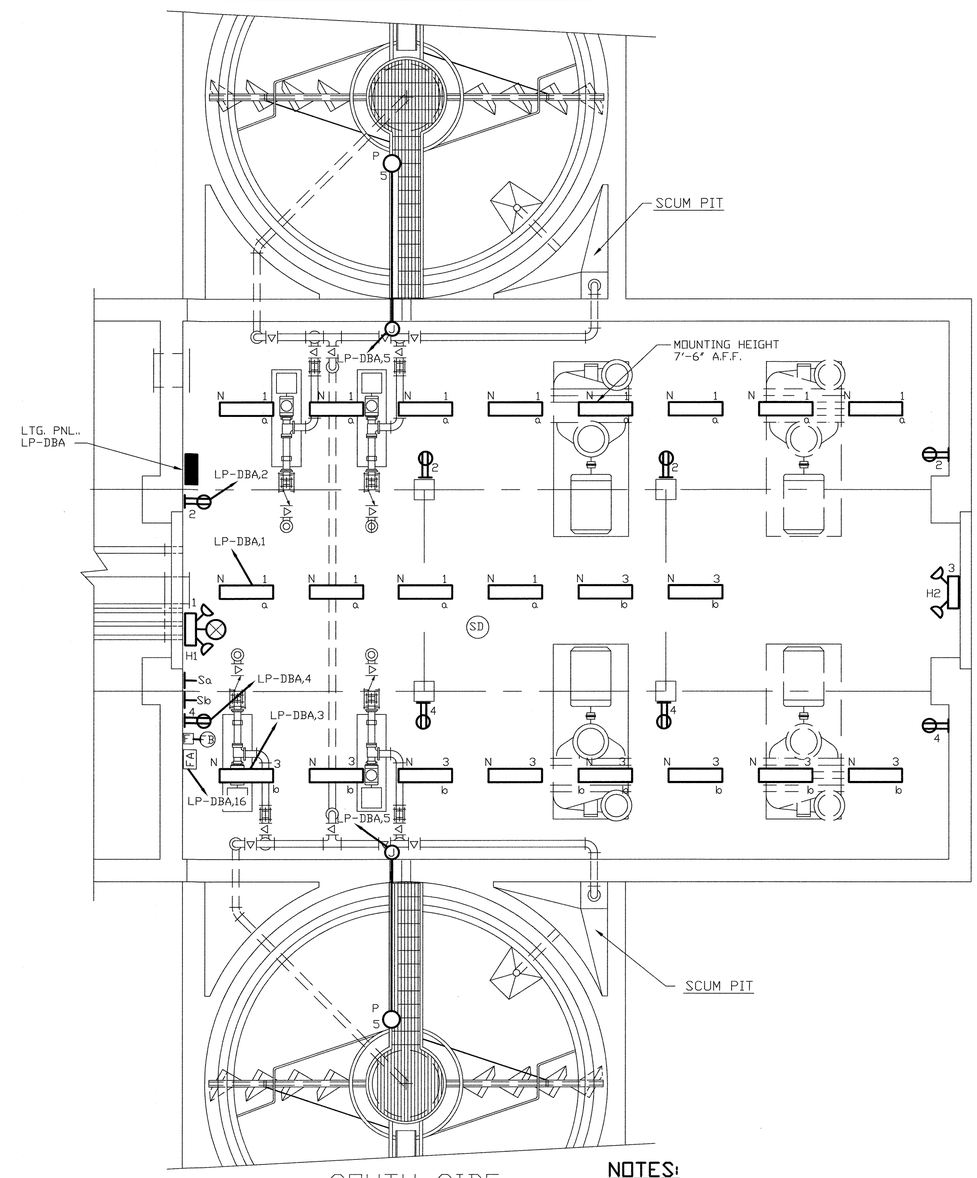

SOUTH SIDE
GRAVITY THICKENER NO.4

NOTES:

1. FOR GENERAL NOTES AND SYMBOLS SEE SHT. E-1.
2. FOR CONDUIT & WIRE SCHEDULE SEE SHT. E-38.
3. FOR PANEL SCHEDULES SEE SHT. E-34.

LIGHTING - PLAN

SCALE: 3/16"=1'-0"

DEPARTMENT OF PUBLIC WORKS
HOWARD COUNTY, MARYLAND

DIRECTOR OF PUBLIC WORKS — DATE 5/7/96
CHIEF, BUREAU OF ENGINEERING — DATE 5/7/96
CHIEF, BUREAU OF ENVIRONMENTAL SERVICES — DATE 5/7/96
CHIEF, UTILITY DESIGN DIVISION — DATE 5-7-96

M&E Metcalf & Eddy
REG. PROF. ENGR. — DATE 5-7-96

STATE OF MARYLAND — JONATHAN WINTHROP DOANE No. 15140 — REGISTERED PROFESSIONAL ENGINEER

	BY	NO.	REVISION	DATE
DES:				
DRN:				
CHK:				
DATE:	M.J.C.	1	RECORD DRAWING	4/10/95

ELECTRICAL

LIGHTING & POWER PLANS - DIGESTER PIPE GALLERY ADDITION

LITTLE PATUXENT WASTEWATER TREATMENT PLANT
LITTLE PATUXENT WASTEWATER TREATMENT PLANT EXPANSION
ADDITION NO. 5
CAPITAL PROJECT S-6153

CONTRACT NO. 20-3082
HOWARD COUNTY, MARYLAND

SCALE AS SHOWN

SHEET 202 OF 226

E-17R

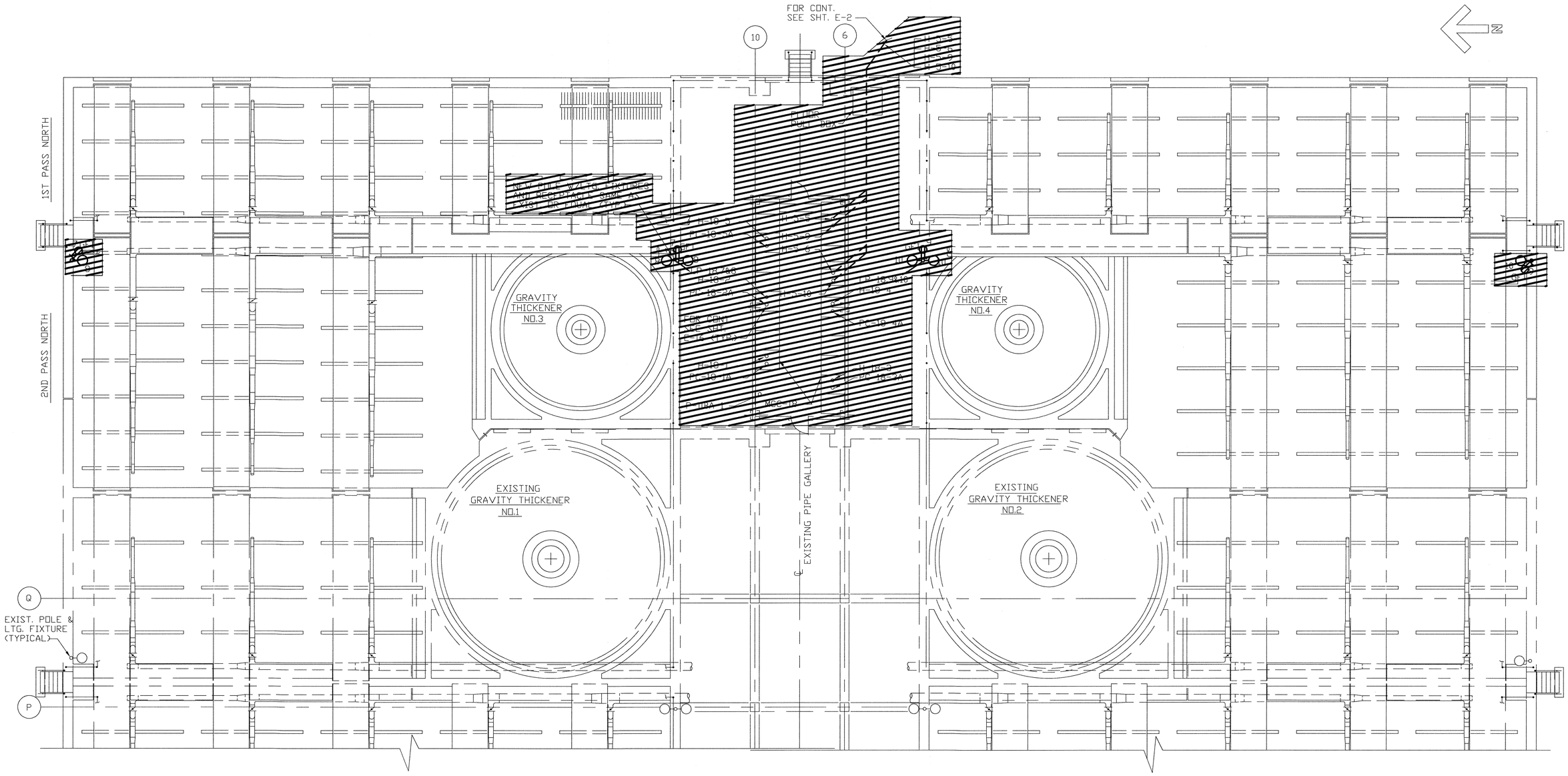

PLAN AT EL. 146.33

SCALE: 1/8"=1'-0"

NOTES:

1. FOR GENERAL NOTES AND SYMBOLS SEE SHT. E-1.
2. FOR CONDUIT AND WIRE SCHEDULE SEE SHT. E-38.

DEPARTMENT OF PUBLIC WORKS
HOWARD COUNTY, MARYLAND

DIRECTOR OF PUBLIC WORKS — DATE 5/7/96
CHIEF, BUREAU OF ENGINEERING — DATE 5/7/96
CHIEF, BUREAU OF ENVIRONMENTAL SERVICES — DATE 5/7/96
CHIEF, UTILITY DESIGN DIVISION — DATE 5-7-96

M&E Metcalf & Eddy

REG. PROF. ENGR. — DATE 5-7-96

STATE OF MARYLAND — JONATHAN WINTHROP DOANE No. 15140 — REGISTERED PROFESSIONAL ENGINEER

DES:				
DRN:				
CHK:				
DATE:	M.J.C.	1	RECORD DRAWING	4/10/95
	BY	NO.	REVISION	DATE

ELECTRICAL

LIGHTING & POWER PLANS - DIGESTERS

LITTLE PATUXENT WASTEWATER TREATMENT PLANT

LITTLE PATUXENT WASTEWATER TREATMENT PLANT EXPANSION
ADDITION NO. 5
CAPITAL PROJECT S-6153

CONTRACT NO. 20-3082
HOWARD COUNTY, MARYLAND

SCALE AS SHOWN

SHEET 203 OF 226

E-18R

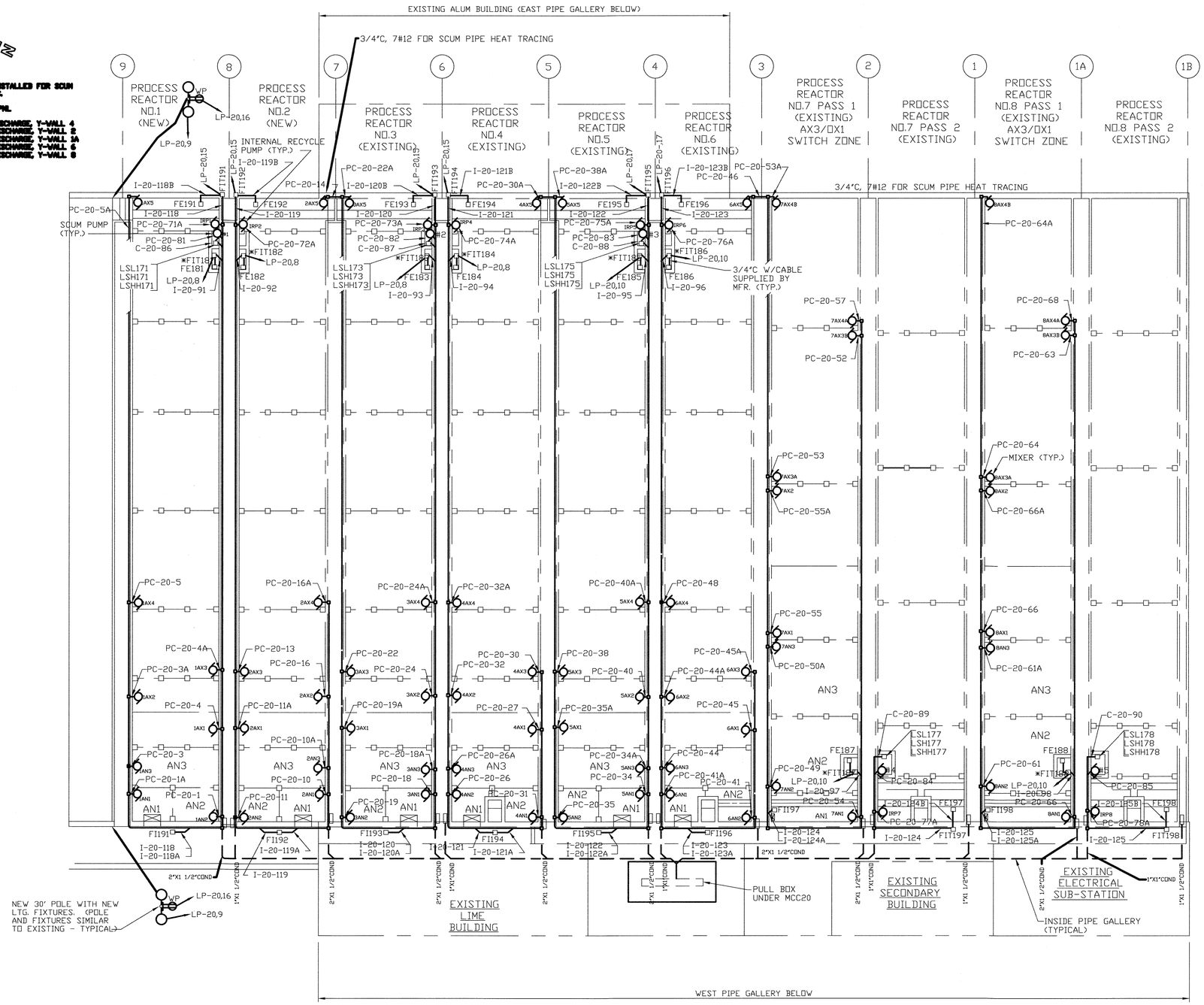

PLAN

SCALE: 1/16"=1'-0"

NOTES:

1. FOR GENERAL NOTES AND SYMBOLS SEE SHT. E-1.
2. FOR CONDUIT AND WIRE SCHEDULE SEE SHT. E-37.
3. PROVIDE 30 AMP PLUG & RECEPTACLE NEMA 4X FOR EACH SUBMERSIBLE MIXER & PUMP.

* FIT 181 THROUGH 188 WERE INSTALLED ON THE PROCESS REACTOR HANDRAIL.

DEPARTMENT OF PUBLIC WORKS
HOWARD COUNTY, MARYLAND

DIRECTOR OF PUBLIC WORKS — DATE 5/7/96
CHIEF, BUREAU OF ENGINEERING — DATE 5/7/96
CHIEF, BUREAU OF ENVIRONMENTAL SERVICES — DATE 5/7/96
CHIEF, UTILITY DESIGN DIVISION — DATE 5-7-96

M&E Metcalf & Eddy
REQ. PROF. ENGR. — DATE 5-7-96

STATE OF MARYLAND — JONATHAN WINTHROP DONNE — No. 15149 — REGISTERED PROFESSIONAL ENGINEER

DES:				
DRN:				
CHK:				
DATE:	M.J.C.	1	RECORD DRAWING	4/10/95
	BY	NO.	REVISION	DATE

ELECTRICAL

LIGHTING & POWER PLANS - PROCESS REACTORS

LITTLE PATUXENT WASTEWATER TREATMENT PLANT
LITTLE PATUXENT WASTEWATER TREATMENT PLANT EXPANSION ADDITION NO. 5
CAPITAL PROJECT S-6153
CONTRACT NO. 20-3082
HOWARD COUNTY, MARYLAND

SCALE AS SHOWN

SHEET 204 OF 226

E-19R

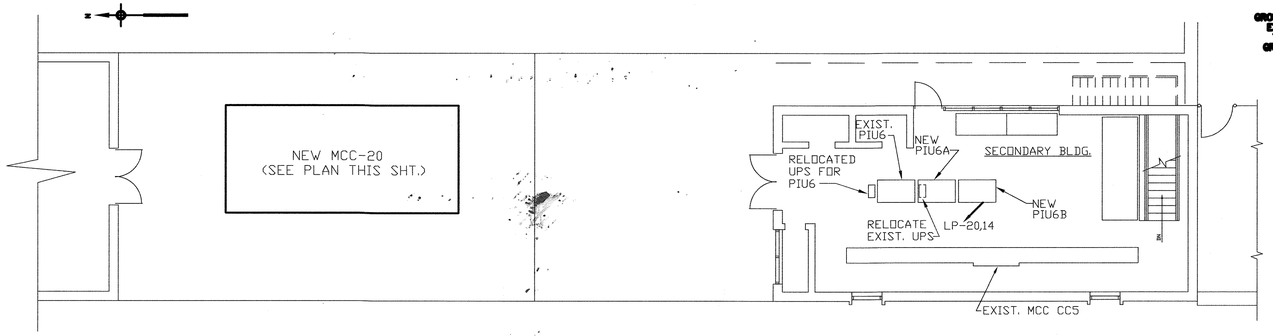

TOP OF WEST PIPE GALLERY - PART PLAN

SCALE: 1/8"=1'-0"

GROUND LOOP TO BE RUN UNDER THE CEILING, EXPOSED INSIDE THE WEST PIPE GALLERY, THROUGH THE WEST WALL THEN UNDER GROUND TO THE GROUND RODS AS SHOWN.

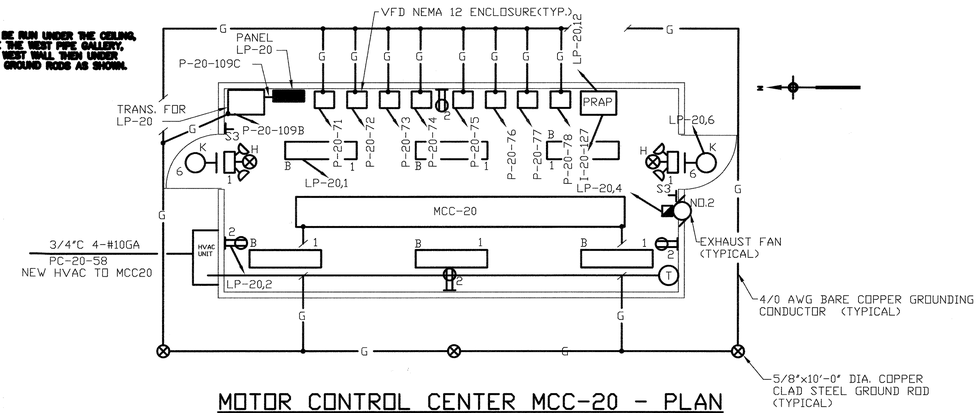

MOTOR CONTROL CENTER MCC-20 - PLAN

SCALE: 1/4"=1'-0"

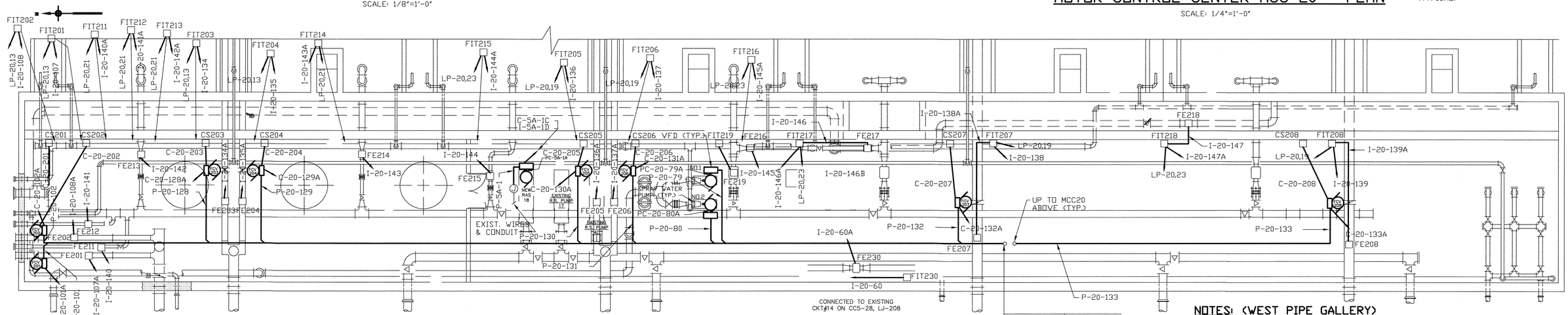

WEST PIPE GALLERY - PLAN

SCALE: 1/8"=1'-0"

NOTES: (WEST PIPE GALLERY)

1. FCV 211 THRU 218 WERE DELETED ALONG WITH ASSOCIATED WIRE AND CONDUIT, THESE VALVES ARE MANUALLY OPERATATED VALVES.
2. FE/FIT 219 REPLACES EXISTING RAS METER TO PR #6 MCC 6 LQ CKT#38.
3. FE/FIT 211 THRU 218A I-20-40A THRU I-20-47A RUN TO THE PRAP PANEL TERMINAL STRIP. THESE METERS ARE CONNECTED TO THE COMPUTER VIA 8 #16SH IN I-20-127.
4. A NUMBER OF EXISTING FLOW METERS WERE REMOVED/REPLACED AND POWERED FROM NEW LP-20. THE FOLLOWING PANAL BOARD SHOULD NOW BE SPARE:

WPG < MCC6-LQ CKT #35
MCC5-LR CKT #14,18,32

EPG — MCC7-LT CKT #12,21,18,20

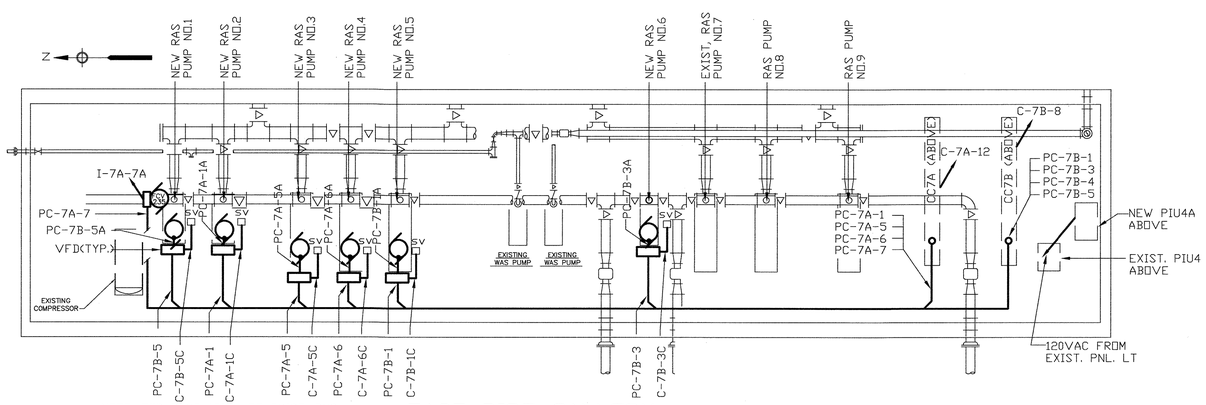

NOTE: FOR DEMOLITION OF EXIST. RNS PUMPS 2A, 2B, 2C, REFER TO ONE LINE DIAGRAM & MECHANICAL DWG'S.

EAST PIPE GALLERY LOWER PLAN - POWER

SCALE: 1/8"=1'-0"

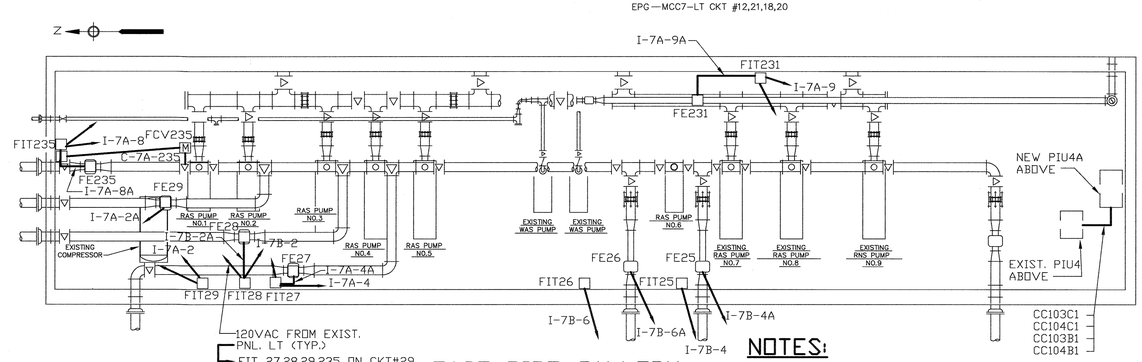

EAST PIPE GALLERY LOWER PLAN - CONTROL

SCALE: 1/8"=1'-0"

NOTES:

1. FOR GENERAL NOTES AND SYMBOLS SEE SHT. E-1.
2. FOR CONDUIT AND WIRE SCHEDULE SEE SHT. E-37 & E-39.

DEPARTMENT OF PUBLIC WORKS
HOWARD COUNTY, MARYLAND

DIRECTOR OF PUBLIC WORKS — DATE 5/7/96
CHIEF, BUREAU OF ENGINEERING — DATE 5/7/96
CHIEF, BUREAU OF ENVIRONMENTAL SERVICES — DATE 5/7/96
CHIEF, UTILITY DESIGN DIVISION — DATE 5-7-96

M&E Metcalf & Eddy

REG. PROF. ENGR. — DATE 5-7-96

STATE OF MARYLAND — JONATHAN WINTHROP DOME No. 15149 — REGISTERED PROFESSIONAL ENGINEER

DES:				
DRN:				
CHK:				
DATE:	M.J.C.	1	RECORD DRAWING	4/10/95
	BY	NO.	REVISION	DATE

ELECTRICAL

LIGHTING & POWER PLANS - ALUM BUILDING, EAST PIPE GALLERY & SECONDARY BUILDING

LITTLE PATUXENT WASTEWATER TREATMENT PLANT

LITTLE PATUXENT WASTEWATER TREATMENT PLANT EXPANSION
ADDITION NO. 5
CAPITAL PROJECT S-6153

CONTRACT NO. 20-3082
HOWARD COUNTY, MARYLAND

SCALE AS SHOWN

SHEET 205 OF 226

E-20R

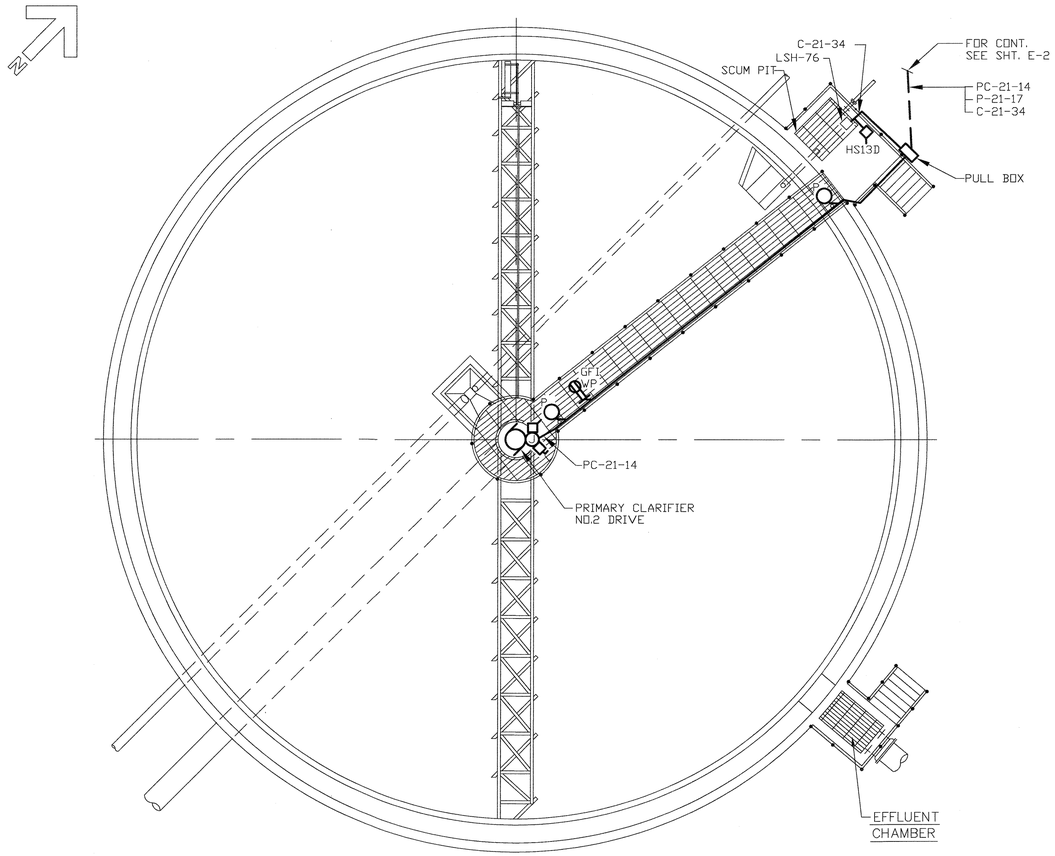

PRIMARY CLARIFIER NO.2 - PLAN

SCALE: 1/8"=1'-0"

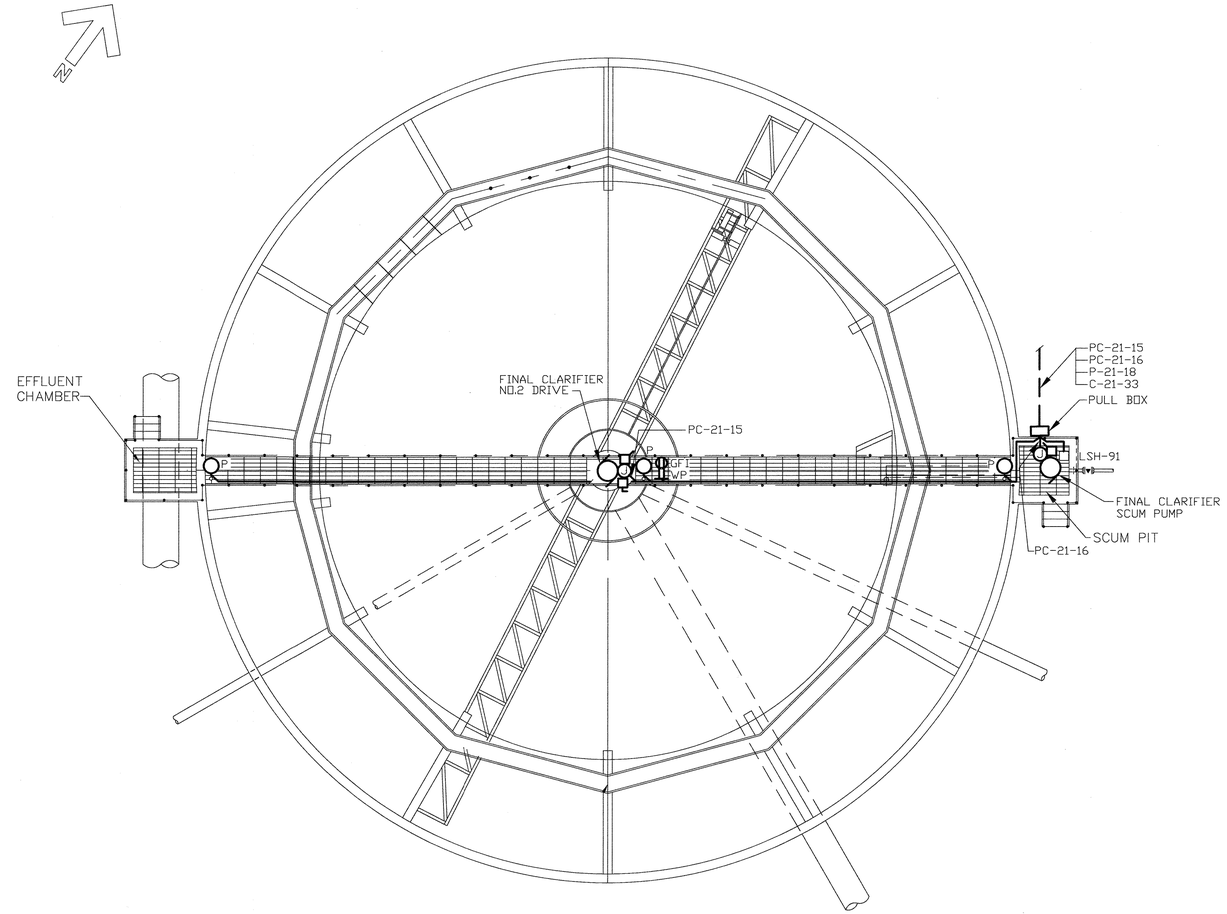

FINAL CLARIFIER NO.2 - PLAN

SCALE: 1/8"=1'-0"

NOTE:

THE PC#2 & FC@2 LIGHT POLES LOCATED ON SUPPORT PEDESTALS CONSTRUCTED OUT SIDE OF THE WALKWAY.

NOTES:

1. FOR GENERAL NOTES AND SYMBOLS SEE SHT. E-1.
2. FOR CONDUIT & WIRE SCHEDULE SEE SHT. E-36.
3. FOR LIGHTING PANEL SCHEDULES SEE SHT. E-34.

DEPARTMENT OF PUBLIC WORKS
HOWARD COUNTY, MARYLAND

DIRECTOR OF PUBLIC WORKS — DATE 5/7/96
CHIEF, BUREAU OF ENGINEERING — DATE 5/7/96
CHIEF, BUREAU OF ENVIRONMENTAL SERVICES — DATE 5/7/96
CHIEF, UTILITY DESIGN DIVISION — DATE 5-7-96

M&E Metcalf & Eddy

REG. PROF. ENGR. — DATE 5-7-96

STATE OF MARYLAND — JONATHAN WINTHROP DOANE No. 15140 — REGISTERED PROFESSIONAL ENGINEER

DES:				
DRN:				
CHK:				
DATE:	M.J.C.	1	RECORD DRAWING	4/10/95
	BY	NO.	REVISION	DATE

ELECTRICAL

LIGHTING & POWER PLANS - PRIMARY & FINAL CLARIFIERS NO.2

LITTLE PATUXENT WASTEWATER TREATMENT PLANT

LITTLE PATUXENT WASTEWATER TREATMENT PLANT EXPANSION
ADDITION NO. 5
CAPITAL PROJECT S-6153

CONTRACT NO. 20-3082
HOWARD COUNTY, MARYLAND

SCALE AS SHOWN

SHEET 206 OF 226

E-21R

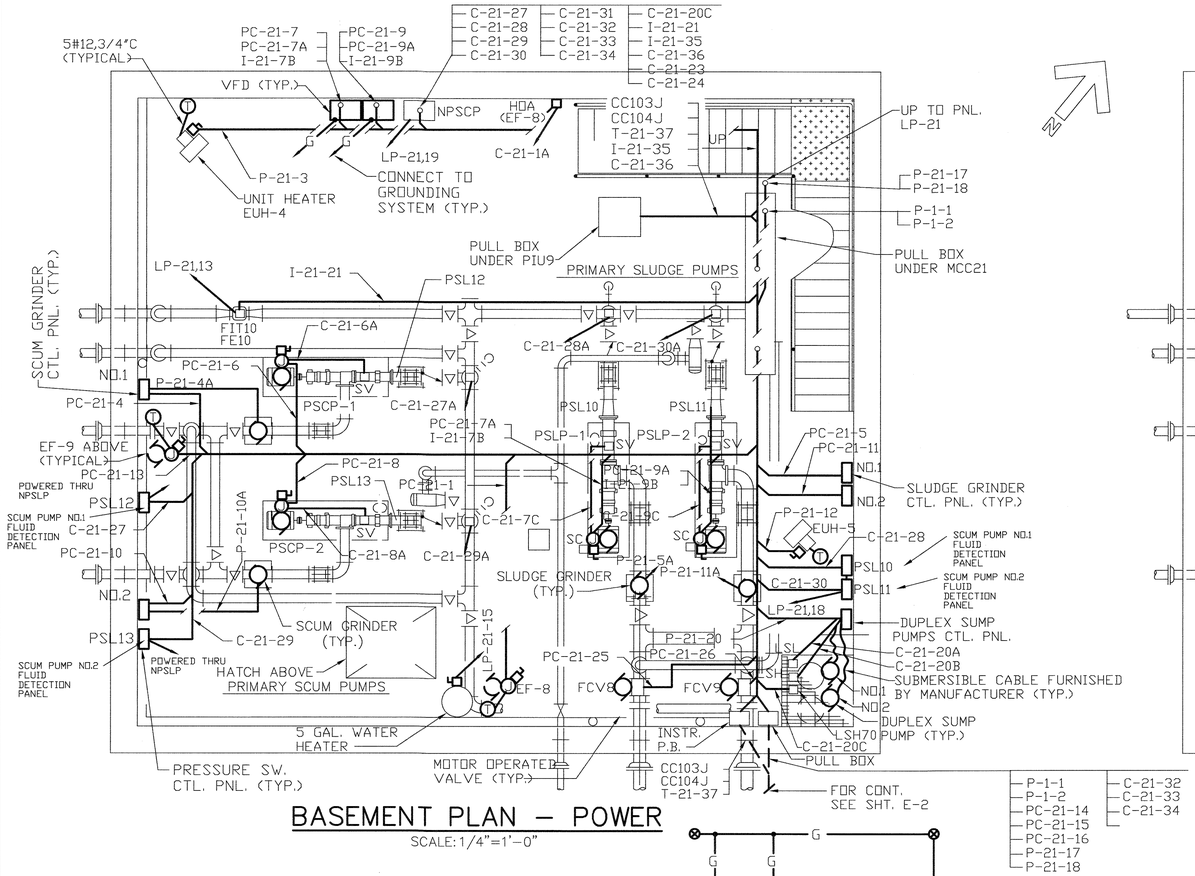

BASEMENT PLAN – POWER

SCALE: 1/4"=1'-0"

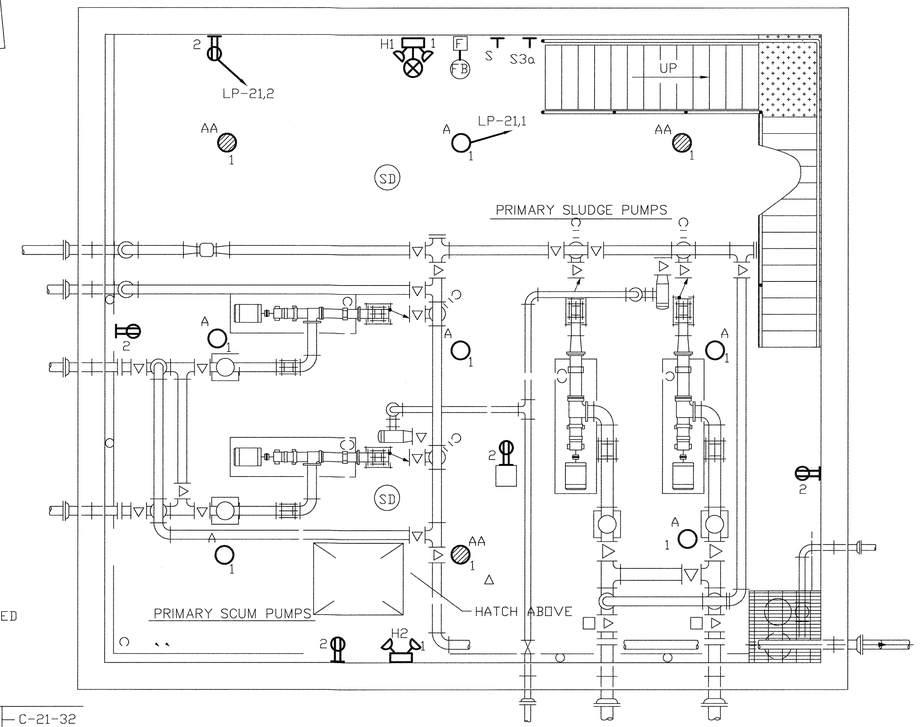

BASEMENT PLAN – LIGHTING

SCALE: 1/4"=1'-0"

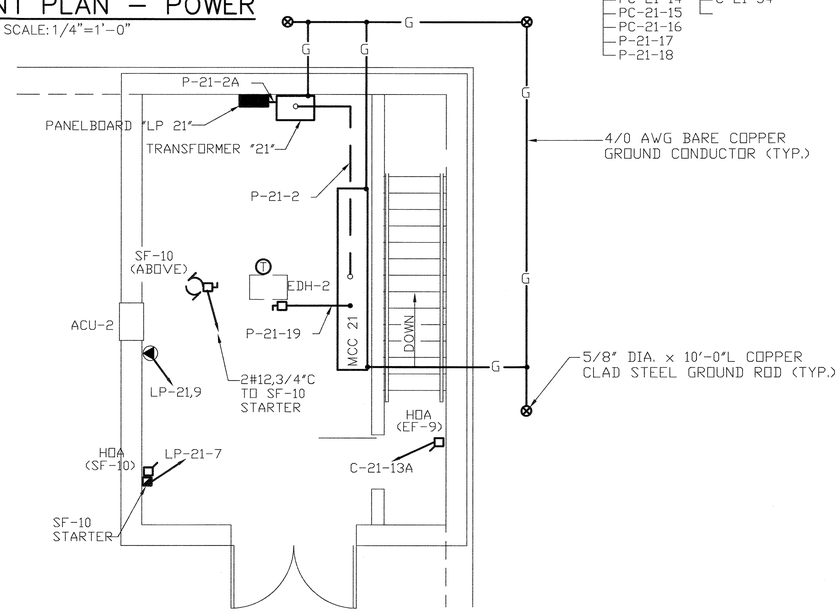

UPPER PLAN – POWER

SCALE: 1/4"=1'-0"

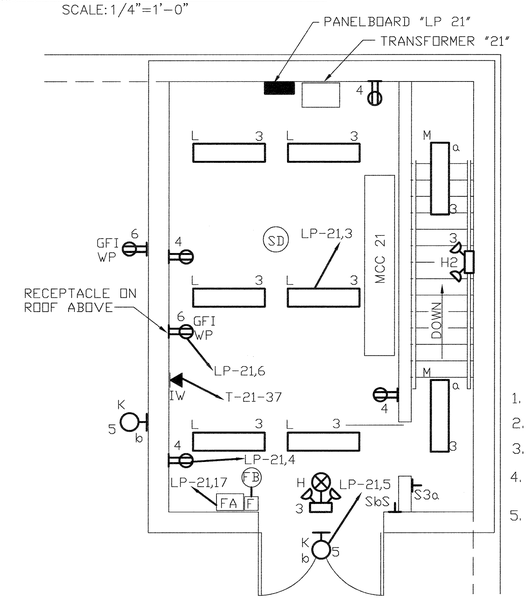

UPPER PLAN – LIGHTING

SCALE: 1/4"=1'-0"

NOTES:

1. FOR GENERAL NOTES AND SYMBOLS SEE SHT. E-1.
2. FOR CONDUIT AND WIRE SCHEDULE SEE SHT. E-36.
3. FOR PANELBOARD SCHEDULE SEE SHT. E-34.
4. FOR FIRE ALARM SYSTEM AND INTERCOM/TELEPHONE SYSTEM WIRING, SEE RISER DIAGRAMS ON SHT. E- .
5. PIV NO. 9 WAS DELETED FROM CONTRACT.

DEPARTMENT OF PUBLIC WORKS
HOWARD COUNTY, MARYLAND

DIRECTOR OF PUBLIC WORKS — DATE 5/7/96
CHIEF, BUREAU OF ENGINEERING — DATE 5/7/96
CHIEF, BUREAU OF ENVIRONMENTAL SERVICES — DATE 5/7/96
CHIEF, UTILITY DESIGN DIVISION — DATE 5-7-96

M&E Metcalf & Eddy
REG. PROF. ENGR. — DATE 5-7-96

STATE OF MARYLAND — JONATHAN WINTHROP DONNE No. 15140 — REGISTERED PROFESSIONAL ENGINEER

	BY	NO.	REVISION	DATE
DES:				
DRN:				
CHK:				
DATE:	M.J.C.	1	RECORD DRAWING	4/10/95

ELECTRICAL

LIGHTING & POWER PLANS – NORTH PUMP STATION

LITTLE PATUXENT WASTEWATER TREATMENT PLANT
LITTLE PATUXENT WASTEWATER TREATMENT PLANT EXPANSION
ADDITION NO. 5
CAPITAL PROJECT S-6153
CONTRACT NO. 20-3082
HOWARD COUNTY, MARYLAND

SCALE AS SHOWN
SHEET 207 OF 226
E-22R

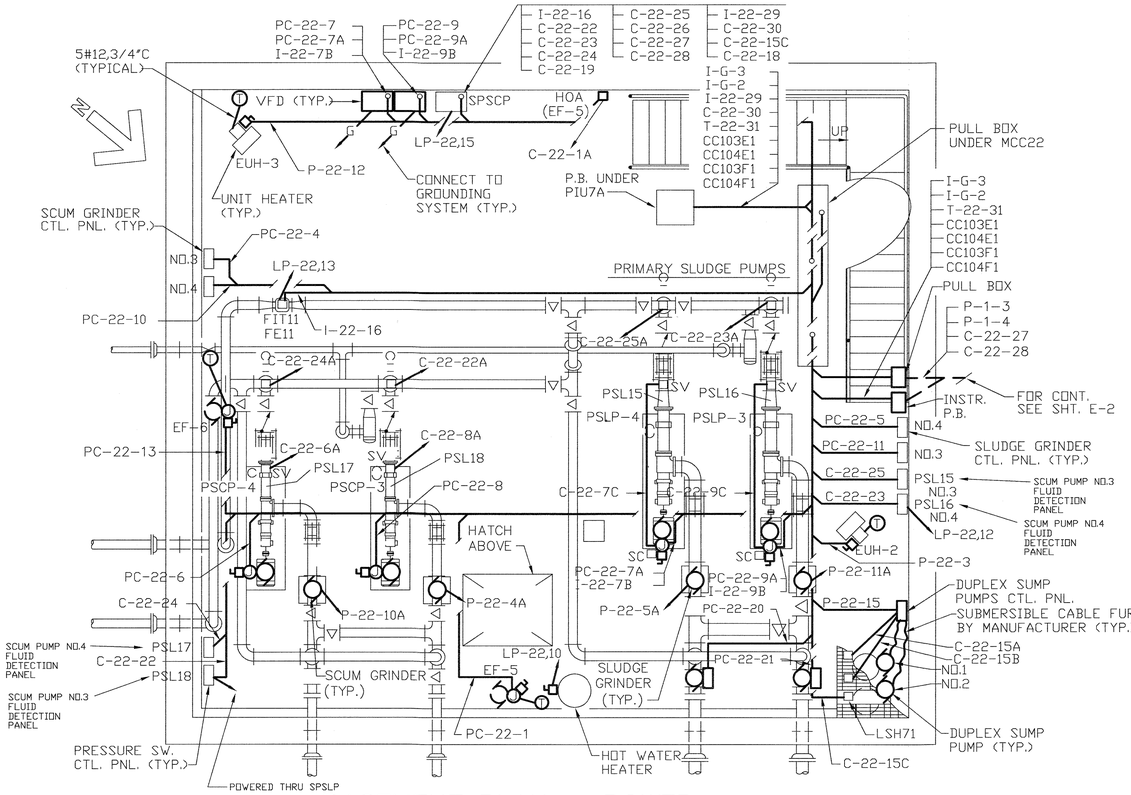

BASEMENT PLAN – POWER

SCALE: 1/4"=1'-0"

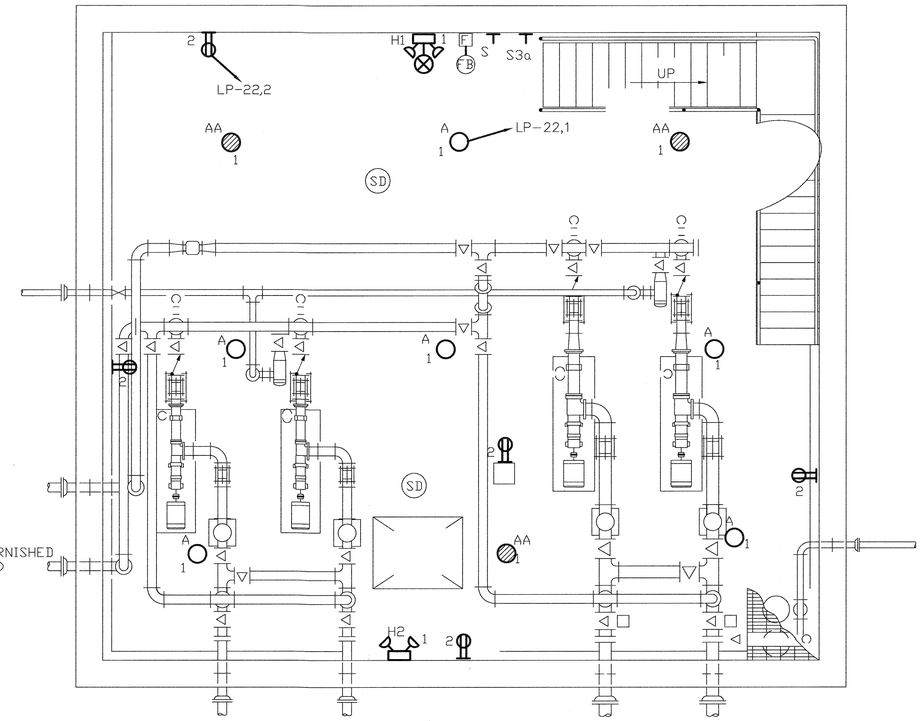

BASEMENT PLAN – LIGHTING

SCALE: 1/4"=1'-0"

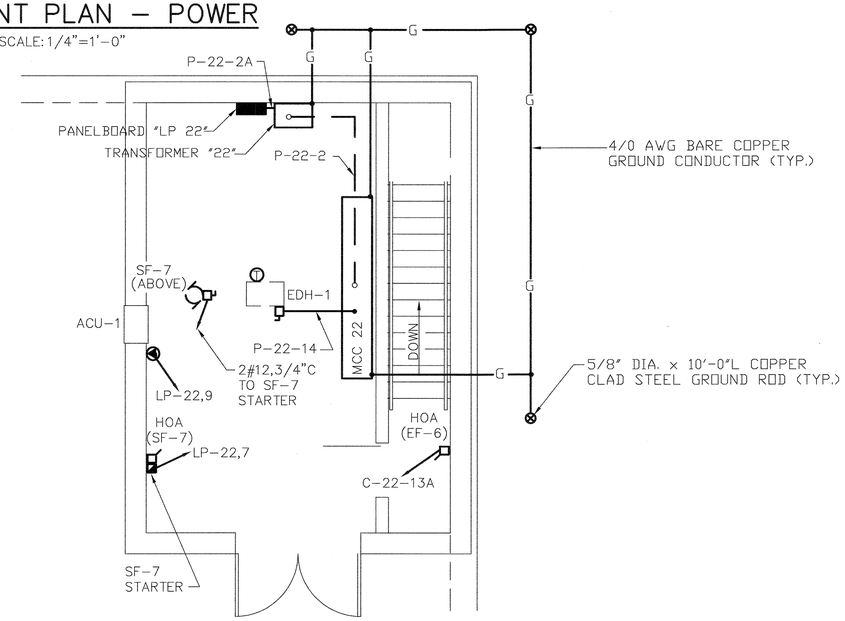

UPPER PLAN – POWER

SCALE: 1/4"=1'-0"

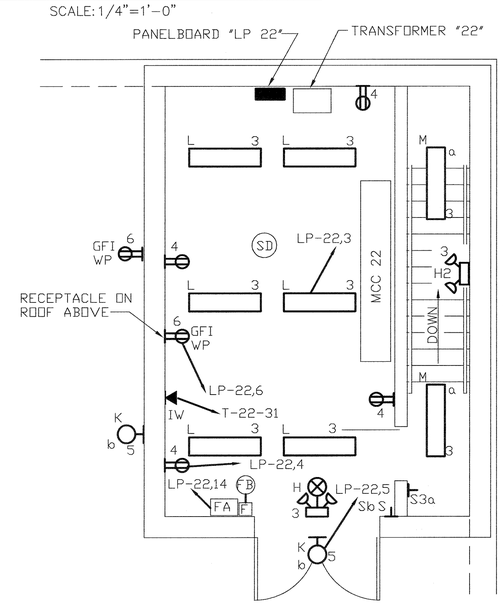

UPPER PLAN – LIGHTING

SCALE: 1/4"=1'-0"

NOTES:

1. FOR GENERAL NOTES AND SYMBOLS SEE SHT. E-1.
2. FOR CONDUIT AND WIRE SCHEDULE SEE SHT. E-36.
3. FOR PANELBOARD SCHEDULE SEE SHT. E-34.
4. FOR FIRE ALARM SYSTEM AND INTERCOM/TELEPHONE SYSTEM WIRING, SEE RISER DIAGRAMS ON SHT. E- .
5. PIV 7A WAS DELETED FROM CONTRACT.

DEPARTMENT OF PUBLIC WORKS
HOWARD COUNTY, MARYLAND

DIRECTOR OF PUBLIC WORKS — DATE 5/7/96
CHIEF, BUREAU OF ENGINEERING — DATE 5/7/96
CHIEF, BUREAU OF ENVIRONMENTAL SERVICES — DATE 5/7/96
CHIEF, UTILITY DESIGN DIVISION — DATE 5-7-96

M&E Metcalf & Eddy
REG. PROF. ENGR. — DATE 5-7-96

STATE OF MARYLAND — JONATHAN WINTHROP DOANE No. 19140 — REGISTERED PROFESSIONAL ENGINEER

DES:
DRN:
CHK:
DATE:

BY	NO.	REVISION	DATE
M.J.C.	1	RECORD DRAWING	4/10/95

ELECTRICAL

LIGHTING & POWER PLANS – SOUTH PUMP STATION

LITTLE PATUXENT WASTEWATER TREATMENT PLANT

LITTLE PATUXENT WASTEWATER TREATMENT PLANT EXPANSION ADDITION NO. 5
CAPITAL PROJECT S-6153

CONTRACT NO. 20-3082
HOWARD COUNTY, MARYLAND

SCALE AS SHOWN

SHEET 208 OF 226

E-23R

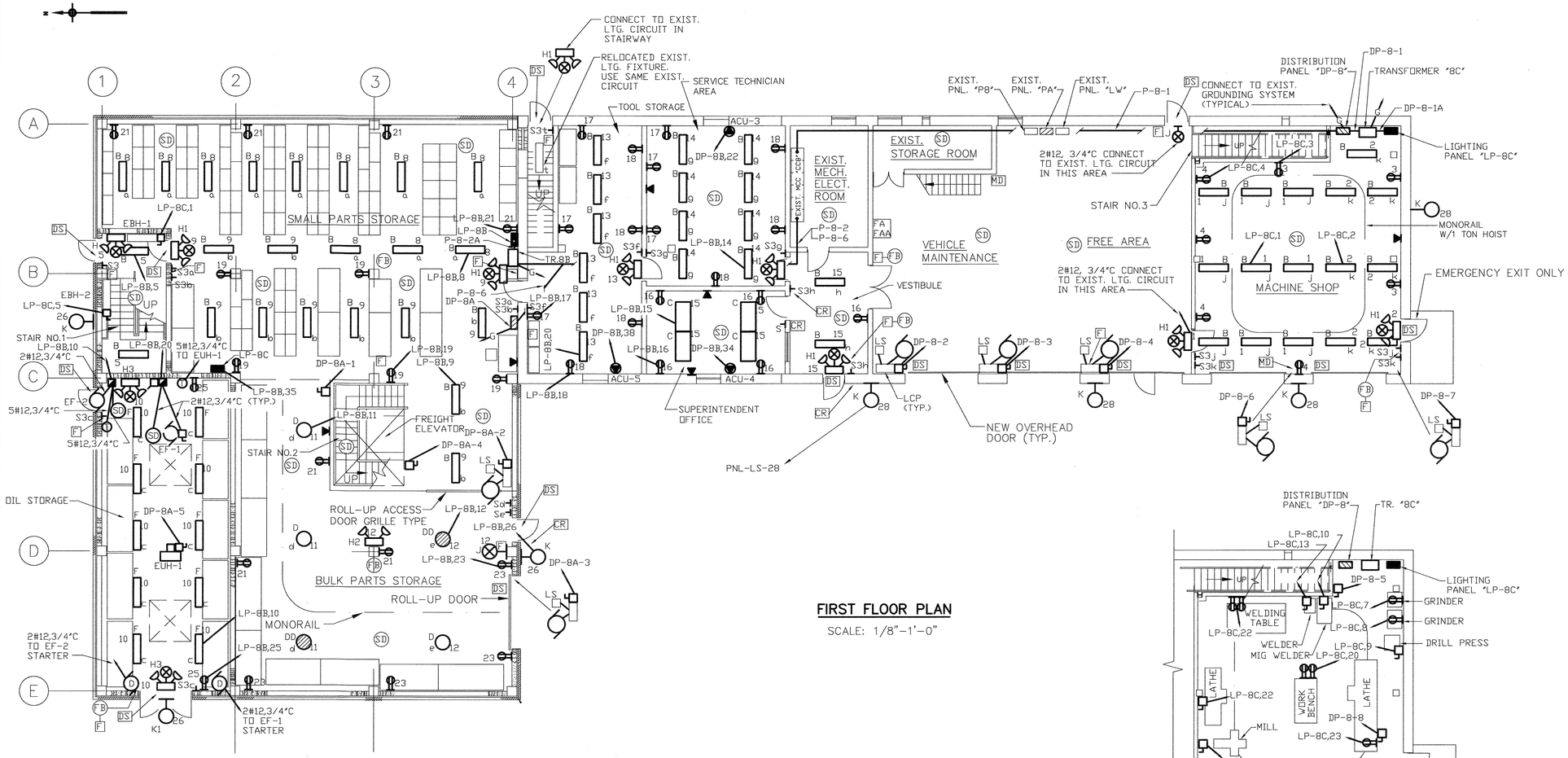

FIRST FLOOR PLAN

SCALE: 1/8"–1'–0"

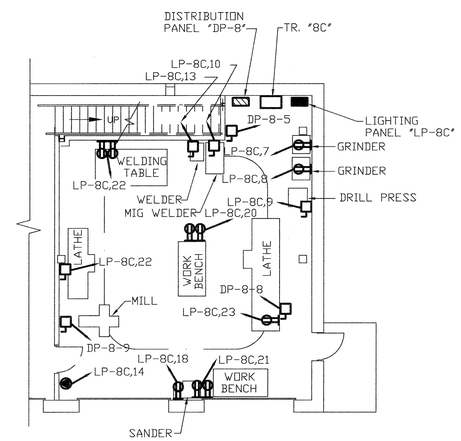

MACHINE AREA POWER PLAN

SCALE: 1/8"–1'–0"

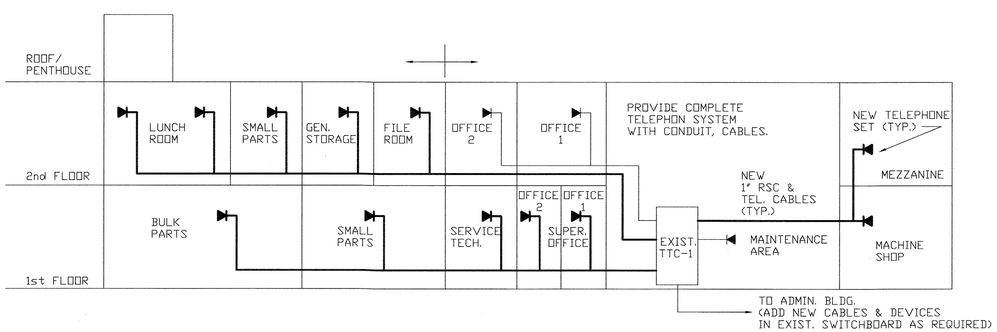

MAINTENANCE BUILDING TELEPHONE SYSTEM RISER DIAGRAM

NO SCALE

NOTES:

1. FOR GENERAL NOTES AND SYMBOLS SEE SHT. E-1.
2. FOR CONDUIT AND WIRE SCHEDULE SEE SHT. E-38.
3. FOR LIGHTING PANEL SCHEDULES SEE SHT. E-34.
4. ALL ELECTRICAL EQUIPMENT IN OIL STORAGE ROOM SHALL BE IN NEMA 7 ENCLOSURE.

DEPARTMENT OF PUBLIC WORKS
HOWARD COUNTY, MARYLAND

DIRECTOR OF PUBLIC WORKS — DATE 5/7/96
CHIEF, BUREAU OF ENGINEERING — DATE 5/7/96
CHIEF, BUREAU OF ENVIRONMENTAL SERVICES — DATE 5/7/96
CHIEF, UTILITY DESIGN DIVISION — DATE 5-7-96

Metcalf & Eddy
REG. PROF. ENGR. — DATE 5-7-96

STATE OF MARYLAND — JONATHAN WINTHROP COME No. 18140 — REGISTERED PROFESSIONAL ENGINEER

BY	NO.	REVISION	DATE
M.J.C.	1	RECORD DRAWING	4/10/95

DES: DRN: CHK: DATE:

ELECTRICAL

LIGHTING & POWER PLANS – MAINTENANCE BUILDING FIRST FLOOR

LITTLE PATUXENT WASTEWATER TREATMENT PLANT
LITTLE PATUXENT WASTEWATER TREATMENT PLANT EXPANSION
ADDITION NO. 5
CAPITAL PROJECT S-6153
CONTRACT NO. 20-3082
HOWARD COUNTY, MARYLAND

SCALE AS SHOWN
SHEET 209 OF 226
E-24R

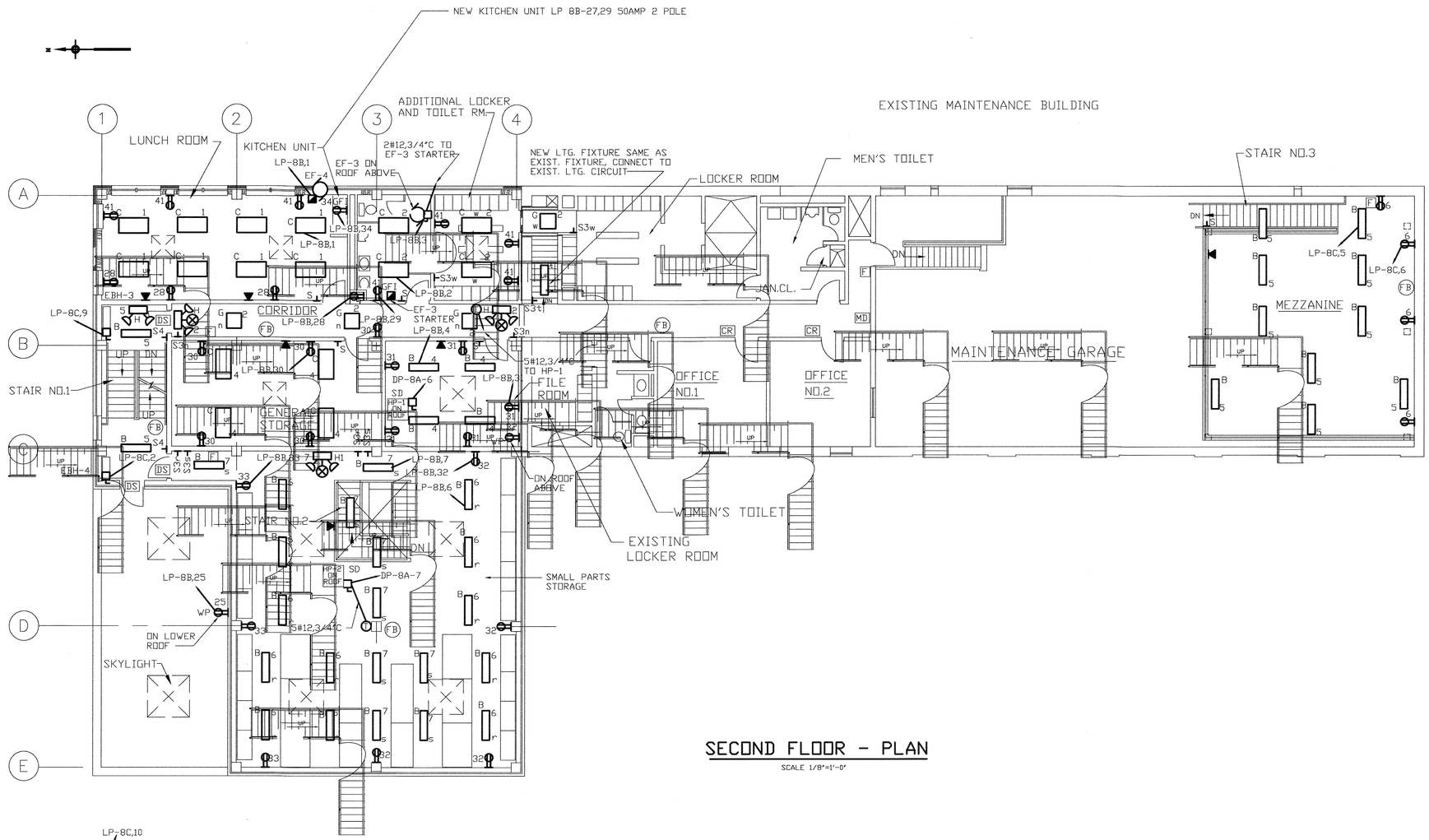

SECOND FLOOR - PLAN

SCALE 1/8"=1'-0"

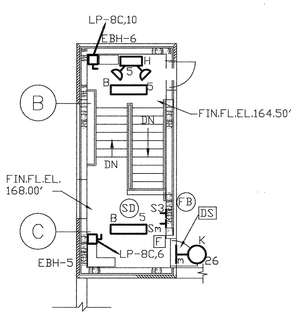

PENTHOUSE - PLAN
FLOOR EL. 168.00'

SCALE 1/8"=1'-0"

NOTES:

1. FOR GENERAL NOTES AND SYMBOLS SEE SHT. E-1.
2. FOR CONDUIT AND WIRE SCHEDULE SEE SHT. E-38.
3. FOR LIGHTING PANEL SCHEDULES SEE SHT. E-34.

DEPARTMENT OF PUBLIC WORKS
HOWARD COUNTY, MARYLAND

DIRECTOR OF PUBLIC WORKS — DATE 5/7/96
CHIEF, BUREAU OF ENGINEERING — DATE 5/7/96
CHIEF, BUREAU OF ENVIRONMENTAL SERVICES — DATE 5/7/96
CHIEF, UTILITY DESIGN DIVISION — DATE 5-7-96

M&E Metcalf & Eddy
REG. PROF. ENGR. — DATE 5-7-96

STATE OF MARYLAND — JONATHAN WINTHROP DOANE No. 18149 — REGISTERED PROFESSIONAL ENGINEER

	BY	NO.	REVISION	DATE
DES:				
DRN:				
CHK:				
DATE:	M.J.C.	1	RECORD DRAWING	4/10/95

ELECTRICAL

LIGHTING & POWER PLANS - MAINTENANCE BUILDING SECOND FLOOR

LITTLE PATUXENT WASTEWATER TREATMENT PLANT

LITTLE PATUXENT WASTEWATER TREATMENT PLANT EXPANSION
ADDITION NO. 5
CAPITAL PROJECT S-6153

CONTRACT NO. 20-3082
HOWARD COUNTY, MARYLAND

SCALE AS SHOWN

SHEET 210 OF 226

E-25R

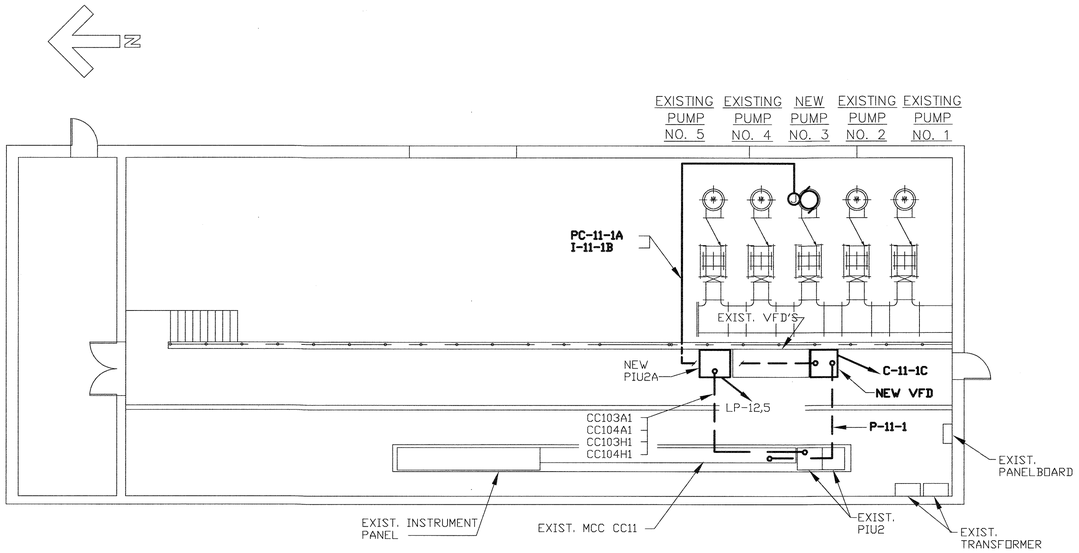

FILTER BLDG. - PLAN AT EL. 141.00

SCALE: 1/8"=1'-0"

NOTE:
PE/PIT5 AND PE/PIT6 WERE DELETED

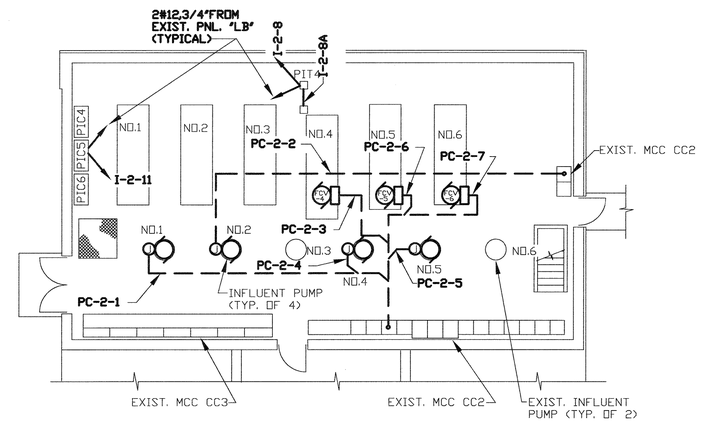

INFLUENT PUMP STA. - PLAN AT EL. 142.50

SCALE: 1/8"=1'-0"

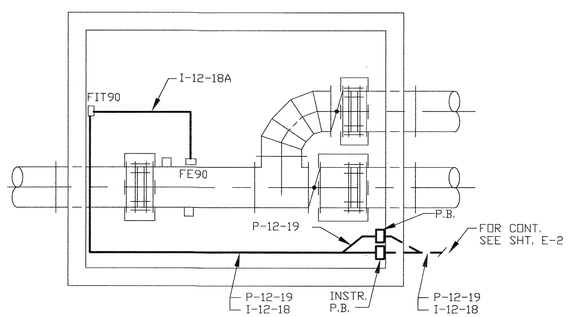

54" EFFLUENT METERING CHAMBER - PLAN

SCALE: 1/8"=1'-0"

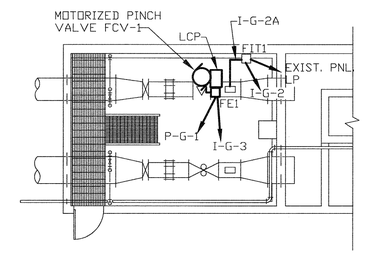

PRIMARY METERING CHAMBER - PLAN

SCALE: 1/8"=1'-0"

NOTES:

1. FOR GENERAL NOTES AND SYMBOLS SEE SHT. E-1.

DEPARTMENT OF PUBLIC WORKS
HOWARD COUNTY, MARYLAND

DIRECTOR OF PUBLIC WORKS — DATE 5/7/96
CHIEF, BUREAU OF ENGINEERING — DATE 5/7/96
CHIEF, BUREAU OF ENVIRONMENTAL SERVICES — DATE 5/7/96
CHIEF, UTILITY DESIGN DIVISION — DATE 5-7-96

M&E Metcalf & Eddy
REG. PROF. ENGR. — DATE 5-7-96

STATE OF MARYLAND — JONATHAN WINTHROP DOANE — No. 15140 — REGISTERED PROFESSIONAL ENGINEER

DES:				
DRN:				
CHK:				
DATE:	M.J.C.	1	RECORD DRAWING	4/10/95
	BY	NO.	REVISION	DATE

ELECTRICAL

LIGHTING & POWER PLANS - FILTER BUILDING, METERING CHAMBERS & INFLUENT PUMP STA.

LITTLE PATUXENT WASTEWATER TREATMENT PLANT
LITTLE PATUXENT WASTEWATER TREATMENT PLANT EXPANSION
ADDITION NO. 5
CAPITAL PROJECT S-6153
CONTRACT NO. 20-3082
HOWARD COUNTY, MARYLAND

SCALE AS SHOWN
SHEET 211 OF 226
E-26R

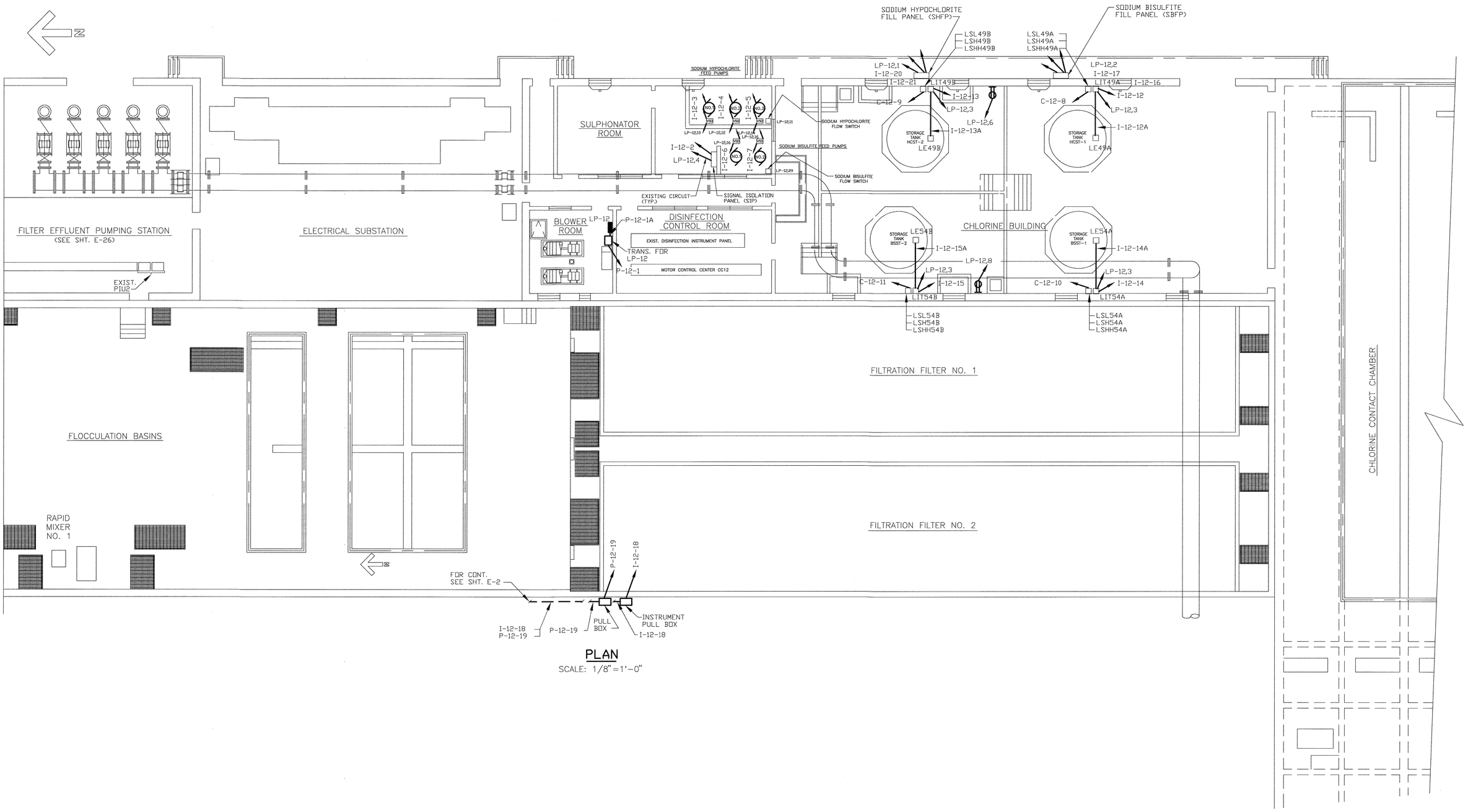

PLAN

SCALE: 1/8"=1'-0"

NOTES:

1. FOR GENERAL NOTES AND SYMBOLS SEE SHT. E-1.
2. FOR CONDUIT AND WIRE SCHEDULE SEE SHT. E-39.

DEPARTMENT OF PUBLIC WORKS
HOWARD COUNTY, MARYLAND

DIRECTOR OF PUBLIC WORKS — DATE 5/7/96
CHIEF, BUREAU OF ENGINEERING — DATE 5/7/96
CHIEF, BUREAU OF ENVIRONMENTAL SERVICES — DATE 5/7/96
CHIEF, UTILITY DESIGN DIVISION — DATE 5-7-96

M&E Metcalf & Eddy
REG. PROF. ENGR. — DATE 5-7-96

STATE OF MARYLAND — JONATHAN WINTHROP DOANE No. 15140 — REGISTERED PROFESSIONAL ENGINEER

DES:
DRN:
CHK:
DATE:

BY	NO.	REVISION	DATE
M.J.C.	1	RECORD DRAWING	4/10/95

ELECTRICAL

LIGHTING & POWER PLANS - CHLORINE BUILDING

LITTLE PATUXENT WASTEWATER TREATMENT PLANT
LITTLE PATUXENT WASTEWATER TREATMENT PLANT EXPANSION
ADDITION NO. 5
CAPITAL PROJECT S-6153
CONTRACT NO. 20-3082
HOWARD COUNTY, MARYLAND

SCALE AS SHOWN
SHEET 212 OF 226
E-27R

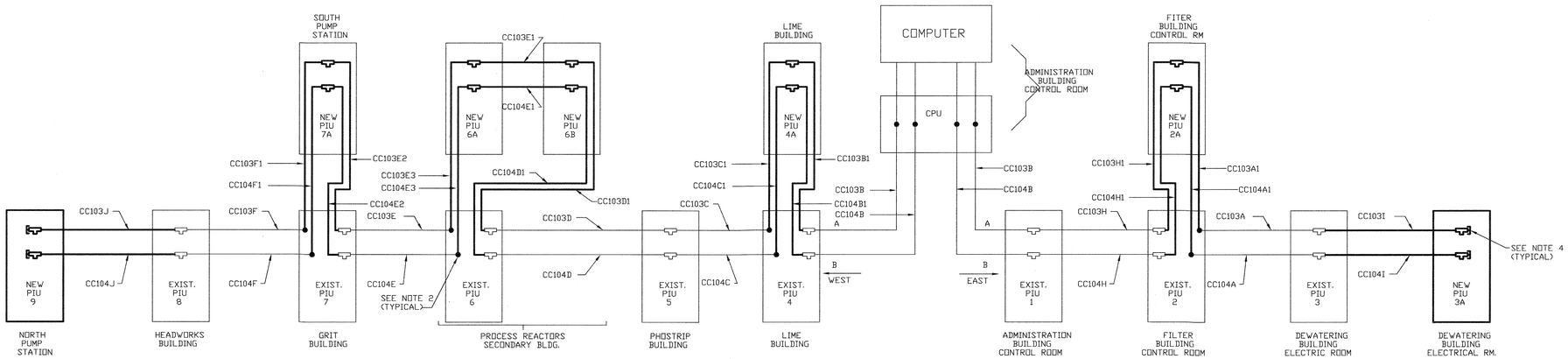

COMPUTER CONTROL SYSTEM

NO SCALE

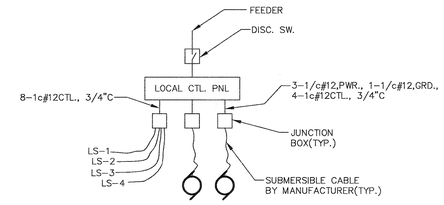

RISER DIAGRAM FOR DUPLEX SUMP PUMPS

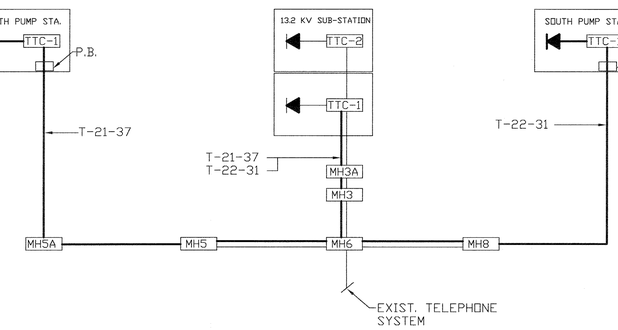

NORTH & SOUTH PUMP STATIONS TELEPHONE RISER DIAGRAM

NO SCALE

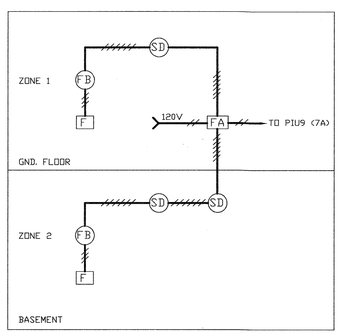

NEW NORTH & SOUTH PUMP STATIONS

NO SCALE

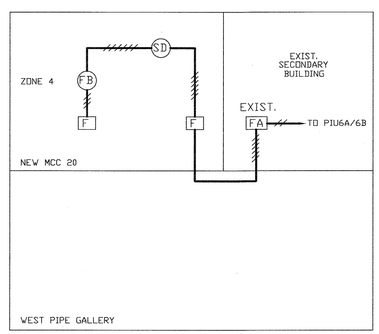

WEST PIPE GALLERY AREA

NO SCALE

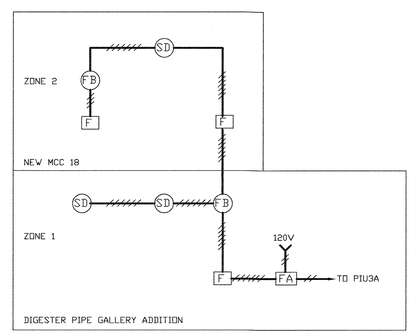

DIGESTER AREA

NO SCALE

FIRE ALARM SYSTEMS

NOTES

1. USE COAXIAL CABLE BELDEN 8213 (#14AWG) FOR EAST AND WEST DATA HIGHWAYS A & B (SAME AS EXISTING).
2. DISCONNECT EXISTING COAXIAL CABLE, PROVIDE NEW STRAIGHT CONNECTOR AND CONNECT TO NEW PIU (TYP. FOR PIU2, 2A, 3, 3A, 6, 6A, 7, 7A & 8).
3. ALL DATA HIGHWAY CABLES BETWEEN ANY TWO NEW/EXISTING PIU SHALL BE OF CONTINUOUS LENGTH WITHOUT SPLICES AND COUPLINGS.
4. FURNISH AND INSTALL THE FOLLOWING HONEYWELL (OR EQUAL) FITTINGS FOR NEW DATA HIGHWAY CABLES: PART NOS. C-KCA01, C-KCA02, C-KCA03 AND INSULATOR FOR COAXIAL CONNECTOR HOUSING.
5. FURNISH AND INSTALL NEW INPUT/OUTPUT CARDS TO EXISTING PIU AS REQUIRED.

DEPARTMENT OF PUBLIC WORKS
HOWARD COUNTY, MARYLAND

DIRECTOR OF PUBLIC WORKS — DATE 5/7/96
CHIEF, BUREAU OF ENGINEERING — DATE 5/7/96
CHIEF, BUREAU OF ENVIRONMENTAL SERVICES — DATE 5/7/96
CHIEF, UTILITY DESIGN DIVISION — DATE 5-7-96

Metcalf & Eddy
REG. PROF. ENGR. — DATE 5-7-96

STATE OF MARYLAND — JONATHAN WINTHROP DOANE No. 15140 — REGISTERED PROFESSIONAL ENGINEER

BY	NO.	REVISION	DATE
M.J.C.	1	RECORD DRAWING	4/10/95

DES:
DRN:
CHK:
DATE:

ELECTRICAL

RISER DIAGRAMS I

LITTLE PATUXENT WASTEWATER TREATMENT PLANT
LITTLE PATUXENT WASTEWATER TREATMENT PLANT EXPANSION
ADDITION NO. 5
CAPITAL PROJECT S-6153
CONTRACT NO. 20-3082
HOWARD COUNTY, MARYLAND

SCALE AS SHOWN
SHEET 213 OF 226
E-28R

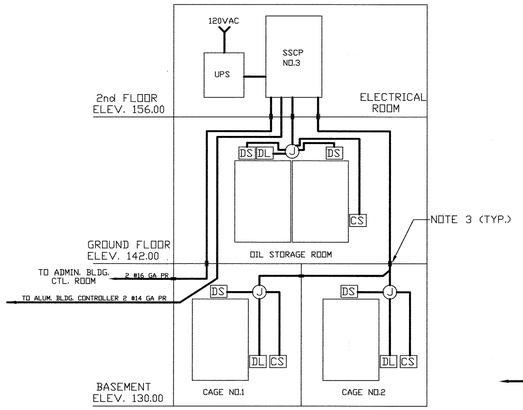

DEWATERING BLDG. SECURITY SYSTEM RISER DIAGRAM

NO SCALE

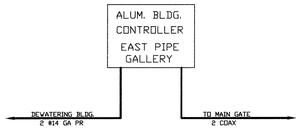

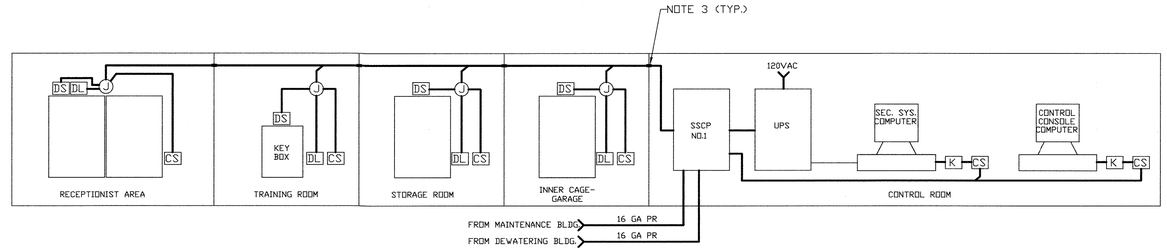

ADMIN. BLDG. SECURITY SYSTEM RISER DIAGRAM

NO SCALE

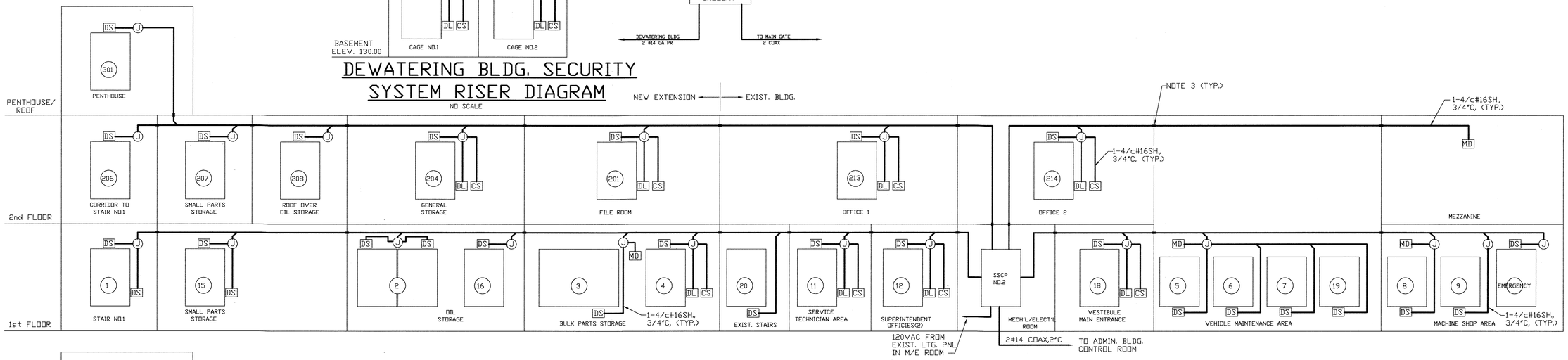

MAINTENANCE BLDG. SECURITY SYSTEM RISER DIAGRAM

NO SCALE

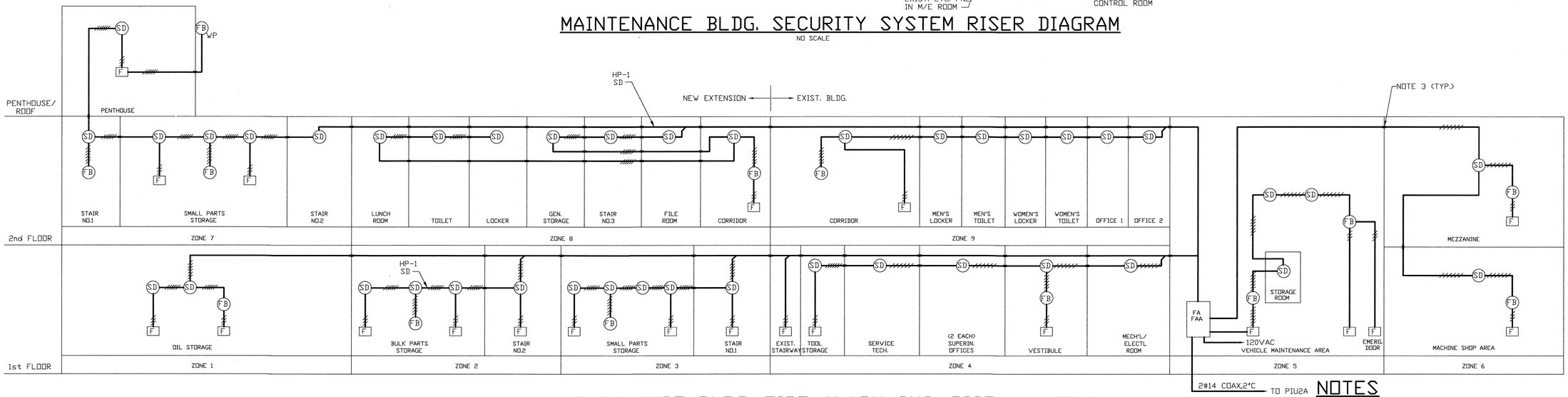

MAINTENANCE BLDG. FIRE ALARM SYS. RISER DIAGRAM

NO SCALE

NOTES

1. FOR GENERAL NOTES AND SYMBOLS SEE SHT. E-1.
2. REPLACE EXIST. FIRE ALARM & SECURITY SYSTEMS WITH NEW SYSTEMS.
3. PROVIDE APPROVED FIRE SEAL IN ALL WALL/FLOOR CONDUIT PENETRATION.

DEPARTMENT OF PUBLIC WORKS
HOWARD COUNTY, MARYLAND

DIRECTOR OF PUBLIC WORKS — DATE 5/7/96
CHIEF, BUREAU OF ENGINEERING — DATE 5/7/96
CHIEF, BUREAU OF ENVIRONMENTAL SERVICES — DATE 5/7/96
CHIEF, UTILITY DESIGN DIVISION — DATE 5-7-96

M&E Metcalf & Eddy
REG. PROF. ENGR. — DATE 5-7-96

STATE OF MARYLAND — JONATHAN WINTHROP DOANE No. 15140 — REGISTERED PROFESSIONAL ENGINEER

	BY	NO.	REVISION	DATE
DES:				
DRN:				
CHK:				
DATE:	M.J.C.	1	RECORD DRAWING	4/10/95

ELECTRICAL

RISER DIAGRAM II

LITTLE PATUXENT WASTEWATER TREATMENT PLANT
LITTLE PATUXENT WASTEWATER TREATMENT PLANT EXPANSION
ADDITION NO. 5
CAPITAL PROJECT S-6153
CONTRACT NO. 20-3082
HOWARD COUNTY, MARYLAND

SCALE AS SHOWN
SHEET 214 OF 226
E-29R

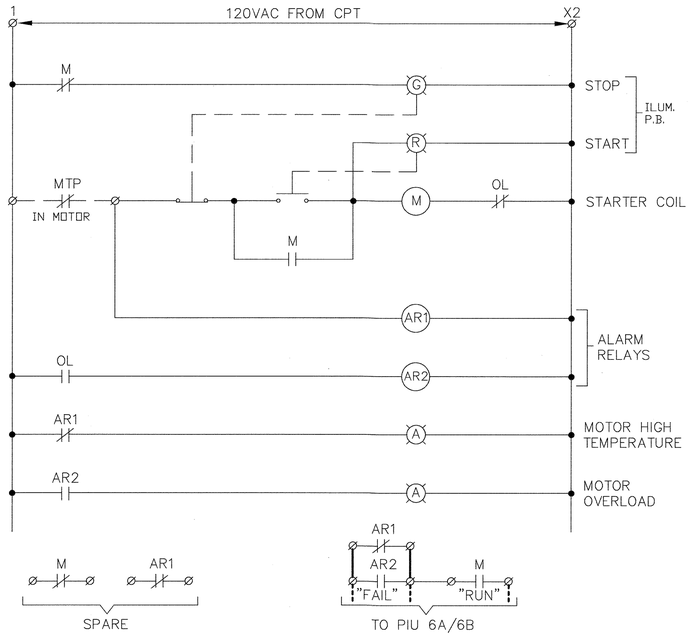

NOTE: ALL DEVICES ARE IN MCC UNLESS NOTED.

PROCESS REACTOR MIXER

(TYPICAL FOR 66 P.R. MIXERS)

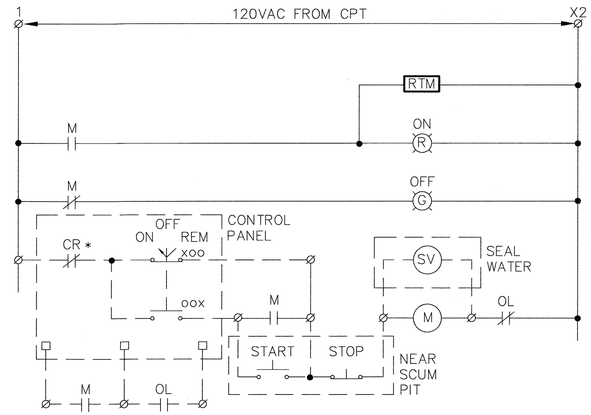

PRIMARY SCUM PUMP

TYPICAL OF 4: NORTH P.S. SCUM PUMPS NO.1 & NO.2
SOUTH P.S. SCUM PUMPS NO.1 & NO.2

* CR21 – PUMP NO.1, CR27 – PUMP NO.2

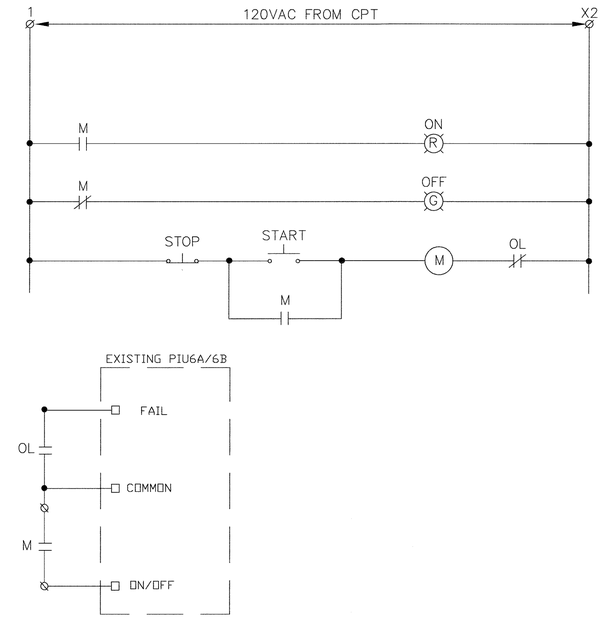

SPRAY WATER PUMPS

(TYPICAL FOR PUMP NO.1 & NO.2)

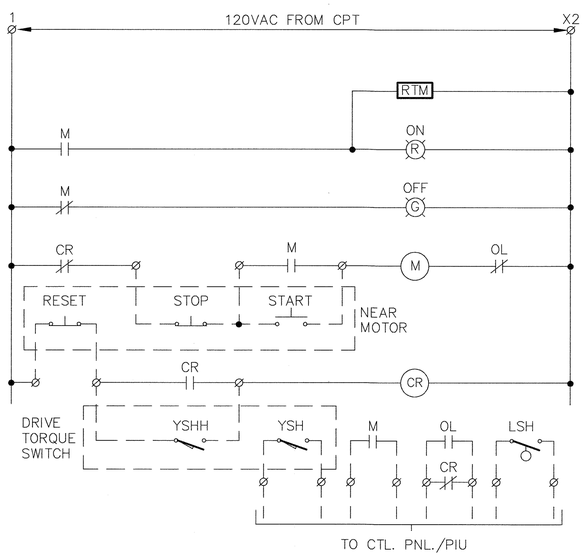

NEW PRIMARY CLARIFIER NO.2

TYPICAL FOR: NEW FINAL CLARIFIER NO.2
NEW GRAVITY THICKENER NO.3
NEW GRAVITY THICKENER NO.4

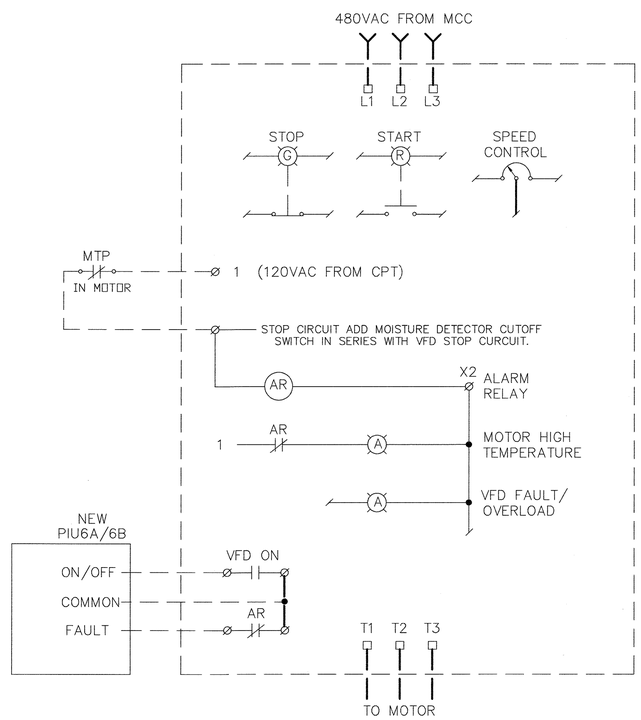

NOTE: ALL DEVICES ARE IN VFD UNLESS NOTED.

INTERNAL RECYCLE PUMP VFD

(TYPICAL FOR 8 RECYCLE PUMPS)

NOTE:
FOR AS-BUILT SCHEMATIC DIAGRAMS, REFER TO O&M MANUALS OF MCC'S, VFD'S AND CONNECTED EQUIPMENT.

DEPARTMENT OF PUBLIC WORKS
HOWARD COUNTY, MARYLAND

DIRECTOR OF PUBLIC WORKS — DATE 5/6/96
CHIEF, BUREAU OF ENGINEERING — DATE 5/7/96
CHIEF, BUREAU OF ENVIRONMENTAL SERVICES — DATE 5/7/96
CHIEF, UTILITY DESIGN DIVISION — DATE 5-7-96

Metcalf & Eddy
REG./PROF. ENGR. — DATE 5-7-96

STATE OF MARYLAND — JONATHAN WINTHROP DOANE — No. 15140 — REGISTERED PROFESSIONAL ENGINEER

	BY	NO.	REVISION	DATE
DES:				
DRN:				
CHK:				
DATE:	M.J.C.	1	RECORD DRAWING	4/10/95

ELECTRICAL

SCHEMATIC DIAGRAMS I

LITTLE PATUXENT WASTEWATER TREATMENT PLANT
LITTLE PATUXENT WASTEWATER TREATMENT PLANT EXPANSION
ADDITION NO. 5
CAPITAL PROJECT S-6153
CONTRACT NO. 20-3082
HOWARD COUNTY, MARYLAND

SCALE AS SHOWN
SHEET 215 OF 226
E-30R

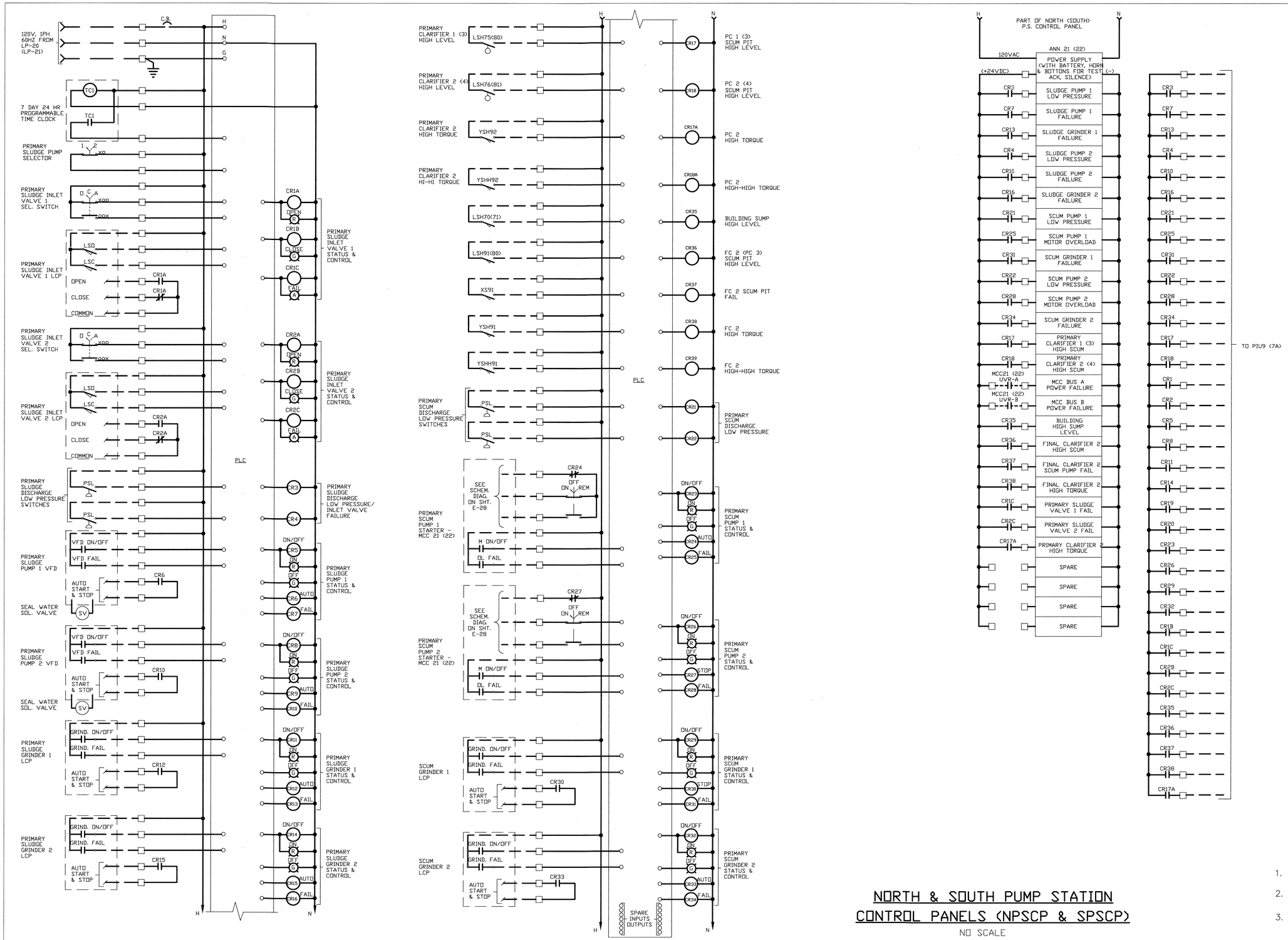

NORTH & SOUTH PUMP STATION CONTROL PANELS (NPSCP & SPSCP)

NO SCALE

NOTES:

1. FOR OTHER SYMBOLS SEE SHT. E-1.
2. ITEMS IN PARENTHESIS PERTAIN TO SOUTH PUMP STATION
3. FOR AS-BUILT SCHEMATIC DIAGRAMS, REFER TO INSTRUMENTATION O&M MANUALS.

DEPARTMENT OF PUBLIC WORKS
HOWARD COUNTY, MARYLAND

DIRECTOR OF PUBLIC WORKS — DATE 5/7/96
CHIEF, BUREAU OF ENGINEERING — DATE 5/7/96
CHIEF, BUREAU OF ENVIRONMENTAL SERVICES — DATE 5/7/96
CHIEF, UTILITY DESIGN DIVISION — DATE 5-7-96

M&E Metcalf & Eddy
REQ. PROF. ENGR. — DATE 5-7-96

STATE OF MARYLAND — JONATHAN WINTHROP DOWNE No. 15140 — REGISTERED PROFESSIONAL ENGINEER

DES:
DRN:
CHK:
DATE:

BY	NO.	REVISION	DATE
M.J.C.	1	RECORD DRAWING	4/10/95

ELECTRICAL

SCHEMATIC DIAGRAMS II

LITTLE PATUXENT WASTEWATER TREATMENT PLANT
LITTLE PATUXENT WASTEWATER TREATMENT PLANT EXPANSION
ADDITION NO. 5
CAPITAL PROJECT S-6153
CONTRACT NO. 20-30B2
HOWARD COUNTY, MARYLAND

SCALE AS SHOWN
SHEET 216 OF 226
E-31 R

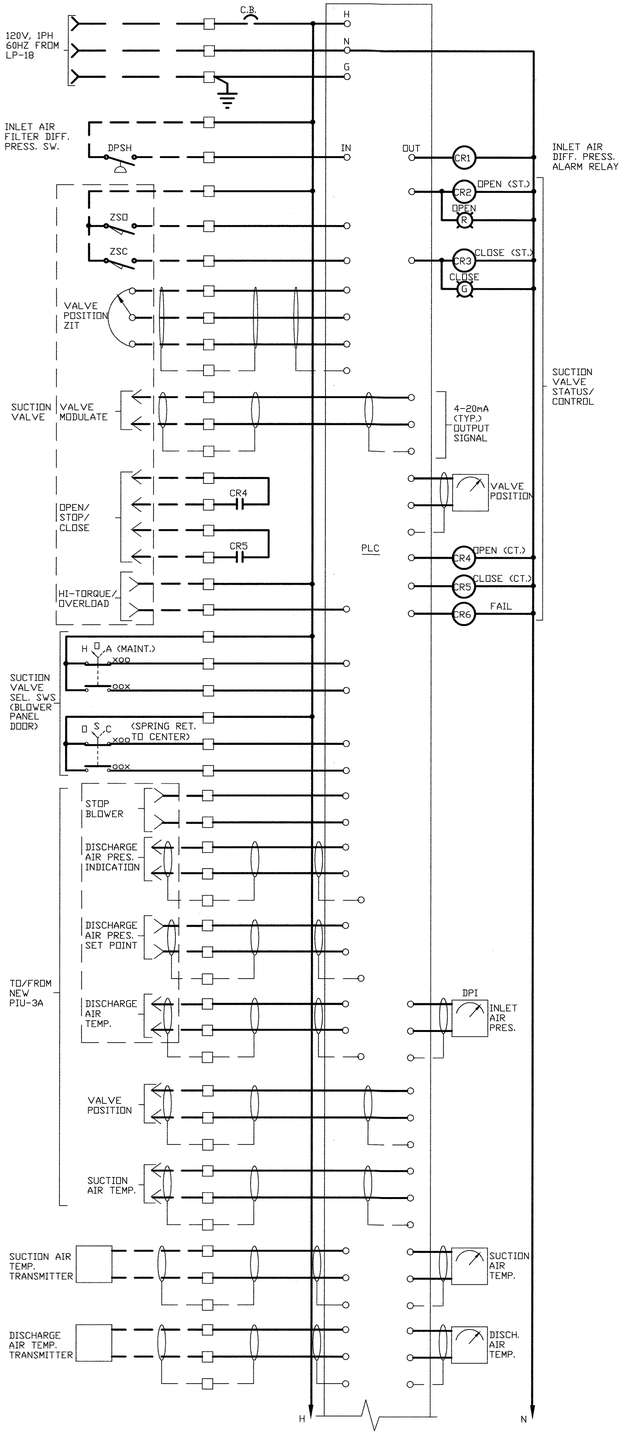

NEW BLOWER CONTROL PANEL

(TYPICAL OF 3)

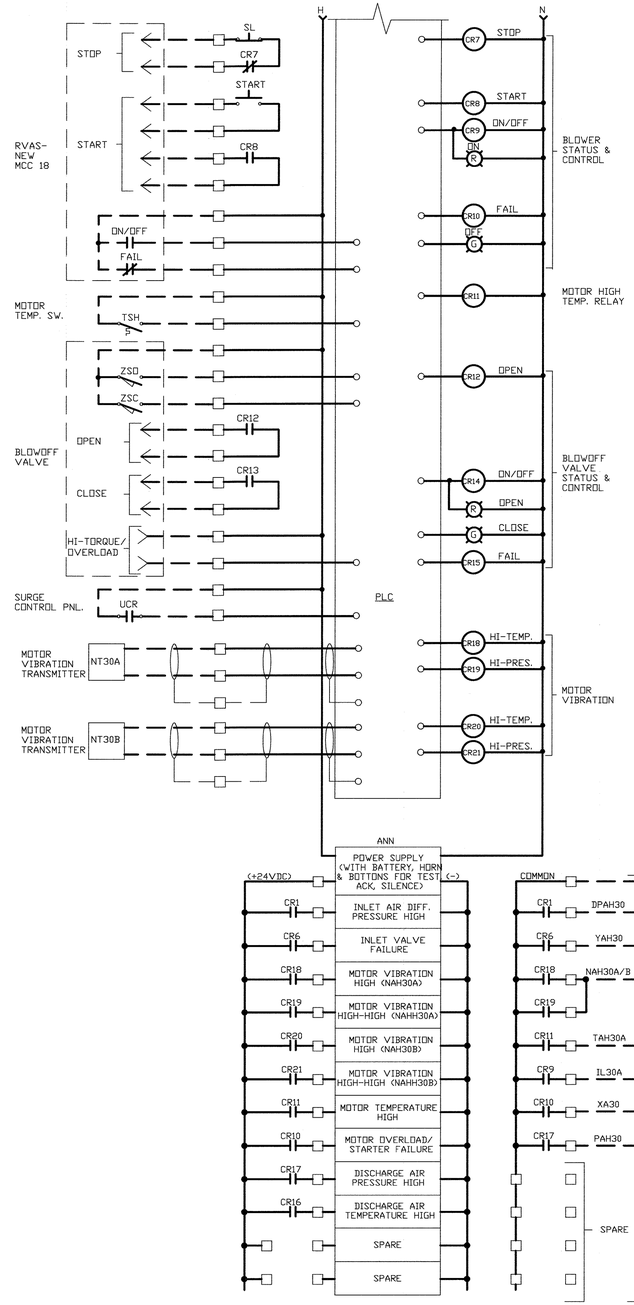

NOTES:

1. FOR OTHER SYMBOLS SEE SHT. E-1.
2. ALL DEVICES ARE IN MCC OR CONTROLLER UNLESS OTHERWISE INDICATED.
3. PROVIDE DISCONNECT SWITCH NEAR MOTOR WHERE INDICATED ON PLANS.
4. REFER TO MANUFACTURER"S INSTRUCTION FOR WIRING OTHER EQUIPMENT OR DEVICES.
5. FOR AS BUILT SCHEMATIC DIAGRAMS, REFER TO O&M MANUALS OF MCC'S, VFD'S,INSRUMENTATION CONTROL PANELS AND CONNECTED EQUIPMENT.

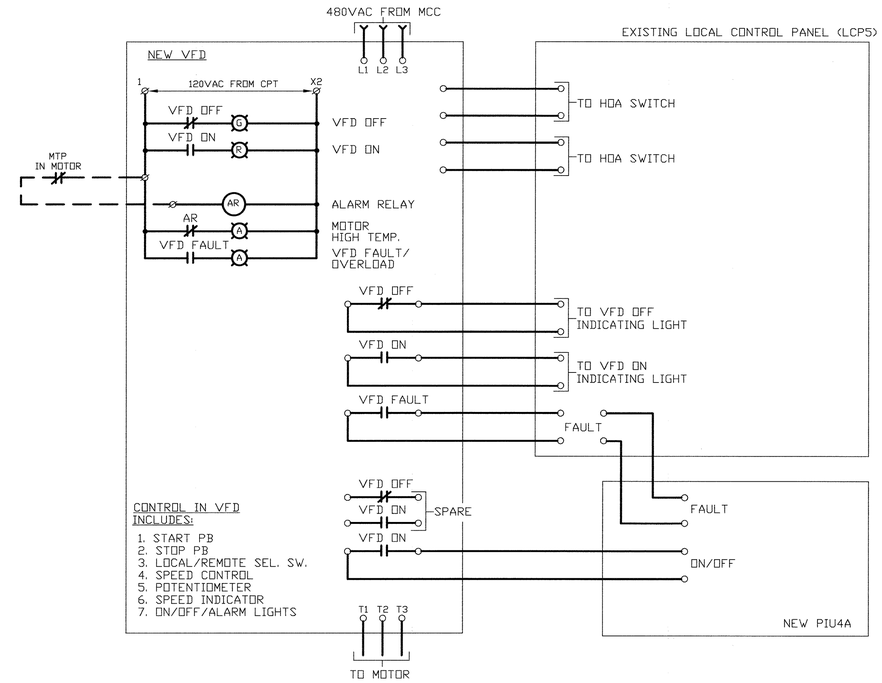

RETURN ACTIVATED SLUDGE PUMPS VFD

(RAS PUMP SWING NO.2A SIMILAR)

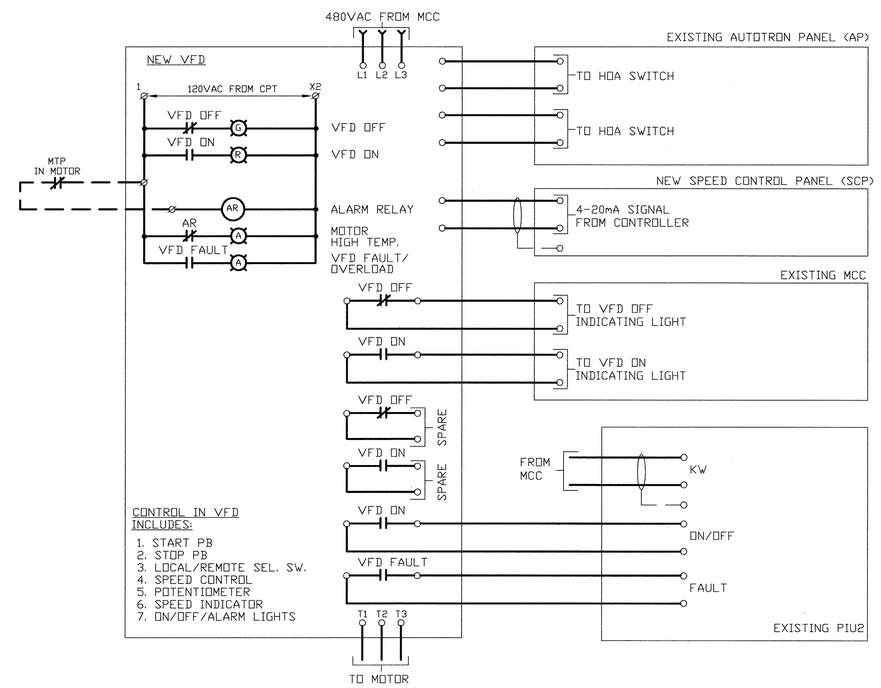

EFFLUENT PUMP NO.3 VFD

DEPARTMENT OF PUBLIC WORKS
HOWARD COUNTY, MARYLAND

DIRECTOR OF PUBLIC WORKS — DATE 5/7/96
CHIEF, BUREAU OF ENGINEERING — DATE 5/7/96
CHIEF, BUREAU OF ENVIRONMENTAL SERVICES — DATE 5/7/96
CHIEF, UTILITY DESIGN DIVISION — DATE 5-7-96

M&E Metcalf & Eddy
REQ. PROF. ENGR. — DATE 5-7-96

STATE OF MARYLAND — JONATHAN WINTHROP DOANE No. 15140 — REGISTERED PROFESSIONAL ENGINEER

DES:				
DRN:				
CHK:				
DATE:	M.J.C.	1	RECORD DRAWING	4/10/95
	BY	NO.	REVISION	DATE

ELECTRICAL

SCHEMATIC DIAGRAMS III

LITTLE PATUXENT WASTEWATER TREATMENT PLANT

LITTLE PATUXENT WASTEWATER TREATMENT PLANT EXPANSION
ADDITION NO. 5
CAPITAL PROJECT S-6153

CONTRACT NO. 20-3082
HOWARD COUNTY, MARYLAND

SCALE AS SHOWN

SHEET 217 OF 226

E-32R

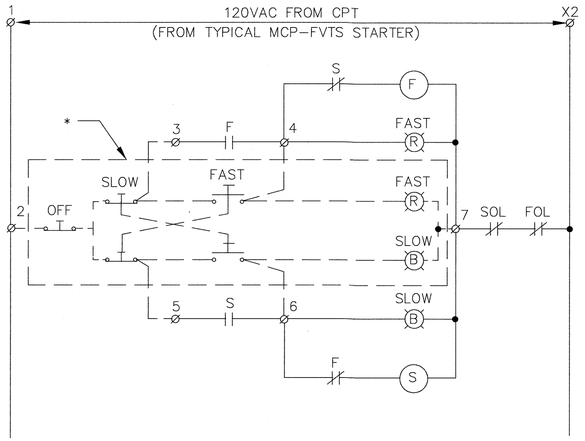

STARTERS "F" & "S" ARE MECHANICALLY INTERLOCKED

* SEE PLANS FOR LOCATIONS

NORTH & SOUTH PUMP STATION EXHAUST FAN - TWO SPEED MANUAL CONTROL

(TYPICAL FOR EF-6 & EF-9)

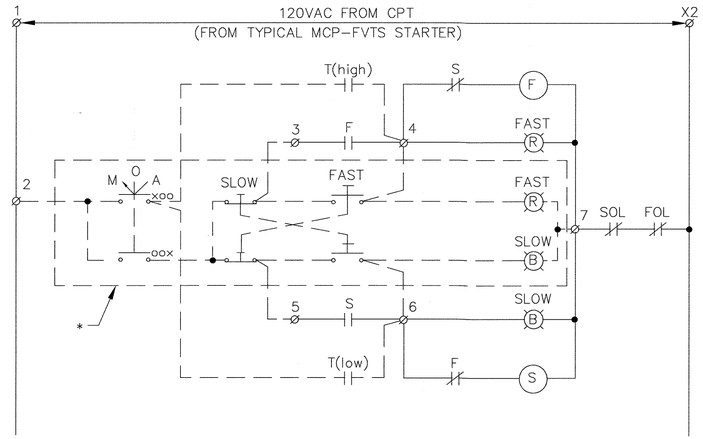

STARTERS "F" & "S" ARE MECHANICALLY INTERLOCKED

* SEE PLANS FOR LOCATIONS

NORTH & SOUTH PUMP STATION EXHAUST FAN - TWO SPEED AUTO/MANUAL CONTROL

(TYPICAL FOR EF-5 & EF-8)

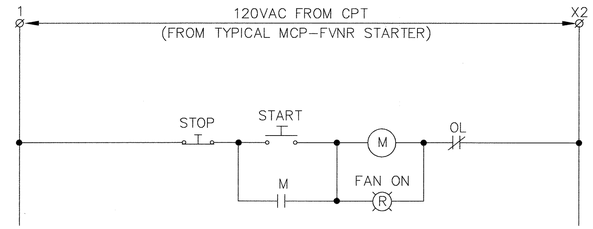

DIGESTER GALLERY EXHAUST FAN

(TYPICAL FOR FAN NO.1 & NO.2)

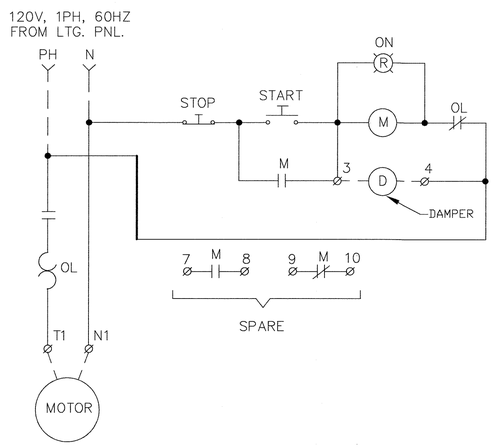

EXHAUST FAN AT MAINTENANCE BUILDING

(TYPICAL FOR EF-1 & EF-2; EXHAUST FANS EF-3 & EF-4 SIMILAR, EXCEPT NO DAMPER)

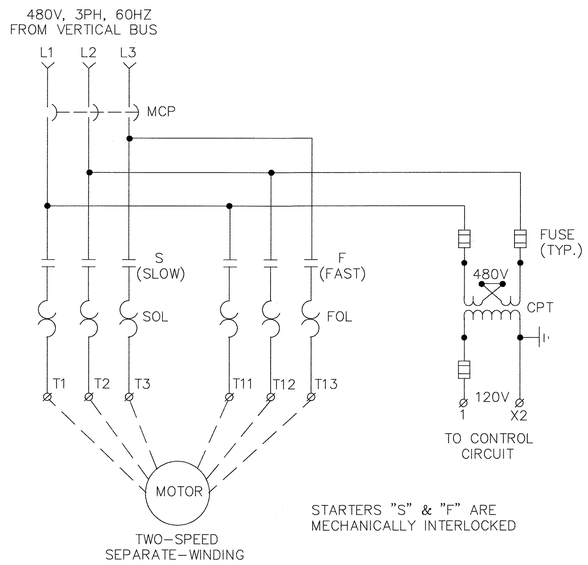

STARTERS "S" & "F" ARE MECHANICALLY INTERLOCKED

TYPICAL COMBINATION MCP-FVTS STARTER

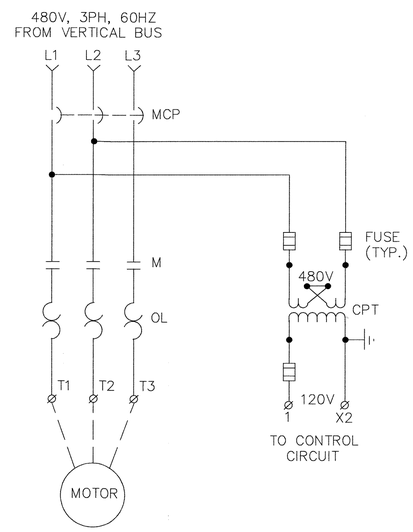

TYPICAL COMBINATION MCP-FVNR STARTER

SCHEMATIC SYMBOLS:

————	FACTORY WIRING IN MCC OR BY CONTROLLER MANUFACTURER
— — —	FIELD WIRING BY CONTRACTOR
12 ⌀	TERMINAL BLOCK IN MCC OR CONTROLLER, NUMBER DENOTES TERMINAL BLOCK MARKING

NOTES:

1. FOR OTHER SYMBOLS SEE SHT. E-1.
2. ALL DEVICES ARE IN MCC OR CONTROLLER UNLESS OTHERWISE INDICATED.
3. PROVIDE DISCONNECT SWITCH NEAR MOTOR WHERE INDICATED ON PLANS.
4. REFER TO MANUFACTURER"S INSTRUCTION FOR WIRING OTHER EQUIPMENT OR DEVICES.
5. FOR AS BUILT SCHEMATIC DIAGRAMS, REFER TO O&M MANUALS OF MCC'S AND CONNECTED EQUIPMENT.

DEPARTMENT OF PUBLIC WORKS
HOWARD COUNTY, MARYLAND

DIRECTOR OF PUBLIC WORKS — DATE 5/7/96
CHIEF, BUREAU OF ENGINEERING — DATE 5/7/96
CHIEF, BUREAU OF ENVIRONMENTAL SERVICES — DATE 5/7/96
CHIEF, UTILITY DESIGN DIVISION — DATE 5-7-96

M&E Metcalf & Eddy
REG. PROF. ENGR. — DATE 5-7-96

STATE OF MARYLAND — JONATHAN WINTHROP DOANE No. 15140 — REGISTERED PROFESSIONAL ENGINEER

DES:				
DRN:				
CHK:				
DATE:	M.J.C.	1	RECORD DRAWING	6/10/95
	BY	NO.	REVISION	DATE

ELECTRICAL

SCHEMATIC DIAGRAMS IV

LITTLE PATUXENT WASTEWATER TREATMENT PLANT
LITTLE PATUXENT WASTEWATER TREATMENT PLANT EXPANSION
ADDITION NO. 5
CAPITAL PROJECT S-6153
CONTRACT NO. 20-3082
HOWARD COUNTY, MARYLAND

SCALE AS SHOWN

SHEET 218 OF 226

E-33R

DISTR. PNL. "DP-8"

SERVICE: 480V, 3PH, 3W, 60HZ
MAIN CIRCUIT BREAKER: 150A FRAME, 150A TRIP
GROUND BUS: NEUTRAL 100A A B C 15
CABINET: SURFACE MOUNTED

LOCATION	HP	KVA	CIR. NO.	CIR. NO.	KVA	HP	LOCATION
TRANSFORMER TR. 8C		37.50	1	2		1.00	MACHINE SHOP MONORAIL
			3	4			
			5	6			
VEHICLE MAINTENANCE ROLL-UP DOOR NO.1	.50		7	8		.50	MACHINE SHOP ROLL-UP DOOR NO.1
			9	10			
			11	12			
VEHICLE MAINTENANCE ROLL-UP DOOR NO.2	.50		13	14		.50	MACHINE SHOP ROLL-UP DOOR NO.2
			15	16			
			17	18			
VEHICLE MAINTENANCE ROLL-UP DOOR NO.3	.50		19	20			LATHE
			21	22			
			23	24			
SPARE			25	26			MILL
			27	28			
			29	30			
SPARE			31	32			SPARE
			33	34			
			35	36			

TOTAL CONNECTED LOAD: 52.00 KVA
PANEL LOCATION: MACHINE SHOP
ALL BRANCH C/B 100 AMP FRAME 20 AMP TRIP (UNLESS NOTED OTHERWISE)

DISTR. PNL. "DP-8A"

SERVICE: 480V, 3PH, 3W, 60HZ
MAIN CIRCUIT BREAKER: 150A FRAME, 125A TRIP
GROUND BUS: NEUTRAL 35 A B C 15
CABINET: SURFACE MOUNTED

LOCATION	HP	KVA	CIR. NO.	CIR. NO.	KVA	HP	LOCATION
BULK PARTS STORAGE MONORAIL	10.00		1	2		.50	BULK PARTS STORAGE ROLL-UP GRILL
			3	4			
			5	6			
BULK PARTS STORAGE ROLL-UP DOOR	.50		7	8		1.50	SMALL PARTS STORAGE FREIGHT ELEVATOR
			9	10			
			11	12			
OIL STORAGE UNIT HEATER EUH-1		10.00	13	14			HEAT PUMP HP-1
			15	16	27.00	2.00	
			17	18			
SPARE			19	20			HEAT PUMP HP-2
			21	22	15.00	1.00	
SPARE			23	24			
			19	20			SPARE
SPARE			21	22			
			23	24			

TOTAL CONNECTED LOAD: 72.00 KVA
PANEL LOCATION: SMALL PARTS STORAGE
ALL BRANCH C/B 100 AMP FRAME 20 AMP TRIP (UNLESS NOTED OTHERWISE)

PANELBOARD " LP-8B"

SERVICE: 208/120V., 3PH., 4W., 60HZ.
MAIN CIRCUIT BREAKER: 225A FRAME, 150A TRIP
GROUND BUS: NEUTRAL A B C
CABINET: SURFACE MOUNTED

LOCATION	HP	KVA	CIR. NO.	CIR. NO.	KVA	HP	LOCATION
LUNCH RM. LTG. & EF-4	1/30	.80	1	2	.90		CORRIDOR, TOILET AND LOCKER ROOM LIGHTING
TOILET EXHAUST FAN EF-3	1/4		3	4	.80		GENERAL STORAGE AND FILE ROOM LIGHTING
STAIR NO.1 LIGHTING		.65	5	6	.85		SMALL PARTS STORAGE LIGHTING (SECOND FLOOR)
SMALL PARTS STORAGE LIGHTING (SECOND FLOOR)		.90	7	8	1.10		SMALL PARTS STORAGE LIGHTING (FIRST FLOOR)
SMALL PARTS STORAGE LIGHTING (FIRST FLOOR)		1.10	9	10	1.10	1/20	OIL STORAGE LTG. & EF-2
BULK PARTS STORAGE LIGHTING		.96	11	12	.65		BULK PARTS STORAGE LIGHTING
TOOL ROOM LIGHTING		.65	13	14	.85		SERVICE TECHNICIAN RM. LIGHTING
SUPERINTENDENT OFFICE AND VESTIBULE LIGHTING		.65	15	16	.90		SUPERINTENDENT OFFICE RECEPTACLES
TOOL STORAGE & SERVICE TECHNICIAN RM. RECEPT'S		1.08	17	18	1.26		TOOL STORAGE & SERVICE TECHNICIAN RECEPT'S
SMALL PARTS STORAGE RECEPT'S		.90	19	20		1/4	OIL STORAGE EX. FAN EF-1
BULK PARTS STORAGE & SMALL PARTS STORAGE RECEPT'S		1.26	21	22		2.30	AC UNIT ACU-3
BULK PARTS STORAGE RECEPT'S		.72	23	24			
OIL STORAGE & ROOF RECEPT'S		.54	25	26	.60		OUTSIDE LIGHTING
KITCHEN UNIT			27	28	.72		WATER FOUNTAIN & LUNCH ROOM RECEPTACLES
		1.26	29	30	1.04		GENERAL STORAGE AND CORRIDOR RECEPTACLES
FILE ROOM RECEPTACLES		.90	31	32	.90		SMALL PART STORAGE & ROOF RECEPT'S
SMALL PARTS STORAGE & ROOF RECEPTACLES		.72	33	34		2.30	AC UNIT ACU-4
PANELBOARD LP-8C		5.00	35	36			
			37	38		2.30	AC UNIT ACU-5
			39	40			
LUNCH ROOM, LOCKER RM REC.			41	42			SPARE

TOTAL CONNECTED LOAD: 38.15 KVA
PANEL LOCATION: SMALL PARTS STORAGE
ALL BRANCH C/B 100 AMP FRAME, 15 AMP TRIP (UNLESS NOTED OTHERWISE)

PANELBOARD "LP 21"

SERVICE: 208/120V., 3PH., 4W., 60HZ.
MAIN CIRCUIT BREAKER: 100A FRAME, 100A TRIP
GROUND BUS: NEUTRAL A B C
CABINET: SURFACE MOUNTED

LOCATION	HP	KVA	CIR. NO.	CIR. NO.	KVA	HP	LOCATION
NORTH PUMP STATION BASEMENT LIGHTING		1.40	1	2	.90		NORTH PUMP STATION BASEMENT RECEPT'S
NORTH PUMP STATION EL. RM. AND STAIRS LTG.		1.20	3	4	.72		NORTH PUMP STATION EL. ROOM RECEPT'S
NORTH PUMP STATION OUTSIDE LIGHTING		.30	5	6	.18		NORTH PUMP STATION ROOF RECEPTACLE
NORTH PUMP STATION SUPPLY FAN SF-10	1/12		7	8	1.00		SPARE
AC UNIT ACU-1		5.00	9	10	.60		PRIMARY CLARIFIER NO.2 LIGHTING
			11	12	.18		PRIMARY CLARIFIER NO.2 RECEPTACLE
TRANSMITTER FIT10		.05	13	14	.60		FINAL CLARIFIER NO.2 LIGHTING
HOT WATER HEATER		1.50	15	16	.18		FINAL CLARIFIER NO.2 RECEPTACLE & HEAT TRACING
FIRE ALARM CONTROL PANEL		1.50	17	18	.20		PRESSURE SWITCHES PSL10, PSL11, (SLUDGE PUMPS)
CONTROL PANEL NPSCP		1.00	19	20			SPARE
SPARE			21	22			SPARE
SPARE			23	24			SPARE

TOTAL CONNECTED LOAD: 16.90 KVA
PANEL LOCATION: ELECTRICAL ROOM
ALL BRANCH C/B 100 AMP FRAME, 15 AMP TRIP (UNLESS NOTED OTHERWISE)

PANELBOARD "LP-12"

SERVICE: 208/120V., 3PH., 4W., 60HZ.
MAIN CIRCUIT BREAKER: 100A FRAME, 100A TRIP
GROUND BUS: NEUTRAL A B C
CABINET: SURFACE MOUNTED

LOCATION	HP	KVA	CIR. NO.	CIR. NO.	KVA	HP	LOCATION
SODIUM HYPOCHLORITE FILL PANEL (SHFP)		.50	1	2	.50		SODIUM BISULFITE PANEL (SBFP)
LIT49A, LIT49B, LIT54A & LIT54B		.20	3	4	1.00		SIGNAL ISOLATION PANEL (SIP)
PIU2A		.50	5	6			PORTABLE TRANSFER PUMP
FIT90		.50	7	8			PORTABLE TRANSFER PUMP
SODIUM BISULFITE FLOWSWITCH			9	10	1.10		SODIUM HYPOCHLORITE FLOWSWITCH PUMP #1
SODIUM HYPOCHLORITE FLOWSWITCH			11	12	1.10		SODIUM HYPOCHLORITE FLOWSWITCH PUMP #2
SPARE			13	14	1.10		SODIUM HYPOCHLORITE FLOWSWITCH PUMP #3
SPARE			15	16	1.10		SODIUM BISULFITE FLOWSWITCH PUMP #1
SPARE			17	18	1.10		SODIUM BISULFITE FLOWSWITCH PUMP #2
SPARE			19	20			SPARE
SPARE			21	22			SPARE
SPARE			23	24			HEAT TRACING FOR 2" CW @ LOADING DOCK

TOTAL CONNECTED LOAD: 3.20 KVA
PANEL LOCATION: BLOWER ROOM
ALL BRANCH C/B 100 AMP FRAME, 15 AMP TRIP (UNLESS NOTED OTHERWISE)

PANELBOARD "LP-8C"

SERVICE: 240/120V, 1PH, 3W, 60HZ
MAIN CIRCUIT BREAKER: 225A FRAME, 200A TRIP
GROUND BUS: NEUTRAL A B
CABINET: SURFACE MOUNTED

LOCATION	HP	KVA	CIR. NO.	CIR. NO.	KVA	HP	LOCATION
MACHINE SHOP LIGHTING		.90	1	2	.75		MACHINE SHOP LIGHTING
MACHINE SHOP RECEPTACLES		.54	3	4	.72		MACHINE SHOP RECEPTACLES
MEZZANINE LIGHTING		1.00	5	6	.72		MEZZANINE RECEPTACLES EX. FAN
GRINDER NO.1			7	8			GRINDER NO.2
DRILL PRESS			9	10			MIG WELDER
			11	12			
WELDER			13	14			WELDER RECEPTACLE
			15	16			
LATHE			17	18			SANDER, EXIT LIGHT
			19	20			WORK BENCH RECEPTACLE
WORK BENCH RECEPTACLE			21	22			WELDING TABLE RECEPTACLE
LATHE RECEPTACLE			23	24			SPARE
SPARE			25	26			SPARE
SPARE			27	28			SPARE
SPARE			29	30			SPARE
SPARE			31	32			SPARE

TOTAL CONNECTED LOAD: 4.63 KVA
PANEL LOCATION: MACHINE SHOP
ALL BRANCH C/B 100 AMP FRAME, 15 AMP TRIP (UNLESS NOTED OTHERWISE)

LIGHTING FIXTURE SCHEDULE

FIXTURE TYPE	FIXTURE MTG	LAMP TYPE	LAMP WATTS	MANUFACTURER & CATALOG NUMBER
A	PEND.	HPS	100	CROUSE-HINDS CO. CAT. NO. VMVS2A100GP/120 OR EQUAL
AA	PEND.	HPS	100	CROUSE-HINDS CO. CAT. NO. VMVS2A100GP/QTZ/120 OR EQUAL
B	PEND.	FLUOR.	2x40	HUBBELL LIGHTING CO. CAT. NO. IC042R-PE10-S1 OR EQUAL
C	RECESS	FLUOR.	2x40	HUBBELL LIGHTING CO. CAT. NO. RD2GNA01-S1 OR EQUAL
D	CEIL.	HPS	250	CROUSE-HINDS CO. CAT. NO. VMVS2C250GP/120 OR EQUAL
DD	CEIL.	HPS	250	CROUSE-HINDS CO. CAT. NO. VMVS2C250GP/QTZ/120 OR EQUAL
E	CEIL.	HPS	100	CROUSE-HINDS CO. CAT. NO. VMVS2C100GP/120 OR EQUAL
EE	CEIL.	HPS	100	CROUSE-HINDS CO. CAT. NO. VMVA2C100GP/QTZ/120 OR EQUAL
F	PEND.	FLUOR.	2x40	CROUSE-HINDS CO. CAT. NO. EVF220B/120 OR EQUAL
G	RECESS	FLUOR.	2U	HUBBELL LIGHTING CO. CAT. NO. RA2GNA01-S1 OR EQUAL
H	WALL	INCAND	70	DUAL LITE CO. CAT. NO. EWRWW-RGI-2 (TWO EMERGENCY HEADS) OR EQUAL
H1	WALL	INCAND	70	LIGHT ALARMS CO. CAT. NO. X78/2L (TWO EMERGENCY HEADS) OR EQUAL
H2	WALL	INCAND	60	LIGHT ALARMS CO. CAT. NO. 2ABC1/L25 OR EQUAL
H3	WALL	INCAND	70	LIGHT ALARMS CO. CAT. NO. EXP-6-EPF402/M-X402 (EMERGENCY HEAD) OR EQUAL
J	WALL	INCAND	50	LIGHT ALARMS CO. CAT. NO. X7BRA (EXIT LIGHT) OR EQUAL
K	WALL	HPS	100	APPLETON LIGHTING CO. CAT. NO. G-AM374L-MT-W/PHOTO CELL OR EQUAL
K1	WALL	HPS	100	APPLETON LIGHTING CO. CAT. NO. G-AM371L-MT-1/2-W/PHOTOCELL (WALL MOUNTED) OR EQUAL
L	PEND.	FLUOR.	3x40	HUBBELL LIGHTING CO. CAT. NO. SSC3NA01-S1E OR EQUAL
M	PEND.	FLUOR.	2x40	HUBBELL LIGHTING CO. CAT. NO. EDL042R-SPDR-S1 OR EQUAL
N	PEND.	FLUOR.	2x40	CROUSE-HINDS CO. CAT. NO. FVN 4240 TG OR EQUAL
P	POLE	HPS	100	GENERAL ELECTRIC CO. CAT. NO. P17M10S1N2AMS5GR WITH POLE CAT. NO. ARTA103S4.DA SNT OR EQUAL

PANELBOARD "LP 22"

SERVICE: 208/120V., 3PH., 4W., 60HZ.
MAIN CIRCUIT BREAKER: 100A FRAME, 100A TRIP
GROUND BUS: NEUTRAL A B C
CABINET: SURFACE MOUNTED

LOCATION	HP	KVA	CIR. NO.	CIR. NO.	KVA	HP	LOCATION
SOUTH PUMP STATION BASEMENT LIGHTING		1.40	1	2	.90		SOUTH PUMP STATION BASEMENT RECEPT'S
SOUTH PUMP STATION EL. RM. AND STAIRS LTG.		1.15	3	4	.72		SOUTH PUMP STATION EL. ROOM RECEPT'S
SOUTH PUMP STATION OUTSIDE LIGHTING		.30	5	6	.18		SOUTH PUMP STATION ROOF RECEPTACLE
SOUTH PUMP STATION SUPPLY FAN SF-7	1/12		7	8	1.00		SPARE
AC UNIT ACU-2		5.00	9	10	1.50		HOT WATER HEATER
			11	12	.20		PRESSURE SWITCHES PSL15, PSL16, (SLUDGE PUMPS)
TRANSMITTER FIT11		.05	13	14	.50		FIRE ALARM CONTROL PANEL
CONTROL PANEL SPSCP		1.00	15	16			SPARE
SPARE			17	18			SPARE
SPARE			19	20			SPARE
SPARE			21	22			SPARE
SPARE			23	24			SPARE

TOTAL CONNECTED LOAD: 14.30 KVA
PANEL LOCATION: ELECTRICAL ROOM
ALL BRANCH C/B 100 AMP FRAME, 15 AMP TRIP (UNLESS NOTED OTHERWISE)

PANELBOARD "LP-DBA"

SERVICE: 208/120V., 3PH., 4W., 60HZ.
MAIN CIRCUIT BREAKER: 100A FRAME, 100A TRIP
GROUND BUS: NEUTRAL A B C
CABINET: SURFACE MOUNTED

LOCATION	HP	KVA	CIR. NO.	CIR. NO.	KVA	HP	LOCATION
NEW THICKENER GALLERY LIGHTING		1.27	1	2	.72		NEW THICKENER GALLERY RECEPT'S
NEW THICKENER GALLERY LIGHTING		1.27	3	4	.72		NEW THICKENER GALLERY RECEPT'S
SPARE							SPARE
SPARE							SPARE
SPARE							SPARE
SPARE							SPARE
SPARE							SPARE
SPARE			15	16	.50		FIRE ALARM CONTROL PANEL
SPARE			17	18			SPARE
SPARE			19	20			SPARE
			21	22			SPARE
			23	24			SPARE

TOTAL CONNECTED LOAD: 23.43 KVA
PANEL LOCATION: DEWATERING BLDG. ADDITION
ALL BRANCH C/B 100 AMP FRAME, 15 AMP TRIP (UNLESS NOTED OTHERWISE)

PANELBOARD "LP-8C"

SERVICE: 208/120V., 3PH., 4W., 60HZ.
MAIN CIRCUIT BREAKER: 100A FRAME, 30A TRIP
GROUND BUS: NEUTRAL A B C
CABINET: SURFACE MOUNTED

LOCATION	HP	KVA	CIR. NO.	CIR. NO.	KVA	HP	LOCATION
MAINTENANCE BLDG. EBH-1		1.00	1	2	.50		MAINTENANCE BLDG. EBH-4
			3	4			
MAINTENANCE BLDG. EBH-2		1.50	5	6	.375		MAINTENANCE BLDG. EBH-5
			7	8			
MAINTENANCE BLDG. EBH-3		.75	9	10	.50		MAINTENANCE BLDG. EBH-6
			11	12			
SPARE			13	14			SPARE
			15	16			
SPARE			17	18			SPARE

TOTAL CONNECTED LOAD: 4.63 KVA
PANEL LOCATION: SMALL PARTS STORAGE
ALL BRANCH C/B 100 AMP FRAME, 15 AMP TRIP (UNLESS NOTED OTHERWISE)

DEPARTMENT OF PUBLIC WORKS
HOWARD COUNTY, MARYLAND

DIRECTOR OF PUBLIC WORKS — DATE 5/7/96
CHIEF, BUREAU OF ENGINEERING — DATE 5/7/96
CHIEF, BUREAU OF ENVIRONMENTAL SERVICES — DATE 5/7/96
CHIEF, UTILITY DESIGN DIVISION — DATE 5-7-96

M&E Metcalf & Eddy
REG/PROF. ENGR. — DATE 5-7-96

STATE OF MARYLAND — JONATHAN WINTHROP DOANE No. 15140 — REGISTERED PROFESSIONAL ENGINEER

DES:
DRN:
CHK:
DATE:

BY	NO.	REVISION	DATE
M.J.C.	1	RECORD DRAWING	6/10/95

ELECTRICAL

EQUIPMENT SCHEDULES I

LITTLE PATUXENT WASTEWATER TREATMENT PLANT
LITTLE PATUXENT WASTEWATER TREATMENT PLANT EXPANSION
ADDITION NO. 5
CAPITAL PROJECT S-6153
CONTRACT NO. 20-3082
HOWARD COUNTY, MARYLAND

SCALE AS SHOWN
SHEET 219 OF 226
E-34R

PANELBOARD "LP-18"

SERVICE: 208/120V., 3PH., 4W., 60HZ.
MAIN CIRCUIT BREAKER: 100A FRAME, 60A TRIP
GROUND BUS — NEUTRAL — A B C
CABINET: SURFACE MOUNTED

LOCATION	HP	KVA	CIR. NO.	CIR. NO.	KVA	HP	LOCATION
MCC-18 LIGHTING		.80	1	2		1/4	EXHAUST FAN NO.1
MCC-18 RECEPTACLES		.36	3	4		1/4	EXHAUST FAN NO.2
UNIT HEATER NO.1		2.00	5	6	2.00		UNIT HEATER NO.2
GRAVITY THICKENER NO.3 RECEPTACLES		.36	7	8	.60		GRAVITY THICKENER NO.3 LIGHTING
GRAVITY THICKENER NO.4 RECEPTACLES		.36	9	10	.60		GRAVITY THICKENER NO.4 LIGHTING
OUTSIDE LIGHTING		.50	11	12			SPARE
SPARE			13	14			SPARE
SPARE			15	16			SPARE
SPARE			17	18			SPARE
SPARE			19	20			SPARE
SPARE			21	22			SPARE
SPARE			23	24			SPARE

TOTAL CONNECTED LOAD: 8.78 KVA
PANEL LOCATION: MOTOR CONTROL CENTER MCC-18
ALL BRANCH C/B 100 AMP FRAME, 15 AMP TRIP (UNLESS NOTED OTHERWISE)

PANELBOARD "LP-PS5"

SERVICE: 208/120V., 3PH., 4W., 60HZ.
MAIN CIRCUIT BREAKER: 100A FRAME, 60A TRIP
GROUND BUS — NEUTRAL — A B C
CABINET: SURFACE MOUNTED

LOCATION	HP	KVA	CIR. NO.	CIR. NO.	KVA	HP	LOCATION
SUBSTATION PS5 LIGHTING		.35	1	2		1/4	EXHAUST FAN NO.1
SUBSTATION PS5 RECEPTACLES		.36	3	4		1/4	EXHAUST FAN NO.2
OUTSIDE LIGHTING		.28	5	6			SPARE
SPARE			7	8			SPARE
SPARE			9	10			SPARE
SPARE			11	12			SPARE
SPARE			13	14			SPARE
SPARE			15	16			SPARE
SPARE			17	18			SPARE
SPARE			19	20			SPARE
SPARE			21	22			SPARE
SPARE			23	24			SPARE

TOTAL CONNECTED LOAD: 3.00 KVA
PANEL LOCATION: SUBSTATION PS5
ALL BRANCH C/B 100 AMP FRAME, 15 AMP TRIP (UNLESS NOTED OTHERWISE)

POWER PANEL PP10

SERVICE: 480V., 3PH.,3W., 60HZ
MAIN CIRCUIT BREAKER: 100A FRAME, 100A TRIP
GROUND BUS — NEUTRAL — A B C
CABINET: SURFACE MOUNTED

LOCATION	HP	KVA	CIR. NO.	CIR. NO.	KVA	HP	LOCATION
MOTOR OPERATED VALVE FCV40	2/5		1	2			
			3	4		2/5	MOTOR OPERATED VALVE FCV41
			5	6			
MOTOR OPERATED VALVE FCV42	2/5		7	8			
			9	10		2/5	MOTOR OPERATED VALVE FCV43
			11	12			
MOTOR OPERATED VALVE FCV44	2/5		13	14			
			15	16		2/5	MOTOR OPERATED VALVE FCV45
			17	18			
MOTOR OPERATED VALVE FCV46	2/5		19	20			
			21	22		2/5	MOTOR OPERATED VALVE FCV47
			23	24			
MOTOR OPERATED VALVE FCV48	2/5		25	26			
			27	28		2/5	MOTOR OPERATED VALVE FCV49
			29	30			
MOTOR OPERATED VALVE FCV50	2/5		31	32			
			33	34		2/5	MOTOR OPERATED VALVE FCV51
			35	36			
SPARE			37	38			
			39	40	15.00		POWER PANEL PP10A
			41	42			

TOTAL CONNECTED LOAD: 57.00 KVA
PANEL LOCATION: EXISTING DIGESTER PIPE GALLERY
ALL BRANCH C/B 100 AMP FRAME, 15 AMP TRIP (UNLESS NOTED OTHERWISE)

POWER PANEL PP10A

SERVICE: 480V., 3PH.,3W., 60HZ
MAIN 100A LUGS ONLY
GROUND BUS — NEUTRAL — A B C
CABINET: SURFACE MOUNTED

LOCATION	HP	KVA	CIR. NO.	CIR. NO.	KVA	HP	LOCATION
MOTOR OPERATED VALVE FCV30A	2/5		1	2			
			3	4		2/5	MOTOR OPERATED VALVE FCV30B
			5	6			
MOTOR OPERATED VALVE FCV31A	2/5		7	8			
			9	10		2/5	MOTOR OPERATED VALVE FCV31B
			11	12			
MOTOR OPERATED VALVE FCV32A	2/5		13	14			
			15	16		2/5	MOTOR OPERATED VALVE FCV32B
			17	18			
SPARE			19	20			
			21	22			SPARE
			23	24			

TOTAL CONNECTED LOAD: 5.00 KVA
PANEL LOCATION: EXISTING DIGESTER PIPE GALLERY
ALL BRANCH C/B 100 AMP FRAME, 15 AMP TRIP (UNLESS NOTED OTHERWISE)

PANELBOARD "LP-20"

SERVICE: 208/120V., 3PH., 4W., 60HZ.
MAIN CIRCUIT BREAKER: 100A FRAME, 50A TRIP
GROUND BUS — NEUTRAL — A B C
CABINET: SURFACE MOUNTED

LOCATION	HP	KVA	CIR. NO.	CIR. NO.	KVA	HP	LOCATION
MCC-20 LIGHTING		.70	1	2	.72		MCC-20 RECEPTACLES
SPARE			3	4			SPARE
SPARE			5	6	.27		OUTDOOR LIGHTING
SPARE			7	8	.20		FIT181, FIT182, FIT183 & FIT184
PROCESS REACTORS OUTSIDE LIGHTING		.80	9	10	.20		FIT185, FIT186, FIT187 & FIT188
			11	12	.50		PRAP
FIT201, FIT202, FIT203, FIT204		.20	13	14	1.00		PIU6A/6B
FIT191, FIT192, FIT193, FIT194		.20	15	16	.36		PROCESS REACTORS RECEPT'S
FIT195, FIT196, FIT197, FIT198		.20	17	18			SPARE
FIT205, FIT206, FIT207, FIT208		.20	19	20			SPARE
FIT211, FIT212, FIT213, FIT214		.20	21	22			SPARE
FIT215, FIT216, FIT217, FIT218		.20	23	24			SPARE

TOTAL CONNECTED LOAD: 11.83 KVA
PANEL LOCATION: MOTOR CONTROL CENTER MCC-20
ALL BRANCH C/B 100 AMP FRAME, 15 AMP TRIP (UNLESS NOTED OTHERWISE)

DEPARTMENT OF PUBLIC WORKS
HOWARD COUNTY, MARYLAND

DIRECTOR OF PUBLIC WORKS — DATE 5/7/96
CHIEF, BUREAU OF ENGINEERING — DATE 5/7/96
CHIEF, BUREAU OF ENVIRONMENTAL SERVICES — DATE 5/7/96
CHIEF, UTILITY DESIGN DIVISION — DATE 5-7-96

M&E Metcalf & Eddy
REG. PROF. ENGR. — DATE 5-7-96

STATE OF MARYLAND — JONATHAN WINTHROP DOANE No. 15140 — REGISTERED PROFESSIONAL ENGINEER

DES:				
DRN:				
CHK:				
DATE:	M.J.C.	1	RECORD DRAWING	6/10/95
	BY	NO.	REVISION	DATE

ELECTRICAL

EQUIPMENT SCHEDULES II

LITTLE PATUXENT WASTEWATER TREATMENT PLANT
LITTLE PATUXENT WASTEWATER TREATMENT PLANT EXPANSION
ADDITION NO. 5
CAPITAL PROJECT S-6153
CONTRACT NO. 20-3082
HOWARD COUNTY, MARYLAND

SCALE AS SHOWN
SHEET 220 OF 226
E-35R

CONDUIT & WIRE SCHEDULE

CONDUIT NO.	CONDUIT SIZE	CABLE QTY.	CABLE SIZE	FROM	TO	REMARKS
PC-21-1	3/4"	6-1/c 1-1/c 5-1/c	12 12 12	MOTOR CONTROL CENTER MCC 21	NORTH PUMP STATION EXHAUST FAN EF-8	POWER GROUND CONTROL
C-21-1A	3/4"	4-1/c	12	N. PUMP STA. EXHAUST FAN EF-8 CTL. STA.	NORTH PUMP STATION EXHAUST FAN EF-8	CONTROL
P-21-2	1"	3-1/c 1-1/c	4 8	MOTOR CONTROL CENTER MCC 21	NORTH PUMP STATION TRANSFORMER "21"	POWER GROUND
P-21-2A	1 1/4"	3-1/c 1-1/c 1-1/c	2 2 8	NORTH PUMP STATION TRANSFORMER "21"	NORTH PUMP STATION PANELBOARD "LP 21"	POWER NEUTRAL GROUND
P-21-3	3/4"	3-1/c 1-1/c	10 10	MOTOR CONTROL CENTER MCC 21	NORTH PUMP STATION UNIT HEATER EUH-4	POWER GROUND
PC-21-4	3/4"	3-1/c 1-1/c 7-1/c	12 12 12	MOTOR CONTROL CENTER MCC 21	NORTH PUMP STATION GRINDER PSCG-1 CONTROL PANEL	POWER GROUND CONTROL
P-21-4A	3/4"	3-1/c 1-1/c	12 12	N.P.STA. GRINDER PSCG-1 CTL. PNL.	NORTH PUMP STATION GRINDER PSCG-1	POWER GROUND
PC-21-5	3/4"	3-1/c 1-1/c 7-1/c	12 12 12	MOTOR CONTROL CENTER MCC 21	NORTH PUMP STATION GRINDER PSLG-1 CONTROL PANEL	POWER GROUND CONTROL
P-21-5A	3/4"	3-1/c 1-1/c	12 12	N.P.STA. GRINDER PSLG-1 CTL. PNL.	NORTH PUMP STATION GRINDER PSLG-1	POWER GROUND
PC-21-6	1"	3-1/c 1-1/c 9-1/c	12 12 12	MOTOR CONTROL CENTER MCC 21	NORTH PUMP STATION PUMP PSCP-1	POWER GROUND CONTROL
C-21-6A	3/4"	2-1/c	12	NORTH PUMP STATION PUMP PSCP-1	N.P.STA. PUMP PSCP-1 SOLENOID VALVE	CONTROL
PC-21-7	3/4"	3-1/c 1-1/c 5-1/c	12 12 12	MOTOR CONTROL CENTER MCC 21	NORTH PUMP STATION PUMP PSLP-1 VFD	POWER GROUND CONTROL
PC-21-7A	1"	3-1/c 1-1/c 9-1/c	12 12 12	NORTH PUMP STATION PUMP PSLP-1 VFD	NORTH PUMP STATION PUMP PSLP-1	POWER GROUND CONTROL
I-21-7B	3/4"	1-PR	16SH.	NORTH PUMP STATION PUMP PSLP-1 VFD	NORTH PUMP STATION PUMP PSLP-1	INSTRUMENT
C-21-7C	3/4"	2-1/c	12	NORTH PUMP STATION PUMP PSLP-1	N.P.STA. PUMP PSLP-1 SOLENOID VALVE	CONTROL
PC-21-8	1"	3-1/c 1-1/c 9-1/c	12 12 12	MOTOR CONTROL CENTER MCC 21	NORTH PUMP STATION PUMP PSCP-2	POWER GROUND CONTROL
C-21-8A	3/4"	2-1/c	12	NORTH PUMP STATION PUMP PSCP-2	N.P.STA. PUMP PSCP-2 SOLENOID VALVE	CONTROL
PC-21-9	3/4"	3-1/c 1-1/c 5-1/c	12 12 12	MOTOR CONTROL CENTER MCC 21	NORTH PUMP STATION PUMP PSLP-2 VFD	POWER GROUND CONTROL
PC-21-9A	1"	3-1/c 1-1/c 9-1/c	12 12 12	NORTH PUMP STATION PUMP PSLP-2 VFD	NORTH PUMP STATION PUMP PSLP-2	POWER GROUND CONTROL
I-21-9B	3/4"	1-PR	16SH.	NORTH PUMP STATION PUMP PSLP-2 VFD	NORTH PUMP STATION PUMP PSLP-2	INSTRUMENT
C-21-9C	3/4"	2-1/c	12	NORTH PUMP STATION PUMP PSLP-2	N.P.STA. PUMP PSLP-2 SOLENOID VALVE	CONTROL
PC-21-10	3/4"	3-1/c 1-1/c 7-1/c	12 12 12	MOTOR CONTROL CENTER MCC 21	NORTH PUMP STATION GRINDER PSCG-2 CONTROL PANEL	POWER GROUND CONTROL
P-21-10A	3/4"	3-1/c 1-1/c	12 12	N.P.STA. GRINDER PSCG-2 CTL. PNL.	NORTH PUMP STATION GRINDER PSCG-2	POWER GROUND
PC-21-11	3/4"	3-1/c 1-1/c 7-1/c	12 12 12	MOTOR CONTROL CENTER MCC 21	NORTH PUMP STATION GRINDER PSLG-2 CONTROL PANEL	POWER GROUND CONTROL
P-21-11A	3/4"	3-1/c 1-1/c	12 12	N.P.STA. GRINDER PSLG-2 CTL. PNL.	NORTH PUMP STATION GRINDER PSLG-2	POWER GROUND
P-21-12	3/4"	3-1/c 1-1/c	10 10	MOTOR CONTROL CENTER MCC 21	NORTH PUMP STATION UNIT HEATER EUH-5	POWER GROUND
PC-21-13	3/4"	6-1/c 1-1/c 5-1/c	12 12 12	MOTOR CONTROL CENTER MCC 21	NORTH PUMP STATION EXHAUST FAN EF-9	POWER GROUND CONTROL
C-21-13A	3/4"	4-1/c	12	N. PUMP STA. EXHAUST FAN EF-9 CTL. STA.	NORTH PUMP STATION EXHAUST FAN EF-9	CONTROL
PC-21-14	1"	3-1/c 1-1/c 7-1/c	12 12 12	MOTOR CONTROL CENTER MCC 21	PRIMARY CLARIFIER NO.2 SL. COLLECTOR DRIVE	POWER GROUND CONTROL
PC-21-15	1"	3-1/c 1-1/c 7-1/c	12 12 12	MOTOR CONTROL CENTER MCC 21	FINAL CLARIFIER NO.2 SL. COLLECTOR DRIVE	POWER GROUND CONTROL
PC-21-16	1"	3-1/c 1-1/c 9-1/c	12 12 12	MOTOR CONTROL CENTER MCC 21	FINAL CLARIFIER NO.2 SCUM PUMP SCP-6	POWER GROUND CONTROL
P-21-17	1"	4-1/c 1-1/c	10 10	NORTH PUMP STATION LTG. PNL. LP-21	PRIMARY CLARIFIER NO.2 LTG. AND RECEPT'S	PWR. (120V) CKT.#10&#12 GROUND
P-21-18	1"	4-1/c 1-1/c	10 10	NORTH PUMP STATION LTG. PNL. LP-21	FINAL CLARIFIER NO.2 LTG. AND RECEPT'S	PWR. (120V) CKT.#14&#16 GROUND
P-21-19	3/4"	3-1/c 1-1/c	12 12	MOTOR CONTROL CENTER MCC 21	NORTH PUMP STATION DUCT HEATER EDH-2	POWER GROUND
P-21-20	3/4"	3-1/c 1-1/c	12 12	MOTOR CONTROL CENTER MCC 21	N.P.STA. DUPLEX SUMP PUMP CTL. PNL.	POWER GROUND
C-21-20A	3/4"	2-1/c	12	N.P.STA. DUPLEX SUMP PUMP CTL. PNL.	N.P.STA. D.S.PUMPS LEVEL SW. LSL	CONTROL
C-21-20B	3/4"	2-1/c	12	N.P.STA. DUPLEX SUMP PUMP CTL. PNL.	N.P.STA. D.S.PUMPS LEVEL SW. LSH	CONTROL
C-21-20C	3/4"	2-1/c	12	NORTH PUMP STA. CTL. PNL. NPSCP	N.P.STA. D.S.PUMPS LEVEL SW. LSH70	CONTROL

CONDUIT & WIRE SCHEDULE

CONDUIT NO.	CONDUIT SIZE	CABLE QTY.	CABLE SIZE	FROM	TO	REMARKS
PC-22-1	3/4"	6-1/c 1-1/c 5-1/c	12 12 12	MOTOR CONTROL CENTER MCC 22	SOUTH PUMP STATION EXHAUST FAN EF-5	POWER GROUND CONTROL
C-22-1A	3/4"	4-1/c	12	S. PUMP STA. EXHAUST FAN EF-5 CTL. STA.	SOUTH PUMP STATION EXHAUST FAN EF-5	CONTROL
P-22-2	1"	3-1/c 1-1/c	4 8	MOTOR CONTROL CENTER MCC 22	SOUTH PUMP STATION TRANSFORMER "22"	POWER GROUND
P-22-2A	1 1/4"	3-1/c 1-1/c 1-1/c	2 2 8	SOUTH PUMP STATION TRANSFORMER "22"	SOUTH PUMP STATION PANELBOARD "LP-22"	POWER NEUTRAL GROUND
P-22-3	3/4"	3-1/c 1-1/c	10 10	MOTOR CONTROL CENTER MCC 22	SOUTH PUMP STATION UNIT HEATER EUH-2	POWER GROUND
PC-22-4	3/4"	3-1/c 1-1/c 7-1/c	12 12 12	MOTOR CONTROL CENTER MCC 22	SOUTH PUMP STATION GRINDER PSCG-3 CONTROL PANEL	POWER GROUND CONTROL
P-22-4A	3/4"	3-1/c 1-1/c	12 12	S.P.STA. GRINDER PSCG-3 CTL. PNL.	SOUTH PUMP STATION GRINDER PSCG-3	POWER GROUND
PC-22-5	3/4"	3-1/c 1-1/c 7-1/c	12 12 12	MOTOR CONTROL CENTER MCC 22	SOUTH PUMP STATION GRINDER PSLG-4 CONTROL PANEL	POWER GROUND CONTROL
P-22-5A	3/4"	3-1/c 1-1/c	12 12	S.P.STA. GRINDER PSLG-4 CTL. PNL.	SOUTH PUMP STATION GRINDER PSLG-4	POWER GROUND
PC-22-6	1"	3-1/c 1-1/c 9-1/c	12 12 12	MOTOR CONTROL CENTER MCC 22	SOUTH PUMP STATION PUMP PSCP-4	POWER GROUND CONTROL
C-22-6A	3/4"	2-1/c	12	SOUTH PUMP STATION PUMP PSCP-4	S.P.STA. PUMP PSCP-4 SOLENOID VALVE	CONTROL
PC-22-7	3/4"	3-1/c 1-1/c 5-1/c	12 12 12	MOTOR CONTROL CENTER MCC 22	SOUTH PUMP STATION PUMP PSLP-4 VFD	POWER GROUND CONTROL
PC-22-7A	1"	3-1/c 1-1/c 9-1/c	12 12 12	SOUTH PUMP STATION PUMP PSLP-4 VFD	SOUTH PUMP STATION PUMP PSLP-4	POWER GROUND CONTROL
I-22-7B	3/4"	1-PR	16SH.	SOUTH PUMP STATION PUMP PSLP-4 VFD	SOUTH PUMP STATION PUMP PSLP-4	INSTRUMENT
C-22-7C	3/4"	2-1/c	12	SOUTH PUMP STATION PUMP PSLP-4	S.P.STA. PUMP PSLP-4 SOLENOID VALVE	CONTROL
PC-22-8	1"	3-1/c 1-1/c 9-1/c	12 12 12	MOTOR CONTROL CENTER MCC 22	SOUTH PUMP STATION PUMP PSCP-3	POWER GROUND CONTROL
C-22-8A	3/4"	2-1/c	12	SOUTH PUMP STATION PUMP PSCP-3	S.P.STA. PUMP PSCP-3 SOLENOID VALVE	CONTROL
PC-22-9	3/4"	3-1/c 1-1/c 5-1/c	12 12 12	MOTOR CONTROL CENTER MCC-22	SOUTH PUMP STATION PUMP PSLP-3 VFD	POWER GROUND CONTROL
PC-22-9A	1"	3-1/c 1-1/c 9-1/c	12 12 12	SOUTH PUMP STATION PUMP PSLP-3 VFD	SOUTH PUMP STATION PUMP PSLP-3	POWER GROUND CONTROL
I-22-9B	3/4"	1-PR	16SH.	SOUTH PUMP STATION PUMP PSLP-3 VFD	SOUTH PUMP STATION PUMP PSLP-3	INSTRUMENT
C-22-9C	3/4"	2-1/c	12	SOUTH PUMP STATION PUMP PSLP-3	S.P.STA. PUMP PSLP-3 SOLENOID VALVE	CONTROL
PC-22-10	3/4"	3-1/c 1-1/c 7-1/c	12 12 12	MOTOR CONTROL CENTER MCC 22	SOUTH PUMP STATION GRINDER PSCG-4 CONTROL PANEL	POWER GROUND CONTROL
P-22-10A	3/4"	3-1/c 1-1/c	12 12	S.P.STA. GRINDER PSCG-4 CTL. PNL.	SOUTH PUMP STATION GRINDR PSCG-4	POWER GROUND
PC-22-11	3/4"	3-1/c 1-1/c 7-1/c	12 12 12	MOTOR CONTROL CENTER MCC 22	SOUTH PUMP STATION GRINDER PSLG-3	POWER GROUND CONTROL
P-22-11A	3/4"	3-1/c 1-1/c	12 12	S.P.STA. GRINDER PSLG-3 CTL. PNL.	SOUTH PUMP STATION GRINDER PSLG-3	POWER GROUND
P-22-12	3/4"	3-1/c 1-1/c	10 10	MOTOR CONTROL CENTER MCC 22	SOUTH PUMP STATION UNIT HEATER EUH-3	POWER GROUND
PC-22-13	3/4"	6-1/c 1-1/c 5-1/c	12 12 12	MOTOR CONTROL CENTER MCC 22	SOUTH PUMP STATION EXHAUST FAN EF-6	POWER GROUND CONTROL
C-22-13A	3/4"	4-1/c	12	S. PUMP STA. EXHAUST FAN EF-6 CTL. STA.	SOUTH PUMP STATION EXHAUST FAN EF-6	CONTROL
P-22-14	3/4"	3-1/c 1-1/c	12 12	MOTOR CONTROL CENTER MCC-22	SOUTH PUMP STATION DUCT HEATER EDH-1	POWER GROUND
P-22-15	3/4"	3-1/c 1-1/c	12 12	MOTOR CONTROL CENTER MCC 22	N.P.STA. DUPLEX SUMP PUMP CTL. PNL.	POWER GROUND
C-22-15A	3/4"	2-1/c	12	S.P.STA. DUPLEX SUMP PUMP CTL. PNL.	S.P.STA. D.S.PUMPS LEVEL SW. LSL	CONTROL
C-22-15B	3/4"	2-1/c	12	S.P.STA. DUPLEX SUMP PUMP CTL. PNL.	S.P.STA. D.S.PUMPS LEVEL SW. LSH	CONTROL
C-22-15C	3/4"	2-1/c	12	CONTROL PANEL SPSCP	S.P.STA. D.S.PUMPS LEVEL SW. LSH71	CONTROL

CONDUIT & WIRE SCHEDULE

CONDUIT NO.	CONDUIT SIZE	CABLE QTY.	CABLE SIZE	FROM	TO	REMARKS
I-21-21	3/4"	1-PR	16SH.	TRANSMITTER FIT10	CONTROL PANEL NPSCP	INSTRUMENT
I-21-22	3/4"	1-PR	MFR.	TRANSMITTER FIT10	FE10	INSTRUMENT
C-21-23	1"	5-1/c	12	NPSCP CONTROL PNL	PR. SL. PUMP 1 VFD	CONTROL
C-21-24	1"	5-1/c	12	NPSCP CONTROL PNL	PR. SL. PUMP 2 VFD	CONTROL
PC-21-25	1"	3-1/c 1-1/c 9-1/c	12 12 12	MOTOR CONTROL CENTER MCC 21	FCV8	POWER GROUND CONTROL
PC-21-26	1"	3-1/c 1-1/c 9-1/c	12 12 12	MOTOR CONTROL CENTER MCC 21	FCV9	POWER GROUND CONTROL
C-21-27	3/4"	6-1/c	12	CONTROL PANEL NPSCP	P.SW. PSL12 CTL. PNL.	CONTROL
C-21-27A	3/4"	4-1/c	12	P.SW. PSL12 CTL. PNL.	PRESSURE SW. PSL12	CONTROL
C-21-28	3/4"	6-1/c	12	CONTROL PANEL NPSCP	P.SW. PSL10 CTL. PNL.	CONTROL
C-21-28A	3/4"	4-1/c	12	P.SW. PSL10 CTL. PNL.	PRESSURE SW. PSL10	CONTROL
C-21-29	3/4"	6-1/c	12	CONTROL PANEL NPSCP	P.SW. PSL13 CTL. PNL.	CONTROL
C-21-29A	3/4"	4-1/c	12	P.SW. PSL13 CTL. PNL.	PRESSURE SW. PSL13	CONTROL
C-21-30	3/4"	6-1/c	12	CONTROL PANEL NPSCP	P.SW. PSL11 CTL. PNL.	CONTROL
C-21-30A	3/4"	4-1/c	12	P.SW. PSL11 CTL. PNL.	PRESSURE SW. PSL11	CONTROL
C-21-31	2"	60-1/c	12	MOTOR CONTROL CENTER MCC 21 JB	CONTROL PANEL NPSCP	CONTROL
C-21-32	1"	7-1/c	12	CONTROL PANEL NPSCP	P.C.#1 LSH75 & HS12D	CONTROL
C-21-33	1"	4-1/c	12	CONTROL PANEL NPSCP	F.C.#2 LSH91	CONTROL
C-21-34	1"	7-1/c	12	CONTROL PANEL NPSCP	P.C.#2 LSH76 & HS13D	CONTROL
I-21-35	1"	4-PR	16SH.	CONTROL PANEL NPSCP	PIU9	INSTRUMENT
C-21-36	2"	60-1/c	12	CONTROL PANEL NPSCP	PIU9	CONTROL
T-21-37	2"	1-4/c	TEL. CABLE	NORTH PUMP STATION TTC-1	HEADWORKS BUILDING TTC-1	TELEPHONE
I-22-16	3/4"	1-PR	16SH.	TRANSMITTER FIT11	CONTROL PANEL SPSCP	INSTRUMENT
I-22-17	3/4"	1-PR	MFR.	TRANSMITTER FIT11	FE11	INSTRUMENT
C-22-18	1"	5-1/c	12	SPSLP CONTROL PNL	PR. SL. PUMP 3 VFD	
C-22-19	1"	5-1/c	12	SPSLP CONTROL PNL	PR. SL. PUMP 4 VFD	
PC-22-20	1"	3-1/c 1-1/c 9-1/c	12 12 12	MOTOR CONTROL CENTER MCC 22	FCV15	POWER GROUND CONTROL
PC-22-20	1"	3-1/c 1-1/c 9-1/c	12 12 12	MOTOR CONTROL CENTER MCC 22	FCV15	POWER GROUND CONTROL
C-22-22	3/4"	6-1/c	12	CONTROL PANEL SPSCP	P.SW. PSL18 CTL. PNL.	CONTROL
C-22-22A	3/4"	4-1/c	12	P.SW. PSL18 CTL. PNL.	PRESSURE SW. PSL18	CONTROL
C-22-23	3/4"	6-1/c	12	CONTROL PANEL SPSCP	P.SW. PSL16 CTL. PNL.	CONTROL
C-22-23A	3/4"	4-1/c	12	P.SW. PSL16 CTL. PNL.	PRESSURE SW. PSL16	CONTROL
C-22-24	3/4"	6-1/c	12	CONTROL PANEL SPSCP	P.SW. PSL17 CTL. PNL.	CONTROL
C-22-24A	3/4"	4-1/c	12	P.SW. PSL17 CTL. PNL.	PRESSURE SW. PSL17	CONTROL
C-22-25	3/4"	6-1/c	12	CONTROL PANEL SPSCP	P.SW. PSL15 CTL. PNL.	CONTROL
C-22-25A	3/4"	4-1/c	12	P.SW. PSL15 CTL. PNL.	PRESSURE SW. PSL15	CONTROL
C-22-26	2"	60-1/c	12	MOTOR CONTROL CENTER MCC 22 JB	CONTROL PANEL SPSCP	CONTROL
C-22-27	1"	7-1/c	12	CONTROL PANEL SPSCP	P.C.#3 LSH80 & HS 3D	CONTROL
C-22-28	1"	7-1/c	12	CONTROL PANEL SPSCP	P.C.#4 LSH81 & HS 4D	CONTROL
I-22-29	1"	4-PR	16SH.	CONTROL PANEL SPSCP	PIU7A	INSTRUMENT
C-22-30	2"	60-1/c	12	CONTROL PANEL SPSCP	PIU7A	CONTROL
T-22-31	2"	1-4/c	TEL. CABLE	SOUTH PUMP STATION TTC-1	HEADWORKS BUILDING TTC-1	TELEPHONE

DEPARTMENT OF PUBLIC WORKS
HOWARD COUNTY, MARYLAND

DIRECTOR OF PUBLIC WORKS — DATE 5-7-96
CHIEF, BUREAU OF ENGINEERING — DATE 5/7/96
CHIEF, BUREAU OF ENVIRONMENTAL SERVICES — DATE 5/7/96
CHIEF, UTILITY DESIGN DIVISION — DATE 5-7-96

M&E Metcalf & Eddy
REG. PROF. ENGR. — DATE 5-7-96

STATE OF MARYLAND — JONATHAN WINTHROP DOANE No. 15140 — REGISTERED PROFESSIONAL ENGINEER

DES:				
DRN:				
CHK:				
DATE:	M.J.C.	1	RECORD DRAWING	6/10/95
	BY	NO.	REVISION	DATE

ELECTRICAL

CONDUIT & WIRE SCHEDULE I

LITTLE PATUXENT WASTEWATER TREATMENT PLANT

LITTLE PATUXENT WASTEWATER TREATMENT PLANT EXPANSION
ADDITION NO. 5
CAPITAL PROJECT S-6153

CONTRACT NO. 20-3082
HOWARD COUNTY, MARYLAND

SCALE AS SHOWN

SHEET 221 OF 226

E-36R

CONDUIT & WIRE SCHEDULE

CONDUIT NO.	CONDUIT SIZE	CABLE QTY.	CABLE SIZE	FROM	TO	REMARKS
P-3-1	2 × 3"	6-1/c 2-1/c	300MCM 1/0	EXIST. SECONDARY SUBSTATION PS3	MOTOR CONTROL CENTER MCC 20 (BUS A)	POWER GROUND
P-3-2	2 × 3"	6-1/c 2-1/c	300MCM 1/0	EXIST. SECONDARY SUBSTATION PS3	MOTOR CONTROL CENTER MCC 20 (BUS B)	POWER GROUND
PC-20-1A	3/4"	6-1/c 2-1/c 4-1/c	12 12 12	MOTOR CONTROL CENTER MCC 20	PROCESS REACTOR NO.1 MIXER 1AN1	POWER GROUND CONTROL
PC-20-4	3/4"	3-1/c 1-1/c 2-1/c	12 12 12	MOTOR CONTROL CENTER MCC 20	PROCESS REACTOR NO.1 MIXER 1AX1	POWER GROUND CONTROL
PC-20-3A	3/4"	3-1/c 1-1/c 2-1/c	12 12 12	MOTOR CONTROL CENTER MCC 20	PROCESS REACTOR NO.1 MIXER 1AX2	POWER GROUND CONTROL
PC-20-4A	3/4"	3-1/c 1-1/c 2-1/c	12 12 12	MOTOR CONTROL CENTER MCC 20	PROCESS REACTOR NO.1 MIXER 1AX3	POWER GROUND CONTROL
PC-20-5A	3/4"	3-1/c 1-1/c 2-1/c	12 12 12	MOTOR CONTROL CENTER MCC 20	PROCESS REACTOR NO.1 MIXER 1AX5	POWER GROUND CONTROL
PC-20-1	3/4"	6-1/c 2-1/c 4-1/c	12 12 12	MOTOR CONTROL CENTER MCC 20	PROCESS REACTOR NO.1 MIXER 1AN2	POWER GROUND CONTROL
PC-20-3	3/4"	6-1/c 2-1/c 4-1/c	12 12 12	MOTOR CONTROL CENTER MCC 20	PROCESS REACTOR NO.1 MIXER 1AN3	POWER GROUND CONTROL
PC-20-5	3/4"	6-1/c 2-1/c 4-1/c	12 12 12	MOTOR CONTROL CENTER MCC 20	PROCESS REACTOR NO.1 MIXER 1AX4	POWER GROUND CONTROL
PC-20-11	3/4"	6-1/c 2-1/c 4-1/c	12 12 12	MOTOR CONTROL CENTER MCC 20	PROCESS REACTOR NO.2 MIXER 2AN2	POWER GROUND CONTROL
PC-20-10A	3/4"	3-1/c 1-1/c 2-1/c	12 12 12	MOTOR CONTROL CENTER MCC 20	PROCESS REACTOR NO.2 MIXER 2AN3	POWER GROUND CONTROL
PC-20-11A	3/4"	3-1/c 1-1/c 2-1/c	12 12 12	MOTOR CONTROL CENTER MCC 20	PROCESS REACTOR NO.2 MIXER 2AX1	POWER GROUND CONTROL
PC-20-16	3/4"	6-1/c 2-1/c 4-1/c	12 12 12	MOTOR CONTROL CENTER MCC 20	PROCESS REACTOR NO.2 MIXER 2AX2	POWER GROUND CONTROL
PC-20-13	3/4"	3-1/c 1-1/c 2-1/c	12 12 12	MOTOR CONTROL CENTER MCC 20	PROCESS REACTOR NO.2 MIXER 2AX3	POWER GROUND CONTROL
PC-20-14	3/4"	3-1/c 1-1/c 2-1/c	12 12 12	MOTOR CONTROL CENTER MCC 20	PROCESS REACTOR NO.2 MIXER 2AX5	POWER GROUND CONTROL
PC-20-18	3/4"	6-1/c 2-1/c 4-1/c	12 12 12	MOTOR CONTROL CENTER MCC 20	PROCESS REACTOR NO.2 MIXER 2AN1	POWER GROUND CONTROL
PC-20-16A	3/4"	3-1/c 1-1/c 2-1/c	12 12 12	MOTOR CONTROL CENTER MCC 20	PROCESS REACTOR NO.2 MIXER 2AX4	POWER GROUND CONTROL
PC-20-19	3/4"	6-1/c 2-1/c 4-1/c	12 12 12	MOTOR CONTROL CENTER MCC 20	PROCESS REACTOR NO.3 MIXER 3AN2	POWER GROUND CONTROL
PC-20-18A	3/4"	3-1/c 1-1/c 2-1/c	12 12 12	MOTOR CONTROL CENTER MCC 20	PROCESS REACTOR NO.3 MIXER 3AN3	POWER GROUND CONTROL
PC-20-19A	3/4"	3-1/c 1-1/c 2-1/c	12 12 12	MOTOR CONTROL CENTER MCC 20	PROCESS REACTOR NO.3 MIXER 3AX1	POWER GROUND CONTROL
PC-20-24	3/4"	6-1/c 2-1/c 4-1/c	12 12 12	MOTOR CONTROL CENTER MCC 20	PROCESS REACTOR NO.3 MIXER 3AX2	POWER GROUND CONTROL
PC-20-22	3/4"	6-1/c 2-1/c 4-1/c	12 12 12	MOTOR CONTROL CENTER MCC 20	PROCESS REACTOR NO.3 MIXER 3AX3	POWER GROUND CONTROL
PC-20-22A	3/4"	6-1/c 2-1/c 4-1/c	12 12 12	MOTOR CONTROL CENTER MCC 20	PROCESS REACTOR NO.3 MIXER 3AX5	POWER GROUND CONTROL
PC-20-18	3/4"	6-1/c 2-1/c 4-1/c	12 12 12	MOTOR CONTROL CENTER MCC 20	PROCESS REACTOR NO.3 MIXER 3AN1	POWER GROUND CONTROL
PC-20-24A	3/4"	3-1/c 1-1/c 2-1/c	12 12 12	MOTOR CONTROL CENTER MCC 20	PROCESS REACTOR NO.3 MIXER 3AX4	POWER GROUND CONTROL
PC-20-26	3/4"	6-1/c 2-1/c 4-1/c	12 12 12	MOTOR CONTROL CENTER MCC 20	PROCESS REACTOR NO.4 MIXER 4AN2	POWER GROUND CONTROL
PC-20-26A	3/4"	3-1/c 1-1/c 2-1/c	12 12 12	MOTOR CONTROL CENTER MCC 20	PROCESS REACTOR NO.4 MIXER 4AN3	POWER GROUND CONTROL
PC-20-27	3/4"	3-1/c 1-1/c 2-1/c	12 12 12	MOTOR CONTROL CENTER MCC 20	PROCESS REACTOR NO.4 MIXER 4AX1	POWER GROUND CONTROL
PC-20-32	3/4"	6-1/c 2-1/c 4-1/c	12 12 12	MOTOR CONTROL CENTER MCC 20	PROCESS REACTOR NO.4 MIXER 4AX2	POWER GROUND CONTROL
PC-20-30	3/4"	6-1/c 2-1/c 4-1/c	12 12 12	MOTOR CONTROL CENTER MCC 20	PROCESS REACTOR NO.4 MIXER 4AX3	POWER GROUND CONTROL
PC-20-30A	3/4"	3-1/c 1-1/c 2-1/c	12 12 12	MOTOR CONTROL CENTER MCC 20	PROCESS REACTOR NO.4 MIXER 4AX5	POWER GROUND CONTROL
CP-20-31	3/4"	3-1/c 1-1/c 2-1/c	12 12 12	MOTOR CONTROL CENTER MCC 20	PROCESS REACTOR NO.4 MIXER 4AN1	POWER GROUND CONTROL
PC-20-32A	3/4"	3-1/c 1-1/c 2-1/c	12 12 12	MOTOR CONTROL CENTER MCC 20	PROCESS REACTOR NO.4 MIXER 4AX4	POWER GROUND CONTROL
PC-20-35	3/4"	6-1/c 2-1/c 4-1/c	12 12 12	MOTOR CONTROL CENTER MCC 20	PROCESS REACTOR NO.5 MIXER 5AN2	POWER GROUND CONTROL
PC-20-34A	3/4"	3-1/c 1-1/c 2-1/c	12 12 12	MOTOR CONTROL CENTER MCC 20	PROCESS REACTOR NO.5 MIXER 5AN3	POWER GROUND CONTROL
PC-20-35A	3/4"	3-1/c 1-1/c 2-1/c	12 12 12	MOTOR CONTROL CENTER MCC 20	PROCESS REACTOR NO.5 MIXER 5AX1	POWER GROUND CONTROL
PC-20-40	3/4"	6-1/c 2-1/c 4-1/c	12 12 12	MOTOR CONTROL CENTER MCC 20	PROCESS REACTOR NO.5 MIXER 5AX2	POWER GROUND CONTROL
PC-20-38	3/4"	6-1/c 2-1/c 4-1/c	12 12 12	MOTOR CONTROL CENTER MCC 20	PROCESS REACTOR NO.5 MIXER 5AX3	POWER GROUND CONTROL
PC-20-38A	3/4"	3-1/c 1-1/c 2-1/c	12 12 12	MOTOR CONTROL CENTER MCC 20	PROCESS REACTOR NO.5 MIXER 5AX5	POWER GROUND CONTROL
PC-20-34	3/4"	6-1/c 2-1/c 4-1/c	12 12 12	MOTOR CONTROL CENTER MCC 20	PROCESS REACTOR NO.5 MIXER 5AN1	POWER GROUND CONTROL
PC-20-40A	3/4"	3-1/c 1-1/c 2-1/c	12 12 12	MOTOR CONTROL CENTER MCC 20	PROCESS REACTOR NO.5 MIXER 5AX4	POWER GROUND CONTROL

CONDUIT & WIRE SCHEDULE

CONDUIT NO.	CONDUIT SIZE	CABLE QTY.	CABLE SIZE	FROM	TO	REMARKS
PC-20-41A	3/4"	3-1/c 1-1/c 2-1/c	12 12 12	MOTOR CONTROL CENTER MCC 20	PROCESS REACTOR NO.6 MIXER 6NA1	POWER GROUND CONTROL
PC-20-44	3/4"	6-1/c 2-1/c 4-1/c	12 12 12	MOTOR CONTROL CENTER MCC 20	PROCESS REACTOR NO.6 MIXER 6NA3	POWER GROUND CONTROL
PC-20-45	3/4"	6-1/c 2-1/c 4-1/c	12 12 12	MOTOR CONTROL CENTER MCC 20	PROCESS REACTOR NO.6 MIXER 6AX1	POWER GROUND CONTROL
PC-20-44A	3/4"	3-1/c 1-1/c 2-1/c	12 12 12	MOTOR CONTROL CENTER MCC 20	PROCESS REACTOR NO.6 MIXER 6AX2	POWER GROUND CONTROL
PC-20-45A	3/4"	3-1/c 1-1/c 2-1/c	12 12 12	MOTOR CONTROL CENTER MCC 20	PROCESS REACTOR NO.6 MIXER 6AX3	POWER GROUND CONTROL
PC-20-46	3/4"	3-1/c 1-1/c 2-1/c	12 12 12	MOTOR CONTROL CENTER MCC 20	PROCESS REACTOR NO.6 MIXER 6AX5	POWER GROUND CONTROL
PC-20-41	3/4"	6-1/c 2-1/c 4-1/c	12 12 12	MOTOR CONTROL CENTER MCC 20	PROCESS REACTOR NO.6 MIXER 6AN2	POWER GROUND CONTROL
PC-20-48	3/4"	3-1/c 1-1/c 2-1/c	12 12 12	MOTOR CONTROL CENTER MCC 20	PROCESS REACTOR NO.6 MIXER 6AX4	POWER GROUND CONTROL
PC-20-50	3/4"	6-1/c 2-1/c 4-1/c	12 12 12	MOTOR CONTROL CENTER MCC 20	PROCESS REACTOR NO.7 MIXER 7AN2	POWER GROUND CONTROL
PC-20-50A	3/4"	3-1/c 1-1/c 2-1/c	12 12 12	MOTOR CONTROL CENTER MCC 20	PROCESS REACTOR NO.6 MIXER 7AN3	POWER GROUND CONTROL
PC-20-55	3/4"	6-1/c 2-1/c 4-1/c	12 12 12	MOTOR CONTROL CENTER MCC 20	PROCESS REACTOR NO.6 MIXER 7AX1	POWER GROUND CONTROL
PC-20-57	3/4"	6-1/c 2-1/c 4-1/c	12 12 12	MOTOR CONTROL CENTER MCC 20	PROCESS REACTOR NO.6 MIXER 7AX3B	POWER GROUND CONTROL
PC-20-53A	3/4"	3-1/c 1-1/c 2-1/c	12 12 12	MOTOR CONTROL CENTER MCC 20	PROCESS REACTOR NO.6 MIXER 7AX4B	POWER GROUND CONTROL
PC-20-54	3/4"	3-1/c 1-1/c 2-1/c	12 12 12	MOTOR CONTROL CENTER MCC 20	PROCESS REACTOR NO.6 MIXER 7AN1	POWER GROUND CONTROL
PC-20-55A	3/4"	3-1/c 1-1/c 2-1/c	12 12 12	MOTOR CONTROL CENTER MCC 20	PROCESS REACTOR NO.6 MIXER 7AX2	POWER GROUND CONTROL
PC-20-53	3/4"	6-1/c 2-1/c 4-1/c	12 12 12	MOTOR CONTROL CENTER MCC 20	PROCESS REACTOR NO.6 MIXER 7AX3A	POWER GROUND CONTROL
PC-20-57A	3/4"	3-1/c 1-1/c 2-1/c	12 12 12	MOTOR CONTROL CENTER MCC 20	PROCESS REACTOR NO.6 MIXER 7AX4A	POWER GROUND CONTROL
PC-20-58	3/4"	3-1/c 1-1/c	10 10	MCC 20 HVAC	HVAC UNIT	POWER GROUND
PC-20-59	3/4"	5-1/c	12	THERMOSTAT	HVAC UNIT	CONTROL
PC-20-61	3/4"	6-1/c 2-1/c 4-1/c	12 12 12	MOTOR CONTROL CENTER MCC 20	PROCESS REACTOR NO.8 MIXER 8AN2	POWER GROUND CONTROL
PC-20-61A	3/4"	3-1/c 1-1/c 2-1/c	12 12 12	MOTOR CONTROL CENTER MCC 20	PROCESS REACTOR NO.6 MIXER 8AN3	POWER GROUND CONTROL
PC-20-66	3/4"	6-1/c 2-1/c 4-1/c	12 12 12	MOTOR CONTROL CENTER MCC 20	PROCESS REACTOR NO.6 MIXER 8AX1	POWER GROUND CONTROL
PC-20-68	3/4"	6-1/c 2-1/c 4-1/c	12 12 12	MOTOR CONTROL CENTER MCC 20	PROCESS REACTOR NO.6 MIXER 8AX3B	POWER GROUND CONTROL
PC-20-64A	3/4"	3-1/c 1-1/c 2-1/c	12 12 12	MOTOR CONTROL CENTER MCC 20	PROCESS REACTOR NO.6 MIXER 8AX4B	POWER GROUND CONTROL
PC-20-65	3/4"	3-1/c 1-1/c 2-1/c	12 12 12	MOTOR CONTROL CENTER MCC 20	PROCESS REACTOR NO.6 MIXER 8AN1	POWER GROUND CONTROL
PC-20-66A	3/4"	3-1/c 1-1/c 2-1/c	12 12 12	MOTOR CONTROL CENTER MCC 20	PROCESS REACTOR NO.6 MIXER 8AX2	POWER GROUND CONTROL
PC-20-64	3/4"	6-1/c 2-1/c 4-1/c	12 12 12	MOTOR CONTROL CENTER MCC 20	PROCESS REACTOR NO.6 MIXER 8AX3A	POWER GROUND CONTROL
PC-20-68A	3/4"	3-1/c 1-1/c 2-1/c	12 12 12	MOTOR CONTROL CENTER MCC 20	PROCESS REACTOR NO.6 MIXER 8AX4A	POWER GROUND CONTROL
PC-20-69				SPACE		
PC-20-70				SPACE		
P-20-71	3/4"	3-1/c 1-1/c	10 12	MOTOR CONTROL CENTER MCC 20	RECYCLE PUMP IRP-1 VFD	POWER GROUND
PC-20-71A	3/4"	3-1/c 1-1/c 4-1/c	10 12 12	RECYCLE PUMP IRP-1 VFD	RECYCLE PUMP IRP-1	POWER GROUND CONTROL
P-20-72	3/4"	3-1/c 1-1/c	10 12	MOTOR CONTROL CENTER MCC 20	RECYCLE PUMP IRP-2 VFD	POWER GROUND
PC-20-72A	3/4"	3-1/c 1-1/c 4-1/c	10 12 12	RECYCLE PUMP IRP-2 VFD	RECYCLE PUMP IRP-2	POWER GROUND CONTROL
P-20-73	3/4"	3-1/c 1-1/c	10 12	MOTOR CONTROL CENTER MCC 20	RECYCLE PUMP IRP-3 VFD	POWER GROUND
PC-20-73A	3/4"	3-1/c 1-1/c 4-1/c	10 12 12	RECYCLE PUMP IRP-3 VFD	RECYCLE PUMP IRP-3	POWER GROUND CONTROL
P-20-74	3/4"	3-1/c 1-1/c	10 12	MOTOR CONTROL CENTER MCC 20	RECYCLE PUMP IRP-4 VFD	POWER GROUND
PC-20-74A	3/4"	3-1/c 1-1/c 4-1/c	10 12 12	RECYCLE PUMP IRP-4 VFD	RECYCLE PUMP IRP-4	POWER GROUND CONTROL
P-20-75	3/4"	3-1/c 1-1/c	10 12	MOTOR CONTROL CENTER MCC 20	RECYCLE PUMP IRP-5 VFD	POWER GROUND
PC-20-75A	3/4"	3-1/c 1-1/c 4-1/c	10 12 12	RECYCLE PUMP IRP-5 VFD	RECYCLE PUMP IRP-5	POWER GROUND CONTROL
P-20-76	3/4"	3-1/c 1-1/c	10 12	MOTOR CONTROL CENTER MCC 20	RECYCLE PUMP IRP-6 VFD	POWER GROUND
PC-20-76A	3/4"	3-1/c 1-1/c 4-1/c	10 12 12	RECYCLE PUMP IRP-6 VFD	RECYCLE PUMP IRP-6	POWER GROUND CONTROL
P-20-77	1"	3-1/c 1-1/c	6 4	MOTOR CONTROL CENTER MCC 20	RECYCLE PUMP IRP-7 VFD	POWER GROUND
PC-20-77A	1 1/4"	3-1/c 1-1/c 4-1/c	6 4	RECYCLE PUMP IRP-7 VFD	RECYCLE PUMP IRP-7	POWER GROUND CONTROL
P-20-78	1"	3-1/c 1-1/c	6 4	MOTOR CONTROL CENTER MCC 20	RECYCLE PUMP IRP-8 VFD	POWER GROUND
PC-20-78A	1 1/4"	3-1/c 1-1/c 4-1/c	6 4 12	RECYCLE PUMP IRP-8 VFD	RECYCLE PUMP IRP-8	POWER GROUND CONTROL

CONDUIT & WIRE SCHEDULE

CONDUIT NO.	CONDUIT SIZE	CABLE QTY.	CABLE SIZE	FROM	TO	REMARKS
P-20-79	1 1/4"	3-1/c 1-1/c	2 6	MOTOR CONTROL CENTER MCC 20	FOAM SPRAY CNTRL PNL PUMP NO.1	POWER GROUND
PC-20-79A	1 1/4"	3-1/c 1-1/c 2-1/c	2 6 12	FOAM SPRAY PUMP NO.1 CNRL PNL	FOAM SPRAY PUMP NO.1	POWER GROUND CONTROL
P-20-80	1 1/4"	3-1/c 1-1/c	2 6	MOTOR CONTROL CENTER MCC 20	FOAM SPRAY PUMP NO.2 CNTRL PNL	POWER GROUND
PC-20-80A	1 1/4"	3-1/c 1-1/c 2-1/c	2 6 12	FOAM SPRAY PUMP NO.2 CNTRL PNL	FOAM SPRAY PUMP NO.2	POWER GROUND CONTROL
PC-20-81	3/4"	3-1/c 1-1/c 7-1/c	12 12 12	MOTOR CONTROL CENTER MCC 20	SCUM PUMP SCP-1	POWER GROUND CONTROL
PC-20-82	3/4"	3-1/c 1-1/c 7-1/c	12 12 12	MOTOR CONTROL CENTER MCC 20	SCUM PUMP SCP-2	POWER GROUND CONTROL
PC-20-83	3/4"	3-1/c 1-1/c 7-1/c	12 12 12	MOTOR CONTROL CENTER MCC 20	SCUM PUMP SCP-3	POWER GROUND CONTROL
PC-20-84	3/4"	3-1/c 1-1/c 7-1/c	12 12 12	MOTOR CONTROL CENTER MCC 20	SCUM PUMP SCP-4	POWER GROUND CONTROL
PC-20-85	3/4"	3-1/c 1-1/c 7-1/c	12 12 12	MOTOR CONTROL CENTER MCC 20	SCUM PUMP SCP-5	POWER GROUND CONTROL
C-20-86	3/4"	8-1/c	12	MCC 20	LSL171,LSH171,LSHH171	CONTROL
C-20-87	3/4"	8-1/c	12	MCC 20	LSL173,LSH173,LSHH173	CONTROL
C-20-88	3/4"	8-1/c	12	MCC 20	LSL175,LSH175,LSHH175	CONTROL
C-20-89	3/4"	8-1/c	12	MCC 20	LSL177,LSH177,LSHH177	CONTROL
C-20-90	3/4"	8-1/c	12	MCC 20	LSL178,LSH178,LSHH178	CONTROL
I-20-91	3/4"	1-PR	16SH.	FIT181	FI181(IN VFD,MCC20)	INSTRUMENT
I-20-91A	3/4"	1-PR	16SH.	FI181(IN VFD,MCC20)	PIU6A/6B	INSTRUMENT
I-20-92	3/4"	1-PR	16SH.	FIT182	FI182(IN VFD,MCC20)	INSTRUMENT
I-20-92A	3/4"	1-PR	16SH.	FI182(IN VFD,MCC20)	PIU6A/6B	INSTRUMENT
I-20-93	3/4"	1-PR	16SH.	FIT183	FI183(IN VFD,MCC20)	INSTRUMENT
I-20-93A	3/4"	1-PR	16SH.	FI183(IN VFD,MCC20)	PIU6A/6B	INSTRUMENT
I-20-94	3/4"	1-PR	16SH.	FIT184	FI184(IN VFD,MCC20)	INSTRUMENT
I-20-94A	3/4"	1-PR	16SH.	FI184(IN VFD,MCC20)	PIU6A/6B	INSTRUMENT
I-20-95	3/4"	1-PR	16SH.	FIT185	FI185(IN VFD,MCC20)	INSTRUMENT
I-20-95A	3/4"	1-PR	16SH.	FI185(IN VFD,MCC20)	PIU6A/6B	INSTRUMENT
I-20-96	3/4"	1-PR	16SH.	FIT186	FI186(IN VFD,MCC20)	INSTRUMENT
I-20-96A	3/4"	1-PR	16SH.	FI186(IN VFD,MCC20)	PIU6A/6B	INSTRUMENT
I-20-97	3/4"	1-PR	16SH.	FIT187	FI187(IN VFD,MCC20)	INSTRUMENT
I-20-97A	3/4"	1-PR	16SH.	FI187(IN VFD,MCC20)	PIU6A/6B	INSTRUMENT
I-20-98	3/4"	1-PR	16SH.	FIT188	FI188(IN VFD,MCC20)	INSTRUMENT
I-20-98A	3/4"	1-PR	16SH.	FI188(IN VFD,MCC20)	PIU6A/6B	INSTRUMENT
C-20-99	2x3"	2x120	12	MCC 20	PIU6A/6B	CONTROL
I-20-100	2"	8-PR	16SH.	MCC 20	PIU6A/6B	INSTRUMENT
P-20-101	3/4"	3-1/c 1-1/c	12 12	MOTOR CONTROL CENTER MCC 20	MOTOR OPERATED VALVE FCV201	POWER GROUND
C-20-101A	3/4"	4-1/c	12	FCV201	PRAP	CONTROL
P-20-102	3/4"	3-1/c 1-1/c	12 12	MOTOR CONTROL CENTER MCC 20	MOTOR OPERATED VALVE FCV202	POWER GROUND
C-20-102A	3/4"	4-1/c	12	FCV202	PRAP	CONTROL
I-20-103				SPACE		
C-20-104	1"	2-1/c	12	MCC 20	F.C.#3 LSH77	CONTROL
C-20-105	1"	2-1/c	12	MCC 20	F.C.#4 LSH78	CONTROL
C-20-106	1"	2-1/c	12	MCC 20	F.C.#5 LSH79	CONTROL
I-20-107	3/4"	1-PR	16SH.	FIT201	PRAP	INSTRUMENT
I-20-107A	3/4"	1-PR	MFR	FIT201	FE201	INSTRUMENT
I-20-108	3/4"	1-PR	16SH.	FIT202	PRAP	INSTRUMENT
I-20-108A	3/4"	1-PR	MFR	FIT202	FE202	INSTRUMENT
P-20-109	1"	3-1/c 1-1/c	8 10	MOTOR CONTROL CENTER MCC 20	ATS FOR LTG. PANEL LP-20	POWER GROUND
P-20-109A	1"	3-1/c 1-1/c	8 10	MOTOR CONTROL CENTER MCC 20	ATS FOR LTG. PANEL LP-20	POWER GROUND
P-20-109B	1"	3-1/c 1-1/c	8 10	ATS FOR LTG. PANEL LP-20	TRANSFORMER FOR LTG. PANEL LP-20	POWER GROUND
P-20-109C	1"	3-1/c 1-1/c 1-1/c	6 6 8	TRANSFORMER FOR LTG. PANEL LP-20	LIGHTING PANEL LP-20	POWER NEUTRAL GROUND
I-20-201	3/4"	12-1/c	12	FCV 201 CONTROL STA.	FCV 201 MTR. OP. VALVE	CONTROL
I-20-202	3/4"	12-1/c	12	FCV 202 CONTROL STA.	FCV 202 MTR. OP. VALVE	CONTROL
I-20-203	3/4"	12-1/c	12	FCV 203 CONTROL STA.	FCV 203 MTR. OP. VALVE	CONTROL
I-20-204	3/4"	12-1/c	12	FCV 204 CONTROL STA.	FCV 204 MTR. OP. VALVE	CONTROL
I-20-205	3/4"	12-1/c	12	FCV 205 CONTROL STA.	FCV 205 MTR. OP. VALVE	CONTROL
I-20-206	3/4"	12-1/c	12	FCV 206 CONTROL STA.	FCV 206 MTR. OP. VALVE	CONTROL
I-20-207	3/4"	12-1/c	12	FCV 207 CONTROL STA.	FCV 207 MTR. OP. VALVE	CONTROL
I-20-208	3/4"	12-1/c	12	FCV 208 CONTROL STA.	FCV 208 MTR. OP. VALVE	CONTROL
I-20-60	3/4"	1"-PR	16SH	FIT 230	PIU 64/68 CNTRL EXIST	INSTRUMENT
I-20-60A	3/4"	1"-PR	MFR	FIT 230	FE 230	INSTRUMENT

CONDUIT & WIRE SCHEDULE

CONDUIT NO.	CONDUIT SIZE	CABLE QTY.	CABLE SIZE	FROM	TO	REMARKS
I-20-118	3/4"	2-PR	16SH.	FIT191	FI191	INSTRUMENT
I-20-118A	3/4"	2-PR	16SH.	FI191	PIU6A/6B	INSTRUMENT
I-20-118B	3/4"	1-PR	MFR	FIT191	FE191	INSTRUMENT
I-20-119	3/4"	2-PR	16SH.	FIT192	FI192	INSTRUMENT
I-20-119A	3/4"	2-PR	16SH.	FI192	PIU6A/6B	INSTRUMENT
I-20-119B	3/4"	1-PR	MFR	FIT192	FE192	INSTRUMENT
I-20-120	3/4"	2-PR	16SH.	FIT193	FI193	INSTRUMENT
I-20-120A	3/4"	2-PR	16SH.	FI193	PIU6A/6B	INSTRUMENT
I-20-120B	3/4"	1-PR	MFR	FIT193	FE193	INSTRUMENT
I-20-121	3/4"	2-PR	16SH.	FIT194	FI194	INSTRUMENT
I-20-121A	3/4"	2-PR	16SH.	FI194	PIU6A/6B	INSTRUMENT
I-20-121B	3/4"	1-PR	MFR	FIT194	FE194	INSTRUMENT
I-20-122	3/4"	2-PR	16SH.	FIT195	FI195	INSTRUMENT
I-20-122A	3/4"	2-PR	16SH.	FI195	PIU6A/6B	INSTRUMENT
I-20-122B	3/4"	1-PR	MFR	FIT195	FE195	INSTRUMENT
I-20-123	3/4"	2-PR	16SH.	FIT196	FI196	INSTRUMENT
I-20-123A	3/4"	2-PR	16SH.	FI196	PIU6A/6B	INSTRUMENT
I-20-123B	3/4"	1-PR	MFR	FIT196	FE196	INSTRUMENT
I-20-124	3/4"	2-PR	16SH.	FI197	FI197	INSTRUMENT
I-20-124A	3/4"	2-PR	16SH.	FI197	PIU6A/6B	INSTRUMENT
I-20-124B	3/4"	1-PR	MFR	FIT197	FE197	INSTRUMENT
I-20-125	3/4"	2-PR	16SH.	FIT198	FI198	INSTRUMENT
I-20-125A	3/4"	2-PR	16SH.	FI198	PIU6A/6B	INSTRUMENT
I-20-125B	3/4"	1-PR	MFR	FIT198	FE198	INSTRUMENT
I-20-127	2"	20-PR	16SH.	PRAP	PIU6A/6B	INSTRUMENT
P-20-128	3/4"	3-1/c 1-1/c	12 12	MOTOR CONTROL CENTER MCC 20	MOTOR OPERATED VALVE FCV203	POWER GROUND
C-20-128A	3/4"	4-1/c	12	FCV203	PRAP	CONTROL
P-20-129	3/4"	3-1/c 1-1/c	12 12	MOTOR CONTROL CENTER MCC 20	MOTOR OPERATED VALVE FCV204	POWER GROUND
C-20-129A	3/4"	4-1/c	12	FCV204	PRAP	CONTROL
P-20-130	3/4"	3-1/c 1-1/c	12 12	MOTOR CONTROL CENTER MCC 20	MOTOR OPERATED VALVE FCV205	POWER GROUND
C-20-130A	3/4"	4-1/c	12	FCV205	PRAP	CONTROL
P-20-131	3/4"	3-1/c 1-1/c	12 12	MOTOR CONTROL CENTER MCC 20	MOTOR OPERATED VALVE FCV206	POWER GROUND
C-20-131A	3/4"	4-1/c	12	FCV206	PRAP	CONTROL
P-20-132	3/4"	3-1/c 1-1/c	12 12	MOTOR CONTROL CENTER MCC 20	MOTOR OPERATED VALVE FCV207	POWER GROUND
C-20-132A	3/4"	4-1/c	12	FCV207	PRAP	CONTROL
P-20-133	3/4"	3-1/c 1-1/c	12 12	MOTOR CONTROL CENTER MCC 20	MOTOR OPERATED VALVE FCV208	POWER GROUND
C-20-133A	3/4"	4-1/c	12	FCV208	PRAP	CONTROL
I-20-134	3/4"	1-PR	16SH.	FIT203	PRAP	INSTRUMENT
I-20-134A	3/4"	1-PR	MFR	FIT203	FE203	INSTRUMENT
I-20-135	3/4"	1-PR	16SH.	FIT204	PRAP	INSTRUMENT
I-20-135A	3/4"	1-PR	MFR	FIT204	FE204	INSTRUMENT
I-20-136	3/4"	1-PR	16SH.	FIT205	PRAP	INSTRUMENT
I-20-136A	3/4"	1-PR	MFR	FIT205	FE205	INSTRUMENT
I-20-137	3/4"	1-PR	16SH.	FIT206	PRAP	INSTRUMENT
I-20-137A	3/4"	1-PR	MFR	FIT206	FE206	INSTRUMENT
I-20-138	3/4"	1-PR	16SH.	FIT207	PRAP	INSTRUMENT
I-20-138A	3/4"	1-PR	MFR	FIT207	FE207	INSTRUMENT
I-20-139	3/4"	1-PR	16SH.	FIT208	PRAP	INSTRUMENT
I-20-139A	3/4"	1-PR	MFR	FIT208	FE208	INSTRUMENT
I-20-140	3/4"	1-PR	MFR	FIT211	FE211	INSTRUMENT
I-20-140A	3/4"	1-PR	16SH.	FIT211	PRSCP	INSTRUMENT
I-20-141	3/4"	1-PR	MFR	FIT212	FE212	INSTRUMENT
I-20-141A	3/4"	1-PR	16SH.	FIT212	PRSCP	INSTRUMENT
I-20-142	3/4"	1-PR	MFR	FIT213	FE213	INSTRUMENT
I-20-142A	3/4"	1-PR	16SH.	FIT213	PRSCP	INSTRUMENT
I-20-143	3/4"	1-PR	MFR	FIT214	FE214	INSTRUMENT
I-20-143A	3/4"	1-PR	16SH.	FIT214	PRSCP	INSTRUMENT
I-20-144	3/4"	1-PR	MFR	FIT215	FE215	INSTRUMENT
I-20-144A	3/4"	1-PR	16SH.	FIT215	PRSCP	INSTRUMENT
I-20-145	3/4"	1-PR	MFR	FIT216	FE216	INSTRUMENT
I-20-145A	3/4"	1-PR	16SH.	FIT216	PRSCP	INSTRUMENT
I-20-146	3/4"	1-PR	MFR	FIT217	FE217	INSTRUMENT
I-20-146A	3/4"	1-PR	16SH.	FIT217	PRSCP	INSTRUMENT
I-20-147	3/4"	1-PR	MFR	FIT218	FE218	INSTRUMENT
I-20-147A	3/4"	1-PR	16SH.	FIT218	PRSCP	INSTRUMENT

DEPARTMENT OF PUBLIC WORKS
HOWARD COUNTY, MARYLAND

DIRECTOR OF PUBLIC WORKS — 5/7/96 DATE
CHIEF, BUREAU OF ENGINEERING — 5/7/96 DATE
CHIEF, BUREAU OF ENVIRONMENTAL SERVICES — 5/7/96 DATE
CHIEF, UTILITY DESIGN DIVISION — 5-7-96 DATE

M&E Metcalf & Eddy

REG. PROF. ENGR. — 5-7-96 DATE

STATE OF MARYLAND — JONATHAN WINTHROP DOANE — No. 15140 — REGISTERED PROFESSIONAL ENGINEER

DES:				
DRN:				
CHK:				
DATE:	M.J.C.	1	RECORD DRAWING	6/10/95
	BY	NO.	REVISION	DATE

ELECTRICAL

CONDUIT & WIRE SCHEDULE II

LITTLE PATUXENT WASTEWATER TREATMENT PLANT

LITTLE PATUXENT WASTEWATER TREATMENT PLANT EXPANSION
ADDITION NO. 5
CAPITAL PROJECT S-6153

CONTRACT NO. 20-3082
HOWARD COUNTY, MARYLAND

SCALE AS SHOWN

SHEET 222 OF 226

E-37R

CONDUIT & WIRE SCHEDULE

CONDUIT NO.	CONDUIT SIZE	CABLE QTY.	CABLE SIZE	FROM	TO	REMARKS
P-8-1	1 1/2"	3-1/c 1-1/c	1/0 6	MOTOR CONTROL CENTER CC 8	DISTRIBUTION PANEL DP-8	POWER GROUND
P-8-2	1"	3-1/c 1-1/c	4 8	MOTOR CONTROL CENTER CC 8	LIGHTING TRANSFORMER TR. 8B	POWER GROUND
P-8-2A	2"	3-1/c 1-1/c 1-1/c	2/0 2/0 6	LIGHTING TRANSFORMER TR. 8B	LIGHTING PANEL LP-8B	POWER NEUTRAL GROUND
P-8-3				SPACE		
P-8-4				SPACE		
P-8-5				SPACE		
P-8-6	1 1/2"	3-1/c 1-1/c	1/0 6	MOTOR CONTROL CENTER CC 8	DISTRIBUTION PANEL DP-8A	POWER GROUND
DP-8-1	1"	2-1/c 1-1/c	2 8	DISTRIBUTION PANEL DP-8	LIGHTING TRANSFORMER TR. 8C	POWER GROUND
DP-8-1A	2"	2-1/c 1-1/c 1-1/c	3/0 3/0 4	LIGHTING TRANSFORMER TR. 8C	LIGHTING PANEL LP-8C	POWER NEUTRAL GROUND
DP-8-2	3/4"	3-1/c 1-1/c	12 12	DISTRIBUTION PANEL DP-8	VECHICLE MAINTENANCE ROLL-UP DOOR ND.1	POWER GROUND
DP-8-3	3/4"	3-1/c 1-1/c	12 12	DISTRIBUTION PANEL DP-8	VECHICLE MAINTENANCE ROLL-UP DOOR ND.2	POWER GROUND
DP-8-4	3/4"	3-1/c 1-1/c	12 12	DISTRIBUTION PANEL DP-8	VECHICLE MAINTENANCE ROLL-UP DOOR ND.3	POWER GROUND
DP-8-5	3/4"	3-1/c 1-1/c	10 10	DISTRIBUTION PANEL DP-8	MACHINE SHOP MONORAIL	POWER GROUND
DP-8-6	3/4"	3-1/c 1-1/c	12 12	DISTRIBUTION PANEL DP-8	MACHINE SHOP ROLL-UP DOOR ND.1	POWER GROUND
DP-8-7	3/4"	3-1/c 1-1/c	12 12	DISTRIBUTION PANEL DP-8	MACHINE SHOP ROLL-UP DOOR ND.2	POWER GROUND
DP-8-8	3/4"	3-1/c 1-1/c	10 10	DISTRIBUTION PANEL DP-8	MACHINE SHOP LATHE	POWER GROUND
DP-8-9	3/4"	3-1/c 1-1/c	12 12	DISTRIBUTION PANEL DP-8	MACHINE SHOP MILL	POWER GROUND
DP-8A-1	3/4"	3-1/c 1-1/c	10 10	DISTRIBUTION PANEL DP-8A	BULK PARTS STORAGE MONORAIL	POWER GROUND
DP-8A-2	3/4"	3-1/c 1-1/c	12 12	DISTRIBUTION PANEL DP-8A	BULK PARTS STORAGE ROLL-UP GRILL	POWER GROUND
DP-8A-3	3/4"	3-1/c 1-1/c	12 12	DISTRIBUTION PANEL DP-8A	BULK PARTS STORAGE ROLL-UP DOOR	POWER GROUND
DP-8A-4	3/4"	3-1/c 1-1/c	12 12	DISTRIBUTION PANEL DP-8A	SMALL PARTS STORAGE FREIGHT ELEVATOR	POWER GROUND
DP-8A-5	3/4"	3-1/c 1-1/c	12 12	DISTRIBUTION PANEL DP-8A	OIL STORAGE UNIT HEATER EUH-1	POWER GROUND
DP-8A-6	3/4"	3-1/c 1-1/c	8 10	DISTRIBUTION PANEL DP-8A	HEAT PUMP HP-1	POWER GROUND
DP-8A-7	3/4"	3-1/c 1-1/c	10 10	DISTRIBUTION PANEL DP-8A	HEAT PUMP HP-2	POWER GROUND
PC-10-1	3/4"	3-1/c 1-1/c 7-1/c	12 12 12	EXIST. MOTOR CONTROL CENTER CC10	DIGESTER PUMP GALLERY ADDITION J.B. ND.1	POWER GROUND CONTROL
PC-10-1A	3/4"	3-1/c 1-1/c 5-1/c	12 12 12	DIGESTER PUMP GALLERY ADDITION J.B. ND.2	GRAVITY THICKENER SLUDGE COLLECTOR ND.4	POWER GROUND CONTROL
C-10-1B	3/4"	2-1/c	12	DIGESTER PUMP GALLERY ADDITION J.B. ND.2	GRAVITY THICKENER ND.4 ALARM LIGHT	CONTROL
PC-10-2	1"	3-1/c 1-1/c 10-1/c	12 12 12	EXIST. MOTOR CONTROL CENTER CC10	DIGESTER SLUDGE PUMP ND.4 VFD	POWER GROUND CONTROL
PC-10-2A	1"	3-1/c 1-1/c 5-1/c	12 12 12	DIGESTER SLUDGE PUMP ND.4 VFD	DIGESTER SLUDGE PUMP ND.4	POWER GROUND CONTROL
I-10-2B	3/4"	1-PR	16SH.	D.SL. PUMP ND.4 VFD	D.SL. PUMP ND.4	INSTRUMENT
I-10-2D	3/4"	2-PR	16SH.	D.SL. PUMP ND.4 VFD	PIU3A	INSTRUMENT
I-10-2E	3/4"	1-PR	16SH.	D.SL. PUMP ND.4 VFD	BFP	INSTRUMENT
PC-10-3	1"	3-1/c 1-1/c 10-1/c	12 12 12	EXIST. MOTOR CONTROL CENTER CC10	DIGESTER SCUM PUMP ND.4 VFD	POWER GROUND CONTROL
PC-10-3A	1"	3-1/c 1-1/c 9-1/c	12 12 12	DIGESTER SCUM PUMP ND.4 VFD	DIGESTER SCUM PUMP ND.4	POWER GROUND CONTROL
I-10-3B	3/4"	1-PR	16SH.	D.SC. PUMP ND.4 VFD	D.SC. PUMP ND.4	INSTRUMENT
I-10-3D	3/4"	2-PR	16SH.	D.SC. PUMP ND.4 VFD	PIU3A	INSTRUMENT
I-10-3E	3/4"	1-PR	16SH.	D.SC. PUMP ND.4 VFD	BFP	INSTRUMENT
PC-10-4	3/4"	2-1/c 1-1/c 5-1/c	12 12 12	EXIST. MOTOR CONTROL CENTER CC10	DIGESTER PUMP GALLERY EXHAUST FAN EF-11B	POWER GROUND CONTROL
P-10-5	3/4"	3-1/c 1-1/c	12 12	EXIST. MOTOR CONTROL CENTER CC10	DIGESTER PUMP GALLERY UNIT HEATER ND.2	POWER GROUND
P-10-6	1"	3-1/c 1-1/c	4 8	EXIST. MOTOR CONTROL CENTER CC10	ATS FOR LTG. PANEL LP-DBA	POWER GROUND
P-10-6A	1"	3-1/c 1-1/c	4 8	ATS FOR LTG. PANEL LP-DBA	LIGHTING TRANSFORMER TR-DBA	POWER GROUND
P-10-6B	1"	3-1/c 1-1/c	4 8	ATS FOR LTG. PANEL LP-DBA	EXIST. MOTOR CONTROL CENTER CC9	POWER GROUND
P-10-6C	1 1/4"	3-1/c 1-1/c 1-1/c	2 2 8	LIGHTING TRANSFORMER TR.-DBA	LIGHTING PANEL LP-DBA	POWER NEUTRAL GROUND
P-10-7				SPACE		
C-10-8	3/4"	4-1/c	12	EXIST. MOTOR CONTROL CENTER CC10	LEVEL SWITCHES LSH63 & LSL63	CONTROL
C-10-9	1 1/4"	28-1/c	12	EXIST. MOTOR CONTROL CENTER CC10	BFP CTL. PNL. IN BELT FILTER PRESS ROOM	CONTROL
P-10-10	1 1/4"	3-1/c 1-1/c	2 8	EXIST. MOTOR CONTROL CENTER CC10	ATS FOR POWER PANEL PP10	POWER GROUND
P-10-10A	1 1/4"	3-1/c 1-1/c	2 8	ATS FOR POWER PANEL PP10	POWER PANEL PP10	POWER GROUND
P-10-10B	1 1/4"	3-1/c 1-1/c	2 8	EXIST. MOTOR CONTROL CENTER CC9	ATS FOR POWER PANEL PP10	POWER GROUND
P-10-10C	3/4"	3-1/c 1-1/c	8 10	POWER PANEL PP10	POWER PANEL PP10A	POWER GROUND
P-10-11	3"	3-1/c 1-1/c	350 2	EXIST. MOTOR CONTROL CENTER CC10	FW PUMP MANUAL TRANSFER SWITCH	POWER GROUND
P-10-12	3"	3-1/c 1-1/c 5-1/c	2 8 12	FW PUMP MANUAL TRANSFER SWITCH	FLUSHING WATER PUMP CNTRL PNL	POWER GROUND
PC-10-13	3/4"	3-1/c 1-1/c 5-1/c	12 12 12	EXIST. MOTOR CONTROL CENTER CC10	DIGESTER PUMP GALLERY SUPPLY FAN SF-12B	POWER GROUND CONTROL
PC-10-14	3/4"	3-1/c 1-1/c 5-1/c	12 12 12	EXIST. MOTOR CONTROL CENTER CC10	EXIST. DIG. P. GALLERY EXHAUST FAN EF-13B	POWER GROUND CONTROL
PC-10-15	3/4"	3-1/c 1-1/c 5-1/c	12 12 12	EXIST. MOTOR CONTROL CENTER CC10	EXIST. DIG. P. GALLERY SUPPLY FAN SF-14	POWER GROUND CONTROL

CONDUIT & WIRE SCHEDULE

CONDUIT NO.	CONDUIT SIZE	CABLE QTY.	CABLE SIZE	FROM	TO	REMARKS
PC-9-1	3/4"	3-1/c 1-1/c 7-1/c	12 12 12	EXIST. MOTOR CONTROL CENTER CC9	DIGESTER PUMP GALLERY ADDITION J.B. ND.1	POWER GROUND CONTROL
PC-9-1A	3/4"	3-1/c 1-1/c 5-1/c	12 12 12	DIGESTER PUMP GALLERY ADDITION J.B. ND.1	GRAVITY THICKENER SLUDGE COLLECTOR ND.3	POWER GROUND CONTROL
C-9-1B	3/4"	2-1/c	12	DIGESTER PUMP GALLERY ADDITION J.B. ND.1	GRAVITY THICKENER ND.3 ALARM LIGHT	CONTROL
PC-9-2	1"	3-1/c 1-1/c 10-1/c	12 12 12	EXIST. MOTOR CONTROL CENTER CC9	DIGESTER SLUDGE PUMP ND.3 VFD	POWER GROUND CONTROL
PC-9-2A	1"	3-1/c 1-1/c 9-1/c	12 12 12	DIGESTER SLUDGE PUMP ND.3 VFD	DIGESTER SLUDGE PUMP ND.3	POWER GROUND CONTROL
I-9-2B	3/4"	1-PR	16SH.	D.SL. PUMP ND.3 VFD	D.SL. PUMP ND.3	INSTRUMENT
I-9-2C	3/4"	2-PR	16SH.	D.SL. PUMP ND.3 VFD	PIU3A	INSTRUMENT
I-9-2D	3/4"	1-PR	16SH.	D.SL. PUMP ND.3 VFD	BFP	INSTRUMENT
PC-9-3	1"	3-1/c 1-1/c 10-1/c	12 12 12	EXIST. MOTOR CONTROL CENTER CC9	DIGESTER SCUM PUMP ND.3 VFD	POWER GROUND CONTROL
PC-9-3A	1"	3-1/c 1-1/c 9-1/c	12 12 12	DIGESTER SCUM PUMP ND.3 VFD	DIGESTER SCUM PUMP ND.3	POWER GROUND CONTROL
I-9-3B	3/4"	1-PR	16SH.	D.SC. PUMP ND.3 VFD	D. SC. PUMP ND.3	INSTRUMENT
I-9-3C	3/4"	2-PR	16SH.	D.SC. PUMP ND.3 VFD	PIU3A	INSTRUMENT
I-9-3D	3/4"	1-PR	16SH.	D.SC. PUMP ND.3 VFD	BFP	INSTRUMENT
PC-9-4	3/4"	3-1/c 1-1/c 5-1/c	12 12 12	EXIST. MOTOR CONTROL CENTER CC9	DIGESTER PUMP GALLERY EXHAUST FAN EF-11A	POWER GROUND CONTROL
P-9-5	3/4"	3-1/c 1-1/c	12 12	EXIST. MOTOR CONTROL CENTER CC9	DIGESTER PUMP GALLERY UNIT HEATER ND.1	POWER GROUND
P-9-8	3"	3-1/c 1-1/c	350 2	EXIST. MOTOR CONTROL CENTER CC9	FW PUMP MANUAL TRANSFER SWITCH	POWER GROUND
C-9-9	1 1/4"	20-1/c	12	FW PUMP CNTRL PNL.	PIU3A	CONTROL
I-9-10	3"	24-PR	16SH.	DAFP	PIU3A	INSTRUMENT
PC-9-11	3/4"	3-1/c 1-1/c 5-1/c	12 12 12	EXIST. MOTOR CONTROL CENTER CC9	DIGESTER PUMP GALLERY SUPPLY FAN SF-12A	POWER GROUND CONTROL
PC-9-12	3/4"	3-1/c 1-1/c 5-1/c	12 12 12	EXIST. MOTOR CONTROL CENTER CC9	EXIST. D PUMP GALLERY EXHAUST FAN EF-13A	POWER GROUND CONTROL
PP10-1	3/4"	3-1/c 1-1/c	12 12	POWER PANEL PP10	FCV40	POWER GROUND
I-10-1A	3/4"	1-PR	16SH.	FCV40	DAFP	INSTRUMENT.
I-10-1B	3/4"	1-PR	MFR.	FE40	FIT40	INSTRUMENT.
I-10-1C	3/4"	1-PR	16SH.	FIT40	DAFP	INSTRUMENT.
C-10-1D	3/4"	6-1/c	12	FCV40	DAFP	CONTROL
PP10-2	3/4"	3-1/c 1-1/c	12 12	POWER PANEL PP10	FCV41	POWER GROUND
I-10-2A	3/4"	1-PR	16SH.	FCV41	DAFP	INSTRUMENT.
I-10-2B	3/4"	1-PR	MFR.	FE41	FIT41	INSTRUMENT.
I-10-2C	3/4"	1-PR	16SH.	FIT41	DAFP	INSTRUMENT.
C-10-2D	3/4"	6-1/c	12	FCV41	DAFP	CONTROL
PP10-3	3/4"	3-1/c 1-1/c	12 12	POWER PANEL PP10	FCV42	POWER GROUND
I-10-3A	3/4"	1-PR	16SH.	FCV42	DAFP	INSTRUMENT.
I-10-3B	3/4"	1-PR	MFR.	FE42	FIT42	INSTRUMENT.
I-10-3C	3/4"	1-PR	16SH.	FIT42	DAFP	INSTRUMENT.
C-10-3D	3/4"	6-1/c	12	FCV42	DAFP	CONTROL
PP10-4	3/4"	3-1/c 1-1/c	12 12	POWER PANEL PP10	FCV43	POWER GROUND
I-10-4A	3/4"	1-PR	16SH.	FCV43	DAFP	INSTRUMENT.
I-10-4B	3/4"	1-PR	MFR.	FE43	FIT43	INSTRUMENT.
I-10-4C	3/4"	1-PR	16SH.	FIT43	DAFP	INSTRUMENT.
C-10-4D	3/4"	6-1/c	12	FCV43	DAFP	CONTROL
PP10-5	3/4"	3-1/c 1-1/c	12 12	POWER PANEL PP10	FCV44	POWER GROUND
I-10-5A	3/4"	1-PR	16SH.	FCV44	DAFP	INSTRUMENT.
I-10-5B	3/4"	1-PR	MFR.	FE44	FIT44	INSTRUMENT.
I-10-5C	3/4"	1-PR	16SH.	FIT44	DAFP	INSTRUMENT.
C-10-5D	3/4"	6-1/c	12	FCV44	DAFP	CONTROL
PP10-6	3/4"	3-1/c 1-1/c	12 12	POWER PANEL PP10	FCV45	POWER GROUND
I-10-6A	3/4"	1-PR	16SH.	FCV45	DAFP	INSTRUMENT.
I-10-6B	3/4"	1-PR	MFR.	FE45	FIT45	INSTRUMENT.
I-10-6C	3/4"	1-PR	16SH.	FIT45	DAFP	INSTRUMENT.
C-10-6D	3/4"	6-1/c	12	FCV45	DAFP	CONTROL
PP10-7	3/4"	3-1/c 1-1/c	12 12	POWER PANEL PP10	FCV46	POWER GROUND
I-10-7A	3/4"	1-PR	16SH.	FCV46	DAFP	INSTRUMENT.
I-10-7B	3/4"	1-PR	MFR.	FE46	FIT46	INSTRUMENT.
I-10-7C	3/4"	1-PR	16SH.	FIT46	DAFP	INSTRUMENT.
C-10-7D	3/4"	6-1/c	12	FCV46	DAFP	CONTROL
PP10-8	3/4"	3-1/c 1-1/c	12 12	POWER PANEL PP10	FCV47	POWER GROUND
I-10-8A	3/4"	1-PR	16SH.	FCV47	DAFP	INSTRUMENT.
I-10-8B	3/4"	1-PR	MFR.	FE47	FIT47	INSTRUMENT.
I-10-8C	3/4"	1-PR	16SH.	FIT47	DAFP	INSTRUMENT.
C-10-8D	3/4"	6-1/c	12	FCV47	DAFP	CONTROL
PP10-9	3/4"	3-1/c 1-1/c	12 12	POWER PANEL PP10	FCV48	POWER GROUND
I-10-9A	3/4"	1-PR	16SH.	FCV48	DAFP	INSTRUMENT.
I-10-9B	3/4"	1-PR	MFR.	FE48	FIT48	INSTRUMENT.
I-10-9C	3/4"	1-PR	16SH.	FIT48	DAFP	INSTRUMENT.
C-10-9D	3/4"	6-1/c	12	FCV48	DAFP	CONTROL
PP10-10	3/4"	3-1/c 1-1/c	12 12	POWER PANEL PP10	FCV49	POWER GROUND
I-10-10A	3/4"	1-PR	16SH.	FCV49	DAFP	INSTRUMENT.
I-10-10B	3/4"	1-PR	MFR.	FE49	FIT49	INSTRUMENT.
I-10-10C	3/4"	1-PR	16SH.	FIT49	DAFP	INSTRUMENT.
C-10-10D	3/4"	6-1/c	12	FCV49	DAFP	CONTROL
PP10-11	3/4"	3-1/c 1-1/2"	12 12	POWER PANEL PP10	FCV50	POWER GROUND
I-10-11A	3/4"	1-PR	16SH.	FCV50	DAFP	INSTRUMENT.
I-10-11B	3/4"	1-PR	MFR.	FE50	FIT50	INSTRUMENT.
I-10-11C	3/4"	1-PR	16SH.	FIT50	DAFP	INSTRUMENT.
C-10-11D	3/4"	6-1/c	12	FCV50	DAFP	CONTROL
PP10-12	3/4"	3-1/c 1-1/c	12 12	POWER PANEL PP10	FCV51	POWER GROUND
I-10-12A	3/4"	1-PR	16SH.	FCV51	DAFP	INSTRUMENT.
I-10-12B	3/4"	1-PR	MFR.	FE51	FIT51	INSTRUMENT.
I-10-12C	3/4"	1-PR	16SH.	FIT51	DAFP	INSTRUMENT.
C-10-12D	3/4"	6-1/c	12	FCV51	DAFP	CONTROL

CONDUIT & WIRE SCHEDULE

CONDUIT NO.	CONDUIT SIZE	CABLE QTY.	CABLE SIZE	FROM	TO	REMARKS
PP10A-1	3/4"	3-1/c 1-1/c	12 12	POWER PANEL PP10A	FV30A	POWER GROUND
I-10A-1A	3/4"	2-PR	16SH.	FV30A & ZIT30	BLOWER ND.5 CTL. PNL.	INSTRUMENT.
C-10A-1B	3/4"	6-1/c	12	FV30A	BLOWER ND.5 CTL. PNL.	CONTROL
I-10A-1C	3/4"	1-PR	16SH.	TT30A	BLOWER ND.5 CTL. PNL.	INSTRUMENT.
I-10A-1D				SPACE		
PP10A-2	3/4"	3-1/c 1-1/c	12 12	POWER PANEL PP10A	FV30B	POWER GROUND
C-10A-2A	3/4"	9-1/c	12	FV30B	BLOWER ND.5 CTL. PNL.	CONTROL
C-10A-2B				SPACE		
I-10A-2C	3/4"	2-PR	16SH.	FV30B (TT30B)	BLOWER ND.5 CTL. PNL.	INSTRUMENT.
PP10A-3	3/4"	3-1/c 1-1/c	12 12	POWER PANEL PP10A	FV31A	POWER GROUND
I-10A-3A	3/4"	2-PR	16SH.	FV31A & ZIT31	BLOWER ND.6 CTL. PNL.	INSTRUMENT.
C-10A-3B	3/4"	6-1/c	12	FV31A	BLOWER ND.6 CTL. PNL.	CONTROL
I-10A-3C	3/4"	1-PR	16SH.	TT31A	BLOWER ND.6 CTL. PNL.	INSTRUMENT.
I-10A-3D				SPACE		
PP10A-4	3/4"	3-1/c 1-1/c	12 12	POWER PANEL PP10A	FV31B	POWER GROUND
C-10A-4A	3/4"	9-1/c	12	FV31B	BLOWER ND.6 CTL. PNL.	CONTROL
C-10A-4B				SPACE		
I-10A-4C	3/4"	2-PR	16SH.	FV31B (TT31B)	BLOWER ND.6 CTL. PNL.	INSTRUMENT.
PP10A-5	3/4"	3-1/c 1-1/c	12 12	POWER PANEL PP10A	FV32A	POWER GROUND
I-10A-5A	3/4"	2-PR	16SH.	FV32A & ZIT32	BLOWER ND.7 CTL. PNL.	INSTRUMENT.
C-10A-5B	3/4"	6-1/c	12	FV32A	BLOWER ND.7 CTL. PNL.	CONTROL
I-10A-5C	3/4"	1-PR	16SH.	TT32A	BLOWER ND.7 CTL. PNL.	INSTRUMENT.
I-10A-5D				SPACE		
PP10A-6	3/4"	3-1/c 1-1/c	12 12	POWER PANEL PP10A	FV32B	POWER GROUND
C-10A-6A	3/4"	9-1/c	12	FV32B	BLOWER ND.7 CTL. PNL.	CONTROL
C-10A-6B				SPACE		
I-10A-6C	3/4"	2-PR	16SH.	FV32B (TT32B)	BLOWER ND.7 CTL. PNL.	INSTRUMENT.
C-10A-7	1 1/4"	22-1/c	12	BLOWER ND.5 CTL. PNL.	PIU3A	CONTROL
I-10A-8	1 1/4"	7-PR	16SH.	BLOWER ND.5 CTL. PNL.	PIU3A	INSTRUMENT.
C-10A-9	1 1/4"	22-1/c	12	BLOWER ND.6 CTL. PNL.	PIU3A	CONTROL
I-10A-10	1 1/4"	7-PR	16SH.	BLOWER ND.6 CTL. PNL.	PIU3A	INSTRUMENT.
C-10A-11	1 1/4"	22-1/c	12	BLOWER ND.7 CTL. PNL.	PIU3A	CONTROL
I-10A-12	1 1/4"	7-PR	16SH.	BLOWER ND.7 CTL. PNL.	PIU3A	INSTRUMENT.
I-10A-13	3/4"	1-PR	16SH.	PIT31	BPCP	INSTRUMENT.
I-10A-14	3/4"	1-PR	16SH.	PIT31	BPCP	INSTRUMENT.
I-10A-15	3/4"	1-PR	16SH.	BPCP	PIU3A	INSTRUMENT.
I-10A-16	3/4"	2-1/c	12	LEVEL SW. LSHH63	PIU3A	INSTRUMENT.
I-10A-17	3/4"	2-1/c	12	LEVEL SW. LSHH60	PIU3A	INSTRUMENT.
I-10A-18	3/4"	1-PR	16SH.	PIT32	BPCP	INSTRUMENT.
I-10A-19	1 1/2"	8-PR	16SH.	PIU3A	BFP CTL. PNL. IN BELT FILTER PRESS ROOM	INSTRUMENT.
I-10A-20	1"	3-PR	16SH.	BLOWER ND.5 CTL. PNL.	BLOWER ND.6 CTL. PNL.	INSTRUMENT.
I-10A-21	1"	3-PR	16SH.	BLOWER ND.5 CTL. PNL.	BLOWER ND.7 CTL. PNL.	INSTRUMENT.
I-10A-22	1"	3-PR	16SH.	BLOWER ND.6 CTL. PNL.	BLOWER ND.7 CTL. PNL.	INSTRUMENT.
I-10A-23	1"	3-PR	16SH.	BLOWER ND.7 CTL. PNL.	BLOWER ND.8 CTL. PNL.	INSTRUMENT. (FUT.)
I-10A-24	1"	3-PR	16SH.	BLOWER ND.7 CTL. PNL.	BLOWER ND.9 CTL. PNL.	INSTRUMENT. (FUT.)
I-10A-25	1"	3-PR	16SH.	BLOWER ND. 8 CTL. PNL.	BLOWER ND.9 CTL. PNL.	INSTRUMENT. (FUT.)
P-DBA-1	1"	3-1/c 1-1/c 1-1/c	6 6 8	LIGHTING PANEL LP-DBA	MCC-18, LIGHTING PANEL LP-18	POWER NEUTRAL GROUND
H-2-1	5"	3-1/c 1-1/c	500MCM 1/0	EXIST. DEWATERING SUBSTATION PS2	DIGESTER SUBSTATION PS5	POWER (15KV CABLE) GROUND
H-2-2	5"	3-1/c 1-1/c	500MCM 1/0	EXIST. DEWATERING SUBSTATION PS2	DIGESTER SUBSTATION PS5	POWER (15KV CABLE) GROUND
H-5-1	5"	3-1/c 1-1/c	500MCM 1/0	DIGESTER SUBSTATION PS5	EXIST. MANHOLE ND.16	POWER (5KV CABLE) GROUND
H-5-2	5"	3-1/c 1-1/c	500MCM 1/0	DIGESTER SUBSTATION PS5	EXIST. MANHOLE ND.16	POWER (5KV CABLE) GROUND
H-5-3	EXIST. 5"	3-1/c 1-1/c	500MCM 1/0	EXIST. MANHOLE ND.16	EXIST. MANHOLE ND.38	POWER (5KV CABLE) GROUND
H-5-4	EXIST. 5"	3-1/c 1-1/c	500MCM 1/0	EXIST. MANHOLE ND.16	EXIST. MANHOLE ND.38	POWER (5KV CABLE) GROUND
H-5-5	5"	3-1/c 1-1/c	500MCM 1/0	EXIST. MANHOLE ND.38	MOTOR CONTROL CENTER MCC-18	POWER (5KV CABLE) GROUND
H-5-6	5"	3-1/c 1-1/c	500MCM 1/0	EXIST. MANHOLE ND.38	MOTOR CONTROL CENTER MCC-18	POWER (5KV CABLE) GROUND
H-5-7	5"	—	—	DIGESTER SUBSTATION PS5	EXIST. MANHOLE ND.16	CONDUIT ONLY
H-5-8	5"	—	—	DIGESTER SUBSTATION PS5	EXIST. MANHOLE ND.16	CONDUIT ONLY
H-5-9	5"	—	—	EXIST. MANHOLE ND.38	MOTOR CONTROL CENTER MCC-19	CONDUIT ONLY
H-5-10	5"	—	—	EXIST. MANHOLE ND.38	MOTOR CONTROL CENTER MCC-19	CONDUIT ONLY
PC-10-16	1 1/4"	3-1/c 1-1/c 2-1/c	2 8 12	FW PUMP CONTROL PANEL	FW PUMP ND.1	POWER GROUND CONTROL
H-10-16A	3/4"	2-1/c	12	FWP ND.1	FWP ND.1 SOL VALVE	CONTROL
PC-10-17	1 1/4"	3-1/c 1-1/c 2-1/c	2 8 12	FW PUMP CONTROL PANEL	FW PUMP ND.2	POWER GROUND CONTROL
H-10-17A	3/4"	2-1/c	12	FWP ND.2	FWP ND.2 SOL VALVE	CONTROL
PC-10-18	1 1/4"	3-1/c 1-1/c 2-1/c	2 8 12	FW PUMP CONTROL PANEL	FW PUMP ND.3	POWER GROUND CONTROL
H-10-18A	3/4"	2-1/c	12	FWP ND.3	FWP ND.3 SOL VALVE	CONTROL

DEPARTMENT OF PUBLIC WORKS
HOWARD COUNTY, MARYLAND

DIRECTOR OF PUBLIC WORKS — DATE 5/7/96
CHIEF, BUREAU OF ENGINEERING — DATE 5/7/96
CHIEF, BUREAU OF ENVIRONMENTAL SERVICES — DATE 5/7/96
CHIEF, UTILITY DESIGN DIVISION — DATE 5-7-96

M&E Metcalf & Eddy
REG. PROF. ENGR. — DATE 5-7-96

STATE OF MARYLAND — JONATHAN WITHERSPOON No. 15149 — REGISTERED PROFESSIONAL ENGINEER

DES:			
DRN:			
CHK:			
DATE:	M.J.C.	1	RECORD DRAWING 6/10/95
	BY	NO.	REVISION / DATE

ELECTRICAL

CONDUIT & WIRE SCHEDULE III

LITTLE PATUXENT WASTEWATER TREATMENT PLANT
LITTLE PATUXENT WASTEWATER TREATMENT PLANT EXPANSION
ADDITION NO. 5
CAPITAL PROJECT S-6153
CONTRACT NO. 20-3082
HOWARD COUNTY, MARYLAND

SCALE AS SHOWN

SHEET 223 OF 226

E-38R

CONDUIT & WIRE SCHEDULE

CONDUIT		CABLE		FROM	TO	REMARKS
NO.	SIZE	QTY.	SIZE			
PC-7A-1	1"	3-1/c 1-1/c 7-1/c	10 10 12	EXIST. MOTOR CONTROL CENTER CC7A	NEW RAS PUMP NO.2 VFD	POWER GROUND CONTROL
PC-7A-1A	1"	3-1/c 1-1/c 7-1/c	10 10 12	NEW RAS PUMP NO.2 VFD	NEW RAS PUMP NO.2	POWER GROUND CONTROL
C-7A-1C	3/4"	2-1/c	12	NEW RAS PUMP NO.1 VFD	NEW RAS PUMP NO.2 SOLENOID VALVE	CONTROL
I-7A-2	3/4"	1-PR	16SH.	FIT29	PIU4A	INSTRUMENT
I-7A-2A	3/4"	1-PR	MFR	FIT29	FE29	INSTRUMENT
C-7A-3				SPACE		
I-7A-4	3/4"	1-PR	16SH.	FIT27	PIU4A	INSTRUMENT
I-7A-4A	3/4"	1-PR	MFR	FIT27	FE27	INSTRUMENT
PC-7A-5	1 1/2"	3-1/c 1-1/c 7-1/c	10 10 12	EXIST. MOTOR CONTROL CENTER CC7A	NEW RAS PUMP NO.3 VFD	POWER GROUND CONTROL
PC-7A-5A	1"	3-1/c 1-1/c 7-1/c	10 10 12	NEW RAS PUMP NO.3 VFD	NEW RAS PUMP NO.3	POWER GROUND CONTROL
C-7A-5C	3/4"	2-1/c	12	NEW RAS PUMP NO.3 VFD	NEW RAS PUMP NO.3 SOLENOID VALVE	CONTROL
PC-7A-6	1 1/2"	3-1/c 1-1/c 7-1/c	10 10 12	EXIST. MOTOR CONTROL CENTER CC7A	NEW RAS PUMP NO.4 VFD	POWER GROUND CONTROL
PC-7A-6A	1"	3-1/c 1-1/c 7-1/c	10 10 12	NEW RAS PUMP NO.4 VFD	NEW RAS PUMP NO.4	POWER GROUND CONTROL
			16SH.			
C-7A-6C	3/4"	2-1/c	12	NEW RAS PUMP NO.4 VFD	NEW RAS PUMP NO.4 SOLENOID VALVE	CONTROL
PC-7A-7	3/4"	3-1/c 1-1/c 5-1/c	12 12 12	EXIST. MOTOR CONTROL CENTER CC7A	MOTOR OPERATED VALVE FCV235	POWER GROUND CONTROL
I-7A-7A	3/4"	1-PR	16SH.	MOTOR OPERATED VALVE FCV235	PIU4A	INSTRUMENT
I-7A-8	3/4"	1-PR	16SH.	FIT235	PIU4A	INSTRUMENT
I-7A-8A	3/4"	1-PR	MFR	FIT235	FE235	INSTRUMENT
I-7A-9	3/4"	1-PR	16SH.	FIT231	PIU4A	INSTRUMENT
I-7A-9A	3/4"	1-PR	MFR	FIT231	FE231	INSTRUMENT
C-7A-10	1"	4-1/c	12	LSH83	EXIST. MOTOR CONTROL CENTER CC7A	CONTROL
C-7A-11	1"	4-1/c	12	LSH84	EXIST. MOTOR CONTROL CENTER CC7A	CONTROL
C-7A-12	1 1/4"	32-1/c	12	EXIST. MOTOR CONTROL CENTER CC7A	PIU4A	CONTROL
PC-7B-1	1 1/2"	3-1/c 1-1/c 7-1/c	10 10 12	EXIST. MOTOR CONTROL CENTER CC7B	NEW RAS PUMP NO.5 VFD	POWER GROUND CONTROL
PC-7B-1A	1"	3-1/c 1-1/c 7-1/c	10 10 12	NEW RAS PUMP NO.5 VFD	NEW RAS PUMP NO.5	POWER GROUND CONTROL
C-7B-1C	3/4"	2-1/c	12	NEW RAS PUMP NO.5 VFD	NEW RAS PUMP NO.5 SOLENOID VALVE	CONTROL
I-7B-2	3/4"	1-PR	16SH.	FIT28	PIU4A	INSTRUMENT
I-7B-2A	3/4"	1-PR	MFR	FIT28	FE28	INSTRUMENT
PC-7B-3	1"	3-1/c 1-1/c 7-1/c	10 10 12	EXIST. MOTOR CONTROL CENTER CC7B	NEW RAS PUMP NO.6 VFD	POWER GROUND CONTROL
PC-7B-3A	1"	3-1/c 1-1/c 7-1/c	10 10 12	NEW RAS PUMP NO.6 VFD	NEW RAS PUMP NO.6	POWER GROUND CONTROL
C-7B-3C	3/4"	2-1/c	12	NEW RAS PUMP NO.6 VFD	NEW RAS PUMP NO.6 SOLENOID VALVE	CONTROL
PC-7B-5	1"	3-1/c 1-1/c 7-1/c	10 10 12	EXIST. MOTOR CONTROL CENTER CC7B	NEW RAS PUMP NO.1 VFD	POWER GROUND CONTROL
PC-7B-5A	1"	3-1/c 1-1/c 7-1/c	10 10 12	NEW RAS PUMP NO.1 VFD	NEW RAS PUMP NO.1	POWER GROUND CONTROL
C-7B-5C	3/4"	2-1/c	12	NEW RAS PUMP NO.1 VFD	NEW RAS PUMP NO.1 SOLENOID VALVE	CONTROL
C-7B-6	1"	4-1/c	12	LSH85	EXIST. MOTOR CONTROL CENTER CC7B	CONTROL
C-7B-7	1"	4-1/c		LSH86	EXIST. MOTOR CONTROL CENTER CC7B	CONTROL
C-7B-8	1 1/2"	40-1/c	12	EXIST. MOTOR CONTROL CENTER CC7B	PIU4A	CONTROL
I-7B-6	3/4"	1-PR	16SH.	FIT 26	PIU4	INSTRUMENT
I-7B-6A	3/4"	1-PR	MFR	FIT 26	FE 26	INSTRUMENT
I-7B-4	3/4"	1-PR	16SH.	FIT 25	PIU4	INSTRUMENT
I-7B-4A	3/4"	1-PR	MFR	FIT 25	FE 25	INSTRUMENT
I-7A-235	3/4"	12-1/c	12	FCV 235 CONTROL STA.	FCV 235 MTR OP. VALVE	CONTROL

CONDUIT & WIRE SCHEDULE

CONDUIT		CABLE		FROM	TO	REMARKS
NO.	SIZE	QTY.	SIZE			
PC-2-1	1 1/2"	3-1/c 1-1/c 5-1/c	1 6 12	EXIST. MOTOR CONTROL CENTER CC2	INFLUENT PUMP NO.1	POWER GROUND CONTROL
PC-2-2	1 1/2"	3-1/c 1-1/c 5-1/c	1 6 12	EXIST. MOTOR CONTROL CENTER CC2	INFLUENT PUMP NO.2	POWER GROUND CONTROL
PC-2-3	3/4"	3-1/c 1-1/c 5-1/c	12 12 12	EXIST. MOTOR CONTROL CENTER CC2	MOTOR OPERATED VALVE FCV4	POWER GROUND CONTROL
PC-2-4	1 1/2"	3-1/c 1-1/c 5-1/c	1 6 12	EXIST. MOTOR CONTROL CENTER CC2	INFLUENT PUMP NO.4	POWER GROUND CONTROL
PC-2-5	1 1/2"	3-1/c 1-1/c 5-1/c	1 6 12	EXIST. MOTOR CONTROL CENTER CC2	INFLUENT PUMP NO.5	POWER GROUND CONTROL
PC-2-6	3/4"	3-1/c 1-1/c 5-1/c	12 12 12	EXIST. MOTOR CONTROL CENTER CC2	MOTOR OPERATED VALVE FCV5	POWER GROUND CONTROL
PC-2-7	3/4"	3-1/c 1-1/c 5-1/c	12 12 12	EXIST. MOTOR CONTROL CENTER CC2	MOTOR OPERATED VALVE FCV6	POWER GROUND CONTROL
I-2-8	3/4"	1-PR	16SH.	PIT4	PIC4	INSTRUMENT
I-2-8A	3/4"	1-PR	MFR	PIT4	PE4	INSTRUMENT
I-2-11	1"	3-PR	16SH.	PIC4, PIC5 & PIC6	PIU8	INSTRUMENT
P-1-1	4"	3-1/c 1-1/c	350 1/0	EXIST. HEADWORKS SUBSTATION SS1	MOTOR CONTROL CENTER MCC 21	POWER GROUND
P-1-2	4"	3-1/c 1-1/c	350 1/0	EXIST. HEADWORKS SUBSTATION SS1	MOTOR CONTROL CENTER MCC 21	POWER GROUND
P-1-3	4"	3-1/c 1-1/c	350 1/0	EXIST. HEADWORKS SUBSTATION SS1	MOTOR CONTROL CENTER MCC 22	POWER GROUND
P-1-4	4"	3-1/c 1-1/c	350 1/0	EXIST. HEADWORKS SUBSTATION SS1	MOTOR CONTROL CENTER MCC 22	POWER GROUND
CC103A1	3/4"	1-1/c	COAX.	PIU2	NEW PIU2A	INSTRUMENT
CC104A1	3/4"	1-1/c	COAX.	PIU2	NEW PIU2A	INSTRUMENT
CC103D1	4"	1-1/c	COAX.	PIU6	NEW PIU6B	INSTRUMENT
CC104D1	4"	1-1/c	COAX.	PIU6	NEW PIU6B	INSTRUMENT
CC103E1	4"	1-1/c	COAX.	NEW PIU6A	NEW PIU6B	INSTRUMENT
CC104E1	4"	1-1/c	COAX.	NEW PIU6A	NEW PIU6B	INSTRUMENT
CC103E3	4"	1-1/c	COAX.	NEW PIU6A	PIU6	INSTRUMENT
CC104E3	4"	1-1/c	COAX.	NEW PIU6A	PIU6	INSTRUMENT
CC103E2	4"	1-1/c	COAX.	PIU7	NEW PIU7A	INSTRUMENT
CC104E2	4"	1-1/c	COAX.	PIU7	NEW PIU7A	INSTRUMENT
CC103F	4"	1-1/c	COAX.	NEW PIU7A	PIU7	INSTRUMENT
CC104F	4"	1-1/c	COAX.	NEW PIU7A	PIU7	INSTRUMENT
CC103H1	3/4"	1-1/c	COAX.	PIU2	NEW PIU2A	INSTRUMENT
CC104H1	3/4"	1-1/c	COAX.	PIU2	NEW PIU2A	INSTRUMENT
CC104I	4"	1-1/c	COAX.	PIU3	NEW PIU3A	INSTRUMENT
CC103J	4"	1-1/c	COAX.	PIU8	NEW PIU9	INSTRUMENT
CC104J	4"	1-1/c	COAX.	PIU8	NEW PIU9	INSTRUMENT
CC103C1	3/4"	1-1/c	COAX.	PIU4	NEW PIU4A	INSTRUMENT
CC104C1	3/4"	1-1/c	COAX.	PIU4	NEW PIU4A	INSTRUMENT
CC103B1	3/4"	1-1/c	COAX.	PIU4	NEW PIU4A	INSTRUMENT
CC104B1	3/4"	1-1/c	COAX.	PIU4	NEW PIU4A	INSTRUMENT
P-12-1	1"	3-1/c 1-1/c	4 8	EXIST. MOTOR CONTROL CENTER CC12 ATS	LTG. TRANSFORMER TR. 12	POWER GROUND
P-12-1A	1 1/4"	3-1/c 1-1/c 1-1/c	2 2 8	LTG. TRANSFORMER TR. 12	PANELBOARD LP-12	POWER NEUTRAL GROUND
P-12-1B	1"	3-1/c 1-1/c	4 8	EXIST. MOTOR CONTROL CENTER CC12	EXIST. MOTOR CONTROL CENTER CC12 ATS	POWER GROUND
P-12-1C	1"	3-1/c 1-1/c	4 8	EXIST. MOTOR CONTROL CENTER CC12	EXIST. MOTOR CONTROL CENTER CC12 ATS	POWER GROUND (ALT. FEED)
I-12-2	3/4"	1-PR	16SH.	SIP	PIU2A	INSTRUMENT
I-12-3	3/4"	1-PR	16SH.	SIP	S.H.F. PUMP NO.1 SCR DRIVE	INSTRUMENT
I-12-4	3/4"	1-PR	16SH.	SIP	S.H.F. PUMP NO.2 SCR DRIVE	INSTRUMENT
I-12-5	3/4"	1-PR	16SH.	SIP	S.H.F. PUMP NO.3 SCR DRIVE	INSTRUMENT
I-12-6	3/4"	1-PR	16SH.	SIP	S.B.F. PUMP NO.1 SCR DRIVE	INSTRUMENT
I-12-7	3/4"	1-PR	16SH.	SIP	S.B.F. PUMP NO.2 SCR DRIVE	INSTRUMENT
C-12-8	3/4"	6-1/c	12	S.H.F. PANEL	HCST-1 JB SPARES	CONTROL
C-12-9	3/4"	6-1/c	12	S.H.F. PANEL	HCST-2 JB SPARES	CONTROL
C-12-10	3/4"	6-1/c	12	S.B.F. PANEL	BSST-1 JB SPARES	CONTROL
C-12-11	3/4"	6-1/c	12	S.B.F. PANEL	BSST-2 JB SPARES	CONTROL
I-12-12	3/4"	1-PR	16SH.	LIT49A	PIU2A	INSTRUMENT
I-12-12A	1"	1-PR	MFR	LIT49A	LE49A	INSTRUMENT
I-12-13	3/4"	1-PR	16SH.	LIT49B	PIU2A	INSTRUMENT
I-12-13A	1"	1-PR	MFR	LIT49B	LE49B	INSTRUMENT
I-12-14	3/4"	1-PR	16SH.	LIT54A	PIU2A	INSTRUMENT
I-12-14A	1"	1-PR	MFR	LIT54A	LE54A	INSTRUMENT
I-12-15	3/4"	1-PR	16SH.	LIT54B	PIU2A	INSTRUMENT
I-12-15A	1"	1-PR	MFR	LIT54B	LE54B	INSTRUMENT
I-12-16	3/4"	10-1/c	12	S.H.F. PANEL	LIT49A	INSTRUMENT
I-12-17	3/4"	10-1/c	12	S.H.F. PANEL	LIT49B	INSTRUMENT
I-12-18	1"	1-PR	16SH.	SIP	FIT90	INSTRUMENT
I-12-18A	1"	1-PR	MFR	FIT90	FE90	INSTRUMENT
P-12-19	1"	2-1/c 1-1/c	12 12	PANELBOARD LP-12	FIT90	POWER (120V, CKT. #7) GROUND
I-12-20	3/4"	10-1/c	12	S.B.F. PANEL	LIT54A	INSTRUMENT
I-12-21	3/4"	10-1/c	12	S.B.F. PANEL	LIT54B	INSTRUMENT

CONDUIT & WIRE SCHEDULE

CONDUIT		CABLE		FROM	TO	REMARKS
NO.	SIZE	QTY.	SIZE			
H-1	6"	BY BG&E		NEW BG&E RISER POLE NO.1	NEW 34.5KV MAIN SUBSTATION	POWER CONDUIT ONLY 35KV CABLES BY BG&E
H-1A	6"	——	——	NEW BG&E RISER POLE NO.1	NEW 34.5KV MAIN SUBSTATION	SPARE CONDUIT
H-1B	6"	3-1/c 1-1/c	2/0 1/0	NEW 34.5KV MAIN SUBSTATION	TRANSFORMER TR-1	POWER (35KV CABLE) GROUND
H-2	6"	BY BG&E		NEW BG&E RISER POLE NO.2	NEW 34.5KV MAIN SUBSTATION	POWER CONDUIT ONLY 35KV CABLES BY BG&E
H-2A	6"	——	——	NEW BG&E RISER POLE NO.2	NEW 34.5KV MAIN SUBSTATION	SPARE CONDUIT
H-2B	6"	3-1/c 1-1/c	2/0 1/0	NEW 34.5KV MAIN SUBSTATION	TRANSFORMER TR-2	POWER (35KV CABLE) GROUND
PC-3	1"	3-1/c 1-1/c 5-1/c	12 12 12	NEW 34.5KV MAIN SUBSTATION	TRANSFORMER TR-1 FAN	POWER GROUND CONTROL
PC-4	1"	3-1/c 1-1/c 5-1/c	12 12 12	NEW 34.5KV MAIN SUBSTATION	TRANSFORMER TR-2 FAN	POWER GROUND CONTROL
C-5	1"	12-1/c	12	NEW 34.5KV MAIN SUBSTATION	TRANSFORMER TR-1 RESISTOR	CONTROL
C-5A	2"	21-1/c	12	NEW 34.5KV MAIN SUBSTATION	NEW 34.5KV MAIN SWITCHGEAR	CONTROL
C-6	1"	12-1/c	12	NEW 34.5KV MAIN SUBSTATION	TRANSFORMER TR-2 RESISTOR	CONTROL
C-6A	2"	21-1/c	12	NEW 34.5KV MAIN SUBSTATION	NEW 34.5KV MAIN SWITCHGEAR	CONTROL
H-7	4"	3-1/c 1-1/c	2/0 1/0	TRANSFORMER TR-1	TRANSFORMER TR-1 RESISTOR	POWER (15KV CABLE) GROUND
H-8	4"	3-1/c 1-1/c	2/0 1/0	TRANSFORMER TR-2	TRANSFORMER TR-2 RESISTOR	POWER (15KV CABLE) GROUND
H-11	5"	3-1/c 1-1/c	500MCM 1/0	TRANSFORMER TR-1	EXIST. 13.2KV MAIN SWITCHGEAR	POWER (15KV CABLE) GROUND
H-21	5"	3-1/c 1-1/c	500MCM 1/0	TRANSFORMER TR-2	EXIST. 13.2KV MAIN SWITCHGEAR	POWER (15KV CABLE) GROUND
C-35	2"	BY BG&E		NEW 34.5KV MAIN SUBSTATION	BG&E METER NO.1	METERING
C-36	2"	BY BG&E		NEW 34.5KV MAIN SUBSTATION	BG&E METER NO.2	METERING
P-SG-30	1"	2-1/c 1-1/c	12 12	NEW 34.5KV MAIN SUBSTATION	EXIST. PNL. LP-SG	POWER (120V AC) GROUND
P-DC-31	1"	2-1/c 1-1/c	12 12	NEW 34.5KV MAIN SUBSTATION	EXIST. 13.2KV MAIN SWITCHGEAR	POWER (125V DC) GROUND
C-CT-32	1"	4-1/c	12	NEW 34.5KV MAIN SUBSTATION	EXIST. 13.2KV MAIN SWITCHGEAR	CONTROL
C-CT-33	1"	4-1/c	12	NEW 34.5KV MAIN SUBSTATION	EXIST. 13.2KV MAIN SWITCHGEAR	CONTROL
P-11-1	1"	3-1/c 1-1/c	4 8	EXIST. MOTOR CONTROL CENTER CC11	EFFLUENT PUMP NO.3 VFD	POWER GROUND
PC-11-1A	1 1/4"	3-1/c 1-1/c 7-1/c	4 8 12	EFFLUENT PUMP NO.3 VFD	EFFLUENT PUMP NO.3	POWER GROUND CONTROL
I-11-1B	3/4"	1-PR	16SH.	EFFLUENT PUMP NO.3 VFD	EFFLUENT PUMP NO.3	INSTRUMENT
C-11-1C	3/4"	2-1/c	12	EFFLUENT PUMP NO.3 VFD	BUBBLER CONTROL PANEL	CONTROL
P-G-1	3/4"	3-1/c 1-1/c	12 12	EXIST. MOTOR CONTROL CENTER CCG (GRIT FACILITY)	MOTOR OPERATED VALVE FCV1	POWER GROUND
I-G-2	3/4"	1-PR	16SH.	FIT1	PIU7A	INSTRUMENT
I-G-2A	3/4"	1-PR	MFR	FIT1	FE1	INSTRUMENT
I-G-3	3/4"	2-PR	16SH.	FCV1	PIU7A	INSTRUMENT
P-5A-1	3/4"	3-1/c 1-1/c	12 12	NEW J.B. FOR NEW RAS PUMP	NEW RAS PUMP VFD	POWER GROUND
PC-5A-1A	3/4"	3-1/c 1-1/c 7-1/c	12 12 12	NEW RAS PUMP 1B VFD	NEW RAS PUMP 1B	POWER GROUND CONTROL
C-5A-1C	3/4"	5-1/c	12	NEW RAS PUMP 1B VFD	PIU6A/6B	CONTROL
I-5A-1D	3/4"	2-PR	16SH.	NEW RAS PUMP 1B VFD	PIU6A/6B	INSTRUMENT
T-1	3/4"	2-PR	NO.24 TWISTED	EXIST. TTC-7 TEL. CABINET	NEW BG&E METER NO.1	UL TYPE CMP (BG&E SPEC)
T-2	3/4"	2-PR	NO.24 TWISTED	EXIST. TTC-7 TEL. CABINET	NEW BG&E METER NO.2	UL TYPE CMP (BG&E SPEC)
P-12-22	3/4"	3-1/c 1-1/c	12 12	EXIST. MOTOR CONTROL CENTER CC-12	36" METER VAULT SUMP PUMP LCP	POWER GROUND
C-12-23	3/4"	2-1/c	12	36" METER VAULT SUMP PUMP LCP	NEW PIV 2A	CONTROL (HIGH SUMP ALARM)

DEPARTMENT OF PUBLIC WORKS
HOWARD COUNTY, MARYLAND

DIRECTOR OF PUBLIC WORKS — 5/7/96 DATE
CHIEF, BUREAU OF ENGINEERING — 5/7/96 DATE
CHIEF, BUREAU OF ENVIRONMENTAL SERVICES — 5/7/96 DATE
CHIEF, UTILITY DESIGN DIVISION — 5-7-96 DATE

M&E Metcalf & Eddy

REG/PROF. ENGR. — 5/7/96 DATE

STATE OF MARYLAND — JONATHAN WINTHROP BOANE — No. 15140 — REGISTERED PROFESSIONAL ENGINEER

	BY	NO.	REVISION	DATE
DES:				
DRN:				
CHK:				
DATE:	M.J.C.	1	RECORD DRAWING	6/10/95

ELECTRICAL

CONDUIT & WIRE SCHEDULE IV

LITTLE PATUXENT WASTEWATER TREATMENT PLANT

LITTLE PATUXENT WASTEWATER TREATMENT PLANT EXPANSION
ADDITION NO. 5
CAPITAL PROJECT S-6153

CONTRACT NO. 20-3082
HOWARD COUNTY, MARYLAND

SCALE AS SHOWN

SHEET 224 OF 226

E-39R

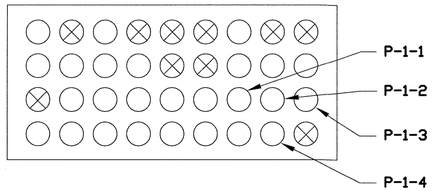

SECTION 1/E-2
SCALE: NONE

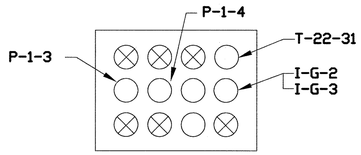

SECTION 6/E-2
SCALE: NONE

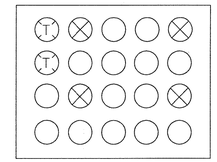

SECTION 11/E-2
SCALE: NONE

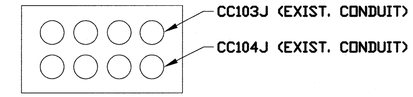

SECTION 16/E-2
SCALE: NONE

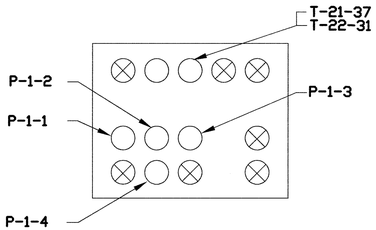

SECTION 2/E-2
SCALE: NONE

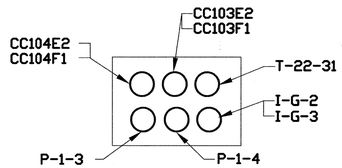

SECTION 7/E-2
SCALE: NONE

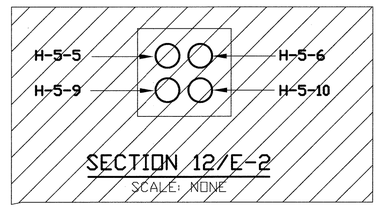

SECTION 12/E-2
SCALE: NONE

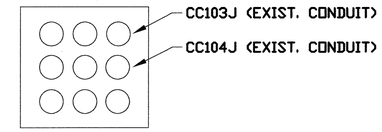

SECTION 17/E-2
SCALE: NONE

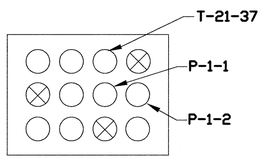

SECTION 3/E-2
SCALE: NONE

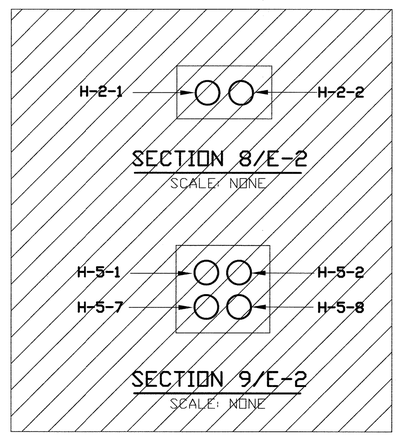

SECTION 8/E-2
SCALE: NONE

SECTION 9/E-2
SCALE: NONE

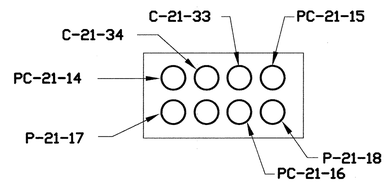

SECTION 13/E-2
SCALE: NONE

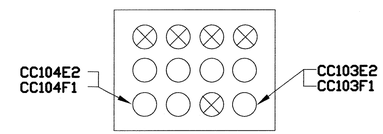

SECTION 18/E-2
SCALE: NONE

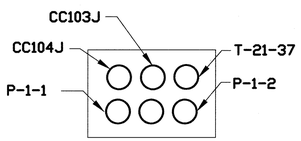

SECTION 4/E-2
SCALE: NONE

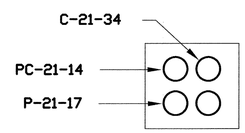

SECTION 14/E-2
SCALE: NONE

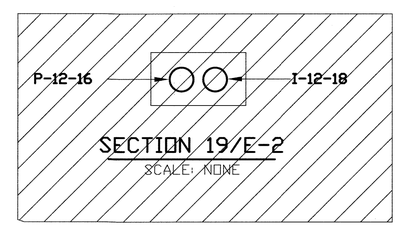

SECTION 19/E-2
SCALE: NONE

NOTE:
USED EXISTING DUCT BANK BETWEEN 54" METERING VAULT AND FILTER BUILDING MCC-11 PULL BOX.

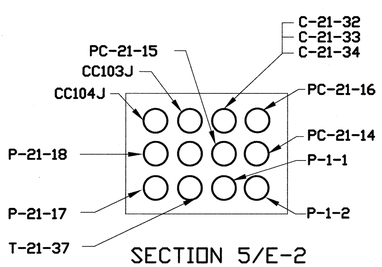

SECTION 5/E-2
SCALE: NONE

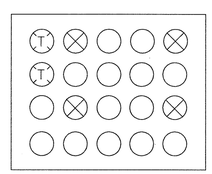

SECTION 10/E-2
SCALE: NONE

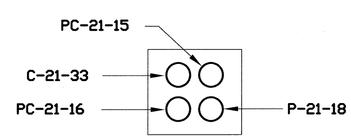

SECTION 15/E-2
SCALE: NONE

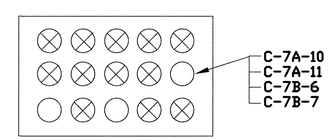

SECTION 20/E-2
SCALE: NONE

NOTES:
1. CONDUITS IN DUCT BANKS ARE 4" PVC UNLESS NOTED OTHERWISE.
2. DUCT BANK PROFILES ARE NOT PROVIDED. REFER TO CIVIL DRAWINGS FOR COORDINATION WITH EXISTING AND NEW UNDERGROUND STRUCTURES.

DEPARTMENT OF PUBLIC WORKS
HOWARD COUNTY, MARYLAND

DIRECTOR OF PUBLIC WORKS — DATE 5/7/96
CHIEF, BUREAU OF ENGINEERING — DATE 5/7/96
CHIEF, BUREAU OF ENVIRONMENTAL SERVICES — DATE 5/7/96
CHIEF, UTILITY DESIGN DIVISION — DATE 5-7-96

M&E Metcalf & Eddy
REG. PROF. ENGR. — DATE 5/7/96

STATE OF MARYLAND — JONATHAN WILLIAM DUNN — No. 15142 — REGISTERED PROFESSIONAL ENGINEER

DES:				
DRN:				
CHK:				
DATE:	M.J.C.	1	RECORD DRAWING	6/10/95
	BY	NO.	REVISION	DATE

ELECTRICAL

DUCT BANK SECTIONS & DETAILS

LITTLE PATUXENT WASTEWATER TREATMENT PLANT
LITTLE PATUXENT WASTEWATER TREATMENT PLANT EXPANSION
ADDITION NO. 5
CAPITAL PROJECT S-6153
CONTRACT NO. 20-3082
HOWARD COUNTY, MARYLAND

SCALE AS SHOWN
SHEET 225 OF 226
E-40R

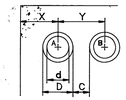

NOTE :

CLEARANCE "C" IS 1" IF BOTH CONDUITS A & B ARE 1 1/2" SIZE OR SMALLER, BUT "C" IS 2" IF EITHER A OR B IS 2" OR LARGER

A	1/2	3/4	1	1 1/4	1 1/2	2	2 1/2	3	3 1/2	4	5	6
d	0.622	0.824	1.049	1.380	1.610	2.067	2.469	3.068	3.546	4.026	5.047	6.065
D	0.840	1.050	1.315	1.660	1.900	2.375	2.875	3.500	4.000	4.500	5.563	6.625
X	3.420	3.525	3.658	3.830	3.950	4.188	4.438	4.750	5.000	5.250	5.782	6.313
B						VALUES OF Y						
1/2	1.840	1.945	2.078	2.250	2.370	3.608	3.858	4.170	4.420	4.670	5.202	5.733
3/4		2.050	2.183	2.355	2.475	3.713	3.963	4.275	4.325	4.775	5.307	5.838
1			2.315	2.488	2.608	3.846	4.096	4.408	4.658	4.908	5.440	5.971
1 1/4				2.660	2.780	4.018	4.268	4.580	4.830	5.080	5.612	6.143
1 1/2					2.900	4.138	4.388	4.700	4.950	5.200	5.732	6.263
2						4.376	4.626	4.938	5.188	5.439	5.970	6.501
2 1/2							4.875	5.188	5.438	5.688	6.220	6.751
3								5.500	5.750	6.000	6.532	7.063
3 1/2									6.000	6.250	6.782	7.313
4										6.500	7.032	7.563
5											7.563	8.095
6												8.625

MINIMUM SPACING OF CONDUITS IN CONCRETE ENVELOPES

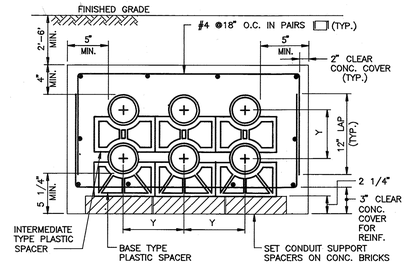

TYPICAL DUCT BANK CONCRETE REINFORCEMENT
4 #6 TOP
4 #6 BOTTOM
1 #6 EACH FACE
LAP 2'-1" AT SPLICES

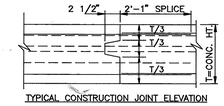

TYPICAL CONSTRUCTION JOINT ELEVATION

NOTES
1. FOR EACH ADDED ROW (HORIZ.) OF DUCTS ADD 1 #6 TOP & 1 #6 BOTTOM.
2. FOR EACH ADDED TIER (VERT.) OF DUCTS ADD 1 #6 EACH FACE MID-DISTANCE BETWEEN DUCTS.
3. CONCRETE CONSTRUCTION JOINTS SHALL NOT BE SPACED MORE THAN 40 FEET O.C.

TYPICAL DUCT BANK SECTION UNDER ROADWAY AND PAVED AREA

NO SCALE

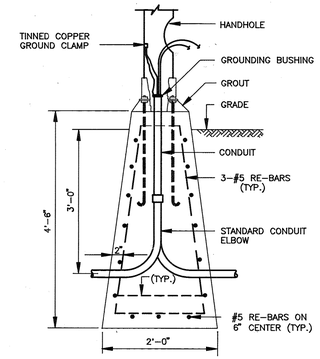

TYPICAL LIGHTING FOUNDATION

NO SCALE

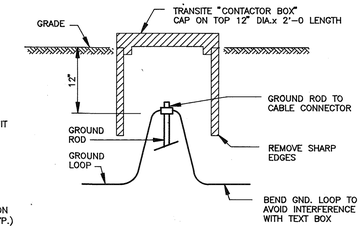

TEST POINT

NO SCALE

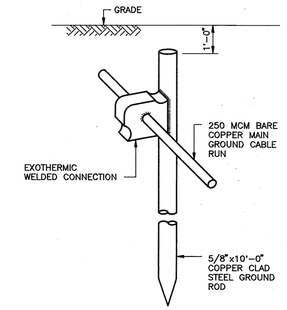

TYPICAL GROUND ROD INSTALLATION

NO SCALE

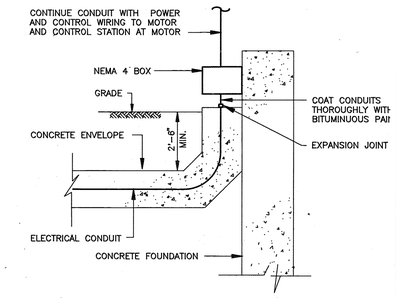

TYPICAL CONDUIT STUB-UP

NO SCALE

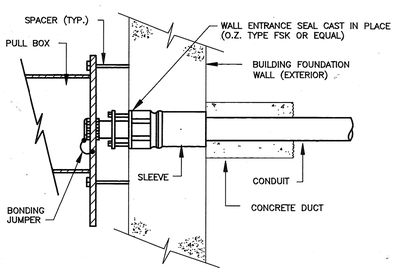

NEW BUILDING CONDUIT WALL ENTRANCE SEAL

NO SCALE

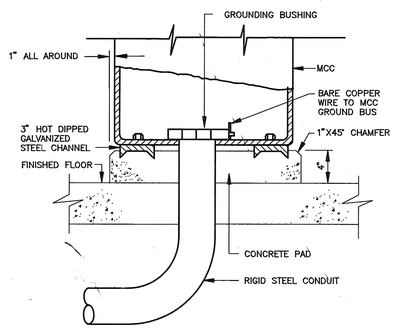

M.C.C. CONDUIT ENTRANCE FROM BELOW

NO SCALE

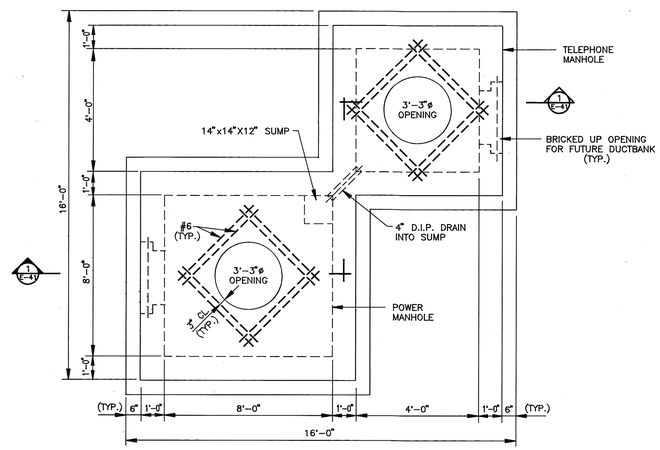

PLAN

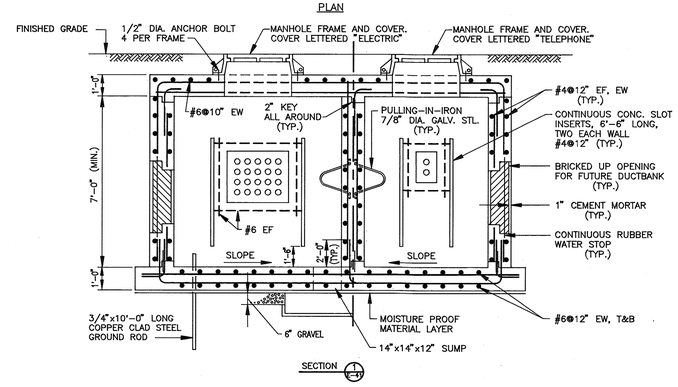

TYPICAL POWER AND INSTRUMENT/TELEPHONE MANHOLE

NO SCALE

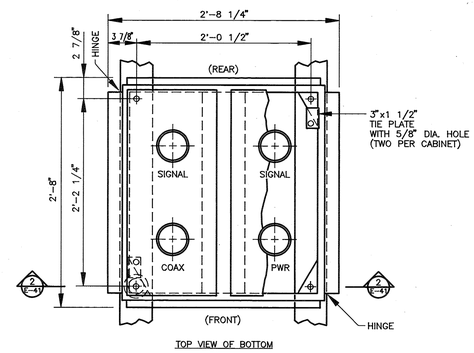

TOP VIEW OF BOTTOM

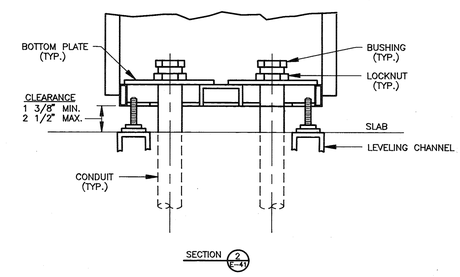

SECTION 2 E-41

NOTE:
1. TYPICAL FOR ALL PIU'S EXCEPT PIU-1 WHICH DOES NOT REQUIRE TIE-DOWN.
2. NO WIRE ENTRY IS POSSIBLE IN THE BATTERY BACK-UP AREA. USE PLATES ONLY.

PIU TIEDOWN AND CONDUIT ENTRY DETAIL

NO SCALE

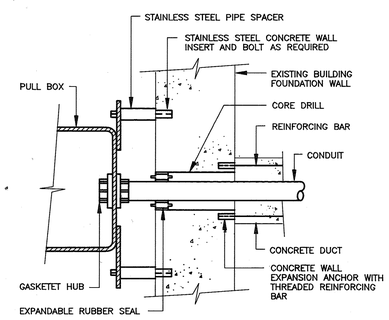

EXISTING BUILDING CONDUIT WALL ENTRANCE SEAL

NO SCALE

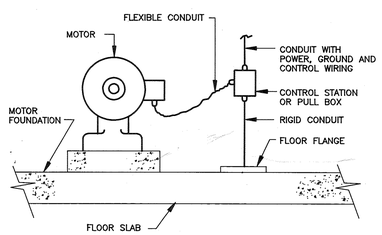

TYPICAL HORIZONTAL FEEDER DETAIL

NO SCALE

DEPARTMENT OF PUBLIC WORKS
HOWARD COUNTY, MARYLAND

DIRECTOR OF PUBLIC WORKS — DATE 12/9/91
CHIEF, BUREAU OF ENGINEERING — DATE 12-9-91
CHIEF, BUREAU OF ENVIRONMENTAL SERVICES — DATE 12/9/91
CHIEF, UTILITY DESIGN DIVISION — DATE 12-9-91

Metcalf & Eddy
REG. PROF. ENGR. — DATE 12/9/91

STATE OF MARYLAND — JONATHAN WINTHROP DOANE No. 15140 — REGISTERED PROFESSIONAL ENGINEER

DES. E. Amaba
DRN. E. Amaba
CHK. W. Tuccillo
DATE: 12-5-91

BY	NO.	REVISION	DATE
	2	NOT REVISED FOR RECORD	4/3/92
	1	REVISED FOR BIDDING	3/5/92

ELECTRICAL

MISCELLANEOUS DETAILS

LITTLE PATUXENT WASTEWATER TREATMENT PLANT
LITTLE PATUXENT WASTEWATER TREATMENT PLANT EXPANSION
ADDITION NO. 5
CAPITAL PROJECT S-6153
CONTRACT NO. 20-3082
HOWARD COUNTY, MARYLAND

SCALE AS SHOWN
SHEET 226 OF 226
E-41