HOWARD COUNTY, MARYLAND
LITTLE PATUXENT WATER RECLAMATION PLANT

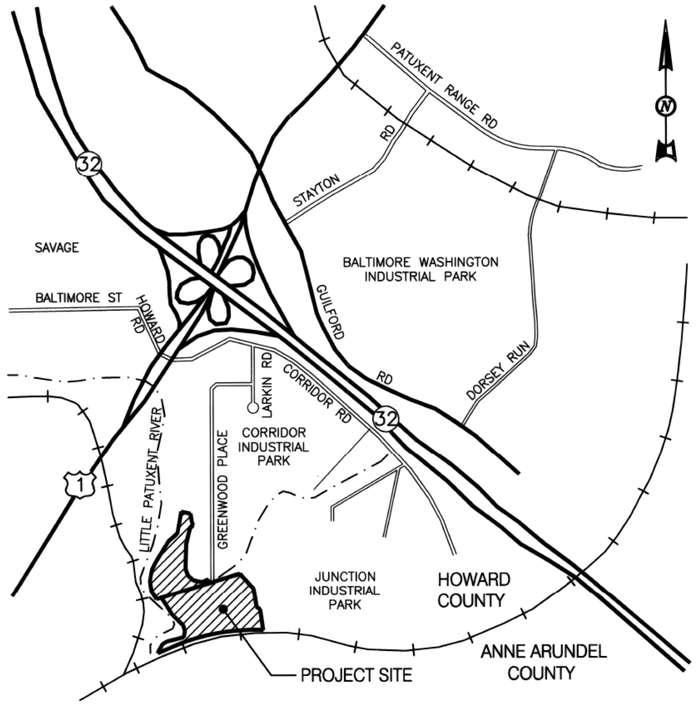

8TH ADDITION - BIOSOLIDS PROCESSING FACILITIES - PHASE II

CAPITAL PROJECT S-6295
CONTRACT NO. 24-4936

THE DRAWINGS IN THIS SET ARE RECORD DRAWINGS. THEY ARE CONSTRUCTION CONTRACT DRAWINGS WHICH HAVE BEEN REVISED BASED ON AVAILABLE FIELD INFORMATION RECORDED BY OTHERS DURING CONSTRUCTION OF THIS CONTRACT. THERE HAS BEEN NO VERIFICATION OF DIMENSIONS SHOWN ON THE CONSTRUCTION DRAWINGS OR THE ACCURACY/COMPLETENESS OF THE FIELD INFORMATION RECEIVED.

SIGNATURE _____ DATE 2/7/2025

DEPARTMENT OF PUBLIC WORKS
HOWARD COUNTY, MARYLAND

DIRECTOR OF PUBLIC WORKS _____ DATE _____

CHIEF, BUREAU OF ENGINEERING _____ DATE _____

CHIEF, BUREAU OF UTILITIES _____ DATE _____

CHIEF, UTILITY DESIGN DIVISION _____ DATE _____

ASSOCIATE DESIGN FIRMS

HDR

S&A
SHAH & ASSOCIATES

DRAWING INDEX

VOLUME 1 OF 1

00 - GENERAL (G)

1	G-1	COVER
2	G-2	DRAWING INDEX - I
3	G-4	ABBREVIATIONS
4	G-5	LEGEND AND SYMBOLS 1
5	G-6	LEGEND AND SYMBOLS 2
6	G-7	EXISTING OVERALL SOLIDS PROCESS FLOW DIAGRAM I
7	G-8	EXISTING OVERALL SOLIDS PROCESS FLOW DIAGRAM II
8	G-9	OVERALL SOLIDS PROCESS FLOW DIAGRAM III
9	G-10	SOLIDS HANDLING MASS BALANCE STARTUP CONDITION
10	G-11	SOLIDS HANDLING MASS BALANCE DESIGN CONDITION
11	G-12	HEAT AND ENERGY SCHEMATIC
12	G-13	DESIGN CRITERIA
13	G-14	OVERALL KEY PLAN 1
14	G-15	OVERALL KEY PLAN 2
15	G-16	OVERALL KEY PLAN 3
16	G-17	AREA CLASSIFICATION - OVERALL KEY PLAN 1
17	G-18	AREA CLASSIFICATION - OVERALL KEY PLAN 2
18	G-19	AREA CLASSIFICATION - OVERALL KEY PLAN 3
19	G-20	AREA CLASSIFICATION - BIOFILTER AND CAKE STORAGE PLAN AND SECTIONS
20	G-21	AREA CLASSIFICATION - GBT AND DRYING AREA PLAN
21	G-22	AREA CLASSIFICATION - DRYER BUILDING PLAN
22	G-23	AREA CLASSIFICATION - CHEMICAL AND CONVEYOR ROOM PLAN
23	G-24	AREA CLASSIFICATION SECTIONS 1
24	G-25	AREA CLASSIFICATION SECTION 2
25	G-26	AREA CLASSIFICATION SECTIONS 3
26	G-30	OVERALL CODE ANALYSIS
27	G-31	SOLIDS PIPE GALLERY - LIFE SAFETY PLAN AT EL 128.00
28	G-32	GRAVITY BELT THICKENER AREA - LIFE SAFETY PLAN AT EL 128.00
29	G-33	DRYER BUILDING - LIFE SAFETY PLAN AT EL 130.00
30	G-34	GRAVITY BELT THICKENER AREA - LIFE SAFETY PLAN AT EL 142.00
31	G-35	DRYER BUILDING - LIFE SAFETY PLAN AT EL 142.00
32	G-36	DRYER BUILDING - LIFE SAFETY PLAN AT EL 156.00
33	G-37	SOLIDS SCREENING AREA - LIFE SAFETY PLAN AT EL 142.00
34	G-38	SOLIDS SCREENING AREA - LIFE SAFETY PLAN AT EL 156.00
35	G-39	SOLIDS SCREENING AREA - LIFE SAFETY PLAN AT EL 167.00

01 - DEMOLITION (X)

SERIES 01 - DEMOLITION		
36	X-1	SITE DEMOLITION PLAN
SERIES 500 - DEWATERING AND CHEMICAL HANDLING AREA		
37	X-500	DEMOLITION PLAN AT EL 129.20
38	X-501	DEMOLITION PLAN AT EL 141.20
39	X-502	FRAMING (BELOW FLOOR) DEMOLITION PLAN AT EL 155.20
40	X-503	DEMOLITION PLAN (ABOVE SLAB) AT EL 155.20
41	X-504	DEMOLITION PLAN AT EL 166.20
42	X-505	CHEMICAL HANDLING ROOF PLAN AND DETAILS
43	X-506	DEMOLITION PHOTOS
44	X-520	HVAC DEMOLITION PLAN AT EL 129.20
45	X-521	HVAC DEMOLITION PLAN AT EL 141.20
46	X-522	HVAC DEMOLITION PLAN AT EL 155.20
47	X-523	HVAC ROOF DEMOLITION PLAN
48	X-524	HVAC DEMOLITION SECTIONS
49	X-525	HVAC DEMOLITION SECTIONS

05 - CIVIL (C)

50	C-1	LEGEND, SYMBOLS, AND GENERAL NOTES
51	C-2	OVERALL EXISTING CONDITIONS PLAN
52	C-3	OVERALL PROPERTY BOUNDARY PLAN
53	C-4	PLANT SITE PLAN - NORTH
54	C-5	PLANT SITE PLAN - SOUTH
55	C-6	EROSION AND SEDIMENT CONTROL CONCEPT PLAN
56	C-7	EROSION AND SEDIMENT CONTROL CONCEPT PLAN
57	C-8	OVERALL SITE PLAN AND KEY MAP
58	C-9	EXISTING CONDITIONS PLAN D
59	C-10	CIVIL SITE PLAN E
60	C-11	GRADING AND DRAINAGE PLAN E
61	C-12	SITE DEVELOPMENT AND EROSION AND SEDIMENT CONTROL PLAN A
62	C-13	SITE DEVELOPMENT AND EROSION AND SEDIMENT CONTROL PLAN B AND C
63	C-14	SITE DEVELOPMENT AND EROSION AND SEDIMENT CONTROL PLAN D
64	C-15	YARD PIPING PLAN E
65	C-16	STORM AND SANITARY SEWER PROFILES
66	C-21	EROSION CONTROL NOTES AND DETAILS
67	C-22	EROSION CONTROL NOTES AND DETAILS
68	C-23	EROSION CONTROL NOTES AND DETAILS
69	C-24	EROSION CONTROL NOTES AND DETAILS
70	C-25	CIVIL DETAILS
71	C-26	CIVIL DETAILS
72	C-27	CIVIL DETAILS
73	C-28	CIVIL DETAILS

DRAWING INDEX

08 - STRUCTURAL (S)

SERIES 400 - PS-2		
74	S-400	PS-2 SUPPORT AND ACCESS
75	S-401	PS-2 SECTIONS
SERIES 500 - DRYER BUILDING		
76	S-500	FOUNDATION PLAN AT EL 129.20
77	S-501	FOUNDATION AND FLOOR PLAN AT EL 141.20 - NORTH
78	S-501A	PILE RECORD PLANS
79	S-501B	PILE RECORD DETAILS
80	S-502	FOUNDATION AND FLOOR PLAN AT EL 141.20 - SOUTH
81	S-503	PLAN AT EL 155.20 - NORTH
82	S-504	PLAN AT EL 155.20 - SOUTH
83	S-505	FRAMING PLAN AT EL 170.45 - NORTH
84	S-506	FRAMING PLAN AT EL 170.45 - SOUTH
85	S-507	ROOF PLAN - NORTH
86	S-508	ROOF PLAN - SOUTH
87	S-509	FRAMING ELEVATIONS
88	S-510	FRAMING ELEVATIONS
89	S-511	FRAMING ELEVATIONS
90	S-512	SECTIONS 1
91	S-513	SECTIONS 2
92	S-514	SECTIONS 3
93	S-515	DETAILS 1
94	S-516	STAIR DETAILS
95	S-517	STAIR SECTIONS 1
96	S-518	STAIR DETAILS 1
97	S-519	DETAILS 3
98	S-585	ODOR CONTROL, SILOS AND PIPE BRIDGE PLAN
99	S-586	SECTIONS AND DETAILS
SERIES 900 - SCHEDULES & DETAILS		
100	S-901	GENERAL AND MATERIAL NOTES
101	S-902	STRUCTURAL STANDARD DETAILS - 1
102	S-903	STRUCTURAL STANDARD DETAILS - 2
103	S-904	STRUCTURAL STANDARD DETAILS - 3
104	S-905	STRUCTURAL STANDARD DETAILS - 4
105	S-906	STRUCTURAL STANDARD DETAILS - 5
106	S-907	GUARDRAIL DETAILS
107	S-908	CONCRETE REPAIR DETAILS

09 - ARCHITECTURAL (A)

SERIES 500 - DRYER BUILDING		
108	A-501	PLAN AT EL 129.20
109	A-502	PLAN AT EL 141.20
110	A-503	PLAN AT EL 155.20
111	A-504	PLAN AT EL 167.00
112	A-505	ROOF PLAN
113	A-506	EXTERIOR ELEVATIONS
114	A-507	BUILDING SECTIONS
115	A-508	BUILDING SECTIONS
116	A-509	WALL SECTIONS
117	A-510	ENLARGED PLANS
118	A-511	ENLARGED PLANS AND INTERIOR ELEVATION
119	A-512	STAIR SECTIONS AND DETAILS
SERIES 900 - SCHEDULES AND DETAILS		
120	A-901	ROOM FINISH AND DOOR SCHEDULES
121	A-902	WINDOW SCHEDULES & PARTITION TYPES
122	A-903	DOOR AND WINDOW DETAILS
123	A-904	DETAILS
124	A-905	DETAILS

12 - PROCESS (M)

SERIES 500 - DRYER BUILDING		
125	M-500	OVERALL BUILDING PLAN
126	M-501	PARTIAL PLAN AT EL 142.00
127	M-502	DRYER EQUIPMENT - PARTIAL PLAN AT EL 129.20
128	M-503	DRYER EQUIPMENT LOCATION PLAN
129	M-504	DRYER EQUIPMENT PARTIAL PLAN AT EL 141.20
130	M-505	DRYER EQUIPMENT- PARTIAL PLAN AT EL 155.20
131	M-506	DRYER EQUIPMENT- PARTIAL PLAN AT EL 167.00
132	M-507	DRYER EQUIPMENT- PARTIAL PLAN AT EL 185.00
133	M-508	BIOFILTER PLAN AND SECTIONS
134	M-509	ENLARGED PLANS SECTIONS AND DETAILS
135	M-510	SECTION 1
136	M-511	SECTION 2
137	M-512	SECTION 3
138	M-513	SECTION 4
139	M-514	SECTION 5
140	M-515	PLAN AND SECTIONS 6
141	M-516	SECTION 7
142	M-517	SECTION 8
143	M-518	SECTION 9
144	M-519	SECTION 10
145	M-520	FOUL ODOR DUCT
SERIES 900 - SCHEDULE AND DETAILS		
146	M-900	MISCELLANEOUS DETAILS 1
147	M-901	MISCELLANEOUS DETAILS 2
148	M-902	MISCELLANEOUS DETAILS 3
149	M-903	MISCELLANEOUS DETAILS 4
150	M-904	MISCELLANEOUS DETAILS 5
151	M-905	PIPE SUPPORT DETAILS 1
152	M-906	PIPE SUPPORT DETAILS 2
153	M-907	PIPE SUPPORT DETAILS 3

DRAWING INDEX

13 - HVAC (H)

SERIES 500 - DRYER BUILDING		
154	H-501	PLAN AT EL 129.20
155	H-502	PLAN AT EL 141.20 - NORTH
156	H-503	PLAN AT EL 141.20 - SOUTH
157	H-504	PLAN AT EL 155.20 - NORTH
158	H-505	PLAN AT EL 155.20 - SOUTH
159	H-506	ROOF PLAN - NORTH
160	H-507	ROOF PLAN - SOUTH
161	H-508	DRYER BUILDING ENLARGED PLAN
162	H-509	SECTIONS
SERIES 900 - SCHEDULE AND DETAILS		
163	H-901	HVAC NOTES, LEGEND AND ABBREVIATIONS
164	H-902	HVAC DETAILS
165	H-903	HVAC SCHEDULES
166	H-904	HVAC AIRFLOW DIAGRAMS

14 - PLUMBING (P)

SERIES 500 - DRYER BUILDING		
167	P-501	DRYER BUILDING WASTE AND VENT PLAN AT EL 141.20 - NORTH
168	P-502	DRYER BUILDING WASTE AND VENT PLAN AT EL 141.20 - SOUTH
169	P-503	DRYER BUILDING WASTE AND VENT PLAN AT EL ROOF - NORTH
170	P-504	DRYER BUILDING WASTE AND VENT PLAN AT EL ROOF - SOUTH
171	P-505	SUPPLY PLAN AT EL 125.2 & EL 141.20 - NORTH
172	P-506	SUPPLY PLAN AT EL 141.20 - SOUTH
173	P-507	SUPPLY PLAN AT EL 155.20 - NORTH
174	P-508	SUPPLY PLAN AT EL 155.20 - SOUTH
175	P-509	ENLARGED PLUMBING PLANS
SERIES 900 - SCHEDULES AND DETAILS		
176	P-901	PLUMBING SCHEDULES AND DETAILS
177	P-902	RISERS - STORM PIPING
178	P-903	RISERS - WASTE PIPING
179	P-904	RISERS - SUPPLY PIPING
180	P-905	RISERS - NATURAL GAS PIPING

15 - FIRE PROTECTION (F)

SERIES 100 - GRAVITY BELT THICKENER AREA		
181	F-100	FIRE SUPPRESSION AND FIRE ALARM PLAN AT EL 128.00
182	F-101	FIRE SUPPRESSION AND FIRE ALARM PLAN AT EL 142.00
SERIES 200 - SOLIDS PIPE GALLERY		
183	F-200	FIRE SUPPRESSION AND FIRE ALARM PLAN AT EL 128.00
SERIES 240- SOLILDS SCREENING AREA		
184	F-240	FIRE SUPPRESSION AND FIRE ALARM PLAN AT EL 142.00
185	F-241	FIRE SUPPRESSION AND FIRE ALARM PLAN AT EL 156.00
186	F-242	FIRE SUPPRESSION AND FIRE ALARM PLAN AT EL 167.00
SERIES 500 - DRYER BUILDING		
187	F-500	FIRE SUPPRESSION AND FIRE ALARM PLAN AT EL 130.00
188	F-501	FIRE SUPPRESSION AND FIRE ALARM PLAN AT EL 142.00
189	F-502	FIRE SUPPRESSION AND FIRE ALARM PLAN AT EL 156.00
SERIES 900 - SCHEDULES AND DETAILS		
190	F-901	FIRE SUPPRESION DETAILS
191	F-902	FIRE ALARM RISER/NETWORK DIAGRAM

16 - ELECTRICAL (EX) - DEMOLITION

192	EX-1	OVERALL ONE LINE DIAGRAM EXISTING AND DEMOLITION
193	EX-2	EXISTING POWER CENTER PC-1 ONE LINE DIAGRAM AND ELEVATION DEMOLITION
194	EX-3	EXISTING POWER CENTER PC-2 ONE LINE DIAGRAM AND ELEVATION DEMOLITION
195	EX-4	EXISTING MCC-9 - ONE LINE DIAGRAM - DEMOLITION I
196	EX-5	EXISTING MCC-9 - ONE LINE DIAGRAM - DEMOLITION II
197	EX-6	EXISTING MCC-10 - ONE LINE DIAGRAM - DEMOLITION I
198	EX-7	EXISTING MCC-10 - ONE LINE DIAGRAM - DEMOLITION II
199	EX-8	EXISTING MCC-15 - ONE LINE DIAGRAM - DEMOLITION I
200	EX-9	EXISTING MCC-15 - ONE LINE DIAGRAM - DEMOLITION II
201	EX-10	EXISTING MCC-23 - ONE LINE DIAGRAM - DEMOLITION I
202	EX-11	EXISTING MCC-23 - ONE LINE DIAGRAM - DEMOLITION II
203	EX-12	EXISTING MCC-9 - ELEVATION - DEMOLITION
204	EX-13	EXISTING MCC-10 ELEVATION DEMOLITION
205	EX-14	EXISTING SUBSTATION PS2 DEMOLITION PLAN
206	EX-15	VAULT - EXISTING AND DEMOLITION
207	EX-16	ELECTRICAL ROOM - EXISTING AND DEMOLITION

16 - ELECTRICAL (E)

208	E-1	SYMBOLS AND ABBREVIATIONS
209	E-2	CONSTRUCTION SEQUENCE
210	E-3	OVERALL ELECTRICAL SITE PLAN - EXISTING AND NEW WORK
211	E-4	ELECTRICAL SITE PLAN - EXISTING AND NEW WORK
212	E-6	OVERALL ONE LINE DIAGRAM EXISTING AND MODIFICATION
213	E-7	ONE LINE DIAGRAM
214	E-8	NEW MCC-9 ONE LINE DIAGRAM I
215	E-9	NEW MCC-9 ONE LINE DIAGRAM II
216	E-10	NEW MCC-9 ONE LINE DIAGRAM III
217	E-11	NEW MCC-10 ONE LINE DIAGRAM I
218	E-12	NEW MCC-10 ONE LINE DIAGRAM II
219	E-12A	NEW MCC-10 ONE LINE DIAGRAM III
220	E-13	NEW MCC-10 ONE LINE DIAGRAM IV
221	E-13A	NEW MCC-10 ONE LINE DIAGRAM V
222	E-14	EXISTING MCC-15 - ONE LINE DIAGRAM - EXISTING AND MODIFICATION I
223	E-15	EXISTING MCC-15 - ONE LINE DIAGRAM - EXISTING AND MODIFICATION II
224	E-16	EXISTING MCC-23 - ONE LINE DIAGRAM - EXISTING AND MODIFICATION I
225	E-17	EXISTING MCC-23 - ONE LINE DIAGRAM - EXISTING AND MODIFICATION II

DRAWING INDEX

16 - ELECTRICAL (E)

226	E-18	NEW ELECTRICAL SWITCHGEAR PS-2 - ELEVATION
227	E-19	NEW MCC-9 - ELEVATION I
228	E-20	NEW MCC-9 - ELEVATION II
229	E-21	NEW MCC-10 ELEVATION I
230	E-22	NEW MCC-10 ELEVATION II
231	E-23	NEW MCC-9 SCHEDULE I
232	E-24	NEW MCC-9 SCHEDULE II
233	E-25	NEW MCC-10 SCHEDULE I
234	E-26	NEW MCC-10 SCHEDULE II
235	E-27	NEW ELECTRICAL SUBSTATION PS-2 - LAYOUT
236	E-29	ELECTRICAL ROOM LAYOUT EXISTING AND NEW WORK
237	E-30	PS-2 AND ELECTRICAL ROOM GROUNDING PLAN
238	E-31	ELECTRICAL ROOM - LIGHTING PLAN
239	E-32	EXISTING SUBSTATION PS-2 VAULT - EXISTING AND MODIFICATION
240	E-33	EXISTING MCC-9 LOAD - EXISTING AND MODIFICATION
241	E-47	NEW MCC-9 ELEMENTARY DIAGRAMS I
242	E-48	NEW MCC-9 ELEMENTARY DIAGRAMS II
243	E-49	NEW MCC-10 ELEMENTARY DIAGRAMS I
244	E-50	NEW MCC-10 ELEMENTARY DIAGRAMS II
245	E-51	NEW MCC-10 ELEMENTARY DIAGRAMS III
246	E-500	OVERALL ELECTRICAL AND I&C PLAN
247	E-501	ELECTRICAL AND I&C PLAN AT EL. 142.00
248	E-502	PARTIAL PLAN AT EL 129.20 ELECTRICAL AND I&C PLAN
249	E-503	PARTIAL PLAN AT EL 141.2 ELECTRICAL AND I&C PLAN
250	E-504	PARTIAL PLAN AT EL 156.00 ELECTRICAL AND I&C PLAN
251	E-505	PARTIAL PLAN AT EL 167.00 ELECTRICAL AND I&C PLAN
252	E-506	PARTIAL PLAN AT EL 185.00 ELECTRICAL AND I&C PLAN
253	E-507	BIOFILTER ELECTRICAL AND I&C PLAN
254	E-508	ELEVATIONS
255	E-509	BIOFILTER AREA LIGHTING PLAN
256	E-510	LIGHTING PLAN I
257	E-510A	AT EL 142.00 - LIGHTING PLAN
258	E-511	LIGHTING PLAN II
259	E-513	LIGHTING PLAN III
260	E-514	LIGHTING PLAN IV
261	E-515	DRYERS INSTRUMENTATION TOP VIEW
262	E-516	DRYERS INSTRUMENTATION ISOMERRIC VIEW I
263	E-517	DRYERS INSTRUMENTATION ISOMERRIC VIEW II
264	E-518	DRYERS INSTRUMENTATION ISOMETRIC DETAILS
265	E-520	GROUNDING AND LIGHTNING PROTECTION I
266	E-521	GROUNDING AND LIGHTNING PROTECTION II
267	E-521A	GROUNDING AND LIGHTNING PROTECTION III
268	E-522	PROCESS WATER AND DIGESTED SOLIDS INSTRUMENT ONE-LINE DIAGRAM
269	E-523	WET CAKE BIN INSTRUMENT ONE-LINE DIAGRAM
270	E-524	DRYER 1 INSTRUMENT ONELINE DIAGRAM I
271	E-525	DRYER 1 INSTRUMENTATION ONELINE DIAGRAM II
272	E-526	DRYER 2 INSTRUMENTATION ONELINE DIAGRAM I
273	E-527	DRYER 2 INSTRUMENTATION ONELINE DIAGRAM II
274	E-528	SILO INSTRUMENTATION ONELINE
275	E-901	PANELBOARD SCHEDULE - I
276	E-902	PANELBOARD SCHEDULE - II
277	E-903	PANELBOARD SCHEDULE - III
278	E-904	PANELBOARD SCHEDULE - IV
279	E-905	PANELBOARD SCHEDULE - V
280	E-906	PANELBOARD SCHEDULE VI
281	E-908	CABLE AND CONDUIT SCHEDULE - I
282	E-909	CABLE AND CONDUIT SCHEDULE - II
283	E-910	CABLE AND CONDUIT SCHEDULE - III
284	E-911	CABLE AND CONDUIT SCHEDULE - IV
285	E-912	CABLE AND CONDUIT SCHEDULE -V
286	E-913	CABLE AND CONDUIT SCHEDULE - VI
287	E-914	CABLE AND CONDUIT SCHEDULE - VII
288	E-914A	CABLE AND CONDUIT SCHEDULE - VIII
289	E-915	GROUNDING AND LIGHTNING PROTECTION DETAILS
290	E-916	LIGHTING FIXTURE AND DETAILS I
291	E-917	LIGHTING FIXTURE AND DETAILS 2
292	E-918	INSTRUMENT CONDUIT SCHEDULE I
293	E-924	DUCT BANK SECTIONS - EXISTING AND DEMOLITION
294	E-925	DUCTBANK SECTIONS - EXISTING AND MODIFICATION

18 - INSTRUMENTATION & CONTROLS (I)

295	I-001	LEGEND AND SYMBOLS 1
296	I-503	COOLING WATER PUMPING SYSTEM
297	I-504	NATURAL GAS AND BIOGAS
298	I-507	ODOR CONTROL
299	I-508	DEWATERED SOLIDS MATERIALS HANDLING SYSTEM
300	I-510	DRYER TRAIN NO.1-SHEET 1
301	I-511	DRYER TRAIN NO.1-SHEET 2
302	I-512	DRYER TRAIN NO.2-SHEET 1
303	I-513	DRYER TRAIN NO.2-SHEET 2
304	I-514	DRYER COMMON
305	I-520	DRYER WET SLUDGE AREA
306	I-521	DRYER TRAIN NO. 1
307	I-522	DRYER TRAIN NO. 2
308	I-523	DRYER BIOSOLIDS SILOS AREA
309	I-904	PCS PHYSICAL NETWORK DIAGRAM
310	I-904A	PCS PHYSICAL NETWORK TOPOLOGY
311	I-905	PCS NETWORK DIAGRAM - DETAILED

THE DRAWINGS IN THIS SET ARE RECORD DRAWINGS. THEY ARE CONSTRUCTION CONTRACT DRAWINGS WHICH HAVE BEEN REVISED BASED ON AVAILABLE FIELD INFORMATION RECORDED BY OTHERS DURING CONSTRUCTION OF THIS CONTRACT. THERE HAS BEEN NO VERIFICATION OF DIMENSIONS SHOWN ON THE CONSTRUCTION DRAWINGS OR THE ACCURACY/COMPLETENESS OF THE FIELD INFORMATION RECEIVED.

SIGNATURE _____ DATE 3/7/2022

SHAH & ASSOCIATES

AS-BUILT REPLACEMENT SHEET

PROFESSIONAL CERTIFICATION

THIS DRAWING WAS ORIGINALLY APPROVED FOR CONSTRUCTION AND SEALED BY ADAM S. PARMENTER, A REGISTERED PROFESSIONAL ENGINEER IN THE STATE OF MARYLAND, NO. 39376

NOTICE TO CONTRACTORS

- PROJECT ELEVATIONS ARE BASED ON NAVD88 AND HOWARD COUNTY'S BENCHMARK SYSTEM
- PREVIOUS PROJECTS USED OTHER DATUMS
- APPLY THE FOLLOWING CONVERSIONS WHEN USING PREVIOUS CONTRACT DRAWINGS:
  - ADDITION NO. 6: SUBTRACT 0.80 FT
  - PRIOR ADDITIONS: SUBTRACT 1.04 FT

DEPARTMENT OF PUBLIC WORKS
HOWARD COUNTY, MARYLAND

CHIEF, BUREAU OF UTILITIES DATE

DES: BMB
DRN: JCS
CHK: JRK
DATE: 01/2018

DATE	REV	DESCRIPTION
03/2021		RECORD DRAWINGS

GENERAL

DRAWING INDEX - I

LITTLE PATUXENT WATER RECLAMATION PLANT
8TH ADDITION
BIOSOLIDS PROCESSING FACILITIES - PHASE 2

CAPITAL PROJECT S-6295
CONTRACT NO. 24-4936

ELECTION DISTRICT NO. 6
HOWARD COUNTY, MARYLAND

SCALE AS SHOWN

SHEET 2 OF 311

G-2

BIM 360://10054364 – Little Patuxent WRP 8th Addition/LPWRP Ph2 Campus Model.rvt
1/7/2022 9:12:32 AM

A/C	AIR CONDITIONING
A/E	ARCHITECT/ENGINEER
A	AMPERE
AB	ANCHOR BOLT
ABAN	ABANDON
ABC	AGGREGATE BASE COURSE
ABT	ABOUT
AC	ALTERNATING CURRENT
ACK	ACKNOWLEDGE
ACP	ACOUSTIC CEILING PANEL, ASPHALTIC CONCRETE PAVEMENT
ACST	ACOUSTIC
AD	ADDENDUM, AREA DRAIN
ADDL	ADDITIONAL
ADH	ADHESIVE
ADJ	ADJUSTABLE, ADJACENT
AF	AMP FRAME, AMP FUSE
AFF	ABOVE FINISH FLOOR
AFG	ABOVE FINISH GRADE
AGGR	AGGREGATE
AI	AREA INLET, ANALOG INPUT
AIC	AMPS INTERRUPTING CAPACITY
ALIG	ALIGNMENT
ALT	ALTERNATE, ALTITUDE
ALUM	ALUMINUM
AM	ACOUSTICAL MATERIAL
AMB	AMBIENT
ANC	ANCHOR
AO	ANALOG OUTPUT
AP	ACCESS PANEL
APRX	APPROXIMATE
APVD	APPROVED
ARCH	ARCHITECTURAL
ASSY	ASSEMBLY
AT	ACOUSTICAL TILE, AMP TRIP
ATC	ACOUSTICAL TILE CEILING
ATM	ATMOSPHERE
AUTO	AUTOMATIC
AUX	AUXILIARY
AVE	AVENUE
AVG	AVERAGE
AWG	AMERICAN WIRE GAGE
AWT	ACOUSTICAL WALL TILE
B TO B	BACK TO BACK
BAL	BALANCE
BBD	BULLETIN BOARD
BC	BASE CABINET, BOTTOM CHORD, BOLT CENTER, BOLT CIRCLE
BD	BOARD
BE	BOTH ENDS, BELL END
BF	BOTH FACES, BOTTOM FACE, BLIND FLANGE, BOARD FEET
BITUM	BITUMINOUS
BKG	BACKING
BL	BASE LINE
BLDG	BUILDING
BLK	BLOCK
BLKG	BLOCKING
BM	BENCHMARK, BEAM
BOC	BACK OF CURB
BOD	BOTTOM OF DUCT
BOG	BOTTOM OF GRILLE
BOL	BOTTOM OF LOUVER, BOLLARD
BOP	BOTTOM OF PIPE
BOR	BOTTOM OF REGISTER
BOT	BOTTOM
BOU	BOTTOM OF UNIT
BP	BASE PLATE
BRG	BEARING
BRGP	BEARING PLATE
BRKT	BRACKET
BS	BOTH SIDES
BTU	BRITISH THERMAL UNIT
BTW	BETWEEN
BTWLD	BUTT WELD
BU	BELL UP, BUILT-UP
BUR	BUILT-UP ROOFING
BW	BOTH WAYS
BYP	BYPASS
CTOC	CENTER TO CENTER
C&G	CURB AND GUTTER
C	CHANNEL SHAPE, CENTIGRADE, CONDUIT
CAB	CABINET
CAP	CAPACITY
CAT	CATALOG, CATALOGIORY
CAV	CAVITY
CB	CATCH BASIN
CCB	CONCRETE BLOCK
CCW	COUNTER CLOCKWISE
CDF	CONTROLLED-DENSITY FILL
CE	CONCRETE EDGE
CER	CERAMIC
CF	CUBIC FEET (FOOT)
CFL	COUNTER FLASHING
CHBD	CHALKBOARD
CHD	CHORD
CHFR	CHAMFER
CHH	COMMUNICATION HANDHOLE
CI	CURB INLET
CIP	CAST-IN-PLACE
CIPB	CONCRETE INTERLOCKING PAVER BALLAST
CIRC	CIRCULATION, CIRCULAR
CJ	CONSTRUCTION JOINT
CKT	CIRCUIT
CL	CENTERLINE, CLASS, CLOSE
CLG	CEILING

CLKG	CAULKING
CLR	CLEAR
CMH	COMMUNICATION MANHOLE
CMP	CORRUGATED METAL PIPE
CMU	CONCRETE MASONRY UNIT
CO	CLEANOUT, CONCRETE OPENING
COL	COLUMN
COM	COMMON
COMB	COMBINATION
COMM	COMMUNICATION
COMP	COMPOSITION, COMPRESSIBLE, COMPOSITE
CON	CONCENTRIC
CONC	CONCRETE
CONN	CONNECTION
CONST	CONSTRUCTION
CONT	CONTINUOUS
COOR	COORDINATE
CORR	CORROSIVE, CORRUGATED
CP	CHECKER PLATE, CONTROL POINT
CPLG	COUPLING
CRL	CORROSION-RESISTANT LINING
CSC	COMPRESSION SLEEVE COUPLING
CSK	COUNTERSINK
CSS	CLINIC SERVICE SINK
CT	CERAMIC TILE
CTJ	CONTRACTION JOINT
CTR	CENTER
CTRL	CONTROL
CVT	CULVERT
CU	COPPER, CUBIC
CW	CLOCKWISE
CY	CUBIC YARD
d	PENNY (NAIL MEASURE)
D	DEEP, DIFFUSER, DRAIN
DB	DUCT BANK, DECIBEL, DRY BULB
DBA	DEFORMED BAR ANCHOR
DBL	DOUBLE
DC	DIRECT CURRENT
DEG	DEGREE
DEG C	DEGREE CENTIGRADE
DEG F	DEGREE FAHRENHEIT
DEMO	DEMOLITION
DEP	DEPRESSED
DEPT	DEPARTMENT
DET	DETAIL
DI	DROP INLET, DUCTILE IRON, DIGITAL INPUT
DIA	DIAMETER
DIAG	DIAGONAL, DIAGRAM
DIFF	DIFFERENTIAL, DIFFERENCE
DIM	DIMENSION
DISCH	DISCHARGE
DIST	DISTANCE, DISTRIBUTION
DIV	DIVISION
DL	DEAD LOAD
DMJ	DOUBLE MECHANICAL JOINT
DMPF	DAMP PROOFING
DN	DOWN
DO	DISSOLVED OXYGEN, DIGITAL OUTPUT, DITTO
DP	DEPTH
DPDT	DOUBLE POLE, DOUBLE THROW
DPST	DOUBLE POLE, SINGLE THROW
DS	DOWN SPOUT
DT	DOUBLE TEE, DRIP TRAP ASSEMBLY
DUP	DUPLICATE
DWG	DRAWING
DWL	DOWEL
DWR	DRAWER
E	EAST
EA	EACH, EXHAUST AIR
EC	ELECTRICAL CONTRACTOR
ECC	ECCENTRIC
ED	EQUIPMENT DRAIN
EDB	ELECTRICAL DUCT BANK
EE	EACH END
EF	EACH FACE
EFF	EFFLUENT, EFFICIENCY
EHH	ELECTRICAL HANDHOLE
EIFS	EXTERIOR INSULATION & FINISH SYSTEM
EJ	EXPANSION JOINT
EL	ELBOW, ELEVATION
ELEC	ELECTRICAL
EMBD	EMBEDDED
EMER	EMERGENCY
EMH	ELECTRICAL MANHOLE
ENCL	ENCLOSURE
ENGR	ENGINEER
ENTR	ENTRANCE
EOP	EDGE OF PAVEMENT
EQ	EQUAL
EQUIP	EQUIPMENT
EQUIV	EQUIVALENT
ES	EACH SIDE, EQUAL SPACE, EMERGENCY SHOWER
ESEW	EMERGENCY SHOWER AND EYE WASH
EST	ESTIMATE
EW	EACH WAY, EMERGENCY EYE/FACE WASH
EWC	ELECTRIC WATER COOLER
EWEF	EACH WAY, EACH FACE
EWTB	EACH WAY, TOP AND BOTTOM
EXC	EXCAVATION
EXH	EXHAUST
EXP	EXPANSION, EXPOSED
EXST	EXISTING
EXT	EXTERIOR, EXTERNAL, EXTENSION

F TO F	FACE TO FACE
F&B	FACE AND BYPASS
FAB	FABRICATE
FB	FLOOR BEAM
FBD	FIBERBOARD
FBG	FIBERGLASS
FBM	BOARD FOOT MEASURE
FBO	FURNISHED BY OWNER
FC	FLUSHING CONNECTION
FCA	FLANGED COUPLING ADAPTER
FD	FLOOR DRAIN
FDC	FLEXIBLE DUCT CONNECTION
FDR	FEEDER
FDTN	FOUNDATION
FE	FLANGED END
FEC	FIRE EXTINGUISHER CABINET
FES	FLARED END SECTION
FEXT	FIRE EXTINGUISHER
FF	FAR FACE, FACTORY FINISH, FLAT FACE
FG	FINISHED GRADE
FH	FIRE HYDRANT
FIG	FIGURE
FIN	FINISH
FJT	FLUSH JOINT
FL	CLINIC, FLOW LINE
FLEX	FLEXIBLE
FLG	FLANGE
FLOR	FLUORESCENT
FLR	FLOOR
FLS	FLASHING, FLUSH
FN	FENCE
FO	FINISHED OPENING
FOB	FLAT ON BOTTOM
FOC	FACE OF CONCRETE, FACE OF CURB
FOF	FACE OF FINISH
FOM	FACE OF MASONRY
FOS	FACE OF STUDS
FOT	FLAT ON TOP
FPT	FEMALE PIPE THREAD
FR	FRAME
FRP	FIBERGLASS REINFORCED PLASTIC
FRTM	FIRE RETARDANT TREATED MATERIAL
FS	FLOOR SINK, FAR SIDE
FT	FEET, FOOT
FTG	FOOTING, FITTING
FUR	FURRED, FURRING
FURN	FURNITURE, FURNISH
FUT	FUTURE
FV	FACE VELOCITY
FW	FIELD WELD, FIRE WALL
FWD	FORWARD
FWE	FURNISHED WITH EQUIPMENT
FXTR	FIXTURE
G	GRILLE, GROUND
GA	GAGE (METAL THICKNESS)
GAL	GALLON
GALV	GALVANIZED
GB	GRAB BAR, GRADE BREAK
GC	GROOVED COUPLING
GD	GUARD
GEN	GENERAL
GFCI	GROUND FAULT CIRCUIT INTERRUPTER
GFMU	GROUND FACE MASONRY UNIT
GG	GUTTER GRADE
GJ	GROOVED JOINT
GL	GLASS
GLB	GLASS BLOCK, GLULAM BEAM
GND	GROUND
GP	GUY POLE
GR	GRADE
GRTG	GRATING
GSB	GYPSUM SHEATHING BOARD
GT	GREASE TRAP
GVL	GRAVEL
GW	GUY WIRE
GWB	GYPSUM WALLBOARD
GYP	GYPSUM HARDBOARD
H	HIGH
HB	HOSE BIBB
HBD	HARDBOARD
HC	HANDICAPPED, HOLLOW CORE, HORIZONTAL CURVE, HORIZONTAL CENTERLINE
HD	HEAD, HOT DIP
HDR	HEADER
HDW	HARDWARE
HEX	HEXAGONAL
HGR	HANGER
HH	HANDHOLE
HID	HIGH-INTENSITY DISCHARGE
HM	HOLLOW METAL
HORIZ	HORIZONTAL
HP	HIGH POINT, HORSEPOWER
HPC	HORIZONTAL POINT OF CURVATURE
HPS	HIGH-PRESSURE SODIUM
HPT	HORIZONTAL POINT OF TANGENCY
HR	HOSE REEL, HOUR
HS	HEADED STUD, HIGH STRENGTH
HSS	HOLLOW STRUCTURAL SHAPE
HT	HEIGHT
HTG	HEATING
HV	HIGH VOLTAGE
HVAC	HEATING, VENTILATING AND AIR CONDITIONING
HWD	HARDWOOD
HWL	HIGH WATER LEVEL
HYD	HYDRAULIC
HZ	HERTZ, CYCLES PER SECOND

ID	INSIDE DIAMETER, INTERIOR DIMENSION
IE	INVERT ELEVATION, FOR EXAMPLE
IF	INSIDE FACE
IH	INTAKE HOOD
IMP	IMPACT
IN	INCH
INC	INCLUDE, INCANDESCENT
INF	INFLUENT
INSTR	INSTRUMENTATION
INSUL	INSULATION
INT	INTERIOR, INTERSECTION
INTR	INTERMEDIATE, INTERIOR
INV	INVERT
IPS	IRON PIPE SIZE
IPT	INTERNAL PIPE THREAD
IR	INSIDE RADIUS, IRON ROD
IRR	IRRIGATION
ISO	ISOMETRIC
JB	JUNCTION BOX
JCT	JUNCTION
JF	JOINT FILLER
JST	JOIST
JT	JOINT
K	KIP
KB	KNEE BRACE
KCMIL	THOUSAND CIRCULAR MILS
KD	KNOCK DOWN
KO	KNOCK OUT
KSI	KIPS PER SQUARE INCH
KW	KILOWATT
L	ANGLE, LENGTH, LAVATORY, LINTEL
LAD	LADDER
LAM	LAMINATE
LATL	LATERAL
LB	LAG BOLT, POUND
LCTB	LIQUID CHALK AND TACK BOARD
LDG	LANDING
LDR	LEADER
LE	LIFTING EYE
LF	LINEAR FOOT
LG	LONG
LH	LEFT HAND
LIN	LINEAR
LIQ	LIQUID
LLH	LONG LEG HORIZONTAL
LLV	LONG LEG VERTICAL
LMLU	LIQUID MARKER LECTURE UNIT
LNG	LONGITUDINAL
LOC	LOCATION
LP	LOW POINT
LPS	LOW-PRESSURE SODIUM
LR	LONG RADIUS
LT	LEFT
LTD	LIMITED
LTG	LIGHTING
LTL	LINTEL
LTNG	LIGHTNING
LV	LOW VOLTAGE
LVL	LAMINATED VENEER LUMBER
LVR	LOUVER
LW	LIGHTWEIGHT
LWC	LIGHTWEIGHT CONCRETE
LWL	LOW WATER LEVEL
MA	MIXED AIR
MACH	MACHINED
MAINT	MAINTENANCE
MAN	MANUAL
MATL	MATERIAL
MAX	MAXIMUM
MB	MACHINE BOLT
MBR	MEMBER
MC	MECHANICAL CONTRACTOR, MECHANICAL COUPLING, MOMENT CONNECTION
MCB	METAL CORNER BEAD
MCJ	MASONRY CONTROL JOINT
MDMJ	MODIFIED DOUBLE MECHANICAL JOINT
MECH	MECHANICAL
MED	MEDIUM
MFR	MANUFACTURER
MH	MANHOLE, METAL HALIDE
MIN	MINIMUM
MIR	MIRROR
MISC	MISCELLANEOUS
MJ	MECHANICAL JOINT
ML	MASONRY LINTEL
MLO	MAIN LUGS ONLY
MMB	MEMBRANE
MO	MASONRY OPENING
MOD	MODULAR, MODIFY
MON	MONUMENT
MPII	MANUFACTURERS PRINTED INSTALLATION INSTRUCTIONS
MPT	MALE PIPE THREAD
MRGWB	MOISTURE-RESISTANT GYPSUM WALLBOARD
MS	MOP SINK
MSL	MEAN SEA LEVEL
MT	MOUNT
MU	MASONRY UNIT
MULL	MULLION
MV	MEDIUM VOLTAGE
MW	MONITORING WELL

N	NORTH, NEUTRAL
NA	NOT APPLICABLE
NAT	NATURAL, NATIONAL
NC	NORMALLY CLOSED
NEG	NEGATIVE
NF	NEAR FACE, NON-FUSED
NIC	NOT IN CONTRACT
NO	NORMALLY OPEN, NUMBER
NOM	NOMINAL
NPS	NOMINAL PIPE SIZE
NPT	NATIONAL PIPE THREAD
NS	NEAR SIDE
NTS	NOT TO SCALE
NWL	NORMAL WATER LEVEL
O TO O	OUT TO OUT
OA	OUTSIDE AIR, OVERALL
OC	ON CENTER
OCPD	OVER CURRENT PROTECTION DEVICE
OD	OUTSIDE DIAMETER
OED	OPEN END DUCT
OF	OUTSIDE FACE, OFFICE FURNISHING
OFCI	OWNER FURNISHED CONTRACTOR INSTALLED
OFOI	OWNER FURNISHED OWNER INSTALLED
OG	ORIGINAL GROUND
OH	OVERHEAD
OPNG	OPENING
OPP	OPPOSITE
OPT	OPTIONAL
OR	OUTSIDE RADIUS
ORD	OVERFLOW ROOF DRAIN
ORIG	ORIGINAL
OVFL	OVERFLOW
OVHG	OVERHANG
OZ	OUNCE
P	PAINT
PA	PUBLIC ADDRESS
PAR	PARALLEL, PARAPET
PB	PANIC BAR, PULL BOX
PBD	PARTICLE BOARD
PC	POINT OF CURVE, PIECE, PRECAST
PCC	POINT OF COMPOUND CURVATURE
PCF	POUNDS PER CUBIC FOOT
PCT	PERCENT
PE	PLAIN END
PED	PEDESTAL
PEN	PENETRATION
PERF	PERFORATED
PERM	PERMANENT
PERP	PERPENDICULAR
PF	POWER FACTOR
PFMU	PREFACED MASONRY UNIT
PH	PHASE
PI	POINT OF INTERSECTION
PKG	PACKAGE
PL	PLATE, PROPERTY LINE, PRECAST LINTEL
PLAS	PLASTER
PLAT	PLATFORM
PLBG	PLUMBING
PLF	POUNDS PER LINEAR FOOT
PNEU	PNEUMATIC
POL	POLISH
POS	POSITIVE, POSITION
PP	POLYPROPYLENE, POWER POLE
PRC	POINT OF REVERSE CURVATURE
PREF	PREFINISHED
PREFAB	PREFABRICATED
PRELIM	PRELIMINARY
PREP	PREPARE
PRES	PRESSURE
PRI	PRIMARY
PROP	PROPERTY, PROPOSED
PROT	PROTECTION
PS	PIPE SUPPORT
PSF	POUNDS PER SQUARE FOOT
PSI	POUNDS PER SQUARE INCH
PSIA	POUNDS PER SQUARE INCH ABSOLUTE
PSIG	POUNDS PER SQUARE INCH GAGE
PST	PRESTRESSED
PT	POINT, POINT OF TANGENCY
PTN	PARTITION
PVC	POLYVINYL CHLORIDE, POINT OF VERTICAL CURVE
PVMT	PAVEMENT
PWD	PLYWOOD
PWJ	PLYWOOD WEB JOIST
PZ	PIEZOMETER
Q	RATE OF FLOW
QT	QUARRY TILE
QTR	QUARTER
QTY	QUANTITY
QUAL	QUALITY

THE DRAWINGS IN THIS SET ARE RECORD DRAWINGS. THEY ARE CONSTRUCTION CONTRACT DRAWINGS WHICH HAVE BEEN REVISED BASED ON AVAILABLE FIELD INFORMATION RECORDED BY OTHERS DURING CONSTRUCTION OF THIS CONTRACT. THERE HAS BEEN NO VERIFICATION OF DIMENSIONS SHOWN ON THE CONSTRUCTION DRAWINGS OR THE ACCURACY/COMPLETENESS OF THE FIELD INFORMATION RECEIVED.

SIGNATURE — DATE 2/7/2023

R&R	REMOVE AND REPLACE
R&S	REMOVE AND SALVAGE
R	RADIUS, REGISTER, RISER
RA	RETURN AIR
RB	RESILIENT BASE, ROCK BERM
RCPT	RECEPTACLE
RD	ROOF DRAIN
REC	RECESS
RECD	RECEIVED
RECT	RECTANGULAR
RED	REDUCER
REF	REFERENCE
REINF	REINFORCING
REM	REMOVE
REQD	REQUIRED
RESIL	RESILIENT
RET	RETAINING, RETURN
REV	REVISION, REVERSE
RF	RESILIENT FLOORING
RFG	ROOFING
RFL	REFLECTED, REFLECTOR
RGH	ROUGH
RGS	RIGID GALVANIZED STEEL
RGS-PVC	PVC COATED RGS
RH	RELIEF HOOD, RIGHT HAND, RELATIVE HUMIDITY
RL	REQUIRED LAP
RLFA	RELIEF AIR
RND	ROUND
RNG	RUNNING
RO	ROUGH OPENING
ROW	RIGHT-OF-WAY
RPM	REVOLUTIONS PER MINUTE
RR	RAILROAD
RSP	ROCK SLOPE PROTECTION
RT	RIGHT
RVT	RESILIENT VINYL TILE
RY	READY
S	SOUTH, SINK
SA	SUPPLY AIR
SAMU	SOUND-ABSORBING MASONRY UNIT
SAN	SANITARY
SB	SPLASH BLOCK
SC	SOLID CORE
SCH	SCHEDULE
SCHEM	SCHEMATIC
SCN	SCREEN
SE	STEEL/ALUMINUM EDGE
SEC	SECONDARY, SECONDS
SECT	SECTION
SEP	SEPARATE
SF	SQUARE FOOT, SILT FENCE
SG	SHEET GLASS, SEALANT GROOVE
SH	SHOWER
SHT	SHEET
SHTG	SHEATHING
SIL	SILENCE
SIM	SIMILAR
SJ	SLAB JOINT
SL	SLOPE, STEEL LINTEL
SLTD	SLOTTED
SLV	SLEEVE
SMLS	SEAMLESS
SOG	SLAB ON GRADE
SP	SOUNDPROOF, STANDPIPE
SPA	SPACING
SPEC	SPECIFICATION
SPLY	SUPPLY
SPST	SINGLE POLE SINGLE THROW
SPT	SET POINT
SQ	SQUARE
SR	SHORT RADIUS
SS	SERVICE SINK
SST	STAINLESS STEEL
ST	STREET
STA	STATION
STD	STANDARD
STIF	STIFFENER
STIR	STIRRUP
STL	STEEL
STOR	STORAGE
STR	STRUCTURAL, STRAIGHT
SUB	SUBSTITUTE
SUC	SUCTION
SUSP	SUSPENDED
SY	SQUARE YARD
SYM	SYMBOL
SYMM	SYMMETRICAL
SYN	SYNTHETIC
SYS	SYSTEM
T&B	TOP AND BOTTOM
T&G	TONGUE AND GROOVE
T	TILE, TREAD
TA	TOILET ACCESSORY, TEMPERED AIR
TAN	TANGENT
TBM	TEMPORARY BENCHMARK
TCE	TEMPORARY CONSTRUCTION EASEMENT
TEF	TROWELED EPOXY FLOORING
TEMP	TEMPORARY, TEMPERATURE
THD	THREAD
THK	THICK
THRESH	THRESHOLD
TKBD	TACK BOARD

TOB	TOP OF BOLT, TOP OF BANK, TOP OF BEAM, TOP OF BERM
TOC	TOP OF CURB, TOP OF CONCRETE
TOD	TOP OF DUCT
TOF	TOP OF FOOTING
TOG	TOP OF GRATING
TOL	TOLERANCE, TOP OF LEDGER
TOM	TOP OF MASONRY
TOP	TOP OF PLATE
TOPO	TOPOGRAPHY
TOS	TOP OF SLAB, TOP OF STEEL, TOE OF SLOPE
TOW	TOP OF WALL
TP	TOILET PARTITION, TELEPHONE POLE, TOE PLATE, TRAP PRIMER
TPD	TOILET PAPER DISPENSER
TPG	TOPPING, THROUGH PLATE GIRDER
TR	TRANSOM
TRANS	TRANSITION
TRD	TRENCH DRAIN
TYP	TYPICAL
U	URINAL
UG	UNDERGROUND
ULT	ULTIMATE
UNFN	UNFINISHED
UNO	UNLESS NOTED OTHERWISE
UTIL	UTILITY
V	VENT, VELOCITY, VOLT
VA	VOLT AMPERE
VAC	VACUUM
VAR	VARNISH, VARIABLE, VOLT AMPERES REACTIVE
VB	VAPOR BARRIER, VINYL BASE, VALVE BOX
VC	VERTICAL CURVE
VCP	VITRIFIED CLAY PIPE
VCT	VINYL COMPOSITION TILE, VERTICAL CENTERLINE
VEL	VELOCITY
VENT	VENTILATION
VERT	VERTICAL
VERTS	VERTICAL REINFORCING
VG	VERTICAL GRAIN
VIF	VERIFY IN FIELD
VIN	VINYL
VOL	VOLUME
VPC	VERTICAL POINT OF CURVATURE
VPI	VERTICAL POINT OF INTERSECTION
VPT	VERTICAL POINT OF TANGENCY
VS	VERSUS, VAPOR SEAL
VTR	VENT THROUGH ROOF
VWC	VINYL WALL COVERING
W/	WITH
W/O	WITHOUT
W	WATT, WEST, WIDE, WINDOW, WIRE, WIDE FLANGE BEAM
WB	WOOD BASE
WC	WATER CLOSET, WATER COLUMN
WD	WOOD, WIDTH
WF	WIDE FLANGE, WASH FOUNTAIN
WG	WIRE GLASS, WATER GAGE
WH	WALL HYDRANT, WEEP HOLE
WI	WROUGHT IRON
WL	WATER LEVEL
WLD	WELDED
WM	WIRE MESH
WP	WEATHERPROOF
WS	WATERSTOP, WATER SURFACE
WSCT	WAINSCOT
WT	WEIGHT, WATER TIGHT
WTHP	WATERPROOF, WORKING POINT
WWF	WELDED WIRE FABRIC
XP	EXPLOSION-PROOF
XS	EXTRA STRONG
XSECT	CROSS SECTION
XXS	DOUBLE EXTRA STRONG
YH	YARD HYDRANT
YS	YIELD STRENGTH

GENERAL NOTES:

1. SEE DRAWING G-6 FOR PROJECT SPECIFIC ABBREVIATIONS FOR PIPE SERVICES, PLANT AREAS, AND EQUIPMENT.
2. LISTING OF ABBREVIATIONS DOES NOT IMPLY THAT ALL ABBREVIATIONS ARE USED IN THE CONTRACT DRAWINGS.
3. ABBREVIATIONS SHOWN ON THIS SHEET INCLUDE VARIATIONS OF A WORD. FOR EXAMPLE, "MOD" MAY MEAN MODIFY OR MODIFICATION, "INC" MAY MEAN INCLUDED OR INCLUDING, AND "REINF" MAY MEAN REINFORCE OR REINFORCING.
4. SEE INSTRUMENTATION LEGEND SHEET FOR PROJECT-SPECIFIC EQUIPMENT AND PIPING SYSTEM ABBREVIATIONS.

BIM 360://10054364 – Little Patuxent WRP 8th Addition/264592_G_V18.rvt
1/7/2022 9:48:16 AM

AS-BUILT REPLACEMENT SHEET

PROFESSIONAL CERTIFICATION

THIS DRAWING WAS ORIGINALLY APPROVED FOR CONSTRUCTION AND SEALED BY ADAM S. PARMENTER, A REGISTERED PROFESSIONAL ENGINEER IN THE STATE OF MARYLAND, NO. 39376

NOTICE TO CONTRACTORS

- PROJECT ELEVATIONS ARE BASED ON NAVD88 AND HOWARD COUNTY'S BENCHMARK SYSTEM
- PREVIOUS PROJECTS USED OTHER DATUMS
- APPLY THE FOLLOWING CONVERSIONS WHEN USING PREVIOUS CONTRACT DRAWINGS:
  - ADDITION NO. 6: SUBTRACT 0.80 FT
  - PRIOR ADDITIONS: SUBTRACT 1.04 FT

DEPARTMENT OF PUBLIC WORKS
HOWARD COUNTY, MARYLAND

CHIEF, BUREAU OF UTILITIES — DATE

DES: ASP
DRN: REE
CHK: JRK
DATE: 01/2018

DATE	REV	DESCRIPTION
03/2021		RECORD DRAWINGS

GENERAL

ABBREVIATIONS

LITTLE PATUXENT WATER RECLAMATION PLANT
8TH ADDITION
BIOSOLIDS PROCESSING FACILITIES - PHASE 2

CAPITAL PROJECT S-6295
CONTRACT NO. 24-4936

ELECTION DISTRICT NO. 6
HOWARD COUNTY, MARYLAND

SCALE AS SHOWN

SHEET 3 OF 311

G-4

MATERIALS IN PLAN/SECTION

- ACOUSTICAL CEILING TILE (SECTION)
- ASPHALT (PLAN OR SMALL-SCALE SECTION)
- ASPHALT (LARGE-SCALE SECTION)
- BATT INSULATION (SECTION)
- BRICK MASONRY (PLAN AND/OR SECTION)
- CHECKERED PLATE (PLAN)
- CONCRETE (PLAN AND/OR SECTION)
- CONCRETE MASONRY (PLAN AND/OR SECTION)
- DEMOLITION (PLAN AND/OR SECTION)
- EARTH (SECTION)
- FILTER POINT MAT (PLAN)
- FINISHED WOOD (SECTION)
- GLULAM LUMBER (SECTION)
- GRANULAR FILL (SECTION)
- GRATING (SECTION)
- GRATING (PLAN)
- GROUT (SECTION)
- GYPSUM BOARD (SECTION)
- METAL (SECTION)
- ORIENTED STRAND BOARD (SECTION)
- PARTICLE BOARD (SECTION)
- PLYWOOD (LARGE-SCALE SECTION)
- PLYWOOD (SMALL-SCALE SECTION)
- PRECAST CONCRETE (PLAN AND/OR SECTION)
- RIGID INSULATION (SECTION)
- RIPRAP (PLAN AND/OR SECTION)
- SAND (SECTION)
- SOD (SECTION)
- WEEP JOINT MORTAR PROTECTION SYSTEM (SECTION)
- WOOD - CONTINUOUS (SECTION)
- WOOD - BLOCKING (SECTION)

GENERAL SYMBOLOGY

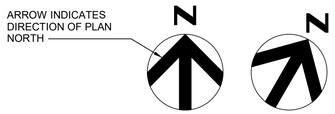

NORTH ARROW

PLAN
1/4" = 1'-0"

PLAN TITLE

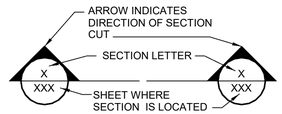

FULL BUILDING SECTION CUT MARKER

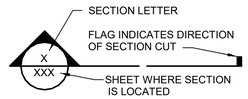

SECTION CUT MARKER

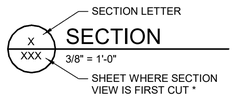

SECTION TITLE

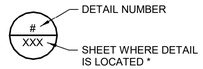

DETAIL MARKER

FOR REFERENCING DETAILS INCLUDED IN DRAWING SET.

XXXXXX

DETAIL MARKER

FOR REFERENCING DETAILS BOUND IN SPECIFICATIONS OR SEPARATE VOLUME.

DETAIL TITLE

* EXCEPTIONS WHERE THE SHEET NUMBER IS REPLACED BY A DASH (-).
1) FOR COMMON DETAILS, SECTIONS, ELEVATIONS OR DETAILS THAT ARE CUT OR CALLED OUT ON MULTIPLE SHEETS.
2) SECTIONS, ELEVATIONS OR DETAILS THAT ARE LOCATED ON THE SAME SHEET THEY ARE CUT OR CALLED OUT ON.

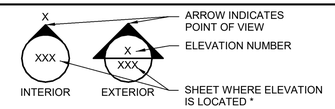

SINGLE ELEVATION OR PHOTO MARKER

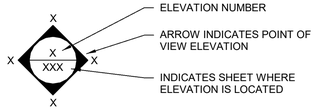

MULTIPLE ELEVATION OR PHOTO MARKER

ELEVATION TITLE

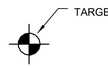

ARCHITECTURAL

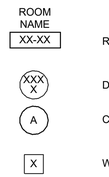

KEY NOTE DESIGNATION

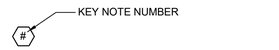

THE DRAWINGS IN THIS SET ARE RECORD DRAWINGS. THEY ARE CONSTRUCTION CONTRACT DRAWINGS WHICH HAVE BEEN REVISED BASED ON AVAILABLE FIELD INFORMATION RECORDED BY OTHERS DURING CONSTRUCTION OF THIS CONTRACT. THERE HAS BEEN NO VERIFICATION OF DIMENSIONS SHOWN ON THE CONSTRUCTION DRAWINGS OR THE ACCURACY/COMPLETENESS OF THE FIELD INFORMATION RECEIVED.

SIGNATURE _____ DATE 2/7/2023

IDENTIFICATION SYMBOLOGY

PIPING IDENTIFICATION

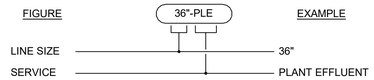

PIPE SERVICE ABBREVIATIONS

ALP	AIR, LOW PRESSURE
ADE	ANAEROBIC DIGESTER EFFLUENT (EXISTING)
ADF	ANAEROBIC DIGESTER FEED
ADMR	ANAEROBIC DIGESTER MIXING RETURN
ADMS	ANAEROBIC DIGESTER MIXING SUPPLY
ADRR	ANAEROBIC DIGESTER RECYCLE RETURN
ADRS	ANAEROBIC DIGESTER RECYCLE SUPPLY
ADS	ANAEROBIC DIGESTER SLUDGE
ADT	ANAEROBIC DIGESTER TRANSFER
BBD	BOILER BLOW DOWN
BCT	BOILER CHEMICAL TREATMENT
CA	COMPRESSED AIR
CDC	CROSS DRYER CONVEYANCE
CF	CENTRIFUGE FEED
CTR	CENTRATE
CTF	CENTRATE FEED
CW	COLD WATER
DAA	DEAMMONIFICATION AIR
DAE	DEAMMONIFICATION EFFLUENT
DB	DRIED BIOSOLIDS
DCHP	DEWATERED CAKE HIGH PRESSURE
DCLP	DEWATERED CAKE LOW PRESSURE
DG	DIGESTER GAS
DGR	DIGESTER GAS RAW
DGS	DIGESTER GAS SCRUBBED
DSM	DIGESTED SOLIDS MIXING
DR	DRAIN
DW	DILUTION WATER
EXH	BOILER EXHAUST
FA	FOUL AIR
FOAM	FOAM CONTROL CHEMICAL
HWR	HOT WATER RETURN
HWS	HOT WATER SUPPLY
HYPO	SODIUM HYPOCHLORITE
MAP	STRUVITE PRECIPITATE (MAGNESIUM AMMONIUM PHOSPHATE)
MGCL	MAGNESIUM CHLORIDE
MN	MICRONUTRIENT
N2	NITROGEN GAS
NAOH	SODIUM HYDROXIDE (CAUSTIC)
NG	NATURAL GAS
OVF	OVERFLOW
PD	PLANT DRAIN
POLY	POLYMER
POLYS	POLYMER SOLUTION
PPRI	PRETREATMENT PROCESS REACTOR INFLUENT
PPRAS	PRETREATMENT PROCESS RETURN ACTIVATED SLUDGE
PS	PRIMARY SLUDGE
PW	PROCESS WATER (NONPOTABLE)
RAS	RETURN ACTIVATED SLUDGE
SMP	SAMPLE
SS	SANITARY SEWER
SBD	SCRUBBER BLOWDOWN
SC	SCUM
SD	STORM DRAIN
TPS	THICKENED PRIMARY SOLIDS
TW	TEMPERED WATER
TWAS	THICKENED WASTE ACTIVATED SLUDGE
W	WATER (POTABLE)
WADS	WASTE ANAEROBIC DIGESTER SLUDGE
WAS	WASTE ACTIVATED SLUDGE

SHEET NAMING CONVENTION

DISCIPLINE DESIGNATOR & DISCIPLINE ORDER

G	GENERAL
X	DEMOLITION
C	CIVIL
S	STRUCTURAL
A	ARCHITECTURAL
M	PROCESS MECHANICAL
H	HVAC
P	PLUMBING
F	FIRE PROTECTION
E	ELECTRICAL
I	INSTRUMENTATION

EQUIPMENT IDENTIFICATION

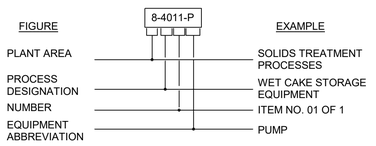

PLANT AREA DESIGNATION

1	HEADWORKS
2	FEBs AND GRIT FACILITIES
3	PCs, N&S PUMP STATIONS, FCs 2-5, W GALLERY
4	E&W PRs, E GALLERY, PS 3
5	N PRs, FC 10-12, N GALLERY AND BLOWER BLDG
6	FC 6-10, E GALLERY
7	FILTRATION & DISINFECTION
8	SOLIDS TREATMENT PROCESSES
8-DRY	BELT DRYER EQUIPMENT
8-GBT	GRAVITY BELT THICKENING/SCUM STORAGE/ THICKENING POLYMER
8-PST	GRAVITY THICKENING/ PRIMARY SLUDGE SCREENING
8-TSS	THICKENED SLUDGE STORAGE
8-DIG	ANAEROBIC DIGESTION/DIGESTER CONTROLS BLDG/ DIGESTED SOLIDS STROAGE/BOILER
8-DGT	DIGESTER GAS TREATMENT/DIGESTER GAS FLARE
8-DEW	DEWATERING
8-CTR	CENTRATE TREATMENT
8-OC	ODOR CONTROL
8-CHE	PHOSPHORUS PRECIPITATION/CHEMICAL FEED FACILITIES
9	ADMINISTRATION BLDG
10	MAINTENANCE BLDG

PROCESS DESIGNATION

40	WET CAKE STORAGE EQUIPMENT
51	DRYER NO.1 EQUIPMENT
52	DRYER NO. 2 EQUIPMENT
61	DRIED BIOSOLIDS SILO NO. 1 EQUIPMENT
62	DRIED BIOSOLIDS SILO NO. 2 EQUIPMENT
71	DRYER NO. 1 AIR TREATMENT, RECIRCULATION, AND EXHAUST SYSTEM EQUIPMENT
72	DRYER NO. 2 AIR TREATMENT, RECIRCULATION, AND EXHAUST SYSTEM EQUIPMENT

EQUIPMENT ABBREVIATIONS

GENERAL:

AD	AIR DRYER
AE	DO SENSOR
AIT	DO INDICATOR/TRANSMITTER
AN	DO ANALYZER - INSTRUMENT PAN
AR	AIR RECEIVER
AS	ALARM SYSTEM
BIN	WET CAKE BIN
BLT	BELT
C	AIR COMPRESSOR
CND	SPRAY CONDENSER
CNV	CONVEYOR (SCREW OR DRAG CHAIN)
COL	BOTTOM SCRAPPER COLLECTOR
DIV	DIVERTER
DFA	DETONATION FLAME ARRESTOR
DRV	DRIVE SYSTEM
EL	EMERGENCY LIGHTING
FAN	FAN
FE	FLOW ELEMENT/SENSOR
FIT	FLOW INDICATOR/TRANSMITTER
FOPP	FIBER OPTIC PATCH PANEL
FS	FLOAT SWITCH
FSH	FLOW SWITCH - HIGH FLOW
FSL	FLOW SWITCH - LOW FLOW
FT	FUEL TANK
FTR	FILTER; BLOWER INTAKE AIR
FX	FIRE EXTINGUISHER
G	BUILDINGS, FLOORS, ETC - GENERAL
GAS	GAS METER
GBT	GRAVITY BELT THICKENER
GC	GAS STORAGE COVER
GD	SYNROGEAR REDUCER
GEN	GENERATOR
GLC	GLYCOL CHILLER
GMU	GAS MONITORING CONTROL UNIT
GMS	GAS MONITORING SENSOR
GS	GENERAL SUPPLY
GT	GRAVITY THICKENER
H	HOIST
HT	HEATER
HY	HYDRANT
HW	HOT WATER HEATER
HWB	HOT WATER BOILER
HX	HEAT EXCHANGER
L	LEVEL (GENERAL)
LCP	LOCAL CONTROL PANEL
LCS	LOCAL CONTROL STATION
LE	LEVEL ELEMENT/SENSOR
LIT	LEVEL INDICATOR/TRANSMITTER
LSH	LEVEL SWITCH - HIGH LEVEL
LSHH	LEVEL SWITCH - HIGH-HIGH LEVEL
LSLL	LEVEL SWITCH - LOW LEVEL
LT	LIGHTING
LTS	GENERATOR TRANSFER SWITCH
LVR	LOUVER

EQUIPMENT ABBREVIATIONS (CON'T)

GENERAL:

IFD	INFRARED FLAME DETECTOR
M	METER - GENERAL
MAU	MAKEUP AIR UNIT
MCC	MOTOR CONTROL CENTER
ME	MECHANICAL EQUIPMENT
MIL	DRUM MILL
MO	MOTOR
MX	MIXER
N2	NITROGEN GAS GENERATION
OC	ODOR CONTROL
OIT	OPERATOR INTERFACE TERMINAL
OPS	OPERATIONS GENERAL SUPPLY
OSH	TORQUE SWITCH - HIGH TORQUE
OSHH	TORQUE SWITCH - HIGH-HIGH TORQUE
P	PUMP
PC	COMPUTER, PERSONAL
PG	POWER GRID
PI	PRESSURE INDICATOR
PE	PRESSURE ELEMENT/SENSOR
PIT	PRESSURE INDICATOR/TRANSMITTER
PDE	PRESSURE DIFFERENTIAL ELEMENT
PDT	PRESSURE DIFFERENTIAL TRANSMITTER
PSH	PRESSURE SWITCH - HIGH PRESSURE
PSL	PRESSURE SWITCH - LOW PRESSURE
PVV	PRESSURE/VACUUM VENT
PR	PROCESS REACTOR
PS	PRIMARY SUBSTATION
R	RECORDER
RMS	GAS PRESSURE REGULATING AND METERING STATION
RO	ROTOMETER
RTU	REMOTE TERMINAL
RW	ROTATING WEIR
SCRB	ROTOCLONE
SCRN	DRY SOLIDS SCREEN
SDR	SOLIDS DISTRIBUTOR
SDU	SOLIDS DOSING UNIT
SLO	DRIED BIOSOLIDS SILO
SR	SURGE RELIEF
SRP	SOLIDS ROLLER PRESS
ST	STORAGE TANK
SW	SWITCH - GENERALT TANK
TCV	TEMPERATURE CONTROL VALVE
TE	TEMPERATURE ELEMENT/SENSOR
TIT	TEMPERATURE INDICATOR/TRANSMITTER
TLC	TELESCOPING LOADOUT CHUTE
TSH	TEMPERATURE SWITCH - HIGH TEMPERATURE
TSL	TEMPERATURE SWITCH - LOW TEMPERATURE
TX	TRANSMITTER - GENERAL
TS	TRANSFER SWITCH
UPS	UNINTERRUPTIBLE POWER SUPPLY
UV	UTILITY VEHICLE
VBR	BIN ACTIVATOR
VFD	VARIABLE FREQUENCY DRIVE
VP	VACUUM PUMP
WT	WATER TANK

VALVE ABBREVIATIONS

VALVES/GATES:

ARV	AIR RELEASE VALVE
BP	BACKFLOW PREVENTER
BLV	BALL VALVE
BLVM	BALL VALVE WITH MOTOR OPERATOR
BV	BUTTERFLY VALVE (AIR & LIQUID)
CV	CHECK VALVE
DPV	DIAPHRAGM VALVE
EZV	ELECTRIC ZONE VALVE
FV	FLOW CONTROL VALVE (ALL TYPES)
GV	GATE VALVE
GLV	GLOBE VALVE
HV	SLIDE GATE
KV	KNIFE VALVE
MV	MUD VALVE
MOV	MOTORIZED VALVE
PNV	PINCH VALVE
PV	PLUG VALVE
RRV	PRESSURE REDUCING VALVE
RV	PRESSURE REGULATING VALVE
PVVFA	PRESSURE/VACUUM VALVE W/ FLAME ARRESTOR
SL	SLIDE GATE
SG	SLUICE GATE
SV	SOLENOID VALVE
TV	TELESCOPING VALVE
UV	UNLOADING VALVE
V	VALVE
WG	WEIR GATE

GENERAL NOTES:

1. THIS IS A STANDARD SHEET SHOWING COMMON SYMBOLOGY. ALL SYMBOLS ARE NOT NECESSARILYUSED ON THIS PROJECT.
2. SCREENING OR SHADING OF WORK IS USED TO INDICATE EXISTING COMPONENTS OR TO DE-EMPHASIZE PROPOSED IMPROVEMENTS TO HIGHLIGHT SELECTED TRADE WORK. REFER TO CONTEXT OF EACH SHEET FOR USAGE.

AS-BUILT REPLACEMENT SHEET

PROFESSIONAL CERTIFICATION

THIS DRAWING WAS ORIGINALLY APPROVED FOR CONSTRUCTION AND SEALED BY ADAM S. PARMENTER, A REGISTERED PROFESSIONAL ENGINEER IN THE STATE OF MARYLAND, NO. 39376

NOTICE TO CONTRACTORS

- PROJECT ELEVATIONS ARE BASED ON NAVD88 AND HOWARD COUNTY'S BENCHMARK SYSTEM
- PREVIOUS PROJECTS USED OTHER DATUMS
- APPLY THE FOLLOWING CONVERSIONS WHEN USING PREVIOUS CONTRACT DRAWINGS:
  - ADDITION NO. 6: SUBTRACT 0.80 FT
  - PRIOR ADDITIONS: SUBTRACT 1.04 FT

DEPARTMENT OF PUBLIC WORKS
HOWARD COUNTY, MARYLAND

CHIEF, BUREAU OF UTILITIES DATE

DES: ASP
DRN: REE
CHK: JRK
DATE: 01/2018

DATE	REV	DESCRIPTION
03/2021		RECORD DRAWINGS

GENERAL

LEGEND AND SYMBOLS 1

LITTLE PATUXENT WATER RECLAMATION PLANT
8TH ADDITION
BIOSOLIDS PROCESSING FACILITIES - PHASE 2

CAPITAL PROJECT S-6295
CONTRACT NO. 24-4936

ELECTION DISTRICT NO. 6
HOWARD COUNTY, MARYLAND

SCALE AS SHOWN

SHEET 4 OF 311

G-5

BIM 360://10054364 – Little Patuxent WRP 8th Addition/284592_G_V18.rvt
1/7/2022 9:48:18 AM

DEMOLITION

DEMOLITION

ABANDON IN PLACE

EQUIPMENT SYMBOLOGY

CENTRIFUGAL PUMP

CHEMICAL FEED PUMP

COMPRESSOR

HEAT EXCHANGER

MIXER - PROPELLER TYPE

MOTOR

PROGRESSING CAVITY PUMP

PROGRESSING CAVITY CAKE PUMP

SUMP PUMP

LOBE PUMP

CENTRIFUGE

DOUBLE DISC PUMP

PIPING AND VALVE SYMBOLOGY (GENERAL DRAWINGS)

BALL VALVE

BUTTERFLY VALVE

DIAPHRAGM VALVE

GATE VALVE

GLOBE VALVE

KNIFE GATE VALVE

NEEDLE VALVE

PINCH VALVE

PLUG VALVE

PLUG VALVE
(NORMALLY CLOSED)

THREE WAY BALL VALVE

THREE WAY PLUG VALVE

BALL CHECK VALVE

CHECK VALVE

DOUBLE DISK CHECK VALVE

CONE VALVE

OR

PRESSURE RELIEF VALVE

PRESSURE REDUCING VALVE

X

AIR RELEASE VACUUM VALVE
A = AIR RELEASE
V = VACUUM

AIR RELEASE VALVE

PRESSURE REGULATING VALVE

BACK PRESSURE VALVE

S

SOLENOID VALVE

36"-RWI

TYPICAL PIPE LINE CALLOUT

OA DAMPER

BACKFLOW PREVENTER

DM

DENSITY METER

FM

FLOW METER

NGM

NATURAL GAS METER

UNION

WYE-STRAINER

FLEXIBLE HOSE OR TUBING

FLEXIBLE PIPING CONNECTION

LINE SIZE CHANGE

LINE TURNING DOWN

LINE TURNING UP

BLIND FLANGE

PIPE BREAK

V-PORT BALL VALVE

THREE-WAY CONTROL VALVE

3-WAY VALVE

4-WAY VALVE

CALIBRATION POT

BASKET STRAINER

QUICK CONNECT

SUCTION DIFFUSER-STRAINER

PUMP DISCHARGE (TRIPLE DUTY) VALVE

THERMOSTATIC MIXING VALVE

INJECTION RING

COMPRESSION SLEEVE TYPE COUPLING

FLANGED COUPLING ADAPTER (FCA)

FLEXIBLE CONNECTION

HARNESSED MECHANICAL COUPLING

EXPANSION COUPLING/JOINT

PRESSURE GAUGE (WITH COCK)

TRAP

QUICK DISCONNECT CAM &
GROOVE COUPLING

CAP OR PLUG

CO

INTERIOR CLEANOUT

HOSE BIBB -1

HOSE BIBB -2

HR

HOSE REEL

FD-X

FLOOR DRAIN

X = TYPE DESIGNATED IN SPECIFICATIONS

PIPE IN SECTION

BU

BELL UP (PLAN)

BU

BELL UP (SECTION OR SCHEMATIC)

D

DRAIN (SECTION OR SCHEMATIC)

DEMOLITION GENERAL NOTES

1. COORDINATE THE EXACT EXTENTS OF DEMOLITION WITH THE CONNECTION TO NEW WORK.
2. SEE SECTION 01 73 29 FOR LIST OF ITEMS TO BE SALVAGED.
3. EXISTING PIPE MATERIALS MAY BE DIFFERENT THAN NEW PIPE MATERIALS SCHEDULED IN SECTION 40 05 00. PIPE IDENTIFIERS ON EXISTING PIPING ARE ONLY INTENDED TO DENOTE THE SERVICE. MATERIAL FOR EXISTING PIPING SYSTEM INDICATED FOR PARTIAL REMOVAL SHALL BE FIELD VERIFIED AND APPROPRIATE RECONNECTIONS MADE SUITABLE FOR PIPING MATERIAL TRANSITIONS.
4. WHERE DEMOLITION OF AN ITEM IS INDICATED, THE ASSOCIATED ELECTRICAL AND INSTRUMENTATION CONDUIT AND WIRING SHALL ALSO BE REMOVED.
5. IN GENERAL, PIPE SUPPORTS ARE NOT SHOWN FOR EXISTING PIPING. SUPPORTS SHALL BE REMOVED WITH THE ASSOCIATED PIPING OR EQUIPMENT. REPAIR CONCRETE SURFACES AFTER REMOVAL OF ANCHORAGE BY GROUTING PENETRATION FLUSH WITH THE WALL.
6. WHERE PIPING IS INDICATED FOR DEMOLITION THROUGH A WALL, FLOOR, OR STRUCTURE, REPAIR OPENINGS TO MATCH THE EXISTING SURFACE. SEE STRUCTURAL DETAILS.
7. CONNECTIONS TO EXISTING PIPING SHALL BE MADE AT EXISTING FLANGED OR GROOVED PIPE JOINTS ONLY. FIELD CUTTING OF EXISTING PIPING FOR CONNECTIONS NOT ALLOWED. DEMOLISH PIPING BACK TO NEAREST PIPE JOINT AS REQUIRED.
8. PRIOR TO STARTING DEMOLITION PROCESS, CONSTRUCT TEMPORARY DEWATERING SYSTEM AND RELOCATE UTILITIES WHICH MUST REMAIN ONLINE. A SEPERATE MEETING SHALL BE HELD WITH THE COUNTY, ENGINEER, AND CMAR PRIOR TO DEMOLITION OF EXISTING SYSTEMS, UTILITIES, AND BUILDINGS.

GENERAL NOTES

1. DRAWINGS ARE INTENDED TO DEPICT DESIGN INTENT; CONTRACTOR TO REFER TO SPECIFICATIONS, P&IDS AND STANDARD DETAILS FOR FURTHER INSTALLATION REQUIREMENTS.
2. VALVES, INLINE APPURTENANCES AND EQUIPMENT ARE SHOWN GRAPHICALLY AS THE DEVICE BODY; REFER TO P&IDS FOR DEVICE TYPE, SIZE AND DETAILS. INSTALL DEVICES IN ACCORDANCE WITH SPECIFICATIONS AND MANUFACTURERS REQUIREMENTS. ENSURE ADEQUATE ACCESS FOR OPERATION OF DEVICES - NOTIFY ENGINEER PRIOR TO INSTALLATION IF INADEQUATE CLEARANCE IS ANTICIPATED.
3. IF SPECIFIC DIMENSIONS OF PIPIING ARE NOT SHOWN, CONTRACTOR MAY PROPOSE ALTERNATIVE PIPE ROUTING, SUBJECT TO APPROVAL BY THE ENGINEER.
4. PROVIDE MANUAL AIR RELEASE VALVES PER DETAIL 5/M-902 FOR ALL HIGH POINTS IN PROCESS PIPING. COORDINATE LOCATION OF VENT PIPE WITH ENGINEER.
5. PROVIDE FLOW SENSING AND PRESSURE MONITORING DEVICES FOR ALL PUMPS AS SHOWN ON THE P&IDS. ISOLATE PRESSURE GAUGES AND PRESSURE SWITCHES PER DETAILS ON DRAWING I-910.
6. EXISTING PIPE LOCATION BASED ON LiDAR SURVEY COMPLETED BY HDR, INC. IN OCTOBER 2015 AND FEBRUARY 2017.
7. LIDAR DATA WILL BE AVAILABLE TO CONTRACTOR AFTER AWARD FOR INFOMATION ONLY.
8. CONTRACTOR SHALL FIELD VERIFY ALL PIPE LOCATIONS.
9. REFER TO SPECIFICATION 40 05 00 FOR ALLOWABLE PIPE JOINTS (FLANGED OR GROOVED) FOR EACH PIPE SYSTEM. PIPE JOINTS SHALL BE AS SCHEDULED IN SECTION 40 05 00 UNLESS SPECIFICALLY CALLED OUT ON THE DRAWINGS.
10. PROVIDE A DISMANLING JOINT OR RESTRAINED COMPRESSION SLEEVE COUPLING AT ALL FLOW METERS AND AT ALL CONNECTIONS TO PUMPS OR OTHER EQUIPMENT.

THE DRAWINGS IN THIS SET ARE RECORD DRAWINGS. THEY ARE CONSTRUCTION CONTRACT DRAWINGS WHICH HAVE BEEN REVISED BASED ON AVAILABLE FIELD INFORMATION RECORDED BY OTHERS DURING CONSTRUCTION OF THIS CONTRACT. THERE HAS BEEN NO VERIFICATION OF DIMENSIONS SHOWN ON THE CONSTRUCTION DRAWINGS OR THE ACCURACY/COMPLETENESS OF THE FIELD INFORMATION RECEIVED.

SIGNATURE

2/7/2022
DATE

AS-BUILT REPLACEMENT SHEET

PROFESSIONAL CERTIFICATION

THIS DRAWING WAS ORIGINALLY APPROVED FOR CONSTRUCTION AND SEALED BY ADAM S. PARMENTER, A REGISTERED PROFESSIONAL ENGINEER IN THE STATE OF MARYLAND, NO. 39376

NOTICE TO CONTRACTORS

- PROJECT ELEVATIONS ARE BASED ON NAVD88 AND HOWARD COUNTY'S BENCHMARK SYSTEM
- PREVIOUS PROJECTS USED OTHER DATUMS
- APPLY THE FOLLOWING CONVERSIONS WHEN USING PREVIOUS CONTRACT DRAWINGS:
  - ADDITION NO. 6: SUBTRACT 0.80 FT
  - PRIOR ADDITIONS: SUBTRACT 1.04 FT

DEPARTMENT OF PUBLIC WORKS
HOWARD COUNTY, MARYLAND

CHIEF, BUREAU OF UTILITIES — DATE

DES: ASP
DRN: REE
CHK: JRK
DATE: 01/2018

DATE	REV	DESCRIPTION
03/2021		RECORD DRAWINGS

GENERAL

LEGEND AND SYMBOLS 2

LITTLE PATUXENT WATER RECLAMATION PLANT
8TH ADDITION
BIOSOLIDS PROCESSING FACILITIES - PHASE 2

CAPITAL PROJECT S-6295
CONTRACT NO. 24-4936

ELECTION DISTRICT NO. 6
HOWARD COUNTY, MARYLAND

SCALE AS SHOWN

SHEET 5 OF 311

G-6

BIM 360://10054364 – Little Patuxent WRP 8th Addition/264592_G_V18.rvt
1/7/2022 9:48:19 AM

GENERAL NOTES:

1. DRAWING DOES NOT SHOW ALL VALVES AND PIPING. AIR AND GAS PIPING NOT SHOWN.

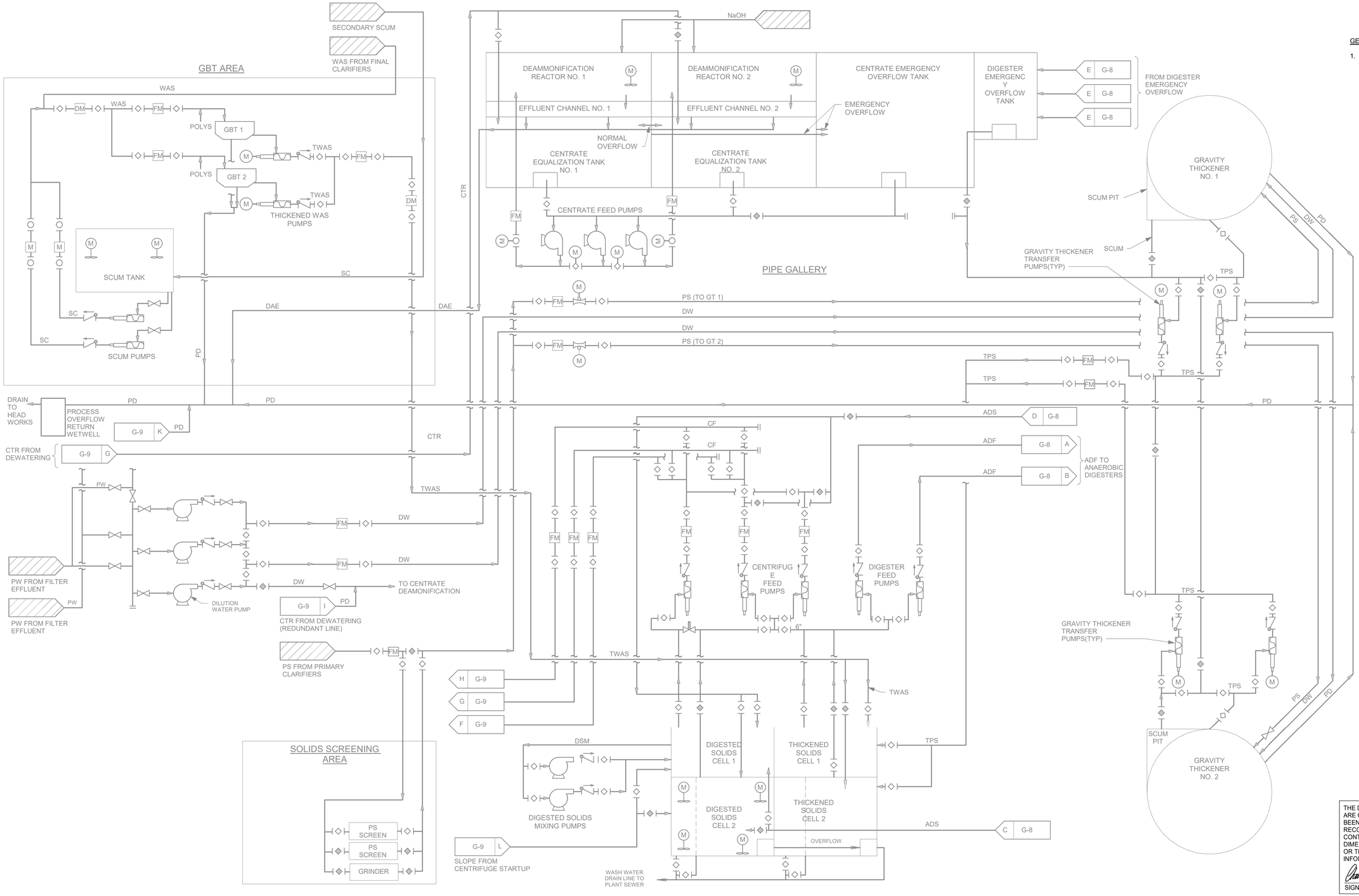

THE DRAWINGS IN THIS SET ARE RECORD DRAWINGS. THEY ARE CONSTRUCTION CONTRACT DRAWINGS WHICH HAVE BEEN REVISED BASED ON AVAILABLE FIELD INFORMATION RECORDED BY OTHERS DURING CONSTRUCTION OF THIS CONTRACT. THERE HAS BEEN NO VERIFICATION OF DIMENSIONS SHOWN ON THE CONSTRUCTION DRAWINGS OR THE ACCURACY/COMPLETENESS OF THE FIELD INFORMATION RECEIVED.

SIGNATURE _____ DATE 2/7/2022

AS-BUILT REPLACEMENT SHEET

PROFESSIONAL CERTIFICATION

THIS DRAWING WAS ORIGINALLY APPROVED FOR CONSTRUCTION AND SEALED BY ADAM S. PARMENTER, A REGISTERED PROFESSIONAL ENGINEER IN THE STATE OF MARYLAND, NO. 39376

NOTICE TO CONTRACTORS

- PROJECT ELEVATIONS ARE BASED ON NAVD88 AND HOWARD COUNTY'S BENCHMARK SYSTEM
- PREVIOUS PROJECTS USED OTHER DATUMS
- APPLY THE FOLLOWING CONVERSIONS WHEN USING PREVIOUS CONTRACT DRAWINGS:
  - ADDITION NO. 6: SUBTRACT 0.80 FT
  - PRIOR ADDITIONS: SUBTRACT 1.04 FT

DEPARTMENT OF PUBLIC WORKS
HOWARD COUNTY, MARYLAND

CHIEF, BUREAU OF UTILITIES DATE

DES: ASP
DRN: REE
CHK: JRK
DATE: 01/2018

DATE	REV	DESCRIPTION
03/2021		RECORD DRAWINGS

GENERAL

EXISTING OVERALL SOLIDS PROCESS FLOW DIAGRAM I

LITTLE PATUXENT WATER RECLAMATION PLANT
8TH ADDITION
BIOSOLIDS PROCESSING FACILITIES - PHASE 2

CAPITAL PROJECT S-6295
CONTRACT NO. 24-4936

ELECTION DISTRICT NO. 6
HOWARD COUNTY, MARYLAND

SCALE AS SHOWN

SHEET 6 OF 311

G-7

BIM 360://10054364 – Little Patuxent WRP 8th Addition/264592_G_V18.rvt
1/7/2022 9:48:22 AM

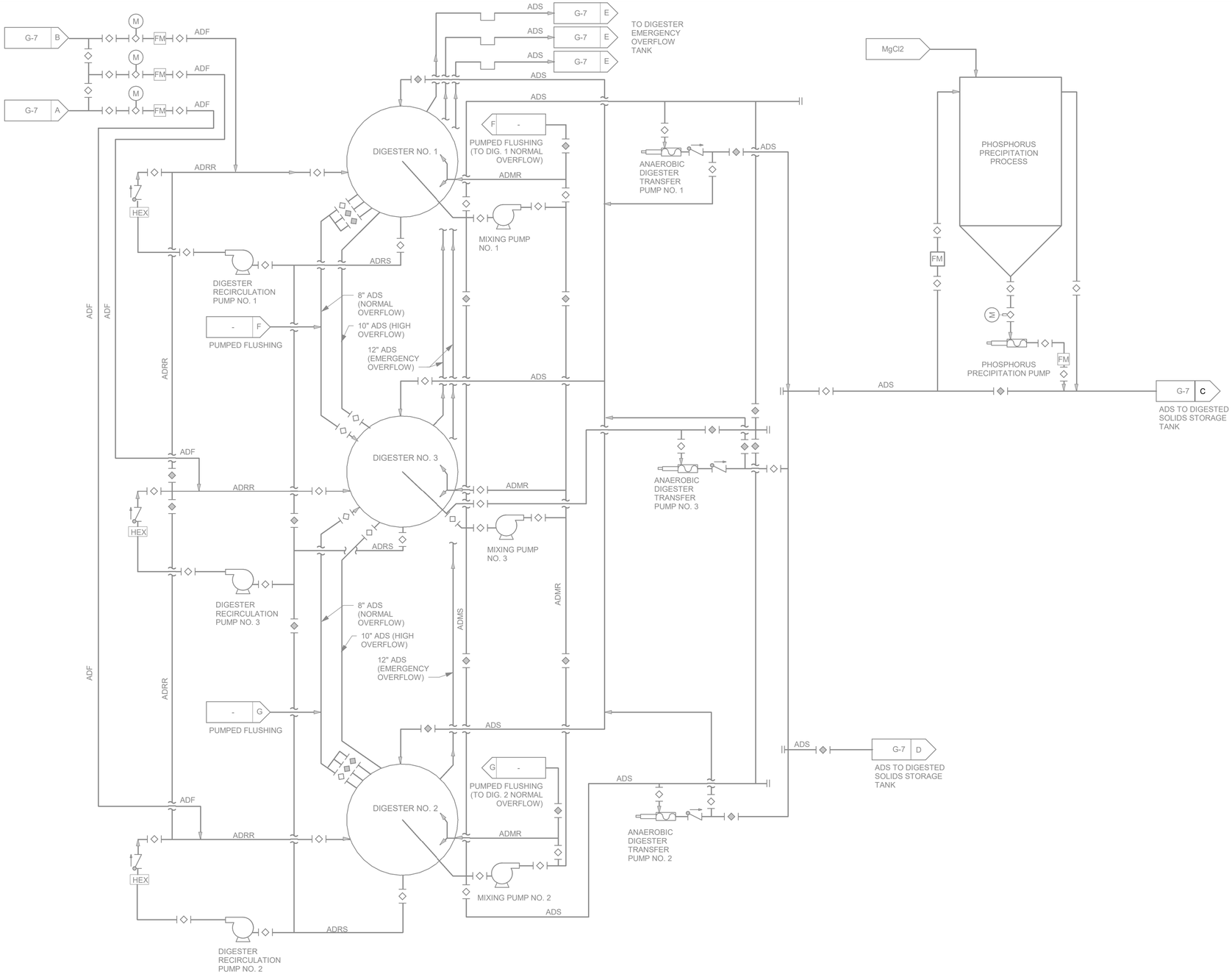

ANAEROBIC DIGESTION

GENERAL NOTES:

1. DRAWING DOES NOT SHOW ALL VALVES AND PIPING. AIR AND GAS PIPING NOT SHOWN.

THE DRAWINGS IN THIS SET ARE RECORD DRAWINGS. THEY ARE CONSTRUCTION CONTRACT DRAWINGS WHICH HAVE BEEN REVISED BASED ON AVAILABLE FIELD INFORMATION RECORDED BY OTHERS DURING CONSTRUCTION OF THIS CONTRACT. THERE HAS BEEN NO VERIFICATION OF DIMENSIONS SHOWN ON THE CONSTRUCTION DRAWINGS OR THE ACCURACY/COMPLETENESS OF THE FIELD INFORMATION RECEIVED.

SIGNATURE _____ DATE 2/7/2022

AS-BUILT REPLACEMENT SHEET

PROFESSIONAL CERTIFICATION

THIS DRAWING WAS ORIGINALLY APPROVED FOR CONSTRUCTION AND SEALED BY ADAM S. PARMENTER, A REGISTERED PROFESSIONAL ENGINEER IN THE STATE OF MARYLAND, NO. 39376

NOTICE TO CONTRACTORS

- PROJECT ELEVATIONS ARE BASED ON NAVD88 AND HOWARD COUNTY'S BENCHMARK SYSTEM
- PREVIOUS PROJECTS USED OTHER DATUMS
- APPLY THE FOLLOWING CONVERSIONS WHEN USING PREVIOUS CONTRACT DRAWINGS:
  - ADDITION NO. 6: SUBTRACT 0.80 FT
  - PRIOR ADDITIONS: SUBTRACT 1.04 FT

DEPARTMENT OF PUBLIC WORKS
HOWARD COUNTY, MARYLAND

CHIEF, BUREAU OF UTILITIES DATE

DES: ASP
DRN: REE
CHK: JRK
DATE: 01/2018

DATE	REV	DESCRIPTION
03/2021		RECORD DRAWINGS

GENERAL

EXISTING OVERALL SOLIDS PROCESS FLOW DIAGRAM II

LITTLE PATUXENT WATER RECLAMATION PLANT
8TH ADDITION
BIOSOLIDS PROCESSING FACILITIES - PHASE 2

CAPITAL PROJECT S-6295
CONTRACT NO. 24-4936

ELECTION DISTRICT NO. 6
HOWARD COUNTY, MARYLAND

SCALE AS SHOWN

SHEET 7 OF 311

G-8

BIM 360://10054364 – Little Patuxent WRP 8th Addition/264592_G_V18.rvt
1/7/2022 9:48:23 AM

GENERAL NOTES:

1. DRAWING DOES NOT SHOW ALL VALVES AND PIPING. AIR AND GAS PIPING IS NOT SHOWN.

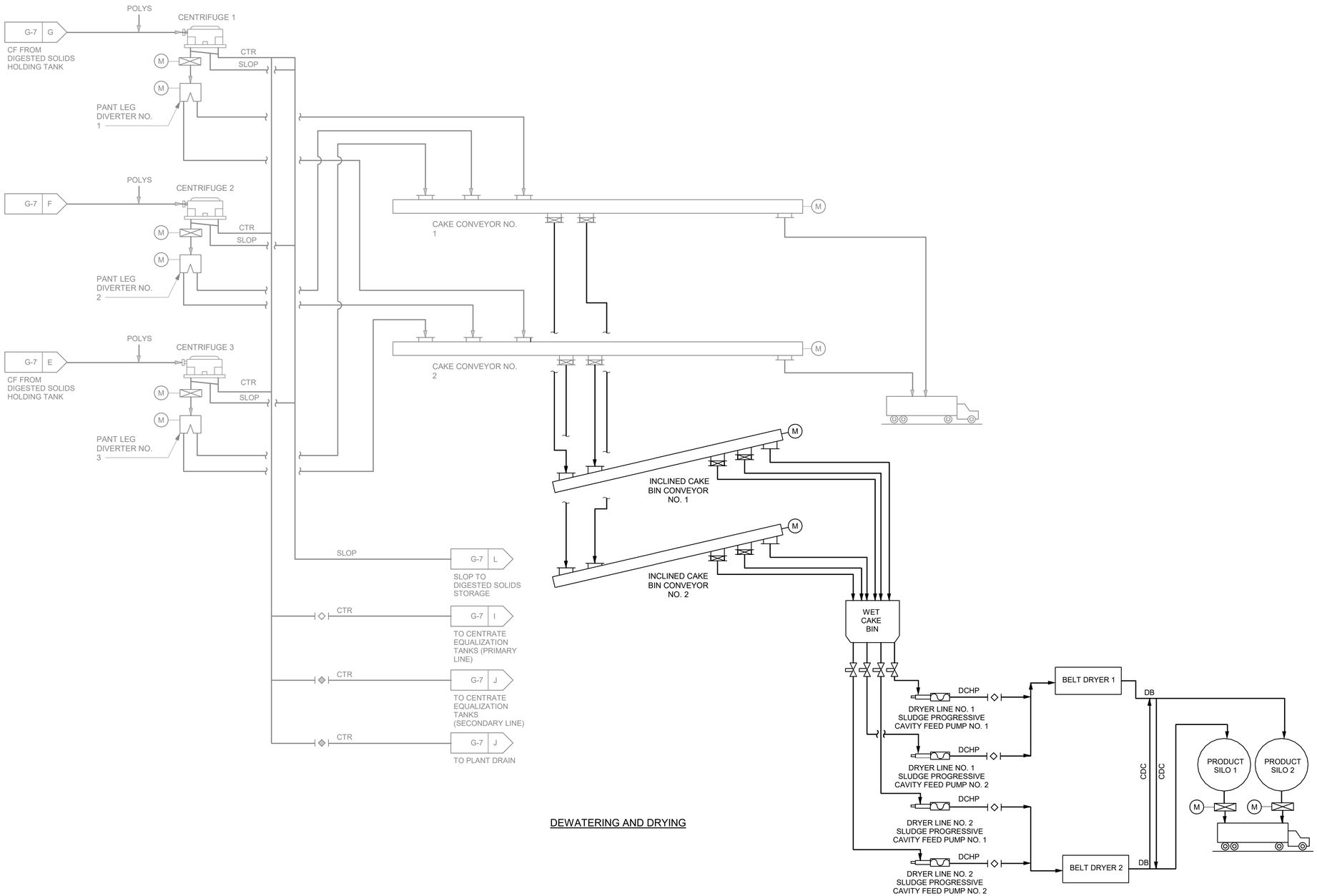

DEWATERING AND DRYING

THE DRAWINGS IN THIS SET ARE RECORD DRAWINGS. THEY ARE CONSTRUCTION CONTRACT DRAWINGS WHICH HAVE BEEN REVISED BASED ON AVAILABLE FIELD INFORMATION RECORDED BY OTHERS DURING CONSTRUCTION OF THIS CONTRACT. THERE HAS BEEN NO VERIFICATION OF DIMENSIONS SHOWN ON THE CONSTRUCTION DRAWINGS OR THE ACCURACY/COMPLETENESS OF THE FIELD INFORMATION RECEIVED.

SIGNATURE — DATE 2/7/2022

AS-BUILT REPLACEMENT SHEET

PROFESSIONAL CERTIFICATION

THIS DRAWING WAS ORIGINALLY APPROVED FOR CONSTRUCTION AND SEALED BY ADAM S. PARMENTER, A REGISTERED PROFESSIONAL ENGINEER IN THE STATE OF MARYLAND, NO. 39376

NOTICE TO CONTRACTORS

- PROJECT ELEVATIONS ARE BASED ON NAVD88 AND HOWARD COUNTY'S BENCHMARK SYSTEM
- PREVIOUS PROJECTS USED OTHER DATUMS
- APPLY THE FOLLOWING CONVERSIONS WHEN USING PREVIOUS CONTRACT DRAWINGS:
  - ADDITION NO. 6: SUBTRACT 0.80 FT
  - PRIOR ADDITIONS: SUBTRACT 1.04 FT

DEPARTMENT OF PUBLIC WORKS
HOWARD COUNTY, MARYLAND

CHIEF, BUREAU OF UTILITIES — DATE

DES: ASP
DRN: REE
CHK: JRK
DATE: 01/2018

DATE	REV	DESCRIPTION
03/2021		RECORD DRAWINGS

GENERAL

OVERALL SOLIDS PROCESS FLOW DIAGRAM III

LITTLE PATUXENT WATER RECLAMATION PLANT
8TH ADDITION
BIOSOLIDS PROCESSING FACILITIES - PHASE 2

CAPITAL PROJECT S-6295
CONTRACT NO. 24-4936

ELECTION DISTRICT NO. 6
HOWARD COUNTY, MARYLAND

SCALE AS SHOWN

SHEET 8 OF 311

G-9

BIM 360://10054364 – Little Patuxent WRP 8th Addition/264592_G_V18.rvt
1/7/2022 9:48:25 AM

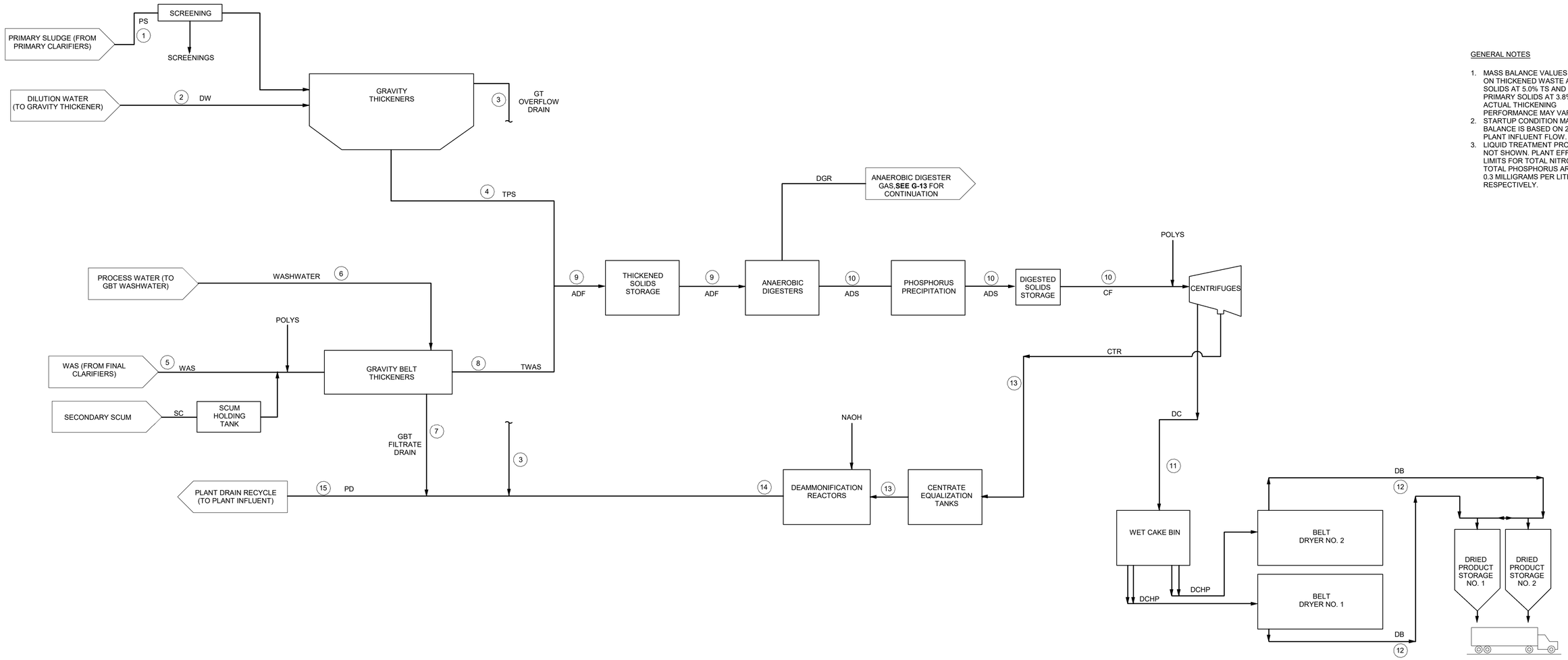

GENERAL NOTES

1. MASS BALANCE VALUES ARE BASED ON THICKENED WASTE ACTIVATED SOLIDS AT 5.0% TS AND THICKENED PRIMARY SOLIDS AT 3.8% TS. ACTUAL THICKENING PERFORMANCE MAY VARY.
2. STARTUP CONDITION MASS BALANCE IS BASED ON 20 MGD PLANT INFLUENT FLOW.
3. LIQUID TREATMENT PROCESS IS NOT SHOWN. PLANT EFFLUENT LIMITS FOR TOTAL NITROGEN AND TOTAL PHOSPHORUS ARE 4.0 AND 0.3 MILLIGRAMS PER LITER, RESPECTIVELY.

		STARTUP CONDITION - ANNUAL AVERAGE										STARTUP CONDITION - MAXIMUM MONTH										STARTUP CONDITION - PEAK WEEK									
		Flow	Mass	TSS		VSS		TN		TP		Flow	Mass	TSS		VSS		TN		TP		Flow	Mass	TSS		VSS		TN		TP	
Label	Description	gpd	lb/day	mg/l	lb/day	mg/l	lb/day	mg/l	lb/day	mg/l	lb/day	gpd	lb/day	mg/l	lb/day	mg/l	lb/day	mg/l	lb/day	mg/l	lb/day	gpd	lb/day	mg/l	lb/day	mg/l	lb/day	mg/l	lb/day	mg/l	lb/day
1	Primary Solids	178,684		20,000	29,805	17,400	25,930	700	1,043	100	149	203,700		20,000	33,977	17,400	29,560	700	1,189	100	170	239,437		20,000	39,938	17,400	34,746	700	1,398	100	200
2	Process Water to GTs	178,684										203,700										239,437									
3	Gravity Thickener Overflow Drain	270,378		991	2,235	862	1,945	35	78	5	11	308,231		991	2,548	862	2,217	35	89	5	13	362,306		991	2,995	862	2,606	35	105	5	15
4	Thickened Primary Solids (from GT)	86,991		38,000	27,569	33,060	23,985	1,330	965	190	138	99,170		38,000	31,429	33,060	27,343	1,330	1,100	190	157	116,568		38,000	36,943	33,060	32,140	1,330	1,293	190	185
5	Waste Activated Solids	341,751		8,000	22,802	6,640	18,925	716	2,042	513	1,461	389,596		8,000	25,994	6,640	21,575	716	2,328	513	1,666	457,946		8,000	30,554	6,640	25,360	716	2,736	513	1,958
6	Washwater to GBTs	57,637										57,637										57,637									
7	GBT Filtrate Drain	347,442		393	1,140	327	946	35	102	25	73	388,014		402	1,300	333	1,079	36	116	26	83	445,975		411	1,528	341	1,268	37	137	26	98
8	Thickened WAS (from GBT)	51,946		50,000	21,662	41,500	17,979	4,477	1,940	3,205	1,388	59,219		50,000	24,694	41,500	20,496	4,477	2,211	3,205	1,583	69,608		50,000	29,026	41,500	24,092	4,477	2,599	3,205	1,860
9	Digester Feed Solids	138,937		42,487	49,231	36,216	41,964	2,507	2,905	1,317	1,526	158,388		42,487	56,123	36,216	47,839	2,507	3,311	1,317	1,740	186,176		42,487	65,969	36,216	56,232	2,507	3,892	1,317	2,045
10	Digested Solids to Dewatering	138,937		24,379	28,249	18,108	20,982	2,389	2,768	1,317	1,526	158,388		24,379	32,203	18,108	23,920	2,389	3,156	1,317	1,740	186,176		24,379	37,853	18,108	28,116	2,389	3,709	1,317	2,045
11	Dewatered Cake	16,512	137,712	200,000	27,542	148,554	20,458	11,968	1,648	7,544	1,039	18,824	156,992	200,000	31,398	148,554	23,322	11,968	1,879	7,544	1,184	22,126	184,534	200,000	36,907	148,554	27,413	11,968	2,209	7,544	1,392
12	Dried Solids		29,937	920,000	27,542	683,346	20,458	50,180	1,502	34,702	1,039		34,129	920,000	31,398	683,346	23,322	50,180	1,713	34,702	1,184		40,116	920,000	36,907	683,346	27,413	50,180	2,013	34,702	1,392
13	Centrate to Anammox Treatment	122,425		692	706	514	525	1,097	1,120	477	487	139,565		692	805	514	598	1,097	1,277	477	555	164,050		692	946	514	703	1,097	1,501	477	653
14	Centrate Reactor Effluent	122,425		692	706	514	525	329	336	477	487	139,565		692	805	514	598	329	383	477	555	164,050		692	946	514	703	329	450	477	653
15	Plant Drain Recycle	740,245		661	4,082	553	3,416	84	516	93	571	835,810		668	4,653	559	3,894	84	589	93	652	972,331		674	5,469	564	4,577	85	692	94	766

THE DRAWINGS IN THIS SET ARE RECORD DRAWINGS. THEY ARE CONSTRUCTION CONTRACT DRAWINGS WHICH HAVE BEEN REVISED BASED ON AVAILABLE FIELD INFORMATION RECORDED BY OTHERS DURING CONSTRUCTION OF THIS CONTRACT. THERE HAS BEEN NO VERIFICATION OF DIMENSIONS SHOWN ON THE CONSTRUCTION DRAWINGS OR THE ACCURACY/COMPLETENESS OF THE FIELD INFORMATION RECEIVED.

SIGNATURE — DATE 2/7/2022

AS-BUILT REPLACEMENT SHEET

PROFESSIONAL CERTIFICATION

THIS DRAWING WAS ORIGINALLY APPROVED FOR CONSTRUCTION AND SEALED BY ADAM S. PARMENTER, A REGISTERED PROFESSIONAL ENGINEER IN THE STATE OF MARYLAND, NO. 39376

NOTICE TO CONTRACTORS

- PROJECT ELEVATIONS ARE BASED ON NAVD88 AND HOWARD COUNTY'S BENCHMARK SYSTEM
- PREVIOUS PROJECTS USED OTHER DATUMS
- APPLY THE FOLLOWING CONVERSIONS WHEN USING PREVIOUS CONTRACT DRAWINGS:
  - ADDITION NO. 6: SUBTRACT 0.80 FT
  - PRIOR ADDITIONS: SUBTRACT 1.04 FT

DEPARTMENT OF PUBLIC WORKS
HOWARD COUNTY, MARYLAND

CHIEF, BUREAU OF UTILITIES — DATE

DES: ASP
DRN: REE
CHK: JRK
DATE: 01/2018

DATE	REV	DESCRIPTION
03/2021		RECORD DRAWINGS

GENERAL

SOLIDS HANDLING MASS BALANCE STARTUP CONDITION

LITTLE PATUXENT WATER RECLAMATION PLANT
8TH ADDITION
BIOSOLIDS PROCESSING FACILITIES - PHASE 2

CAPITAL PROJECT S-6295
CONTRACT NO. 24-4936

ELECTION DISTRICT NO. 6
HOWARD COUNTY, MARYLAND

SCALE AS SHOWN

SHEET 9 OF 311

G-10

BIM 360://10054364 – Little Patuxent WRP 8th Addition/264592_G_V18.rvt
1/7/2022 9:48:28 AM

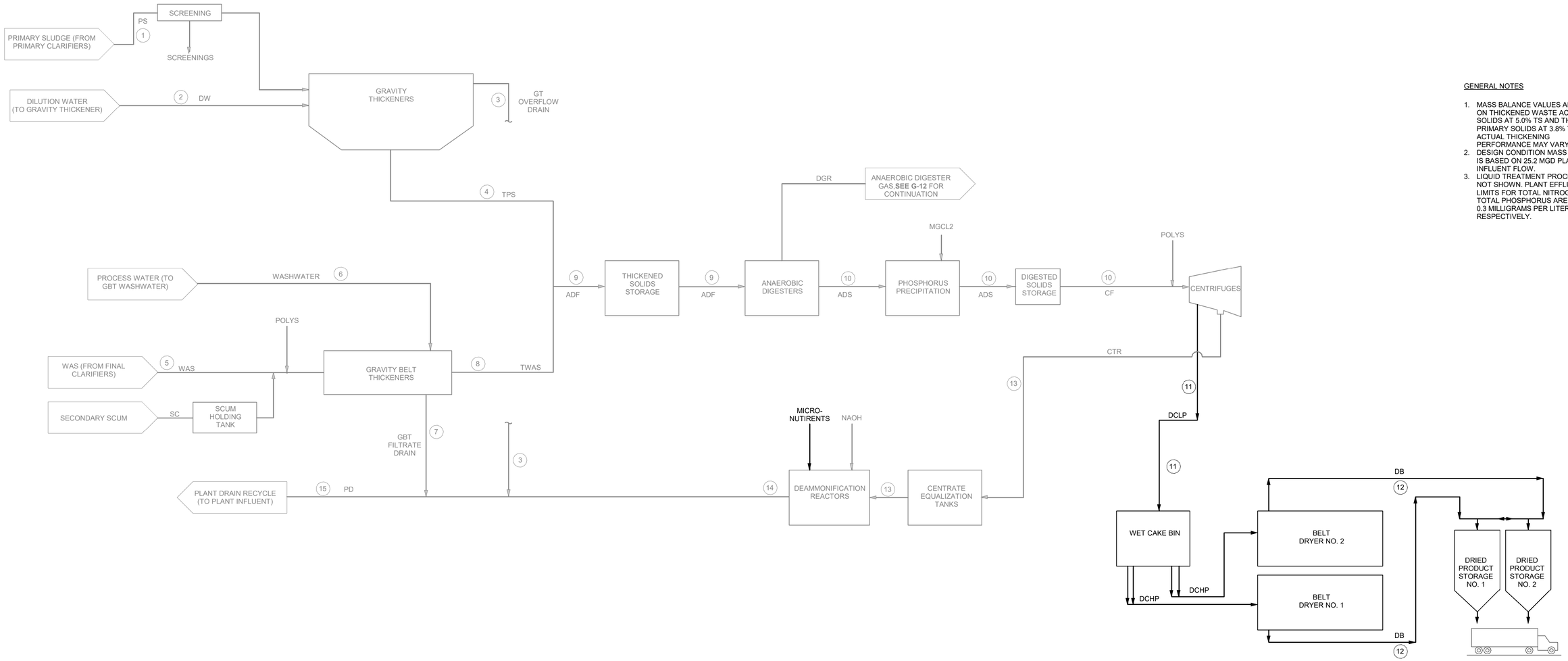

GENERAL NOTES

1. MASS BALANCE VALUES ARE BASED ON THICKENED WASTE ACTIVATED SOLIDS AT 5.0% TS AND THICKENED PRIMARY SOLIDS AT 3.8% TS. ACTUAL THICKENING PERFORMANCE MAY VARY.
2. DESIGN CONDITION MASS BALANCE IS BASED ON 25.2 MGD PLANT INFLUENT FLOW.
3. LIQUID TREATMENT PROCESS IS NOT SHOWN. PLANT EFFLUENT LIMITS FOR TOTAL NITROGEN AND TOTAL PHOSPHORUS ARE 4.0 AND 0.3 MILLIGRAMS PER LITER, RESPECTIVELY.

		DESIGN CONDITION - ANNUAL AVERAGE									DESIGN CONDITION - MAXIMUM MONTH									DESIGN CONDITION - PEAK WEEK								
		Flow	Mass	TSS		VSS		TN		TP	Flow	Mass	TSS		VSS		TN		TP		Flow	Mass	TSS		VSS		TN		TP	
Label	Description	gpd	lb/day	mg/l	lb/day	mg/l	lb/day	mg/l	lb/day	mg/l	lb/day	gpd	lb/day	mg/l	lb/day	mg/l	lb/day	mg/l	lb/day	mg/l	lb/day	gpd	lb/day	mg/l	lb/day	mg/l	lb/day	mg/l	lb/day	mg/l	lb/day
1	Primary Solids	225,142		20,000	37,554	17,400	32,672	700	1,314	100	188	256,662		20,000	42,811	17,400	37,246	700	1,498	100	214	301,691		20,000	50,322	17,400	43,780	700	1,761	100	252
2	Process Water to GTs	225,142		-	-	-	-	-	-	-	-	256,662		-	-	-	-	-	-	-	-	301,691									
3	Gravity Thickener Overflow Drain	340,676		991	2,817	862	2,450	35	99	5	14	388,371		991	3,211	862	2,793	35	112	5	16	456,506		991	3,774	862	3,284	35	132	5	19
4	Thickened Primary Solids (from GT)	109,609		38,000	34,737	33,060	30,221	1,330	1,216	190	174	124,954		38,000	39,600	33,060	34,452	1,330	1,386	190	198	146,876		38,000	46,548	33,060	40,497	1,330	1,629	190	233
5	Waste Activated Solids	430,606		8,000	28,730	6,640	23,846	716	2,573	513	1,841	490,891		8,000	32,752	6,640	27,184	716	2,933	513	2,099	577,012		8,000	38,498	6,640	31,954	716	3,447	513	2,467
6	Washwater to GBTs	57,637		-	-	-	-	-	-	-	-	57,637		-	-	-	-	-	-	-	-	57,637									
7	GBT Filtrate Drain	422,791		407	1,437	338	1,192	36	129	26	92	473,912		414	1,638	344	1,359	37	147	27	105	546,943		422	1,925	350	1,598	38	172	27	123
8	Thickened WAS (from GBT)	65,452		50,000	27,294	41,500	22,654	4,477	2,444	3,205	1,749	74,615		50,000	31,115	41,500	25,825	4,477	2,786	3,205	1,994	87,706		50,000	36,573	41,500	30,356	4,477	3,275	3,205	2,344
9	Digester Feed Solids	175,061		42,487	62,031	36,216	52,875	2,507	3,660	1,317	1,923	199,569		42,487	70,715	36,216	60,278	2,507	4,172	1,317	2,192	234,582		42,487	83,121	36,216	70,853	2,507	4,904	1,317	2,577
10	Digested Solids to Dewatering	175,061		24,379	35,593	18,108	26,438	2,389	3,488	1,317	1,923	199,569		24,379	40,576	18,108	30,139	2,389	3,976	1,317	2,192	234,582		24,379	47,695	18,108	35,426	2,389	4,674	1,317	2,577
11	Dewatered Cake	20,805	173,517	200,000	34,703	148,554	25,777	11,968	2,077	7,544	1,309	23,718	197,810	200,000	39,562	148,554	29,385	11,968	2,367	7,544	1,492	27,879	232,513	200,000	46,503	148,554	34,541	11,968	2,783	7,544	1,754
12	Dried Solids		37,721	920,000	34,703	683,346	25,777	50,180	1,893	34,702	1,309		43,002	920,000	39,562	683,346	29,385	50,180	2,158	34,702	1,492		50,546	920,000	46,503	683,346	34,541	50,180	2,536	34,702	1,754
13	Centrate to Anammox Treatment	154,256		692	890	514	661	1,097	1,411	477	614	175,851		692	1,014	514	753	1,097	1,609	477	700	206,702		692	1,192	514	886	1,097	1,891	477	823
14	Centrate Reactor Effluent	154,256		692	890	514	661	329	423	477	614	175,851		692	1,014	514	753	329	483	477	700	206,702		692	1,192	514	886	329	567	477	823
15	Plant Drain Recycle	917,723		672	5,143	562	4,304	85	651	94	720	1,038,135		677	5,863	567	4,906	86	742	95	821	1,210,152		683	6,891	571	5,767	86	872	96	965

THE DRAWINGS IN THIS SET ARE RECORD DRAWINGS. THEY ARE CONSTRUCTION CONTRACT DRAWINGS WHICH HAVE BEEN REVISED BASED ON AVAILABLE FIELD INFORMATION RECORDED BY OTHERS DURING CONSTRUCTION OF THIS CONTRACT. THERE HAS BEEN NO VERIFICATION OF DIMENSIONS SHOWN ON THE CONSTRUCTION DRAWINGS OR THE ACCURACY/COMPLETENESS OF THE FIELD INFORMATION RECEIVED.

SIGNATURE

DATE

BIM 360://10054364 – Little Patuxent WRP 8th Addition/264592_G_V18.rvt
1/7/2022 9:48:31 AM

AS-BUILT REPLACEMENT SHEET

PROFESSIONAL CERTIFICATION

THIS DRAWING WAS ORIGINALLY APPROVED FOR CONSTRUCTION AND SEALED BY ADAM S. PARMENTER, A REGISTERED PROFESSIONAL ENGINEER IN THE STATE OF MARYLAND, NO. 39376

NOTICE TO CONTRACTORS

- PROJECT ELEVATIONS ARE BASED ON NAVD88 AND HOWARD COUNTY'S BENCHMARK SYSTEM
- PREVIOUS PROJECTS USED OTHER DATUMS
- APPLY THE FOLLOWING CONVERSIONS WHEN USING PREVIOUS CONTRACT DRAWINGS:
  - ADDITION NO. 6: SUBTRACT 0.80 FT
  - PRIOR ADDITIONS: SUBTRACT 1.04 FT

DEPARTMENT OF PUBLIC WORKS
HOWARD COUNTY, MARYLAND

CHIEF, BUREAU OF UTILITIES DATE

DES: ASP
DRN: REE
CHK: JRK
DATE: 01/2018

DATE	REV	DESCRIPTION
03/2021		RECORD DRAWINGS

GENERAL

SOLIDS HANDLING MASS BALANCE DESIGN CONDITION

LITTLE PATUXENT WATER RECLAMATION PLANT
8TH ADDITION
BIOSOLIDS PROCESSING FACILITIES - PHASE 2

CAPITAL PROJECT S-6295
CONTRACT NO. 24-4936

ELECTION DISTRICT NO. 6
HOWARD COUNTY, MARYLAND

SCALE AS SHOWN

SHEET 10 OF 311

G-11

DIGESTER BOILERS

NUMBER OF UNITS	2
OUTPUT CAPACITY EACH	5 MMBTU/HR
NOMINAL EFFICIENCY	80%
MAX FUEL DEMAND AT FULL CAPACITY	12.5 MMBTU/HR 350 SCFM AS DIGESTER GAS 210 SCFM AS NATURAL GAS

TYPICAL BOILER FUEL DEMANDS

FLOW CONDITION	SEASON	TOTAL BOILER FUEL DEMAND (MMBTU/HR) / (SCFM DIGESTER GAS)
STARTUP AVERAGE	SUMMER	2.2 / 61
STARTUP AVERAGE	AVERAGE	3.1 / 86
DESIGN AVERAGE	AVERAGE	3.7 / 102
DESIGN AVERAGE	WINTER	5.4 / 150
DESIGN PEAK WEEK	WINTER	6.2 / 172

DIGESTER HEAT EXCHANGERS

NUMBER OF UNITS	3 (1 PER DIGESTER)
CAPACITY EACH	2.8 MMBTU/HR

FLARE

TYPE	ENCLOSED
MINIMUM CAPACITY	400 SCFM

ANAEROBIC DIGESTER GAS

ANAEROBIC DIGESTER GAS	
DESIGN AVERAGE	275 SCFM / 9.9 MMBTU/HR
DESIGN MAX MONTH	315 SCFM / 11.3 MMBTU/HR
DESIGN PEAK WEEK	370 SCFM / 13.3 MMBTU/HR
TYPICAL GAS PROPERTIES	
HEATING VALUE	600 BTU/CF
% METHANE	65%
% HYDROGEN SULFIDE	0.10 TO 0.15%

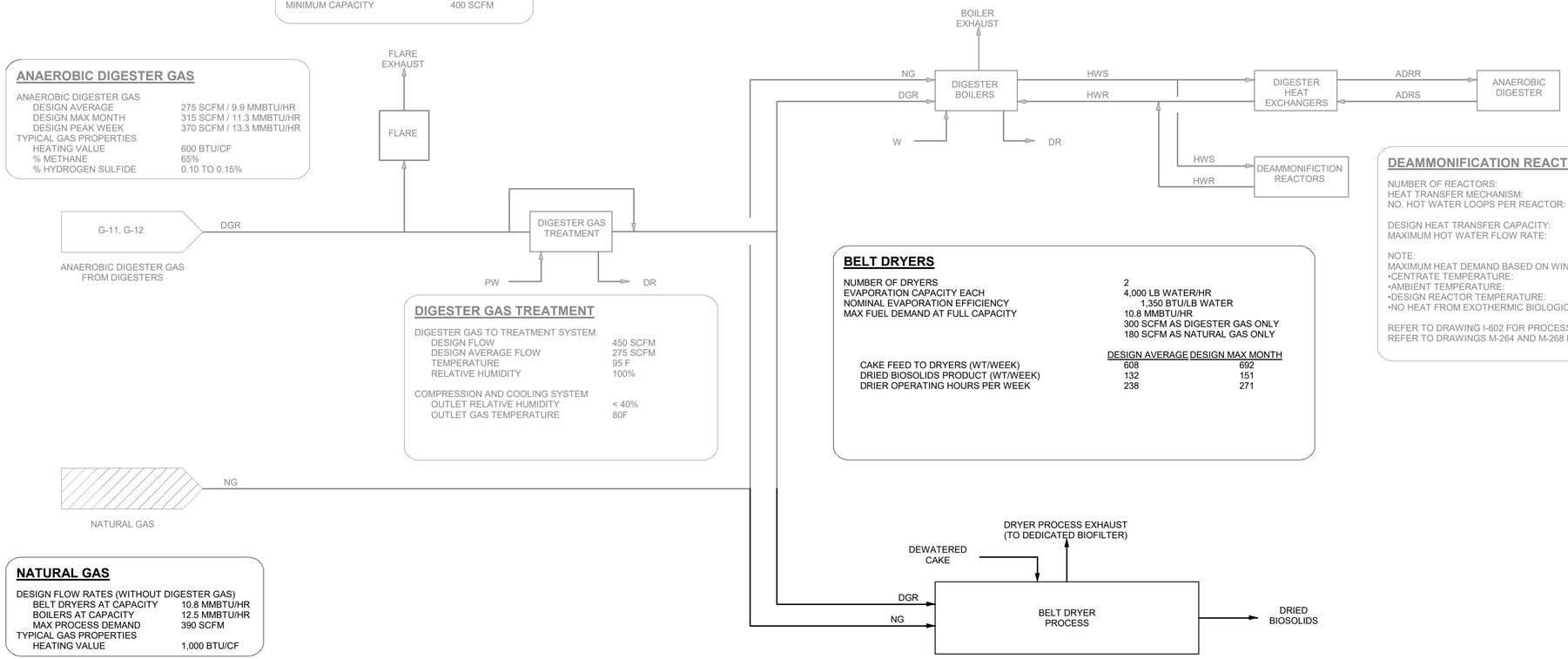

DEAMMONIFICATION REACTOR HEATING

NUMBER OF REACTORS:	2
HEAT TRANSFER MECHANISM:	SUBMERGED HOT WATER LOOPS
NO. HOT WATER LOOPS PER REACTOR:	10
DESIGN HEAT TRANSFER CAPACITY:	300,000 BTU/HR PER REACTOR
MAXIMUM HOT WATER FLOW RATE:	30 GPM PER REACTOR

NOTE:
MAXIMUM HEAT DEMAND BASED ON WINTER STARTUP CONDITIONS:
- •CENTRATE TEMPERATURE: 13 °C
- •AMBIENT TEMPERATURE: 0 °C
- •DESIGN REACTOR TEMPERATURE: 30 °C
- •NO HEAT FROM EXOTHERMIC BIOLOGICAL REACTIONS

REFER TO DRAWING I-602 FOR PROCESS & INSTRUMENTATION DIAGRAM.
REFER TO DRAWINGS M-264 AND M-268 FOR MECHANICAL PLANS AND SECTIONS.

DIGESTER GAS TREATMENT

DIGESTER GAS TO TREATMENT SYSTEM	
DESIGN FLOW	450 SCFM
DESIGN AVERAGE FLOW	275 SCFM
TEMPERATURE	95 F
RELATIVE HUMIDITY	100%
COMPRESSION AND COOLING SYSTEM	
OUTLET RELATIVE HUMIDITY	< 40%
OUTLET GAS TEMPERATURE	80F

BELT DRYERS

NUMBER OF DRYERS	2
EVAPORATION CAPACITY EACH	4,000 LB WATER/HR
NOMINAL EVAPORATION EFFICIENCY	1,350 BTU/LB WATER
MAX FUEL DEMAND AT FULL CAPACITY	10.8 MMBTU/HR 300 SCFM AS DIGESTER GAS ONLY 180 SCFM AS NATURAL GAS ONLY

	DESIGN AVERAGE	DESIGN MAX MONTH
CAKE FEED TO DRYERS (WT/WEEK)	608	692
DRIED BIOSOLIDS PRODUCT (WT/WEEK)	132	151
DRIER OPERATING HOURS PER WEEK	238	271

NATURAL GAS

DESIGN FLOW RATES (WITHOUT DIGESTER GAS)	
BELT DRYERS AT CAPACITY	10.8 MMBTU/HR
BOILERS AT CAPACITY	12.5 MMBTU/HR
MAX PROCESS DEMAND	390 SCFM
TYPICAL GAS PROPERTIES	
HEATING VALUE	1,000 BTU/CF

THE DRAWINGS IN THIS SET ARE RECORD DRAWINGS. THEY ARE CONSTRUCTION CONTRACT DRAWINGS WHICH HAVE BEEN REVISED BASED ON AVAILABLE FIELD INFORMATION RECORDED BY OTHERS DURING CONSTRUCTION OF THIS CONTRACT. THERE HAS BEEN NO VERIFICATION OF DIMENSIONS SHOWN ON THE CONSTRUCTION DRAWINGS OR THE ACCURACY/COMPLETENESS OF THE FIELD INFORMATION RECEIVED.

SIGNATURE 2/7/2023 DATE

AS-BUILT REPLACEMENT SHEET

PROFESSIONAL CERTIFICATION
THIS DRAWING WAS ORIGINALLY APPROVED FOR CONSTRUCTION AND SEALED BY ADAM S. PARMENTER, A REGISTERED PROFESSIONAL ENGINEER IN THE STATE OF MARYLAND, NO. 39376

NOTICE TO CONTRACTORS
- PROJECT ELEVATIONS ARE BASED ON NAVD88 AND HOWARD COUNTY'S BENCHMARK SYSTEM
- PREVIOUS PROJECTS USED OTHER DATUMS
- APPLY THE FOLLOWING CONVERSIONS WHEN USING PREVIOUS CONTRACT DRAWINGS:
  - ADDITION NO. 6: SUBTRACT 0.80 FT
  - PRIOR ADDITIONS: SUBTRACT 1.04 FT

DEPARTMENT OF PUBLIC WORKS
HOWARD COUNTY, MARYLAND

CHIEF, BUREAU OF UTILITIES DATE

DES: ASP
DRN: REE
CHK: JRK
DATE: 01/2018

DATE	REV	DESCRIPTION
03/2021		RECORD DRAWINGS

GENERAL

HEAT AND ENERGY SCHEMATIC

LITTLE PATUXENT WATER RECLAMATION PLANT
8TH ADDITION
BIOSOLIDS PROCESSING FACILITIES - PHASE 2

CAPITAL PROJECT S-6295
CONTRACT NO. 24-4936

ELECTION DISTRICT NO. 6
HOWARD COUNTY, MARYLAND

SCALE AS SHOWN

SHEET 11 OF 311

G-12

BIM 360://10054364 – Little Patuxent WRP 8th Addition/264592_G_V18.rvt
1/7/2022 9:48:33 AM

GBT POLYMER FEED

NUMBER OF POLYMER TRANSFER PUMPS	2
PUMP TYPE	ROTARY TYPE
MOTOR HP	3
DRIVE TYPE	CONSTANT SPEED
DESIGN FLOW AND TDH	12.5 GPM @ 40 PSIG

ANAEROBIC DIGESTER FEED

HOLDING TANKS - THICKENED SLUDGE CELLS

MIXER TYPE	LARGE BUBBLE COMPRESSED AIR
NUMBER OF COMPRESSORS	2 @ 25 HP (1 DUTY + 1 STANDBY)
OPERATING LEVEL RANGE	EL 132.2 TO EL 142.2
OPERATING VOLUME RANGE, CELL 1 (GAL)	14,000 TO 60,000
OPERATING VOLUME RANGE, CELL 2 (GAL)	47,000 TO 198,000

DIGESTER FEED PUMPS

NUMBER OF UNITS INSTALLED	2
NUMBER OF UNITS OPERATING	1
OPERATING SCHEDULE	CONTINUOUS
PUMP TYPE	PROGRESSING CAVITY
MOTOR HP	15
DRIVE TYPE	VFD
DESIGN FLOW AND TDH	200 GPM @ 32 PSIG

ANAEROBIC DIGESTION, MIXING, AND TRANSFER

ANAEROBIC DIGESTERS

NUMBER OF UNITS INSTALLED	3
DIMENSIONS	80 FT DIA X 45 FT (40 FT SWD)
OPERATING VOLUME EACH	1.55 MG
TEMPERATURE	95 TO 98 F
DESIGN HRT (DAYS)	15 AT MAX MONTH WITH 2 DIGESTERS IN SERVICE
DESIGN SOLIDS LOADING (LB VS/DAY/CF)	0.9 TO 0.17

OPERATING CONDITIONS	ANNUAL AVERAGE	MAX MONTH
HRT WITH 2 DIGESTERS (DAYS)	17.6	15.5
HRT WITH 3 DIGESTERS (DAYS)	26.5	23.2
SOLIDS LOADING WITH 2 DIGESTERS (LBS VS/DAY/CF)	0.13	0.15
SOLIDS LOADING WITH 3 DIGESTERS (LBS VS/DAY/CF)	0.09	0.1

DIGESTER MIXING PUMPS

NUMBER OF UNITS INSTALLED	3 (1 PER DIGESTER)
NUMBER OF UNITS OPERATING	3
PUMP TYPE	CHOPPER
MOTOR HORSEPOWER	75
DRIVE TYPE	VFD
DESIGN FLOW AND TDH	6,200 GPM @ 40 FT

DIGESTER TRANSFER PUMPS

NUMBER OF PUMPS INSTALLED	3
PUMP TYPE	PROGRESSING CAVITY
MOTOR HP	15
DRIVE TYPE	VFD
DESIGN FLOW AND TDH	200 GPM @ 28 PSIG

ANAEROBIC DIGESTER HEATING AND BIOGAS

DIGESTER RECIRCULATION PUMPS

NUMBER OF UNITS INSTALLED	3
NUMBER OF UNITS OPERATING	3
PUMP TYPE	CENTRIFUGAL
MOTOR HP	7.5
DRIVE TYPE	CONSTANT SPEED
DESIGN CONDITION	500 GPM @ 10 PSIG

DIGESTER HEAT EXCHANGERS

NUMBER OF UNITS INSTALLED	3 (1 PER DIGESTER)
TYPE	TUBE-IN-TUBE
DESIGN HEAT TRANSFER CAPACITY EACH	2.8 MMBTU/HR
HEAT TRANSFER AREA EACH (SF)	300
HOT WATER SUPPLY TEMPERATURE	155 F
HOT WATER FLOW RATE (GPM)	400 GPM (200 GPM PER PASS)
PRESSURE DROP, MAX	13 FT

HOT WATER BOILERS

NUMBER OF UNITS INSTALLED	2 (1 RELOCATED, 1 NEW)
TYPE	TUBE-FIRED HOT WATER
FUEL SYSTEM	DUAL DIGESTER/NATURAL GAS
RATED OUTPUT EACH (MMBTU/HR)	5

HOT WATER SUPPLY PUMPS

NUMBER OF PUMPS INSTALLED	3
NUMBER OF PUMPS OPERATING	3
PUMP TYPE	CENTRIFUGAL
MOTOR HORSEPOWER	5
DRIVE TYPE	VFD
DESIGN FLOW AND TDH	251 GPM @ 40 PSIG

DIGESTER COVERS

TYPE	FIXED
NUMBER OF UNITS INSTALLED	2
OPERATING PRESSURE (INCHES WC)	8
DESIGN PRESSURE (INCHES WC)	16

DIGESTER GAS STORAGE

TYPE OF STORAGE	MEMBRANE GASHOLDER COVER
NUMBER OF UNITS INSTALLED	1 (DIGESTER NO. 3)
MAXIMUM VOLUME EACH (CF)	130,000
OPERATING PRESSURE (INCHES WC)	8

DIGESTER GAS FLARE

NUMBER OF UNITS INSTALLED	1
CAPACITY (SCFM)	400

DIGESTER GAS TREATMENT

SEE DWG G-13

PHOSPHORUS PRECIPITATION

PHOSPHORUS PRECIPITATION REACTOR AND PUMP

REACTOR VOLUME (GAL)	40,000
PUMP TYPE	PROGRESSING CAVITY
PUMP OPERATING SCHEDULE	PERIODIC (5 MIN PER HOUR)
MOTOR HP AND DRIVE TYPE	3 HP, VFD
PUMP FLOW RATE	5 TO 22 GPM @ 65 PSIG

MAGNESIUM CHLORIDE STORAGE AND FEED

TANK VOLUME (GAL)	8,000
CHEMICAL STORED	30-35% MAG CHLORIDE
TYPE OF TANK	DUAL WALL XLPE, INSULATED/HEAT TRACED
NUMBER OF METERING PUMPS	2 (1 DUTY + 1 STANDBY)
TYPE OF PUMP	DIAPHRAGM METERING PUMP
PUMP CAPACITY	55 GPH @ 60 PSIG

DEWATERING AND DRYING

HOLDING TANKS - DIGESTED SOLIDS CELLS

CELL 1	
MIXER TYPE	CHOPPER PUMP/JET
NUMBER OF UNITS INSTALLED	2 (1 DUTY + 1 STANDBY)
MOTOR HORSEPOWER	20
DRIVE TYPE	VFD
OPERATING LEVEL RANGE	EL 132.2 TO EL 142.2
OPERATING VOLUME RANGE (GAL)	14,000 TO 60,000
CELL 2	
MIXER TYPE	SUBMERSIBLE
NUMBER OF UNITS INSTALLED	4 @ 7.5 HP (EXISTING, RELOCATED)
OPERATING LEVEL RANGE	EL 132.2 TO EL 142.2
OPERATING VOLUME RANGE (GAL)	47,000 TO 198,000

POLYMER TRANSFER PUMPS (EXISTING)

NUMBER OF POLYMER TRANSFER PUMPS	2
PUMP TYPE	ROTARY TYPE
MOTOR HP	3
DRIVE TYPE	CONSTANT SPEED
DESIGN FLOW AND TDH	12.5 GPM @ 40 PSIG

CENTRIFUGE POLYMER SYSTEM (EXISTING)

POLYMER DAY TANK MATERIAL	FRP
POLYMER DAY TANK VOLUME	1000 GALLONS
NUMBER OF POLYMER FEED PUMPS	2
POLYMER FEED PUMP TYPE	x
POLYMER FEED PUMP HP	x
POLYMER FEED PUMP DRIVE TYPE	x
POLYMER FEED PUMP DESIGN FLOW AND TDH (40% SOLUTION)	x
NUMBER OF POLYMER BLEND UNITS	2
DESIGN POLYMER DOSE (LB/DTON)	20 TO 30
NUMBER OF POLYMER METERING PUMPS	3
POLYMER METERING PUMP TYPE	x
BLENDED POLYMER FLOW, 0.5% SOLUTION	x

CENTRIFUGE FEED PUMPS (EXISTING)

NUMBER OF UNITS INSTALLED	3
NUMBER OF UNITS OPERATING	1
PUMP TYPE	PROGRESSING CAVITY
MOTOR HP	25
DRIVE TYPE	VFD
DESIGN FLOW AND TDH	200 GPM @ 75 PSIG

CENTRIFUGES (EXISTING)

NUMBER OF UNITS INSTALLED	3 (EXISTING, RELOCATED)
NUMBER OF UNITS OPERATING	1
SOLIDS CAPTURE EFFICIENCY*	97.5%
CAKE SOLIDS*	20%
SOLIDS LOADING CAPACITY (LBS/HR)	2,250 (NO. 1 & 3), 3,000 (NO. 2)
HYDRAULIC CAPACITY (GPM @ 2% SOLIDS)	150-225 (NO. 1 & 3), 105-300 GPM (NO. 2)

OPERATING CONDITIONS	ANNUAL AVERAGE	MAX MONTH
NUMBER OF UNITS OPERATING	1	1
CENTRIFUGE OPERATING HOURS/WEEK	120	144
SOLIDS LOADING RATE (DRY TONS/HR)	2020	1920
HYDRAULIC LOADING RATE (GPM)	170	162

BELT DRYERS

OPERATING HOURS PER YEAR	6240
OPERATING HOURS PER WEEK	24/5
NUMBER OF DRYER UNITS	2
DRY SOLIDS THROUGHPUT (TONDS/DAY)	12.2
DRY SOLIDS (DSTON/HR)	0.51
SLUDGE INPUT (%DS)	20%
SLUDGE INPUT (TONS/HR)	2.55
SLUDGE INPUT (TONS/DAY)	61
SLUDGE OUTPUT (%DS)	92%
SLUDGE OUTPUT (TONS/HR)	0.55
SLUDGE OUTPUT (TONS/DAY)	13.3
SLUDGE OUTPUT (°F)	100
SLUDGE OUTPUT (BULK DENSITY LBS/FT3)	35
WATER EVAPORATION TOTAL (LBS/HR)	3990
EXHAUST AIR TO ODOR CONTROL (CFM-NORM)	2217
AFTER CONDENSER (TEMP °F)	105
THERMAL ENERGY REQUIREMENT (MBTU/HR)	5.407
NATURAL GAS LHV (BTU/FT3)	950
NATURAL GAS FLOW RATE (FT3/MIN)	95
BIOGAS LHV (BTU/FT3)	450
BIOGAS FLOW RATE (FT3/MIN)	200
ELECTRICAL POWER INSTALLED (HP)	227
ELECTRICAL POWER CONSUMPTION (HPh/h)	182
THERMAL RATIO (MBTU/TON OF H2O)	1355
ELECTRICAL RATIO (HP/TON OF H2O EVAP)	91

DRIED BIOSOLIDS STORAGE (PHASE 2)

TYPE	ELEVATED SILO
NUMBER OF UNITS INSTALLED	2
WORKING CAPACITY EACH (CF)	10500

CENTRATE DEAMMONIFICATION

CENTRATE EQUALIZATION TANKS

NUMBER OF EQUALIZATION TANKS	2 (+1 EMERGENCY OVERFLOW TANK)
EQ TANK VOLUME, EACH	200,000 GAL
EMERGENCY OVERFLOW TANK VOLUME	360,000 GAL

CENTRATE FEED PUMPS

NUMBER OF PUMPS INSTALLED	3 (2 DUTY + 1 STANDBY)
OPERATING SCHEDULE	CONTINUOUS
PUMP TYPE	END SUCTION CENTRIFUGAL
MOTOR HP	1.5
DRIVE TYPE	VFD
PRIMARY DESIGN POINT	70 GPM @ 21.2 FT TDH
SECONDARY DESIGN POINT	42 GPM @ 4.9 FT TDH

ODOR CONTROL BIOFILTERS

TYPE	BIOFILTERS: PARALLEL UNITS
NUMBER OF UNITS INSTALLED	2
WORKING CAPACITY EACH (CFM)	3600
TYPE	VFD BIOFILTER FAN BLOWERS NOS. 3 AND 4
NUMBER OF UNITS INSTALLED	2
WORKING CAPACITY EACH (CFM)	7200, 13 INCHES W.C.

THE DRAWINGS IN THIS SET ARE RECORD DRAWINGS. THEY ARE CONSTRUCTION CONTRACT DRAWINGS WHICH HAVE BEEN REVISED BASED ON AVAILABLE FIELD INFORMATION RECORDED BY OTHERS DURING CONSTRUCTION OF THIS CONTRACT. THERE HAS BEEN NO VERIFICATION OF DIMENSIONS SHOWN ON THE CONSTRUCTION DRAWINGS OR THE ACCURACY/COMPLETENESS OF THE FIELD INFORMATION RECEIVED.

SIGNATURE — DATE 2/7/2023

GENERAL NOTES:
1. DRAWING IS FOR INFORMATIONAL PURPOSE ONLY. SEE SPECIFICATIONS FOR EQUIPMENT REQUIREMENTS.

BIM 360://10054364 – Little Patuxent WRP 8th Addition/284592_G_V18.rvt
1/7/2022 9:48:38 AM

AS-BUILT REPLACEMENT SHEET

PROFESSIONAL CERTIFICATION
THIS DRAWING WAS ORIGINALLY APPROVED FOR CONSTRUCTION AND SEALED BY ADAM S. PARMENTER, A REGISTERED PROFESSIONAL ENGINEER IN THE STATE OF MARYLAND, NO. 39376

NOTICE TO CONTRACTORS
- PROJECT ELEVATIONS ARE BASED ON NAVD88 AND HOWARD COUNTY'S BENCHMARK SYSTEM
- PREVIOUS PROJECTS USED OTHER DATUMS
- APPLY THE FOLLOWING CONVERSIONS WHEN USING PREVIOUS CONTRACT DRAWINGS:
  - ADDITION NO. 6: SUBTRACT 0.80 FT
  - PRIOR ADDITIONS: SUBTRACT 1.04 FT

DEPARTMENT OF PUBLIC WORKS
HOWARD COUNTY, MARYLAND

CHIEF, BUREAU OF UTILITIES — DATE

DES: ASP
DRN: REE
CHK: JRK
DATE: 01/2018

DATE	REV	DESCRIPTION
03/2021		RECORD DRAWINGS

GENERAL

DESIGN CRITERIA

LITTLE PATUXENT WATER RECLAMATION PLANT
8TH ADDITION
BIOSOLIDS PROCESSING FACILITIES - PHASE 2

CAPITAL PROJECT S-6295
CONTRACT NO. 24-4936

ELECTION DISTRICT NO. 6
HOWARD COUNTY, MARYLAND

SCALE AS SHOWN

SHEET 12 OF 311

G-13

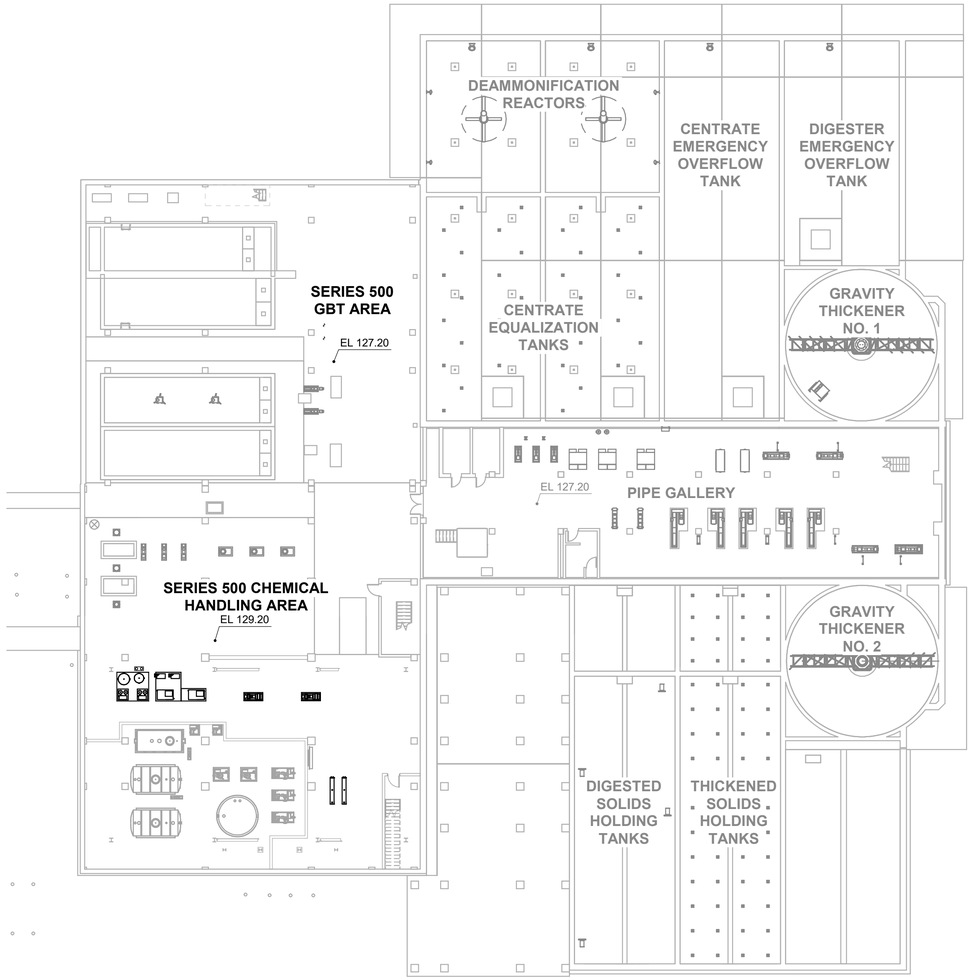

PLAN AT EL 127.20

1" = 20'-0"

THE DRAWINGS IN THIS SET ARE RECORD DRAWINGS. THEY ARE CONSTRUCTION CONTRACT DRAWINGS WHICH HAVE BEEN REVISED BASED ON AVAILABLE FIELD INFORMATION RECORDED BY OTHERS DURING CONSTRUCTION OF THIS CONTRACT. THERE HAS BEEN NO VERIFICATION OF DIMENSIONS SHOWN ON THE CONSTRUCTION DRAWINGS OR THE ACCURACY/COMPLETENESS OF THE FIELD INFORMATION RECEIVED.

SIGNATURE — DATE: 2/7/2023

AS-BUILT REPLACEMENT SHEET

PROFESSIONAL CERTIFICATION

THIS DRAWING WAS ORIGINALLY APPROVED FOR CONSTRUCTION AND SEALED BY ADAM S. PARMENTER, A REGISTERED PROFESSIONAL ENGINEER IN THE STATE OF MARYLAND, NO. 39376

NOTICE TO CONTRACTORS

- PROJECT ELEVATIONS ARE BASED ON NAVD88 AND HOWARD COUNTY'S BENCHMARK SYSTEM
- PREVIOUS PROJECTS USED OTHER DATUMS
- APPLY THE FOLLOWING CONVERSIONS WHEN USING PREVIOUS CONTRACT DRAWINGS:
  - ADDITION NO. 6: SUBTRACT 0.80 FT
  - PRIOR ADDITIONS: SUBTRACT 1.04 FT

DEPARTMENT OF PUBLIC WORKS
HOWARD COUNTY, MARYLAND

CHIEF, BUREAU OF UTILITIES — DATE

DES: CJM
DRN: REE
CHK: JRK
DATE: 01/2019

DATE	REV	DESCRIPTION
03/2021		RECORD DRAWINGS

GENERAL

OVERALL KEY PLAN 1

LITTLE PATUXENT WATER RECLAMATION PLANT
8TH ADDITION
BIOSOLIDS PROCESSING FACILITIES - PHASE 2

CAPITAL PROJECT S-6295
CONTRACT NO. 24-4936

ELECTION DISTRICT NO. 6
HOWARD COUNTY, MARYLAND

SCALE AS SHOWN

SHEET 13 OF 311

G-14

BIM 360://10054364 – Little Patuxent WRP 8th Addition/264592_100_D_V18.rvt
1/7/2022 12:46:23 PM

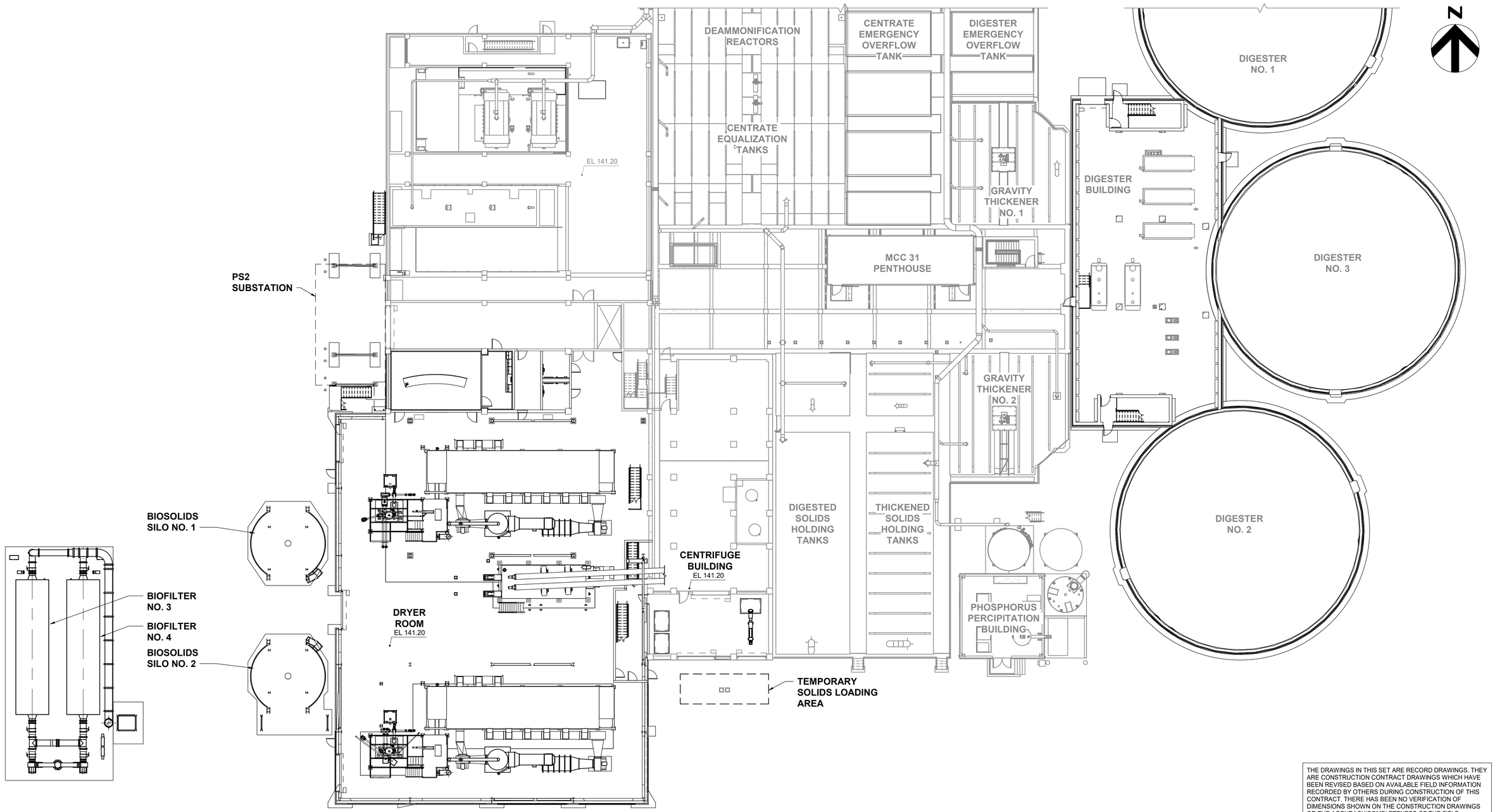

PLAN AT EL 141.20

1/16" = 1'-0"

THE DRAWINGS IN THIS SET ARE RECORD DRAWINGS. THEY ARE CONSTRUCTION CONTRACT DRAWINGS WHICH HAVE BEEN REVISED BASED ON AVAILABLE FIELD INFORMATION RECORDED BY OTHERS DURING CONSTRUCTION OF THIS CONTRACT. THERE HAS BEEN NO VERIFICATION OF DIMENSIONS SHOWN ON THE CONSTRUCTION DRAWINGS OR THE ACCURACY/COMPLETENESS OF THE FIELD INFORMATION RECEIVED.

SIGNATURE — DATE 2/7/2022

AS-BUILT REPLACEMENT SHEET

PROFESSIONAL CERTIFICATION

THIS DRAWING WAS ORIGINALLY APPROVED FOR CONSTRUCTION AND SEALED BY ADAM S. PARMENTER, A REGISTERED PROFESSIONAL ENGINEER IN THE STATE OF MARYLAND, NO. 39376

NOTICE TO CONTRACTORS

- PROJECT ELEVATIONS ARE BASED ON NAVD88 AND HOWARD COUNTY'S BENCHMARK SYSTEM
- PREVIOUS PROJECTS USED OTHER DATUMS
- APPLY THE FOLLOWING CONVERSIONS WHEN USING PREVIOUS CONTRACT DRAWINGS:
  - ADDITION NO. 6: SUBTRACT 0.80 FT
  - PRIOR ADDITIONS: SUBTRACT 1.04 FT

DEPARTMENT OF PUBLIC WORKS
HOWARD COUNTY, MARYLAND

CHIEF, BUREAU OF UTILITIES — DATE

DES: ADP
DRN: SLB
CHK: JRK
DATE: 01/2019

DATE	REV	DESCRIPTION
03/2021		RECORD DRAWINGS

GENERAL

OVERALL KEY PLAN 2

LITTLE PATUXENT WATER RECLAMATION PLANT
8TH ADDITION
BIOSOLIDS PROCESSING FACILITIES - PHASE 2

CAPITAL PROJECT S-6295
CONTRACT NO. 24-4936

ELECTION DISTRICT NO. 6
HOWARD COUNTY, MARYLAND

SCALE AS SHOWN

SHEET 14 OF 311

G-15

BIM 360://10054364 – Little Patuxent WRP 8th Addition/264592_100_D_V18.rvt
1/7/2022 12:46:49 PM

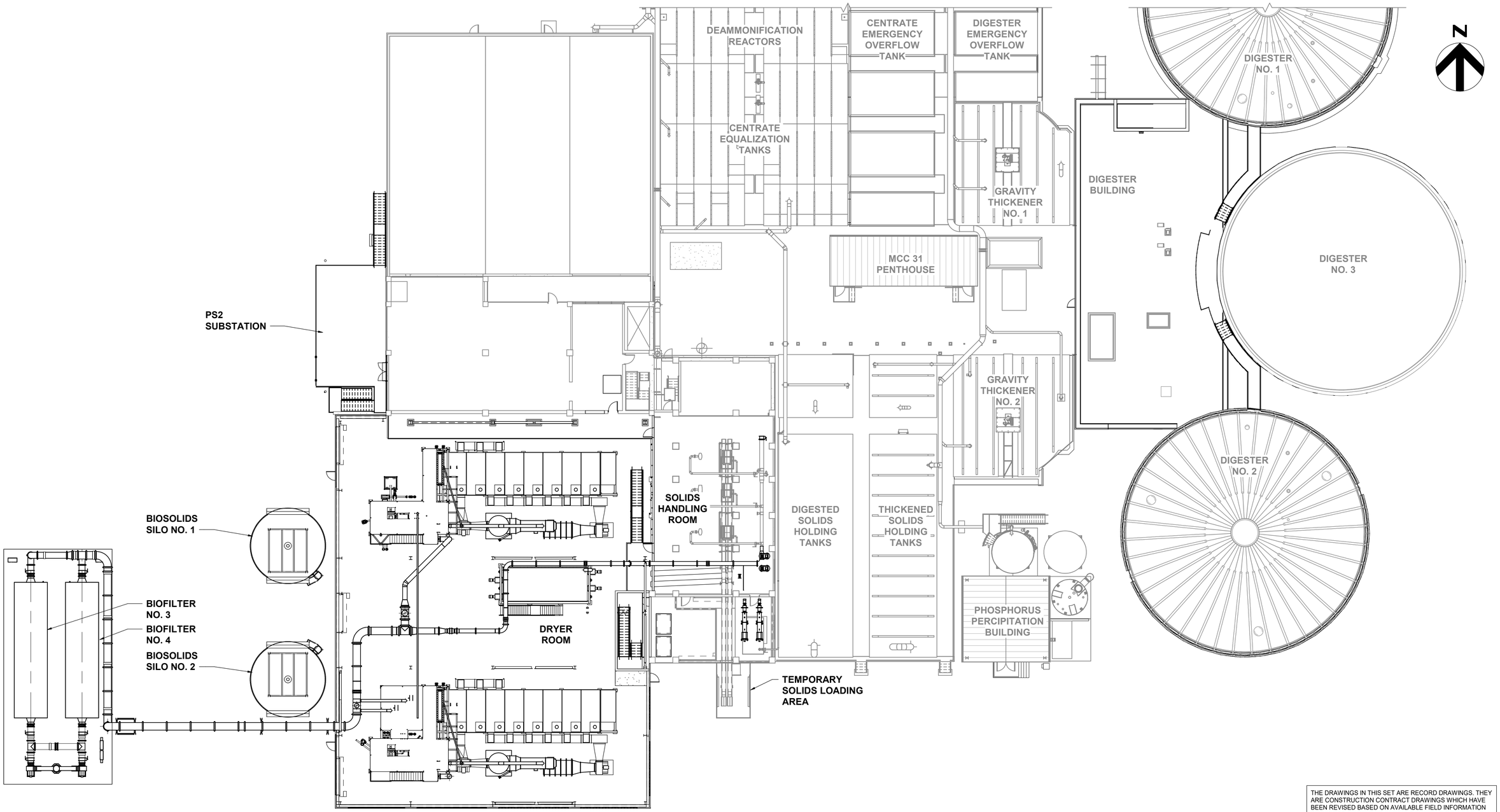

PLAN AT EL 155.20

1/16" = 1'-0"

THE DRAWINGS IN THIS SET ARE RECORD DRAWINGS. THEY ARE CONSTRUCTION CONTRACT DRAWINGS WHICH HAVE BEEN REVISED BASED ON AVAILABLE FIELD INFORMATION RECORDED BY OTHERS DURING CONSTRUCTION OF THIS CONTRACT. THERE HAS BEEN NO VERIFICATION OF DIMENSIONS SHOWN ON THE CONSTRUCTION DRAWINGS OR THE ACCURACY/COMPLETENESS OF THE FIELD INFORMATION RECEIVED.

SIGNATURE _____ DATE 2/7/2022

AS-BUILT REPLACEMENT SHEET

PROFESSIONAL CERTIFICATION

THIS DRAWING WAS ORIGINALLY APPROVED FOR CONSTRUCTION AND SEALED BY ADAM S. PARMENTER, A REGISTERED PROFESSIONAL ENGINEER IN THE STATE OF MARYLAND, NO. 39376

NOTICE TO CONTRACTORS

- PROJECT ELEVATIONS ARE BASED ON NAVD88 AND HOWARD COUNTY'S BENCHMARK SYSTEM
- PREVIOUS PROJECTS USED OTHER DATUMS
- APPLY THE FOLLOWING CONVERSIONS WHEN USING PREVIOUS CONTRACT DRAWINGS:
  - ADDITION NO. 6: SUBTRACT 0.80 FT
  - PRIOR ADDITIONS: SUBTRACT 1.04 FT

DEPARTMENT OF PUBLIC WORKS
HOWARD COUNTY, MARYLAND

CHIEF, BUREAU OF UTILITIES DATE

DES: ADP
DRN: REE
CHK: JRK
DATE: 01/2019

DATE	REV	DESCRIPTION
03/2021		RECORD DRAWINGS

GENERAL

OVERALL KEY PLAN 3

LITTLE PATUXENT WATER RECLAMATION PLANT
8TH ADDITION
BIOSOLIDS PROCESSING FACILITIES - PHASE 2

CAPITAL PROJECT S-6295
CONTRACT NO. 24-4936

ELECTION DISTRICT NO. 6
HOWARD COUNTY, MARYLAND

SCALE AS SHOWN

SHEET 15 OF 311

G-16

BIM 360://10054364 – Little Patuxent WRP 8th Addition/264592_100_D_V18.rvt
1/7/2022 12:47:22 PM

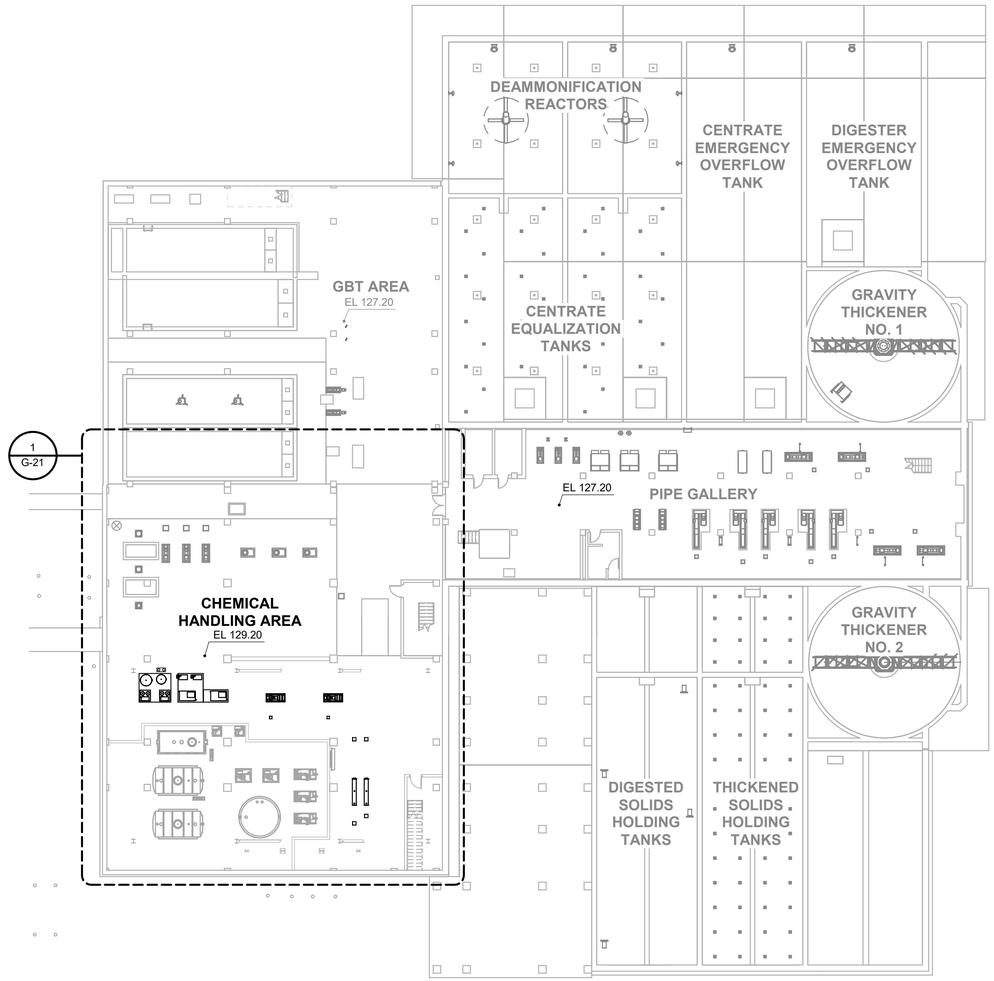

PLAN AT EL 127.20

1" = 20'-0"

N

NOTE:
1. AREA CLASSIFICATIONS PER NFPA-820 (2016)
2. ALL ODOR CONTROL EQUIPMENT AND PIPING IS CLASS I, DIVISION 2, GROUP D WITHIN 3 FT IN ALL DIRECTIONS OF LEAKAGE SOURCES PER NFPA 820 TABLE 4.2.2, ROW 20, LINE D AND FIGURE A.4.2(G).

LEGEND

- CLASS 1, DIVISION 1, GROUP D
- CLASS 1, DIVISION 2, GROUP D
- CLASS II, DIVISION 1, GROUP G
- CLASS II, DIVISION 2, GROUP G
- UNCLASSIFIED

THE DRAWINGS IN THIS SET ARE RECORD DRAWINGS. THEY ARE CONSTRUCTION CONTRACT DRAWINGS WHICH HAVE BEEN REVISED BASED ON AVAILABLE FIELD INFORMATION RECORDED BY OTHERS DURING CONSTRUCTION OF THIS CONTRACT. THERE HAS BEEN NO VERIFICATION OF DIMENSIONS SHOWN ON THE CONSTRUCTION DRAWINGS OR THE ACCURACY/COMPLETENESS OF THE FIELD INFORMATION RECEIVED.

SIGNATURE — DATE 2/7/2023

AS-BUILT REPLACEMENT SHEET

PROFESSIONAL CERTIFICATION

THIS DRAWING WAS ORIGINALLY APPROVED FOR CONSTRUCTION AND SEALED BY ADAM S. PARMENTER, A REGISTERED PROFESSIONAL ENGINEER IN THE STATE OF MARYLAND, NO. 39376

NOTICE TO CONTRACTORS

- PROJECT ELEVATIONS ARE BASED ON NAVD88 AND HOWARD COUNTY'S BENCHMARK SYSTEM
- PREVIOUS PROJECTS USED OTHER DATUMS
- APPLY THE FOLLOWING CONVERSIONS WHEN USING PREVIOUS CONTRACT DRAWINGS:
  - ADDITION NO. 6: SUBTRACT 0.80 FT
  - PRIOR ADDITIONS: SUBTRACT 1.04 FT

DEPARTMENT OF PUBLIC WORKS
HOWARD COUNTY, MARYLAND

CHIEF, BUREAU OF UTILITIES — DATE

DES: ADP
DRN: REE
CHK: JRK
DATE: 01/2019

DATE	REV	DESCRIPTION
03/2021		RECORD DRAWINGS

GENERAL

AREA CLASSIFICATION - OVERALL KEY PLAN 1

LITTLE PATUXENT WATER RECLAMATION PLANT
8TH ADDITION
BIOSOLIDS PROCESSING FACILITIES - PHASE 2

CAPITAL PROJECT S-6295
CONTRACT NO. 24-4936

ELECTION DISTRICT NO. 6
HOWARD COUNTY, MARYLAND

SCALE AS SHOWN

SHEET 16 OF 311

G-17

BIM 360://10054364 – Little Patuxent WRP 8th Addition/264592_100_D_V18.rvt
1/7/2022 12:47:26 PM

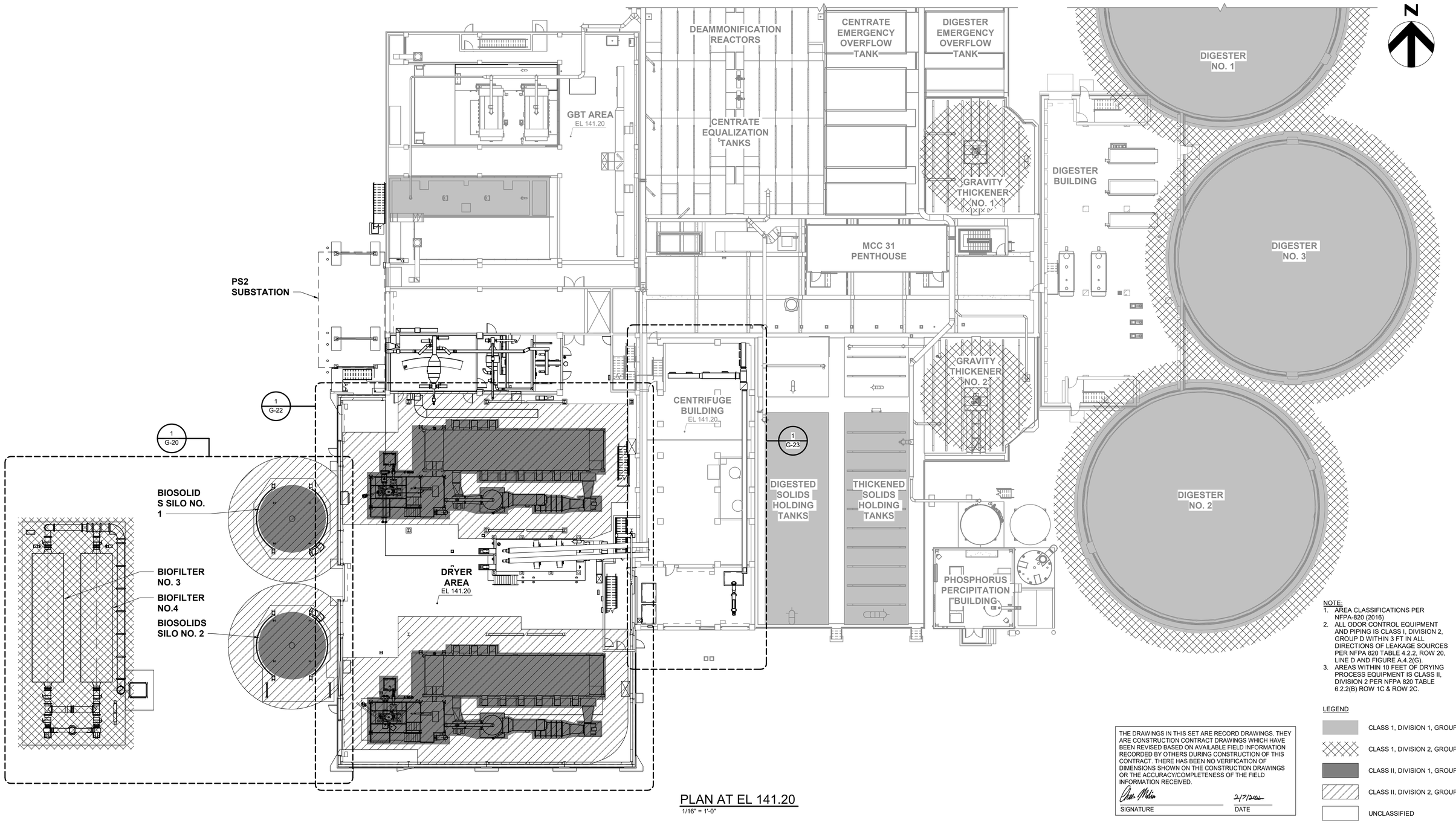

PLAN AT EL 141.20
1/16" = 1'-0"

NOTE:
1. AREA CLASSIFICATIONS PER NFPA-820 (2016)
2. ALL ODOR CONTROL EQUIPMENT AND PIPING IS CLASS I, DIVISION 2, GROUP D WITHIN 3 FT IN ALL DIRECTIONS OF LEAKAGE SOURCES PER NFPA 820 TABLE 4.2.2, ROW 20, LINE D AND FIGURE A.4.2(G).
3. AREAS WITHIN 10 FEET OF DRYING PROCESS EQUIPMENT IS CLASS II, DIVISION 2 PER NFPA 820 TABLE 6.2.2(B) ROW 1C & ROW 2C.

LEGEND

- CLASS 1, DIVISION 1, GROUP D
- CLASS 1, DIVISION 2, GROUP D
- CLASS II, DIVISION 1, GROUP G
- CLASS II, DIVISION 2, GROUP G
- UNCLASSIFIED

THE DRAWINGS IN THIS SET ARE RECORD DRAWINGS. THEY ARE CONSTRUCTION CONTRACT DRAWINGS WHICH HAVE BEEN REVISED BASED ON AVAILABLE FIELD INFORMATION RECORDED BY OTHERS DURING CONSTRUCTION OF THIS CONTRACT. THERE HAS BEEN NO VERIFICATION OF DIMENSIONS SHOWN ON THE CONSTRUCTION DRAWINGS OR THE ACCURACY/COMPLETENESS OF THE FIELD INFORMATION RECEIVED.

SIGNATURE — DATE 2/7/2023

AS-BUILT REPLACEMENT SHEET

PROFESSIONAL CERTIFICATION

THIS DRAWING WAS ORIGINALLY APPROVED FOR CONSTRUCTION AND SEALED BY ADAM S. PARMENTER, A REGISTERED PROFESSIONAL ENGINEER IN THE STATE OF MARYLAND, NO. 39376

NOTICE TO CONTRACTORS

- PROJECT ELEVATIONS ARE BASED ON NAVD88 AND HOWARD COUNTY'S BENCHMARK SYSTEM
- PREVIOUS PROJECTS USED OTHER DATUMS
- APPLY THE FOLLOWING CONVERSIONS WHEN USING PREVIOUS CONTRACT DRAWINGS:
  - ADDITION NO. 6: SUBTRACT 0.80 FT
  - PRIOR ADDITIONS: SUBTRACT 1.04 FT

DEPARTMENT OF PUBLIC WORKS
HOWARD COUNTY, MARYLAND

CHIEF, BUREAU OF UTILITIES — DATE

DES: ADP
DRN: REE
CHK: JRK
DATE: 01/2019

DATE	REV	DESCRIPTION
03/2021		RECORD DRAWINGS

GENERAL

AREA CLASSIFICATION - OVERALL KEY PLAN 2

LITTLE PATUXENT WATER RECLAMATION PLANT
8TH ADDITION
BIOSOLIDS PROCESSING FACILITIES - PHASE 2

CAPITAL PROJECT S-6295
CONTRACT NO. 24-4936

ELECTION DISTRICT NO. 6
HOWARD COUNTY, MARYLAND

SCALE AS SHOWN

SHEET 17 OF 311

G-18

BIM 360://10054364 – Little Patuxent WRP 8th Addition/264592_100_D_V18.rvt
1/7/2022 12:48:57 PM

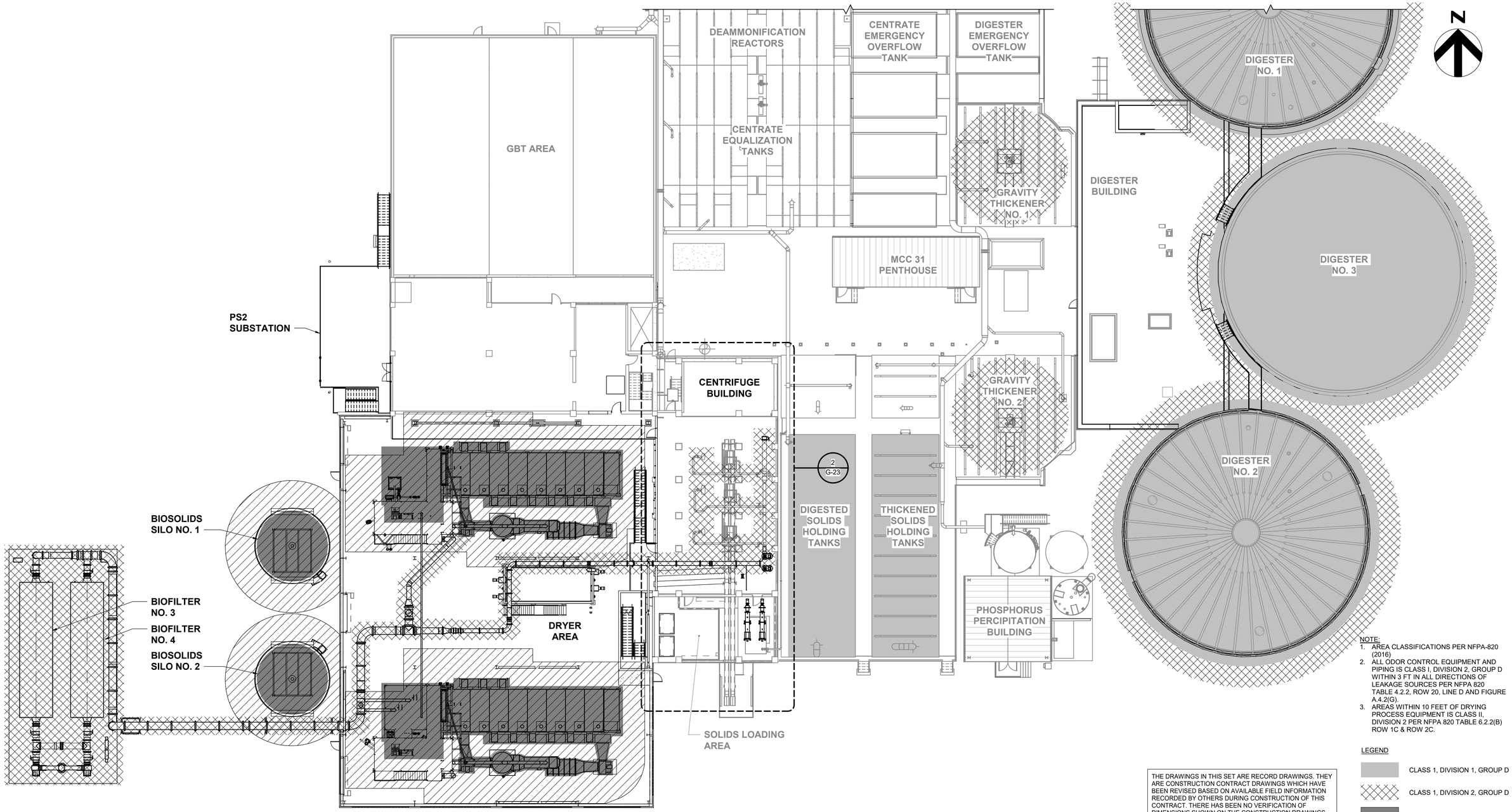

NOTE:
1. AREA CLASSIFICATIONS PER NFPA-820 (2016)
2. ALL ODOR CONTROL EQUIPMENT AND PIPING IS CLASS I, DIVISION 2, GROUP D WITHIN 3 FT IN ALL DIRECTIONS OF LEAKAGE SOURCES PER NFPA 820 TABLE 4.2.2, ROW 20, LINE D AND FIGURE A.4.2(G).
3. AREAS WITHIN 10 FEET OF DRYING PROCESS EQUIPMENT IS CLASS II, DIVISION 2 PER NFPA 820 TABLE 6.2.2(B) ROW 1C & ROW 2C.

LEGEND

- CLASS 1, DIVISION 1, GROUP D
- CLASS 1, DIVISION 2, GROUP D
- CLASS II, DIVISION 1, GROUP G
- CLASS II, DIVISION 2, GROUP G
- UNCLASSIFIED

THE DRAWINGS IN THIS SET ARE RECORD DRAWINGS. THEY ARE CONSTRUCTION CONTRACT DRAWINGS WHICH HAVE BEEN REVISED BASED ON AVAILABLE FIELD INFORMATION RECORDED BY OTHERS DURING CONSTRUCTION OF THIS CONTRACT. THERE HAS BEEN NO VERIFICATION OF DIMENSIONS SHOWN ON THE CONSTRUCTION DRAWINGS OR THE ACCURACY/COMPLETENESS OF THE FIELD INFORMATION RECEIVED.

SIGNATURE _____ DATE 2/7/2022

AS-BUILT REPLACEMENT SHEET

PROFESSIONAL CERTIFICATION

THIS DRAWING WAS ORIGINALLY APPROVED FOR CONSTRUCTION AND SEALED BY ADAM S. PARMENTER, A REGISTERED PROFESSIONAL ENGINEER IN THE STATE OF MARYLAND, NO. 39376

NOTICE TO CONTRACTORS

- PROJECT ELEVATIONS ARE BASED ON NAVD88 AND HOWARD COUNTY'S BENCHMARK SYSTEM
- PREVIOUS PROJECTS USED OTHER DATUMS
- APPLY THE FOLLOWING CONVERSIONS WHEN USING PREVIOUS CONTRACT DRAWINGS:
  - ADDITION NO. 6: SUBTRACT 0.80 FT
  - PRIOR ADDITIONS: SUBTRACT 1.04 FT

DEPARTMENT OF PUBLIC WORKS
HOWARD COUNTY, MARYLAND

CHIEF, BUREAU OF UTILITIES DATE

DES: ADP
DRN: REE
CHK: JRK
DATE: 01/2019

DATE	REV	DESCRIPTION
03/2021		RECORD DRAWINGS

GENERAL

AREA CLASSIFICATION - OVERALL KEY PLAN 3

LITTLE PATUXENT WATER RECLAMATION PLANT
8TH ADDITION
BIOSOLIDS PROCESSING FACILITIES - PHASE 2

CAPITAL PROJECT S-6295
CONTRACT NO. 24-4936

ELECTION DISTRICT NO. 6
HOWARD COUNTY, MARYLAND

SCALE AS SHOWN

SHEET 18 OF 311

G-19

BIM 360://10054364 – Little Patuxent WRP 8th Addition/264592_100_D_V18.rvt
1/7/2022 12:50:43 PM

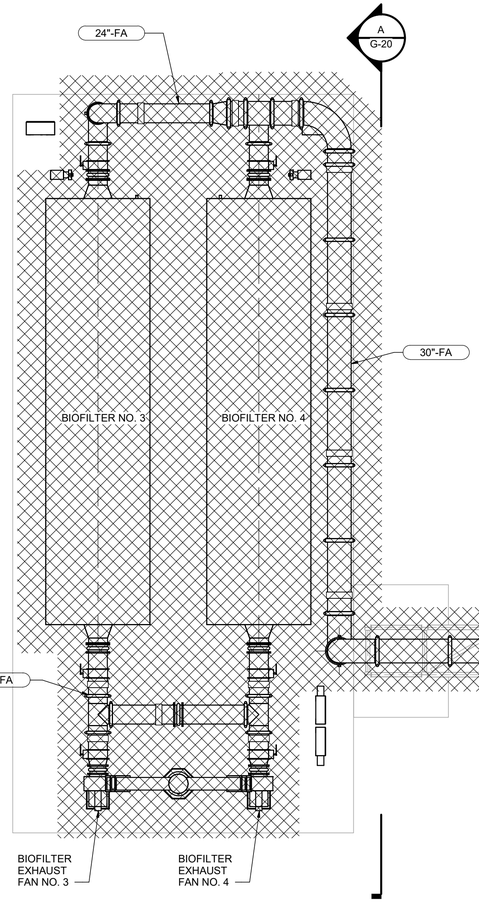

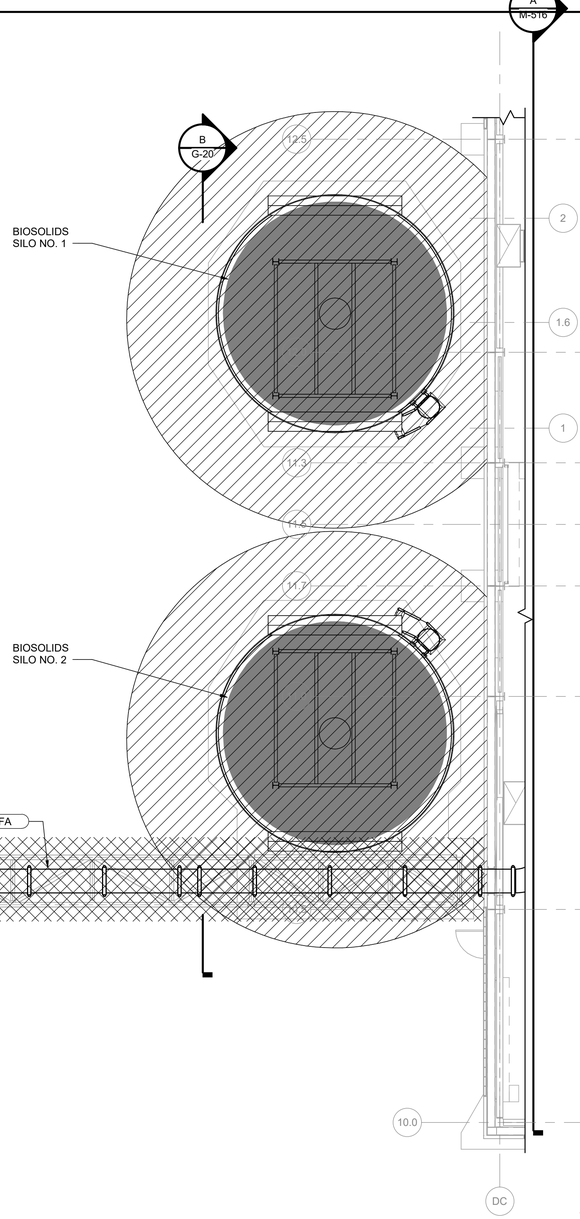

1 G-18 AREA CLASSIFICATION PLAN
1/8" = 1'-0"

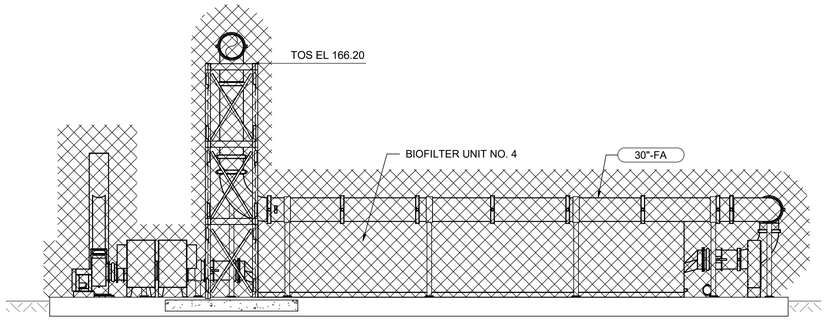

A G-20 SECTION
1/8" = 1'-0"

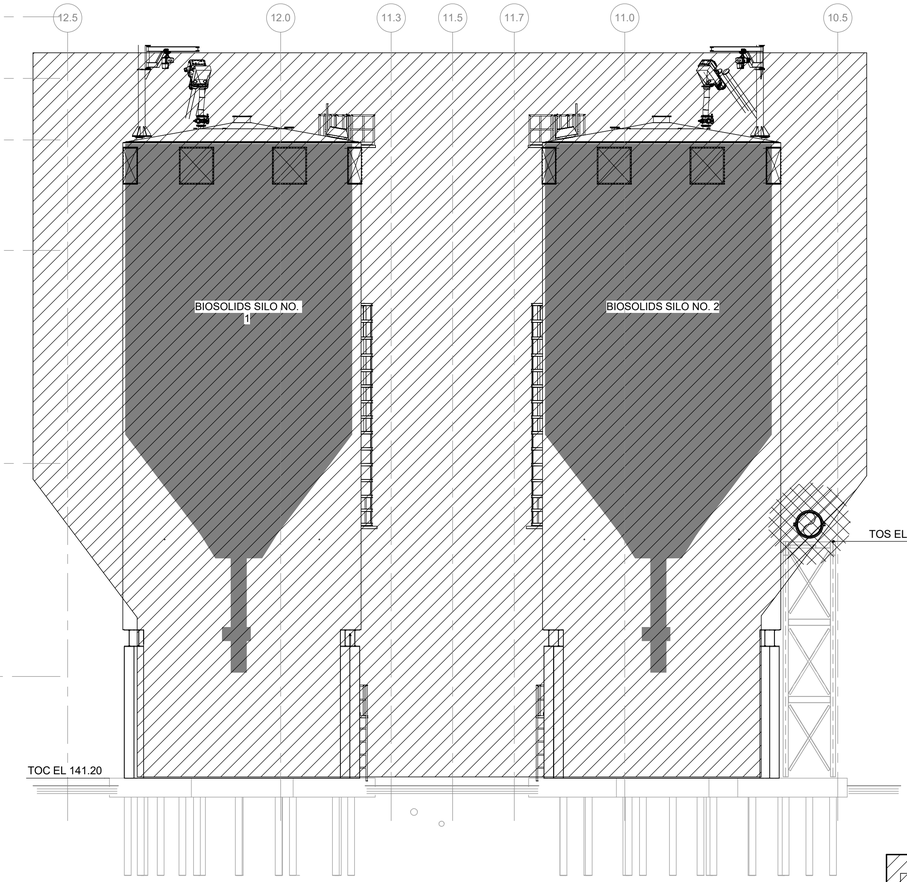

B G-20 SECTION
1/8" = 1'-0"

N

NOTE:
1. AREA CLASSIFICATIONS PER NFPA-820 (2016).
2. ALL ODOR CONTROL EQUIPMENT AND PIPING IS CLASS I, DIVISION 2, GROUP D WITHIN 3 FT IN ALL DIRECTIONS OF LEAKAGE SOURCES PER NFPA 820 TABLE 4.2.2, ROW 20, LINE D AND FIGURE A.4.2(G).
3. AREAS WITHIN 10 FEET OF DRYING PROCESS EQUIPMENT IS CLASS II, DIVISION 2 PER NFPA 820 TABLE 6.2.2(B) ROW 1C & ROW 2C.

LEGEND

- CLASS 1, DIVISION 1, GROUP D
- CLASS 1, DIVISION 2, GROUP D
- CLASS II, DIVISION 1, GROUP G
- CLASS II, DIVISION 2, GROUP G
- UNCLASSIFIED

THE DRAWINGS IN THIS SET ARE RECORD DRAWINGS. THEY ARE CONSTRUCTION CONTRACT DRAWINGS WHICH HAVE BEEN REVISED BASED ON AVAILABLE FIELD INFORMATION RECORDED BY OTHERS DURING CONSTRUCTION OF THIS CONTRACT. THERE HAS BEEN NO VERIFICATION OF DIMENSIONS SHOWN ON THE CONSTRUCTION DRAWINGS OR THE ACCURACY/COMPLETENESS OF THE FIELD INFORMATION RECEIVED.

SIGNATURE — DATE 2/7/2023

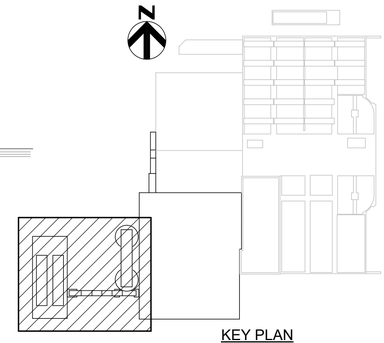

KEY PLAN

AS-BUILT REPLACEMENT SHEET

PROFESSIONAL CERTIFICATION
THIS DRAWING WAS ORIGINALLY APPROVED FOR CONSTRUCTION AND SEALED BY ADAM S. PARMENTER, A REGISTERED PROFESSIONAL ENGINEER IN THE STATE OF MARYLAND, NO. 39376

NOTICE TO CONTRACTORS
- PROJECT ELEVATIONS ARE BASED ON NAVD88 AND HOWARD COUNTY'S BENCHMARK SYSTEM
- PREVIOUS PROJECTS USED OTHER DATUMS
- APPLY THE FOLLOWING CONVERSIONS WHEN USING PREVIOUS CONTRACT DRAWINGS:
  - ADDITION NO. 6: SUBTRACT 0.80 FT
  - PRIOR ADDITIONS: SUBTRACT 1.04 FT

DEPARTMENT OF PUBLIC WORKS
HOWARD COUNTY, MARYLAND

CHIEF, BUREAU OF UTILITIES — DATE

DES: ADP
DRN: REE
CHK: JRK
DATE: 01/2019

DATE	REV	DESCRIPTION
03/2021		RECORD DRAWINGS

GENERAL

AREA CLASSIFICATION - BIOFILTER AND CAKE STORAGE PLAN AND SECTIONS

LITTLE PATUXENT WATER RECLAMATION PLANT
8TH ADDITION
BIOSOLIDS PROCESSING FACILITIES - PHASE 2

CAPITAL PROJECT S-6295
CONTRACT NO. 24-4936

ELECTION DISTRICT NO. 6
HOWARD COUNTY, MARYLAND

SCALE AS SHOWN

SHEET 19 OF 311

G-20

BIM 360://10054364 – Little Patuxent WRP 8th Addition/264592_100_D_V18.rvt
1/7/2022 12:51:45 PM

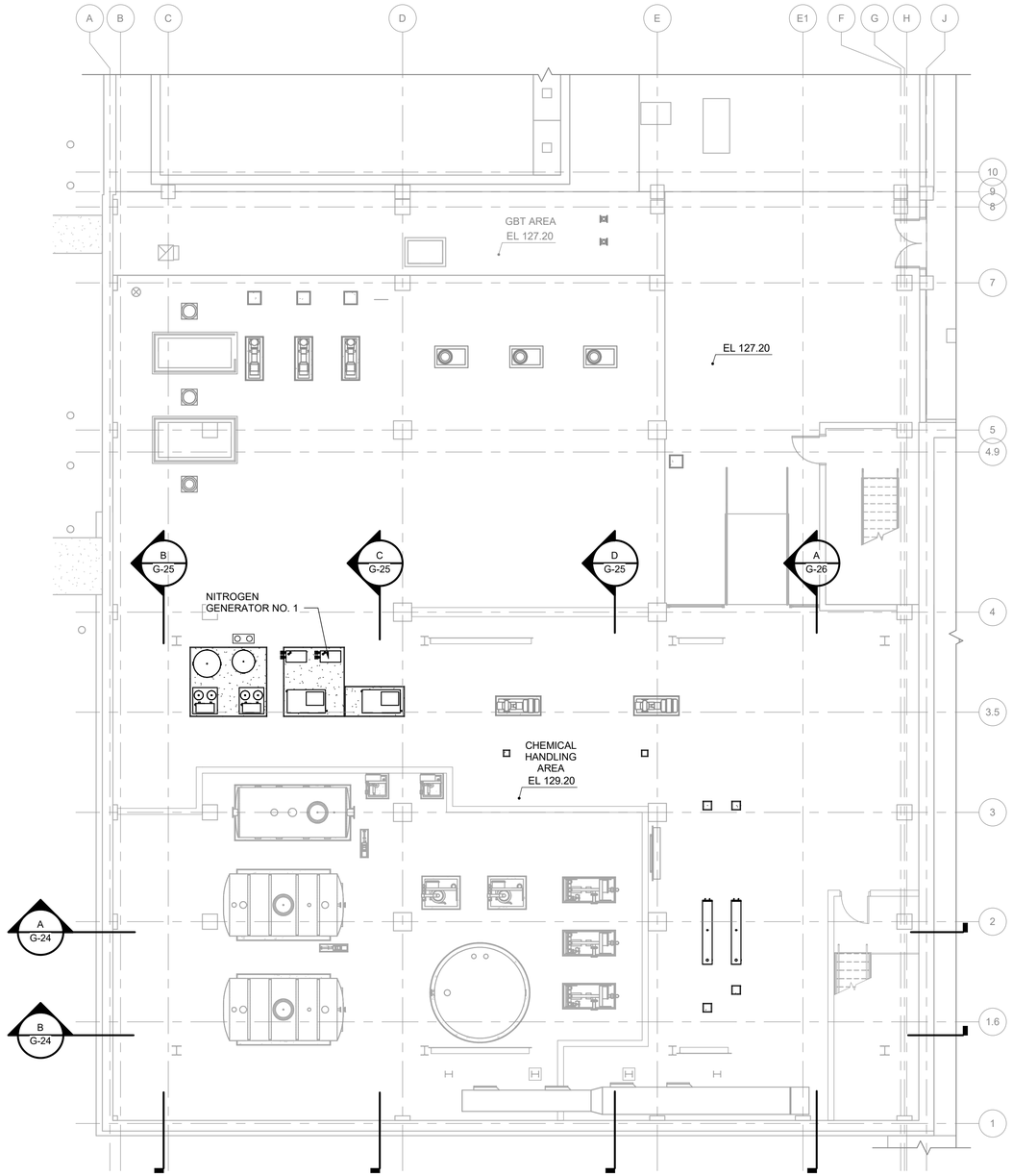

AREA CLASSIFICATION PLAN AT EL 127.20

1/8" = 1'-0"

N

NOTE:

1. GBT AREA IS UNCLASSIFIED WITH 6 ACH (PER NFPA 820, TABLE 6.2.2 ROW 12, LINE A)
2. ALL ODOR CONTROL EQUIPMENT AND PIPING IS CLASS I, DIVISION 2, GROUP D WITHIN 3 FT IN ALL DIRECTIONS OF LEAKAGE SOURCES PER NFPA 820 TABLE 4.2.2, ROW 20, LINE D AND FIGURE A.4.2(G).

LEGEND

- CLASS 1, DIVISION 1, GROUP D
- CLASS 1, DIVISION 2, GROUP D
- CLASS II, DIVISION 1, GROUP G
- CLASS II, DIVISION 2, GROUP G
- UNCLASSIFIED

THE DRAWINGS IN THIS SET ARE RECORD DRAWINGS. THEY ARE CONSTRUCTION CONTRACT DRAWINGS WHICH HAVE BEEN REVISED BASED ON AVAILABLE FIELD INFORMATION RECORDED BY OTHERS DURING CONSTRUCTION OF THIS CONTRACT. THERE HAS BEEN NO VERIFICATION OF DIMENSIONS SHOWN ON THE CONSTRUCTION DRAWINGS OR THE ACCURACY/COMPLETENESS OF THE FIELD INFORMATION RECEIVED.

SIGNATURE _____ DATE 2/7/2023

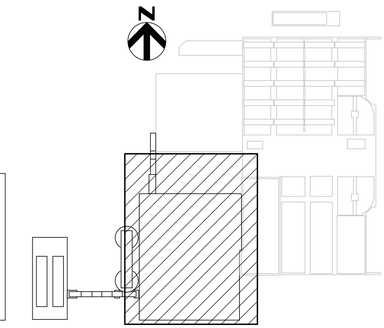

KEY PLAN

AS-BUILT REPLACEMENT SHEET

PROFESSIONAL CERTIFICATION

THIS DRAWING WAS ORIGINALLY APPROVED FOR CONSTRUCTION AND SEALED BY ADAM S. PARMENTER, A REGISTERED PROFESSIONAL ENGINEER IN THE STATE OF MARYLAND, NO. 39376

NOTICE TO CONTRACTORS

- PROJECT ELEVATIONS ARE BASED ON NAVD88 AND HOWARD COUNTY'S BENCHMARK SYSTEM
- PREVIOUS PROJECTS USED OTHER DATUMS
- APPLY THE FOLLOWING CONVERSIONS WHEN USING PREVIOUS CONTRACT DRAWINGS:
  - ADDITION NO. 6: SUBTRACT 0.80 FT
  - PRIOR ADDITIONS: SUBTRACT 1.04 FT

DEPARTMENT OF PUBLIC WORKS
HOWARD COUNTY, MARYLAND

CHIEF, BUREAU OF UTILITIES DATE

DES: ADP
DRN: REE
CHK: JRK
DATE: 01/2019

DATE	REV	DESCRIPTION
03/2021		RECORD DRAWINGS

GENERAL

AREA CLASSIFICATION - GBT AND DRYING AREA PLAN

LITTLE PATUXENT WATER RECLAMATION PLANT
8TH ADDITION
BIOSOLIDS PROCESSING FACILITIES - PHASE 2

CAPITAL PROJECT S-6295
CONTRACT NO. 24-4936

ELECTION DISTRICT NO. 6
HOWARD COUNTY, MARYLAND

SCALE AS SHOWN

SHEET 20 OF 311

G-21

BIM 360://100543364 – Little Patuxent WRP 8th Addition/264592_100_D_V18.rvt
1/7/2022 12:51:46 PM

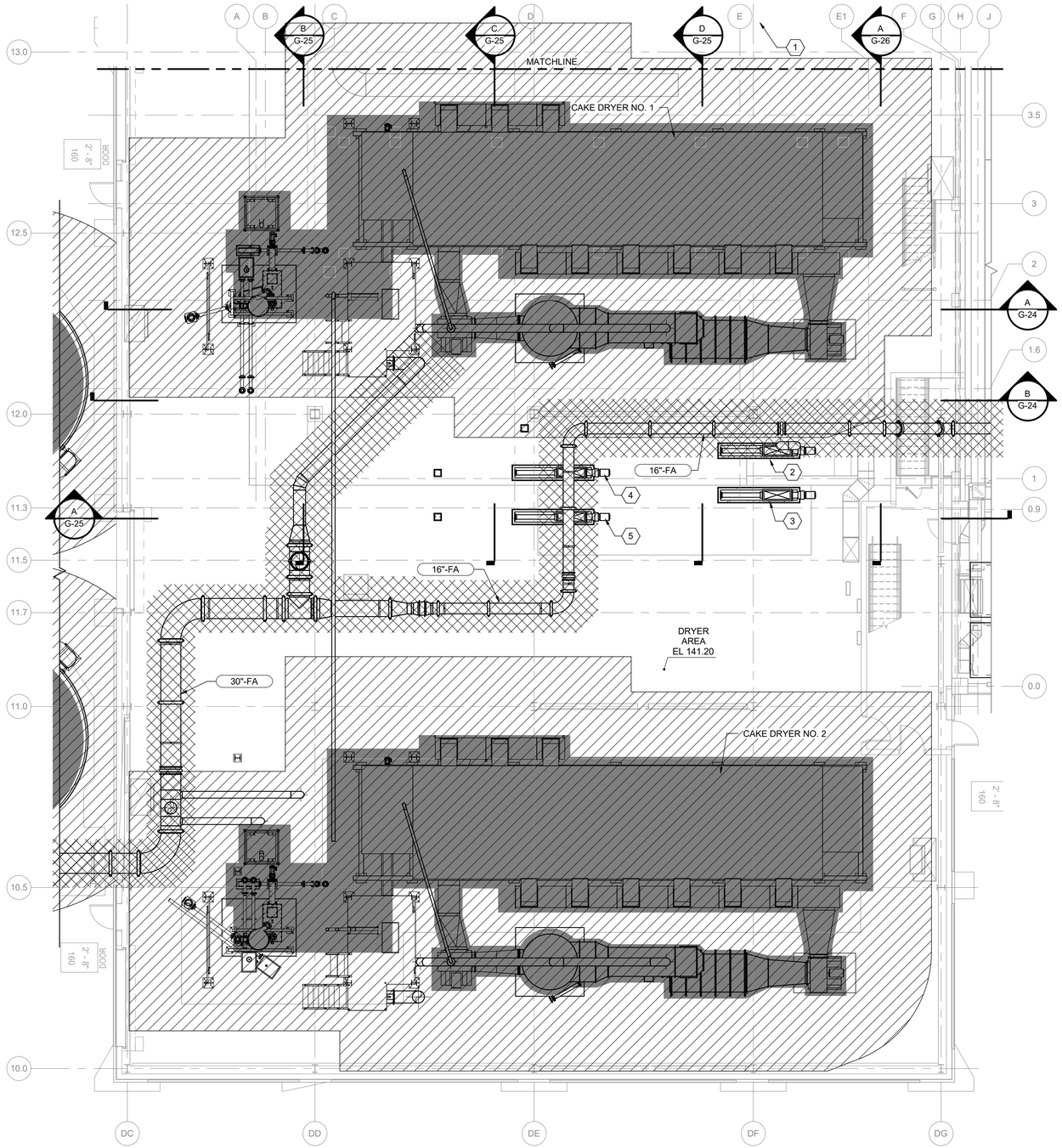

1 G-18 AREA CLASSIFICATION PLAN AT EL 141.20

1/8" = 1'-0"

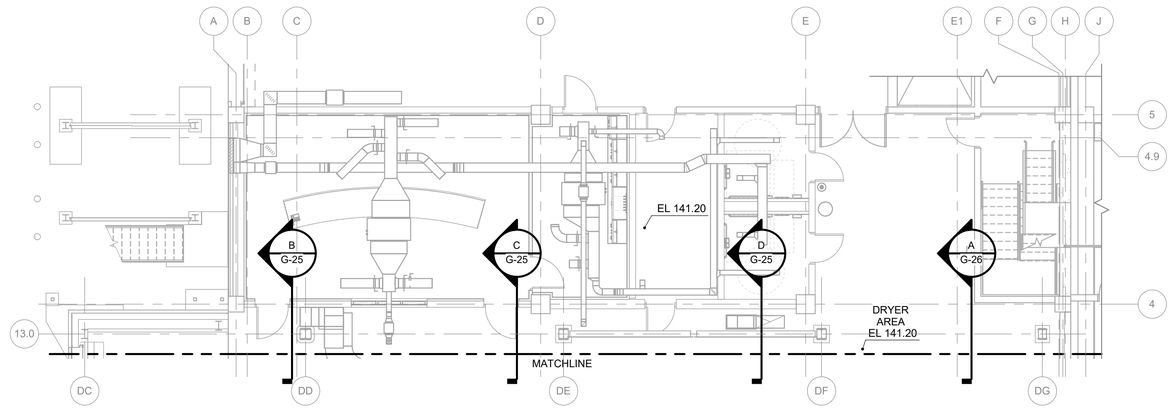

AREA CLASSIFICATION PLAN AT EL 141.20

1/8" = 1'-0"

KEY NOTES (X)

1. SPRAY CONDENSER NO. 1
2. DEWATERED SOLIDS PROGRESSIVE CAVITY PUMP NO. 1
3. DEWATERED SOLIDS PROGRESSIVE CAVITY PUMP NO. 2
4. DEWATERED SOLIDS PROGRESSIVE CAVITY PUMP NO. 3
5. DEWATERED SOLIDS PROGRESSIVE CAVITY PUMP NO. 4

NOTE:
1. AREA CLASSIFICATIONS PER NFPA-820 (2016).
2. ALL ODOR CONTROL EQUIPMENT AND PIPING IS CLASS I, DIVISION 2, GROUP D WITHIN 3 FT IN ALL DIRECTIONS OF LEAKAGE SOURCES PER NFPA 820 TABLE 4.2.2, ROW 20, LINE D AND FIGURE A.4.2(G).
3. AREAS WITHIN 10 FEET OF DRYING PROCESS EQUIPMENT IS CLASS II, DIVISION 2 PER NFPA 820 TABLE 6.2.2(B) ROW 1C & ROW 2C.

LEGEND

- CLASS 1, DIVISION 1, GROUP D
- CLASS 1, DIVISION 2, GROUP D
- CLASS II, DIVISION 1, GROUP G
- CLASS II, DIVISION 2, GROUP G
- UNCLASSIFIED

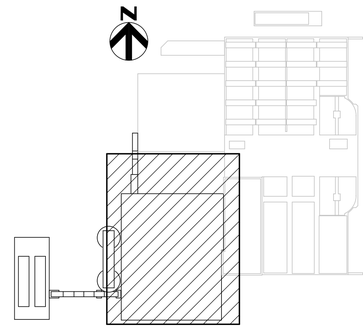

KEY PLAN

THE DRAWINGS IN THIS SET ARE RECORD DRAWINGS. THEY ARE CONSTRUCTION CONTRACT DRAWINGS WHICH HAVE BEEN REVISED BASED ON AVAILABLE FIELD INFORMATION RECORDED BY OTHERS DURING CONSTRUCTION OF THIS CONTRACT. THERE HAS BEEN NO VERIFICATION OF DIMENSIONS SHOWN ON THE CONSTRUCTION DRAWINGS OR THE ACCURACY/COMPLETENESS OF THE FIELD INFORMATION RECEIVED.

SIGNATURE — DATE 2/7/2022

AS-BUILT REPLACEMENT SHEET

PROFESSIONAL CERTIFICATION

THIS DRAWING WAS ORIGINALLY APPROVED FOR CONSTRUCTION AND SEALED BY ADAM S. PARMENTER, A REGISTERED PROFESSIONAL ENGINEER IN THE STATE OF MARYLAND, NO. 39376

NOTICE TO CONTRACTORS

- PROJECT ELEVATIONS ARE BASED ON NAVD88 AND HOWARD COUNTY'S BENCHMARK SYSTEM
- PREVIOUS PROJECTS USED OTHER DATUMS
- APPLY THE FOLLOWING CONVERSIONS WHEN USING PREVIOUS CONTRACT DRAWINGS:
  - ADDITION NO. 6: SUBTRACT 0.80 FT
  - PRIOR ADDITIONS: SUBTRACT 1.04 FT

DEPARTMENT OF PUBLIC WORKS
HOWARD COUNTY, MARYLAND

CHIEF, BUREAU OF UTILITIES — DATE

DES: ADP
DRN: REE
CHK: JRK
DATE: 01/2019

DATE	REV	DESCRIPTION
03/2021		RECORD DRAWINGS

GENERAL

AREA CLASSIFICATION - DRYER BUILDING PLAN

LITTLE PATUXENT WATER RECLAMATION PLANT
8TH ADDITION
BIOSOLIDS PROCESSING FACILITIES - PHASE 2

CAPITAL PROJECT S-6295
CONTRACT NO. 24-4936

ELECTION DISTRICT NO. 6
HOWARD COUNTY, MARYLAND

SCALE AS SHOWN

SHEET 21 OF 311

G-22

BIM 360://10054364 – Little Patuxent WRP 8th Addition/284592_100_D_V18.rvt
1/7/2022 12:53:10 PM

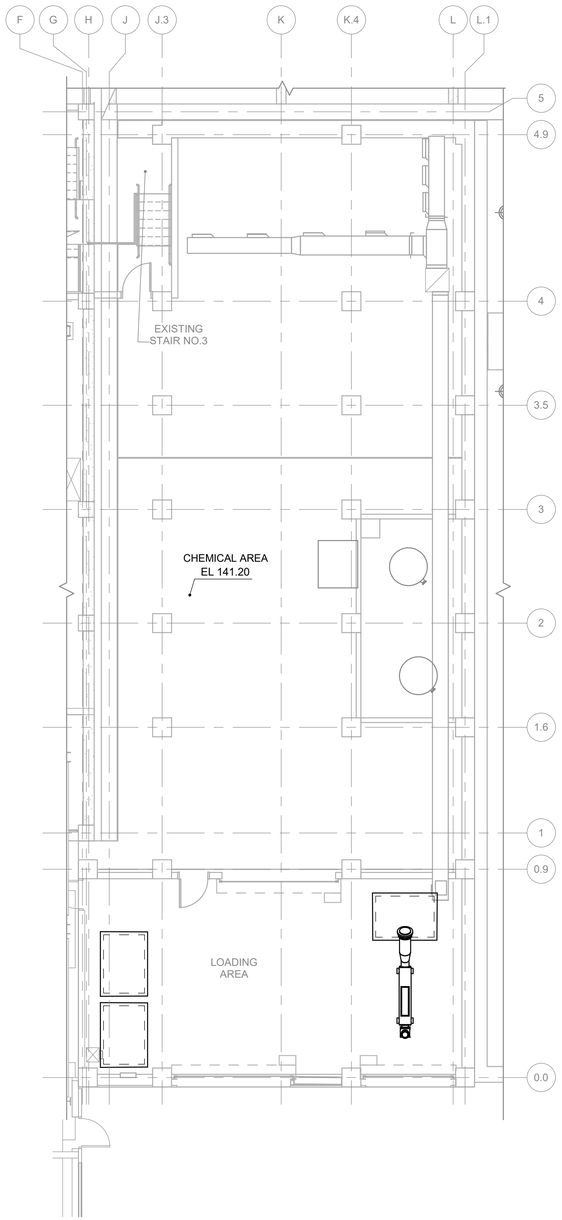

1 G-18 AREA CLASSIFICATION PLAN AT EL 141.20
1/8" = 1'-0"

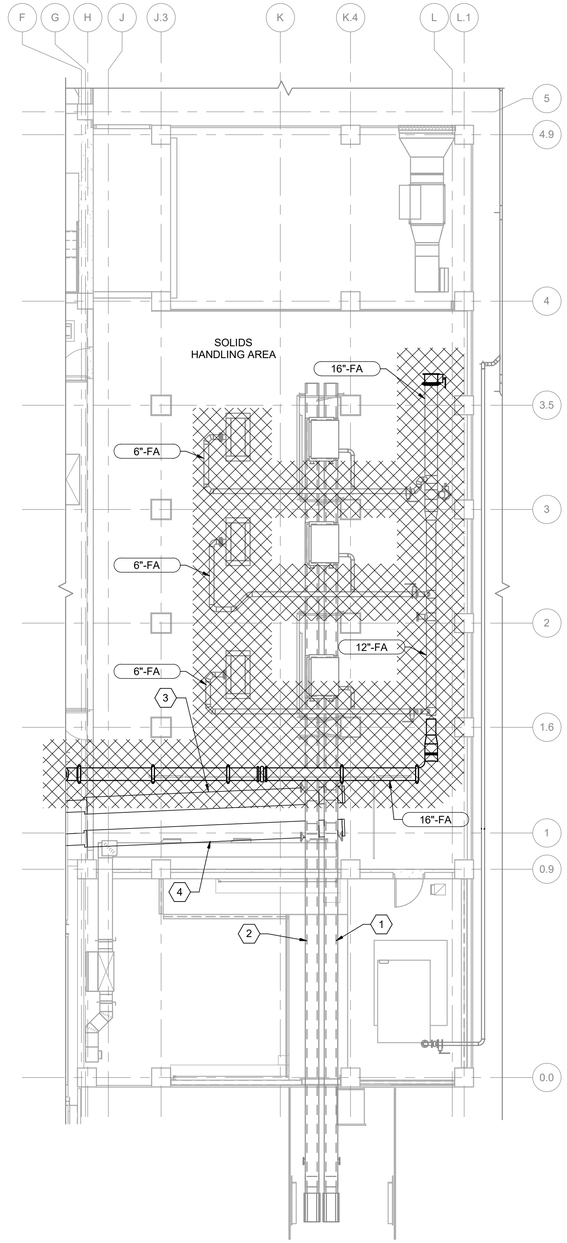

2 G-19 AREA CLASSIFICATION PLAN AT EL 155.20
1/8" = 1'-0"

N

NOTE:
1. CHEMICAL ROOM AND CONVEYOR ROOM IS UNCLASSIFIED WITH 6 ACH (PER NFPA 820, TABLE 6.2.2 ROW 12, LINE A)
2. ALL ODOR CONTROL EQUIPMENT AND PIPING IS CLASS I, DIVISION 2, GROUP D WITHIN 3 FT IN ALL DIRECTIONS OF LEAKAGE SOURCES PER NFPA 820 TABLE 4.2.2, ROW 20, LINE D AND FIGURE A.4.2(G).

LEGEND

- CLASS 1, DIVISION 1, GROUP D
- CLASS 1, DIVISION 2, GROUP D
- CLASS II, DIVISION 1, GROUP G
- CLASS II, DIVISION 2, GROUP G
- UNCLASSIFIED

KEY NOTES (X)

1 HORIZONTAL CONVEYOR NO. 1 (EXISTING)
2 HORIZONTAL CONVEYOR NO. 2 (EXISTING)
3 ANGLED SCREW CONVEYOR NO. 1
4 ANGLED SCREW CONVEYOR NO. 2

THE DRAWINGS IN THIS SET ARE RECORD DRAWINGS. THEY ARE CONSTRUCTION CONTRACT DRAWINGS WHICH HAVE BEEN REVISED BASED ON AVAILABLE FIELD INFORMATION RECORDED BY OTHERS DURING CONSTRUCTION OF THIS CONTRACT. THERE HAS BEEN NO VERIFICATION OF DIMENSIONS SHOWN ON THE CONSTRUCTION DRAWINGS OR THE ACCURACY/COMPLETENESS OF THE FIELD INFORMATION RECEIVED.

SIGNATURE _____ DATE 2/7/2022

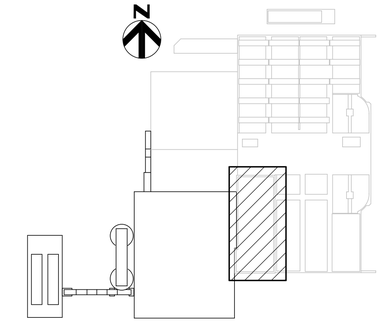

KEY PLAN

AS-BUILT REPLACEMENT SHEET

PROFESSIONAL CERTIFICATION
THIS DRAWING WAS ORIGINALLY APPROVED FOR CONSTRUCTION AND SEALED BY ADAM S. PARMENTER, A REGISTERED PROFESSIONAL ENGINEER IN THE STATE OF MARYLAND, NO. 39376

NOTICE TO CONTRACTORS
- PROJECT ELEVATIONS ARE BASED ON NAVD88 AND HOWARD COUNTY'S BENCHMARK SYSTEM
- PREVIOUS PROJECTS USED OTHER DATUMS
- APPLY THE FOLLOWING CONVERSIONS WHEN USING PREVIOUS CONTRACT DRAWINGS:
  - ADDITION NO. 6: SUBTRACT 0.80 FT
  - PRIOR ADDITIONS: SUBTRACT 1.04 FT

DEPARTMENT OF PUBLIC WORKS
HOWARD COUNTY, MARYLAND

CHIEF, BUREAU OF UTILITIES DATE

DES: ADP
DRN: REE
CHK: JRK
DATE: 01/2019

DATE	REV	DESCRIPTION
03/2021		RECORD DRAWINGS

GENERAL

AREA CLASSIFICATION - CHEMICAL AND CONVEYOR ROOM PLAN

LITTLE PATUXENT WATER RECLAMATION PLANT
8TH ADDITION
BIOSOLIDS PROCESSING FACILITIES - PHASE 2

CAPITAL PROJECT S-6295
CONTRACT NO. 24-4936

ELECTION DISTRICT NO. 6
HOWARD COUNTY, MARYLAND

SCALE AS SHOWN

SHEET 22 OF 311

G-23

BIM 360://10054364 – Little Patuxent WRP 8th Addition/264592_100_D_V18.rvt
1/7/2022 12:53:14 PM

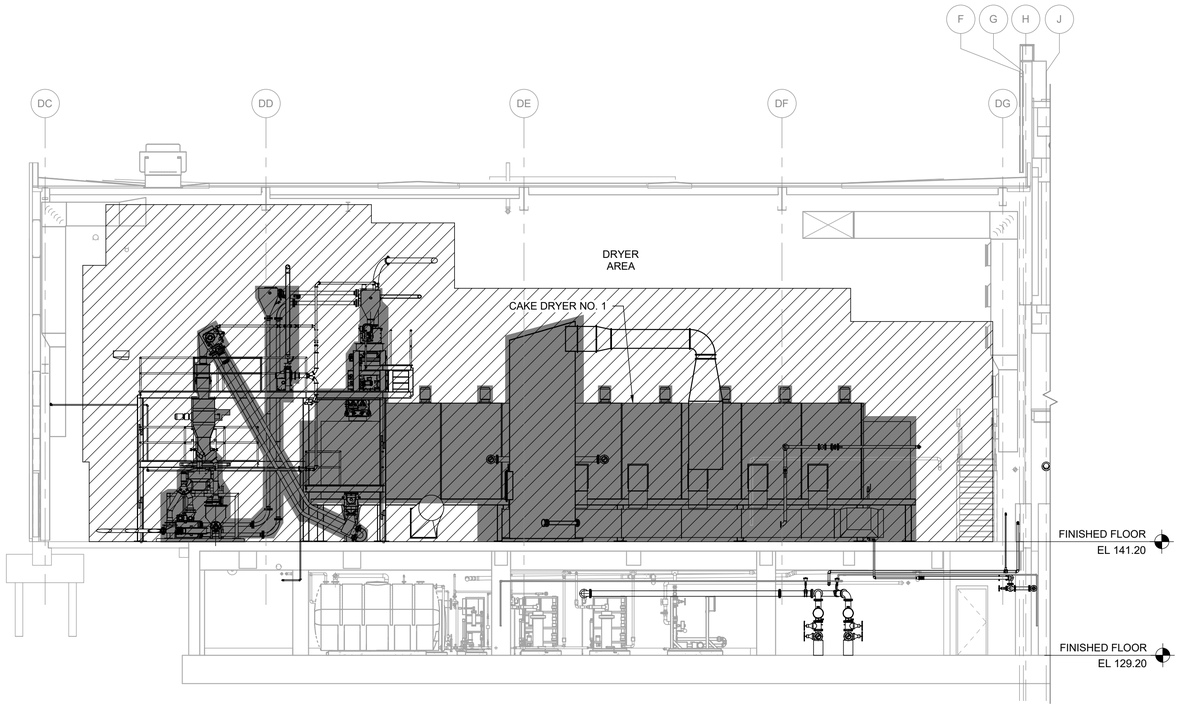

A G-21 SECTION
1/8" = 1'-0"

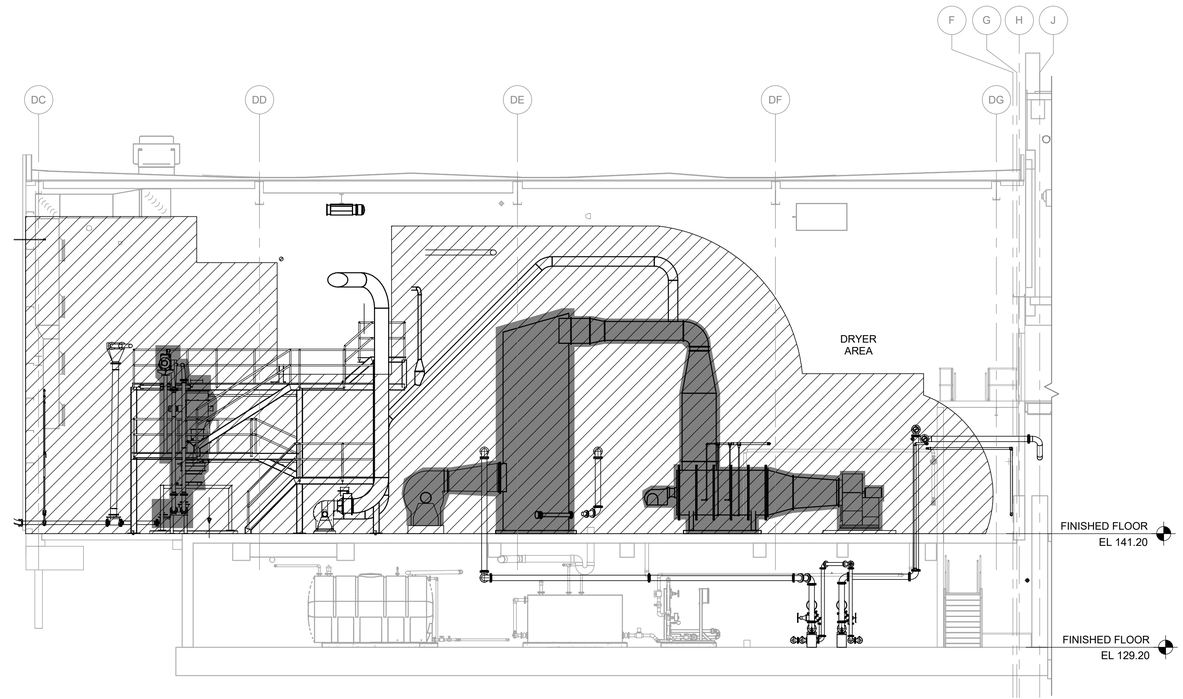

B G-21 SECTION
1/8" = 1'-0"

NOTE:
1. AREA CLASSIFICATIONS PER NFPA-820 (2016).
2. ALL ODOR CONTROL EQUIPMENT AND PIPING IS CLASS I, DIVISION 2, GROUP D WITHIN 3 FT IN ALL DIRECTIONS OF LEAKAGE SOURCES PER NFPA 820 TABLE 4.2.2, ROW 20, LINE D AND FIGURE A.4.2(G).
3. AREAS WITHIN 10 FEET OF DRYING PROCESS EQUIPMENT IS CLASS II, DIVISION 2 PER NFPA 820 TABLE 6.2.2(B) ROW 1C & ROW 2C.

LEGEND

- CLASS 1, DIVISION 1, GROUP D
- CLASS 1, DIVISION 2, GROUP D
- CLASS II, DIVISION 1, GROUP G
- CLASS II, DIVISION 2, GROUP G
- UNCLASSIFIED

THE DRAWINGS IN THIS SET ARE RECORD DRAWINGS. THEY ARE CONSTRUCTION CONTRACT DRAWINGS WHICH HAVE BEEN REVISED BASED ON AVAILABLE FIELD INFORMATION RECORDED BY OTHERS DURING CONSTRUCTION OF THIS CONTRACT. THERE HAS BEEN NO VERIFICATION OF DIMENSIONS SHOWN ON THE CONSTRUCTION DRAWINGS OR THE ACCURACY/COMPLETENESS OF THE FIELD INFORMATION RECEIVED.

SIGNATURE 2/7/2022 DATE

AS-BUILT REPLACEMENT SHEET

PROFESSIONAL CERTIFICATION
THIS DRAWING WAS ORIGINALLY APPROVED FOR CONSTRUCTION AND SEALED BY ADAM S. PARMENTER, A REGISTERED PROFESSIONAL ENGINEER IN THE STATE OF MARYLAND, NO. 39376

NOTICE TO CONTRACTORS
- PROJECT ELEVATIONS ARE BASED ON NAVD88 AND HOWARD COUNTY'S BENCHMARK SYSTEM
- PREVIOUS PROJECTS USED OTHER DATUMS
- APPLY THE FOLLOWING CONVERSIONS WHEN USING PREVIOUS CONTRACT DRAWINGS:
  - ADDITION NO. 6: SUBTRACT 0.80 FT
  - PRIOR ADDITIONS: SUBTRACT 1.04 FT

DEPARTMENT OF PUBLIC WORKS
HOWARD COUNTY, MARYLAND

CHIEF, BUREAU OF UTILITIES DATE

DES: ADP
DRN: REE
CHK: JRK
DATE: 01/2019

DATE	REV	DESCRIPTION
03/2021		RECORD DRAWINGS

GENERAL

AREA CLASSIFICATION SECTIONS 1

LITTLE PATUXENT WATER RECLAMATION PLANT
8TH ADDITION
BIOSOLIDS PROCESSING FACILITIES - PHASE 2

CAPITAL PROJECT S-6295
CONTRACT NO. 24-4936

ELECTION DISTRICT NO. 6
HOWARD COUNTY, MARYLAND

SCALE AS SHOWN

SHEET 23 OF 311

G-24

BIM 360://10054364 – Little Patuxent WRP 8th Addition/284592_100_D_V18.rvt
1/7/2022 12:55:24 PM

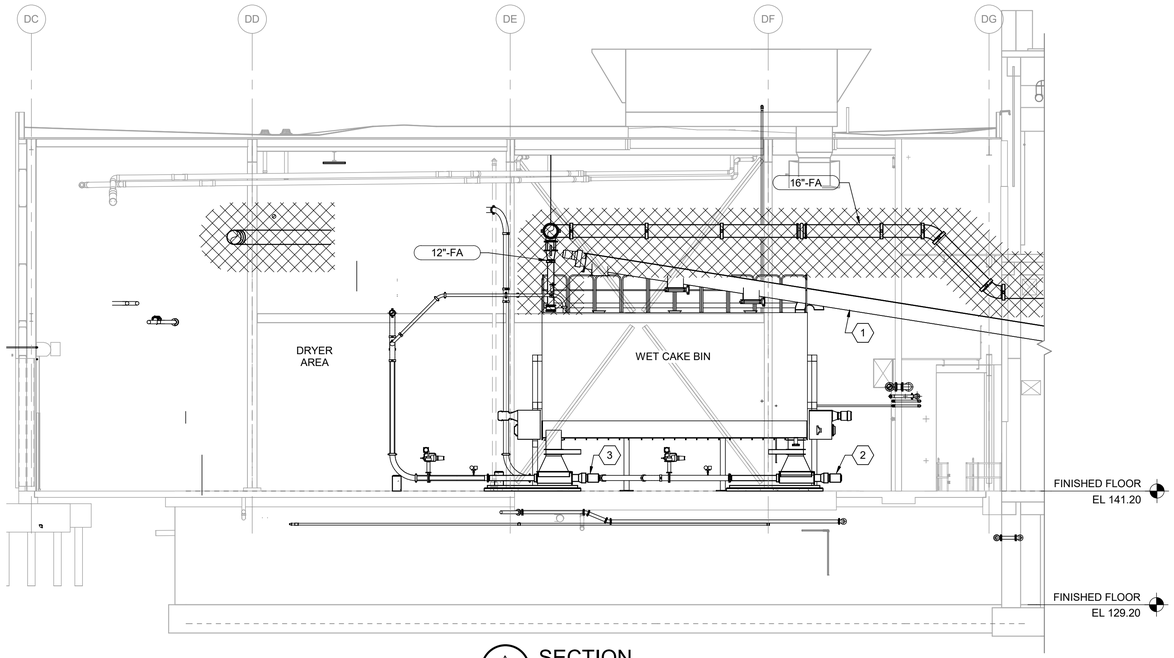

A G-22 SECTION 1/8" = 1'-0"

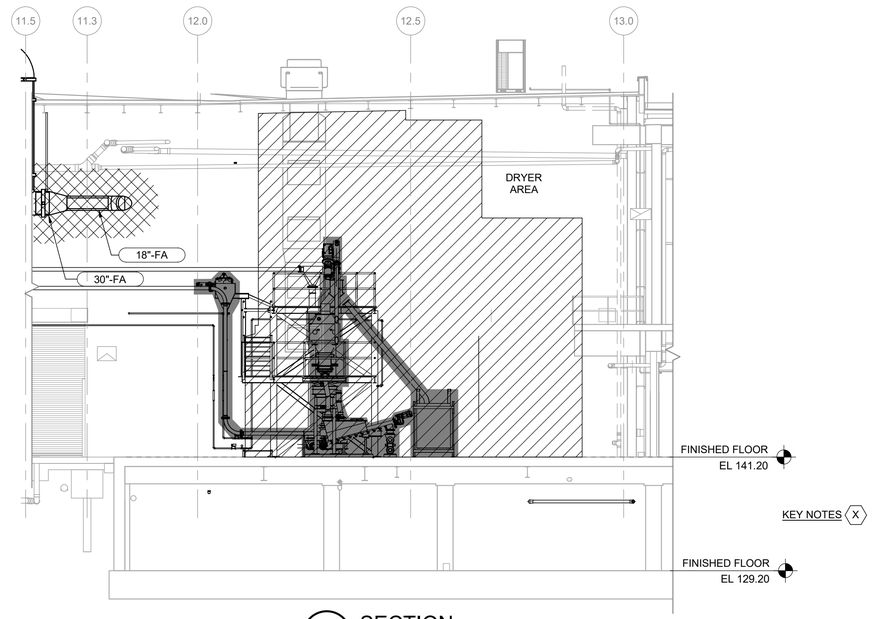

B G-21 SECTION 1/8" = 1'-0"

NOTE:
1. AREA CLASSIFICATIONS PER NFPA-820 (2016).
2. ALL ODOR CONTROL EQUIPMENT AND PIPING IS CLASS I, DIVISION 2, GROUP D WITHIN 3 FT IN ALL DIRECTIONS OF LEAKAGE SOURCES PER NFPA 820 TABLE 4.2.2, ROW 20, LINE D AND FIGURE A.4.2(G).
3. AREAS WITHIN 10 FEET OF DRYING PROCESS EQUIPMENT IS CLASS II, DIVISION 2 PER NFPA 820 TABLE 6.2.2(B) ROW 1C & ROW 2C.

LEGEND

- CLASS 1, DIVISION 1, GROUP D
- CLASS 1, DIVISION 2, GROUP D
- CLASS II, DIVISION 1, GROUP G
- CLASS II, DIVISION 2, GROUP G
- UNCLASSIFIED

KEY NOTES (X)

1 ANGLED SCREW CONVEYOR NO. 2
2 DEWATERED SOLIDS PROGRESSIVE CAVITY PUMP NO. 2
3 DEWATERED SOLIDS PROGRESSIVE CAVITY PUMP NO. 4

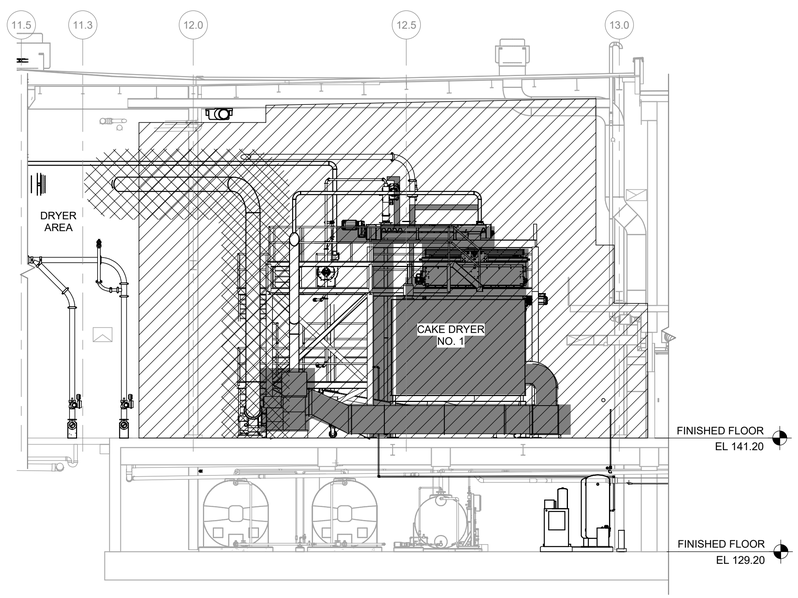

C G-21 SECTION 1/8" = 1'-0"

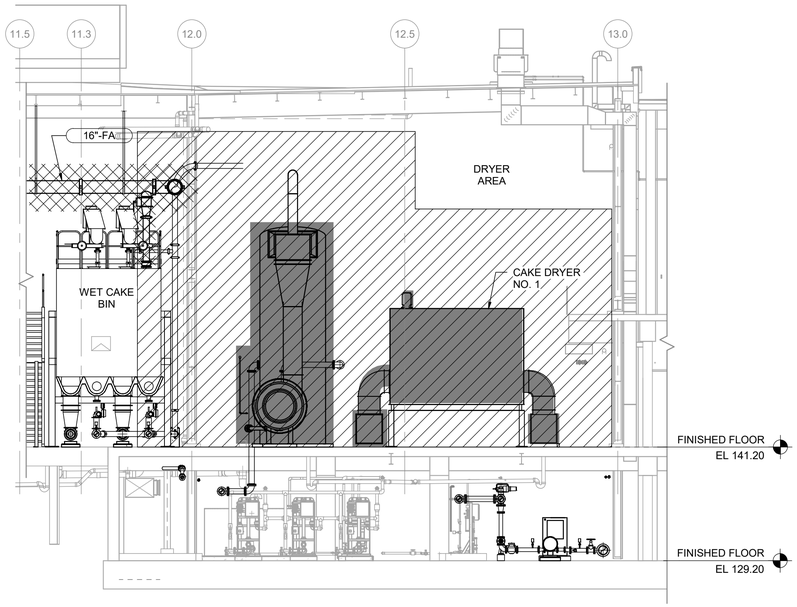

D G-21 SECTION 1/8" = 1'-0"

THE DRAWINGS IN THIS SET ARE RECORD DRAWINGS. THEY ARE CONSTRUCTION CONTRACT DRAWINGS WHICH HAVE BEEN REVISED BASED ON AVAILABLE FIELD INFORMATION RECORDED BY OTHERS DURING CONSTRUCTION OF THIS CONTRACT. THERE HAS BEEN NO VERIFICATION OF DIMENSIONS SHOWN ON THE CONSTRUCTION DRAWINGS OR THE ACCURACY/COMPLETENESS OF THE FIELD INFORMATION RECEIVED.

SIGNATURE — DATE 2/7/2023

AS-BUILT REPLACEMENT SHEET

PROFESSIONAL CERTIFICATION

THIS DRAWING WAS ORIGINALLY APPROVED FOR CONSTRUCTION AND SEALED BY ADAM S. PARMENTER, A REGISTERED PROFESSIONAL ENGINEER IN THE STATE OF MARYLAND, NO. 39376

NOTICE TO CONTRACTORS

- PROJECT ELEVATIONS ARE BASED ON NAVD88 AND HOWARD COUNTY'S BENCHMARK SYSTEM
- PREVIOUS PROJECTS USED OTHER DATUMS
- APPLY THE FOLLOWING CONVERSIONS WHEN USING PREVIOUS CONTRACT DRAWINGS:
  - ADDITION NO. 6: SUBTRACT 0.80 FT
  - PRIOR ADDITIONS: SUBTRACT 1.04 FT

DEPARTMENT OF PUBLIC WORKS
HOWARD COUNTY, MARYLAND

CHIEF, BUREAU OF UTILITIES — DATE

DES: ADP
DRN: REE
CHK: JRK
DATE: 01/2019

DATE	REV	DESCRIPTION
03/2021		RECORD DRAWINGS

GENERAL

AREA CLASSIFICATION SECTION 2

LITTLE PATUXENT WATER RECLAMATION PLANT
8TH ADDITION
BIOSOLIDS PROCESSING FACILITIES - PHASE 2

CAPITAL PROJECT S-6295
CONTRACT NO. 24-4936

ELECTION DISTRICT NO. 6
HOWARD COUNTY, MARYLAND

SCALE AS SHOWN

SHEET 24 OF 311

G-25

BIM 360://10054364 – Little Patuxent WRP 8th Addition/264592_100_D_Y18.rvt
1/7/2022 12:57:31 PM

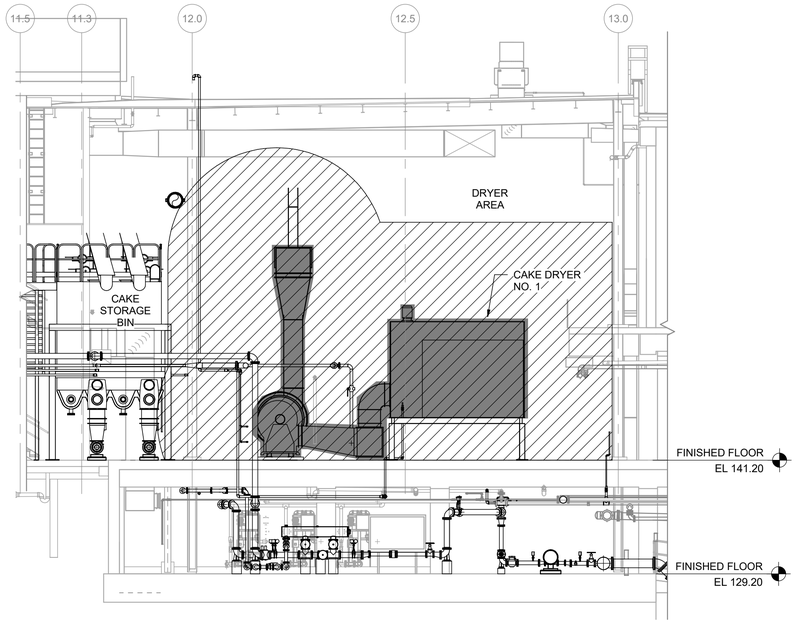

A
G-21
SECTION
1/8" = 1'-0"

NOTE:
1. DRYING BUILDING AREA IS UNCLASSIFIED WITH 6 ACH (PER NFPA 820, TABLE 6.2.2 ROW 12, LINE A)
2. ALL ODOR CONTROL EQUIPMENT AND PIPING IS CLASS I, DIVISION 2, GROUP D WITHIN 3 FT IN ALL DIRECTIONS OF LEAKAGE SOURCES PER NFPA 820 TABLE 4.2.2, ROW 20, LINE D AND FIGURE A.4.2(G).

LEGEND

- CLASS 1, DIVISION 1, GROUP D
- CLASS 1, DIVISION 2, GROUP D
- CLASS II, DIVISION 1, GROUP G
- CLASS II, DIVISION 2, GROUP G
- UNCLASSIFIED

THE DRAWINGS IN THIS SET ARE RECORD DRAWINGS. THEY ARE CONSTRUCTION CONTRACT DRAWINGS WHICH HAVE BEEN REVISED BASED ON AVAILABLE FIELD INFORMATION RECORDED BY OTHERS DURING CONSTRUCTION OF THIS CONTRACT. THERE HAS BEEN NO VERIFICATION OF DIMENSIONS SHOWN ON THE CONSTRUCTION DRAWINGS OR THE ACCURACY/COMPLETENESS OF THE FIELD INFORMATION RECEIVED.

SIGNATURE — DATE 2/7/2022

AS-BUILT REPLACEMENT SHEET

PROFESSIONAL CERTIFICATION
THIS DRAWING WAS ORIGINALLY APPROVED FOR CONSTRUCTION AND SEALED BY ADAM S. PARMENTER, A REGISTERED PROFESSIONAL ENGINEER IN THE STATE OF MARYLAND, NO. 39376

NOTICE TO CONTRACTORS
- PROJECT ELEVATIONS ARE BASED ON NAVD88 AND HOWARD COUNTY'S BENCHMARK SYSTEM
- PREVIOUS PROJECTS USED OTHER DATUMS
- APPLY THE FOLLOWING CONVERSIONS WHEN USING PREVIOUS CONTRACT DRAWINGS:
  - ADDITION NO. 6: SUBTRACT 0.80 FT
  - PRIOR ADDITIONS: SUBTRACT 1.04 FT

DEPARTMENT OF PUBLIC WORKS
HOWARD COUNTY, MARYLAND

CHIEF, BUREAU OF UTILITIES — DATE

DES: ADP
DRN: REE
CHK: JRK
DATE: 01/2019

DATE	REV	DESCRIPTION
03/2021		RECORD DRAWINGS

GENERAL

AREA CLASSIFICATION SECTIONS 3

LITTLE PATUXENT WATER RECLAMATION PLANT
8TH ADDITION
BIOSOLIDS PROCESSING FACILITIES - PHASE 2

CAPITAL PROJECT S-6295
CONTRACT NO. 24-4936

ELECTION DISTRICT NO. 6
HOWARD COUNTY, MARYLAND

SCALE
AS
SHOWN

SHEET
25 OF 311

G-26

BIM 360://10054364 – Little Patuxent WRP 8th Addition/264592_100_D_V18.rvt
1/7/2022 12:57:37 PM

1. PROJECT LOCATION:
   A. HOWARD COUNTY, MARYLAND
2. PROJECT DESCRIPTION
   A. PHASE 2 OF THIS PROJECT CONSISTS OF VARIOUS IMPROVEMENTS TO THE EXISTING HOWARD COUNTY LITTLE PATUXENT WATER RECLAMATION PLANT (HCLPWRP) BIOSOLIDS PROCESSING FACILITY. INCLUDED UNDER THIS OVERALL CODE ANALYSIS IS ALTERATION WORK BEING DONE IN THE EXISTING SOLIDS SCREENING AREA (CENTRIFUGE BUILDING) WHICH CONSISTS OF THE REPLACEMENT OF VARIOUS EQUIPMENT AND BUILDING ELEMENTS IN KIND. THERE IS NO NEW PROCESS WORK OCCURING WITHIN THE SOLIDS PIPE GALLERY AND THE GRAVITY BELT THICKENER AREA FOR PHASE 2. THE ABOVE...

3. REGULATORY ENFORCEMENT:
   A. AUTHORITY HAVING JURISDICTION (AHJ):
      I. HOWARD COUNTY FIRE AND RESCUE (FIRE AND LIFE SAFETY)
         6751 COLUMBIA GATEWAY DR
         COLUMBIA, MD 21046
      II. HOWARD COUNTY INSPECTIONS, LICENSES AND PERMITS DEPARTMENT (BUILDING CODE)
         3430 COURT HOUSE DR
         ELLICOTT CITY, MD 21043
   B. APPLICABLE DESIGN STANDARDS/CODES
      I. LOCALLY ADOPTED GOVERNING CODES:
         1 INTERNATIONAL BUILDING CODE, 2015 EDITION, WITH AMENDMENTS
         2 INTERNATIONAL MECHANICAL CODE, 2015 EDITION, WITH AMENDMENTS
         3 INTERNATIONAL ENERGY CONSERVATION CODE, 2015 EDITION, WITH AMENDMENTS
         4 NFPA 1 UNIFORM FIRE CODE, 2015 EDITION, WITH AMENDMENTS
         5 NFPA 101 LIFE SAFETY CODE (LSC), 2015 EDITION
         6 HOWARD COUNTY ELECTRICAL CODE ADOPTED PURSUANT TO TITLE 3, SUBTITLE 2 OF THE HOWARD COUNTY...
         7 HOWARD COUNTY PLUMBING AND GASFITTING CODE ADOPTED PURSUANT TO TITLE 3, SUBTITLE 3 OF THE...
         8 MARYLAND STATE ACCESSIBILITY CODE
         9 INTERNATIONAL EXISTING BUILDING CODE, 2015 EDITION, BY WAY OF MARYLAND BUILDING REHABILITATION...
      II. REFERENCED STANDARDS:
         1 NFPA 13 STANDARD FOR THE INSTALLATION OF SPRINKLER SYSTEMS, 2013 EDITION
         2 NFPA 72 NATIONAL FIRE ALARM CODE, 2013 EDITION
      III. OTHER CODES USED FOR DESIGN:
         1 NFPA 820 STANDARD FOR FIRE PROTECTION IN WASTEWATER TREATMENT AND COLLECTION FACILITIES, 2016...
4. OCCUPANCY CLASSIFICATION
   A. IBC CHAPTER 3 - LOW HAZARD FACTORY INDUSTRIAL GROUP F-2
   B. NFPA 101 CHAPTER 40 - SPECIAL PURPOSE INDUSTRIAL, LOW HAZARD
5. CONSTRUCTION TYPE
   A. IBC CHAPTER 6 - TYPE II-B CONSTRUCTION CLASSIFICATION
6. EXISTING BUILDING AREA AND HEIGHT
   A. IBC CHAPTER 5, SECTION 503 - ALLOWABLE BUILDING AREA AND HEIGHT PER IBC TABLES 504.3, 504.4, AND 506.2 FOR A...
      I. HEIGHT: 75 FEET
      II. STORIES: 4
      III. AREA: 69,000 SQUARE FEET
      IV. A 26% AREA INCREASE IS ALLOWED FOR AVAILABLE FRONTAGE PER 506.3.
         FRONTAGE INCREASE CALCULATED USING EQUATION 5-5 FROM 2015 IBC;
         IF = [F/P - 0.25]W/30 = [448/878 - 0.25]30/30 = [0.51 - 0.25]1 = 0.26
         THIS RESULTS IN AN ALLOWABLE AREA OF 74,980 SQUARE FEET.
   B. ACTUAL - TYPE IIB CONSTRUCTION CLASSIFICATION:
      I. HEIGHT: APPROXIMATELY 50 FEET
      II. STORIES: 3
      III. AREA: APPROXIMATELY 35,400 SQUARE FEET
   C. A 3-HOUR FIRE WALL IS BEING PROVIDED IN PHASE 1 TO FULLY SEPARATE THE EXISTING BUILDING AREAS FROM THE NEW...
7. INTERNATIONAL EXISTING BUILDING CODE (IEBC) - CLASSIFICATION OF WORK
   A. SOLIDS PIPE GALLERY = NO PROCESS WORK IN PHASE 2
   B. CHEMICAL HANDLING AREA = BASEMENT BEING KEPT, ABOVE GRADE BEING DEMOLISHED AND REPLACED WITH DRYER BUILDING; CONSTITUTES A NEW ADDITION TO THE BUILDING AND THIS STRUCTURE WILL COMPLY WITH 2015 IBC WITH...
   C. SOLIDS SCREENING AREA (CENTRIFUGE BUILDING) = ALTERATION LEVEL 1
   D. GRAVITY BELT THICKENER AREA = NO PROCESS WORK IN PHASE 2
   E. NOTES:
      I. TOTAL WORK AREA IS MORE THAN THE 5,000 SQUARE FEET, WHICH PER THE LOCAL ORDINANCE REQUIRES THE...
8. IEBC CHAPTER 7 - ALTERATIONS LEVEL 1 REQUIREMENTS
   A. GENERAL, §701
      I. §701.2 CONFORMANCE - AN EXISTING BUILDING OR PORTION THEREOF SHALL NOT BE ALTERED SUCH THAT THE BUILDING BECOMES LESS SAFE THAN ITS EXISTING CONDITION.
   B. FIRE PROTECTION, §703 - ALTERATIONS SHALL BE DONE IN A MANNER THAT MAINTAINS THE LEVEL OF FIRE PROTECTION...
   C. MEANS OF EGRESS, §704 - ALTERATIONS SHALL BE DONE IN A MANNER THAT MAINTAINES THE LEVEL OF PROTECTION...
9. FIRE RESISTANCE REQUIREMENTS
   A. TYPE IIB CONSTRUCTION CLASSIFICATION SHALL BE LIMITED TO THE BUILDING ELEMENTS INDICATED IN SECTIONS 601 &...
      EXTERIOR BEARING WALLS - (0) HOUR RATING (SEE BELOW)
      EXTERIOR NON-BEARING WALLS (0) HOUR RATING (SEE BELOW)
      INTERIOR BEARING WALLS - (0) HOUR RATING
      STRUCTURAL FRAME- (0) HOUR RATING
      PERMANENT PARTITIONS- (0) HOUR RATING
      FLOORS & FLOOR-CEILINGS - (0) HOUR RATING
      ROOFS AND ROOF CEILINGS - (0) HOUR RATING
      EXIT STAIR ENCLOSURES (LESS THAN 4 STORIES) - (1) HOUR RATING

THIS BUILDING IS NOT REQUIRED TO HAVE FIRE-RESISTANCE RATED EXTERIOR WALLS DUE TO HAVING SUFFICIENT FIRE SEPARATIO...

THE ONLY INTERNAL FIRE-RATED BARRIERS/ASSEMBLIES REQUIRED FOR THIS SINGLE OCCUPANCY BUILDING ARE THE EXIT STAIR ENCLOSURES (1 HOUR FIRE BARRIER) AND THE 2F MCC ROOM SPRINKLER EXCEPTION (2 HOUR FIRE BARRIER AND HORIZONTAL...

10 FIRE PROTECTION SYSTEMS
   A. AN AUTOMATIC SPRINKLER PROTECTION IS REQUIRED FOR THIS GROUP F-2 OCCUPANCY IN ACCORDANCE WITH THE LOCAL AMENDMENTS TO 2015 IBC §903.2.13, "ADDITIONAL SUPPRESSION REQUIREMENTS", DUE TO THE DRYER BUILDING ADDITION BEING OVER 5,000 GROSS SQUARE FEET IN FLOOR AREA. THE NEW DRYER BUILDING IS ALSO REQUIRED TO HAVE SPRINKLERS...
   B. PORTABLE FIRE EXTINGUISHERS ARE REQUIRED TO BE SELECTED AND INSTALLED IN ACCORDANCE WITH IBC §906 AND NFPA 10.
   C. A FIRE ALARM SYSTEM IS REQUIRED FOR THE BIOSOLIDS PROCESSING FACILITY PER 2016 NFPA 820 (SEE NFPA 820 REQUIREMENTS SECTION, BELOW). THE FIRE ALARM CONTROL PANEL (FACP) SHALL MONITOR THE AUTOMATIC SPRINKLER SYSTEM AND BE CAPABLE OF SUPERVISORY SERVICE FOR EMERGENCY SERVICES NOTIFICATION AS REQUIRED PER IBC §903.4, WHICH SAYS "ALARM, SUPERVISORY AND TROUBLE SIGNALS SHALL BE DISTINCTLY DIFFERENT AND SHALL BE AUTOMATICALLY TRANSMITTED TO AN APPROVED SUPERVISING STATION OR, WHERE APPROVED BY THE FIRE CODE OFFICIAL, SHALL SOUND AN AUDIBLE SIGNAL AT A CONSTANTLY ATTENDED LOCATION", AND PER IBC §903.4.1, WHICH SAYS THE "ALARM, SUPERVISORY...
11. MEANS OF EGRESS
   A. BUILDING OCCUPANT LOAD:
      I. IBC CHAPTER 10 - OCCUPANT LOAD FACTOR FROM TABLE 1004.1.1:
         1 ELECTRICAL/MECHANICAL EQUIPMENT ROOMS; 300 SQ. FT. / PERSON (GROSS)
         2 OCCUPANT LOAD: 118 OCCUPANTS (35,400 SQ. FT. / 300 SQ. FT./ PERSON)
      II. NFPA 101 - PER TABLE 7.3.1.2, FOR SPECIAL PURPOSE INDUSTRIAL OCCUPANCY, "THE OCCUPANT LOAD IS THE MAXIMUM PROBABLE NUMBER OF OCCUPANTS PRESENT AT ANY TIME." IT IS EXPECTED THAT FEWER THAN 10 OCCUPANTS WILL BE PRESENT IN THIS FACILITY AT A GIVEN TIME SINCE THE BUILDING IS ONLY OCCUPIED BY PERSONNEL AS REQUIRED FOR...
   B. EGRESS ILLUMINATION OF 1 FOOTCANDLE SHALL BE PROVIDED PER IBC §1008.2 AND NFPA 101 §7.8.1.3
   C. EMERGENCY POWER SUPPLIES SHALL BE PROVIDED FOR EGRESS ILLUMINATION PER IBC §1008.3 AND NFPA 101 §7.9
   D. DOORS SHALL PROVIDE MINIMUM CLEAR WIDTH OF 32 INCHES PER IBC §1010.1.1 AND NFPA 101 § 7.2.1.2.3 - SEE FLOOR PLANS FOR EXIT WIDTHS BEING PROVIDED.
   E. ILLUMINATED EXIT SIGNS SHALL BE PROVIDED FOR EGRESS DOORS PER IBC §1013 AND NFPA 101 §7.10.
   F. EXIT ACCESS - SPRINKLERED BUILDING
      I. IBC (F-2):
         1 100 FT. MAX COMMON PATH ALLOWED IBC §1006.2
         2 400 FT. MAX TRAVEL DISTANCE ALLOWED IBC §1017.2
      II. NFPA 101 (SPECIAL INDUSTRIAL OCCUPANCY):
         1 100 FT. MAX COMMON PATH ALLOWED NFPA 101 TABLE 40.2.5.1
         2 400 FT. MAX TRAVEL DISTANCE ALLOWED NFPA 101 TABLE 40.2.6.1
   G. ACCESSIBILITY IS NOT REQUIRED FOR THE MAJORITY OF THE BIOSOLIDS PROCESSING FACILITIES IN ACCORDANCE WITH §1103.2.9, WHICH STATES "SPACES FREQUENTED ONLY BY SERVICE PERSONNEL FOR MAINTENANCE, REPAIR OR OCCASIONAL...

12. NFPA 820 REQUIREMENTS
   A. EXISTING PIPE GALLERY; NFPA 820, TABLE 6.2.2(A), ROW 9, LINE B
      1. HAZARDOUS CLASSIFICATION: UNCLASSIFIED
      2. VENTILATED AT 6 CONTINUOUS AIR CHANGES PER HOUR (REQUIRED)
      3. PORTABLE FIRE EXTINGUISHER AND FIRE HYDRANT (REQUIRED)
   B. GRAVITY BELT THICKENER AREA
      1. WAS THICKENING; NFPA 820, TABLE 6.2.2(A), ROW 12, LINE A
         I. HAZARDOUS CLASSIFICATION: UNCLASSIFIED
         II. VENTILATED AT 6 CONTINUOUS AIR CHANGES PER HOUR (REQUIRED)
         III. FIRE EXTINGUISHER AND FIRE HYDRANT (REQUIRED)
         IV. FIRE ALARM SYSTEM* (REQUIRED)
         *SEE FIRE PROTECTION SYSTEMS, ABOVE.
      2. PRIMARY SLUDGE THICKENING (SLUDGE SCREENS & SCREENING HANDLING); NFPA 820, TABLE 6.2.2(A), ROW 1
         I. HAZARDOUS CLASSIFICATION: UNCLASSIFIED
         II. NO VENTILATION REQUIREMENT
         III. FIRE EXTINGUISHER AND FIRE HYDRANT (REQUIRED)
         IV. FIRE ALARM SYSTEM* (REQUIRED)
         *SEE FIRE PROTECTION SYSTEMS, ABOVE.
   C. SOLIDS SCREENING AREA (CENTRIFUGE BUILDING); NFPA 820, TABLE 6.2.2(A), ROW 12, LINE A
      1. HAZARDOUS CLASSIFICATION: UNCLASSIFIED
      2. VENTILATED AT 6 CONTINUOUS AIR CHANGES PER HOUR (REQUIRED)
      3. FIRE EXTINGUISHER AND FIRE HYDRANT (REQUIRED)
      4. FIRE ALARM SYSTEM* (REQUIRED)
      *SEE FIRE PROTECTION SYSTEMS, ABOVE.

D. DRYER BUILDING
NFPA 820, TABLE 6.2.2(B), ROW 1, LINES A, B, C, & D
   1. HAZARDOUS CLASSIFICATION:
      I. CLASS II, DIVISION 1 IN ROOMS EXPOSED TO COMBUSTIBLE PARTICULATE SOLIDS AND AREAS INSIDE EQUIPMENT...
      II. CLASS II, DIVISION 2 WITHIN 10 FEET OF EQUIPMENT PROCESSING COMBUSTIBLE PARTICULATE SOLIDS
      III. UNCLASSIFIED BEYOND 10 FEET OF EQUIPMENT PROCESSING COMBUSTIBLE PARTICULATE SOLIDS
   2. NO VENTILATION REQUIREMENT
   3. FIRE HYDRANT (REQUIRED)
   4. FIRE SUPPRESSION SYSTEM AND FIRE ALARM SYSTEM* (REQUIRED)
      *SEE FIRE PROTECTION SYSTEMS, ABOVE.

THE DRAWINGS IN THIS SET ARE RECORD DRAWINGS. THEY ARE CONSTRUCTION CONTRACT DRAWINGS WHICH HAVE BEEN REVISED BASED ON AVAILABLE FIELD INFORMATION RECORDED BY OTHERS DURING CONSTRUCTION OF THIS CONTRACT. THERE HAS BEEN NO VERIFICATION OF DIMENSIONS SHOWN ON THE CONSTRUCTION DRAWINGS OR THE ACCURACY/COMPLETENESS OF THE FIELD INFORMATION RECEIVED.

SIGNATURE _____ DATE 2/7/2023

AS-BUILT REPLACEMENT SHEET

PROFESSIONAL CERTIFICATION
THIS DRAWING WAS ORIGINALLY APPROVED FOR CONSTRUCTION AND SEALED BY ZACHARY J. SACHSENMAIER, A REGISTERED PROFESSIONAL ENGINEER IN THE STATE OF MARYLAND, NO. 42646

NOTICE TO CONTRACTORS
- PROJECT ELEVATIONS ARE BASED ON NAVD88 AND HOWARD COUNTY'S BENCHMARK SYSTEM
- PREVIOUS PROJECTS USED OTHER DATUMS
- APPLY THE FOLLOWING CONVERSIONS WHEN USING PREVIOUS CONTRACT DRAWINGS:
  - ADDITION NO. 6: SUBTRACT 0.80 FT
  - PRIOR ADDITIONS: SUBTRACT 1.04 FT

DEPARTMENT OF PUBLIC WORKS
HOWARD COUNTY, MARYLAND

CHIEF, BUREAU OF UTILITIES DATE

DES: MJS
DRN: TRF
CHK: ZJS
DATE: 01/2018

DATE	REV	DESCRIPTION
03/2021		RECORD DRAWINGS

GENERAL

OVERALL CODE ANALYSIS

LITTLE PATUXENT WATER RECLAMATION PLANT
8TH ADDITION
BIOSOLIDS PROCESSING FACILITIES - PHASE 2

CAPITAL PROJECT S-6295
CONTRACT NO. 24-4936

ELECTION DISTRICT NO. 6
HOWARD COUNTY, MARYLAND

SCALE AS SHOWN

SHEET 26 OF 311

G-30

BIM 360://10054364 – Little Patuxent WRP 8th Addition/264592_100_A_V18.rvt
1/7/2022 11:19:47 AM

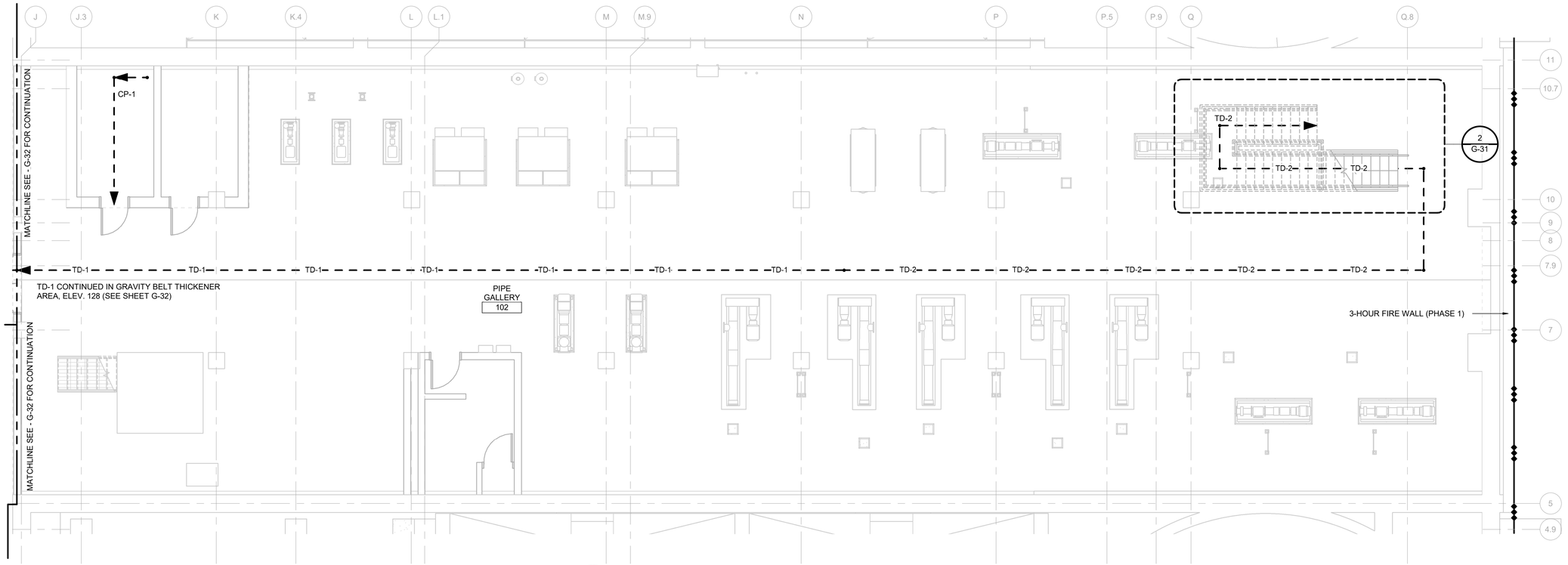

1 G-31 SOLIDS PIPE GALLERY LIFE SAFETY PLAN - EL. 128.00

3/16" = 1'-0"

MEANS OF EGRESS ARRANGEMENT DISTANCE SCHEDULE - BUILDING SUMMARY		
EGRESS PATH ID	EGRESS DISTANCE	
	PROVIDED	MAXIMUM PERMITTED
	0' - 0"	
CP-1	15' - 0"	100' - 0"
TD-1	120' - 6"	400' - 0"
TD-2	126' - 0"	400' - 0"

MEANS OF EGRESS WIDTH CAPACITY			
	PROVIDED EGRESS CAPACITY - LEVEL COMPONENTS & RAMPS		
EXIT ID	EGRESS CAPACITY FACTOR	CLEAR WIDTH	OCCUPANT LOAD CAPACITY
48	0.2	2' - 8"	160

WALL RATING LEGEND

1 HOUR FIRE BARRIER

3 HOUR FIRE WALL (PHASE 1)

LIFE SAFETY NOTES:

1. FOR EXIT LIGHTS AND EMERGENCY LIGHTING, SEE ELECTRICAL DRAWINGS.

LIFE SAFETY SYMBOLS:

EXIT DOOR TAG

A	CLEAR DOOR WIDTH [FEET - INCHES]
B	OCCUPANT LOAD CAPACITY [NO.OF PEOPLE]

LINE TYPES FOR MEANS OF EGRESS:

COMPONENT	SYMBOL
TRAVEL DISTANCE	TD
COMMON PATH	CP

EXIT DISCHARGE

EXIT DISCHARGE ARROW

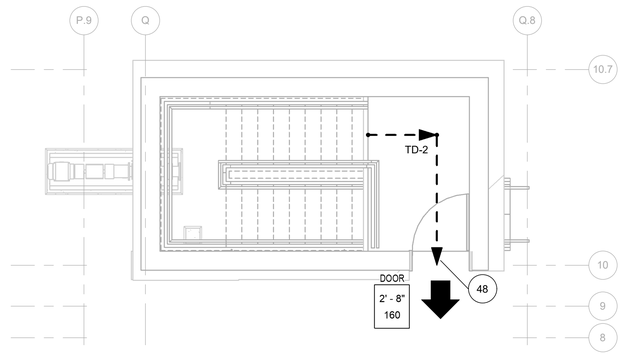

2 G-31 ENLARGED SOLIDS PIPE GALLERY STAIR PLAN - EL. 142.00

1/4" = 1'-0"

THE DRAWINGS IN THIS SET ARE RECORD DRAWINGS. THEY ARE CONSTRUCTION CONTRACT DRAWINGS WHICH HAVE BEEN REVISED BASED ON AVAILABLE FIELD INFORMATION RECORDED BY OTHERS DURING CONSTRUCTION OF THIS CONTRACT. THERE HAS BEEN NO VERIFICATION OF DIMENSIONS SHOWN ON THE CONSTRUCTION DRAWINGS OR THE ACCURACY/COMPLETENESS OF THE FIELD INFORMATION RECEIVED.

SIGNATURE — DATE 2/7/2022

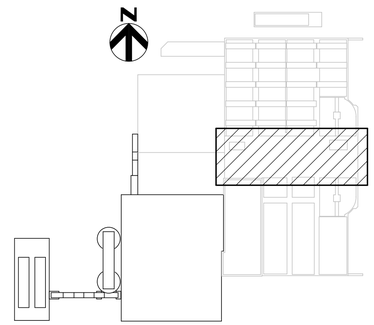

KEY PLAN

AS-BUILT REPLACEMENT SHEET

PROFESSIONAL CERTIFICATION

THIS DRAWING WAS ORIGINALLY APPROVED FOR CONSTRUCTION AND SEALED BY ZACHARY J. SACHSENMAIER, A REGISTERED PROFESSIONAL ENGINEER IN THE STATE OF MARYLAND, NO. 42646

NOTICE TO CONTRACTORS

- PROJECT ELEVATIONS ARE BASED ON NAVD88 AND HOWARD COUNTY'S BENCHMARK SYSTEM
- PREVIOUS PROJECTS USED OTHER DATUMS
- APPLY THE FOLLOWING CONVERSIONS WHEN USING PREVIOUS CONTRACT DRAWINGS:
  - ADDITION NO. 6: SUBTRACT 0.80 FT
  - PRIOR ADDITIONS: SUBTRACT 1.04 FT

DEPARTMENT OF PUBLIC WORKS
HOWARD COUNTY, MARYLAND

CHIEF, BUREAU OF UTILITIES — DATE

DES: MJS
DRN: TRF
CHK: ZJS
DATE: 01/2018

DATE	REV	DESCRIPTION
03/2021		RECORD DRAWINGS

GENERAL

SOLIDS PIPE GALLERY - LIFE SAFETY PLAN AT EL 128.00

LITTLE PATUXENT WATER RECLAMATION PLANT
8TH ADDITION
BIOSOLIDS PROCESSING FACILITIES - PHASE 2

CAPITAL PROJECT S-6295
CONTRACT NO. 24-4936

ELECTION DISTRICT NO. 6
HOWARD COUNTY, MARYLAND

SCALE AS SHOWN

SHEET 27 OF 311

G-31

BIM 360://10054364 – Little Patuxent WRP 8th Addition/264592_100_A_V18.rvt
1/7/2022 11:19:49 AM

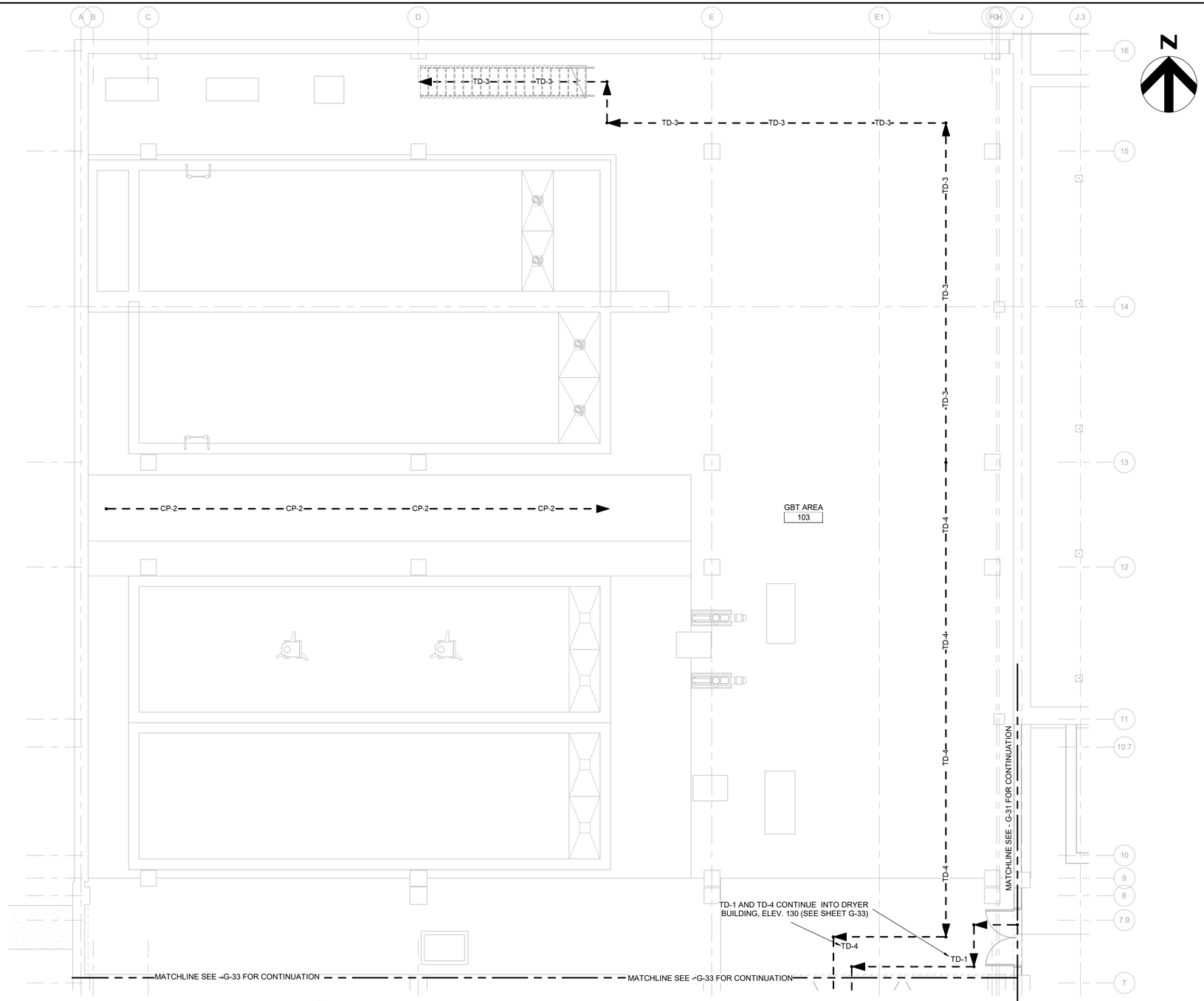

1 / G-32 PARTIAL LIFE SAFETY PLAN - EL 128.00

3/16" = 1'-0"

LIFE SAFETY NOTES:

1. FOR EXIT LIGHTS AND EMERGENCY LIGHTING, SEE ELECTRICAL DRAWINGS.

LIFE SAFETY SYMBOLS:

EXIT DOOR TAG

A	CLEAR DOOR WIDTH [FEET - INCHES]
B	OCCUPANT LOAD CAPACITY [NO.OF PEOPLE]

LINE TYPES FOR MEANS OF EGRESS:

COMPONENT	SYMBOL
TRAVEL DISTANCE	TD
COMMON PATH	CP

EXIT DISCHARGE

EXIT DISCHARGE ARROW

WALL RATING LEGEND

1 HOUR FIRE BARRIER

MEANS OF EGRESS ARRANGEMENT DISTANCE SCHEDULE - BUILDING SUMMARY

EGRESS PATH ID	EGRESS DISTANCE	
	PROVIDED	MAXIMUM PERMITTED
CP-2	48' - 0"	100' - 0"
TD-3	86' - 6"	400' - 0"
TD-4	85' - 6"	400' - 0"

THE DRAWINGS IN THIS SET ARE RECORD DRAWINGS. THEY ARE CONSTRUCTION CONTRACT DRAWINGS WHICH HAVE BEEN REVISED BASED ON AVAILABLE FIELD INFORMATION RECORDED BY OTHERS DURING CONSTRUCTION OF THIS CONTRACT. THERE HAS BEEN NO VERIFICATION OF DIMENSIONS SHOWN ON THE CONSTRUCTION DRAWINGS OR THE ACCURACY/COMPLETENESS OF THE FIELD INFORMATION RECEIVED.

SIGNATURE — DATE 2/7/2022

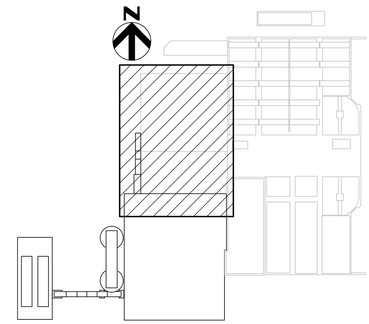

KEY PLAN

AS-BUILT REPLACEMENT SHEET

PROFESSIONAL CERTIFICATION

THIS DRAWING WAS ORIGINALLY APPROVED FOR CONSTRUCTION AND SEALED BY ZACHARY J. SACHSENMAIER, A REGISTERED PROFESSIONAL ENGINEER IN THE STATE OF MARYLAND, NO. 42646

NOTICE TO CONTRACTORS

- PROJECT ELEVATIONS ARE BASED ON NAVD88 AND HOWARD COUNTY'S BENCHMARK SYSTEM
- PREVIOUS PROJECTS USED OTHER DATUMS
- APPLY THE FOLLOWING CONVERSIONS WHEN USING PREVIOUS CONTRACT DRAWINGS:
  - ADDITION NO. 6: SUBTRACT 0.80 FT
  - PRIOR ADDITIONS: SUBTRACT 1.04 FT

DEPARTMENT OF PUBLIC WORKS
HOWARD COUNTY, MARYLAND

CHIEF, BUREAU OF UTILITIES — DATE

DES: MJS
DRN: TRF
CHK: ZJS
DATE: 01/2018

DATE	REV	DESCRIPTION
03/2021		RECORD DRAWINGS

GENERAL

GRAVITY BELT THICKENER AREA - LIFE SAFETY PLAN AT EL 128.00

LITTLE PATUXENT WATER RECLAMATION PLANT
8TH ADDITION
BIOSOLIDS PROCESSING FACILITIES - PHASE 2

CAPITAL PROJECT S-6295
CONTRACT NO. 24-4936

ELECTION DISTRICT NO. 6
HOWARD COUNTY, MARYLAND

SCALE AS SHOWN

SHEET 28 OF 311

G-32

BIM 360://100543364 – Little Patuxent WRP 8th Addition/264592_100_A_V18.rvt
1/7/2022 11:19:52 AM

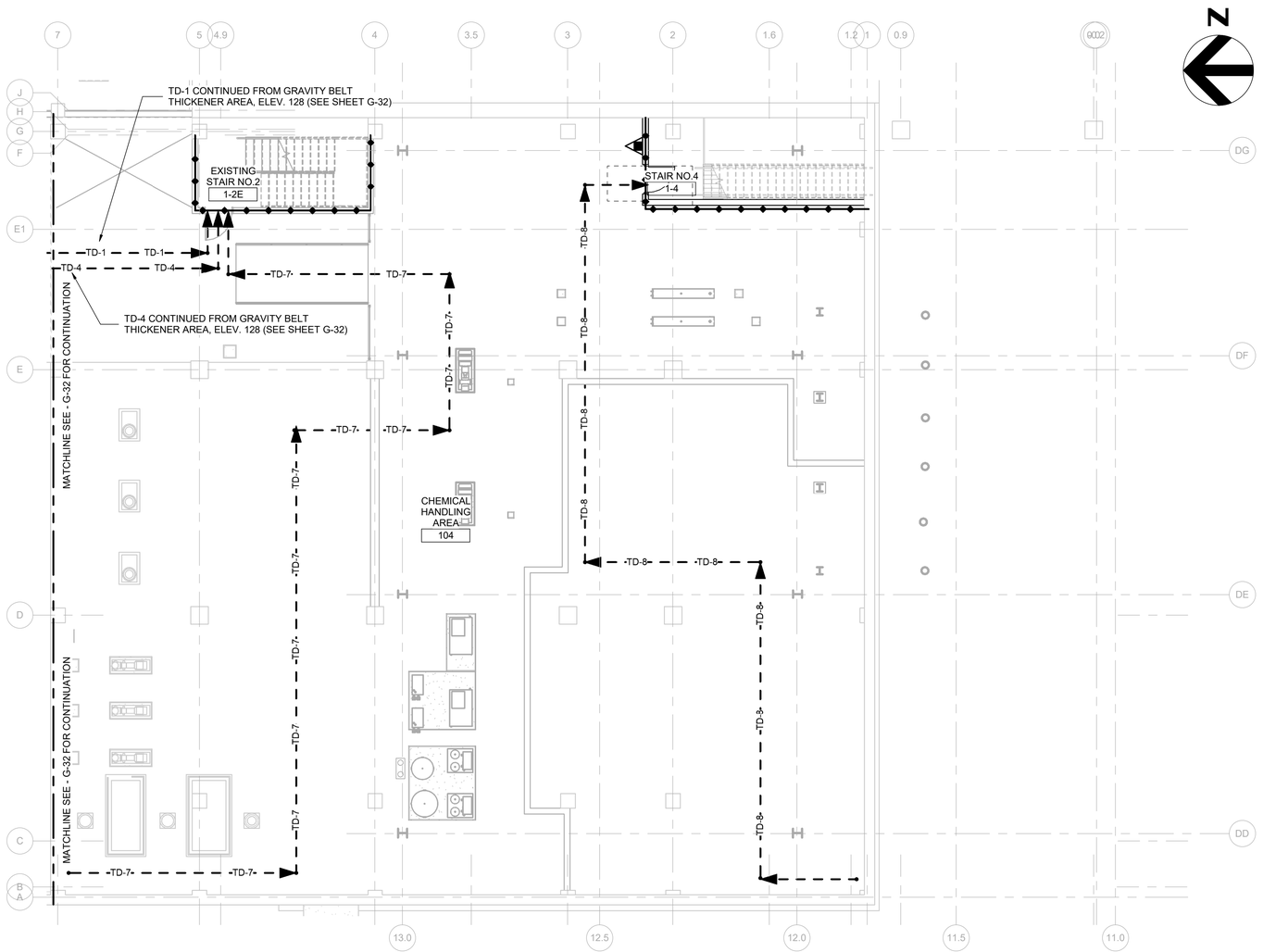

1 G-33 LIFE SAFETY PLAN - EL. 130

1/8" = 1'-0"

LIFE SAFETY NOTES:

1. FOR EXIT LIGHTS AND EMERGENCY LIGHTING, SEE ELECTRICAL DRAWINGS.

LIFE SAFETY SYMBOLS:

EXIT DOOR TAG

A	CLEAR DOOR WIDTH [FEET - INCHES]
B	OCCUPANT LOAD CAPACITY [NO.OF PEOPLE]

PORTABLE FIRE EXTINGUISHER, ABC TYPE
SEE FIRE EXTINGUISHER SPECIFICATION SECTION 10 44 33
FIRE EXTINGUISHER LOCATIONS PER RFI 0599

LINE TYPES FOR MEANS OF EGRESS:

COMPONENT	SYMBOL
TRAVEL DISTANCE	TD
COMMON PATH	CP

EXIT DISCHARGE

EXIT DISCHARGE ARROW

WALL RATING LEGEND

1 HOUR FIRE BARRIER

MEANS OF EGRESS ARRANGEMENT DISTANCE SCHEDULE - BUILDING SUMMARY

EGRESS PATH ID	EGRESS DISTANCE	
	PROVIDED	MAXIMUM PERMITTED
TD-7	145' - 0"	400' - 0"
TD-8	117' - 6"	400' - 0"

THE DRAWINGS IN THIS SET ARE RECORD DRAWINGS. THEY ARE CONSTRUCTION CONTRACT DRAWINGS WHICH HAVE BEEN REVISED BASED ON AVAILABLE FIELD INFORMATION RECORDED BY OTHERS DURING CONSTRUCTION OF THIS CONTRACT. THERE HAS BEEN NO VERIFICATION OF DIMENSIONS SHOWN ON THE CONSTRUCTION DRAWINGS OR THE ACCURACY/COMPLETENESS OF THE FIELD INFORMATION RECEIVED.

SIGNATURE — DATE 2/7/2022

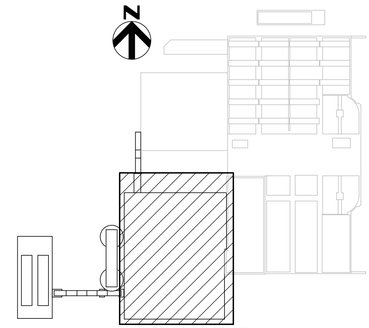

KEY PLAN

AS-BUILT REPLACEMENT SHEET

PROFESSIONAL CERTIFICATION

THIS DRAWING WAS ORIGINALLY APPROVED FOR CONSTRUCTION AND SEALED BY ZACHARY J. SACHSENMAIER, A REGISTERED PROFESSIONAL ENGINEER IN THE STATE OF MARYLAND, NO. 42646

NOTICE TO CONTRACTORS

- PROJECT ELEVATIONS ARE BASED ON NAVD88 AND HOWARD COUNTY'S BENCHMARK SYSTEM
- PREVIOUS PROJECTS USED OTHER DATUMS
- APPLY THE FOLLOWING CONVERSIONS WHEN USING PREVIOUS CONTRACT DRAWINGS:
  - ADDITION NO. 6: SUBTRACT 0.80 FT
  - PRIOR ADDITIONS: SUBTRACT 1.04 FT

DEPARTMENT OF PUBLIC WORKS
HOWARD COUNTY, MARYLAND

CHIEF, BUREAU OF UTILITIES — DATE

DES: MJS
DRN: TRF
CHK: ZJS
DATE: 01/2018

DATE	REV	DESCRIPTION
03/2021		RECORD DRAWINGS

GENERAL

DRYER BUILDING - LIFE SAFETY PLAN AT EL 130.00

LITTLE PATUXENT WATER RECLAMATION PLANT
8TH ADDITION
BIOSOLIDS PROCESSING FACILITIES - PHASE 2

CAPITAL PROJECT S-6295
CONTRACT NO. 24-4936

ELECTION DISTRICT NO. 6
HOWARD COUNTY, MARYLAND

SCALE AS SHOWN

SHEET 29 OF 311

G-33

BIM 360://10054364 – Little Patuxent WRP 8th Addition/264592_100_A_V18.rvt
1/7/2022 11:19:55 AM

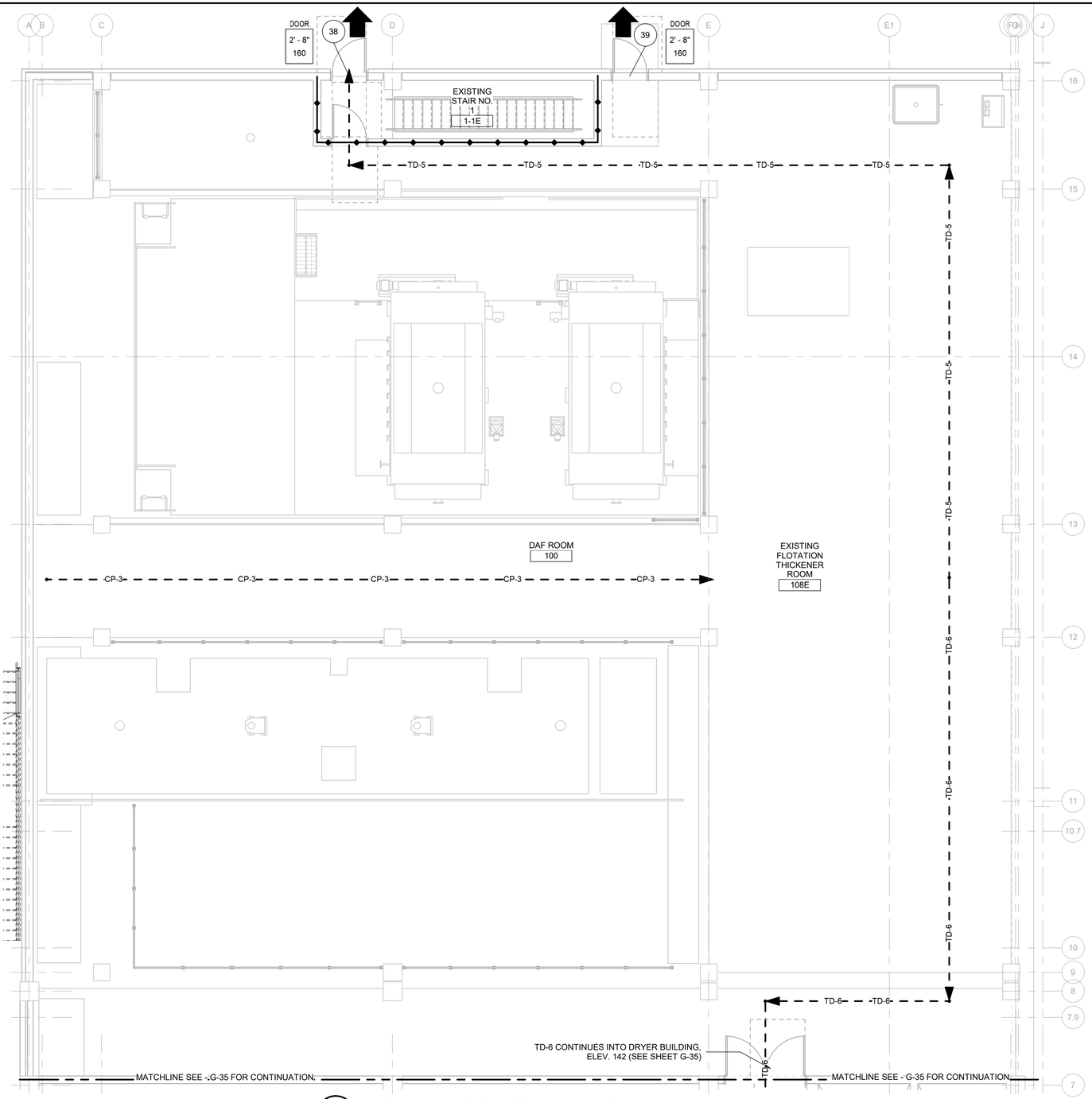

1 G-34 PARTIAL LIFE SAFETY PLAN - EL 142.00

3/16" = 1'-0"

N

LIFE SAFETY NOTES:

1. FOR EXIT LIGHTS AND EMERGENCY LIGHTING, SEE ELECTRICAL DRAWINGS.

LIFE SAFETY SYMBOLS:

EXIT DOOR TAG

A	CLEAR DOOR WIDTH [FEET - INCHES]
B	OCCUPANT LOAD CAPACITY [NO.OF PEOPLE]

LINE TYPES FOR MEANS OF EGRESS:

COMPONENT	SYMBOL
TRAVEL DISTANCE	TD
COMMON PATH	CP

EXIT DISCHARGE

EXIT DISCHARGE ARROW

WALL RATING LEGEND

1 HOUR FIRE BARRIER

MEANS OF EGRESS ARRANGEMENT DISTANCE SCHEDULE - BUILDING SUMMARY

EGRESS PATH ID	EGRESS DISTANCE	
	PROVIDED	MAXIMUM PERMITTED
	0' - 0"	
CP-3	59' - 0"	100' - 0"
TD-5	98' - 0"	400' - 0"
TD-6	93' - 0"	400' - 0"

MEANS OF EGRESS WIDTH CAPACITY

	PROVIDED EGRESS CAPACITY - LEVEL COMPONENTS & RAMPS		
EXIT ID	EGRESS CAPACITY FACTOR	CLEAR WIDTH	OCCUPANT LOAD CAPACITY
38	0.2	2' - 8"	160
39	0.2	2' - 8"	160

THE DRAWINGS IN THIS SET ARE RECORD DRAWINGS. THEY ARE CONSTRUCTION CONTRACT DRAWINGS WHICH HAVE BEEN REVISED BASED ON AVAILABLE FIELD INFORMATION RECORDED BY OTHERS DURING CONSTRUCTION OF THIS CONTRACT. THERE HAS BEEN NO VERIFICATION OF DIMENSIONS SHOWN ON THE CONSTRUCTION DRAWINGS OR THE ACCURACY/COMPLETENESS OF THE FIELD INFORMATION RECEIVED.

SIGNATURE

1/7/2022
DATE

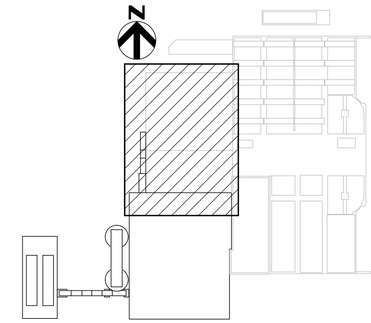

KEY PLAN

AS-BUILT REPLACEMENT SHEET

PROFESSIONAL CERTIFICATION

THIS DRAWING WAS ORIGINALLY APPROVED FOR CONSTRUCTION AND SEALED BY ZACHARY J. SACHSENMAIER, A REGISTERED PROFESSIONAL ENGINEER IN THE STATE OF MARYLAND, NO. 42646

NOTICE TO CONTRACTORS

- PROJECT ELEVATIONS ARE BASED ON NAVD88 AND HOWARD COUNTY'S BENCHMARK SYSTEM
- PREVIOUS PROJECTS USED OTHER DATUMS
- APPLY THE FOLLOWING CONVERSIONS WHEN USING PREVIOUS CONTRACT DRAWINGS:
  - ADDITION NO. 6: SUBTRACT 0.80 FT
  - PRIOR ADDITIONS: SUBTRACT 1.04 FT

DEPARTMENT OF PUBLIC WORKS
HOWARD COUNTY, MARYLAND

CHIEF, BUREAU OF UTILITIES DATE

DES: MJS
DRN: TRF
CHK: ZJS
DATE: 01/2018

DATE	REV	DESCRIPTION
03/2021		RECORD DRAWINGS

GENERAL

GRAVITY BELT THICKENER AREA - LIFE SAFETY PLAN AT EL 142.00

LITTLE PATUXENT WATER RECLAMATION PLANT
8TH ADDITION
BIOSOLIDS PROCESSING FACILITIES - PHASE 2

CAPITAL PROJECT S-6295
CONTRACT NO. 24-4936

ELECTION DISTRICT NO. 6
HOWARD COUNTY, MARYLAND

SCALE AS SHOWN

SHEET 30 OF 311

G-34

BIM 360://10054364 – Little Patuxent WRP 8th Addition/264592_100_A_V18.rvt
1/7/2022 11:19:59 AM

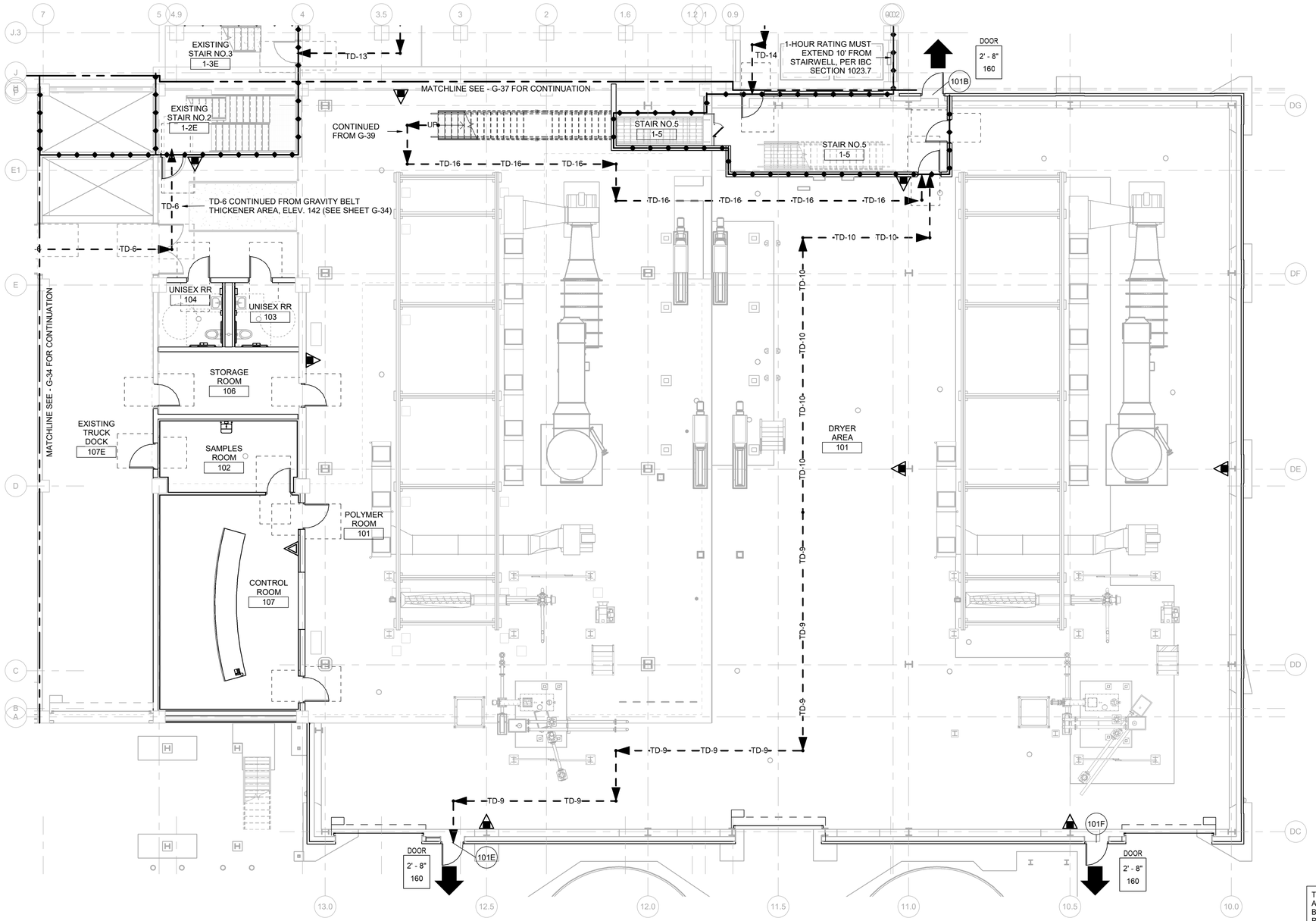

1 G-35 LIFE SAFETY PLAN - EL. 142.00

1/8" = 1'-0"

LIFE SAFETY NOTES:

1. FOR EXIT LIGHTS AND EMERGENCY LIGHTING, SEE ELECTRICAL DRAWINGS.

LIFE SAFETY SYMBOLS:

EXIT DOOR TAG

A — CLEAR DOOR WIDTH [FEET - INCHES]

B — OCCUPANT LOAD CAPACITY [NO.OF PEOPLE]

PORTABLE FIRE EXTINGUISHER, ABC TYPE
SEE FIRE EXTINGUISHER SPECIFICATION SECTION 10 44 33

PORTABLE FIRE EXTINGUISHER, CLEAN AGENT

FIRE EXTINGUISHER LOCATIONS PER RFI 0599

LINE TYPES FOR MEANS OF EGRESS:

COMPONENT	SYMBOL
TRAVEL DISTANCE	TD
COMMON PATH	CP

EXIT DISCHARGE

EXIT DISCHARGE ARROW

WALL RATING LEGEND

1 HOUR FIRE BARRIER

2 HOUR FIRE BARRIER

MEANS OF EGRESS ARRANGEMENT DISTANCE SCHEDULE - BUILDING SUMMARY

EGRESS PATH ID	EGRESS DISTANCE	
	PROVIDED	MAXIMUM PERMITTED
TD-9	95' - 0"	400' - 0"
TD-10	65' - 0"	400' - 0"

MEANS OF EGRESS WIDTH CAPACITY

EXIT ID	PROVIDED EGRESS CAPACITY - LEVEL COMPONENTS & RAMPS		
	EGRESS CAPACITY FACTOR	CLEAR WIDTH	OCCUPANT LOAD CAPACITY
101B - SOUTHEAST	0.2	2' - 8"	160
101B - WEST	0.2	2' - 8"	160
101D	0.2	2' - 8"	160

THE DRAWINGS IN THIS SET ARE RECORD DRAWINGS. THEY ARE CONSTRUCTION CONTRACT DRAWINGS WHICH HAVE BEEN REVISED BASED ON AVAILABLE FIELD INFORMATION RECORDED BY OTHERS DURING CONSTRUCTION OF THIS CONTRACT. THERE HAS BEEN NO VERIFICATION OF DIMENSIONS SHOWN ON THE CONSTRUCTION DRAWINGS OR THE ACCURACY/COMPLETENESS OF THE FIELD INFORMATION RECEIVED.

SIGNATURE — DATE 1/7/2022

KEY PLAN

AS-BUILT REPLACEMENT SHEET

PROFESSIONAL CERTIFICATION

THIS DRAWING WAS ORIGINALLY APPROVED FOR CONSTRUCTION AND SEALED BY ZACHARY J. SACHSENMAIER, A REGISTERED PROFESSIONAL ENGINEER IN THE STATE OF MARYLAND, NO. 42646

NOTICE TO CONTRACTORS

- PROJECT ELEVATIONS ARE BASED ON NAVD88 AND HOWARD COUNTY'S BENCHMARK SYSTEM
- PREVIOUS PROJECTS USED OTHER DATUMS
- APPLY THE FOLLOWING CONVERSIONS WHEN USING PREVIOUS CONTRACT DRAWINGS:
  - ADDITION NO. 6: SUBTRACT 0.80 FT
  - PRIOR ADDITIONS: SUBTRACT 1.04 FT

DEPARTMENT OF PUBLIC WORKS
HOWARD COUNTY, MARYLAND

CHIEF, BUREAU OF UTILITIES — DATE

DES: MJS
DRN: TRF
CHK: ZJS
DATE: 01/2018

DATE	REV	DESCRIPTION
03/2021		RECORD DRAWINGS

GENERAL

DRYER BUILDING - LIFE SAFETY PLAN AT EL 142.00

LITTLE PATUXENT WATER RECLAMATION PLANT
8TH ADDITION
BIOSOLIDS PROCESSING FACILITIES - PHASE 2

CAPITAL PROJECT S-6295
CONTRACT NO. 24-4936

ELECTION DISTRICT NO. 6
HOWARD COUNTY, MARYLAND

SCALE AS SHOWN

SHEET 31 OF 311

G-35

BIM 360://10054364 – Little Patuxent WRP 8th Addition/264592_100_A_V18.rvt
1/7/2022 11:20:15 AM

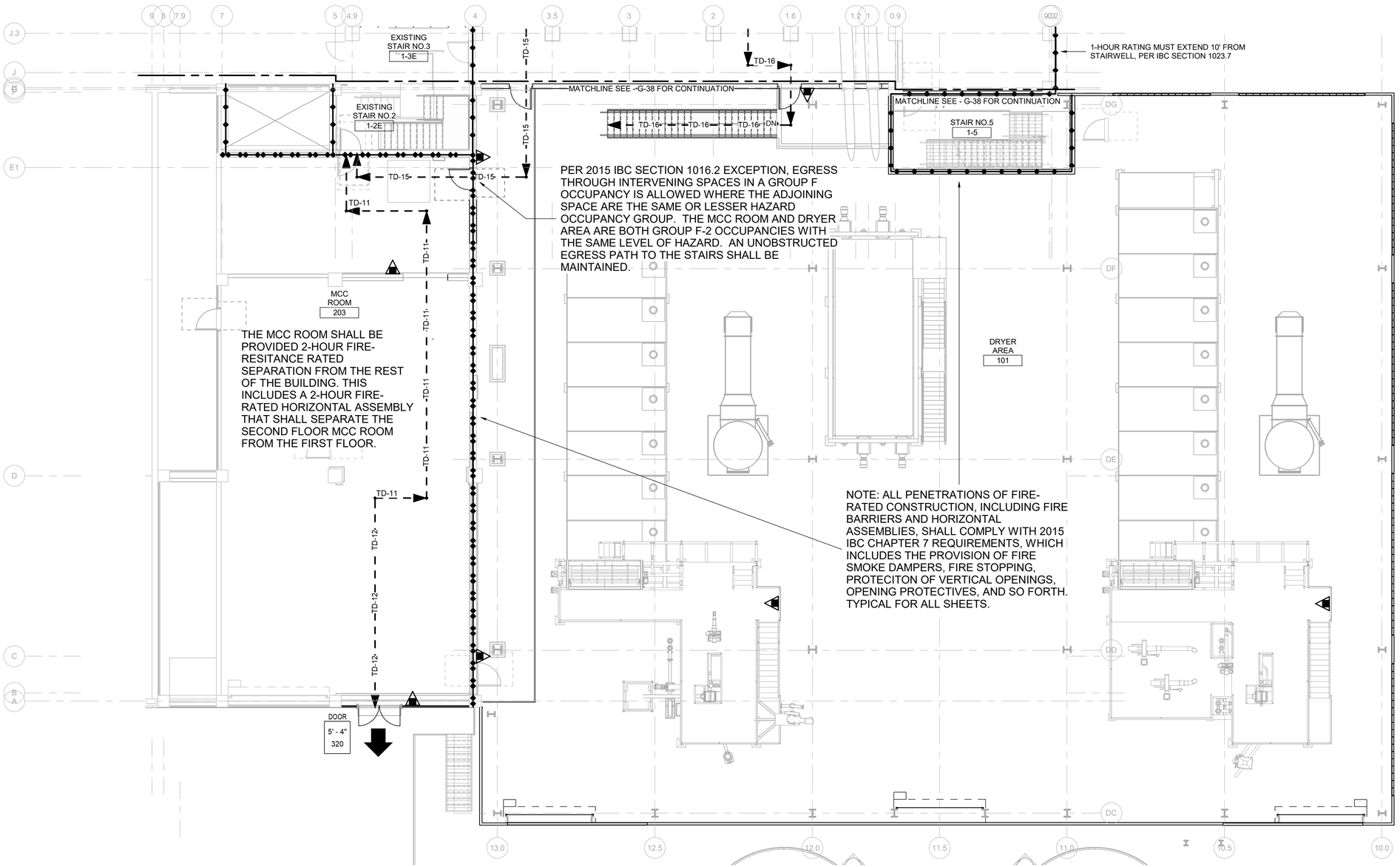

1 / G-36 PARTIAL LIFE SAFETY PLAN - EL. 156.00

1/8" = 1'-0"

N

LIFE SAFETY NOTES:

1. FOR EXIT LIGHTS AND EMERGENCY LIGHTING, SEE ELECTRICAL DRAWINGS.

LIFE SAFETY SYMBOLS:

EXIT DOOR TAG

A — CLEAR DOOR WIDTH [FEET - INCHES]

B — OCCUPANT LOAD CAPACITY [NO.OF PEOPLE]

PORTABLE FIRE EXTINGUISHER, ABC TYPE
SEE FIRE EXTINGUISHER SPECIFICATION SECTION 10 44 33
FIRE EXTINGUISHER LOCATIONS PER RFI 0599

LINE TYPES FOR MEANS OF EGRESS:

COMPONENT	SYMBOL
TRAVEL DISTANCE	TD
COMMON PATH	CP

EXIT DISCHARGE

EXIT DISCHARGE ARROW

WALL RATING LEGEND

1 HOUR FIRE BARRIER

2 HOUR FIRE BARRIER

MEANS OF EGRESS ARRANGEMENT DISTANCE SCHEDULE - BUILDING SUMMARY

EGRESS PATH ID	EGRESS DISTANCE	
	PROVIDED	MAXIMUM PERMITTED
TD-11	68' - 0"	400' - 0"
TD-12	30' - 0"	400' - 0"

MEANS OF EGRESS WIDTH CAPACITY

EXIT ID	PROVIDED EGRESS CAPACITY - LEVEL COMPONENTS & RAMPS		
	EGRESS CAPACITY FACTOR	CLEAR WIDTH	OCCUPANT LOAD CAPACITY
MCC WEST EXIT	0.2	5' - 4"	320

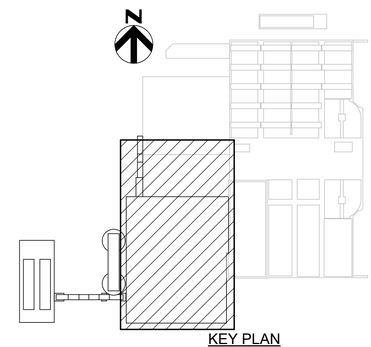

KEY PLAN

THE DRAWINGS IN THIS SET ARE RECORD DRAWINGS. THEY ARE CONSTRUCTION CONTRACT DRAWINGS WHICH HAVE BEEN REVISED BASED ON AVAILABLE FIELD INFORMATION RECORDED BY OTHERS DURING CONSTRUCTION OF THIS CONTRACT. THERE HAS BEEN NO VERIFICATION OF DIMENSIONS SHOWN ON THE CONSTRUCTION DRAWINGS OR THE ACCURACY/COMPLETENESS OF THE FIELD INFORMATION RECEIVED.

SIGNATURE — DATE 2/7/2022

AS-BUILT REPLACEMENT SHEET

PROFESSIONAL CERTIFICATION

THIS DRAWING WAS ORIGINALLY APPROVED FOR CONSTRUCTION AND SEALED BY ZACHARY J. SACHSENMAIER, A REGISTERED PROFESSIONAL ENGINEER IN THE STATE OF MARYLAND, NO. 42646

NOTICE TO CONTRACTORS

- PROJECT ELEVATIONS ARE BASED ON NAVD88 AND HOWARD COUNTY'S BENCHMARK SYSTEM
- PREVIOUS PROJECTS USED OTHER DATUMS
- APPLY THE FOLLOWING CONVERSIONS WHEN USING PREVIOUS CONTRACT DRAWINGS:
  - ADDITION NO. 6: SUBTRACT 0.80 FT
  - PRIOR ADDITIONS: SUBTRACT 1.04 FT

DEPARTMENT OF PUBLIC WORKS
HOWARD COUNTY, MARYLAND

CHIEF, BUREAU OF UTILITIES — DATE

DES: MJS
DRN: TRF
CHK: ZJS
DATE: 01/2018

DATE	REV	DESCRIPTION
03/2021		RECORD DRAWINGS

GENERAL

DRYER BUILDING - LIFE SAFETY PLAN AT EL 156.00

LITTLE PATUXENT WATER RECLAMATION PLANT
8TH ADDITION
BIOSOLIDS PROCESSING FACILITIES - PHASE 2

CAPITAL PROJECT S-6295
CONTRACT NO. 24-4936

ELECTION DISTRICT NO. 6
HOWARD COUNTY, MARYLAND

SCALE AS SHOWN

SHEET 32 OF 311

G-36

BIM 360://10054364 – Little Patuxent WRP 8th Addition/2643592_100_A_V18.rvt
1/7/2022 11:20:39 AM

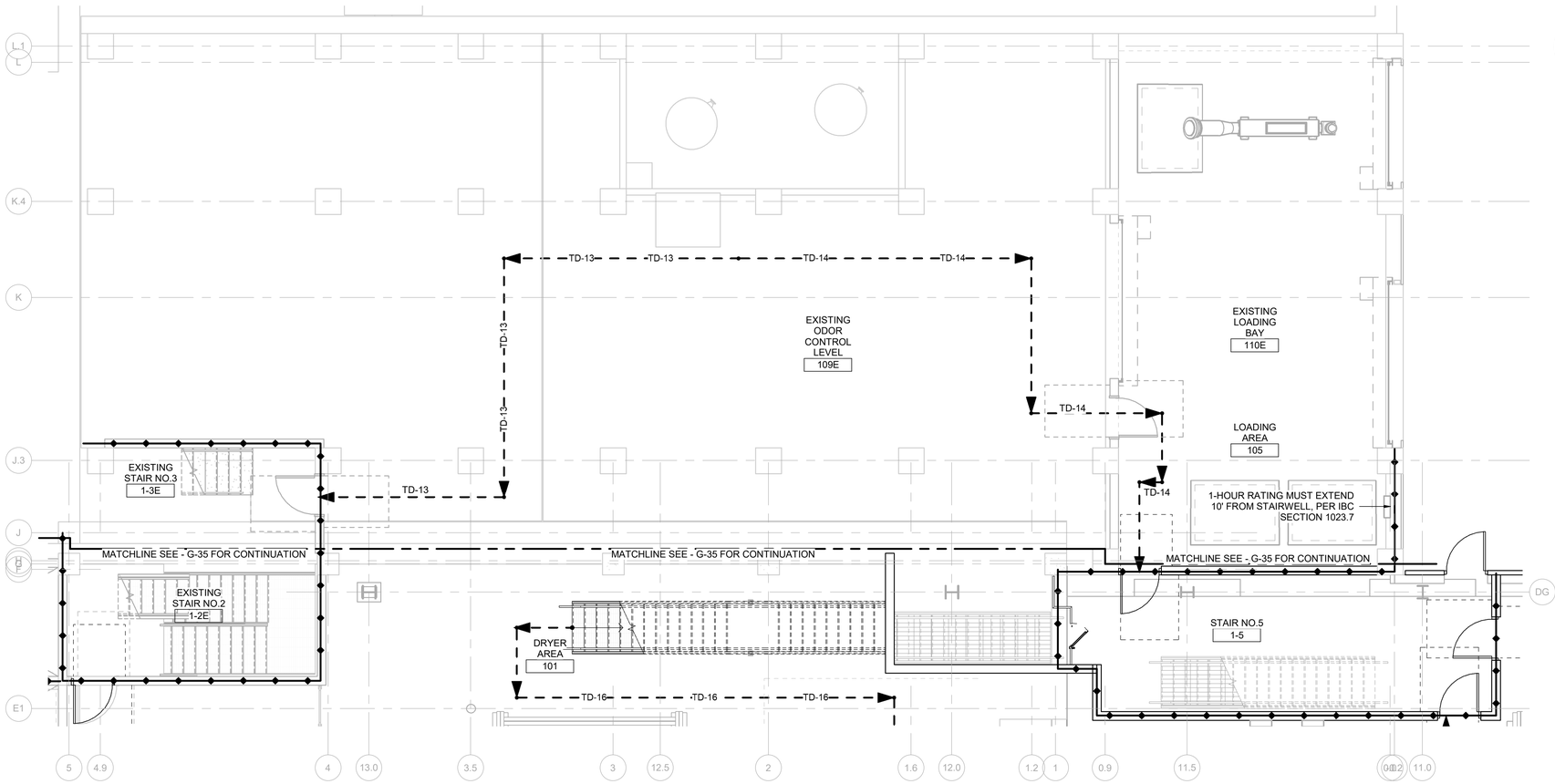

1 / G-37 PARTIAL LIFE SAFETY PLAN - EL. 142.00

3/16" = 1'-0"

N

LIFE SAFETY NOTES:

1. FOR EXIT LIGHTS AND EMERGENCY LIGHTING, SEE ELECTRICAL DRAWINGS.

LIFE SAFETY SYMBOLS:

EXIT DOOR TAG

A	CLEAR DOOR WIDTH [FEET - INCHES]
B	OCCUPANT LOAD CAPACITY [NO.OF PEOPLE]

LINE TYPES FOR MEANS OF EGRESS:

COMPONENT	SYMBOL
TRAVEL DISTANCE	TD
COMMON PATH	CP

EXIT DISCHARGE

EXIT DISCHARGE ARROW

WALL RATING LEGEND

1 HOUR FIRE BARRIER

MEANS OF EGRESS ARRANGEMENT DISTANCE SCHEDULE - BUILDING SUMMARY

EGRESS PATH ID	EGRESS DISTANCE	
	PROVIDED	MAXIMUM PERMITTED
TD-13	51' - 0"	400' - 0"
TD-14	58' - 6"	400' - 0"

MEANS OF EGRESS WIDTH CAPACITY

	PROVIDED EGRESS CAPACITY - LEVEL COMPONENTS & RAMPS		
EXIT ID	EGRESS CAPACITY FACTOR	CLEAR WIDTH	OCCUPANT LOAD CAPACITY
48	0.2	2' - 8"	160

THE DRAWINGS IN THIS SET ARE RECORD DRAWINGS. THEY ARE CONSTRUCTION CONTRACT DRAWINGS WHICH HAVE BEEN REVISED BASED ON AVAILABLE FIELD INFORMATION RECORDED BY OTHERS DURING CONSTRUCTION OF THIS CONTRACT. THERE HAS BEEN NO VERIFICATION OF DIMENSIONS SHOWN ON THE CONSTRUCTION DRAWINGS OR THE ACCURACY/COMPLETENESS OF THE FIELD INFORMATION RECEIVED.

SIGNATURE

1/7/2022
DATE

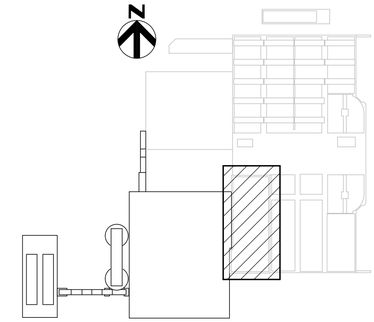

KEY PLAN

AS-BUILT REPLACEMENT SHEET

PROFESSIONAL CERTIFICATION

THIS DRAWING WAS ORIGINALLY APPROVED FOR CONSTRUCTION AND SEALED BY ZACHARY J. SACHSENMAIER, A REGISTERED PROFESSIONAL ENGINEER IN THE STATE OF MARYLAND, NO. 42646

NOTICE TO CONTRACTORS

- PROJECT ELEVATIONS ARE BASED ON NAVD88 AND HOWARD COUNTY'S BENCHMARK SYSTEM
- PREVIOUS PROJECTS USED OTHER DATUMS
- APPLY THE FOLLOWING CONVERSIONS WHEN USING PREVIOUS CONTRACT DRAWINGS:
  - ADDITION NO. 6: SUBTRACT 0.80 FT
  - PRIOR ADDITIONS: SUBTRACT 1.04 FT

DEPARTMENT OF PUBLIC WORKS
HOWARD COUNTY, MARYLAND

CHIEF, BUREAU OF UTILITIES DATE

DES: MJS
DRN: TRF
CHK: ZJS
DATE: 01/2018

DATE	REV	DESCRIPTION
03/2021		RECORD DRAWINGS

GENERAL

SOLIDS SCREENING AREA - LIFE SAFETY PLAN AT EL 142.00

LITTLE PATUXENT WATER RECLAMATION PLANT
8TH ADDITION
BIOSOLIDS PROCESSING FACILITIES - PHASE 2

CAPITAL PROJECT S-6295
CONTRACT NO. 24-4936

ELECTION DISTRICT NO. 6
HOWARD COUNTY, MARYLAND

SCALE AS SHOWN

SHEET 33 OF 311

G-37

BIM 360://10054364 – Little Patuxent WRP 8th Addition/264592_100_A_V18.rvt
1/7/2022 11:20:43 AM

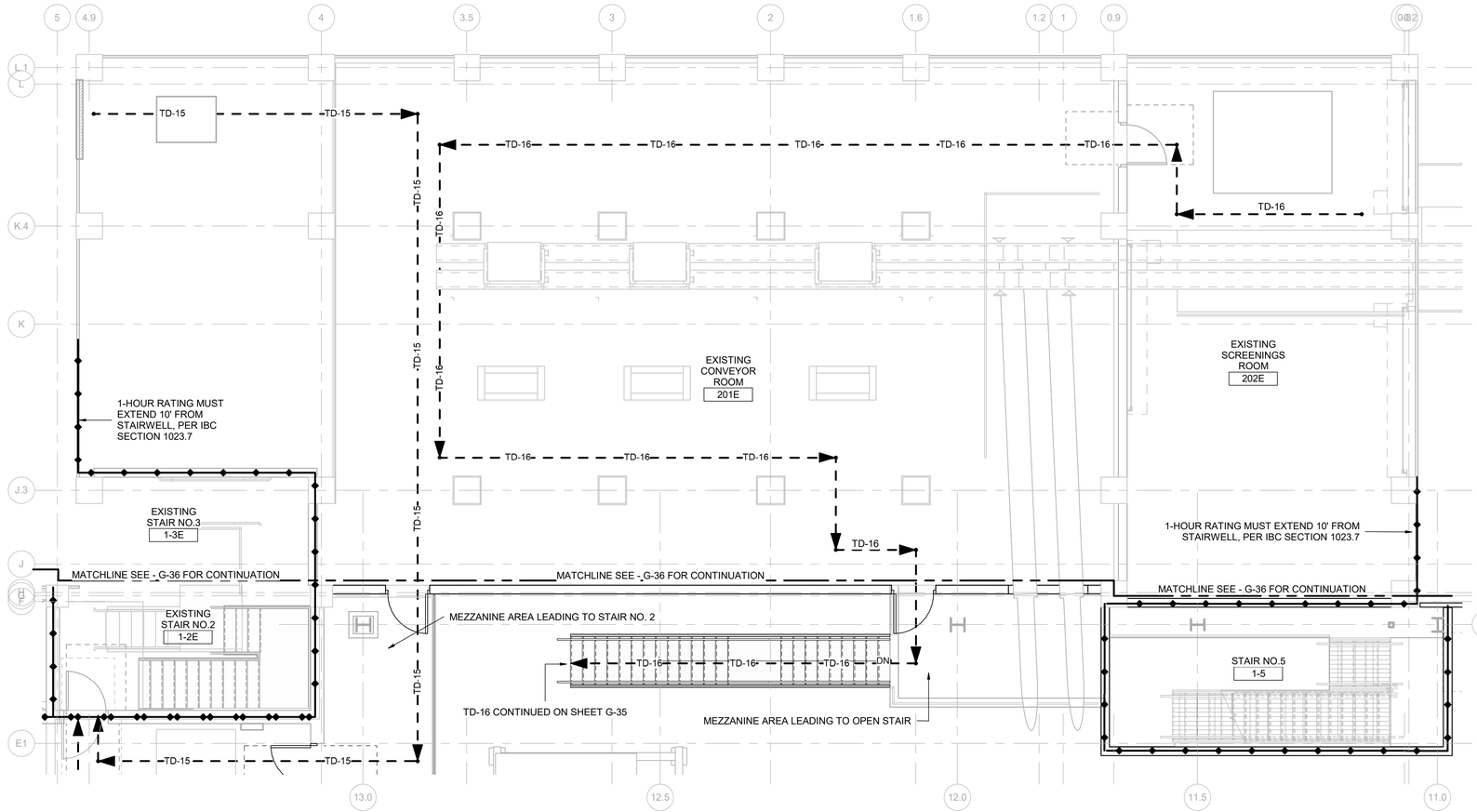

1 / G-38 PARTIAL LIFE SAFETY PLAN - EL. 156.00

3/16" = 1'-0"

N

LIFE SAFETY NOTES:

1. FOR EXIT LIGHTS AND EMERGENCY LIGHTING, SEE ELECTRICAL DRAWINGS.

LIFE SAFETY SYMBOLS:

EXIT DOOR TAG

A	CLEAR DOOR WIDTH [FEET - INCHES]
B	OCCUPANT LOAD CAPACITY [NO.OF PEOPLE]

LINE TYPES FOR MEANS OF EGRESS:

COMPONENT	SYMBOL
TRAVEL DISTANCE	TD
COMMON PATH	CP

EXIT DISCHARGE

EXIT DISCHARGE ARROW

WALL RATING LEGEND

1 HOUR FIRE BARRIER

MEANS OF EGRESS ARRANGEMENT DISTANCE SCHEDULE - BUILDING SUMMARY

EGRESS PATH ID	EGRESS DISTANCE	
	PROVIDED	MAXIMUM PERMITTED
TD-15	101' - 0"	400' - 0"
TD-16	266' - 6"	400' - 0"

MEANS OF EGRESS WIDTH CAPACITY

	PROVIDED EGRESS CAPACITY - LEVEL COMPONENTS & RAMPS		
EXIT ID	EGRESS CAPACITY FACTOR	CLEAR WIDTH	OCCUPANT LOAD CAPACITY
48	0.2	2' - 8"	160

THE DRAWINGS IN THIS SET ARE RECORD DRAWINGS. THEY ARE CONSTRUCTION CONTRACT DRAWINGS WHICH HAVE BEEN REVISED BASED ON AVAILABLE FIELD INFORMATION RECORDED BY OTHERS DURING CONSTRUCTION OF THIS CONTRACT. THERE HAS BEEN NO VERIFICATION OF DIMENSIONS SHOWN ON THE CONSTRUCTION DRAWINGS OR THE ACCURACY/COMPLETENESS OF THE FIELD INFORMATION RECEIVED.

SIGNATURE

2/7/2022
DATE

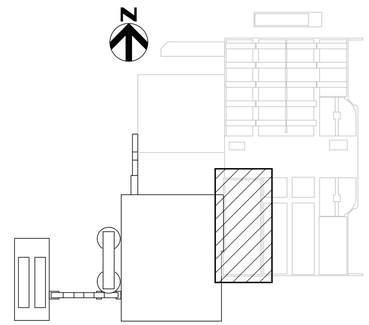

KEY PLAN

BIM 360://10054364 – Little Patuxent WRP 8th Addition/264592_100_A_V18.rvt
1/7/2022 11:20:47 AM

AS-BUILT REPLACEMENT SHEET

PROFESSIONAL CERTIFICATION

THIS DRAWING WAS ORIGINALLY APPROVED FOR CONSTRUCTION AND SEALED BY ZACHARY J. SACHSENMAIER, A REGISTERED PROFESSIONAL ENGINEER IN THE STATE OF MARYLAND, NO. 42646

NOTICE TO CONTRACTORS

- PROJECT ELEVATIONS ARE BASED ON NAVD88 AND HOWARD COUNTY'S BENCHMARK SYSTEM
- PREVIOUS PROJECTS USED OTHER DATUMS
- APPLY THE FOLLOWING CONVERSIONS WHEN USING PREVIOUS CONTRACT DRAWINGS:
  - ADDITION NO. 6: SUBTRACT 0.80 FT
  - PRIOR ADDITIONS: SUBTRACT 1.04 FT

DEPARTMENT OF PUBLIC WORKS
HOWARD COUNTY, MARYLAND

CHIEF, BUREAU OF UTILITIES — DATE

DES: MJS
DRN: TRF
CHK: ZJS
DATE: 01/2018

DATE	REV	DESCRIPTION
03/2021		RECORD DRAWINGS

GENERAL

SOLIDS SCREENING AREA - LIFE SAFETY PLAN AT EL 156.00

LITTLE PATUXENT WATER RECLAMATION PLANT
8TH ADDITION
BIOSOLIDS PROCESSING FACILITIES - PHASE 2

CAPITAL PROJECT S-6295
CONTRACT NO. 24-4936

ELECTION DISTRICT NO. 6
HOWARD COUNTY, MARYLAND

SCALE AS SHOWN

SHEET 34 OF 311

G-38

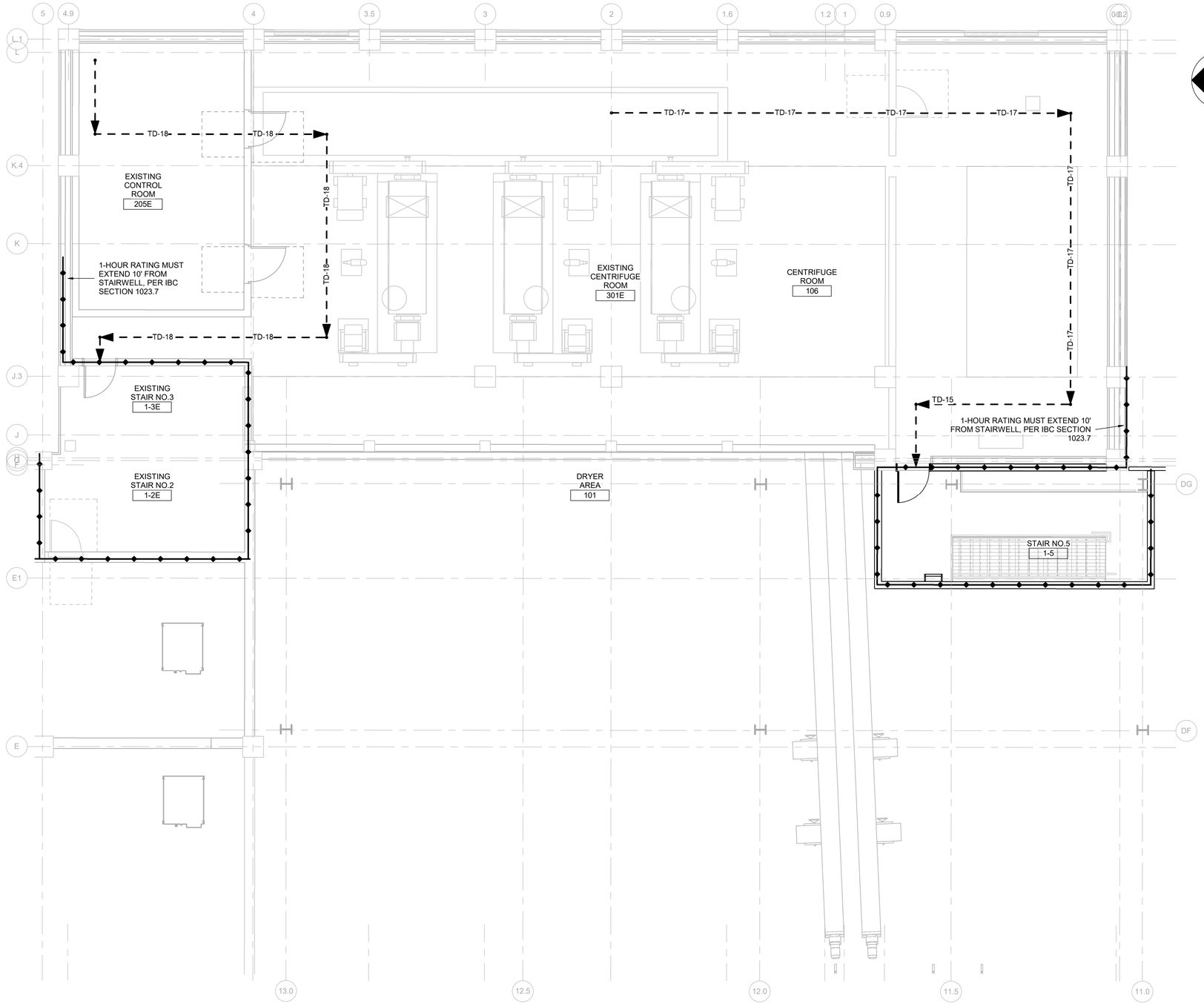

1 G-39 PARTIAL LIFE SAFETY PLAN - EL. 167.00

3/16" = 1'-0"

N

LIFE SAFETY NOTES:

1. FOR EXIT LIGHTS AND EMERGENCY LIGHTING, SEE ELECTRICAL DRAWINGS.

LIFE SAFETY SYMBOLS:

EXIT DOOR TAG

A	CLEAR DOOR WIDTH [FEET - INCHES]
B	OCCUPANT LOAD CAPACITY [NO.OF PEOPLE]

LINE TYPES FOR MEANS OF EGRESS:

COMPONENT	SYMBOL
TRAVEL DISTANCE	TD
COMMON PATH	CP

EXIT DISCHARGE

EXIT DISCHARGE ARROW

WALL RATING LEGEND

1 HOUR FIRE BARRIER

MEANS OF EGRESS ARRANGEMENT DISTANCE SCHEDULE - BUILDING SUMMARY

EGRESS PATH ID	EGRESS DISTANCE	
	PROVIDED	MAXIMUM PERMITTED
TD-17	92' - 0"	400' - 0"
TD-18	72' - 0"	400' - 0"

MEANS OF EGRESS WIDTH CAPACITY

	PROVIDED EGRESS CAPACITY - LEVEL COMPONENTS & RAMPS		
EXIT ID	EGRESS CAPACITY FACTOR	CLEAR WIDTH	OCCUPANT LOAD CAPACITY
48	0.2	2' - 8"	160

THE DRAWINGS IN THIS SET ARE RECORD DRAWINGS. THEY ARE CONSTRUCTION CONTRACT DRAWINGS WHICH HAVE BEEN REVISED BASED ON AVAILABLE FIELD INFORMATION RECORDED BY OTHERS DURING CONSTRUCTION OF THIS CONTRACT. THERE HAS BEEN NO VERIFICATION OF DIMENSIONS SHOWN ON THE CONSTRUCTION DRAWINGS OR THE ACCURACY/COMPLETENESS OF THE FIELD INFORMATION RECEIVED.

SIGNATURE — DATE 2/7/2022

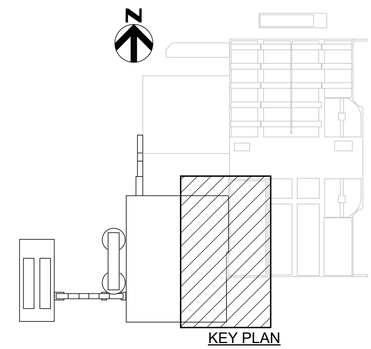

KEY PLAN

BIM 360://10054364 – Little Patuxent WRP 8th Addition/264592_100_A_V18.rvt
1/7/2022 11:20:51 AM

AS-BUILT REPLACEMENT SHEET

PROFESSIONAL CERTIFICATION

THIS DRAWING WAS ORIGINALLY APPROVED FOR CONSTRUCTION AND SEALED BY ZACHARY J. SACHSENMAIER, A REGISTERED PROFESSIONAL ENGINEER IN THE STATE OF MARYLAND, NO. 42646

NOTICE TO CONTRACTORS

- PROJECT ELEVATIONS ARE BASED ON NAVD88 AND HOWARD COUNTY'S BENCHMARK SYSTEM
- PREVIOUS PROJECTS USED OTHER DATUMS
- APPLY THE FOLLOWING CONVERSIONS WHEN USING PREVIOUS CONTRACT DRAWINGS:
  - ADDITION NO. 6: SUBTRACT 0.80 FT
  - PRIOR ADDITIONS: SUBTRACT 1.04 FT

DEPARTMENT OF PUBLIC WORKS
HOWARD COUNTY, MARYLAND

CHIEF, BUREAU OF UTILITIES — DATE

DES: MJS
DRN: TRF
CHK: ZJS
DATE: 01/2018

DATE	REV	DESCRIPTION
03/2021		RECORD DRAWINGS

GENERAL

SOLIDS SCREENING AREA - LIFE SAFETY PLAN AT EL 167.00

LITTLE PATUXENT WATER RECLAMATION PLANT
8TH ADDITION
BIOSOLIDS PROCESSING FACILITIES - PHASE 2

CAPITAL PROJECT S-6295
CONTRACT NO. 24-4936

ELECTION DISTRICT NO. 6
HOWARD COUNTY, MARYLAND

SCALE AS SHOWN

SHEET 35 OF 311

G-39

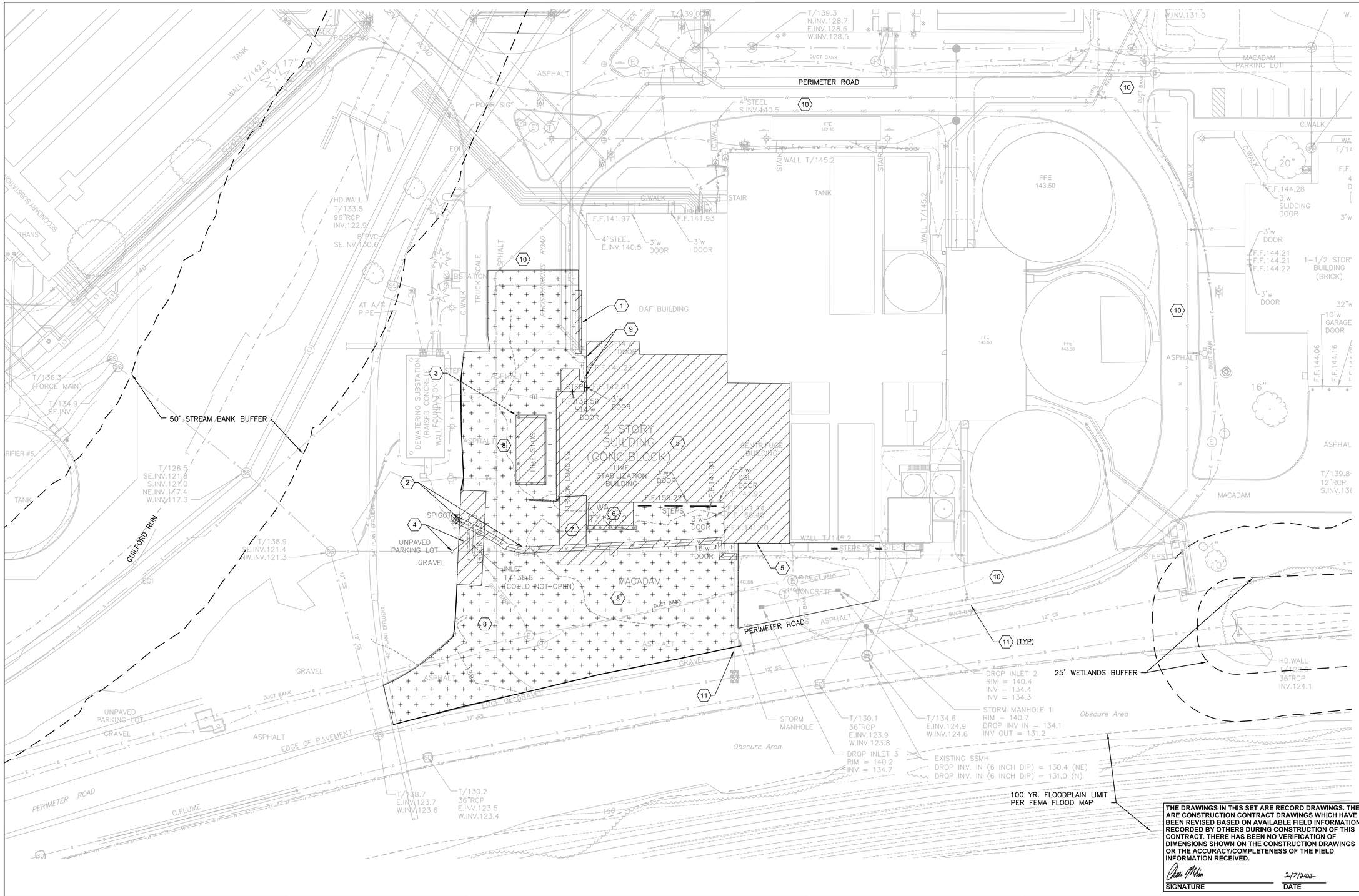

N

GENERAL NOTES:

1. ALL DEMOLITION ITEMS WITHIN WORK AREA SHALL BE COMPLETELY REMOVED UNLESS NOTED OTHERWISE.
2. SEE STRUCTURAL DEMOLITION SHEETS FOR ADDITIONAL DEMOLITION INFORMATION.
3. SEE ELECTRICAL SHEETS FOR DEMOLITION INFORMATION.
4. SEE SHEET C-1 FOR LEGEND AND GENERAL NOTES.
5. SAW CUT FOR CLEAN LINES WHERE EXISTING PAVED AREAS MEET DEMOLISHED PAVED AREA.

KEY NOTES:

1. DEMOLISH CURB
2. DEMOLISH AND REMOVE WATER LINE, SPIGOT, AND VALVE.
3. DEMOLISH SILOS, BOLLARDS, AND FOUNDATION.
4. DEMOLISH TRUCK WASH CONCRETE FOUNDATION. DRAIN INLET, DRAIN PIPE, AND CLEANOUT.
5. SEE DEMOLITION 01 SERIES SHEETS FOR FACILITY DEMOLITION DETAILS AND INFORMATION.
6. DEMOLISH LIME STABILIZATION AND ODOR CONTROL FACILITY AND FOUNDATION.
7. DEMOLISH CONCRETE TRUCK ENTRANCE.
8. DEMOLISH ASPHALT.
9. DEMOLISH BOLLARDS.
10. SEE C-13 AND C-14 FOR PAVEMENT MILL AND OVERLAY LIMITS.
11. ABANDON OUTFALL AFTER NEW STORM SYSTEM IS INSTALLED. SEE C-15.

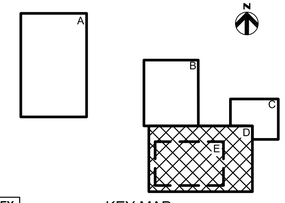

KEY MAP

0 30 60 90

SCALE: 1" = 30'

THE DRAWINGS IN THIS SET ARE RECORD DRAWINGS. THEY ARE CONSTRUCTION CONTRACT DRAWINGS WHICH HAVE BEEN REVISED BASED ON AVAILABLE FIELD INFORMATION RECORDED BY OTHERS DURING CONSTRUCTION OF THIS CONTRACT. THERE HAS BEEN NO VERIFICATION OF DIMENSIONS SHOWN ON THE CONSTRUCTION DRAWINGS OR THE ACCURACY/COMPLETENESS OF THE FIELD INFORMATION RECEIVED.

SIGNATURE — DATE 2/7/2023

AS-BUILT REPLACEMENT SHEET

PROFESSIONAL CERTIFICATION
THIS DRAWING WAS ORIGINALLY APPROVED FOR CONSTRUCTION AND SEALED BY ROBERT BAYSDEN, A REGISTERED PROFESSIONAL ENGINEER IN THE STATE OF MARYLAND, NO. 49972.

NOTICE TO CONTRACTORS
- PROJECT ELEVATIONS ARE BASED ON NAVD88 AND HOWARD COUNTY'S BENCHMARK SYSTEM
- PREVIOUS PROJECTS USED OTHER DATUMS
- APPLY THE FOLLOWING CONVERSIONS WHEN USING PREVIOUS CONTRACT DRAWINGS:
  - ADDITION NO. 6: SUBTRACT 0.80 FT
  - PRIOR ADDITIONS: SUBTRACT 1.04 FT

DEPARTMENT OF PUBLIC WORKS
HOWARD COUNTY, MARYLAND

CHIEF, BUREAU OF UTILITIES — DATE

DES: xr
DRN: S.W.
CHK: R.B.
DATE: 01/2018

DATE	REV	DESCRIPTION
03/2021		RECORD DRAWINGS

CIVIL

SITE DEMOLITION PLAN

LITTLE PATUXENT WATER RECLAMATION PLANT
8TH ADDITION
BIOSOLIDS PROCESSING FACILITIES - PHASE 2

CAPITAL PROJECT S-6295
CONTRACT NO. 24-4936

ELECTION DISTRICT NO. 6
HOWARD COUNTY, MARYLAND

SCALE AS SHOWN

SHEET 36 OF 311

X-1

C:\pwworking\pitt\d1900894\ X-1.dwg 01/07/22 9:36

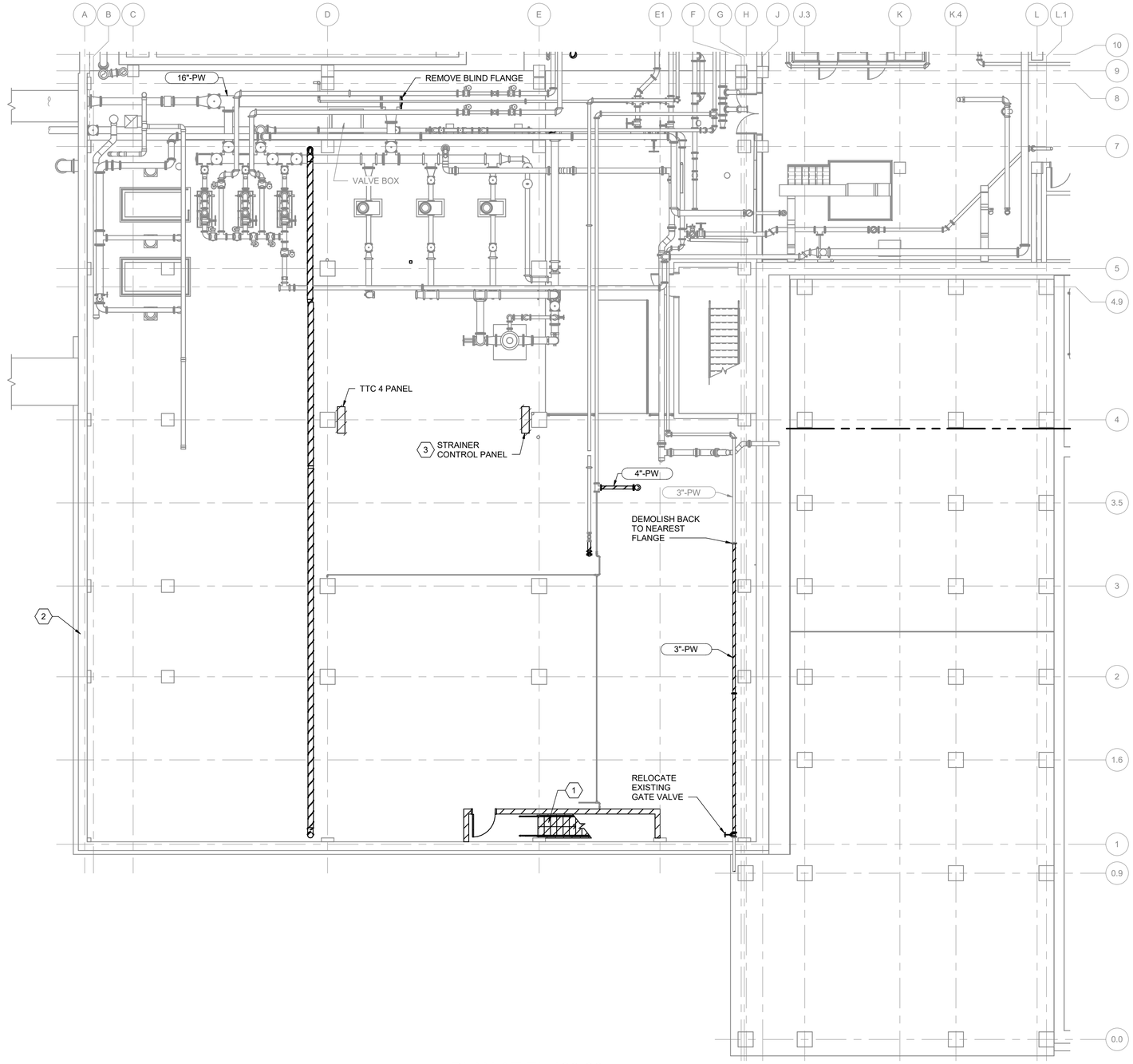

PLAN AT EL 129.20

1/8" = 1'-0"

N

GENERAL NOTES

1. DURING DEMOLITION OF BUILDING SOUTH OF COLUMN LINE 4, CARE SHALL BE TAKEN TO PROTECT THE EXISTING SLAB AT ELEVATION 141.20. DEMOLITION DEBRIS SHALL NOT BE ALLOWED TO FALL ON OR BE DROPED ONTO THE EXISTING SLAB.
2. DO NOT LEAVE DEMOLITION DEBRIS ON EXISTING SLAB OR EXCEED LIVE LOAD OF 125 PSF.

KEY NOTES (X)

1 DEMOLISH EXISTING STAIRS AND STAIRWELL.

2 BASEMENT WALLS SOUTH OF LINE 5 SHALL BE SHORED AS REQUIRED DURING DEMOLITION AND NEW CONSTRUCTION ACTIVITIES. DETAIL OF TEMPORARY SHORING SHALL BE BASED UPON EQUIPMENT THAT WILL SURCHARGE BELOW GRADE WALLS.

3 RELOCATE STRAINER CONTROL PANEL. SEE ELECTRICAL DRAWINGS.

THE DRAWINGS IN THIS SET ARE RECORD DRAWINGS. THEY ARE CONSTRUCTION CONTRACT DRAWINGS WHICH HAVE BEEN REVISED BASED ON AVAILABLE FIELD INFORMATION RECORDED BY OTHERS DURING CONSTRUCTION OF THIS CONTRACT. THERE HAS BEEN NO VERIFICATION OF DIMENSIONS SHOWN ON THE CONSTRUCTION DRAWINGS OR THE ACCURACY/COMPLETENESS OF THE FIELD INFORMATION RECEIVED.

SIGNATURE

1/7/2022
DATE

N

KEY PLAN

AS-BUILT REPLACEMENT SHEET

PROFESSIONAL CERTIFICATION

THIS DRAWING WAS ORIGINALLY APPROVED FOR CONSTRUCTION AND SEALED BY ADAM S. PARMENTER, A REGISTERED PROFESSIONAL ENGINEER IN THE STATE OF MARYLAND, NO. 39376

NOTICE TO CONTRACTORS

- PROJECT ELEVATIONS ARE BASED ON NAVD88 AND HOWARD COUNTY'S BENCHMARK SYSTEM
- PREVIOUS PROJECTS USED OTHER DATUMS
- APPLY THE FOLLOWING CONVERSIONS WHEN USING PREVIOUS CONTRACT DRAWINGS:
  - ADDITION NO. 6: SUBTRACT 0.80 FT
  - PRIOR ADDITIONS: SUBTRACT 1.04 FT

DEPARTMENT OF PUBLIC WORKS
HOWARD COUNTY, MARYLAND

CHIEF, BUREAU OF UTILITIES DATE

DES: ADP
DRN: REE
CHK: JKP
DATE: 01/2019

DATE	REV	DESCRIPTION
03/2021		RECORD DRAWINGS

DEMOLITION

DEWATERING AND CHEMICAL HANDLING AREA
DEMOLITION PLAN AT EL 129.20

LITTLE PATUXENT WATER RECLAMATION PLANT
8TH ADDITION
BIOSOLIDS PROCESSING FACILITIES - PHASE 2

CAPITAL PROJECT S-6295
CONTRACT NO. 24-4936

ELECTION DISTRICT NO. 6
HOWARD COUNTY, MARYLAND

SCALE AS SHOWN

SHEET 37 OF 311

X-500

BIM 360://10054364 – Little Patuxent WRP 8th Addition/264592_100_D_V18.rvt
1/7/2022 1:22:27 PM

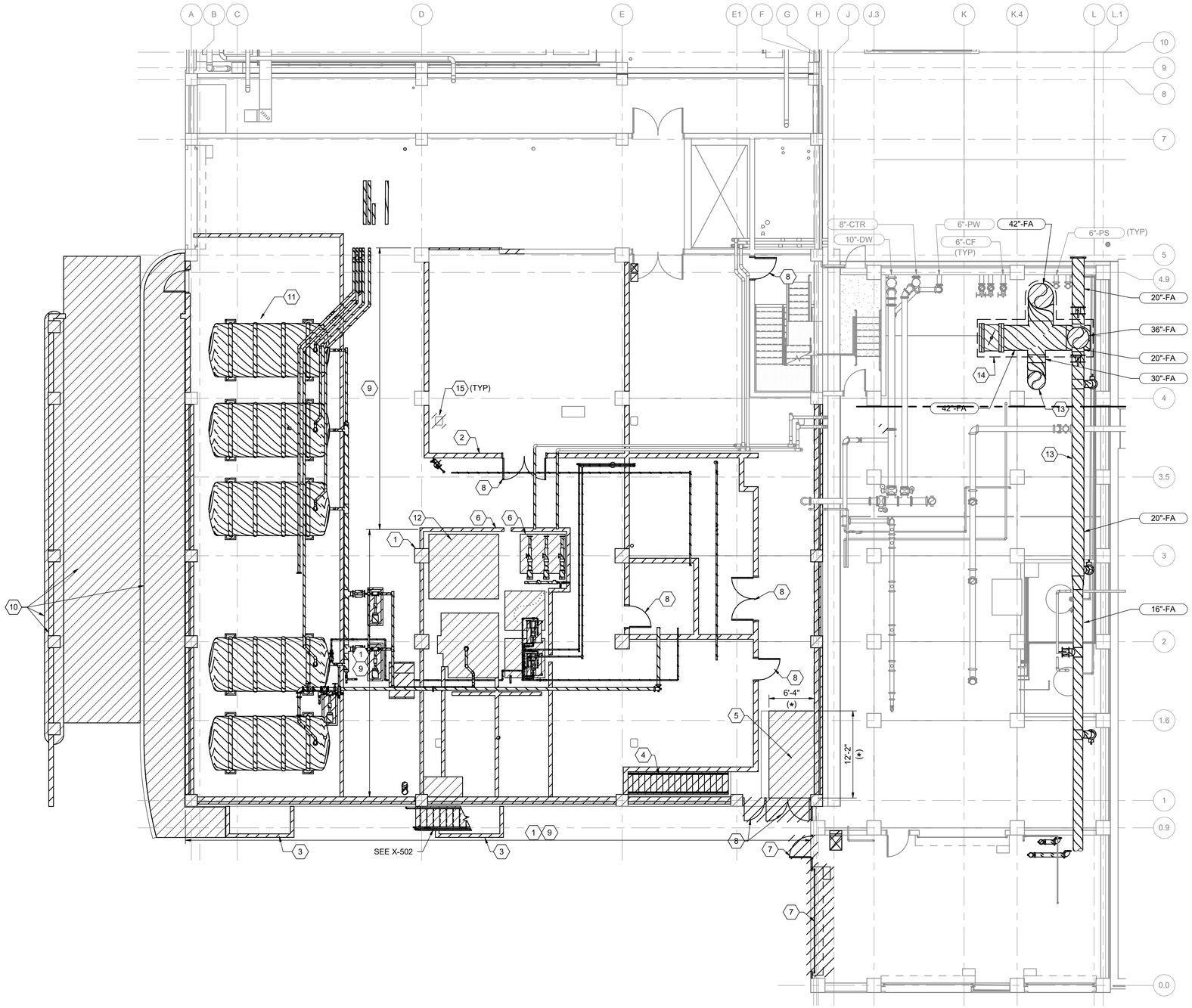

PLAN AT EL 141.20

1/8" = 1'-0"

GENERAL NOTES

1. DURING DEMOLITION OF BUILDING SOUTH OF COLUMN LINE 4, CARE SHALL BE TAKEN TO PROTECT THE EXISTING STRUCTURAL SLAB AT ELEVATION 141.20. DEMOLITION DEBRIS SHALL NOT BE ALLOWED TO FALL ON OR BE DROPPED ONTO THE EXISTING SLAB.
2. DO NOT LEAVE DEMOLITION DEBRIS ON EXIST SLAB OR EXCEED LIVE LOAD OF 125 PSF.
3. ALL COLUMNS BELOW THIS PLAN TO REMAIN.
4. MECHANICAL EXTENT OF DEMOLTION INDLUDES PIPING, VALVING AND PROCESS EQUIPMENT CONTAINED WITHIN THE MAIN FLOOR BETWEEN ★ COLUMNS A THRU J AND 0.9 THRU 4.
5. DIMENSIONS MARKED WITH ( ), SHALL BE VERIFIED PRIOR TO DEMOLITION.

KEY NOTES (X)

1 DEMOLISH EXISTING COLUMNS ABOVE ELEVATION 141.20 SOUTH OF COLUMN LINE 4 AND WEST OF COLUMN LINE J. COLUMNS SHALL BE FINISHED FLUSH WITH REMAINING BASE SLAB (BELOW TOPPING).

2 DEMOLISH EXISTING MASONRY WALLS.

3 DEMOLISH EXISTING CONCRETE WALL.

4 DEMOLISH EXISTING STAIRS AND STAIRWELL.

5 DEMOLISH EXISTING CONCRETE SLAB AS SHOWN FOR NEW STAIRWELL.

6 DEMOLISH EXISTING CONCRETE CURB AND EQUIPMENT PADS.

7 DEMOLISH EXISTING DOORS, METAL WALL PANELS AND FRAMING.

8 DEMOLISH DOORS.

9 EXISTING DELAMINATED AND SOUND ORIGINAL 4" (+/-) SLOPED OVERLAY SHALL BE STRIPPED OFF. REMOVE ALL CONCRETE TO TOP OF 8"" STRUCTURAL FLOOR IN PREPARATION OF NEW FLOOR TOPPING (SEE S-500 SERIES)."

10 DEMOLISH GUARDRAIL, CONCRETE FOUNDATIONS, PAVING AND SIDEWALKS.

11 DEMOLISH TANK (TYP OF 5) AND ALL ASSOCIATED PUMPS, PIPING, VALVES, ELECTRICAL AND CONTROLS.

12 DEMOLISH POLYMER SYSTEM TANKS AND ALL ASSOCIATED PUMPS, PIPING, VALVES, ELECTRICAL AND CONTROLS.

13 DEMOLISH FOUL AIR PIPING, VALVES, SUPPORTS AND APPUTENANCES TO LIMITS SHOWN.

14 DUCTWORK AND ASSOCIATED APPERTUNANCES SHALL REMAIN IN PLACE UNTIL BIOFILTERS NOS. 3 AND 4 ARE PLACED IN SERVICE, SEE DETAIL 1/X-505

15 ABANDON AND FILL IN HOLE FOR STRUCTURAL FRAMING. SEE STRUCTURAL SHEETS FOR MORE INFORMATION.

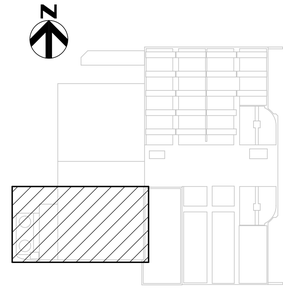

KEY PLAN

THE DRAWINGS IN THIS SET ARE RECORD DRAWINGS. THEY ARE CONSTRUCTION CONTRACT DRAWINGS WHICH HAVE BEEN REVISED BASED ON AVAILABLE FIELD INFORMATION RECORDED BY OTHERS DURING CONSTRUCTION OF THIS CONTRACT. THERE HAS BEEN NO VERIFICATION OF DIMENSIONS SHOWN ON THE CONSTRUCTION DRAWINGS OR THE ACCURACY/COMPLETENESS OF THE FIELD INFORMATION RECEIVED.

SIGNATURE _____ DATE 2/7/2022

AS-BUILT REPLACEMENT SHEET

PROFESSIONAL CERTIFICATION

THIS DRAWING WAS ORIGINALLY APPROVED FOR CONSTRUCTION AND SEALED BY ADAM S. PARMENTER, A REGISTERED PROFESSIONAL ENGINEER IN THE STATE OF MARYLAND, NO. 39376

NOTICE TO CONTRACTORS

- PROJECT ELEVATIONS ARE BASED ON NAVD88 AND HOWARD COUNTY'S BENCHMARK SYSTEM
- PREVIOUS PROJECTS USED OTHER DATUMS
- APPLY THE FOLLOWING CONVERSIONS WHEN USING PREVIOUS CONTRACT DRAWINGS:
  - ADDITION NO. 6: SUBTRACT 0.80 FT
  - PRIOR ADDITIONS: SUBTRACT 1.04 FT

DEPARTMENT OF PUBLIC WORKS
HOWARD COUNTY, MARYLAND

CHIEF, BUREAU OF UTILITIES DATE

DES: ADP
DRN: REE
CHK: JKP
DATE: 01/2019

DATE	REV	DESCRIPTION
03/2021		RECORD DRAWINGS

DEMOLITION

DEWATERING AND CHEMICAL HANDLING AREA
DEMOLITION PLAN AT EL 141.20

LITTLE PATUXENT WATER RECLAMATION PLANT
8TH ADDITION
BIOSOLIDS PROCESSING FACILITIES - PHASE 2

CAPITAL PROJECT S-6295
CONTRACT NO. 24-4936

ELECTION DISTRICT NO. 6
HOWARD COUNTY, MARYLAND

SCALE AS SHOWN

SHEET 38 OF 311

X-501

BIM 360://10054364 – Little Patuxent WRP 8th Addition/264592_100_D_V18.rvt
1/7/2022 1:22:32 PM

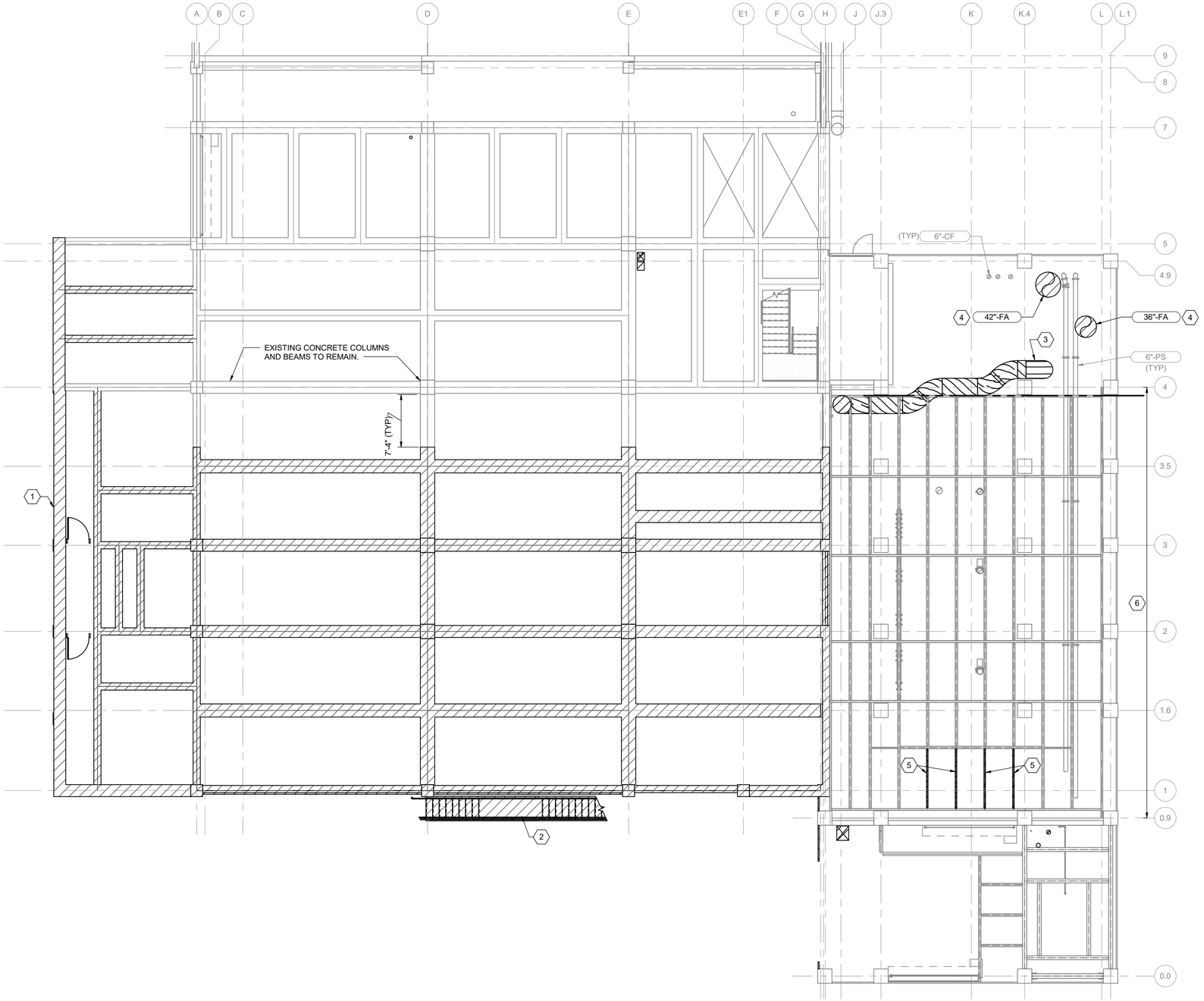

PLAN AT 155.20

1/8" = 1'-0"

N

GENERAL NOTES

1. DURING DEMOLITION OF BUILDING SOUTH OF COLUMN LINE 4, CARE SHALL BE TAKEN TO PROTECT THE EXISTING SLAB AT ELEVATION 141.20. DEMOLITION DEBRIS SHALL NOT BE ALLOWED TO FALL ON OR BE DROPPED ONTO THE EXISTING SLAB.
2. DO NOT LEAVE DEMOLITION DEBRIS ON EXISTING SLAB OR EXCEED LIVE LOAD OF 125 PSF.
3. MECHANICAL EXTENT OF DEMOLTION INDLUDES PIPING, VALVING AND PROCESS EQUIPMENT CONTAINED WITHIN THE MAIN FLOOR BETWEEN COLUMNS A THRU J AND 0.9 THRU 4.

KEY NOTES (X)

1 DEMOLISH EXISTING STRUCTURE WEST OF COLUMN LINE A.

2 DISASSEMBLE EXISTING STAIR AND LANDINGS. SALVAGE FOR REUSE BY OWNER.

3 DEMOLISH FOUL AIR PIPING, VALVES, SUPPORTS AND APPUTENANCES TO LIMITS SHOWN.

4 DUCTWORK AND ASSOCIATED APPERTUNANCES SHALL REMAIN IN PLACE UNTIL BIOFILTERS NOS. 3 AND 4 ARE PLACED IN SERVICE

5 DEMOLISH C8 FRAMING AND GRATING

6 NEW MEZZANINE PLATFORM MAY NOT BE IN PLACE AS PART OF PHASE 1 CONTRACT.

THE DRAWINGS IN THIS SET ARE RECORD DRAWINGS. THEY ARE CONSTRUCTION CONTRACT DRAWINGS WHICH HAVE BEEN REVISED BASED ON AVAILABLE FIELD INFORMATION RECORDED BY OTHERS DURING CONSTRUCTION OF THIS CONTRACT. THERE HAS BEEN NO VERIFICATION OF DIMENSIONS SHOWN ON THE CONSTRUCTION DRAWINGS OR THE ACCURACY/COMPLETENESS OF THE FIELD INFORMATION RECEIVED.

SIGNATURE — DATE 2/7/2022

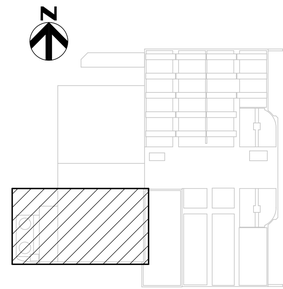

KEY PLAN

AS-BUILT REPLACEMENT SHEET

PROFESSIONAL CERTIFICATION

THIS DRAWING WAS ORIGINALLY APPROVED FOR CONSTRUCTION AND SEALED BY ADAM S. PARMENTER, A REGISTERED PROFESSIONAL ENGINEER IN THE STATE OF MARYLAND, NO. 39376

NOTICE TO CONTRACTORS

- PROJECT ELEVATIONS ARE BASED ON NAVD88 AND HOWARD COUNTY'S BENCHMARK SYSTEM
- PREVIOUS PROJECTS USED OTHER DATUMS
- APPLY THE FOLLOWING CONVERSIONS WHEN USING PREVIOUS CONTRACT DRAWINGS:
  - ADDITION NO. 6: SUBTRACT 0.80 FT
  - PRIOR ADDITIONS: SUBTRACT 1.04 FT

DEPARTMENT OF PUBLIC WORKS
HOWARD COUNTY, MARYLAND

CHIEF, BUREAU OF UTILITIES — DATE

DES: ADP
DRN: REE
CHK: JKP
DATE: 01/2019

DATE	REV	DESCRIPTION
03/2021		RECORD DRAWINGS

DEMOLITION

DEWATERING AND CHEMICAL HANDLING AREA FRAMING (BELOW FLOOR) DEMOLITION PLAN AT EL 155.20

LITTLE PATUXENT WATER RECLAMATION PLANT
8TH ADDITION
BIOSOLIDS PROCESSING FACILITIES - PHASE 2

CAPITAL PROJECT S-6295
CONTRACT NO. 24-4936

ELECTION DISTRICT NO. 6
HOWARD COUNTY, MARYLAND

SCALE AS SHOWN

SHEET 39 OF 311

X-502

BIM 360://10054364 – Little Patuxent WRP 8th Addition/264592_100_D_V18.rvt
1/7/2022 1:22:35 PM

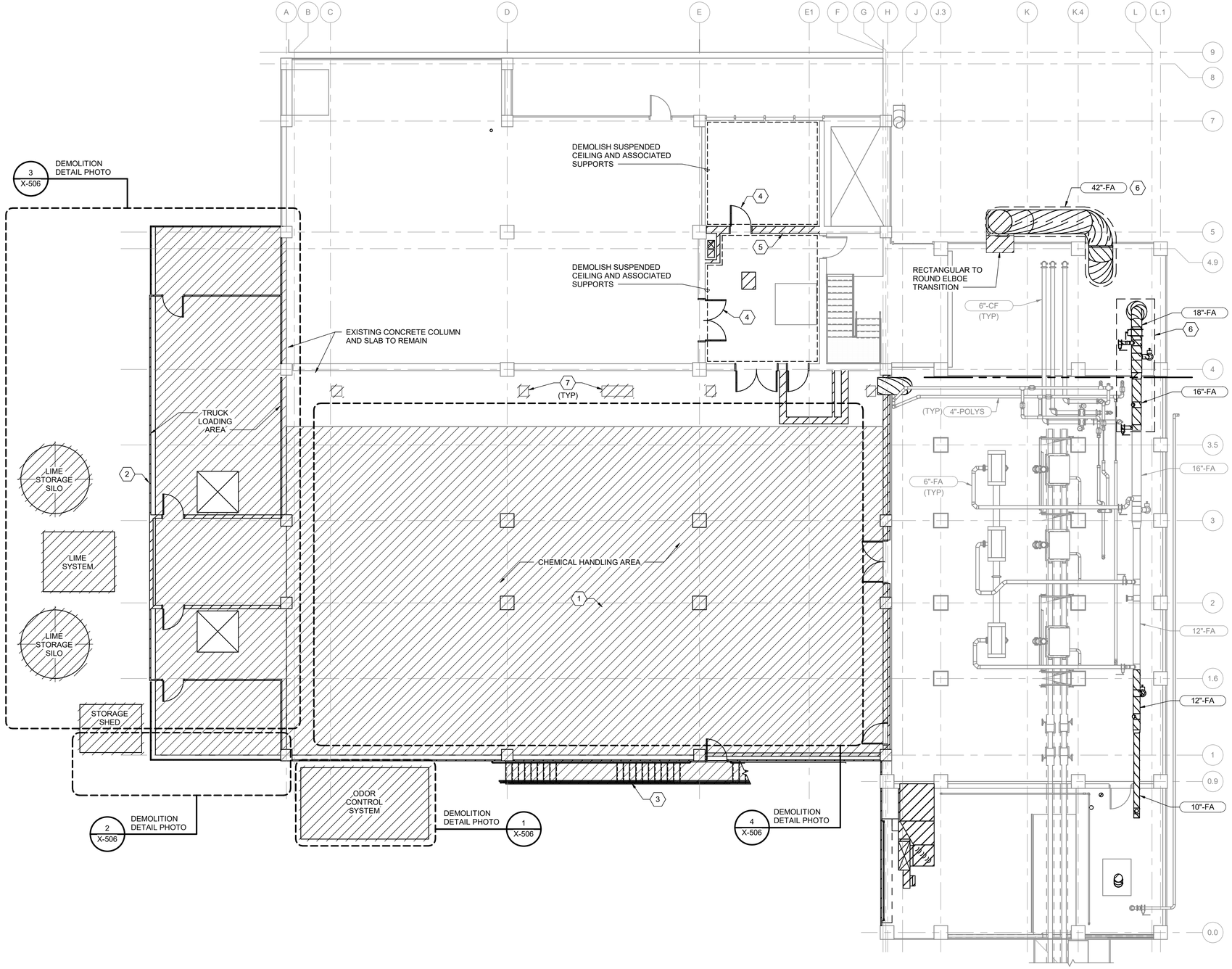

PLAN AT EL 155.20

1/8" = 1'-0"

N

GENERAL NOTES

1. DURING DEMOLITION OF BUILDING SOUTH OF COLUMN LINE 4, CARE SHALL BE TAKEN TO PROTECT THE EXISTING SLAB AT ELEVATION 141.20. DEMOLITION DEBRIS SHALL NOT BE ALLOWED TO FALL ON OR BE DROPPED ONTO THE EXISTING SLAB.
2. DO NOT LEAVE DEMOLITION DEBRIS ON EXISTING SLAB OR EXCEED LIVE LOAD OF 125 PSF.
3. MECHANICAL EXTENT OF DEMOLTION INDLUDES PIPING, VALVING AND PROCESS EQUIPMENT CONTAINED WITHIN THE MAIN FLOOR BETWEEN COLUMNS A THRU J AND 0.9 THRU 4.

KEY NOTES (X)

1 DEMOLISH EXISTING SLAB, BEAMS AND COLUMNS SOUTH OF COLUMN LINE 4 AND WEST OF COLUMN LINE J, UNO.
2 DEMOLISH EXISTING STRUCTURE WEST OF COLUMN LINE A.
3 DISASSEMBLE EXISTING STAIR AND LANDINGS. SALVAGE FOR REUSE BY OWNER.
4 DEMOLISH DOORS.
5 DEMOLISH WALLS.
6 DUCTWORK AND ASSOCIATED APPERTUNANCES SHALL REMAIN IN PLACE UNTIL BIOFILTERS NOS. 3 AND 4 ARE PLACED IN SERVICE
7 ABANDON AND FILL IN HOLE FOR STRUCTURAL FRAMING. SEE STRUCTURAL SHEETS FOR MORE INFORMATION.

THE DRAWINGS IN THIS SET ARE RECORD DRAWINGS. THEY ARE CONSTRUCTION CONTRACT DRAWINGS WHICH HAVE BEEN REVISED BASED ON AVAILABLE FIELD INFORMATION RECORDED BY OTHERS DURING CONSTRUCTION OF THIS CONTRACT. THERE HAS BEEN NO VERIFICATION OF DIMENSIONS SHOWN ON THE CONSTRUCTION DRAWINGS OR THE ACCURACY/COMPLETENESS OF THE FIELD INFORMATION RECEIVED.

SIGNATURE — DATE 2/7/2025

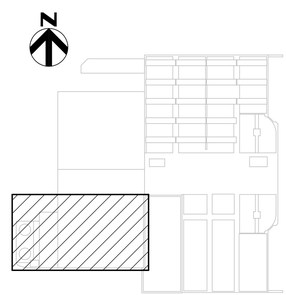

KEY PLAN

AS-BUILT REPLACEMENT SHEET

PROFESSIONAL CERTIFICATION

THIS DRAWING WAS ORIGINALLY APPROVED FOR CONSTRUCTION AND SEALED BY ADAM S. PARMENTER, A REGISTERED PROFESSIONAL ENGINEER IN THE STATE OF MARYLAND, NO. 39376

NOTICE TO CONTRACTORS

- PROJECT ELEVATIONS ARE BASED ON NAVD88 AND HOWARD COUNTY'S BENCHMARK SYSTEM
- PREVIOUS PROJECTS USED OTHER DATUMS
- APPLY THE FOLLOWING CONVERSIONS WHEN USING PREVIOUS CONTRACT DRAWINGS:
  - ADDITION NO. 6: SUBTRACT 0.80 FT
  - PRIOR ADDITIONS: SUBTRACT 1.04 FT

DEPARTMENT OF PUBLIC WORKS
HOWARD COUNTY, MARYLAND

CHIEF, BUREAU OF UTILITIES — DATE

DES: ADP
DRN: REE
CHK: JKP
DATE: 01/2019

DATE	REV	DESCRIPTION
03/2021		RECORD DRAWINGS

DEMOLITION

DEWATERING AND CHEMICAL HANDLING AREA DEMOLITION PLAN (ABOVE SLAB) AT EL 155.20

LITTLE PATUXENT WATER RECLAMATION PLANT
8TH ADDITION
BIOSOLIDS PROCESSING FACILITIES - PHASE 2

CAPITAL PROJECT S-6295
CONTRACT NO. 24-4936

ELECTION DISTRICT NO. 6
HOWARD COUNTY, MARYLAND

SCALE AS SHOWN

SHEET 40 OF 311

X-503

BIM 360://10054364 – Little Patuxent WRP 8th Addition/264592_100_D_V18.rvt
1/7/2022 1:22:38 PM

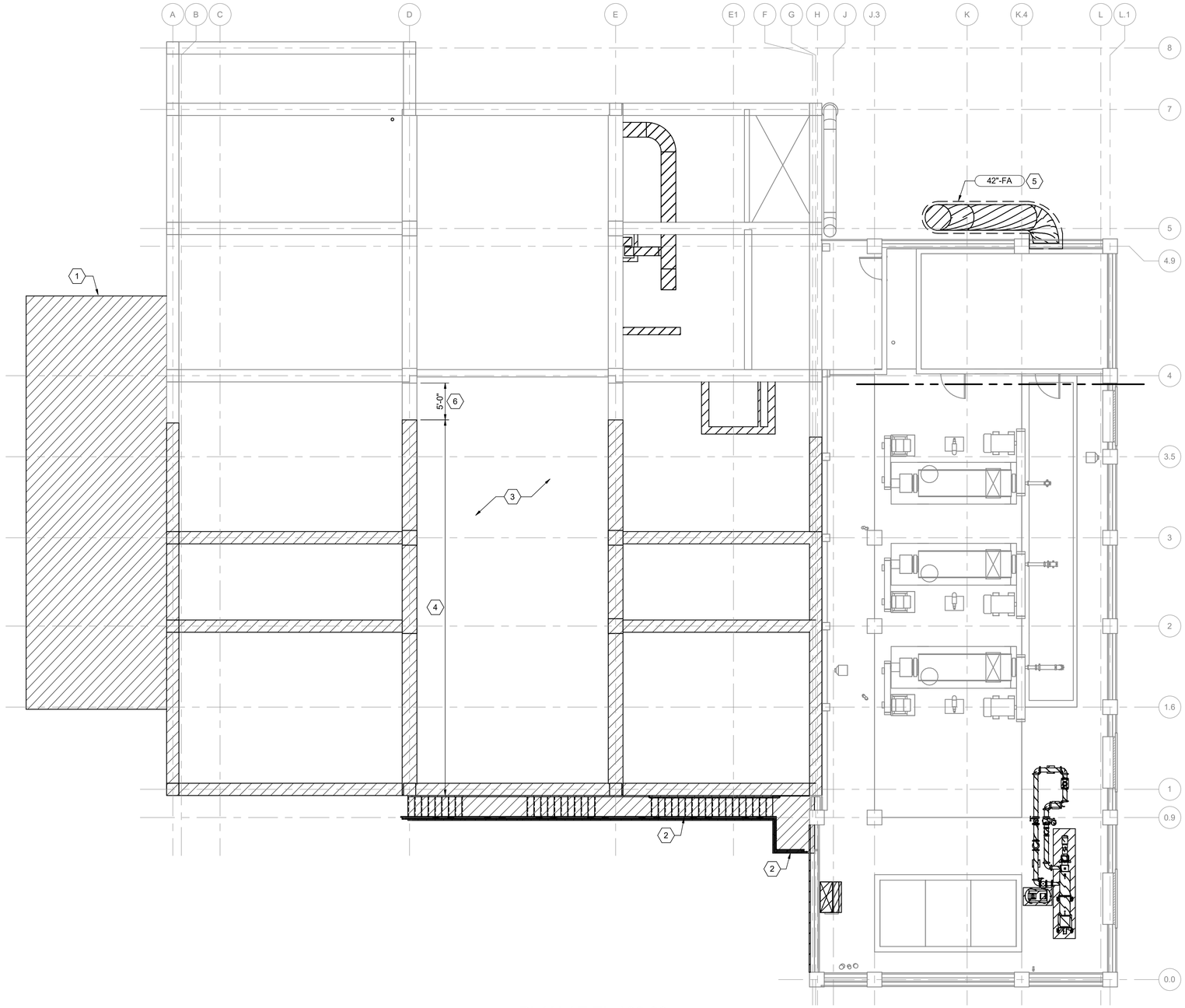

PLAN AT EL 166.20

1/8" = 1'-0"

N

GENERAL NOTES

1. DURING DEMOLITION OF BUILDING SOUTH OF COLUMN LINE 4, CARE SHALL BE TAKEN TO PROTECT THE EXISTING SLAB AT ELEVATION 141.20. DEMOLITION DEBRIS SHALL NOT BE ALLOWED TO FALL ON OR BE DROpPED ONTO THE EXISTING SLAB.
2. DO NOT LEAVE DEMOLITION DEBRIS ON EXISTING SLAB OR EXCEED LIVE LOAD OF 125 PSF.
3. MECHANICAL EXTENT OF DEMOLTION INDLUDES PIPING, VALVING AND PROCESS EQUIPMENT CONTAINED WITHIN THE MAIN FLOOR BETWEEN COLUMNS A THRU J AND 0.9 THRU 4.

KEY NOTES (X)

1 DEMOLISH EXISTING METAL LEAN-TO STRUCTURE WEST OF COLUMN LINE A.

2 DISASSEMBLE EXISTING STAIR AND LANDINGS. SALVAGE FOR REUSE BY OWNER.

3 DEMOLISH ALL EQUIPMENT, PLATFORMS, STAIRS, METAL SUPPORT STRUCTURES AND ASSOCIATED APPURTENANCES.

4 DEMOLISH COLUMNS, ROOF BEAMS AND HOLLOW CORE ROOF SOUTH OF COLUMN LINE 4 AND WEST OF COLUMN LINE J, EXCEPT AS NOTED. SEE S-504 FOR ADDITIONAL NOTES.

5 DUCTWORK AND ASSOCIATED APPERTUNANCES SHALL REMAIN IN PLACE UNTIL BIOFILTERS NOS. 3 AND 4 ARE PLACED IN SERVICE

6 CONCRETE ROOF BEAM OVERHANG TO REMAIN AS SHOWN

THE DRAWINGS IN THIS SET ARE RECORD DRAWINGS. THEY ARE CONSTRUCTION CONTRACT DRAWINGS WHICH HAVE BEEN REVISED BASED ON AVAILABLE FIELD INFORMATION RECORDED BY OTHERS DURING CONSTRUCTION OF THIS CONTRACT. THERE HAS BEEN NO VERIFICATION OF DIMENSIONS SHOWN ON THE CONSTRUCTION DRAWINGS OR THE ACCURACY/COMPLETENESS OF THE FIELD INFORMATION RECEIVED.

SIGNATURE — DATE 2/7/2022

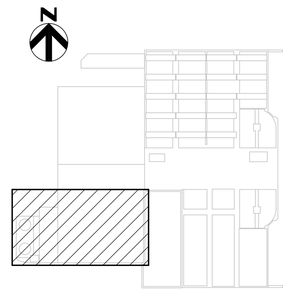

KEY PLAN

AS-BUILT REPLACEMENT SHEET

PROFESSIONAL CERTIFICATION

THIS DRAWING WAS ORIGINALLY APPROVED FOR CONSTRUCTION AND SEALED BY ADAM S. PARMENTER, A REGISTERED PROFESSIONAL ENGINEER IN THE STATE OF MARYLAND, NO. 39376

NOTICE TO CONTRACTORS

- PROJECT ELEVATIONS ARE BASED ON NAVD88 AND HOWARD COUNTY'S BENCHMARK SYSTEM
- PREVIOUS PROJECTS USED OTHER DATUMS
- APPLY THE FOLLOWING CONVERSIONS WHEN USING PREVIOUS CONTRACT DRAWINGS:
  - ADDITION NO. 6: SUBTRACT 0.80 FT
  - PRIOR ADDITIONS: SUBTRACT 1.04 FT

DEPARTMENT OF PUBLIC WORKS
HOWARD COUNTY, MARYLAND

CHIEF, BUREAU OF UTILITIES — DATE

DES: ADP
DRN: REE
CHK: JKP
DATE: 01/2019

DATE	REV	DESCRIPTION
03/2021		RECORD DRAWINGS

DEMOLITION

DEWATERING AND CHEMICAL HANDLING AREA DEMOLITION PLAN AT EL 166.20

LITTLE PATUXENT WATER RECLAMATION PLANT
8TH ADDITION
BIOSOLIDS PROCESSING FACILITIES - PHASE 2

CAPITAL PROJECT S-6295
CONTRACT NO. 24-4936

ELECTION DISTRICT NO. 6
HOWARD COUNTY, MARYLAND

SCALE AS SHOWN

SHEET 41 OF 311

X-504

BIM 360://10054364 – Little Patuxent WRP 8th Addition/264592_100_D_V18.rvt
1/7/2022 1:22:40 PM

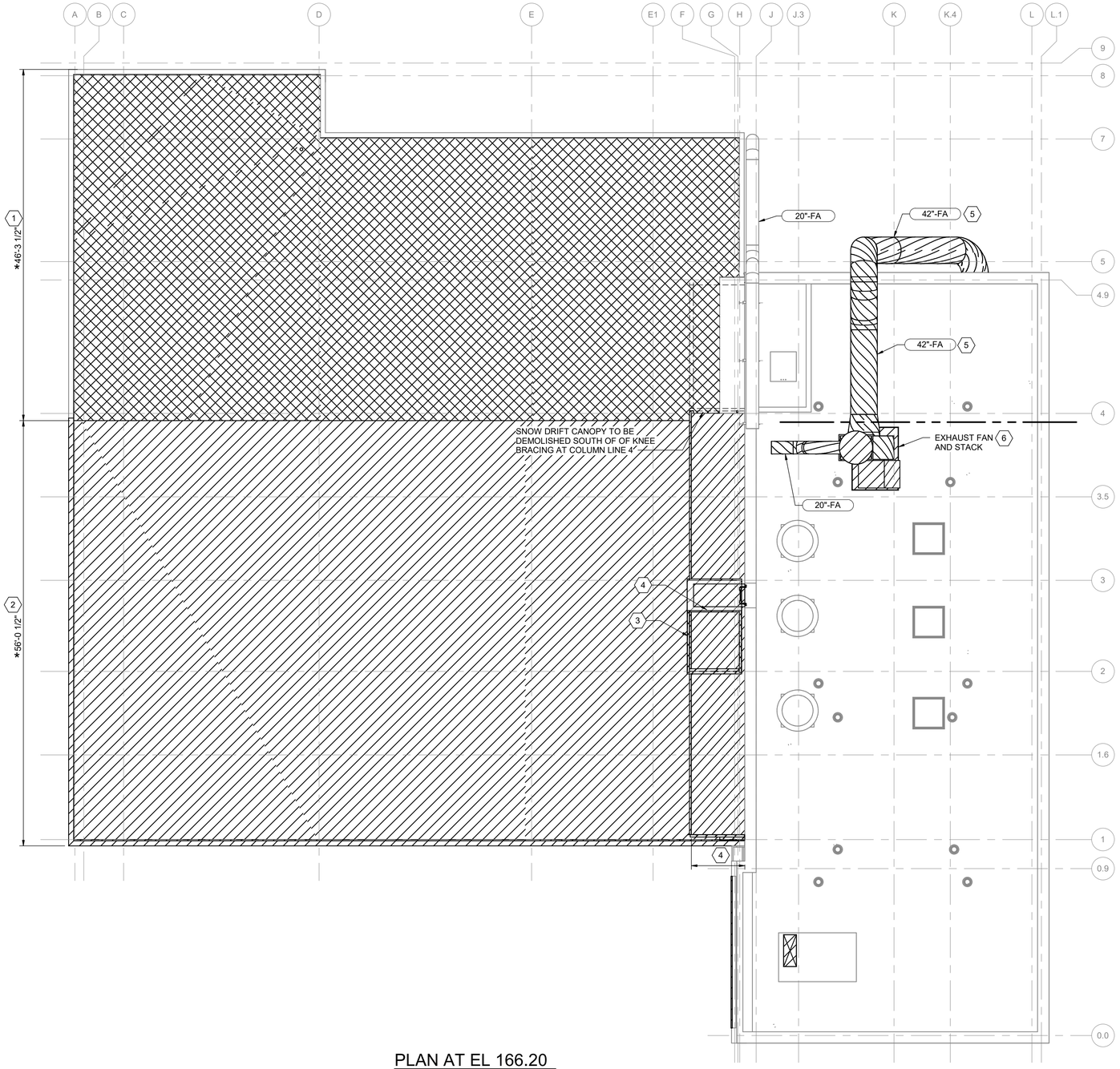

PLAN AT EL 166.20

1/8" = 1'-0"

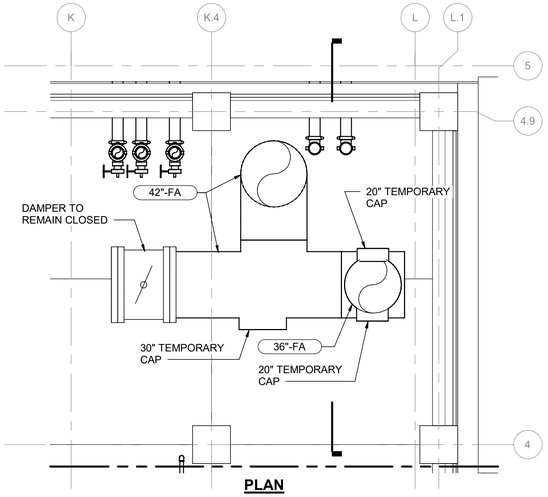

PLAN

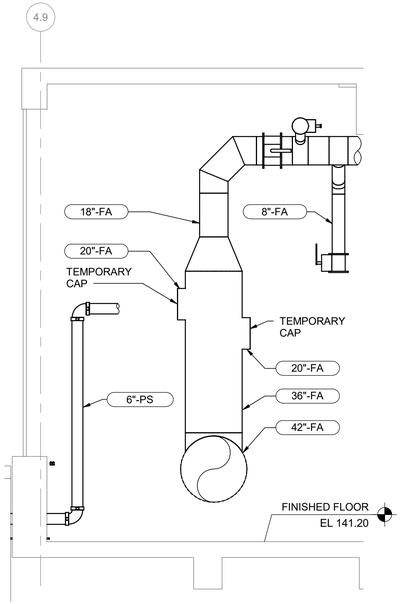

SECTION

1 X-501 TEMPORARY DUCT DETAIL

1/4" = 1'-0"

THE DRAWINGS IN THIS SET ARE RECORD DRAWINGS. THEY ARE CONSTRUCTION CONTRACT DRAWINGS WHICH HAVE BEEN REVISED BASED ON AVAILABLE FIELD INFORMATION RECORDED BY OTHERS DURING CONSTRUCTION OF THIS CONTRACT. THERE HAS BEEN NO VERIFICATION OF DIMENSIONS SHOWN ON THE CONSTRUCTION DRAWINGS OR THE ACCURACY/COMPLETENESS OF THE FIELD INFORMATION RECEIVED.

SIGNATURE

2/7/2022

DATE

N

GENERAL NOTES

1. DURING DEMOLITION OF BUILDING SOUTH OF COLUMN LINE 4, CARE SHALL BE TAKEN TO PROTECT THE EXISTING SLAB AT ELEVATION 141.20. DEMOLITION DEBRIS SHALL NOT BE ALLOWED TO FALL ON OR BE DROpPED ONTO THE EXISTING SLAB.
2. DO NOT LEAVE DEMOLITION DEBRIS ON EXISTING SLAB OR EXCEED LIVE LOAD OF 125 PSF.
3. MECHANICAL EXTENT OF DEMOLTION INDLUDES PIPING, VALVING AND PROCESS EQUIPMENT CONTAINED WITHIN THE MAIN FLOOR BETWEEN COLUMNS A THRU J AND 0.9 THRU 4.

KEY NOTES (X)

1 REMOVE EXISTING ROOF MEMBRANE, PARAPET FLASHING AND ROOF INSULATION DOWN TO STRUCTURE. STRUCTURAL ROOF DECK TO REMAIN.

2 DEMOLISH COLUMNS, ROOF BEAMS AND HOLLOW CORE ROOF SOUTH OF COLUMN LINE 4 AND WEST OF COLUMN LINE J, EXCEPT AS NOTED. SEE S-504 FOR ADDITIONAL NOTES.

3 REMOVE ROOF ACCESS LADDER, PLATFORMS, FRAMING AND GUARDRAILS IN ITS ENTIRETY. PROVIDE SAFETY RAILING AT CENTRIFUGE BUILDING ROOF PARAPET DURING DEMOLITION AND CONSTRUCTION OF NEW DRYER BUILDING.

4 DEMOLISH METAL SNOW DRIFT CANOPY IN ITS ENTIRETY SOUTH OF COLUMN LINE 4. SAWCUT CONCRETE CANTILEVERED SUPPORTS BACK TO COLUMN. PATCH AND REPAIR COLUMNS AND REMAINING WALLS.

5 DUCTWORK AND ASSOCIATED APPERTUNANCES SHALL REMAIN IN PLACE UNTIL BIOFILTERS NOS. 3 AND 4 ARE PLACED IN SERVICE

6 EXHAUST FAN, STACK AND ASSOCIATED APPERTUNANCES SHALL REMAIN IN SERVICE UNTIL BIOFILTERS NOS. 3 AND 4 ARE PLACED INTO SERVICE

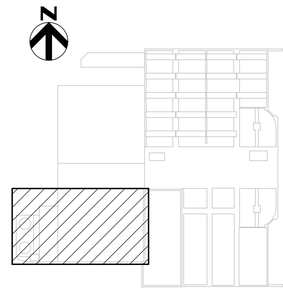

KEY PLAN

BIM 360://10054364 – Little Patuxent WRP 8th Addition/264592_100_D_V18.rvt
1/7/2022 1:22:44 PM

AS-BUILT REPLACEMENT SHEET

PROFESSIONAL CERTIFICATION

THIS DRAWING WAS ORIGINALLY APPROVED FOR CONSTRUCTION AND SEALED BY ADAM S. PARMENTER, A REGISTERED PROFESSIONAL ENGINEER IN THE STATE OF MARYLAND, NO. 39376

NOTICE TO CONTRACTORS

- PROJECT ELEVATIONS ARE BASED ON NAVD88 AND HOWARD COUNTY'S BENCHMARK SYSTEM
- PREVIOUS PROJECTS USED OTHER DATUMS
- APPLY THE FOLLOWING CONVERSIONS WHEN USING PREVIOUS CONTRACT DRAWINGS:
  - ADDITION NO. 6: SUBTRACT 0.80 FT
  - PRIOR ADDITIONS: SUBTRACT 1.04 FT

DEPARTMENT OF PUBLIC WORKS
HOWARD COUNTY, MARYLAND

CHIEF, BUREAU OF UTILITIES DATE

DES: ADP
DRN: REE
CHK: JKP
DATE: 01/2019

DATE	REV	DESCRIPTION
03/2021		RECORD DRAWINGS

DEMOLITION

DEWATERING AND CHEMICAL HANDLING AREA CHEMICAL HANDLING ROOF PLAN AND DETAILS

LITTLE PATUXENT WATER RECLAMATION PLANT
8TH ADDITION
BIOSOLIDS PROCESSING FACILITIES - PHASE 2

CAPITAL PROJECT S-6295
CONTRACT NO. 24-4936

ELECTION DISTRICT NO. 6
HOWARD COUNTY, MARYLAND

SCALE AS SHOWN

SHEET 42 OF 311

X-505

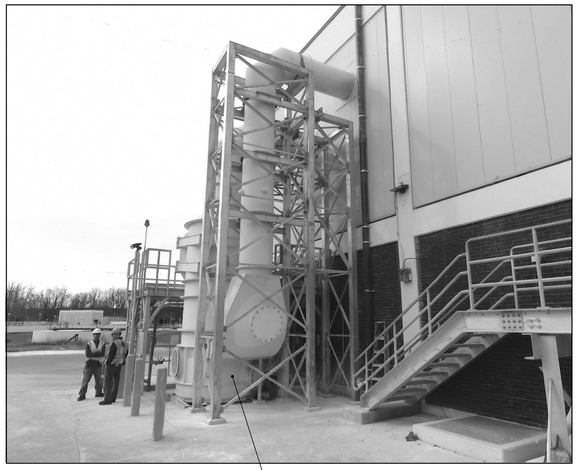

1 X-503 DEMOLITION PHOTO DETAIL
12" = 1'-0"

2 X-503 DEMOLITION PHOTO DETAIL
12" = 1'-0"

GENERAL NOTES:

1. ALL WASH DOWN WATER FROM LIME STORAGE SILOS AND SCRUBBER WILL BE DISCHARGED OFF SITE.
2. SALVAGE ALL PARTS AS DIRECTED BY ENGINEER OR OWNER.
3. DEMOLITION WORK CAN COMMENCE ONLY AFTER THE TEMPORARY DEWATERING LOADING SYSTEM IS OPERATIONAL.
4. DEMOLISHED PIECES WILL BE DISPOSED OF OFF SITE UNLESS OTHERWISE NOTED BY THE ENGINEER OR OWNER.

KEY NOTES X

1. DEMOLISH ODOR CONTROL SCRUBBER
2. DEMOLISH LIME STORAGE SYSTEM
3. DEMOLISH TRUCK LOADING AND ABOVE STRUCTURE AND ALL APPERTUNANCES
4. DEMOLISH ALL EQUIPMENT INSIDE OF THE CHEMICAL HANDLING AREA

3 X-503 DEMOLITION PHOTO DETAIL
12" = 1'-0"

4 X-503 DEMOLITION PHOTO DETAILS
12" = 1'-0"

THE DRAWINGS IN THIS SET ARE RECORD DRAWINGS. THEY ARE CONSTRUCTION CONTRACT DRAWINGS WHICH HAVE BEEN REVISED BASED ON AVAILABLE FIELD INFORMATION RECORDED BY OTHERS DURING CONSTRUCTION OF THIS CONTRACT. THERE HAS BEEN NO VERIFICATION OF DIMENSIONS SHOWN ON THE CONSTRUCTION DRAWINGS OR THE ACCURACY/COMPLETENESS OF THE FIELD INFORMATION RECEIVED.

SIGNATURE 2/7/2022 DATE

AS-BUILT REPLACEMENT SHEET

PROFESSIONAL CERTIFICATION

THIS DRAWING WAS ORIGINALLY APPROVED FOR CONSTRUCTION AND SEALED BY ADAM S. PARMENTER, A REGISTERED PROFESSIONAL ENGINEER IN THE STATE OF MARYLAND, NO. 39376

NOTICE TO CONTRACTORS

- PROJECT ELEVATIONS ARE BASED ON NAVD88 AND HOWARD COUNTY'S BENCHMARK SYSTEM
- PREVIOUS PROJECTS USED OTHER DATUMS
- APPLY THE FOLLOWING CONVERSIONS WHEN USING PREVIOUS CONTRACT DRAWINGS:
  - ADDITION NO. 6: SUBTRACT 0.80 FT
  - PRIOR ADDITIONS: SUBTRACT 1.04 FT

DEPARTMENT OF PUBLIC WORKS
HOWARD COUNTY, MARYLAND

CHIEF, BUREAU OF UTILITIES DATE

DES: ADP
DRN: REE
CHK: JKP
DATE: 01/2019

DATE	REV	DESCRIPTION
03/2021		RECORD DRAWINGS

DEMOLITION

DEMOLITION PHOTOS

LITTLE PATUXENT WATER RECLAMATION PLANT
8TH ADDITION
BIOSOLIDS PROCESSING FACILITIES - PHASE 2

CAPITAL PROJECT S-6295
CONTRACT NO. 24-4936

ELECTION DISTRICT NO. 6
HOWARD COUNTY, MARYLAND

SCALE AS SHOWN

SHEET 43 OF 311

X-506

BIM 360://10054364 – Little Patuxent WRP 8th Addition/264592_100_D_V18.rvt
1/7/2022 1:22:45 PM

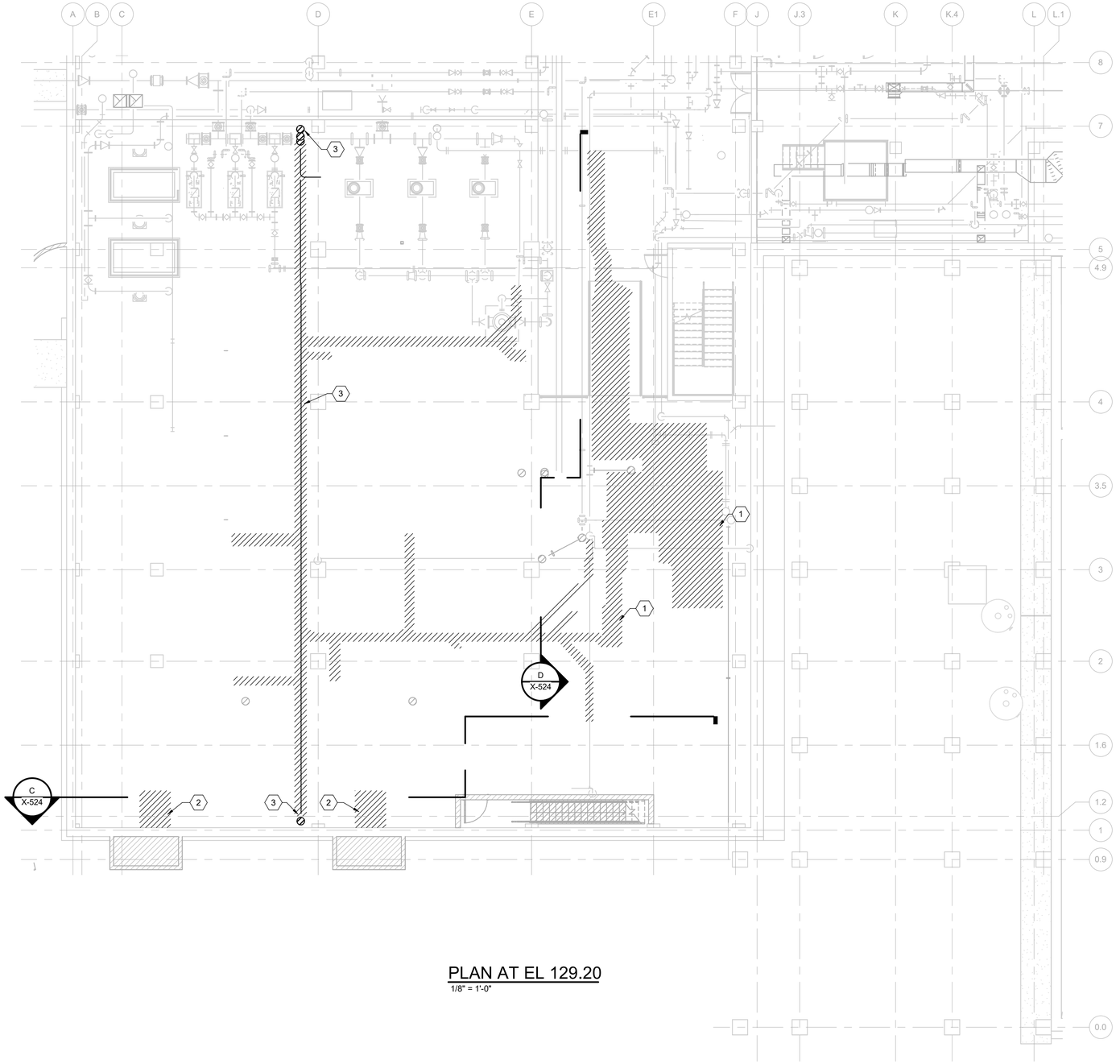

PLAN AT EL 129.20

1/8" = 1'-0"

KEY NOTES (X)

1 DEMOLISH MAKE-UP AIR UNIT, 8-862-MAU, ALL ASSOCIATED DUCTWORK, APPURTENANCES AND CONTROLS.

2 DEMOLISH EXHAUST FAN AND ALL APPURTENANCES AND CONTROLS.

3 DEMOLISH ALL SANITARY SEWER PIPING SERVING ABOVE FLOOR LEVEL AS INDICATED TO 8" RISER AND CAP. FILL REMAINING HOLES. SEE STRUCTURAL DRAWING FOR DETAIL.

THE DRAWINGS IN THIS SET ARE RECORD DRAWINGS. THEY ARE CONSTRUCTION CONTRACT DRAWINGS WHICH HAVE BEEN REVISED BASED ON AVAILABLE FIELD INFORMATION RECORDED BY OTHERS DURING CONSTRUCTION OF THIS CONTRACT. THERE HAS BEEN NO VERIFICATION OF DIMENSIONS SHOWN ON THE CONSTRUCTION DRAWINGS OR THE ACCURACY/COMPLETENESS OF THE FIELD INFORMATION RECEIVED.

SIGNATURE 2/7/2022 DATE

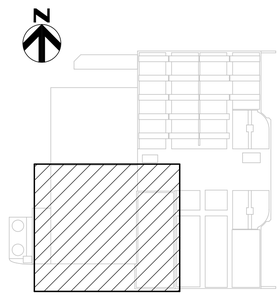

KEY PLAN

AS-BUILT REPLACEMENT SHEET

PROFESSIONAL CERTIFICATION
THIS DRAWING WAS ORIGINALLY APPROVED FOR CONSTRUCTION AND SEALED BY CHRISTOPHER S. WORK, A REGISTERED PROFESSIONAL ENGINEER IN THE STATE OF MARYLAND, NO. 50093

NOTICE TO CONTRACTORS
- PROJECT ELEVATIONS ARE BASED ON NAVD88 AND HOWARD COUNTY'S BENCHMARK SYSTEM
- PREVIOUS PROJECTS USED OTHER DATUMS
- APPLY THE FOLLOWING CONVERSIONS WHEN USING PREVIOUS CONTRACT DRAWINGS:
  - ADDITION NO. 6: SUBTRACT 0.80 FT
  - PRIOR ADDITIONS: SUBTRACT 1.04 FT

DEPARTMENT OF PUBLIC WORKS
HOWARD COUNTY, MARYLAND

CHIEF, BUREAU OF UTILITIES DATE

DES: CSW
DRN: JCS
CHK: MDD
DATE: 10/2017

DATE	REV	DESCRIPTION
03/2021		RECORD DRAWINGS

DEMOLITION

DEWATERING AND CHEMICAL HANDLING AREA HVAC DEMOLITION PLAN AT EL 129.20

LITTLE PATUXENT WATER RECLAMATION PLANT
8TH ADDITION
BIOSOLIDS PROCESSING FACILITIES - PHASE 2

CAPITAL PROJECT S-6295
CONTRACT NO. 24-4936

ELECTION DISTRICT NO. 6
HOWARD COUNTY, MARYLAND

SCALE AS SHOWN

SHEET 44 OF 311

X-520

BIM 360://10054364 – Little Patuxent WRP 8th Addition/264592_100_HP_V18.rvt
1/7/2022 2:53:41 PM

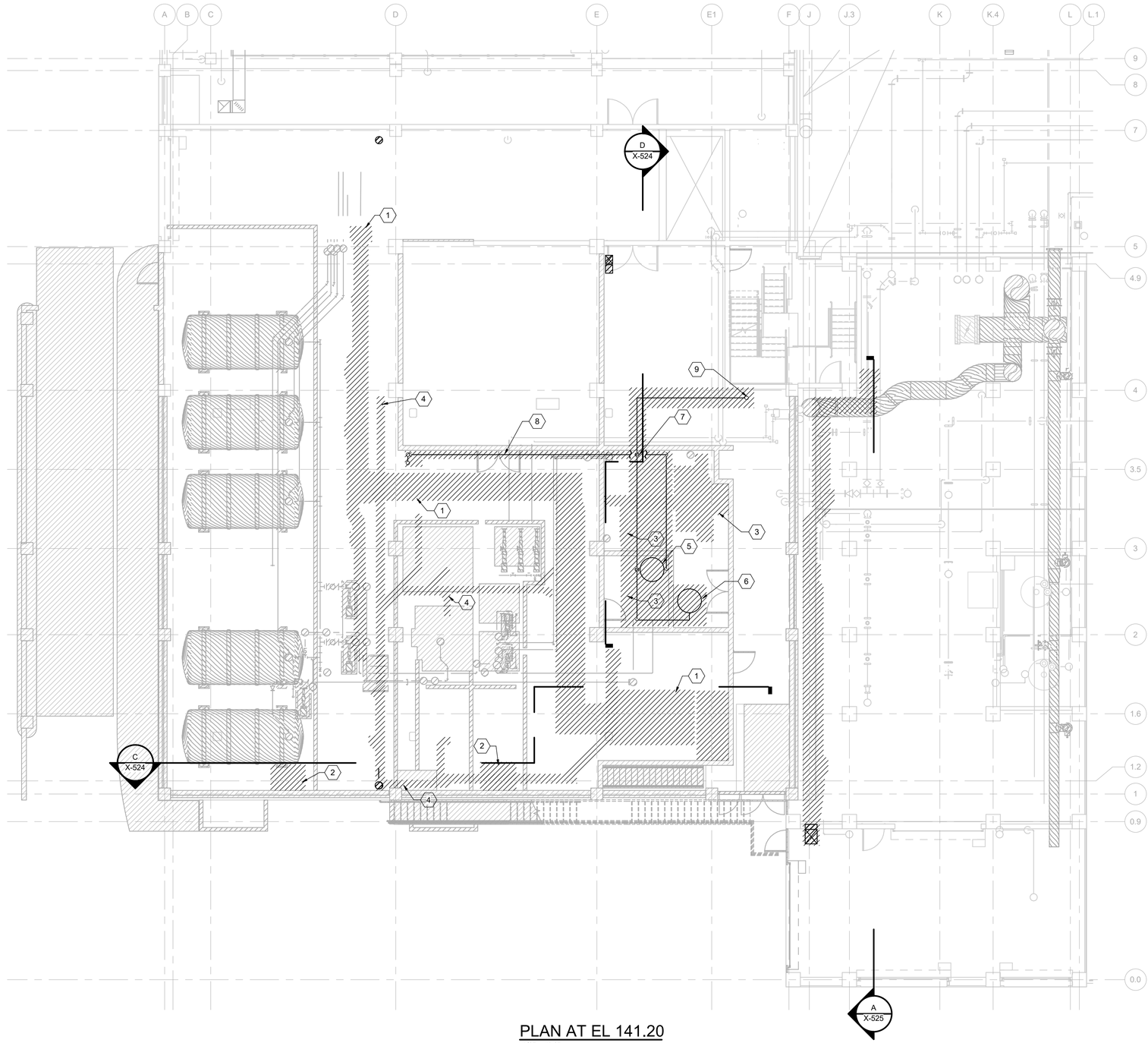

PLAN AT EL 141.20

1/8" = 1'-0"

KEY NOTES ⟨X⟩

1 DEMOLISH MAKE-UP AIR UNIT, 8-863-MAU, ALL ASSOCIATED DUCTWORK, APPURTENANCES AND CONTROLS.

2 DEMOLISH EXHAUST FAN AND ALL APPURTENANCES AND CONTROLS.

3 DEMOLISH ALL DUCTWORK, FANS, AND APPURTENANCES.

4 DEMOLISH ALL SANITARY AND VENT PIPING SERVING ABOVE FLOOR LEVEL AS INDICATED.

5 DEMOLISH WATER STORAGE TANK WST-301.

6 DEMOLISH ELECTRIC WATER HEATER EWH-301.

7 DEMOLISH POTABLE WATER DOWN TO 2" MAIN IN BASEMENT AND CAP.

8 DEMOLISH TEPID WATER LINES SERVING ALL EMERGENCY EQUIPMENT.

9 DEMOLISH ALL DOMESTIC HOT AND COLD WATER PIPING UP TO AND SERVING RESTROOM ABOVE. DEMOLISH ALL PLUMBING FIXTURES IN RESTROOM.

THE DRAWINGS IN THIS SET ARE RECORD DRAWINGS. THEY ARE CONSTRUCTION CONTRACT DRAWINGS WHICH HAVE BEEN REVISED BASED ON AVAILABLE FIELD INFORMATION RECORDED BY OTHERS DURING CONSTRUCTION OF THIS CONTRACT. THERE HAS BEEN NO VERIFICATION OF DIMENSIONS SHOWN ON THE CONSTRUCTION DRAWINGS OR THE ACCURACY/COMPLETENESS OF THE FIELD INFORMATION RECEIVED.

SIGNATURE 2/7/2022 DATE

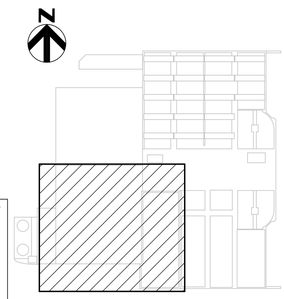

KEY PLAN

AS-BUILT REPLACEMENT SHEET

PROFESSIONAL CERTIFICATION
THIS DRAWING WAS ORIGINALLY APPROVED FOR CONSTRUCTION AND SEALED BY CHRISTOPHER S. WORK, A REGISTERED PROFESSIONAL ENGINEER IN THE STATE OF MARYLAND, NO. 50093

NOTICE TO CONTRACTORS
- PROJECT ELEVATIONS ARE BASED ON NAVD88 AND HOWARD COUNTY'S BENCHMARK SYSTEM
- PREVIOUS PROJECTS USED OTHER DATUMS
- APPLY THE FOLLOWING CONVERSIONS WHEN USING PREVIOUS CONTRACT DRAWINGS:
  - ADDITION NO. 6: SUBTRACT 0.80 FT
  - PRIOR ADDITIONS: SUBTRACT 1.04 FT

DEPARTMENT OF PUBLIC WORKS
HOWARD COUNTY, MARYLAND

CHIEF, BUREAU OF UTILITIES DATE

DES: CSW
DRN: JCS
CHK: MDD
DATE: 10/2017

DATE	REV	DESCRIPTION
03/2021		RECORD DRAWINGS

DEMOLITION

DEWATERING AND CHEMICAL HANDLING AREA HVAC DEMOLITION PLAN AT EL 141.20

LITTLE PATUXENT WATER RECLAMATION PLANT
8TH ADDITION
BIOSOLIDS PROCESSING FACILITIES - PHASE 2

CAPITAL PROJECT S-6295
CONTRACT NO. 24-4936

ELECTION DISTRICT NO. 6
HOWARD COUNTY, MARYLAND

SCALE AS SHOWN

SHEET 45 OF 311

X-521

BIM 360://10054364 – Little Patuxent WRP 8th Addition/264592_100_HP_V18.rvt
1/7/2022 2:53:46 PM

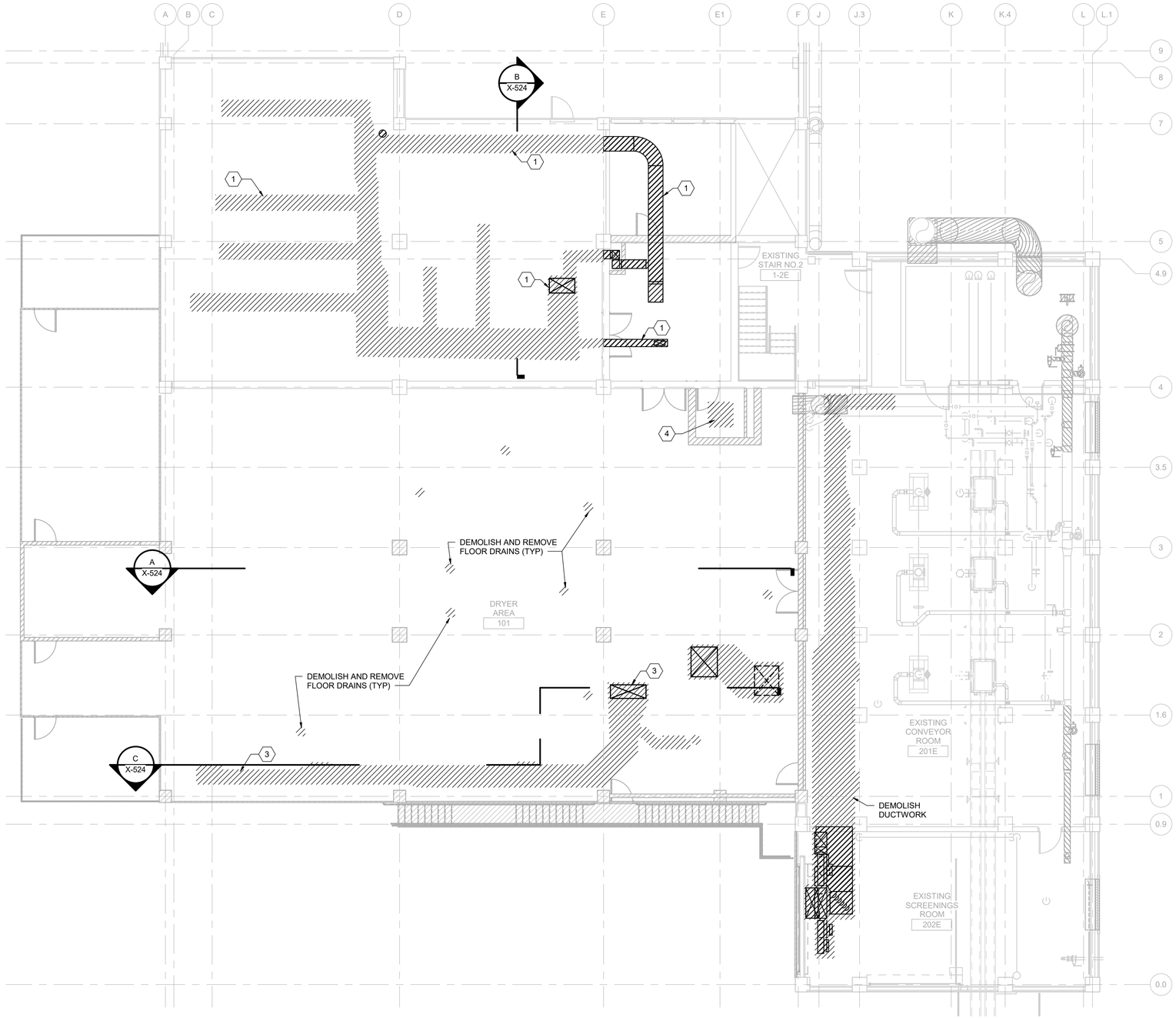

PLAN AT EL 155.20

1/8" = 1'-0"

KEY NOTES (X)

1 DEMOLISH SUPPLY AIR DUCTWORK AND APPURTENANCES FROM 8-687-PAC ON ROOF.

2 DEMOLISH INTAKE AIR DUCTWORK FROM ROOF HOOD, RH-301 ON ROOF. ALL CONNECTED DUCTWORK SHALL BE DEMOLISHED AND REMOVED.

3 DEMOLISH MAKE-UP AIR DUCTWORK AND APPURTENANCES FROM 8-684-MAU ON ROOF.

4 DEMOLISH EXHAUST GRILLE AND ASSOCIATED DUCTWORK.

THE DRAWINGS IN THIS SET ARE RECORD DRAWINGS. THEY ARE CONSTRUCTION CONTRACT DRAWINGS WHICH HAVE BEEN REVISED BASED ON AVAILABLE FIELD INFORMATION RECORDED BY OTHERS DURING CONSTRUCTION OF THIS CONTRACT. THERE HAS BEEN NO VERIFICATION OF DIMENSIONS SHOWN ON THE CONSTRUCTION DRAWINGS OR THE ACCURACY/COMPLETENESS OF THE FIELD INFORMATION RECEIVED.

SIGNATURE — DATE 2/7/2023

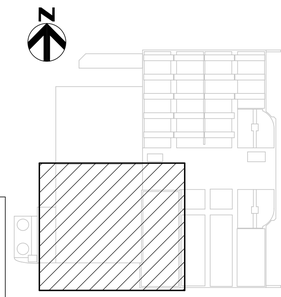

KEY PLAN

AS-BUILT REPLACEMENT SHEET

PROFESSIONAL CERTIFICATION
THIS DRAWING WAS ORIGINALLY APPROVED FOR CONSTRUCTION AND SEALED BY CHRISTOPHER S. WORK, A REGISTERED PROFESSIONAL ENGINEER IN THE STATE OF MARYLAND, NO. 50093

NOTICE TO CONTRACTORS
- PROJECT ELEVATIONS ARE BASED ON NAVD88 AND HOWARD COUNTY'S BENCHMARK SYSTEM
- PREVIOUS PROJECTS USED OTHER DATUMS
- APPLY THE FOLLOWING CONVERSIONS WHEN USING PREVIOUS CONTRACT DRAWINGS:
  - ADDITION NO. 6: SUBTRACT 0.80 FT
  - PRIOR ADDITIONS: SUBTRACT 1.04 FT

DEPARTMENT OF PUBLIC WORKS
HOWARD COUNTY, MARYLAND

CHIEF, BUREAU OF UTILITIES — DATE

DES: CSW
DRN: JCS
CHK: MDD
DATE: 10/2017

DATE	REV	DESCRIPTION
03/2021		RECORD DRAWINGS

DEMOLITION

DEWATERING AND CHEMICAL HANDLING AREA HVAC DEMOLITION PLAN AT EL 155.20

LITTLE PATUXENT WATER RECLAMATION PLANT
8TH ADDITION
BIOSOLIDS PROCESSING FACILITIES - PHASE 2

CAPITAL PROJECT S-6295
CONTRACT NO. 24-4936

ELECTION DISTRICT NO. 6
HOWARD COUNTY, MARYLAND

SCALE AS SHOWN

SHEET 46 OF 311

X-522

BIM 360://10054364 – Little Patuxent WRP 8th Addition/264592_100_HP_V18.rvt
1/7/2022 2:53:49 PM

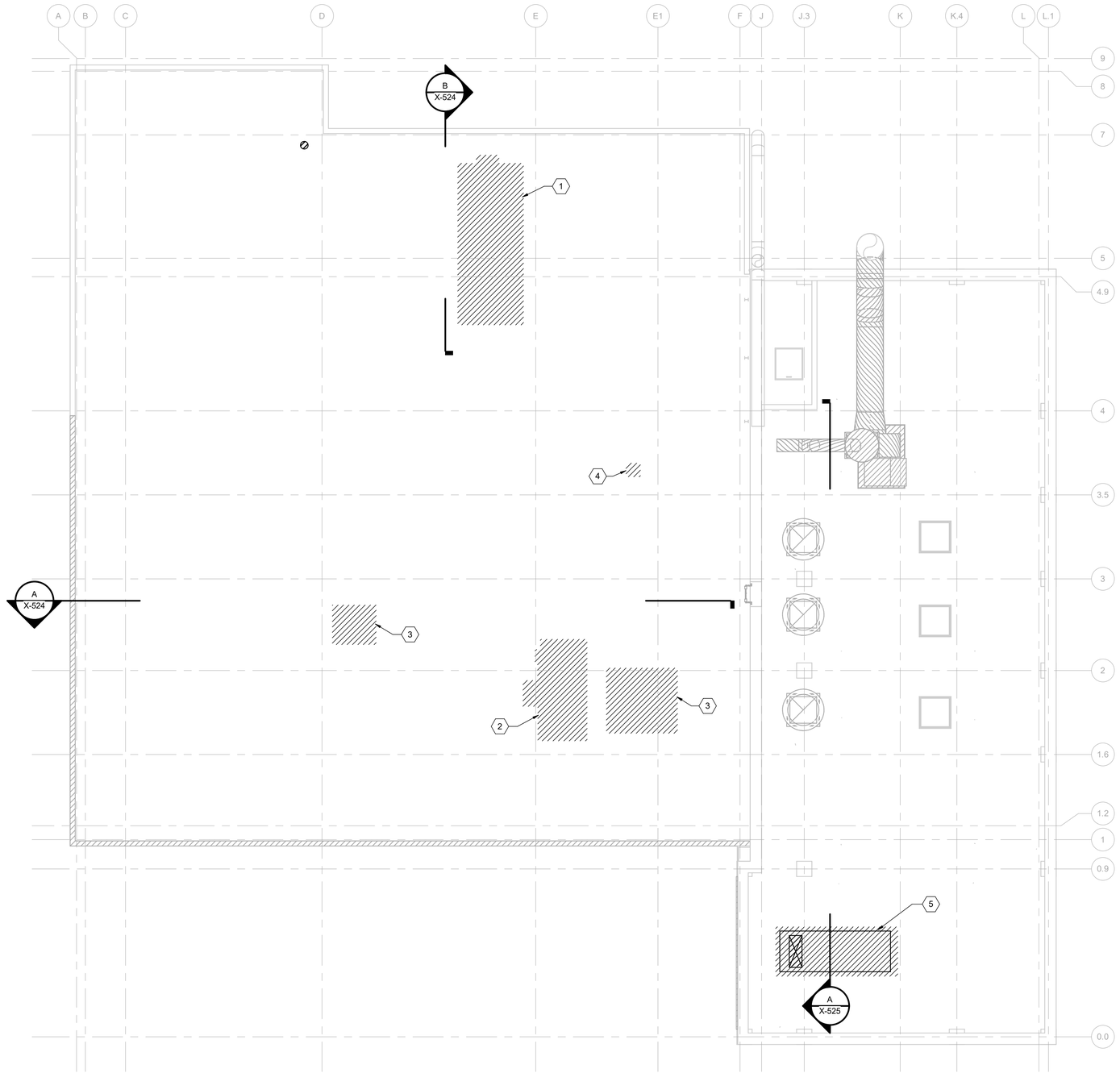

PLAN AT EL 177.58

1/8" = 1'-0"

KEY NOTES (X)

1 DEMOLISH PACKAGED AIR CONDITIONING SYSTEM, 8-687-PAC, AND ALL APPURTENANCES AND ASSOCIATED CONTROLS. PROVIDE PRE-FABRICATED ALUMINUM INSULATED CURB CAP TO SEAL ROOF OPENING.

2 DEMOLISH MAKE-UP AIR UNIT, 8-684-MAU, AND ALL APPURTENANCES AND ASSOCIATED CONTROLS.

3 DEMOLISH INTAKE ROOF HOOD.

4 DEMOLISH RESTROOM EXHAUST FAN, ALL APPURTENANCES AND ASSOCIATED DUCTWORK BELOW.

5 DEMOLISH MAKE-UP AIR UNIT, 8-686-MAU, ALL APPURTENANCES AND ASSOCIATED CONTROLS. PROVIDE NEW CURB AND ADAPTER FOR NEW UNIT.

THE DRAWINGS IN THIS SET ARE RECORD DRAWINGS. THEY ARE CONSTRUCTION CONTRACT DRAWINGS WHICH HAVE BEEN REVISED BASED ON AVAILABLE FIELD INFORMATION RECORDED BY OTHERS DURING CONSTRUCTION OF THIS CONTRACT. THERE HAS BEEN NO VERIFICATION OF DIMENSIONS SHOWN ON THE CONSTRUCTION DRAWINGS OR THE ACCURACY/COMPLETENESS OF THE FIELD INFORMATION RECEIVED.

SIGNATURE 2/7/2022 DATE

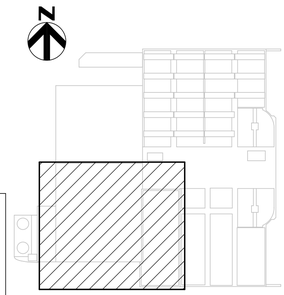

KEY PLAN

AS-BUILT REPLACEMENT SHEET

PROFESSIONAL CERTIFICATION
THIS DRAWING WAS ORIGINALLY APPROVED FOR CONSTRUCTION AND SEALED BY CHRISTOPHER S. WORK, A REGISTERED PROFESSIONAL ENGINEER IN THE STATE OF MARYLAND, NO. 50093

NOTICE TO CONTRACTORS
- PROJECT ELEVATIONS ARE BASED ON NAVD88 AND HOWARD COUNTY'S BENCHMARK SYSTEM
- PREVIOUS PROJECTS USED OTHER DATUMS
- APPLY THE FOLLOWING CONVERSIONS WHEN USING PREVIOUS CONTRACT DRAWINGS:
  - ADDITION NO. 6: SUBTRACT 0.80 FT
  - PRIOR ADDITIONS: SUBTRACT 1.04 FT

DEPARTMENT OF PUBLIC WORKS
HOWARD COUNTY, MARYLAND

CHIEF, BUREAU OF UTILITIES DATE

DES: CSW
DRN: JCS
CHK: MDD
DATE: 10/2017

DATE	REV	DESCRIPTION
03/2021		RECORD DRAWINGS

DEMOLITION

DEWATERING AND CHEMICAL HANDLING AREA HVAC ROOF DEMOLITION PLAN

LITTLE PATUXENT WATER RECLAMATION PLANT
8TH ADDITION
BIOSOLIDS PROCESSING FACILITIES - PHASE 2

CAPITAL PROJECT S-6295
CONTRACT NO. 24-4936

ELECTION DISTRICT NO. 6
HOWARD COUNTY, MARYLAND

SCALE AS SHOWN

SHEET 47 OF 311

X-523

BIM 360://10054364 – Little Patuxent WRP 8th Addition/264592_100_HP_V18.rvt
1/7/2022 2:53:51 PM

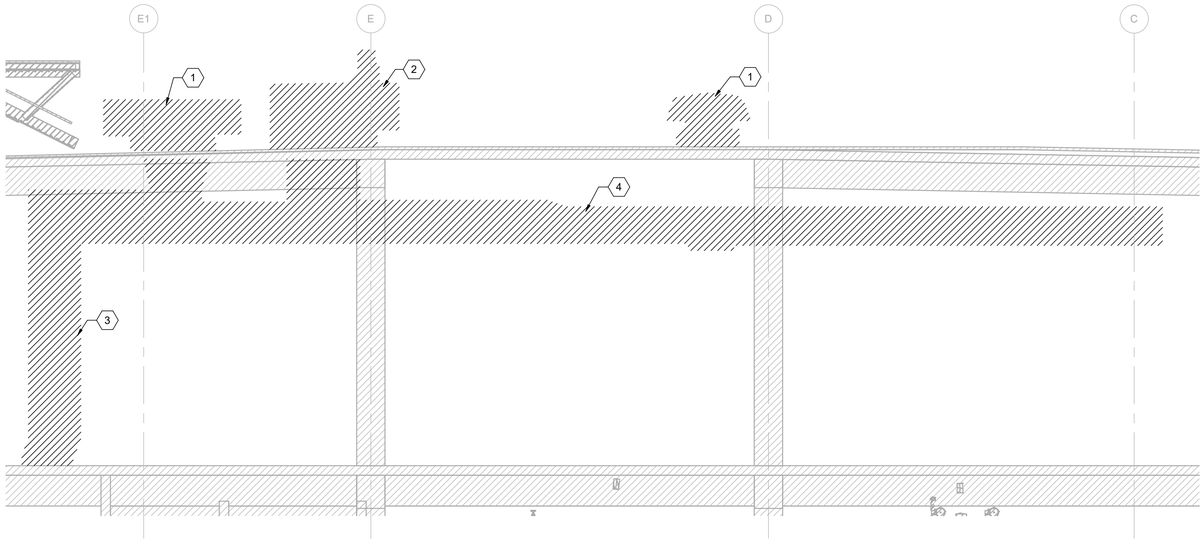

A SECTION
3/16" = 1'-0"

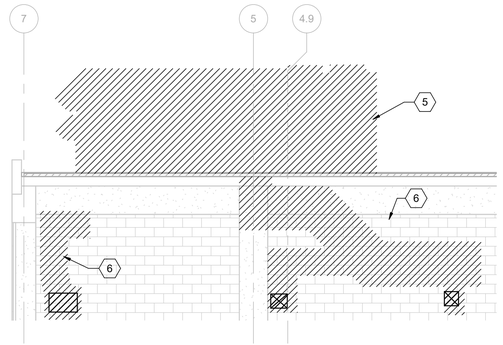

B SECTION
3/16" = 1'-0"

KEY NOTES (X)

1 DEMOLISH INTAKE ROOF HOOD.

2 DEMOLISH MAKE-UP AIR UNIT, 8-684-MAU, AND ALL APPURTENANCES AND ASSOCIATED CONTROLS.

3 DEMOLISH INTAKE AIR DUCTWORK FROM ROOF HOOD, RH-301 ON ROOF. ALL CONNECTED DUCTWORK SHALL BE DEMOLISHED AND REMOVED.

4 DEMOLISH MAKE-UP AIR DUCTWORK AND APPURTENANCES FROM 8-684-MAU ON ROOF.

5 DEMOLISH PACKAGED AIR CONDITIONING SYSTEM, 8-687-PAC, AND ALL APPURTENANCES AND ASSOCIATED CONTROLS. PROVIDE PRE-FABRICATED ALUMINUM INSULATED CURB CAP TO SEAL ROOF OPENING.

6 DEMOLISH SUPPLY AIR DUCTWORK AND APPURTENANCES FROM 8-687-PAC ON ROOF.

7 DEMOLISH MAKE-UP AIR UNIT, 8-863-MAU, ALL ASSOCIATED DUCTWORK, APPURTENANCES AND CONTROLS.

8 DEMOLISH MAKE-UP AIR UNIT, 8-862-MAU, ALL ASSOCIATED DUCTWORK, APPURTENANCES AND CONTROLS.

9 DEMOLISH ALL DUCTWORK, FANS, AND APPURTENANCES.

10 DEMOLISH EXHAUST FAN AND ALL APPURTENANCES AND CONTROLS.

11 DEMOLISH DRAIN PIPING TO THE EXTENTS SHOWN.

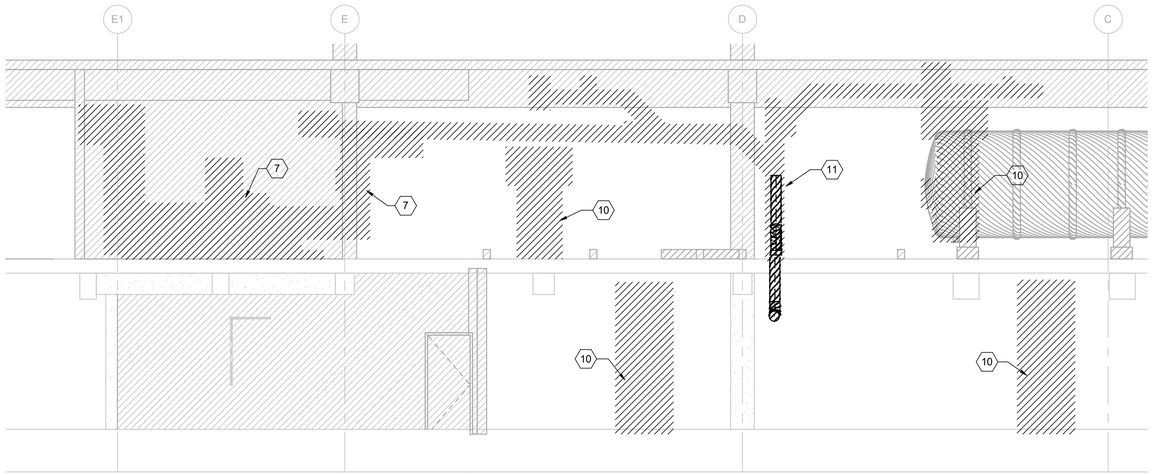

C SECTION
3/16" = 1'-0"

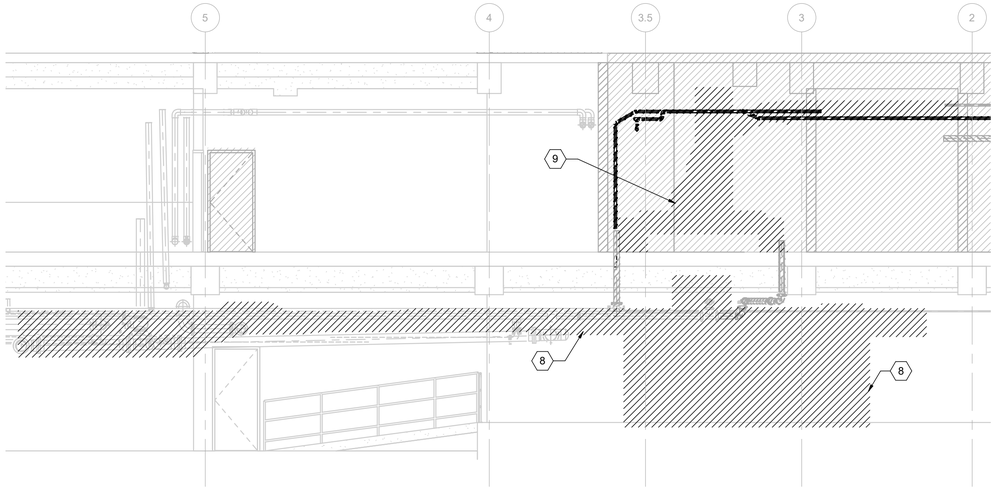

D SECTION
3/16" = 1'-0"

THE DRAWINGS IN THIS SET ARE RECORD DRAWINGS. THEY ARE CONSTRUCTION CONTRACT DRAWINGS WHICH HAVE BEEN REVISED BASED ON AVAILABLE FIELD INFORMATION RECORDED BY OTHERS DURING CONSTRUCTION OF THIS CONTRACT. THERE HAS BEEN NO VERIFICATION OF DIMENSIONS SHOWN ON THE CONSTRUCTION DRAWINGS OR THE ACCURACY/COMPLETENESS OF THE FIELD INFORMATION RECEIVED.

SIGNATURE 2/7/2023 DATE

AS-BUILT REPLACEMENT SHEET

PROFESSIONAL CERTIFICATION
THIS DRAWING WAS ORIGINALLY APPROVED FOR CONSTRUCTION AND SEALED BY CHRISTOPHER S. WORK, A REGISTERED PROFESSIONAL ENGINEER IN THE STATE OF MARYLAND, NO. 50093

NOTICE TO CONTRACTORS
- PROJECT ELEVATIONS ARE BASED ON NAVD88 AND HOWARD COUNTY'S BENCHMARK SYSTEM
- PREVIOUS PROJECTS USED OTHER DATUMS
- APPLY THE FOLLOWING CONVERSIONS WHEN USING PREVIOUS CONTRACT DRAWINGS:
  - ADDITION NO. 6: SUBTRACT 0.80 FT
  - PRIOR ADDITIONS: SUBTRACT 1.04 FT

DEPARTMENT OF PUBLIC WORKS
HOWARD COUNTY, MARYLAND

CHIEF, BUREAU OF UTILITIES DATE

DES: CSW
DRN: JCS
CHK: MDD
DATE: 10/2017

DATE	REV	DESCRIPTION
03/2021		RECORD DRAWINGS

DEMOLITION

DEWATERING AND CHEMICAL HANDLING AREA HVAC DEMOLITION SECTIONS

LITTLE PATUXENT WATER RECLAMATION PLANT
8TH ADDITION
BIOSOLIDS PROCESSING FACILITIES - PHASE 2

CAPITAL PROJECT S-6295
CONTRACT NO. 24-4936

ELECTION DISTRICT NO. 6
HOWARD COUNTY, MARYLAND

SCALE AS SHOWN

SHEET 48 OF 311

X-524

BIM 360://10054364 – Little Patuxent WRP 8th Addition/284592_100_HP_V18.rvt
1/7/2022 2:53:55 PM

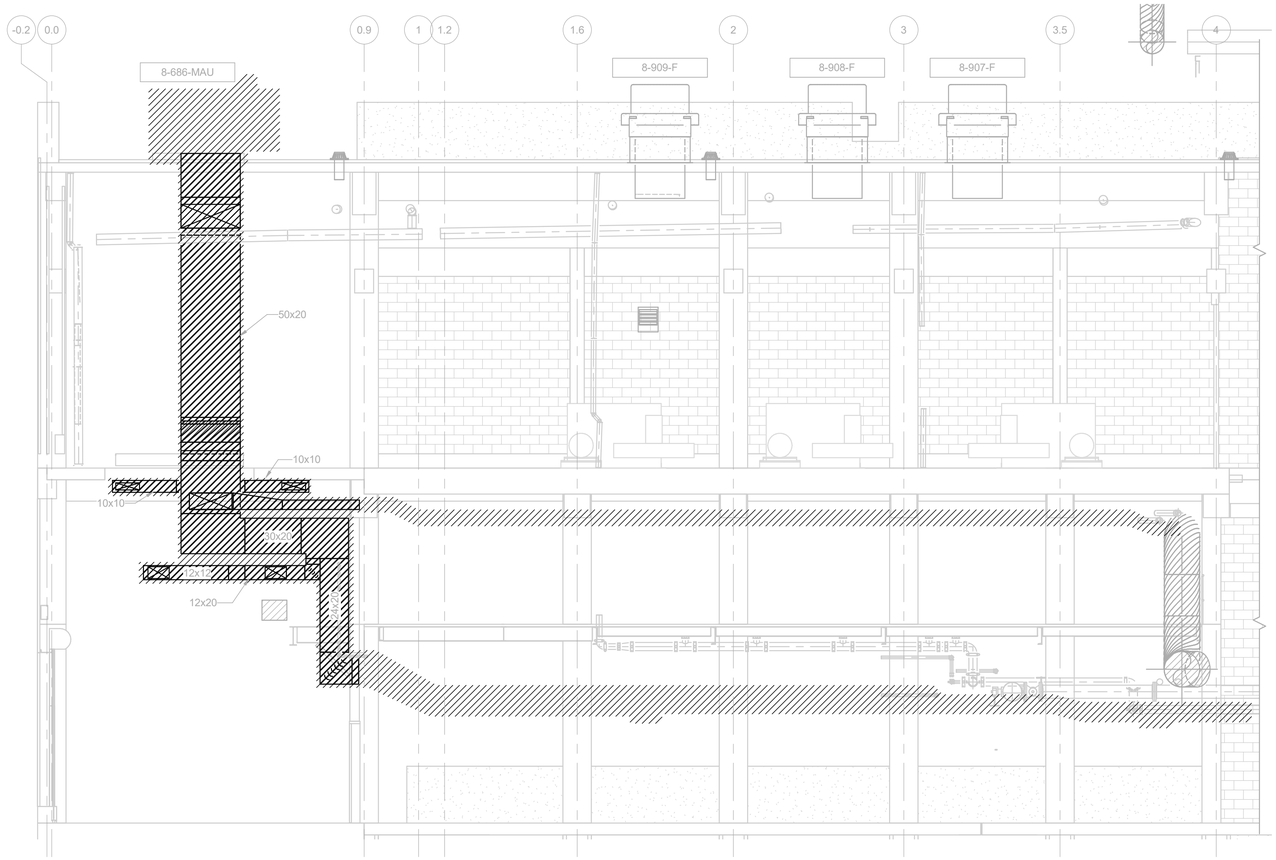

A / - SECTION
3/16" = 1'-0"

THE DRAWINGS IN THIS SET ARE RECORD DRAWINGS. THEY ARE CONSTRUCTION CONTRACT DRAWINGS WHICH HAVE BEEN REVISED BASED ON AVAILABLE FIELD INFORMATION RECORDED BY OTHERS DURING CONSTRUCTION OF THIS CONTRACT. THERE HAS BEEN NO VERIFICATION OF DIMENSIONS SHOWN ON THE CONSTRUCTION DRAWINGS OR THE ACCURACY/COMPLETENESS OF THE FIELD INFORMATION RECEIVED.

SIGNATURE 2/7/2022 DATE

AS-BUILT REPLACEMENT SHEET

PROFESSIONAL CERTIFICATION
THIS DRAWING WAS ORIGINALLY APPROVED FOR CONSTRUCTION AND SEALED BY CHRISTOPHER S. WORK, A REGISTERED PROFESSIONAL ENGINEER IN THE STATE OF MARYLAND, NO. 50093

NOTICE TO CONTRACTORS
- PROJECT ELEVATIONS ARE BASED ON NAVD88 AND HOWARD COUNTY'S BENCHMARK SYSTEM
- PREVIOUS PROJECTS USED OTHER DATUMS
- APPLY THE FOLLOWING CONVERSIONS WHEN USING PREVIOUS CONTRACT DRAWINGS:
  - ADDITION NO. 6: SUBTRACT 0.80 FT
  - PRIOR ADDITIONS: SUBTRACT 1.04 FT

DEPARTMENT OF PUBLIC WORKS
HOWARD COUNTY, MARYLAND

CHIEF, BUREAU OF UTILITIES DATE

DES: CSW
DRN: JCS
CHK: MDD
DATE: 10/2017

DATE	REV	DESCRIPTION
03/2021		RECORD DRAWINGS

DEMOLITION

DEWATERING AND CHEMICAL HANDLING AREA HVAC DEMOLITION SECTIONS

LITTLE PATUXENT WATER RECLAMATION PLANT
8TH ADDITION
BIOSOLIDS PROCESSING FACILITIES - PHASE 2

CAPITAL PROJECT S-6295
CONTRACT NO. 24-4936

ELECTION DISTRICT NO. 6
HOWARD COUNTY, MARYLAND

SCALE AS SHOWN

SHEET 49 OF 311

X-525

BIM 360://10054364 – Little Patuxent WRP 8th Addition/264592_100_HP_V18.rvt
1/7/2022 2:53:57 PM

SITE FEATURES

- PROPERTY LINE
- EX GRADE MAJOR CONTOUR
- EX GRADE MINOR CONTOUR
- LIMITS OF WETLANDS
- WETLAND BUFFER
- BUFFER
- EXISTING STORM LINE
- EXISTING WATER LINE
- NEW WATER LINE
- EXISTING ELECTRICAL
- NEW ELECTRICAL
- NEW NATURAL GAS MAIN
- EXISTING STORMWATER LINE
- NEW STORMWATER LINE
- EXISTING TELEPHONE LINE
- NEW UNDERGROUND FIBER OPTIC
- NEW GRADE CONTOUR
- EXISTING SPOT ELEVATION
- NEW SPOT ELEVATION
- EXISTING YARD HYDRANT
- NEW YARD HYDRANT
- EXISTING FIRE HYDRANT
- NEW FIRE HYDRANT
- NEW VALVE
- NEW REDUCER
- EXISTING SANITARY SEWER
- EXISTING STORM DRAINAGE MANHOLE
- TOP OF SLOPE
- BOTTOM OF SLOPE
- DIRECTION OF (SURFACE) FLOW
- EXISTING TREE LINE
- NEW TREE LINE
- EXISTING TREE OR SHRUB
- EXISTING FENCE
- NEW FENCE
- STAKEOUT CONTROL POINT
- COORDINATE IDENTIFICATION
- EXISTING PIPE AND DESIGNATION (DOUBLE LINE)
- EXISTING PIPE AND DESIGNATION (SINGLE LINE)

SURFACES

- NEW BITUMINOUS PAVEMENT/ BITUMINOUS PAVEMENT REPLACEMENT
- BITUMINOUS PAVEMENT RESTORATION (MILL, PATCH AND OVERLAY)
- EXISTING CONCRETE SURFACE
- NEW CONCRETE SURFACE
- TEMPORARY GRAVEL ACCESS ROAD
- DEMOLITION HATCH
- ASPHALT/PAVEMENT DEMOLITION HATCH

EROSION & SEDIMENT CONTROL SYMBOLS

- LIMIT OF DISTURBANCE/ LIMIT OF WORK
- SILT FENCE (SEE DETAIL E-1/C-23)
- SILT FENCE PHASE 1 (SEE DETAIL E-1/C-23)
- SUPER SILT FENCE (SEE DETAIL E-3/C-23)
- SUPER SILT FENCE – PHASE 1 (SEE DETAIL E-3/C-23)
- FILTER LOG (SEE DETAIL E-6/C-23)
- STABILIZED CONSTRUCTION ENTRANCE (SEE DETAIL B-1/C-23)
- STABILIZED CONSTRUCTION ENTRANCE – PHASE 1 (SEE DETAIL B-1/C-23)
- SUMP PIT
- PORTABLE SEDIMENT TANK
- AT GRADE INLET PROTECTION (SEE DETAIL E-9-2/C-24)
- CURB INLET PROTECTION (SEE DETAIL E-9-3/C-24)
- CURB INLET PROTECTION – PHASE 1 (SEE DETAIL E-9-3/C-24)
- SUPER SILT FENCE INLET PROTECTION
- CONCRETE WASHOUT STRUCTURE SEE DETAIL H-6/C-24
- CONCRETE WASHOUT STRUCTURE – PHASE 1 SEE DETAIL H-6/C-24
- SILT FENCE ROCK OUTLET SEE DETAIL 1/C-21
- SILT FENCE ROCK OUTLET – PHASE 1 SEE DETAIL 1/C-21
- SEDIMENT FILTER BAG
- TEMPORARY ASPHALT BERM (LOCATED ON EXIST PAVING ONLY)
- TREE PROTECTION FENCING (SEE DETAIL L-9.02/C-24)
- TREE PROTECTION FENCING – PHASE 1 (SEE DETAIL L-9.02 ON C-24)
- TEMPORARY SWALE A-2 (SEE DETAIL C-2 ON C-24)
- TEMPORARY SWALE A-2 – PHASE 1 (SEE DETAIL C-2 ON C-24)
- INLET SEDIMENT SACK (SEE DETAIL 1/C-24)

GENERAL NOTES

1. SEE EXISTING CONDITIONS SHEET FOR SURVEY INFORMATION.
2. EXISTING UTILITIES AND STRUCTURES SHOWN ARE FROM THE BEST AVAILABLE RECORDS, AND SHALL BE VERIFIED BY THE CONTRACTOR PRIOR TO COMMENCING WORK. THE COMPLETENESS OR CORRECTNESS OF THE INFORMATION GIVEN IS NEITHER WARRANTED NOR GUARANTEED. NECESSARY PRECAUTIONS SHALL BE TAKEN BY THE CONTRACTOR TO PROTECT EXISTING SERVICES AND MAINS. ANY DAMAGE TO THEM DUE TO HIS NEGLIGENCE SHALL BE REPAIRED IMMEDIATELY AT HIS OWN EXPENSE AND NO INCREASE IN CONTRACT TIME ALLOWED.
3. CONTRACTOR SHALL USE DESIGNATED AREAS FOR STAGING, STORAGE, AND EMPLOYEE PARKING, AND SHALL MAINTAIN CLEAR ACCESS FOR PLANT FACILITIES AT ALL TIMES.
4. SOIL BORINGS AND THE GEOTECHNICAL REPORT ARE INCLUDED IN THE APPENDICES OF THE CONTRACT SPECIFICATIONS.
5. ALL DISTURBED AREAS SHALL BE STABILIZED IN ACCORDANCE WITH SEDIMENT CONTROL NOTES AND SPECIFICATIONS.
6. MAINTAIN MINIMUM ONE-FOOT VERTICAL CLEARANCE BETWEEN ALL STORM DRAIN CROSSINGS AND OTHER UTILITIES.
7. ALL WORK SHALL BE PERFORMED WITH REGARD FOR THE SAFETY OF THE CONSTRUCTION CREW.
8. COMPACT TRENCH BACKFILL TO NOT LESS THAN 95% DENSITY IN ACCORDANCE WITH ASTM D698. UNDER PAVEMENT, COMPACT LAST ONE-FOOT TO 100% DENSITY IN ACCORDANCE WITH ASTM D698.
9. SHEETING AND SHORING SHALL BE THE RESPONSIBILITY OF THE CONTRACTOR.
10. WHEN GROUNDWATER OR SURFACE RUNOFF IS PRESENT IN THE WORK AREA, DEWATER TO MAINTAIN WATER LEVEL BELOW PIPE OR STRUCTURE FOUNDATION TO PROVIDE A STABLE TRENCH BOTTOM.

THE DRAWINGS IN THIS SET ARE RECORD DRAWINGS. THEY ARE CONSTRUCTION CONTRACT DRAWINGS WHICH HAVE BEEN REVISED BASED ON AVAILABLE FIELD INFORMATION RECORDED BY OTHERS DURING CONSTRUCTION OF THIS CONTRACT. THERE HAS BEEN NO VERIFICATION OF DIMENSIONS SHOWN ON THE CONSTRUCTION DRAWINGS OR THE ACCURACY/COMPLETENESS OF THE FIELD INFORMATION RECEIVED.

SIGNATURE _____ DATE 2/7/2025

APPROVED: DEPARTMENT OF PLANNING AND ZONING

CHIEF, DEVELOPMENT ENGINEERING DIVISION _____ DATE: _____

CHIEF, DIVISION OF LAND DEVELOPMENT _____ DATE: _____

DIRECTOR _____ DATE: _____

ENGINEER'S CERTIFICATE

"I CERTIFY THAT THIS PLAN FOR SEDIMENT AND EROSION CONTROL REPRESENTS A PRACTICAL AND WORKABLE PLAN BASED ON MY PERSONAL KNOWLEDGE OF THE SITE CONDITIONS AND THAT IT WAS PREPARED IN ACCORDANCE WITH THE REQUIREMENTS OF THE HOWARD SOIL CONSERVATION DISTRICT."

SIGNATURE OF ENGINEER (PRINT NAME BELOW SIGNATURE) _____ DATE: _____

DEVELOPER'S CERTIFICATE

"I/WE CERTIFY THAT ALL DEVELOPMENT AND CONSTRUCTION WILL BE DONE ACCORDING TO THIS PLAN FOR SEDIMENT AND EROSION CONTROL, AND THAT ALL RESPONSIBLE PERSONNEL INVOLVED IN THE CONSTRUCTION PROJECT WILL HAVE A CERTIFICATE OF ATTENDANCE AT A DEPARTMENT OF THE ENVIRONMENT APPROVED TRAINING PROGRAM FOR THE CONTROL OF SEDIMENT AND EROSION BEFORE BEGINNING THE PROJECT. I ALSO AUTHORIZE PERIODIC ON-SITE INSPECTION BY THE HOWARD SOIL CONSERVATION DISTRICT."

SIGNATURE OF ENGINEER (PRINT NAME BELOW SIGNATURE) _____ DATE: _____

HDR

AS-BUILT REPLACEMENT SHEET

PROFESSIONAL CERTIFICATION
THIS DRAWING WAS ORIGINALLY APPROVED FOR CONSTRUCTION AND SEALED BY ROBERT BAYSDEN, A REGISTERED PROFESSIONAL ENGINEER IN THE STATE OF MARYLAND, NO. 49972.

NOTICE TO CONTRACTORS
- PROJECT ELEVATIONS ARE BASED ON NAVD88 AND HOWARD COUNTY'S BENCHMARK SYSTEM
- PREVIOUS PROJECTS USED OTHER DATUMS
- APPLY THE FOLLOWING CONVERSIONS WHEN USING PREVIOUS CONTRACT DRAWINGS:
  - ADDITION NO. 6: SUBTRACT 0.80 FT
  - PRIOR ADDITIONS: SUBTRACT 1.04 FT

DEPARTMENT OF PUBLIC WORKS
HOWARD COUNTY, MARYLAND

CHIEF, BUREAU OF UTILITIES DATE

DES: M.L.
DRN: S.W.
CHK: R.B.
DATE: 01/2018

DATE	REV	DESCRIPTION
03/2021		RECORD DRAWINGS

CIVIL

LEGEND SYMBOLS AND GENERAL NOTES

LITTLE PATUXENT WATER RECLAMATION PLANT
8TH ADDITION
BIOSOLIDS PROCESSING FACILITIES - PHASE 2

CAPITAL PROJECT S-6295
CONTRACT NO. 24-4936

ELECTION DISTRICT NO. 6
HOWARD COUNTY, MARYLAND

SCALE AS SHOWN

SHEET 50 OF 311

C-1

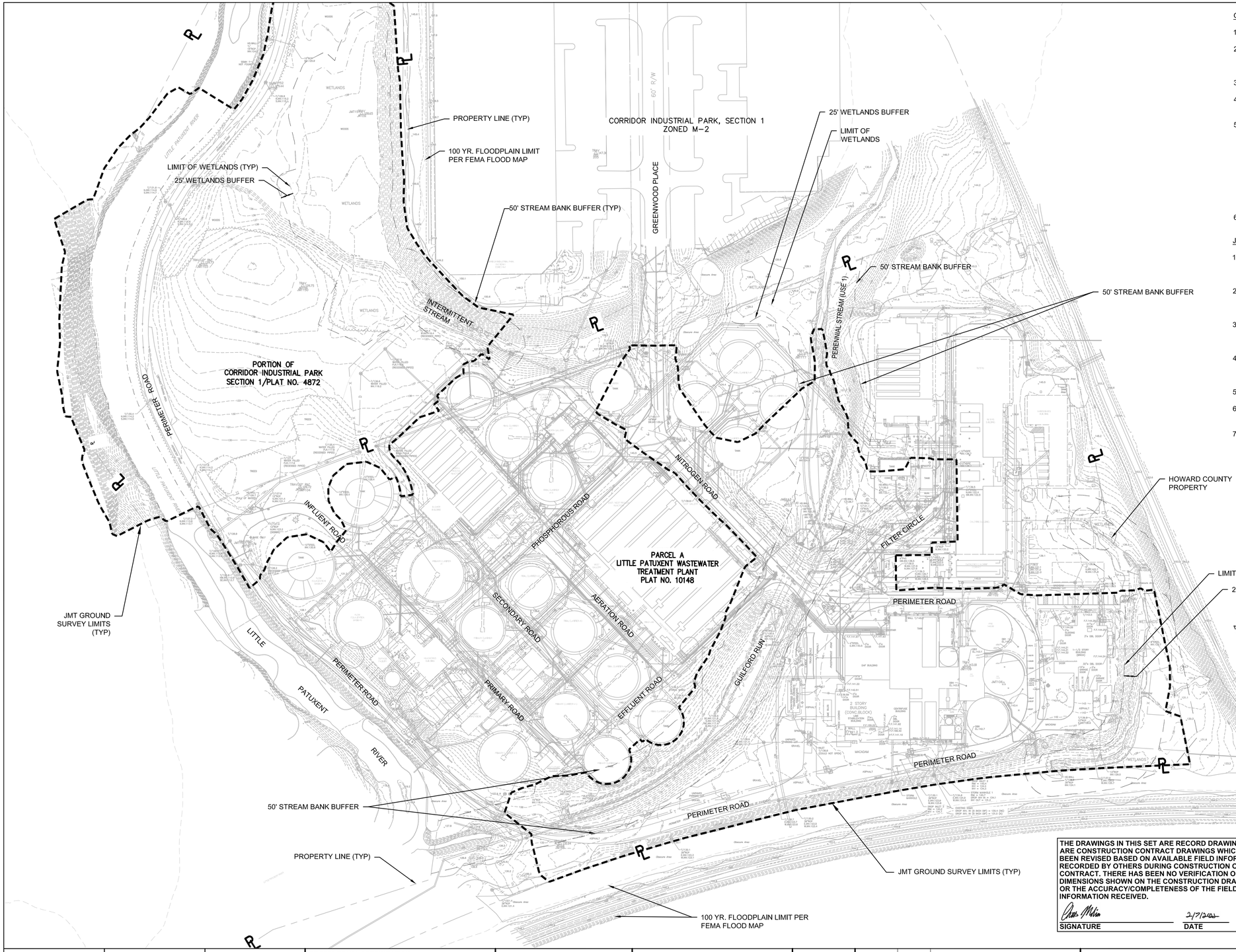

GENERAL NOTES:

1. THIS DOCUMENT IS A COMPILATION OF DATA FROM FIELD SURVEY, GIS, AND PAST PROJECTS.
2. GROUND SURVEY INFORMATION WITHIN THE DESIGNATED AREA LABELED "JMT GROUND SURVEY LIMITS" WAS OBTAINED FROM JOHNSON, MIRMIRAN, & THOMPSON (JMT). SURVEY COORDINATE, ELEVATION, AND SOURCE INFORMATION ARE LISTED BELOW.
3. PHASE 1 NEW WORK IS SHOWN AS EXISTING.
4. LIDAR SURVEY USED FOR AREAS OUTSIDE BOUNDARY WAS OBTAINED FROM McKENZIE AND SNYDER.
5. MCKENZIE AND SNYDER LIDAR COORDINATES, VERTICAL DATUM AND CONTROL POINTS ARE BASED ON THE ADDITION 7 SURVEY, WHICH STATES:
   - 5.1. THE COORDINATES SHOWN HEREON ARE BASED ON THE HOWARD COUNTY GEODETIC CONTRTROL, WHICH IS BASED ON THE MARYLAND STATE PLANE COORDINATE SYSTEM, NAD 83/91.
   - 5.2. THE VERTICAL DATUM IS BASED UPON HOWARD COUNTY GPS CONTROL, NAVD 88. NOTE: COUNTY MONUMENTS 471T1 AND 471T2 WERE DESTROYED PRIOR TO THIS PROJECT. NEW TRAVERSE AND BENCHMARKS WERE ESTABLISHED WITH ASSISTANCE FROM HOWARD COUNTY. PREVIOUS PROJECTS USED OTHER VERTICAL DATUMS. CONVERSIONS ARE GIVEN AT THE BOTTOM OF ALL SHEETS FOR THIS PROJECT.
6. UNDERGROUND PIPING DATA AND OTHER INFORMATION NOT PROVIDED IN SURVEY WAS OBTAINED FROM PBS&J ADDITION 7 AS-BUILTS DATED MARCH OF 2009.

JMT SURVEY GENERAL NOTES

1. THIS SURVEY WAS BASED ON A FIELD-RUN TOPOGRAPHIC SURVEY PERFORMED BY JOHNSON, MIRMIRAN & THOMPSON (JMT) IN MARCH, APRIL & JUNE 2016 AND REFLECTS SITE CONDITIONS AS OF THAT DATE.
2. COORDINATES ARE REFERENCED TO THE MARYLAND STATE PLANE COORDINATE SYSTEM NAD 83(2011) ZONE 1900 EPOCH 2010 AS DETERMINED BY CONVENTIONAL TRAVERSE TIES TO HOWARD COUNTY CONTROL MONUMENTS; HP12, HP13, HP14 & HP15.
3. ELEVATIONS ARE REFERENCED TO THE NORTH AMERICAN VERTICAL DATUM OF 1988 (NAVD88)(GEOID 12A) AS DETERMINED BY CONVENTIONAL TRAVERSE TRIG ELEVATION TIES TO HOWARD COUNTY CONTROL MONUMENTS; HP12, HP13, HP14 & HP15.
4. UNDERGROUND UTILITY LINES SHOWN HEREON WERE FIELD DESIGNATED EXCLUDING STORM & SEWER. ALL PIPE SIZES ARE APPROXIMATE. NO RECORD DRAWINGS WERE UTILIZED IN THE MAPPING OF THIS TOPOGRAPHICAL SURVEY.
5. ALL UNDERGROUND UTILITY LINE ELEVATIONS ARE VOID UNLESS OTHERWISE NOTED HEREON.
6. ADDITIONAL SPOT ELEVATIONS RESIDE IN THE ELECTRONIC VERSION OF THIS DRAWING BUT ARE NOT PLOTTED HEREON.
7. THE EIGHTH ADDITION PHASE 1 DESIGN DATA IS SHOWN AS EXISTING CONDITIONS FOR REFERENCE ONLY.

JMT SURVEY TRAVERSE CONTROL TABLE

POINT	NORTHING	EASTING	ELEV.	DESCRIPTION
JMT68	530385.31	1365270.39	132.04	REBAR & CAP
JMT70	530983.52	1364641.68	127.74	REBAR & CAP
JMT71	531365.71	1365113.79	138.96	MAGNAIL
JMT72	530578.09	1366065.22	141.70	REBAR & CAP
JMT73	530636.10	1366372.02	141.58	REBAR & CAP
JMT101	530606.22	1366298.42	141.06	REBAR & CAP
JMT102	530890.04	1366134.54	141.42	REBAR & CAP
JMT103	531545.80	1364556.57	139.77	REBAR & CAP
JMT104	531097.20	1364751.22	128.72	REBAR & CAP
JMT105	530755.25	1366234.67	143.26	REBAR & CAP
JMT106	530704.35	1366156.69	143.72	REBAR & CAP
JMT107	530874.30	1366398.76	138.06	REBAR & CAP
JMT108	530846.53	1366056.02	141.99	REBAR & CAP
JMT109	530742.13	1366081.01	143.18	REBAR & CAP
JMT110	530868.20	1365749.82	140.30	REBAR & CAP
JMT111	531189.92	1365498.39	139.93	MAGNAIL
JMT112	531204.37	1365802.10	127.92	REBAR & CAP
JMT113	531065.45	1365724.44	127.40	SPIKE
JMT114	531022.73	1365919.82	139.74	REBAR & CAP
JMT115	531013.04	1366032.36	139.25	REBAR & CAP
JMT116	531230.08	1366038.65	140.21	REBAR & CAP
JMT117	531364.73	1365751.01	129.46	REBAR & CAP
JMT118	531466.76	1365011.25	129.49	SPIKE
JMT150	531499.41	1364756.72	139.75	REBAR & CAP
JMT151	531843.40	1364874.15	128.65	REBAR & CAP
JMT152	531898.05	1364696.03	129.44	REBAR & CAP
JMT153	531703.95	1364541.70	130.18	REBAR & CAP

THE DRAWINGS IN THIS SET ARE RECORD DRAWINGS. THEY ARE CONSTRUCTION CONTRACT DRAWINGS WHICH HAVE BEEN REVISED BASED ON AVAILABLE FIELD INFORMATION RECORDED BY OTHERS DURING CONSTRUCTION OF THIS CONTRACT. THERE HAS BEEN NO VERIFICATION OF DIMENSIONS SHOWN ON THE CONSTRUCTION DRAWINGS OR THE ACCURACY/COMPLETENESS OF THE FIELD INFORMATION RECEIVED.

SIGNATURE 2/7/2020 DATE

N

0 100 200 300

SCALE: 1" = 100'

AS-BUILT REPLACEMENT SHEET

PROFESSIONAL CERTIFICATION
THIS DRAWING WAS ORIGINALLY APPROVED FOR CONSTRUCTION AND SEALED BY ROBERT BAYSDEN, A REGISTERED PROFESSIONAL ENGINEER IN THE STATE OF MARYLAND, NO. 49972.

NOTICE TO CONTRACTORS
- PROJECT ELEVATIONS ARE BASED ON NAVD88 AND HOWARD COUNTY'S BENCHMARK SYSTEM
- PREVIOUS PROJECTS USED OTHER DATUMS
- APPLY THE FOLLOWING CONVERSIONS WHEN USING PREVIOUS CONTRACT DRAWINGS:
  - ADDITION NO. 6: SUBTRACT 0.80 FT
  - PRIOR ADDITIONS: SUBTRACT 1.04 FT

DEPARTMENT OF PUBLIC WORKS
HOWARD COUNTY, MARYLAND

CHIEF, BUREAU OF UTILITIES DATE

DES: M.L.
DRN: S.W.
CHK: R.B.
DATE: 01/2018

DATE	REV	DESCRIPTION
03/2021		RECORD DRAWINGS

CIVIL

OVERALL EXISTING CONDITIONS PLAN

LITTLE PATUXENT WATER RECLAMATION PLANT
8TH ADDITION
BIOSOLIDS PROCESSING FACILITIES - PHASE 2

CAPITAL PROJECT S-6295
CONTRACT NO. 24-4936

ELECTION DISTRICT NO. 6
HOWARD COUNTY, MARYLAND

SCALE AS SHOWN

SHEET 51 OF 311

C-2

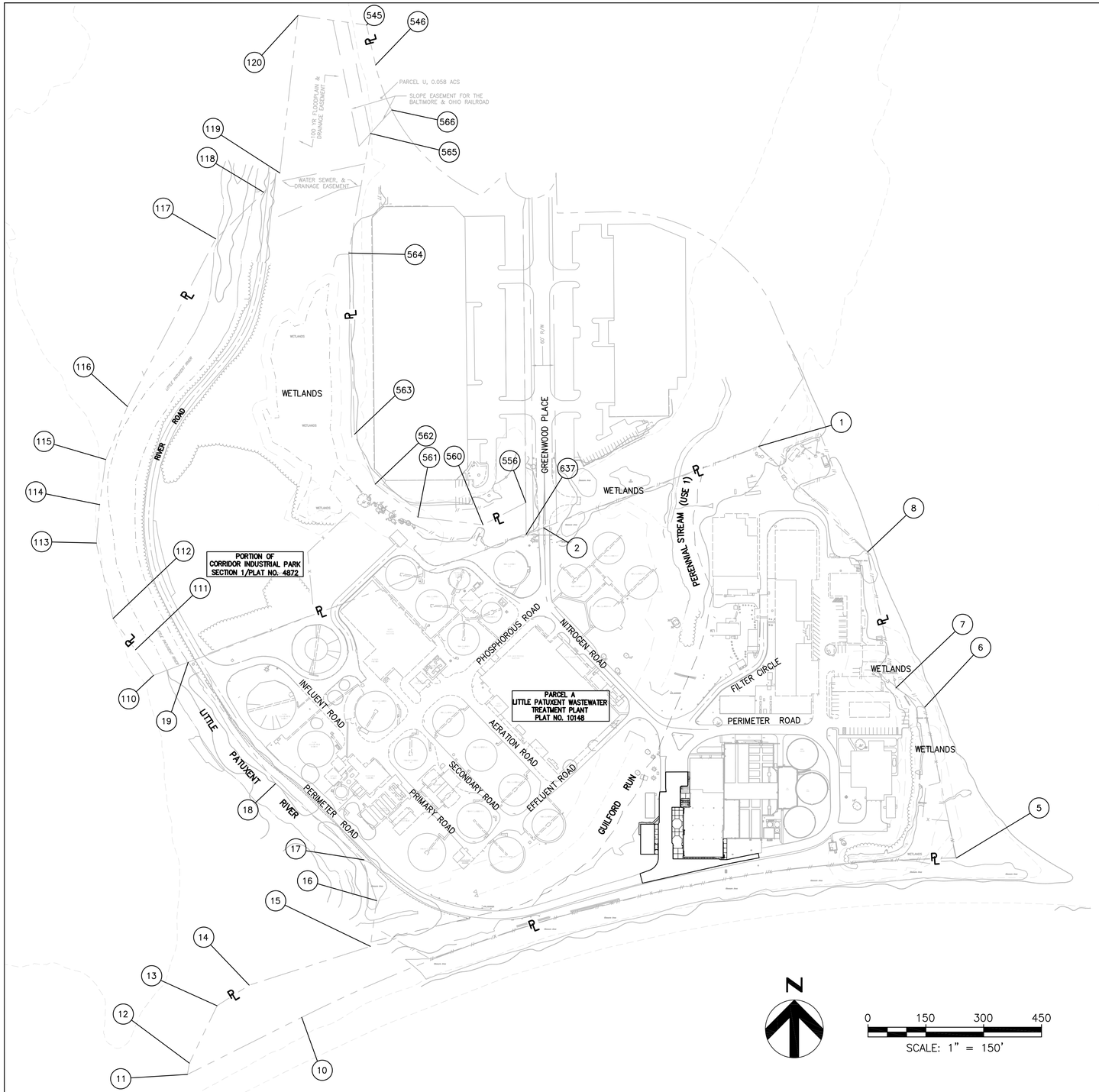

N

0 150 300 450

SCALE: 1" = 150'

NOTE: COORDINATES SHOWN HEREON ARE BASED ON CORRIDOR INDUSTRIAL PARK SECTION ONE, PLAT BOOK 31, FOLIO 18

CORRIDOR INDUSTRIAL PARK - SECTION 1

PARCEL "U" AND A PORTION OF THE HOWARD COUNTY PARK UTILITY AND DRAINAGE RESERVATION

PLAT NO. 4872 A RESUBDIVISION OF THE PARK, UTILITY AND DRAINAGE RESERVATION, 6TH ELECTION DISTRICT, HOWARD COUNTY, MARYLAND

NO	NORTHING	EASTING	POINTS	BEARING	DISTANCE
545	471951.91	852583.70	545 TO 546	S12°30'00"	106.20'
546	471848.22	852606.68	546 TO 566	(SEE CURVE DATA)	
566	47731.67	852648.54	566 TO 565	N42°15'00"E	82.13'
565	471670.87	852593.32	565 TO 564	N10°20'00"E	315.00'
564	471360.98	852536.81	564 TO 563	N01°45'00"W	470.00'
563	470891.20	852551.17	563 TO 562	N22°30'00"W	140.00'
562	470761.86	852604.74	562 TO 561	N52°15'00"W	140.00'
561	470676.15	852715.44	561 TO 560	N83°15'00"W	170.00'
560	470656.16	852884.26	560 TO 556	S62°36'00"W	125.00'
556	470713.69	852995.24	556 TO 637	S00°30'00"E	82.42'
637	470631.28	852995.96	637 TO 110	S69°20'14"W	1032.85'
110	470266.81	852029.54	110 TO 111	N35°12'18"W	80.93'
111	470332.94	851982.88	111 TO 112	N35°27'18"W	100.00'
112	470414.40	851924.87	112 TO 113	N12°27'18"W	200.00'
113	470609.70	851881.74	113 TO 114	N04°52'42"	100.00'
114	470709.33	851890.24	114 TO 115	N07°52'42"E	118.00'
115	470826.22	851906.41	115 TO 116	N22°17'42"W	148.50'
116	470963.62	851962.75	116 TO 117	N27°42'40"E	491.14'
117	471397.96	852192.02	117 TO 118	N45°54'10"E	173.25'
118	471518.52	852316.44	118 TO 119	N42°02'10"	63.40'
119	471568.59	852358.51	119 TO 120	N06°36'47"E	411.23'
120	471977.09	852405.87	120 TO 545	S81°56'24"E	178.60'

CURVE DATA

POINTS	RAD	DELTA	ARC	TAN	CHD	BEARING
546 to 566	490.34'	14°30'56"	124.18'	62.42'	123.85'	S19°45'18"E

SOURCE: PLAT–C.M.P NO. 4872

LITTLE PATUXENT WASTEWATER TREATMENT PLANT - PARCEL A

PLAT NO. 10148, A RESUBDIVISION OF PARCEL NO. 200, LIBER 423 FOLIO 516 AD PARCEL NO. 198, LIBER 618 FOLIO 537 AS SHOWN ON TAX MAP NO. 47, SIXTH ELECTION DISTRICT, HOWARD COUNTY, MARYLAND

NO	NORTHING	EASTING	POINTS	BEARING	DISTANCE
1	470858.65	853598.86	1 TO 8	S45°51'41"E	393.08'
8	470584.91	853880.95	8 TO 7	S11°41'47"E	360.00'
7	470232.38	853953.94	7 TO 6	S56°41'47"E	90.00'
6	470182.97	854029.16	6 TO 5	S11°41'47"E	400.00'
5	468791.27	854110.25	5 TO 10	(SEE CURVE DATA)	
10	469379.92	852412.86	10 TO 11	S63°29'14"W	331.00'
11	469232.16	852116.67	11 TO 12	N09°25'14"E	29.81'
12	469261.57	852121.55	12 TO 13	N25°49'14"	65.00'
13	469410.10	852193.42	13 TO 14	N57°19'14"E	99.00'
14	469463.55	852276.74	14 TO 15	N72°19'14"E	330.00'
15	469563.77	852591.16	15 TO 16	N07°49'14"E	119.62'
16	469682.28	852607.44	16 TO 17	N18°40'46"W	115.50'
17	469791.69	852570.44	17 TO 18	N49°10'46"W	297.00'
18	469985.84	852345.69	18 TO 19	N35°40'46"W	367.75'
19	470300.80	852119.53	19 TO 2	N69°20'24"E	985.03'
2	470648.34	853041.21	2 TO 1	N69°20'14"E	595.99'
1	470858.65	853598.86			

CURVE DATA

POINTS	RAD	DELTA	ARC	TAN	CHD	BEARING
5 TO 10	3909.83'	25°48'42"	1761.38'	895.89'	1746.52'	S76°22'38"W

SOURCE: PLAT–M.D.R. NO. 10148

ZONING SITE ANALYSIS:
AREA OF PARCEL/LOT:
AREA OF PLAT NO. 10148 = 38.01± ACRES
AREA OF PLAT NO. 4872 = 18.19± ACRES (EXCLUDES PARCEL "U")
TOTAL SITE AREA = 56.20± ACRES
PRESENT ZONING = M–2 PER 02/02/04 COMPREHENSIVE REZONING PLAN
EXISTING/PROPOSED USE: WATER RECLAMATION PLANT
NUMBER OF EMPLOYEES = 55 (NO CHANGE)

THE DRAWINGS IN THIS SET ARE RECORD DRAWINGS. THEY ARE CONSTRUCTION CONTRACT DRAWINGS WHICH HAVE BEEN REVISED BASED ON AVAILABLE FIELD INFORMATION RECORDED BY OTHERS DURING CONSTRUCTION OF THIS CONTRACT. THERE HAS BEEN NO VERIFICATION OF DIMENSIONS SHOWN ON THE CONSTRUCTION DRAWINGS OR THE ACCURACY/COMPLETENESS OF THE FIELD INFORMATION RECEIVED.

SIGNATURE 2/7/2021 DATE

AS-BUILT REPLACEMENT SHEET

PROFESSIONAL CERTIFICATION
THIS DRAWING WAS ORIGINALLY APPROVED FOR CONSTRUCTION AND SEALED BY ROBERT BAYSDEN, A REGISTERED PROFESSIONAL ENGINEER IN THE STATE OF MARYLAND, NO. 49972.

NOTICE TO CONTRACTORS
- PROJECT ELEVATIONS ARE BASED ON NAVD88 AND HOWARD COUNTY'S BENCHMARK SYSTEM
- PREVIOUS PROJECTS USED OTHER DATUMS
- APPLY THE FOLLOWING CONVERSIONS WHEN USING PREVIOUS CONTRACT DRAWINGS:
  - ADDITION NO. 6: SUBTRACT 0.80 FT
  - PRIOR ADDITIONS: SUBTRACT 1.04 FT

DEPARTMENT OF PUBLIC WORKS
HOWARD COUNTY, MARYLAND

CHIEF, BUREAU OF UTILITIES DATE

DES: M.L.
DRN: S.W.
CHK: R.B.
DATE: 01/2018

DATE	REV	DESCRIPTION
03/2021		RECORD DRAWINGS

CIVIL

OVERALL PROPERTY BOUNDARY PLAN

LITTLE PATUXENT WATER RECLAMATION PLANT
8TH ADDITION
BIOSOLIDS PROCESSING FACILITIES - PHASE 2

CAPITAL PROJECT S-6295
CONTRACT NO. 24-4936

ELECTION DISTRICT NO. 6
HOWARD COUNTY, MARYLAND

SCALE AS SHOWN

SHEET 52 OF 311

C-3

STRUCTURE IDENTIFICATION

KEY NOTES	FACILITY DESCRIPTION
6	FLOW EQUALIZATION BASIN 2 (FEB-2)
14	EAST PIPE GALLERY ALUM/HYPO STORAGE & FEED
18	FINAL CLARIFIER (FC-6)
19	FINAL CLARIFIER (FC-7)
20	DISTRIBUTION FLOW CHAMBER
21	FINAL CLARIFIER (FC-8)
22	FINAL CLARIFIER (FC-9)
23	NORTH PROCESS REACTORS
25	FINAL CLARIFIER (FC-10)
26	FINAL CLARIFIER (FC-11)
27	FINAL CLARIFIER (FC-12)
28	NORTH GALLERY
29	PRETREATMENT CLARIFIER/THICKENER
30	PRETREATMENT FERMENTER
31	NORTH PROCESS REACTOR
32	FINAL CLARIFIER (FC-13) [92.3' DIA.]
33	AUXILIARY NORTH GALLERY
43	FILTER BUILDING
53	DENITRIFICATION FILTER COMPLEX
54	DENITRIFICATION FILTER MUDWELL
55	METHANOL STORAGE AND FEED FACILITY
56	METHANOL FILL STATION

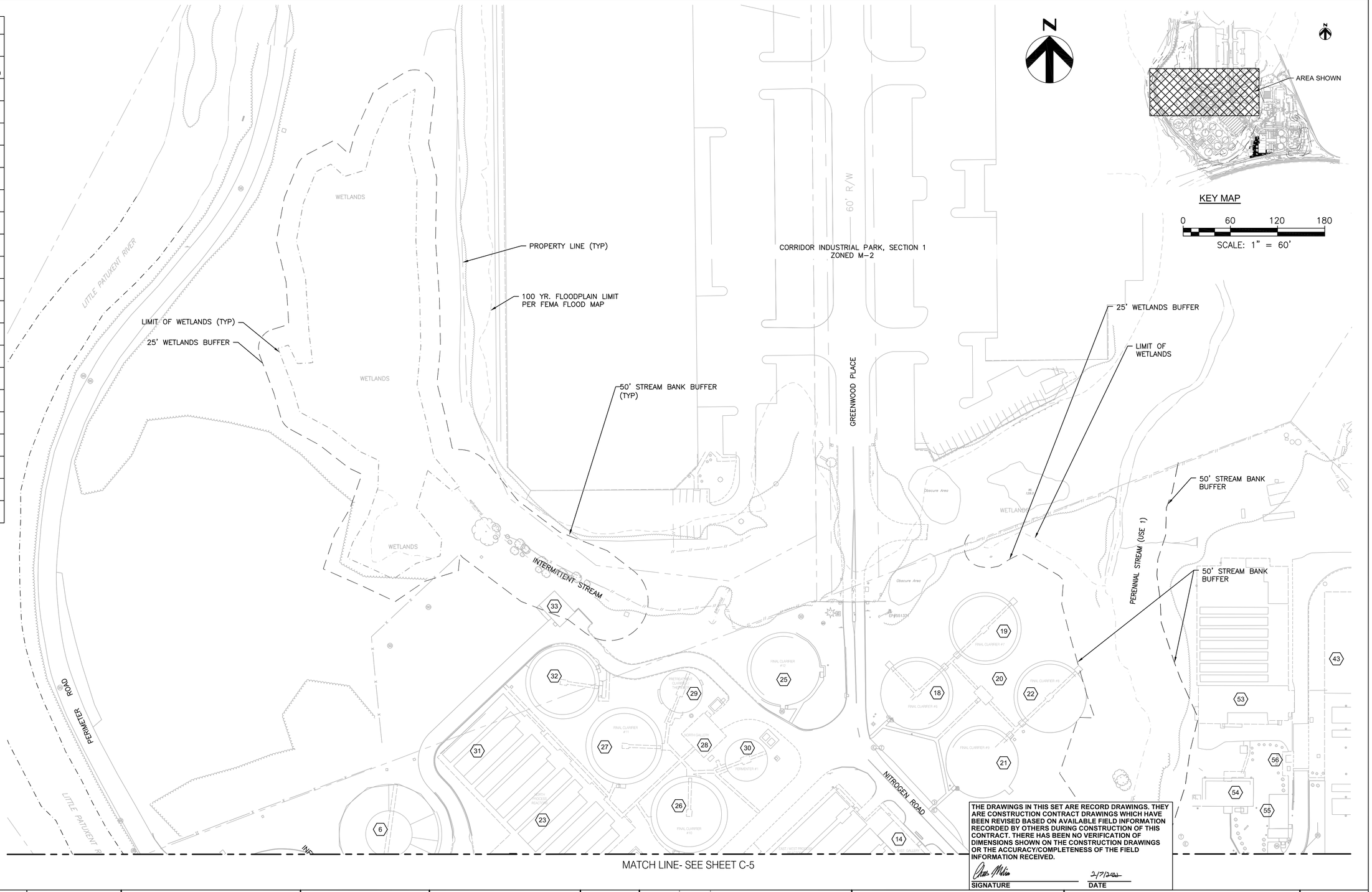

THE DRAWINGS IN THIS SET ARE RECORD DRAWINGS. THEY ARE CONSTRUCTION CONTRACT DRAWINGS WHICH HAVE BEEN REVISED BASED ON AVAILABLE FIELD INFORMATION RECORDED BY OTHERS DURING CONSTRUCTION OF THIS CONTRACT. THERE HAS BEEN NO VERIFICATION OF DIMENSIONS SHOWN ON THE CONSTRUCTION DRAWINGS OR THE ACCURACY/COMPLETENESS OF THE FIELD INFORMATION RECEIVED.

SIGNATURE _____ DATE 2/7/2022

AS-BUILT REPLACEMENT SHEET

PROFESSIONAL CERTIFICATION
THIS DRAWING WAS ORIGINALLY APPROVED FOR CONSTRUCTION AND SEALED BY ROBERT BAYSDEN, A REGISTERED PROFESSIONAL ENGINEER IN THE STATE OF MARYLAND, NO. 49972.

NOTICE TO CONTRACTORS
- PROJECT ELEVATIONS ARE BASED ON NAVD88 AND HOWARD COUNTY'S BENCHMARK SYSTEM
- PREVIOUS PROJECTS USED OTHER DATUMS
- APPLY THE FOLLOWING CONVERSIONS WHEN USING PREVIOUS CONTRACT DRAWINGS:
  - ADDITION NO. 6: SUBTRACT 0.80 FT
  - PRIOR ADDITIONS: SUBTRACT 1.04 FT

DEPARTMENT OF PUBLIC WORKS
HOWARD COUNTY, MARYLAND

CHIEF, BUREAU OF UTILITIES DATE

DES: M.L.
DRN: S.W.
CHK: R.B.
DATE: 01/2018

DATE	REV	DESCRIPTION
03/2021		RECORD DRAWINGS

CIVIL

PLANT SITE PLAN - NORTH

LITTLE PATUXENT WATER RECLAMATION PLANT
8TH ADDITION
BIOSOLIDS PROCESSING FACILITIES - PHASE 2

CAPITAL PROJECT S-6295
CONTRACT NO. 24-4936

ELECTION DISTRICT NO. 6
HOWARD COUNTY, MARYLAND

SCALE AS SHOWN

SHEET 53 OF 311

C-4

STRUCTURE IDENTIFICATION

KEY NOTES	FACILITY DESCRIPTION
1	SEPTAGE FACILITY
2	HEADWORKS BUILDING
3	HEADWORKS SUBSTATION
4	AUXILIARY PUMP STATION
5	FLOW EQUALIZATION BASIN 1 (FEB-1)
7	FLOW EQUALIZATION BASIN 3 (FEB-3)
8	GRIT BUILDING
9	PRIMARY CLARIFIER (PC-1)
10	PRIMARY CLARIFIER (PC-2)
11	NORTH PUMP STATION
12	NORTH SUBSTATION
13	EAST / WEST PROCESS REACTORS
15	WEST PIPE GALLERY FLOW SPLITTER BOX
16	FINAL CLARIFIER (FC-2)
17	FINAL CLARIFIER (FC-3)
24	NORTH BLOWER BUILDING
36	PRIMARY CLARIFIER (PC-3)
37	PRIMARY CLARIFIER (PC-4)
38	PRIMARY CLARIFIER (PC-5)
39	SOUTH PUMP STATION
40	FINAL CLARIFIER (FC-4)
41	FINAL CLARIFIER (FC-5)
44	CHLORINE BUILDING
45	POST AERATION
46	EMERGENCY CHLORINE CONTACT BASINS
48	BIOSOLIDS FACILITIES
51	EAST/WEST BLOWER FACILITY
52	EAST SUBSTATION
57	FIRE PROTECTION BUILDING
58	EFFLUENT METER VAULT
59	DIGESTERS
60	DIGESTER BUILDING
61	BIO-FILTER
62	FLARE
63	PHOSPHOROUS PRECIPITATION BUILDING
64	DRYER BUILDING
65	SILO
66	ODOR CONTROL

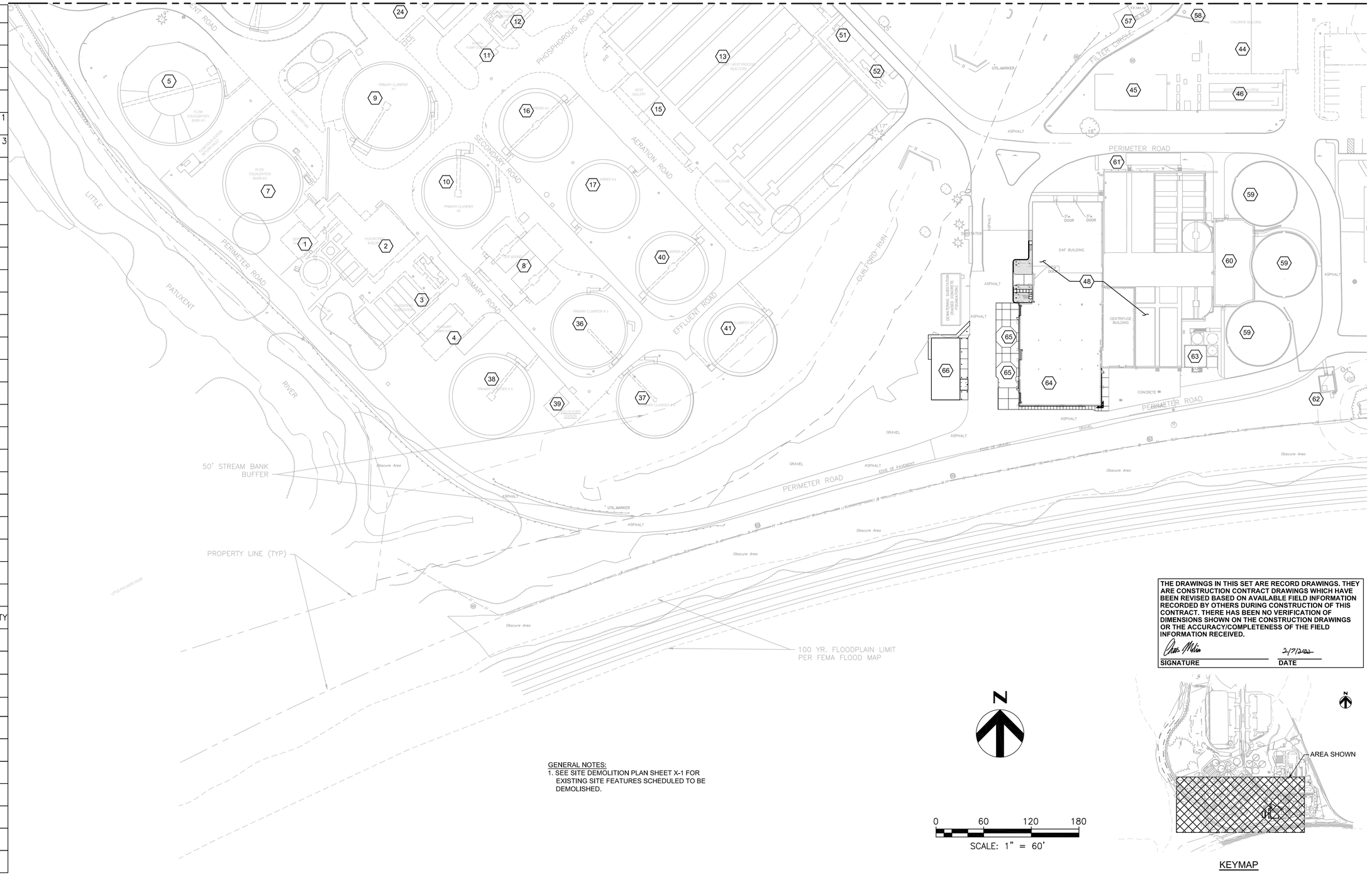

THE DRAWINGS IN THIS SET ARE RECORD DRAWINGS. THEY ARE CONSTRUCTION CONTRACT DRAWINGS WHICH HAVE BEEN REVISED BASED ON AVAILABLE FIELD INFORMATION RECORDED BY OTHERS DURING CONSTRUCTION OF THIS CONTRACT. THERE HAS BEEN NO VERIFICATION OF DIMENSIONS SHOWN ON THE CONSTRUCTION DRAWINGS OR THE ACCURACY/COMPLETENESS OF THE FIELD INFORMATION RECEIVED.

SIGNATURE _____ DATE 2/7/2023

GENERAL NOTES:
1. SEE SITE DEMOLITION PLAN SHEET X-1 FOR EXISTING SITE FEATURES SCHEDULED TO BE DEMOLISHED.

N

0 60 120 180

SCALE: 1" = 60'

KEYMAP

AS-BUILT REPLACEMENT SHEET

PROFESSIONAL CERTIFICATION
THIS DRAWING WAS ORIGINALLY APPROVED FOR CONSTRUCTION AND SEALED BY ROBERT BAYSDEN, A REGISTERED PROFESSIONAL ENGINEER IN THE STATE OF MARYLAND, NO. 49972.

NOTICE TO CONTRACTORS
- PROJECT ELEVATIONS ARE BASED ON NAVD88 AND HOWARD COUNTY'S BENCHMARK SYSTEM
- PREVIOUS PROJECTS USED OTHER DATUMS
- APPLY THE FOLLOWING CONVERSIONS WHEN USING PREVIOUS CONTRACT DRAWINGS:
  - ADDITION NO. 6: SUBTRACT 0.80 FT
  - PRIOR ADDITIONS: SUBTRACT 1.04 FT

DEPARTMENT OF PUBLIC WORKS
HOWARD COUNTY, MARYLAND

CHIEF, BUREAU OF UTILITIES DATE

DES: M.L.
DRN: S.W.
CHK: R.B.
DATE: 01/2018

DATE	REV	DESCRIPTION
03/2021		RECORD DRAWINGS

CIVIL

PLANT SITE PLAN - SOUTH

LITTLE PATUXENT WATER RECLAMATION PLANT
8TH ADDITION
BIOSOLIDS PROCESSING FACILITIES - PHASE 2

CAPITAL PROJECT S-6295
CONTRACT NO. 24-4936

ELECTION DISTRICT NO. 6
HOWARD COUNTY, MARYLAND

SCALE AS SHOWN

SHEET 54 OF 311

C-5

GENERAL NOTES:

1. SEE SHEET C-1 FOR LEGEND AND GENERAL NOTES.
2. SEE SHEETS C-21 THROUGH C-24 FOR EROSION CONTROL NOTES, DETAILS, AND SEEDING REQUIREMENTS.
3. SEE SHEETS C-13 THROUGH C-14 FOR EROSION & SEDIMENT CONTROL PLANS.
4. DESIGNATED PHASE 1 EROSION CONTROL MEASURES SHALL REMAIN IN PLACE AND MAINTAINED DURING PHASE 2 WORK. SEE C-12 THRU C-14 FOR ADDITIONAL INFORMATION.

THE DRAWINGS IN THIS SET ARE RECORD DRAWINGS. THEY ARE CONSTRUCTION CONTRACT DRAWINGS WHICH HAVE BEEN REVISED BASED ON AVAILABLE FIELD INFORMATION RECORDED BY OTHERS DURING CONSTRUCTION OF THIS CONTRACT. THERE HAS BEEN NO VERIFICATION OF DIMENSIONS SHOWN ON THE CONSTRUCTION DRAWINGS OR THE ACCURACY/COMPLETENESS OF THE FIELD INFORMATION RECEIVED.

SIGNATURE — DATE 2/7/2022

MATCH LINE- SEE SHEET C-7

AS-BUILT REPLACEMENT SHEET

PROFESSIONAL CERTIFICATION
THIS DRAWING WAS ORIGINALLY APPROVED FOR CONSTRUCTION AND SEALED BY ROBERT BAYSDEN, A REGISTERED PROFESSIONAL ENGINEER IN THE STATE OF MARYLAND, NO. 49972.

NOTICE TO CONTRACTORS
- PROJECT ELEVATIONS ARE BASED ON NAVD88 AND HOWARD COUNTY'S BENCHMARK SYSTEM
- PREVIOUS PROJECTS USED OTHER DATUMS
- APPLY THE FOLLOWING CONVERSIONS WHEN USING PREVIOUS CONTRACT DRAWINGS:
  - ADDITION NO. 6: SUBTRACT 0.80 FT
  - PRIOR ADDITIONS: SUBTRACT 1.04 FT

DEPARTMENT OF PUBLIC WORKS
HOWARD COUNTY, MARYLAND

CHIEF, BUREAU OF UTILITIES — DATE

DES: M.L.
DRN: S.W.
CHK: R.B.
DATE: 01/2018

DATE	REV	DESCRIPTION
03/2021		RECORD DRAWINGS

CIVIL

EROSION AND SEDIMENT CONTROL CONCEPT PLAN

LITTLE PATUXENT WATER RECLAMATION PLANT
8TH ADDITION
BIOSOLIDS PROCESSING FACILITIES - PHASE 2

CAPITAL PROJECT S-6295
CONTRACT NO. 24-4936

ELECTION DISTRICT NO. 6
HOWARD COUNTY, MARYLAND

SCALE AS SHOWN

SHEET 55 OF 311

C-6

MATCH LINE- SEE SHEET C-6

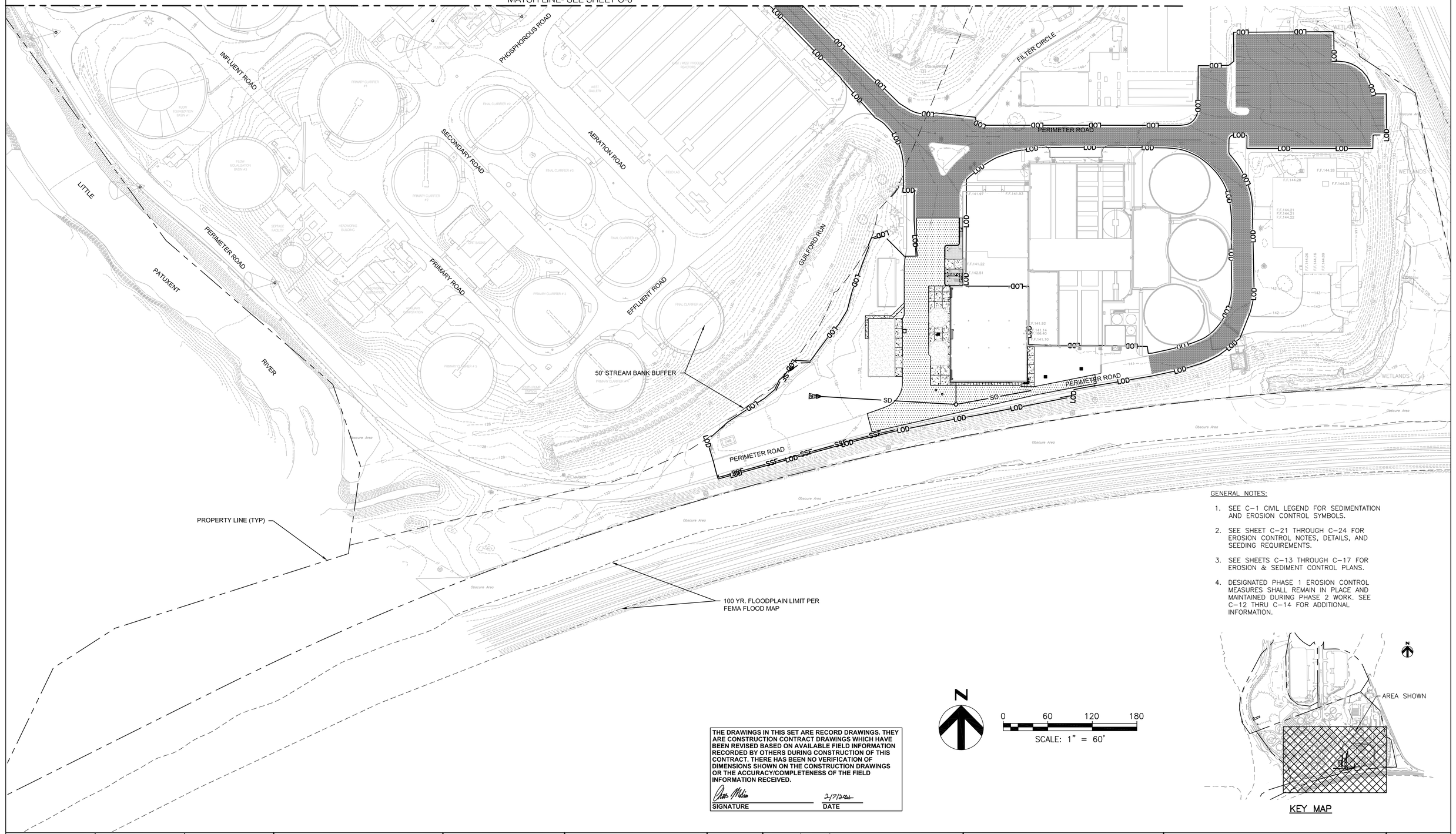

GENERAL NOTES:

1. SEE C-1 CIVIL LEGEND FOR SEDIMENTATION AND EROSION CONTROL SYMBOLS.
2. SEE SHEET C-21 THROUGH C-24 FOR EROSION CONTROL NOTES, DETAILS, AND SEEDING REQUIREMENTS.
3. SEE SHEETS C-13 THROUGH C-17 FOR EROSION & SEDIMENT CONTROL PLANS.
4. DESIGNATED PHASE 1 EROSION CONTROL MEASURES SHALL REMAIN IN PLACE AND MAINTAINED DURING PHASE 2 WORK. SEE C-12 THRU C-14 FOR ADDITIONAL INFORMATION.

KEY MAP

N

0 60 120 180

SCALE: 1" = 60'

THE DRAWINGS IN THIS SET ARE RECORD DRAWINGS. THEY ARE CONSTRUCTION CONTRACT DRAWINGS WHICH HAVE BEEN REVISED BASED ON AVAILABLE FIELD INFORMATION RECORDED BY OTHERS DURING CONSTRUCTION OF THIS CONTRACT. THERE HAS BEEN NO VERIFICATION OF DIMENSIONS SHOWN ON THE CONSTRUCTION DRAWINGS OR THE ACCURACY/COMPLETENESS OF THE FIELD INFORMATION RECEIVED.

SIGNATURE — DATE 2/7/2023

AS-BUILT REPLACEMENT SHEET

PROFESSIONAL CERTIFICATION
THIS DRAWING WAS ORIGINALLY APPROVED FOR CONSTRUCTION AND SEALED BY ROBERT BAYSDEN, A REGISTERED PROFESSIONAL ENGINEER IN THE STATE OF MARYLAND, NO. 49972.

NOTICE TO CONTRACTORS
- PROJECT ELEVATIONS ARE BASED ON NAVD88 AND HOWARD COUNTY'S BENCHMARK SYSTEM
- PREVIOUS PROJECTS USED OTHER DATUMS
- APPLY THE FOLLOWING CONVERSIONS WHEN USING PREVIOUS CONTRACT DRAWINGS:
  - ADDITION NO. 6: SUBTRACT 0.80 FT
  - PRIOR ADDITIONS: SUBTRACT 1.04 FT

DEPARTMENT OF PUBLIC WORKS
HOWARD COUNTY, MARYLAND

CHIEF, BUREAU OF UTILITIES — DATE

DES: M.L.
DRN: S.W.
CHK: R.B.
DATE: 01/2018

DATE	REV	DESCRIPTION
03/2021		RECORD DRAWINGS

CIVIL

EROSION AND SEDIMENT CONTROL CONCEPT PLAN

LITTLE PATUXENT WATER RECLAMATION PLANT
8TH ADDITION
BIOSOLIDS PROCESSING FACILITIES - PHASE 2

CAPITAL PROJECT S-6295
CONTRACT NO. 24-4936

ELECTION DISTRICT NO. 6
HOWARD COUNTY, MARYLAND

SCALE AS SHOWN

SHEET 56 OF 311

C-7

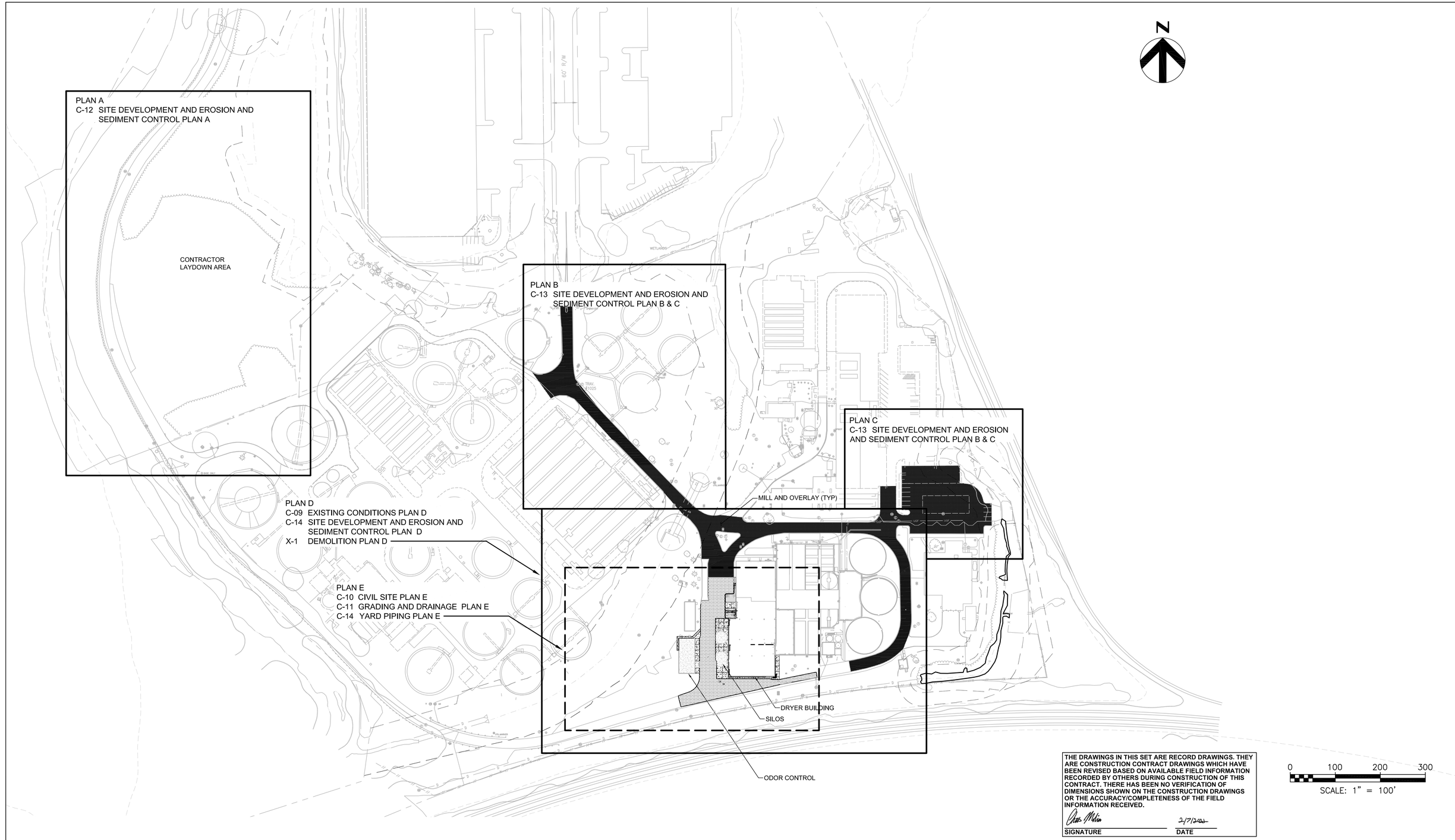

THE DRAWINGS IN THIS SET ARE RECORD DRAWINGS. THEY ARE CONSTRUCTION CONTRACT DRAWINGS WHICH HAVE BEEN REVISED BASED ON AVAILABLE FIELD INFORMATION RECORDED BY OTHERS DURING CONSTRUCTION OF THIS CONTRACT. THERE HAS BEEN NO VERIFICATION OF DIMENSIONS SHOWN ON THE CONSTRUCTION DRAWINGS OR THE ACCURACY/COMPLETENESS OF THE FIELD INFORMATION RECEIVED.

SIGNATURE — DATE 2/7/2020

AS-BUILT REPLACEMENT SHEET

PROFESSIONAL CERTIFICATION
THIS DRAWING WAS ORIGINALLY APPROVED FOR CONSTRUCTION AND SEALED BY ROBERT BAYSDEN, A REGISTERED PROFESSIONAL ENGINEER IN THE STATE OF MARYLAND, NO. 49972.

NOTICE TO CONTRACTORS
- PROJECT ELEVATIONS ARE BASED ON NAVD88 AND HOWARD COUNTY'S BENCHMARK SYSTEM
- PREVIOUS PROJECTS USED OTHER DATUMS
- APPLY THE FOLLOWING CONVERSIONS WHEN USING PREVIOUS CONTRACT DRAWINGS:
  - ADDITION NO. 6: SUBTRACT 0.80 FT
  - PRIOR ADDITIONS: SUBTRACT 1.04 FT

DEPARTMENT OF PUBLIC WORKS
HOWARD COUNTY, MARYLAND

CHIEF, BUREAU OF UTILITIES — DATE

DES: M.L.
DRN: S.W.
CHK: R.B.
DATE: 01/2018

DATE	REV	DESCRIPTION
03/2021		RECORD DRAWINGS

CIVIL

OVERALL SITE PLAN AND KEY MAP

LITTLE PATUXENT WATER RECLAMATION PLANT
8TH ADDITION
BIOSOLIDS PROCESSING FACILITIES - PHASE 2

CAPITAL PROJECT S-6295
CONTRACT NO. 24-4936

ELECTION DISTRICT NO. 6
HOWARD COUNTY, MARYLAND

SCALE AS SHOWN

SHEET 57 OF 311

C-8

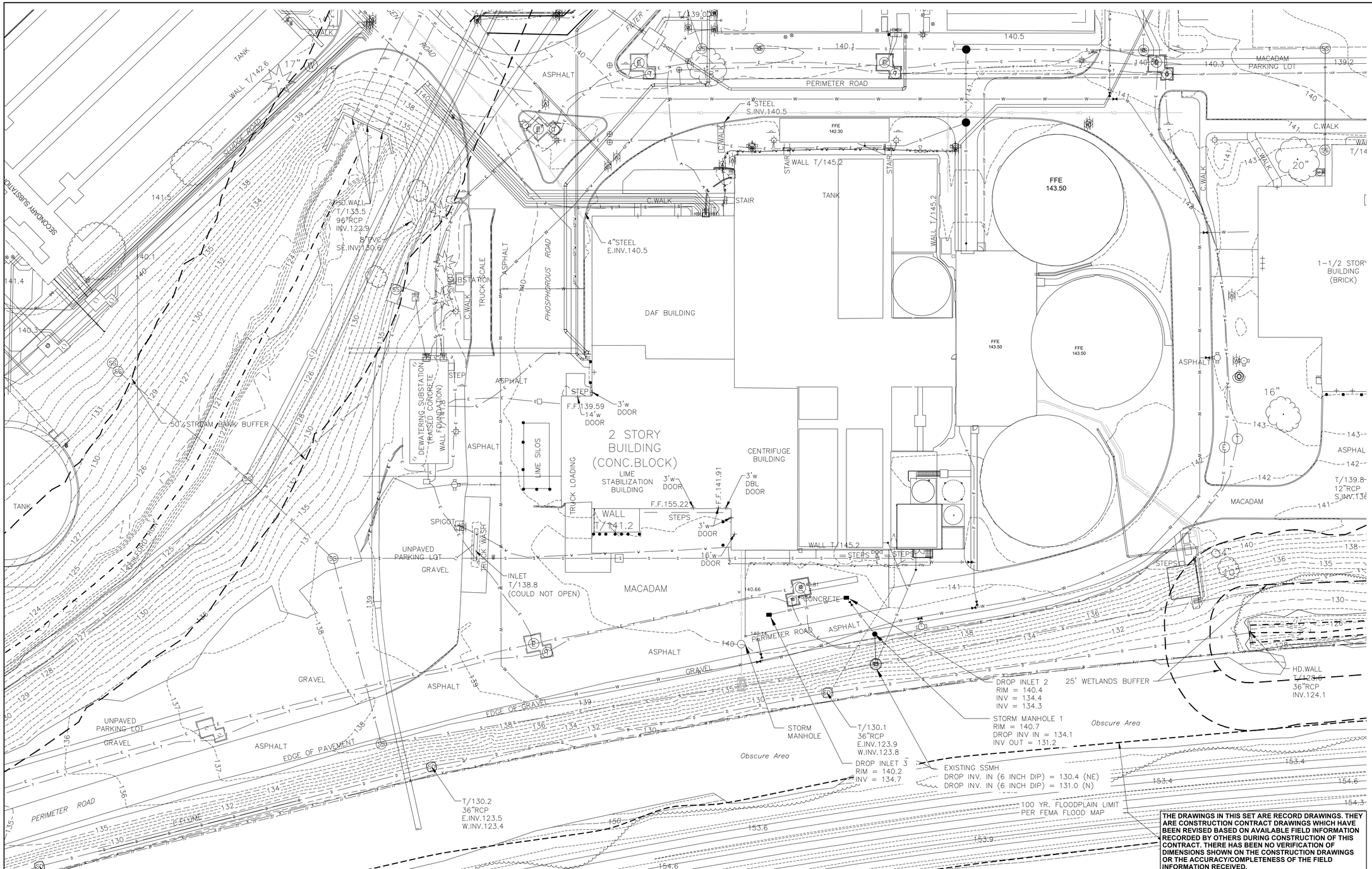

GENERAL NOTES:

1. SEE SHEET C-1 FOR GENERAL NOTES AND LEGEND.
2. PHASE 1 NEW WORK IS SHOWN AS EXISTING FOR PHASE 2 PLANS.

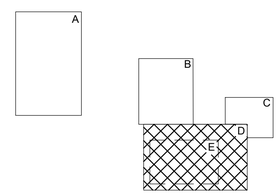

KEY MAP

0 30 60 90

SCALE: 1" = 30'

THE DRAWINGS IN THIS SET ARE RECORD DRAWINGS. THEY ARE CONSTRUCTION CONTRACT DRAWINGS WHICH HAVE BEEN REVISED BASED ON AVAILABLE FIELD INFORMATION RECORDED BY OTHERS DURING CONSTRUCTION OF THIS CONTRACT. THERE HAS BEEN NO VERIFICATION OF DIMENSIONS SHOWN ON THE CONSTRUCTION DRAWINGS OR THE ACCURACY/COMPLETENESS OF THE FIELD INFORMATION RECEIVED.

SIGNATURE _____ DATE 2/7/2020

AS-BUILT REPLACEMENT SHEET

PROFESSIONAL CERTIFICATION
THIS DRAWING WAS ORIGINALLY APPROVED FOR CONSTRUCTION AND SEALED BY ROBERT BAYSDEN, A REGISTERED PROFESSIONAL ENGINEER IN THE STATE OF MARYLAND, NO. 49972.

NOTICE TO CONTRACTORS
- PROJECT ELEVATIONS ARE BASED ON NAVD88 AND HOWARD COUNTY'S BENCHMARK SYSTEM
- PREVIOUS PROJECTS USED OTHER DATUMS
- APPLY THE FOLLOWING CONVERSIONS WHEN USING PREVIOUS CONTRACT DRAWINGS:
  - ADDITION NO. 6: SUBTRACT 0.80 FT
  - PRIOR ADDITIONS: SUBTRACT 1.04 FT

DEPARTMENT OF PUBLIC WORKS
HOWARD COUNTY, MARYLAND

CHIEF, BUREAU OF UTILITIES DATE

DES: M.L.
DRN: S.W.
CHK: R.B.
DATE: 01/2018

DATE	REV	DESCRIPTION
03/2021		RECORD DRAWINGS

CIVIL

EXISTING CONDITIONS PLAN D

LITTLE PATUXENT WATER RECLAMATION PLANT
8TH ADDITION
BIOSOLIDS PROCESSING FACILITIES - PHASE 2

CAPITAL PROJECT S-6295
CONTRACT NO. 24-4936

ELECTION DISTRICT NO. 6
HOWARD COUNTY, MARYLAND

SCALE AS SHOWN

SHEET 58 OF 311

C-9

POINT TABLE			
POINT NO.	NORTHING	EASTING	Description
1	530765.55	1365776.81	EDGE OF ASPHALT
2	530765.66	1365834.12	EDGE OF ASPHALT
3	530713.16	1365814.53	EDGE OF ASPHALT
4	530693.83	1365814.53	EDGE OF ASPHALT
5	530674.13	1365821.95	EDGE OF CONCRETE
6	530674.14	1365793.16	EDGE OF CONCRETE
7	530581.69	1365793.16	EDGE OF CONCRETE
8	530578.98	1365795.87	EDGE OF CONCRETE
9	530540.22	1365795.87	EDGE OF CONCRETE
10	530544.22	1365821.91	EDGE OF CONCRETE
11	530544.22	1365926.49	EDGE OF CONCRETE
12	530592.35	1365935.43	EDGE OF CONCRETE
13	530538.41	1365935.33	EDGE OF CONCRETE
14	530527.32	1365937.31	EDGE OF ASPHALT
15	530477.42	1365716.77	EDGE OF ASPHALT
16	530502.17	1365710.36	EDGE OF ASPHALT
17	530510.88	1365734.67	EDGE OF ASPHALT
18	530543.83	1365757.87	EDGE OF ASPHALT
19	530552.22	1365757.87	EDGE OF ASPHALT
20	530552.22	1365747.85	CORNER OF BIOLFILTE
21	530552.22	1365711.85	CORNER OF BIOFILTER
22	530630.22	1365711.85	CORNER OF BIOFILTER
23	530630.22	1365747.85	CORNER OF BIOFILTER
24	530630.22	1365757.87	EDGE OF CONCRETE
25	530635.22	1365760.12	EDGE OF ASPHALT
26	530706.48	1365760.80	EDGE OF ASPHALT
27	530714.21	1365778.15	EDGE OF ASPHALT

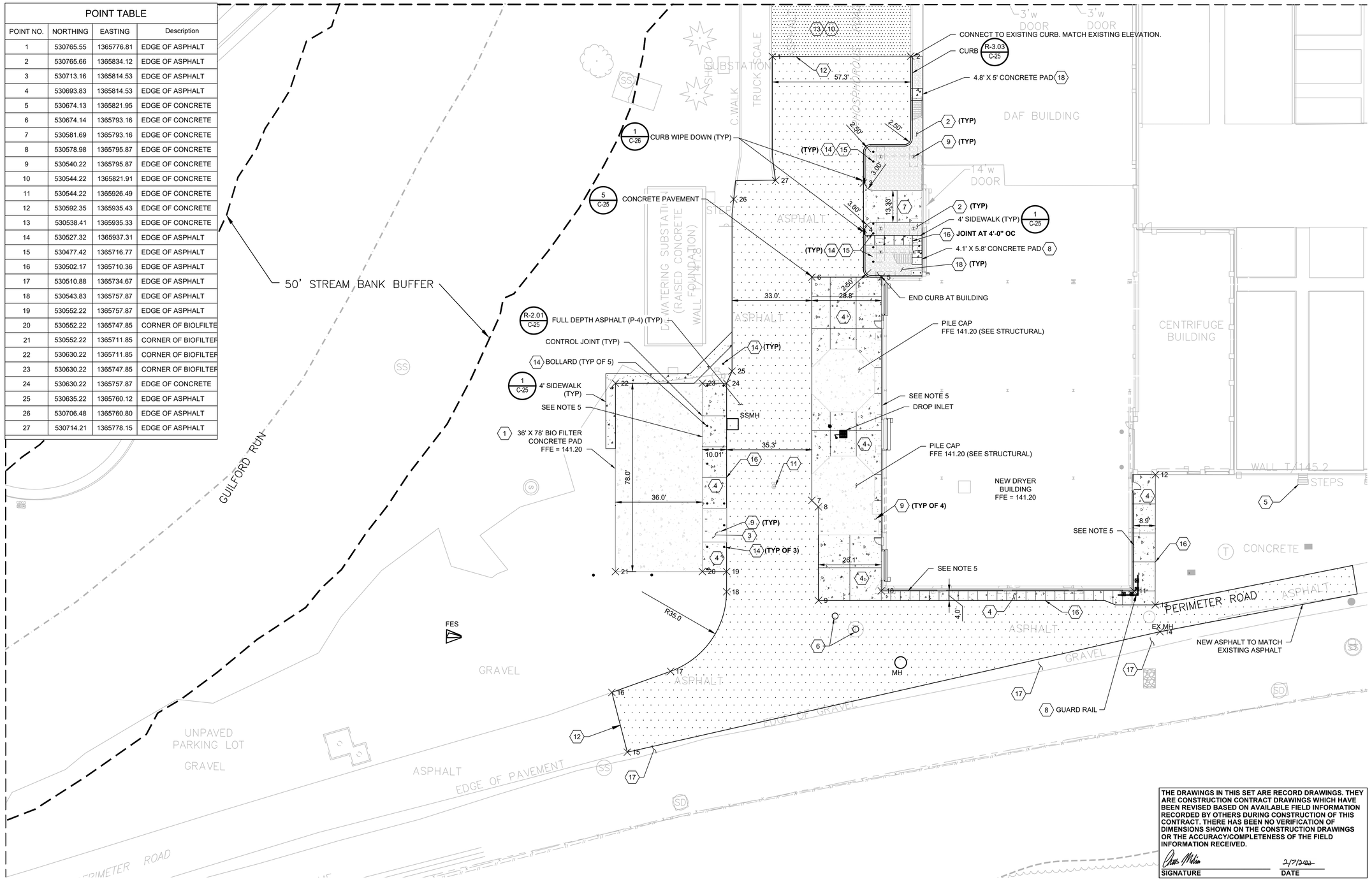

GENERAL NOTES:

1. SEE SHEET C-1 FOR GENERAL NOTES AND LEGEND.
2. PHASE 1 NEW WORK IS SHOWN AS EXISTING FOR PHASE 2 PLANS.
3. SEE ARCHITECTURAL PLANS (SERIES A500) FOR NEW BUILDING AND SILO INFORMATION.
4. SEE SHEETS C-21 - C-24 FOR EROSION CONTROL NOTES AND DETAILS.
5. INSTALL EXPANSION JOINT WHERE CONCRETE MEETS BUILDING FOUNDATION. SEE DETAIL 4/C-25.

KEY NOTES:

1. SEE 08 SERIES STRUCTURAL PLANS FOR PAD DESIGN.
2. INSTALL 6" LAYER OF 57 STONE OVER NON-WOVEN GEOTEXTILE FABRIC.
3. COLUMN FOUNDATION. SEE 08 SERIES.
4. CONCRETE PAVEMENT. SEE DETAIL 5/C-25.
5. REPLACE STEPS REMOVED IN PHASE 1.
6. ADJUST MANHOLES TO NEW PAVEMENT ELEVATION.
7. OVERHEAD PLATFORM WITH SUPPORT COLUMNS. SEE STRUCTURAL SERIES 08.
8. SEE STRUCTURAL SERIES 08 FOR GUARDRAIL DETAIL.
9. SUPPORT COLUMNS. SEE STRUCTURAL.
10. PERFORM MILL AND OVERLAY AFTER PHASE 1 AND PHASE 2 WORK ARE COMPLETE.
11. ADJUST CLEANOUT RIM TO NEW PAVEMENT ELEVATION.
12. PROVIDE SMOOTH TRANSITION BETWEEN NEW AND EXISTING PAVEMENT.
13. SEE C-13 AND C-14 FOR 2" MILL AND OVERLAY EXTENTS.
14. BOLLARD: SEE BOLLARD DETAIL 2/S-903.
15. SEE STRUCTURAL SERIES FOR FOUNDATION PLAN AND BOLLARD LOCATION.
16. EXPANSION JOINT SEE DETAIL 4/C-25.
17. RESTORE DAMAGED AREAS OF GRAVEL SHOULDER AS NEEDED.
18. CONCRETE PAD. SEE STRUCTURAL CONCRETE PAD DETAIL 6/S-903.

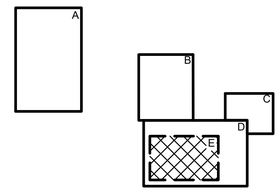

KEYMAP

0 20 40 60

SCALE: 1" = 20'

THE DRAWINGS IN THIS SET ARE RECORD DRAWINGS. THEY ARE CONSTRUCTION CONTRACT DRAWINGS WHICH HAVE BEEN REVISED BASED ON AVAILABLE FIELD INFORMATION RECORDED BY OTHERS DURING CONSTRUCTION OF THIS CONTRACT. THERE HAS BEEN NO VERIFICATION OF DIMENSIONS SHOWN ON THE CONSTRUCTION DRAWINGS OR THE ACCURACY/COMPLETENESS OF THE FIELD INFORMATION RECEIVED.

SIGNATURE 2/7/2021 DATE

AS-BUILT REPLACEMENT SHEET

PROFESSIONAL CERTIFICATION
THIS DRAWING WAS ORIGINALLY APPROVED FOR CONSTRUCTION AND SEALED BY ROBERT BAYSDEN, A REGISTERED PROFESSIONAL ENGINEER IN THE STATE OF MARYLAND, NO. 49972.

NOTICE TO CONTRACTORS
- PROJECT ELEVATIONS ARE BASED ON NAVD88 AND HOWARD COUNTY'S BENCHMARK SYSTEM
- PREVIOUS PROJECTS USED OTHER DATUMS
- APPLY THE FOLLOWING CONVERSIONS WHEN USING PREVIOUS CONTRACT DRAWINGS:
  - ADDITION NO. 6: SUBTRACT 0.80 FT
  - PRIOR ADDITIONS: SUBTRACT 1.04 FT

DEPARTMENT OF PUBLIC WORKS
HOWARD COUNTY, MARYLAND

CHIEF, BUREAU OF UTILITIES DATE

DES: xr
DRN: S.W.
CHK: R.B.
DATE: 01/2018

DATE	REV	DESCRIPTION
03/2021		RECORD DRAWINGS

CIVIL

CIVIL SITE PLAN E

LITTLE PATUXENT WATER RECLAMATION PLANT
8TH ADDITION
BIOSOLIDS PROCESSING FACILITIES - PHASE 2

CAPITAL PROJECT S-6295
CONTRACT NO. 24-4936

ELECTION DISTRICT NO. 6
HOWARD COUNTY, MARYLAND

SCALE AS SHOWN

SHEET 59 OF 311

C-10

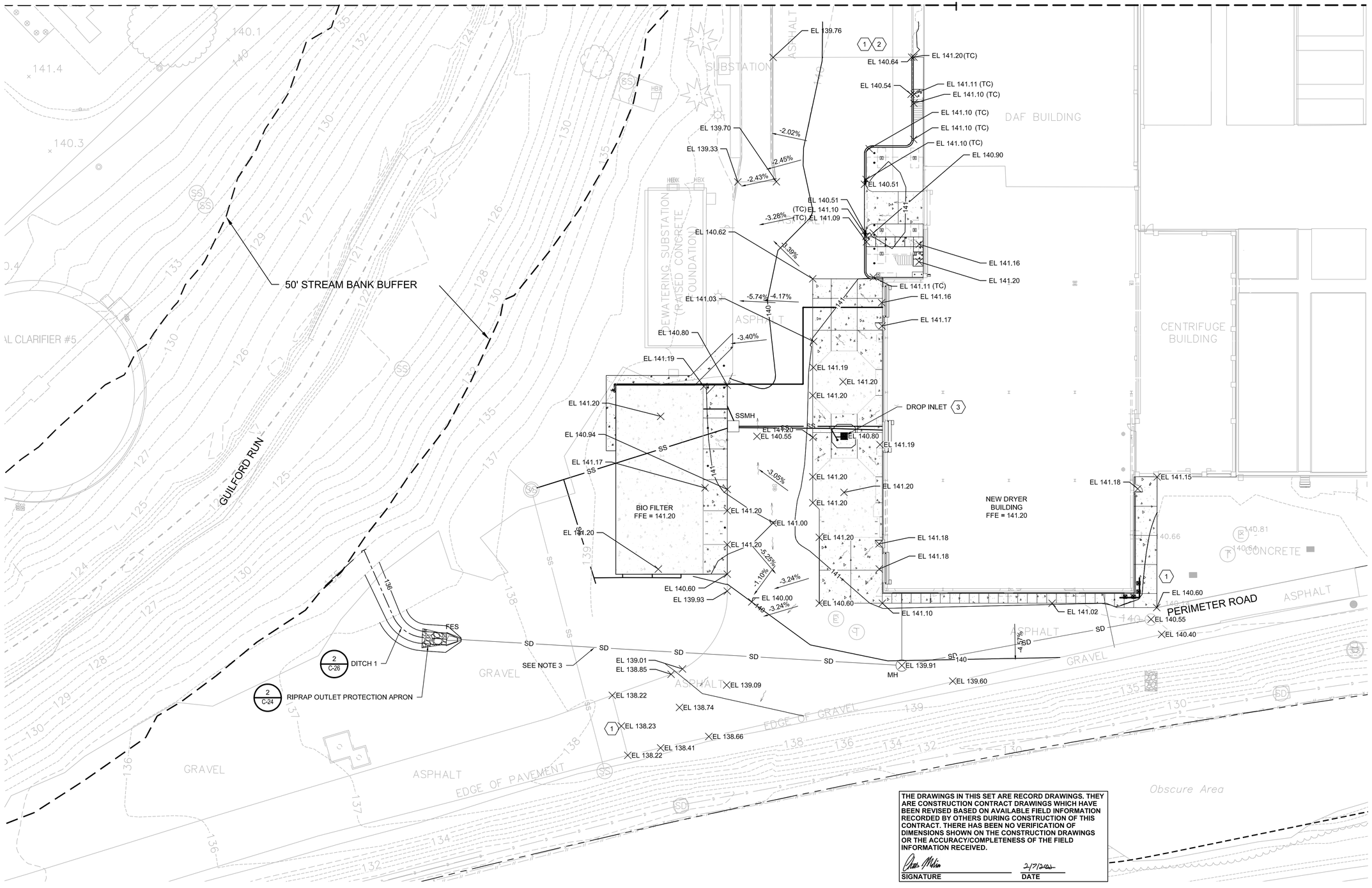

N

GENERAL NOTES:

1. SEE SHEETS C-21 - C-24 FOR EROSION AND SEDIMENT CONTROL NOTES AND DETAILS.
2. SEE SHEET C-1 FOR GENERAL NOTES AND LEGEND.
3. SEE C-15 AND C-16 FOR STORM SYSTEM LAYOUT AND PROFILE.

KEY NOTES:

(1) MATCH EXISTING PAVEMENT ELEVATIONS AND PROVIDE SMOOTH TRANSITION BETWEEN NEW AND EXISTING PAVEMENT.

(2) SEE C-13 AND C-14 FOR MILL AND OVERLAY INFORMATION.

(3) SLOPE AREA BETWEEN SILOS TO DROP INLET.

KEYMAP

SCALE: 1" = 20'

THE DRAWINGS IN THIS SET ARE RECORD DRAWINGS. THEY ARE CONSTRUCTION CONTRACT DRAWINGS WHICH HAVE BEEN REVISED BASED ON AVAILABLE FIELD INFORMATION RECORDED BY OTHERS DURING CONSTRUCTION OF THIS CONTRACT. THERE HAS BEEN NO VERIFICATION OF DIMENSIONS SHOWN ON THE CONSTRUCTION DRAWINGS OR THE ACCURACY/COMPLETENESS OF THE FIELD INFORMATION RECEIVED.

SIGNATURE 2/7/2020 DATE

AS-BUILT REPLACEMENT SHEET

PROFESSIONAL CERTIFICATION
THIS DRAWING WAS ORIGINALLY APPROVED FOR CONSTRUCTION AND SEALED BY ROBERT BAYSDEN, A REGISTERED PROFESSIONAL ENGINEER IN THE STATE OF MARYLAND, NO. 49972.

NOTICE TO CONTRACTORS
- PROJECT ELEVATIONS ARE BASED ON NAVD88 AND HOWARD COUNTY'S BENCHMARK SYSTEM
- PREVIOUS PROJECTS USED OTHER DATUMS
- APPLY THE FOLLOWING CONVERSIONS WHEN USING PREVIOUS CONTRACT DRAWINGS:
  - ADDITION NO. 6: SUBTRACT 0.80 FT
  - PRIOR ADDITIONS: SUBTRACT 1.04 FT

DEPARTMENT OF PUBLIC WORKS
HOWARD COUNTY, MARYLAND

CHIEF, BUREAU OF UTILITIES DATE

DES: M.L.
DRN: S.W.
CHK: R.B.
DATE: 01/2018

DATE	REV	DESCRIPTION
03/2021		RECORD DRAWINGS

CIVIL

GRADING AND DRAINAGE PLAN E

LITTLE PATUXENT WATER RECLAMATION PLANT
8TH ADDITION
BIOSOLIDS PROCESSING FACILITIES - PHASE 2

CAPITAL PROJECT S-6295
CONTRACT NO. 24-4936

ELECTION DISTRICT NO. 6
HOWARD COUNTY, MARYLAND

SCALE AS SHOWN

SHEET 60 OF 311

C-11

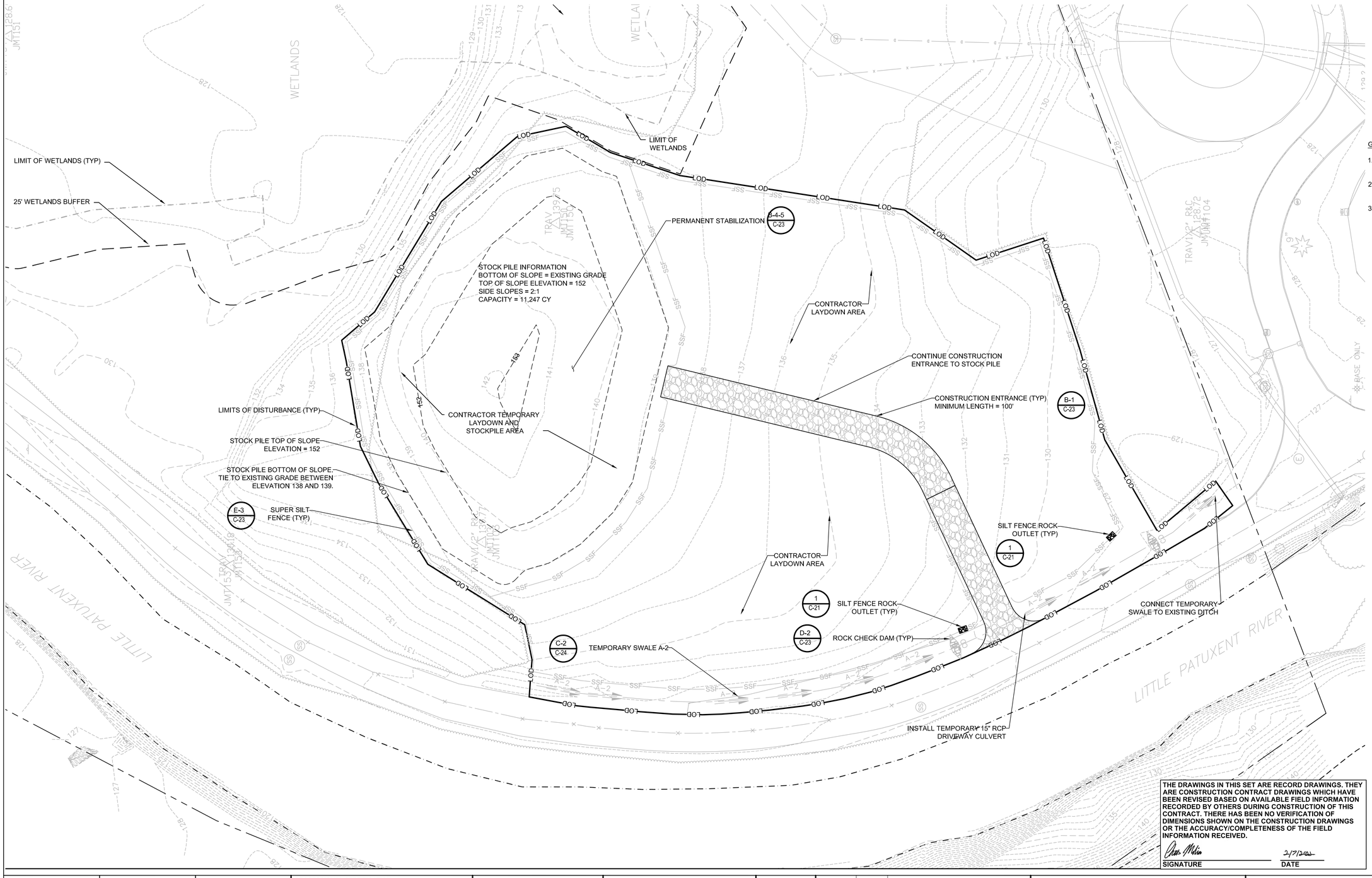

GENERAL NOTES:

1. SEE SHEETS C-21 - C-24 FOR EROSION CONTROL NOTES AND DETAILS.
2. SEE SHEET C-1 FOR GENERAL NOTES AND LEGEND.
3. EROSION CONTROL MEASURES ON THIS SHEET WERE INSTALLED DURING PHASE 1. MAINTAIN ALL PHASE 1 EROSION CONTROL MEASURES IN THIS AREA DURING PHASE 2.

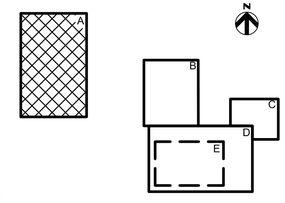

KEYMAP

0 30 60 90

SCALE: 1" = 30'

THE DRAWINGS IN THIS SET ARE RECORD DRAWINGS. THEY ARE CONSTRUCTION CONTRACT DRAWINGS WHICH HAVE BEEN REVISED BASED ON AVAILABLE FIELD INFORMATION RECORDED BY OTHERS DURING CONSTRUCTION OF THIS CONTRACT. THERE HAS BEEN NO VERIFICATION OF DIMENSIONS SHOWN ON THE CONSTRUCTION DRAWINGS OR THE ACCURACY/COMPLETENESS OF THE FIELD INFORMATION RECEIVED.

SIGNATURE 2/7/2021 DATE

AS-BUILT REPLACEMENT SHEET

PROFESSIONAL CERTIFICATION
THIS DRAWING WAS ORIGINALLY APPROVED FOR CONSTRUCTION AND SEALED BY ROBERT BAYSDEN, A REGISTERED PROFESSIONAL ENGINEER IN THE STATE OF MARYLAND, NO. 49972.

NOTICE TO CONTRACTORS
- PROJECT ELEVATIONS ARE BASED ON NAVD88 AND HOWARD COUNTY'S BENCHMARK SYSTEM
- PREVIOUS PROJECTS USED OTHER DATUMS
- APPLY THE FOLLOWING CONVERSIONS WHEN USING PREVIOUS CONTRACT DRAWINGS:
  - ADDITION NO. 6: SUBTRACT 0.80 FT
  - PRIOR ADDITIONS: SUBTRACT 1.04 FT

DEPARTMENT OF PUBLIC WORKS
HOWARD COUNTY, MARYLAND

CHIEF, BUREAU OF UTILITIES DATE

DES: M.L.
DRN: S.W.
CHK: R.B.
DATE: 01/2018

DATE	REV	DESCRIPTION
03/2021		RECORD DRAWINGS

CIVIL

SITE DEVELOPMENT AND EROSION AND SEDIMENT CONTROL PLAN A

LITTLE PATUXENT WATER RECLAMATION PLANT
8TH ADDITION
BIOSOLIDS PROCESSING FACILITIES - PHASE 2

CAPITAL PROJECT S-6295
CONTRACT NO. 24-4936

ELECTION DISTRICT NO. 6
HOWARD COUNTY, MARYLAND

SCALE AS SHOWN

SHEET 61 OF 311

C-12

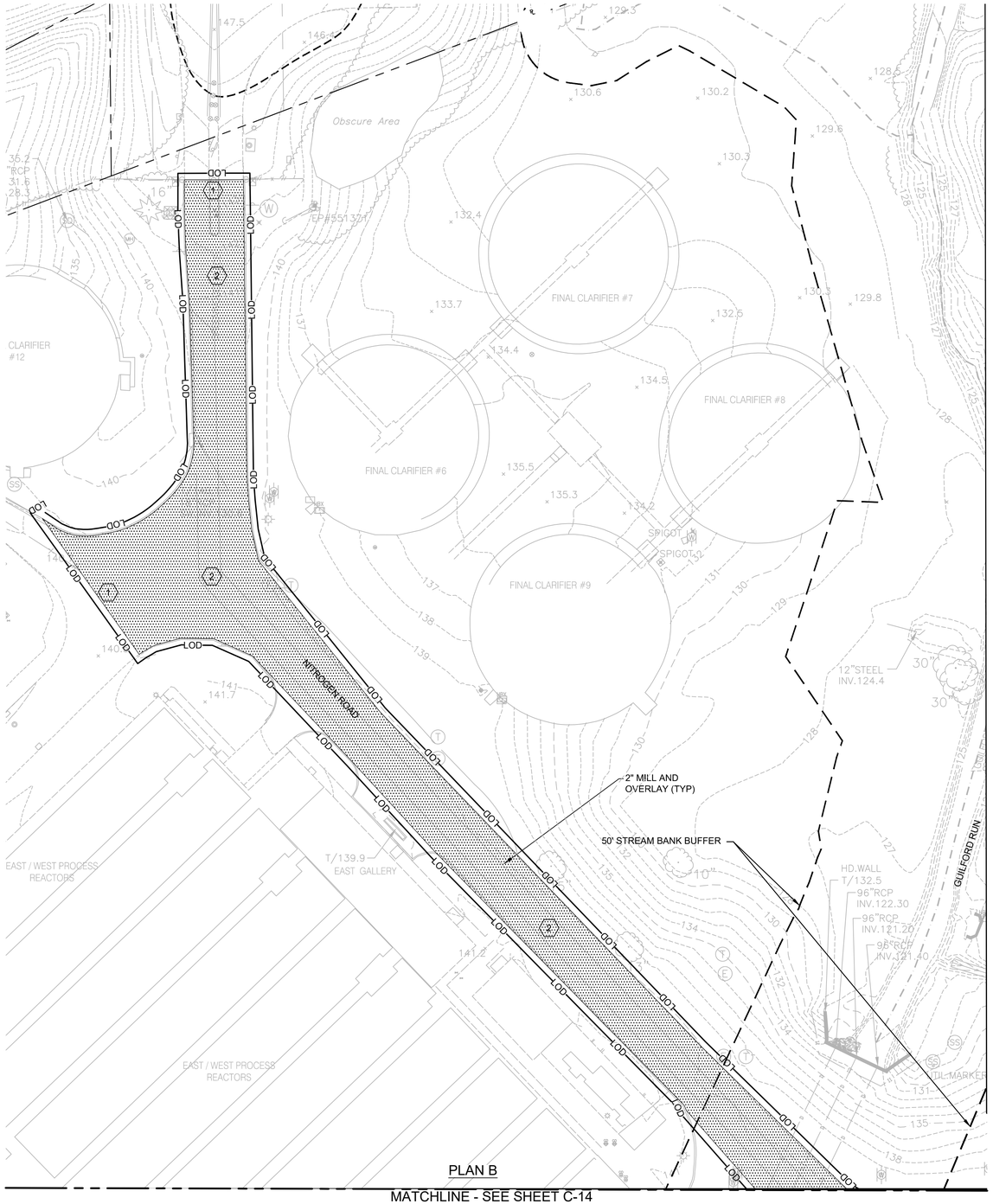

PLAN B

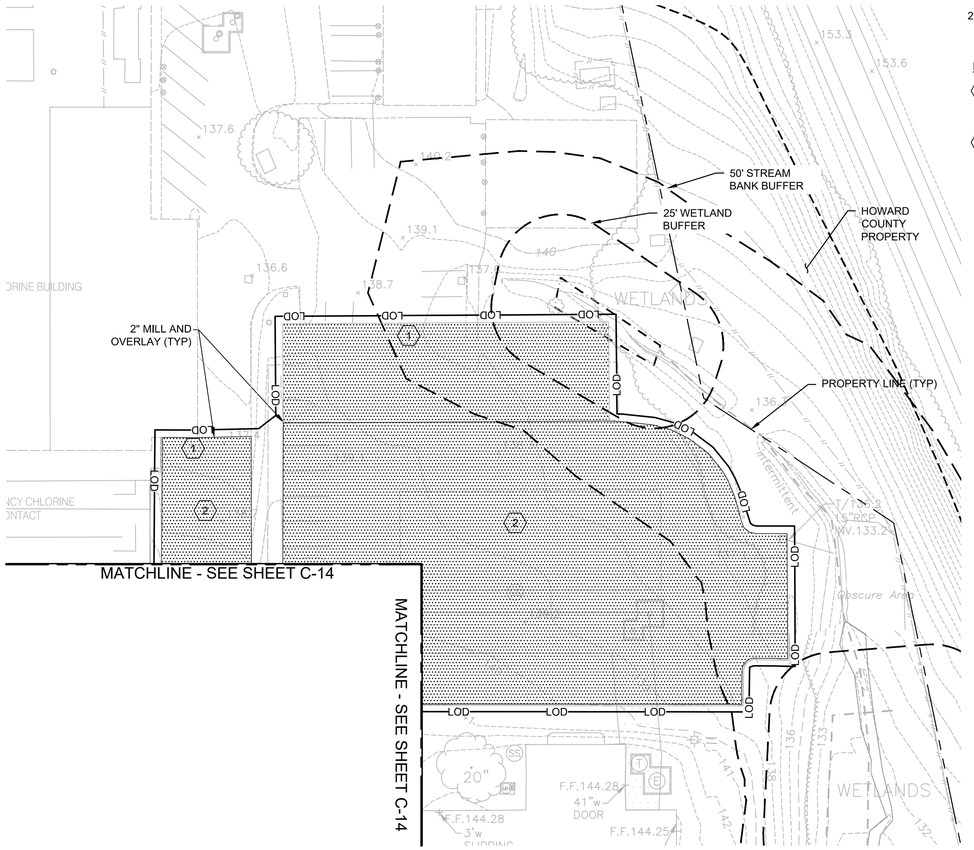

PLAN C

GENERAL NOTES:

1. SEE SHEETS C-21 - C-24 FOR EROSION AND SEDIMENT CONTROL NOTES AND DETAILS.
2. SEE SHEET C-1 FOR GENERAL NOTES AND LEGEND.

KEY NOTES:

(1) MATCH EXISTING PAVEMENT ELEVATIONS AND PROVIDE SMOOTH TRANSITION BETWEEN NEW AND EXISTING PAVEMENT.

(2) 2" MILL AND OVERLAY

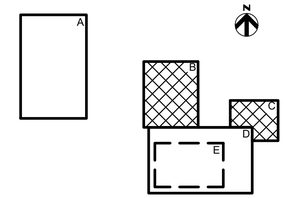

KEYMAP

0 30 60 90

SCALE: 1" = 30'

THE DRAWINGS IN THIS SET ARE RECORD DRAWINGS. THEY ARE CONSTRUCTION CONTRACT DRAWINGS WHICH HAVE BEEN REVISED BASED ON AVAILABLE FIELD INFORMATION RECORDED BY OTHERS DURING CONSTRUCTION OF THIS CONTRACT. THERE HAS BEEN NO VERIFICATION OF DIMENSIONS SHOWN ON THE CONSTRUCTION DRAWINGS OR THE ACCURACY/COMPLETENESS OF THE FIELD INFORMATION RECEIVED.

SIGNATURE 2/7/2020 DATE

AS-BUILT REPLACEMENT SHEET

PROFESSIONAL CERTIFICATION
THIS DRAWING WAS ORIGINALLY APPROVED FOR CONSTRUCTION AND SEALED BY ROBERT BAYSDEN, A REGISTERED PROFESSIONAL ENGINEER IN THE STATE OF MARYLAND, NO. 49972.

NOTICE TO CONTRACTORS
- PROJECT ELEVATIONS ARE BASED ON NAVD88 AND HOWARD COUNTY'S BENCHMARK SYSTEM
- PREVIOUS PROJECTS USED OTHER DATUMS
- APPLY THE FOLLOWING CONVERSIONS WHEN USING PREVIOUS CONTRACT DRAWINGS:
  - ADDITION NO. 6: SUBTRACT 0.80 FT
  - PRIOR ADDITIONS: SUBTRACT 1.04 FT

DEPARTMENT OF PUBLIC WORKS
HOWARD COUNTY, MARYLAND

CHIEF, BUREAU OF UTILITIES DATE

DES: M.L.
DRN: S.W.
CHK: R.B.
DATE: 01/2018

DATE	REV	DESCRIPTION
03/2021		RECORD DRAWINGS

CIVIL

SITE DEVELOPMENT AND EROSION AND SEDIMENT CONTROL PLAN B AND C

LITTLE PATUXENT WATER RECLAMATION PLANT
8TH ADDITION
BIOSOLIDS PROCESSING FACILITIES - PHASE 2

CAPITAL PROJECT S-6295
CONTRACT NO. 24-4936

ELECTION DISTRICT NO. 6
HOWARD COUNTY, MARYLAND

SCALE AS SHOWN

SHEET 62 OF 311

C-13

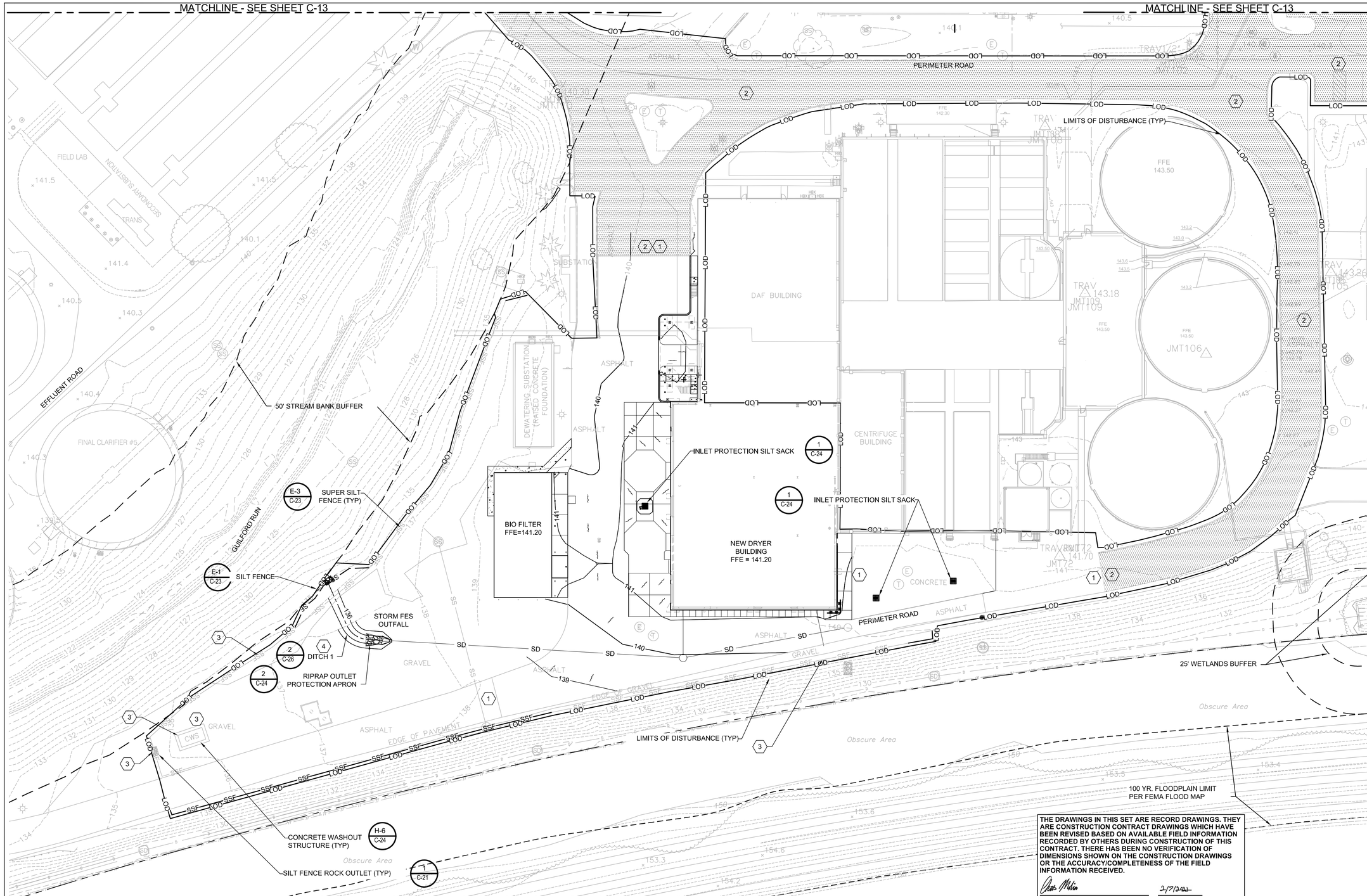

GENERAL NOTES:

1. SEE SHEETS C-21 - C-24 FOR EROSION AND SEDIMENT CONTROL NOTES AND DETAILS.
2. SEE SHEET C-1 FOR GENERAL NOTES AND LEGEND.
3. SEE C-15 AND C-16 FOR STORM SYSTEM LAYOUT AND PROFILE.

KEY NOTES:

1. MATCH EXISTING PAVEMENT ELEVATIONS AND PROVIDE SMOOTH TRANSITION BETWEEN NEW AND EXISTING PAVEMENT.
2. 2" MILL AND OVERLAY
3. MAINTAIN PHASE 1 EROSION CONTROL. DURING PHASE 2 CONSTRUCTION.
4. INSTALL MATTING FOR EROSION CONTROL IMMEDIATELY AFTER DITCH IS GRADED.

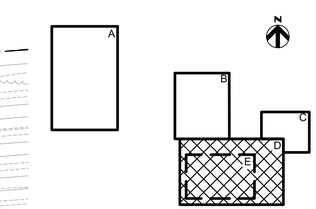

KEYMAP

0 30 60 90

SCALE: 1" = 30'

THE DRAWINGS IN THIS SET ARE RECORD DRAWINGS. THEY ARE CONSTRUCTION CONTRACT DRAWINGS WHICH HAVE BEEN REVISED BASED ON AVAILABLE FIELD INFORMATION RECORDED BY OTHERS DURING CONSTRUCTION OF THIS CONTRACT. THERE HAS BEEN NO VERIFICATION OF DIMENSIONS SHOWN ON THE CONSTRUCTION DRAWINGS OR THE ACCURACY/COMPLETENESS OF THE FIELD INFORMATION RECEIVED.

SIGNATURE DATE 2/7/2022

HDR

AS-BUILT REPLACEMENT SHEET

PROFESSIONAL CERTIFICATION
THIS DRAWING WAS ORIGINALLY APPROVED FOR CONSTRUCTION AND SEALED BY ROBERT BAYSDEN, A REGISTERED PROFESSIONAL ENGINEER IN THE STATE OF MARYLAND, NO. 49972.

NOTICE TO CONTRACTORS
- PROJECT ELEVATIONS ARE BASED ON NAVD88 AND HOWARD COUNTY'S BENCHMARK SYSTEM
- PREVIOUS PROJECTS USED OTHER DATUMS
- APPLY THE FOLLOWING CONVERSIONS WHEN USING PREVIOUS CONTRACT DRAWINGS:
  - ADDITION NO. 6: SUBTRACT 0.80 FT
  - PRIOR ADDITIONS: SUBTRACT 1.04 FT

DEPARTMENT OF PUBLIC WORKS
HOWARD COUNTY, MARYLAND

CHIEF, BUREAU OF UTILITIES DATE

DES: M.L.
DRN: S.W.
CHK: R.B.
DATE: 01/2018

DATE	REV	DESCRIPTION
03/2021		RECORD DRAWINGS

CIVIL

SITE DEVELOPMENT AND EROSION AND SEDIMENT CONTROL PLAN D

LITTLE PATUXENT WATER RECLAMATION PLANT
8TH ADDITION
BIOSOLIDS PROCESSING FACILITIES - PHASE 2

CAPITAL PROJECT S-6295
CONTRACT NO. 24-4936

ELECTION DISTRICT NO. 6
HOWARD COUNTY, MARYLAND

SCALE AS SHOWN

SHEET 63 OF 311

C-14

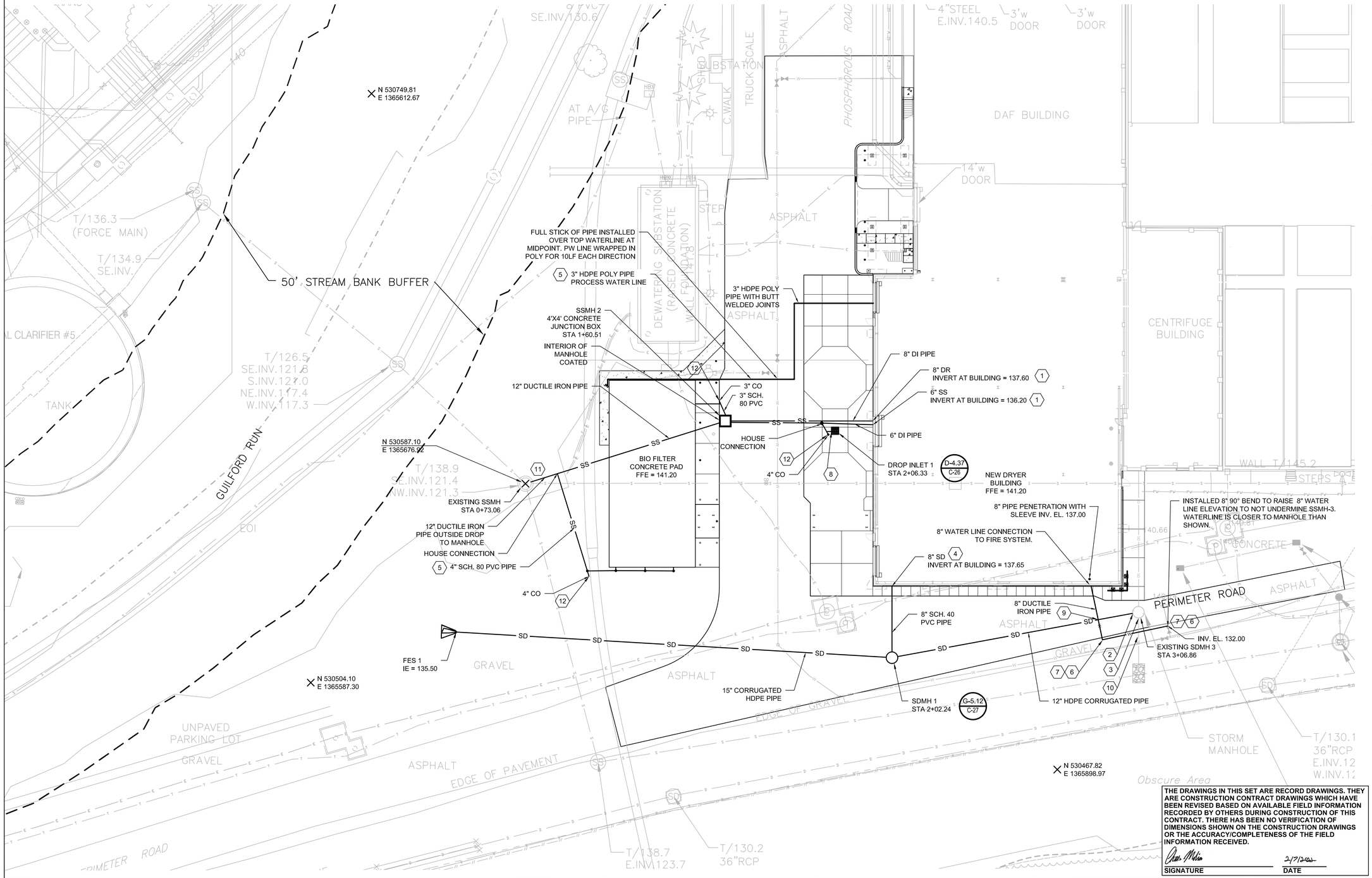

N

GENERAL NOTES:

1. SEE SHEETS C-21 - C-24 FOR EROSION CONTROL NOTES AND DETAILS.
2. SEE SHEET C-1 FOR GENERAL NOTES AND LEGEND.
3. SEE C-16 FOR SANITARY SEWER AND STORM WATER PROFILES.
4. PIPE TRENCH DETAILS LOCATED ON C-28.
5. A MINIMUM OF 12" SEPARATION SHALL BE PROVIDED BETWEEN UTILITIES AND THE PROPOSED 8" WATER LINE CONNECTION.
6. HOWARD COUNTY WATER AND SEWER NOTES ARE LOCATED ON C-28.
7. CONTRACTOR SHALL VERIFY THE DEPTH OF ALL EXISTING UTILITIES CROSSING PROPOSED WORK PRIOR TO CONSTRUCTION.

KEY NOTES:

1. SEE PLUMBING PLANS FOR SANITARY SEWER AND FLOOR DRAIN CONTINUATION.
2. CONNECT PROPOSED PIPE TO EXISTING STORM MANHOLE INSTALLED IN PHASE 1.
3. AFTER NEW STORM SYSTEM IS INSTALLED AND OPERATIONAL, REMOVE 2 FOOT SECTION OF OUT FALL PIPE FROM STRUCTURE, PLUG EXISTING PIPE OPENING WITH BRICK AND NON-SHRINK GROUT.
4. SEE PLUMBING PLAN FOR ROOF STORM DRAIN CONTINUATION.
5. SEE M-508 FOR BIOFILTER DRAIN PIPES AND 3" PROCESS WATER CONNECTION.
6. INSTALL 90 DEGREE BEND.
7. INSTALL BUTTRESS AND ANCHORAGE AT TEES AND BENDS OF WATER LINE. SEE DETAIL DETAIL W-2.23/C-26.
8. INSTALL TIDEFLEX CHECKMATE INLINE VALVE AT UPSTREAM END OF 6INCH STORM DRAIN PIPE. VALVE MUST BE ACCESSIBLE FROM DROP INLET FOR MAINTENANCE.
9. MAINTAIN A MINIMUM 1' VERTICAL CLEARANCE BETWEEN 8" WATER PIPE AND STORM PIPE.
10. ABANDON PIPE (FROM STRUCTURE TO OUTLET) AND RIP RAP APRON IN PLACE AFTER NEW SYSTEM IS INSTALLED AND INVERT PLUGGED.
11. INSTALL OUTSIDE DROP PER HOWARD COUNTY DETAIL S-1.32.
12. CLEAN OUT

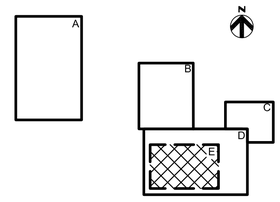

KEYMAP

0 20 40 60

SCALE: 1" = 20'

THE DRAWINGS IN THIS SET ARE RECORD DRAWINGS. THEY ARE CONSTRUCTION CONTRACT DRAWINGS WHICH HAVE BEEN REVISED BASED ON AVAILABLE FIELD INFORMATION RECORDED BY OTHERS DURING CONSTRUCTION OF THIS CONTRACT. THERE HAS BEEN NO VERIFICATION OF DIMENSIONS SHOWN ON THE CONSTRUCTION DRAWINGS OR THE ACCURACY/COMPLETENESS OF THE FIELD INFORMATION RECEIVED.

SIGNATURE 2/7/2020 DATE

AS-BUILT REPLACEMENT SHEET

PROFESSIONAL CERTIFICATION

THIS DRAWING WAS ORIGINALLY APPROVED FOR CONSTRUCTION AND SEALED BY ROBERT BAYSDEN, A REGISTERED PROFESSIONAL ENGINEER IN THE STATE OF MARYLAND, NO. 49972.

NOTICE TO CONTRACTORS

- PROJECT ELEVATIONS ARE BASED ON NAVD88 AND HOWARD COUNTY'S BENCHMARK SYSTEM
- PREVIOUS PROJECTS USED OTHER DATUMS
- APPLY THE FOLLOWING CONVERSIONS WHEN USING PREVIOUS CONTRACT DRAWINGS:
  - ADDITION NO. 6: SUBTRACT 0.80 FT
  - PRIOR ADDITIONS: SUBTRACT 1.04 FT

DEPARTMENT OF PUBLIC WORKS
HOWARD COUNTY, MARYLAND

CHIEF, BUREAU OF UTILITIES DATE

DES: M.L.
DRN: S.W.
CHK: R.B.
DATE: 01/2018

DATE	REV	DESCRIPTION
03/2021		RECORD DRAWINGS

CIVIL

YARD PIPING PLAN E

LITTLE PATUXENT WATER RECLAMATION PLANT
8TH ADDITION
BIOSOLIDS PROCESSING FACILITIES - PHASE 2

CAPITAL PROJECT S-6295
CONTRACT NO. 24-4936

ELECTION DISTRICT NO. 6
HOWARD COUNTY, MARYLAND

SCALE AS SHOWN

SHEET 64 OF 311

C-15

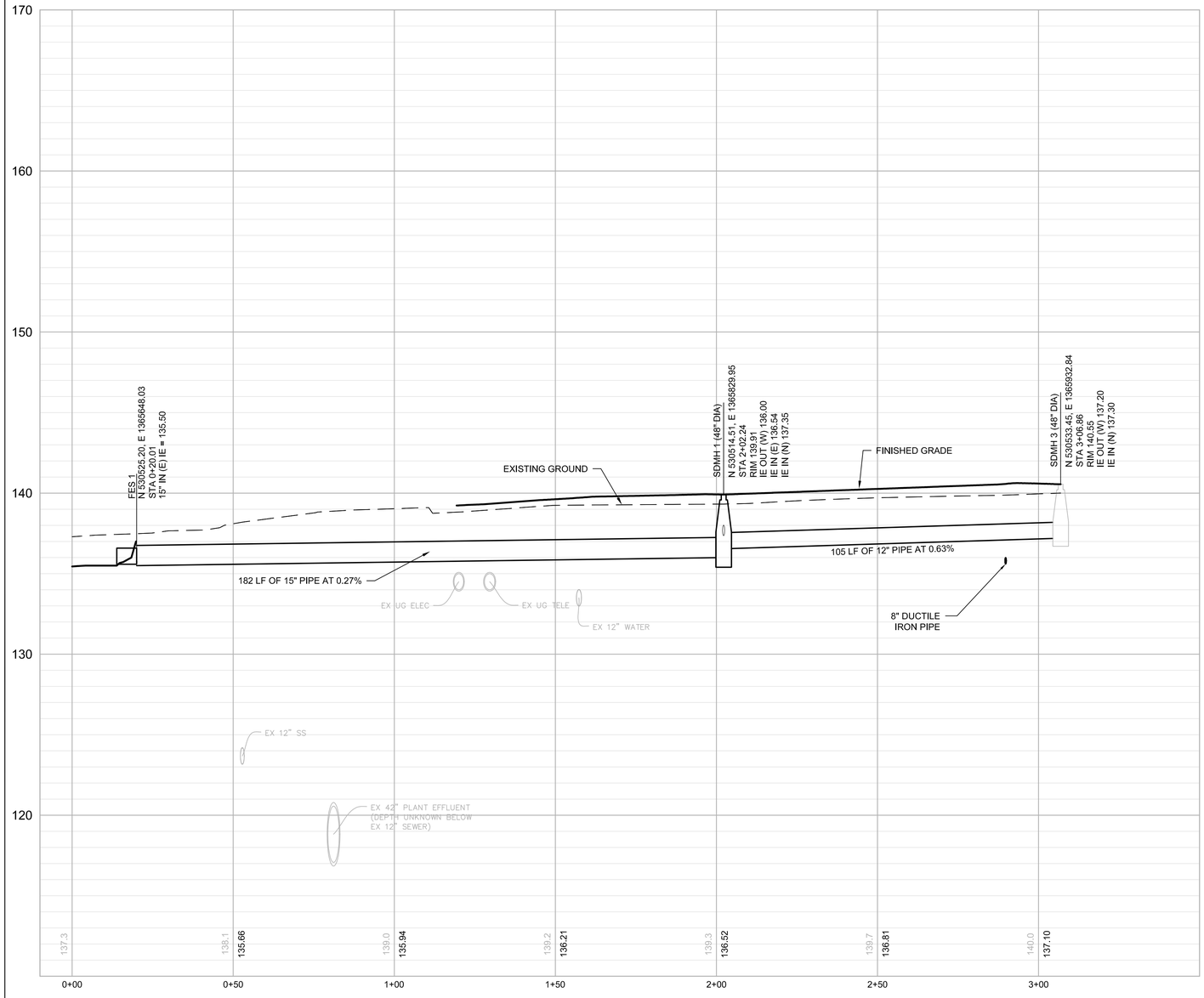

STORM DRAIN MAIN PROFILE

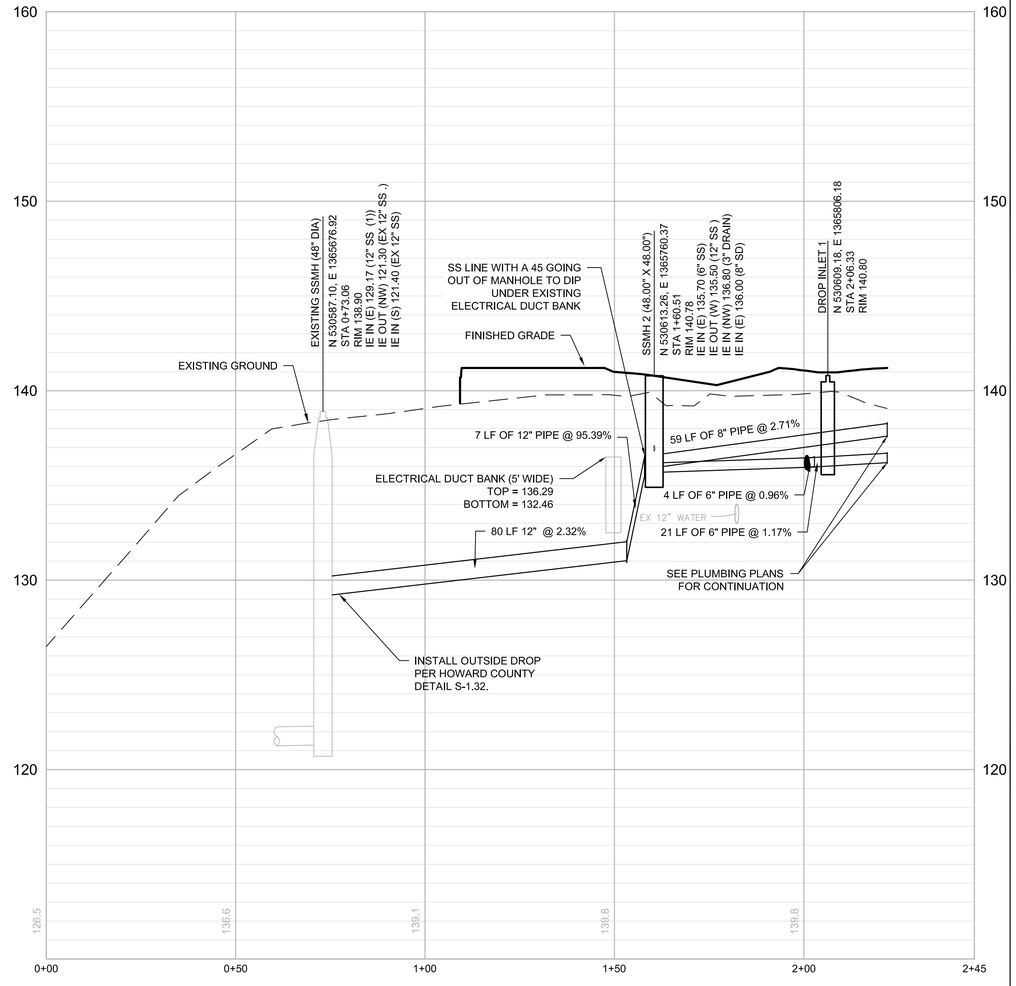

SANITARY SEWER MAIN PROFILE

VERTICAL SCALE

0 5 10 15

SCALE: 1" = 5'

HORIZONTAL SCALE

0 20 40 60

SCALE: 1" = 20'

THE DRAWINGS IN THIS SET ARE RECORD DRAWINGS. THEY ARE CONSTRUCTION CONTRACT DRAWINGS WHICH HAVE BEEN REVISED BASED ON AVAILABLE FIELD INFORMATION RECORDED BY OTHERS DURING CONSTRUCTION OF THIS CONTRACT. THERE HAS BEEN NO VERIFICATION OF DIMENSIONS SHOWN ON THE CONSTRUCTION DRAWINGS OR THE ACCURACY/COMPLETENESS OF THE FIELD INFORMATION RECEIVED.

SIGNATURE

2/7/2022
DATE

AS-BUILT REPLACEMENT SHEET

PROFESSIONAL CERTIFICATION

THIS DRAWING WAS ORIGINALLY APPROVED FOR CONSTRUCTION AND SEALED BY ROBERT BAYSDEN, A REGISTERED PROFESSIONAL ENGINEER IN THE STATE OF MARYLAND, NO. 49972.

NOTICE TO CONTRACTORS

- PROJECT ELEVATIONS ARE BASED ON NAVD88 AND HOWARD COUNTY'S BENCHMARK SYSTEM
- PREVIOUS PROJECTS USED OTHER DATUMS
- APPLY THE FOLLOWING CONVERSIONS WHEN USING PREVIOUS CONTRACT DRAWINGS:
  - ADDITION NO. 6: SUBTRACT 0.80 FT
  - PRIOR ADDITIONS: SUBTRACT 1.04 FT

DEPARTMENT OF PUBLIC WORKS
HOWARD COUNTY, MARYLAND

CHIEF, BUREAU OF UTILITIES DATE

DES: M.L.
DRN: S.W.
CHK: R.B.
DATE: 01/2018

DATE	REV	DESCRIPTION
03/2021		RECORD DRAWINGS

CIVIL

STORM AND SANITARY SEWER PROFILES

LITTLE PATUXENT WATER RECLAMATION PLANT
8TH ADDITION
BIOSOLIDS PROCESSING FACILITIES - PHASE 2

CAPITAL PROJECT S-6295
CONTRACT NO. 24-4936

ELECTION DISTRICT NO. 6
HOWARD COUNTY, MARYLAND

SCALE AS SHOWN

SHEET 65 OF 311

C-16

CONSTRUCTION SEQUENCE

1. APPLY FOR GRADING PERMIT AND SCHEDULE A PRE – CONSTRUCTION MEETING WITH THE INSPECTOR. OBTAIN GRADING PERMIT FROM THE INSPECTOR AT THE MEETING.
2. MAINTAIN PHASE 1 EROSION CONTROL MEASURES AS SHOWN ON PHASE 2 PLANS.
3. CLEAR AND GRUB AS NECESSARY FOR THE INSTALLATION OF THE PERIMETER CONTROLS.
4. CONSTRUCT AND STABILIZE PERIMETER CONTROLS AS SHOWN ON PLANS.
5. BEGIN DEMOLITION OF TRUCK SCALE, SILOS, PAVEMENT, AND DRYER BUILDING AND SITE FEATURES AS SHOWN ON THE DEMOLITION PLANS.
6. CONSTRUCT NEW BIO FILTER, DRYER BUILDING, UTILITIES, AND PAVEMENT AS SHOWN ON PLANS.
7. STABILIZE AREAS IMMEDIATELY AFTER FINAL GRADES ARE CONSTRUCTED.
8. AFTER CONSTRUCTION IS COMPLETE, PERFORM MILL AND OVERLAY AS SHOWN ON PLANS.
9. OBTAIN APPROVAL PRIOR TO THE REMOVAL OF SEDIMENT CONTROLS. AFTER UPSTREAM AREAS ARE FULLY STABILIZED.
10. REMOVE SEDIMENT CONTROLS AND STABILIZE AREAS THAT AREA DISTURBED BY THE REMOVAL OF SEDIMENT CONTROLS.

GENERAL EROSION CONTROL NOTES:

1. STANDARD SILT FENCE MAY BE REPLACED WITH SUPER SILT FENCE AT THE DIRECTION OF THE SEDIMENT CONTROL INSPECTOR.
2. WHEN SUPER SILT FENCE IS RUNNING AT A SLOPE GREATER THAN 5%, CURL FENCE UP 2' FOR EVERY 2' OF ELEVATION CHANGE ALONG SILT FENCE.
3. SEDIMENT CONTROL INSPECTOR MAY RELOCATE STABILIZED CONSTRUCTION ENTRANCES.
4. ANY EARTH DIKE INTERRUPTED BY THE INSTALLATION OF A STORM DRAIN IS TO BE REPAIRED IMMEDIATELY.
5. THE STANDARD SEDIMENT CONTROL PLAN MAY NOT BE USED TO OBTAIN GRADING PERMITS FOR THIS PROJECT.

HOWARD SOIL CONSERVATION DISTRICT (HSCD) STANDARD SEDIMENT CONTROL NOTES

1. A PRE–CONSTRUCTION MEETING MUST OCCUR WITH THE HOWARD COUNTY DEPARTMENT OF PUBLIC WORKS, CONSTRUCTION INSPECTION DIVISION (CID), 410–313–1855 AFTER THE FUTURE LOD AND PROTECTED AREAS ARE MARKED CLEARLY IN THE FIELD. A MINIMUM OF 48 HOUR NOTICE TO CID MUST BE GIVEN AT THE FOLLOWING STAGES:

a. PRIOR TO THE START OF EARTH DISTURBANCE,
b. UPON COMPLETION OF THE INSTALLATION OF PERIMETER EROSION AND SEDIMENT CONTROLS, BUT BEFORE PROCEEDING WITH ANY OTHER EARTH DISTURBANCE OR GRADING,
c. PRIOR TO THE START OF ANOTHER PHASE OF CONSTRUCTION OR OPENING OF ANOTHER GRADING UNIT,
d. PRIOR TO THE REMOVAL OR MODIFICATION OF SEDIMENT CONTROL PRACTICES.

OTHER BUILDING OR GRADING INSPECTION APPROVALS MAY NOT BE AUTHORIZED UNTIL THIS INITIAL APPROVAL BY THE INSPECTION AGENCY IS MADE. OTHER RELATED STATE AND FEDERAL PERMITS SHALL BE REFERENCED, TO ENSURE COORDINATION AND TO AVOID CONFLICTS WITH THIS PLAN.

2. ALL VEGETATIVE AND STRUCTURAL PRACTICES ARE TO BE INSTALLED ACCORDING TO THE PROVISIONS OF THIS PLAN AND ARE TO BE IN CONFORMANCE WITH THE 2011 MARYLAND STANDARDS AND SPECIFICATIONS FOR SOIL EROSION AND SEDIMENT CONTROL, AND REVISIONS THERETO.

3. FOLLOWING INITIAL SOIL DISTURBANCE OR RE–DISTURBANCE, PERMANENT OR TEMPORARY STABILIZATION IS REQUIRED WITHIN THREE (3) CALENDAR DAYS AS TO THE SURFACE OF ALL PERIMETER CONTROLS, DIKES, SWALES, DITCHES, PERIMETER SLOPES, AND ALL SLOPES STEEPER THAN 3 HORIZONTAL TO 1 VERTICAL (3:1); AND SEVEN (7) CALENDAR DAYS AS TO ALL OTHER DISTURBED AREAS ON THE PROJECT SITE EXCEPT FOR THOSE AREAS UNDER ACTIVE GRADING.

4. ALL DISTURBED AREAS MUST BE STABILIZED WITHIN THE TIME PERIOD SPECIFIED ABOVE IN ACCORDANCE WITH THE 2011 MARYLAND STANDARDS AND SPECIFICATIONS FOR SOIL EROSION AND SEDIMENT CONTROL FOR TOPSOIL (SEC. B–4–2), PERMANENT SEEDING (SEC. B–4–5), TEMPORARY SEEDING (SEC. B–4–4) AND MULCHING (SEC. B–4–3). TEMPORARY STABILIZATION WITH MULCH ALONE CAN ONLY BE APPLIED BETWEEN THE FALL AND SPRING SEEDING DATES IF THE GROUND IS FROZEN. INCREMENTAL STABILIZATION (SEC. B–4–1) SPECIFICATIONS SHALL BE ENFORCED IN AREAS WITH >15' OF CUT AND/OR FILL. STOCKPILES (SEC. B–4–8) IN EXCESS OF 20 FT. MUST BE BENCHED WITH STABLE OUTLET. ALL CONCENTRATED FLOW, STEEP SLOPE, AND HIGHLY ERODIBLE AREAS SHALL RECEIVE SOIL STABILIZATION MATTING (SEC. B–4–6).

5. ALL SEDIMENT CONTROL STRUCTURES ARE TO REMAIN IN PLACE AND ARE TO BE MAINTAINED IN OPERATIVE CONDITION UNTIL PERMISSION FOR THEIR REMOVAL HAS BEEN OBTAINED FROM THE CID.

6. SITE ANALYSIS:

TOTAL AREA OF SITE	56.20± AC.
AREA DISTURBED	7.30± AC.
AREA TO BE ROOFED	0.02 ± AC.
AREA TO BE VEGETATIVELY STABILIZED	4.00 ± AC.

*FOR ESTIMATING PURPOSES ONLY. CONTRACTOR TO VERIFY ACTUAL VALUES.

7. ANY SEDIMENT CONTROL PRACTICE WHICH IS DISTURBED BY GRADING ACTIVITY FOR PLACEMENT OF UTILITIES MUST BE REPAIRED ON THE SAME DAY OF DISTURBANCE.

8. ADDITIONAL SEDIMENT CONTROL MUST BE PROVIDED, IF DEEMED NECESSARY BY THE CID. THE SITE AND ALL CONTROLS SHALL BE INSPECTED BY THE CONTRACTOR WEEKLY; AND THE NEXT DAY AFTER EACH RAIN EVENT. A WRITTEN REPORT BY THE CONTRACTOR, MADE AVAILABLE UPON REQUEST, IS PART OF EVERY INSPECTION AND SHOULD INCLUDE:

* INSPECTION DATE
* INSPECTION TYPE (ROUTINE, PRE–STORM EVENT, DURING RAIN EVENT)
* NAME AND TITLE OF INSPECTOR
* WEATHER INFORMATION (CURRENT CONDITIONS AS WELL AS TIME AND AMOUNT OF LAST RECORDED PRECIPITATION)
* BRIEF DESCRIPTION OF PROJECT'S STATUS (E.G., PERCENT COMPLETE) AND/OR CURRENT ACTIVITIES
* EVIDENCE OF SEDIMENT DISCHARGES
* IDENTIFICATION OF PLAN DEFICIENCIES
* IDENTIFICATION OF SEDIMENT CONTROLS THAT REQUIRE MAINTENANCE
* IDENTIFICATION OF MISSING OR IMPROPERLY INSTALLED SEDIMENT CONTROLS
* COMPLIANCE STATUS REGARDING THE SEQUENCE OF CONSTRUCTION AND STABILIZATION REQUIREMENTS
* PHOTOGRAPHS
* MONITORING/SAMPLING
* MAINTENANCE AND/OR CORRECTIVE ACTION PERFORMED
* OTHER INSPECTION ITEMS AS REQUIRED BY THE GENERAL PERMIT FOR STORMWATER ASSOCIATED WITH CONSTRUCTION ACTIVITIES (NPDES, MDE).

9. TRENCHES FOR THE CONSTRUCTION OF UTILITIES IS LIMITED TO THREE PIPE LENGTHS OR THAT WHICH CAN AND SHALL BE BACK–FILLED AND STABILIZED BY THE END OF EACH WORKDAY, WHICHEVER IS SHORTER.

10. ANY MAJOR CHANGES OR REVISIONS TO THE PLAN OR SEQUENCE OF CONSTRUCTION MUST BE REVIEWED AND APPROVED BY THE HSCD PRIOR TO PROCEEDING WITH CONSTRUCTION. MINOR REVISIONS MAY ALLOWED BY THE CID PER THE LIST OF HSCD–APPROVED FIELD CHANGES.

11. DISTURBANCE SHALL NOT OCCUR OUTSIDE THE L.O.D. A PROJECT IS TO BE SEQUENCED SO THAT GRADING ACTIVITIES BEGIN ON ONE GRADING UNIT (MAXIMUM ACREAGE OF 20 AC. PER GRADING UNIT) AT A TIME. WORK MAY PROCEED TO A SUBSEQUENT GRADING UNIT WHEN AT LEAST 50 PERCENT OF THE DISTURBED AREA IN THE PRECEDING GRADING UNIT HAS BEEN STABILIZED AND APPROVED BY THE CID. UNLESS OTHERWISE SPECIFIED AND APPROVED BY THE CID, NO MORE THAN 30 ACRES CUMULATIVELY MAY BE DISTURBED AT A GIVEN TIME.

HOWARD SOIL CONSERVATION DISTRICT (HSCD) STANDARD SEDIMENT CONTROL NOTES (CONTINUED)

12. WASH WATER FROM ANY EQUIPMENT, VEHICLES, WHEELS, PAVEMENT, AND OTHER SOURCES MUST BE TREATED IN A SEDIMENT BASIN OR OTHER APPROVED WASHOUT STRUCTURE.

13. TOPSOIL SHALL BE STOCKPILED AND PRESERVED ON–SITE FOR REDISTRIBUTION ONTO FINAL GRADE.

14. ALL SILT FENCE AND SUPER SILT FENCE SHALL BE PLACED ON–THE–CONTOUR, AND BE IMBRICATED AT 25' MINIMUM INTERVALS, WITH LOWER ENDS CURLED UPHILL BY 2' IN ELEVATION.

15. STREAM CHANNELS MUST NOT BE DISTURBED DURING THE FOLLOWING RESTRICTED TIME PERIODS (INCLUSIVE):
* USE I AND IP MARCH 1 – JUNE 15
* USE III AND IIIP OCTOBER 1 – APRIL 30
* USE IV MARCH 1 – MAY 31

16. A COPY OF THIS PLAN, THE 2011 MARYLAND STANDARDS AND SPECIFICATIONS FOR SOIL EROSION AND SEDIMENT CONTROL, AND ASSOCIATED PERMITS SHALL BE ON–SITE AND AVAILABLE WHEN THE SITE IS ACTIVE.

SEDIMENT CONTROL

Owners/Developer Certification:

"I/We hereby certify that any clearing, grading, construction, or development will be done pursuant to this approved erosion and sediment control plan, including inspecting and maintaining controls, and that the responsible personnel involved in the construction project will have a Certificate of Training at a Maryland Department of the Environment (MDE) approved training program for the control on erosion and sediment prior to beginning the project. I certify right-of-entry for periodic on-site evaluation by Howard County, the Howard Soil Conservation District and/or MDE."

_____ _____
Owner's/ Developer's Signature Date

_____
Printed Name & Title

Design Certification:

"I hereby certify that this plan has been designed in accordance with current Maryland erosion and sediment control laws, regulations, and standards, that it represents a practical and workable plan based on my personal knowledge of the site, and that it was prepared in accordance with the requirements of the Howard Soil Conservation District."

_____ _____
Designer's Signature Date

_____ MD Registration No._____
Printed Name P.E., R.L.S., or R.L.A. (circle one)

Professional Certification:

"I hereby certify these documents were prepared or approved by me, and that I am a duly licensed professional engineer under the laws of the State Of Maryland,

License No._____, Expiration Date:_____"

(Title block, certification, seal, and signature shall appear close to each other)

Howard SCD Signature Block:

This plan is approved for soil erosion and sediment control by the Howard Soil Conservation District.

_____ _____
Howard Soil Conservation District Date

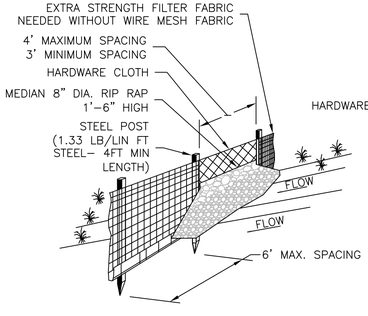

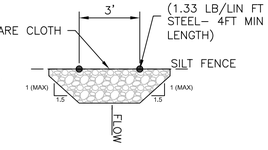

NOTES:

1. WASHED STONE (#57) TO BE REMOVED AND REPLACED ONCE IT BECOMES CLOGGED WITH SEDIMENT.
2. SEDIMENT TO BE REMOVED WHEN ACCUMULATIONS REACH 1/3 HEIGHT OF SILT FENCE
3. THE KEY TO FUNCTIONAL ROCK OUTLETS IS WEEKLY INSPECTIONS, ROUTINE MAINTENANCE, AND REGULAR SEDIMENT REMOVAL.

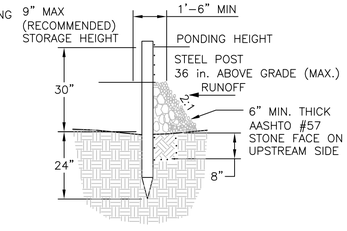

ROCK SECTION DETAIL
TRENCH WITH GRAVEL

DESIGN TYPE	DRAINAGE AREA (APPROX.)	WEIR LENGTH (L) MIN.
1/4	1/2 ACRE	3.0 FT

SILT FENCE ROCK OUTLET (1 – 1)
NOT TO SCALE

Rev. 8/2015

THE DRAWINGS IN THIS SET ARE RECORD DRAWINGS. THEY ARE CONSTRUCTION CONTRACT DRAWINGS WHICH HAVE BEEN REVISED BASED ON AVAILABLE FIELD INFORMATION RECORDED BY OTHERS DURING CONSTRUCTION OF THIS CONTRACT. THERE HAS BEEN NO VERIFICATION OF DIMENSIONS SHOWN ON THE CONSTRUCTION DRAWINGS OR THE ACCURACY/COMPLETENESS OF THE FIELD INFORMATION RECEIVED.

SIGNATURE 2/7/2025 DATE

AS-BUILT REPLACEMENT SHEET

PROFESSIONAL CERTIFICATION
THIS DRAWING WAS ORIGINALLY APPROVED FOR CONSTRUCTION AND SEALED BY ROBERT BAYSDEN, A REGISTERED PROFESSIONAL ENGINEER IN THE STATE OF MARYLAND, NO. 49972.

NOTICE TO CONTRACTORS
- PROJECT ELEVATIONS ARE BASED ON NAVD88 AND HOWARD COUNTY'S BENCHMARK SYSTEM
- PREVIOUS PROJECTS USED OTHER DATUMS
- APPLY THE FOLLOWING CONVERSIONS WHEN USING PREVIOUS CONTRACT DRAWINGS:
  - ADDITION NO. 6: SUBTRACT 0.80 FT
  - PRIOR ADDITIONS: SUBTRACT 1.04 FT

DEPARTMENT OF PUBLIC WORKS
HOWARD COUNTY, MARYLAND

CHIEF, BUREAU OF UTILITIES DATE

DES: M.L.
DRN: S.W.
CHK: R.B.
DATE: 01/2018

DATE	REV	DESCRIPTION
03/2021		RECORD DRAWINGS

CIVIL

EROSION CONTROL NOTES AND DETAILS

LITTLE PATUXENT WATER RECLAMATION PLANT
8TH ADDITION
BIOSOLIDS PROCESSING FACILITIES - PHASE 2

CAPITAL PROJECT S-6295
CONTRACT NO. 24-4936

ELECTION DISTRICT NO. 6
HOWARD COUNTY, MARYLAND

SCALE AS SHOWN

SHEET 66 OF 311

C-21

B-4-2 STANDARD AND SPECIFICATIONS FOR SOIL PREPARATION, TOPSOILING, AND SOIL AMENDMENTS

DEFINITION

THE PROCESS OF PREPARING THE SOILS TO SUSTAIN ADEQUATE VEGETATIVE STABILIZATION.

PURPOSE

TO PROVIDE A SUITABLE SOIL MEDIUM FOR VEGETATIVE GROWTH.

CONDITIONS WHERE PRACTICE APPLIES

WHERE VEGETATIVE STABILIZATION IS TO BE ESTABLISHED.

CRITERIA

A. SOIL PREPARATION

1. TEMPORARY STABILIZATION

a. SEEDBED PREPARATION CONSISTS OF LOOSENING SOIL TO A DEPTH OF 3 TO 5 INCHES BY MEANS OF SUITABLE AGRICULTURAL OR CONSTRUCTION EQUIPMENT, SUCH AS DISC HARROWS OR CHISEL PLOWS OR RIPPERS MOUNTED ON CONSTRUCTION EQUIPMENT. AFTER THE SOIL IS LOOSENED, IT MUST NOT BE ROLLED OR DRAGGED SMOOTH BUT LEFT IN THE ROUGHENED CONDITION. SLOPES 3:1 OR FLATTER ARE TO BE TRACKED WITH RIDGES RUNNING PARALLEL TO THE CONTOUR OF THE SLOPE.
b. APPLY FERTILIZER AND LIME AS PRESCRIBED ON THE PLANS.
c. INCORPORATE LIME AND FERTILIZER INTO THE TOP 3 TO 5 INCHES OF SOIL BY DISKING OR OTHER SUITABLE MEANS.

2. PERMANENT STABILIZATION

a. A SOIL TEST IS REQUIRED FOR ANY EARTH DISTURBANCE OF 5 ACRES OR MORE. THE MINIMUM SOIL CONDITIONS REQUIRED FOR PERMANENT VEGETATIVE ESTABLISHMENT ARE:

I. SOIL PH BETWEEN 6.0 AND 7.0.

II. SOLUBLE SALTS LESS THAN 500 PARTS PER MILLION (PPM).

III. SOIL CONTAINS LESS THAN 40 PERCENT CLAY BUT ENOUGH FINE GRAINED MATERIAL (GREATER THAN 30 PERCENT SILT PLUS CLAY) TO PROVIDE THE CAPACITY TO HOLD A MODERATE AMOUNT OF MOISTURE. AN EXCEPTION: IF LOVEGRASS WILL BE PLANTED, THEN A SANDY SOIL (LESS THAN 30 PERCENT SILT PLUS CLAY) WOULD BE ACCEPTABLE.

IV. SOIL CONTAINS 1.5 PERCENT MINIMUM ORGANIC MATTER BY WEIGHT.

V. SOIL CONTAINS SUFFICIENT PORE SPACE TO PERMIT ADEQUATE ROOT PENETRATION.

b. APPLICATION OF AMENDMENTS OR TOPSOIL IS REQUIRED IF ON-SITE SOILS DO NOT MEET THE ABOVE CONDITIONS.

c. GRADED AREAS MUST BE MAINTAINED IN A TRUE AND EVEN GRADE AS SPECIFIED ON THE APPROVED PLAN, THEN SCARIFIED OR OTHERWISE LOOSENED TO A DEPTH OF 3 TO 5 INCHES.

d. APPLY SOIL AMENDMENTS AS SPECIFIED ON THE APPROVED PLAN OR AS INDICATED BY THE RESULTS OF A SOIL TEST.

e. MIX SOIL AMENDMENTS INTO THE TOP 3 TO 5 INCHES OF SOIL BY DISKING OR OTHER SUITABLE MEANS, RAKE LAWN AREAS TO SMOOTH THE SURFACE, REMOVE LARGE OBJECTS LIKE STONES AND BRANCHES, AND READY THE AREA FOR SEED APPLICATION. LOOSEN SURFACE SOIL BY DRAGGING WITH A HEAVY CHAIN OR OTHER EQUIPMENT TO ROUGHEN THE SURFACE WHERE SITE CONDITIONS WILL NOT PERMIT NORMAL SEEDBED PREPARATION. TRACK SLOPES 3:1 OR FLATTER WITH TRACKED EQUIPMENT LEAVING THE SOIL IN AN IRREGULAR CONDITION WITH RIDGES RUNNING PARALLEL TO THE CONTOUR OF THE SLOPE. LEAVE THE TOP 1 TO 3 INCHES OF SOIL LOOSE AND FRIABLE. SEEDBED LOOSENING MAY BE UNNECESSARY ON NEWLY DISTURBED AREAS.

B. TOPSOILING

1. TOPSOIL IS PLACED OVER PREPARED SUBSOIL PRIOR TO ESTABLISHMENT OF PERMANENT VEGETATION. THE PURPOSE IS TO PROVIDE A SUITABLE SOIL MEDIUM FOR VEGETATIVE GROWTH. SOILS OF CONCERN HAVE LOW MOISTURE CONTENT, LOW NUTRIENT LEVELS, LOW PH, MATERIALS TOXIC TO PLANTS, AND/OR UNACCEPTABLE SOIL GRADATION.

2. TOPSOIL SALVAGED FROM AN EXISTING SITE MAY BE USED PROVIDED IT MEETS THE STANDARDS AS SET FORTH IN THESE SPECIFICATIONS. TYPICALLY, THE DEPTH OF TOPSOIL TO BE SALVAGED FOR A GIVEN SOIL TYPE CAN BE FOUND IN THE REPRESENTATIVE SOIL PROFILE SECTION IN THE SOIL SURVEY PUBLISHED BY USDA-NRCS.

3. TOPSOILING IS LIMITED TO AREAS HAVING 2:1 OR FLATTER SLOPES WHERE:

a. THE TEXTURE OF THE EXPOSED SUBSOIL/PARENT MATERIAL IS NOT ADEQUATE TO PRODUCE VEGETATIVE GROWTH.
b. THE SOIL MATERIAL IS SO SHALLOW THAT THE ROOTING ZONE IS NOT DEEP ENOUGH TO SUPPORT PLANTS OR FURNISH CONTINUING SUPPLIES OF MOISTURE AND PLANT NUTRIENTS.
c. THE ORIGINAL SOIL TO BE VEGETATED CONTAINS MATERIAL TOXIC TO PLANT GROWTH.
d. THE SOIL IS SO ACIDIC THAT TREATMENT WITH LIMESTONE IS NOT FEASIBLE.

4. AREAS HAVING SLOPES STEEPER THAN 2:1 REQUIRE SPECIAL CONSIDERATION AND DESIGN.

5. TOPSOIL SPECIFICATIONS: SOIL TO BE USED AS TOPSOIL MUST MEET THE FOLLOWING CRITERIA:

a. TOPSOIL MUST BE A LOAM, SANDY LOAM, CLAY LOAM, SILT LOAM, SANDY CLAY LOAM, OR LOAMY SAND. OTHER SOILS MAY BE USED IF RECOMMENDED BY AN AGRONOMIST OR SOIL SCIENTIST AND APPROVED BY THE APPROPRIATE APPROVAL AUTHORITY. TOPSOIL MUST NOT BE A MIXTURE OF CONTRASTING TEXTURED SUBSOILS AND MUST CONTAIN LESS THAN 5 PERCENT BY VOLUME OF CINDERS, STONES, SLAG, COARSE FRAGMENTS, GRAVEL, STICKS, ROOTS, TRASH, OR OTHER MATERIALS LARGER THAN 1.5 INCHES IN DIAMETER.

b. TOPSOIL MUST BE FREE OF NOXIOUS PLANTS OR PLANT PARTS SUCH AS BERMUDA GRASS, QUACK GRASS, JOHNSON GRASS, NUT SEDGE, POISON IVY, THISTLE, OR OTHERS AS SPECIFIED.

c. TOPSOIL SUBSTITUTES OR AMENDMENTS, AS RECOMMENDED BY A QUALIFIED AGRONOMIST OR SOIL SCIENTIST AND APPROVED BY THE APPROPRIATE APPROVAL AUTHORITY, MAY BE USED IN LIEU OF NATURAL TOPSOIL.

6. TOPSOIL APPLICATION

a. EROSION AND SEDIMENT CONTROL PRACTICES MUST BE MAINTAINED WHEN APPLYING TOPSOIL.
b. UNIFORMLY DISTRIBUTE TOPSOIL IN A 5 TO 8 INCH LAYER AND LIGHTLY COMPACT TO A MINIMUM THICKNESS OF 4 INCHES. SPREADING IS TO BE PERFORMED IN SUCH A MANNER THAT SODDING OR SEEDING CAN PROCEED WITH A MINIMUM OF ADDITIONAL SOIL PREPARATION AND TILLAGE. ANY IRREGULARITIES IN THE SURFACE RESULTING FROM TOPSOILING OR OTHER OPERATIONS MUST BE CORRECTED IN ORDER TO PREVENT THE FORMATION OF DEPRESSIONS OR WATER POCKETS.
c. TOPSOIL MUST NOT BE PLACED IF THE TOPSOIL OR SUBSOIL IS IN A FROZEN OR MUDDY CONDITION, WHEN THE SUBSOIL IS EXCESSIVELY WET OR IN A CONDITION THAT MAY OTHERWISE BE DETRIMENTAL TO PROPER GRADING AND SEEDBED PREPARATION.

B-4-2 (CONTINUED)

C. SOIL AMENDMENTS (FERTILIZER AND LIME SPECIFICATIONS)

1. SOIL TESTS MUST BE PERFORMED TO DETERMINE THE EXACT RATIOS AND APPLICATION RATES FOR BOTH LIME AND FERTILIZER ON SITES HAVING DISTURBED AREAS OF 5 ACRES OR MORE. SOIL ANALYSIS MAY BE PERFORMED BY A RECOGNIZED PRIVATE OR COMMERCIAL LABORATORY. SOIL SAMPLES TAKEN FOR ENGINEERING PURPOSES MAY ALSO BE USED FOR CHEMICAL ANALYSES.
2. FERTILIZERS MUST BE UNIFORM IN COMPOSITION, FREE FLOWING AND SUITABLE FOR ACCURATE APPLICATION BY APPROPRIATE EQUIPMENT. MANURE MAY BE SUBSTITUTED FOR FERTILIZER WITH PRIOR APPROVAL FROM THE APPROPRIATE APPROVAL AUTHORITY. FERTILIZERS MUST ALL BE DELIVERED TO THE SITE FULLY LABELED ACCORDING TO THE APPLICABLE LAWS AND MUST BEAR THE NAME, TRADE NAME OR TRADEMARK AND WARRANTY OF THE PRODUCER.
3. LIME MATERIALS MUST BE GROUND LIMESTONE (HYDRATED OR BURNT LIME MAY BE SUBSTITUTED EXCEPT WHEN HYDROSEEDING) WHICH CONTAINS AT LEAST 50 PERCENT TOTAL OXIDES (CALCIUM OXIDE PLUS MAGNESIUM OXIDE). LIMESTONE MUST BE GROUND TO SUCH FINENESS THAT AT LEAST 50 PERCENT WILL PASS THROUGH A #100 MESH SIEVE AND 98 TO 100 PERCENT WILL PASS THROUGH A #20 MESH SIEVE.
4. LIME AND FERTILIZER ARE TO BE EVENLY DISTRIBUTED AND INCORPORATED INTO THE TOP 3 TO 5 INCHES OF SOIL BY DISKING OR OTHER SUITABLE MEANS. WHERE THE SUBSOIL IS EITHER HIGHLY ACIDIC OR COMPOSED OF HEAVY CLAYS, SPREAD GROUND LIMESTONE AT THE AT THE RATE OF 4 TO 8 TONS/ACRE (200-400 POUNDS PER 1,000 SQUARE FEET) PRIOR TO THE PLACEMENT OF TOPSOIL.

B-4-3 STANDARDS AND SPECIFICATIONS FOR SEEDING AND MULCHING

DEFINITION

THE APPLICATION OF SEED AND MULCH TO ESTABLISH VEGETATIVE COVER.

PURPOSE

TO PROTECT DISTURBED SOILS FROM EROSION DURING AND AT THE END OF CONSTRUCTION.

CONDITIONS WHERE PRACTICE APPLIES

TO THE SURFACE OF ALL PERIMETER CONTROLS, SLOPES, AND ANY DISTURBED AREA NOT UNDER ACTIVE GRADING.

CRITERIA

A. SEEDING

1. SPECIFICATIONS

a. ALL SEED MUST MEET THE REQUIREMENTS OF THE MARYLAND STATE SEED LAW. ALL SEED MUST BE SUBJECT TO RE-TESTING BY A RECOGNIZED SEED LABORATORY. ALL SEED USED MUST HAVE BEEN TESTED WITHIN THE 6 MONTHS IMMEDIATELY PRECEDING THE DATE OF SOWING SUCH MATERIAL ON ANY PROJECT. REFER TO TABLE B.4 REGARDING THE QUALITY OF SEED. SEED TAGS MUST BE AVAILABLE UPON REQUEST TO THE INSPECTOR TO VERIFY TYPE OF SEED AND SEEDING RATE.
b. MULCH ALONE MAY BE APPLIED BETWEEN THE FALL AND SPRING SEEDING DATES ONLY IF THE GROUND IS FROZEN. THE APPROPRIATE SEEDING MIXTURE MUST BE APPLIED WHEN THE GROUND THAWS.
c. INOCULATES: THE INOCULATE FOR TREATING LEGUME SEED IN THE SEED MIXTURES MUST BE A PURE CULTURE OF NITROGEN FIXING BACTERIA PREPARED SPECIFICALLY FOR THE SPECIES. INOCULATES MUST NOT BE USED LATER THAN THE DATE INDICATED ON THE CONTAINER. ADD FRESH INOCULATES AS DIRECTED ON THE PACKAGE. USE FOUR TIMES THE RECOMMENDED RATE WHEN HYDROSEEDING. NOTE: IT IS VERY IMPORTANT TO KEEP INOCULATE AS COOL AS POSSIBLE UNTIL USED. TEMPERATURES ABOVE 75 TO 80 DEGREES FAHRENHEIT CAN WEAKEN BACTERIA AND MAKE THE INOCULATE LESS EFFECTIVE.
d. SOD OR SEED MUST NOT BE PLACED ON SOIL WHICH HAS BEEN TREATED WITH SOIL STERILANTS OR CHEMICALS USED FOR WEED CONTROL UNTIL SUFFICIENT TIME HAS ELAPSED (14 DAYS MIN.) TO PERMIT DISSIPATION OF PHYTO-TOXIC MATERIALS.

2. APPLICATION

a. DRY SEEDING: THIS INCLUDES USE OF CONVENTIONAL DROP OR BROADCAST SPREADERS.
   i. INCORPORATE SEED INTO THE SUBSOIL AT THE RATES PRESCRIBED ON TEMPORARY SEEDING TABLE B.1, PERMANENT SEEDING TABLE B.3, OR SITE-SPECIFIC SEEDING SUMMARIES.
   ii. APPLY SEED IN TWO DIRECTIONS, PERPENDICULAR TO EACH OTHER. APPLY HALF THE SEEDING RATE IN EACH DIRECTION. ROLL THE SEEDED AREA WITH A WEIGHTED ROLLER TO PROVIDE GOOD SEED TO SOIL CONTACT.

b. DRILL OR CULTIPACKER SEEDING: MECHANIZED SEEDERS THAT APPLY AND COVER SEED WITH SOIL.
   i. CULTIPACKING SEEDERS ARE REQUIRED TO BURY THE SEED IN SUCH A FASHION AS TO PROVIDE AT LEAST 1/4 INCH OF SOIL COVERING. SEEDBED MUST BE FIRM AFTER PLANTING.
   ii. APPLY SEED IN TWO DIRECTIONS, PERPENDICULAR TO EACH OTHER. APPLY HALF THE SEEDING RATE IN EACH DIRECTION.

c. HYDROSEEDING: APPLY SEED UNIFORMLY WITH HYDROSEEDER (SLURRY INCLUDES SEED AND FERTILIZER).
   i. IF FERTILIZER IS BEING APPLIED AT THE TIME OF SEEDING, THE APPLICATION RATES SHOULD NOT EXCEED THE FOLLOWING: NITROGEN, 100 POUNDS PER ACRE TOTAL OF SOLUBLE NITROGEN; P2O5 (PHOSPHOROUS), 200 POUNDS PER ACRE; K2O (POTASSIUM), 200 POUNDS PER ACRE.
   ii. LIME: USE ONLY GROUND AGRICULTURAL LIMESTONE (UP TO 3 TONS PER ACRE MAY BE APPLIED BY HYDROSEEDING). NORMALLY, NOT MORE THAN 2 TONS ARE APPLIED BY HYDROSEEDING AT ANY ONE TIME. DO NOT USE BURNT OR HYDRATED LIME WHEN HYDROSEEDING.
   iii. MIX SEED AND FERTILIZER ON SITE AND SEED IMMEDIATELY AND WITHOUT INTERRUPTION.
   iv. WHEN HYDROSEEDING DO NOT INCORPORATE SEED INTO THE SOIL.

B-4-3 (CONTINUED)

B. MULCHING

1. MULCH MATERIALS (IN ORDER OF PREFERENCE)

a. STRAW CONSISTING OF THOROUGHLY THRESHED WHEAT, RYE, OAT, OR BARLEY AND REASONABLY BRIGHT IN COLOR. STRAW IS TO BE FREE OF NOXIOUS WEED SEEDS AS SPECIFIED IN THE MARYLAND SEED LAW AND NOT MUSTY, MOLDY, CAKED, DECAYED, OR EXCESSIVELY DUSTY. NOTE: USE ONLY STERILE STRAW MULCH IN AREAS WHERE ONE SPECIES OF GRASS IS DESIRED.
b. WOOD CELLULOSE FIBER MULCH (WCFM) CONSISTING OF SPECIALLY PREPARED WOOD CELLULOSE PROCESSED INTO A UNIFORM FIBROUS PHYSICAL STATE.
   i. WCFM IS TO BE DYED GREEN OR CONTAIN A GREEN DYE IN THE PACKAGE THAT WILL PROVIDE AN APPROPRIATE COLOR TO FACILITATE VISUAL INSPECTION OF THE UNIFORMLY SPREAD SLURRY.
   ii. WCFM, INCLUDING DYE, MUST CONTAIN NO GERMINATION OR GROWTH INHIBITING FACTORS.
   iii. WCFM MATERIALS ARE TO BE MANUFACTURED AND PROCESSED IN SUCH A MANNER THAT THE WOOD CELLULOSE FIBER MULCH WILL REMAIN IN UNIFORM SUSPENSION IN WATER UNDER AGITATION AND WILL BLEND WITH SEED, FERTILIZER AND OTHER ADDITIVES TO FORM A HOMOGENEOUS SLURRY. THE MULCH MATERIAL MUST FORM A BLOTTER-LIKE GROUND COVER, ON APPLICATION, HAVING MOISTURE ABSORPTION AND PERCOLATION PROPERTIES AND MUST COVER AND HOLD GRASS SEED IN CONTACT WITH THE SOIL WITHOUT INHIBITING THE GROWTH OF THE GRASS SEEDLINGS.
   iv. WCFM MATERIAL MUST NOT CONTAIN ELEMENTS OR COMPOUNDS AT CONCENTRATION LEVELS THAT WILL BE PHYTO-TOXIC.
   v. WCFM MUST CONFORM TO THE FOLLOWING PHYSICAL REQUIREMENTS: FIBER LENGTH OF APPROXIMATELY 10 MILLIMETERS, DIAMETER APPROXIMATELY 1 MILLIMETER, PH RANGE OF 4.0 TO 8.5, ASH CONTENT OF 1.6 PERCENT MAXIMUM AND WATER HOLDING CAPACITY OF 90 PERCENT MINIMUM.

2. APPLICATION

a. APPLY MULCH TO ALL SEEDED AREAS IMMEDIATELY AFTER SEEDING.
b. WHEN STRAW MULCH IS USED, SPREAD IT OVER ALL SEEDED AREAS AT THE RATE OF 2 TONS PER ACRE TO A UNIFORM LOOSE DEPTH OF 1 TO 2 INCHES. APPLY MULCH TO ACHIEVE A UNIFORM DISTRIBUTION AND DEPTH SO THAT THE SOIL SURFACE IS NOT EXPOSED. WHEN USING A MULCH ANCHORING TOOL, INCREASE THE APPLICATION RATE TO 2.5 TONS PER ACRE.
c. WOOD CELLULOSE FIBER USED AS MULCH MUST BE APPLIED AT A NET DRY WEIGHT OF 1500 POUNDS PER ACRE. MIX THE WOOD CELLULOSE FIBER WITH WATER TO ATTAIN A MIXTURE WITH A MAXIMUM OF 50 POUNDS OF WOOD CELLULOSE FIBER PER 100 GALLONS OF WATER.

3. ANCHORING

a. PERFORM MULCH ANCHORING IMMEDIATELY FOLLOWING APPLICATION OF MULCH TO MINIMIZE LOSS BY WIND OR WATER. THIS MAY BE DONE BY ONE OF THE FOLLOWING METHODS (LISTED BY PREFERENCE), DEPENDING UPON THE SIZE OF THE AREA AND EROSION HAZARD:
   i. A MULCH ANCHORING TOOL IS A TRACTOR DRAWN IMPLEMENT DESIGNED TO PUNCH AND ANCHOR MULCH INTO THE SOIL SURFACE A MINIMUM OF 2 INCHES. THIS PRACTICE IS MOST EFFECTIVE ON LARGE AREAS, BUT IS LIMITED TO FLATTER SLOPES WHERE EQUIPMENT CAN OPERATE SAFELY. IF USED ON SLOPING LAND, THIS PRACTICE SHOULD FOLLOW THE CONTOUR.
   ii. WOOD CELLULOSE FIBER MAY BE USED FOR ANCHORING STRAW. APPLY THE FIBER BINDER AT A NET DRY WEIGHT OF 750 POUNDS PER ACRE. MIX THE WOOD CELLULOSE FIBER WITH WATER AT A MAXIMUM OF 50 POUNDS OF WOOD CELLULOSE FIBER PER 100 GALLONS OF WATER.
   iii. SYNTHETIC BINDERS SUCH AS ACRYLIC DLR (AGRO-TACK), DCA-70, PETROSET, TERRA TAX II, TERRA MANUFACTURER. APPLICATION OF LIQUID BINDERS NEEDS TO BE HEAVIER AT THE EDGES WHERE WIND CATCHES MULCH, SUCH AS IN VALLEYS AND ON CRESTS OF BANKS. USE OF ASPHALT BINDERS IS STRICTLY PROHIBITED.
   iv. LIGHTWEIGHT PLASTIC NETTING MAY BE STAPLED OVER THE MULCH ACCORDING TO MANUFACTURER RECOMMENDATIONS. NETTING IS USUALLY AVAILABLE IN ROLLS 4 TO 15 FEET WIDE AND 300 TO 3,000 FEET LONG.

B-4-4 STANDARDS AND SPECIFICATIONS FOR TEMPORARY STABILIZATION

DEFINITION

TO STABILIZE DISTURBED SOILS WITH VEGETATION FOR UP TO 6 MONTHS.

PURPOSE

TO USE FAST GROWING VEGETATION THAT PROVIDES COVER ON DISTURBED SOILS. CONDITIONS WHERE PRACTICE APPLIES EXPOSED SOILS WHERE GROUND COVER IS NEEDED FOR A PERIOD OF 6 MONTHS OR LESS. FOR LONGER DURATION OF TIME, PERMANENT STABILIZATION PRACTICES ARE REQUIRED.

CRITERIA

1. SELECT ONE OR MORE OF THE SPECIES OR SEED MIXTURES LISTED IN TABLE B.1 FOR THE APPROPRIATE PLANT HARDINESS ZONE (FROM FIGURE B.3), AND ENTER THEM IN THE TEMPORARY SEEDING SUMMARY BELOW ALONG WITH APPLICATION RATES, SEEDING DATES AND SEEDING DEPTHS. IF THIS SUMMARY IS NOT PUT ON THE PLAN AND COMPLETED, THEN TABLE B.1 PLUS FERTILIZER AND LIME RATES MUST BE PUT ON THE PLAN.
2. FOR SITES HAVING SOIL TESTS PERFORMED, USE AND SHOW THE RECOMMENDED RATES BY THE TESTING AGENCY SOIL TESTS ARE NOT REQUIRED FOR TEMPORARY SEEDING.
3. WHEN STABILIZATION IS REQUIRED OUTSIDE OF A SEEDING SEASON, APPLY SEED AND MULCH OR STRAW MULCH ALONE AS PRESCRIBED IN SECTION B-4-3.A.1.B AND MAINTAIN UNTIL THE NEXT SEEDING SEASON.

B-4-4 (CONTINUED)

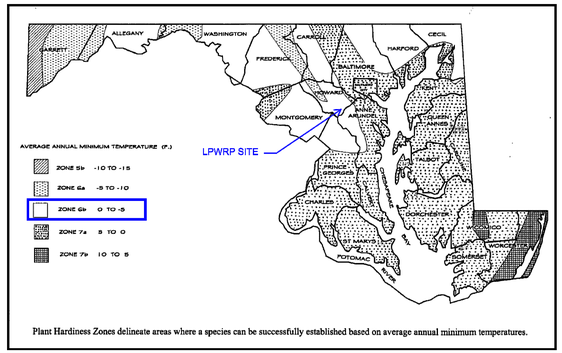

Plant Hardiness Zones delineate areas where a species can be successfully established based on average annual minimum temperatures.

Figure B.3: U.S.D.A. Plant Hardiness Zones

Table B.1: Temporary Seeding for Site Stabilization

Plant Species	Seeding Rate 1/		Seeding Depth 2/ (inches)	Recommended Seeding Dates by Plant Hardiness Zone 3/		
	lb/ac	lb/1000 ft²		5b and 6a	6b	7a and 7b
Cool-Season Grasses						
Annual Ryegrass (*Lolium perenne ssp. multiflorum*)	40	1.0	0.5	Mar 15 to May 31; Aug 1 to Sep 30	Mar 1 to May 15; Aug 1 to Oct 15	Feb 15 to Apr 30; Aug 15 to Nov 30
Barley (*Hordeum vulgare*)	96	2.2	1.0	Mar 15 to May 31; Aug 1 to Sep 30	Mar 1 to May 15; Aug 1 to Oct 15	Feb 15 to Apr 30; Aug 15 to Nov 30
Oats (*Avena sativa*)	72	1.7	1.0	Mar 15 to May 31; Aug 1 to Sep 30	Mar 1 to May 15; Aug 1 to Oct 15	Feb 15 to Apr 30; Aug 15 to Nov 30
Wheat (*Triticum aestivum*)	120	2.8	1.0	Mar 15 to May 31; Aug 1 to Sep 30	Mar 1 to May 15; Aug 1 to Oct 15	Feb 15 to Apr 30; Aug 15 to Nov 30
Cereal Rye (*Secale cereale*)	112	2.8	1.0	Mar 15 to May 31; Aug 1 to Oct 31	Mar 1 to May 15; Aug 1 to Nov 15	Feb 15 to Apr 30; Aug 15 to Dec 15
Warm-Season Grasses						
Foxtail Millet (*Setaria italica*)	30	0.7	0.5	Jun 1 to Jul 31	May 16 to Jul 31	May 1 to Aug 14
Pearl Millet (*Pennisetum glaucum*)	20	0.5	0.5	Jun 1 to Jul 31	May 16 to Jul 31	May 1 to Aug 14

NOTES:

1/ Seeding rates for the warm-season grasses are in pounds of Pure Live Seed (PLS). Actual planting rates shall be adjusted to reflect percent seed germination and purity, as tested. Adjustments are usually not needed for the cool-season grasses.

Seeding rates listed above are for temporary seedings, when planted alone. When planted as a nurse crop with permanent seed mixes, use 1/3 of the seeding rate listed above for barley, oats, and wheat. For smaller-seeded grasses (annual ryegrass, pearl millet, foxtail millet), do not exceed more than 5% (by weight) of the overall permanent seeding mix. Cereal rye generally should not be used as a nurse crop, unless planting will occur in very late fall beyond the seeding dates for other temporary seedings. Cereal rye has allelopathic properties that inhibit the germination and growth of other plants. If it must be used as a nurse crop, seed at 1/3 of the rate listed above.

Oats are the recommended nurse crop for warm-season grasses.

2/ For sandy soils, plant seeds at twice the depth listed above.
3/ The planting dates listed are averages for each Zone and may require adjustment to reflect local conditions, especially near the boundaries of the zone.

H-5 STANDARDS AND SPECIFICATIONS FOR DUST CONTROL

DEFINITION

CONTROLLING THE SUSPENSION OF DUST PARTICLES FROM CONSTRUCTION ACTIVITIES.

PURPOSE

TO PREVENT BLOWING AND MOVEMENT OF DUST FROM EXPOSED SOIL SURFACES TO REDUCE ON AND OFF-SITE DAMAGE INCLUDING HEALTH AND TRAFFIC HAZARDS.

CONDITIONS WHERE PRACTICE APPLIES

AREAS SUBJECT TO DUST BLOWING AND MOVEMENT WHERE ON AND OFF-SITE DAMAGE IS LIKELY WITHOUT TREATMENT.

SPECIFICATIONS

1. MULCHES: SEE SECTION B-4-2 SOIL PREPARATION, TOPSOILING, AND SOIL AMENDMENTS, SECTION B-4-3 SEEDING AND MULCHING, AND SECTION B-4-4 TEMPORARY STABILIZATION. MULCH MUST BE ANCHORED TO PREVENT BLOWING.
2. VEGETATIVE COVER: SEE SECTION B-4-4 TEMPORARY STABILIZATION.
3. TILLAGE: TILL TO ROUGHEN SURFACE AND BRING CLODS TO THE SURFACE. BEGIN PLOWING ON WINDWARD SIDE OF SITE. CHISEL-TYPE PLOWS SPACED ABOUT 12 INCHES APART, SPRING-TOOTHED HARROWS, AND SIMILAR PLOWS ARE EXAMPLES OF EQUIPMENT THAT MAY PRODUCE THE DESIRED EFFECT.
4. IRRIGATION: SPRINKLE SITE WITH WATER UNTIL THE SURFACE IS MOIST. REPEAT AS NEEDED. THE SITE MUST NOT BE IRRIGATED TO THE POINT THAT RUNOFF OCCURS.
5. BARRIERS: SOLID BOARD FENCES, SILT FENCES, SNOW FENCES, BURLAP FENCES, STRAW BALES, AND SIMILAR MATERIAL CAN BE USED TO CONTROL AIR CURRENTS AND SOIL BLOWING.
6. CHEMICAL TREATMENT: USE OF CHEMICAL TREATMENT REQUIRES APPROVAL BY THE APPROPRIATE PLAN REVIEW AUTHORITY.

THE DRAWINGS IN THIS SET ARE RECORD DRAWINGS. THEY ARE CONSTRUCTION CONTRACT DRAWINGS WHICH HAVE BEEN REVISED BASED ON AVAILABLE FIELD INFORMATION RECORDED BY OTHERS DURING CONSTRUCTION OF THIS CONTRACT. THERE HAS BEEN NO VERIFICATION OF DIMENSIONS SHOWN ON THE CONSTRUCTION DRAWINGS OR THE ACCURACY/COMPLETENESS OF THE FIELD INFORMATION RECEIVED.

SIGNATURE _____ DATE 2/7/2020

AS-BUILT REPLACEMENT SHEET

PROFESSIONAL CERTIFICATION

THIS DRAWING WAS ORIGINALLY APPROVED FOR CONSTRUCTION AND SEALED BY ROBERT BAYSDEN, A REGISTERED PROFESSIONAL ENGINEER IN THE STATE OF MARYLAND, NO. 49972.

NOTICE TO CONTRACTORS

- PROJECT ELEVATIONS ARE BASED ON NAVD88 AND HOWARD COUNTY'S BENCHMARK SYSTEM
- PREVIOUS PROJECTS USED OTHER DATUMS
- APPLY THE FOLLOWING CONVERSIONS WHEN USING PREVIOUS CONTRACT DRAWINGS:
  - ADDITION NO. 6: SUBTRACT 0.80 FT
  - PRIOR ADDITIONS: SUBTRACT 1.04 FT

DEPARTMENT OF PUBLIC WORKS
HOWARD COUNTY, MARYLAND

CHIEF, BUREAU OF UTILITIES DATE

DES: M.L.
DRN: S.W.
CHK: R.B.
DATE: 01/2018

DATE	REV	DESCRIPTION
03/2021		RECORD DRAWINGS

CIVIL

EROSION CONTROL NOTES AND DETAILS

LITTLE PATUXENT WATER RECLAMATION PLANT
8TH ADDITION
BIOSOLIDS PROCESSING FACILITIES - PHASE 2

CAPITAL PROJECT S-6295
CONTRACT NO. 24-4936

ELECTION DISTRICT NO. 6
HOWARD COUNTY, MARYLAND

SCALE AS SHOWN

SHEET 67 OF 311

C-22

B-4-5 STANDARDS AND SPECIFICATIONS FOR PERMANENT STABILIZATION

DEFINITION

TO STABILIZE DISTURBED SOILS WITH PERMANENT VEGETATION.

PURPOSE

TO USE LONG-LIVED PERENNIAL GRASSES AND LEGUMES TO ESTABLISH PERMANENT GROUND COVER ON DISTURBED SOILS.

CONDITIONS WHERE PRACTICE APPLIES

EXPOSED SOILS WHERE GROUND COVER IS NEEDED FOR 6 MONTHS OR MORE.

CRITERIA

A. SEED MIXTURES

1. GENERAL USE
   a. SELECT ONE OR MORE OF THE SPECIES OR MIXTURES LISTED IN TABLE B.3 FOR THE APPROPRIATE PLANT HARDINESS ZONE (FROM FIGURE B.3) AND BASED ON THE SITE CONDITION OR PURPOSE FOUND ON TABLE B.2. ENTER SELECTED MIXTURE(S), APPLICATION RATES, AND SEEDING DATES IN THE PERMANENT SEEDING SUMMARY. THE SUMMARY IS TO BE PLACED ON THE PLAN.
   b. ADDITIONAL PLANTING SPECIFICATIONS FOR EXCEPTIONAL SITES SUCH AS SHORELINES, STREAM BANKS, OR DUNES OR FOR SPECIAL PURPOSES SUCH AS WILDLIFE OR AESTHETIC TREATMENT MAY BE FOUND IN USDA-NRCS TECHNICAL FIELD OFFICE GUIDE, SECTION 342 - CRITICAL AREA PLANTING.
   c. FOR SITES HAVING DISTURBED AREA OVER 5 ACRES, USE AND SHOW THE RATES RECOMMENDED BY THE SOIL TESTING AGENCY.
   d. FOR AREAS RECEIVING LOW MAINTENANCE, APPLY UREA FORM FERTILIZER (46-0-0) AT 3 1/2 POUNDS PER 1000 SQUARE FEET (150 POUNDS PER ACRE) AT THE TIME OF SEEDING IN ADDITION TO THE SOIL AMENDMENTS SHOWN IN THE PERMANENT SEEDING SUMMARY.

2. TURFGRASS MIXTURES

   a. AREAS WHERE TURFGRASS MAY BE DESIRED INCLUDE LAWNS, PARKS, PLAYGROUNDS, AND COMMERCIAL SITES WHICH WILL RECEIVE A MEDIUM TO HIGH LEVEL OF MAINTENANCE.

   b. SELECT ONE OR MORE OF THE SPECIES OR MIXTURES LISTED BELOW BASED ON THE SITE CONDITIONS OR PURPOSE. ENTER SELECTED MIXTURE(S), APPLICATION RATES, AND SEEDING DATES IN THE PERMANENT SEEDING SUMMARY. THE SUMMARY IS TO BE PLACED ON THE PLAN.

      i. KENTUCKY BLUEGRASS: FULL SUN MIXTURE: FOR USE IN AREAS THAT RECEIVE INTENSIVE MANAGEMENT. IRRIGATION REQUIRED IN THE AREAS OF CENTRAL MARYLAND AND EASTERN SHORE. RECOMMENDED CERTIFIED KENTUCKY BLUEGRASS CULTIVARS SEEDING RATE: 1.5 TO 2.0 POUNDS PER 1000 SQUARE FEET. CHOOSE A MINIMUM OF THREE KENTUCKY BLUEGRASS CULTIVARS WITH EACH RANGING FROM 10 TO 35 PERCENT OF THE TOTAL MIXTURE BY WEIGHT.

      ii. KENTUCKY BLUEGRASS/PERENNIAL RYE: FULL SUN MIXTURE: FOR USE IN FULL SUN AREAS WHERE RAPID ESTABLISHMENT IS NECESSARY AND WHEN TURF WILL RECEIVE MEDIUM TO INTENSIVE MANAGEMENT. CERTIFIED PERENNIAL RYEGRASS CULTIVARS/CERTIFIED KENTUCKY BLUEGRASS SEEDING RATE: 2 POUNDS MIXTURE PER 1000 SQUARE FEET. CHOOSE A MINIMUM OF THREE KENTUCKY BLUEGRASS CULTIVARS WITH EACH RANGING FROM 10 TO 35 PERCENT OF THE TOTAL MIXTURE BY WEIGHT.

      iii. TALL FESCUE/KENTUCKY BLUEGRASS: FULL SUN MIXTURE: FOR USE IN DROUGHT PRONE AREAS AND/OR FOR AREAS RECEIVING LOW TO MEDIUM MANAGEMENT IN FULL SUN TO MEDIUM SHADE.
      RECOMMENDED MIXTURE INCLUDES; CERTIFIED TALL FESCUE CULTIVARS 95 TO 100 PERCENT, CERTIFIED KENTUCKY BLUEGRASS CULTIVARS 0 TO 5 PERCENT. SEEDING RATE: 5 TO 8 POUNDS PER 1000 SQUARE FEET. ONE OR MORE CULTIVARS MAY BE BLENDED.

      iv. KENTUCKY BLUEGRASS/FINE FESCUE: SHADE MIXTURE: FOR USE IN AREAS WITH SHADE IN BLUEGRASS LAWNS. FOR ESTABLISHMENT IN HIGH QUALITY, INTENSIVELY MANAGED TURF AREA. MIXTURE INCLUDES; CERTIFIED KENTUCKY BLUEGRASS CULTIVARS 30 TO 40 PERCENT AND CERTIFIED FINE FESCUE AND 60 TO 70 PERCENT. SEEDING RATE: 1 1/2 TO 3 POUNDS PER 1000 SQUARE FEET.

      NOTES:

      SELECT TURFGRASS VARIETIES FROM THOSE LISTED IN THE MOST CURRENT UNIVERSITY OF MARYLAND PUBLICATION, AGRONOMY MEMO #77, "TURFGRASS CULTIVAR RECOMMENDATIONS FOR MARYLAND"

      CHOOSE CERTIFIED MATERIAL. CERTIFIED MATERIAL IS THE BEST GUARANTEE OF CULTIVAR PURITY. THE CERTIFICATION PROGRAM OF THE MARYLAND DEPARTMENT OF AGRICULTURE, TURF AND SEED SECTION, PROVIDES A RELIABLE MEANS OF CONSUMER PROTECTION AND ASSURES A PURE GENETIC LINE

i. IDEAL TIMES OF SEEDING FOR TURF GRASS MIXTURES
   WESTERN MD: MARCH 15 TO JUNE 1, AUGUST 1 TO OCTOBER 1 (HARDINESS ZONES: 5B, 6A)
   CENTRAL MD: MARCH 1 TO MAY 15, AUGUST 15 TO OCTOBER 15 (HARDINESS ZONE: 6B)
   SOUTHERN MD, EASTERN SHORE: MARCH 1 TO MAY 15, AUGUST 15 TO OCTOBER 15 (HARDINESS ZONES: 7A, 7B)

j. TILL AREAS TO RECEIVE SEED BY DISKING OR OTHER APPROVED METHODS TO A DEPTH OF 2 TO 4 INCHES, LEVEL AND RAKE THE AREAS TO PREPARE A PROPER SEEDBED. REMOVE STONES AND DEBRIS OVER 1 1/2 INCHES IN DIAMETER. THE RESULTING SEEDBED MUST BE IN SUCH CONDITION THAT FUTURE MOWING OF GRASSES WILL POSE NO DIFFICULTY.

k. IF SOIL MOISTURE IS DEFICIENT, SUPPLY NEW SEEDINGS WITH ADEQUATE WATER FOR PLANT GROWTH (1/2 TO 1 INCH EVERY 3 TO 4 DAYS DEPENDING ON SOIL TEXTURE) UNTIL THEY ARE FIRMLY ESTABLISHED. THIS IS ESPECIALLY TRUE WHEN SEEDINGS ARE MADE LATE IN THE PLANTING SEASON, IN ABNORMALLY DRY OR HOT SEASONS, OR ON ADVERSE SITES.

THE DRAWINGS IN THIS SET ARE RECORD DRAWINGS. THEY ARE CONSTRUCTION CONTRACT DRAWINGS WHICH HAVE BEEN REVISED BASED ON AVAILABLE FIELD INFORMATION RECORDED BY OTHERS DURING CONSTRUCTION OF THIS CONTRACT. THERE HAS BEEN NO VERIFICATION OF DIMENSIONS SHOWN ON THE CONSTRUCTION DRAWINGS OR THE ACCURACY/COMPLETENESS OF THE FIELD INFORMATION RECEIVED.

SIGNATURE _____ DATE 2/7/2020

B-4-5 (CONTINUED) PERMANENT SEEDING SUMMARY

HARDINESS ZONE: 6b
SEED MIXTURE: #9 (Tall Fescue/ Kentucky Bluegrass)

	SPECIES	APPLICATION RATE	SEEDING DATES	SEEDING DEPTHS	FERTILIZER RATE (10-20-20)	LIME RATE
		6-8 lb/ 1000 s.f.	Mar. 1 to May 15, Aug. 15 to Oct. 15	1/4 - 1/2 IN.	1.0 lb/ 1000 s.f. (45 lb/acre)	90 lb/ 1000 s.f.

* Other cultivars listed as "proven" in the most current UMD TT-77 may also be used

B. SOD: TO PROVIDE QUICK COVER ON DISTURBED AREAS (2:1 GRADE OR FLATTER).

1. GENERAL SPECIFICATIONS

   a. CLASS OF TURFGRASS SOD MUST BE MARYLAND STATE CERTIFIED. SOD LABELS MUST BE MADE AVAILABLE TO THE JOB FOREMAN AND INSPECTOR.
   b. SOD MUST BE MACHINE CUT AT A UNIFORM SOIL THICKNESS OF 3/4 INCH, PLUS OR MINUS 1/4 INCH, AT THE TIME OF CUTTING. MEASUREMENT FOR THICKNESS MUST EXCLUDE TOP GROWTH AND THATCH. BROKEN PADS AND TORN OR UNEVEN ENDS WILL NOT BE ACCEPTABLE.
   c. STANDARD SIZE SECTIONS OF SOD MUST BE STRONG ENOUGH TO SUPPORT THEIR OWN WEIGHT AND RETAIN THEIR SIZE AND SHAPE WHEN SUSPENDED VERTICALLY WITH A FIRM GRASP ON THE UPPER 10 PERCENT OF THE SECTION.
   d. SOD MUST NOT BE HARVESTED OR TRANSPLANTED WHEN MOISTURE CONTENT (EXCESSIVELY DRY OR WET) MAY ADVERSELY AFFECT ITS SURVIVAL.
   e. SOD MUST BE HARVESTED, DELIVERED, AND INSTALLED WITHIN A PERIOD OF 36 HOURS. SOD NOT TRANSPLANTED WITHIN THIS PERIOD MUST BE APPROVED BY AN AGRONOMIST OR SOIL SCIENTIST PRIOR TO ITS INSTALLATION.

2. SOD INSTALLATION

   a. DURING PERIODS OF EXCESSIVELY HIGH TEMPERATURE OR IN AREAS HAVING DRY SUBSOIL, LIGHTLY IRRIGATE THE SUBSOIL IMMEDIATELY PRIOR TO LAYING THE SOD.
   b. LAY THE FIRST ROW OF SOD IN A STRAIGHT LINE WITH SUBSEQUENT ROWS PLACED PARALLEL TO IT AND TIGHTLY WEDGED AGAINST EACH OTHER. STAGGER LATERAL JOINTS TO PROMOTE MORE UNIFORM GROWTH AND STRENGTH. ENSURE THAT SOD IS NOT STRETCHED OR OVERLAPPED AND THAT ALL JOINTS ARE BUTTED TIGHT IN ORDER TO PREVENT VOIDS WHICH WOULD CAUSE AIR DRYING OF THE ROOTS.
   c. WHEREVER POSSIBLE, LAY SOD WITH THE LONG EDGES PARALLEL TO THE CONTOUR AND WITH STAGGERING JOINTS. ROLL AND TAMP. PEG OR OTHERWISE SECURE THE SOD TO PREVENT SLIPPAGE ON SLOPES. ENSURE SOLID CONTACT EXISTS BETWEEN SOD ROOTS AND THE UNDERLYING SOIL SURFACE.
   d. WATER THE SOD IMMEDIATELY FOLLOWING ROLLING AND TAMPING UNTIL THE UNDERSIDE OF THE NEW SOD PAD AND SOIL SURFACE BELOW THE SOD ARE THOROUGHLY WET. COMPLETE THE OPERATIONS OF LAYING, TAMPING AND IRRIGATING FOR ANY PIECE OF SOD WITHIN EIGHT HOURS.

3. SOD MAINTENANCE

   a. IN THE ABSENCE OF ADEQUATE RAINFALL, WATER DAILY DURING THE FIRST WEEK OR AS OFTEN AND SUFFICIENTLY AS NECESSARY TO MAINTAIN MOIST SOIL TO A DEPTH OF 4 INCHES. WATER SOD DURING THE HEAT OF THE DAY TO PREVENT WILTING.
   b. AFTER THE FIRST WEEK, SOD WATERING IS REQUIRED AS NECESSARY TO MAINTAIN ADEQUATE MOISTURE CONTENT.
   c. DO NOT MOW UNTIL THE SOD IS FIRMLY ROOTED. NO MORE THAN 1/3 OF THE GRASS LEAF MUST BE REMOVED BY THE INITIAL CUTTING OR SUBSEQUENT CUTTINGS. MAINTAIN A GRASS HEIGHT OF AT LEAST 3 INCHES UNLESS OTHERWISE SPECIFIED.

DETAIL D-2 STONE CHECK DAM

STANDARD SYMBOL: CD

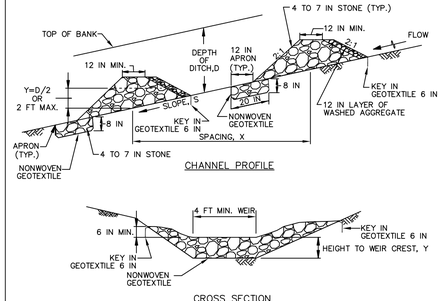

CONSTRUCTION SPECIFICATIONS

1. PREPARE SWALES IN ACCORDANCE WITH THE CONSTRUCTION SPECIFICATIONS DESCRIBED IN SECTION C–2, STANDARDS AND SPECIFICATIONS FOR TEMPORARY SWALE, OR AS SPECIFIED ON PLAN.
2. PLACE NONWOVEN GEOTEXTILE, AS SPECIFIED IN SECTION H–1 MATERIALS, UNDER THE BOTTOM AND SIDES OF THE DAM PRIOR TO PLACEMENT OF STONE. CONSTRUCT THE CHECK DAM WITH WASHED 4 TO 7 INCH STONE OR EQUIVALENT RECYCLED CONCRETE (WITHOUT REBAR) WITH SIDE SLOPES OF 2:1 OR FLATTER AND A MINIMUM TOP WIDTH OF 12 INCHES. PLACE THE STONE SO THAT IT COMPLETELY COVERS THE WIDTH OF THE CHANNEL AND CHANNEL BANKS. FORM THE WEIR SO THAT TOP OF THE OUTLET CREST IS APPROXIMATELY 6 INCHES LOWER THAN THE OUTER EDGES. LINE THE UPSTREAM FACE OF THE DAM WITH A 1 FOOT THICK LAYER OF WASHED AGGREGATE (¾ TO 1½ INCH).
3. SET THE HEIGHT FOR THE WEIR CREST EQUAL TO ONE–HALF THE DEPTH OF THE CHANNEL OR DITCH. TO AVOID SCOUR THE MAXIMUM HEIGHT OF THE WEIR CREST MUST NOT EXCEED 2.0 FEET.
4. REMOVE ACCUMULATED SEDIMENT WHEN IT REACHES ONE–HALF OF THE HEIGHT OF THE WEIR CREST. MAINTAIN LINE, GRADE, AND CROSS SECTION.

MARYLAND STANDARDS AND SPECIFICATIONS FOR SOIL EROSION AND SEDIMENT CONTROL

U.S. DEPARTMENT OF AGRICULTURE NATURAL RESOURCES CONSERVATION SERVICE	2011	MARYLAND DEPARTMENT OF ENVIRONMENT WATER MANAGEMENT ADMINISTRATION

DETAIL E-3 SUPER SILT FENCE

STANDARD SYMBOL: SSF

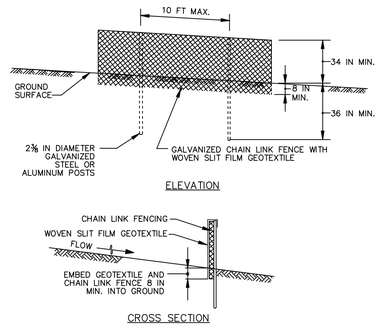

CONSTRUCTION SPECIFICATIONS

1. INSTALL 2⅜ INCH DIAMETER GALVANIZED STEEL POSTS OF 0.095 INCH WALL THICKNESS AND SIX FOOT LENGTH SPACED NO FURTHER THAN 10 FEET APART. DRIVE THE POSTS A MINIMUM OF 36 INCHES INTO THE GROUND.
2. FASTEN 9 GAUGE OR HEAVIER GALVANIZED CHAIN LINK FENCE (2⅜ INCH MAXIMUM OPENING) 42 INCHES IN HEIGHT SECURELY TO THE FENCE POSTS WITH WIRE TIES OR HUG RINGS.
3. FASTEN WOVEN SLIT FILM GEOTEXTILE AS SPECIFIED IN SECTION H–1 MATERIALS, SECURELY TO THE UPSLOPE SIDE OF CHAIN LINK FENCE WITH TIES SPACED EVERY 24 INCHES AT THE TOP AND MID SECTION. EMBED GEOTEXTILE AND CHAIN LINK FENCE A MINIMUM OF 8 INCHES INTO THE GROUND.
4. WHERE ENDS OF THE GEOTEXTILE COME TOGETHER, THE ENDS SHALL BE OVERLAPPED BY 6 INCHES, FOLDED, AND STAPLED TO PREVENT SEDIMENT BY PASS.
5. EXTEND BOTH ENDS OF THE SUPER SILT FENCE A MINIMUM OF FIVE HORIZONTAL FEET UPSLOPE AT 45 DEGREES TO THE MAIN FENCE ALIGNMENT TO PREVENT RUNOFF FROM GOING AROUND THE ENDS OF THE SUPER SILT FENCE.
6. PROVIDE MANUFACTURER CERTIFICATION TO THE INSPECTION/ENFORCEMENT AUTHORITY SHOWING THAT GEOTEXTILE USED MEETS THE REQUIREMENTS IN SECTION H–1 MATERIALS.
7. REMOVE ACCUMULATED SEDIMENT AND DEBRIS WHEN BULGES DEVELOP IN FENCE OR WHEN SEDIMENT REACHES 25% OF FENCE HEIGHT. REPLACE GEOTEXTILE IF TORN. IF UNDERMINING OCCURS, REINSTALL CHAIN LINK FENCING AND GEOTEXTILE.

MARYLAND STANDARDS AND SPECIFICATIONS FOR SOIL EROSION AND SEDIMENT CONTROL

U.S. DEPARTMENT OF AGRICULTURE NATURAL RESOURCES CONSERVATION SERVICE	2011	MARYLAND DEPARTMENT OF ENVIRONMENT WATER MANAGEMENT ADMINISTRATION

DETAIL E-1 SILT FENCE

STANDARD SYMBOL: SF

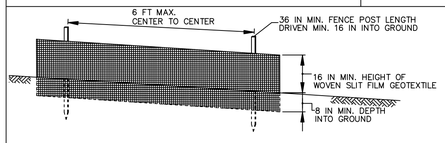

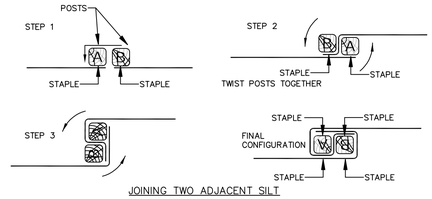

JOINING TWO ADJACENT SILT FENCE SECTIONS (TOP VIEW)

1 OF 2

MARYLAND STANDARDS AND SPECIFICATIONS FOR SOIL EROSION AND SEDIMENT CONTROL

U.S. DEPARTMENT OF AGRICULTURE NATURAL RESOURCES CONSERVATION SERVICE	2011	MARYLAND DEPARTMENT OF ENVIRONMENT WATER MANAGEMENT ADMINISTRATION

DETAIL B-1 STABILIZED CONSTRUCTION ENTRANCE

STANDARD SYMBOL: SCE

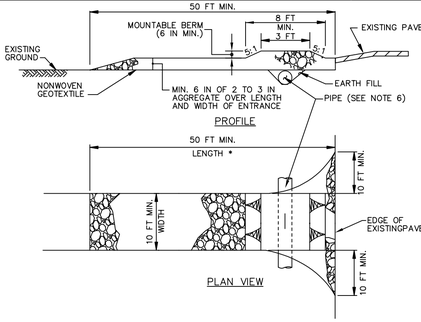

CONSTRUCTION SPECIFICATIONS

1. PLACE STABILIZED CONSTRUCTION ENTRANCE IN ACCORDANCE WITH THE APPROVED PLAN. VEHICLES MUST TRAVEL OVER THE ENTIRE LENGTH OF THE SCE. USE MINIMUM LENGTH OF 50 FEET (*30 FEET FOR SINGLE RESIDENCE LOT). USE MINIMUM WIDTH OF 10 FEET. FLARE SCE 10 FEET MINIMUM AT THE EXISTING ROAD TO PROVIDE A TURNING RADIUS.
2. PIPE ALL SURFACE WATER FLOWING TO OR DIVERTED TOWARD THE SCE UNDER THE ENTRANCE, MAINTAINING POSITIVE DRAINAGE. PROTECT PIPE INSTALLED THROUGH THE SCE WITH A MOUNTABLE BERM WITH 5:1 SLOPES AND A MINIMUM OF 12 INCHES OF STONE OVER THE PIPE. PROVIDE PIPE AS SPECIFIED ON APPROVED PLAN. WHEN THE SCE IS LOCATED AT A HIGH SPOT AND HAS NO DRAINAGE TO CONVEY, A PIPE IS NOT NECESSARY. A MOUNTABLE BERM IS REQUIRED WHEN SCE IS NOT LOCATED AT A HIGH SPOT.
3. PREPARE SUBGRADE AND PLACE NONWOVEN GEOTEXTILE, AS SPECIFIED IN SECTION H–1 MATERIALS.
4. PLACE CRUSHED AGGREGATE (2 TO 3 INCHES IN SIZE) OR EQUIVALENT RECYCLED CONCRETE (WITHOUT REBAR) AT LEAST 6 INCHES DEEP OVER THE LENGTH AND WIDTH OF THE SCE.
5. MAINTAIN ENTRANCE IN A CONDITION THAT MINIMIZES TRACKING OF SEDIMENT. ADD STONE OR MAKE OTHER REPAIRS AS CONDITIONS DEMAND TO MAINTAIN CLEAN SURFACE, MOUNTABLE BERM, AND SPECIFIED DIMENSIONS. IMMEDIATELY REMOVE STONE AND/OR SEDIMENT SPILLED, DROPPED, OR TRACKED ONTO ADJACENT ROADWAY BY VACUUMING, SCRAPING, AND/OR SWEEPING. WASHING ROADWAY TO REMOVE MUD TRACKED ONTO PAVEMENT IS NOT ACCEPTABLE UNLESS WASH WATER IS DIRECTED TO AN APPROVED SEDIMENT CONTROL PRACTICE.

MARYLAND STANDARDS AND SPECIFICATIONS FOR SOIL EROSION AND SEDIMENT CONTROL

U.S. DEPARTMENT OF AGRICULTURE NATURAL RESOURCES CONSERVATION SERVICE	2011	MARYLAND DEPARTMENT OF ENVIRONMENT WATER MANAGEMENT ADMINISTRATION

DETAIL E-1 SILT FENCE

STANDARD SYMBOL: SF

CONSTRUCTION SPECIFICATIONS

1. USE WOOD POSTS 1¾ X 1¾ ± 1/8 INCH (MINIMUM) SQUARE CUT OF SOUND QUALITY HARDWOOD. AS AN ALTERNATIVE TO WOODEN POST USE STANDARD "I" OR "U" SECTION STEEL POSTS WEIGHING NOT LESS THAN 1 POUND PER LINEAR FOOT.
2. USE 36 INCH MINIMUM POSTS DRIVEN 16 INCH MINIMUM INTO GROUND NO MORE THAN 6 FEET APART.
3. USE WOVEN SLIT FILM GEOTEXTILE AS SPECIFIED IN SECTION H–1 MATERIALS AND FASTEN GEOTEXTILE SECURELY TO UPSLOPE SIDE OF FENCE POSTS WITH WIRE TIES OR STAPLES AT TOP AND MID–SECTION.
4. PROVIDE MANUFACTURER CERTIFICATION TO THE AUTHORIZED REPRESENTATIVE OF THE INSPECTION/ENFORCEMENT AUTHORITY SHOWING THAT THE GEOTEXTILE USED MEETS THE REQUIREMENTS IN SECTION H–1 MATERIALS.
5. EMBED GEOTEXTILE A MINIMUM OF 8 INCHES VERTICALLY INTO THE GROUND. BACKFILL AND COMPACT THE SOIL ON BOTH SIDES OF FABRIC.
6. WHERE TWO SECTIONS OF GEOTEXTILE ADJOIN: OVERLAP, TWIST, AND STAPLE TO POST IN ACCORDANCE WITH THIS DETAIL.
7. EXTEND BOTH ENDS OF THE SILT FENCE A MINIMUM OF FIVE HORIZONTAL FEET UPSLOPE AT 45 DEGREES TO THE MAIN FENCE ALIGNMENT TO PREVENT RUNOFF FROM GOING AROUND THE ENDS OF THE SILT FENCE.
8. REMOVE ACCUMULATED SEDIMENT AND DEBRIS WHEN BULGES DEVELOP IN SILT FENCE OR WHEN SEDIMENT REACHES 25% OF FENCE HEIGHT. REPLACE GEOTEXTILE IF TORN. IF UNDERMINING OCCURS, REINSTALL FENCE.

2 OF 2

MARYLAND STANDARDS AND SPECIFICATIONS FOR SOIL EROSION AND SEDIMENT CONTROL

U.S. DEPARTMENT OF AGRICULTURE NATURAL RESOURCES CONSERVATION SERVICE	2011	MARYLAND DEPARTMENT OF ENVIRONMENT WATER MANAGEMENT ADMINISTRATION

DETAIL E-6 FILTER LOG

STANDARD SYMBOL: FL-18

DESIGNATION FL-18 REFERS TO 18 INCH DIAMETER FILTER LOG.

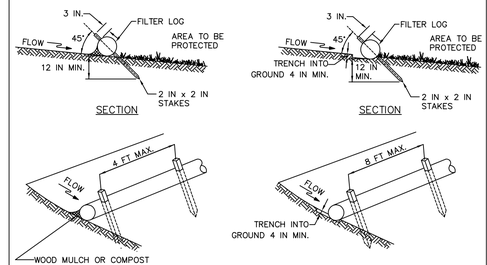

*THIS APPLICATION MAY NOT BE USED WITH LOGS SMALLER THAN 12 IN.

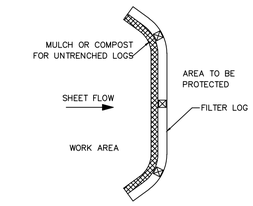

1 OF 2

MARYLAND STANDARDS AND SPECIFICATIONS FOR SOIL EROSION AND SEDIMENT CONTROL

U.S. DEPARTMENT OF AGRICULTURE NATURAL RESOURCES CONSERVATION SERVICE	2011	MARYLAND DEPARTMENT OF ENVIRONMENT WATER MANAGEMENT ADMINISTRATION

DETAIL E-6 FILTER LOG

STANDARD SYMBOL: FL-18

DESIGNATION FL-18 REFERS TO 18 INCH DIAMETER FILTER LOG.

CONSTRUCTION SPECIFICATIONS

1. PRIOR TO INSTALLATION, CLEAR ALL OBSTRUCTIONS INCLUDING ROCKS, CLODS, AND DEBRIS GREATER THAN ONE INCH THAT MAY INTERFERE WITH PROPER FUNCTION OF FILTER LOG.
2. FILL LOG NETTING UNIFORMLY WITH COMPOST (IN ACCORDANCE WITH SECTION H–1 MATERIALS), OR OTHER APPROVED BIODEGRADABLE MATERIAL TO DESIRED LENGTH SUCH THAT LOGS DO NOT DEFORM.
3. INSTALL FILTER LOGS PERPENDICULAR TO THE FLOW DIRECTION AND PARALLEL TO THE SLOPE WITH THE BEGINNING AND END OF THE INSTALLATION POINTING SLIGHTLY UP THE SLOPE CREATING A "J" SHAPE AT EACH END TO PREVENT BYPASS.
4. FOR UNTRENCHED INSTALLATION BLOW OR HAND PLACE MULCH OR COMPOST ON UPHILL SIDE OF THE SLOPE ALONG LOG.
5. STAKE FILTER LOG EVERY 4 FEET OR CLOSER ALONG ENTIRE LENGTH OF LOG OR TRENCH LOG INTO GROUND A MINIMUM OF 4 INCHES AND STAKE LOG EVERY 8 FEET OR CLOSER.
6. USE STAKES WITH A MINIMUM NOMINAL CROSS SECTION OF 2X2 INCH AND OF SUFFICIENT LENGTH TO ATTAIN A MINIMUM OF 12 INCHES INTO THE GROUND AND 3 INCHES PROTRUDING ABOVE LOG.
7. WHEN MORE THAN ONE LOG IS NEEDED, OVERLAP ENDS 12 INCHES MINIMUM AND STAKE.
8. REMOVE SEDIMENT WHEN IT HAS ACCUMULATED TO A DEPTH OF ½ THE EXPOSED HEIGHT OF LOG AND REPLACE MULCH. REPLACE FILTER LOG IF TORN. REINSTALL FILTER LOG IF UNDERMINING OR DISLODGING OCCURS. REPLACE CLOGGED FILTER LOGS. FOR PERMANENT APPLICATIONS, ESTABLISH AND CONTINUOUSLY MEET REQUIREMENTS FOR ADEQUATE VEGETATIVE ESTABLISHMENT IN ACCORDANCE WITH SECTION B–4 VEGETATIVE STABILIZATION.

2 OF 2

MARYLAND STANDARDS AND SPECIFICATIONS FOR SOIL EROSION AND SEDIMENT CONTROL

U.S. DEPARTMENT OF AGRICULTURE NATURAL RESOURCES CONSERVATION SERVICE	2011	MARYLAND DEPARTMENT OF ENVIRONMENT WATER MANAGEMENT ADMINISTRATION

HDR

AS-BUILT REPLACEMENT SHEET

PROFESSIONAL CERTIFICATION
THIS DRAWING WAS ORIGINALLY APPROVED FOR CONSTRUCTION AND SEALED BY ROBERT BAYSDEN, A REGISTERED PROFESSIONAL ENGINEER IN THE STATE OF MARYLAND, NO. 49972.

NOTICE TO CONTRACTORS
- PROJECT ELEVATIONS ARE BASED ON NAVD88 AND HOWARD COUNTY'S BENCHMARK SYSTEM
- PREVIOUS PROJECTS USED OTHER DATUMS
- APPLY THE FOLLOWING CONVERSIONS WHEN USING PREVIOUS CONTRACT DRAWINGS:
  - ADDITION NO. 6: SUBTRACT 0.80 FT
  - PRIOR ADDITIONS: SUBTRACT 1.04 FT

DEPARTMENT OF PUBLIC WORKS
HOWARD COUNTY, MARYLAND

CHIEF, BUREAU OF UTILITIES DATE

DES: M.L.
DRN: S.W.
CHK: R.B.
DATE: 01/2018

DATE	REV	DESCRIPTION
03/2021		RECORD DRAWINGS

CIVIL

EROSION CONTROL NOTES AND DETAILS

LITTLE PATUXENT WATER RECLAMATION PLANT
8TH ADDITION
BIOSOLIDS PROCESSING FACILITIES - PHASE 2

CAPITAL PROJECT S-6295
CONTRACT NO. 24-4936

ELECTION DISTRICT NO. 6
HOWARD COUNTY, MARYLAND

SCALE AS SHOWN

SHEET 68 OF 311

C-23

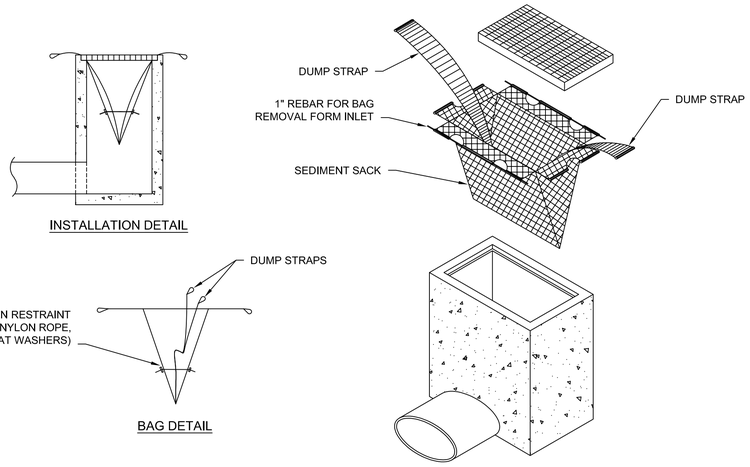

INLET SEDIMENT SACK

NOT TO SCALE

1
-

DETAIL C-2 TEMPORARY SWALE

STANDARD SYMBOL: A-1

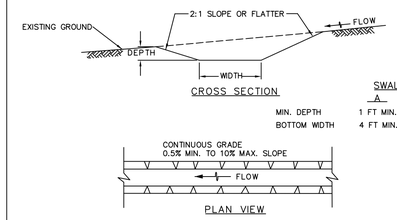

SWALE TYPE	A	B
MIN. DEPTH	1 FT MIN.	1 FT MIN.
BOTTOM WIDTH	4 FT MIN.	6 FT MIN.

FLOW CHANNEL STABILIZATION

A-1	SEED WITH STRAW MULCH AND TACK. (NOT ALLOWED FOR CLEAR WATER DIVERSION.)
A-2/B-2	SEED WITH SOIL STABILIZATION MATTING OR LINE WITH SOD.
A-3/B-3	4 TO 7 INCH STONE OR EQUIVALENT RECYCLED CONCRETE PRESSED INTO SOIL A MINIMUM OF 7 INCHES AND FLUSH WITH GROUND.

CONSTRUCTION SPECIFICATIONS

1. REMOVE AND DISPOSE OF ALL TREES, BRUSH, STUMPS, OBSTRUCTIONS, AND OTHER OBJECTIONABLE MATERIAL SO AS NOT TO INTERFERE WITH PROPER FUNCTION OF TEMPORARY SWALE.
2. EXCAVATE OR SHAPE TEMPORARY SWALE TO LINE, GRADE, AND CROSS SECTION AS SPECIFIED. BANK PROJECTIONS OR OTHER IRREGULARITIES ARE NOT ALLOWED.
3. STABILIZE TEMPORARY SWALE WITHIN THREE DAYS OF INSTALLATION. STABILIZE SWALES USED FOR CLEAR WATER DIVERSION WITHIN 24 HOURS OF INSTALLATION.
4. CONSTRUCT FLOW CHANNEL ON AN UNINTERRUPTED, CONTINUOUS GRADE, ADJUSTING THE LOCATION DUE TO FIELD CONDITIONS AS NECESSARY TO MAINTAIN POSITIVE DRAINAGE.
5. PROVIDE OUTLET PROTECTION AS REQUIRED ON APPROVED PLAN.
6. MAINTAIN LINE, GRADE, AND CROSS SECTION. REMOVE ACCUMULATED SEDIMENT AND DEBRIS, AND MAINTAIN POSITIVE DRAINAGE. KEEP TEMPORARY SWALE AND POINT OF DISCHARGE FREE OF EROSION, AND CONTINUOUSLY MEET REQUIREMENTS FOR ADEQUATE VEGETATIVE ESTABLISHMENT IN ACCORDANCE WITH SECTION B-4 VEGETATIVE STABILIZATION.
7. UPON REMOVAL OF TEMPORARY SWALE, GRADE AREA FLUSH WITH EXISTING GROUND. WITHIN 24 HOURS OF REMOVAL STABILIZE DISTURBED AREA WITH TOPSOIL, SEED, AND MULCH, OR AS SPECIFIED ON APPROVED PLAN.

MARYLAND STANDARDS AND SPECIFICATIONS FOR SOIL EROSION AND SEDIMENT CONTROL

U.S. DEPARTMENT OF AGRICULTURE NATURAL RESOURCES CONSERVATION SERVICE	2011	MARYLAND DEPARTMENT OF ENVIRONMENT WATER MANAGEMENT ADMINISTRATION

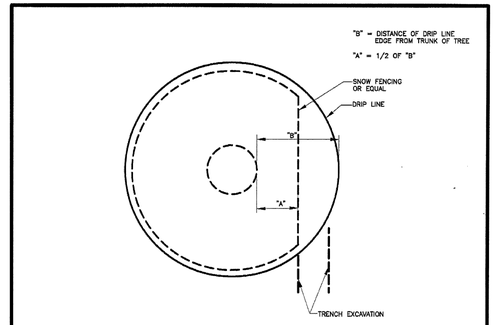

TEMPORARY TREE PROTECTION(PLAN)

NOTES:
FENCING SHALL BE PLACED AT THE DRIP LINE OF TREES TO BE PROTECTED DURING CONSTRUCTION EXCEPT ON THE SIDE OF THE UTILITY TRENCHING. FENCING SHALL NOT BE PLACED CLOSER TO THE TREE THAN 1/2 THE TOTAL DISTANCE FROM THE TREE TO THE LIMITS OF THE TREE'S DRIP LINE. THIS SPACE IS TO ACCOMMODATE TRENCHING ONLY AND NOT TO ALLOW ADDITIONAL WORKING SPACE.

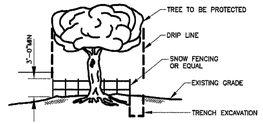

TEMPORARY TREE PROTECTION

NOTES:
1. GROUPS OF TREES MAY BE FENCED AS ONE.

Revised / Revised 5/1/2007 / Approved	Howard County, Maryland Department of Public Works — Approved: Chief, Bureau of Engineering	Temporary Tree Protection Fencing Private	Detail L-9.02

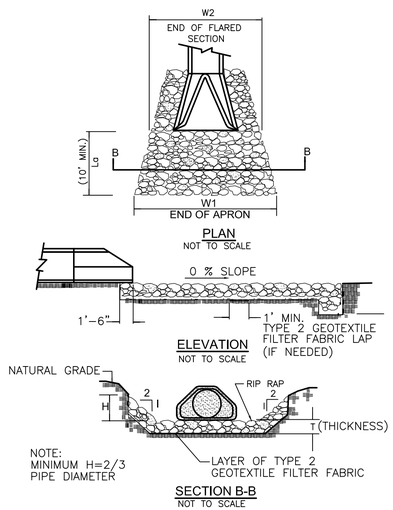

OUTLET APRON DIMENSIONS

12-INCH FES
La = 8'
W2 = 3.75'
W1 = 9.25'
d50 = 0.5'
H = 1.0'
T = 1.13'

NOTES:
1. RIPRAP SHOULD EXTEND UP BOTH SIDES OF THE APRON AND AROUND THE END OF THE PIPE OR CULVERT AT THE DISCHARGE OUTLET AT A MAXIMUM SLOPE OF 2:1 AND A HEIGHT NOT LESS THAN TWO THIRDS THE PIPE DIAMETER OR CULVERT HEIGHT.
2. THERE SHALL BE NO OVERFLOW FROM THE END OF THE APRON TO THE SURFACE OF THE RECEIVING CHANNEL. THE AREA TO BE RIP-RAPPED SHALL BE UNDERCUT SO THAT THE INVERT OF THE APRON SHALL BE AT THE SAME GRADE (FLUSH) WITH THE SURFACE OF THE RECEIVING CHANNEL. THE APRON SHALL HAVE A CUTOFF OR TOE WALL AT THE DOWNSTREAM END.
3. THE WIDTH OF THE END OF THE APRON SHALL BE EQUAL TO THE BOTTOM WIDTH OF THE RECEIVING CHANNEL. MAXIMUM TAPER TO RECEIVING CHANNEL 5:1.
4. ALL SUBGRADE FOR STRUCTURE TO BE COMPACTED TO 95% OR GREATER. THE PLACING OF FILL, EITHER LOOSE OR COMPACTED IN THE RECEIVING CHANNEL SHALL NOT BE ALLOWED.
5. TYPE 2 GEOTEXTILE FILTER FABRIC SHALL BE INSTALLED ON COMPACTED SUBGRADE PRIOR TO PLACEMENT OF RIP RAP. ANY DISTURBED AREA FROM END OF APRON TO RECIEVING CHANNEL MUST BE STABILIZED.
6. H = 2/3 X DIAMETER
   T = 1.5 X dmax. WHERE dmax = 1.5 X d50

RIPRAP OUTLET PROTECTION APRON

NTS

2
-

DETAIL E-9-3 CURB INLET PROTECTION

STANDARD SYMBOL: CIP

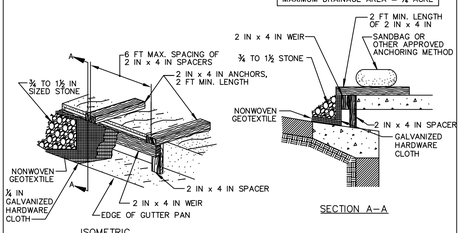

CONSTRUCTION SPECIFICATIONS

1. USE NOMINAL 2 INCH x 4 INCH LUMBER
2. USE NONWOVEN GEOTEXTILE AS SPECIFIED IN SECTION H-1 MATERIALS.
3. NAIL THE 2x4 WEIR TO 9 INCH LONG VERTICAL SPACERS (MAXIMUM 6 FEET APART).
4. ATTACH A CONTINUOUS PIECE OF ¼ INCH GALVANIZED HARDWARE CLOTH, WITH A MINIMUM WIDTH OF 30 INCHES AND A MINIMUM LENGTH OF 4 FEET LONGER THAN THE THROAT OPENING, TO THE 2x4 WEIR, EXTENDING IT 2 FEET BEYOND THROAT ON EACH SIDE.
5. PLACE A CONTINUOUS PIECE OF NONWOVEN GEOTEXTILE OF THE SAME DIMENSIONS AS THE HARDWARE CLOTH OVER THE HARDWARE CLOTH AND SECURELY ATTACH TO THE 2x4 WEIR.
6. PLACE THE ASSEMBLY AGAINST THE INLET THROAT AND NAIL TO 2x4 ANCHORS (MINIMUM 2 FEET LENGTH). EXTEND THE ANCHORS ACROSS THE INLET TOP AND HOLD IN PLACE BY SANDBAGS OR OTHER APPROVED ANCHORING METHOD.
7. INSTALL END SPACERS A MINIMUM OF 1 FOOT BEYOND THE ENDS OF THE THROAT OPENING.
8. FORM THE HARDWARE CLOTH AND THE GEOTEXTILE TO THE CONCRETE GUTTER AND FACE OF CURB TO SPAN THE INLET OPENING. COVER THE HARDWARE CLOTH AND GEOTEXTILE WITH CLEAN ¾ TO 1½ INCH STONE OR EQUIVALENT RECYCLED CONCRETE.
9. AT NON-SUMP LOCATIONS, INSTALL A TEMPORARY SANDBAG OR ASPHALT BERM TO PREVENT INLET BYPASS.
10. STORM DRAIN INLET PROTECTION REQUIRES FREQUENT MAINTENANCE. REMOVE ACCUMULATED SEDIMENT AFTER EACH RAIN EVENT TO MAINTAIN FUNCTION AND AVOID PREMATURE CLOGGING. IF INLET PROTECTION DOES NOT COMPLETELY DRAIN WITHIN 24 HOURS AFTER A STORM EVENT, IT IS CLOGGED. WHEN THIS OCCURS, REMOVE ACCUMULATED SEDIMENT AND CLEAN, OR REPLACE GEOTEXTILE AND STONE.

MARYLAND STANDARDS AND SPECIFICATIONS FOR SOIL EROSION AND SEDIMENT CONTROL

U.S. DEPARTMENT OF AGRICULTURE NATURAL RESOURCES CONSERVATION SERVICE	2011	MARYLAND DEPARTMENT OF ENVIRONMENT WATER MANAGEMENT ADMINISTRATION

DETAIL E-9-2 AT-GRADE INLET PROTECTION

STANDARD SYMBOL: AGIP

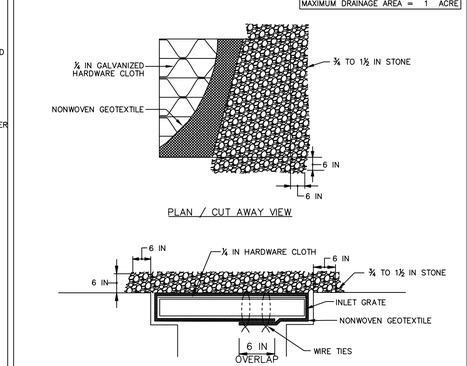

CONSTRUCTION SPECIFICATIONS

1. USE NONWOVEN GEOTEXTILE AS SPECIFIED IN SECTION H-1 MATERIALS.
2. LIFT GRATE AND WRAP WITH NONWOVEN GEOTEXTILE TO COMPLETELY COVER ALL OPENINGS. SECURE WITH WIRE TIES AND SET GRATE BACK IN PLACE.
3. PLACE CLEAN ¾ TO 1½ INCH STONE OR EQUIVALENT RECYCLED CONCRETE 6 INCHES THICK ON THE GRATE.
4. STORM DRAIN INLET PROTECTION REQUIRES FREQUENT MAINTENANCE. REMOVE ACCUMULATED SEDIMENT AFTER EACH RAIN EVENT TO MAINTAIN FUNCTION AND AVOID PREMATURE CLOGGING. IF INLET PROTECTION DOES NOT COMPLETELY DRAIN WITHIN 24 HOURS AFTER A STORM EVENT, IT IS CLOGGED. WHEN THIS OCCURS, REMOVE ACCUMULATED SEDIMENT AND CLEAN, OR REPLACE GEOTEXTILE AND STONE.

MARYLAND STANDARDS AND SPECIFICATIONS FOR SOIL EROSION AND SEDIMENT CONTROL

U.S. DEPARTMENT OF AGRICULTURE NATURAL RESOURCES CONSERVATION SERVICE	2011	MARYLAND DEPARTMENT OF ENVIRONMENT WATER MANAGEMENT ADMINISTRATION

DETAIL H-6 ONSITE CONCRETE WASHOUT STRUCTURE

STANDARD SYMBOL: CWS

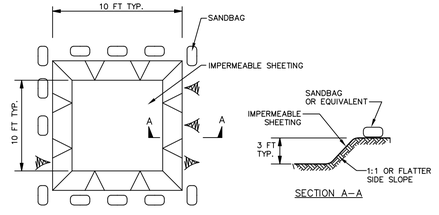

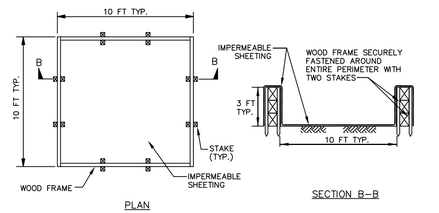

1 OF 2

MARYLAND STANDARDS AND SPECIFICATIONS FOR SOIL EROSION AND SEDIMENT CONTROL

U.S. DEPARTMENT OF AGRICULTURE NATURAL RESOURCES CONSERVATION SERVICE	2011	MARYLAND DEPARTMENT OF ENVIRONMENT WATER MANAGEMENT ADMINISTRATION

DETAIL H-6 ONSITE CONCRETE WASHOUT STRUCTURE

STANDARD SYMBOL: CWS

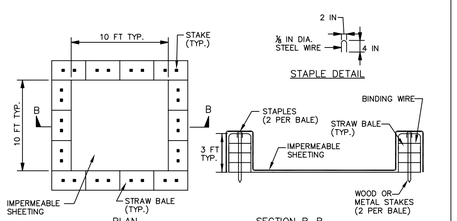

NOTE: CAN BE TWO STACKED BALES OR PARTIALLY EXCAVATED TO REACH 3 FT DEPTH

WASHOUT STRUCTURE WITH STRAW BALES

CONSTRUCTION SPECIFICATIONS

1. LOCATE WASHOUT STRUCTURE A MINIMUM OF 50 FEET AWAY FROM OPEN CHANNELS, STORM DRAIN INLETS, SENSITIVE AREAS, WETLANDS, BUFFERS AND WATER COURSES AND AWAY FROM CONSTRUCTION TRAFFIC.
2. SIZE WASHOUT STRUCTURE FOR VOLUME NECESSARY TO CONTAIN WASH WATER AND SOLIDS AND MAINTAIN AT LEAST 4 INCHES OF FREEBOARD. TYPICAL DIMENSIONS ARE 10 FEET X 10 FEET X 3 FEET DEEP.
3. PREPARE SOIL BASE FREE OF ROCKS OR OTHER DEBRIS THAT MAY CAUSE TEARS OR HOLES IN THE LINER. FOR LINER, USE 10 MIL OR THICKER UV RESISTANT, IMPERMEABLE SHEETING, FREE OF HOLES AND TEARS OR OTHER DEFECTS THAT COMPROMISE IMPERMEABILITY OF THE MATERIAL.
4. PROVIDE A SIGN FOR THE WASHOUT IN CLOSE PROXIMITY TO THE FACILITY.
5. KEEP CONCRETE WASHOUT STRUCTURE WATER TIGHT. REPLACE IMPERMEABLE LINER IF DAMAGED (E.G., RIPPED OR PUNCTURED). EMPTY OR REPLACE WASHOUT STRUCTURE THAT IS 75 PERCENT FULL, AND DISPOSE OF ACCUMULATED MATERIAL PROPERLY. DO NOT REUSE PLASTIC LINER. WET-VACUUM STORED LIQUIDS THAT HAVE NOT EVAPORATED AND DISPOSE OF IN AN APPROVED MANNER. PRIOR TO FORECASTED RAINSTORMS, REMOVE LIQUIDS OR COVER STRUCTURE TO PREVENT OVERFLOWS. REMOVE HARDENED SOLIDS, WHOLE OR BROKEN UP, FOR DISPOSAL OR RECYCLING. MAINTAIN RUNOFF DIVERSION AROUND EXCAVATED WASHOUT STRUCTURE UNTIL STRUCTURE IS REMOVED.

2 OF 2

MARYLAND STANDARDS AND SPECIFICATIONS FOR SOIL EROSION AND SEDIMENT CONTROL

U.S. DEPARTMENT OF AGRICULTURE NATURAL RESOURCES CONSERVATION SERVICE	2011	MARYLAND DEPARTMENT OF ENVIRONMENT WATER MANAGEMENT ADMINISTRATION

THE DRAWINGS IN THIS SET ARE RECORD DRAWINGS. THEY ARE CONSTRUCTION CONTRACT DRAWINGS WHICH HAVE BEEN REVISED BASED ON AVAILABLE FIELD INFORMATION RECORDED BY OTHERS DURING CONSTRUCTION OF THIS CONTRACT. THERE HAS BEEN NO VERIFICATION OF DIMENSIONS SHOWN ON THE CONSTRUCTION DRAWINGS OR THE ACCURACY/COMPLETENESS OF THE FIELD INFORMATION RECEIVED.

SIGNATURE _____ DATE 2/7/2023

AS-BUILT REPLACEMENT SHEET

PROFESSIONAL CERTIFICATION
THIS DRAWING WAS ORIGINALLY APPROVED FOR CONSTRUCTION AND SEALED BY ROBERT BAYSDEN, A REGISTERED PROFESSIONAL ENGINEER IN THE STATE OF MARYLAND, NO. 49972.

NOTICE TO CONTRACTORS
- PROJECT ELEVATIONS ARE BASED ON NAVD88 AND HOWARD COUNTY'S BENCHMARK SYSTEM
- PREVIOUS PROJECTS USED OTHER DATUMS
- APPLY THE FOLLOWING CONVERSIONS WHEN USING PREVIOUS CONTRACT DRAWINGS:
  - ADDITION NO. 6: SUBTRACT 0.80 FT
  - PRIOR ADDITIONS: SUBTRACT 1.04 FT

DEPARTMENT OF PUBLIC WORKS
HOWARD COUNTY, MARYLAND

CHIEF, BUREAU OF UTILITIES DATE

DES: M.L.
DRN: S.W.
CHK: R.B.
DATE: 01/2018

DATE	REV	DESCRIPTION
03/2021		RECORD DRAWINGS

CIVIL

EROSION CONTROL NOTES AND DETAILS

LITTLE PATUXENT WATER RECLAMATION PLANT
8TH ADDITION
BIOSOLIDS PROCESSING FACILITIES - PHASE 2

CAPITAL PROJECT S-6295
CONTRACT NO. 24-4936

ELECTION DISTRICT NO. 6
HOWARD COUNTY, MARYLAND

SCALE AS SHOWN

SHEET 69 OF 311

C-24

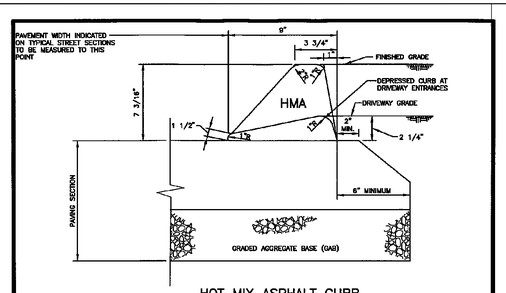

HOT MIX ASPHALT CURB

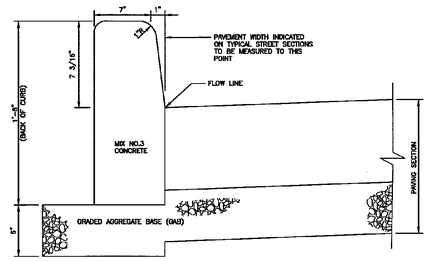

CONCRETE BARRIER CURB

NOTES:

1. A MINIMUM OF TWO (2) FEET OF COMPACTED STABILIZED EARTH, OR EQUIVALENT, SHALL SUPPORT THE ENTIRE BACK OF CURB.
2. POSITIVE DRAINAGE SHALL BE PROVIDED BOTH BEHIND THE CURB AND ALONG THE GUTTER AND FLOW LINE.

Revised / Revised / 5/1/2007 Approved	Howard County, Maryland Department of Public Works — Approved: Chief, Bureau of Engineering	CURBS Hot Mix Asphalt & Concrete Barrier	Detail R-3.03

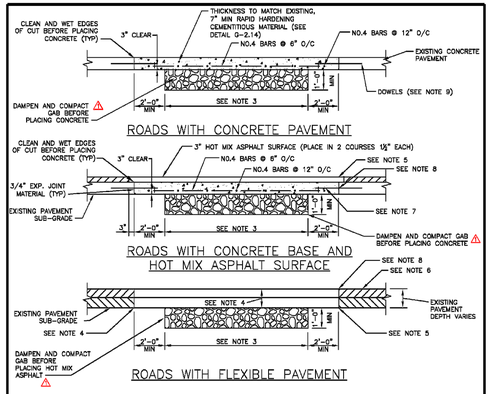

NOTES:

1. WHEREVER A TRENCH CROSSES A CONCRETE ROADWAY THAT HAS JOINT INSTALLATIONS THE ENTIRE SLAB BETWEEN THE EDGE OF THE TRENCH AND THE NEAREST JOINT SHALL BE REMOVED IF THE DISTANCE IS LESS THAN 10 FEET.
2. CLEAN AND WET EDGES OF CUT AND SUBGRADE BEFORE PLACING CONCRETE.
3. AGGREGATE SUB-BASE WIDTH SHALL BE 6 FT MINIMUM OR ACTUAL TRENCH WIDTH, WHICH EVER IS GREATER.
4. HOT MIX ASPHALT PAVEMENT PATCH THICKNESS SHALL BE EQUAL TO THE EXISTING PAVING SECTION OR AS APPROVED BY DPW. THE MINIMUM PAVING PATCH SHALL CONSIST OF 2" HMA SURFACE COURSE OVER 4" HMA BASE COURSE. GRADED AGGREGATE BASE (GAB) SHALL BE PLACED AND COMPACTED IN 6" MAXIMUM COMPACTED THICKNESS LAYERS.
5. CLEAN EXPOSED VERTICAL SURFACE OF ADJACENT PAVEMENT AND PLACE TACK COAT ON ALL VERTICAL SURFACES PRIOR TO PLACING HMA.
6. IF THE REMAINING EXISTING PAVEMENT IS LESS THAN 4' WIDE , THE RESIDUAL PAVEMENT SHALL BE REMOVED IN ITS ENTIRITY AND REPLACED.
7. CONCRETE REPLACEMENT SHALL BE 10" MINIMUM MIX NO. 6.
8. SAW CUT FULL DEPTH ALL JOINTS OF EXISTING CONCRETE, BITUMINOUS, AND BASE PAVEMENTS.
9. REINFORCEMENT OF CONCRETE PAVING SHALL BE ACCOMPLISHED BY DOWELING. DOWELS SHALL BE CENTERED IN PAVEMENT THICKNESS. NEW REINFORCING SHALL BE TIED TO DOWELS.
10. TOTAL REPAIR WIDTH SHALL BE EQUAL TO THE LANE WIDTH IN ACCORDANCE WITH THE SPECIFICATIONS.

Revised / 5/1/2014 Revised / 5/1/2007 Approved	Howard County, Maryland Department of Public Works — Approved: Chief, Bureau of Engineering	Utility Trench Roadway Repaving	Detail G-4.01

SECTION NUMBER	ROAD AND STREET CLASSIFICATION	CALIFORNIA BEARING RATIO (CBR)	3 TO <5	5 TO <7	≥ 7	3 TO <5	5 TO <7	≥ 7
		PAVEMENT MATERIAL (INCHES)	MIN HMA WITH GAB			HMA WITH CONSTANT GAB		
P-1	PARKING BAYS: RESIDENTIAL AND NON-RESIDENTIAL PARKING DRIVE AISLES: RESIDENTIAL AND NON-RESIDENTIAL WITH NO MORE THAN 2 HEAVY TRUCKS PER DAY	HMA SUPERPAVE FINAL SURFACE 9.5 MM PG 64-22, LEVEL 1 (ESAL)	1.5	1.5	1.5	1.5	1.5	1.5
		HMA SUPERPAVE INTERMEDIATE SURFACE (NA)	NA	NA	NA	NA	NA	NA
		HMA SUPERPAVE BASE 19.0 MM, PG 64-22, LEVEL 1 (ESAL)	2.0	2.0	2.0	3.5	3.0	2.5
		GRADED AGGREGATE BASE (GAB)	8.5	7.0	5.0	4.0	4.0	4.0
P-2	PARKING DRIVE AISLES: RESIDENTIAL AND NON-RESIDENTIAL WITH NO MORE THAN 10 HEAVY TRUCKS PER DAY LOCAL ROADS: ACCESS PLACE, ACCESS STREET CUL-DE-SACS: RESIDENTIAL	HMA SUPERPAVE FINAL SURFACE 9.5 MM, PG 64-22, LEVEL 1 (ESAL)	1.5	1.5	1.5	1.5	1.5	1.5
		HMA SUPERPAVE INTERMEDIATE SURFACE 9.5 MM, PG 64-22, LEVEL 1 (ESAL)	1.0	1.0	1.0	1.0	1.0	1.0
		HMA SUPERPAVE BASE 19.0 MM, PG 64-22, LEVEL 1 (ESAL)	2.0	2.0	2.0	3.5	2.0	2.0
		GRADED AGGREGATE BASE (GAB)	8.0	4.0	3.0	4.0	4.0	4.0
P-3	PARKING DRIVE AISLES: RESIDENTIAL AND NON-RESIDENTIAL WITH NO MORE THAN 10 HEAVY TRUCKS PER DAY LOCAL ROADS: ACCESS PLACE, ACCESS STREET CUL-DE-SACS: NON-RESIDENTIAL MINOR COLLECTORS: RESIDENTIAL	HMA SUPERPAVE FINAL SURFACE 9.5 MM, PG 64-22, LEVEL 1 (ESAL)	1.5	1.5	1.5	1.5	1.5	1.5
		HMA SUPERPAVE INTERMEDIATE SURFACE 9.5 MM, PG 64-22, LEVEL 1 (ESAL)	1.0	1.0	1.0	1.0	1.0	1.0
		HMA SUPERPAVE BASE 19.0 MM, PG 64-22, LEVEL 1 (ESAL)	3.0	3.0	3.0	4.5	3.0	2.0
		GRADED AGGREGATE BASE (GAB)	10.0	6.0	3.0	6.0	6.0	6.0
P-4	MINOR COLLECTORS: NON-RESIDENTIAL MAJOR COLLECTORS	HMA SUPERPAVE FINAL SURFACE 12.5 MM, PG 64-22, LEVEL 2 (LOW ESAL)	2.0	2.0	2.0	2.0	2.0	2.0
		HMA SUPERPAVE INTERMEDIATE SURFACE 12.5 MM, PG 64-22, LEVEL 2 (LOW ESAL)	2.0	2.0	2.0	2.0	2.0	2.0
		HMA SUPERPAVE BASE 19.0 MM, PG 64-22, LEVEL 2 (LOW ESAL)	4.0	4.0	3.0	6.0	5.0	3.0
		GRADED AGGREGATE BASE (GAB)	13.0	7.0	4.0	6.0	6.0	6.0

Notes:
1) HEAVY TRUCKS ARE DEFINED AS THOSE WITH SIX (6) WHEELS OR MORE INCLUDING GARBAGE TRUCKS.
2) HMA SUPERPAVE LAYERS SHALL BE PLACED IN APPROPRIATE COMPACTED LIFT THICKNESS: 19.0 MM BASE (2.0" MIN TO 4.0" MAX), 12.5 MM SURFACE (1.5" MIN TO 3.0" MAX), AND 9.5 MM SURFACE (1.0" MIN TO 2.0" MAX)
3) GRADED AGGREGATE BASE (GAB) TO BE PLACED AND COMPACTED IN 6" MAX COMPACTED THICKNESS LAYERS.
4) THE INTERMEDIATE SURFACE COURSE LAYER MUST BE PLACED WITHIN 2 WEEKS OF PLACEMENT OF BASE COURSE, AND IS REQUIRED PRIOR TO SUBSTANTIAL COMPLETION INSPECTION AND BOND REDUCTION.
5) IN LIEU OF PLACING THE INTERMEDIATE SURFACE COURSE LAYER FOR COMMERCIAL/INDUSTRIAL ENTRANCE APRONS WITHIN THE COUNTY RIGHT-OF-WAY WHERE AUXILIARY LANES ARE NOT REQUIRED, THE THICKNESS OF THE INTERMEDIATE PAVEMENT LAYER CAN BE ADDED TO THE REQUIRED THICKNESS OF THE BASE ASPHALT LAYER.
6) THE CONSTRUCTION DRAWINGS SHALL SHOW THE PAVING SECTION, ROAD CLASSIFICATION AND CRB VALUE FOR EACH ROADWAY

HMA SUPERPAVE FINAL SURFACE
HMA SUPERPAVE INTERMEDIATE SURFACE
HMA SUPERPAVE BASE
GRADED AGGREGATE BASE (GAB)

Revised / Revised / 5/1/2007 Approved	Howard County, Maryland Department of Public Works — Approved: Chief, Bureau of Engineering	PAVING SECTIONS P-1 to P-4	Detail R-2.01

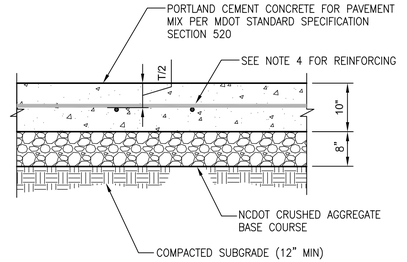

NOTES:

1. ALL PAVEMENT TO BE CONSTRUCTED PER NORTH CAROLINA DEPARTMENT OF TRANSPORTATION SPECIFICATION REQUIREMENTS.
2. CRUSHED AGGREGATE BASE COURSE TO EXTEND A MINIMUM 2 FEET BEYOND EDGE OF PAVEMENT.
3. SEE DETAIL 9/04C-01 FOR JOINT DETAILS.
4. PROVIDE REINFORCEMENT #5 REBAR 12" O.C. BOTH DIRECTIONS.

CONCRETE PAVEMENT SECTION (5 -)
NOT TO SCALE

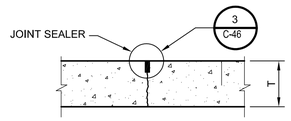

TRANSVERSE CONTRACTION JOINT

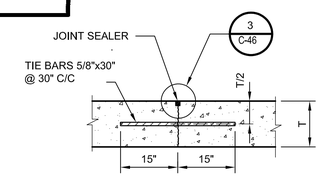

LONGITUDINAL CONTRACTION JOINT

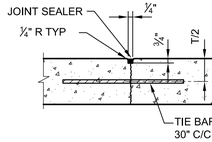

NOTE:

1. WHERE TYING INTO EXISTING PAVEMENT, ALSO USE 3/4" X 18" BARS AT 12" C/C

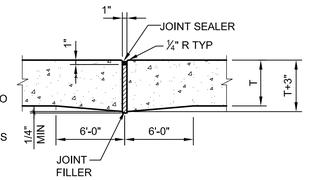

LONGITUDINAL CONSTRUCTION JOINT

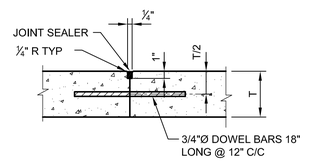

DOWELED CONSTRUCTION JOINT

EXPANSION JOINT

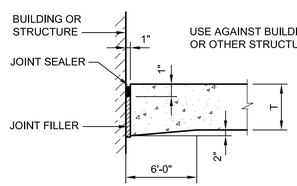

EXPANSION JOINT AT STRUCTURE

NOTE:

T = PAVEMENT THICKNESS PER PLAN

CONCRETE PAVEMENT JOINT DETAILS (4 -)
NOT TO SCALE

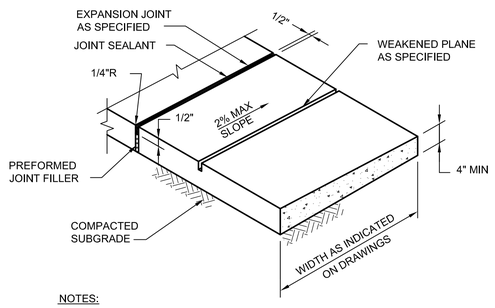

NOTES:

1. PROVIDE FULL DEPTH 3/8 INCH PREFORMED JOINT FILLER ALL AROUND AT ALL UTILITY POLES, METER BOXES, ETC.
2. PLACE PREFORMED JOINT FILLER FULL DEPTH THRU JOINTS AT POINT OF TANGENCY, ABUTTING BUILDINGS, CURBS, WALLS, STRUCTURES. AND AT MINIMUM 25 FOOT INTERVALS.
3. THICKNESS OF CONCRETE AS SHOWN ON DRAWINGS.
4. SEE DETAIL 2/C-46 FOR JOINT DETAILS.

CONCRETE WALKWAY/SIDEWALK/PAD (1 -)
NOT TO SCALE

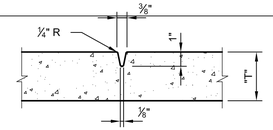

SPACING: 4'-0" WALK - 4'-0" C/C
5'-0" WALK - 5'-0" C/C
6'-0" WALK - 6'-0" C/C

CONTRACTION JOINT

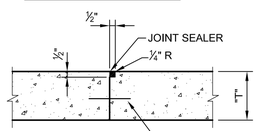

USE ONLY WHERE CONTRACTION JOINTS WOULD OCCUR

CONSTRUCTION JOINT

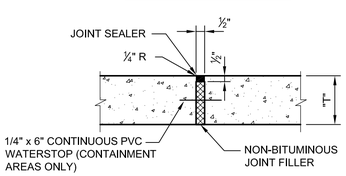

EXPANSION JOINT

"T" = THICKNESS PER PLAN (4" MIN)

CONCRETE WALK JOINT DETAILS (2 -)
NOT TO SCALE

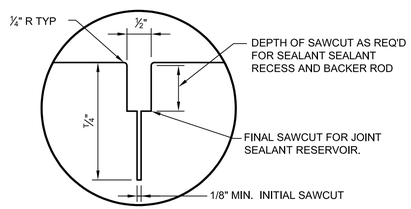

T = PAVEMENT THICKNESS

SAWCUT

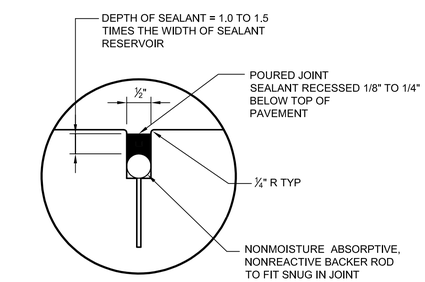

COMPLETED SAWCUT JOINT

SAW CUT DETAILS (3 -)
NOT TO SCALE

THE DRAWINGS IN THIS SET ARE RECORD DRAWINGS. THEY ARE CONSTRUCTION CONTRACT DRAWINGS WHICH HAVE BEEN REVISED BASED ON AVAILABLE FIELD INFORMATION RECORDED BY OTHERS DURING CONSTRUCTION OF THIS CONTRACT. THERE HAS BEEN NO VERIFICATION OF DIMENSIONS SHOWN ON THE CONSTRUCTION DRAWINGS OR THE ACCURACY/COMPLETENESS OF THE FIELD INFORMATION RECEIVED.

SIGNATURE — DATE 2/7/2025

AS-BUILT REPLACEMENT SHEET

PROFESSIONAL CERTIFICATION
THIS DRAWING WAS ORIGINALLY APPROVED FOR CONSTRUCTION AND SEALED BY ROBERT BAYSDEN, A REGISTERED PROFESSIONAL ENGINEER IN THE STATE OF MARYLAND, NO. 49972.

NOTICE TO CONTRACTORS
- PROJECT ELEVATIONS ARE BASED ON NAVD88 AND HOWARD COUNTY'S BENCHMARK SYSTEM
- PREVIOUS PROJECTS USED OTHER DATUMS
- APPLY THE FOLLOWING CONVERSIONS WHEN USING PREVIOUS CONTRACT DRAWINGS:
  - ADDITION NO. 6: SUBTRACT 0.80 FT
  - PRIOR ADDITIONS: SUBTRACT 1.04 FT

DEPARTMENT OF PUBLIC WORKS
HOWARD COUNTY, MARYLAND

CHIEF, BUREAU OF UTILITIES — DATE

DES: M.L.
DRN: S.W.
CHK: R.B.
DATE: 01/2018

DATE	REV	DESCRIPTION
03/2021		RECORD DRAWINGS

CIVIL

CIVIL DETAILS

LITTLE PATUXENT WATER RECLAMATION PLANT
8TH ADDITION
BIOSOLIDS PROCESSING FACILITIES - PHASE 2

CAPITAL PROJECT S-6295
CONTRACT NO. 24-4936

ELECTION DISTRICT NO. 6
HOWARD COUNTY, MARYLAND

SCALE AS SHOWN

SHEET 70 OF 311

C-25

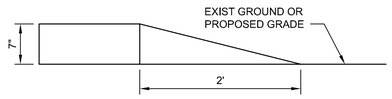

CURB WIPE DOWN

NOT TO SCALE

1 / -

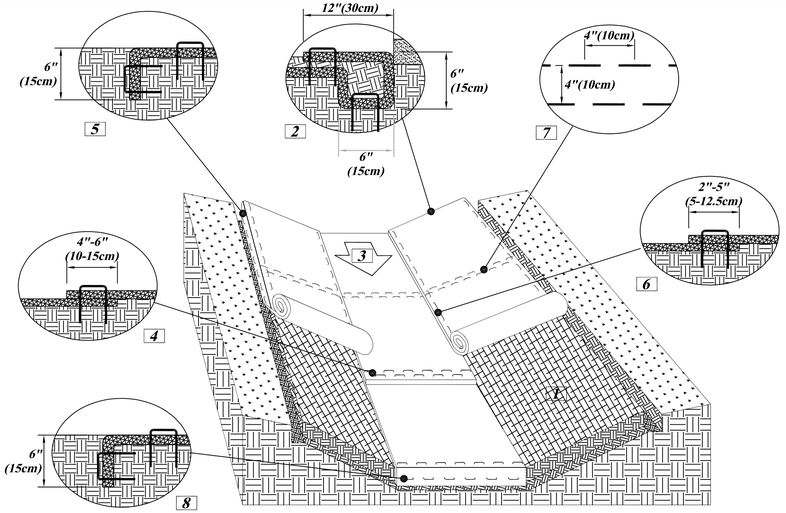

CRITICAL POINTS
A. OVERLAPS AND SEAMS
B. PROJECTED WATER LINE
C. CHANNEL BOTTOM/SIDE SLOPE VERTICES

NOTES:
*HORIZONTAL STAPLE SPACING SHOULD BE ALTERED IF NECESSARY TO ALLOW STAPLES TO SECURE THE CRITICAL POINTS ALONG THE CHANNEL SURFACE.

**IN LOOSE SOIL CONDITIONS, THE USE OF STAPLE OR STAKE LENGTHS GREATER THAN 6"(15CM) MAY BE NECESSARY TO PROPERLY SECURE THE RECP'S.

1. PREPARE SOIL BEFORE INSTALLING ROLLED EROSION CONTROL PRODUCTS (RECPS), INCLUDING ANY NECESSARY APPLICATION OF LIME, FERTILIZER, AND SEED.
2. BEGIN AT THE TOP OF THE CHANNEL BY ANCHORING THE RECPS IN A 6"(15CM) DEEP X 6"(15CM) WIDE TRENCH WITH APPROXIMATELY 12"(30CM) OF RECPS EXTENDED BEYOND THE UP-SLOPE PORTION OF THE TRENCH. USE SHOREMAX MAT AT THE CHANNEL/CULVERT OUTLET AS SUPPLEMENTAL SCOUR PROTECTION AS NEEDED. ANCHOR THE RECPS WITH A ROW OF STAPLES/STAKES APPROXIMATELY 12"(30CM) APART IN THE BOTTOM OF THE TRENCH. BACKFILL AND COMPACT THE TRENCH AFTER STAPLING. APPLY SEED TO THE COMPACTED SOIL AND FOLD THE REMAINING 12"(30CM) PORTION OF RECPS BACK OVER THE SEED AND COMPACTED SOIL. SECURE RECPS OVER COMPACTED SOIL WITH A ROW OF STAPLES/STAKES SPACED APPROXIMATELY 12" APART ACROSS THE WIDTH OF THE RECPS.
3. ROLL CENTER RECPS IN DIRECTION OF WATER FLOW IN BOTTOM OF CHANNEL. RECPS WILL UNROLL WITH APPROPRIATE SIDE AGAINST THE SOIL SURFACE. ALL RECPS MUST BE SECURELY FASTENED TO SOIL SURFACE BY PLACING STAPLES/STAKES IN APPROPRIATE LOCATIONS AS SHOWN IN THE STAPLE PATTERN GUIDE.
4. PLACE CONSECUTIVE RECPS END-OVER-END (SHINGLE STYLE) WITH A 4"-6" OVERLAP. USE A DOUBLE ROW OF STAPLES STAGGERED 4" APART AND 4" ON CENTER TO SECURE RECPS.
5. FULL LENGTH EDGE OF RECPS AT TOP OF SIDE SLOPES MUST BE ANCHORED WITH A ROW OF STAPLES/STAKES APPROXIMATELY 12"(30CM) APART IN A 6"(15CM) DEEP X 6"(15CM) WIDE TRENCH. BACKFILL AND COMPACT THE TRENCH AFTER STAPLING.
6. ADJACENT RECPS MUST BE OVERLAPPED APPROXIMATELY 2"-5" (5-12.5CM) (DEPENDING ON RECPS TYPE) AND STAPLED.
7. IN HIGH FLOW CHANNEL APPLICATIONS A STAPLE CHECK SLOT IS RECOMMENDED AT 30 TO 40 FOOT (9 -12M) INTERVALS. USE A DOUBLE ROW OF STAPLES STAGGERED 4"(10CM) APART AND 4"(10CM) ON CENTER OVER ENTIRE WIDTH OF THE CHANNEL.
8. THE TERMINAL END OF THE RECPS MUST BE ANCHORED WITH A ROW OF STAPLES/STAKES APPROXIMATELY 12" (30CM) APART IN A 6"(15CM) DEEP X 6"(15CM) WIDE TRENCH. BACKFILL AND COMPACT THE TRENCH AFTER STAPLING.

LINER - CHANNEL INSTALLATION DETAIL

NOT TO SCALE

3 / -

DITCH DETAIL

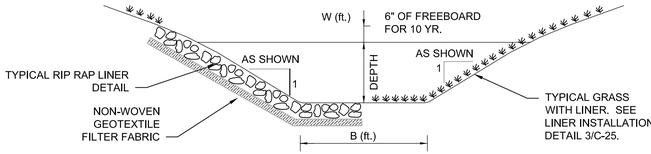

DITCH (ft)	DEPTH (ft)	W (ft)	B (ft)	TEMP LINER	STAPLE PATTERN
1	1	8	2	NAG S150	D

NOTES:
1. SEE SEEDING SPECIFICATIONS FOR SWALES TO BE PERMANENTLY SEEDED
2. RIPRAP SHALL BE CLASS 1, 12-INCH DEEP ON LAYER OF NON-WOVEN GEOTEXTILE FABRIC.
3. LINER TYPE SHALL BE SPECIFIED NORTH AMERICAN GREEN (NAG) TYPE LINER OR EQUIVALENT.

PERMANENT DITCH

NOT TO SCALE

2 / -

THE DRAWINGS IN THIS SET ARE RECORD DRAWINGS. THEY ARE CONSTRUCTION CONTRACT DRAWINGS WHICH HAVE BEEN REVISED BASED ON AVAILABLE FIELD INFORMATION RECORDED BY OTHERS DURING CONSTRUCTION OF THIS CONTRACT. THERE HAS BEEN NO VERIFICATION OF DIMENSIONS SHOWN ON THE CONSTRUCTION DRAWINGS OR THE ACCURACY/COMPLETENESS OF THE FIELD INFORMATION RECEIVED.

SIGNATURE _____ DATE 2/7/2020

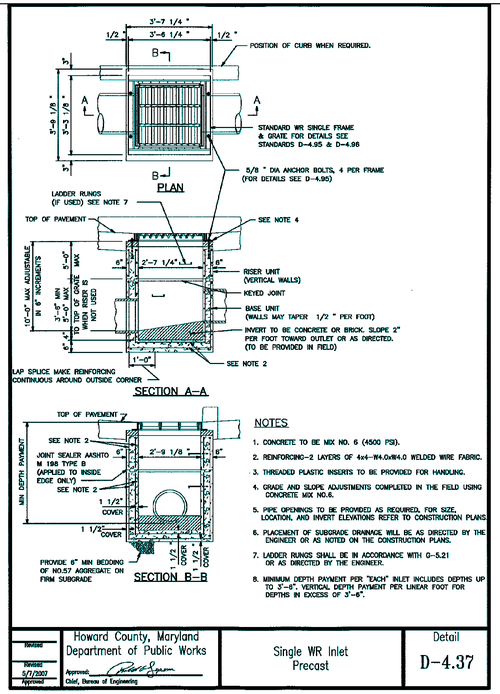

NOTES
1. CONCRETE TO BE MIX NO. 6 (4500 PSI).
2. REINFORCING-2 LAYERS OF 4x4-W4.0xW4.0 WELDED WIRE FABRIC.
3. THREADED PLASTIC INSERTS TO BE PROVIDED FOR HANDLING.
4. GRADE AND SLOPE ADJUSTMENTS COMPLETED IN THE FIELD USING CONCRETE MIX NO.6.
5. PIPE OPENINGS TO BE PROVIDED AS REQUIRED. FOR SIZE, LOCATION, AND INVERT ELEVATIONS REFER TO CONSTRUCTION PLANS.
6. PLACEMENT OF SUBGRADE DRAINAGE WILL BE AS DIRECTED BY THE ENGINEER OR AS NOTED ON THE CONSTRUCTION PLANS.
7. LADDER RUNGS SHALL BE IN ACCORDANCE WITH O-5.21 OR AS DIRECTED BY THE ENGINEER.
8. MINIMUM DEPTH PAVEMENT PER "EACH" INLET INCLUDES DEPTHS UP TO 3'-0". VERTICAL DEPTH PAVEMENT PER LINEAR FOOT FOR DEPTHS IN EXCESS OF 3'-6".

Revised	Howard County, Maryland Department of Public Works	Single WR Inlet Precast	Detail D-4.37
Revised 5/1/2003 Approved	Approved: Chief, Bureau of Engineering		

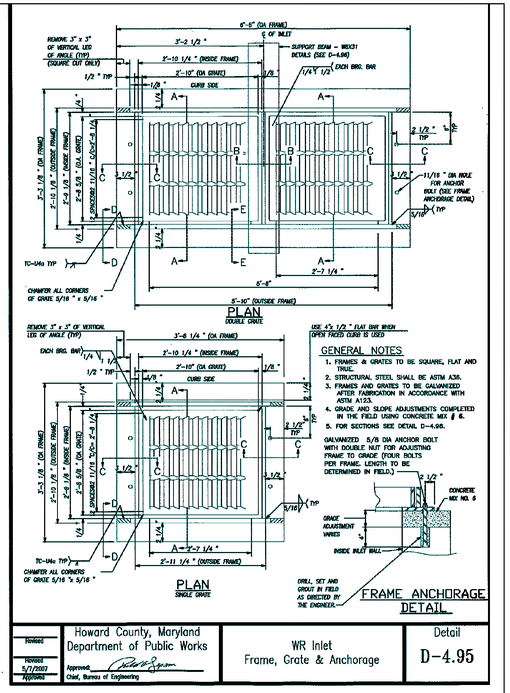

Revised	Howard County, Maryland Department of Public Works	WR Inlet Frame, Grate & Anchorage	Detail D-4.95
Revised 5/1/2003 Approved	Approved: Chief, Bureau of Engineering		

DIAMETER	O	P	R	S
8"	1' - 2"	1' - 2"	1' - 8"	5"
8"	1' - 7"	1' - 8"	1' - 8"	6"
12"	2' - 0"	2' - 6"	1' - 11"	7"
16"	2' - 10"	3' - 0"	2' - 2"	10"
18"	3' - 1"	3' - 8"	2' - 8"	1' - 0"
20"	3' - 6"	3' - 10"	2' - 10"	1' - 0"
24"	4' - 8"	4' - 0"	3' - 0"	1' - 0"

AREA OF BEARING = 2 X O X P

MINIMUM DIMENSIONS OF BUTTRESS FOR TEES

LABEL	SIZE OF BRANCH				
D	6"	8"	12"	16"	20" 24"
H	8"	8"	1'-0"	1'-4"	1'-8" 2'-0"
I	10"	1'-1"	1'-7"	2'-2"	2'-8" 3'-2"
J	6"	8"	1'-1"	1'-5"	1'-8" 2'-1"
K	6"	7"	9"	10"	1'-2" 1'-4"

BUTTRESS FOR TEES

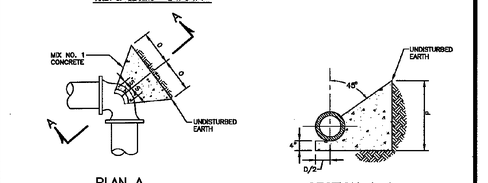

NOTES:
1. BUTTRESS DIMENSIONS ARE BASED ON A WATER PRESSURE OF 150 PSI AND A MINIMUM SOIL BEARING PRESSURE OF 3000 PSF. WHEN ACTUAL FIELD CONDITIONS ARE DIFFERENT THE AREA OF BEARING SHALL BE INCREASED AS DETERMINED BY THE ENGINEER AND SHOWN ON THE CONTRACT DOCUMENTS.
2. AREA OF BEARING = 2J x 2I

Revised	Howard County, Maryland Department of Public Works	WATER MAIN Buttress Tee & 1/4 Bend	Detail W-2.23
Revised 5/1/2003 Approved	Approved: Chief, Bureau of Engineering		

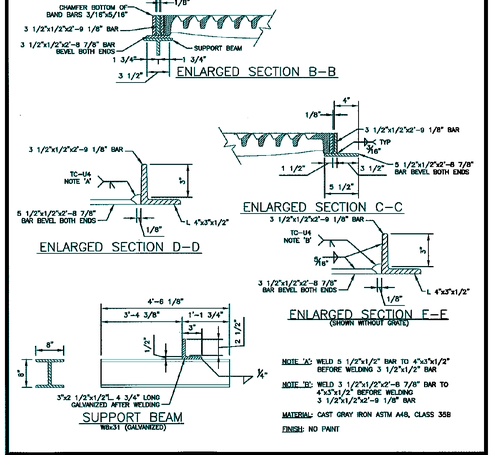

NOTE 'A': WELD 5 1/2"x1/2" BAR TO 4"x3"x1/2" BEFORE WELDING 3 1/2"x1/2" BAR

NOTE 'B': WELD 3 1/2"x1/2"x2'-8 7/8" BAR TO 4"x3"x1/2" BEFORE WELDING 3 1/2"x1/2"x2'-9 1/8" BAR

MATERIAL: CAST GRAY IRON ASTM A48, CLASS 35B

FINISH: NO PAINT

Revised	Howard County, Maryland Department of Public Works	WR Inlet Frame, Grate & Support	Detail D-4.96
Revised 5/1/2003 Approved	Approved: Chief, Bureau of Engineering		

AS-BUILT REPLACEMENT SHEET

PROFESSIONAL CERTIFICATION
THIS DRAWING WAS ORIGINALLY APPROVED FOR CONSTRUCTION AND SEALED BY ROBERT BAYSDEN, A REGISTERED PROFESSIONAL ENGINEER IN THE STATE OF MARYLAND, NO. 49972.

NOTICE TO CONTRACTORS
- PROJECT ELEVATIONS ARE BASED ON NAVD88 AND HOWARD COUNTY'S BENCHMARK SYSTEM
- PREVIOUS PROJECTS USED OTHER DATUMS
- APPLY THE FOLLOWING CONVERSIONS WHEN USING PREVIOUS CONTRACT DRAWINGS:
  - ADDITION NO. 6: SUBTRACT 0.80 FT
  - PRIOR ADDITIONS: SUBTRACT 1.04 FT

DEPARTMENT OF PUBLIC WORKS
HOWARD COUNTY, MARYLAND

CHIEF, BUREAU OF UTILITIES DATE

DES: M.L.
DRN: S.W.
CHK: R.B.
DATE: 01/2018

DATE	REV	DESCRIPTION
03/2021		RECORD DRAWINGS

CIVIL

CIVIL DETAILS

LITTLE PATUXENT WATER RECLAMATION PLANT
8TH ADDITION
BIOSOLIDS PROCESSING FACILITIES - PHASE 2

CAPITAL PROJECT S-6295
CONTRACT NO. 24-4936

ELECTION DISTRICT NO. 6
HOWARD COUNTY, MARYLAND

SCALE AS SHOWN

SHEET 71 OF 311

C-26

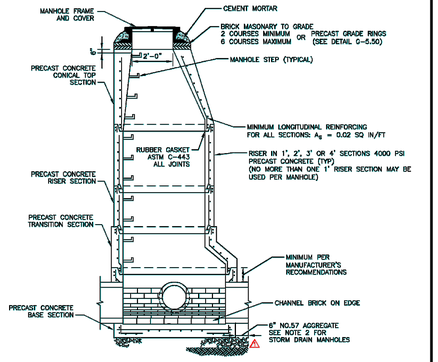

GENERAL NOTES APPLICABLE TO ALL PRECAST MANHOLES

1. MANHOLE BASE SECTION SHALL BE BEDDED ON 6-INCH NO.57 AGGREGATE ON FIRM SUBGRADE.
2. NO.57 AGGREGATE MATERIAL SHALL BE EXTENDED FROM 6-INCHES UNDERNEATH BOTTOM OF STRUCTURE TO SUBGRADE (STORM ONLY).
3. CONNECTION BETWEEN MANHOLE WALL AND SEWER SHALL BE NON-SHRINK GROUT (STORM) OR COMPRESSION TYPE RUBBER GASKET (SANITARY SEWER).
4. MANHOLE STEPS SHALL BE AS INDICATED ON DETAIL G-5.21.
5. MANHOLE COVER SHALL BE AS SPECIFIED ON DETAIL G-5.51, G-5.52, & G-5.53.
6. PROVIDE TWO APPLICATIONS OF BITUMINOUS MATERIAL (MINIMUM 18 MILS DFT) COATING ON EXTERIOR SURFACE OF MANHOLES (SANITARY SEWER ONLY).
7. ⚠ MANHOLE CHANNELS SHALL BE FORMED TO PROVIDE A SMOOTH HYDRAULIC TRANSITION BETWEEN PIPES. BENCH SHALL BE TO TOP OF PIPE OR AS SHOWN ON CONTRACT DOCUMENTS. SANITARY SEWER MANHOLE CHANNEL AND BENCH SHALL BE PRECAST OR FORMED FROM SEWER BRICK SET ON EDGE. STORM DRAIN MANHOLE CHANNELS SHALL BE SEWER BRICK SET ON EDGE.
8. MANHOLE SHALL BE IN ACCORDANCE WITH ASTM C-478 EXCEPT AS INDICATED.
9. MAXIMUM INVERT DIFFERENTIAL IS 6 INCHES WITHOUT A DROP CONNECTION. SEE DETAIL S-1.32 FOR DROP CONNECTION DETAILS.
10. THE MINIMUM DISTANCE BETWEEN PIPE OPENINGS IN THE WALL OF THE MANHOLE SHALL BE 12 INCHES.
11. A MINIMUM OF 4" SHALL BE PROVIDED BETWEEN MANHOLE FLOOR AND LOWEST PIPE INVERT.
12. PRECAST RINGS MAY BE SUPPLIED IN PLACE OF BRICK MASONRY COURSES. SEE DETAIL G-5.50.
13. MANHOLE INTERMEDIATE LANDINGS SHALL BE AS INDICATED ON DETAIL G-5.16.

Revised ⚠ 5/1/2014 Revised 5/7/2007 Approved	Howard County, Maryland Department of Public Works Approved: Thomas E. Scott Chief, Bureau of Engineering	PRECAST MANHOLE Notes	Detail G-5.11

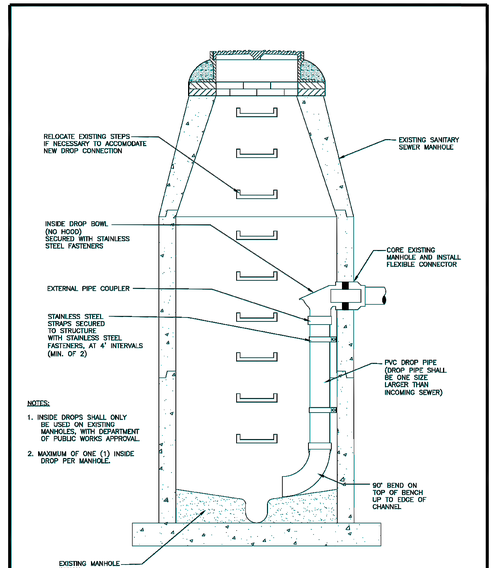

NOTES:

1. INSIDE DROPS SHALL ONLY BE USED ON EXISTING MANHOLES, WITH DEPARTMENT OF PUBLIC WORKS APPROVAL.
2. MAXIMUM OF ONE (1) INSIDE DROP PER MANHOLE.

Revised Revised 6/30/2011 Approved	Howard County, Maryland Department of Public Works Approved: Chief, Bureau of Engineering	INSIDE DROP- EXISTING MANHOLE	Detail S-1.33

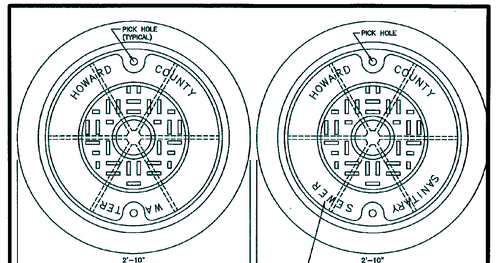

NOTES:

1. FOR FRAME AND COVER ASSEMBLY, AND NOTES SEE DETAIL G-5.51.

Revised Revised 5/7/2007 Approved	Howard County, Maryland Department of Public Works Approved: Chief, Bureau of Engineering	Manhole Cover Lettering	Detail G-5.53

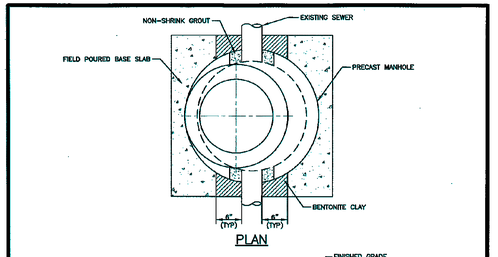

NOTES:

1. SEE DETAIL G-5.11 FOR GENERAL NOTES APPLICABLE TO ALL PRECAST MANHOLES.
2. SEE DETAIL G-5.13 FOR MANHOLE DETAILS FOR PIPES 27 INCHES TO 36 INCHES.

ELEVATION

Revised Revised 5/7/2007 Approved	Howard County, Maryland Department of Public Works Approved: Chief, Bureau of Engineering	PRECAST MANHOLE Doghouse Over Existing Sewer 24" Pipe and smaller	Detail G-5.14

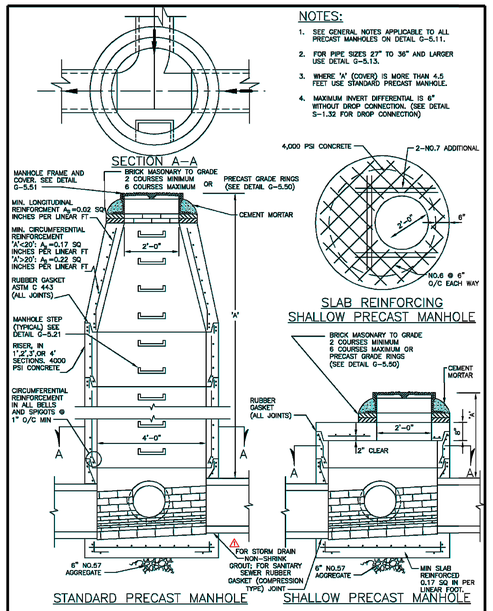

NOTES:

1. SEE GENERAL NOTES APPLICABLE TO ALL PRECAST MANHOLES ON DETAIL G-5.11.
2. FOR PIPE SIZES 27" TO 36" AND LARGER USE DETAIL G-5.13.
3. WHERE 'A' (COVER) IS MORE THAN 4.5 FEET USE STANDARD PRECAST MANHOLE.
4. MAXIMUM INVERT DIFFERENTIAL IS 6" WITHOUT DROP CONNECTION. (SEE DETAIL S-1.32 FOR DROP CONNECTION)

Revised ⚠ 5/1/2014 Revised 5/7/2007 Approved	Howard County, Maryland Department of Public Works Approved: Thomas E. Scott Chief, Bureau of Engineering	PRECAST MANHOLE Standard and Shallow 4'-0" for 24" Pipe and smaller	Detail G-5.12

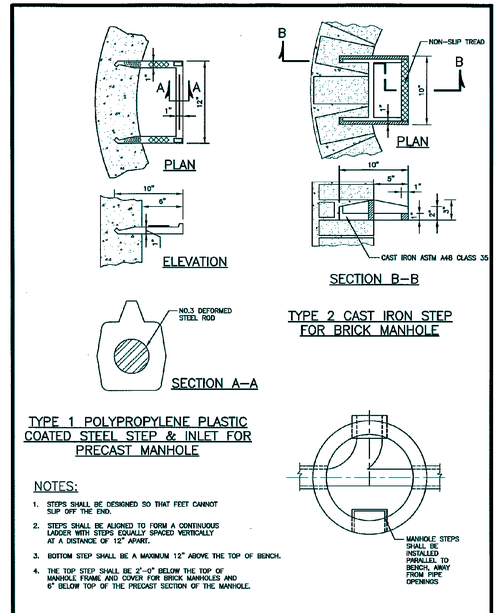

NOTES:

1. STEPS SHALL BE DESIGNED SO THAT FEET CANNOT SLIP OFF THE END.
2. STEPS SHALL BE ALIGNED TO FORM A CONTINUOUS LADDER WITH STEPS EQUALLY SPACED VERTICALLY AT A DISTANCE OF 12" APART.
3. BOTTOM STEP SHALL BE A MAXIMUM 12" ABOVE THE TOP OF BENCH.
4. THE TOP STEP SHALL BE 2'-0" BELOW THE TOP OF MANHOLE FRAME AND COVER FOR BRICK MANHOLES AND 6" BELOW TOP OF THE PRECAST SECTION OF THE MANHOLE.

Revised Revised 5/7/2007 Approved	Howard County, Maryland Department of Public Works Approved: Chief, Bureau of Engineering	Manhole & Inlet Steps	Detail G-5.21

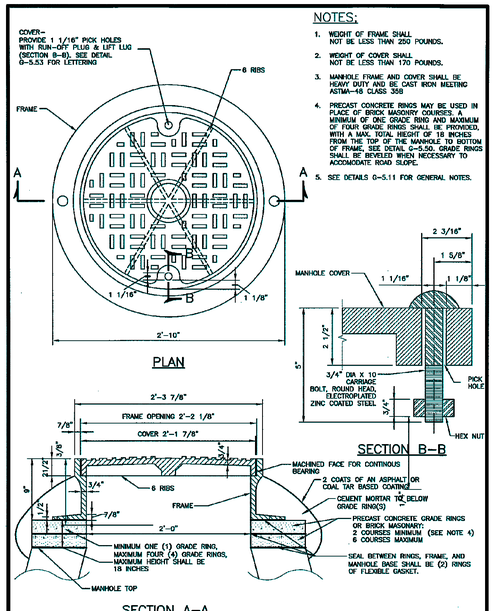

NOTES:

1. WEIGHT OF FRAME SHALL NOT BE LESS THAN 250 POUNDS.
2. WEIGHT OF COVER SHALL NOT BE LESS THAN 170 POUNDS.
3. MANHOLE FRAME AND COVER SHALL BE HEAVY DUTY AND BE CAST IRON MEETING ASTMA-48 CLASS 35B
4. PRECAST CONCRETE RINGS MAY BE USED IN PLACE OF BRICK MASONRY COURSES. A MINIMUM OF ONE GRADE RING AND MAXIMUM OF FOUR GRADE RINGS SHALL BE PROVIDED, WITH A MAX. TOTAL HEIGHT OF 18 INCHES FROM THE TOP OF THE MANHOLE TO BOTTOM OF FRAME, SEE DETAIL G-5.50. GRADE RINGS SHALL BE BEVELED WHEN NECESSARY TO ACCOMODATE ROAD SLOPE.
5. SEE DETAILS G-5.11 FOR GENERAL NOTES.

Revised Revised 5/7/2007 Approved	Howard County, Maryland Department of Public Works Approved: Chief, Bureau of Engineering	Manhole Heavy Traffic Frame and Cover	Detail G-5.51

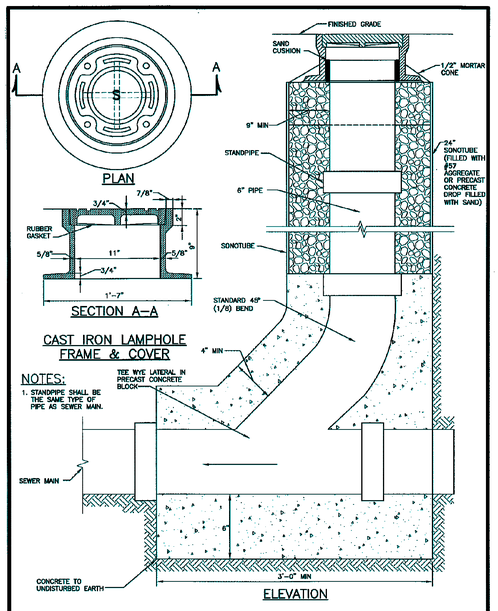

NOTES:

1. STANDPIPE SHALL BE THE SAME TYPE OF PIPE AS SEWER MAIN.

Revised Revised 5/7/2007 Approved	Howard County, Maryland Department of Public Works Approved: Chief, Bureau of Engineering	Main Line Cleanout Lamphole	Detail S-3.21

THE DRAWINGS IN THIS SET ARE RECORD DRAWINGS. THEY ARE CONSTRUCTION CONTRACT DRAWINGS WHICH HAVE BEEN REVISED BASED ON AVAILABLE FIELD INFORMATION RECORDED BY OTHERS DURING CONSTRUCTION OF THIS CONTRACT. THERE HAS BEEN NO VERIFICATION OF DIMENSIONS SHOWN ON THE CONSTRUCTION DRAWINGS OR THE ACCURACY/COMPLETENESS OF THE FIELD INFORMATION RECEIVED.

SIGNATURE — DATE 2/7/2023

AS-BUILT REPLACEMENT SHEET

PROFESSIONAL CERTIFICATION
THIS DRAWING WAS ORIGINALLY APPROVED FOR CONSTRUCTION AND SEALED BY ROBERT BAYSDEN, A REGISTERED PROFESSIONAL ENGINEER IN THE STATE OF MARYLAND, NO. 49972.

NOTICE TO CONTRACTORS
- PROJECT ELEVATIONS ARE BASED ON NAVD88 AND HOWARD COUNTY'S BENCHMARK SYSTEM
- PREVIOUS PROJECTS USED OTHER DATUMS
- APPLY THE FOLLOWING CONVERSIONS WHEN USING PREVIOUS CONTRACT DRAWINGS:
  - ADDITION NO. 6: SUBTRACT 0.80 FT
  - PRIOR ADDITIONS: SUBTRACT 1.04 FT

DEPARTMENT OF PUBLIC WORKS
HOWARD COUNTY, MARYLAND

CHIEF, BUREAU OF UTILITIES — DATE

DES: M.L.
DRN: S.W.
CHK: R.B.
DATE: 01/2018

DATE	REV	DESCRIPTION
03/2021		RECORD DRAWINGS

CIVIL

CIVIL DETAILS

LITTLE PATUXENT WATER RECLAMATION PLANT
8TH ADDITION
BIOSOLIDS PROCESSING FACILITIES - PHASE 2

CAPITAL PROJECT S-6295
CONTRACT NO. 24-4936

ELECTION DISTRICT NO. 6
HOWARD COUNTY, MARYLAND

SCALE AS SHOWN

SHEET 72 OF 311

C-27

PLASTIC		
PIPE DIA "D"	"W"	TRENCH WIDTH
4	12	28
6	11	28
8	10	28
10	9	28
12	8	28

ALL DIMENSIONS IN INCHES

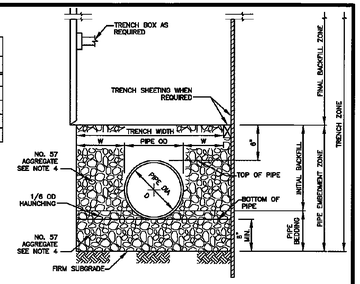

NOTES:

1. THE "W" DIMENSION SHALL BE USED TO CALCULATE MAXIMUM TRENCH PAY WIDTH.
2. FOR TRENCHES WHERE TRENCH BOX OR TRENCH SHEETING IS NOT REQUIRED, MEASUREMENT FOR CONTINGENT BORROW MATERIALS WILL BE BASED ON THE TRENCH WIDTH SHOWN.
3. FOR TRENCHES WHERE TRENCH BOX OR TRENCH SHEETING IS REQUIRED, MEASUREMENT FOR CONTINGENT BORROW MATERIALS WILL BE BASED ON THE TRENCH WIDTH SHOWN PLUS 24 INCHES.
4. FOR COPPER, PVC AND HDPE PIPE, 3 INCHES OR SMALLER:
   PIPE EMBEDMENT ZONE MATERIAL IS FINE AGGREGATE (SAND)
   "W" DIMENSION IS 6 INCHES MINIMUM AND BEDDING THICKNESS UNDER PIPE IS 4" MINIMUM.
   FOR TRENCHES IN ROCK, MINIMUM BEDDING THICKNESS IS 6 INCHES.
5. SPECIAL DESIGN IS REQUIRED AND SHALL BE SPECIFIED OR DETAILED IN THE CONTRACT DOCUMENTS FOR THE FOLLOWING PIPES:
   PVC AWWA C-905 LARGER THAN 12 INCHES
   PVC GRAVITY SANITARY SEWERS LARGER THAN 12 INCHES
   HDPE CORRELATED DRAIN PIPE
   STREAM CROSSINGS SEE DETAILS S-3.11 AND S-3.12

Howard County, Maryland Department of Public Works	Pipe Trench Plastic & Copper	Detail G-2.12
Revised 5/1/2007 Approved — Approved: Chief, Bureau of Engineering		

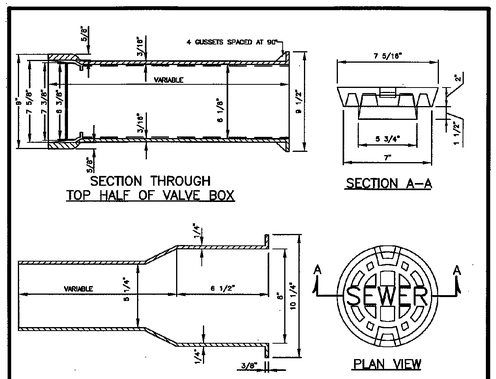

NOTES:

1. ALL VALVES BOXES SHALL BE THE SLIDING TYPE IN PAVED AREAS. USE SCREW TYPE VALVE BOXES IN LAWN AREAS.
2. ALL WATER VALVES SHALL BE MARKED "WATER" AND ALL SEWER VALVES SHALL BE MARKED "SEWER".
3. ENTIRE VALVE BOX AND ASSEMBLY SHALL BE CAST FROM CLASS 35 GREY IRON. ALL PARTS SHALL BE SUPPLIED BY THE SAME MANUFACTURER.
4. INSTALLATION SHALL BE PLUMB.
5. FOR BOXES ADJUSTABLE 23" TO 34"
   TOP SECTION-18"
   BOTTOM SECTION-18"
6. FOR BOXES ADJUSTABLE 34" TO 46"
   TOP SECTION-18"
   BOTTOM SECTION-30"
7. MINIMUM WEIGHT PER BOX- 100 LBS
8. BOTTOM SECTION SHALL REST ON VALVE BONNET.

7" FRAME AND COVER CAST IRON

Howard County, Maryland Department of Public Works	Valve Box Adjustable Round Head	Detail G-8.01
Revised 5/1/2007 Approved — Approved: Chief, Bureau of Engineering		

DIP		
PIPE DIA "D"	"W"	TRENCH PAYMENT WIDTH
4	12	28
6	11	28
8	10	28
10	9	28
12	8	28
14	8	30
16	8	32
18	8	34
20	8	36
24	12	48

RCP		
PIPE DIA "D"	"W"	TRENCH PAYMENT WIDTH
4	12	28
6	11	28
12	8	28
15	8	31
18	8	34
21	8	37
24	12	48
27	12	51
30	12	54
33	15	63
36	15	66
42	15	72
48	18	84
54	18	90
60	18	96
66	18	102
72	18	108
78	18	114
84	18	120
90	18	126
96	18	132
102	18	138
108	18	144

ALL DIMENSIONS IN INCHES

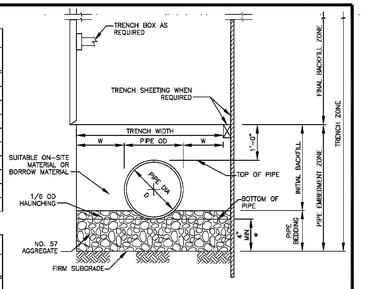

* FOR TRENCHES IN ROCK, MINIMUM BEDDING DEPTH IS 6 INCHES. FOR RCP 96 INCHES AND GREATER, MINIMUM BEDDING DEPTH IS 12 INCHES.

NOTES:

1. THE "W" DIMENSION SHALL BE USED TO CALCULATE MAXIMUM TRENCH PAY WIDTH.
2. FOR TRENCHES WHERE TRENCH BOX OR TRENCH SHEETING IS NOT REQUIRED, MEASUREMENT FOR CONTINGENT BORROW MATERIALS WILL BE BASED ON THE TRENCH WIDTH SHOWN.
3. FOR TRENCHES WHERE TRENCH BOX OR TRENCH SHEETING IS REQUIRED, MEASUREMENT FOR CONTINGENT BORROW MATERIALS WILL BE BASED ON THE TRENCH WIDTH SHOWN PLUS 24 INCHES.
4. THE MAXIMUM WIDTH OF THE TRENCH EXCAVATED ON-SITE FOR RCP, SHALL NOT EXCEED THE TRENCH PAYMENT WIDTH PLUS 12 INCHES.
5. MINIMUM SPACING BETWEEN PARALLEL CULVERT PIPES SHALL BE TWICE THE "W" DIMENSION.
6. SPECIAL DESIGN IS REQUIRED AND SHALL BE SPECIFIED OR DETAILED IN THE CONTRACT DOCUMENTS FOR THE FOLLOWING PIPES:
   RCP STORM DRAINS LARGER THAN 108 INCHES
   RCP GRAVITY SANITARY SEWERS LARGER THAN 48 INCHES
   DIP LARGER THAN 24 INCHES
   STREAM CROSSINGS SEE S-3.11 AND S-3.12
7. △ WATERMAIN SHALL BE SPECIAL THICKNESS CLASS 54 DIP MINIMUM.

Howard County, Maryland Department of Public Works	Pipe Trench DIP & RCP	Detail G-2.11
Revised 8/30/2011 △ Revised 5/1/2007 Approved — Approved: Chief, Bureau of Engineering		

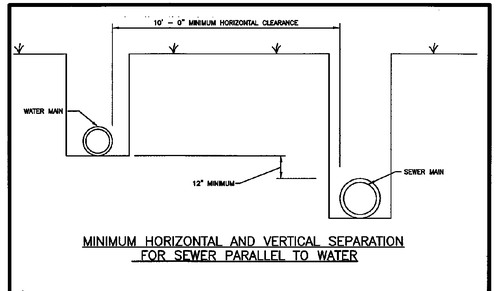

MINIMUM HORIZONTAL AND VERTICAL SEPARATION FOR SEWER PARALLEL TO WATER

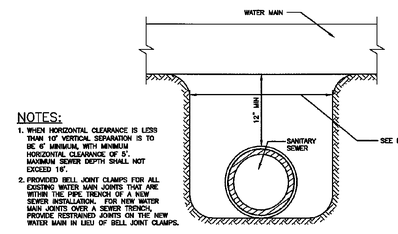

NOTES:

1. WHEN HORIZONTAL CLEARANCE IS LESS THAN 10' VERTICAL SEPARATION IS TO BE 6' MINIMUM, WITH MINIMUM HORIZONTAL CLEARANCE OF 5'. MAXIMUM SEWER DEPTH SHALL NOT EXCEED 16'.
2. PROVIDED BELL JOINT CLAMPS FOR ALL EXISTING WATER MAIN JOINTS THAT ARE WITHIN THE PIPE TRENCH OF A NEW SEWER INSTALLATION. FOR NEW WATER MAIN JOINTS OVER A SEWER TRENCH, PROVIDE RESTRAINED JOINTS ON THE NEW WATER MAIN IN LIEU OF BELL JOINT CLAMPS.

WATER/SANITARY CROSSING CLEARANCE

Howard County, Maryland Department of Public Works	Clearance Requirements Water To Sewer	Detail S-3.13
Revised — Revised 5/1/2007 Approved — Approved: Chief, Bureau of Engineering		

WATER AND SEWER NOTES

PART I

1. APPROXIMATE LOCATIONS OF EXISTING MAINS ARE SHOWN. THE CONTRACTOR SHALL TAKE ALL NECESSARY PRECAUTIONS TO PROTECT EXISTING MAINS AND SERVICES AND MAINTAINS UNINTERRUPTED SERVICE. ANY DAMAGE INCURRED SHALL BE REPAIRED IMMEDIATELY TO THE SATISFACTION OF THE ENGINEER AT THE CONTRACTOR'S EXPENSE
2. TOPOGRAPHIC FIELD SURVEYS WERE PERFORMED MARCH, APRIL, AND JUNE OF 2016 BY JOHNSON, MIRMIRAN, & THOMPSON (JMT)
3. HORIZONTAL AND VERTICAL SURVEY CONTROLS:
   3.1. *THE COORDINATES SHOWN ON THE DRAWINGS ARE BASED ON MARYLAND STATE REFERENCE SYSTEM NAD '83/91 AS PROJECTED BY HOWARD COUNTY GEODETIC CONTROL STATIONS NO. ___ NO.___ AND NO. ___.*
4. ALL PIPE ELEVATIONS SHOWN ARE INVERT ELEVATIONS UNLESS OTHERWISE NOTED ON THE PLANS
5. CLEAR ALL UTILITIES BY A MINIMUM OF 12 INCHES. CLEAR ALL POLES BY 5'-0" MINIMUM OR TUNNEL AS REQUIRED UNLESS OTHERWISE NOTED. THE OWNER HAS CONTACTED THE UTILITY COMPANIES AND HAS MADE ARRANGEMENTS FOR BRACING OF POLES AS SHOWN ON THE DRAWINGS. IN THE EVENT THE CONTRACTOR'S WORK REQUIRES THE BRACING OF ADDITIONAL POLES, ANY COST INCURRED BY THE OWNER FOR THE BRACING OF ADDITIONAL POLES OR DAMAGES SHALL BE DEDUCTED FROM MONIES OWED THE CONTRACTOR. THE CONTRACTOR SHALL COORDINATE WITH THE UTILITY COMPANIES TO SCHEDULE THE BRACING OF THE POLES
6. FOR DETAILS NOT SHOWN ON THE DRAWING, AND FOR MATERIALS AND CONSTRUCTION METHODS, USE HOWARD COUNTY DESIGN MANUAL, VOLUME IV, STANDARD SPECIFICATIONS AND DETAILS FOR CONSTRUCTION (LATEST EDITION). THE CONTRACTOR SHALL HAVE A COPY OF VOLUME IV ON THE JOB
7. WHERE TEST PITS HAVE BEEN MADE ON EXISTING UTILITIES, THEY ARE NOTED BY THE SYMBOL AT THE LOCATIONS OF THE TEST PITS. A NOTE OR NOTES CONTAINING THE RESULTS OF THE TEST PIT OR PITS IS INCLUDED ON THE DRAWINGS. EXISTING UTILITIES IN THE VICINITY OF THE PROPOSED WORK FOR WHICH TEST PITS HAVE NOT BEEN DUG SHALL BE LOCATED BY THE CONTRACTOR TWO WEEKS IN ADVANCE OF CONSTRUCTION OPERATIONS AT HIS OWN EXPENSE
8. THE CONTRACTOR SHALL NOTIFY THE FOLLOWING UTILITY COMPANIES OR AGENCIES AT LEAST FIVE WORKING DAYS BEFORE STARTING WORK SHOWN ON THESE PLANS:

AT&T	800-252-1133
BGE (CONTRACTOR SERVICES)	410-637-8713
BGE (EMERGENCY)	410-685-0123
BUREAU OF UTILITIES	410-313-4900
COLONIAL PIPELINE CO.	410-795-1390
MISS UTILITY	800-257-7777
STATE HIGHWAY ADMINISTRATION	410-531-5533
VERIZON	800-743-0033

9. TREES AND SHRUBS ARE TO BE PROTECTED FROM DAMAGE TO THE MAXIMUM EXTENT. TREES AND SHRUBS LOCATED WITHIN THE CONSTRUCTION STRIP ARE NOT TO BE REMOVED OR DAMAGED BY THE CONTRACTOR
10. THE CONTRACTOR SHALL REMOVE TREES, STUMPS, AND ROOTS ALONG THE LINE OF EXCAVATION. PAYMENT FOR SUCH REMOVAL SHALL BE INCLUDED IN THE UNIT PRICE BID FOR CONSTRUCTION OF THE MAIN
11. THE CONTRACTOR SHALL NOTIFY THE BUREAU OF HIGHWAYS, HOWARD COUNTY AT (410) 313-7450 AT LEAST FIVE WORKING DAYS BEFORE OPEN CUTTING OR BORING/JACKING OF ANY COUNTY ROADS FOR LAYING WATER/SEWER MAINS OR HOUSE CONNECTIONS. THE APPROVAL OF THESE DRAWINGS WILL CONSTITUTE COMPLIANCE WITH DPW REQUIREMENTS PER SECTION 18.114(A) OF THE HOWARD COUNTY CODE

PART II

1. ALL WATER MAINS SHALL BE D.I.P. CLASS 54 UNLESS OTHERWISE NOTED
2. TOPS OF ALL WATER MAINS SHALL HAVE A MINIMUM OF 3'-6" OF COVER UNLESS OTHERWISE NOTED
3. VALVES ADJACENT TO TREES SHALL BE STRAPPED TO TREES
4. ALL FITTINGS SHALL BE BUTTRESSED OR ANCHORED WITH CONCRETE IN ACCORDANCE WITH STANDARD DETAILS UNLESS OTHERWISE PROVIDED FOR ON THE DRAWINGS
5. FIRE HYDRANTS SHALL BE SET TO THE BURY LINE ELEVATIONS SHOWN ON THE DRAWINGS. ALL FIRE HYDRANTS SHALL BE INSTALLED IN ACCORDANCE WITH STANDARD DETAILS. THE SOIL AROUND THE FIRE HYDRANT SHALL BE COMPACTED IN ACCORDANCE WITH SECTION 1000 AND SECTION 1005 OF THE STANDARD SPECIFICATIONS
6. THE CONTRACTOR SHALL NOT OPERATE ANY WATER MAIN VALVES ON THE EXISTING WATER SYSTEM
7. TRACER WIRE AND CONTINUITY TEST STATIONS SHALL BE INSTALLED ON ALL DIP AND PVC WATER MAINS IN ACCORDANCE WITH THE HOWARD COUNTY DESIGN MANUAL
8. FOR PVC WATER MAINS, ALL RECORDS FOR THE QUALITY CONTROL AND QUALIFICATIONS TEST REQUIREMENTS NOTED ON SECTION 5.1 OF THE AWWA STANDARD C900 FOR PVC PRESSURE PIPES SHALL BE SUBMITTED WITH THE PIPE MATERIAL CERTIFICATIONS OR SHOP DRAWINGS PRIOR TO APPROVAL OF THE MATERIAL FOR USE. THE TEST RECORDS SHALL BE FOR THE PIPE TO BE INSTALLED UNDER THIS CONTRACT. ALL PVC PIPE SHALL CONTAIN MARKINGS TO ALLOW CROSS REFERENCING OF THE PIPE SUPPLIED TO THE TEST RECORDS RECEIVED
9. UNLESS OTHERWISE NOTED ON THE PLANS OR IN THE SPECIFICATIONS, SACRIFICIAL ANODE SHALL BE INSTALLED ON ALL VALVES AND METALLIC FITTINGS USED WITH PVC WATER MAINS IN ACCORDANCE WITH VOLUME IV STANDARD SPECIFICATIONS AND DETAILS FOR CONSTRUCTION, 17 POUND MAGNESIUM ANODES SHALL BE INSTALLED ON ALL VALVES AND DUCTILE IRON FITTINGS INCLUDING RESTRAINTS AND HARNESSES, 12 POUND ZINC ANODES SHALL BE INSTALLED ON ALL STAINLESS STEEL FITTINGS AND SADDLES USED WITH PVC MAINS. ALL "TEES" USED WITH PVC MAINS SHALL BE DUCTILE IRON.
10. PROPER ASSEMBLY OF GASKETED PVC PIPE JOINTS: THE MANUFACTURER'S INSERTION LINE OF GASKETED PVC PIPE JOINTS INDICATES THE MAXIMUM DEPTH OF INSERTION OF THE SPIGOT INTO THE BELL. AFTER ASSEMBLY OF THE JOINT, THE INSERTION LINE SHALL REMAIN VISIBLE. DUAL INSERTION LINES ON GASKETED PVC PIPE INDICATE THE MAXIMUM AND MINIMUM DEPTH OF INSERTION OF THE SPIGOT INTO THE BELL. THE CONTRACTOR SHALL NOT OVER INSERT OR OVER HOME THE SPIGOT INTO THE BELL OF THE PVC PIPE
11. ALL CHANGES IN HORIZONTAL OR VERTICAL DIRECTION OF PVC WATER PIPES SHALL BE MADE WITH STANDARD BENDS, 5-DEGREE SWEEPS OR HIGH DEFLECTION (HD) COUPLINGS. NO BENDING OF THE PIPE OR DEFLECTING OF PVC PIPE JOINTS IS PERMITTED. WHERE HIGH DEFLECTION COUPLINGS OR 5-DEGREE SWEEPS ARE PERMITTED, THE CONTRACTOR SHALL PROVIDE ON FULL PIPE LENGTH (20-FOOT LONG) ON EITHER SIDE OF THE HIGH DEFLECTION COUPLING OR 5-DEGREE SWEEP. THE CONTRACTOR SHALL USE A VIBRATORY PLATE COMPACTOR OR OTHER APPROVED MEANS TO THOROUGHLY COMPACT THE #57 STONE ON BOTH SIDES OF THE HIGH DEFLECTION COUPLING OR 5-DEGREE SWEEP, TAKING CARE NOT TO USE COMPACTION EQUIPMENT DIRECTLY OVER THE FITTING

    PVC HIGH DEFLECTION COUPLINGS SHALL BE LIMITED TO A TOTAL DEFLECTION OF 3-DEGREES (1-1/2-DEGREE ON EITHER END OF THE COUPLING), SHALL BE RATED FOR A MINIMUM 200 PSI MEETING THE REQUIREMENTS OF AWWA C900, SHALL HAVE A MINIMUM LAY LENGTH OF 9-INCHES AND SHALL HAVE CENTER STOPS. PVC HIGH DEFLECTION COUPLINGS SHALL BE CERTAIN TEED PVC HIGH DEFLECTION (HD) STOP COUPLINGS OR EQUAL

    FIVE DEGREE SWEEPS SHALL BE BELL BY SPIGOT, RATED FOR A MINIMUM 225 PSI, DR 18 MEETING THE REQUIREMENTS OF AWWA C900 AND SHALL BE MULTI FITTINGS (IPEX) BLUE BRUTE DR18 OR EQUAL
12. WHEN PVC HIGH DEFLECTION COUPLINGS OR PVC-5-DEGREE SWEEPS ARE USED TO FACILITATE CHANGES IN HORIZONTAL OR VERTICAL ALIGNMENTS OF AWWA C-900 PVC PIPELINES, THE CONTRACTOR SHALL INSTALL DEVICES FOR THE PREVENTION OF OVER-INSERTION OF THE PVC PIPE SPIGOTS OR PLAIN ENDS INTO THE PUSH ON BELL JOINT ON BOTH SIDES OF THE HIGH DEFLECTION COUPLINGS AND 5-DEGREE SWEEPS. BELL STOPS SHALL BE PLACED AT THE PROPER INSERTION LINE FOR THE FITTING. THE BELL STOP SHALL BE MANUFACTURED OF DUCTILE IRON AND INCORPORATES AN EXPANSION RETENTION SPRING TO ALLOW FOR PIPE EXPANSION AND CONTRACTION. THE BELL STOPS SHALL BE SERIES 5000 MEGA-STOP, AS MANUFACTURED BY EBAA IRON, INC. OR APPROVAL EQUAL

PART III

1. ALL SEWER MAINS SHALL BE D.I.P. OR P.V.C. UNLESS OTHERWISE NOTED
2. ALL MANHOLES SHALL BE 4'-0" INSIDE DIAMETER UNLESS OTHERWISE NOTED
3. FORCE MAINS SHALL BE D.I.P. ONLY
4. MANHOLES SHOWN WITH 12" AND 16" WALLS ARE BRICK MANHOLES ONLY
5. MANHOLES DESIGNATED W.T. IN PLAN AND PROFILE SHALL HAVE WATERTIGHT FRAME AND COVER. STANDARD DETAIL G5.52 WHERE WATERTIGHT MANHOLE FRAMES AND COVERS ARE USED, SET TOP OF FRAME 1'-6" ABOVE FINISHED GRADE UNLESS OTHERWISE NOTED ON THE DRAWINGS
6. HOUSE(S) WITH THE SYMBOL "C.N.S." INDICATED THE CELLAR CANNOT BE SERVED

THE DRAWINGS IN THIS SET ARE RECORD DRAWINGS. THEY ARE CONSTRUCTION CONTRACT DRAWINGS WHICH HAVE BEEN REVISED BASED ON AVAILABLE FIELD INFORMATION RECORDED BY OTHERS DURING CONSTRUCTION OF THIS CONTRACT. THERE HAS BEEN NO VERIFICATION OF DIMENSIONS SHOWN ON THE CONSTRUCTION DRAWINGS OR THE ACCURACY/COMPLETENESS OF THE FIELD INFORMATION RECEIVED.

SIGNATURE — DATE 2/7/2023

AS-BUILT REPLACEMENT SHEET

PROFESSIONAL CERTIFICATION
THIS DRAWING WAS ORIGINALLY APPROVED FOR CONSTRUCTION AND SEALED BY ROBERT BAYSDEN, A REGISTERED PROFESSIONAL ENGINEER IN THE STATE OF MARYLAND, NO. 49972.

NOTICE TO CONTRACTORS
- PROJECT ELEVATIONS ARE BASED ON NAVD88 AND HOWARD COUNTY'S BENCHMARK SYSTEM
- PREVIOUS PROJECTS USED OTHER DATUMS
- APPLY THE FOLLOWING CONVERSIONS WHEN USING PREVIOUS CONTRACT DRAWINGS:
  - ADDITION NO. 6: SUBTRACT 0.80 FT
  - PRIOR ADDITIONS: SUBTRACT 1.04 FT

DEPARTMENT OF PUBLIC WORKS
HOWARD COUNTY, MARYLAND

CHIEF, BUREAU OF UTILITIES — DATE

DES: M.L.
DRN: S.W.
CHK: R.B.
DATE: 01/2018

DATE	REV	DESCRIPTION
03/2021		RECORD DRAWINGS

CIVIL

CIVIL DETAILS

LITTLE PATUXENT WATER RECLAMATION PLANT
8TH ADDITION
BIOSOLIDS PROCESSING FACILITIES - PHASE 2

CAPITAL PROJECT S-6295
CONTRACT NO. 24-4936

ELECTION DISTRICT NO. 6
HOWARD COUNTY, MARYLAND

SCALE AS SHOWN

SHEET 73 OF 311

C-28

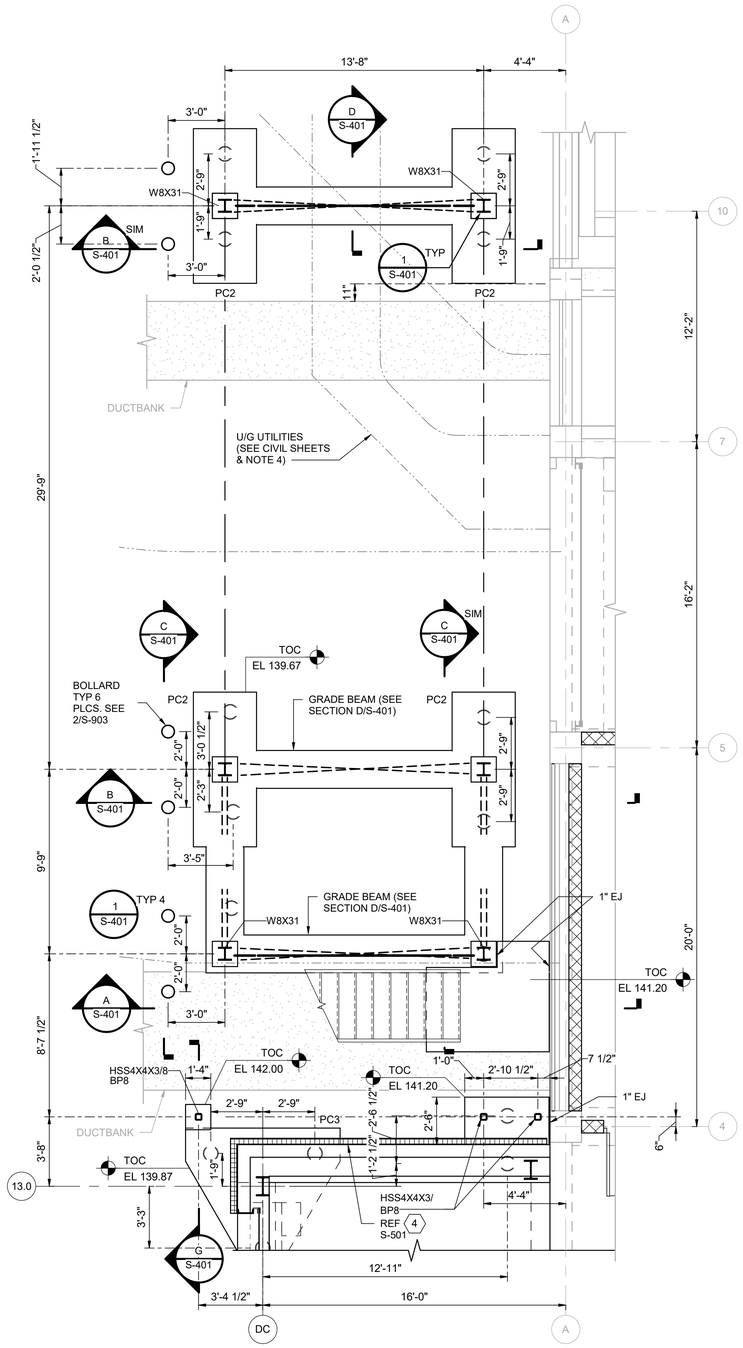

FOUNDATION PLAN

1/4" = 1'-0"

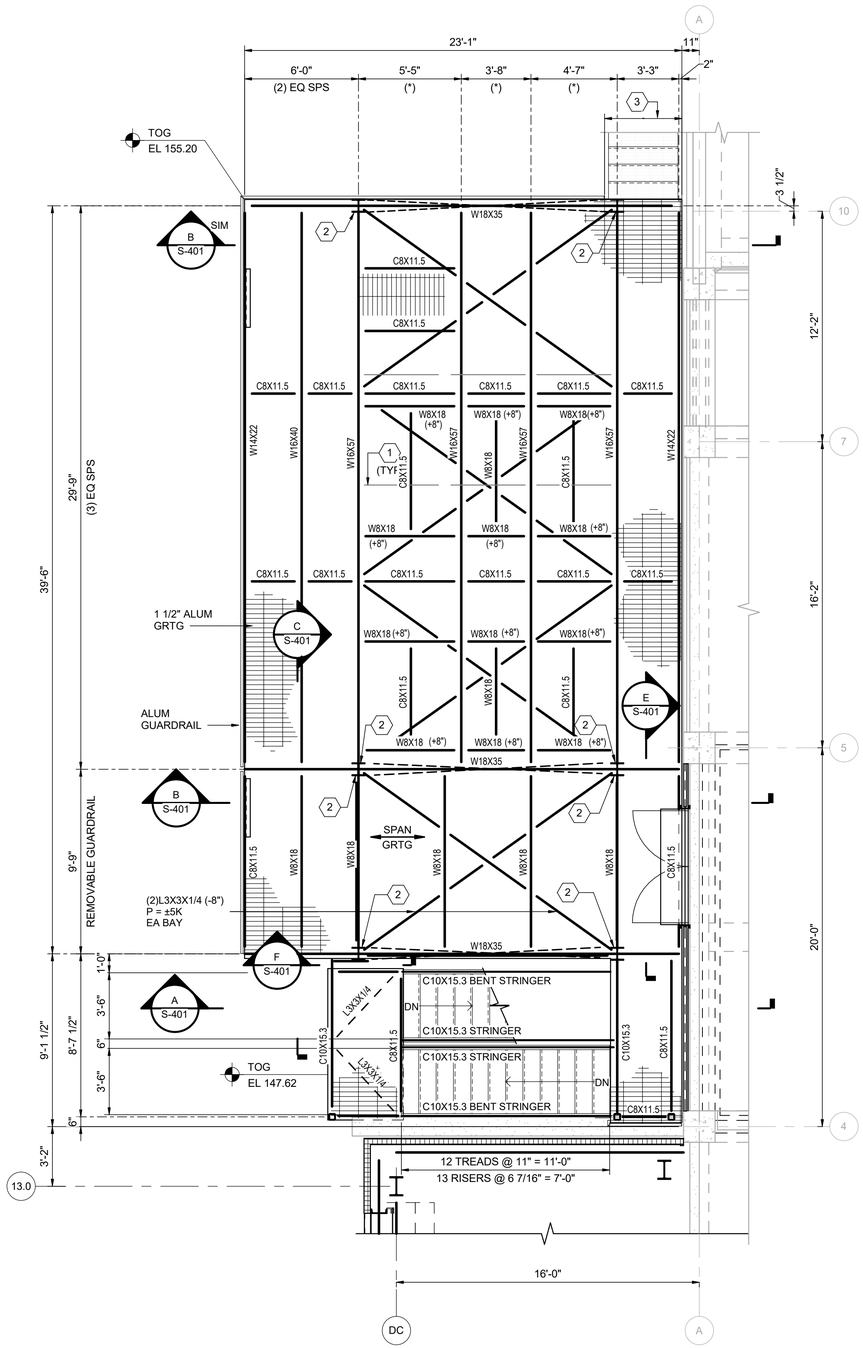

PLAN AT TOG ELEVATION EL 155.20

1/4" = 1'-0"

LIVE LOAD: 250 psf

GENERAL NOTES:

1. SEE SHEET S-901 FOR STRUCTURAL GENERAL NOTES. SEE S-900 SERIES SHEETS FOR STANDARD DETAILS.
2. ALL STEEL THIS STRUCTURE SHALL BE HOT DIPPED GALVANIZED.
3. COAT ALL DISSIMILAR METALS PER SPECS.
4. LOCATE BURIED UTILITY PRIOR TO PILING CONSTRUCTION. NOTIFY ENGINEER OF ANY POTENTIAL INTERFERENCES.

KEY NOTES:

1. C6X10.5 FRAMING AS REQUIRED BY EQUIPMENT.
2. COPE 1/2" BOTTOM FLANGE FOR CONNECTION TO STIFFENER PLATE. SEE SECTIONS.
3. INSTALL ALUMINUM STAIR SALVAGED FROM SOUTH SIDE OF EXISTING BUILDING W/ EXISTING INTERMEDIATE LANDING AND COLUMNS - SEE X-502 FOR LOCATION. MODIFY STAIRS AS REQUIRED TO MEET EXACT GRADE. PROVIDE 3'-6" X 6'-0" X 2'-0" DEEP FOOTING AT LANDING COLUMNS W/ 1'-8" MINIMUM WASHED STONE @ INTERMEDIATE LANDING W/ #6@12" EW, T&B.
4. PROVIDE POST INSTALLED ADHESIVE ANCHORS WITH 6" MIN EMBED SEE BASE PLATE DETAIL FOR ADDITIONAL INFORMATION.

THE DRAWINGS IN THIS SET ARE RECORD DRAWINGS. THEY ARE CONSTRUCTION CONTRACT DRAWINGS WHICH HAVE BEEN REVISED BASED ON AVAILABLE FIELD INFORMATION RECORDED BY OTHERS DURING CONSTRUCTION OF THIS CONTRACT. THERE HAS BEEN NO VERIFICATION OF DIMENSIONS SHOWN ON THE CONSTRUCTION DRAWINGS OR THE ACCURACY/COMPLETENESS OF THE FIELD INFORMATION RECEIVED.

SIGNATURE

2/7/2022
DATE

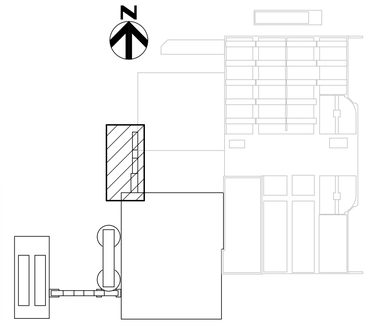

KEY PLAN

BIM 360://10054364 – Little Patuxent WRP 8th Addition/264592_100_S_V18.rvt
1/7/2022 10:09:41 AM

AS-BUILT REPLACEMENT SHEET

PROFESSIONAL CERTIFICATION

THIS DRAWING WAS ORIGINALLY APPROVED FOR CONSTRUCTION AND SEALED BY MICHAEL E. MARTIN, A REGISTERED PROFESSIONAL ENGINEER IN THE STATE OF MARYLAND, NO. 49839.

NOTICE TO CONTRACTORS

- PROJECT ELEVATIONS ARE BASED ON NAVD88 AND HOWARD COUNTY'S BENCHMARK SYSTEM
- PREVIOUS PROJECTS USED OTHER DATUMS
- APPLY THE FOLLOWING CONVERSIONS WHEN USING PREVIOUS CONTRACT DRAWINGS:
  - ADDITION NO. 6: SUBTRACT 0.80 FT
  - PRIOR ADDITIONS: SUBTRACT 1.04 FT

DEPARTMENT OF PUBLIC WORKS
HOWARD COUNTY, MARYLAND

CHIEF, BUREAU OF UTILITIES DATE

DES: MEM
DRN: WM
CHK: RM
DATE: 01/2018

DATE	REV	DESCRIPTION
03/2021		RECORD DRAWINGS

STRUCTURAL

PS-2 SUPPORT AND ACCESS

LITTLE PATUXENT WATER RECLAMATION PLANT
8TH ADDITION
BIOSOLIDS PROCESSING FACILITIES - PHASE 2

CAPITAL PROJECT S-6295
CONTRACT NO. 24-4936

ELECTION DISTRICT NO. 6
HOWARD COUNTY, MARYLAND

SCALE
AS
SHOWN

SHEET
74 OF 311

S-400

GENERAL NOTES:

1. SEE SHEET S-401 FOR ADDITIONAL NOTES.

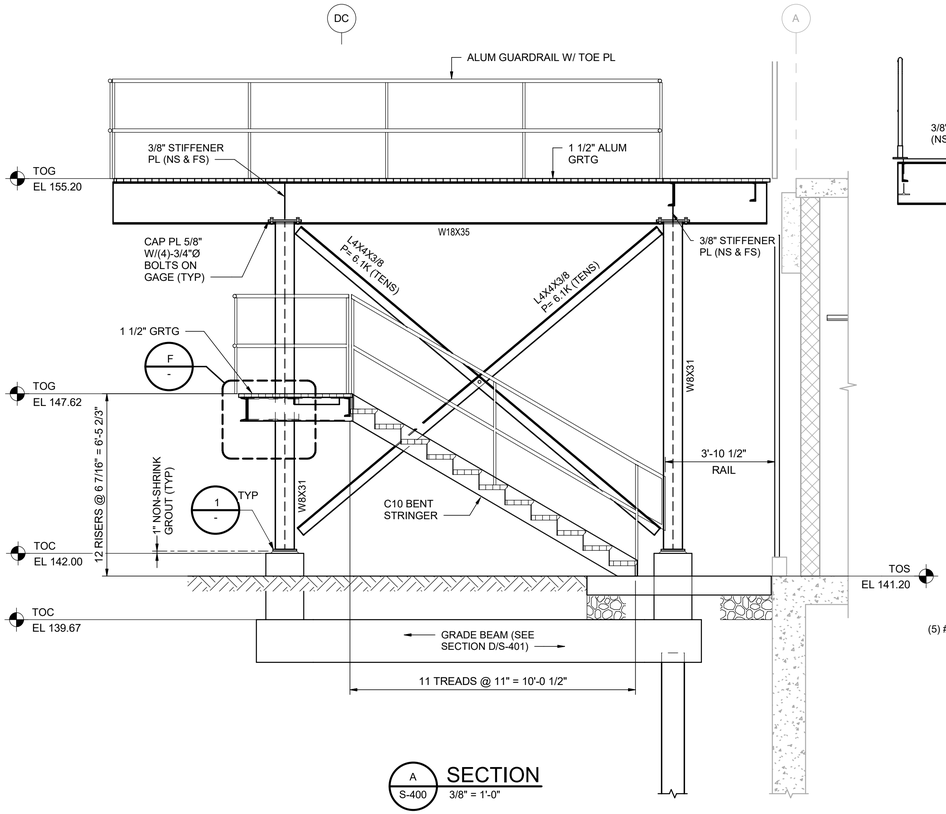

A S-400 SECTION 3/8" = 1'-0"

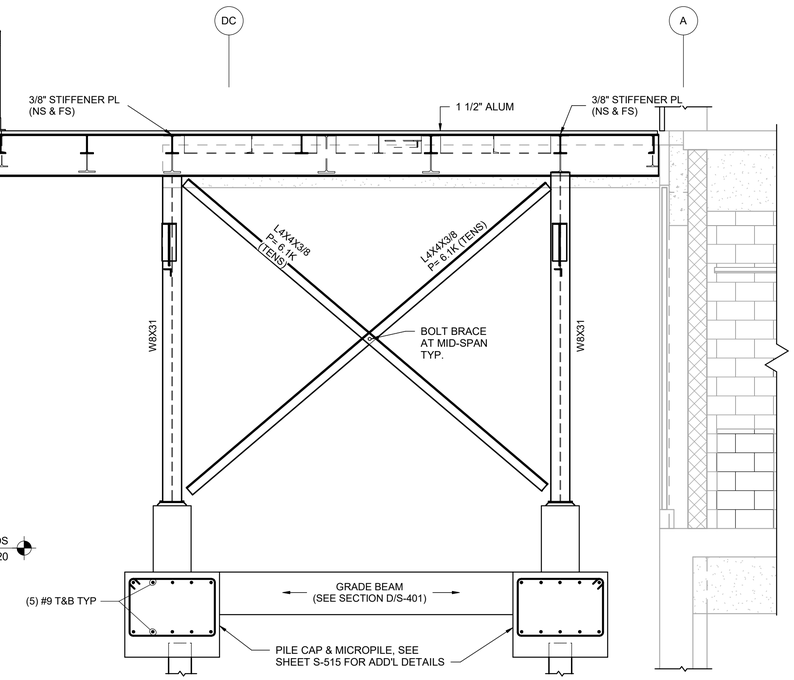

B S-400 SECTION 3/8" = 1'-0"

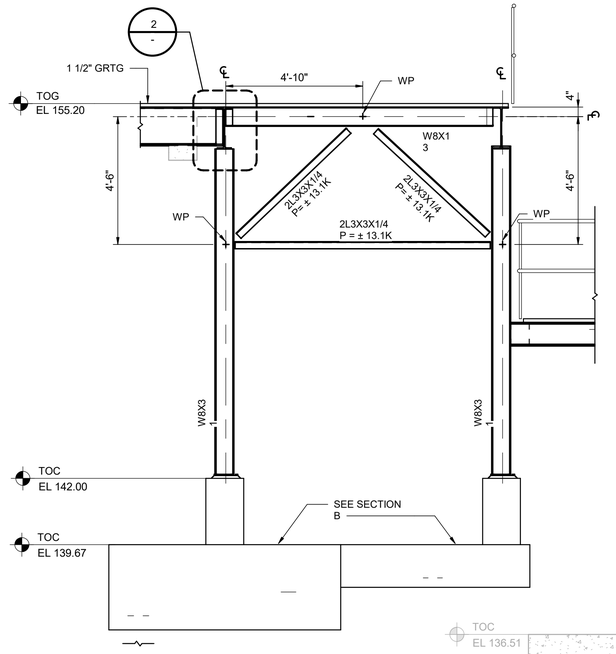

C S-400 SECTION 3/8" = 1'-0"

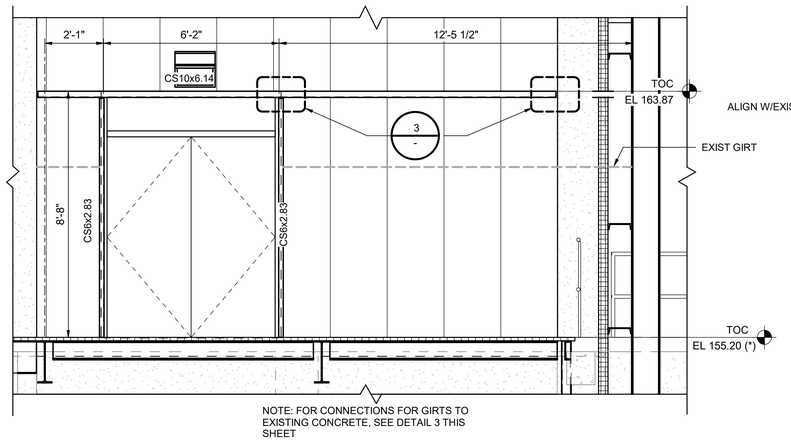

E S-400 SECTION 3/8" = 1'-0"

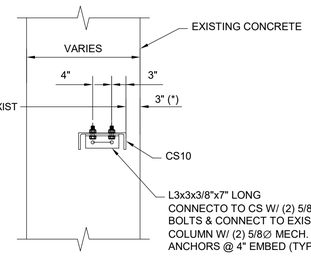

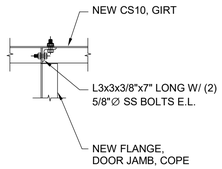

3 - GIRT CONNECTION DETAIL
NOT TO SCALE

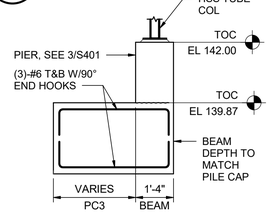

G S-400 SECTION 3/8" = 1'-0"

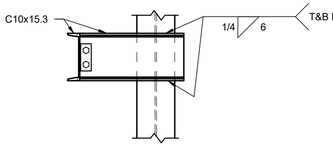

F S-400 SECTION 3/4" = 1'-0"

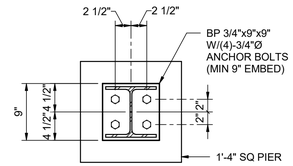

BASE PLATE

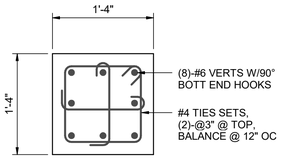

PIER REINFORCING

1 DETAIL 1" = 1'-0"

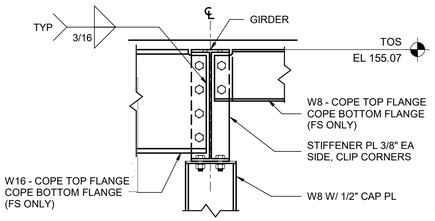

2 DETAIL 1" = 1'-0"

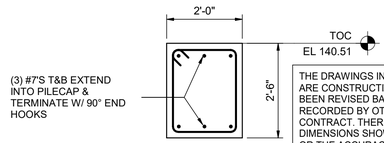

D S-400 SECTION 1/2" = 1'-0"

THE DRAWINGS IN THIS SET ARE RECORD DRAWINGS. THEY ARE CONSTRUCTION CONTRACT DRAWINGS WHICH HAVE BEEN REVISED BASED ON AVAILABLE FIELD INFORMATION RECORDED BY OTHERS DURING CONSTRUCTION OF THIS CONTRACT. THERE HAS BEEN NO VERIFICATION OF DIMENSIONS SHOWN ON THE CONSTRUCTION DRAWINGS OR THE ACCURACY/COMPLETENESS OF THE FIELD INFORMATION RECEIVED.

SIGNATURE — DATE 2/7/2022

BIM 360://10054364 – Little Patuxent WRP 8th Addition/264592_100_S_V18.rvt
1/7/2022 10:09:45 AM

AS-BUILT REPLACEMENT SHEET

PROFESSIONAL CERTIFICATION
THIS DRAWING WAS ORIGINALLY APPROVED FOR CONSTRUCTION AND SEALED BY MICHAEL E. MARTIN, A REGISTERED PROFESSIONAL ENGINEER IN THE STATE OF MARYLAND, NO. 49839.

NOTICE TO CONTRACTORS
- PROJECT ELEVATIONS ARE BASED ON NAVD88 AND HOWARD COUNTY'S BENCHMARK SYSTEM
- PREVIOUS PROJECTS USED OTHER DATUMS
- APPLY THE FOLLOWING CONVERSIONS WHEN USING PREVIOUS CONTRACT DRAWINGS:
  - ADDITION NO. 6: SUBTRACT 0.80 FT
  - PRIOR ADDITIONS: SUBTRACT 1.04 FT

DEPARTMENT OF PUBLIC WORKS
HOWARD COUNTY, MARYLAND

CHIEF, BUREAU OF UTILITIES — DATE

DES: MEM
DRN: WM
CHK: RM
DATE: 01/2018

DATE	REV	DESCRIPTION
03/2021		RECORD DRAWINGS

STRUCTURAL

PS-2 SECTIONS

LITTLE PATUXENT WATER RECLAMATION PLANT
8TH ADDITION
BIOSOLIDS PROCESSING FACILITIES - PHASE 2

CAPITAL PROJECT S-6295
CONTRACT NO. 24-4936

ELECTION DISTRICT NO. 6
HOWARD COUNTY, MARYLAND

SCALE AS SHOWN

SHEET 75 OF 311

S-401

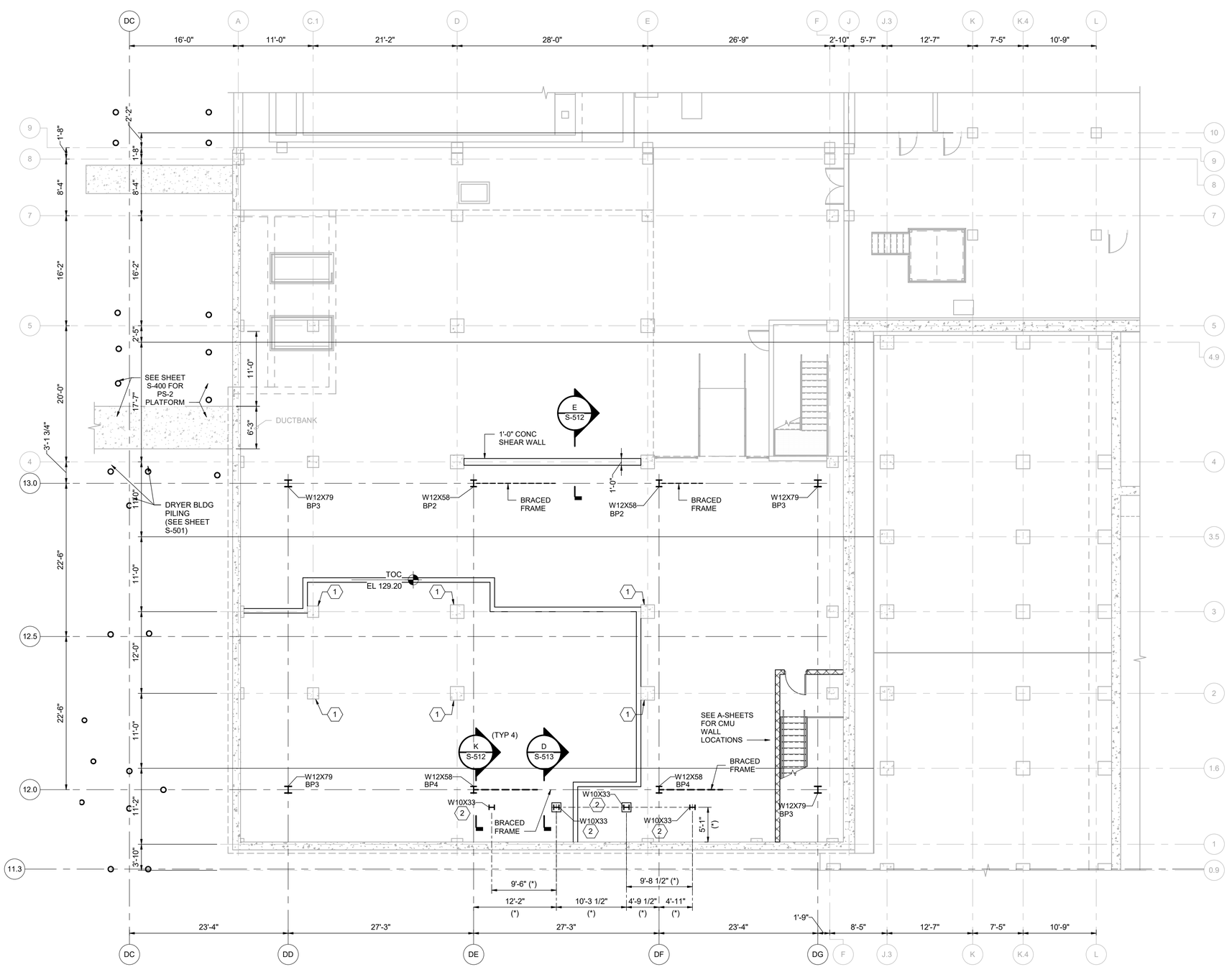

FOUNDATION BASEMENT PLAN ELEVATION 129.20

1/8" = 1'-0"

GENERAL NOTES:

1. SEE SHEET S-901 FOR STRUCTURAL GENERAL NOTES. SEE S-900 SERIES SHEETS FOR STANDARD DETAILS.
2. ALL STEEL TO BE HOT-DIPPED GALVANIZED (UNO).
3. BP INDICATES BASE PLATE MARK, SEE DETAIL 1/S-906 FOR SCHEDULE.

LOADS:
FLOOR LIVE LOAD: 250 PSF

KEY NOTES:

1. EXISTING CONCRETE COLUMN TO REMAIN.
2. LOCATE STEEL COLUMNS DIRECTLY BELOW STORAGE BIN COLUMNS. LOCATION, NUMBER OF COLUMNS, AND COLUMN SIZE MAY VARY BASED ON FINAL STORAGE BIN DRAWINGS. SEE SECTION K/S-512 FOR MORE INFORMATION.

THE DRAWINGS IN THIS SET ARE RECORD DRAWINGS. THEY ARE CONSTRUCTION CONTRACT DRAWINGS WHICH HAVE BEEN REVISED BASED ON AVAILABLE FIELD INFORMATION RECORDED BY OTHERS DURING CONSTRUCTION OF THIS CONTRACT. THERE HAS BEEN NO VERIFICATION OF DIMENSIONS SHOWN ON THE CONSTRUCTION DRAWINGS OR THE ACCURACY/COMPLETENESS OF THE FIELD INFORMATION RECEIVED.

SIGNATURE

2/7/2023
DATE

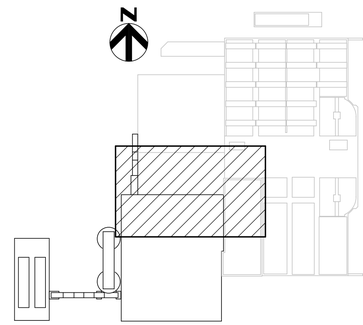

KEY PLAN

AS-BUILT REPLACEMENT SHEET

PROFESSIONAL CERTIFICATION
THIS DRAWING WAS ORIGINALLY APPROVED FOR CONSTRUCTION AND SEALED BY MICHAEL E. MARTIN, A REGISTERED PROFESSIONAL ENGINEER IN THE STATE OF MARYLAND, NO. 49839.

NOTICE TO CONTRACTORS
- PROJECT ELEVATIONS ARE BASED ON NAVD88 AND HOWARD COUNTY'S BENCHMARK SYSTEM
- PREVIOUS PROJECTS USED OTHER DATUMS
- APPLY THE FOLLOWING CONVERSIONS WHEN USING PREVIOUS CONTRACT DRAWINGS:
  - ADDITION NO. 6: SUBTRACT 0.80 FT
  - PRIOR ADDITIONS: SUBTRACT 1.04 FT

DEPARTMENT OF PUBLIC WORKS
HOWARD COUNTY, MARYLAND

CHIEF, BUREAU OF UTILITIES DATE

DES: MEM
DRN: WM
CHK: RM
DATE: 01/2018

DATE	REV	DESCRIPTION
03/2021		RECORD DRAWINGS

STRUCTURAL

DRYER BUILDING FOUNDATION PLAN AT EL 129.20 NORTH

LITTLE PATUXENT WATER RECLAMATION PLANT
8TH ADDITION
BIOSOLIDS PROCESSING FACILITIES - PHASE 2

CAPITAL PROJECT S-6295
CONTRACT NO. 24-4936

ELECTION DISTRICT NO. 6
HOWARD COUNTY, MARYLAND

SCALE AS SHOWN

SHEET 76 OF 311

S-500

BIM 360://10054364 – Little Patuxent WRP 8th Addition/264592_100_S_V18.rvt
1/7/2022 10:09:47 AM

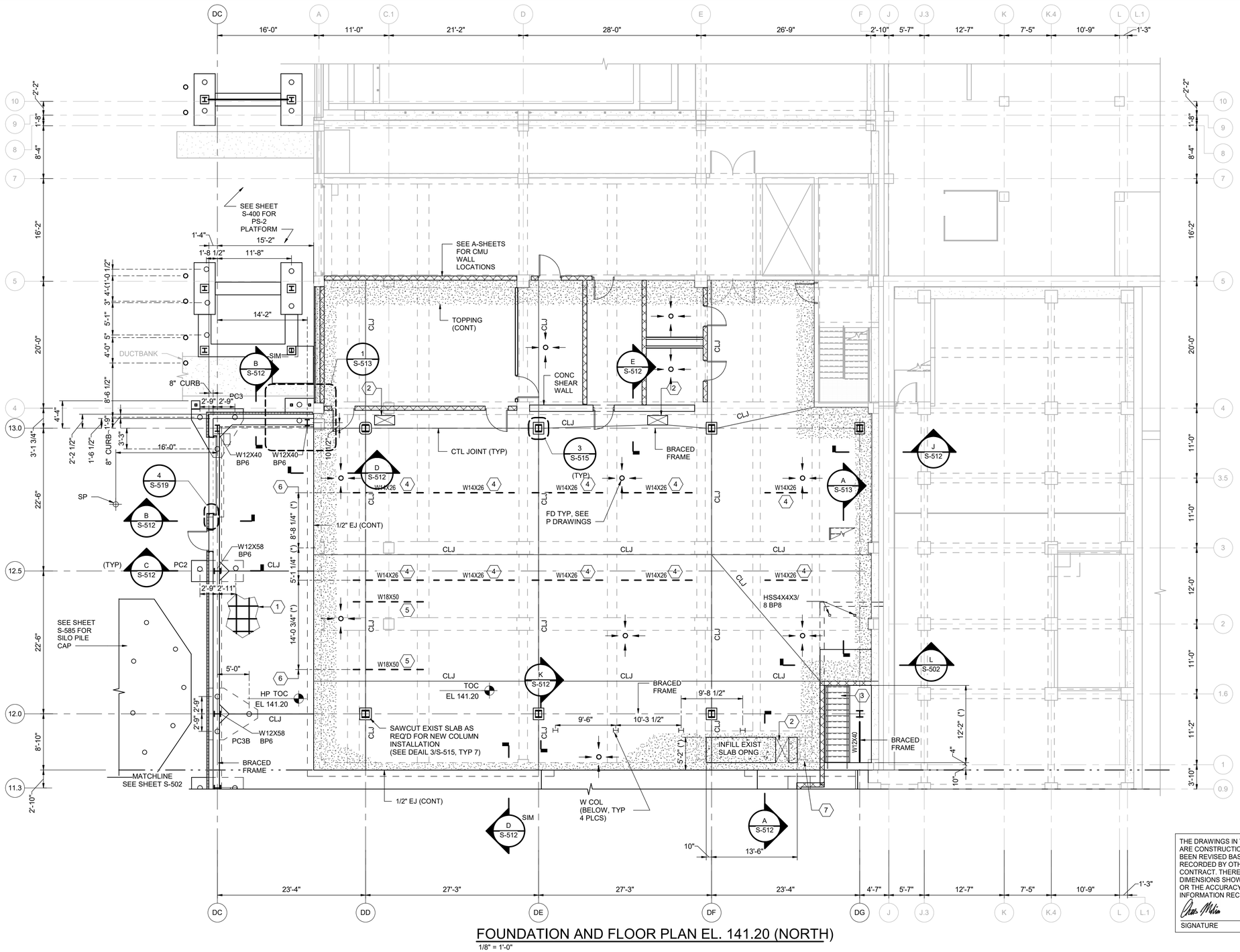

FOUNDATION AND FLOOR PLAN EL. 141.20 (NORTH)

1/8" = 1'-0"

GENERAL NOTES:

1. SEE SHEET S-500 FOR ADDITIONAL NOTES.
2. BP INDICATES BASE PLATE MARK, SEE DETAIL 1/S-906 FOR SCHEDULE.
3. TOP OF CONCRETE (TOC) PILE CAP ELEVATION 139.87 (TYP UNO).
4. CONCRETE FLOOR TO BE LEVEL AT DRAINS. PROVIDE 1 ON 1 SLOPE AT EACH DRAIN ON 4'-0" RADIUS, 1/2" SLOPE.

LOADS:
FINISHED FLOOR (SLAB ON GRADE)
LIVE LOAD: 250 PSF

EXISTING ELEVATED SLABS: 100 PSF
(IN ADDITION TO DRYER WEIGHT)

KEY NOTES:

1. 8" THICK (MINIMUM) CONCRETE SLAB WITH #5@12" EACH WAY AT MID-THICKNESS. SLOPE TO FLOOR DRAINS. TOC HP EL 141.20.
2. FLOOR OPENING FOR MECHANICAL EQUIPMENT, COORDINATE SIZE AND LOCATION WITH M-SHEETS.
3. SEE SHEET S-516 FOR STAIR PLANS AND ADDITIONAL INFORMATION.
4. SEE DETAIL 3/S-513 FOR CONNECTION TO EXIST CONCRETE
5. SEE DETAIL 4/S-513 FOR CONNECTION TO EXIST CONCRETE
6. LOCATION OF BEAMS TO BE DIRECTLY BELOW DRYER EQUIPMENT
7. REMOVE EXISTING SLAB AT STAIRS REPAIR PER SECTIONS A/S512.

LEGEND:

- INDICATES 9 5/8"Ø MICROPILE WITH 90K VERTICAL CAPACITY, 10K UPLIFT CAPACITY AND 6K LATERAL CAPACITY (ALL LOADS SERVICE) SEE SPECIFICATIONS FOR ADDITIONAL INFORMATION.
- NEW FLOOR TOPPING (4 INCH MAXIMUM THICKNESS, 2 INCH MIN THICKNESS) MINIMAL SLOPE AS REQUIRED TO FLOOR DRAINS. SEE DEMOLITION DRAWINGS FOR ADDITIONAL INFORMATION. TOPPING MIX TO CONTAIN MACRO FIBERS AT 5 #/CY MINIMUM; f'c = 4000 PSI, W/C RATIO 0.40 MAX.
- SACRIFICIAL PILE LOAD TEST (SP)

THE DRAWINGS IN THIS SET ARE RECORD DRAWINGS. THEY ARE CONSTRUCTION CONTRACT DRAWINGS WHICH HAVE BEEN REVISED BASED ON AVAILABLE FIELD INFORMATION RECORDED BY OTHERS DURING CONSTRUCTION OF THIS CONTRACT. THERE HAS BEEN NO VERIFICATION OF DIMENSIONS SHOWN ON THE CONSTRUCTION DRAWINGS OR THE ACCURACY/COMPLETENESS OF THE FIELD INFORMATION RECEIVED.

SIGNATURE — DATE 2/7/2022

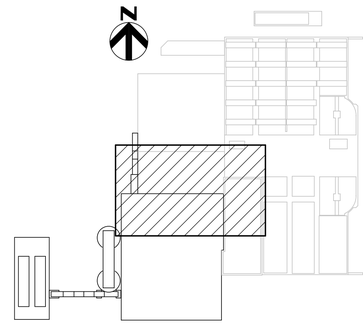

KEY PLAN

AS-BUILT REPLACEMENT SHEET

PROFESSIONAL CERTIFICATION
THIS DRAWING WAS ORIGINALLY APPROVED FOR CONSTRUCTION AND SEALED BY MICHAEL E. MARTIN, A REGISTERED PROFESSIONAL ENGINEER IN THE STATE OF MARYLAND, NO. 49839.

NOTICE TO CONTRACTORS
- PROJECT ELEVATIONS ARE BASED ON NAVD88 AND HOWARD COUNTY'S BENCHMARK SYSTEM
- PREVIOUS PROJECTS USED OTHER DATUMS
- APPLY THE FOLLOWING CONVERSIONS WHEN USING PREVIOUS CONTRACT DRAWINGS:
  - ADDITION NO. 6: SUBTRACT 0.80 FT
  - PRIOR ADDITIONS: SUBTRACT 1.04 FT

DEPARTMENT OF PUBLIC WORKS
HOWARD COUNTY, MARYLAND

CHIEF, BUREAU OF UTILITIES — DATE

DES: MEM
DRN: WM
CHK: RM
DATE: 01/2018

DATE	REV	DESCRIPTION
03/2021		RECORD DRAWINGS

STRUCTURAL

DRYER BUILDING FOUNDATION AND FLOOR PLAN AT EL 141.20 - NORTH

LITTLE PATUXENT WATER RECLAMATION PLANT
8TH ADDITION
BIOSOLIDS PROCESSING FACILITIES - PHASE 2

CAPITAL PROJECT S-6295
CONTRACT NO. 24-4936

ELECTION DISTRICT NO. 6
HOWARD COUNTY, MARYLAND

SCALE AS SHOWN

SHEET 77 OF 311

S-501

BIM 360://10054364 – Little Patuxent WRP 8th Addition/264592_100_S_V18.rvt
1/7/2022 10:09:49 AM

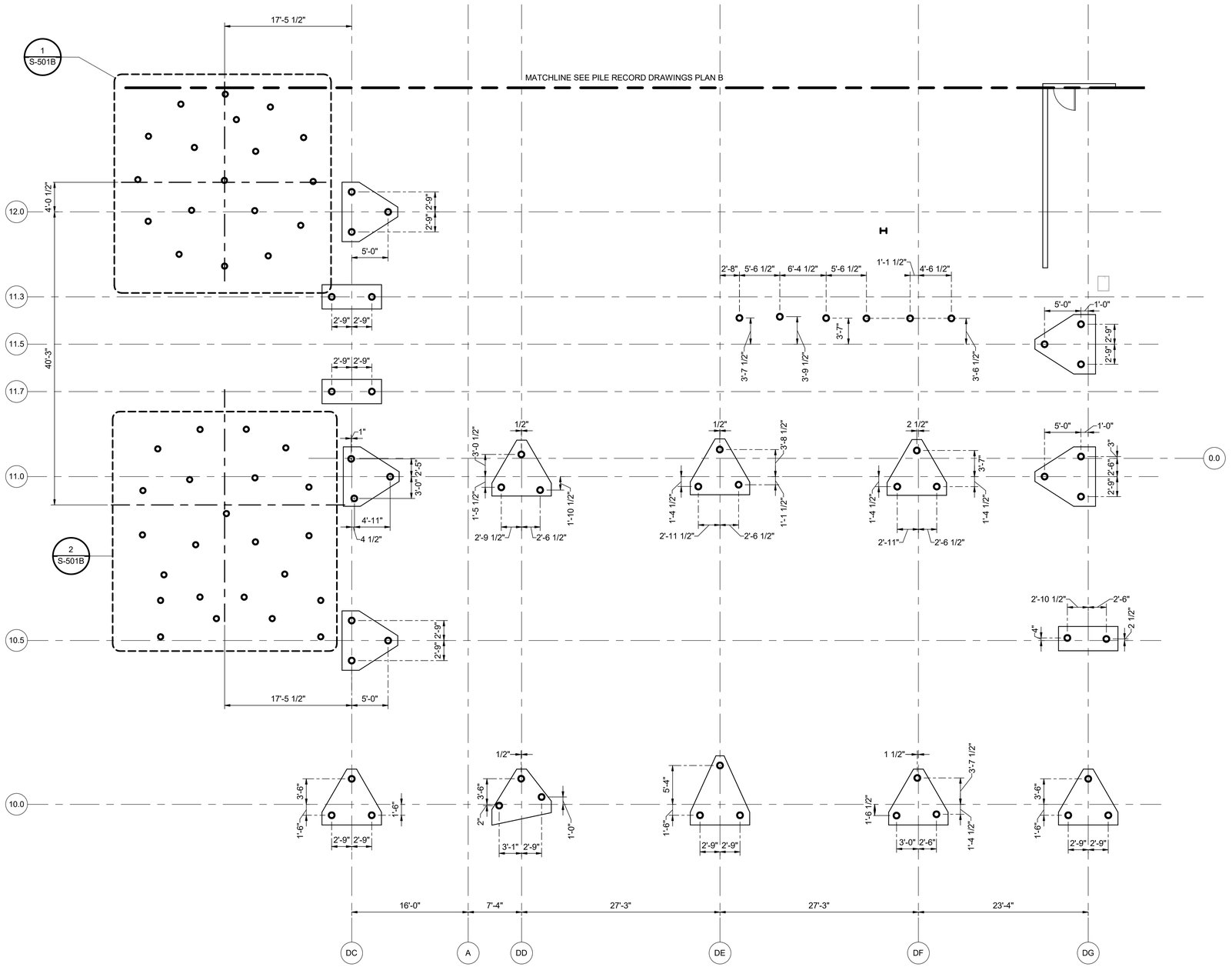

PILE RECORD DRAWINGS PLAN A

1/8" = 1'-0"

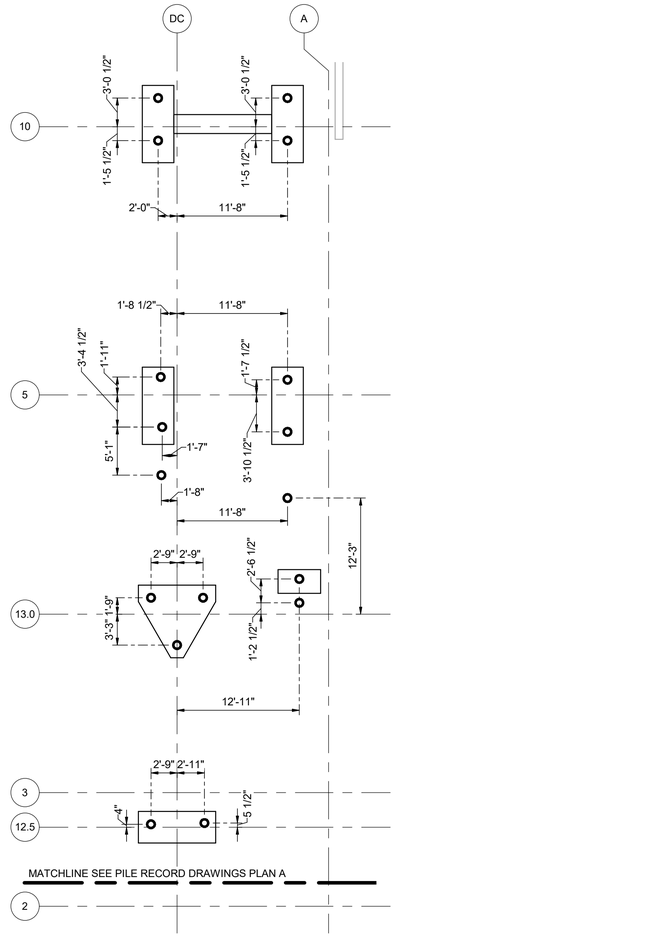

PILE RECORD DRAWINGS PLAN B

1/8" = 1'-0"

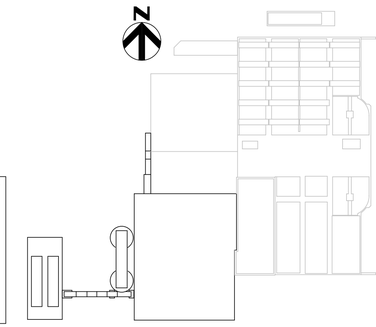

KEY PLAN

THE DRAWINGS IN THIS SET ARE RECORD DRAWINGS. THEY ARE CONSTRUCTION CONTRACT DRAWINGS WHICH HAVE BEEN REVISED BASED ON AVAILABLE FIELD INFORMATION RECORDED BY OTHERS DURING CONSTRUCTION OF THIS CONTRACT. THERE HAS BEEN NO VERIFICATION OF DIMENSIONS SHOWN ON THE CONSTRUCTION DRAWINGS OR THE ACCURACY/COMPLETENESS OF THE FIELD INFORMATION RECEIVED.

SIGNATURE — DATE 2/7/2022

AS-BUILT REPLACEMENT SHEET

PROFESSIONAL CERTIFICATION
THIS DRAWING WAS ORIGINALLY APPROVED FOR CONSTRUCTION AND SEALED BY MICHAEL E. MARTIN, A REGISTERED PROFESSIONAL ENGINEER IN THE STATE OF MARYLAND, NO. 49839.

NOTICE TO CONTRACTORS
- PROJECT ELEVATIONS ARE BASED ON NAVD88 AND HOWARD COUNTY'S BENCHMARK SYSTEM
- PREVIOUS PROJECTS USED OTHER DATUMS
- APPLY THE FOLLOWING CONVERSIONS WHEN USING PREVIOUS CONTRACT DRAWINGS:
  - ADDITION NO. 6: SUBTRACT 0.80 FT
  - PRIOR ADDITIONS: SUBTRACT 1.04 FT

DEPARTMENT OF PUBLIC WORKS
HOWARD COUNTY, MARYLAND

CHIEF, BUREAU OF UTILITIES — DATE

DES: HMA
DRN: NCC
CHK: MEM
DATE: 01/2018

DATE	REV	DESCRIPTION
03/2021		RECORD DRAWINGS

STRUCTURAL

PILE RECORD PLANS

LITTLE PATUXENT WATER RECLAMATION PLANT
8TH ADDITION
BIOSOLIDS PROCESSING FACILITIES - PHASE 2

CAPITAL PROJECT S-6295
CONTRACT NO. 24-4936

ELECTION DISTRICT NO. 6
HOWARD COUNTY, MARYLAND

SCALE AS SHOWN

SHEET 78 OF 311

S-501A

BIM 360://10054364 – Little Patuxent WRP 8th Addition/264592_100_S_V18.rvt
1/7/2022 10:09:51 AM

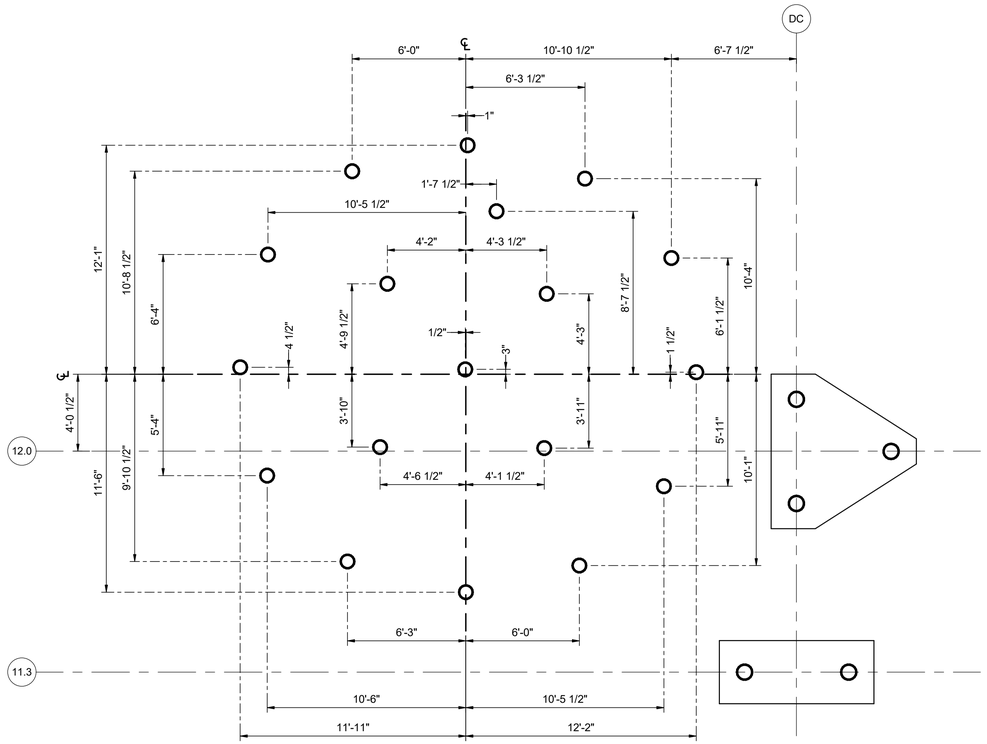

1 S-501A DETAIL
1/4" = 1'-0"

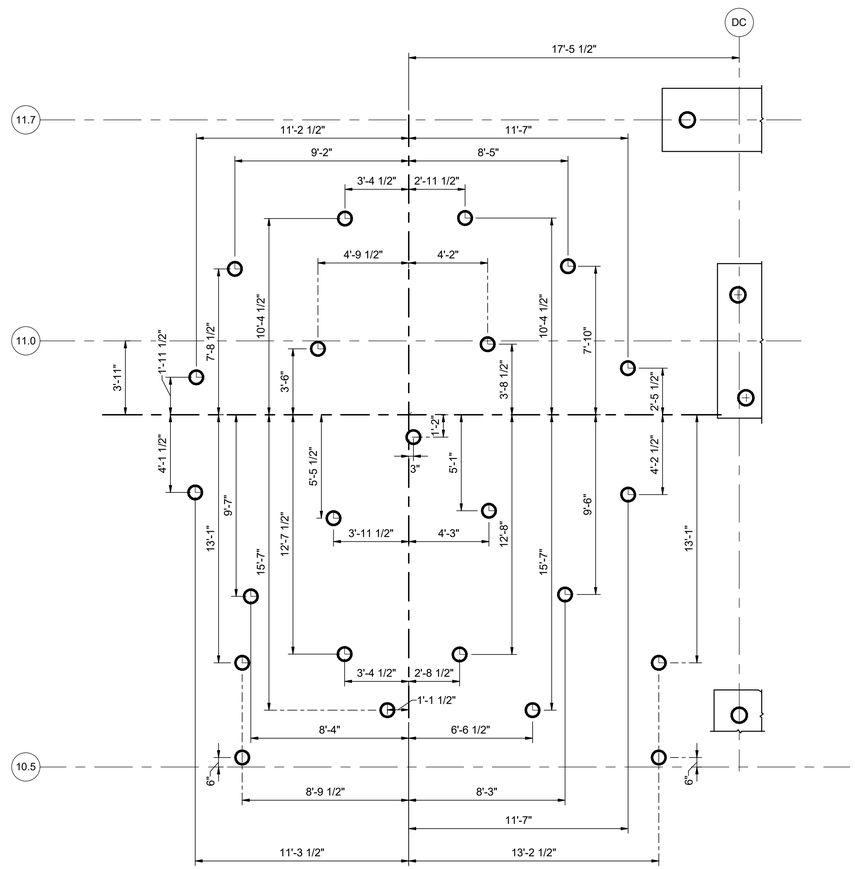

2 S-501A DETAIL
1/4" = 1'-0"

THE DRAWINGS IN THIS SET ARE RECORD DRAWINGS. THEY ARE CONSTRUCTION CONTRACT DRAWINGS WHICH HAVE BEEN REVISED BASED ON AVAILABLE FIELD INFORMATION RECORDED BY OTHERS DURING CONSTRUCTION OF THIS CONTRACT. THERE HAS BEEN NO VERIFICATION OF DIMENSIONS SHOWN ON THE CONSTRUCTION DRAWINGS OR THE ACCURACY/COMPLETENESS OF THE FIELD INFORMATION RECEIVED.

SIGNATURE _____ DATE 1/7/2022

AS-BUILT REPLACEMENT SHEET

PROFESSIONAL CERTIFICATION
THIS DRAWING WAS ORIGINALLY APPROVED FOR CONSTRUCTION AND SEALED BY MICHAEL E. MARTIN, A REGISTERED PROFESSIONAL ENGINEER IN THE STATE OF MARYLAND, NO. 49839.

NOTICE TO CONTRACTORS
- PROJECT ELEVATIONS ARE BASED ON NAVD88 AND HOWARD COUNTY'S BENCHMARK SYSTEM
- PREVIOUS PROJECTS USED OTHER DATUMS
- APPLY THE FOLLOWING CONVERSIONS WHEN USING PREVIOUS CONTRACT DRAWINGS:
  - ADDITION NO. 6: SUBTRACT 0.80 FT
  - PRIOR ADDITIONS: SUBTRACT 1.04 FT

DEPARTMENT OF PUBLIC WORKS
HOWARD COUNTY, MARYLAND

CHIEF, BUREAU OF UTILITIES DATE

DES: HMA
DRN: NCC
CHK: MEM
DATE: 01/2018

DATE	REV	DESCRIPTION
03/2021		RECORD DRAWINGS

STRUCTURAL

PILE RECORD DETAILS

LITTLE PATUXENT WATER RECLAMATION PLANT
8TH ADDITION
BIOSOLIDS PROCESSING FACILITIES - PHASE 2

CAPITAL PROJECT S-6295
CONTRACT NO. 24-4936

ELECTION DISTRICT NO. 6
HOWARD COUNTY, MARYLAND

SCALE AS SHOWN

SHEET 79 OF 311

S-501B

BIM 360://10054364 – Little Patuxent WRP 8th Addition/264592_100_S_V18.rvt
1/7/2022 10:09:51 AM

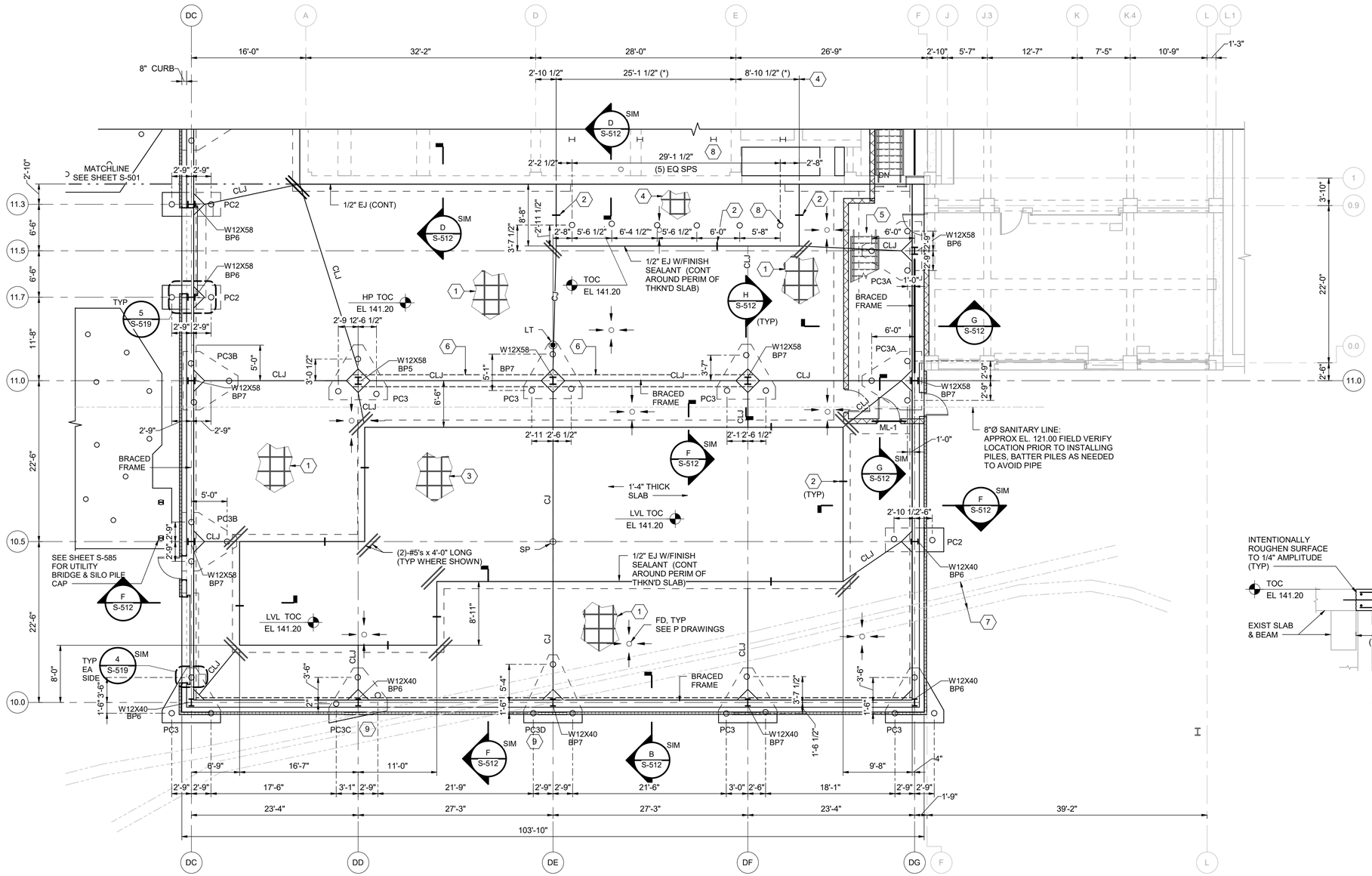

FOUNDATION AND FLOOR PLAN EL. 141.20 (SOUTH)

1/8" = 1'-0"

L S-501 SECTION

3/8" = 1'-0"

GENERAL NOTES:

1. SEE SHEET S-500 FOR ADDITIONAL NOTES.
2. BP INDICATES BASE PLATE MARK, SEE DETAIL 1/S-906 FOR SCHEDULE.
3. PILE CAP SCHEDULE ON SHEET S-515. TOP OF CONCRETE (TOC) PILE CAP ELEVATION 139.87 (TYP UNO).
4. CONCRETE FLOOR TO BE LEVEL AT DRAINS. PROVIDE 1 ON 1 SLOPE AT EACH DRAIN ON 4'-0" RADIUS, 1/2" SLOPE.

LOADS:
FINISHED FLOOR LIVE LOAD: 250 PSF

KEY NOTES:

1. 8" THICK (MINIMUM) CONCRETE SLAB WITH #5@12" EACH WAY AT MID-THICKNESS. SLOPE TO FLOOR DRAINS. TOC HP EL 141.20.
2. 3/4"Ø A36, GALV. DOWEL x 1'-6" LONG @ 1'-6" OC, ALL SIDES, SEE SECTIONS.
3. 1'-4" THICK (MINIMUM) CONCRETE SLAB WITH #5@12" EACH WAY, TOP AND BOTTOM. NO SLOPE.
4. 2'-0" THICK (MINIMUM) CONCRETE SLAB WITH #6@12 EACH WAY, TOP AND BOTTOM. NO SLOPE. ADJUST BOTTOM REBARS AROUND PILES.
5. SEE SHEET S-516 FOR STAIR PLAN AND INFORMATION.
6. 2'-0" WIDE x 2'-6" DEEP GRADE BEAM, TOC BEAM EL 140.53' (BELOW SLAB) APPLY BOND BREAKER BETWEEN BEAM AND SLAB. SEE B/S-512 FOR BEAM REINF. TERM BEAM REINF. W/ 90° END HOOKS AT CTR PILE CAPS.
7. EXISTING 48" WIDE (*) DUCT BANK, FIELD VERIFY LOCATION PRIOR TO INSTALLING PILES.
8. EMBED PILES 4" INTO FOOTING.
9. LOCATE BURIED UTILITY PRIOR TO PILING CONSTRUCTION. NOTIFY ENGINEER OF ANY POTENTIAL INTERFERENCES.

LEGEND:

- INDICATES 9 5/8"Ø MICROPILE WITH 90K VERTICAL CAPACITY, 10K UPLIFT CAPACITY AND 6K LATERAL CAPACITY (ALL LOADS SERVICE) SEE SPECIFICATIONS FOR ADDITIONAL INFORMATION.
- SACRIFICIAL PILE LOAD TEST (SP)
- PRODUCTION PILE LOAD TEST (LT)

THE DRAWINGS IN THIS SET ARE RECORD DRAWINGS. THEY ARE CONSTRUCTION CONTRACT DRAWINGS WHICH HAVE BEEN REVISED BASED ON AVAILABLE FIELD INFORMATION RECORDED BY OTHERS DURING CONSTRUCTION OF THIS CONTRACT. THERE HAS BEEN NO VERIFICATION OF DIMENSIONS SHOWN ON THE CONSTRUCTION DRAWINGS OR THE ACCURACY/COMPLETENESS OF THE FIELD INFORMATION RECEIVED.

SIGNATURE

2/7/2022
DATE

KEY PLAN

BIM 360://10054364 – Little Patuxent WRP 8th Addition/264592_100_S_V18.rvt
1/7/2022 10:09:54 AM

	HDR	AS-BUILT REPLACEMENT SHEET	PROFESSIONAL CERTIFICATION THIS DRAWING WAS ORIGINALLY APPROVED FOR CONSTRUCTION AND SEALED BY MICHAEL E. MARTIN, A REGISTERED PROFESSIONAL ENGINEER IN THE STATE OF MARYLAND, NO. 49839.	NOTICE TO CONTRACTORS • PROJECT ELEVATIONS ARE BASED ON NAVD88 AND HOWARD COUNTY'S BENCHMARK SYSTEM • PREVIOUS PROJECTS USED OTHER DATUMS • APPLY THE FOLLOWING CONVERSIONS WHEN USING PREVIOUS CONTRACT DRAWINGS: - ADDITION NO. 6: SUBTRACT 0.80 FT - PRIOR ADDITIONS: SUBTRACT 1.04 FT	DEPARTMENT OF PUBLIC WORKS HOWARD COUNTY, MARYLAND CHIEF, BUREAU OF UTILITIES DATE	DES: MEM DRN: WM CHK: RM DATE: 01/2018	03/2021		RECORD DRAWINGS	**STRUCTURAL** **DRYER BUILDING FOUNDATION AND FLOOR PLAN AT EL 141.20 - SOUTH**	LITTLE PATUXENT WATER RECLAMATION PLANT 8TH ADDITION BIOSOLIDS PROCESSING FACILITIES - PHASE 2 CAPITAL PROJECT S-6295 CONTRACT NO. 24-4936 ELECTION DISTRICT NO. 6 HOWARD COUNTY, MARYLAND	SCALE AS SHOWN SHEET 80 OF 311 **S-502**
							DATE	REV	DESCRIPTION	

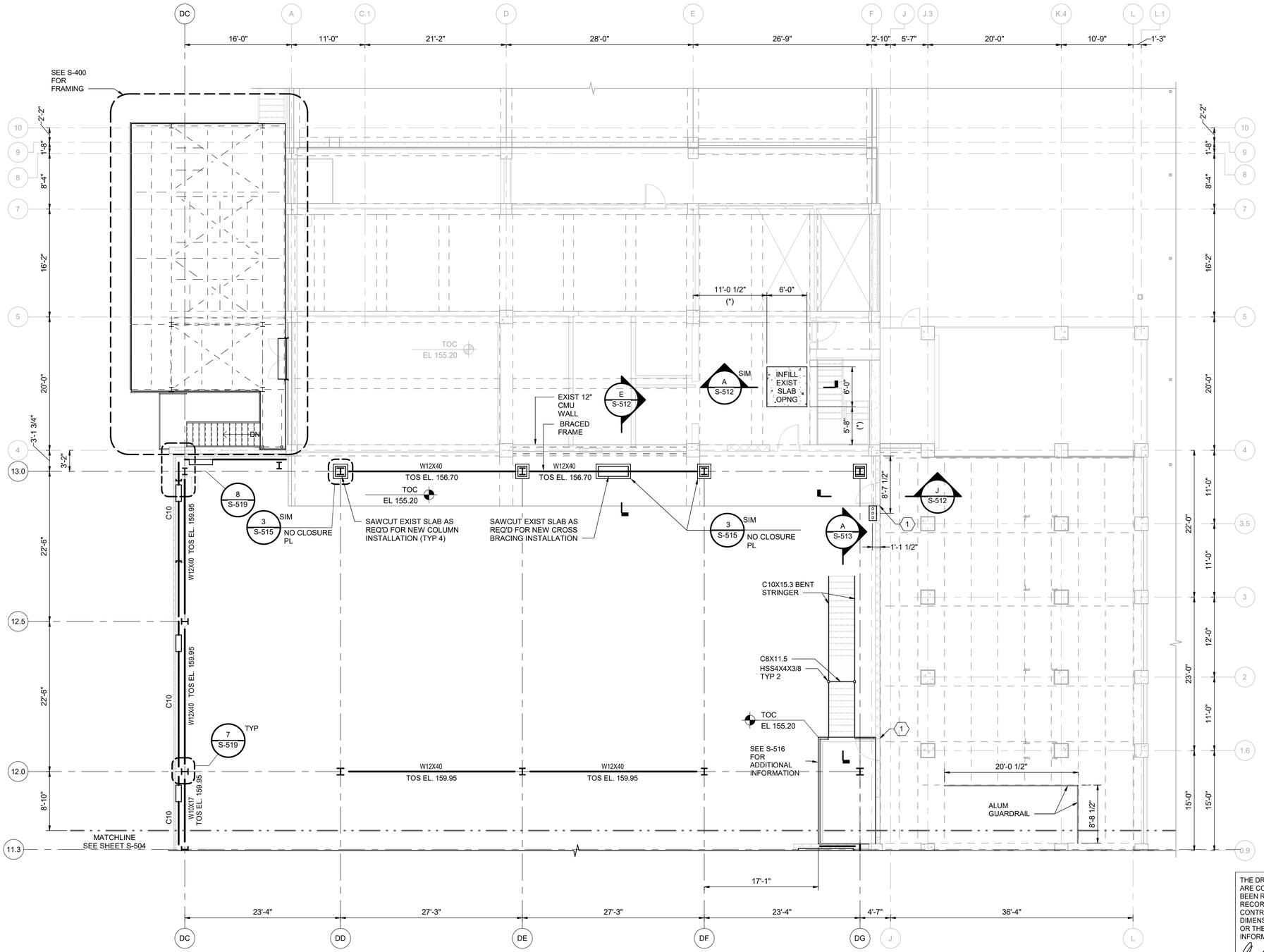

NORTH PLAN @ ELEVATION TOS EL. 155.20

1/8" = 1'-0"

N

GENERAL NOTES:

1. SEE SHEET S-500 FOR ADDITIONAL NOTES.
2. SEE A-SHEET FOR CMU DIMENSIONS.
3. GIRT SIZES ON ELEVATIONS.

KEYNOTES:

1. INSTALL ALUMINUM CHECKERPLATE AS A THRESHOLD TRANSITION AT DOOR 201A AND 201B. ANCHOR TO CONCRETE USING ANCHORS. INSTALL SUCH THAT THE HORIZONTAL LEG IS LEVEL WITH THE TOP OF GRATING.

LOADS:
GRATING + STAIR LIVE LOAD: 100 PSF
SLAB LIVE LOAD = 250 PSF

THE DRAWINGS IN THIS SET ARE RECORD DRAWINGS. THEY ARE CONSTRUCTION CONTRACT DRAWINGS WHICH HAVE BEEN REVISED BASED ON AVAILABLE FIELD INFORMATION RECORDED BY OTHERS DURING CONSTRUCTION OF THIS CONTRACT. THERE HAS BEEN NO VERIFICATION OF DIMENSIONS SHOWN ON THE CONSTRUCTION DRAWINGS OR THE ACCURACY/COMPLETENESS OF THE FIELD INFORMATION RECEIVED.

SIGNATURE

2/7/2022
DATE

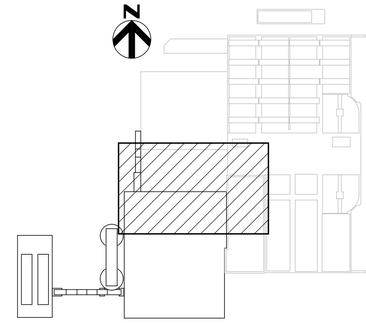

KEY PLAN

AS-BUILT REPLACEMENT SHEET

PROFESSIONAL CERTIFICATION
THIS DRAWING WAS ORIGINALLY APPROVED FOR CONSTRUCTION AND SEALED BY MICHAEL E. MARTIN, A REGISTERED PROFESSIONAL ENGINEER IN THE STATE OF MARYLAND, NO. 49839.

NOTICE TO CONTRACTORS
- PROJECT ELEVATIONS ARE BASED ON NAVD88 AND HOWARD COUNTY'S BENCHMARK SYSTEM
- PREVIOUS PROJECTS USED OTHER DATUMS
- APPLY THE FOLLOWING CONVERSIONS WHEN USING PREVIOUS CONTRACT DRAWINGS:
  - ADDITION NO. 6: SUBTRACT 0.80 FT
  - PRIOR ADDITIONS: SUBTRACT 1.04 FT

DEPARTMENT OF PUBLIC WORKS
HOWARD COUNTY, MARYLAND

CHIEF, BUREAU OF UTILITIES DATE

DES: MEM
DRN: WM
CHK: RM
DATE: 01/2018

DATE	REV	DESCRIPTION
		RFI-0518
03/2021		RECORD DRAWINGS

STRUCTURAL

DRYER BUILDING
PLAN AT EL 155.20 - NORTH

LITTLE PATUXENT WATER RECLAMATION PLANT
8TH ADDITION
BIOSOLIDS PROCESSING FACILITIES - PHASE 2

CAPITAL PROJECT S-6295
CONTRACT NO. 24-4936

ELECTION DISTRICT NO. 6
HOWARD COUNTY, MARYLAND

SCALE AS SHOWN

SHEET 81 OF 311

S-503

BIM 360://10054364 – Little Patuxent WRP 8th Addition/264592_100_S_V18.rvt
1/7/2022 10:09:57 AM

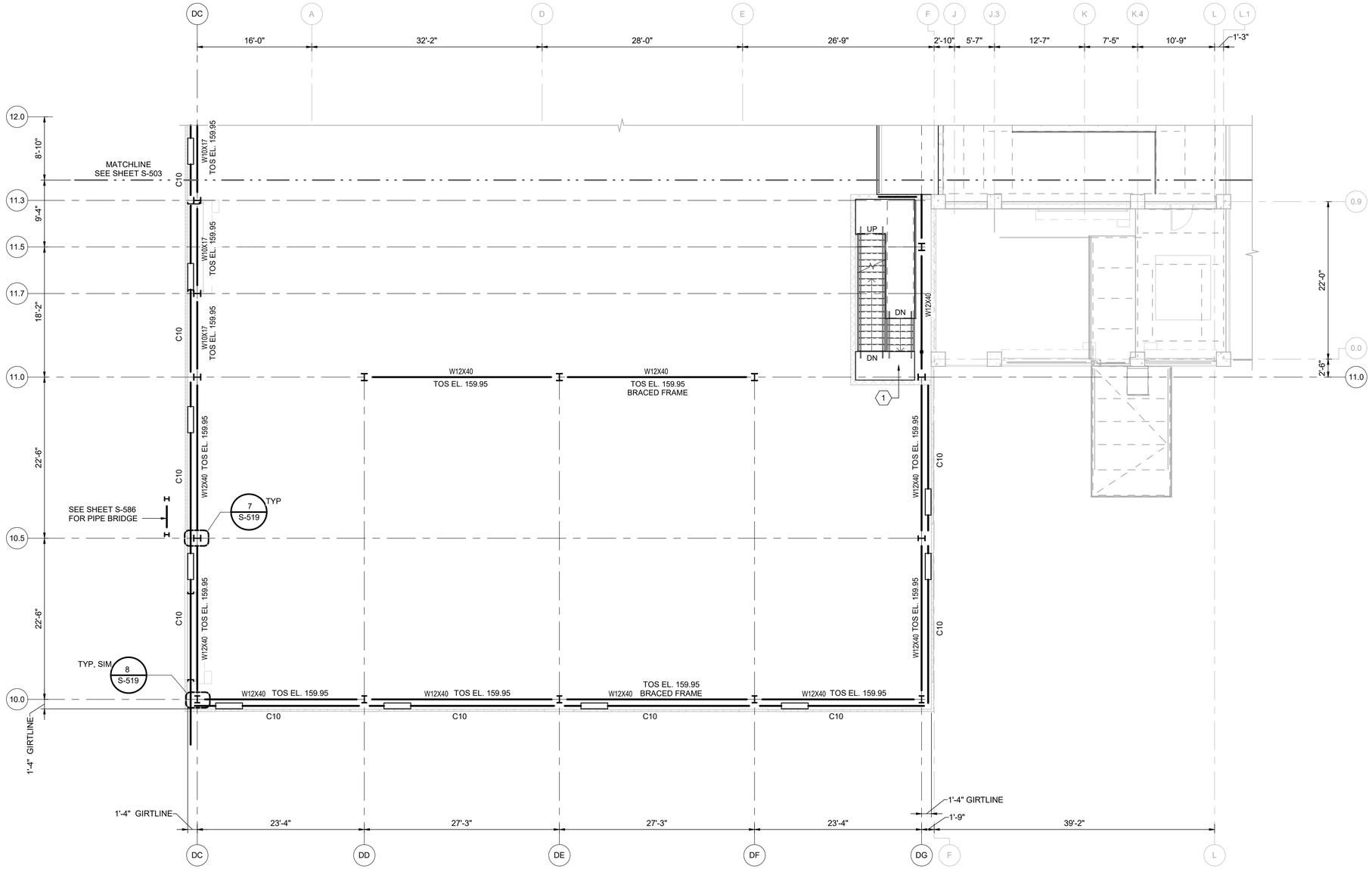

SOUTH PLAN @ ELEVATION 155.20

1/8" = 1'-0"

GENERAL NOTES:

1. SEE SHEET S-500 AND S-503 FOR ADDITIONAL NOTES.

KEY NOTES:

(1) SEE SHEET S-516 FOR STAIR PLAN AND INFORMATION.

THE DRAWINGS IN THIS SET ARE RECORD DRAWINGS. THEY ARE CONSTRUCTION CONTRACT DRAWINGS WHICH HAVE BEEN REVISED BASED ON AVAILABLE FIELD INFORMATION RECORDED BY OTHERS DURING CONSTRUCTION OF THIS CONTRACT. THERE HAS BEEN NO VERIFICATION OF DIMENSIONS SHOWN ON THE CONSTRUCTION DRAWINGS OR THE ACCURACY/COMPLETENESS OF THE FIELD INFORMATION RECEIVED.

SIGNATURE — DATE 2/7/2022

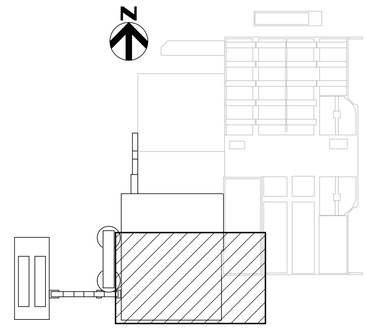

KEY PLAN

AS-BUILT REPLACEMENT SHEET

PROFESSIONAL CERTIFICATION

THIS DRAWING WAS ORIGINALLY APPROVED FOR CONSTRUCTION AND SEALED BY MICHAEL E. MARTIN, A REGISTERED PROFESSIONAL ENGINEER IN THE STATE OF MARYLAND, NO. 49839.

NOTICE TO CONTRACTORS

- PROJECT ELEVATIONS ARE BASED ON NAVD88 AND HOWARD COUNTY'S BENCHMARK SYSTEM
- PREVIOUS PROJECTS USED OTHER DATUMS
- APPLY THE FOLLOWING CONVERSIONS WHEN USING PREVIOUS CONTRACT DRAWINGS:
  - ADDITION NO. 6: SUBTRACT 0.80 FT
  - PRIOR ADDITIONS: SUBTRACT 1.04 FT

DEPARTMENT OF PUBLIC WORKS
HOWARD COUNTY, MARYLAND

CHIEF, BUREAU OF UTILITIES — DATE

DES: MEM
DRN: WM
CHK: RM
DATE: 01/2018

DATE	REV	DESCRIPTION
03/2021		RECORD DRAWINGS

STRUCTURAL

DRYER BUILDING
PLAN AT EL 155.20 - SOUTH

LITTLE PATUXENT WATER RECLAMATION PLANT
8TH ADDITION
BIOSOLIDS PROCESSING FACILITIES - PHASE 2

CAPITAL PROJECT S-6295
CONTRACT NO. 24-4936

ELECTION DISTRICT NO. 6
HOWARD COUNTY, MARYLAND

SCALE AS SHOWN

SHEET 82 OF 311

S-504

BIM 360://10054364 – Little Patuxent WRP 8th Addition/264592_100_S_V18.rvt
1/7/2022 10:09:59 AM

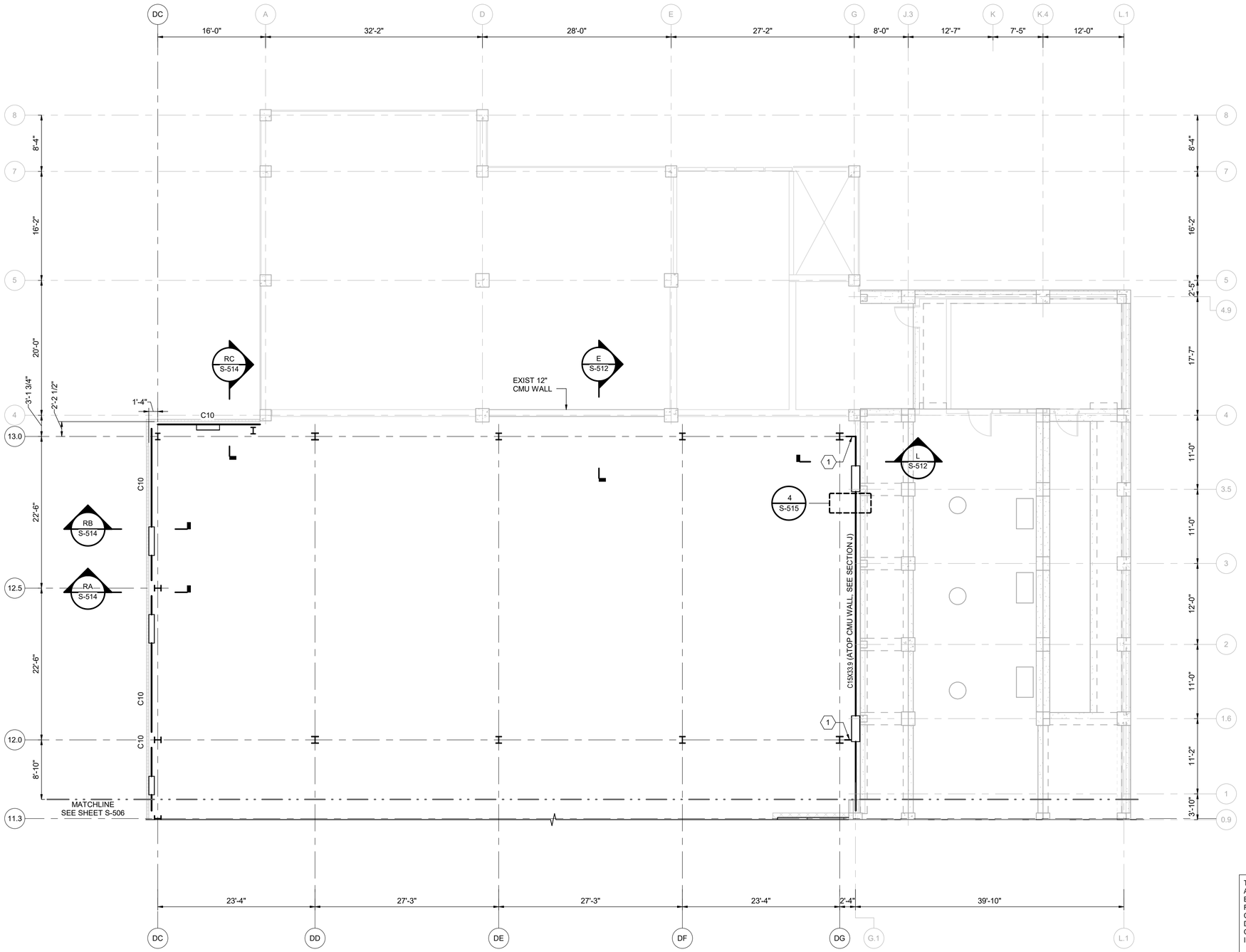

NORTH PLAN @ ELEVATON 170.45

1/8" = 1'-0"

GENERAL NOTES:

1. SEE SHEET S-500 AND S-503 FOR ADDITIONAL NOTES.

KEYNOTES:

1 SEE SECTION J

THE DRAWINGS IN THIS SET ARE RECORD DRAWINGS. THEY ARE CONSTRUCTION CONTRACT DRAWINGS WHICH HAVE BEEN REVISED BASED ON AVAILABLE FIELD INFORMATION RECORDED BY OTHERS DURING CONSTRUCTION OF THIS CONTRACT. THERE HAS BEEN NO VERIFICATION OF DIMENSIONS SHOWN ON THE CONSTRUCTION DRAWINGS OR THE ACCURACY/COMPLETENESS OF THE FIELD INFORMATION RECEIVED.

SIGNATURE — DATE 2/7/2022

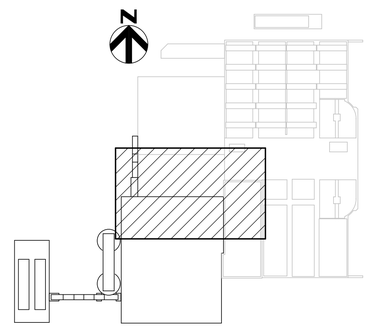

KEY PLAN

AS-BUILT REPLACEMENT SHEET

PROFESSIONAL CERTIFICATION

THIS DRAWING WAS ORIGINALLY APPROVED FOR CONSTRUCTION AND SEALED BY MICHAEL E. MARTIN, A REGISTERED PROFESSIONAL ENGINEER IN THE STATE OF MARYLAND, NO. 49839.

NOTICE TO CONTRACTORS

- PROJECT ELEVATIONS ARE BASED ON NAVD88 AND HOWARD COUNTY'S BENCHMARK SYSTEM
- PREVIOUS PROJECTS USED OTHER DATUMS
- APPLY THE FOLLOWING CONVERSIONS WHEN USING PREVIOUS CONTRACT DRAWINGS:
  - ADDITION NO. 6: SUBTRACT 0.80 FT
  - PRIOR ADDITIONS: SUBTRACT 1.04 FT

DEPARTMENT OF PUBLIC WORKS
HOWARD COUNTY, MARYLAND

CHIEF, BUREAU OF UTILITIES — DATE

DES: MEM
DRN: WM
CHK: RM
DATE: 01/2018

DATE	REV	DESCRIPTION
03/2021		RECORD DRAWINGS

STRUCTURAL

DRYER BUILDING FRAMING PLAN AT EL 170.45 - NORTH

LITTLE PATUXENT WATER RECLAMATION PLANT
8TH ADDITION
BIOSOLIDS PROCESSING FACILITIES - PHASE 2

CAPITAL PROJECT S-6295
CONTRACT NO. 24-4936

ELECTION DISTRICT NO. 6
HOWARD COUNTY, MARYLAND

SCALE AS SHOWN

SHEET 83 OF 311

S-505

BIM 360://10054364 – Little Patuxent WRP 8th Addition/264592_100_S_V18.rvt
1/7/2022 10:10:01 AM

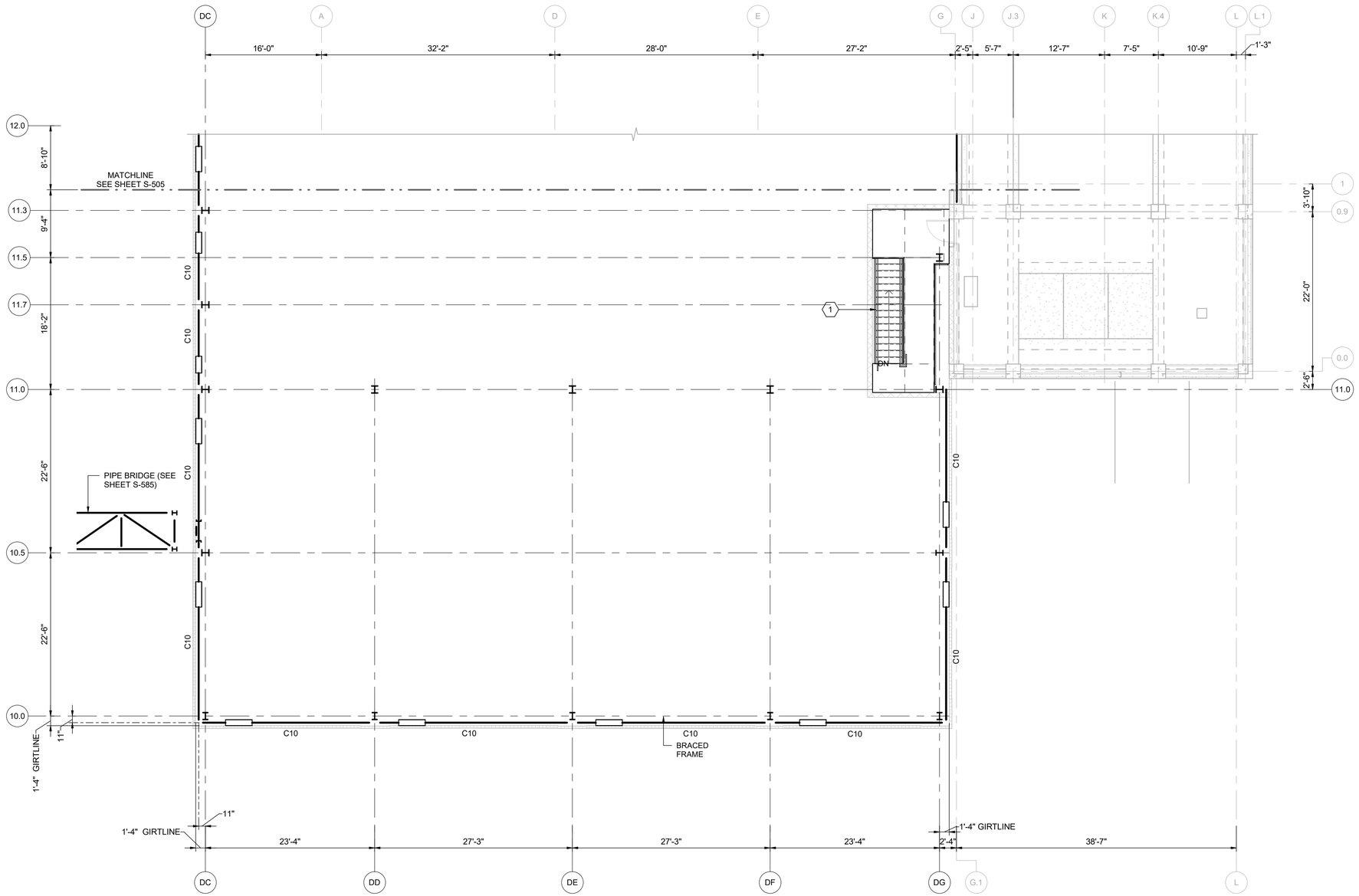

SOUTH PLAN @ ELEVATION 170.45

1/8" = 1'-0"

GENERAL NOTES:

1. SEE SHEET S-500 AND S-503 FOR ADDITIONAL NOTES.

KEY NOTES:

1. SEE SHEET S-516 FOR STAIR PLAN AND INFORMATION.

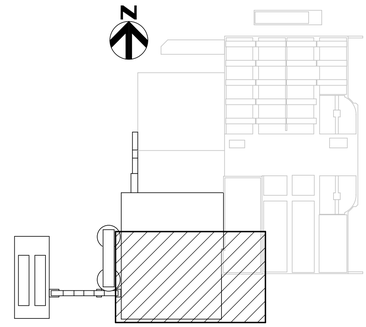

KEY PLAN

THE DRAWINGS IN THIS SET ARE RECORD DRAWINGS. THEY ARE CONSTRUCTION CONTRACT DRAWINGS WHICH HAVE BEEN REVISED BASED ON AVAILABLE FIELD INFORMATION RECORDED BY OTHERS DURING CONSTRUCTION OF THIS CONTRACT. THERE HAS BEEN NO VERIFICATION OF DIMENSIONS SHOWN ON THE CONSTRUCTION DRAWINGS OR THE ACCURACY/COMPLETENESS OF THE FIELD INFORMATION RECEIVED.

SIGNATURE — DATE 2/7/2022

AS-BUILT REPLACEMENT SHEET

PROFESSIONAL CERTIFICATION
THIS DRAWING WAS ORIGINALLY APPROVED FOR CONSTRUCTION AND SEALED BY MICHAEL E. MARTIN, A REGISTERED PROFESSIONAL ENGINEER IN THE STATE OF MARYLAND, NO. 49839.

NOTICE TO CONTRACTORS
- PROJECT ELEVATIONS ARE BASED ON NAVD88 AND HOWARD COUNTY'S BENCHMARK SYSTEM
- PREVIOUS PROJECTS USED OTHER DATUMS
- APPLY THE FOLLOWING CONVERSIONS WHEN USING PREVIOUS CONTRACT DRAWINGS:
  - ADDITION NO. 6: SUBTRACT 0.80 FT
  - PRIOR ADDITIONS: SUBTRACT 1.04 FT

DEPARTMENT OF PUBLIC WORKS
HOWARD COUNTY, MARYLAND

CHIEF, BUREAU OF UTILITIES — DATE

DES: MEM
DRN: WM
CHK: RM
DATE: 01/2018

DATE	REV	DESCRIPTION
03/2021		RECORD DRAWINGS

STRUCTURAL

DRYER BUILDING FRAMING PLAN AT EL 170.45 - SOUTH

LITTLE PATUXENT WATER RECLAMATION PLANT
8TH ADDITION
BIOSOLIDS PROCESSING FACILITIES - PHASE 2

CAPITAL PROJECT S-6295
CONTRACT NO. 24-4936

ELECTION DISTRICT NO. 6
HOWARD COUNTY, MARYLAND

SCALE AS SHOWN

SHEET 84 OF 311

S-506

BIM 360://10054364 – Little Patuxent WRP 8th Addition/264592_100_S_V18.rvt
1/7/2022 10:10:02 AM

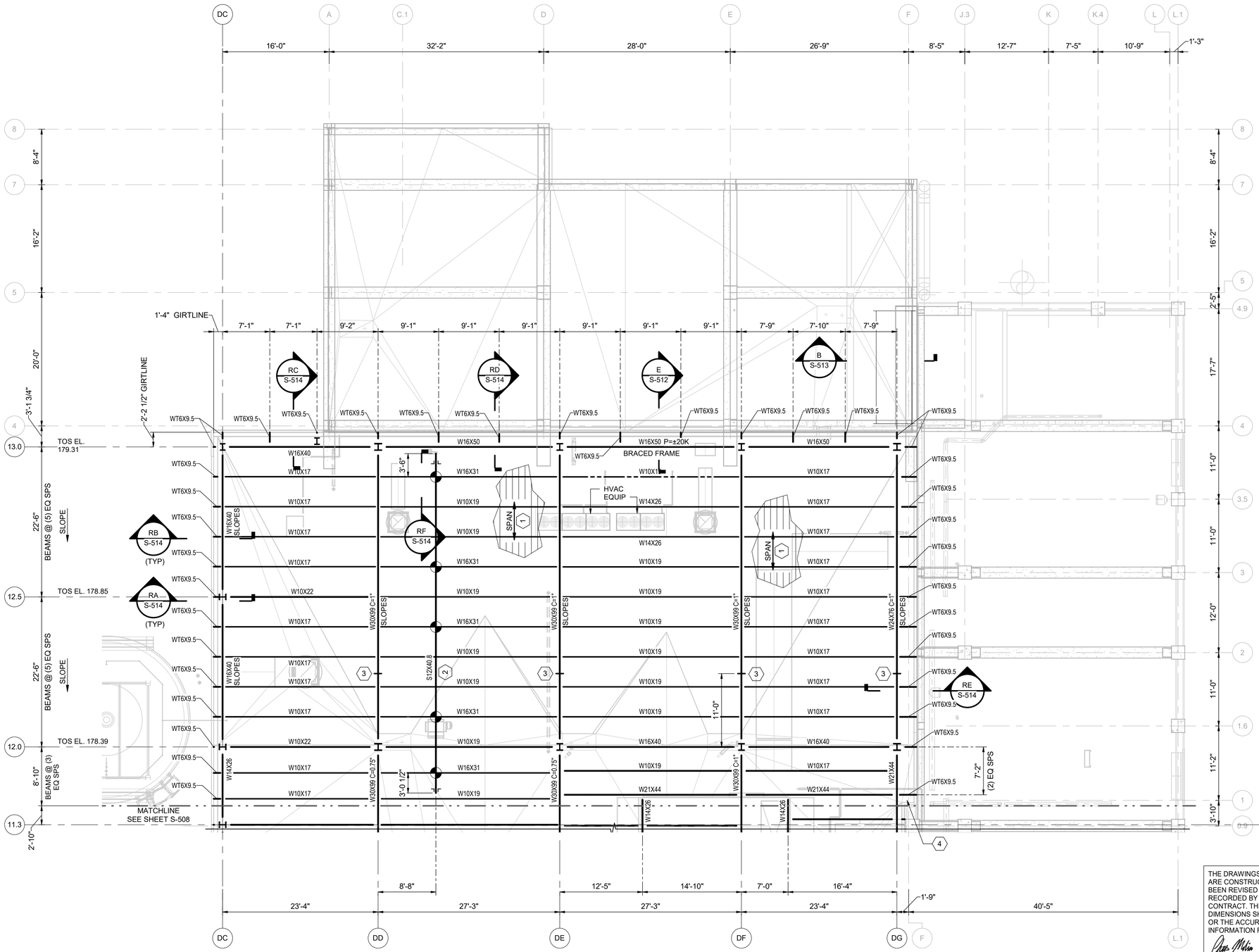

ROOF PLAN - NORTH

1/8" = 1'-0"

GENERAL NOTES:

1. SEE SHEET S-500 AND S-503 FOR ADDITIONAL NOTES.
2. SEE SCHEDULE ON H-903 FOR ASSUMED WEIGHT OF HVAC EQUIPMENT. IF FINAL EQUIPMENT WEIGHT EXCEEDS ASSUMED WEIGHTS, NOTIFY ENGINEER FOR CORRECTIVE ACTION.

KEY NOTES:

1. 1.5B22 ROOF DECK WITH 5/8"Ø PUDDLE WELDS IN A 36/4 PATTERN WITH (4)-#10 TEK SCREW SIDELAP FASTENERS EQ SPACES, PER SPAN.
2. 3T MONORAIL
3. OPTIONAL GIRDER SPLICE LOCATION, FULLY BOLTED CONNECTION BY DETAILER.
4. PROVIDE CUTOUT IN DECKING AT IMP SUPPORT COLUMN TO MAINTAIN 2" CLEARANCE AROUND COLUMN.

LEGEND:

INDICATES MONORAIL SUPPORT POINT SEE RF/S-514

C = CAMBER UP

ROOF LOADS:

ROOF LIVE	= 30 psf
SNOW LOAD	= 22 psf (BALANCED) 44 psf (DRIFT @ COL LINE F)
COLLATERAL	= 20 psf
HVAC EQUIP ALLOWANCE	= 60 psf

THE DRAWINGS IN THIS SET ARE RECORD DRAWINGS. THEY ARE CONSTRUCTION CONTRACT DRAWINGS WHICH HAVE BEEN REVISED BASED ON AVAILABLE FIELD INFORMATION RECORDED BY OTHERS DURING CONSTRUCTION OF THIS CONTRACT. THERE HAS BEEN NO VERIFICATION OF DIMENSIONS SHOWN ON THE CONSTRUCTION DRAWINGS OR THE ACCURACY/COMPLETENESS OF THE FIELD INFORMATION RECEIVED.

SIGNATURE — DATE 2/7/2022

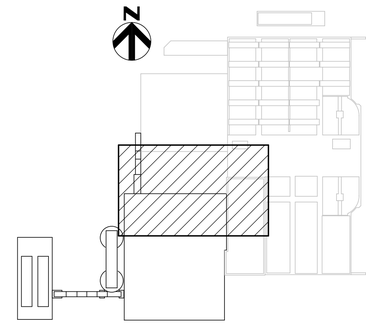

KEY PLAN

AS-BUILT REPLACEMENT SHEET

PROFESSIONAL CERTIFICATION

THIS DRAWING WAS ORIGINALLY APPROVED FOR CONSTRUCTION AND SEALED BY MICHAEL E. MARTIN, A REGISTERED PROFESSIONAL ENGINEER IN THE STATE OF MARYLAND, NO. 49839.

NOTICE TO CONTRACTORS

- PROJECT ELEVATIONS ARE BASED ON NAVD88 AND HOWARD COUNTY'S BENCHMARK SYSTEM
- PREVIOUS PROJECTS USED OTHER DATUMS
- APPLY THE FOLLOWING CONVERSIONS WHEN USING PREVIOUS CONTRACT DRAWINGS:
  - ADDITION NO. 6: SUBTRACT 0.80 FT
  - PRIOR ADDITIONS: SUBTRACT 1.04 FT

DEPARTMENT OF PUBLIC WORKS
HOWARD COUNTY, MARYLAND

CHIEF, BUREAU OF UTILITIES — DATE

DES: MEM
DRN: WM
CHK: RM
DATE: 01/2018

DATE	REV	DESCRIPTION
03/2021		RECORD DRAWINGS

STRUCTURAL

DRYER BUILDING ROOF PLAN - NORTH

LITTLE PATUXENT WATER RECLAMATION PLANT
8TH ADDITION
BIOSOLIDS PROCESSING FACILITIES - PHASE 2

CAPITAL PROJECT S-6295
CONTRACT NO. 24-4936

ELECTION DISTRICT NO. 6
HOWARD COUNTY, MARYLAND

SCALE AS SHOWN

SHEET 85 OF 311

S-507

BIM 360://10054364 – Little Patuxent WRP 8th Addition/264592_100_S_V18.rvt
1/7/2022 10:10:06 AM

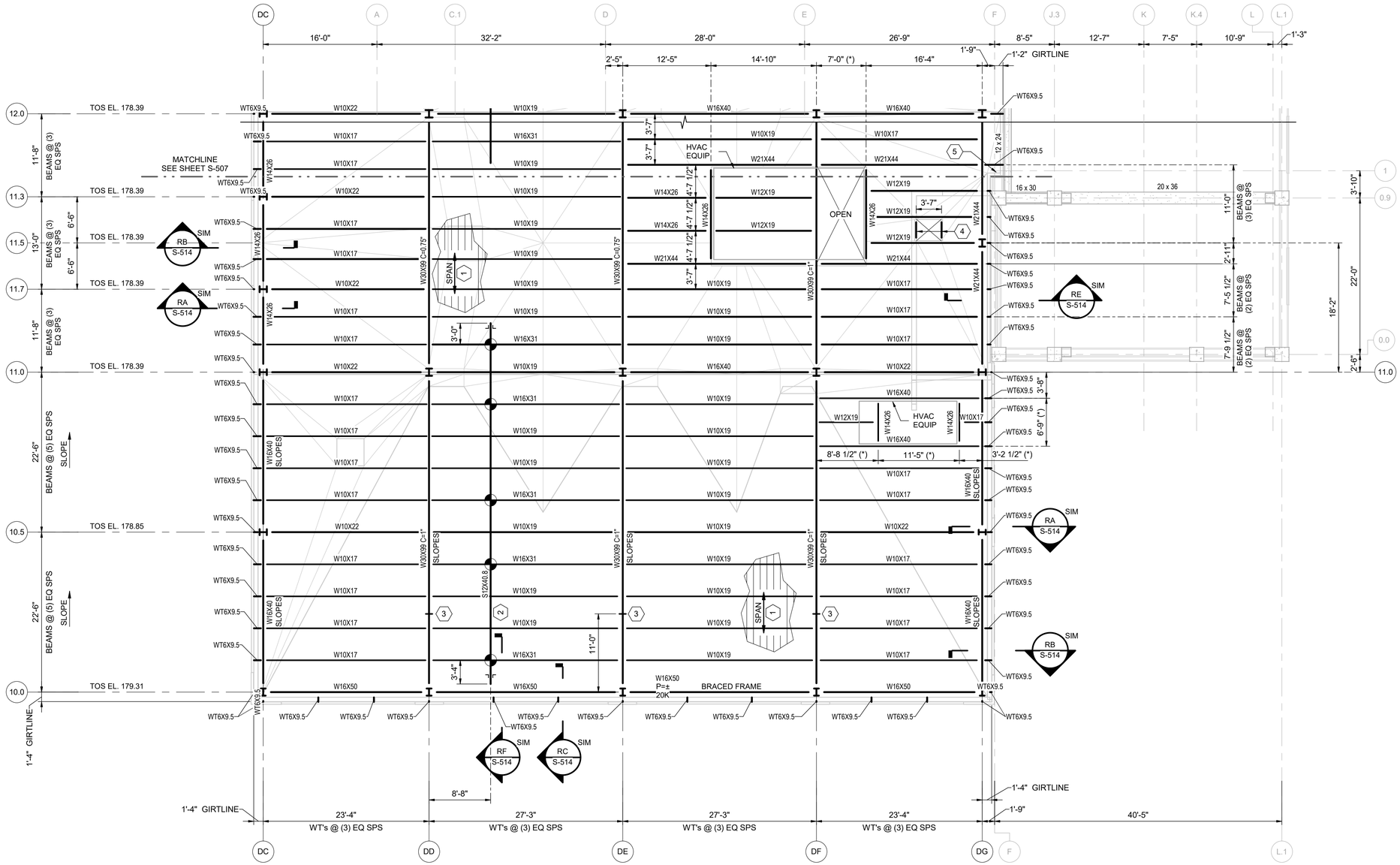

ROOF PLAN - SOUTH

1/8" = 1'-0"

GENERAL NOTES:

1. SEE SHEET S-500 AND S-503 FOR ADDITIONAL NOTES.
2. COORDINATE ROOF OPENING FRAMING W/ HVAC EQUIPMENT DETAILS.
3. SEE SCHEDULE ON H-903 FOR ASSUMED WEIGHT OF HVAC EQUIPMENT. IF FINAL EQUIPMENT WEIGHT EXCEEDS ASSUMED WEIGHTS, NOTIFY ENGINEER FOR CORRECTIVE ACTION.

KEY NOTES:

1. 1.5B22 ROOF DECK WITH 5/8"Ø PUDDLE WELDS IN A 36/4 PATTERN WITH (4)-#10 TEK SCREW SIDELAP FASTENERS EQ SPACES, PER SPAN.
2. 3T MONORAIL.
3. OPTIONAL GIRDER SPLICE LOCATION, FULLY BOLTED CONNECTION BY DETAILER.
4. LADDER ACCESS HATCH, SEE ARCHITECTURAL DRAWINGS. PROVIDE C8X11.5 EA SIDE OF OPENING.
5. MODIFY DECKING AS REQUIRED TO ALLOW FOR EXISTING INSULATED METAL PANEL SUPPORTS. CUT OUT DECKING 2" FROM EDGE OF EXISTING SUPPORT STEEL.

LEGEND:

INDICATES MONORAIL SUPPORT POINT SEE RF/S-514

C = CAMBER UP

ROOF LOADS:

ROOF LIVE	= 30 psf
SNOW LOAD	= 22 psf (BALANCED) 44 psf (DRIFT @ COL LINE F)
COLLATERAL	= 20 psf
HVAC EQUIP ALLOWANCE	= 60 psf

THE DRAWINGS IN THIS SET ARE RECORD DRAWINGS. THEY ARE CONSTRUCTION CONTRACT DRAWINGS WHICH HAVE BEEN REVISED BASED ON AVAILABLE FIELD INFORMATION RECORDED BY OTHERS DURING CONSTRUCTION OF THIS CONTRACT. THERE HAS BEEN NO VERIFICATION OF DIMENSIONS SHOWN ON THE CONSTRUCTION DRAWINGS OR THE ACCURACY/COMPLETENESS OF THE FIELD INFORMATION RECEIVED.

SIGNATURE — DATE 2/7/2023

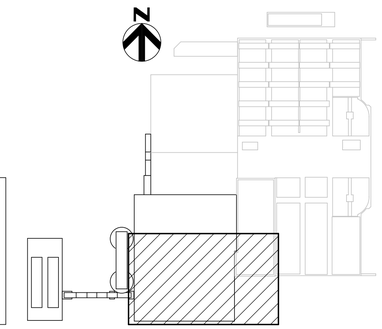

KEY PLAN

AS-BUILT REPLACEMENT SHEET

PROFESSIONAL CERTIFICATION
THIS DRAWING WAS ORIGINALLY APPROVED FOR CONSTRUCTION AND SEALED BY MICHAEL E. MARTIN, A REGISTERED PROFESSIONAL ENGINEER IN THE STATE OF MARYLAND, NO. 49839.

NOTICE TO CONTRACTORS
- PROJECT ELEVATIONS ARE BASED ON NAVD88 AND HOWARD COUNTY'S BENCHMARK SYSTEM
- PREVIOUS PROJECTS USED OTHER DATUMS
- APPLY THE FOLLOWING CONVERSIONS WHEN USING PREVIOUS CONTRACT DRAWINGS:
  - ADDITION NO. 6: SUBTRACT 0.80 FT
  - PRIOR ADDITIONS: SUBTRACT 1.04 FT

DEPARTMENT OF PUBLIC WORKS
HOWARD COUNTY, MARYLAND

CHIEF, BUREAU OF UTILITIES — DATE

DES: MEM
DRN: WTM
CHK: RM
DATE: 01/2018

DATE	REV	DESCRIPTION
03/2021		RECORD DRAWINGS

STRUCTURAL

DRYER BUILDING ROOF PLAN - SOUTH

LITTLE PATUXENT WATER RECLAMATION PLANT
8TH ADDITION
BIOSOLIDS PROCESSING FACILITIES - PHASE 2

CAPITAL PROJECT S-6295
CONTRACT NO. 24-4936

ELECTION DISTRICT NO. 6
HOWARD COUNTY, MARYLAND

SCALE AS SHOWN

SHEET 86 OF 311

S-508

BIM 360://10054364 – Little Patuxent WRP 8th Addition/264592_100_S_V18.rvt
1/7/2022 10:10:09 AM

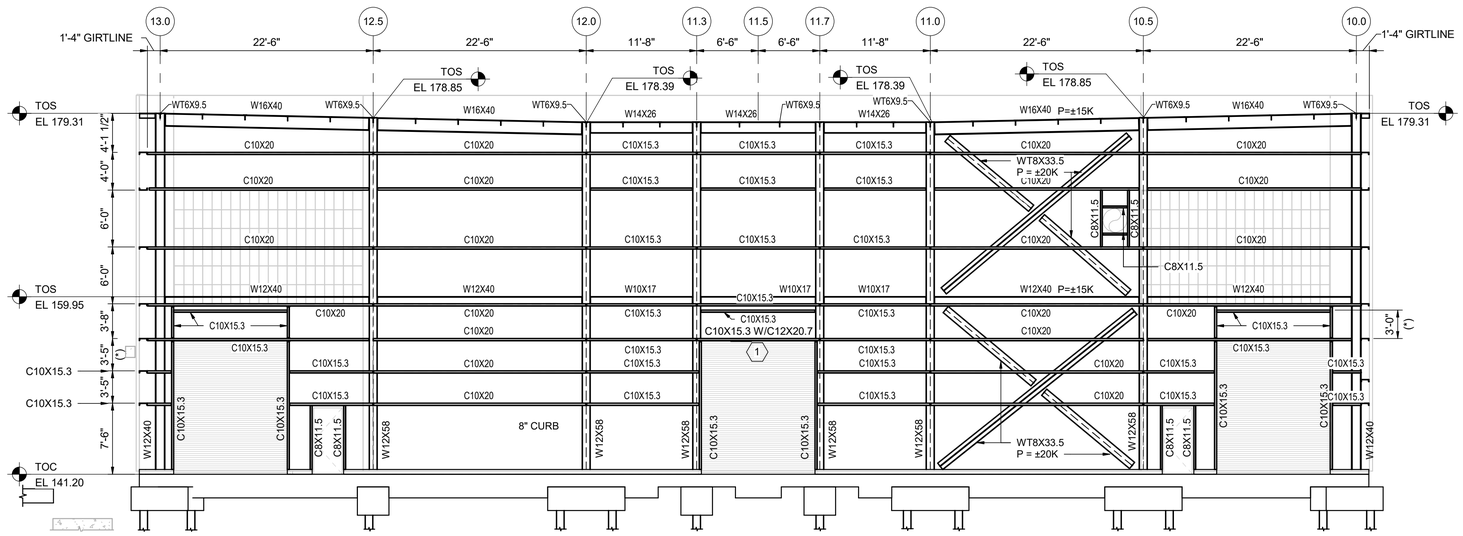

ELEVATION GRID LINE DC

1/8" = 1'-0"

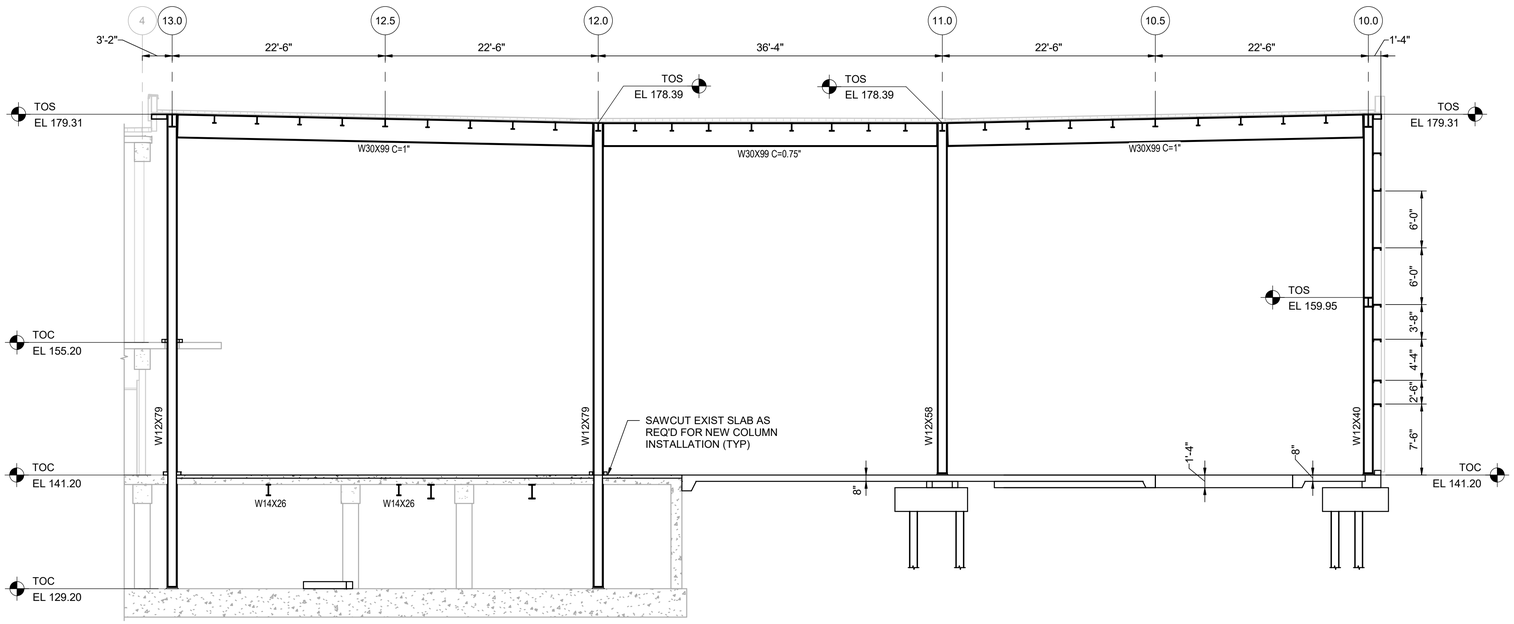

ELEVATION GRID LINE DD (SIM @ GRID LINES "DE" & "DF")

1/8" = 1'-0"

GENERAL NOTES:

1. SEE SHEET S-500 FOR ADDITIONAL NOTES.
2. SAG RODS NOT SHOWN FOR CLARITY. SAG RODS FOR EXTERNAL GIRTS SHALL BE 1/2" Ø @ 10'-0" O.C. MAX SPACING. SEE ROOF SECTIONS ON S-514 FOR ADDITIONAL INFORMATION.
3. GIRT LOCATIONS MAY VARY BASED ON FINAL WALL MATERIALS AND CONSTRUCTION.

KEYNOTES:

⟨1⟩ SEE 6/S-519 FOR DETAIL

LEGEND:

C = CAMBER UP

THE DRAWINGS IN THIS SET ARE RECORD DRAWINGS. THEY ARE CONSTRUCTION CONTRACT DRAWINGS WHICH HAVE BEEN REVISED BASED ON AVAILABLE FIELD INFORMATION RECORDED BY OTHERS DURING CONSTRUCTION OF THIS CONTRACT. THERE HAS BEEN NO VERIFICATION OF DIMENSIONS SHOWN ON THE CONSTRUCTION DRAWINGS OR THE ACCURACY/COMPLETENESS OF THE FIELD INFORMATION RECEIVED.

SIGNATURE — DATE 2/7/2023

HDR

AS-BUILT REPLACEMENT SHEET

PROFESSIONAL CERTIFICATION
THIS DRAWING WAS ORIGINALLY APPROVED FOR CONSTRUCTION AND SEALED BY MICHAEL E. MARTIN, A REGISTERED PROFESSIONAL ENGINEER IN THE STATE OF MARYLAND, NO. 49839.

NOTICE TO CONTRACTORS
- PROJECT ELEVATIONS ARE BASED ON NAVD88 AND HOWARD COUNTY'S BENCHMARK SYSTEM
- PREVIOUS PROJECTS USED OTHER DATUMS
- APPLY THE FOLLOWING CONVERSIONS WHEN USING PREVIOUS CONTRACT DRAWINGS:
  - ADDITION NO. 6: SUBTRACT 0.80 FT
  - PRIOR ADDITIONS: SUBTRACT 1.04 FT

DEPARTMENT OF PUBLIC WORKS
HOWARD COUNTY, MARYLAND

CHIEF, BUREAU OF UTILITIES — DATE

DES: MEM
DRN: WM
CHK: RM
DATE: 01/2018

DATE	REV	DESCRIPTION
03/2021		RECORD DRAWINGS

STRUCTURAL

DRYER BUILDING FRAMING ELEVATIONS

LITTLE PATUXENT WATER RECLAMATION PLANT
8TH ADDITION
BIOSOLIDS PROCESSING FACILITIES - PHASE 2

CAPITAL PROJECT S-6295
CONTRACT NO. 24-4936

ELECTION DISTRICT NO. 6
HOWARD COUNTY, MARYLAND

SCALE AS SHOWN

SHEET 87 OF 311

S-509

BIM 360://10054364 – Little Patuxent WRP 8th Addition/264592_100_S_V18.rvt
1/7/2022 10:10:12 AM

GENERAL NOTES:
1. SEE SHEET S-500 AND S-509 FOR ADDITIONAL NOTES.

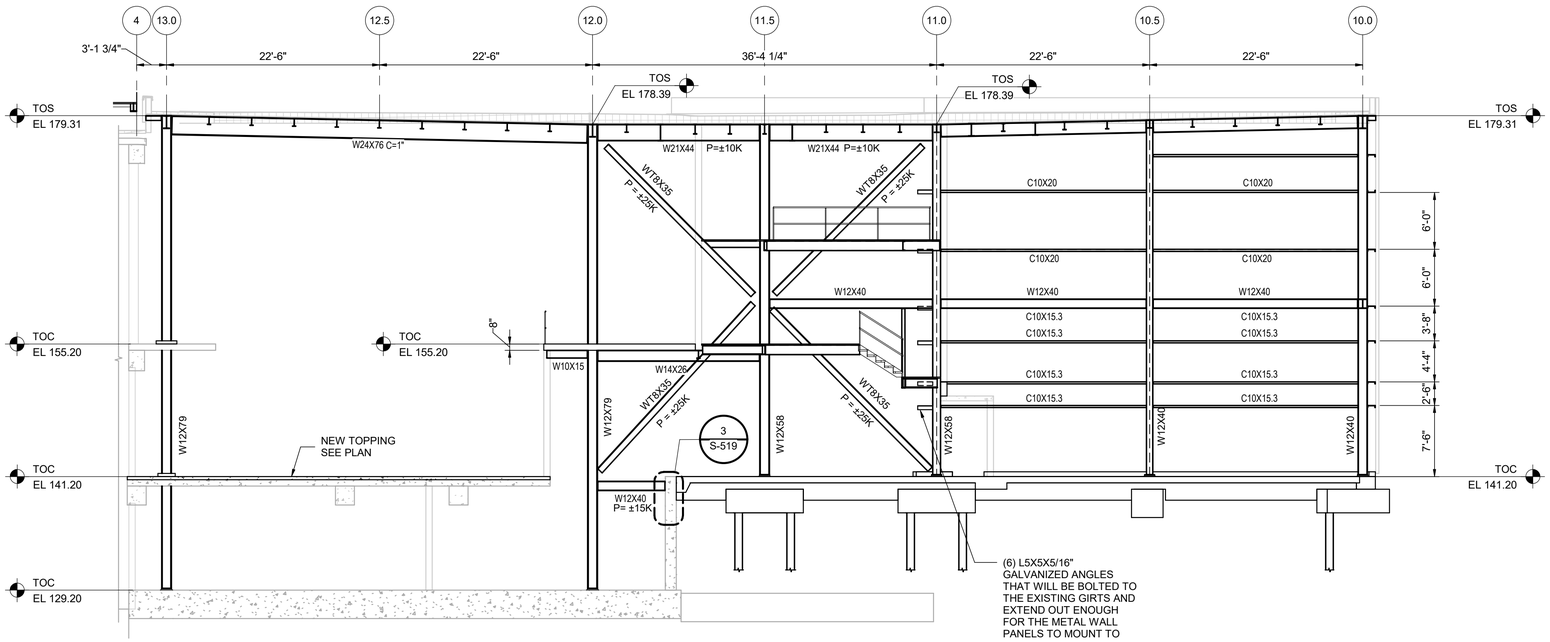

ELEVATION GRID LINE DG

1/8" = 1'-0"

THE DRAWINGS IN THIS SET ARE RECORD DRAWINGS. THEY ARE CONSTRUCTION CONTRACT DRAWINGS WHICH HAVE BEEN REVISED BASED ON AVAILABLE FIELD INFORMATION RECORDED BY OTHERS DURING CONSTRUCTION OF THIS CONTRACT. THERE HAS BEEN NO VERIFICATION OF DIMENSIONS SHOWN ON THE CONSTRUCTION DRAWINGS OR THE ACCURACY/COMPLETENESS OF THE FIELD INFORMATION RECEIVED.

SIGNATURE 2/7/2022 DATE

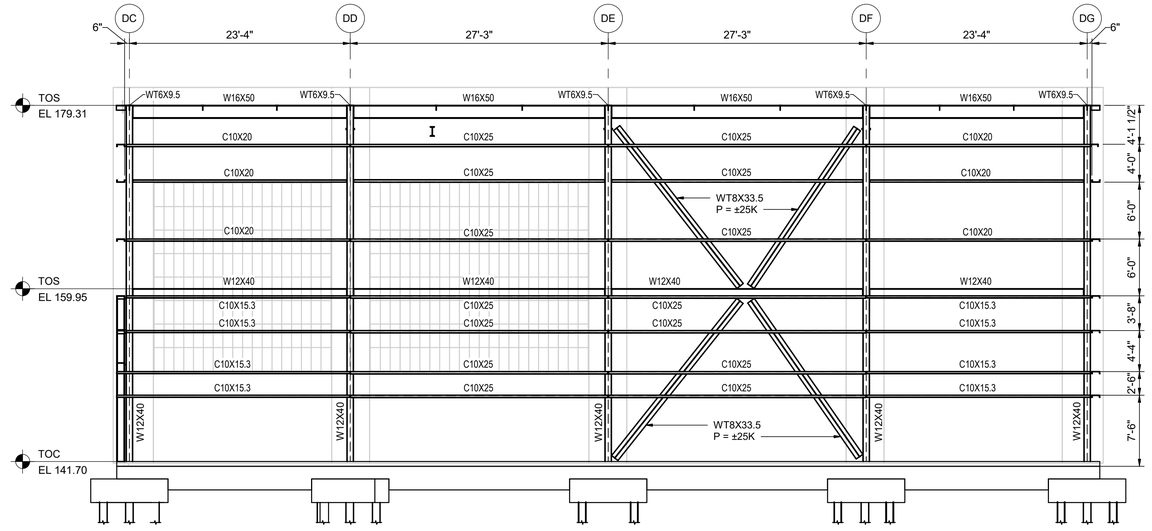

ELEVATION GRID LINE 10.0

1/8" = 1'-0"

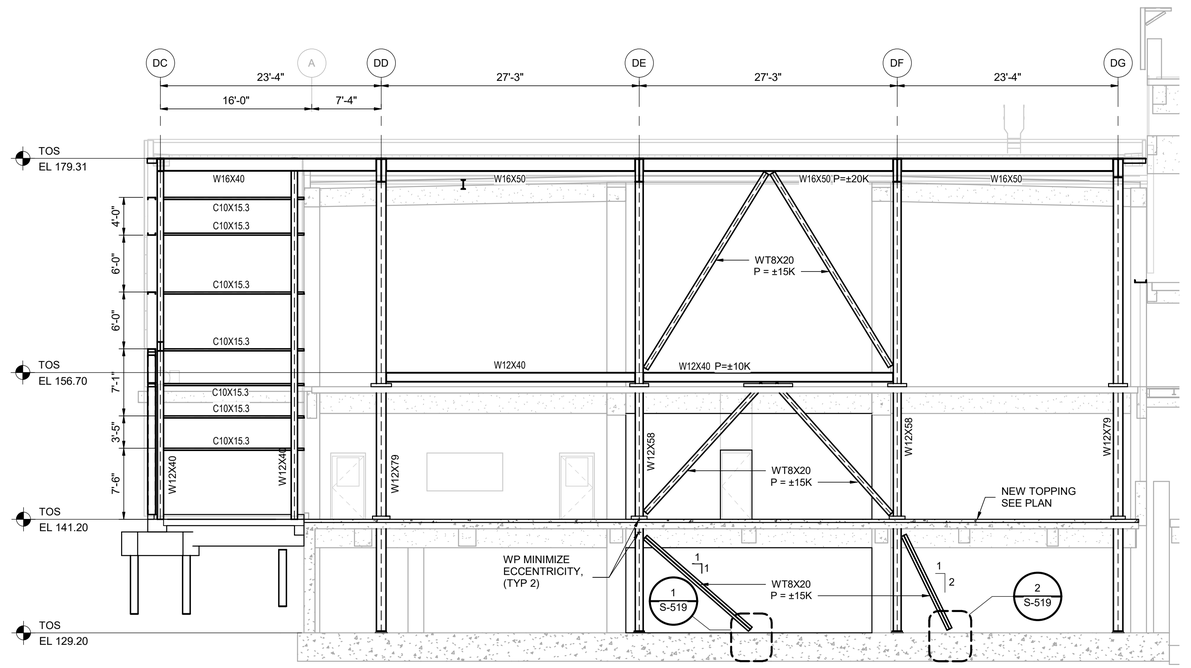

ELEVATION GRID LINE 13.0

1/8" = 1'-0"

HDR	AS-BUILT REPLACEMENT SHEET	PROFESSIONAL CERTIFICATION THIS DRAWING WAS ORIGINALLY APPROVED FOR CONSTRUCTION AND SEALED BY MICHAEL E. MARTIN, A REGISTERED PROFESSIONAL ENGINEER IN THE STATE OF MARYLAND, NO. 49839.	NOTICE TO CONTRACTORS • PROJECT ELEVATIONS ARE BASED ON NAVD88 AND HOWARD COUNTY'S BENCHMARK SYSTEM • PREVIOUS PROJECTS USED OTHER DATUMS • APPLY THE FOLLOWING CONVERSIONS WHEN USING PREVIOUS CONTRACT DRAWINGS: - ADDITION NO. 6: SUBTRACT 0.80 FT - PRIOR ADDITIONS: SUBTRACT 1.04 FT	DEPARTMENT OF PUBLIC WORKS HOWARD COUNTY, MARYLAND CHIEF, BUREAU OF UTILITIES DATE	DES: MEM DRN: WM CHK: RM DATE: 01/2018	07/06/2020 RFI 530 03/2021 RECORD DRAWINGS DATE REV DESCRIPTION	STRUCTURAL DRYER BUILDING FRAMING ELEVATIONS	LITTLE PATUXENT WATER RECLAMATION PLANT 8TH ADDITION BIOSOLIDS PROCESSING FACILITIES - PHASE 2 CAPITAL PROJECT S-6295 CONTRACT NO. 24-4936 ELECTION DISTRICT NO. 6 HOWARD COUNTY, MARYLAND	SCALE AS SHOWN SHEET 88 OF 311 S-510

BIM 360://10054364 – Little Patuxent WRP 8th Addition/264592_100_S_V18.rvt
1/7/2022 10:10:16 AM

GENERAL NOTES:

1. SEE SHEET S-500 AND S-509 FOR ADDITIONAL NOTES.

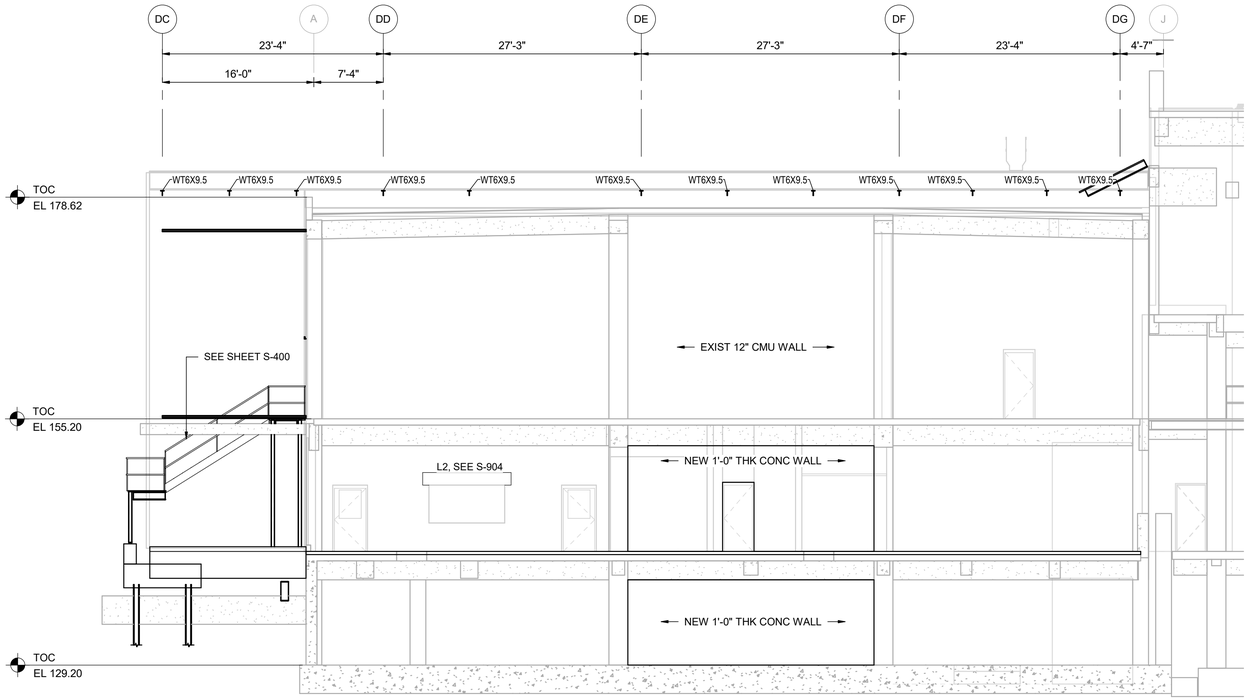

ELEVATION AT GRID LINE 4

1/8" = 1'-0"

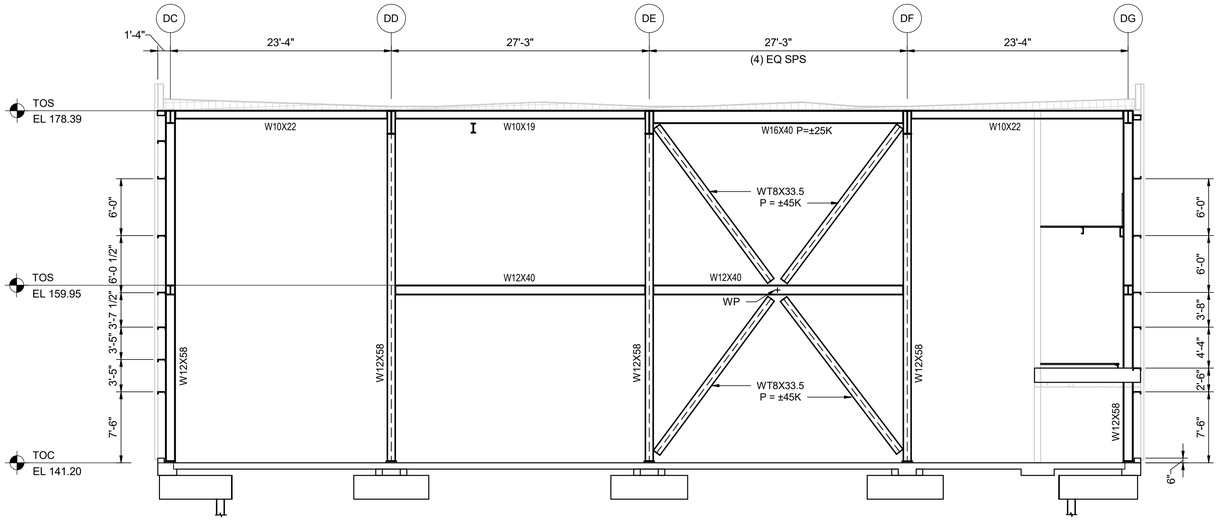

ELEVATION GRID LINE 11

1/8" = 1'-0"

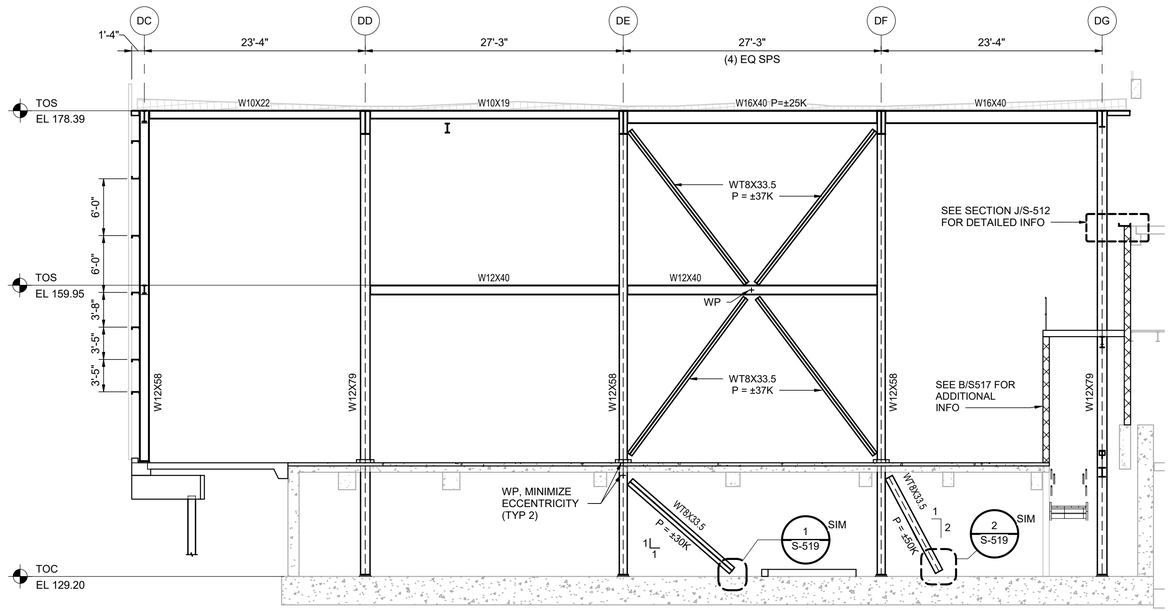

ELEVATION AT GRID LINE 12

1/8" = 1'-0"

THE DRAWINGS IN THIS SET ARE RECORD DRAWINGS. THEY ARE CONSTRUCTION CONTRACT DRAWINGS WHICH HAVE BEEN REVISED BASED ON AVAILABLE FIELD INFORMATION RECORDED BY OTHERS DURING CONSTRUCTION OF THIS CONTRACT. THERE HAS BEEN NO VERIFICATION OF DIMENSIONS SHOWN ON THE CONSTRUCTION DRAWINGS OR THE ACCURACY/COMPLETENESS OF THE FIELD INFORMATION RECEIVED.

SIGNATURE — DATE 2/7/2023

AS-BUILT REPLACEMENT SHEET

PROFESSIONAL CERTIFICATION

THIS DRAWING WAS ORIGINALLY APPROVED FOR CONSTRUCTION AND SEALED BY MICHAEL E. MARTIN, A REGISTERED PROFESSIONAL ENGINEER IN THE STATE OF MARYLAND, NO. 49839.

NOTICE TO CONTRACTORS

- PROJECT ELEVATIONS ARE BASED ON NAVD88 AND HOWARD COUNTY'S BENCHMARK SYSTEM
- PREVIOUS PROJECTS USED OTHER DATUMS
- APPLY THE FOLLOWING CONVERSIONS WHEN USING PREVIOUS CONTRACT DRAWINGS:
  - ADDITION NO. 6: SUBTRACT 0.80 FT
  - PRIOR ADDITIONS: SUBTRACT 1.04 FT

DEPARTMENT OF PUBLIC WORKS
HOWARD COUNTY, MARYLAND

CHIEF, BUREAU OF UTILITIES — DATE

DES: MEM
DRN: WM
CHK: RM
DATE: 01/2018

DATE	REV	DESCRIPTION
07/06/2020		RFI 530
03/2021		RECORD DRAWINGS

STRUCTURAL

DRYER BUILDING FRAMING ELEVATIONS

LITTLE PATUXENT WATER RECLAMATION PLANT
8TH ADDITION
BIOSOLIDS PROCESSING FACILITIES - PHASE 2

CAPITAL PROJECT S-6295
CONTRACT NO. 24-4936

ELECTION DISTRICT NO. 6
HOWARD COUNTY, MARYLAND

SCALE AS SHOWN

SHEET 89 OF 311

S-511

BIM 360://10054364 – Little Patuxent WRP 8th Addition/284592_100_S_V18.rvt
1/7/2022 10:10:18 AM

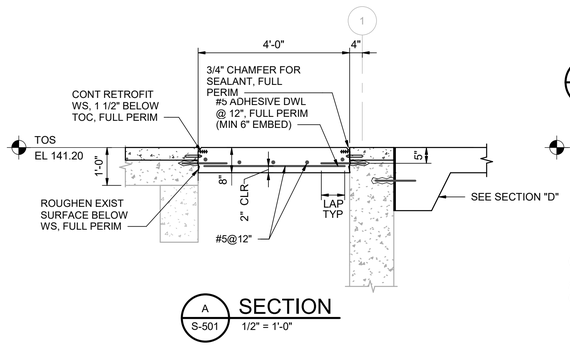

A S-501 SECTION 1/2" = 1'-0"

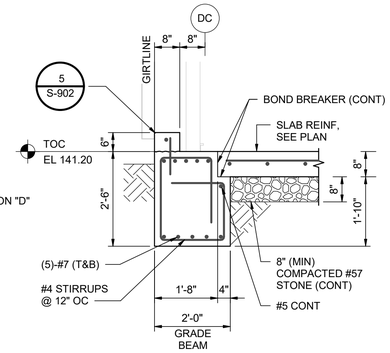

B S-501 SECTION 1/2" = 1'-0"

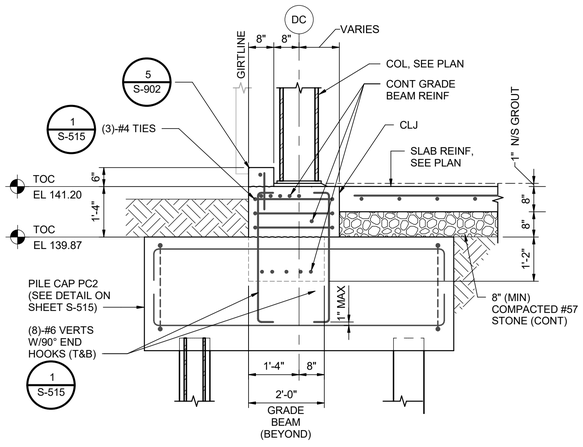

C S-501 SECTION 1/2" = 1'-0"

GENERAL NOTES:

1. SEE SHEET S-500 FOR ADDITIONAL NOTES.

THE DRAWINGS IN THIS SET ARE RECORD DRAWINGS. THEY ARE CONSTRUCTION CONTRACT DRAWINGS WHICH HAVE BEEN REVISED BASED ON AVAILABLE FIELD INFORMATION RECORDED BY OTHERS DURING CONSTRUCTION OF THIS CONTRACT. THERE HAS BEEN NO VERIFICATION OF DIMENSIONS SHOWN ON THE CONSTRUCTION DRAWINGS OR THE ACCURACY/COMPLETENESS OF THE FIELD INFORMATION RECEIVED.

SIGNATURE — DATE 2/7/2023

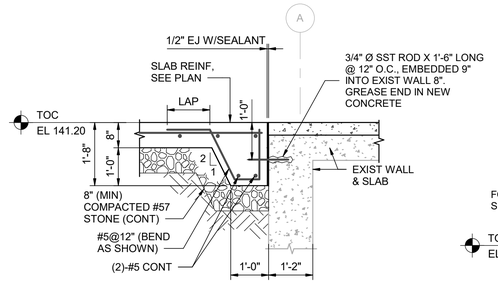

D S-501 SECTION 1/2" = 1'-0"

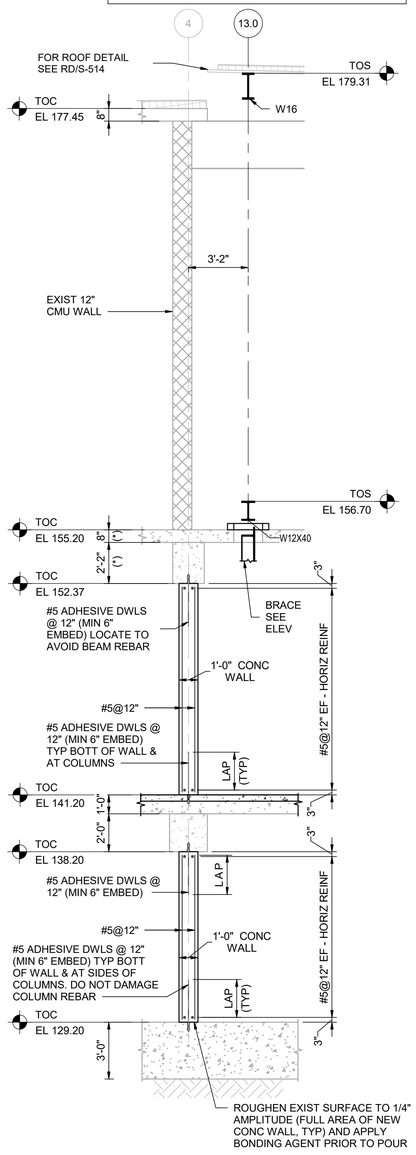

E S-500 SECTION 1/4" = 1'-0"

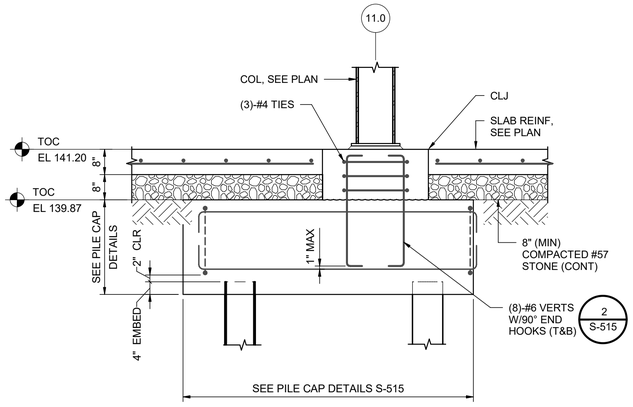

H S-502 SECTION 1/2" = 1'-0"

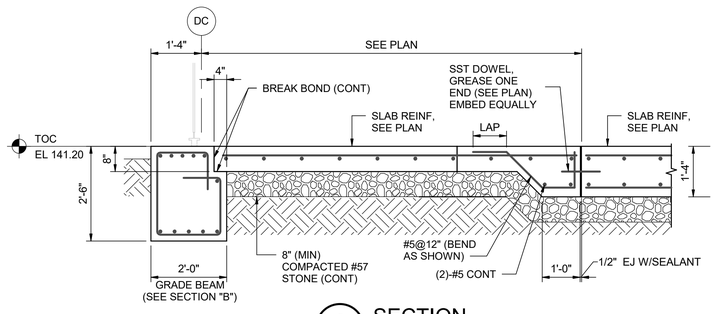

F S-502 SECTION 1/2" = 1'-0"

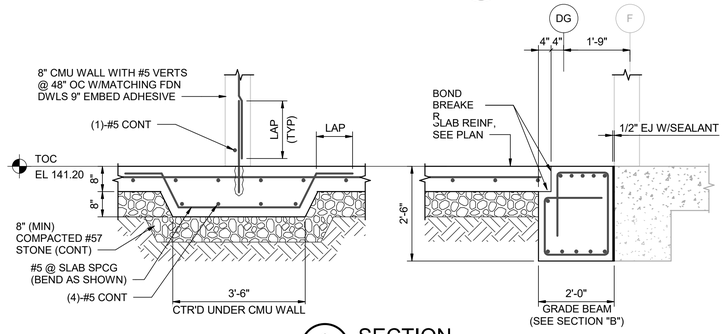

G S-502 SECTION 1/2" = 1'-0"

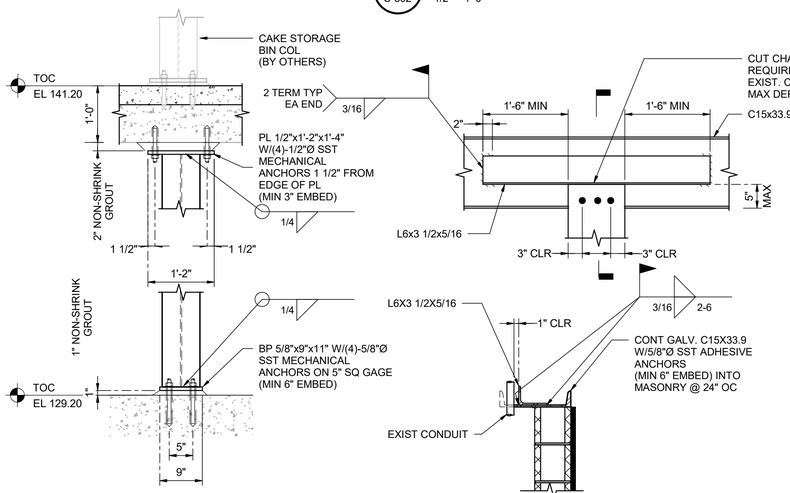

K S-500 SECTION 3/4" = 1'-0"

L S-505 SECTION 3/4" = 1'-0"

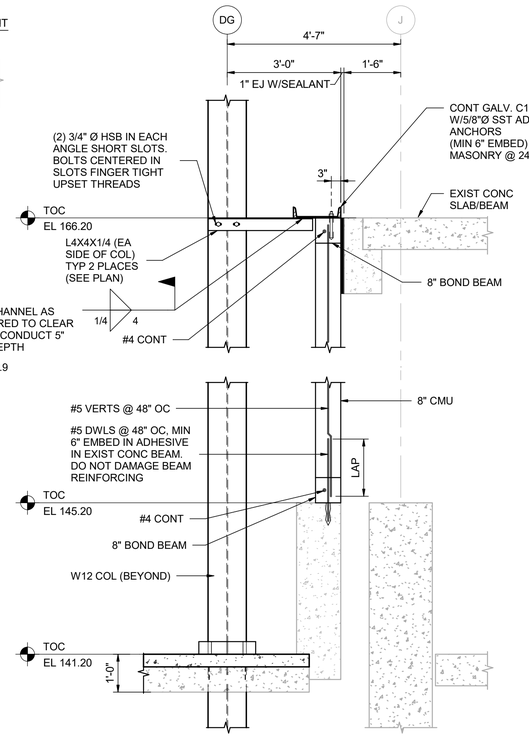

J S-501 SECTION 1/2" = 1'-0"

BIM 360://10054364 – Little Patuxent WRP 8th Addition/264592_100_S_V18.rvt
1/7/2022 10:10:23 AM

AS-BUILT REPLACEMENT SHEET

PROFESSIONAL CERTIFICATION
THIS DRAWING WAS ORIGINALLY APPROVED FOR CONSTRUCTION AND SEALED BY MICHAEL E. MARTIN, A REGISTERED PROFESSIONAL ENGINEER IN THE STATE OF MARYLAND, NO. 49839.

NOTICE TO CONTRACTORS
- PROJECT ELEVATIONS ARE BASED ON NAVD88 AND HOWARD COUNTY'S BENCHMARK SYSTEM
- PREVIOUS PROJECTS USED OTHER DATUMS
- APPLY THE FOLLOWING CONVERSIONS WHEN USING PREVIOUS CONTRACT DRAWINGS:
  - ADDITION NO. 6: SUBTRACT 0.80 FT
  - PRIOR ADDITIONS: SUBTRACT 1.04 FT

DEPARTMENT OF PUBLIC WORKS
HOWARD COUNTY, MARYLAND

CHIEF, BUREAU OF UTILITIES — DATE

DES: MEM
DRN: WM
CHK: RM
DATE: 01/2018

DATE	REV	DESCRIPTION
03/2021		RECORD DRAWINGS

STRUCTURAL

DRYER BUILDING SECTIONS 1

LITTLE PATUXENT WATER RECLAMATION PLANT
8TH ADDITION
BIOSOLIDS PROCESSING FACILITIES - PHASE 2

CAPITAL PROJECT S-6295
CONTRACT NO. 24-4936

ELECTION DISTRICT NO. 6
HOWARD COUNTY, MARYLAND

SCALE AS SHOWN

SHEET 90 OF 311

S-512

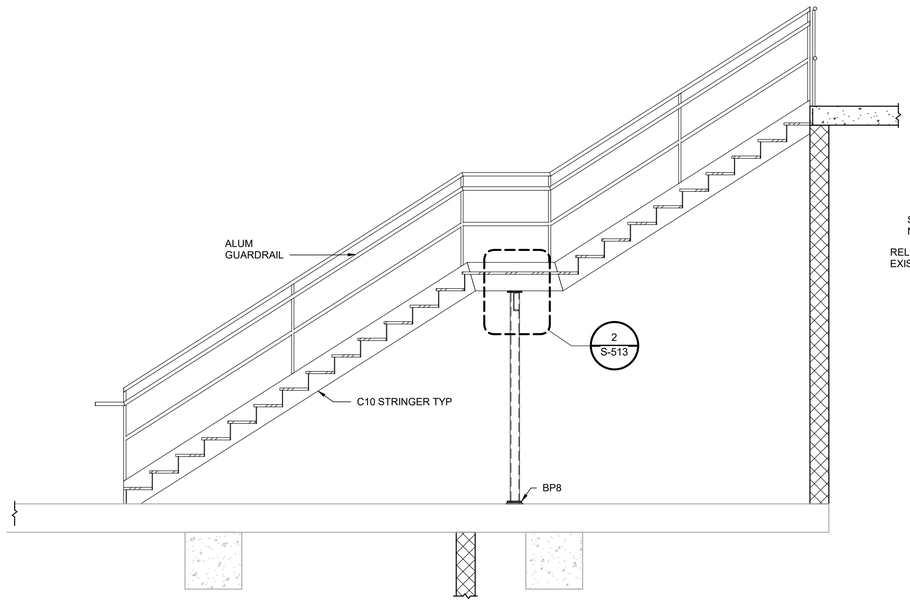

A S-501 SECTION
3/8" = 1'-0"

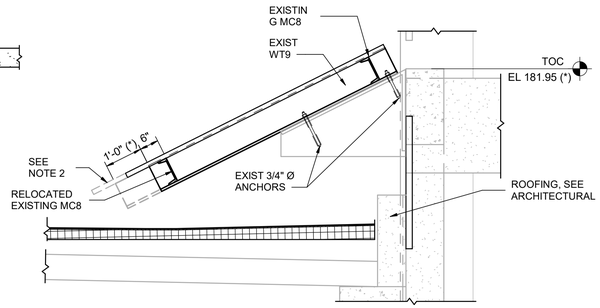

NOTES:

1) REMOVE EXISTING SNOW DRIFT CANOPY AS REQUIRED TO INSTALL NEW ROOFING AND INSULATION.

2) MODIFY EXIST WT9 & CORRUGATED PANEL TO CLEAR EXIST ROOFING, RELOCATE MC8 W/ CONNECTION TO MATCH EXISTING REINSTALL CANOPY USING EXISTING ANCHORS.

B S-507 SECTION
1/2" = 1'-0"

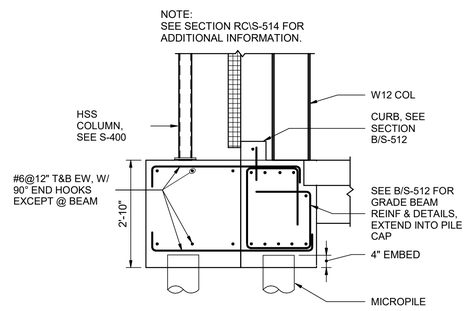

C S-512 SECTION
1/2" = 1'-0"

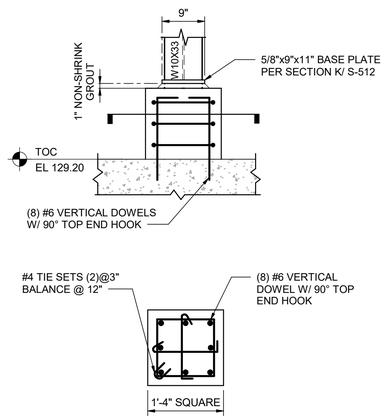

D S-500 SECTION
NOT TO SCALE

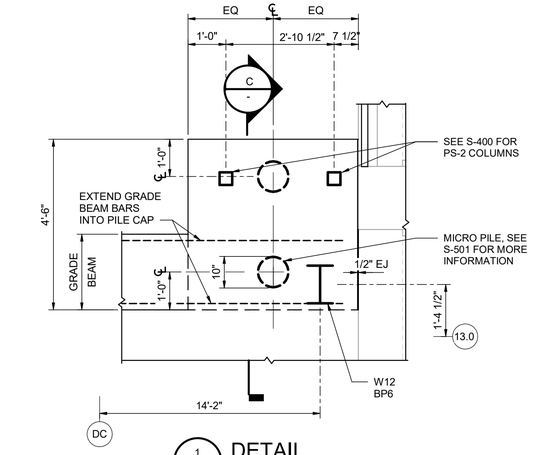

1 S-501 DETAIL
1/2" = 1'-0"

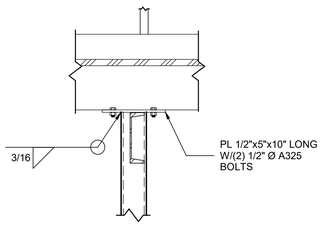

2 S-513 DETAIL
1" = 1'-0"

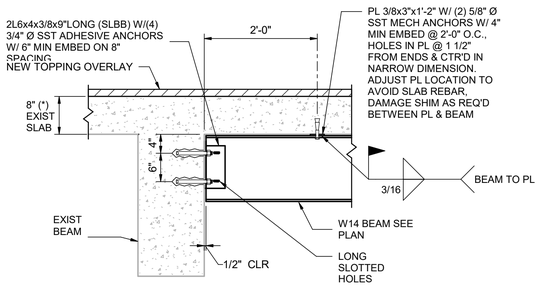

3 S-501 DETAIL
3/4" = 1'-0"

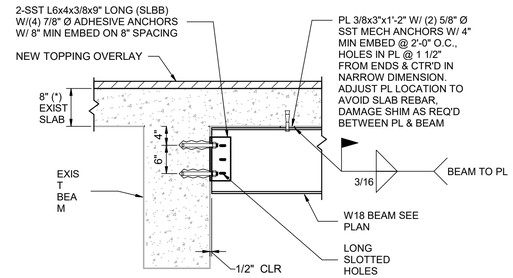

4 S-501 DETAIL
3/4" = 1'-0"

THE DRAWINGS IN THIS SET ARE RECORD DRAWINGS. THEY ARE CONSTRUCTION CONTRACT DRAWINGS WHICH HAVE BEEN REVISED BASED ON AVAILABLE FIELD INFORMATION RECORDED BY OTHERS DURING CONSTRUCTION OF THIS CONTRACT. THERE HAS BEEN NO VERIFICATION OF DIMENSIONS SHOWN ON THE CONSTRUCTION DRAWINGS OR THE ACCURACY/COMPLETENESS OF THE FIELD INFORMATION RECEIVED.

SIGNATURE _____ DATE 2/7/2022

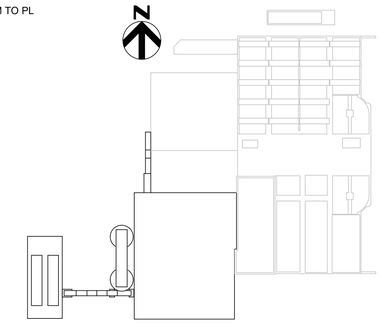

KEY PLAN

AS-BUILT REPLACEMENT SHEET

PROFESSIONAL CERTIFICATION
THIS DRAWING WAS ORIGINALLY APPROVED FOR CONSTRUCTION AND SEALED BY MICHAEL E. MARTIN, A REGISTERED PROFESSIONAL ENGINEER IN THE STATE OF MARYLAND, NO. 49839.

NOTICE TO CONTRACTORS
- PROJECT ELEVATIONS ARE BASED ON NAVD88 AND HOWARD COUNTY'S BENCHMARK SYSTEM
- PREVIOUS PROJECTS USED OTHER DATUMS
- APPLY THE FOLLOWING CONVERSIONS WHEN USING PREVIOUS CONTRACT DRAWINGS:
  - ADDITION NO. 6: SUBTRACT 0.80 FT
  - PRIOR ADDITIONS: SUBTRACT 1.04 FT

DEPARTMENT OF PUBLIC WORKS
HOWARD COUNTY, MARYLAND

CHIEF, BUREAU OF UTILITIES DATE

DES: MEM
DRN: WM
CHK: RM
DATE: 01/2018

DATE	REV	DESCRIPTION
03/2021		RECORD DRAWINGS

STRUCTURAL

DRYER BUILDING SECTIONS 2

LITTLE PATUXENT WATER RECLAMATION PLANT
8TH ADDITION
BIOSOLIDS PROCESSING FACILITIES - PHASE 2

CAPITAL PROJECT S-6295
CONTRACT NO. 24-4936

ELECTION DISTRICT NO. 6
HOWARD COUNTY, MARYLAND

SCALE AS SHOWN

SHEET 91 OF 311

S-513

BIM 360://10054364 – Little Patuxent WRP 8th Addition/264592_100_S_V18.rvt
1/7/2022 10:10:27 AM

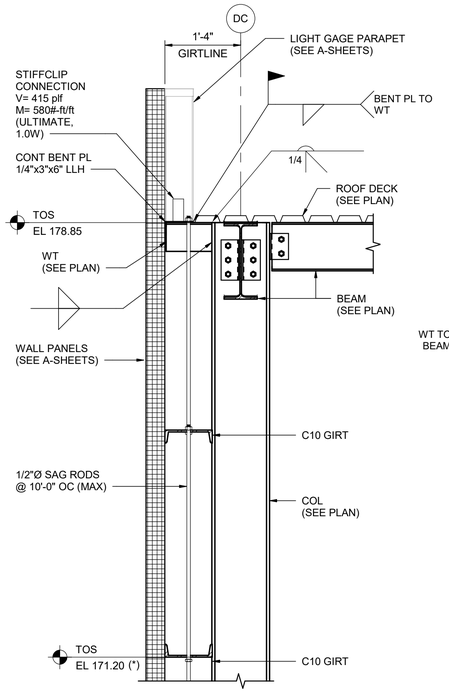

RA S-505 SECTION 3/4" = 1'-0"

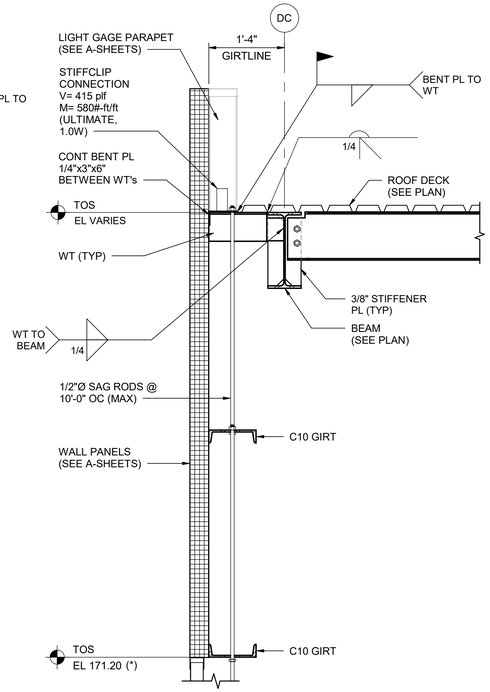

NOTE:
ROOF DECK NOTCHED TO ALLOW INSTALL OF LIGHT GAUGE FRAMING.

RB S-505 SECTION 3/4" = 1'-0"

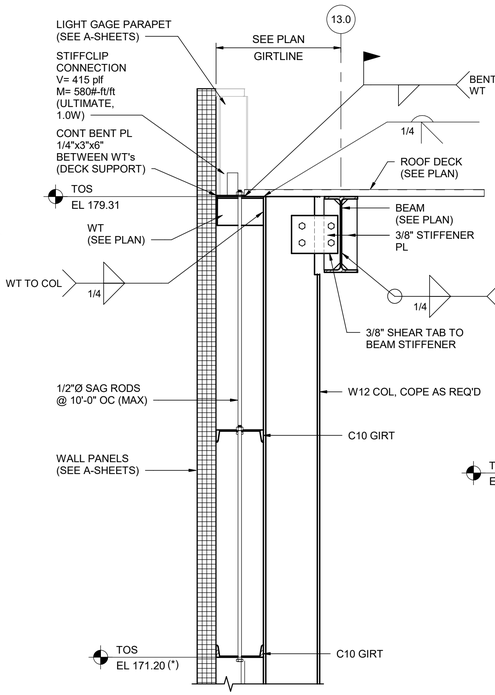

RC S-505 SECTION 3/4" = 1'-0"

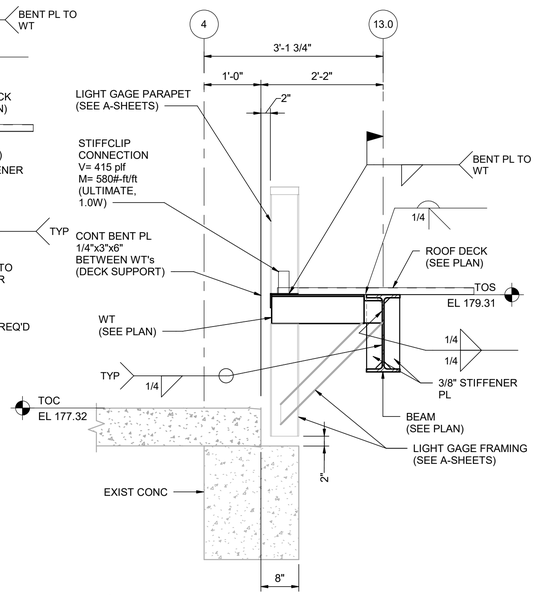

NOTE:
SEE DWG A-904 FOR FURTHER CLARIFICATION ON EXPANSION JOINT

RD S-507 SECTION 3/4" = 1'-0"

GENERAL NOTES:
1. SEE SHEET S-500 AND S-509 FOR ADDITIONAL NOTES.

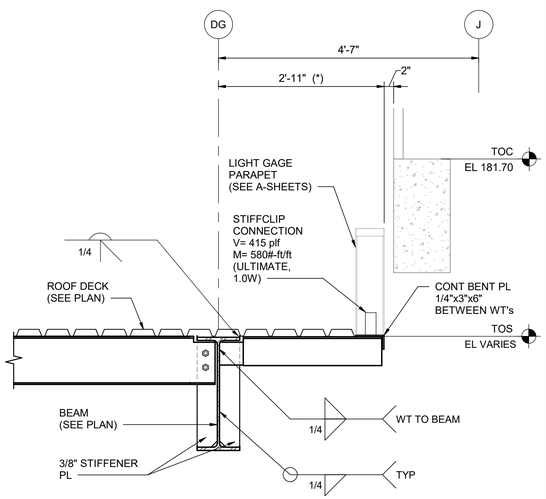

RE S-507 SECTION 3/4" = 1'-0"

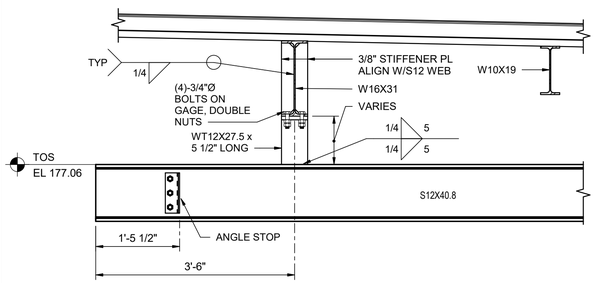

RF S-507 SECTION 3/4" = 1'-0"

THE DRAWINGS IN THIS SET ARE RECORD DRAWINGS. THEY ARE CONSTRUCTION CONTRACT DRAWINGS WHICH HAVE BEEN REVISED BASED ON AVAILABLE FIELD INFORMATION RECORDED BY OTHERS DURING CONSTRUCTION OF THIS CONTRACT. THERE HAS BEEN NO VERIFICATION OF DIMENSIONS SHOWN ON THE CONSTRUCTION DRAWINGS OR THE ACCURACY/COMPLETENESS OF THE FIELD INFORMATION RECEIVED.

SIGNATURE _____ DATE 2/7/2022

AS-BUILT REPLACEMENT SHEET

PROFESSIONAL CERTIFICATION
THIS DRAWING WAS ORIGINALLY APPROVED FOR CONSTRUCTION AND SEALED BY MICHAEL E. MARTIN, A REGISTERED PROFESSIONAL ENGINEER IN THE STATE OF MARYLAND, NO. 49839.

NOTICE TO CONTRACTORS
- PROJECT ELEVATIONS ARE BASED ON NAVD88 AND HOWARD COUNTY'S BENCHMARK SYSTEM
- PREVIOUS PROJECTS USED OTHER DATUMS
- APPLY THE FOLLOWING CONVERSIONS WHEN USING PREVIOUS CONTRACT DRAWINGS:
  - ADDITION NO. 6: SUBTRACT 0.80 FT
  - PRIOR ADDITIONS: SUBTRACT 1.04 FT

DEPARTMENT OF PUBLIC WORKS
HOWARD COUNTY, MARYLAND

CHIEF, BUREAU OF UTILITIES DATE

DES: MEM
DRN: WM
CHK: RM
DATE: 01/2018

DATE	REV	DESCRIPTION
03/2021		RECORD DRAWINGS

STRUCTURAL

DRYER BUILDING SECTIONS 3

LITTLE PATUXENT WATER RECLAMATION PLANT
8TH ADDITION
BIOSOLIDS PROCESSING FACILITIES - PHASE 2

CAPITAL PROJECT S-6295
CONTRACT NO. 24-4936

ELECTION DISTRICT NO. 6
HOWARD COUNTY, MARYLAND

SCALE AS SHOWN

SHEET 92 OF 311

S-514

BIM 360://10054364 – Little Patuxent WRP 8th Addition/264592_100_S_V18.rvt
1/7/2022 10:10:30 AM

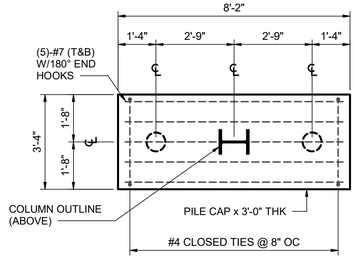

PLAN - PC2

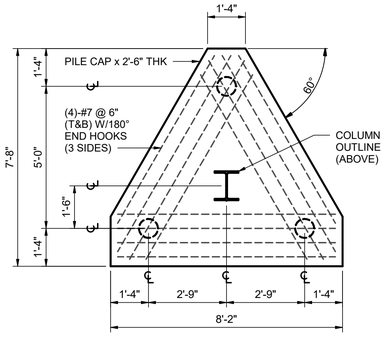

PLAN - PC3

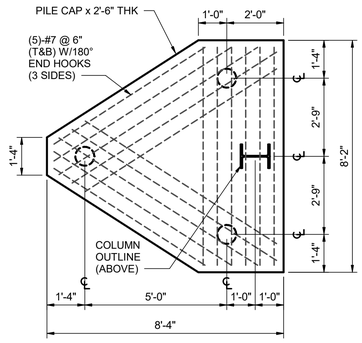

PLAN - PC3A

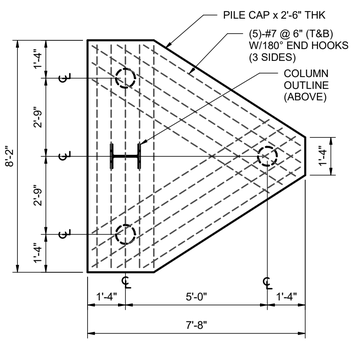

PLAN - PC3B

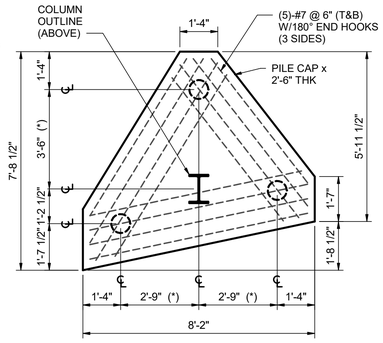

PLAN - PC3C

SEE CAUTION NOTES ON PLAN

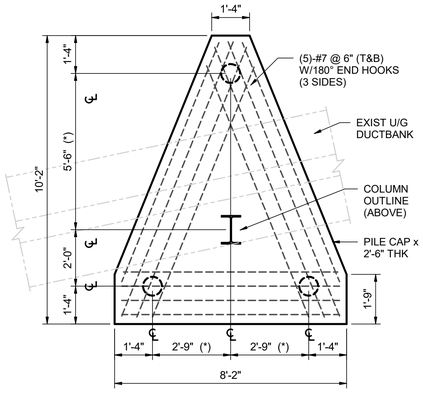

PLAN - PC3D

SEE CAUTION NOTES ON PLAN

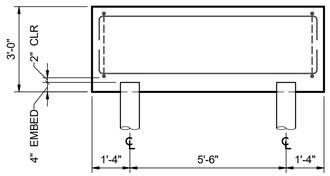

SECTION - PC2

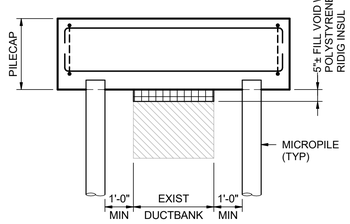

SECTION - PC3D

PILE CAP DETAILS

3/8" = 1'-0"

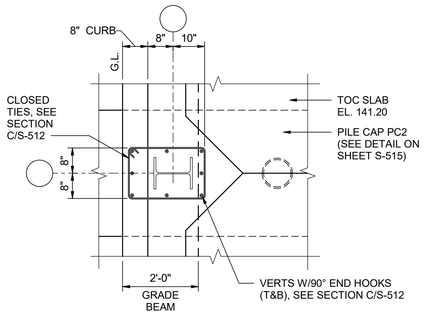

S-512 PLAN

1 DETAIL 1/2" = 1'-0"

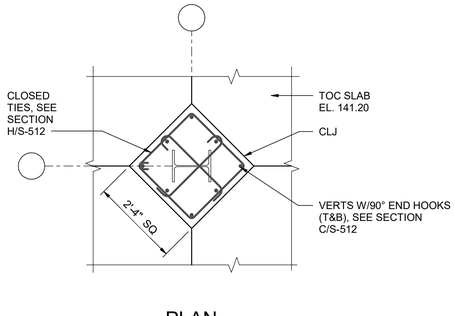

S-512 PLAN

2 DETAIL 1/2" = 1'-0"

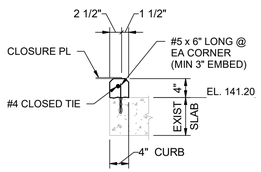

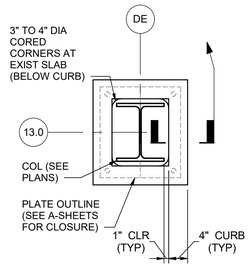

3 S-501 DETAIL 3/4" = 1'-0"

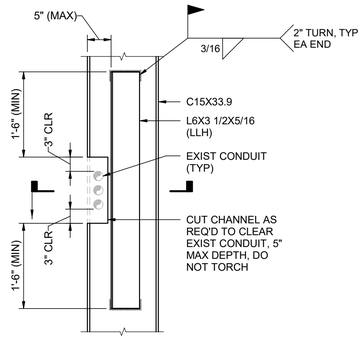

PLAN

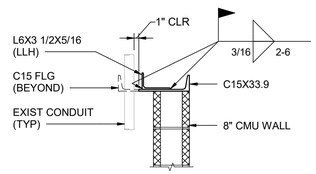

SECTION

4 DETAIL 3/4" = 1'-0"

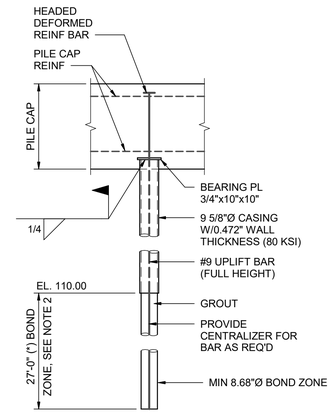

MICROPILE DETAIL

3/8" = 1'-0"

NOTES:
1. SEE SPECIFICATION SECTION 31 62 18 FOR MORE INFORMATION.
2. MINIMUM TIP ELEVATIONS FOR MICROPILES ARE BASED ON 8.68" DIAMETER BONDED ZONE AND ASSUMED GROUT GROUND BOND STRENGTH OF 9 PSI FOR RESIDUAL SOILS AND 35 PSI (ULTIMATE). FOR HIGHLY WEATHERED ROCK. BOND LENGTHS OF MICROPILES MAY BE REDUCED BASED ON THE RESULTS OF THE PILE LOAD TEST PROGRAM ON MICROPILES.

THE DRAWINGS IN THIS SET ARE RECORD DRAWINGS. THEY ARE CONSTRUCTION CONTRACT DRAWINGS WHICH HAVE BEEN REVISED BASED ON AVAILABLE FIELD INFORMATION RECORDED BY OTHERS DURING CONSTRUCTION OF THIS CONTRACT. THERE HAS BEEN NO VERIFICATION OF DIMENSIONS SHOWN ON THE CONSTRUCTION DRAWINGS OR THE ACCURACY/COMPLETENESS OF THE FIELD INFORMATION RECEIVED.

SIGNATURE — DATE 1/7/2022

HDR

AS-BUILT REPLACEMENT SHEET

PROFESSIONAL CERTIFICATION
THIS DRAWING WAS ORIGINALLY APPROVED FOR CONSTRUCTION AND SEALED BY MICHAEL E. MARTIN, A REGISTERED PROFESSIONAL ENGINEER IN THE STATE OF MARYLAND, NO. 49839.

NOTICE TO CONTRACTORS
- PROJECT ELEVATIONS ARE BASED ON NAVD88 AND HOWARD COUNTY'S BENCHMARK SYSTEM
- PREVIOUS PROJECTS USED OTHER DATUMS
- APPLY THE FOLLOWING CONVERSIONS WHEN USING PREVIOUS CONTRACT DRAWINGS:
  - ADDITION NO. 6: SUBTRACT 0.80 FT
  - PRIOR ADDITIONS: SUBTRACT 1.04 FT

DEPARTMENT OF PUBLIC WORKS
HOWARD COUNTY, MARYLAND

CHIEF, BUREAU OF UTILITIES — DATE

DES: MEM
DRN: WM
CHK: RM
DATE: 01/2018

DATE	REV	DESCRIPTION
03/2021		RECORD DRAWINGS

STRUCTURAL

DRYER BUILDING DETAILS 1

LITTLE PATUXENT WATER RECLAMATION PLANT
8TH ADDITION
BIOSOLIDS PROCESSING FACILITIES - PHASE 2

CAPITAL PROJECT S-6295
CONTRACT NO. 24-4936

ELECTION DISTRICT NO. 6
HOWARD COUNTY, MARYLAND

SCALE AS SHOWN

SHEET 93 OF 311

S-515

BIM 360://10054364 – Little Patuxent WRP 8th Addition/264592_100_S_V18.rvt
1/7/2022 10:10:33 AM

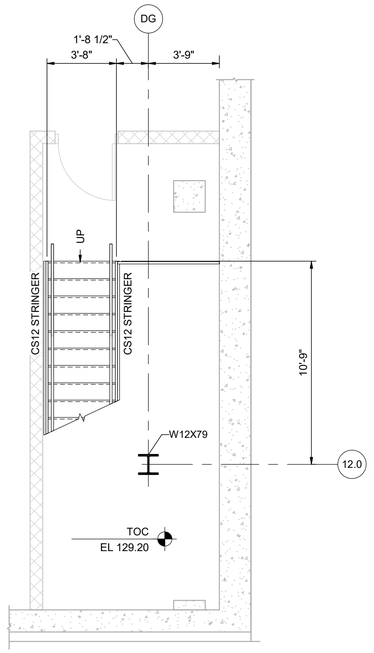

STAIR PLAN EL 129.20

1/4" = 1'-0"

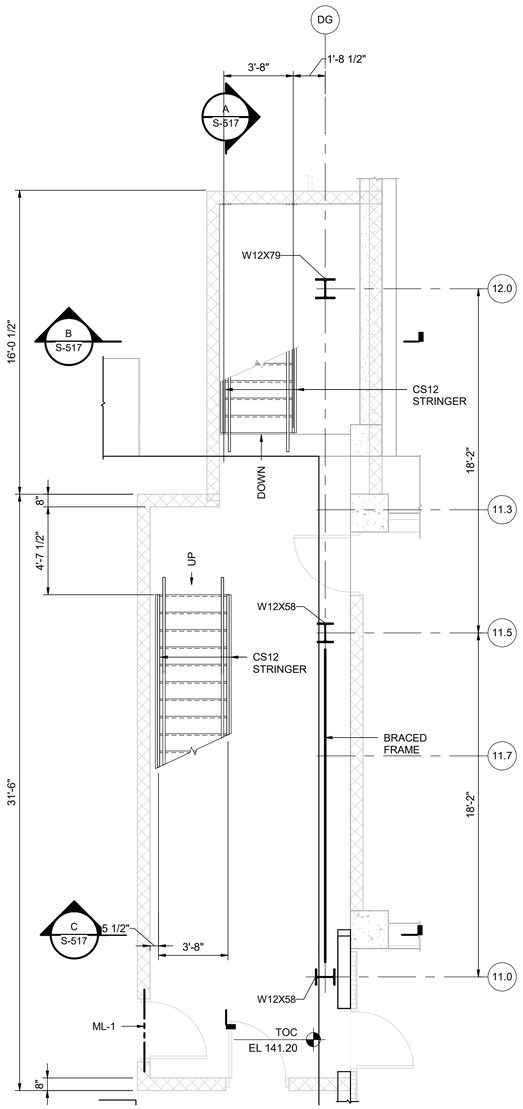

STAIR PLAN EL 141.20

1/4" = 1'-0"

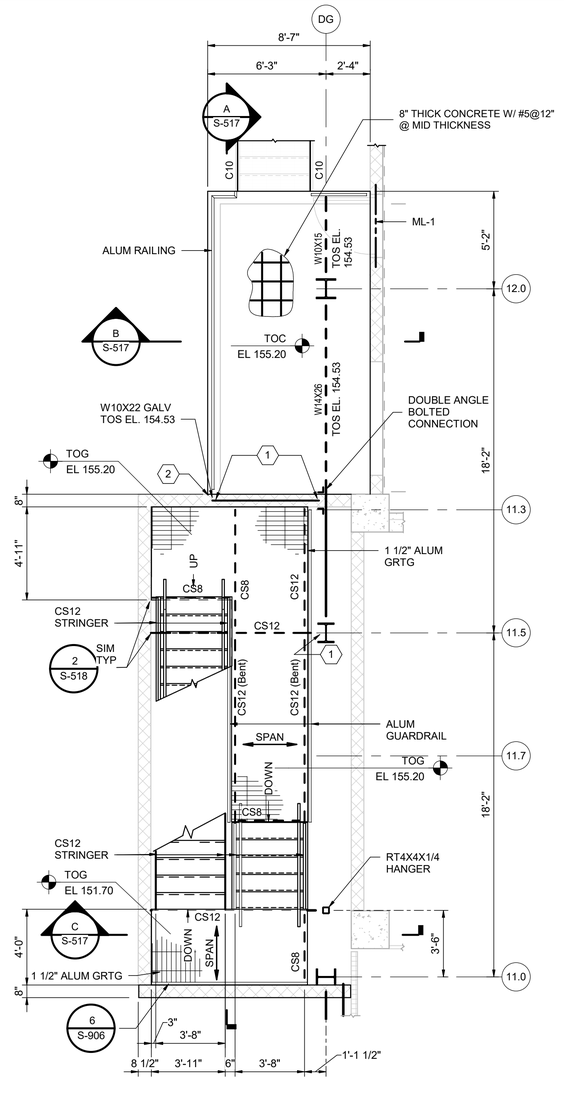

STAIR PLAN EL 155.20

1/4" = 1'-0"

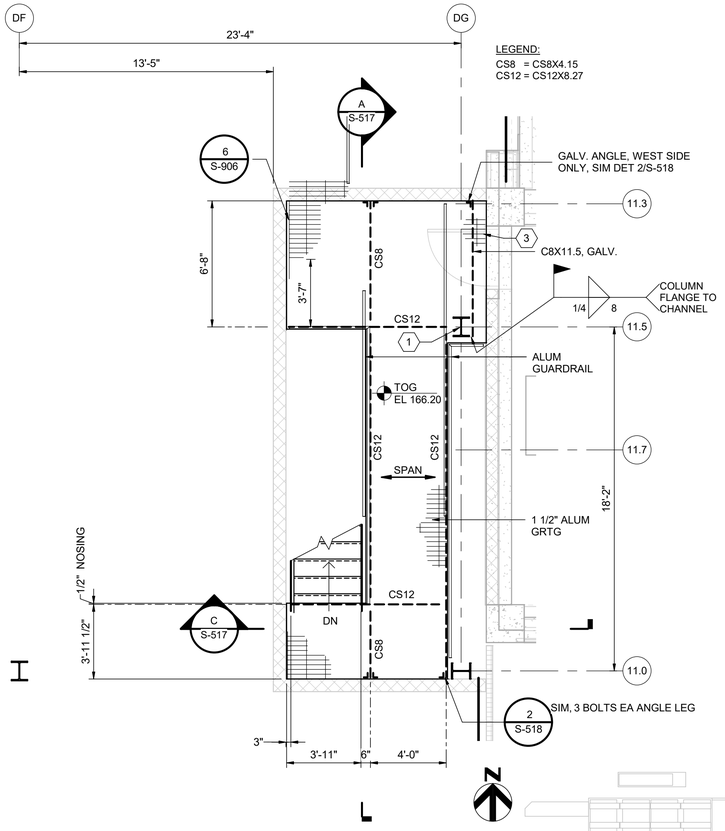

STAIR PLAN EL 166.20

1/4" = 1'-0"

GENERAL NOTES:

1. SEE SHEET S-500 FOR ADDITIONAL NOTES.
2. SEE ARCHITECTURAL FOR MASONRY DIMENSIONS.
3. ALL STAIR FRAMING & GRATING TO BE ALUMINUM (UNO).
4. ALL HORIZONTAL RAILING TO HAVE TOE PL UNO.

KEY NOTES:

1. STAINLESS STEEL BOLTED CONNECTION TO COLUMN OR STEEL BEAM.
2. BEAM TO BEAR ON PL 3/8"X6 1/2"X0'-8" FULL 8" AND FILLET WELD THERE TO PROVIDE 2 HEADED STUDS TO PL BOTTOM 5/8"ØX6", SPACED @6" O.C. AT PLATE MID WIDTH.
3. EXTEND GRATING WITHIN 1/2" OF EXIST FLOOR. BAND EAST END.

LEGEND:

CS8 = CS8X4.15
CS12 = CS12X8.27

THE DRAWINGS IN THIS SET ARE RECORD DRAWINGS. THEY ARE CONSTRUCTION CONTRACT DRAWINGS WHICH HAVE BEEN REVISED BASED ON AVAILABLE FIELD INFORMATION RECORDED BY OTHERS DURING CONSTRUCTION OF THIS CONTRACT. THERE HAS BEEN NO VERIFICATION OF DIMENSIONS SHOWN ON THE CONSTRUCTION DRAWINGS OR THE ACCURACY/COMPLETENESS OF THE FIELD INFORMATION RECEIVED.

SIGNATURE — DATE 2/7/2022

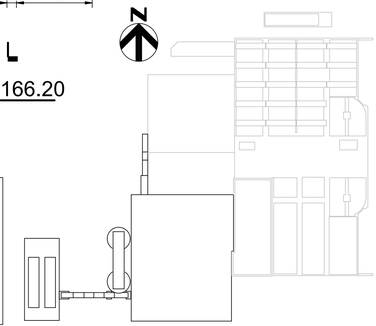

KEY PLAN

AS-BUILT REPLACEMENT SHEET

PROFESSIONAL CERTIFICATION
THIS DRAWING WAS ORIGINALLY APPROVED FOR CONSTRUCTION AND SEALED BY MICHAEL E. MARTIN, A REGISTERED PROFESSIONAL ENGINEER IN THE STATE OF MARYLAND, NO. 49839.

NOTICE TO CONTRACTORS
- PROJECT ELEVATIONS ARE BASED ON NAVD88 AND HOWARD COUNTY'S BENCHMARK SYSTEM
- PREVIOUS PROJECTS USED OTHER DATUMS
- APPLY THE FOLLOWING CONVERSIONS WHEN USING PREVIOUS CONTRACT DRAWINGS:
  - ADDITION NO. 6: SUBTRACT 0.80 FT
  - PRIOR ADDITIONS: SUBTRACT 1.04 FT

DEPARTMENT OF PUBLIC WORKS
HOWARD COUNTY, MARYLAND

CHIEF, BUREAU OF UTILITIES — DATE

DES: MEM
DRN: WM
CHK: RM
DATE: 01/2018

DATE	REV	DESCRIPTION
03/2021		RECORD DRAWINGS

STRUCTURAL

DRYER BUILDING STAIR DETAILS

LITTLE PATUXENT WATER RECLAMATION PLANT
8TH ADDITION
BIOSOLIDS PROCESSING FACILITIES - PHASE 2

CAPITAL PROJECT S-6295
CONTRACT NO. 24-4936

ELECTION DISTRICT NO. 6
HOWARD COUNTY, MARYLAND

SCALE AS SHOWN

SHEET 94 OF 311

S-516

BIM 360://10054364 – Little Patuxent WRP 8th Addition/264592_100_S_V18.rvt
1/7/2022 10:10:36 AM

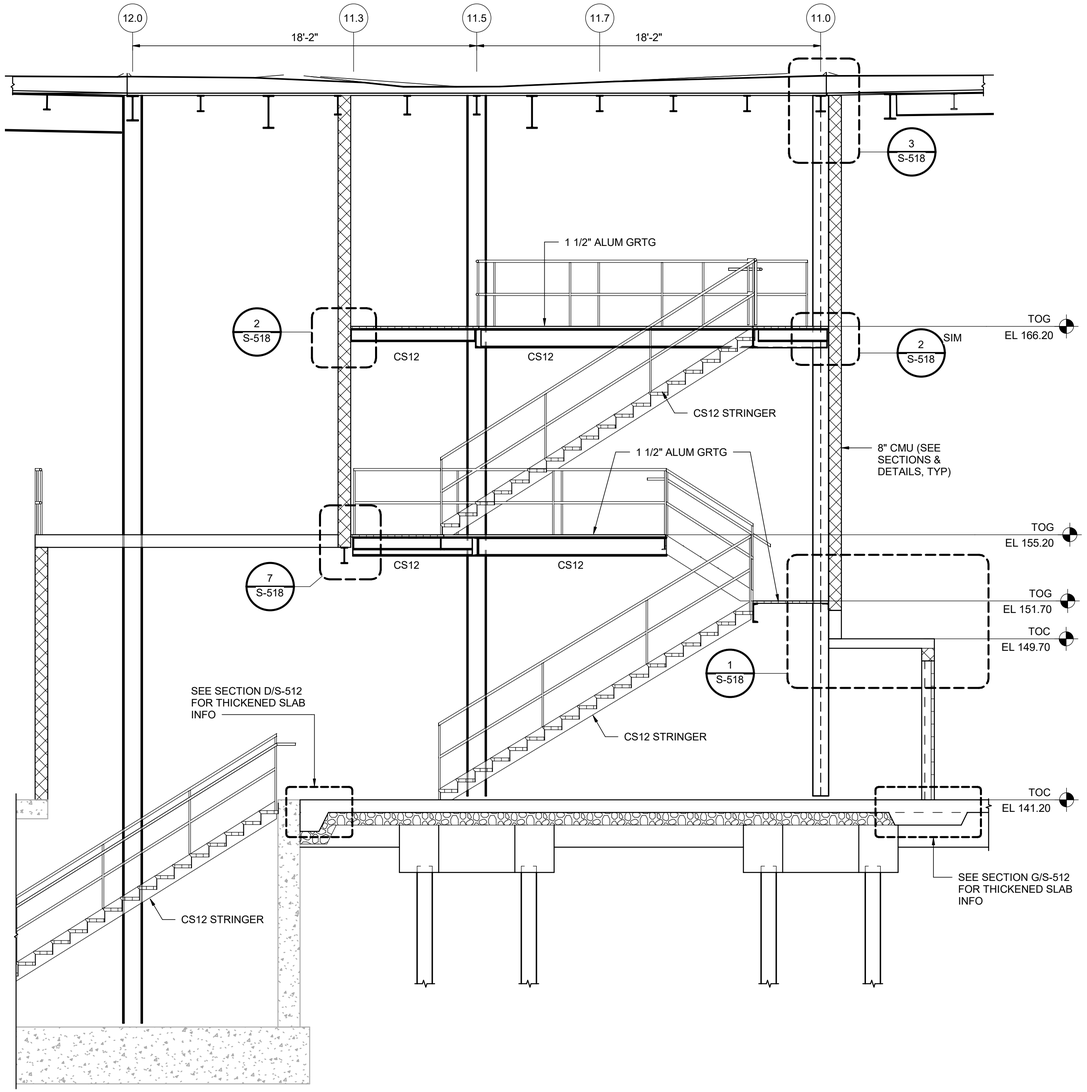

A S-516 SECTION
1/4" = 1'-0"

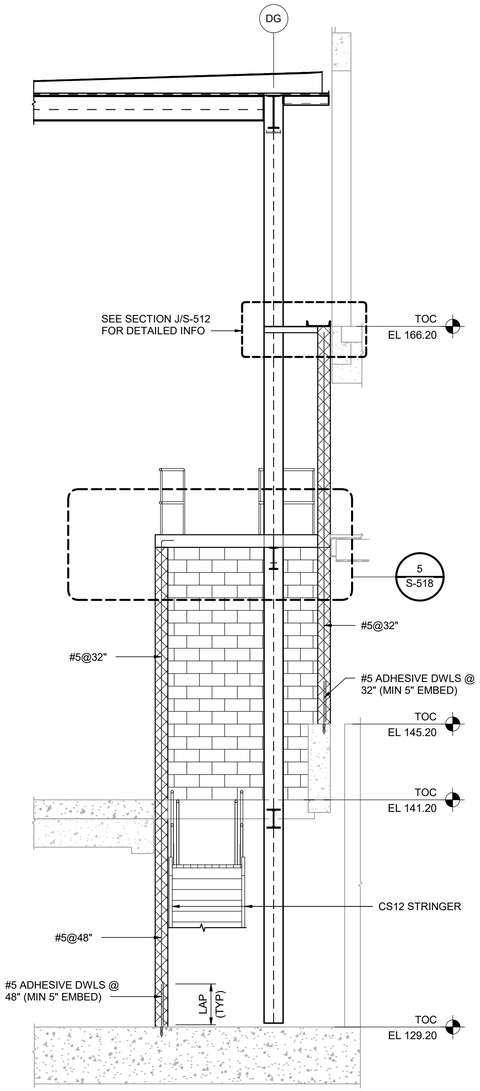

B S-516 SECTION
1/4" = 1'-0"

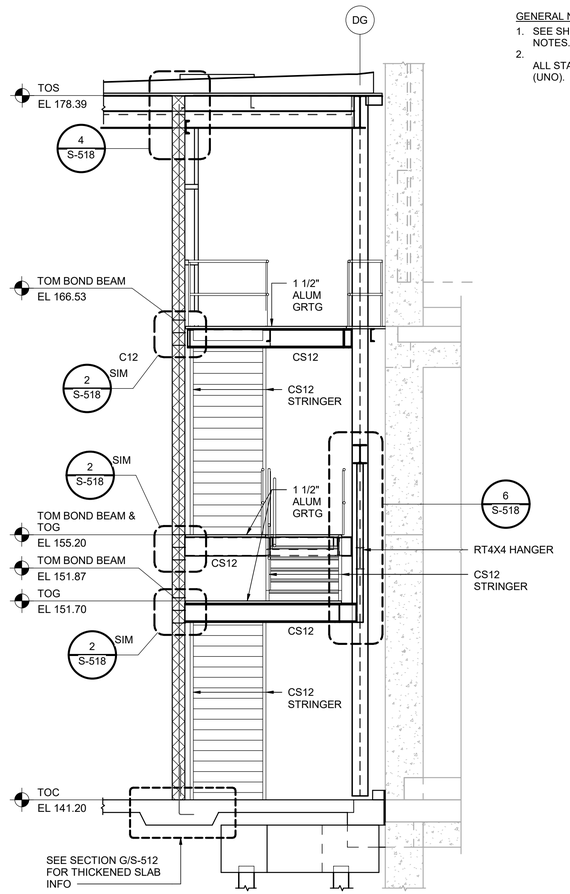

C S-516 SECTION
1/4" = 1'-0"

GENERAL NOTES:

1. SEE SHEET S-500 FOR ADDITIONAL NOTES.
2. ALL STAIR FRAMING TO BE ALUMINUM (UNO).

THE DRAWINGS IN THIS SET ARE RECORD DRAWINGS. THEY ARE CONSTRUCTION CONTRACT DRAWINGS WHICH HAVE BEEN REVISED BASED ON AVAILABLE FIELD INFORMATION RECORDED BY OTHERS DURING CONSTRUCTION OF THIS CONTRACT. THERE HAS BEEN NO VERIFICATION OF DIMENSIONS SHOWN ON THE CONSTRUCTION DRAWINGS OR THE ACCURACY/COMPLETENESS OF THE FIELD INFORMATION RECEIVED.

SIGNATURE — DATE 2/7/2023

AS-BUILT REPLACEMENT SHEET

PROFESSIONAL CERTIFICATION
THIS DRAWING WAS ORIGINALLY APPROVED FOR CONSTRUCTION AND SEALED BY MICHAEL E. MARTIN, A REGISTERED PROFESSIONAL ENGINEER IN THE STATE OF MARYLAND, NO. 49839.

NOTICE TO CONTRACTORS
- PROJECT ELEVATIONS ARE BASED ON NAVD88 AND HOWARD COUNTY'S BENCHMARK SYSTEM
- PREVIOUS PROJECTS USED OTHER DATUMS
- APPLY THE FOLLOWING CONVERSIONS WHEN USING PREVIOUS CONTRACT DRAWINGS:
  - ADDITION NO. 6: SUBTRACT 0.80 FT
  - PRIOR ADDITIONS: SUBTRACT 1.04 FT

DEPARTMENT OF PUBLIC WORKS
HOWARD COUNTY, MARYLAND

CHIEF, BUREAU OF UTILITIES — DATE

DES: MEM
DRN: WM
CHK: RM
DATE: 01/2018

DATE	REV	DESCRIPTION
06/25/2019		RFI 497
06/21/2019		RFI 493
03/2021		RECORD DRAWINGS

STRUCTURAL

DRYER BUILDING STAIR SECTIONS 1

LITTLE PATUXENT WATER RECLAMATION PLANT
8TH ADDITION
BIOSOLIDS PROCESSING FACILITIES - PHASE 2

CAPITAL PROJECT S-6295
CONTRACT NO. 24-4936

ELECTION DISTRICT NO. 6
HOWARD COUNTY, MARYLAND

SCALE AS SHOWN

SHEET 95 OF 311

S-517

BIM 360://10054364 – Little Patuxent WRP 8th Addition/264592_100_S_V18.rvt
1/7/2022 10:10:38 AM

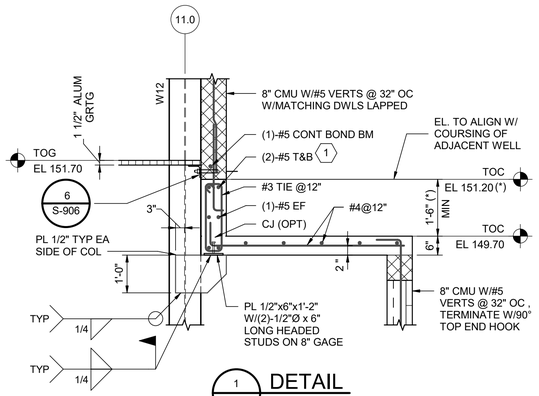

1 S-517 DETAIL 1/2" = 1'-0"

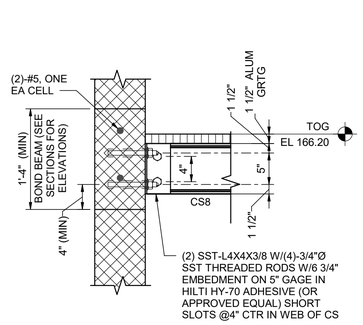

2 S-517 DETAIL 1" = 1'-0"

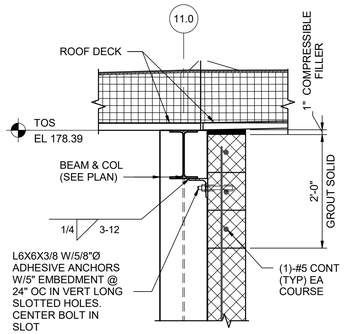

3 S-517 DETAIL 3/4" = 1'-0"

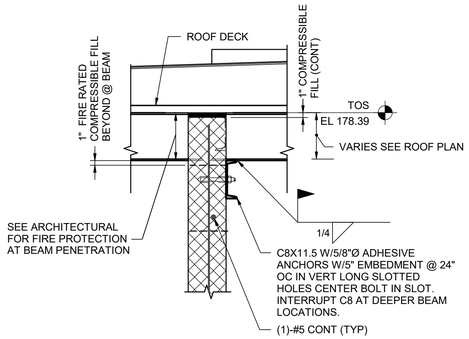

4 S-517 DETAIL 3/4" = 1'-0"

GENERAL NOTES:

1. SEE SHEET S-500 & S-516 FOR ADDITIONAL NOTES.

KEYNOTE: X

1. STOP TOP HORIZONTAL BEAM REINFORCEMENT SORT OF STEEL GIRT AT BUILDING PERIMETER. PROVIDE (2) #5 2" LOWER BELOW STEEL BEAM EXTENDING LAP LENGTH INTO REINFORCEMENT SHOWN. GROUT AROUND STEEL BEAM AS REQUIRED TO ALLOW MASONRY INSTALLATION.

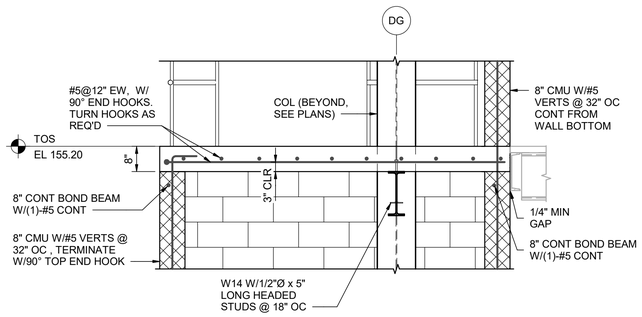

5 S-517 DETAIL 1/2" = 1'-0"

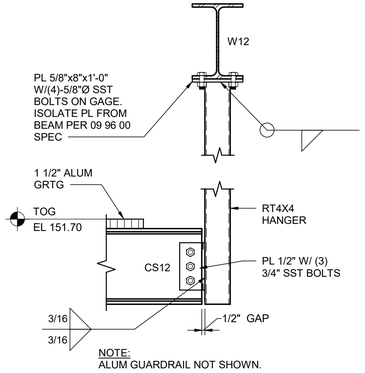

6 S-517 DETAIL 1" = 1'-0"

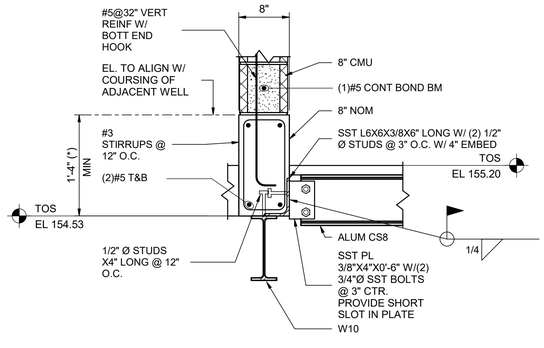

7 S-517 DETAIL 1" = 1'-0"

THE DRAWINGS IN THIS SET ARE RECORD DRAWINGS. THEY ARE CONSTRUCTION CONTRACT DRAWINGS WHICH HAVE BEEN REVISED BASED ON AVAILABLE FIELD INFORMATION RECORDED BY OTHERS DURING CONSTRUCTION OF THIS CONTRACT. THERE HAS BEEN NO VERIFICATION OF DIMENSIONS SHOWN ON THE CONSTRUCTION DRAWINGS OR THE ACCURACY/COMPLETENESS OF THE FIELD INFORMATION RECEIVED.

SIGNATURE 2/7/2022 DATE

HDR

AS-BUILT REPLACEMENT SHEET

PROFESSIONAL CERTIFICATION
THIS DRAWING WAS ORIGINALLY APPROVED FOR CONSTRUCTION AND SEALED BY MICHAEL E. MARTIN, A REGISTERED PROFESSIONAL ENGINEER IN THE STATE OF MARYLAND, NO. 49839.

NOTICE TO CONTRACTORS
- PROJECT ELEVATIONS ARE BASED ON NAVD88 AND HOWARD COUNTY'S BENCHMARK SYSTEM
- PREVIOUS PROJECTS USED OTHER DATUMS
- APPLY THE FOLLOWING CONVERSIONS WHEN USING PREVIOUS CONTRACT DRAWINGS:
  - ADDITION NO. 6: SUBTRACT 0.80 FT
  - PRIOR ADDITIONS: SUBTRACT 1.04 FT

DEPARTMENT OF PUBLIC WORKS
HOWARD COUNTY, MARYLAND

CHIEF, BUREAU OF UTILITIES DATE

DES: MEM
DRN: WM
CHK: RM
DATE: 01/2018

DATE	REV	DESCRIPTION
03/2021		RECORD DRAWINGS

STRUCTURAL

DRYER BUILDING STAIR DETAILS 1

LITTLE PATUXENT WATER RECLAMATION PLANT
8TH ADDITION
BIOSOLIDS PROCESSING FACILITIES - PHASE 2

CAPITAL PROJECT S-6295
CONTRACT NO. 24-4936

ELECTION DISTRICT NO. 6
HOWARD COUNTY, MARYLAND

SCALE AS SHOWN

SHEET 96 OF 311

S-518

BIM 360://10054364 – Little Patuxent WRP 8th Addition/264592_100_S_V18.rvt
1/7/2022 10:10:42 AM

GENERAL

1. SEE S-500 FOR ADDITIONAL NOTES.

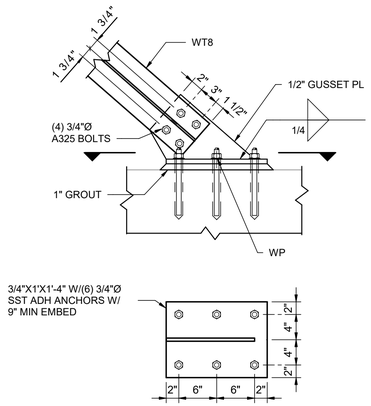

1 S-510 DETAIL 1" = 1'-0"

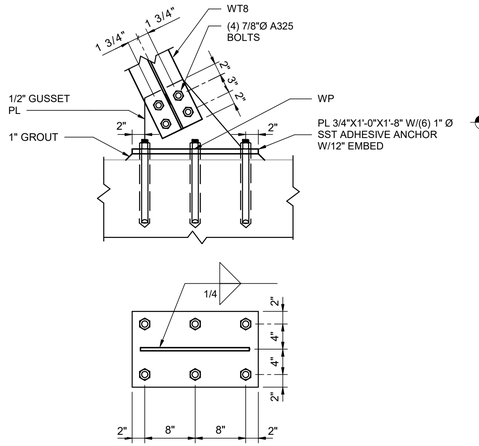

2 S-510 DETAIL 1" = 1'-0"

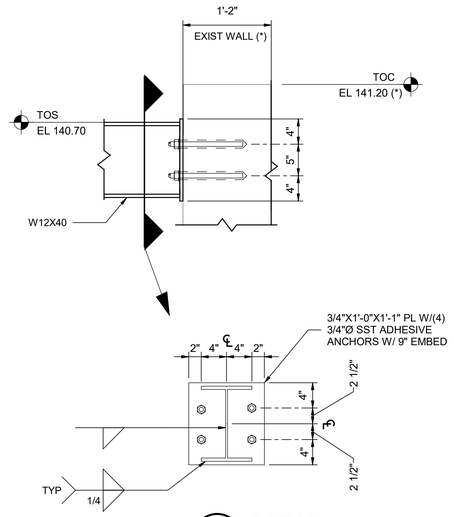

3 S-510 DETAIL 1" = 1'-0"

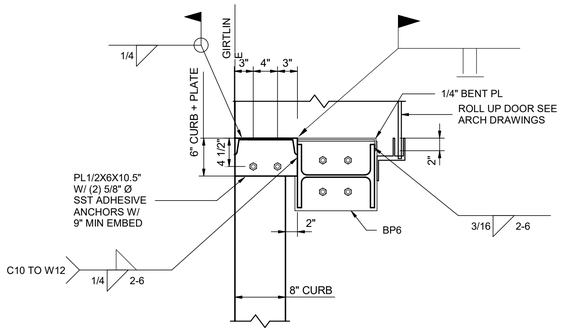

5 S-502 DETAIL 1" = 1'-0"

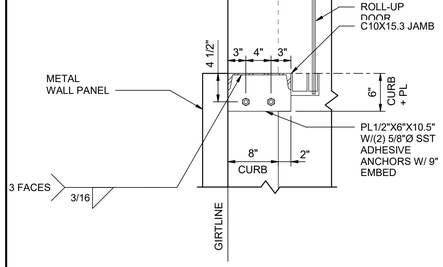

4 S-501 DETAIL 1" = 1'-0"

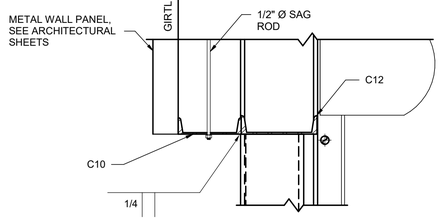

6 S-509 DETAIL 1" = 1'-0"

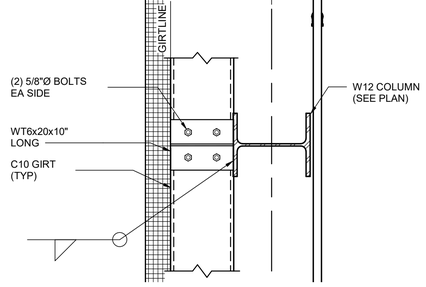

7 S-503 DETAIL 1" = 1'-0"

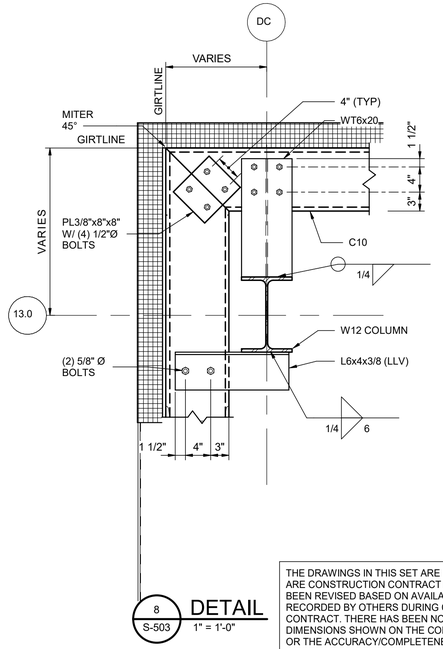

8 S-503 DETAIL 1" = 1'-0"

THE DRAWINGS IN THIS SET ARE RECORD DRAWINGS. THEY ARE CONSTRUCTION CONTRACT DRAWINGS WHICH HAVE BEEN REVISED BASED ON AVAILABLE FIELD INFORMATION RECORDED BY OTHERS DURING CONSTRUCTION OF THIS CONTRACT. THERE HAS BEEN NO VERIFICATION OF DIMENSIONS SHOWN ON THE CONSTRUCTION DRAWINGS OR THE ACCURACY/COMPLETENESS OF THE FIELD INFORMATION RECEIVED.

SIGNATURE _____ DATE 2/7/2023

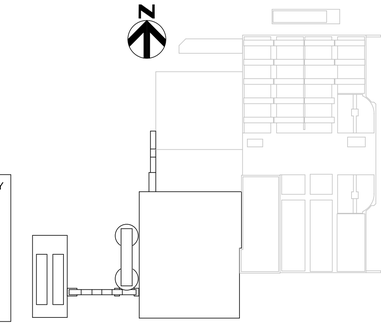

KEY PLAN

AS-BUILT REPLACEMENT SHEET

PROFESSIONAL CERTIFICATION
THIS DRAWING WAS ORIGINALLY APPROVED FOR CONSTRUCTION AND SEALED BY MICHAEL E. MARTIN, A REGISTERED PROFESSIONAL ENGINEER IN THE STATE OF MARYLAND, NO. 49839.

NOTICE TO CONTRACTORS
- PROJECT ELEVATIONS ARE BASED ON NAVD88 AND HOWARD COUNTY'S BENCHMARK SYSTEM
- PREVIOUS PROJECTS USED OTHER DATUMS
- APPLY THE FOLLOWING CONVERSIONS WHEN USING PREVIOUS CONTRACT DRAWINGS:
  - ADDITION NO. 6: SUBTRACT 0.80 FT
  - PRIOR ADDITIONS: SUBTRACT 1.04 FT

DEPARTMENT OF PUBLIC WORKS
HOWARD COUNTY, MARYLAND

CHIEF, BUREAU OF UTILITIES DATE

DES: MEM
DRN: WM
CHK: RM
DATE: 01/2018

DATE	REV	DESCRIPTION
03/2021		RECORD DRAWINGS

STRUCTURAL

DEWATERING AND DRYING BUILDING DETAILS 3

LITTLE PATUXENT WATER RECLAMATION PLANT
8TH ADDITION
BIOSOLIDS PROCESSING FACILITIES - PHASE 2

CAPITAL PROJECT S-6295
CONTRACT NO. 24-4936

ELECTION DISTRICT NO. 6
HOWARD COUNTY, MARYLAND

SCALE AS SHOWN

SHEET 97 OF 311

S-519

BIM 360://10054364 – Little Patuxent WRP 8th Addition/264592_100_S_V18.rvt
1/7/2022 10:10:48 AM

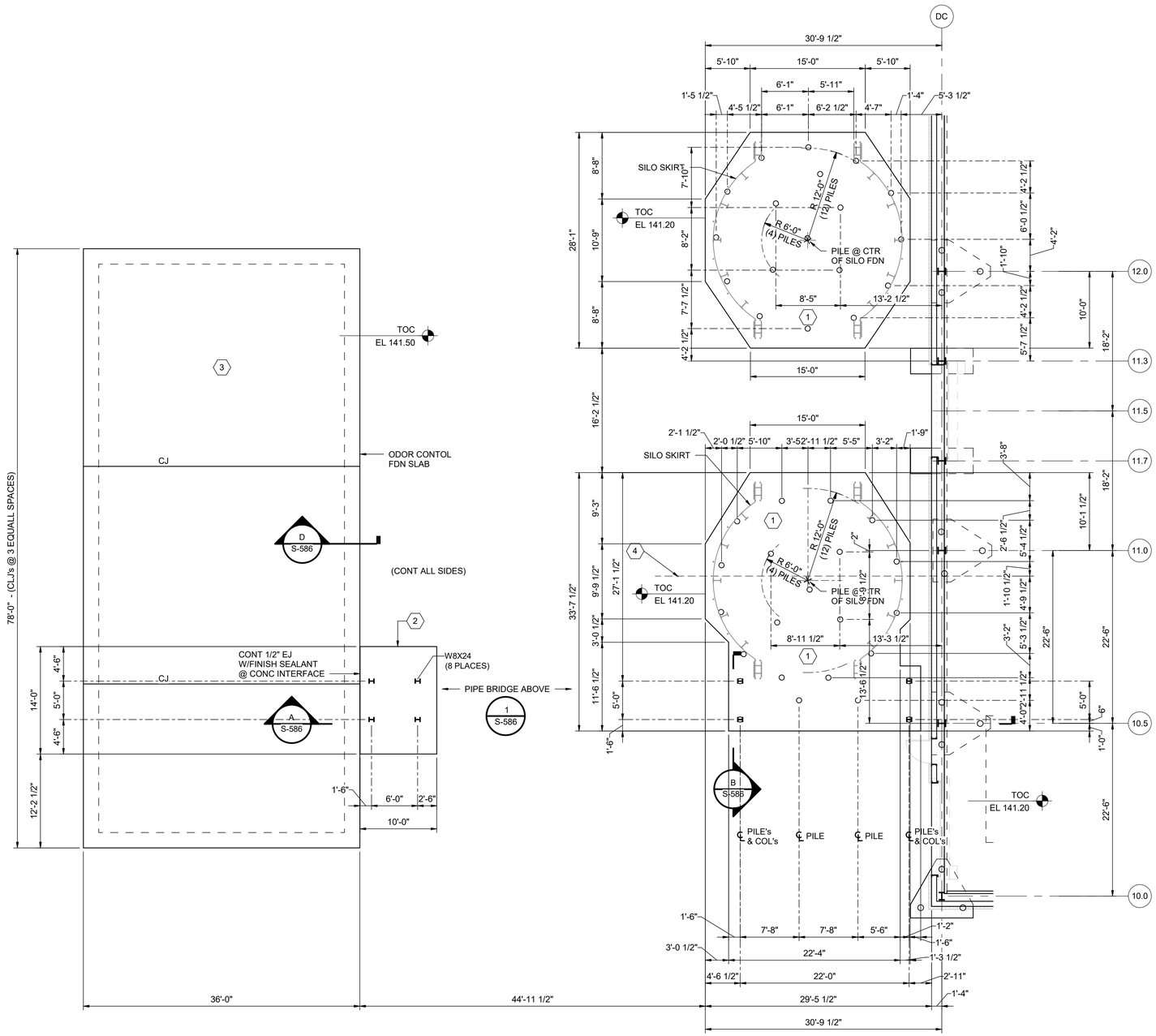

ODOR CONTROL, SILOS, AND PIPE BRIDGE FOUNDATION SLAB PLAN

1/8" = 1'-0"

GENERAL NOTES:

1. SEE SHEET S-500 FOR ADDITIONAL NOTES.

KEY NOTES:

1. 2'-6" THICK PILE CAP WITH #7@12" EACH WAY WITH 90° END HOOKS PROVIDE AT TOP OF STEEL.
2. 1'-2" THICK FOOTING WITH #5@12" EACH WAY, TOP AND BOTTOM.
3. 10" THICK (MINIMUM) CONCRETE SLAB WITH #5@12" EACH WAY, TOP AND BOTTOM.
4. EXISTING 8" PD LINE. FIELD VERIFY LOCATION PRIOR TO INSTALLING PILES. INFORM ENGINEER OF ANY POTENTIAL CONFLICTS.

LEGEND:

- O INDICATES 9 5/8"Ø MICROPILE WITH 90K VERTICAL CAPACITY, 10K UPLIFT CAPACITY AND 6K LATERAL CAPACITY (ALL LOADS SERVICE) SEE SPECIFICATIONS FOR ADDITIONAL INFORMATION.

THE DRAWINGS IN THIS SET ARE RECORD DRAWINGS. THEY ARE CONSTRUCTION CONTRACT DRAWINGS WHICH HAVE BEEN REVISED BASED ON AVAILABLE FIELD INFORMATION RECORDED BY OTHERS DURING CONSTRUCTION OF THIS CONTRACT. THERE HAS BEEN NO VERIFICATION OF DIMENSIONS SHOWN ON THE CONSTRUCTION DRAWINGS OR THE ACCURACY/COMPLETENESS OF THE FIELD INFORMATION RECEIVED.

SIGNATURE — DATE 2/7/2023

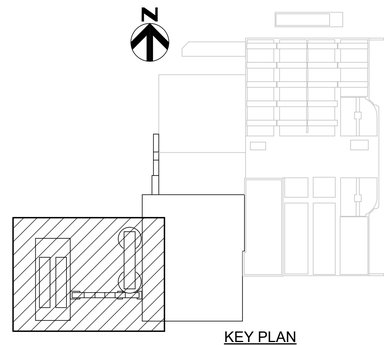

KEY PLAN

AS-BUILT REPLACEMENT SHEET

PROFESSIONAL CERTIFICATION
THIS DRAWING WAS ORIGINALLY APPROVED FOR CONSTRUCTION AND SEALED BY MICHAEL E. MARTIN, A REGISTERED PROFESSIONAL ENGINEER IN THE STATE OF MARYLAND, NO. 49839.

NOTICE TO CONTRACTORS
- PROJECT ELEVATIONS ARE BASED ON NAVD88 AND HOWARD COUNTY'S BENCHMARK SYSTEM
- PREVIOUS PROJECTS USED OTHER DATUMS
- APPLY THE FOLLOWING CONVERSIONS WHEN USING PREVIOUS CONTRACT DRAWINGS:
  - ADDITION NO. 6: SUBTRACT 0.80 FT
  - PRIOR ADDITIONS: SUBTRACT 1.04 FT

DEPARTMENT OF PUBLIC WORKS
HOWARD COUNTY, MARYLAND

CHIEF, BUREAU OF UTILITIES — DATE

DES: MEM
DRN: WM
CHK: RM
DATE: 01/2018

DATE	REV	DESCRIPTION
03/2021		RECORD DRAWINGS

STRUCTURAL

DRYER BUILDING ODOR CONTROL, SILOS AND PIPE BRIDGE PLAN

LITTLE PATUXENT WATER RECLAMATION PLANT
8TH ADDITION
BIOSOLIDS PROCESSING FACILITIES - PHASE 2

CAPITAL PROJECT S-6295
CONTRACT NO. 24-4936

ELECTION DISTRICT NO. 6
HOWARD COUNTY, MARYLAND

SCALE AS SHOWN

SHEET 98 OF 311

S-585

BIM 360://10054364 – Little Patuxent WRP 8th Addition/264592_100_S_V18.rvt
1/7/2022 10:10:49 AM

GENERAL NOTES:

1. SEE SHEET S-585 FOR ADDITIONAL NOTES.
2. ALL FRAMING & BOLT CONNECTIONS TO BE HOT DIPPED GALVANIZED STRUCTURAL STEEL (UNO).

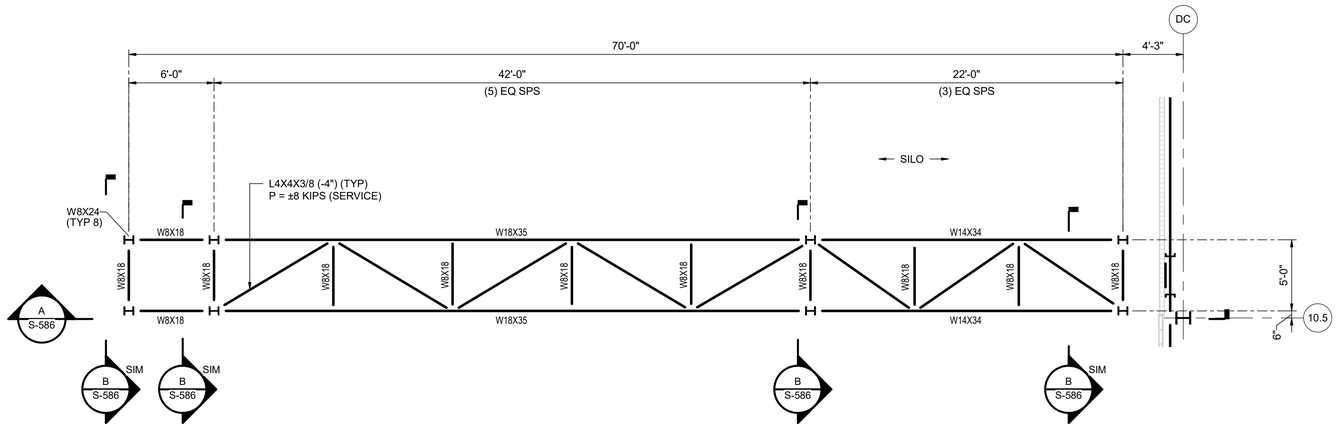

1 S-585 PIPE BRIDGE PLAN AT EL. 166.17
3/16" = 1'-0"

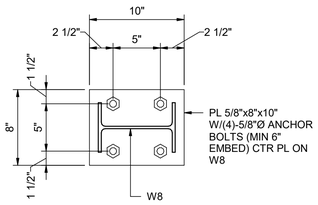

2 DETAIL
1 1/2" = 1'-0"

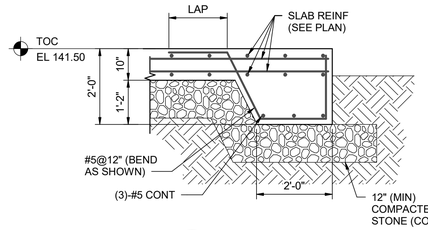

D S-585 SECTION
1/2" = 1'-0"

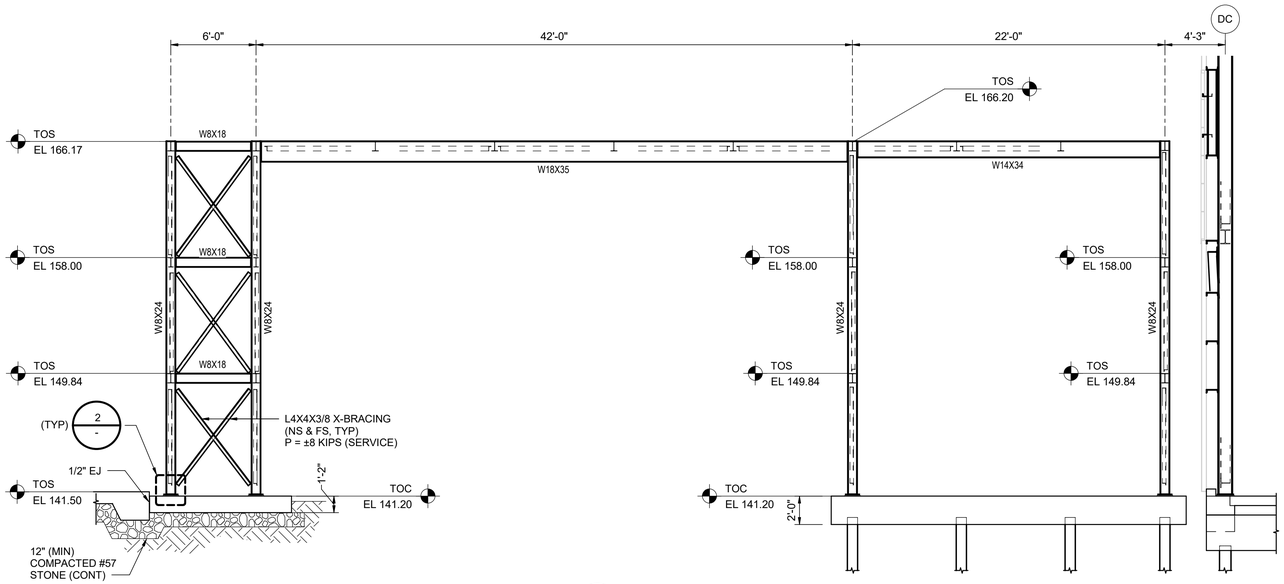

A S-585 SECTION
3/16" = 1'-0"

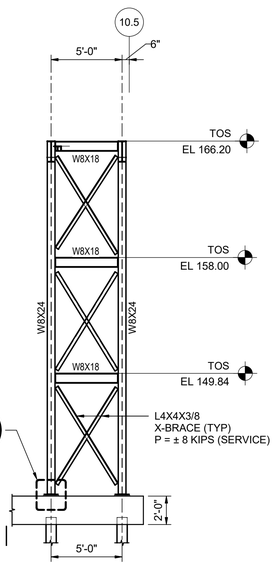

B S-585 SECTION
3/16" = 1'-0"

THE DRAWINGS IN THIS SET ARE RECORD DRAWINGS. THEY ARE CONSTRUCTION CONTRACT DRAWINGS WHICH HAVE BEEN REVISED BASED ON AVAILABLE FIELD INFORMATION RECORDED BY OTHERS DURING CONSTRUCTION OF THIS CONTRACT. THERE HAS BEEN NO VERIFICATION OF DIMENSIONS SHOWN ON THE CONSTRUCTION DRAWINGS OR THE ACCURACY/COMPLETENESS OF THE FIELD INFORMATION RECEIVED.

SIGNATURE — DATE: 2/7/2023

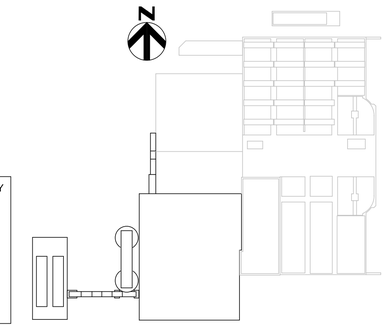

KEY PLAN

AS-BUILT REPLACEMENT SHEET

PROFESSIONAL CERTIFICATION
THIS DRAWING WAS ORIGINALLY APPROVED FOR CONSTRUCTION AND SEALED BY MICHAEL E. MARTIN, A REGISTERED PROFESSIONAL ENGINEER IN THE STATE OF MARYLAND, NO. 49839.

NOTICE TO CONTRACTORS
- PROJECT ELEVATIONS ARE BASED ON NAVD88 AND HOWARD COUNTY'S BENCHMARK SYSTEM
- PREVIOUS PROJECTS USED OTHER DATUMS
- APPLY THE FOLLOWING CONVERSIONS WHEN USING PREVIOUS CONTRACT DRAWINGS:
  - ADDITION NO. 6: SUBTRACT 0.80 FT
  - PRIOR ADDITIONS: SUBTRACT 1.04 FT

DEPARTMENT OF PUBLIC WORKS
HOWARD COUNTY, MARYLAND

CHIEF, BUREAU OF UTILITIES — DATE

DES: MEM
DRN: WM
CHK: RM
DATE: 01/2018

DATE	REV	DESCRIPTION
03/2021		RECORD DRAWINGS

STRUCTURAL

DRYER BUILDING SECTIONS AND DETAILS

LITTLE PATUXENT WATER RECLAMATION PLANT
8TH ADDITION
BIOSOLIDS PROCESSING FACILITIES - PHASE 2

CAPITAL PROJECT S-6295
CONTRACT NO. 24-4936

ELECTION DISTRICT NO. 6
HOWARD COUNTY, MARYLAND

SCALE AS SHOWN

SHEET 99 OF 311

S-586

BIM 360://10054364 – Little Patuxent WRP 8th Addition/284592_100_S_V18.rvt
1/7/2022 10:10:52 AM

STRUCTURAL GENERAL NOTES:

G1 SCOPE:
THE NOTES ON THIS SHEET AND ALL THE STANDARD STRUCTURAL DETAILS ARE GENERAL AND APPLY TO THE ENTIRE PROJECT WHETHER SPECIFICALLY CALLED OUT OR NOT, UNLESS OTHERWISE SPECIFIED.

G2 APPLICABLE SPECIFICATIONS AND CODES:
1. INTERNATIONAL BUILDING CODE, 2015 EDITION, INCLUDING JURISDICTIONAL AMENDMENTS.
2. ACI 318-14
3. ACI 350-06
4. ACI 530-13
5. ASCE 7-10
6. AISC 360-10
7. ALUMINUM DESIGN MANUAL, 2015 EDITION

G3 DESIGN CRITERIA:
1. MINIMUM VERTICAL LIVE LOADS: SEE INDIVIDUAL PLANS.
   A. UNIFORM LIVE LOAD INCLUDES ALLOWANCE FOR:
      * UNIFORM SNOW LOAD.
      * UNIFORM PIPING LOAD (ONLY FOR PIPES SMALLER THAN 12"-DIA).
      * LIGHTING AND MECHANICAL DUCTWORK.
   B. FOR ROOF LOADS OTHER THAN LIVE LOAD:
      REFER TO SPECIFICATIONS AND OTHER DISCIPLINE'S REQUIREMENTS.
   C. ALL SLABS ON GRADE: 250 PSF (UNO)
      STAIR AND LANDINGS: 100 PSF
   D. ADDITIONAL LOADS FROM OTHER DISCIPLINE DRAWINGS INCLUDE:
      * UNIFORM DEAD LOADS PER ARCH DRAWINGS
      * CONCENTRATED EQUIPMENT LOADS
      * PIPING LOADS
      * ELECTRICAL LOADS

2. WIND LOADS:
   A. RISK CATEGORY: III
   B. BASIC WIND SPEED: 120 MPH
   C. WIND EXPOSURE: C

3. SEISMIC:
   A. SITE CLASS: D
   B. RISK CATEGORY: III
   C. SEISMIC IMPORTANCE FACTOR (Ie): 1.25
   D. SPECTRAL RESPONSE COEFF: SDS=0.130, SD1=0.081 (SITE SPECIFIC RESPONSE)
   E. SEISMIC DESIGN CATEGORY: B

4. SNOW LOAD:
   A. GROUND SNOW (PG): 25 PSF
   B. IMPORTANCE FACTOR (Ii): 1.1

5. FLOOD ZONE:
   FLOOD ZONE AE, EL. 146. BASED ON FEMA MAP 24027C0235D PANEL 0235D.

6. FUTURE LOADS:
   UNLESS SPECIFICALLY NOTED, THERE ARE NO PROVISIONS MADE FOR FUTURE FLOOR, ROOF, OR OTHER LOADS.

G4 GEOTECHNICAL REPORT:
"GEOTECHNICAL EVALUATION, ADDITION 8 - DRYER BUILDING ADDITION" BY THE ROBERT B. BALTER COMPANY. DATED 8/3/17.

G5 SITEWORK/EXCAVATION:
1. FOR EXCAVATION REQUIREMENTS SEE SPECIFICATION 31 23 00.
2. FOR BACKFILL REQUIREMENTS SEE SPECIFICATION 31 23 33.
3. SUBGRADE PREPARATION: PRIOR TO FILL PLACEMENT, FOUNDATION, AND SLAB-ON-GROUND CONSTRUCTION THE EXPOSED SUBGRADE SOILS SHALL BE EVALUATED BY GEOTECHNICAL ENGINEER. ALL STRUCTURE SUBGRADES SHALL BE PROOF ROLLED PRIOR TO PLACEMENT OF STONE SUBBASE. SUITABLE PROOF ROLLING EQUIPMENT SHALL BE DETERMINED BY GEOTECHNICAL ENGINEER. AREAS REQUIRING SUBGRADE REMEDIATION AS WELL METHODS FOR REMEDIATION SHALL BE DETERMINED BY GEOTECHNICAL ENGINEER.

G6 SAFETY:
SAFETY AND STRUCTURE STABILITY DURING CONSTRUCTION ARE THE SOLE RESPONSIBILITY OF THE DESIGN-BUILDER. STRUCTURES HAVE BEEN DESIGNED TO RESIST THE DESIGN LIVE LOADS ONLY AS A COMPLETED STRUCTURE.

G7 STANDARD DETAILS:
THE STANDARD DETAILS DEPICT TYPICAL DETAILING TO BE USED ON THIS PROJECT. IF CONDITIONS ARE NOT EXPLICITLY SHOWN ON THE DRAWINGS THEY SHALL BE MADE SIMILAR TO THE STANDARD DETAILS. OBTAIN ENGINEER APPROVAL IN WRITING FOR SIMILAR CONDITIONS PRIOR TO CONSTRUCTION.

G8 CONFLICTS:
IF THERE ARE CONFLICTS BETWEEN CONTRACT DRAWINGS AND SPECIFICATIONS, REQUEST CLARIFICATION FROM ENGINEER OR RECORD.

G9 DEFERRED SUBMITTALS:
1. ALL DESIGNS BY OTHERS (SUCH AS PRECAST CONCRETE DESIGN ELEMENTS, PRE-ENGINEERED METAL BUILDINGS, AND TANKS) ARE HEREBY CLASSIFIED AS "DEFERRED" BY THE BUILDING CODE.

STEEL

S1 STRUCTURAL STEEL DESIGN PROPERTIES (UNO):
WIDE FLANGE AND TEES: Fy=50 KSI
PIPES: Fy=35 KSI
HSS SECTIONS: Fy=42 KSI
ALL OTHER PLATES AND SHAPES: Fy=36 KSI

S2 DIMENSIONS:
TO CENTERLINES OF COLUMNS AND BEAMS, TOP SURFACES OF BEAMS AND TUBES AND BACKS OF CHANNELS AND ANGLES UNLESS NOTED OTHERWISE.

S2 ELEVATIONS:
REFER TO TOP SURFACE OF MEMBER OR FLANGE UNLESS NOTED OTHERWISE.

S4 UNLESS OTHERWISE NOTED, BOLTED BEAM CONNECTIONS SHALL BE SIMPLE FRAMED SHEAR CONNECTIONS. BOLTED STEEL CONNECTIONS SHALL BE IN ACCORDANCE WITH THE AISC MANUAL OF STEEL CONSTRUCTION LATEST EDITION USING ASTM A325 GALVANIZED BOLTS. USE ASTM A593 FOR STAINLESS STEEL CONNECTIONS WHERE REQUIRED. ALL BOLTED STRUCTURAL CONNECTIONS SHALL BE BEARING TYPE CONNECTIONS UNLESS OTHERWISE INDICATED TO BE SLIP-CRITICAL.

S5 UNLESS OTHERWISE SHOWN ON THE DRAWINGS, CONNECTIONS SHALL BE DESIGNED FOR THE REACTIONS, AXIAL LOADS, AND MOMENTS AS PER THE FOLLOWING CRITERIA:
1. WHERE BEAM REACTIONS ARE NOT SHOWN, BEAM CONNECTIONS SHALL BE DESIGNED TO 50 PERCENT OF THE TOTAL UNIFORM LOAD CAPACITY OF THE LATERALLY-BRACED BEAM.
2. CONNECTIONS SHALL BE DESIGNED FOR AXIAL LOADS WHERE INDICATED THUS (+- 60) AS KIPS, (+) INDICATES TENSION IN MEMBER AND (-) INDICATES COMPRESSION.
3. MOMENT CONNECTIONS (MC) SHALL BE DESIGNED FOR THE MOMENT INDICATED ON THE DRAWINGS IN FOOT-KIPS, WHERE MOMENTS ARE NOT SHOWN, CONNECTIONS SHALL BE DESIGNED TO DEVELOP THE ALLOWABLE FLEXURAL STRENGTH OF THE SMALLER MEMBER.
4. UNLESS OTHERWISE NOTED, BRACING MEMBER CONNECTIONS SHALL BE DESIGNED FOR THE MAXIMUM ALLOWABLE CAPACITY OF THE BRACING MEMBER.
5. CONNECTIONS THAT ARE NOT COMPLETELY DETAILED ARE SCHEMATIC IN NATURE ONLY. ADDITIONAL COMPONENTS, SUCH AS REINFORCING MAY BE REQUIRED BASED ON LOADING CRITERIA PROVIDED OR LISTED ABOVE.

S6 WHEN FILLET WELD SIZE IS NOT INDICATED, PROVIDE MAXIMUM WELD SIZE IN ACCORDANCE WITH AISC SPECIFICATIONS.

S7 GROUT UNDER COLUMN/POST BASE SHALL NOT EXTEND ABOVE BOTTOM OF BASE PLATE. CHAMFER GROUT AT 45 DEGREES.

S8 ALL DRYER BUILDING STEEL SHALL BE HD GALVANIZED PER ASTM A123/A153.

ALUMINUM

A1 STRUCTURAL ALUMINUM IS ALLOY 6061-T6 UNLESS NOTED OTHERWISE.
ALL BOLTS SHALL BE STAINLESS STEEL.

A2 DIMENSIONS:
TO CENTERLINES OF COLUMNS AND BEAMS, TOP SURFACES OF BEAMS AND TUBES AND BACKS OF CHANNELS AND ANGLES UNLESS NOTED OTHERWISE.

A3 ELEVATIONS:
REFER TO TOP SURFACE OR FLANGE OF MEMBER UNLESS NOTED OTHERWISE.

A4 WHEN FILLET WELD SIZE IS NOT INDICATED, PROVIDE MAXIMUM WELD SIZE IN ACCORDANCE WITH THE LATEST EDITION OF THE "ALUMINUM DESIGN MANUAL" BY THE ALUMINUM ASSOCIATION.

A5 ALUMINUM IN CONTACT WITH DISSIMILAR MATERIALS OR CONCRETE:
CONTACT SURFACES SHALL BE COATED PER SPECIFICATION 09 91 00.

A6 GROUT UNDER COLUMN/POST BASE SHALL NOT EXTEND ABOVE BOTTOM OF BASE PLATE. CHAMFER GROUT AT 45 DEGREES.

PILING

P1 SEE DRAWING S-515 AND SPECIFICATION 31 62 18 FOR PILING DETAILS.

CONCRETE

C1 CONCRETE DESIGN PROPERTIES:
f 'c = 4,000 PSI (UNO)
Fy = 60,000 PSI

C2 CONCRETE COVER UNLESS OTHERWISE NOTED, PROVIDE CONCRETE COVER FOR REINFORCING AS FOLLOWS:

CONCRETE DEPOSITED AGAINST EARTH: 3"
UNDER WATERSTOPS (WALL TO SLAB): 3"
ALL OTHER: 2"
SEE DRAWINGS FOR EXCEPTIONS.

C3 SEE SPECIFICATIONS FOR REINFORCING PLACEMENT REQUIREMENTS.

C4 PROVIDE 3/4" CHAMFERS AT ALL EXPOSED EDGES AND 1/2" CHAMFERS AT JOINTS AS SHOWN. NOT ALL CHAMFERS MAY BE SHOWN ON DRAWINGS.

C5 FIELD ADJUST REINFORCING AT OPENINGS AND EMBEDDED ITEMS AS SPECIFIED OR AS REQUIRED BY STANDARD DETAILS.

C6 ANCHOR BOLTS NOT SPECIFIED BY ENGINEER SHALL BE DESIGNED BY CONTRACTOR IN ACCORDANCE WITH APPLICABLE PROJECT CODE REQUIREMENTS. COORDINATE LOCATION, SIZE AND EMBEDMENT PRIOR TO CASTING CONCRETE.

C7 ABSOLUTELY NO WELDING OF REINFORCING BARS OR TORCHING TO BEND REINFORCING BARS SHALL BE ALLOWED WITHOUT WRITTEN SPECIFIC APPROVAL FROM THE STRUCTURAL ENGINEER.

MASONRY

M1 DESIGN PROPERTIES:
f 'm = 1,500 PSI
Fy = 60,000 PSI

M2 GROUT TO BE COARSE GROUT UNLESS NOTED OTHERWISE, MAXIMUM AGGREGATE SIZE IS 3/8 INCH.

M3 GROUT POURS SHALL NOT EXCEED 4-FEET IN HEIGHT UNLESS CLEANOUTS ARE PROVIDED IN THE BOTTOM COURSE OF THE CELL(S) TO BE GROUTED.

M4 RESTRICTED BAR ANCHORAGE: IN CASES WHERE REINFORCING BARS CANNOT BE EXTENDED AS FAR AS REQUIRED, THE BARS SHALL EXTEND AS FAR AS POSSIBLE AND END IN STANDARD HOOK. IDENTIFY THIS SITUATION ON SHOP DRAWINGS AND CLOUD TO BRING TO ENGINEER'S ATTENTION.

M5 IF BOND BEAMS AT INTERSECTING WALLS ARE SHOWN ON THE DRAWINGS TO MEET AT DIFFERENT ELEVATIONS, EXTEND BOTH BOND BEAMS AROUND INTERSECTING CORNER NOT LESS THAN 4-FEET IN EACH DIRECTION FOR OVERLAP CONDITION.

POST-INSTALLED ANCHORS

PA1 FOR ANCHORAGE TO CONCRETE SEE SPECIFICATION 03 15 19.

PA2 POST-INSTALLED ANCHORS SHALL ONLY BE USED WHERE SPECIFIED ON THE CONTRACT DRAWINGS. THE CONTRACTOR SHALL OBTAIN APPROVAL FROM THE ENGINEER–OF-RECORD (EOR) PRIOR TO INSTALLING POST-INSTALLED ANCHORS FOR MISSING OR MISPLACED CAST-IN-PLACE ANCHORS.

PA3 CARE SHALL BE TAKEN IN PLACING POST-INSTALLED ANCHORS TO AVOID CONFLICTS WITH EXISTING REBAR. HOLES SHALL BE DRILLED AND CLEANED IN ACCORDANCE WITH THE MANUFACTURER'S WRITTEN INSTRUCTIONS.

PA4 SPECIAL INSPECTION SHALL BE PROVIDED FOR ALL POST INSTALLED ANCHOR (MECHANICAL AND ADHESIVE) INSTALLATIONS AS REQUIRED BY THE BUILDING CODE AND APPLICABLE ICC EVALUATION REPORTS. INDEPENDENT ON-SITE PROOF LOAD TESTING MAY BE REQUIRED BY THE EOR. SEE SPECIFICATIONS 03 15 19 AND 01 45 33 FOR ADDITIONAL DETAILS.

PA5 SUBSTITUTION REQUESTS, FOR PRODUCTS OTHER THAN THOSE SPECIFIED, SHALL BE SUBMITTED BY THE CONTRACTOR TO THE EOR ALONG WITH CALCULATIONS THAT ARE PREPARED & SEALED BY A REGISTERED PROFESSIONAL ENGINEER. THE CALCULATIONS SHALL DEMONSTRATE THAT THE SUBSTITUTED PRODUCT IS CAPABLE OF ACHIEVING THE PERTINENT EQUIVALENT PERFORMANCE VALUES (MINIMUM) OF THE SPECIFIED PRODUCT USING THE APPROPRIATE DESIGN PROCEDURE AND/OR STANDARD(S) AS REQUIRED BY THE BUILDING CODE. PRODUCT ICC-ES CODE REPORTS SHALL BE INCLUDED WITH THE SUBMITTAL PACKAGE.

PA5 FOR TRAINING AND CERTIFICATION REQUIREMENTS FOR INSPECTORS AND INSTALLERS SEE SPECIFICATIONS 03 15 19 AND 01 45 33.

PA 6 POST INSTALLED ADHESIVE ANCHORS INSTALLED IN EITHER A HORIZONTAL OR INCLINED ORIENTATION REQUIRE INSTALLER TRAINING AND APPROVAL PER BUILDING CODE REQUIREMENTS PER SPECIFICATION 03 15 19.

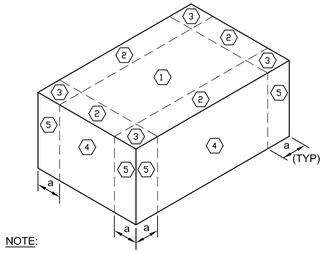

NOTE:

"a": 10% OF THE LEAST HORIZONTAL DIMENSION OR 40% OF THE STRUCTURE HEIGHT, WHICHEVER IS SMALLER, BUT NOT LESS THAN EITHER 4% OF THE LEAST HORIZONTAL DIMENSION, OR 3 FEET.

COMPONENT/CLADDING WIND ZONES: WALLS

NTS

ENCLOSED BUILDING COMPONENT AND CLADDING WIND PRESSURES, PSF (PLUS AND MINUS SIGNS SIGNIFY PRESSURES ACTING TOWARD AND AWAY FROM SURFACES, RESPECTIVELY)

EFFECTIVE WIND AREA	ZONE 1	ZONE 2	ZONE 3	ZONE 4	ZONE 5	PARAPET ZONE 4	PARAPET ZONE 5
EFFECTIVE WIND AREA = 10 SQUARE FEET	16.0 -38.7	16.0 -64.1	16.0 -96.4	34.9 -37.9	34.9 -46.6	116.4 -70.6	145.8 -100.0
EFFECTIVE WIND AREA = 20 SQUARE FEET	16.0 -37.2	16.0 -57.2	16.0 -79.8	33.4 -36.3	33.4 -43.5	116.4 -70.6	145.8 -100.0
EFFECTIVE WIND AREA = 50 SQUARE FEET	16.0 -35.9	16.0 -48.2	16.0 -58.0	31.3 -34.2	31.3 -39.4	116.4 -70.6	145.8 -100.0
EFFECTIVE WIND AREA = 100 SQUARE FEET	16.0 -34.9	16.0 -41.4	16.0 -41.4	29.8 -32.7	29.8 -36.3	116.4 -70.6	145.8 -100.0
EFFECTIVE WIND AREA = 500 SQUARE FEET	16.0 -34.9	16.0 -41.4	16.0 -41.4	26.2 -29.1	26.2 -29.1	116.4 -70.6	145.8 -100.0

THE DRAWINGS IN THIS SET ARE RECORD DRAWINGS. THEY ARE CONSTRUCTION CONTRACT DRAWINGS WHICH HAVE BEEN REVISED BASED ON AVAILABLE FIELD INFORMATION RECORDED BY OTHERS DURING CONSTRUCTION OF THIS CONTRACT. THERE HAS BEEN NO VERIFICATION OF DIMENSIONS SHOWN ON THE CONSTRUCTION DRAWINGS OR THE ACCURACY/COMPLETENESS OF THE FIELD INFORMATION RECEIVED.

SIGNATURE _____ DATE 2/7/2022

C:\pwworking\pitt\d1900826\S-901.dwg 01/07/22 10:24

AS-BUILT REPLACEMENT SHEET

PROFESSIONAL CERTIFICATION
THIS DRAWING WAS ORIGINALLY APPROVED FOR CONSTRUCTION AND SEALED BY MICHAEL E. MARTIN, A REGISTERED PROFESSIONAL ENGINEER IN THE STATE OF MARYLAND, NO. 49839.

NOTICE TO CONTRACTORS
- PROJECT ELEVATIONS ARE BASED ON NAVD88 AND HOWARD COUNTY'S BENCHMARK SYSTEM
- PREVIOUS PROJECTS USED OTHER DATUMS
- APPLY THE FOLLOWING CONVERSIONS WHEN USING PREVIOUS CONTRACT DRAWINGS:
  - ADDITION NO. 6: SUBTRACT 0.80 FT
  - PRIOR ADDITIONS: SUBTRACT 1.04 FT

DEPARTMENT OF PUBLIC WORKS
HOWARD COUNTY, MARYLAND

CHIEF, BUREAU OF UTILITIES DATE

DES: HA
DRN: WM
CHK: MEM
DATE: 01/2018

DATE	REV	DESCRIPTION
03/2021		RECORD DRAWINGS

STRUCTURAL

GENERAL AND MATERIAL NOTES

LITTLE PATUXENT WATER RECLAMATION PLANT
8TH ADDITION
BIOSOLIDS PROCESSING FACILITIES - PHASE 2

CAPITAL PROJECT S-6295
CONTRACT NO. 24-4936

ELECTION DISTRICT NO. 6
HOWARD COUNTY, MARYLAND

SCALE AS SHOWN

SHEET 100 OF 311

S-901

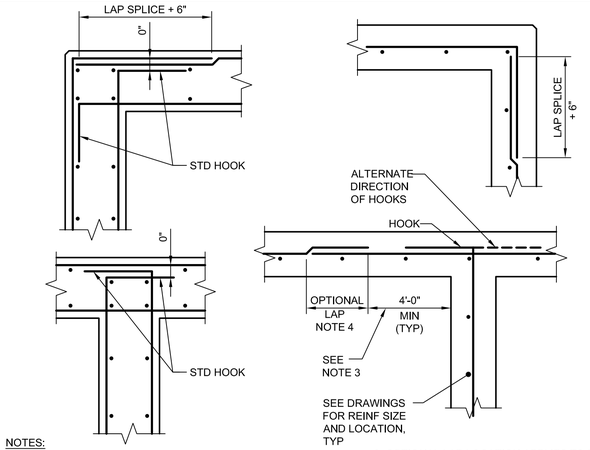

NOTES:

1. ALL HOOKS SHALL BE STD 90 DEGREE HOOKS.

2. SEE DRAWINGS FOR ADDITIONAL HORIZONTAL BARS. STAGGER BETWEEN TYPICAL REINF SPACING, EXTEND TO 1/5 OF DISTANCE TO NEAREST ADJACENT WALL IN EACH DIRECTION, UNO.

3. OPTIONAL LAP LOCATION APPLIES TO BOTH DOUBLE AND SINGLE LAYER CONDITIONS TYP.

4. BARS MAY BE ONE PIECE CONTINUOUS, THUS TWO PIECE REBAR NOT REQUIRED WITH LAP.

TYPICAL WALL REINFORCEMENT AT CORNERS & INTERSECTIONS

1 -

NTS

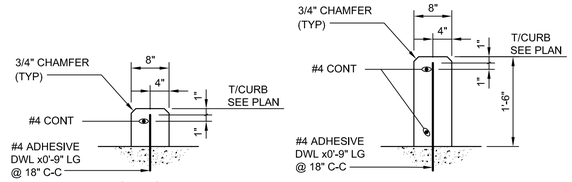

TYPICAL CURB DETAIL

5 -

NTS

LAP SPLICE AND EMDEDMENT LENGTHS f'c =4.0 ksi fy = 60 ksi		
BAR	BARS SPACED GREATER THAN 4"	BARS SPACED LESS THAN OR EQUAL TO 4"
#3	14"	14"
#4	19"	19"
#5	24"	30"
#6	29"	43"
#7	46"	74"
#8	60"	96"
#9	76"	122"
#10	97"	155"
#11	120"	191"

NOTES:

1. PROVIDE MINIMUM LAP SPLICE LENGTHS AND EMBEDMENTS PER TABLE UNLESS NOTED OTHERWISE. EMBEDMENT LENGTH EQUALS THE LAP SPLICE LENGTH UNLESS OTHERWISE NOTED.
2. BAR SPACING AT LAP SPLICE IS THE MINIMUM CLEAR DISTANCE BETWEEN LAPPED BARS PLUS ONE BAR DIAMETER.
3. ALL SPLICES TO BE CONTACT SPLICES AND WIRED TOGETHER UNLESS OTHERWISE APPROVED BY ENGINEER.
4. REQUIREMENTS FOR SPACINGS 4 INCHES OR LESS SHALL NOT APPLY TO "ADD" BARS AROUND OPENINGS.

REINFORCING LAP AND EMBEDMENT SCHEDULE

6 -

NTS

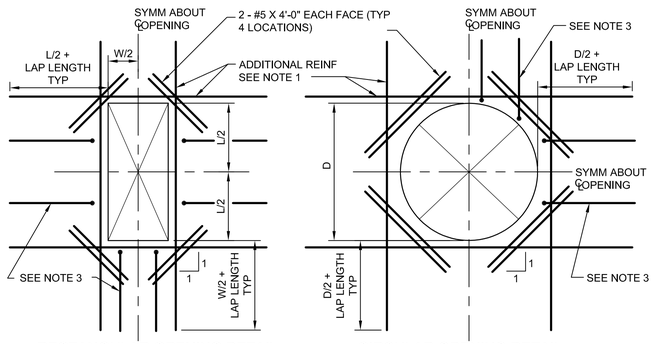

RECTANGULAR OPENING DETAIL

CIRCULAR OPENING DETAIL

NOTES:

1. ~~PR~~PROVIDE ADDITIONAL REINFORCING THE SAME SIZE AS DISCONTINUOUS REINFORCEMENT AT OPENING. QUANTITY OF REINFORCING IN EACH DIRECTION SHALL BE EQUAL TO OR ONE GREATER THAN THE NUMBER OF DISCONTINUOUS BARS. PLACE 1/2 OF ADDITIONAL REINFORCING BARS EACH SIDE OF OPENING. PLACE ADDITIONAL REINFORCEMENT AT 3" OC (TYPICAL BOTH DIRECTIONS AND ALL LAYERS OF REINFORCEMENT). START FIRST BAR 2" CLEAR TO OPENING.
2. EXTEND ADDITIONAL REINFORCING BEYOND EDGE OF OPENING AS SHOWN ABOVE. ADDITIONAL BARS MAY TERMINATE AT THE END OF THE WALL WITH A STANDARD HOOK WHERE THE LENGTH OF THE WALL WILL NOT PERMIT BARS TO EXTEND AS SHOWN ABOVE.
3. TYPICAL WALL OR SLAB REINFORCING NOT COMPLETELY SHOWN FOR CLARITY. TERMINATE TYPICAL REINFORCING 2" CLEAR TO OPENING WITH STANDARD 90° HOOKS.
4. OPENINGS 12" OR LESS IN SLABS AND 18" OR LESS IN WALLS, NO EXTRA REBARS ARE REQUIRED UNLESS SHOWN OTHERWISE. TYPICAL REINFORCING SHALL BE RESPACED (NOT CUT) TO ALLOW FOR OPENINGS TO BE MADE.
5. UNLESS SHOWN OTHERWISE ON DRAWINGS, PROVIDE EXTRA REINFORCING AROUND OPENINGS AS SHOWN AND INDICATED ABOVE.
6. PROVIDE ADDITIONAL DOWELS PER NOTE 1 ABOVE FOR ALL OPENINGS NEAR THE FLOOR SLAB, BASE SLAB, OR CORNERS

REINFORCING AROUND OPENINGS AND REENTRANT CORNERS

2 -

NTS

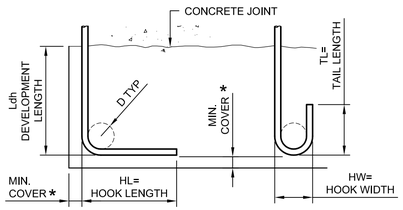

90° STD HOOK

180° STD HOOK

BAR SIZE GRADE 60	HL	HW	TL	D	f'c=4000 psi OR GREATER Ldh *
#3	6"	3"	4"	2 1/4"	6"
#4	8"	4"	4 1/2"	3"	7"
#5	10"	5"	5"	3 3/4"	9"
#6	1'-0"	6"	6"	4 1/2"	10"
#7	1'-2"	7"	7"	5 1/4"	12"
#8	1'-4"	8"	8"	6"	14"
#9	1'-7"	11 3/4"	10 1/2"	9 1/2"	15"
#10	1'-10"	1'-1 1/4"	11 1/2"	10 3/4"	17"
#11	2'-0"	1'-2 3/4"	1'-1"	12"	19"

* COMPLYING WITH MINIMUM COVER REQUIREMENTS OF ACI 318, 12.5.3. OTHERWISE Ldh MUST BE RE-CALCULATED.

REINFORCING HOOK SCHEDULE

7 -

NTS

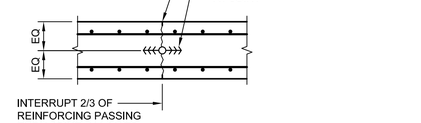

NOTES:

1. ONLY WATER BEARING SLABS OR WALLS REQUIRE WATERSTOP.

2. JOINT MAY BE FORMED WITH 1/2" CHAMFER STRIPS BACK-TO-BACK AT WALLS, CONTRACTOR'S OPTION.

CONTROL JOINT (CLJ)

8 -

NTS

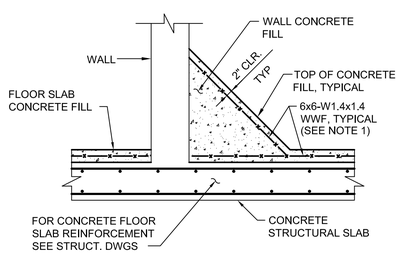

NOTE:

1. REINFORCE CONCRETE FILL AS SHOWN WHENEVER CONCRETE FILL THICKNESS EXCEEDS 6".

CONCRETE FILL REINFORCING

10 -

NTS

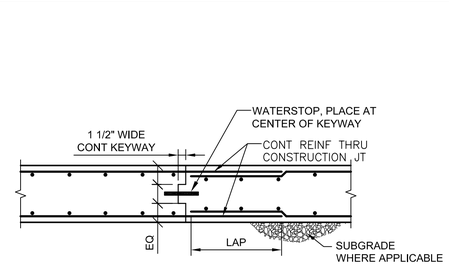

KEYED CONSTRUCTION JOINT (KCJ)

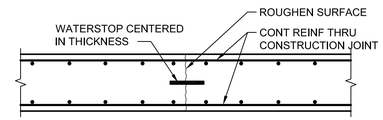

ROUGHEN CONSTRUCTION JOINT

NOTES:

1. FURNISH CONSTRUCTION JOINTS SHOWN HERE AT ALL WALL VERTICAL AND SLAB CONSTRUCTION JOINTS.

2. ALL FORMED CJ MUST BE KCJ TYPE.

3. WATERSTOPS ONLY REQUIRED AS SPECIFIED ON DESIGN DRAWINGS.

4. SEE SPECIFICATION FOR REQUIREMENT TO TIE WATERSTOPS IN PLACE TO PREVENT MOVEMENT OR FOLDING OVER.

CONSTRUCTION JOINT (CJ)

3 -

NTS

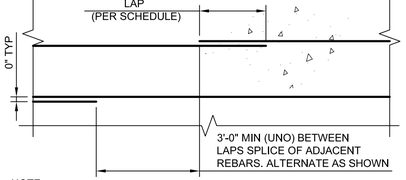

NOTE:

1. APPLIES TO SLABS AND WALLS (BOTH HORIZONTAL AND VERTICAL)

REINFORCING SPLICE WHEN NOT AT CJ

9 -

NTS

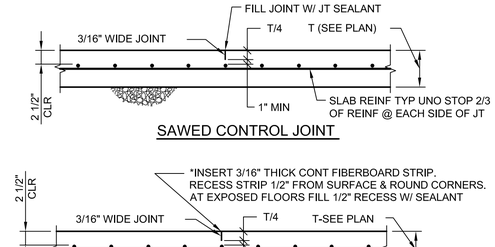

SAWED CONTROL JOINT

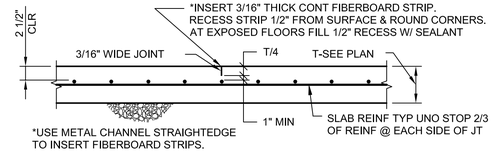

FORMED CONTROL JOINT

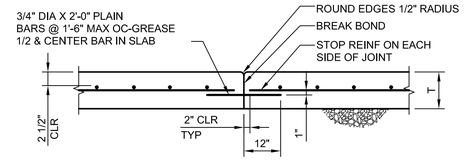

DOWELLED CONSTRUCTION JOINT

NOTES:

1. ANY ONE OF THE DETAILS ABOVE MAY BE USED AT LOCATIONS INDICATED ON DRAWINGS AS "SJ," AT CONTRACTOR'S OPTION.

2. ONLY FOR USE ON NON-PILE SUPPORTED SLABS.

SLAB-ON-GRADE JOINT (SJ)

4 -

NTS

NEW OPENING IN EXISTING WALL

PATCHING EXISTING OPENING IN EXISTING WALL OR SLAB

PIPE PENETRATION IN EXIST WALL

11 -

NTS

THE DRAWINGS IN THIS SET ARE RECORD DRAWINGS. THEY ARE CONSTRUCTION CONTRACT DRAWINGS WHICH HAVE BEEN REVISED BASED ON AVAILABLE FIELD INFORMATION RECORDED BY OTHERS DURING CONSTRUCTION OF THIS CONTRACT. THERE HAS BEEN NO VERIFICATION OF DIMENSIONS SHOWN ON THE CONSTRUCTION DRAWINGS OR THE ACCURACY/COMPLETENESS OF THE FIELD INFORMATION RECEIVED.

SIGNATURE

DATE 2/7/2023

C:\pwworking\pitt\d1900826\ S-902.dwg 01/07/22 10:26

HDR

AS-BUILT REPLACEMENT SHEET

PROFESSIONAL CERTIFICATION
THIS DRAWING WAS ORIGINALLY APPROVED FOR CONSTRUCTION AND SEALED BY MICHAEL E. MARTIN, A REGISTERED PROFESSIONAL ENGINEER IN THE STATE OF MARYLAND, NO. 49839.

NOTICE TO CONTRACTORS
- PROJECT ELEVATIONS ARE BASED ON NAVD88 AND HOWARD COUNTY'S BENCHMARK SYSTEM
- PREVIOUS PROJECTS USED OTHER DATUMS
- APPLY THE FOLLOWING CONVERSIONS WHEN USING PREVIOUS CONTRACT DRAWINGS:
  - ADDITION NO. 6: SUBTRACT 0.80 FT
  - PRIOR ADDITIONS: SUBTRACT 1.04 FT

DEPARTMENT OF PUBLIC WORKS
HOWARD COUNTY, MARYLAND

CHIEF, BUREAU OF UTILITIES DATE

DES: H.A.
DRN: W.M.
CHK: M.E.M.
DATE: 01/2018

DATE	REV	DESCRIPTION
03/2021		RECORD DRAWINGS

STRUCTURAL

STRUCTURAL STANDARD DETAILS 1

LITTLE PATUXENT WATER RECLAMATION PLANT
8TH ADDITION
BIOSOLIDS PROCESSING FACILITIES - PHASE 2

CAPITAL PROJECT S-6295
CONTRACT NO. 24-4936

ELECTION DISTRICT NO. 6
HOWARD COUNTY, MARYLAND

SCALE AS SHOWN

SHEET 101 OF 311

S-902

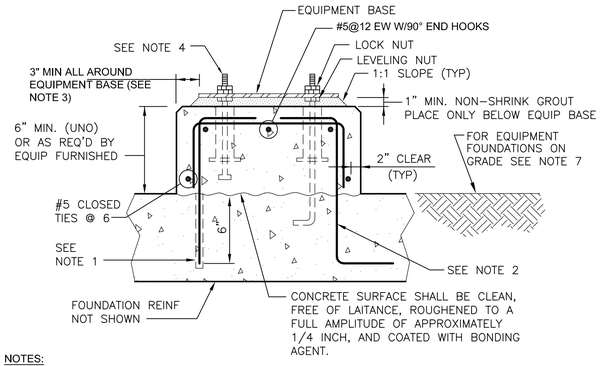

NOTES:

1. FOR NEW EQUIPMENT BASES ON EXISTING SLABS, DRILL INTO EXISTING SLAB TO INDICATED DEPTH AT 12" CENTERS AROUND PERIMETER OF EQUIPMENT BASE AND SET #5 DOWEL HOOKED AS SHOWN IN ADHESIVE ANCHOR SYSTEM.
2. FOR EQUIPMENT BASES ON NEW SLABS, PROVIDE #5 DOWELS HAVING TWO HOOKED ENDS AT 12" CENTERS AROUND PERIMETER.
3. EQUIPMENT BASE DIMENSIONS SHALL BE AS INDICATED ON THE DRAWINGS OR AS DETERMINED BY THE EQUIPMENT MANUFACTURER AND APPROVED BY THE ENGINEER.
4. THE SIZE, NUMBER, TYPE, LOCATION, AND THREAD PROJECTION OF THE ANCHOR BOLTS SHALL BE AS DETERMINED BY THE EQUIPMENT MANUFACTURER AND SHALL BE AS APPROVED BY THE ENGINEER. ANCHOR BOLTS SHALL BE HELD IN POSITION WITH A TEMPLATE WHILE EQUIPMENT BASE IS BEING CAST. ALL ANCHOR BOLTS SHALL BE STAINLESS STEEL.
5. PIPE SLEEVES SHALL BE USED TO PROVIDE THE ANCHOR BOLT A MINIMUM MOVEMENT OF 1/2" IN ALL DIRECTIONS. THE MINIMUM SLEEVE LENGTH SHALL BE 8 TIMES THE BOLT DIAMETER. PIPE SLEEVES SHALL HAVE A MINIMUM INTERNAL DIAMETER 1" GREATER THAN BOLT DIAMETER AND A MAXIMUM INTERNAL DIAMETER OF 3" GREATER THAN BOLT DIAMETER. SLEEVES SHALL BE FILLED WITH NON-SHRINK GROUT AFTER INSTALLATION OF GROUT.
6. EQUIPMENT BASES SHALL BE INSTALLED LEVEL UNLESS SPECIFIED OTHERWISE.
7. FOR EQUIPMENT PLACED ON GRADE; EXTEND FOUNDATION MINIMUM OF 18" UNO BELOW GRADE; USE #5 @ 12" T&B EW.

EQUIPMENT BASE (1)
NTS

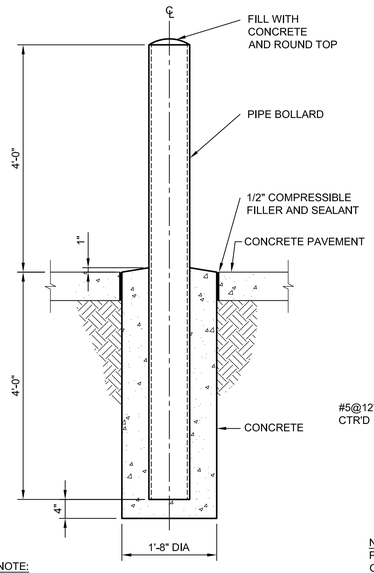

NOTE:
1. REINFORCING FOR CONCRETE SLAB NOT SHOWN.

BOLLARD (2)
NTS

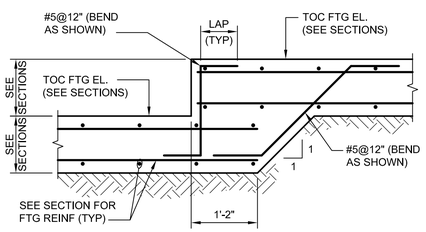

STEPPED FOOTING (3)
NTS

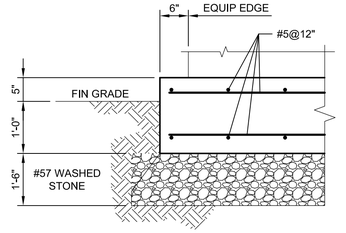

EQUIPMENT PAD (4)
NTS

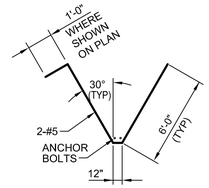

H1

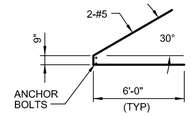

H2

HAIRPIN REINFORCING (5)
NTS

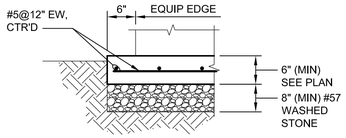

NOTE:
PROVIDE FOR ALL CONCRETE PADS NOTED ON "C" AND "D" SHEETS (UNO).

CONCRETE PAD (6)
NTS

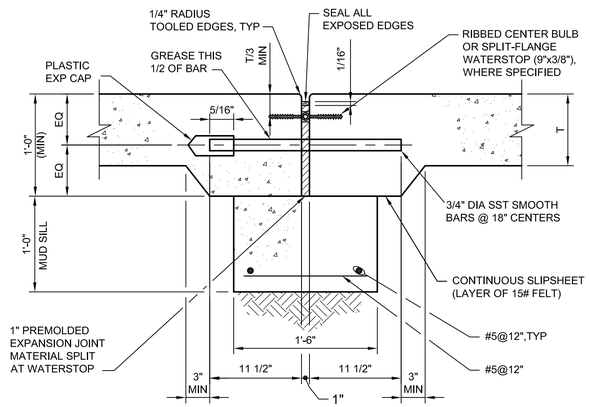

SLABS ON GRADE

EXPANSION JOINTS (7)
NONE

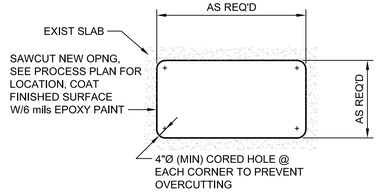

PLAN

DETAIL (8)
NTS

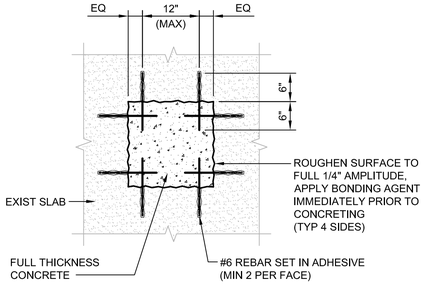

PLAN

DETAIL (9)
NTS

THE DRAWINGS IN THIS SET ARE RECORD DRAWINGS. THEY ARE CONSTRUCTION CONTRACT DRAWINGS WHICH HAVE BEEN REVISED BASED ON AVAILABLE FIELD INFORMATION RECORDED BY OTHERS DURING CONSTRUCTION OF THIS CONTRACT. THERE HAS BEEN NO VERIFICATION OF DIMENSIONS SHOWN ON THE CONSTRUCTION DRAWINGS OR THE ACCURACY/COMPLETENESS OF THE FIELD INFORMATION RECEIVED.

SIGNATURE _____ DATE 3/7/2021

C:\pwworking\pitt\d1900826\ S-903.dwg 01/07/22 10:29

AS-BUILT REPLACEMENT SHEET

PROFESSIONAL CERTIFICATION
THIS DRAWING WAS ORIGINALLY APPROVED FOR CONSTRUCTION AND SEALED BY MICHAEL E. MARTIN, A REGISTERED PROFESSIONAL ENGINEER IN THE STATE OF MARYLAND, NO. 49839.

NOTICE TO CONTRACTORS
- PROJECT ELEVATIONS ARE BASED ON NAVD88 AND HOWARD COUNTY'S BENCHMARK SYSTEM
- PREVIOUS PROJECTS USED OTHER DATUMS
- APPLY THE FOLLOWING CONVERSIONS WHEN USING PREVIOUS CONTRACT DRAWINGS:
  - ADDITION NO. 6: SUBTRACT 0.80 FT
  - PRIOR ADDITIONS: SUBTRACT 1.04 FT

DEPARTMENT OF PUBLIC WORKS
HOWARD COUNTY, MARYLAND

CHIEF, BUREAU OF UTILITIES DATE

DES: H.A.
DRN: W.M.
CHK: M.E.M.
DATE: 01/2018

DATE	REV	DESCRIPTION
03/2021		RECORD DRAWINGS

STRUCTURAL

STRUCTURAL STANDARD DETAILS 2

LITTLE PATUXENT WATER RECLAMATION PLANT
8TH ADDITION
BIOSOLIDS PROCESSING FACILITIES - PHASE 2

CAPITAL PROJECT S-6295
CONTRACT NO. 24-4936

ELECTION DISTRICT NO. 6
HOWARD COUNTY, MARYLAND

SCALE AS SHOWN

SHEET 102 OF 311

S-903

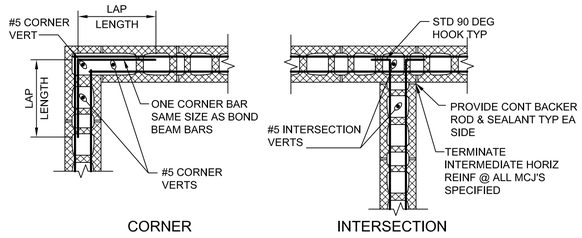

CORNER INTERSECTION

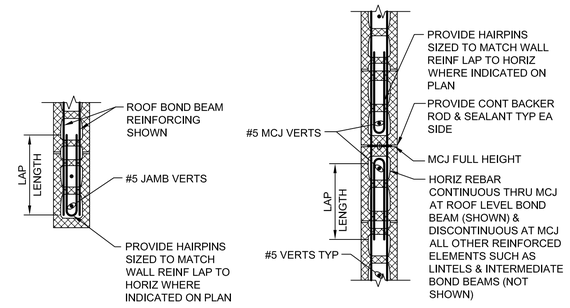

JAMB OR END OF WALL MASONRY CONTROL JOINT (MCJ)

NOTES:
1. FOR REINFORCING SEE EITHER "CMU REINFORCING SCHEDULE" AND "DETAILS" OR REINFORCING DETAILED ON PLANS AND SECTIONS.
2. LOCATE VERT BARS AT CENTERLINE OF WALL, UNO IN SCHEDULE.
3. EXTEND MCJ FULL HEIGHT OF MASONRY BOND BEAM.
4. LIMIT DISTANCE BETWEEN MCJ TO MAX 24'-0". SEE DRAWINGS FOR LOCATIONS.
5. HORIZONTAL JOINT REINFORCING NOT SHOWN.
6. MODIFY BAR CONFIGURATION SHOWN AS REQUIRED WHERE TWO VERTICAL REINFORCING BARS ARE SHOWN ON THE SCHEDULE.

CMU WALL REINFORCING (1)
NTS

CMU MASONRY LAP SPLICE SCHEDULE			
BAR SIZE	LAP (PER WALL THICKNESS)		
	6"	8"	12"
#4	20"	20"	20"
#5	32"	25"	25"
#6	54"	43"	39"
#7	-	60"	46"

NOTES:
1. LAPS PER ACI 530-11 EQ 2-12
2. SINGLE BAR PER CELL.
3. BAR LOCATED @ CENTER CELL. 4. f'm = 1500 PSI
5. Fy = 60 KSI

MASONRY REINFORCING LAP SCHEDULE (5)
NTS

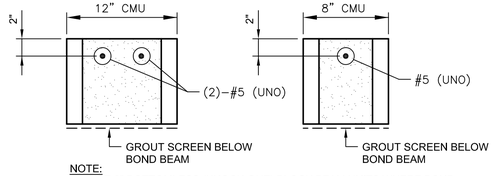

NOTE:
1. USE 8" BOTTOMLESS (KNOCK-OUT) BLOCK BEAM UNITS WHERE BOND BEAM IS CALLED OUT ON PLAN OR SECTIONS. "U" BLOCKS SHALL ONLY BE USED AT LINTELS.

BOND BEAM (6)
NTS

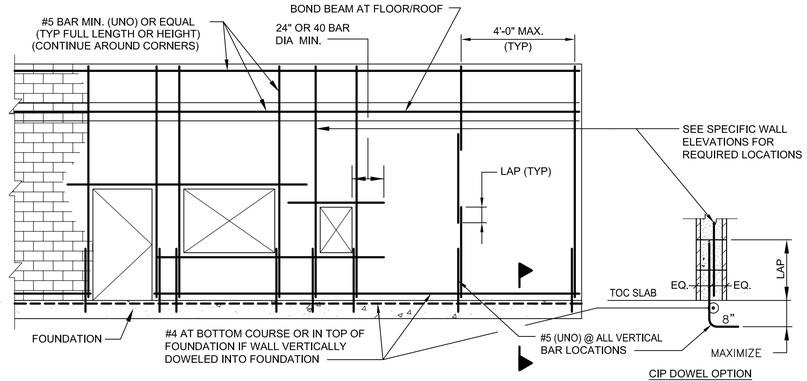

CIP DOWEL OPTION

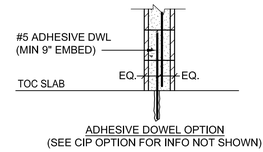

ADHESIVE DOWEL OPTION
(SEE CIP OPTION FOR INFO NOT SHOWN)

NOTES:
1. THIS STANDARD FOLLOWS REQUIREMENTS OF IBC-2015 FOR SEISMIC DESIGN CATEGORY "B" AND RUNNING BOND CONSTRUCTION.
2. ALL HORIZONTAL BAR REINFORCING SHALL BE SET IN LINTELS OR BOND BEAMS, NOT IN JOINTS.
3. PROVIDE CONTINUOUS GALVANIZED "LADDER" MASONRY JOINT REINFORCING @ 16" O/C VERTICALLY (UNO). CONTINUE JOINT REINFORCING INTO INTERSECTING WALL. USE PREFABRICATED CORNER AND TEE SECTIONS

CMU WALL REINFORCING (2)
NTS

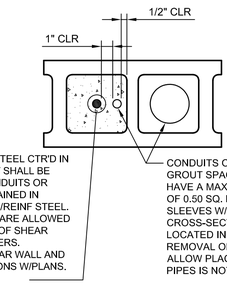

PIPES SHALL NOT BE EMBEDDED IN MASONRY IF THEY ARE:
1) CONTAINING, LIQUID, GAS, OR VAPORS HIGHER THEN 150° F (66° C) 2) UNDER PRESSURE IN EXCESS OF 55 PSI (379 kPa)
3) CONTAINING WATER OR OTHER LIQUIDS SUBJECT TO FREEZING

EMBEDDED CONDUITS, PIPES AND SLEEVES IN CMU (3)
NTS

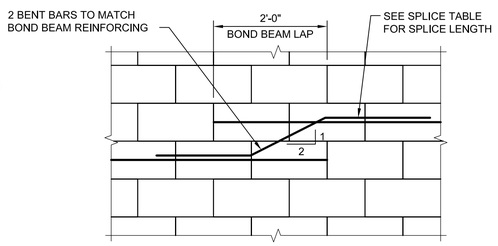

TYPICAL STEPPED BOND BEAM (7)
NTS

LINTEL REINFORCEMENT SCHEDULE					
MARK	NOM WIDTH	NOM HEIGHT	"R"	STIRRUPS	REMARKS
L1	8"	8"	(1)-#5	-	
L2	8"	16"	(2)-#4	-	"R" - TOP AND BOTTOM
L3	8"	8"	(1)-#5	-	
L4	12"	24"	(2)-#6	-	
L5	8"	8"	(2)-#4	-	"R" - TOP AND BOTTOM
L6	8"	16"	(1)-#5	-	
L7	8"	16"	(1)-#5	#3@6"	
L8	12"	16"	(1)-#5	-	"R" - TOP AND BOTTOM
L9	8"	24"	(1)-#5	-	"R" - TOP AND BOTTOM

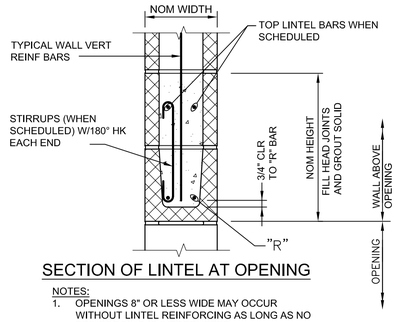

SECTION OF LINTEL AT OPENING
NOTES:
1. OPENINGS 8" OR LESS WIDE MAY OCCUR WITHOUT LINTEL REINFORCING AS LONG AS NO REINFORCING IS INTERRUPTED..
2. SEE DRAWINGS FOR LINTEL TYPES.

LINTEL SCHEDULE (4)
NTS

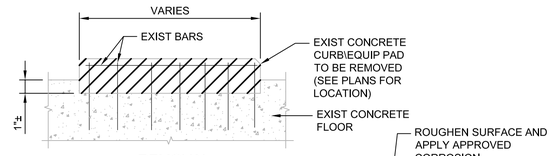

REMOVAL

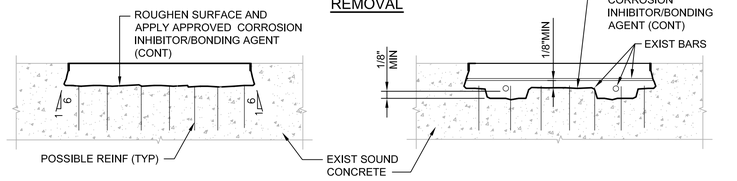

REINF STEEL NOT ENCOUNTERED HORIZONTAL REINF STEEL ENCOUNTERED

(A) CLEAN SURFACE OF EXISTING CONCRETE AND PREPARE REPAIR BOUNDARIES AFTER REMOVING CONCRETE.

(B) SAW CUT 1/2" DEEP AT EDGES OF REPAIR AREA.

(C) REMOVE DETERIORATED, CONTAMINATED, OR DAMAGED CONCRETE AND SOUND CONCRETE TO A DEPTH AT LEAST 1" AND MIN 1" CLEAR OF EXPOSED EXISTING REINFORCEMENT, AVOID DAMAGING ENCOUNTERED REINFORCING STEEL.

(D) BARS DAMAGED DURING REMOVAL OPERATION OR IF REINFORCING STEEL HAS LOST MORE THAN 20% OF ITS CROSS SECTION, THEN REPLACEMENT BAR OVER AFFECTED LENGTH PLUS LAP LENGTH EACH END WITH A NEW BAR (OF SAME SIZE AS AFFECTED BAR).

(E) CLEAN EXPOSED SOUND CONCRETE AND ABRASIVE BLAST EXISTING REINFORCING BARS.

(F) APPLY CORROSION INHIBITOR/BONDING AGENT TO CONCRETE AND REINFORCING.

(G) APPLY AND CURE REPAIR MORTAR IN ACCORDANCE WITH THE MANUFACTURER'S RECOMMENDATIONS AND THE SPECIFICATIONS.

(H) FINISH SURFACE TO MATCH COLOR AND TEXTURE OF EXISTING SURFACE.

CONCRETE REPAIR AT CONCRETE CURB OR EQUIPMENT PAD REMOVAL (8)
NTS

THE DRAWINGS IN THIS SET ARE RECORD DRAWINGS. THEY ARE CONSTRUCTION CONTRACT DRAWINGS WHICH HAVE BEEN REVISED BASED ON AVAILABLE FIELD INFORMATION RECORDED BY OTHERS DURING CONSTRUCTION OF THIS CONTRACT. THERE HAS BEEN NO VERIFICATION OF DIMENSIONS SHOWN ON THE CONSTRUCTION DRAWINGS OR THE ACCURACY/COMPLETENESS OF THE FIELD INFORMATION RECEIVED.

SIGNATURE 2/7/2021 DATE

C:\pwworking\pitt\d1900826\S-904.dwg 01/07/22 10:33

AS-BUILT REPLACEMENT SHEET

PROFESSIONAL CERTIFICATION
THIS DRAWING WAS ORIGINALLY APPROVED FOR CONSTRUCTION AND SEALED BY MICHAEL E. MARTIN, A REGISTERED PROFESSIONAL ENGINEER IN THE STATE OF MARYLAND, NO. 49839.

NOTICE TO CONTRACTORS
- PROJECT ELEVATIONS ARE BASED ON NAVD88 AND HOWARD COUNTY'S BENCHMARK SYSTEM
- PREVIOUS PROJECTS USED OTHER DATUMS
- APPLY THE FOLLOWING CONVERSIONS WHEN USING PREVIOUS CONTRACT DRAWINGS:
  - ADDITION NO. 6: SUBTRACT 0.80 FT
  - PRIOR ADDITIONS: SUBTRACT 1.04 FT

DEPARTMENT OF PUBLIC WORKS
HOWARD COUNTY, MARYLAND

CHIEF, BUREAU OF UTILITIES DATE

DES: H.A.
DRN: W.M.
CHK: M.E.M.
DATE: 01/2018

DATE	REV	DESCRIPTION
03/2021		RECORD DRAWINGS

STRUCTURAL

STRUCTURAL STANDARD DETAILS 3

LITTLE PATUXENT WATER RECLAMATION PLANT
8TH ADDITION
BIOSOLIDS PROCESSING FACILITIES - PHASE 2

CAPITAL PROJECT S-6295
CONTRACT NO. 24-4936

ELECTION DISTRICT NO. 6
HOWARD COUNTY, MARYLAND

SCALE AS SHOWN

SHEET 103 OF 311

S-904

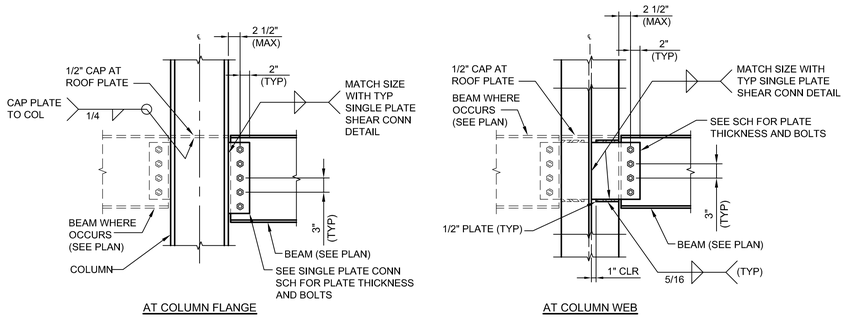

SINGLE PLATE BEAM CONNECTION AT COLUMNS

1 / -

NTS

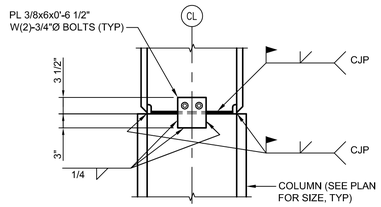

OPTIONAL COLUMN SPLICE (WELDED)

2 / -

NTS

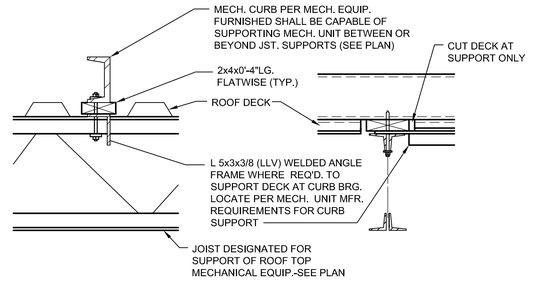

NOTE:
LOAD CARRYING CURBS PARALLEL TO JOIST SHALL BE PLACED ONTO DECK DIRECTLY OVER SUPPORT MEMBERS. PROVIDE WOOD BLOCKING & ATTACHMENTS AT SPACING PER MANUFACTURES REQUIREMENTS.

SUPPORT DETAIL AT ROOF EQUIPMENT CURB

3 / -

NTS

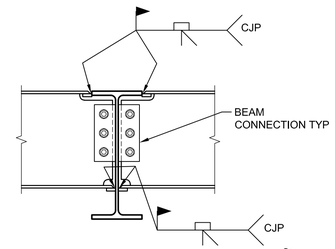

NOTE:
1. CONNECTION SHOWN THUS ON PLAN:

MOMENT CONNECTION BEAM THRU BEAM

4 / -

NTS

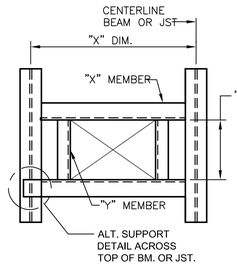

MAX. "X" DIM.	"X" MEMBER (LLV)
4'-0"	L3x3x1/4
5'-0"	L4x3x5/16
6'-6"	L5x3x5/16

NOTE: "X" MEMBER SHALL NOT BE OF LESSER SIZE THAN "Y" MEMBER TO WHICH IT CONNECTS.

MAX. "Y" DIM.	"Y" MEMBER (LLV)
1'-6"	L2 1/2x2 1/2x1/4
4'-0"	L3x3x1/4
7'-0"	L4x3x1/4
9'-0"	L6x4x3/8

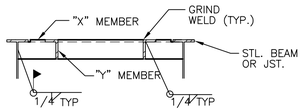

ROOF SUPPORT AT OPENINGS

5 / -

NTS

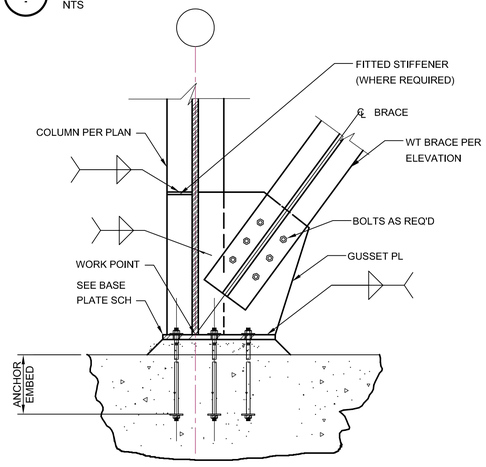

NOTE:
1. SEE BASE PLATE DETAIL AND SCHEDULE FOR ADDITIONAL INFORMATION.

BASE PLATE WITH BRACE

6 / -

NTS

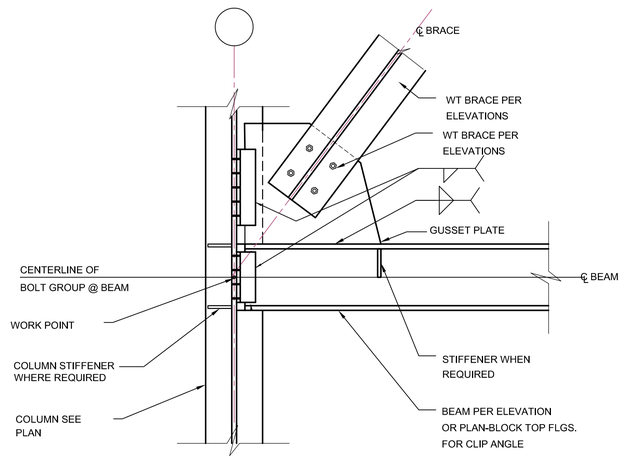

BRACE AT COLUMN WEB

7 / -

NTS

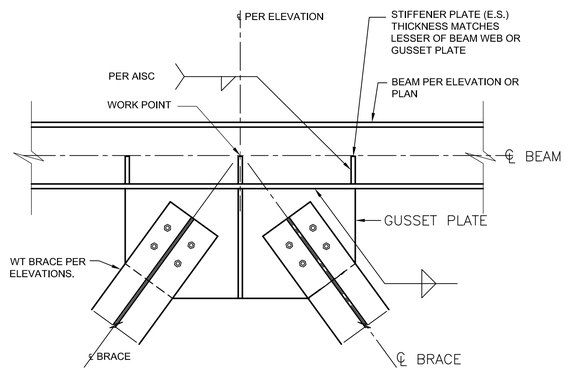

BRACE AT BEAM

8 / -

NTS

THE DRAWINGS IN THIS SET ARE RECORD DRAWINGS. THEY ARE CONSTRUCTION CONTRACT DRAWINGS WHICH HAVE BEEN REVISED BASED ON AVAILABLE FIELD INFORMATION RECORDED BY OTHERS DURING CONSTRUCTION OF THIS CONTRACT. THERE HAS BEEN NO VERIFICATION OF DIMENSIONS SHOWN ON THE CONSTRUCTION DRAWINGS OR THE ACCURACY/COMPLETENESS OF THE FIELD INFORMATION RECEIVED.

SIGNATURE — DATE 2/7/2022

AS-BUILT REPLACEMENT SHEET

PROFESSIONAL CERTIFICATION
THIS DRAWING WAS ORIGINALLY APPROVED FOR CONSTRUCTION AND SEALED BY MICHAEL E. MARTIN, A REGISTERED PROFESSIONAL ENGINEER IN THE STATE OF MARYLAND, NO. 49839.

NOTICE TO CONTRACTORS
- PROJECT ELEVATIONS ARE BASED ON NAVD88 AND HOWARD COUNTY'S BENCHMARK SYSTEM
- PREVIOUS PROJECTS USED OTHER DATUMS
- APPLY THE FOLLOWING CONVERSIONS WHEN USING PREVIOUS CONTRACT DRAWINGS:
  - ADDITION NO. 6: SUBTRACT 0.80 FT
  - PRIOR ADDITIONS: SUBTRACT 1.04 FT

DEPARTMENT OF PUBLIC WORKS
HOWARD COUNTY, MARYLAND

CHIEF, BUREAU OF UTILITIES — DATE

DES: H.A.
DRN: W.M.
CHK: M.E.M.
DATE: 01/2018

DATE	REV	DESCRIPTION
03/2021		RECORD DRAWINGS

STRUCTURAL

STRUCTURAL STANDARD DETAILS 4

LITTLE PATUXENT WATER RECLAMATION PLANT
8TH ADDITION
BIOSOLIDS PROCESSING FACILITIES - PHASE 2

CAPITAL PROJECT S-6295
CONTRACT NO. 24-4936

ELECTION DISTRICT NO. 6
HOWARD COUNTY, MARYLAND

SCALE AS SHOWN

SHEET 104 OF 311

S-905

C:\pwworking\pitt\d1900826\S-905.dwg 01/07/22 10:38

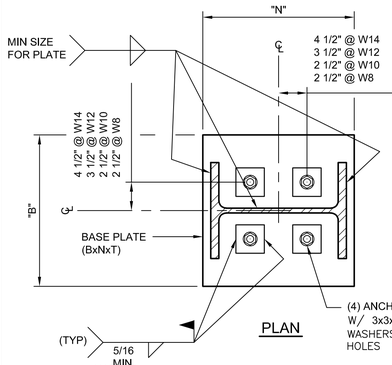

PLAN

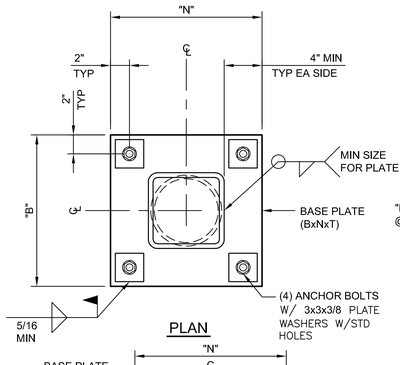

PLAN

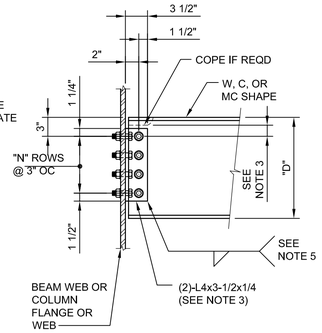

STANDARD BOLTED CONNECTION SCHEDULE		
NOMINAL BEAM SIZE "D"	NUMBER OF BOLT ROWS "N"	WELD SIZE
W8	2	3/16
W10	2	3/16
W12	3	3/16
W14	3	3/16
W16	3	1/4
W18	4	1/4
W21	4	1/4
W24	4	1/4
W27	5	1/4
W30	5	5/16
W33	6	5/16
W36	6	5/16

NOTES:

1. ALL BOLTS SHALL BE 3/4"Ø A325-N FOR STEEL CONSTRUCTION. ALL BOLTS SHALL BE 3/4"Ø SST FOR ALL OTHER CONSTRUCTION.
2. PROVIDE MINIMUM NUMBER OF BOLT ROWS "N" SHOWN AS THE TYPICAL CONN. INCREASE NUMBER OF ROWS AND / OR BOLT DIA. IF INDICATED ON PLANS.
3. MIN. DISTANCE FROM ℄ OF TOP BOLT TO A COPE SHALL BE 1-1/2". WHERE DEEP COPES ARE REQD., INCREASE DISTANCE FROM TOP OF BEAM TO ℄ OF TOP BOLT.
4. USE STANDARD OR SHORT HORIZONTAL SLOTTED HOLES AS REQUIRED.
5. WELD DOUBLE ANGLES TO BEAM WEB IN LIEU OF BOLTING AT CONTRACTORS OPTION.

TYPICAL BEAM CONNECTION (2)

NTS

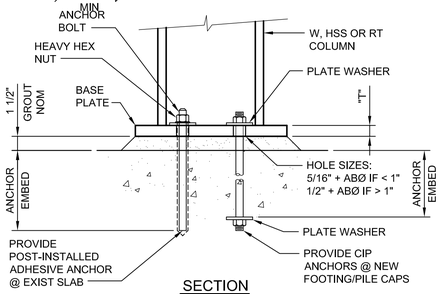

SECTION

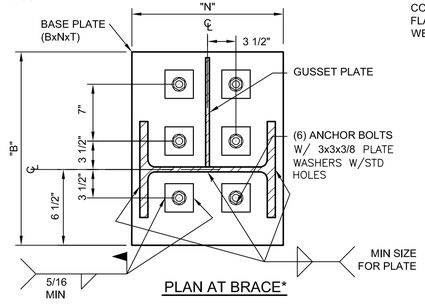

PLAN AT BRACE*

BASE PLATE SCHEDULE						
MARK	"B"	"N"	"T"	SHAPE	ANCHOR SIZE	ANCHOR EMBED
BP1	11"	1'-1"	5/8"	W12x40	5/8"	8"
BP2	11"	1'-1"	5/8"	W12x58	5/8"	8"
BP3	1'-1"	1'-1"	5/8"	W12x79	5/8"	8"
BP4	11"	1'-1"	1"	W12x58	5/8"	8"
BP5	11"	1'-1"	1"	W12x58	1"	10"
BP6	11"	1'-1"	5/8"	W12x40 & W12X58	1"	10"
BP7*	1'-8"	1'-2"	1"	W12x40 & W12X58	1 1/4"	12"
BP8	1'-0"	1'-0"	5/8"	HSS4x4x3/8	5/8"	6"
BP10	9"	11"	5/8"	W10X33	5/8"	6"

COLUMN BASE PLATE (1)

NTS

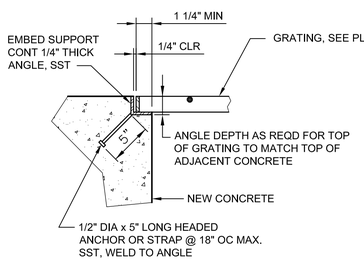

ALTERNATE

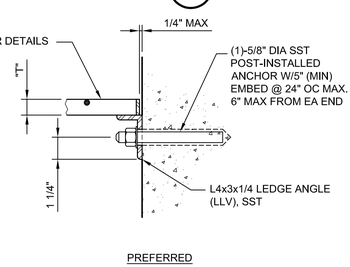

PREFERRED

NOTES:

1. GRATING SIZE PER CONTRACT DOCUMENTS.
2. ALL ENDS AND OPENINGS SHALL BE BANDED, SEE SPECIFICATION.
3. ATTACH GRATING TO ALL SUPPORT ANGLES WITH BOLTED CLIPS, SPACED AT 2'-0" MAX CENTERS.
4. PROVIDE DISSIMILAR MATERIAL PROTECTION FOR ALUMINUM IN CONTACT WITH CONCRETE PER SPECIFICATION.

GRATING AND SUPPORT DETAIL (6)

NTS

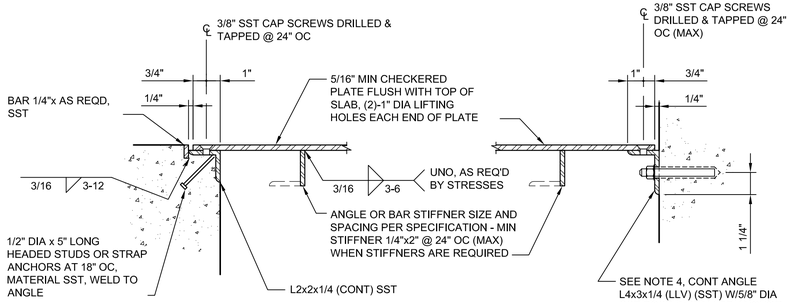

NOTES:

1. CHECKERED PLATE SIZE TO BE DETERMINED PER CONTRACT DOCUMENTS.
2. FIELD DRILL HOLES FOR SCREWS AT CONTRACTORS OPTION.
3. PROVIDE DISSIMILAR MATERIAL PROTECTION FOR ALUMINUM IN CONTACT WITH CONCRETE PER SPECIFICATION.
4. ONLY TO BE USED AT CONTINUOUS WALL ABOVE CHECKERED PLATE OR AT PRE-EXISTING CONCRETE CONSTRUCTION.

CHECKERED PLATE SUPPORT (7)

NTS

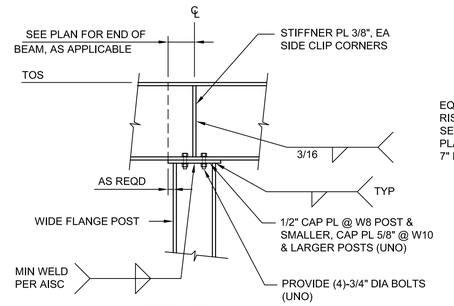

W POST TO BEAM

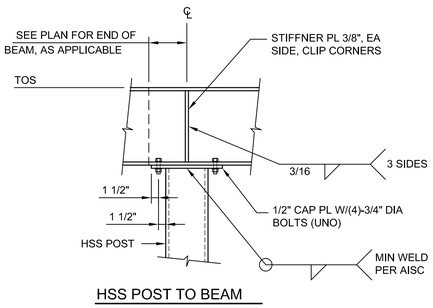

HSS POST TO BEAM

POST TO BEAM CONNECTIONS (3)

NTS

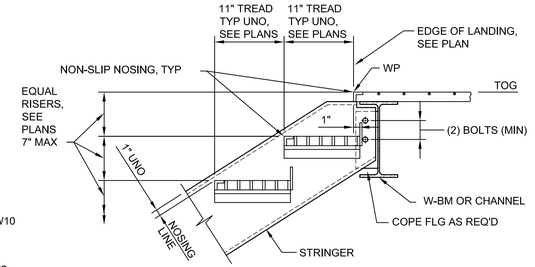

STAIR NOTES:

1. SEE SPECS AND DRAWINGS FOR MATERIAL TYPE.
2. FASTENER MATERIAL SHALL MATCH STAIR MATERIAL TYPE EXCEPT THAT ALUMINUM STAIRS SHALL USE SST TYPE 304 FASTENERS.
3. SEE ARCH STAIR SCHEDULE AS APPLICABLE.

TOP CONNECTION AT BEAM (4)

NTS

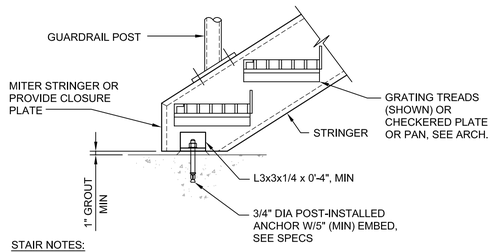

STAIR NOTES:

1. ALL STAIRS AND APPURTENANT ITEMS SHOWN ON DRAWINGS SHALL BE ALUMINUM, UNLESS SHOWN AS CONCRETE STAIRS ON DRAWINGS. ALL FASTENERS SHALL BE STAINLESS STEEL TYPE 304.
2. BASE PLATES FOR ALUMINUM COLUMNS SHALL REST ON 1" NON-SHRINK GROUT.

STAIR BOTTOM CONNECTION (5)

NTS

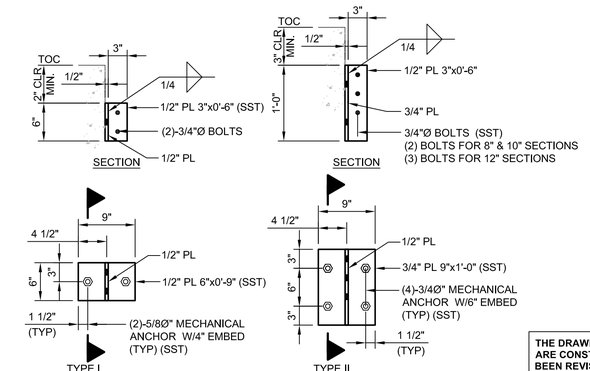

NOTES:

1. ALL MATERIALS SST TYPE 304
2. WHERE MOUNTED TO MASONRY, CELLS IN AREA TO RECEIVE CONNECTION SHALL BE GROUTED SOLID

WALL BRACKET (8)

NTS

THE DRAWINGS IN THIS SET ARE RECORD DRAWINGS. THEY ARE CONSTRUCTION CONTRACT DRAWINGS WHICH HAVE BEEN REVISED BASED ON AVAILABLE FIELD INFORMATION RECORDED BY OTHERS DURING CONSTRUCTION OF THIS CONTRACT. THERE HAS BEEN NO VERIFICATION OF DIMENSIONS SHOWN ON THE CONSTRUCTION DRAWINGS OR THE ACCURACY/COMPLETENESS OF THE FIELD INFORMATION RECEIVED.

SIGNATURE — DATE 2/7/2022

C:\pwworking\pitt\d1900826\S-906.dwg 01/07/22 10:39

AS-BUILT REPLACEMENT SHEET

PROFESSIONAL CERTIFICATION
THIS DRAWING WAS ORIGINALLY APPROVED FOR CONSTRUCTION AND SEALED BY MICHAEL E. MARTIN, A REGISTERED PROFESSIONAL ENGINEER IN THE STATE OF MARYLAND, NO. 49839.

NOTICE TO CONTRACTORS
- PROJECT ELEVATIONS ARE BASED ON NAVD88 AND HOWARD COUNTY'S BENCHMARK SYSTEM
- PREVIOUS PROJECTS USED OTHER DATUMS
- APPLY THE FOLLOWING CONVERSIONS WHEN USING PREVIOUS CONTRACT DRAWINGS:
  - ADDITION NO. 6: SUBTRACT 0.80 FT
  - PRIOR ADDITIONS: SUBTRACT 1.04 FT

DEPARTMENT OF PUBLIC WORKS
HOWARD COUNTY, MARYLAND

CHIEF, BUREAU OF UTILITIES — DATE

DES: H.A.
DRN: W.M.
CHK: M.E.M.
DATE: 01/2018

DATE	REV	DESCRIPTION
03/2021		RECORD DRAWINGS

STRUCTURAL

STRUCTURAL STANDARD DETAILS 5

LITTLE PATUXENT WATER RECLAMATION PLANT
8TH ADDITION
BIOSOLIDS PROCESSING FACILITIES - PHASE 2

CAPITAL PROJECT S-6295
CONTRACT NO. 24-4936

ELECTION DISTRICT NO. 6
HOWARD COUNTY, MARYLAND

SCALE AS SHOWN

SHEET 105 OF 311

S-906

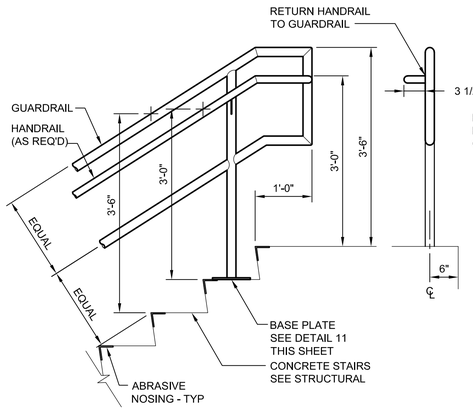

1 - STAIR RAIL TYPE '1'
3/4" = 1'-0"

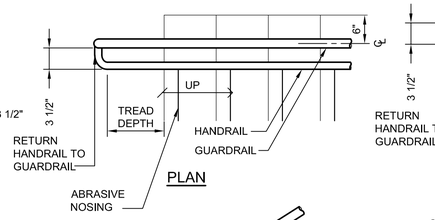

PLAN

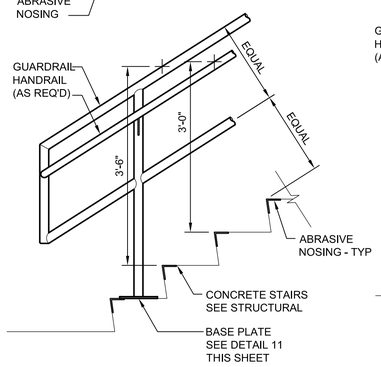

ELEVATION

2 - STAIR RAIL TYPE '1'
3/4" = 1'-0"

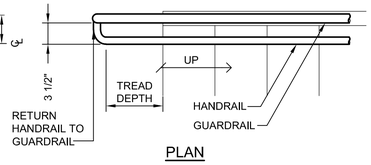

PLAN

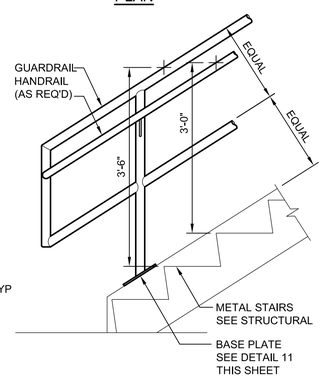

ELEVATION

3 - STAIR RAIL TYPE '2'
3/4" = 1'-0"

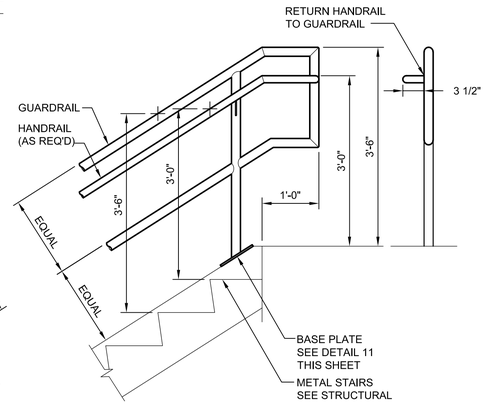

4 - STAIR RAIL TYPE '2'
3/4" = 1'-0"

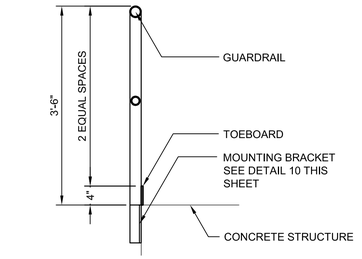

5 - GUARDRAIL TYPE '1'
3/4" = 1'-0"

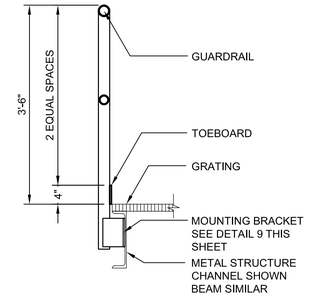

7 - GUARDRAIL TYPE '3'
3/4" = 1'-0"

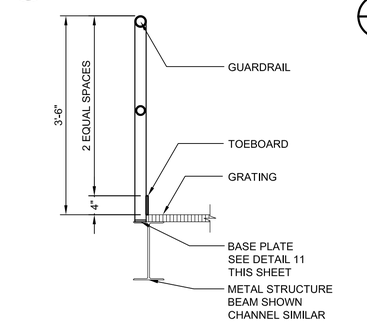

6 - GUARDRAIL TYPE '2'
3/4" = 1'-0"

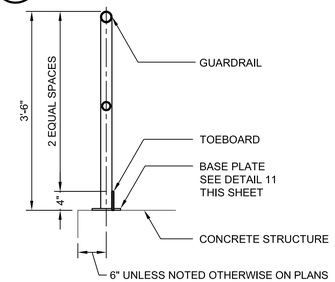

8 - GUARDRAIL TYPE '4'
3/4" = 1'-0"

PLAN VIEW

PLAN VIEW

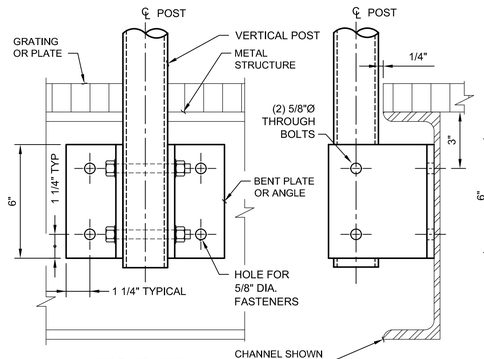

FRONT VIEW SIDE VIEW

NOTE:
1. TOEBOARD NOT SHOWN.
2. COAT SURFACES WITH BITUMINOUS PAINT AT DISSIMILAR MATERIALS, SEE SPECIFICATION 09905.

9 - ALUMINUM GUARDRAIL POST DETAIL
NTS

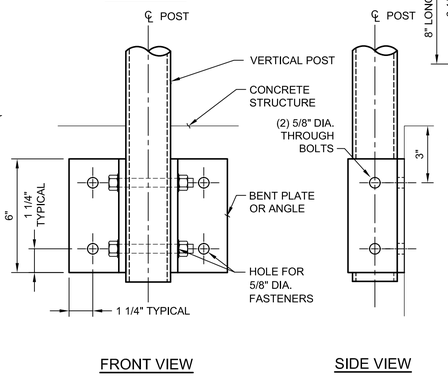

FRONT VIEW SIDE VIEW

NOTE:
1. TOEBOARD NOT SHOWN.
2. COAT SURFACES WITH BITUMINOUS PAINT AT DISSIMILAR MATERIALS, SEE SPECIFICATION 09905.

10 - ALUMINUM GUARDRAIL POST DETAIL
NTS

TYPICAL VERTICAL POST

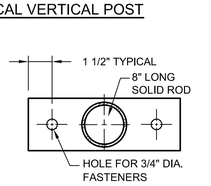

BASE PLATE FOR MOUNTING TO METAL STRUCTURE

REMOVABLE GUARDRAIL VERTICAL POST

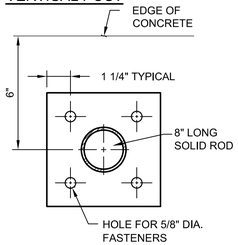

BASE PLATE FOR MOUNTING TO CONCRETE

NOTE:
1. TOEBOARD NOT SHOWN.
2. COAT SURFACES WITH BITUMINOUS PAINT AT DISSIMILAR MATERIALS, SEE SPECIFICATION 09905.

11 - ALUMINUM VERTICAL POST BASE
NTS

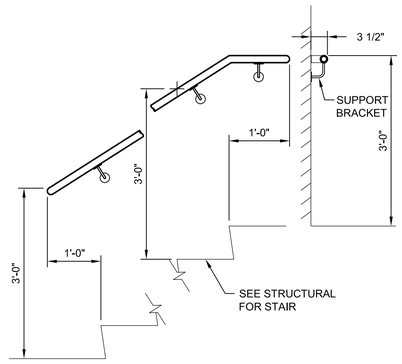

12 - WALL MOUNTED HANDRAIL DETAIL
3/4" = 1'-0"

THE DRAWINGS IN THIS SET ARE RECORD DRAWINGS. THEY ARE CONSTRUCTION CONTRACT DRAWINGS WHICH HAVE BEEN REVISED BASED ON AVAILABLE FIELD INFORMATION RECORDED BY OTHERS DURING CONSTRUCTION OF THIS CONTRACT. THERE HAS BEEN NO VERIFICATION OF DIMENSIONS SHOWN ON THE CONSTRUCTION DRAWINGS OR THE ACCURACY/COMPLETENESS OF THE FIELD INFORMATION RECEIVED.

SIGNATURE 2/7/2022 DATE

C:\pwworking\pitt\d1900826\S-907.dwg 01/07/22 10:42

AS-BUILT REPLACEMENT SHEET

PROFESSIONAL CERTIFICATION
THIS DRAWING WAS ORIGINALLY APPROVED FOR CONSTRUCTION AND SEALED BY MICHAEL E. MARTIN, A REGISTERED PROFESSIONAL ENGINEER IN THE STATE OF MARYLAND, NO. 49839.

NOTICE TO CONTRACTORS
- PROJECT ELEVATIONS ARE BASED ON NAVD88 AND HOWARD COUNTY'S BENCHMARK SYSTEM
- PREVIOUS PROJECTS USED OTHER DATUMS
- APPLY THE FOLLOWING CONVERSIONS WHEN USING PREVIOUS CONTRACT DRAWINGS:
  - ADDITION NO. 6: SUBTRACT 0.80 FT
  - PRIOR ADDITIONS: SUBTRACT 1.04 FT

DEPARTMENT OF PUBLIC WORKS
HOWARD COUNTY, MARYLAND

CHIEF, BUREAU OF UTILITIES DATE

DES: H.A.
DRN: W.M.
CHK: M.E.M.
DATE: 01/2018

DATE	REV	DESCRIPTION
03/2021		RECORD DRAWINGS

STRUCTURAL

GUARDRAIL DETAILS

LITTLE PATUXENT WATER RECLAMATION PLANT
8TH ADDITION
BIOSOLIDS PROCESSING FACILITIES - PHASE 2

CAPITAL PROJECT S-6295
CONTRACT NO. 24-4936

ELECTION DISTRICT NO. 6
HOWARD COUNTY, MARYLAND

SCALE AS SHOWN

SHEET 106 OF 311

S-907

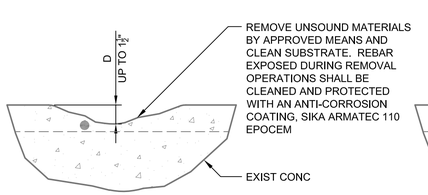

SECTION

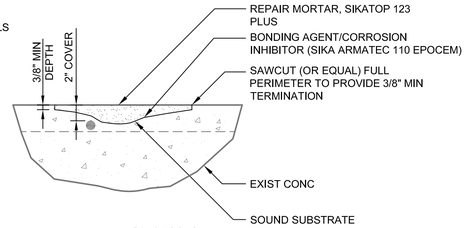

SECTION

TYPE I - THIN LOCAL CONCRETE REPAIR (1 -)

NTS (UP TO 1 1/2" IN DEPTH)

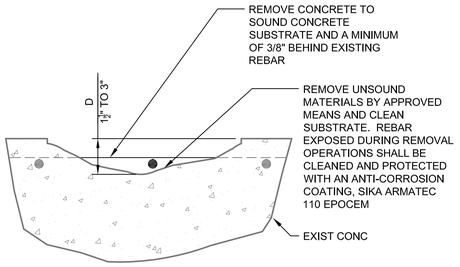

SECTION

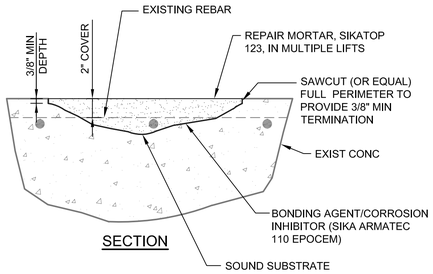

SECTION

TYPE II - MODERATE LOCAL CONCRETE REPAIR (2 -)

NTS (1 1/2" TO 3" IN DEPTH)

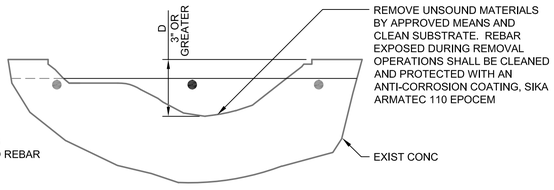

SECTION A-A

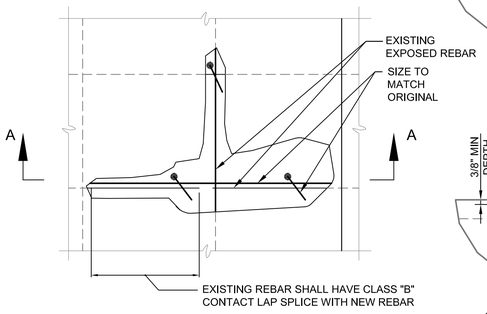

PARTIAL PLAN OR ELEVATION

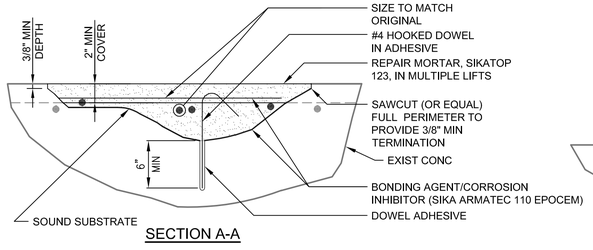

SECTION A-A

TYPE III - SEVERE LOCAL CONCRETE REPAIR (3 -)

NTS (GREATER THAN 3" IN DEPTH)

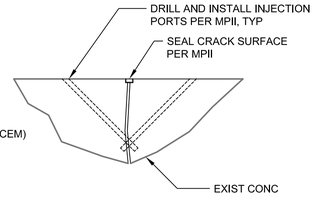

TYPE X - CRACKS BELOW WATER

(WATERPROOF INJECTION GROUT)

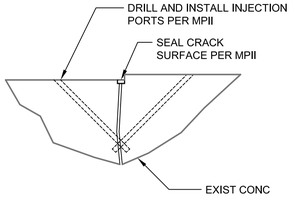

TYPE XI - STRUCTURAL CRACKS

(EPOXY CRACK REPAIR BINDER)

CRACK REPAIR DETAILS (5 -)

NTS

INTRODUCTION

THE CONDITIONS ENCOUNTERED UPON INITIAL CLEANING OF THE STRUCTURE MAY BE SUCH THAT ADDITIONAL STRUCTURAL REPAIRS ARE REQUIRED PRIOR TO IMPLEMENTING THE OTHER SPECIFIED REPAIR WORK. OR IT MAY BE SUCH THAT A FULL WALL AREA MACHINE APPLIED OVERLAY IS THE BEST SOLUTION DUE TO EXTENT AND DEFICIENCIES EXPOSED.

SCOPE AND PRODUCTS

CONTRACTOR SHALL USE A SHOTCRETE METHOD TO BUILD BACK THE WALL SURFACES TO A PLANE THAT OF THE ORIGINAL CONSTRUCTION'S FINISHED SURFACES (SEE PROJECT'S DRAWINGS FOR DIMENSIONS). OWNER AND ENGINEER WILL PROVIDE DIRECTION FOR REPAIR TYPE TO BE APPLIED. SEE OTHER NOTES THIS SHEET.

S1. COMPLY WITH ACI 506, 506.2 AND 506.4R

S2. USE HIGH OR LOW PRESSURE INSTALLATION TECHNIQUES AND EQUIPMENT, AS APPROPRIATE

S3. FOLLOW PERTINENT ACI RAP BULLETINS (SUCH AS #12)

S4. AS A MINIMUM, WET THE SURFACES TO A SSD CONDITION IMMEDIATELY PRIOR TO START OF THIS WORK

S5. APPLIED PRODUCT SHALL BE BASICALLY CHLORIDE FREE (ION CONTENT LESS THAN 0.10% OF TOTAL CEMENT BY WEIGHT)

S6. PREPACKAGED MIXES SHALL MEET ASTM C1480 REQUIREMENTS

S7. MINIMUM COMPRESSIVE STRENGTH SHALL BE 4500 PSI AT 28 DAYS

S8. PORTLAND CEMENT SHALL BE TYPE I/II (AS PER ASTM C 150); MIX SHALL INCLUDE SILICA FUME AT A RATE OF 7% BY WEIGHT OF THE CEMENTITIOUS PRODUCT; USE NO RETARDANT ADMIXTURE.

S9. USE OF COARSE AGGREGATES IS NOT REQUIRED, BUT MAY BE PROPOSED, BASED UPON PRESENT CONDITION AND ANTICIPATED REPAIR THICKNESS.

S10. IT IS NOT ANTICIPATED, BUT IF SIGNIFICANT REINFORCING REPLACEMENT MAY BE REQUIRED DUE TO CONDITION OF THE MATERIAL ENCOUNTERED. THIS STEEL SHALL BE LAPPED EACH END (ACI 318 CLASS B LAP) ONTO REMAINING STEEL THAT IS AT LEAST 80% OF ITS ORIGINAL CROSS-SECTIONAL AREA. STEEL SHALL BE TREATED WITH BONDING AGENT AND CORROSION INHIBITOR. REPLACEMENT REBAR SHALL MATCH SIZE AND SPACING OF EXISTING REBAR.

EXECUTION AND QUALITY ASSURANCE

S11. CONTRACTOR SHALL PREPARE A SURVEY WITH SURFACE CONTOURS IN ORDER TO ESTABLISH PAYMENT BASIS (VOLUMETRIC NOT AREA DETERMINATION).

S12. SUBMITTALS FOR THIS WORK SHALL FOLLOW THE REQUIREMENTS OF THE APPLICABLE DIVISION 3 SPECIFICATIONS.

S13. SHOTCRETE SUBCONTRACTOR SHALL BE AN EXPERIENCED, QUALIFIED REPAIR FIRM, REGULARLY ENGAGED IN SIMILAR WORK FOR A MINIMUM OF 3 CONSECUTIVE YEARS.

S14. ALL NOZZLEMEN SHALL HOLD CURRENT CERTIFICATION PER THE ACI NOZZLEMAN PROGRAM; CONTRACTOR SHALL SUBMIT THE ACI WORK EXPERIENCE FORM AND OTHER NECESSARY DOCUMENTATION TO VALIDATE APPLICATOR'S QUALIFICATIONS.

S15. SURFACES TO RECEIVE SHOTCRETE SHALL HAVE OUTCROPPINGS GREATER THAN 1-1/2 INCHES BEYOND ADJACENT MATERIAL BE REMOVED TO ELIMINATE RISERS AND THINNER REPAIRED AREAS. FEATHER EDGES ARE NOT ACCEPTABLE.

S16. BASE CONCRETE CONDITION SHALL BE FREE OF ANY CONTAMINANTS AND CHEMICAL CONDITION THAT WOULD IMPAIR THE SHOTCRETE BOND THERETO.

S17. TIMING OF THE STEEL INSTALLATION SHALL BE COORDINATED WITH GENERAL CONTRACTOR, SO AS TO PROVIDE A SOUND INSTALLATION WITHOUT ANY VOIDS UNDER THE REINFORCING CURTAIN. REINFORCING SHALL BE FULLY EMBEDDED IN THE SHOTCRETE. IT MAY BE REQUIRED TO DELAY STEEL INSTALLATION UNTIL AFTER PARTIAL SHOTCRETING ONLY; COMPLETION OF SHOTCRETE EFFORT SHALL THEN BE RESUMED.

S18. FINAL SURFACE CONDITION SHALL BE SMOOTH, SIMILAR TO FINISH #2 OF SPECIFICATION SECTION 03 35 00.

S19. FINAL SHOTCRETE INSTALLATION WILL BE TESTED FOR BOND (150 PSI MINIMUM) PER ACI 506.4R BY A THIRD PARTY FIRM PRIOR TO ACCEPTANCE OF THIS PHASE OF THE WORK. (SONIC TESTING MAY BE AN OPTION).

TYPE IV - SHOTCRETE REPAIR (3 -)

NTS

GENERAL NOTES:

G1. ALL EXISTING INFORMATION SHOWN ON THESE DRAWINGS INCLUDING LOCATION, DIMENSIONS, ELEVATIONS, AND CONFIGURATIONS IS DERIVED FROM THE ORIGINAL CONSTRUCTION AND IS NOT GUARANTEED TO BE COMPLETE OR CORRECT. THE CONTRACTOR IS RESPONSIBLE FOR VERIFYING ALL EXISTING INFORMATION IN THE FIELD AS REQUIRED.

G2. UNLESS SCOPE OF REPAIR WORK IS CLEARLY DEFINED IN CONTRACT DOCUMENTS, CONCRETE REPAIRS SHALL BE PAID FOR UNDER THE APPLICABLE UNIT PRICE BID ITEM. THE CONTRACT AMOUNT SHALL INCLUDE ALL WORK RELATING TO CONCRETE REPAIRS AS INDICATED PER THE DRAWINGS AND SPECIFICATIONS. THE LISTED QUANTITIES IN THE BID FORM BY WORK ITEM ARE ESTIMATES ONLY.

G3. CONCRETE REPAIR WORK SHALL BE PERFORMED PER SPECIFICATION SECTION 03 35 00 AND THE DETAILS ON THE DRAWINGS. CONCRETE REPAIR WORK USING SHOTCRETE SHALL BE PERFORMED IN ACCORDANCE WITH DRAWINGS REQUIREMENTS.

G4. A PREWORK CONDITION ASSESSMENT INSPECTION SHALL BE UNDERTAKEN BY THE CONTRACTOR, REPAIR/SURFACE PREPARATION SUB-CONTRACTOR, ENGINEER, AND THE OWNER IMMEDIATELY. ALL NECESSARY SAFETY PRECAUTIONS SHALL BE IN PLACE, AND ALL PERSONNEL ENTERING THE STRUCTURE MUST BE PROPERLY TRAINED AND QUALIFIED.

G5. BEFORE PERFORMING ANY CONCRETE REPAIR WORK, THE CONTRACTOR SHALL GRITBLAST OR WATERBLAST (5,000 PSI WATERJET W/ORBITTAL NOZZLE) 100% OF AREAS TO REMOVE ALL LOOSE CONCRETE, EXISTING COATINGS, UNSOUND MATERIAL AND DEBRIS. ALL SURFACES SHALL BE CLEAN, FREE OF DIRT, GREASE, LOOSE PARTICLES, AND DELETERIOUS SUBSTANCES AND SHALL BE PREPARED ACCORDING TO MANUFACTURER'S PRINTED INSTALLATION INSTRUCTIONS (MPII). IF NECESSARY, USE A DETERGENT AND FOLLOW WITH RINSES TO REMOVE DETERGENT.

G6. AFTER THE CONCRETE SURFACE PREPARATION HAS BEEN COMPLETED A SECONDARY INSPECTION OF THE SURFACES SHALL BE PERFORMED BY THE CONTRACTOR, REPAIR SUB-CONTRACTOR, ENGINEER, AND OWNER. THE INSPECTION SHALL SERVE AS A MEANS TO DETERMINE THE EXTENT OF CONCRETE REPAIR THAT IS REQUIRED. WITHIN 96 HOURS OF COMPLETING THE INSPECTION, THE ENGINEER SHALL PROVIDE A REPORT SUMMARIZING THE INSPECTION FINDINGS AND DETAILING THE REPAIRS REQUIRED FOR THE INTERIOR SURFACES.

G7. A SLURRY BOND COAT MAY BE USED IN LIEU OF BONDING AGENT WHEN APPROVED BY THE REPAIR PRODUCT MANUFACTURER AND ENGINEER. CONTRACTOR SHALL OBTAIN WRITTEN APPROVAL. WET CONCRETE SURFACES TO SURFACE SATURATED DRY (SSD) PRIOR TO APPLYING SLURRY BOND COAT. APPLY REPAIR MORTAR WHILE SLURRY BOND COAT IS STILL WET.

G8. CONTRACTOR SHALL COORDINATE PIPING REPLACEMENT OR REPAIR WITH THE OWNER.

G9. THE CONTRACTOR SHALL NOT PERFORM ANY CONCRETE REPAIR WORK WHEN AMBIENT TEMPERATURES ARE BELOW MANUFACTURER'S RECOMMENDATIONS. NO ADMIXTURES, EXCEPT THOSE REQUIRED BY THE MANUFACTURER, SHALL BE USED IN THE REPAIRS HEREIN. ALL PRODUCTS SHALL BE APPLIED IN STRICT ACCORDANCE WITH THE MPII BY APPROVED INSTALLERS.

G10. CONCRETE REPAIRS SHALL RESTORE ALL INTERIOR SURFACES TO THE APPROXIMATE DIMENSIONS OF THE ORIGINAL CONSTRUCTION. ALL REINFORCING STEEL SHALL HAVE A MINIMUM COVER OF 2".

G11. THE CONTRACTOR SHALL PERFORM THE REPAIR WORK AS OUTLINED. THE CONTRACTOR SHALL BE PAID FOR THE REPAIR WORK UNDER UNIT PRICE BID ITEMS AS LISTED IN THE CONTRACT DOCUMENTS AND AS FOLLOWS:

TYPE I - THIN LOCAL CONCRETE REPAIR
TYPE II - MODERATE LOCAL CONCRETE REPAIR
TYPE III - SEVERE LOCAL CONCRETE REPAIR
TYPE IV - LARGE AREA SHOTCRETE REPAIR/OVERLAY
BELOW WATER LEVEL OR LEAKING CRACK - WATERPROOF INJECTION GROUT (DETERMINATION SHALL BE MADE AT TIME OF INSPECTION)
TYPE XI - STRUCTURAL CRACK - EPOXY CRACK REPAIR BINDER (DETERMINATION SHALL BE MADE AT TIME OF INSPECTION)

THE DRAWINGS IN THIS SET ARE RECORD DRAWINGS. THEY ARE CONSTRUCTION CONTRACT DRAWINGS WHICH HAVE BEEN REVISED BASED ON AVAILABLE FIELD INFORMATION RECORDED BY OTHERS DURING CONSTRUCTION OF THIS CONTRACT. THERE HAS BEEN NO VERIFICATION OF DIMENSIONS SHOWN ON THE CONSTRUCTION DRAWINGS OR THE ACCURACY/COMPLETENESS OF THE FIELD INFORMATION RECEIVED.

SIGNATURE 2/7/2023 DATE

C:\pwworking\pitt\d1900826\S-908.dwg 01/07/22_10:44

AS-BUILT REPLACEMENT SHEET

PROFESSIONAL CERTIFICATION
THIS DRAWING WAS ORIGINALLY APPROVED FOR CONSTRUCTION AND SEALED BY MICHAEL E. MARTIN, A REGISTERED PROFESSIONAL ENGINEER IN THE STATE OF MARYLAND, NO. 49839.

NOTICE TO CONTRACTORS
- PROJECT ELEVATIONS ARE BASED ON NAVD88 AND HOWARD COUNTY'S BENCHMARK SYSTEM
- PREVIOUS PROJECTS USED OTHER DATUMS
- APPLY THE FOLLOWING CONVERSIONS WHEN USING PREVIOUS CONTRACT DRAWINGS:
  - ADDITION NO. 6: SUBTRACT 0.80 FT
  - PRIOR ADDITIONS: SUBTRACT 1.04 FT

DEPARTMENT OF PUBLIC WORKS
HOWARD COUNTY, MARYLAND

CHIEF, BUREAU OF UTILITIES DATE

DES: H.A.
DRN: W.M.
CHK: M.E.M.
DATE: 01/2018

DATE	REV	DESCRIPTION
03/2021		RECORD DRAWINGS

STRUCTURAL

CONCRETE REPAIR DETAILS

LITTLE PATUXENT WATER RECLAMATION PLANT
8TH ADDITION
BIOSOLIDS PROCESSING FACILITIES - PHASE 2

CAPITAL PROJECT S-6295
CONTRACT NO. 24-4936

ELECTION DISTRICT NO. 6
HOWARD COUNTY, MARYLAND

SCALE AS SHOWN

SHEET 107 OF 311

S-908

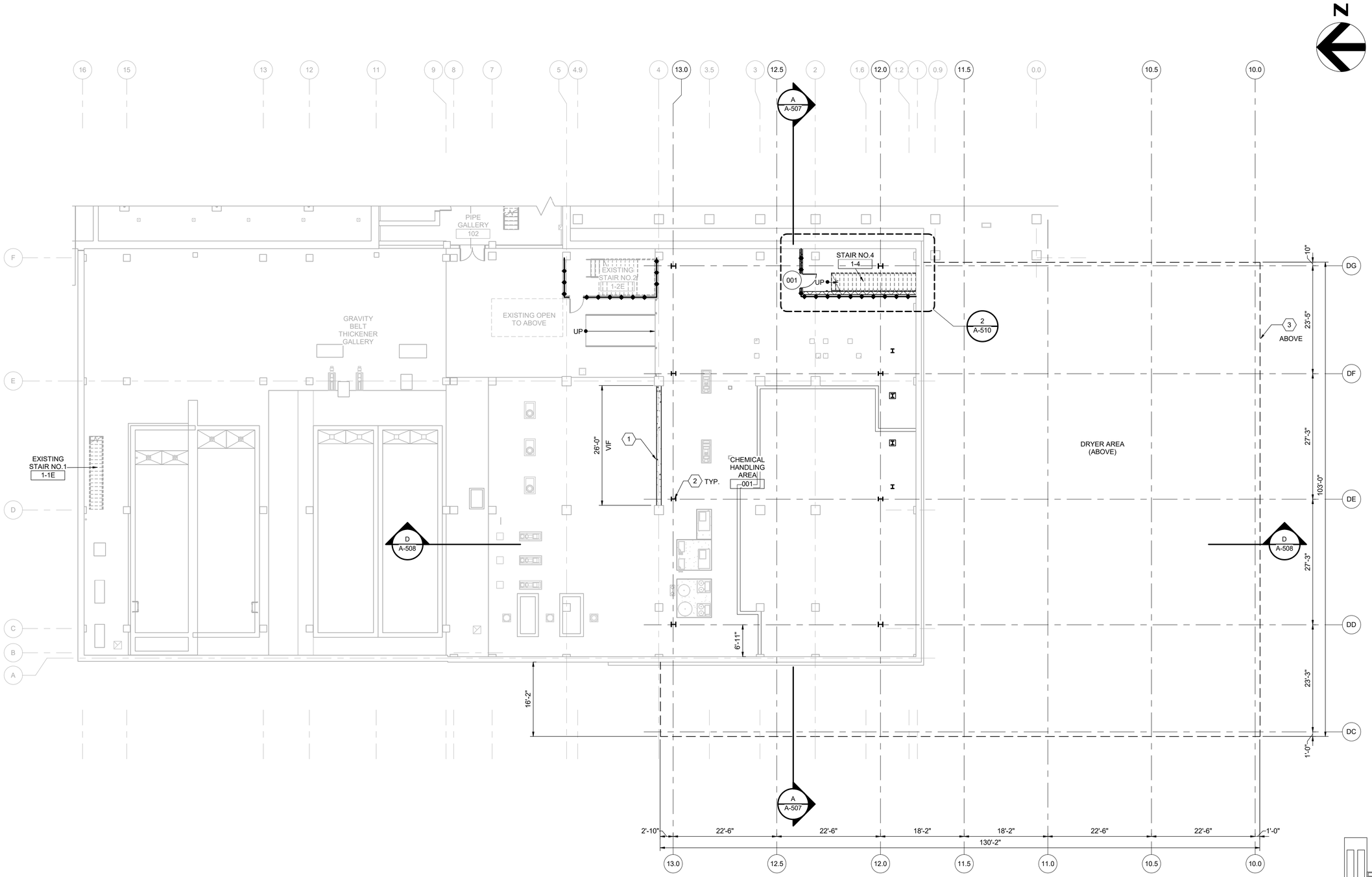

PLAN AT EL 128.00

3/32" = 1'-0"

GENERAL NOTES

1 SEE SHEET A-901 FOR ROOM FINISH AND DOOR SCHEDULES.

2 SEE SHEET A-902 FOR WINDOW SCHEDULE AND PARTITION TYPES.

3 SEE SHEETS A-903 - A-905 FOR DETAILS.

KEY NOTES (X)

1 CONCRETE WALL, REFER TO STRUCTURAL
2 NEW STEEL FRAMING, REFER TO STRUCTURAL
3 CONCRETE FOUNDATION, REFER TO STRUCTURAL

WALL RATING LEGEND

1 HOUR FIRE BARRIER

2 HOUR FIRE BARRIER

LEGEND

EXISTING

NEW

HIDDEN ABOVE

THE DRAWINGS IN THIS SET ARE RECORD DRAWINGS. THEY ARE CONSTRUCTION CONTRACT DRAWINGS WHICH HAVE BEEN REVISED BASED ON AVAILABLE FIELD INFORMATION RECORDED BY OTHERS DURING CONSTRUCTION OF THIS CONTRACT. THERE HAS BEEN NO VERIFICATION OF DIMENSIONS SHOWN ON THE CONSTRUCTION DRAWINGS OR THE ACCURACY/COMPLETENESS OF THE FIELD INFORMATION RECEIVED.

SIGNATURE — DATE 2/7/2022

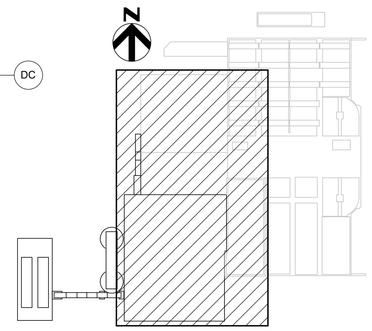

KEY PLAN

AS-BUILT REPLACEMENT SHEET

PROFESSIONAL CERTIFICATION

THIS DRAWING WAS ORIGINALLY APPROVED FOR CONSTRUCTION AND SEALED BY PATRICK DAUGHTON, A REGISTERED PROFESSIONAL ARCHITECT IN THE STATE OF MARYLAND, NO. 18898

NOTICE TO CONTRACTORS

- PROJECT ELEVATIONS ARE BASED ON NAVD88 AND HOWARD COUNTY'S BENCHMARK SYSTEM
- PREVIOUS PROJECTS USED OTHER DATUMS
- APPLY THE FOLLOWING CONVERSIONS WHEN USING PREVIOUS CONTRACT DRAWINGS:
  - ADDITION NO. 6: SUBTRACT 0.80 FT
  - PRIOR ADDITIONS: SUBTRACT 1.04 FT

DEPARTMENT OF PUBLIC WORKS
HOWARD COUNTY, MARYLAND

CHIEF, BUREAU OF UTILITIES — DATE

DES: RK
DRN: RK
CHK: BE
DATE: 01/2018

DATE	REV	DESCRIPTION
03/2021		RECORD DRAWINGS

ARCHITECTURAL

DRYER BUILDING PLAN AT EL 129.20

LITTLE PATUXENT WATER RECLAMATION PLANT
8TH ADDITION
BIOSOLIDS PROCESSING FACILITIES - PHASE 2

CAPITAL PROJECT S-6295
CONTRACT NO. 24-4936

ELECTION DISTRICT NO. 6
HOWARD COUNTY, MARYLAND

SCALE AS SHOWN

SHEET 108 OF 311

A-501

BIM 360://10054364 – Little Patuxent WRP 8th Addition/264592_100_A_V18.rvt
1/7/2022 11:35:23 AM

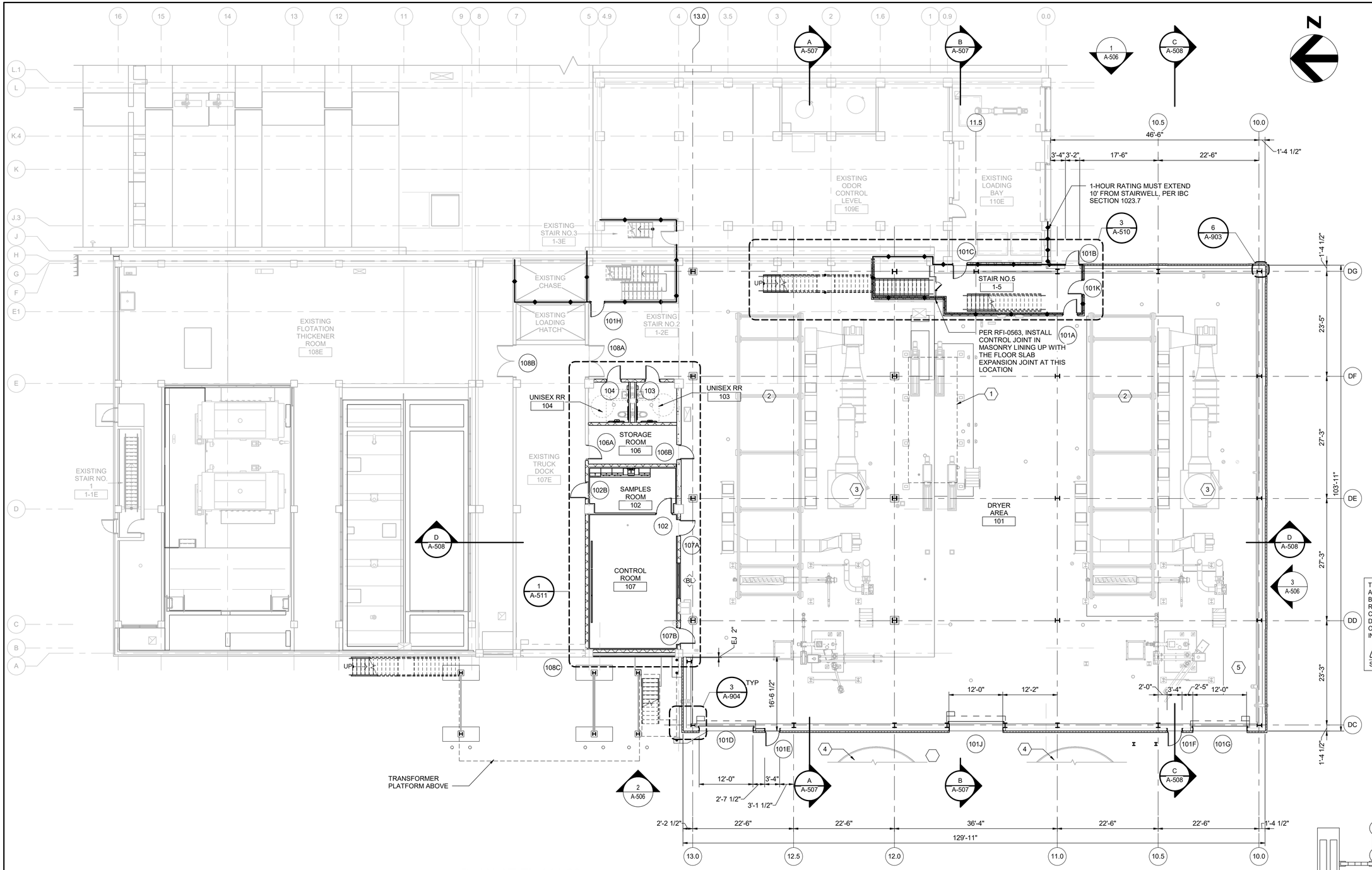

PLAN AT EL 141.20

3/32" = 1'-0"

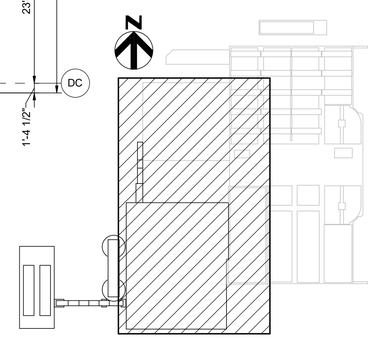

KEY PLAN

GENERAL NOTES

1 SEE SHEET A-501 FOR GENERAL NOTES.

KEY NOTES (X)

1 CAKE BIN, REFER TO PROCESS.
2 DRYER, REFER TO PROCESS
3 CONDENSER TOWER, REFER TO PROCESS
4 SILOS, REFER TO PROCESS
5 METAL PLATFORM ABOVE, REFER TO STRUCTURAL

WALL RATING LEGEND

1 HOUR FIRE BARRIER
2 HOUR FIRE BARRIER

LEGEND

EXISTING
NEW
HIDDEN ABOVE/BEYOND
(X) WINDOW TYPE

THE DRAWINGS IN THIS SET ARE RECORD DRAWINGS. THEY ARE CONSTRUCTION CONTRACT DRAWINGS WHICH HAVE BEEN REVISED BASED ON AVAILABLE FIELD INFORMATION RECORDED BY OTHERS DURING CONSTRUCTION OF THIS CONTRACT. THERE HAS BEEN NO VERIFICATION OF DIMENSIONS SHOWN ON THE CONSTRUCTION DRAWINGS OR THE ACCURACY/COMPLETENESS OF THE FIELD INFORMATION RECEIVED.

SIGNATURE — DATE 2/7/2022

AS-BUILT REPLACEMENT SHEET

PROFESSIONAL CERTIFICATION

THIS DRAWING WAS ORIGINALLY APPROVED FOR CONSTRUCTION AND SEALED BY PATRICK DAUGHTON, A REGISTERED PROFESSIONAL ARCHITECT IN THE STATE OF MARYLAND, NO. 18898

NOTICE TO CONTRACTORS

- PROJECT ELEVATIONS ARE BASED ON NAVD88 AND HOWARD COUNTY'S BENCHMARK SYSTEM
- PREVIOUS PROJECTS USED OTHER DATUMS
- APPLY THE FOLLOWING CONVERSIONS WHEN USING PREVIOUS CONTRACT DRAWINGS:
  - ADDITION NO. 6: SUBTRACT 0.80 FT
  - PRIOR ADDITIONS: SUBTRACT 1.04 FT

DEPARTMENT OF PUBLIC WORKS
HOWARD COUNTY, MARYLAND

CHIEF, BUREAU OF UTILITIES — DATE

DES: RK
DRN: RK
CHK: BE
DATE: 01/2018

DATE	REV	DESCRIPTION
03/2021		RECORD DRAWINGS

ARCHITECTURAL

DRYER BUILDING PLAN AT EL 141.20

LITTLE PATUXENT WATER RECLAMATION PLANT
8TH ADDITION
BIOSOLIDS PROCESSING FACILITIES - PHASE 2

CAPITAL PROJECT S-6295
CONTRACT NO. 24-4936

ELECTION DISTRICT NO. 6
HOWARD COUNTY, MARYLAND

SCALE AS SHOWN

SHEET 109 OF 311

A-502

BIM 360://10054364 – Little Patuxent WRP 8th Addition/264592_100_A_V18.rvt
1/7/2022 11:35:37 AM

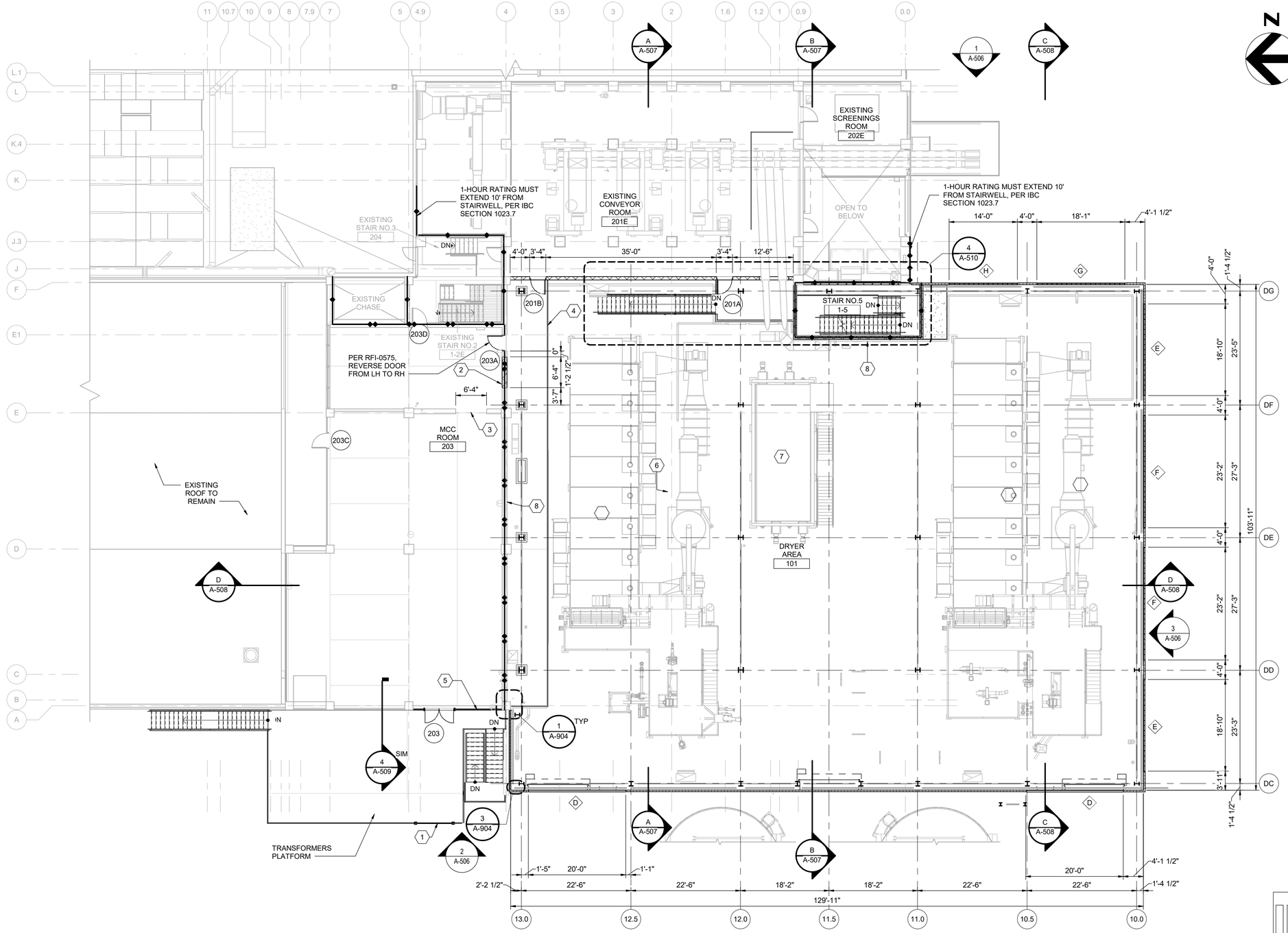

PLAN AT EL 155.20

3/32" = 1'-0"

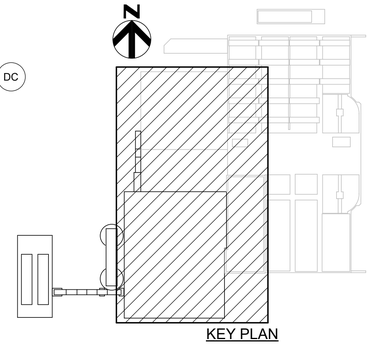

KEY PLAN

GENERAL NOTES

1 SEE SHEET A-501 FOR GENERAL NOTES.

2 THE MCC ROOM SHALL BE PROVIDED 2-HOUR FIRE-RESITANCE RATED SEPARATION FROM THE REST OF THE BUILDING. THIS INCLUDES A 2-HOUR FIRE-RATED HORIZONTAL ASSEMBLY THAT SHALL SEPARATE THE SECOND FLOOR MCC ROOM FROM THE FIRST FLOOR.

3 SEE SHEET G-36 FOR ADDITIONAL FIRE-RATING INFORMATION

KEY NOTES (X)

1 NOT USED
2 FILL OPENING W/ CMU
3 ROUGH OPENING TO REMAIN, PATCH AND REPAIR CMU AS REQ'D.
4 AL GUARDRAIL SYSTEM, REFER TO STRUCTURAL FOR DETAILS
5 NEW INFILL METAL WALL PANEL TO MATCH EXISTING. OLD PANELS BEING DEMOLISHED.
6 CONDENSER TOWER, REFER TO PROCESS
7 CAKE BIN, REFER TO PROCESS.
8 ALL PENETRATIONS OF FIRE-RATED CONSTRUCTION, INCLUDING FIRE BARRIERS AND HORIZONTAL ASSEMBLIES, SHALL COMPLY WITH 2015 IBC CHAPTER 7 REQUIREMENTS, WHICH INCLUDES THE PROVISION OF FIRE SMOKE DAMPERS, FIRE STOPPING, PROTECITON OF VERTICAL OPENINGS, OPENING PROTECTIVES, AND SO FORTH. TYPICAL FOR ALL SHEETS.
9 FILL EXISTING OPENING W/ 2 HOUR FIRE RATED ASSEMBLY

WALL RATING LEGEND

1 HOUR FIRE BARRIER
2 HOUR FIRE BARRIER

LEGEND

EXISTING
NEW
HIDDEN ABOVE/BEYOND
(X) WINDOW TYPE

THE DRAWINGS IN THIS SET ARE RECORD DRAWINGS. THEY ARE CONSTRUCTION CONTRACT DRAWINGS WHICH HAVE BEEN REVISED BASED ON AVAILABLE FIELD INFORMATION RECORDED BY OTHERS DURING CONSTRUCTION OF THIS CONTRACT. THERE HAS BEEN NO VERIFICATION OF DIMENSIONS SHOWN ON THE CONSTRUCTION DRAWINGS OR THE ACCURACY/COMPLETENESS OF THE FIELD INFORMATION RECEIVED.

SIGNATURE — DATE 2/7/2023

AS-BUILT REPLACEMENT SHEET

PROFESSIONAL CERTIFICATION

THIS DRAWING WAS ORIGINALLY APPROVED FOR CONSTRUCTION AND SEALED BY PATRICK DAUGHTON, A REGISTERED PROFESSIONAL ARCHITECT IN THE STATE OF MARYLAND, NO. 18898

NOTICE TO CONTRACTORS

- PROJECT ELEVATIONS ARE BASED ON NAVD88 AND HOWARD COUNTY'S BENCHMARK SYSTEM
- PREVIOUS PROJECTS USED OTHER DATUMS
- APPLY THE FOLLOWING CONVERSIONS WHEN USING PREVIOUS CONTRACT DRAWINGS:
  - ADDITION NO. 6: SUBTRACT 0.80 FT
  - PRIOR ADDITIONS: SUBTRACT 1.04 FT

DEPARTMENT OF PUBLIC WORKS
HOWARD COUNTY, MARYLAND

CHIEF, BUREAU OF UTILITIES — DATE

DES: RK
DRN: RK
CHK: BE
DATE: 01/2018

DATE	REV	DESCRIPTION
03/2021		RECORD DRAWINGS

ARCHITECTURAL

DRYER BUILDING PLAN AT EL 155.20

LITTLE PATUXENT WATER RECLAMATION PLANT
8TH ADDITION
BIOSOLIDS PROCESSING FACILITIES - PHASE 2

CAPITAL PROJECT S-6295
CONTRACT NO. 24-4936

ELECTION DISTRICT NO. 6
HOWARD COUNTY, MARYLAND

SCALE AS SHOWN

SHEET 110 OF 311

A-503

BIM 360://10054364 – Little Patuxent WRP 8th Addition/264592_100_A_V18.rvt
1/7/2022 11:35:58 AM

GENERAL NOTES

1 SEE SHEET A-501 FOR GENERAL NOTES.

KEY NOTES (X)

1 NEW STEEL FRAMING, REFER TO STRUCTURAL
2 DOOR, AS SCHEDULED

WALL RATING LEGEND

1 HOUR FIRE BARRIER
2 HOUR FIRE BARRIER

LEGEND

EXISTING
NEW
HIDDEN ABOVE/BEYOND
(X) WINDOW TYPE

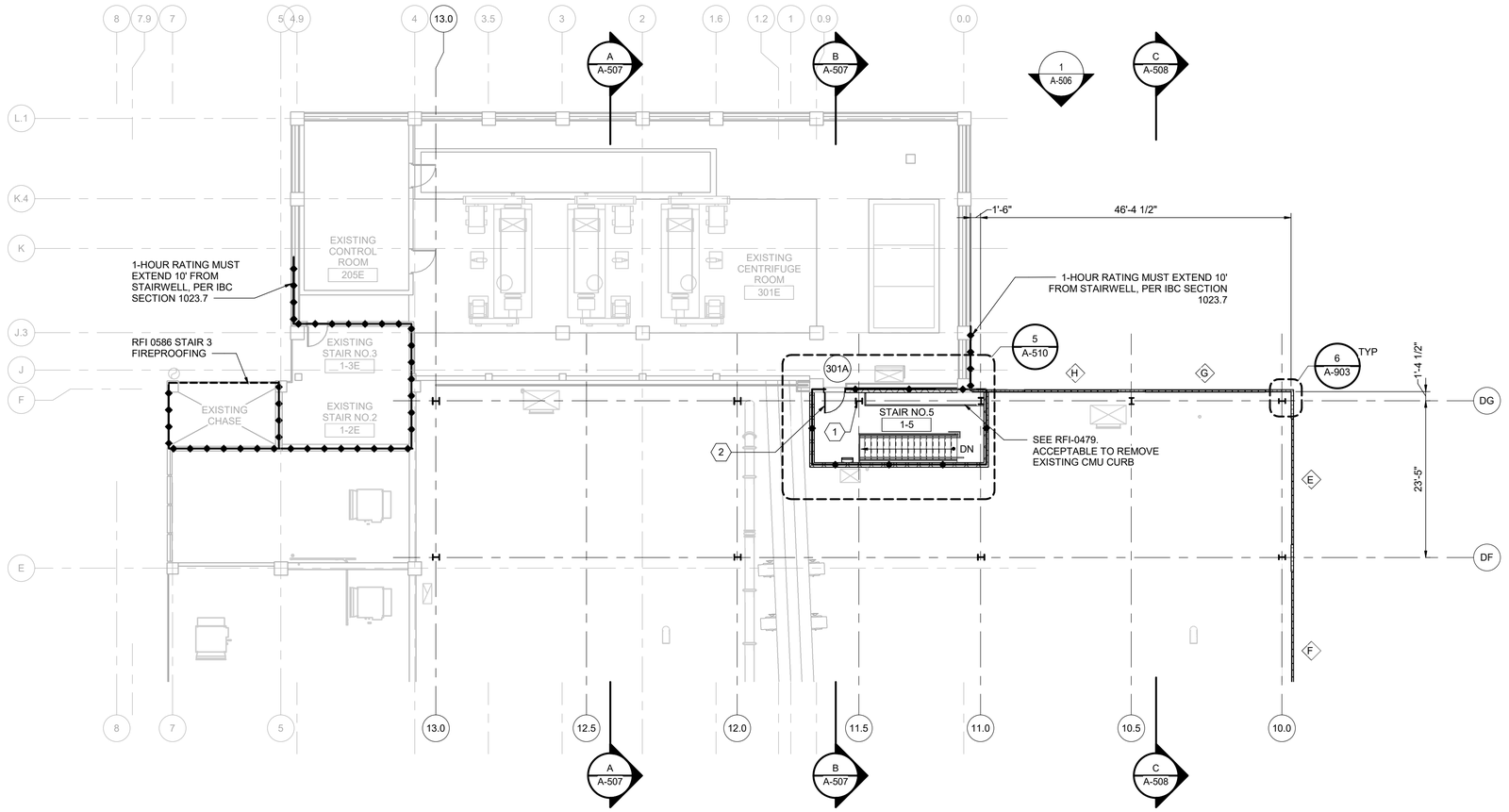

PLAN AT EL 167.00
3/32" = 1'-0"

THE DRAWINGS IN THIS SET ARE RECORD DRAWINGS. THEY ARE CONSTRUCTION CONTRACT DRAWINGS WHICH HAVE BEEN REVISED BASED ON AVAILABLE FIELD INFORMATION RECORDED BY OTHERS DURING CONSTRUCTION OF THIS CONTRACT. THERE HAS BEEN NO VERIFICATION OF DIMENSIONS SHOWN ON THE CONSTRUCTION DRAWINGS OR THE ACCURACY/COMPLETENESS OF THE FIELD INFORMATION RECEIVED.

SIGNATURE 2/7/2023 DATE

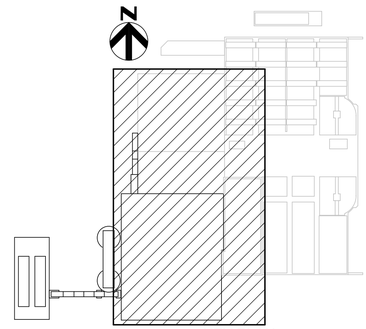

KEY PLAN

AS-BUILT REPLACEMENT SHEET

PROFESSIONAL CERTIFICATION

THIS DRAWING WAS ORIGINALLY APPROVED FOR CONSTRUCTION AND SEALED BY PATRICK DAUGHTON, A REGISTERED PROFESSIONAL ARCHITECT IN THE STATE OF MARYLAND, NO. 18898

NOTICE TO CONTRACTORS

- PROJECT ELEVATIONS ARE BASED ON NAVD88 AND HOWARD COUNTY'S BENCHMARK SYSTEM
- PREVIOUS PROJECTS USED OTHER DATUMS
- APPLY THE FOLLOWING CONVERSIONS WHEN USING PREVIOUS CONTRACT DRAWINGS:
  - ADDITION NO. 6: SUBTRACT 0.80 FT
  - PRIOR ADDITIONS: SUBTRACT 1.04 FT

DEPARTMENT OF PUBLIC WORKS
HOWARD COUNTY, MARYLAND

CHIEF, BUREAU OF UTILITIES DATE

DES: RK
DRN: RK
CHK: BE
DATE: 01/2018

DATE	REV	DESCRIPTION
03/2021		RECORD DRAWINGS

ARCHITECTURAL

DRYER BUILDING PLAN AT EL 167.00

LITTLE PATUXENT WATER RECLAMATION PLANT
8TH ADDITION
BIOSOLIDS PROCESSING FACILITIES - PHASE 2

CAPITAL PROJECT S-6295
CONTRACT NO. 24-4936

ELECTION DISTRICT NO. 6
HOWARD COUNTY, MARYLAND

SCALE AS SHOWN

SHEET 111 OF 311

A-504

BIM 360://10054364 – Little Patuxent WRP 8th Addition/264592_100_A_V18.rvt
1/7/2022 11:36:02 AM

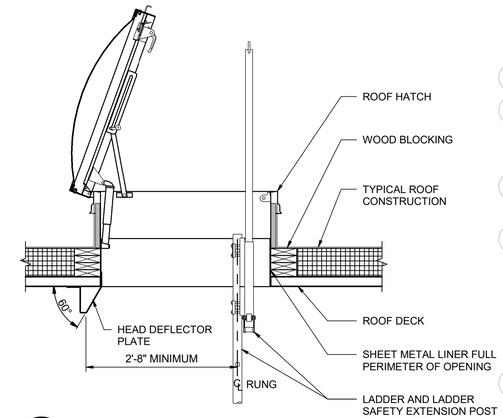

2 - ROOF HATCH DETAIL
3/4" = 1'-0"

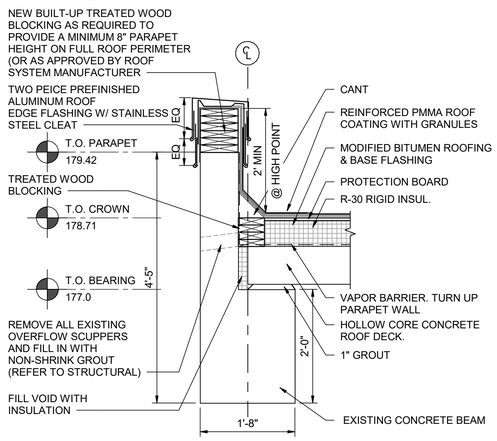

3 - SOFFIT DETAIL
3/4" = 1'-0"

NOTE:
EXISTING 8" PRECAST HOLLOW CORE CONCRETE DECK SPANS IN THE EAST-WEST DIRECTION. FIELD VERIFY AND COORDINATE EXACT LOCATIONS OF PRECAST CONCRETE DECK JOINTS WITH STRUCTURAL AND PLUMBING ENGINEERS PRIOR TO CUTTING HOLES FOR NEW ROOF DRAINS. NEW ROOF DRAINS SHALL NOT BE LOCATED DIRECTLY OVER ELECTRICAL EQUIPMENT IN THE ROOM BELOW.

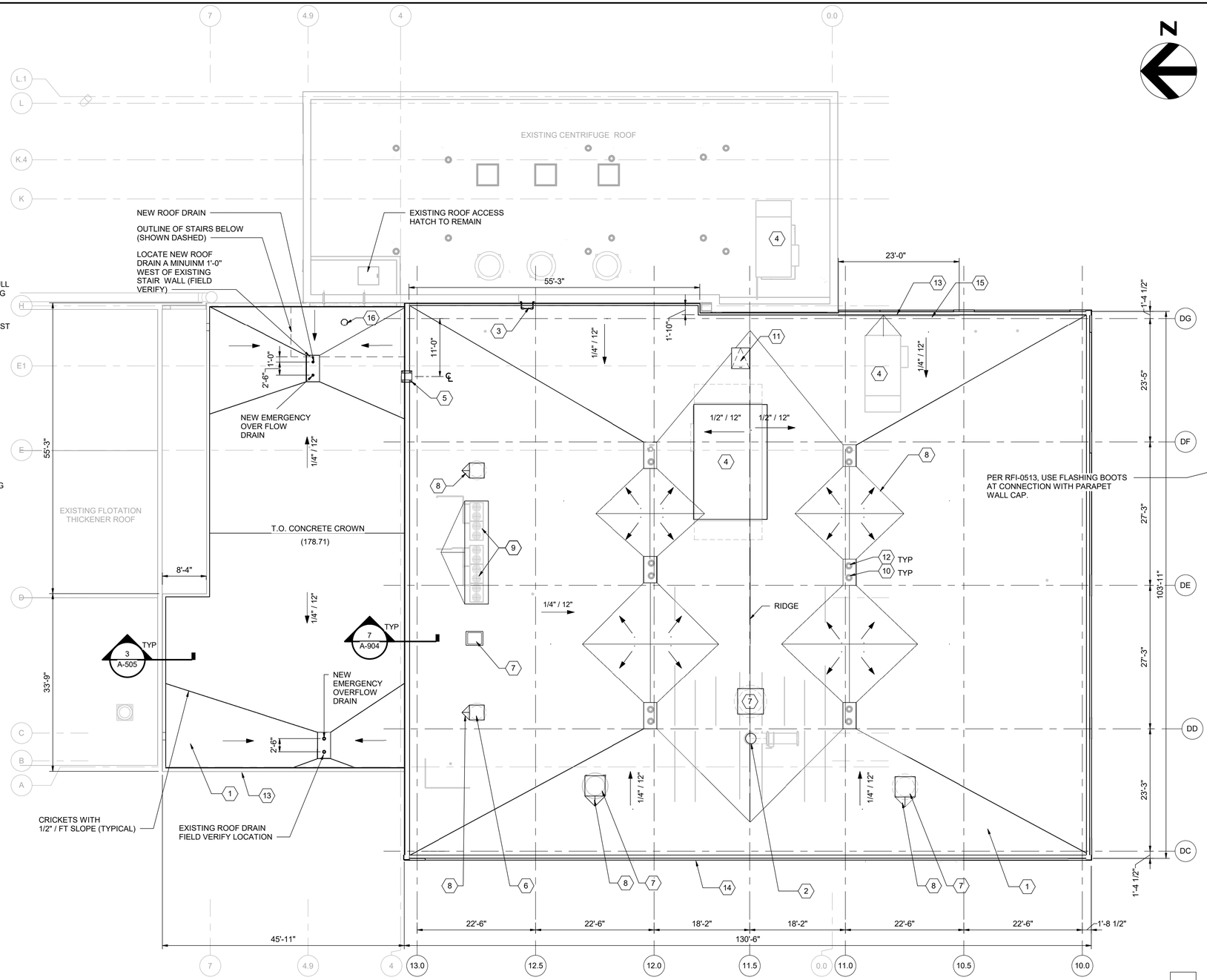

ROOF PLAN
3/32" = 1'-0"

GENERAL NOTES

1 ROOFING SYSTEM TAPERED INSULATION SHALL HAVE A MIN THICKNESS OF 2" AT DRAINS AND A MIN SLOPE OF 1/4" PER FT.

2 REFER TO SHEET A-905 FOR TYPICAL ROOF DETAILS

3 THE MINIMUM ROOF INSULATION THICKNESS SHALL ACHIEVE MINIMUM R-30

4 EXISTING ROOF STRUCTURE OVER MCC ELECTRICAL ROOM IS CONSTRUCTED WITH PRECAST HOLLOW CORE CONCRETE WITH SLOPED CONCRETE TOPPING WITH A SLOPE OF 1/4" / FT. ROOFING SYSTEM INSULATION ABOVE THIS SPACE SHALL BE 6" THICK OR AS REQUIRED TO ACHIEVE R-30.

KEY NOTES (X)

1 SBS MODIFIED BITUMEN ROOFING SYSTEM. SEE SPECIFICATION 07 52 16. PROVIDE CONTINUOUS FLUID APPLIED FLOOD COAT W/ MARBLE CHIP OVER ROOFING CAP SHEET.
2 PIPE PENETRATION, SEE SHEET 8/A-905.
3 ACCESS LADDER, SEE 7/A-905 FOR DETAILS
4 MAKEUP AIR UNIT, REFER TO MECHANICAL
5 PARAPET ACCESS LADDER, SEE 6/A-905 FOR DETAILS.
6 EXHAUST FAN/ROOF VENT, REFER TO MECHANICAL
7 HEAT PUMP, REFER TO MECHANICAL
8 CRICKET W/ MINIMUM 1/2"/FT SLOPE
9 HEAT PUMP UNIT, SEE 2/A-905 FOR SUPORT DETAIL.
10 ROOF DRAINS, TYP
11 ROOF ACCESS HATCH, SEE 2/A-505 AND 10/A-905
12 OVERFLOW DRAIN
13 PREFINISHED METAL COPING
14 PREFINISHED ALUMINUM COPING
15 ROOF MOUNTED GUARDRAIL
16 REMOVE EXISTING ROOF DRAIN AND PROVIDE MINIMUM 1/4" THICK GALVANIZED STEEL PLATE SIZED TO PROVIDE MINIMUM 4" COVERAGE CENTERED OVER DECK OPENING. PROVIDE (4) 1 /4" HILTI HDI-P DROP IN ANCHORS (OR APPROVED EQUAL). ANCHORS TO BE LOCATED 1 1/2" FROM THE EDGES OF PLATE, MAXIMIZING EDGE DISTANCE FROM OPENING.

LEGEND

EXISTING
NEW
HIDDEN ABOVE/BEYOND
(X) WINDOW TYPE

THE DRAWINGS IN THIS SET ARE RECORD DRAWINGS. THEY ARE CONSTRUCTION CONTRACT DRAWINGS WHICH HAVE BEEN REVISED BASED ON AVAILABLE FIELD INFORMATION RECORDED BY OTHERS DURING CONSTRUCTION OF THIS CONTRACT. THERE HAS BEEN NO VERIFICATION OF DIMENSIONS SHOWN ON THE CONSTRUCTION DRAWINGS OR THE ACCURACY/COMPLETENESS OF THE FIELD INFORMATION RECEIVED.

SIGNATURE 2/7/2022 DATE

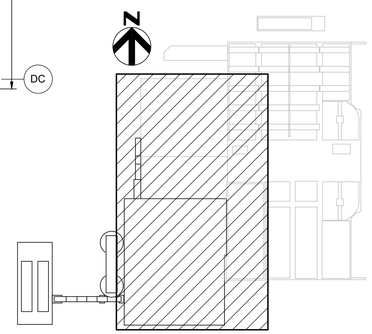

KEY PLAN

AS-BUILT REPLACEMENT SHEET

PROFESSIONAL CERTIFICATION
THIS DRAWING WAS ORIGINALLY APPROVED FOR CONSTRUCTION AND SEALED BY PATRICK DAUGHTON, A REGISTERED PROFESSIONAL ARCHITECT IN THE STATE OF MARYLAND, NO. 18898

NOTICE TO CONTRACTORS
- PROJECT ELEVATIONS ARE BASED ON NAVD88 AND HOWARD COUNTY'S BENCHMARK SYSTEM
- PREVIOUS PROJECTS USED OTHER DATUMS
- APPLY THE FOLLOWING CONVERSIONS WHEN USING PREVIOUS CONTRACT DRAWINGS:
  - ADDITION NO. 6: SUBTRACT 0.80 FT
  - PRIOR ADDITIONS: SUBTRACT 1.04 FT

DEPARTMENT OF PUBLIC WORKS
HOWARD COUNTY, MARYLAND

CHIEF, BUREAU OF UTILITIES DATE

DES: RK
DRN: RK
CHK: BE
DATE: 01/2018

DATE	REV	DESCRIPTION
03/2021		RECORD DRAWINGS

ARCHITECTURAL

DRYER BUILDING ROOF PLAN

LITTLE PATUXENT WATER RECLAMATION PLANT
8TH ADDITION
BIOSOLIDS PROCESSING FACILITIES - PHASE 2

CAPITAL PROJECT S-6295
CONTRACT NO. 24-4936

ELECTION DISTRICT NO. 6
HOWARD COUNTY, MARYLAND

SCALE AS SHOWN

SHEET 112 OF 311

A-505

BIM 360://10054364 – Little Patuxent WRP 8th Addition/264592_100_A_V18.rvt
1/7/2022 11:36:25 AM

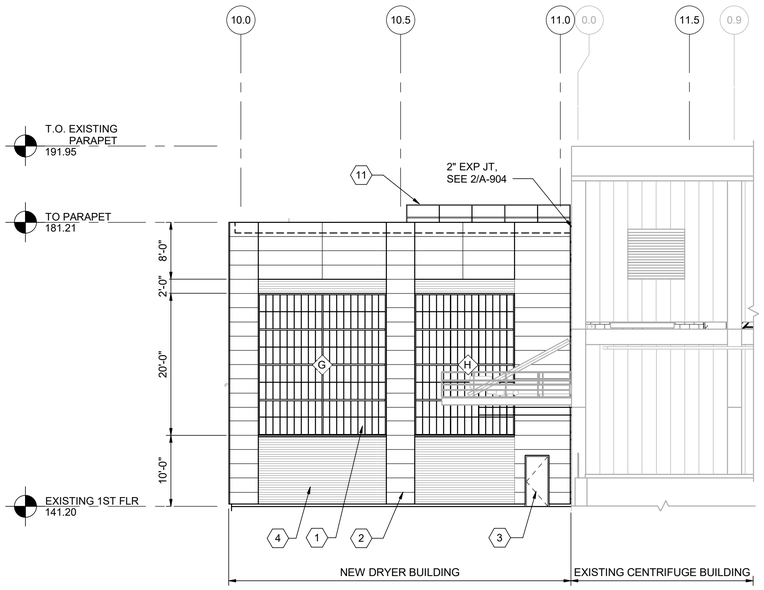

1 A-502 **DRYER - EAST ELEVATION**
3/32" = 1'-0"

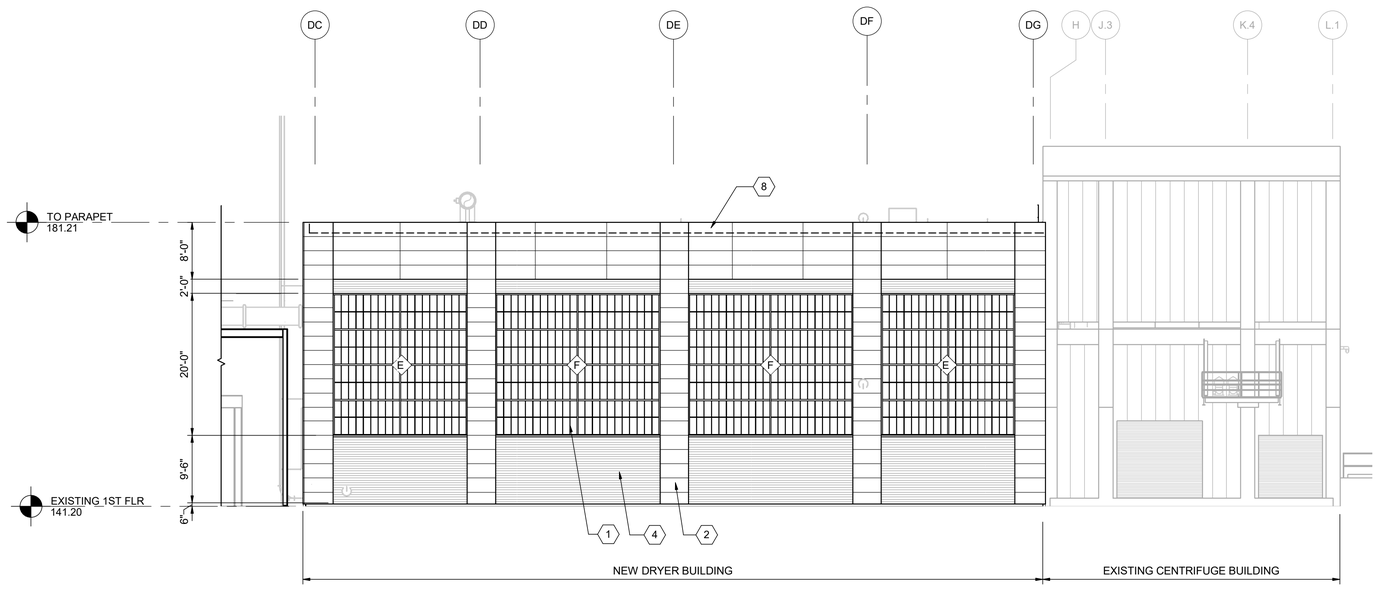

3 A-502 **DRYER - SOUTH ELEVATION**
3/32" = 1'-0"

GENERAL NOTES

1. CONTRACTOR SHALL FIELD VERIFY ALL DIMENSIONS AND EXISTING CONDITIONS.
2. SOME OF THE BIOSOLIDS SILOS AND RELATED STRUCTURES NOT SHOWN FOR CLARITY IN ARCHITECTURAL ELEVATIONS. SEE PROCESS DRAWINGS FOR INFORMATION.
3. REFER TO 8/A-905 FOR TYPICAL WALL PENETRATION DETAIL.
4. INSULATED METAL WALL PANELS SHALL ACHIEVE MINIMUM R-20

KEY NOTES (X)

1. TRANSLUCENT WALL PANEL
2. INSULATED METAL PANEL - HORIZONTAL SMOOTH FACE
3. DOOR, AS SCHEDULED
4. INSULATED METAL PANEL - HORIZONTAL RIBBED
5. ACCESS LADDER, SEE 7/A-905 FOR DETAILS
6. NEW INFILL METAL WALL PANEL TO MATCH EXISTING. OLD PANELS BEING DEMOLISHED.
7. PARAPET ACCESS LADDER, SEE 6/A-905 FOR DETAILS.
8. ROOF PARAPET W/ CONT AL COPING CAP
9. PIPE PENETRATION, SEE SHEET 8/A-905.
10. AL GUARDRAIL SYSTEM, REFER TO STRUCTURAL FOR DETAILS
11. ROOF MOUNTED GUARDRAIL

THE DRAWINGS IN THIS SET ARE RECORD DRAWINGS. THEY ARE CONSTRUCTION CONTRACT DRAWINGS WHICH HAVE BEEN REVISED BASED ON AVAILABLE FIELD INFORMATION RECORDED BY OTHERS DURING CONSTRUCTION OF THIS CONTRACT. THERE HAS BEEN NO VERIFICATION OF DIMENSIONS SHOWN ON THE CONSTRUCTION DRAWINGS OR THE ACCURACY/COMPLETENESS OF THE FIELD INFORMATION RECEIVED.

SIGNATURE _____ DATE 2/7/2023

LEGEND

- EXISTING
- NEW
- HIDDEN ABOVE/BEYOND
- (X) WINDOW TYPE

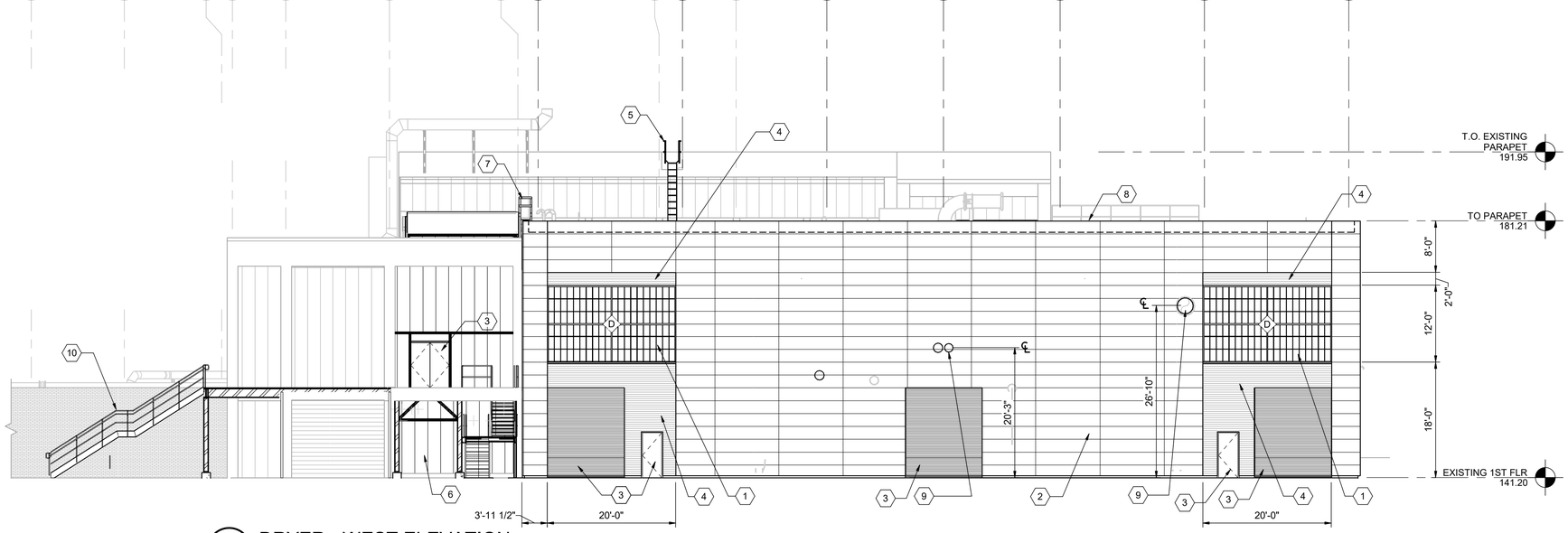

2 A-502 **DRYER - WEST ELEVATION**
3/32" = 1'-0"

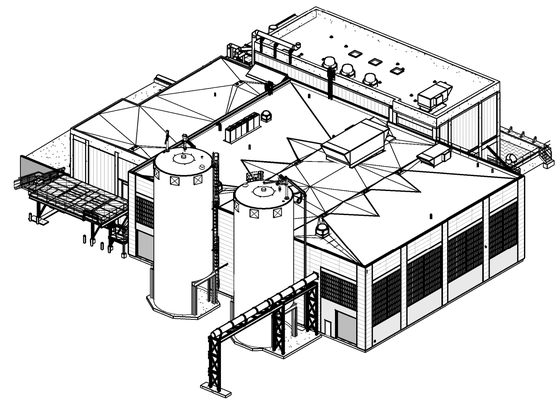

4 - **3D VIEW**
NOT TO SCALE

BIM 360://10054364 – Little Patuxent WRP 8th Addition/264592_100_A_V18.rvt
1/7/2022 11:37:57 AM

AS-BUILT REPLACEMENT SHEET

PROFESSIONAL CERTIFICATION

THIS DRAWING WAS ORIGINALLY APPROVED FOR CONSTRUCTION AND SEALED BY PATRICK DAUGHTON, A REGISTERED PROFESSIONAL ARCHITECT IN THE STATE OF MARYLAND, NO. 18898

NOTICE TO CONTRACTORS

- PROJECT ELEVATIONS ARE BASED ON NAVD88 AND HOWARD COUNTY'S BENCHMARK SYSTEM
- PREVIOUS PROJECTS USED OTHER DATUMS
- APPLY THE FOLLOWING CONVERSIONS WHEN USING PREVIOUS CONTRACT DRAWINGS:
  - ADDITION NO. 6: SUBTRACT 0.80 FT
  - PRIOR ADDITIONS: SUBTRACT 1.04 FT

DEPARTMENT OF PUBLIC WORKS
HOWARD COUNTY, MARYLAND

CHIEF, BUREAU OF UTILITIES DATE

DES: RK
DRN: RK
CHK: BE
DATE: 01/2018

DATE	REV	DESCRIPTION
03/2021		RECORD DRAWINGS

ARCHITECTURAL

DRYER BUILDING EXTERIOR ELEVATIONS

LITTLE PATUXENT WATER RECLAMATION PLANT
8TH ADDITION
BIOSOLIDS PROCESSING FACILITIES - PHASE 2

CAPITAL PROJECT S-6295
CONTRACT NO. 24-4936

ELECTION DISTRICT NO. 6
HOWARD COUNTY, MARYLAND

SCALE AS SHOWN

SHEET 113 OF 311

A-506

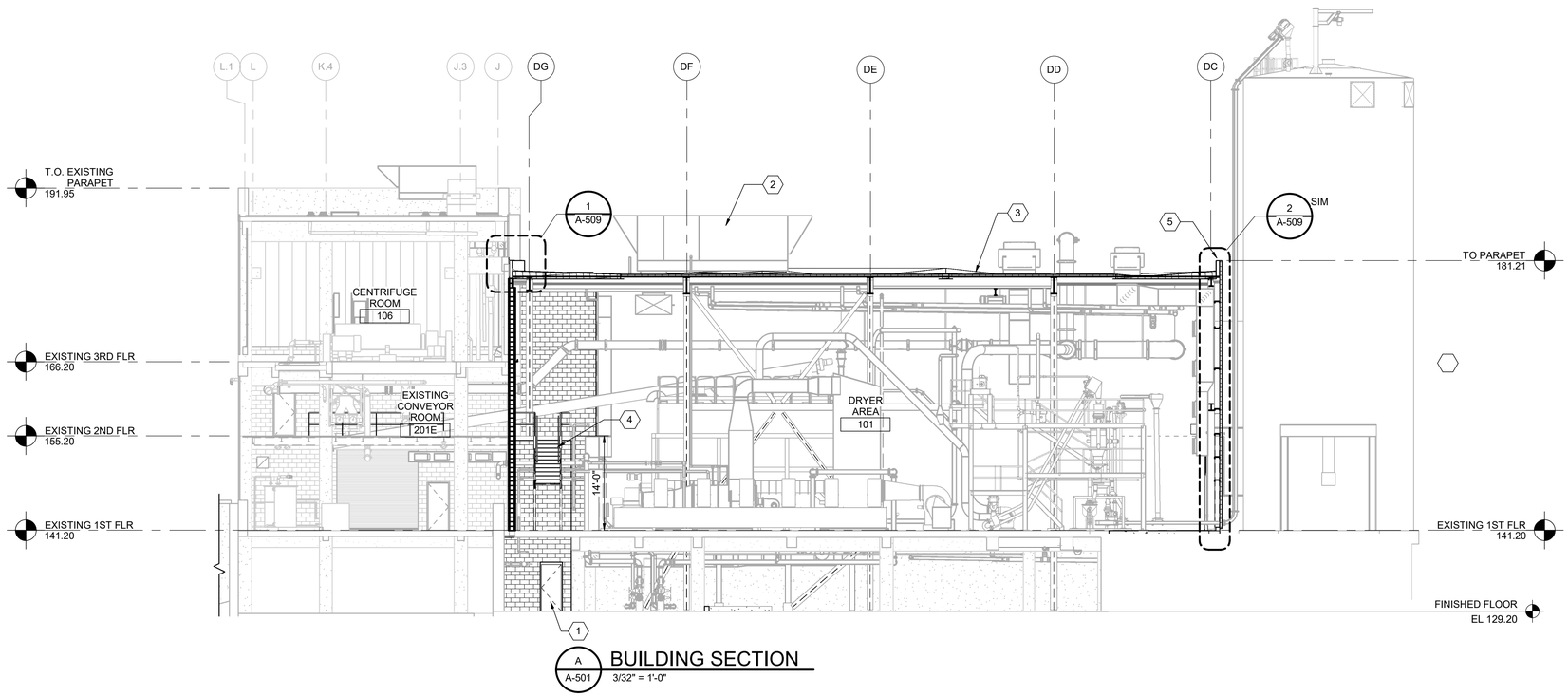

A A-501 **BUILDING SECTION**
3/32" = 1'-0"

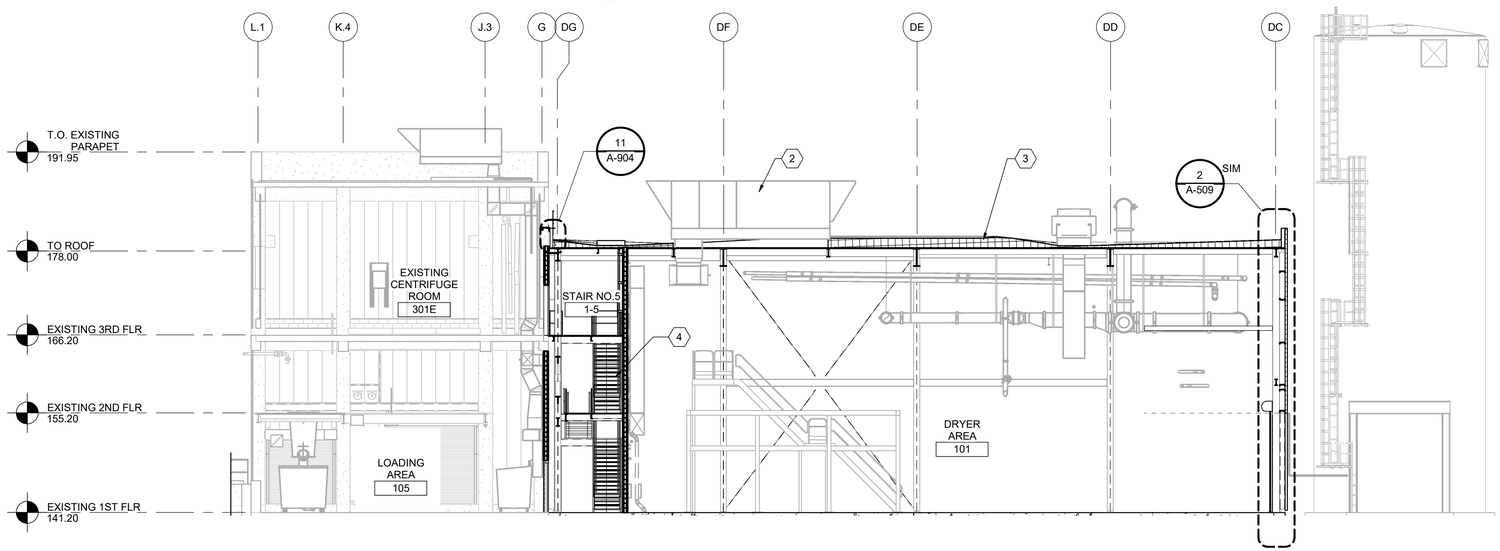

B A-502 **BUILDING SECTION**
3/32" = 1'-0"

KEY NOTES (X)

1 DOOR, AS SCHEDULED
2 MAKEUP AIR UNIT, REFER TO MECHANICAL
3 SBS MODIFIED BITUMEN ROOFING SYSTEM. SEE SPECIFICATION 07 52 16. PROVIDE CONTINUOUS FLUID APPLIED FLOOD COAT W/ MARBLE CHIP OVER ROOFING CAP SHEET.
4 AL GUARDRAIL SYSTEM, REFER TO STRUCTURAL FOR DETAILS
5 ROOF PARAPET W/ CONT AL COPING CAP

LEGEND

EXISTING
NEW
HIDDEN ABOVE/BEYOND
X WINDOW TYPE

THE DRAWINGS IN THIS SET ARE RECORD DRAWINGS. THEY ARE CONSTRUCTION CONTRACT DRAWINGS WHICH HAVE BEEN REVISED BASED ON AVAILABLE FIELD INFORMATION RECORDED BY OTHERS DURING CONSTRUCTION OF THIS CONTRACT. THERE HAS BEEN NO VERIFICATION OF DIMENSIONS SHOWN ON THE CONSTRUCTION DRAWINGS OR THE ACCURACY/COMPLETENESS OF THE FIELD INFORMATION RECEIVED.

SIGNATURE — DATE 1/7/2022

AS-BUILT REPLACEMENT SHEET

PROFESSIONAL CERTIFICATION

THIS DRAWING WAS ORIGINALLY APPROVED FOR CONSTRUCTION AND SEALED BY PATRICK DAUGHTON, A REGISTERED PROFESSIONAL ARCHITECT IN THE STATE OF MARYLAND, NO. 18898

NOTICE TO CONTRACTORS

- PROJECT ELEVATIONS ARE BASED ON NAVD88 AND HOWARD COUNTY'S BENCHMARK SYSTEM
- PREVIOUS PROJECTS USED OTHER DATUMS
- APPLY THE FOLLOWING CONVERSIONS WHEN USING PREVIOUS CONTRACT DRAWINGS:
  - ADDITION NO. 6: SUBTRACT 0.80 FT
  - PRIOR ADDITIONS: SUBTRACT 1.04 FT

DEPARTMENT OF PUBLIC WORKS
HOWARD COUNTY, MARYLAND

CHIEF, BUREAU OF UTILITIES — DATE

DES: RK
DRN: RK
CHK: BE
DATE: 01/2018

DATE	REV	DESCRIPTION
03/2021		RECORD DRAWINGS

ARCHITECTURAL

DRYER BUILDING BUILDING SECTIONS

LITTLE PATUXENT WATER RECLAMATION PLANT
8TH ADDITION
BIOSOLIDS PROCESSING FACILITIES - PHASE 2

CAPITAL PROJECT S-6295
CONTRACT NO. 24-4936

ELECTION DISTRICT NO. 6
HOWARD COUNTY, MARYLAND

SCALE AS SHOWN

SHEET 114 OF 311

A-507

BIM 360://10054364 – Little Patuxent WRP 8th Addition/264592_100_A_V18.rvt
1/7/2022 11:38:09 AM

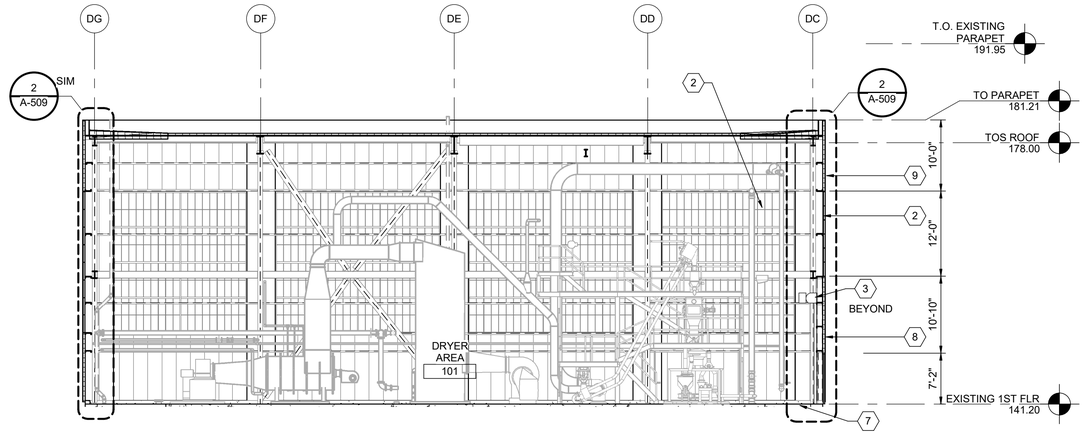

C A-502 BUILDING SECTION
3/32" = 1'-0"

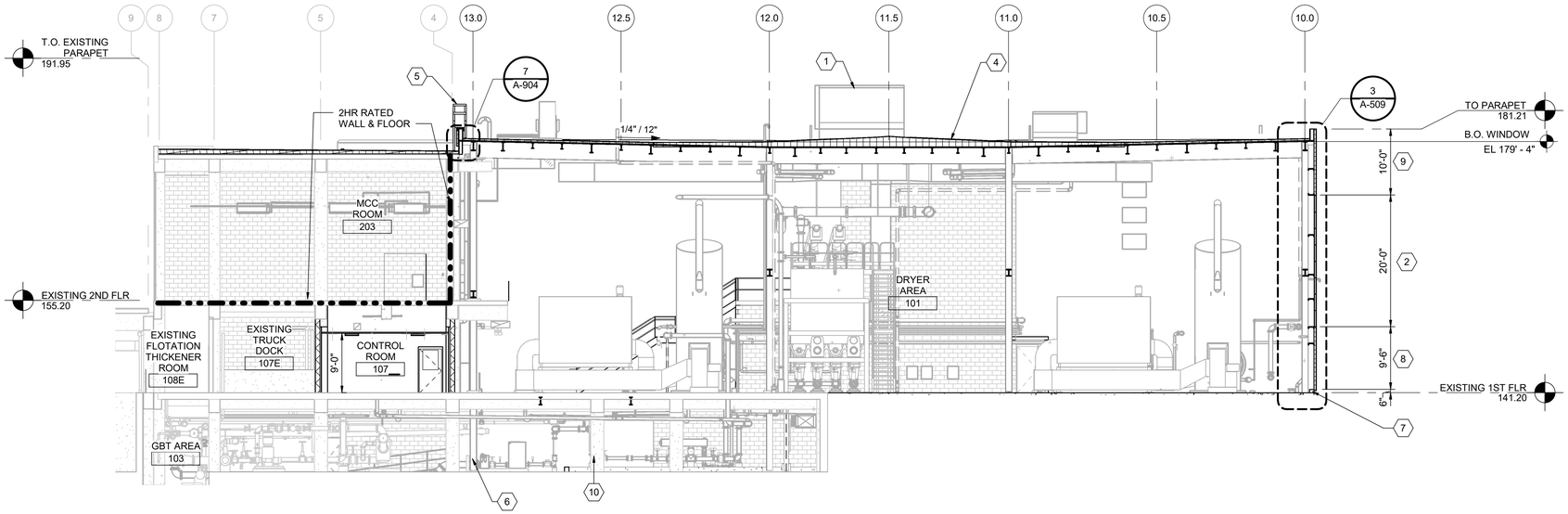

D A-501 BUILDING SECTION
3/32" = 1'-0"

KEY NOTES (X)

1 MAU, REFER TO MECHANICAL
2 TRANSLUCENT WALL PANEL
3 OVERHEAD DOOR
4 SBS MODIFIED BITUMEN ROOFING SYSTEM. SEE SPECIFICATION 07 52 16. PROVIDE CONTINUOUS FLUID APPLIED FLOOD COAT W/ MARBLE CHIP OVER ROOFING CAP SHEET.
5 PARAPET ACCESS LADDER, SEE 6/A-905 FOR DETAILS.
6 NEW STEEL FRAMING, REFER TO STRUCTURAL
7 CONCRETE FOUNDATION, REFER TO STRUCTURAL
8 INSULATED METAL PANEL - HORIZONTAL RIBBED
9 INSULATED METAL PANEL - HORIZONTAL SMOOTH FACE
10 CONCRETE COLUMN, REFER TO STRUCTURAL

LEGEND

EXISTING
NEW
HIDDEN ABOVE/BEYOND
X WINDOW TYPE

THE DRAWINGS IN THIS SET ARE RECORD DRAWINGS. THEY ARE CONSTRUCTION CONTRACT DRAWINGS WHICH HAVE BEEN REVISED BASED ON AVAILABLE FIELD INFORMATION RECORDED BY OTHERS DURING CONSTRUCTION OF THIS CONTRACT. THERE HAS BEEN NO VERIFICATION OF DIMENSIONS SHOWN ON THE CONSTRUCTION DRAWINGS OR THE ACCURACY/COMPLETENESS OF THE FIELD INFORMATION RECEIVED.

SIGNATURE 2/7/2023 DATE

AS-BUILT REPLACEMENT SHEET

PROFESSIONAL CERTIFICATION
THIS DRAWING WAS ORIGINALLY APPROVED FOR CONSTRUCTION AND SEALED BY PATRICK DAUGHTON, A REGISTERED PROFESSIONAL ARCHITECT IN THE STATE OF MARYLAND, NO. 18898

NOTICE TO CONTRACTORS
- PROJECT ELEVATIONS ARE BASED ON NAVD88 AND HOWARD COUNTY'S BENCHMARK SYSTEM
- PREVIOUS PROJECTS USED OTHER DATUMS
- APPLY THE FOLLOWING CONVERSIONS WHEN USING PREVIOUS CONTRACT DRAWINGS:
  - ADDITION NO. 6: SUBTRACT 0.80 FT
  - PRIOR ADDITIONS: SUBTRACT 1.04 FT

DEPARTMENT OF PUBLIC WORKS
HOWARD COUNTY, MARYLAND

CHIEF, BUREAU OF UTILITIES DATE

DES: RK
DRN: RK
CHK: BE
DATE: 01/2018

DATE	REV	DESCRIPTION
03/2021		RECORD DRAWINGS

ARCHITECTURAL

DRYER BUILDING BUILDING SECTIONS

LITTLE PATUXENT WATER RECLAMATION PLANT
8TH ADDITION
BIOSOLIDS PROCESSING FACILITIES - PHASE 2

CAPITAL PROJECT S-6295
CONTRACT NO. 24-4936

ELECTION DISTRICT NO. 6
HOWARD COUNTY, MARYLAND

SCALE AS SHOWN

SHEET 115 OF 311

A-508

BIM 360://10054364 – Little Patuxent WRP 8th Addition/264592_100_A_V18.rvt
1/7/2022 11:38:19 AM

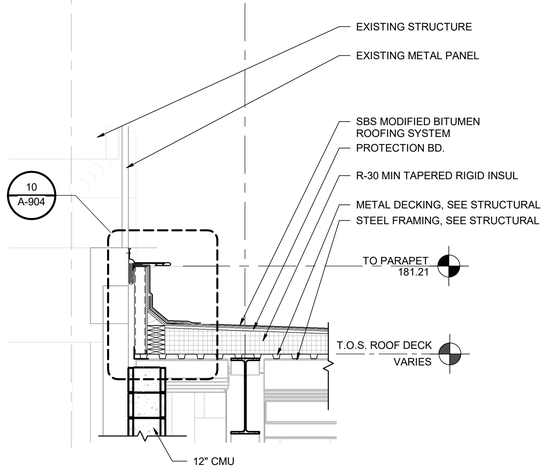

1 A-507 WALL SECTION 1/2" = 1'-0"

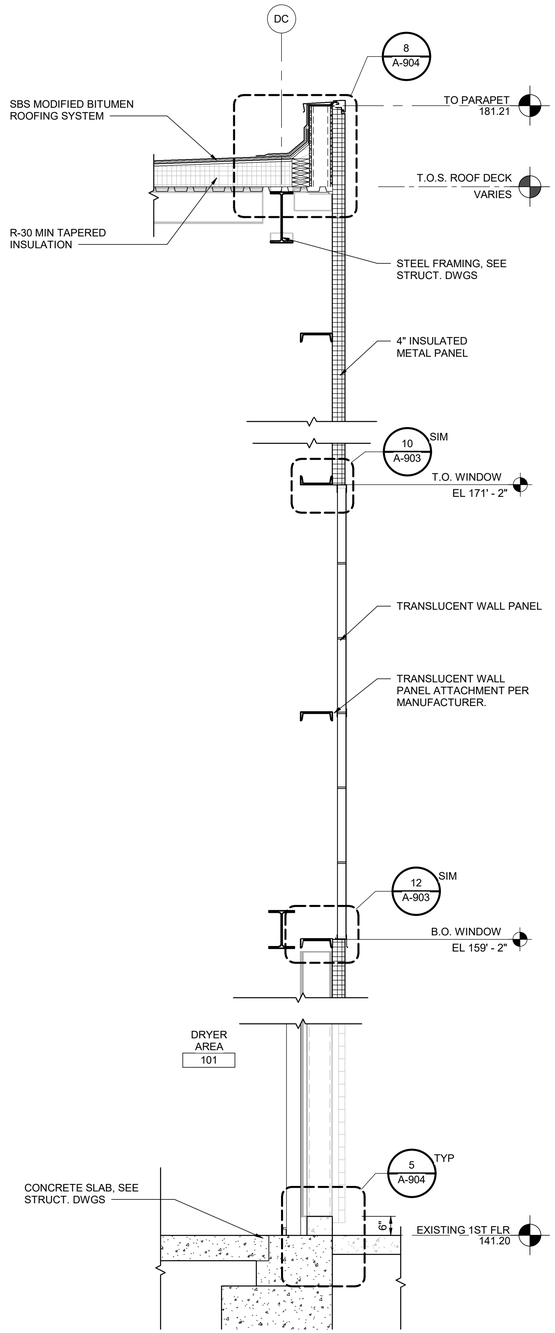

2 A-507 WALL SECTION 1/2" = 1'-0"

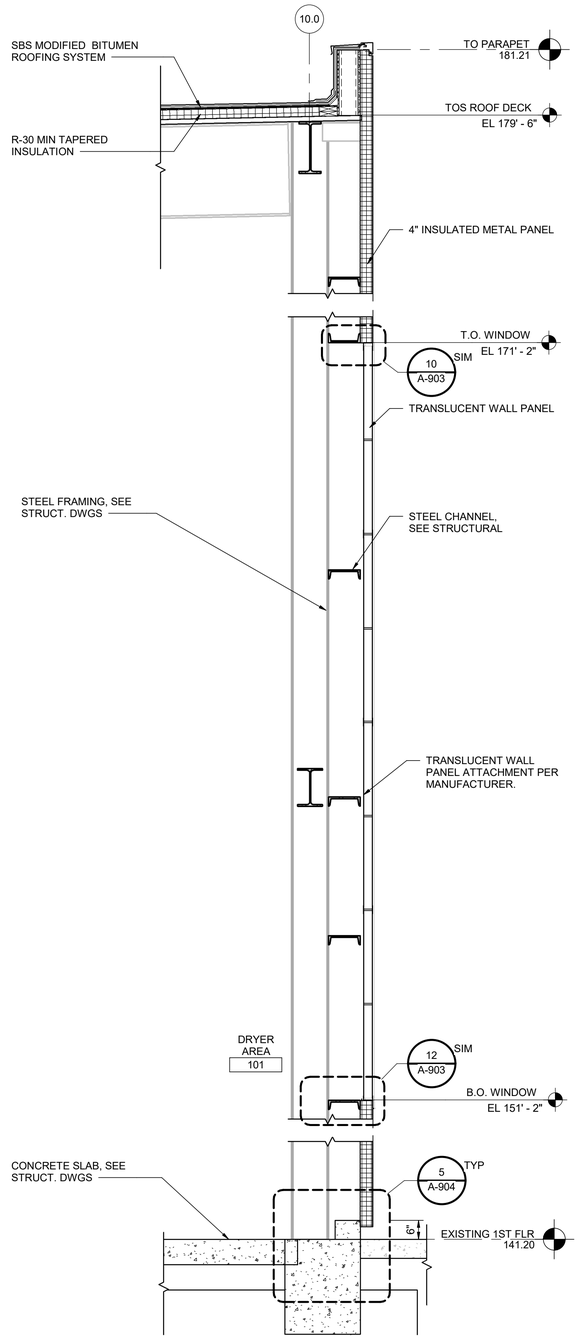

3 A-508 WALL SECTION 1/2" = 1'-0"

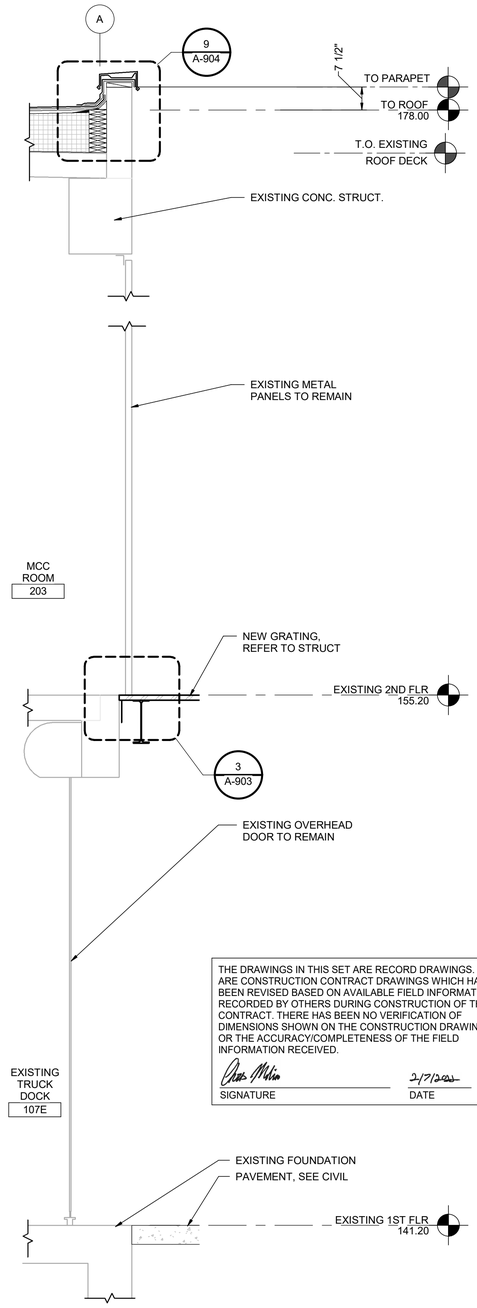

4 A-503 WALL SECTION 1/2" = 1'-0"

THE DRAWINGS IN THIS SET ARE RECORD DRAWINGS. THEY ARE CONSTRUCTION CONTRACT DRAWINGS WHICH HAVE BEEN REVISED BASED ON AVAILABLE FIELD INFORMATION RECORDED BY OTHERS DURING CONSTRUCTION OF THIS CONTRACT. THERE HAS BEEN NO VERIFICATION OF DIMENSIONS SHOWN ON THE CONSTRUCTION DRAWINGS OR THE ACCURACY/COMPLETENESS OF THE FIELD INFORMATION RECEIVED.

SIGNATURE 2/7/2022 DATE

AS-BUILT REPLACEMENT SHEET

PROFESSIONAL CERTIFICATION

THIS DRAWING WAS ORIGINALLY APPROVED FOR CONSTRUCTION AND SEALED BY PATRICK DAUGHTON, A REGISTERED PROFESSIONAL ARCHITECT IN THE STATE OF MARYLAND, NO. 18898

NOTICE TO CONTRACTORS

- PROJECT ELEVATIONS ARE BASED ON NAVD88 AND HOWARD COUNTY'S BENCHMARK SYSTEM
- PREVIOUS PROJECTS USED OTHER DATUMS
- APPLY THE FOLLOWING CONVERSIONS WHEN USING PREVIOUS CONTRACT DRAWINGS:
  - ADDITION NO. 6: SUBTRACT 0.80 FT
  - PRIOR ADDITIONS: SUBTRACT 1.04 FT

DEPARTMENT OF PUBLIC WORKS
HOWARD COUNTY, MARYLAND

CHIEF, BUREAU OF UTILITIES DATE

DES: RK
DRN: RK
CHK: BE
DATE: 01/2018

DATE	REV	DESCRIPTION
03/2021		RECORD DRAWINGS

ARCHITECTURAL

DRYER BUILDING WALL SECTIONS

LITTLE PATUXENT WATER RECLAMATION PLANT
8TH ADDITION
BIOSOLIDS PROCESSING FACILITIES - PHASE 2

CAPITAL PROJECT S-6295
CONTRACT NO. 24-4936

ELECTION DISTRICT NO. 6
HOWARD COUNTY, MARYLAND

SCALE AS SHOWN

SHEET 116 OF 311

A-509

BIM 360://10054364 – Little Patuxent WRP 8th Addition/264592_100_A_V18.rvt
1/7/2022 11:38:23 AM

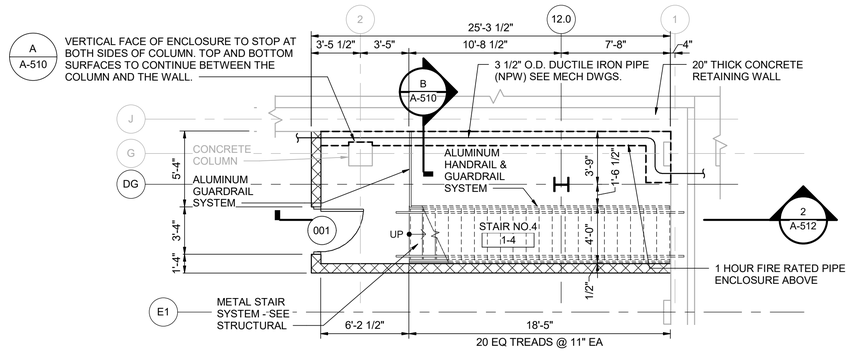

2 / A-501 STAIR #4 AT EL 128.00

3/16" = 1'-0"

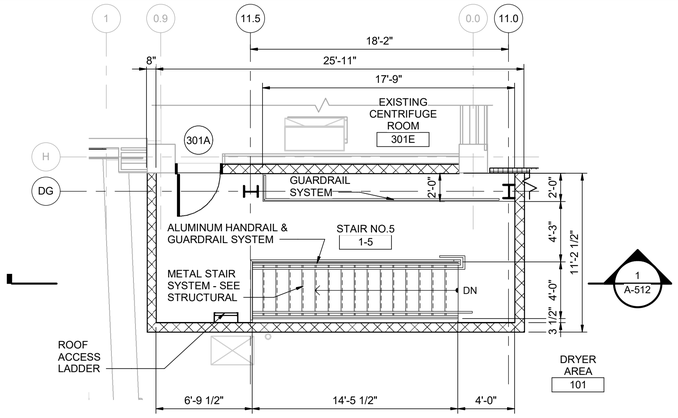

5 / A-504 STAIR #5 AT EL 167.00

3/16" = 1'-0"

GENERAL NOTES

1 REFER TO STRUCTURAL DRAWINGS FOR RAILING & POST DETAILS.

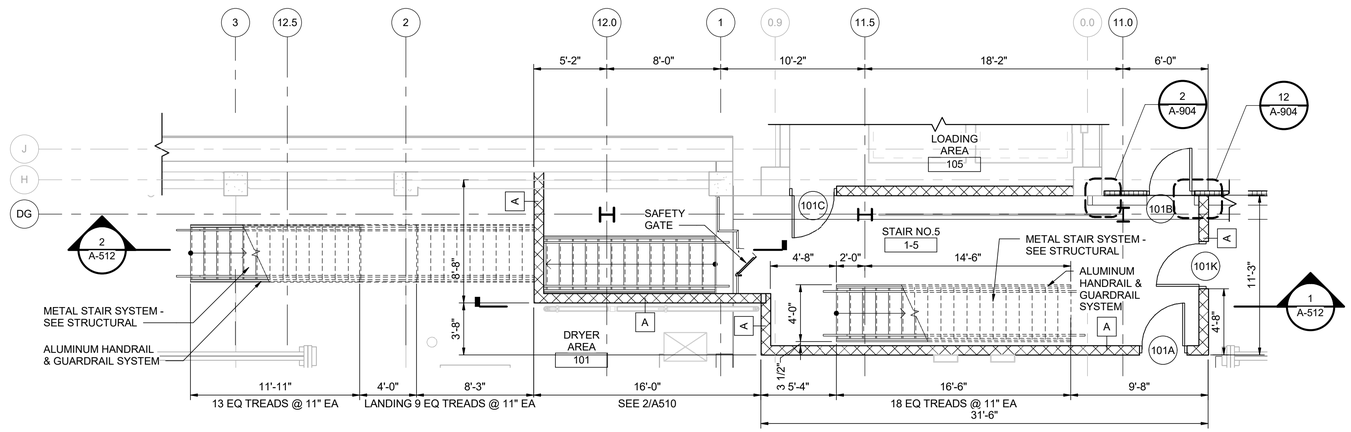

3 / A-502 STAIR #5 AT EL 141.20

3/16" = 1'-0"

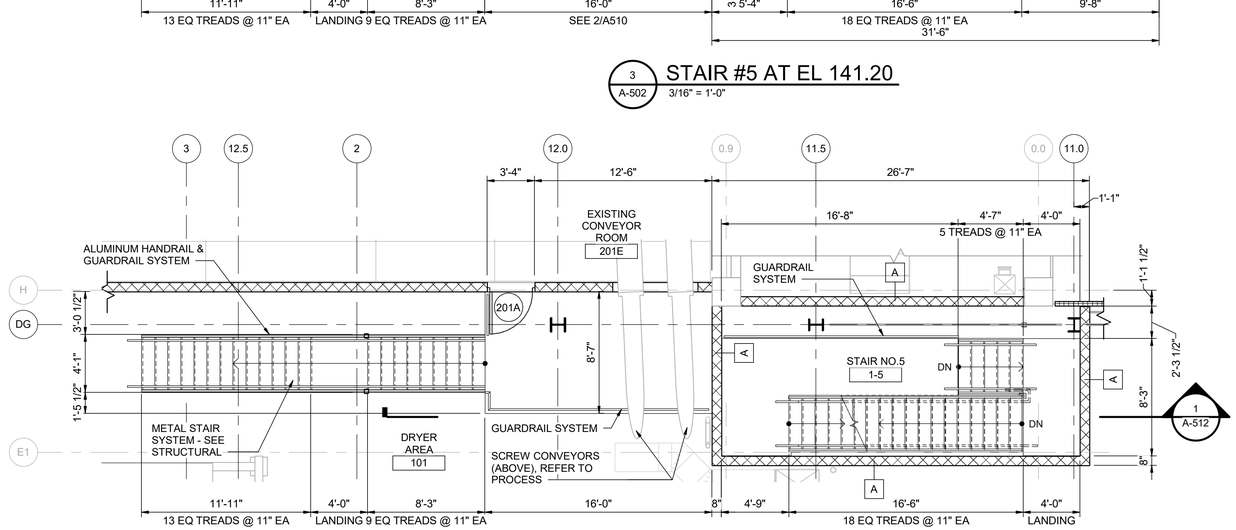

4 / A-503 STAIR #5 AT EL 155.20

3/16" = 1'-0"

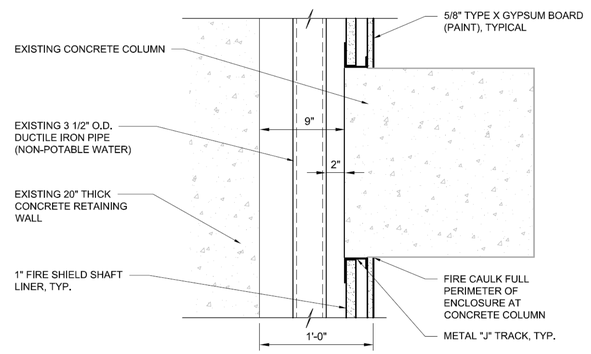

A / - SECTION AT 1 HOUR RATED ENCLOSURE

1 1/2" = 1'-0"

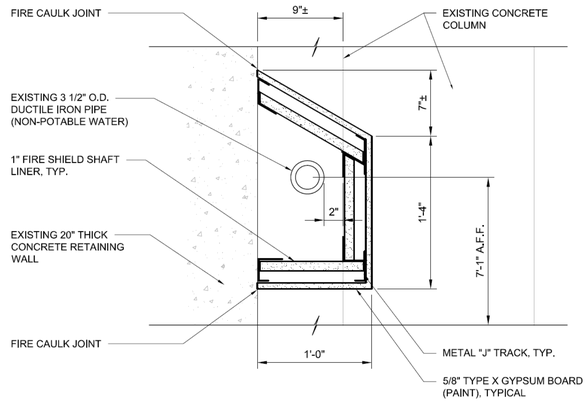

B / - SECTION AT 1 HOUR RATED ENCLOSURE

1 1/2" = 1'-0"

THE DRAWINGS IN THIS SET ARE RECORD DRAWINGS. THEY ARE CONSTRUCTION CONTRACT DRAWINGS WHICH HAVE BEEN REVISED BASED ON AVAILABLE FIELD INFORMATION RECORDED BY OTHERS DURING CONSTRUCTION OF THIS CONTRACT. THERE HAS BEEN NO VERIFICATION OF DIMENSIONS SHOWN ON THE CONSTRUCTION DRAWINGS OR THE ACCURACY/COMPLETENESS OF THE FIELD INFORMATION RECEIVED.

SIGNATURE — DATE 2/7/2023

AS-BUILT REPLACEMENT SHEET

PROFESSIONAL CERTIFICATION

THIS DRAWING WAS ORIGINALLY APPROVED FOR CONSTRUCTION AND SEALED BY PATRICK DAUGHTON, A REGISTERED PROFESSIONAL ARCHITECT IN THE STATE OF MARYLAND, NO. 18898

NOTICE TO CONTRACTORS

- PROJECT ELEVATIONS ARE BASED ON NAVD88 AND HOWARD COUNTY'S BENCHMARK SYSTEM
- PREVIOUS PROJECTS USED OTHER DATUMS
- APPLY THE FOLLOWING CONVERSIONS WHEN USING PREVIOUS CONTRACT DRAWINGS:
  - ADDITION NO. 6: SUBTRACT 0.80 FT
  - PRIOR ADDITIONS: SUBTRACT 1.04 FT

DEPARTMENT OF PUBLIC WORKS
HOWARD COUNTY, MARYLAND

CHIEF, BUREAU OF UTILITIES — DATE

DES: RK
DRN: RK
CHK: BE
DATE: 01/2018

DATE	REV	DESCRIPTION
03/2021		RECORD DRAWINGS

ARCHITECTURAL

DRYER BUILDING ENLARGED PLANS

LITTLE PATUXENT WATER RECLAMATION PLANT
8TH ADDITION
BIOSOLIDS PROCESSING FACILITIES - PHASE 2

CAPITAL PROJECT S-6295
CONTRACT NO. 24-4936

ELECTION DISTRICT NO. 6
HOWARD COUNTY, MARYLAND

SCALE AS SHOWN

SHEET 117 OF 311

A-510

BIM 360://10054364 – Little Patuxent WRP 8th Addition/264592_100_A_V18.rvt
1/7/2022 11:38:28 AM

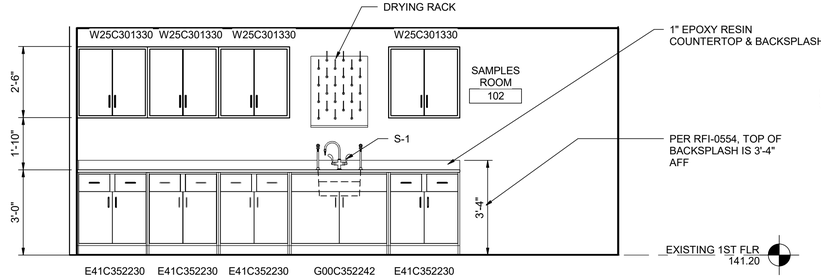

NOTE: CABINET MODEL NUMBERS SHOWN ARE BASED ON KEWAUNEE SCIENTIFIC CASEWORK.

3 / A-511 SAMPLES ROOM - EAST ELEVATION

3/8" = 1'-0"

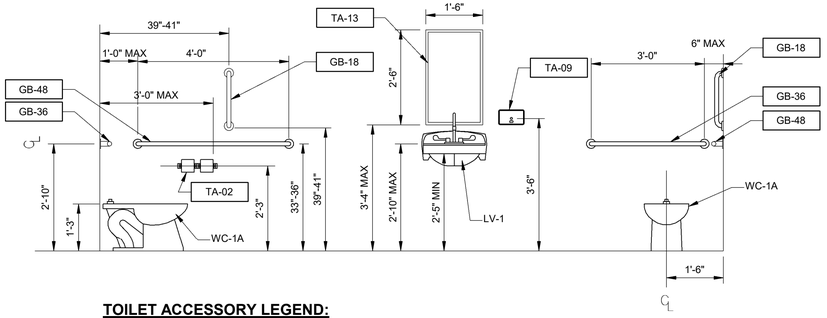

TOILET ACCESSORY LEGEND:

TA-02:	TOILET TISSUE DISPENSER (DOUBLE NON-CONTROLLED)
TA-09:	WALL MOUNTED LIQUID SOAP DISPENSER
TA-13:	MIRROR SIZE INDICATED ON DRAWINGS.
GB-18:	18" GRAB BAR
GB-36:	36" GRAB BAR
GB-48:	48" GRAB BAR

NOTE:
1. REFER TO PLUMBING DRAWINGS FOR ALL FIXTURE SYMBOLS.
2. ALL ACCESSORIES AND FIXTURES SHALL MEET THE REQUIREMENTS OF ICC A117.1-2009.

4 / - TOILET FIXTURE ELEVATIONS

1/2" = 1'-0"

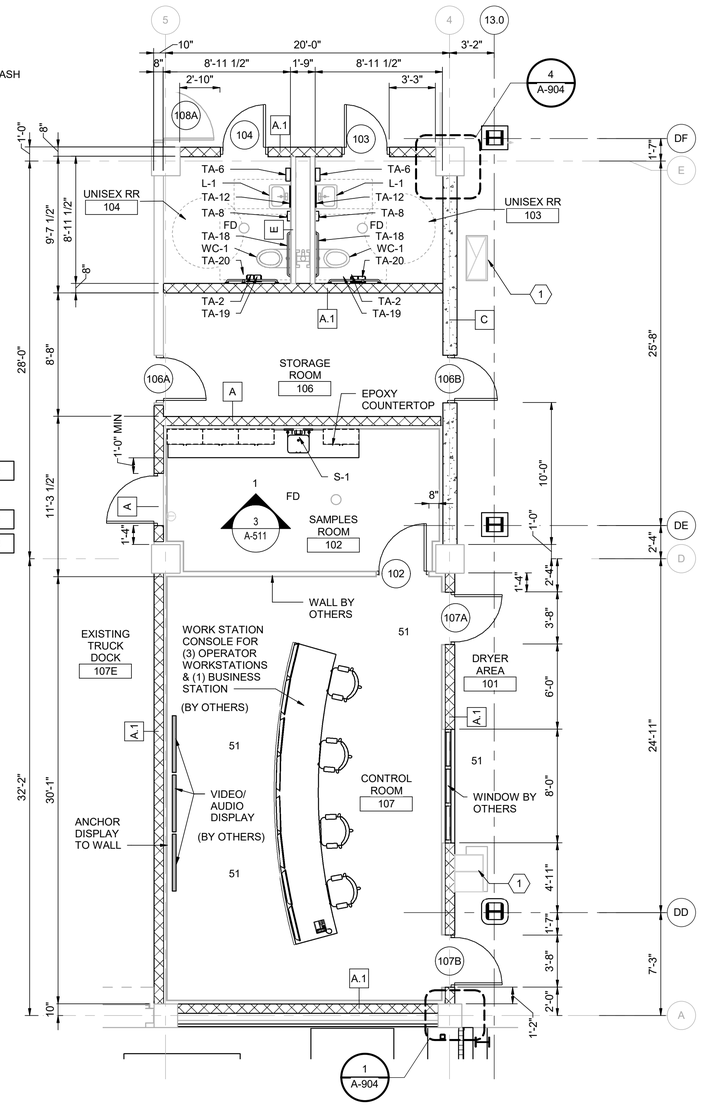

1 / A-502 ENLARGED PLAN

3/16" = 1'-0"

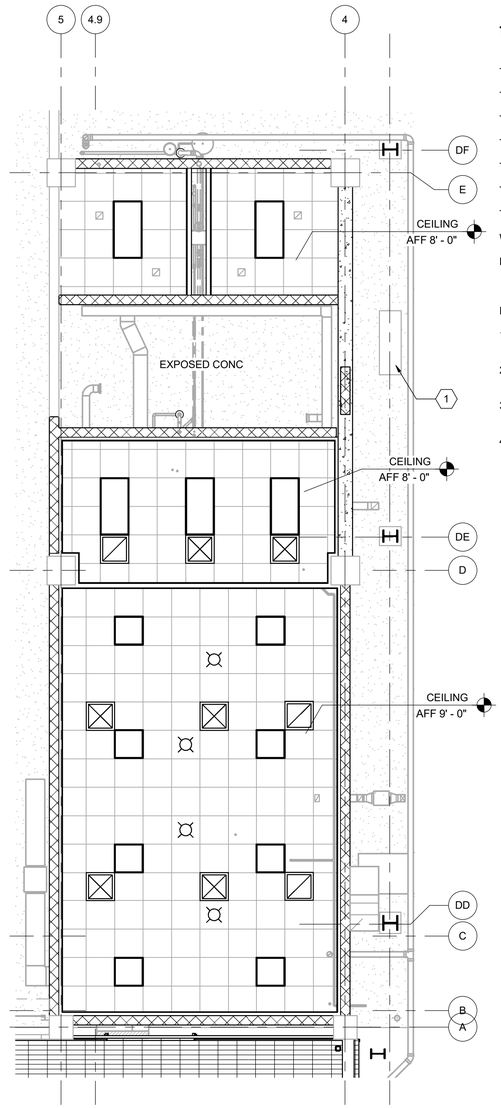

2 / - ENLARGED CEILING PLAN

3/16" = 1'-0"

TOILET ACCESSORY LEGEND

TA-2:	TOILET TISSUE DISPENSER (DOUBLE NON-CONTROLLED) - B-2740.
TA-6:	WALL MOUNTED PAPER TOWEL DISPENSER - B-262 @ 4'-0" MAX AFF.
TA-8:	LIQUID SOAP DISPENSER - B-2112 @ 3'-6" AFF.
TA-12:	MIRROR - B-290 (18 IN X 30 IN) @ 3'-4" AFF. (BO MIRROR)
TA-18:	GRAB BAR - B-6893.99 (36 IN HORIZONTAL)
TA-19:	GRAB BAR - B-6893.99 (42 IN HORIZONTAL)
TA-20:	GRAB BAR - B-5806 (18 IN VERTICAL)
WC-1:	WATER CLOSET, REFER TO PLUMBING.
L-1:	WALL MOUNTED LAVATORY, REFER TO PLUMBING

NOTE:

1 REFER TO PLUMBING DRAWINGS FOR PLUMBING FIXTURE SCHEDULE FOR ALL FIXTURE SYMBOLS.

2 PROVIDE ALL REQUIRED ACCESSORIES FOR FULL INSTALL OF PLUMBING FIXTURES INDICATED ON DRAWINGS.

3 ALL WORKSTATIONS AND FURNITURE IN CONTROL ROOM 107 BY OTHERS

4 SUSPENDED ACOUSTICAL TILE CEILINGS SYSTEMS, BY OTHERS. COORDINATE LIGHTS, AIR SUPPLY/ RETURNS DIFFUSERS WITH CEILING INSTALLATION

KEY NOTES (X)

1 SLAB OPENING FOR DUCT - SEE STRUCTURAL

CEILING LEGEND

- 2X2 ACT- BY OTHERS
- LIGHT FIXTURE-SEE ELECTRICAL LIGHTING
- 2' X 4' LIGHT FIXTURE
- LIGHT FIXTURE-SEE ELECTRICAL LIGHTING
- 2X2 SUPPLY AIR GRILL
- 2X2 RETURN AIR GRILL

THE DRAWINGS IN THIS SET ARE RECORD DRAWINGS. THEY ARE CONSTRUCTION CONTRACT DRAWINGS WHICH HAVE BEEN REVISED BASED ON AVAILABLE FIELD INFORMATION RECORDED BY OTHERS DURING CONSTRUCTION OF THIS CONTRACT. THERE HAS BEEN NO VERIFICATION OF DIMENSIONS SHOWN ON THE CONSTRUCTION DRAWINGS OR THE ACCURACY/COMPLETENESS OF THE FIELD INFORMATION RECEIVED.

SIGNATURE 2/7/2022 DATE

AS-BUILT REPLACEMENT SHEET

PROFESSIONAL CERTIFICATION

THIS DRAWING WAS ORIGINALLY APPROVED FOR CONSTRUCTION AND SEALED BY PATRICK DAUGHTON, A REGISTERED PROFESSIONAL ARCHITECT IN THE STATE OF MARYLAND, NO. 18898

NOTICE TO CONTRACTORS

- PROJECT ELEVATIONS ARE BASED ON NAVD88 AND HOWARD COUNTY'S BENCHMARK SYSTEM
- PREVIOUS PROJECTS USED OTHER DATUMS
- APPLY THE FOLLOWING CONVERSIONS WHEN USING PREVIOUS CONTRACT DRAWINGS:
  - ADDITION NO. 6: SUBTRACT 0.80 FT
  - PRIOR ADDITIONS: SUBTRACT 1.04 FT

DEPARTMENT OF PUBLIC WORKS
HOWARD COUNTY, MARYLAND

CHIEF, BUREAU OF UTILITIES DATE

DES: RK
DRN: RK
CHK: BE
DATE: 01/2018

DATE	REV	DESCRIPTION
03/2021		RECORD DRAWINGS

ARCHITECTURAL

DRYER BUILDING ENLARGED PLANS AND INTERIOR ELEVATION

LITTLE PATUXENT WATER RECLAMATION PLANT
8TH ADDITION
BIOSOLIDS PROCESSING FACILITIES - PHASE 2

CAPITAL PROJECT S-6295
CONTRACT NO. 24-4936

ELECTION DISTRICT NO. 6
HOWARD COUNTY, MARYLAND

SCALE AS SHOWN

SHEET 118 OF 311

A-511

BIM 360://10054364 – Little Patuxent WRP 8th Addition/264592_100_A_V18.rvt
1/7/2022 11:38:32 AM

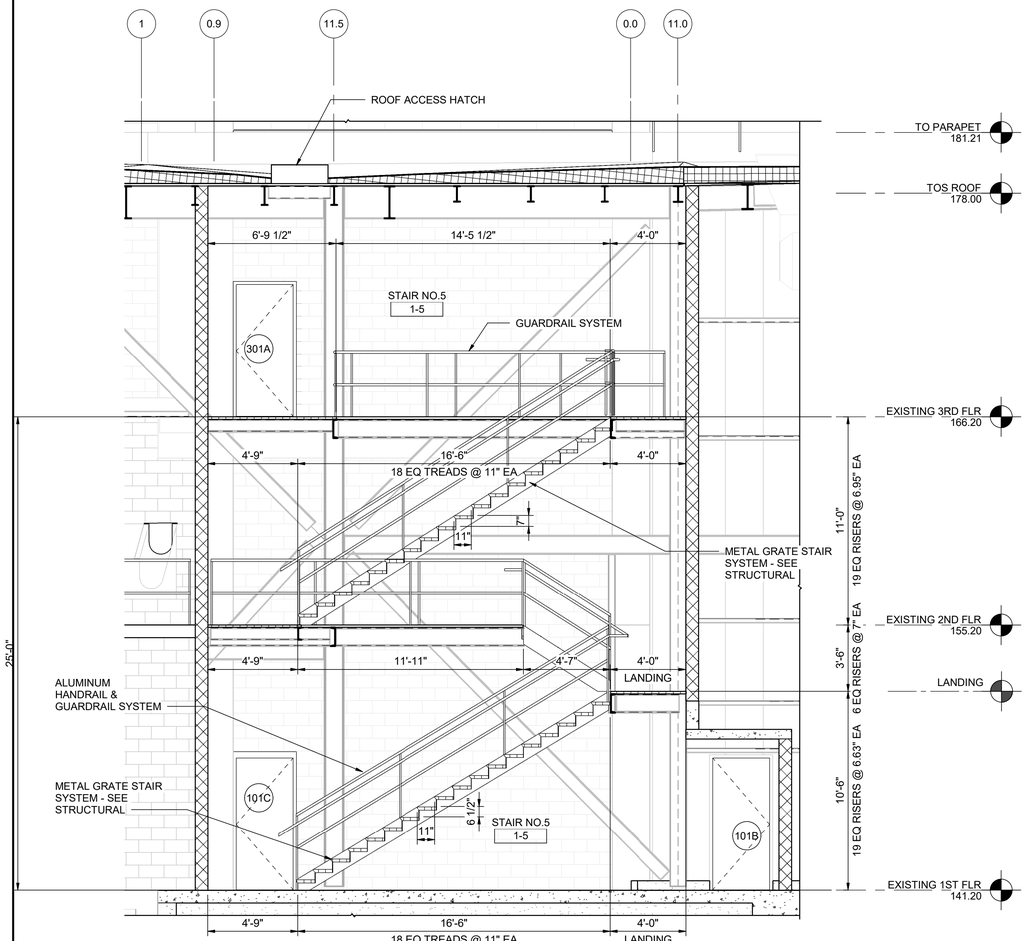

1 A-510 STAIR SECTION
1/4" = 1'-0"

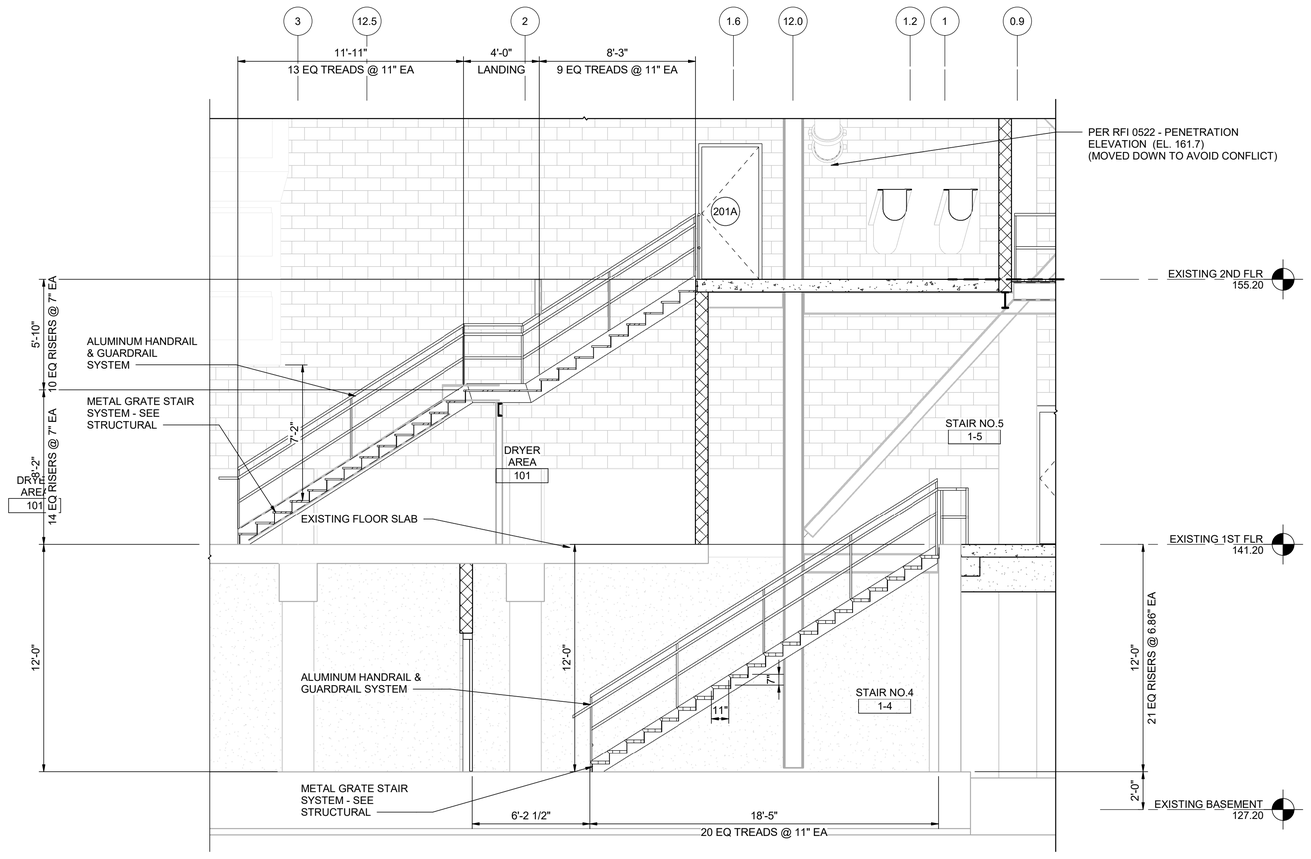

2 A-510 STAIR SECTION
1/4" = 1'-0"

THE DRAWINGS IN THIS SET ARE RECORD DRAWINGS. THEY ARE CONSTRUCTION CONTRACT DRAWINGS WHICH HAVE BEEN REVISED BASED ON AVAILABLE FIELD INFORMATION RECORDED BY OTHERS DURING CONSTRUCTION OF THIS CONTRACT. THERE HAS BEEN NO VERIFICATION OF DIMENSIONS SHOWN ON THE CONSTRUCTION DRAWINGS OR THE ACCURACY/COMPLETENESS OF THE FIELD INFORMATION RECEIVED.

SIGNATURE _____ DATE 2/7/2022

AS-BUILT REPLACEMENT SHEET

PROFESSIONAL CERTIFICATION

THIS DRAWING WAS ORIGINALLY APPROVED FOR CONSTRUCTION AND SEALED BY PATRICK DAUGHTON, A REGISTERED PROFESSIONAL ARCHITECT IN THE STATE OF MARYLAND, NO. 18898

NOTICE TO CONTRACTORS

- PROJECT ELEVATIONS ARE BASED ON NAVD88 AND HOWARD COUNTY'S BENCHMARK SYSTEM
- PREVIOUS PROJECTS USED OTHER DATUMS
- APPLY THE FOLLOWING CONVERSIONS WHEN USING PREVIOUS CONTRACT DRAWINGS:
  - ADDITION NO. 6: SUBTRACT 0.80 FT
  - PRIOR ADDITIONS: SUBTRACT 1.04 FT

DEPARTMENT OF PUBLIC WORKS
HOWARD COUNTY, MARYLAND

CHIEF, BUREAU OF UTILITIES DATE

DES: RK
DRN: RK
CHK: BE
DATE: 01/2018

DATE	REV	DESCRIPTION
03/2021		RECORD DRAWINGS

ARCHITECTURAL

DRYER BUILDING
STAIR SECTIONS AND DETAILS

LITTLE PATUXENT WATER RECLAMATION PLANT
8TH ADDITION
BIOSOLIDS PROCESSING FACILITIES - PHASE 2

CAPITAL PROJECT S-6295
CONTRACT NO. 24-4936

ELECTION DISTRICT NO. 6
HOWARD COUNTY, MARYLAND

SCALE AS SHOWN

SHEET 119 OF 311

A-512

BIM 360://10054364 – Little Patuxent WRP 8th Addition/264592_100_A_V18.rvt
1/7/2022 11:38:35 AM

DOOR SCHEDULE

DOOR NUMBER		Door Sizes	DOOR TYPE	DOOR MATERIAL	DOOR FINISH	FRAME TYPE	FRAME MATERIAL	FRAME FINISH	RATING (MINUTES)	HARDWARE	HEAD	JAMB	COMMENTS
001		3'-0"x7'-0"	A	B	A	2	B	A	60	HW-3	4/A-903	5A-903	3
101A		3'-0"x7'-0"	A	B	A	2	B	A	60	HW-3	4/A-903	5/A-903	3
101B		3'-0"x7'-0"	A	B	A	1	B	A	60	HW-3	1/A-903	2/A-903	3
101C		3'-0"x7'-0"	A	B	A	2	B	A	60	HW-3	4/A-903	5/A-903	3
101D		OH 12'-0"x14'-0"	D	A	F	-	A	F	-	-	7/A-903	8/A-903	1, 2
101E		3'-0"x7'-0"	B	B	A	1	B	A	-	HW-1	1/A-903	2/A-903	
101F		3'-0"x7'-0"	B	B	A	1	B	A	-	HW-1	1/A-903	2/A-903	
101G		OH 12'-0"x14'-0"	D	A	F	-	A	F	-	-	7/A-903	8/A-903	1, 2
101H		3'-0"x7'-0"	A	B	A	2	B	A	60	HW-3	4/A-903	5/A-903	3
101J		OH 12'-0"x14'-0"	D	A	F	-	A	F	-	-	7/A-903	8/A-903	1, 2
101K		3'-0"x7'-0"	A	B	A	2	B	A	60	HW-3	4/A-903 SIM	5/A-903 SIM	3
102		3'-6"x-7'-0"	C	B	A	2	B	A	-	HW-4	9/A-903	13/A-903	4
102B		3'-0"x-7'-0"	B	B	A	2	B	A	-	HW-4	9/A-903 SIM	13/A-903 SIM	4
103		3'-0"x7'-0"	A	B	A	2	B	A	-	HW-5	4/A-903	5/A-903	
104		3'-0"x7'-0"	A	B	A	2	B	A	-	HW-5	4/A-903	5/A-903	
106A		3'-0"x7'-0"	B	B	A	2	B	A	-	HW-4	4/A-903 SIM	5/A-903 SIM	
106B		3'-0"x7'-0"	B	B	A	2	B	A	-	HW-4	4/A-903 SIM	5/A-903 SIM	
107A		3'-6"x-7'-0"	C	B	A	2	B	A	-	HW-4	9/A-903	13/A-903	4
107B		3'-6"x-7'-0"	C	B	A	2	B	A	-	HW-4	9/A-903	13/A-903	4
108A		← EXISTING TO REMAIN →											
108B		← EXISTING TO REMAIN →											
108C		← EXISTING TO REMAIN →											
110A		← EXISTING TO REMAIN →											
110B		← EXISTING TO REMAIN →											
201A		3'-0"x7'-0"	A	B	A	1	B	A	-	HW-4	4/A-903	5/A-903	
201B		3'-0"x7'-0"	A	B	A	1	B	A	-	HW-4	4/A-903	5/A-903	
203		PR 3'-0"x7'-0"	E	B	A	1	B	A	-	HW-2	1/A-903	2/A-903	
203A		3'-0"x7'-0"	A	B	A	2	B	A	90	HW-3	4/A-903	5/A-903	3
203C		← EXISTING TO REMAIN →											
203D		3'-0"x7'-0"	A	B	A	2	B	A	90	HW-3	4/A-903	5/A-903	
301A		3'-0"x7'-0"	B	B	A	1	B	A	60	HW-3	4/A-903	5/A-903	

MATERIAL		FINISH	
A	ALUMINUM	A	GEL COAT - FACTORY FINISH
B	FIBERGLASS REINFORCED PLASTIC (FRP)	F	FACTORY FINISH - POWDER COAT
C	STEEL	P	PAINT

COMMENTS:
1. PROVIDE INSULATED DOOR
2. ALL DOOR HARDWARE FURNISHED AND INSTALLED BY OVERHEAD DOOR MANUFACTURER.
3. PROVIDE RATED HARDWARE.
4. DOOR INSTALLED BY OTHERS.

ROOM SCHEDULE

NUMBER	NAME	FLOOR FINISH	BASE FINISH	NORTH WALL FINISH	EAST WALL FINISH	SOUTH WALL FINISH	WEST WALL FINISH	CEILING FINISH	CEILING HEIGHT	COMMENT
001	CHEMICAL HANDLING AREA	← EXISTING TO REMAIN →								
1-1E	EXISTING STAIR NO. 1	←	-	-	EXISTING TO REMAIN		-	-	-	→
1-2E	EXISTING STAIR NO.2	←	-	-	EXISTING TO REMAIN		-	-	-	→
1-3E	EXISTING STAIR NO.3	←	-	-	EXISTING TO REMAIN		-	-	-	→
1-4	STAIR NO.4	C	N	CMU	CMU	CMU	CMU	ES		
1-5	STAIR NO.5	C	N	CMU	CMU	CMU	CMU	ES	-	
101	DRYER AREA	C	N	CMU	MWP/CMU	MWP	MWP	ES	-	
102	SAMPLES ROOM	EPOXY	EPOXY	GWB/P	GWB/P	GWB/P	GWB/P	ACT	8'-0"	4,5,6
103	UNISEX RR	EPOXY	EPOXY	-	-	-	-	ACT	8'-0"	5
104	UNISEX RR	EPOXY	EPOXY	-	-	-	-	ACT	8'-0"	5
106	STORAGE ROOM	C	N	CMU	CMU	CMU	CMU	ES	-	
107	CONTROL ROOM	EPOXY	VB	-	-	-	-		9'-0"	4,5,6,7
107E	EXISTING TRUCK DOCK	←	-	-	EXISTING TO REMAIN		-	-	-	→
108E	EXISTING FLOTATION THICKENER ROOM	←	-	-	EXISTING TO REMAIN		-	-	-	→
109E	EXISTING ODOR CONTROL LEVEL	←	-	-	EXISTING TO REMAIN		-	-	-	→
110E	EXISTING LOADING BAY	←	-	-	EXISTING TO REMAIN		-	-	-	→
201E	EXISTING CONVEYOR ROOM	←	-	-	EXISTING TO REMAIN		-	-	-	→
202E	EXISTING SCREENINGS ROOM	←	-	-	EXISTING TO REMAIN		-	-	-	→
203	MCC ROOM	C	-	MWP	CMU	CMU	MWP	ES	-	
205E	EXISTING CONTROL ROOM	←	-	-	EXISTING TO REMAIN		-	-	-	→
301E	EXISTING CENTRIFUGE ROOM	←	-	-	EXISTING TO REMAIN		-	-	-	→

FLOOR		BASE		WALL		CEILING	
C	SEALED CONCRETE	N	NONE	MWP	METAL WALL PANEL - FACTORY FINISH	MRP	MRP - METAL ROOF PANEL
EPOXY	EPOXY FLOOR SYSTEM	EPOXY	EPOXY FLOOR BASE	CMU	CMU - UNPAINTED	ES	EXPOSED STRUCTURE - PAINTED
		VB	VINYL BASE	GWB	GYPSUM BD - PAINTED	P	PAINT

COMMENTS:

1 PRE-CAST CONCRETE SURFACES SHALL NOT BE PAINTED.

2 GALVANIZED SURFACES SHALL NOT BE PAINTED. PROVIDE GALVANIZING REPAIR COATING FOR AREAS DAMAGED DURING CONSTRUCTION.

3 PRIMARY AND SECONDARY GALVANIZED STEEL STRUCTURE SHALL NOT BE PAINTED.

4 METAL STUD WALL FURRING. GYPSUM BOARD, PAINT, BY OTHERS.

5 SUSPEND ACOUSTICAL TILE CEILING SYSYTEM AND FLOOR FINISHES BY OTHERS

6 METAL STUD/ GYPSUM BOARD PARTITION BETWEEN SAMPLES ROOM 102 AND CONTROL ROOM 107 BY OTHERS.

7 CONTROL ROOM FINISH BY OTHERS.

GENERAL FINISH NOTE:

1 PAINT ALL NON-GALVANIZED FERROUS METALS, PROCESS PIPING, AND EQUIPMENT AS DIRECTED IN SPECIFICATION SECTION 09 96 00 UNLESS NOTED OTHERWISE.

2 DO NOT PAINT PIPE CONNECTION NUTS AND BOLTS.

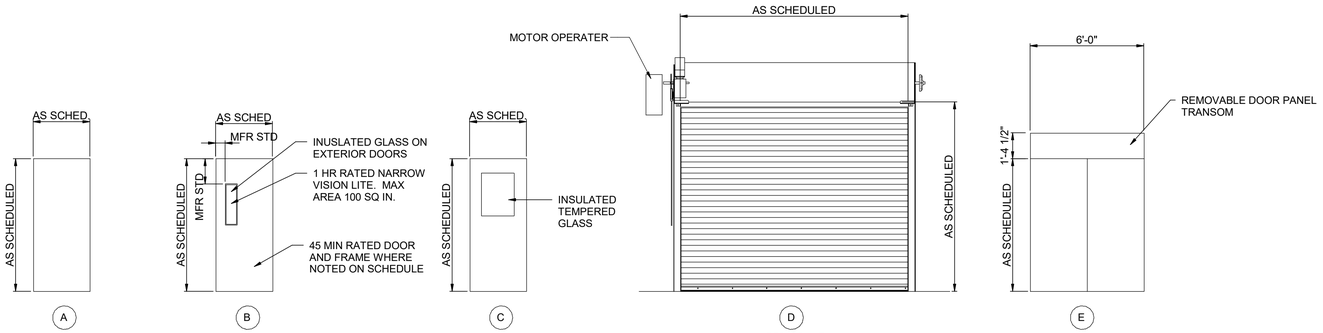

DOOR TYPES

1/4" = 1'-0"

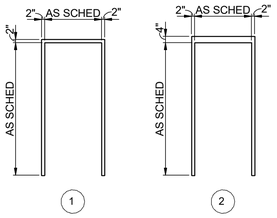

FRAME TYPES

1/4" = 1'-0"

THE DRAWINGS IN THIS SET ARE RECORD DRAWINGS. THEY ARE CONSTRUCTION CONTRACT DRAWINGS WHICH HAVE BEEN REVISED BASED ON AVAILABLE FIELD INFORMATION RECORDED BY OTHERS DURING CONSTRUCTION OF THIS CONTRACT. THERE HAS BEEN NO VERIFICATION OF DIMENSIONS SHOWN ON THE CONSTRUCTION DRAWINGS OR THE ACCURACY/COMPLETENESS OF THE FIELD INFORMATION RECEIVED.

SIGNATURE 2/7/2023 DATE

AS-BUILT REPLACEMENT SHEET

PROFESSIONAL CERTIFICATION

THIS DRAWING WAS ORIGINALLY APPROVED FOR CONSTRUCTION AND SEALED BY PATRICK DAUGHTON, A REGISTERED PROFESSIONAL ARCHITECT IN THE STATE OF MARYLAND, NO. 18898

NOTICE TO CONTRACTORS

- PROJECT ELEVATIONS ARE BASED ON NAVD88 AND HOWARD COUNTY'S BENCHMARK SYSTEM
- PREVIOUS PROJECTS USED OTHER DATUMS
- APPLY THE FOLLOWING CONVERSIONS WHEN USING PREVIOUS CONTRACT DRAWINGS:

- ADDITION NO. 6: SUBTRACT 0.80 FT
- PRIOR ADDITIONS: SUBTRACT 1.04 FT

DEPARTMENT OF PUBLIC WORKS
HOWARD COUNTY, MARYLAND

CHIEF, BUREAU OF UTILITIES DATE

DES: RK
DRN: RK
CHK: BE
DATE: 01/2018

DATE	REV	DESCRIPTION
03/2021		RECORD DRAWINGS

ARCHITECTURAL

DRYER BUILDING ROOM FINISH AND DOOR SCHEDULES

LITTLE PATUXENT WATER RECLAMATION PLANT
8TH ADDITION
BIOSOLIDS PROCESSING FACILITIES - PHASE 2

CAPITAL PROJECT S-6295
CONTRACT NO. 24-4936

ELECTION DISTRICT NO. 6
HOWARD COUNTY, MARYLAND

SCALE AS SHOWN

SHEET 120 OF 311

A-901

BIM 360://10054364 – Little Patuxent WRP 8th Addition/264592_100_A_V18.rvt
1/7/2022 11:38:39 AM

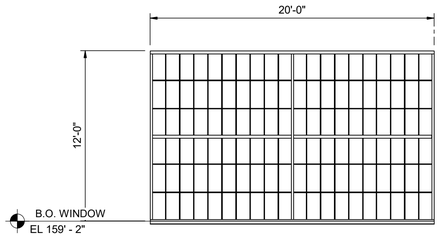

D

TRANSLUCENT WALL PANEL

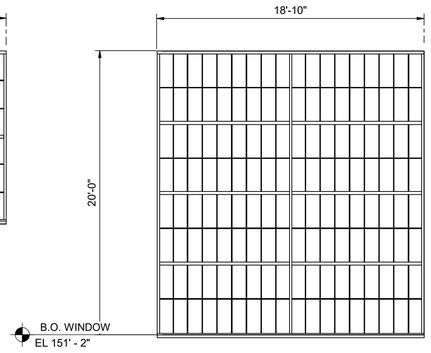

E

TRANSLUCENT WALL PANEL

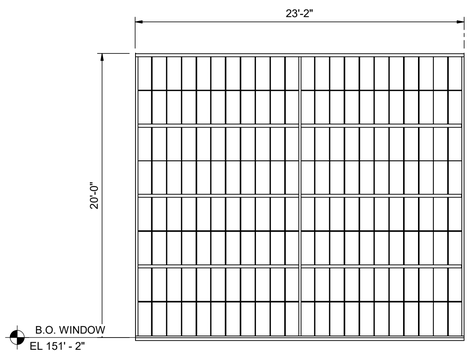

F

TRANSLUCENT WALL PANEL

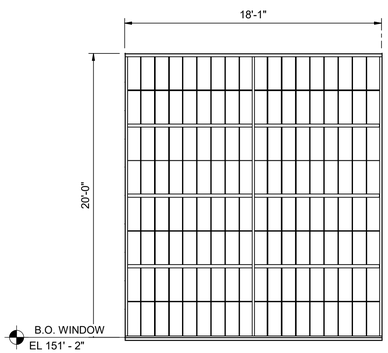

G

TRANSLUCENT WALL PANEL

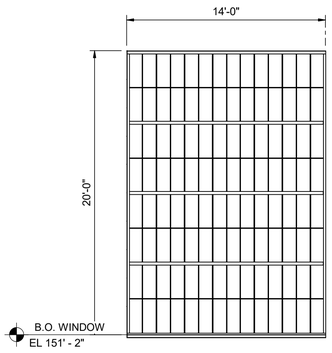

H

TRANSLUCENT WALL PANEL

1 - WINDOW TYPES

3/16" = 1'-0"

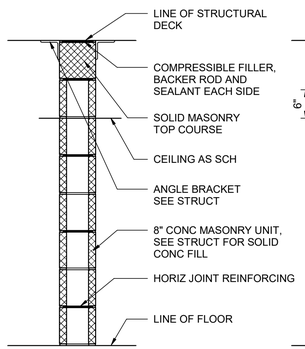

WALL TYPE
SCALE: NTS A

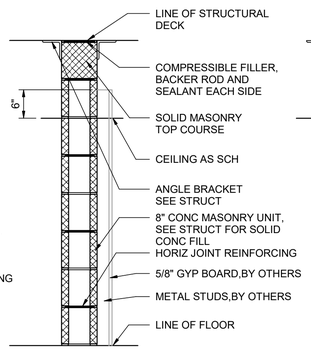

WALL TYPE
SCALE: NTS A.1

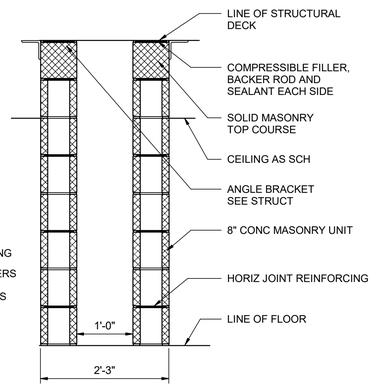

WALL TYPE
SCALE: NTS B

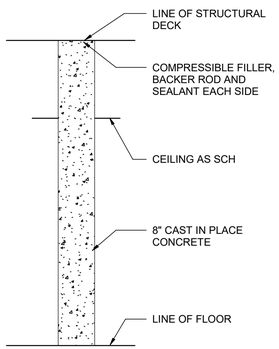

WALL TYPE
SCALE: NTS C

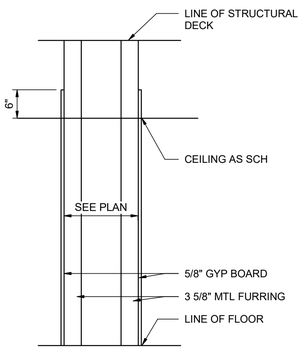

WALL TYPE
SCALE: NTS E

8 - WALL PARTITION TYPES SCHEDULE

3/4" = 1'-0"

GENERAL NOTES:

1 SEE PLANS FOR FIRE RATED WALL LOCATIONS AND HOURLY RATED REQUIREMENTS.

2 SEE STRUCTURAL FOR ALL VERTICAL WALL REINFORCING AND ALL BOND BEAM REINFORCING IN MASONRY WALLS AND FOR ALL REINFORCING IN CIP CONCRETE WALLS.

3 PROVIDE FIRE STOPPING AND FIRE RATED SEALANT AS REQUIRED FOR ASSEMBLY INDICATED AT FIRE RATED WALLS.

4 SEE PLANS FOR WALL THICKNESS NOT SHOWN ON THIS DRAWING.

THE DRAWINGS IN THIS SET ARE RECORD DRAWINGS. THEY ARE CONSTRUCTION CONTRACT DRAWINGS WHICH HAVE BEEN REVISED BASED ON AVAILABLE FIELD INFORMATION RECORDED BY OTHERS DURING CONSTRUCTION OF THIS CONTRACT. THERE HAS BEEN NO VERIFICATION OF DIMENSIONS SHOWN ON THE CONSTRUCTION DRAWINGS OR THE ACCURACY/COMPLETENESS OF THE FIELD INFORMATION RECEIVED.

SIGNATURE 2/7/2023 DATE

AS-BUILT REPLACEMENT SHEET

PROFESSIONAL CERTIFICATION

THIS DRAWING WAS ORIGINALLY APPROVED FOR CONSTRUCTION AND SEALED BY PATRICK DAUGHTON, A REGISTERED PROFESSIONAL ARCHITECT IN THE STATE OF MARYLAND, NO. 18898

NOTICE TO CONTRACTORS

- PROJECT ELEVATIONS ARE BASED ON NAVD88 AND HOWARD COUNTY'S BENCHMARK SYSTEM
- PREVIOUS PROJECTS USED OTHER DATUMS
- APPLY THE FOLLOWING CONVERSIONS WHEN USING PREVIOUS CONTRACT DRAWINGS:
  - ADDITION NO. 6: SUBTRACT 0.80 FT
  - PRIOR ADDITIONS: SUBTRACT 1.04 FT

DEPARTMENT OF PUBLIC WORKS
HOWARD COUNTY, MARYLAND

CHIEF, BUREAU OF UTILITIES DATE

DES: RK
DRN: RK
CHK: BE
DATE: 01/2018

DATE	REV	DESCRIPTION
	51	

ARCHITECTURAL

DRYER BUILDING WINDOW SCHEDULES & PARTITION TYPES

LITTLE PATUXENT WATER RECLAMATION PLANT
8TH ADDITION
BIOSOLIDS PROCESSING FACILITIES - PHASE 2

CAPITAL PROJECT S-6295
CONTRACT NO. 24-4936

ELECTION DISTRICT NO. 6
HOWARD COUNTY, MARYLAND

SCALE AS SHOWN

SHEET 121 OF 311

A-902

BIM 360://10054364 – Little Patuxent WRP 8th Addition/284592_100_A_V18.rvt
1/7/2022 11:38:41 AM

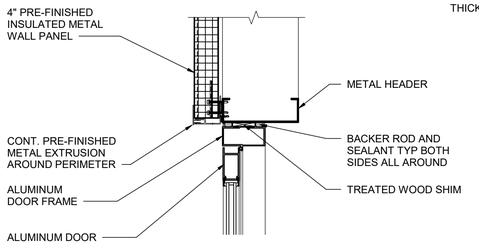

NOTE: INSULATED METAL WALL PANELS ARE INDICATED 4" THICK. TOTAL THICKNESS OF INSULATED METAL WALL PANELS SHALL BE A MINIMUM 4" THICK AND MUST ACHIEVE R-20

1 ALUMINUM DOOR HEAD DETAIL
1 1/2" = 1'-0"

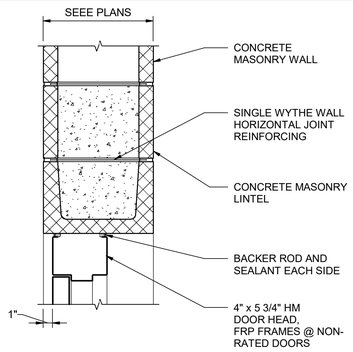

NOTES:

1. SEE STRUCTURAL FOR LINTEL SIZE AND VERTICAL WALL REINFORCING.

4 HM DOOR HEAD (4") IN CMU WALL DETAIL
1 1/2" = 1'-0"

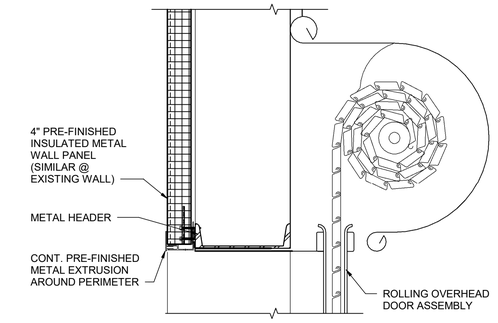

7 ROLLING OVERHEAD DOOR HEAD IN METAL WALL DETAIL
1 1/2" = 1'-0"

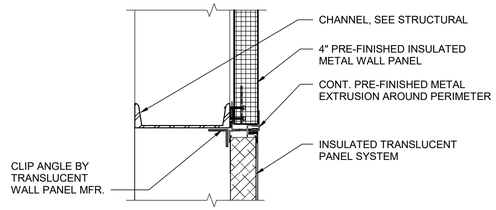

10 (A-509) TRANSLUCENT WALL PANEL HEAD DETAIL
1 1/2" = 1'-0"

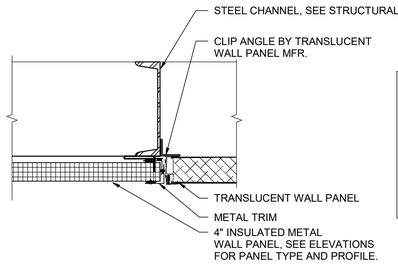

THE DRAWINGS IN THIS SET ARE RECORD DRAWINGS. THEY ARE CONSTRUCTION CONTRACT DRAWINGS WHICH HAVE BEEN REVISED BASED ON AVAILABLE FIELD INFORMATION RECORDED BY OTHERS DURING CONSTRUCTION OF THIS CONTRACT. THERE HAS BEEN NO VERIFICATION OF DIMENSIONS SHOWN ON THE CONSTRUCTION DRAWINGS OR THE ACCURACY/COMPLETENESS OF THE FIELD INFORMATION RECEIVED.

SIGNATURE _____ DATE 2/7/2022

11 TRANSLUCENT WALL PANEL JAMB DETAIL
1 1/2" = 1'-0"

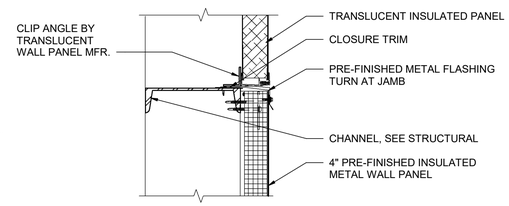

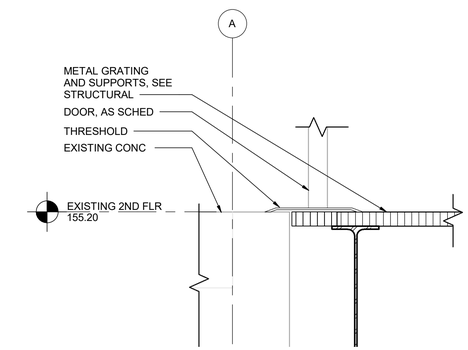

2 ALUMINUM DOOR JAMB DETAIL
1 1/2" = 1'-0"

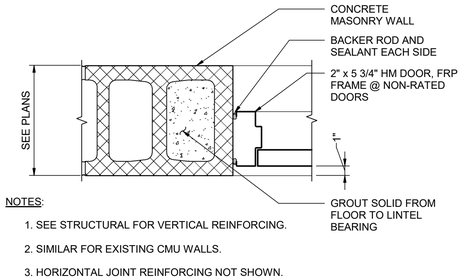

NOTES:

1. SEE STRUCTURAL FOR VERTICAL REINFORCING.
2. SIMILAR FOR EXISTING CMU WALLS.
3. HORIZONTAL JOINT REINFORCING NOT SHOWN.

5 HM DOOR JAMB IN CMU WALL DETAIL
1 1/2" = 1'-0"

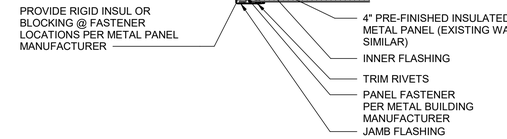

8 ROLLING OVERHEAD DOOR JAMB IN METAL WALL
1 1/2" = 1'-0"

3 (A-509) SILL DETAIL
1 1/2" = 1'-0"

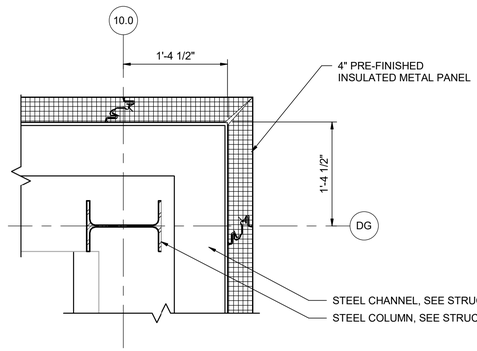

6 (A-502) PLAN DETAIL, TYPICAL
1" = 1'-0"

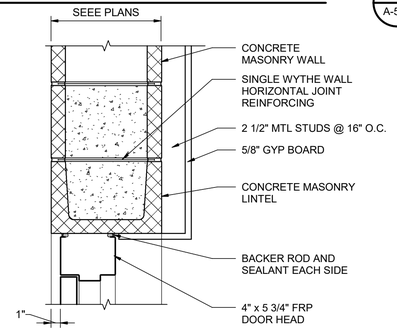

NOTES:

1. SEE STRUCTURAL FOR LINTEL SIZE AND VERTICAL WALL REINFORCING.

9 HM DOOR HEAD (4") IN CMU W/FURRING WALL DETAIL
1 1/2" = 1'-0"

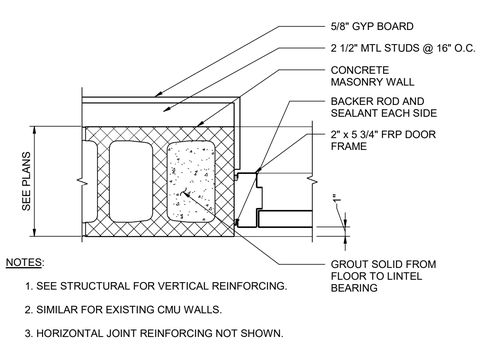

NOTES:

1. SEE STRUCTURAL FOR VERTICAL REINFORCING.
2. SIMILAR FOR EXISTING CMU WALLS.
3. HORIZONTAL JOINT REINFORCING NOT SHOWN.

12 (A-509) TRANSLUCENT WALL PANEL SILL DETAIL
1 1/2" = 1'-0"

13 HM DOOR JAMB IN CMU W/FURRING WALL DETAIL
1 1/2" = 1'-0"

AS-BUILT REPLACEMENT SHEET

PROFESSIONAL CERTIFICATION

THIS DRAWING WAS ORIGINALLY APPROVED FOR CONSTRUCTION AND SEALED BY PATRICK DAUGHTON, A REGISTERED PROFESSIONAL ARCHITECT IN THE STATE OF MARYLAND, NO. 18898

NOTICE TO CONTRACTORS

- PROJECT ELEVATIONS ARE BASED ON NAVD88 AND HOWARD COUNTY'S BENCHMARK SYSTEM
- PREVIOUS PROJECTS USED OTHER DATUMS
- APPLY THE FOLLOWING CONVERSIONS WHEN USING PREVIOUS CONTRACT DRAWINGS:
  - ADDITION NO. 6: SUBTRACT 0.80 FT
  - PRIOR ADDITIONS: SUBTRACT 1.04 FT

DEPARTMENT OF PUBLIC WORKS
HOWARD COUNTY, MARYLAND

CHIEF, BUREAU OF UTILITIES DATE

DES: RK
DRN: RK
CHK: BE
DATE: 01/2018

DATE	REV	DESCRIPTION
03/2021		RECORD DRAWINGS

ARCHITECTURAL

DRYER BUILDING DOOR AND WINDOW DETAILS

LITTLE PATUXENT WATER RECLAMATION PLANT
8TH ADDITION
BIOSOLIDS PROCESSING FACILITIES - PHASE 2

CAPITAL PROJECT S-6295
CONTRACT NO. 24-4936

ELECTION DISTRICT NO. 6
HOWARD COUNTY, MARYLAND

SCALE AS SHOWN

SHEET 122 OF 311

A-903

BIM 360://10054364 – Little Patuxent WRP 8th Addition/264592_100_A_V18.rvt
1/7/2022 11:38:44 AM

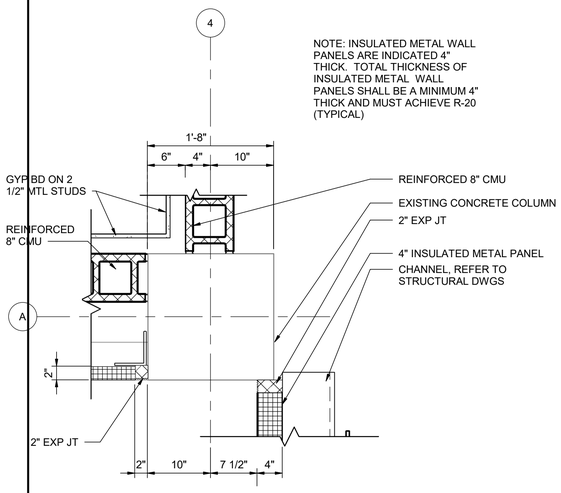

1 / A-503 PLAN DETAIL AT COL. A-4

1" = 1'-0"

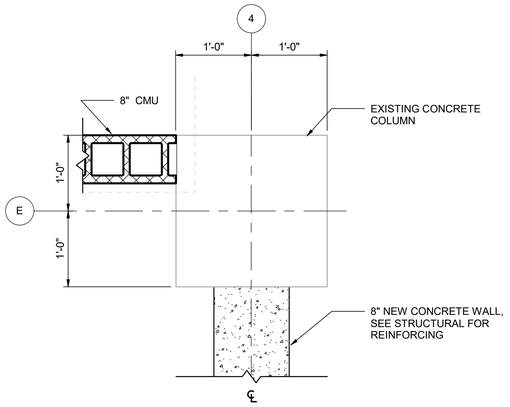

4 / A-511 PLAN DETAIL AT COL. E-4

1" = 1'-0"

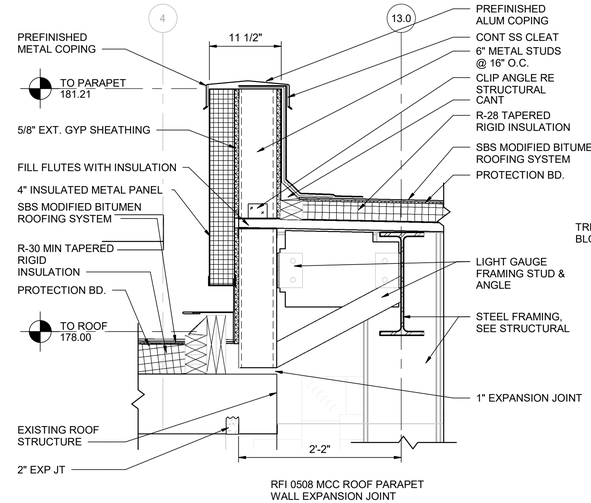

7 / A-505 SECTION DETAIL

1" = 1'-0"

RFI 0508 MCC ROOF PARAPET WALL EXPANSION JOINT

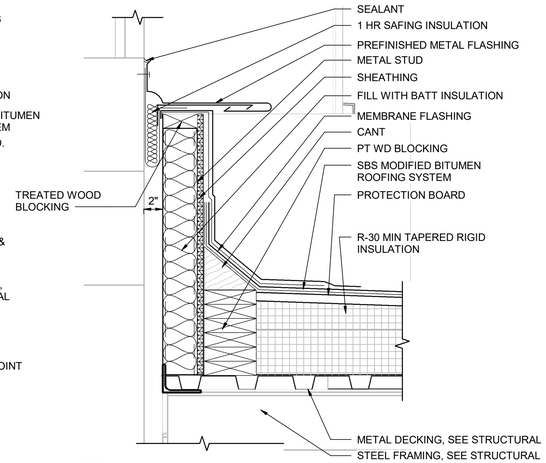

10 / A-509 SECTION DETAIL

1 1/2" = 1'-0"

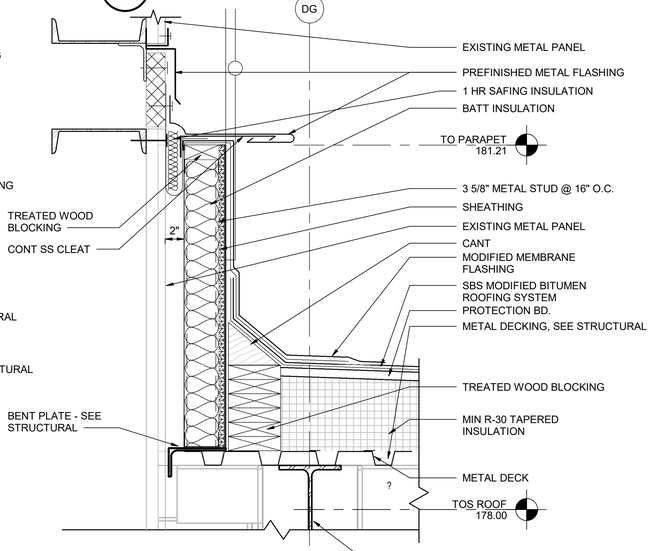

2 / A-510 PLAN DETAIL AT COL. G-0.0

H-0.0

1" = 1'-0"

5 / A-509 BASE DETAIL W CURB

1 1/2" = 1'-0"

8 / A-509 SECTION DETAIL

1 1/2" = 1'-0"

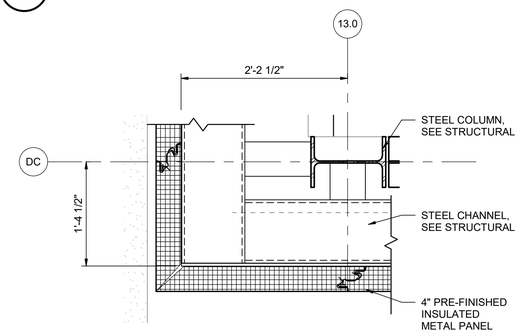

3 / A-502 PLAN DETAIL AT COL D.C -13.0

1" = 1'-0"

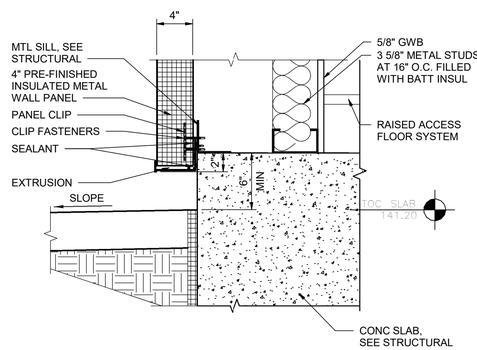

6 / A-509 METAL BASE DETAIL W FURRING

1 1/2" = 1'-0"

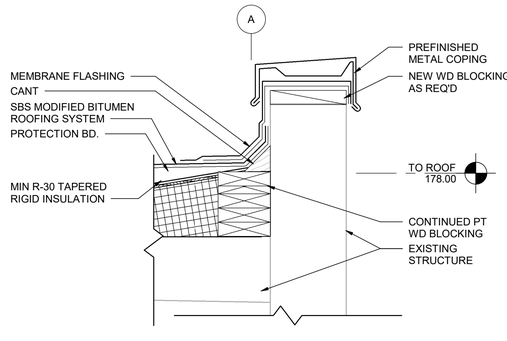

9 / A-509 SECTION DETAIL

1 1/2" = 1'-0"

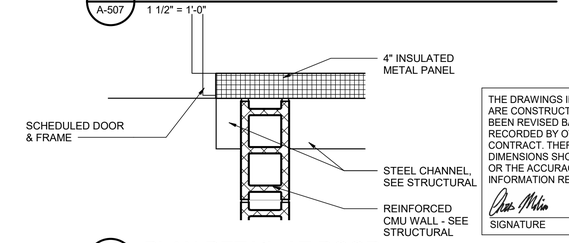

11 / A-507 SECTION DETAIL

1 1/2" = 1'-0"

12 / A-510 PLAN DETAIL AT DOOR

1" = 1'-0"

THE DRAWINGS IN THIS SET ARE RECORD DRAWINGS. THEY ARE CONSTRUCTION CONTRACT DRAWINGS WHICH HAVE BEEN REVISED BASED ON AVAILABLE FIELD INFORMATION RECORDED BY OTHERS DURING CONSTRUCTION OF THIS CONTRACT. THERE HAS BEEN NO VERIFICATION OF DIMENSIONS SHOWN ON THE CONSTRUCTION DRAWINGS OR THE ACCURACY/COMPLETENESS OF THE FIELD INFORMATION RECEIVED.

SIGNATURE — DATE 2/7/2022

AS-BUILT REPLACEMENT SHEET

PROFESSIONAL CERTIFICATION

THIS DRAWING WAS ORIGINALLY APPROVED FOR CONSTRUCTION AND SEALED BY PATRICK DAUGHTON, A REGISTERED PROFESSIONAL ARCHITECT IN THE STATE OF MARYLAND, NO. 18898

NOTICE TO CONTRACTORS

- PROJECT ELEVATIONS ARE BASED ON NAVD88 AND HOWARD COUNTY'S BENCHMARK SYSTEM
- PREVIOUS PROJECTS USED OTHER DATUMS
- APPLY THE FOLLOWING CONVERSIONS WHEN USING PREVIOUS CONTRACT DRAWINGS:
  - ADDITION NO. 6: SUBTRACT 0.80 FT
  - PRIOR ADDITIONS: SUBTRACT 1.04 FT

DEPARTMENT OF PUBLIC WORKS
HOWARD COUNTY, MARYLAND

CHIEF, BUREAU OF UTILITIES — DATE

DES: RK
DRN: RK
CHK: BE
DATE: 01/2018

DATE	REV	DESCRIPTION
03/2021		RECORD DRAWINGS

ARCHITECTURAL

DRYER BUILDING DETAILS

LITTLE PATUXENT WATER RECLAMATION PLANT
8TH ADDITION
BIOSOLIDS PROCESSING FACILITIES - PHASE 2

CAPITAL PROJECT S-6295
CONTRACT NO. 24-4936

ELECTION DISTRICT NO. 6
HOWARD COUNTY, MARYLAND

SCALE AS SHOWN

SHEET 123 OF 311

A-904

BIM 360://10054364 – Little Patuxent WRP 8th Addition/2645922_100_A_V18.rvt
1/7/2022 11:38:50 AM

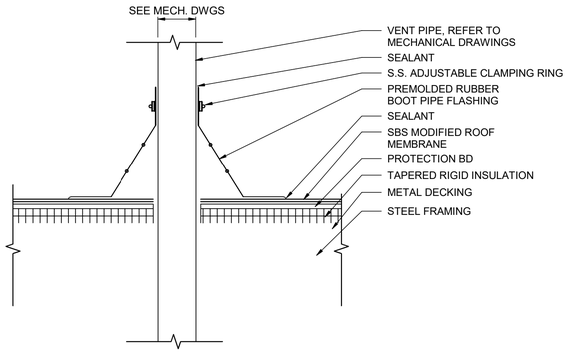

1 - TYPICAL PLUMBING VENT FLASHING DETAIL

1 1/2" = 1'-0"

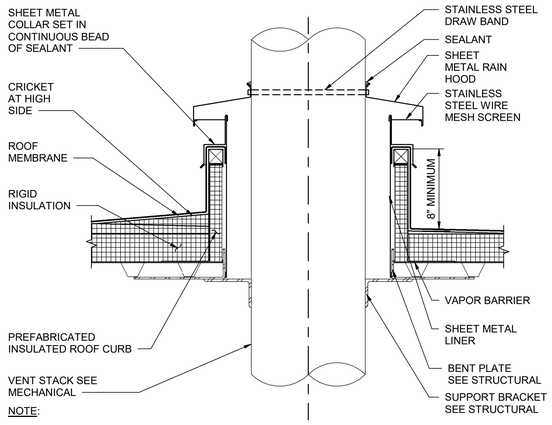

NOTE:

1. COORDINATE CURB AND OPENING SIZE WITH VENT STACK SIZE AND CLEARANCE REQUIREMENTS.

4 - MECHANICAL EQUIPMENT VENT STACK FLASHING DETAIL

1 1/2" = 1'-0"

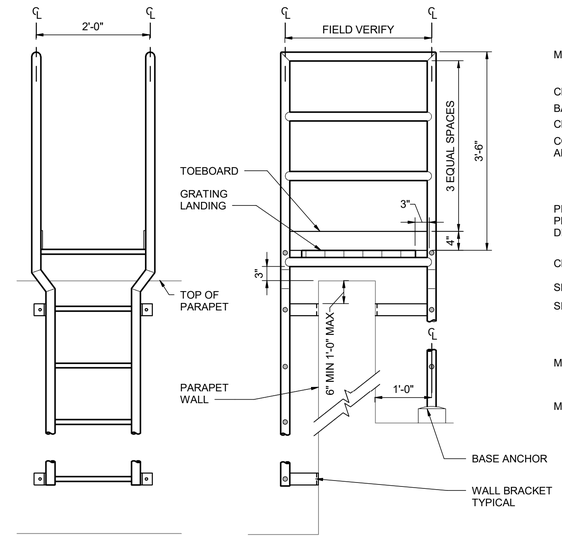

ELEVATION SECTION

6 - LADDER OVER PARAPET DETAIL

3/4" = 1'-0"

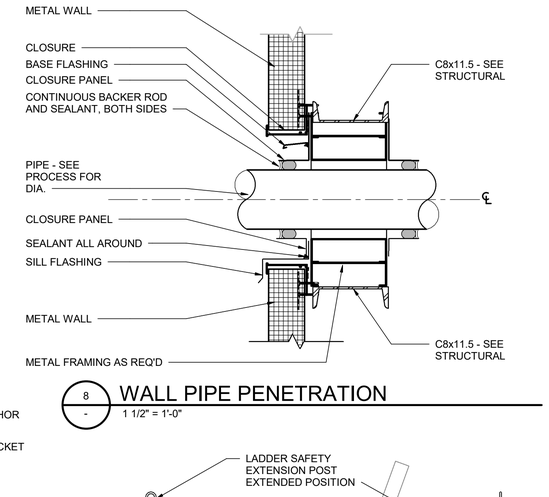

8 - WALL PIPE PENETRATION

1 1/2" = 1'-0"

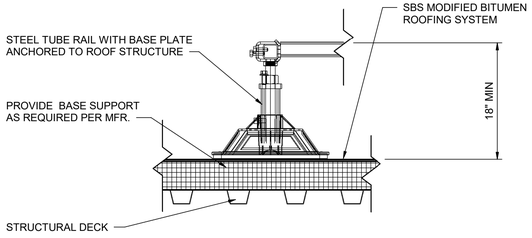

2 - HEAT PUMP UNIT SUPPORT

1 1/2" = 1'-0"

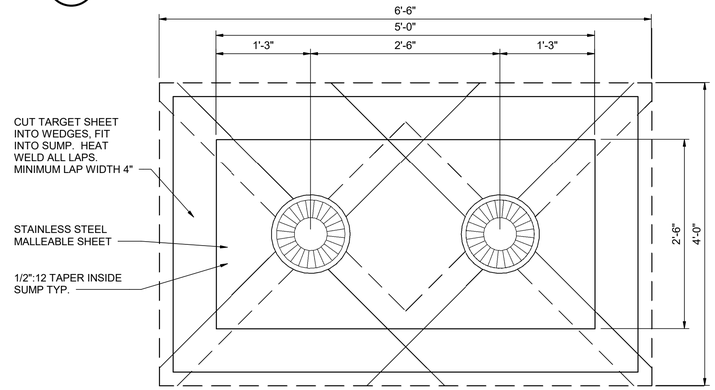

NOTE: ROOF DRAIN SUMP SHALL BE TYP. FOR ALL ROOF DRAINS.

PLAN

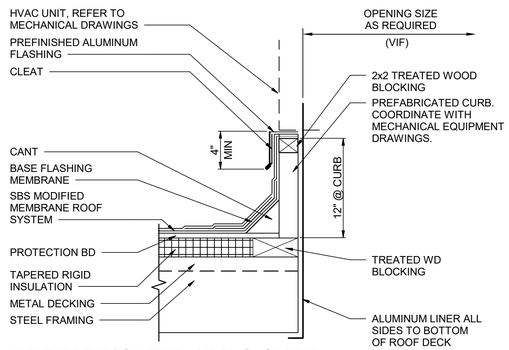

3 - PREFABRICATED HVAC CURB DETAIL

1 1/2" = 1'-0"

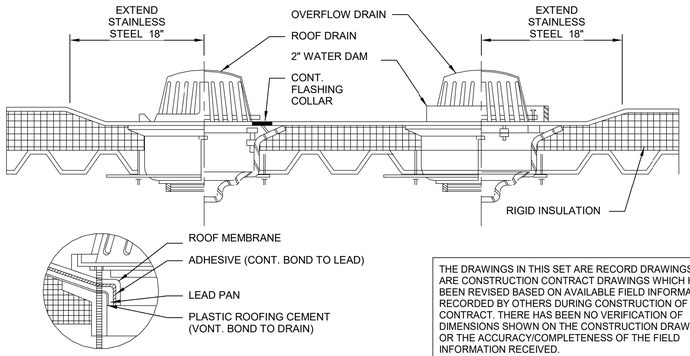

SECTION

5 - ROOF DRAIN DETAIL

12" = 1'-0"

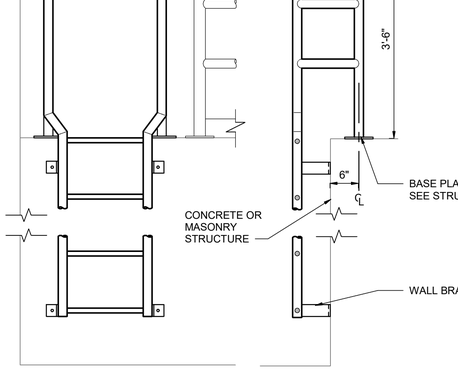

ELEVATION SECTION

7 - LADDER DETAIL

3/4" = 1'-0"

ELEVATION SECTION

NOTE:
1: TOP RUNG OF LADDER TO BE FLUSH WITH BOTTOM FLANGE OF ROOF HATCH.

10 - LADDER WALL MOUNTED TO ROOF HATCH DETAIL

3/4" = 1'-0"

THE DRAWINGS IN THIS SET ARE RECORD DRAWINGS. THEY ARE CONSTRUCTION CONTRACT DRAWINGS WHICH HAVE BEEN REVISED BASED ON AVAILABLE FIELD INFORMATION RECORDED BY OTHERS DURING CONSTRUCTION OF THIS CONTRACT. THERE HAS BEEN NO VERIFICATION OF DIMENSIONS SHOWN ON THE CONSTRUCTION DRAWINGS OR THE ACCURACY/COMPLETENESS OF THE FIELD INFORMATION RECEIVED.

SIGNATURE — DATE 2/7/2023

AS-BUILT REPLACEMENT SHEET

PROFESSIONAL CERTIFICATION

THIS DRAWING WAS ORIGINALLY APPROVED FOR CONSTRUCTION AND SEALED BY PATRICK DAUGHTON, A REGISTERED PROFESSIONAL ARCHITECT IN THE STATE OF MARYLAND, NO. 18898

NOTICE TO CONTRACTORS

- PROJECT ELEVATIONS ARE BASED ON NAVD88 AND HOWARD COUNTY'S BENCHMARK SYSTEM
- PREVIOUS PROJECTS USED OTHER DATUMS
- APPLY THE FOLLOWING CONVERSIONS WHEN USING PREVIOUS CONTRACT DRAWINGS:
  - ADDITION NO. 6: SUBTRACT 0.80 FT
  - PRIOR ADDITIONS: SUBTRACT 1.04 FT

DEPARTMENT OF PUBLIC WORKS
HOWARD COUNTY, MARYLAND

CHIEF, BUREAU OF UTILITIES — DATE

DES: RK
DRN: RK, AG
CHK: BE
DATE: 01/2018

DATE	REV	DESCRIPTION
03/2021		RECORD DRAWINGS

ARCHITECTURAL

DRYER BUILDING DETAILS

LITTLE PATUXENT WATER RECLAMATION PLANT
8TH ADDITION
BIOSOLIDS PROCESSING FACILITIES - PHASE 2

CAPITAL PROJECT S-6295
CONTRACT NO. 24-4936

ELECTION DISTRICT NO. 6
HOWARD COUNTY, MARYLAND

SCALE AS SHOWN

SHEET 124 OF 311

A-905

BIM 360://10054364 – Little Patuxent WRP 8th Addition/264592_100_A_V18.rvt
1/7/2022 11:38:52 AM

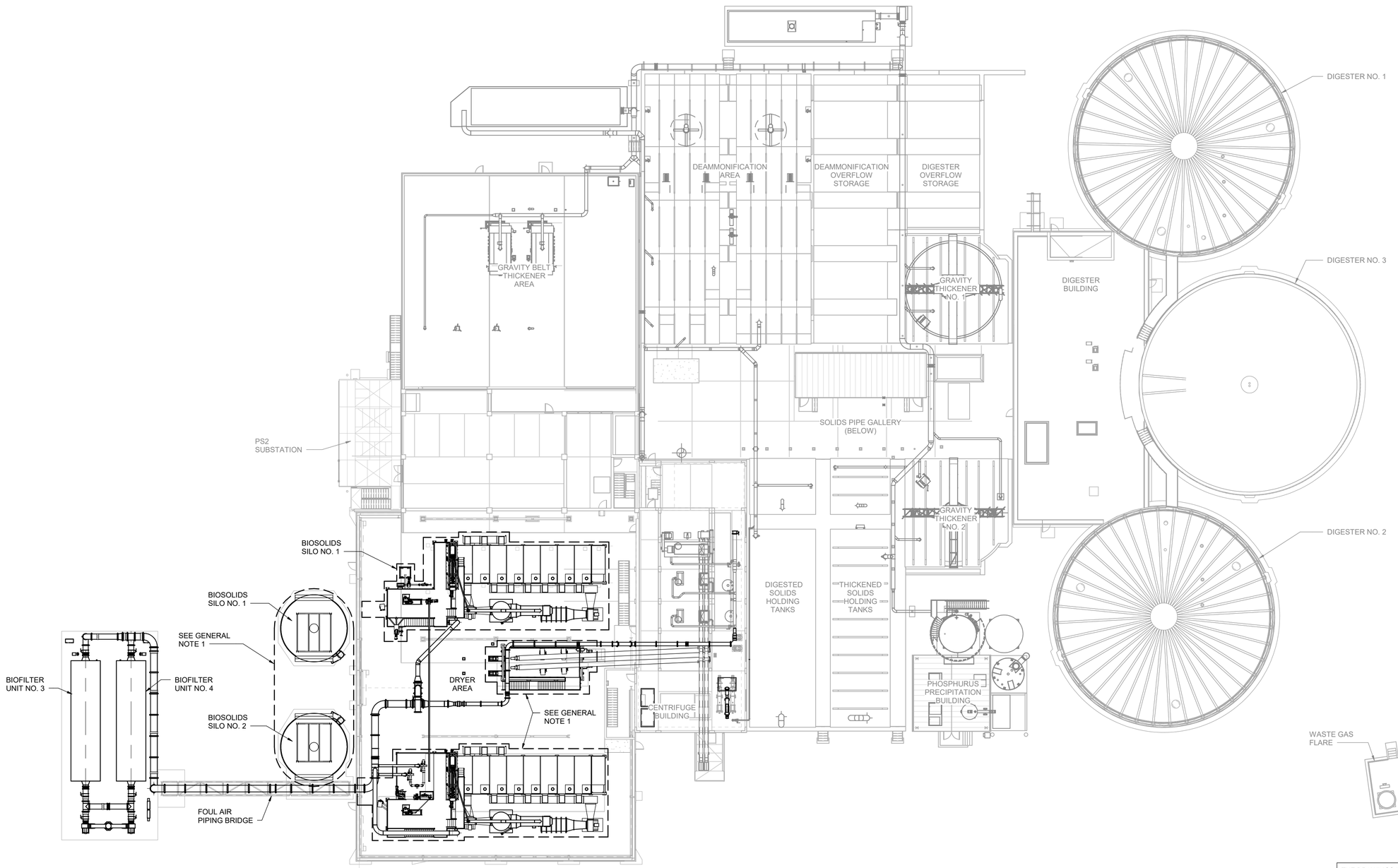

GENERAL NOTES

1. EQUIPMENT SHOWN WITHIN DASHED AREA IS SUPPLIED BY DRYER MANUFACTURER AND INSTALLED BY CONTRACTOR. SEE DRYER SUPPLIER DESIGN SUBMITTAL FOR CLARIFICATION OF LIMITS OF SCOPE.

OVERALL BUILDING PLAN

1" = 20'-0"

THE DRAWINGS IN THIS SET ARE RECORD DRAWINGS. THEY ARE CONSTRUCTION CONTRACT DRAWINGS WHICH HAVE BEEN REVISED BASED ON AVAILABLE FIELD INFORMATION RECORDED BY OTHERS DURING CONSTRUCTION OF THIS CONTRACT. THERE HAS BEEN NO VERIFICATION OF DIMENSIONS SHOWN ON THE CONSTRUCTION DRAWINGS OR THE ACCURACY/COMPLETENESS OF THE FIELD INFORMATION RECEIVED.

SIGNATURE

2/7/2022
DATE

0 20 40
SCALE: 1"= 20'

AS-BUILT REPLACEMENT SHEET

PROFESSIONAL CERTIFICATION

THIS DRAWING WAS ORIGINALLY APPROVED FOR CONSTRUCTION AND SEALED BY ADAM S. PARMENTER, A REGISTERED PROFESSIONAL ENGINEER IN THE STATE OF MARYLAND, NO. 39376

NOTICE TO CONTRACTORS

- PROJECT ELEVATIONS ARE BASED ON NAVD88 AND HOWARD COUNTY'S BENCHMARK SYSTEM
- PREVIOUS PROJECTS USED OTHER DATUMS
- APPLY THE FOLLOWING CONVERSIONS WHEN USING PREVIOUS CONTRACT DRAWINGS:
  - ADDITION NO. 6: SUBTRACT 0.80 FT
  - PRIOR ADDITIONS: SUBTRACT 1.04 FT

DEPARTMENT OF PUBLIC WORKS
HOWARD COUNTY, MARYLAND

CHIEF, BUREAU OF UTILITIES DATE

DES: ADP
DRN: REE
CHK: JKP
DATE: 01/2019

DATE	REV	DESCRIPTION
03/2021		RECORD DRAWINGS

PROCESS

DEWATERING AND DRYER BUILDING OVERALL BUILDING PLAN

LITTLE PATUXENT WATER RECLAMATION PLANT
8TH ADDITION
BIOSOLIDS PROCESSING FACILITIES - PHASE 2

CAPITAL PROJECT S-6295
CONTRACT NO. 24-4936

ELECTION DISTRICT NO. 6
HOWARD COUNTY, MARYLAND

SCALE AS SHOWN

SHEET 125 OF 311

M-500

BIM 360://10054364 – Little Patuxent WRP 8th Addition/264592_100_D_V18.rvt
1/7/2022 1:29:49 PM

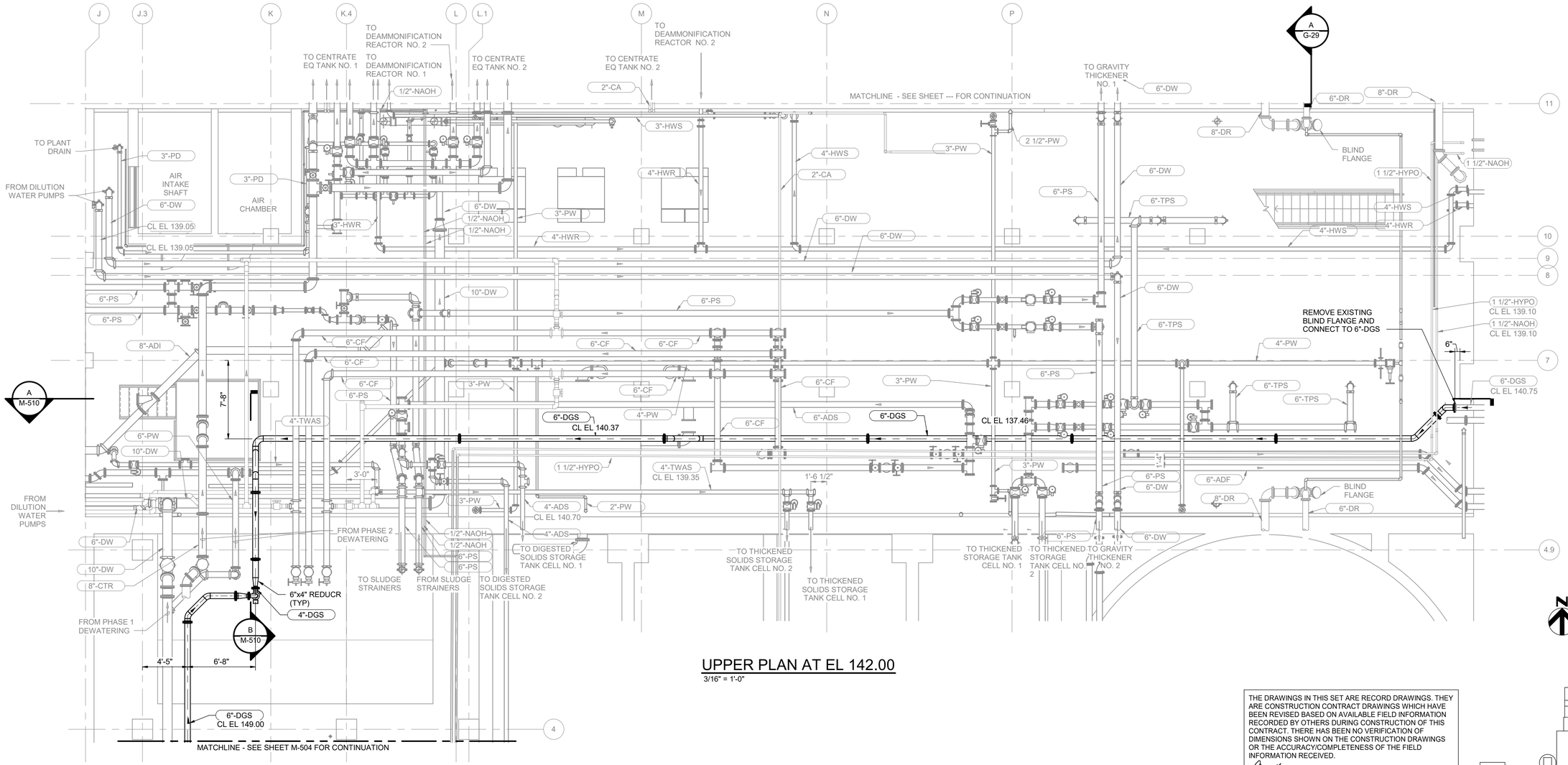

UPPER PLAN AT EL 142.00

3/16" = 1'-0"

N

GENERAL NOTES

1. CONTRACTOR TO VERIFY AND MATCH EXISTING ELEVATIONS WHEN CONNECTING TO EXISITNG PIPING SYSTEMS. SEE DRYER SUPPLIER DESIGN SUBMITTAL FOR CLARIFICATION OF LIMITS OF SCOPE.
2. UNLESS NOTED OTHERWISE, NOT ALL PIPE AND DUCT SUPPORTS ARE SHOWN. FOR SUPPORT DETAILS, SEE SHEETS M-905 THROUGH M-907.

THE DRAWINGS IN THIS SET ARE RECORD DRAWINGS. THEY ARE CONSTRUCTION CONTRACT DRAWINGS WHICH HAVE BEEN REVISED BASED ON AVAILABLE FIELD INFORMATION RECORDED BY OTHERS DURING CONSTRUCTION OF THIS CONTRACT. THERE HAS BEEN NO VERIFICATION OF DIMENSIONS SHOWN ON THE CONSTRUCTION DRAWINGS OR THE ACCURACY/COMPLETENESS OF THE FIELD INFORMATION RECEIVED.

SIGNATURE — DATE 2/7/2023

0 5 10

SCALE: 3/16"=1'-0"

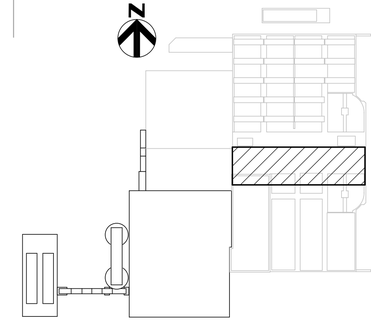

KEY PLAN

BIM 360://10054364 - Little Patuxent WRP 8th Addition/264592_100_D_V18.rvt
1/7/2022 1:29:59 PM

AS-BUILT REPLACEMENT SHEET

PROFESSIONAL CERTIFICATION

THIS DRAWING WAS ORIGINALLY APPROVED FOR CONSTRUCTION AND SEALED BY ADAM S. PARMENTER, A REGISTERED PROFESSIONAL ENGINEER IN THE STATE OF MARYLAND, NO. 39376

NOTICE TO CONTRACTORS

- PROJECT ELEVATIONS ARE BASED ON NAVD88 AND HOWARD COUNTY'S BENCHMARK SYSTEM
- PREVIOUS PROJECTS USED OTHER DATUMS
- APPLY THE FOLLOWING CONVERSIONS WHEN USING PREVIOUS CONTRACT DRAWINGS:
  - ADDITION NO. 6: SUBTRACT 0.80 FT
  - PRIOR ADDITIONS: SUBTRACT 1.04 FT

DEPARTMENT OF PUBLIC WORKS
HOWARD COUNTY, MARYLAND

CHIEF, BUREAU OF UTILITIES — DATE

DES: ADP
DRN: REE
CHK: JKP
DATE: 01/2019

DATE	REV	DESCRIPTION
03/2021		RECORD DRAWINGS

PROCESS

DEWATERING AND DRYER BUILDING PARTIAL PLAN AT EL 142.00

LITTLE PATUXENT WATER RECLAMATION PLANT
8TH ADDITION
BIOSOLIDS PROCESSING FACILITIES - PHASE 2

CAPITAL PROJECT S-6295
CONTRACT NO. 24-4936

ELECTION DISTRICT NO. 6
HOWARD COUNTY, MARYLAND

SCALE AS SHOWN

SHEET 126 OF 311

M-501

MATCHLINE - SEE SHEET M-509 FOR CONTINUATION

2"-POLY
2"-POLY
2"-POLY
1 1/4"-POLYS
1 1/4"-POLYS
6"-VT
OIL / WATER SEPERATOR
AIR RECEIVER
SEE NOTE 2 (9) (12)
AIR DRIER (TYP)
NITROGEN RECEIVER
3/4"-NPW
3"-PW
1/4"-CA
NITROGEN GENERATOR (TYP)
AIR COMPRESSOR (TYP)
A M-517
A M-515
SEE DRAWING C-18 FOR CONTINUATION
1"-N2
2'-2"
1'-9"
2'-1"
D M-510
A M-518
11'-5"
2"-NPW
(TYP) 4"-PW
4" GATE VALVE (TYP)
(TYP) 3
2"-PW (DRAIN, TYP)
BLIND FLANGE
1 8-DRY-1212-PMP
2 8-DRY-1222-PMP
(TYP) 4"-PW
3 (TYP)
DISMANTLING JOINT
BLIND FLANGE (ABOVE)
(TYP) 8
C M-510
11'-8 1/2"
8-DRY-1211-MOV 4
4'-5"
2'-1"
6"-PW
3"-NPW
8'-9"
(TYP) 7
(TYP) 5
4"-PW
8-DRY-1222-FE
5'-6"
3'-2"
EL 129.20
8-DRY-1212-FE
1 1/2"-PW
REUSED 3" GATE VALVE
3"-PW
2"-PW
2"
(TYP) 6
6"-PW (TYP)
1/4"-CA
FILTER DRAIN DETAIL
1 M-511
8-DRY-1212-FIL
10
6"-PW
(TYP) 6
13
8-DRY-1222-FIL
11
3'-6"
3'-6"
6"
3"-PW
10"-PW
1 1/4"-POLYS (TYP)
8"-CTR
4"-NPW
4"-PW
3"-PW
6"-CTR
2"-NPW
10"-PW (TYP)
1/4"-CA
2"-NPW
2"-NPW
CONNECT TO EXISTING FLANGE
6"-PW
3"-NPW
3"-POLYS
3"-POLYS
2"-NPW
A M-514
2"-POLY
UP TO DRYER ROOM N2 SYSTEM
4"-VT
7'-10"
1'-1"
6"-PW
4'-2"
4"
3"-DR CL EL 138.95
3"-DR CL EL 138.00
TIE-IN TO 8" DRAIN WITH 8"X4" LATERAL AND TRANSITION TO FLG FITTINGS
3/4"-PW
B M-511
1"-PW
CONNECT TO EXISTING FLANGE
A M-513

PARTIAL PLAN AT EL 129.20

1/4" = 1'-0"

1 4 8
SCALE: 1/4"=1'-0"

N

GENERAL NOTES

1. UNLESS NOTED OTHERWISE, NOT ALL PIPE AND DUCT SUPPORTS ARE SHOWN. FOR SUPPORT DETAILS, SEE SHEETS M-905 THROUGH M-907.
2. EQUIPMENT WITHIN DASHED LINE IS PART OF TWO NITROGEN GAS GENERATION SYSTEMS. ONE SYSTEM SUPPLIED BY THE DRYER MANUFACTURER. ONE SYSTEM SUPPLIED BY THE CONTRACTOR PRE-PURCHASE). CONTRACTOR TO INSTALL ALL EQUIPMENT.

KEY NOTES (X)

1 COOLING WATER PUMP NO. 1
2 COOLING WATER PUMP NO. 3
3 PRESSURE GAUGE SIMILAR TO DETAIL 2/I-910
4 6" MOTORIZED PLUG VALVE
5 4" MANUAL GATE VAVLE
6 PRESSURE GAUGE AND TRANSMITTER, SEE DETAIL 3/I-910
7 AIR RELEASE VALVE
8 4" CHECK VALVE
9 ALL EQUIPMENT WILL BE INSTALLED, ELECTRICALLY CONNECTED AND PIPED BY CONTRACTOR.
10 FILTRATION UNIT NO. 1
11 FILTRATION UNIT NO. 2
12 PIPING LAYOUT BY CONTRACTOR. AVOID WALKING PATHWAY INTERFERENCES BY ROUTING PIPING UPWARD.
13 PNEUMATIC PRESSURE SUSTAINING VALVE

THE DRAWINGS IN THIS SET ARE RECORD DRAWINGS. THEY ARE CONSTRUCTION CONTRACT DRAWINGS WHICH HAVE BEEN REVISED BASED ON AVAILABLE FIELD INFORMATION RECORDED BY OTHERS DURING CONSTRUCTION OF THIS CONTRACT. THERE HAS BEEN NO VERIFICATION OF DIMENSIONS SHOWN ON THE CONSTRUCTION DRAWINGS OR THE ACCURACY/COMPLETENESS OF THE FIELD INFORMATION RECEIVED.

SIGNATURE — DATE 2/7/2022

N

KEY PLAN

BIM 360://10054364 – Little Patuxent WRP 8th Addition/264592_100_D_V18.rvt
1/7/2022 1:30:04 PM

AS-BUILT REPLACEMENT SHEET

PROFESSIONAL CERTIFICATION
THIS DRAWING WAS ORIGINALLY APPROVED FOR CONSTRUCTION AND SEALED BY ADAM S. PARMENTER, A REGISTERED PROFESSIONAL ENGINEER IN THE STATE OF MARYLAND, NO. 39376

NOTICE TO CONTRACTORS
- PROJECT ELEVATIONS ARE BASED ON NAVD88 AND HOWARD COUNTY'S BENCHMARK SYSTEM
- PREVIOUS PROJECTS USED OTHER DATUMS
- APPLY THE FOLLOWING CONVERSIONS WHEN USING PREVIOUS CONTRACT DRAWINGS:
  - ADDITION NO. 6: SUBTRACT 0.80 FT
  - PRIOR ADDITIONS: SUBTRACT 1.04 FT

DEPARTMENT OF PUBLIC WORKS
HOWARD COUNTY, MARYLAND

CHIEF, BUREAU OF UTILITIES — DATE

DES: ADP
DRN: REE
CHK: JKP
DATE: 01/2019

DATE	REV	DESCRIPTION
03/2021		RECORD DRAWINGS

PROCESS

DEWATERING AND DRYER BUILDING
DRYER EQUIPMENT - PARTIAL PLAN AT EL 129.20

LITTLE PATUXENT WATER RECLAMATION PLANT
8TH ADDITION
BIOSOLIDS PROCESSING FACILITIES - PHASE 2

CAPITAL PROJECT S-6295
CONTRACT NO. 24-4936

ELECTION DISTRICT NO. 6
HOWARD COUNTY, MARYLAND

SCALE AS SHOWN

SHEET 127 OF 311

M-502

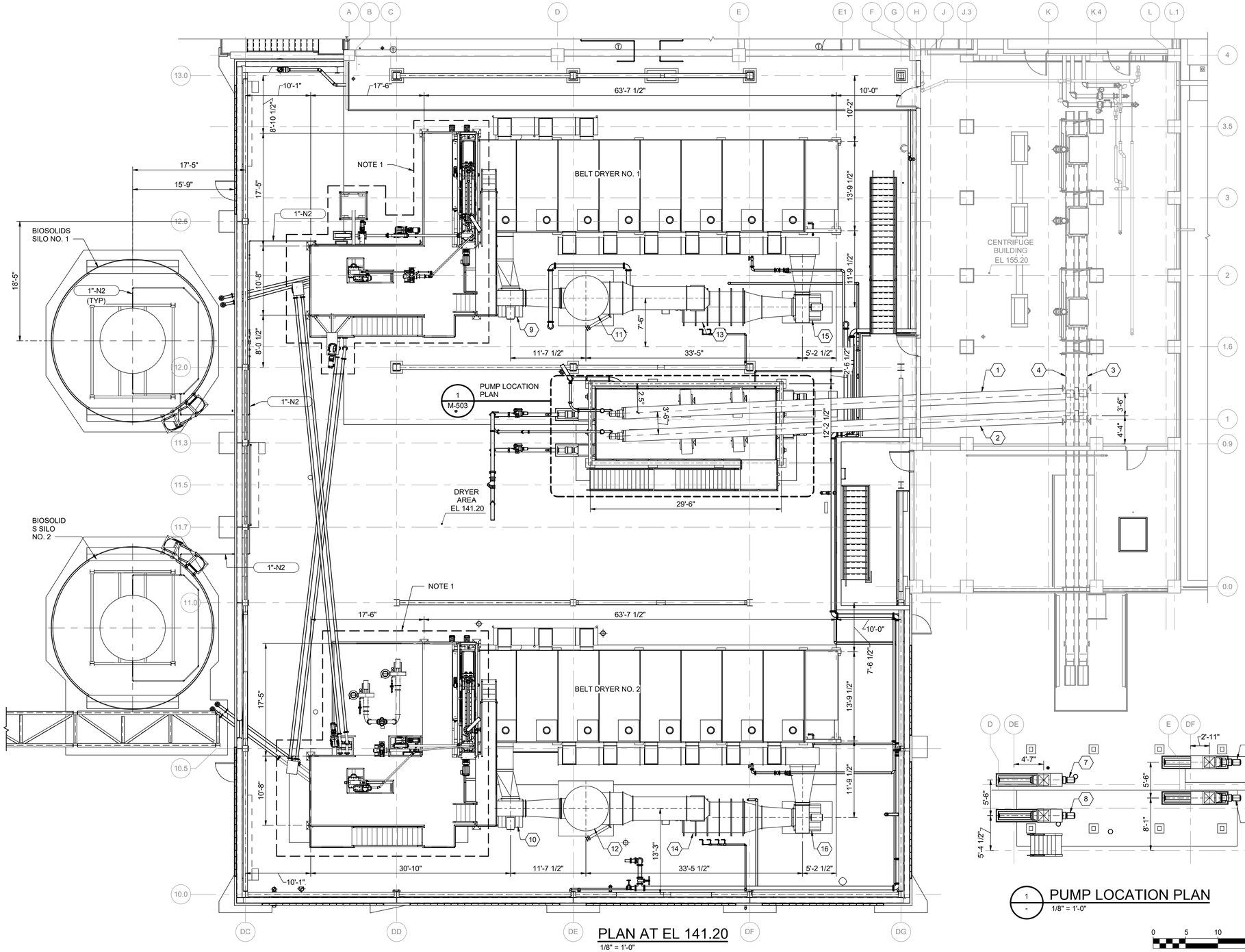

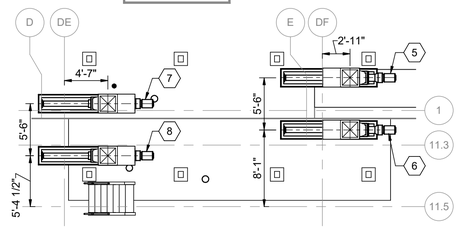

1 / - PUMP LOCATION PLAN
1/8" = 1'-0"

PLAN AT EL 141.20
1/8" = 1'-0"

0 5 10 15
SCALE: 1/8"=1'-0"

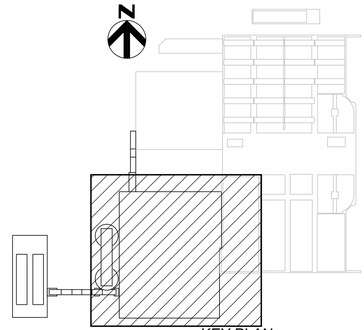

KEY PLAN

N

GENERAL NOTES:
1. SEE MANUFACTURERS DRYER SYSTEM DRAWINGS FOR THE LOCATIONS OF EQUIPMENT.

KEY NOTES (X)

1 ANGLED SCREW CONVEYOR NO. 1
2 ANGLED SCREW CONVEYOR NO. 2
3 CAKE CONVEYOR NO. 1
4 CAKE CONVEYOR NO. 2
5 DEWATERED SOLIDS PROGRESSIVE CAVITY PUMP NO. 1
6 DEWATERED SOLIDS PROGRESSIVE CAVITY PUMP NO. 2
7 DEWATERED SOLIDS PROGRESSIVE CAVITY PUMP NO. 3
8 DEWATERED SOLIDS PROGRESSIVE CAVITY PUMP NO. 4
9 OFF-GAS FAN NO. 1
10 OFF-GAS FAN NO. 2
11 SPRAY CONDENSER NO. 1
12 SPRAY CONDENSER NO. 2
13 GAS BURNER SYSTEM NO. 1
14 GAS BUNNER SYSTEM NO. 2
15 HOT GAS FAN NO. 1
16 HOT GAS FAN NO. 2

THE DRAWINGS IN THIS SET ARE RECORD DRAWINGS. THEY ARE CONSTRUCTION CONTRACT DRAWINGS WHICH HAVE BEEN REVISED BASED ON AVAILABLE FIELD INFORMATION RECORDED BY OTHERS DURING CONSTRUCTION OF THIS CONTRACT. THERE HAS BEEN NO VERIFICATION OF DIMENSIONS SHOWN ON THE CONSTRUCTION DRAWINGS OR THE ACCURACY/COMPLETENESS OF THE FIELD INFORMATION RECEIVED.

SIGNATURE — DATE 2/7/2022

AS-BUILT REPLACEMENT SHEET

PROFESSIONAL CERTIFICATION
THIS DRAWING WAS ORIGINALLY APPROVED FOR CONSTRUCTION AND SEALED BY ADAM S. PARMENTER, A REGISTERED PROFESSIONAL ENGINEER IN THE STATE OF MARYLAND, NO. 39376

NOTICE TO CONTRACTORS
- PROJECT ELEVATIONS ARE BASED ON NAVD88 AND HOWARD COUNTY'S BENCHMARK SYSTEM
- PREVIOUS PROJECTS USED OTHER DATUMS
- APPLY THE FOLLOWING CONVERSIONS WHEN USING PREVIOUS CONTRACT DRAWINGS:
  - ADDITION NO. 6: SUBTRACT 0.80 FT
  - PRIOR ADDITIONS: SUBTRACT 1.04 FT

DEPARTMENT OF PUBLIC WORKS
HOWARD COUNTY, MARYLAND

CHIEF, BUREAU OF UTILITIES — DATE

DES: ADP
DRN: SLB
CHK: JKP
DATE: 01/2019

DATE	REV	DESCRIPTION
03/2021		RECORD DRAWINGS

PROCESS

DRYER BUILDING DRYER EQUIPMENT LOCATION PLAN

LITTLE PATUXENT WATER RECLAMATION PLANT
8TH ADDITION
BIOSOLIDS PROCESSING FACILITIES - PHASE 2

CAPITAL PROJECT S-6295
CONTRACT NO. 24-4936

ELECTION DISTRICT NO. 6
HOWARD COUNTY, MARYLAND

SCALE AS SHOWN

SHEET 128 OF 311

M-503

BIM 360://10054364 – Little Patuxent WRP 8th Addition/264592_100_D_V18.rvt
1/9/2022 10:26:38 AM

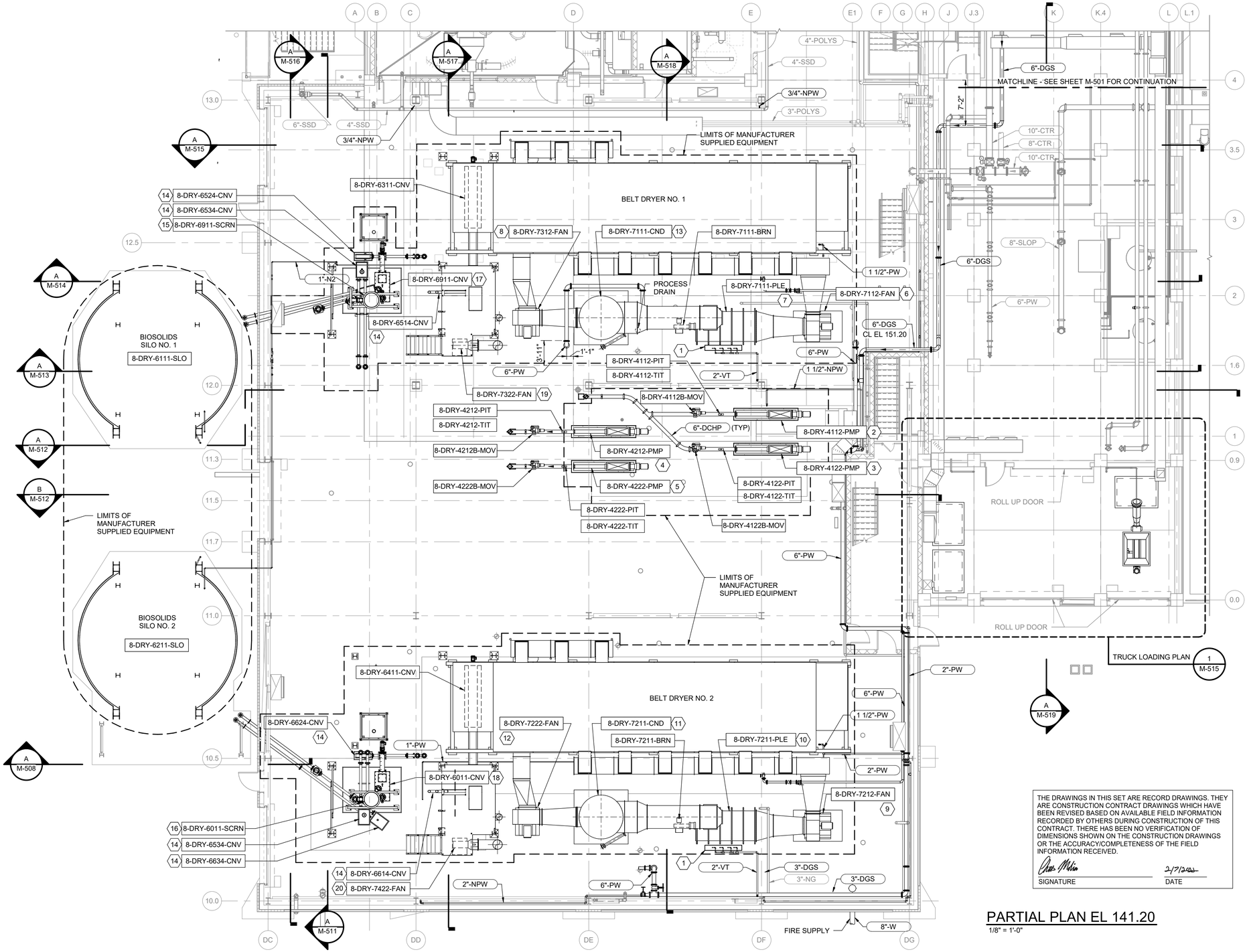

GENERAL NOTES

1. EQUIPMENT SHOWN WITHIN DASHED AREA IS SUPPLIED BY DRYER MANUFACTURER AND INSTALLED BY CONTRACTOR. SEE DRYER SUPPLIER DESIGN SUBMITTAL FOR CLARIFICATION OF LIMITS OF SLOPE.
2. UNLESS NOTED OTHERWISE, NOT ALL PIPE AND DUCT SUPPORTS ARE SHOWN. FOR SUPPORT DETAILS, SEE SHEETS M-905 THROUGH M-907.
3. FOR LOCATIONAL DIMENSIONS TO EQUIPMENT, SEE SHEET M-503.

KEY NOTES (X)

1 GAS PRESSURE REGULATING AND METERING STATION
2 DEWATERED SOLIDS PROGRESSIVE CAVITY PUMP NO. 1
3 DEWATERED SOLIDS PROGRESSIVE CAVITY PUMP NO. 2
4 DEWATERED SOLIDS PROGRESSIVE CAVITY PUMP NO. 3
5 DEWATERED SOLIDS PROGRESSIVE CAVITY PUMP NO. 4
6 HOT GAS FAN NO. 1
7 GAS BURNER SYSTEM NO. 1
8 OFF-GAS FAN NO. 1
9 HOT GAS FAN NO. 2
10 GAS BUNNER SYSTEM NO. 2
11 SPRAY CONDENSER NO. 2
12 OFF-GAS FAN NO. 2
13 SPRAY CONDENSER NO. 1
14 DRAG CONVEYOR
15 SOLIDS SCREEN NO. 1
16 SOLIDS SCREEN NO. 2
17 MIXER DOSING SCREW CONVEYOR NO. 1
18 MIXER DOSING SCREW CONVEYOR NO. 2
19 EXHAUST FAN NO. 1
20 EXHAUST FAN NO. 2

THE DRAWINGS IN THIS SET ARE RECORD DRAWINGS. THEY ARE CONSTRUCTION CONTRACT DRAWINGS WHICH HAVE BEEN REVISED BASED ON AVAILABLE FIELD INFORMATION RECORDED BY OTHERS DURING CONSTRUCTION OF THIS CONTRACT. THERE HAS BEEN NO VERIFICATION OF DIMENSIONS SHOWN ON THE CONSTRUCTION DRAWINGS OR THE ACCURACY/COMPLETENESS OF THE FIELD INFORMATION RECEIVED.

SIGNATURE — DATE 1/7/2022

PARTIAL PLAN EL 141.20

1/8" = 1'-0"

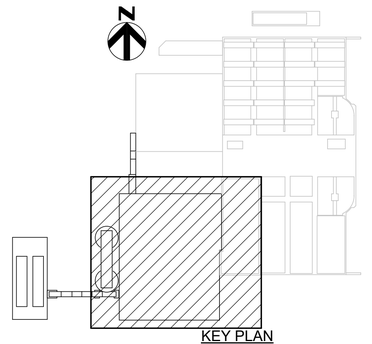

AS-BUILT REPLACEMENT SHEET

PROFESSIONAL CERTIFICATION

THIS DRAWING WAS ORIGINALLY APPROVED FOR CONSTRUCTION AND SEALED BY ADAM S. PARMENTER, A REGISTERED PROFESSIONAL ENGINEER IN THE STATE OF MARYLAND, NO. 39376

NOTICE TO CONTRACTORS

- PROJECT ELEVATIONS ARE BASED ON NAVD88 AND HOWARD COUNTY'S BENCHMARK SYSTEM
- PREVIOUS PROJECTS USED OTHER DATUMS
- APPLY THE FOLLOWING CONVERSIONS WHEN USING PREVIOUS CONTRACT DRAWINGS:
  - ADDITION NO. 6: SUBTRACT 0.80 FT
  - PRIOR ADDITIONS: SUBTRACT 1.04 FT

DEPARTMENT OF PUBLIC WORKS
HOWARD COUNTY, MARYLAND

CHIEF, BUREAU OF UTILITIES — DATE

DES: ADP
DRN: REE
CHK: JKP
DATE: 01/2019

DATE	REV	DESCRIPTION
03/2021		RECORD DRAWINGS

PROCESS

DEWATERING AND DRYER BUILDING
DRYER EQUIPMENT PARTIAL PLAN AT EL 141.20

LITTLE PATUXENT WATER RECLAMATION PLANT
8TH ADDITION
BIOSOLIDS PROCESSING FACILITIES - PHASE 2

CAPITAL PROJECT S-6295
CONTRACT NO. 24-4936

ELECTION DISTRICT NO. 6
HOWARD COUNTY, MARYLAND

SCALE AS SHOWN

SHEET 129 OF 311

M-504

BIM 360://10054364 – Little Patuxent WRP 8th Addition/264592_100_D_V18.rvt
1/7/2022 1:31:12 PM

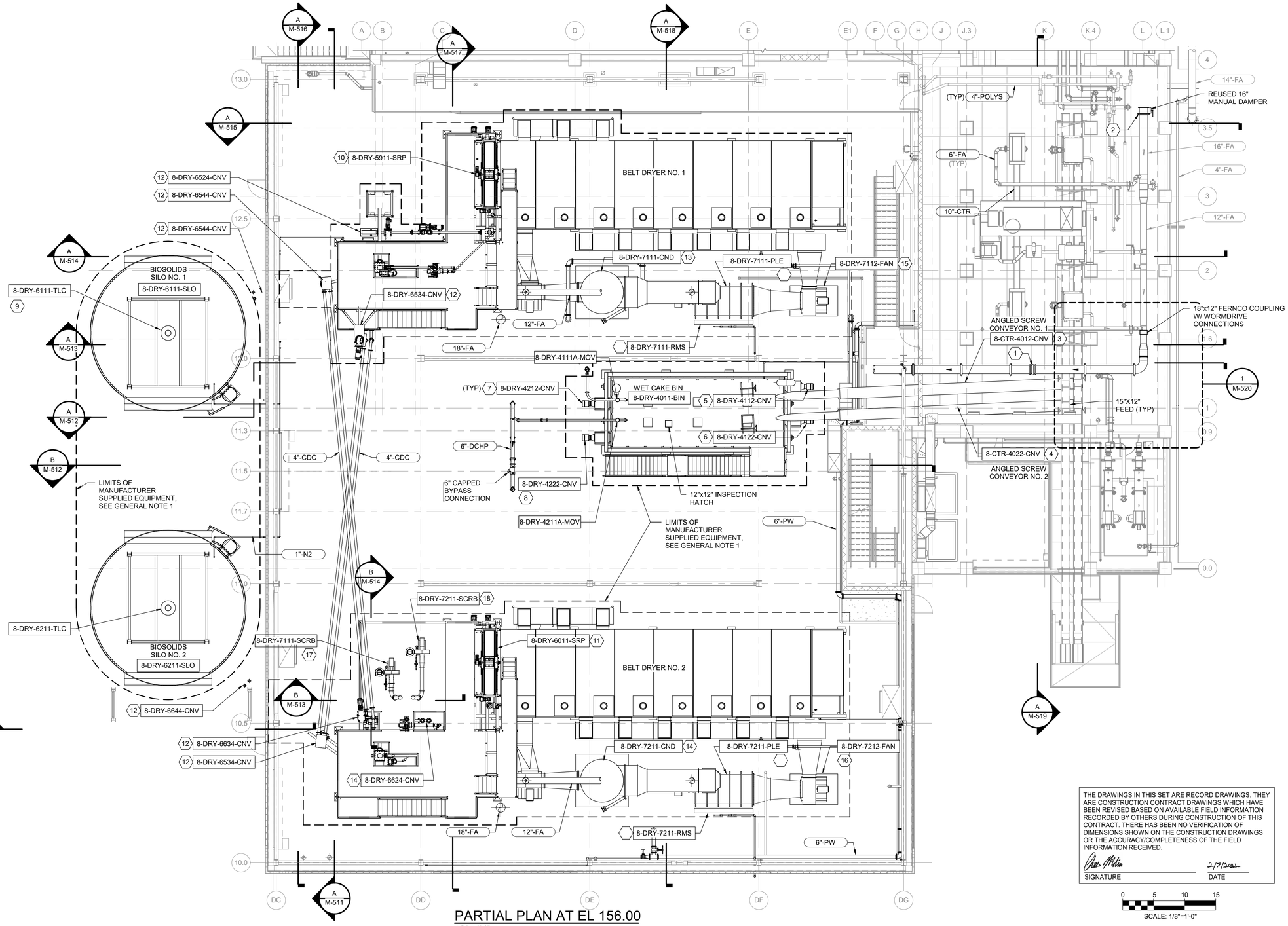

PARTIAL PLAN AT EL 156.00

1/8" = 1'-0"

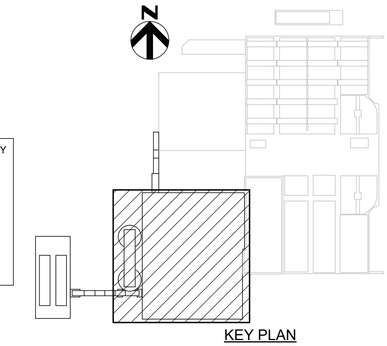

KEY PLAN

GENERAL NOTES

1. EQUIPMENT SHOWN WITHIN DASHED AREA IS SUPPLIED BY DRYER MANUFACTURER AND INSTALLED BY CONTRACTOR.
2. TWO NEW ANGLED SCREW CONVEYORS SUPPLIED BY CONTRACTOR.
3. FOUL AIR (FA) DUCTWORK DOWNSTREAM OF DRYER EXHAUST FAN NO. 1 & NO. 2 SUPPLIED BY CONTRACTOR.
4. UNLESS NOTED OTHERWISE, NOT ALL PIPE AND DUCT SUPPORTS ARE SHOWN. FOR SUPPORT DETAILS, SEE SHEETS M-905 THROUGH M-907.
5. FOR LOCATIONAL DIMENSIONS TO EQUIPMENT, SEE SHEET M-503.

KEY NOTES (X)

1 FLEXIBLE CONNECTOR
2 PROVIDE FLANGED TRANSITION.
3 ANGLED SCREW CONVEYOR NO. 1
4 ANGLED SCREW CONVEYOR NO. 2
5 CAKE BIN LIVE BOTTON SCREW CONVERYOR NO. 1
6 CAKE BIN LIVE BOTTON SCREW CONVERYOR NO. 2
7 CAKE BIN LIVE BOTTON SCREW CONVERYOR NO. 3
8 CAKE BIN LIVE BOTTON SCREW CONVERYOR NO. 4
9 TELESCOPING LOADOUT CHUTE NO. 1
10 SOLIDS ROLLER PRESS NO. 1
11 SOLIDS ROLLER PRESS NO. 2
12 DRAG CONVEYOR
13 SPRAY CONDENSER NO. 1
14 SPRAY CONDENSER NO. 2
15 HOT GAS FAN NO. 1
16 HOT GAS FAN NO. 2
17 ROTO CLONE NO. 1
18 ROTO CLONE NO. 2

THE DRAWINGS IN THIS SET ARE RECORD DRAWINGS. THEY ARE CONSTRUCTION CONTRACT DRAWINGS WHICH HAVE BEEN REVISED BASED ON AVAILABLE FIELD INFORMATION RECORDED BY OTHERS DURING CONSTRUCTION OF THIS CONTRACT. THERE HAS BEEN NO VERIFICATION OF DIMENSIONS SHOWN ON THE CONSTRUCTION DRAWINGS OR THE ACCURACY/COMPLETENESS OF THE FIELD INFORMATION RECEIVED.

SIGNATURE — DATE 2/7/2022

0 5 10 15
SCALE: 1/8"=1'-0"

AS-BUILT REPLACEMENT SHEET

PROFESSIONAL CERTIFICATION

THIS DRAWING WAS ORIGINALLY APPROVED FOR CONSTRUCTION AND SEALED BY ADAM S. PARMENTER, A REGISTERED PROFESSIONAL ENGINEER IN THE STATE OF MARYLAND, NO. 39376

NOTICE TO CONTRACTORS

- PROJECT ELEVATIONS ARE BASED ON NAVD88 AND HOWARD COUNTY'S BENCHMARK SYSTEM
- PREVIOUS PROJECTS USED OTHER DATUMS
- APPLY THE FOLLOWING CONVERSIONS WHEN USING PREVIOUS CONTRACT DRAWINGS:
  - ADDITION NO. 6: SUBTRACT 0.80 FT
  - PRIOR ADDITIONS: SUBTRACT 1.04 FT

DEPARTMENT OF PUBLIC WORKS
HOWARD COUNTY, MARYLAND

CHIEF, BUREAU OF UTILITIES — DATE

DES: ADP
DRN: REE
CHK: JKP
DATE: 01/2019

DATE	REV	DESCRIPTION
03/2021		RECORD DRAWINGS

PROCESS

DEWATERING AND DRYER BUILDING
DRYER EQUIPMENT- PARTIAL PLAN AT EL 155.20

LITTLE PATUXENT WATER RECLAMATION PLANT
8TH ADDITION
BIOSOLIDS PROCESSING FACILITIES - PHASE 2

CAPITAL PROJECT S-6295
CONTRACT NO. 24-4936

ELECTION DISTRICT NO. 6
HOWARD COUNTY, MARYLAND

SCALE AS SHOWN

SHEET 130 OF 311

M-505

BIM 360://10054364 – Little Patuxent WRP 8th Addition/264592_100_D_V18.rvt
1/7/2022 1:31:53 PM

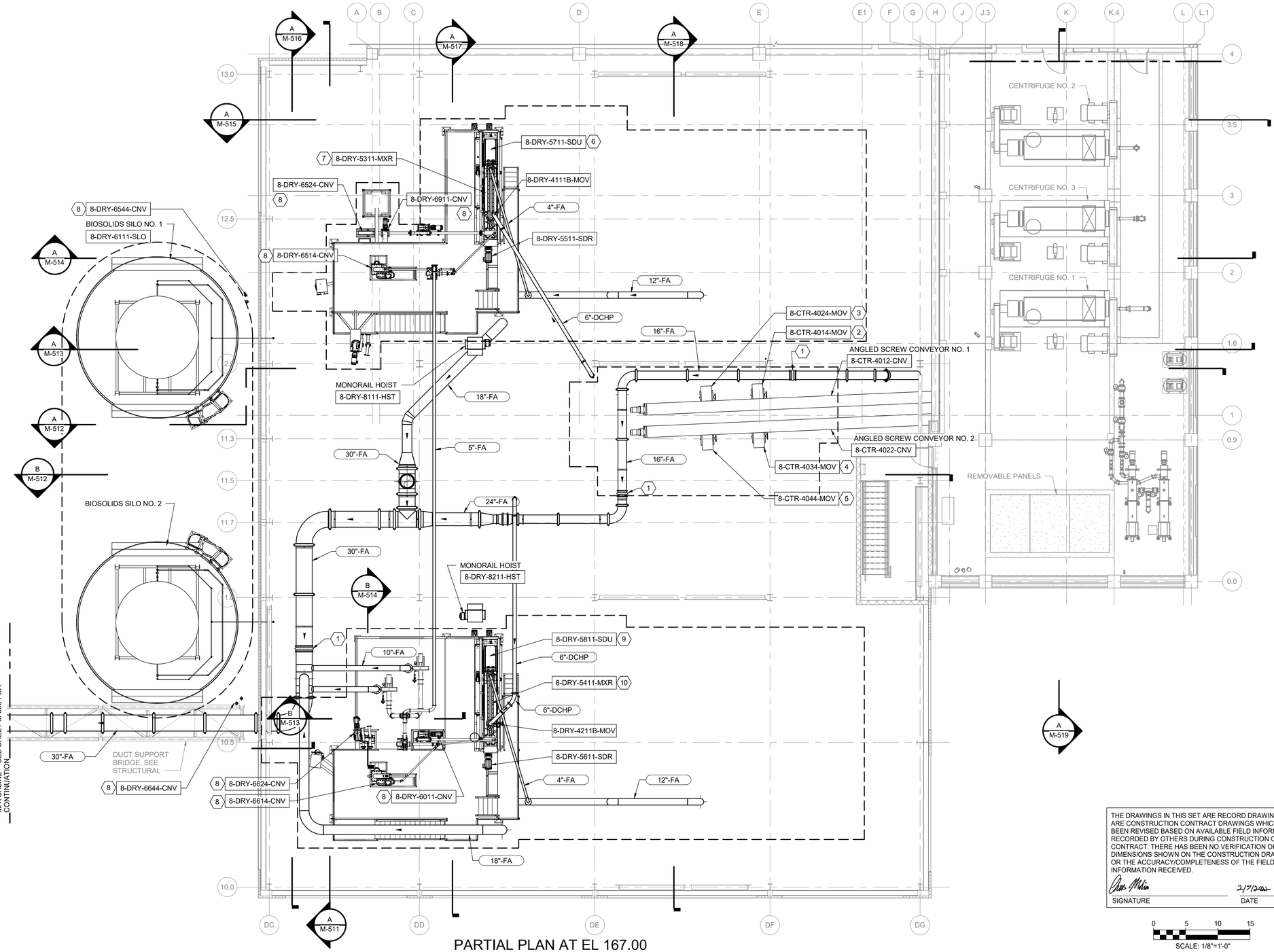

PARTIAL PLAN AT EL 167.00

1/8" = 1'-0"

N

GENERAL NOTES

1. EQUIPMENT SHOWN WITHIN DASHED AREA IS SUPPLIED BY DRYER MANUFACTURER AND INSTALLED BY CONTRACTOR.
2. TWO NEW ANGLED SCREW CONVEYORS SUPPLIED BY CONTRACTOR.
3. FOUL AIR (FA) DUCTWORK DOWNSTREAM OF DRYER EXHAUST FAN NO. 1 & NO. 2 SUPPLIED BY CONTRACTOR.
4. UNLESS NOTED OTHERWISE, NOT ALL PIPE AND DUCT SUPPORTS ARE SHOWN. FOR SUPPORT DETAILS, SEE SHEETS M-905 THROUGH M-907.
5. FOR LOCATIONAL DIMENSIONS TO EQUIPMENT, SEE SHEET M-503.

KEY NOTES (X)

1 FLEXIBLE CONNECTOR
2 MOTORIZED CONVEYOR SLIDE GATE NO. 1
3 MOTORIZED CONVEYOR SLIDE GATE NO. 2
4 MOTORIZED CONVEYOR SLIDE GATE NO. 3
5 MOTORIZED CONVEYOR SLIDE GATE NO. 4
6 SOLIDS DOSING UNIT NO. 1
7 SOLIDS MIXER NO. 1
8 DRAG CONVEYOR
9 SOLIDS DOSING UNIT NO. 2
10 SOLIDS MIXER NO. 2

THE DRAWINGS IN THIS SET ARE RECORD DRAWINGS. THEY ARE CONSTRUCTION CONTRACT DRAWINGS WHICH HAVE BEEN REVISED BASED ON AVAILABLE FIELD INFORMATION RECORDED BY OTHERS DURING CONSTRUCTION OF THIS CONTRACT. THERE HAS BEEN NO VERIFICATION OF DIMENSIONS SHOWN ON THE CONSTRUCTION DRAWINGS OR THE ACCURACY/COMPLETENESS OF THE FIELD INFORMATION RECEIVED.

SIGNATURE — DATE 2/7/2022

0 5 10 15
SCALE: 1/8"=1'-0"

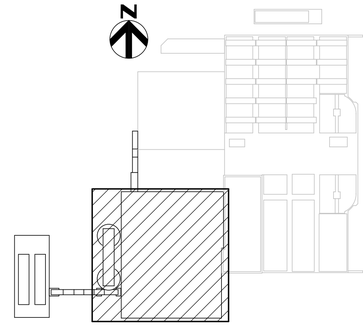

KEY PLAN

AS-BUILT REPLACEMENT SHEET

PROFESSIONAL CERTIFICATION

THIS DRAWING WAS ORIGINALLY APPROVED FOR CONSTRUCTION AND SEALED BY ADAM S. PARMENTER, A REGISTERED PROFESSIONAL ENGINEER IN THE STATE OF MARYLAND, NO. 39376

NOTICE TO CONTRACTORS

- PROJECT ELEVATIONS ARE BASED ON NAVD88 AND HOWARD COUNTY'S BENCHMARK SYSTEM
- PREVIOUS PROJECTS USED OTHER DATUMS
- APPLY THE FOLLOWING CONVERSIONS WHEN USING PREVIOUS CONTRACT DRAWINGS:
  - ADDITION NO. 6: SUBTRACT 0.80 FT
  - PRIOR ADDITIONS: SUBTRACT 1.04 FT

DEPARTMENT OF PUBLIC WORKS
HOWARD COUNTY, MARYLAND

CHIEF, BUREAU OF UTILITIES — DATE

DES: ADP
DRN: REE
CHK: JKP
DATE: 01/2019

DATE	REV	DESCRIPTION
03/2021		RECORD DRAWINGS

PROCESS

DEWATERING AND DRYER BUILDING DRYER EQUIPMENT- PARTIAL PLAN AT EL 167.00

LITTLE PATUXENT WATER RECLAMATION PLANT
8TH ADDITION
BIOSOLIDS PROCESSING FACILITIES - PHASE 2

CAPITAL PROJECT S-6295
CONTRACT NO. 24-4936

ELECTION DISTRICT NO. 6
HOWARD COUNTY, MARYLAND

SCALE AS SHOWN

SHEET 131 OF 311

M-506

BIM 360://10054364 – Little Patuxent WRP 8th Addition/264592_100_D_V18.rvt
1/7/2022 1:32:32 PM

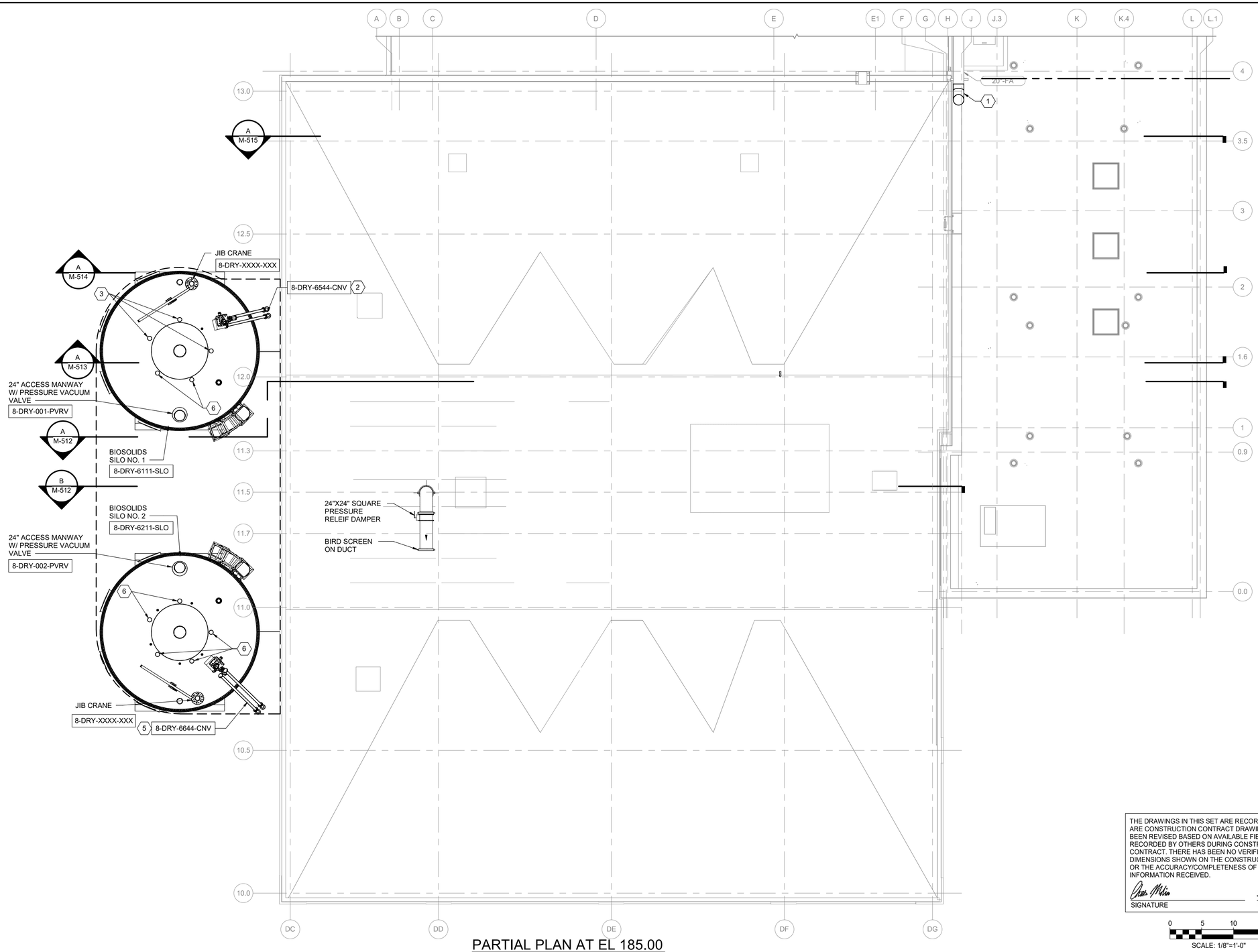

PARTIAL PLAN AT EL 185.00

1/8" = 1'-0"

N

GENERAL NOTES

1. EQUIPMENT SHOWN WITHIN DASHED AREA IS SUPPLIED BY DRYER MANUFACTURER AND INSTALLED BY CONTRACTOR. SEE DRYER SUPPLIER DESIGN SUBMITTAL FOR CLARIFICATION OF LIMITS OF SLOPE.
2. UNLESS NOTED OTHERWISE, NOT ALL PIPE AND DUCT SUPPORTS ARE SHOWN. FOR SUPPORT DETAILS, SEE SHEETS M-905 THROUGH M-907.
3. FOR LOCATIONAL DIMENSIONS TO EQUIPMENT, SEE SHEET M-503.

KEY NOTES (X)

1 CONTRACTOR TO REMOVE 20" 90 DEGREE BEND AND RE-INSTALL WITH BEND POINTED UP.
2 DRAG CONVEYOR
3 THERMAL STRING WITH FIVE (5) ELEMENTS SPACED EVENLY

THE DRAWINGS IN THIS SET ARE RECORD DRAWINGS. THEY ARE CONSTRUCTION CONTRACT DRAWINGS WHICH HAVE BEEN REVISED BASED ON AVAILABLE FIELD INFORMATION RECORDED BY OTHERS DURING CONSTRUCTION OF THIS CONTRACT. THERE HAS BEEN NO VERIFICATION OF DIMENSIONS SHOWN ON THE CONSTRUCTION DRAWINGS OR THE ACCURACY/COMPLETENESS OF THE FIELD INFORMATION RECEIVED.

SIGNATURE 2/7/2022 DATE

0 5 10 15
SCALE: 1/8"=1'-0"

N

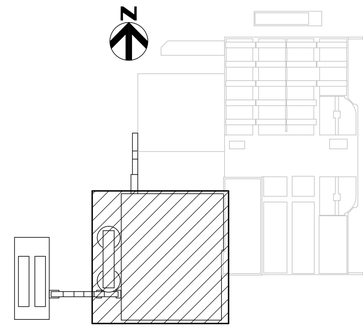

KEY PLAN

AS-BUILT REPLACEMENT SHEET

PROFESSIONAL CERTIFICATION

THIS DRAWING WAS ORIGINALLY APPROVED FOR CONSTRUCTION AND SEALED BY ADAM S. PARMENTER, A REGISTERED PROFESSIONAL ENGINEER IN THE STATE OF MARYLAND, NO. 39376

NOTICE TO CONTRACTORS

- PROJECT ELEVATIONS ARE BASED ON NAVD88 AND HOWARD COUNTY'S BENCHMARK SYSTEM
- PREVIOUS PROJECTS USED OTHER DATUMS
- APPLY THE FOLLOWING CONVERSIONS WHEN USING PREVIOUS CONTRACT DRAWINGS:
  - ADDITION NO. 6: SUBTRACT 0.80 FT
  - PRIOR ADDITIONS: SUBTRACT 1.04 FT

DEPARTMENT OF PUBLIC WORKS
HOWARD COUNTY, MARYLAND

CHIEF, BUREAU OF UTILITIES DATE

DES: ADP
DRN: REE
CHK: JKP
DATE: 01/2019

DATE	REV	DESCRIPTION
03/2021		RECORD DRAWINGS

PROCESS

DEWATERING AND DRYER BUILDING
DRYER EQUIPMENT- PARTIAL PLAN AT EL 185.00

LITTLE PATUXENT WATER RECLAMATION PLANT
8TH ADDITION
BIOSOLIDS PROCESSING FACILITIES - PHASE 2

CAPITAL PROJECT S-6295
CONTRACT NO. 24-4936

ELECTION DISTRICT NO. 6
HOWARD COUNTY, MARYLAND

SCALE AS SHOWN

SHEET 132 OF 311

M-507

BIM 360://10054364 – Little Patuxent WRP 8th Addition/264592_100_D_V18.rvt
1/7/2022 1:32:46 PM

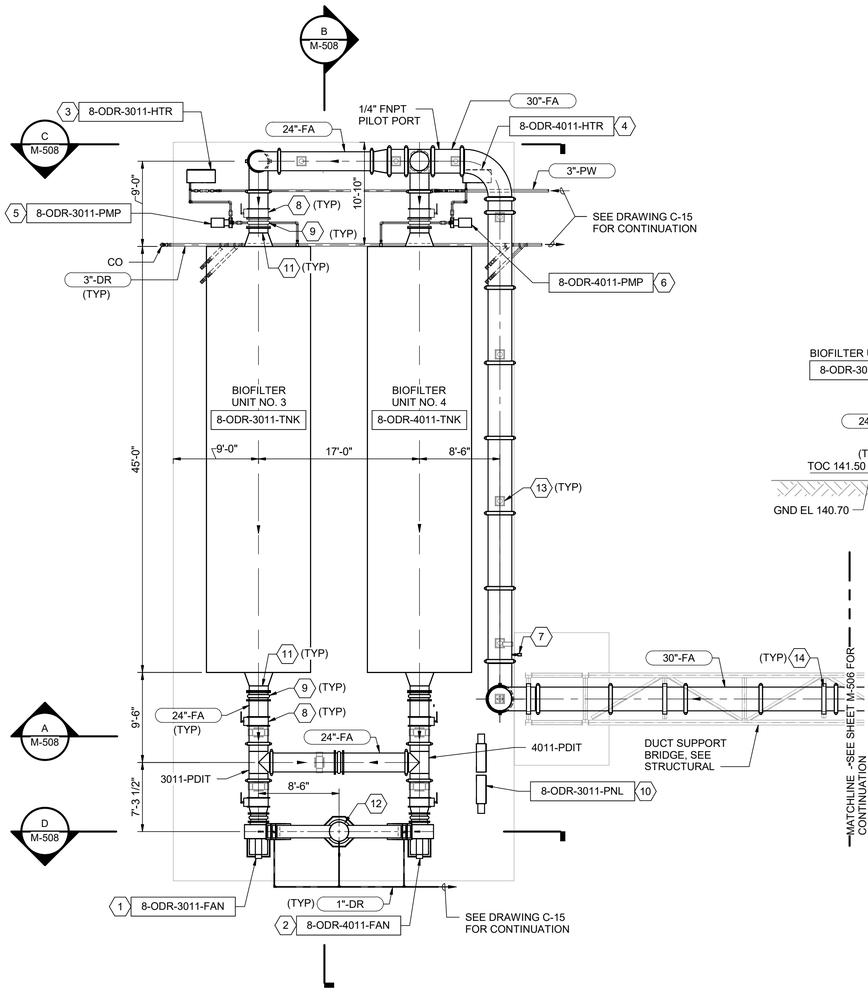

BIOFILTER PLAN AT EL 141.20

1/8" = 1'-0"

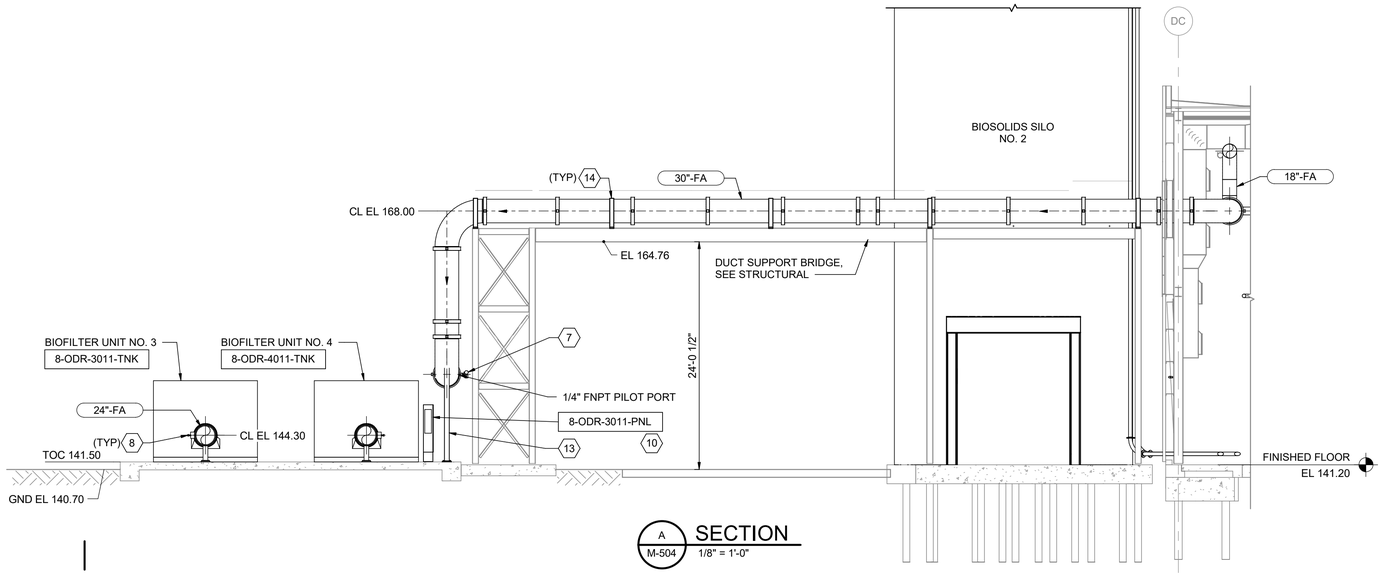

SECTION

A M-504 — 1/8" = 1'-0"

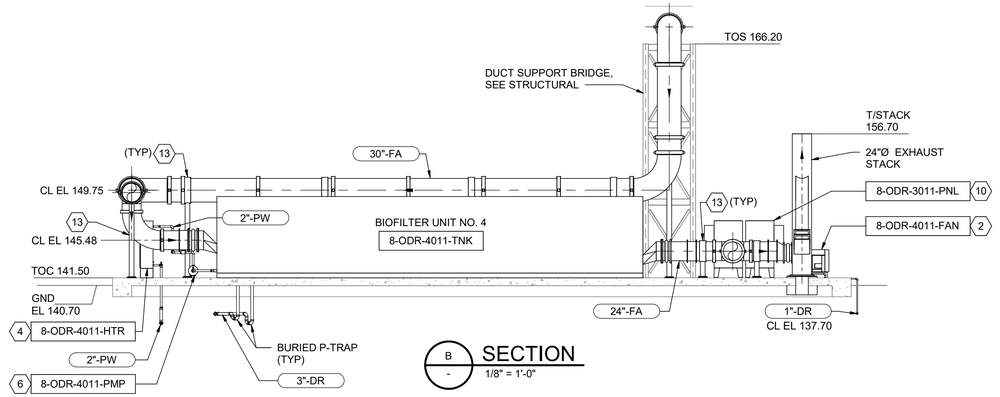

SECTION

B - — 1/8" = 1'-0"

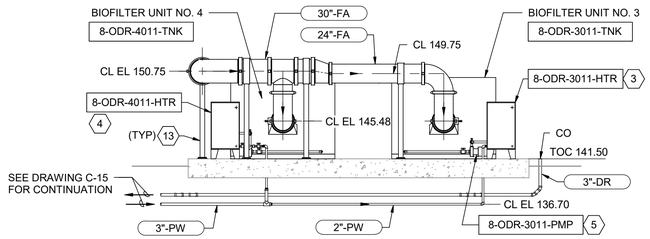

SECTION

C M-508 — 1/8" = 1'-0"

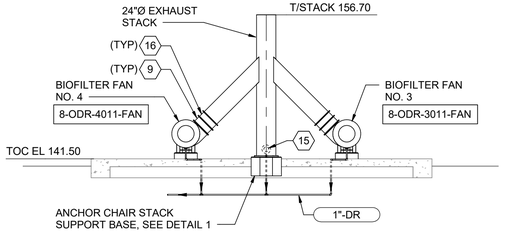

SECTION

D M-508 — 1/8" = 1'-0"

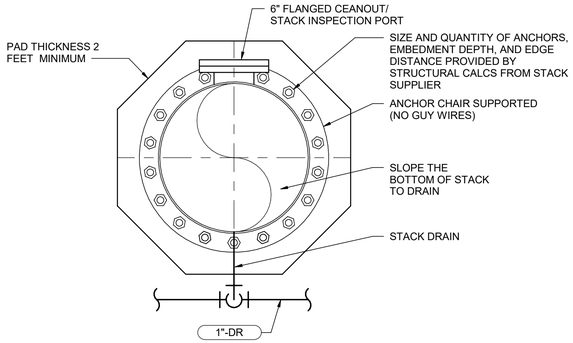

EXHAUST STACK BASE DETAIL

1 - — 1" = 1'-0"

GENERAL NOTES:

1. EQUIPMENT SHOWN WITHIN DASHED AREA IS SUPPLIED BY DRYER MANUFACTURER AND INSTALLED BY CONTRACTOR.
2. UNLESS NOTED OTHERWISE, NOT ALL PIPE AND DUCT SUPPORTS ARE SHOWN. FOR SUPPORT DETAILS, SEE SHEETS M-905 THROUGH M-907.
3. ALL EXPOSED PIPING REQUIRES HEAT TRACING AND INSULATION PER MANUFACTURER RECOMMENDATIONS.

KEY NOTES (X)

1 BIOFILTER FAN NO. 3
2 BIOFILTER FAN NO. 4
3 WATER BOX INSULATED AND HEATED NO. 1
4 WATER BOX INSULATED AND HEATED NO. 2
5 RECIRCULATION PUMP NO. 1
6 RECIRCULATION PUMP NO. 2
7
8 24" MANUAL DAMPER
9 FLEXIBLE CONNECTOR
10 SYSTEM CONTROL PANEL
11 ROUND TO RECTANGULAR TRANSITION
12 EXHAUST STACK, SEE EXHAUST STACK BASE DETAIL 1/M-507
13 FOUL AIR DUCT SUPPORT DESIGNED BY DUCT SUPPLIER, SEE DETAIL 1/M-907
14 FOUL AIR DUCT SUPPORT DESIGNED BY DUCT SUPPLIER, SEE DETAIL 5/M-907
15 6" FLANGED CLEANOUT/ STACK INSPECTION PORT
16 BACKDRAFT DAMPER

0 1 2
SCALE: 1"=1'-0"

0 5 10 15
SCALE: 1/8"=1'-0"

THE DRAWINGS IN THIS SET ARE RECORD DRAWINGS. THEY ARE CONSTRUCTION CONTRACT DRAWINGS WHICH HAVE BEEN REVISED BASED ON AVAILABLE FIELD INFORMATION RECORDED BY OTHERS DURING CONSTRUCTION OF THIS CONTRACT. THERE HAS BEEN NO VERIFICATION OF DIMENSIONS SHOWN ON THE CONSTRUCTION DRAWINGS OR THE ACCURACY/COMPLETENESS OF THE FIELD INFORMATION RECEIVED.

SIGNATURE — DATE 2/7/2023

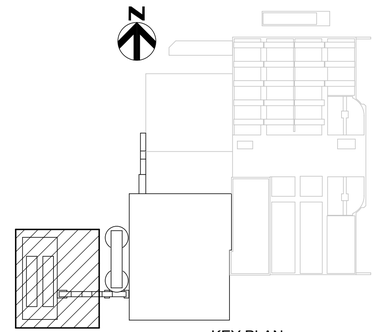

KEY PLAN

BIM 360://10054364 – Little Patuxent WRP 8th Addition/284592_100_D_V18.rvt
1/7/2022 1:33:00 PM

AS-BUILT REPLACEMENT SHEET

PROFESSIONAL CERTIFICATION

THIS DRAWING WAS ORIGINALLY APPROVED FOR CONSTRUCTION AND SEALED BY ADAM S. PARMENTER, A REGISTERED PROFESSIONAL ENGINEER IN THE STATE OF MARYLAND, NO. 39376

NOTICE TO CONTRACTORS

- PROJECT ELEVATIONS ARE BASED ON NAVD88 AND HOWARD COUNTY'S BENCHMARK SYSTEM
- PREVIOUS PROJECTS USED OTHER DATUMS
- APPLY THE FOLLOWING CONVERSIONS WHEN USING PREVIOUS CONTRACT DRAWINGS:
  - ADDITION NO. 6: SUBTRACT 0.80 FT
  - PRIOR ADDITIONS: SUBTRACT 1.04 FT

DEPARTMENT OF PUBLIC WORKS
HOWARD COUNTY, MARYLAND

CHIEF, BUREAU OF UTILITIES — DATE

DES: ADP
DRN: REE
CHK: JKP
DATE: 01/2019

DATE	REV	DESCRIPTION
03/2021		RECORD DRAWINGS

PROCESS

DEWATERING AND DRYER BUILDING
BIOFILTER PLAN AND SECTIONS

LITTLE PATUXENT WATER RECLAMATION PLANT
8TH ADDITION
BIOSOLIDS PROCESSING FACILITIES - PHASE 2

CAPITAL PROJECT S-6295
CONTRACT NO. 24-4936

ELECTION DISTRICT NO. 6
HOWARD COUNTY, MARYLAND

SCALE AS SHOWN

SHEET 133 OF 311

M-508

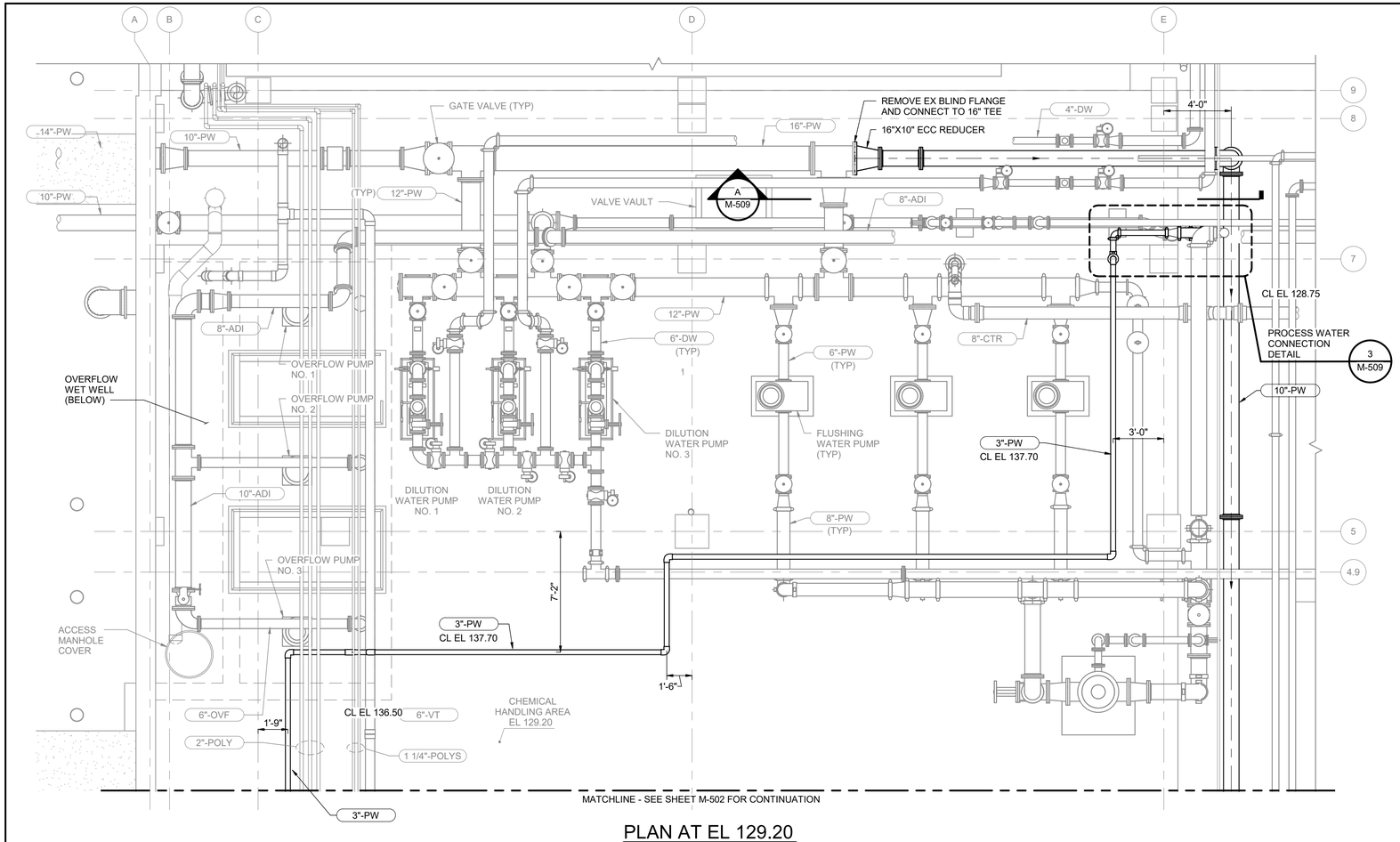

PLAN AT EL 129.20

1/4" = 1'-0"

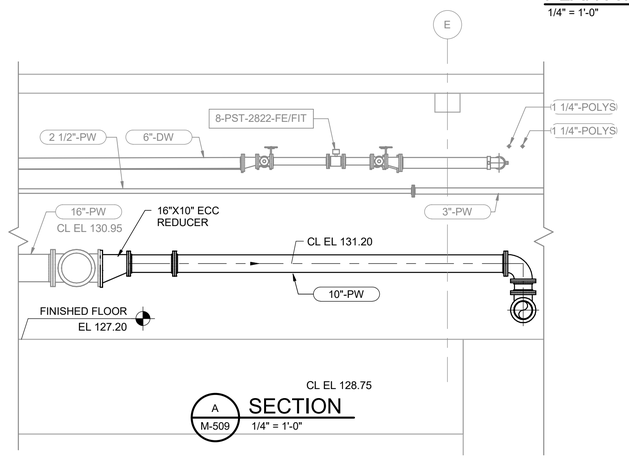

A M-509 SECTION

1/4" = 1'-0"

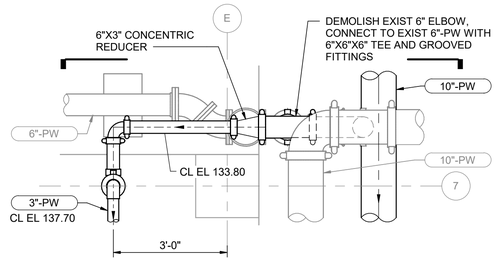

PLAN

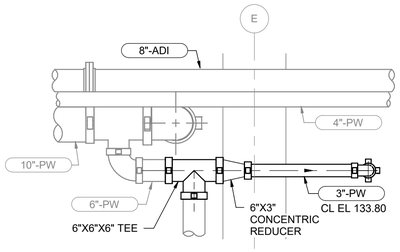

SECTION

PROCESS WATER CONNECTION DETAIL

3 M-509

1/2" = 1'-0"

THE DRAWINGS IN THIS SET ARE RECORD DRAWINGS. THEY ARE CONSTRUCTION CONTRACT DRAWINGS WHICH HAVE BEEN REVISED BASED ON AVAILABLE FIELD INFORMATION RECORDED BY OTHERS DURING CONSTRUCTION OF THIS CONTRACT. THERE HAS BEEN NO VERIFICATION OF DIMENSIONS SHOWN ON THE CONSTRUCTION DRAWINGS OR THE ACCURACY/COMPLETENESS OF THE FIELD INFORMATION RECEIVED.

SIGNATURE

2/7/2022
DATE

0 1 2 4
SCALE: 1/2"=1'-0"

1 4 8
SCALE: 1/4"=1'-0"

AS-BUILT REPLACEMENT SHEET

PROFESSIONAL CERTIFICATION

THIS DRAWING WAS ORIGINALLY APPROVED FOR CONSTRUCTION AND SEALED BY ADAM S. PARMENTER, A REGISTERED PROFESSIONAL ENGINEER IN THE STATE OF MARYLAND, NO. 39376

NOTICE TO CONTRACTORS

- PROJECT ELEVATIONS ARE BASED ON NAVD88 AND HOWARD COUNTY'S BENCHMARK SYSTEM
- PREVIOUS PROJECTS USED OTHER DATUMS
- APPLY THE FOLLOWING CONVERSIONS WHEN USING PREVIOUS CONTRACT DRAWINGS:
  - ADDITION NO. 6: SUBTRACT 0.80 FT
  - PRIOR ADDITIONS: SUBTRACT 1.04 FT

DEPARTMENT OF PUBLIC WORKS
HOWARD COUNTY, MARYLAND

CHIEF, BUREAU OF UTILITIES DATE

DES: ADP
DRN: REE
CHK: JKP
DATE: 01/2019

DATE	REV	DESCRIPTION
03/2021		RECORD DRAWINGS

PROCESS

DEWATERING AND DRYER BUILDING ENLARGED PLANS SECTIONS AND DETAILS

LITTLE PATUXENT WATER RECLAMATION PLANT
8TH ADDITION
BIOSOLIDS PROCESSING FACILITIES - PHASE 2

CAPITAL PROJECT S-6295
CONTRACT NO. 24-4936

ELECTION DISTRICT NO. 6
HOWARD COUNTY, MARYLAND

SCALE AS SHOWN

SHEET 134 OF 311

M-509

BIM 360://10054364 – Little Patuxent WRP 8th Addition/264592_100_D_V18.rvt
1/7/2022 1:33:06 PM

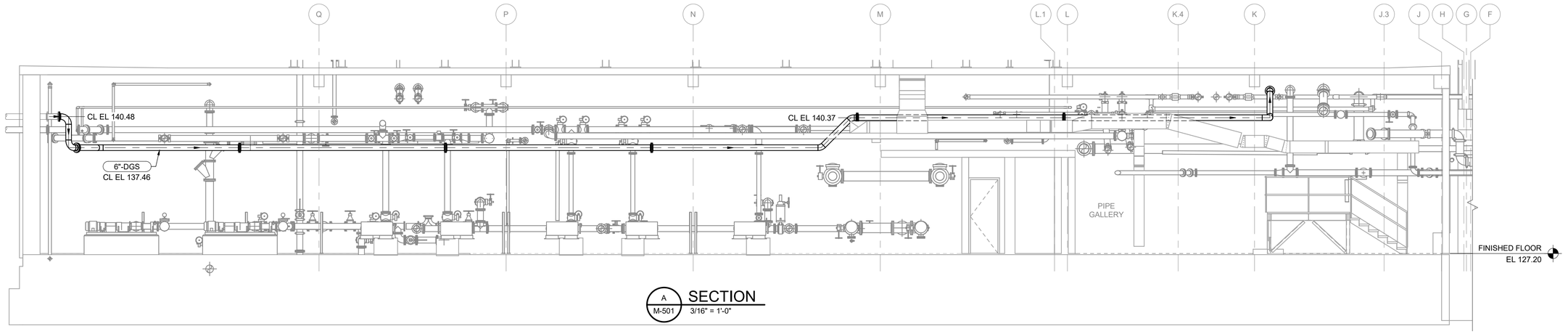

A M-501 SECTION
3/16" = 1'-0"

GENERAL NOTES:

1. UNLESS NOTED OTHERWISE, NOT ALL PIPE AND DUCT SUPPORTS ARE SHOWN. FOR SUPPORT DETAILS, SEE SHEETS M-905 THROUGH M-907.

KEY NOTES (X)

1 COOLING WATER PUMP NO. 1
2 COOLING WATER PUMP NO. 3
3 PRESSURE GAUGE W/ DIAPHRAGM SEAL, SEE DETAIL 2/I-910.
4 BASE ELBOW PIPE SUPPORT, SEE DETAIL 5/M-905.
5 6" MOTORIZED PLUG VALVE
6 PRESSURE GAUGE W/ DIAPHRAGM SEAL, SEE DETAIL 2/I-910.

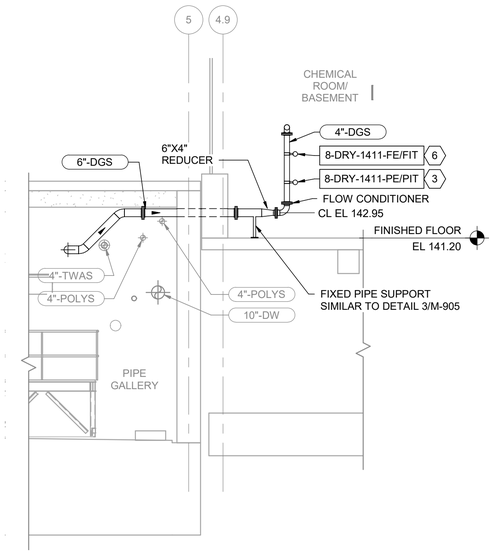

B M-501 SECTION
3/16" = 1'-0"

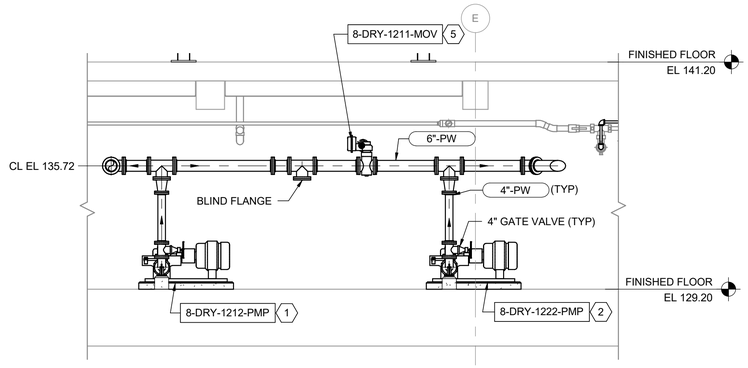

C M-502 SECTION
1/4" = 1'-0"

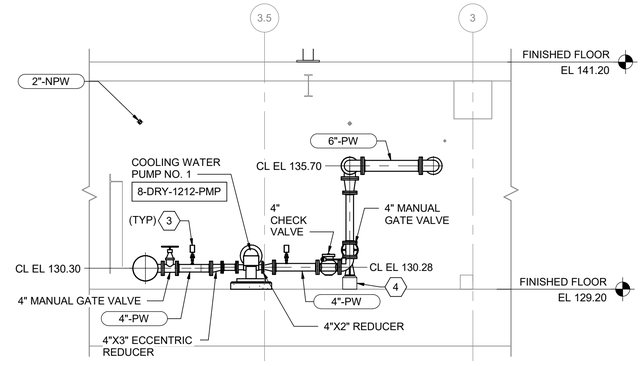

D M-502 SECTION
1/4" = 1'-0"

THE DRAWINGS IN THIS SET ARE RECORD DRAWINGS. THEY ARE CONSTRUCTION CONTRACT DRAWINGS WHICH HAVE BEEN REVISED BASED ON AVAILABLE FIELD INFORMATION RECORDED BY OTHERS DURING CONSTRUCTION OF THIS CONTRACT. THERE HAS BEEN NO VERIFICATION OF DIMENSIONS SHOWN ON THE CONSTRUCTION DRAWINGS OR THE ACCURACY/COMPLETENESS OF THE FIELD INFORMATION RECEIVED.

SIGNATURE

2/7/2023
DATE

0 5 10
SCALE: 3/16"=1'-0"

1 4 8
SCALE: 1/4"=1'-0"

AS-BUILT REPLACEMENT SHEET

PROFESSIONAL CERTIFICATION

THIS DRAWING WAS ORIGINALLY APPROVED FOR CONSTRUCTION AND SEALED BY ADAM S. PARMENTER, A REGISTERED PROFESSIONAL ENGINEER IN THE STATE OF MARYLAND, NO. 39376

NOTICE TO CONTRACTORS

- PROJECT ELEVATIONS ARE BASED ON NAVD88 AND HOWARD COUNTY'S BENCHMARK SYSTEM
- PREVIOUS PROJECTS USED OTHER DATUMS
- APPLY THE FOLLOWING CONVERSIONS WHEN USING PREVIOUS CONTRACT DRAWINGS:
  - ADDITION NO. 6: SUBTRACT 0.80 FT
  - PRIOR ADDITIONS: SUBTRACT 1.04 FT

DEPARTMENT OF PUBLIC WORKS
HOWARD COUNTY, MARYLAND

CHIEF, BUREAU OF UTILITIES DATE

DES: ADP
DRN: REE
CHK: JKP
DATE: 01/2019

DATE	REV	DESCRIPTION
03/2021		RECORD DRAWINGS

PROCESS

DEWATERING AND DRYER BUILDING SECTION 1

LITTLE PATUXENT WATER RECLAMATION PLANT
8TH ADDITION
BIOSOLIDS PROCESSING FACILITIES - PHASE 2

CAPITAL PROJECT S-6295
CONTRACT NO. 24-4936

ELECTION DISTRICT NO. 6
HOWARD COUNTY, MARYLAND

SCALE AS SHOWN

SHEET 135 OF 311

M-510

BIM 360://10054364 – Little Patuxent WRP 8th Addition/264592_100_D_V18.rvt
1/7/2022 1:33:12 PM

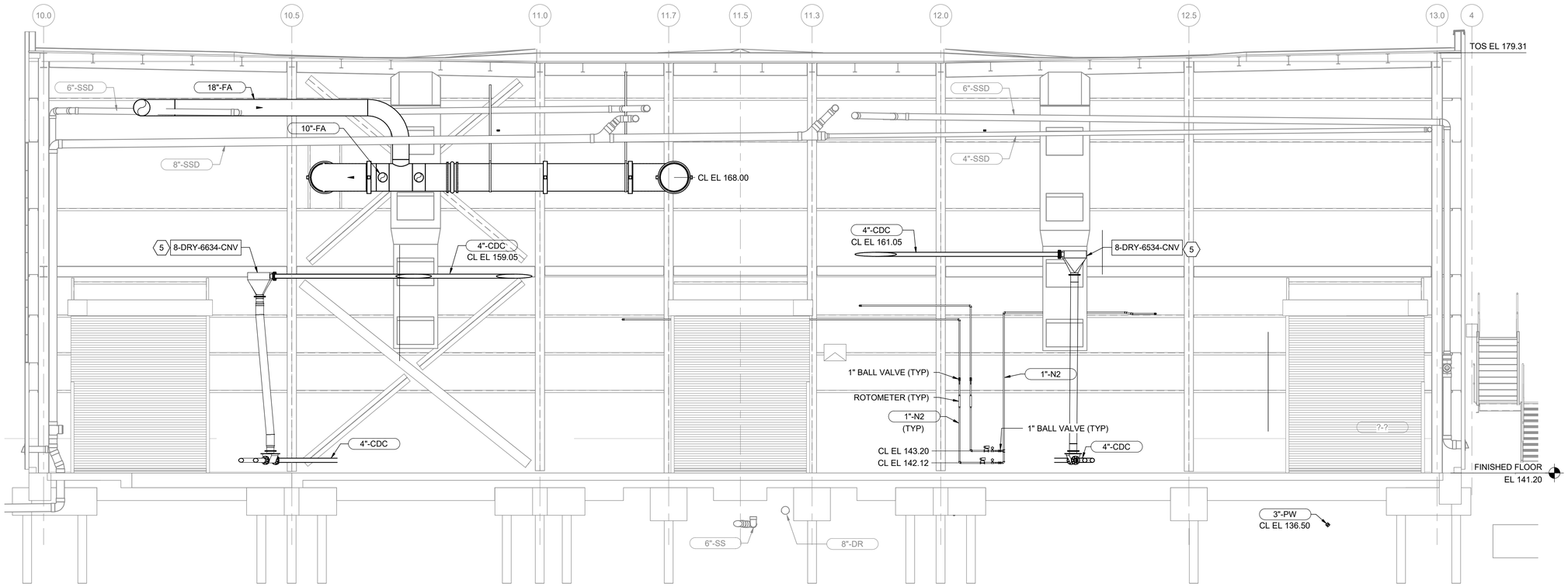

A M-504 WEST WALL SECTION
3/16" = 1'-0"

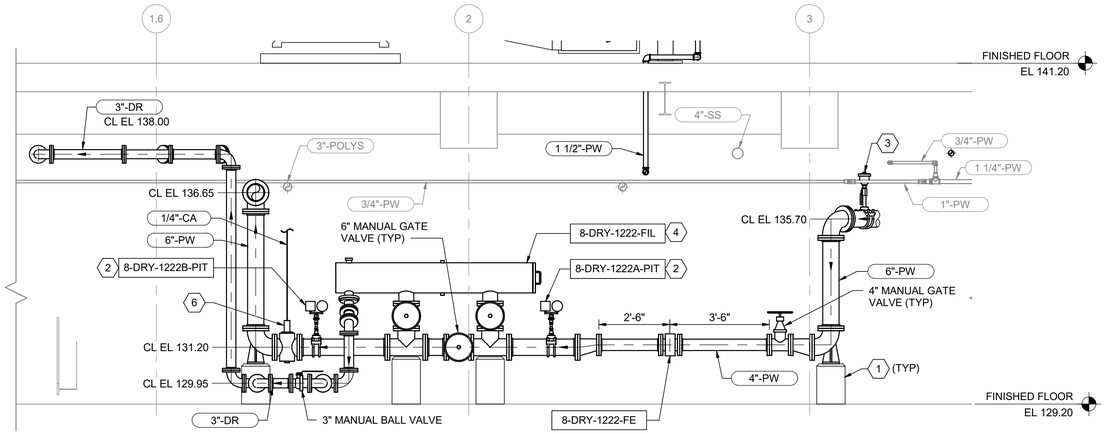

B M-502 SECTION
3/8" = 1'-0"

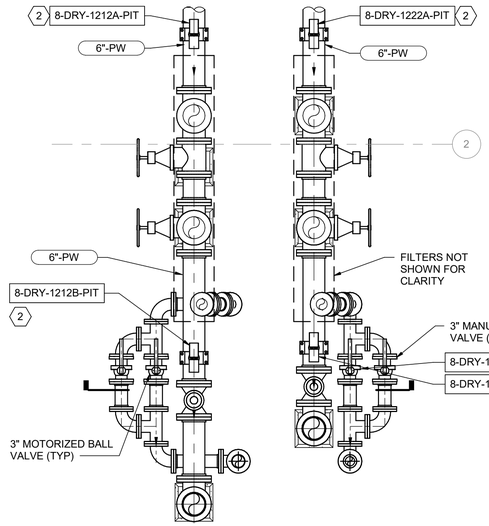

PLAN

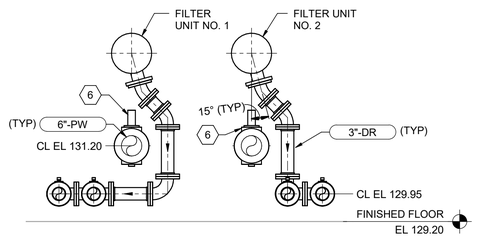

SECTION

1 M-502 FILTER DRAIN DETAIL
1/2" = 1'-0"

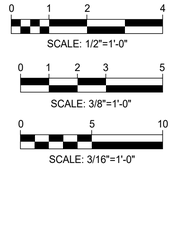

GENERAL NOTES:

1. UNLESS NOTED OTHERWISE, NOT ALL PIPE AND DUCT SUPPORTS ARE SHOWN. FOR SUPPORT DETAILS, SEE SHEETS M-905 THROUGH M-907.

KEY NOTES (X)

1 BASE ELBOW PIPE SUPPORT, SEE DETAIL 5/M-905.
2 PRESSURE GAUGE AND TRANSMITTER, SEE DETAIL 3/I-910
3 AIR RELEASE VALVE
4 FILTRATION UNIT NO. 2
5 DRAG CONVEYOR
6 PNEUMATIC PRESSURE SUSTAINING VALVE

THE DRAWINGS IN THIS SET ARE RECORD DRAWINGS. THEY ARE CONSTRUCTION CONTRACT DRAWINGS WHICH HAVE BEEN REVISED BASED ON AVAILABLE FIELD INFORMATION RECORDED BY OTHERS DURING CONSTRUCTION OF THIS CONTRACT. THERE HAS BEEN NO VERIFICATION OF DIMENSIONS SHOWN ON THE CONSTRUCTION DRAWINGS OR THE ACCURACY/COMPLETENESS OF THE FIELD INFORMATION RECEIVED.

SIGNATURE 2/7/2020 DATE

AS-BUILT REPLACEMENT SHEET

PROFESSIONAL CERTIFICATION

THIS DRAWING WAS ORIGINALLY APPROVED FOR CONSTRUCTION AND SEALED BY ADAM S. PARMENTER, A REGISTERED PROFESSIONAL ENGINEER IN THE STATE OF MARYLAND, NO. 39376

NOTICE TO CONTRACTORS

- PROJECT ELEVATIONS ARE BASED ON NAVD88 AND HOWARD COUNTY'S BENCHMARK SYSTEM
- PREVIOUS PROJECTS USED OTHER DATUMS
- APPLY THE FOLLOWING CONVERSIONS WHEN USING PREVIOUS CONTRACT DRAWINGS:
  - ADDITION NO. 6: SUBTRACT 0.80 FT
  - PRIOR ADDITIONS: SUBTRACT 1.04 FT

DEPARTMENT OF PUBLIC WORKS
HOWARD COUNTY, MARYLAND

CHIEF, BUREAU OF UTILITIES DATE

DES: ADP
DRN: REE
CHK: JKP
DATE: 01/2019

DATE	REV	DESCRIPTION
03/2021		RECORD DRAWINGS

PROCESS

DEWATERING AND DRYER BUILDING SECTION 2

LITTLE PATUXENT WATER RECLAMATION PLANT
8TH ADDITION
BIOSOLIDS PROCESSING FACILITIES - PHASE 2

CAPITAL PROJECT S-6295
CONTRACT NO. 24-4936

ELECTION DISTRICT NO. 6
HOWARD COUNTY, MARYLAND

SCALE AS SHOWN

SHEET 136 OF 311

M-511

BIM 360://10054364 – Little Patuxent WRP 8th Addition/264592_100_D_V18.rvt
1/7/2022 1:33:22 PM

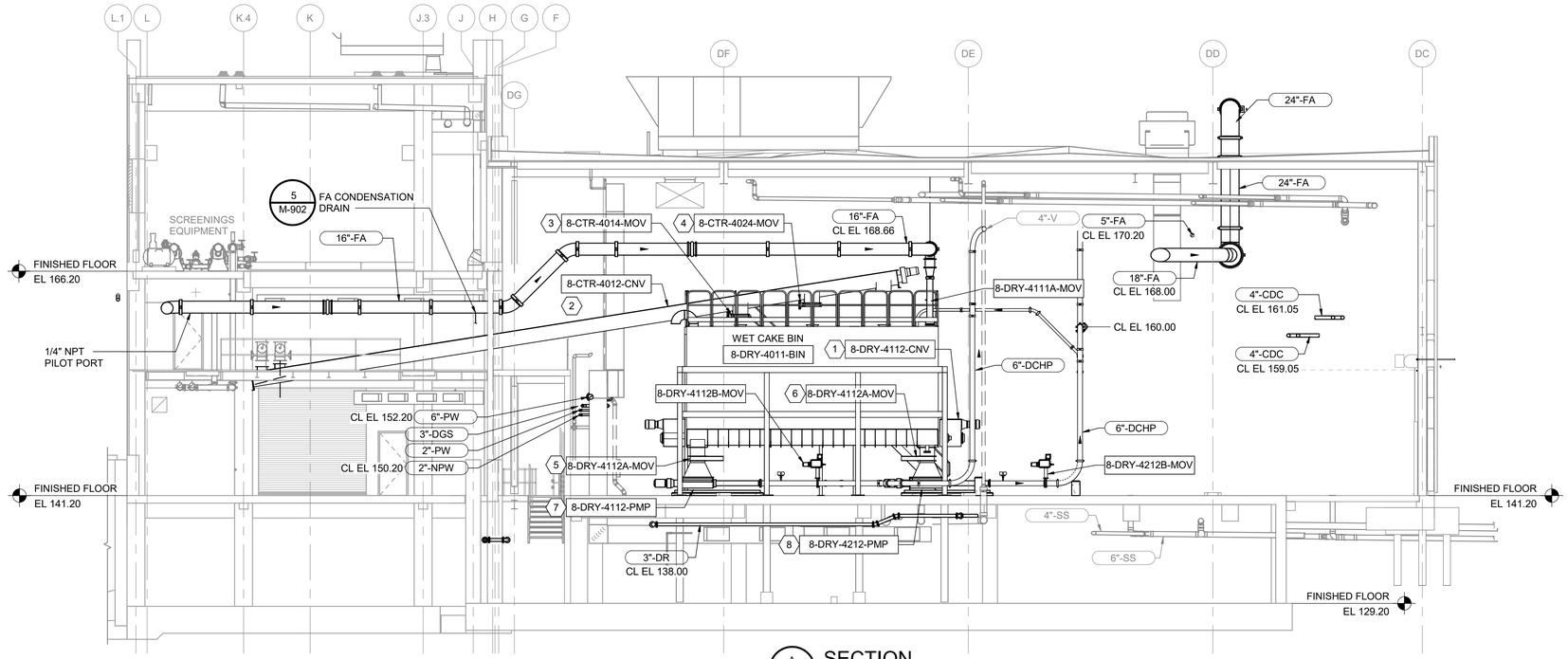

A M-504 SECTION
1/8" = 1'-0"

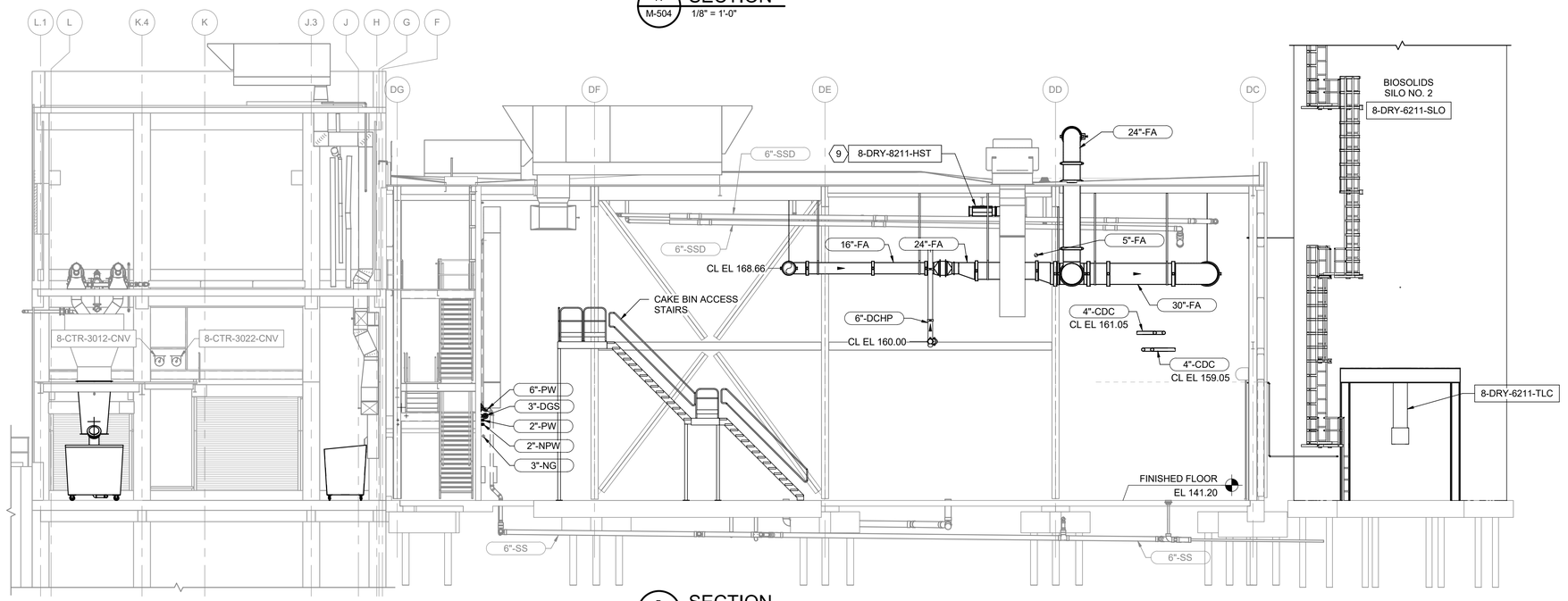

B M-504 SECTION
1/8" = 1'-0"

GENERAL NOTES:

1. UNLESS NOTED OTHERWISE, NOT ALL PIPE AND DUCT SUPPORTS ARE SHOWN. FOR SUPPORT DETAILS, SEE SHEETS M-905 THROUGH M-907.

KEY NOTES (X)

1 LIVE BOTTOM SCREW NO. 3
2 ANGLED SCREW CONVEYOR NO. 1
3 MOTORIZED CONVEYOR SLIDE GATE NO. 1
4 MOTORIZED CONVEYOR SLIDE GATE NO. 2
5 MOTORIZED CAKE PUMP SLIDE GATE NO. 1
6 MOTORIZED CAKE PUMP SLIDE GATE NO. 3
7 DEWATERED SOLIDS PROGRESSIVE CAVITY PUMP NO. 1
8 DEWATERED SOLIDS PROGRESSIVE CAVITY PUMP NO. 3
9 3 TON MONORAIL AND HOIST NO. 2

THE DRAWINGS IN THIS SET ARE RECORD DRAWINGS. THEY ARE CONSTRUCTION CONTRACT DRAWINGS WHICH HAVE BEEN REVISED BASED ON AVAILABLE FIELD INFORMATION RECORDED BY OTHERS DURING CONSTRUCTION OF THIS CONTRACT. THERE HAS BEEN NO VERIFICATION OF DIMENSIONS SHOWN ON THE CONSTRUCTION DRAWINGS OR THE ACCURACY/COMPLETENESS OF THE FIELD INFORMATION RECEIVED.

SIGNATURE

2/7/2022
DATE

0 5 10 15
SCALE: 1/8"=1'-0"

AS-BUILT REPLACEMENT SHEET

PROFESSIONAL CERTIFICATION

THIS DRAWING WAS ORIGINALLY APPROVED FOR CONSTRUCTION AND SEALED BY ADAM S. PARMENTER, A REGISTERED PROFESSIONAL ENGINEER IN THE STATE OF MARYLAND, NO. 39376

NOTICE TO CONTRACTORS

- PROJECT ELEVATIONS ARE BASED ON NAVD88 AND HOWARD COUNTY'S BENCHMARK SYSTEM
- PREVIOUS PROJECTS USED OTHER DATUMS
- APPLY THE FOLLOWING CONVERSIONS WHEN USING PREVIOUS CONTRACT DRAWINGS:
  - ADDITION NO. 6: SUBTRACT 0.80 FT
  - PRIOR ADDITIONS: SUBTRACT 1.04 FT

DEPARTMENT OF PUBLIC WORKS
HOWARD COUNTY, MARYLAND

CHIEF, BUREAU OF UTILITIES DATE

DES: ADP
DRN: REE
CHK: JKP
DATE: 01/2019

DATE	REV	DESCRIPTION
03/2021		RECORD DRAWINGS

PROCESS

DEWATERING AND DRYER BUILDING SECTION 3

LITTLE PATUXENT WATER RECLAMATION PLANT
8TH ADDITION
BIOSOLIDS PROCESSING FACILITIES - PHASE 2

CAPITAL PROJECT S-6295
CONTRACT NO. 24-4936

ELECTION DISTRICT NO. 6
HOWARD COUNTY, MARYLAND

SCALE AS SHOWN

SHEET 137 OF 311

M-512

BIM 360://10054364 – Little Patuxent WRP 8th Addition/264592_100_D_V18.rvt
1/7/2022 1:33:30 PM

GENERAL NOTES:

1. UNLESS NOTED OTHERWISE, NOT ALL PIPE AND DUCT SUPPORTS ARE SHOWN. FOR SUPPORT DETAILS, SEE SHEETS M-905 THROUGH M-907.

KEY NOTES (X)

1 3 TON MONORAIL AND HOIST NO. 1
2 TELESCOPING LOADOUT CHUTE NO. 1
3 DRAG CONVEYOR
4 PANT LEG DIVERTER
5 DRUM MILL NO. 1
6 SOLIDS SCREEN NO. 1
7 MIXER DOSING SCREW CONVEYOR NO. 1
8 EXHAUST FAN NO. 1
9 DRYER DISCHARGE SCREW NO. 1
10 OFF-GAS FAN NO. 1
11 SPRAY CONDENSER NO. 1
12 GAS BURNER SYSTEM NO. 1
13 HOT GAS FAN NO. 1
14 ROTO CLONE NO. 1
15 ROTO CLONE NO. 2

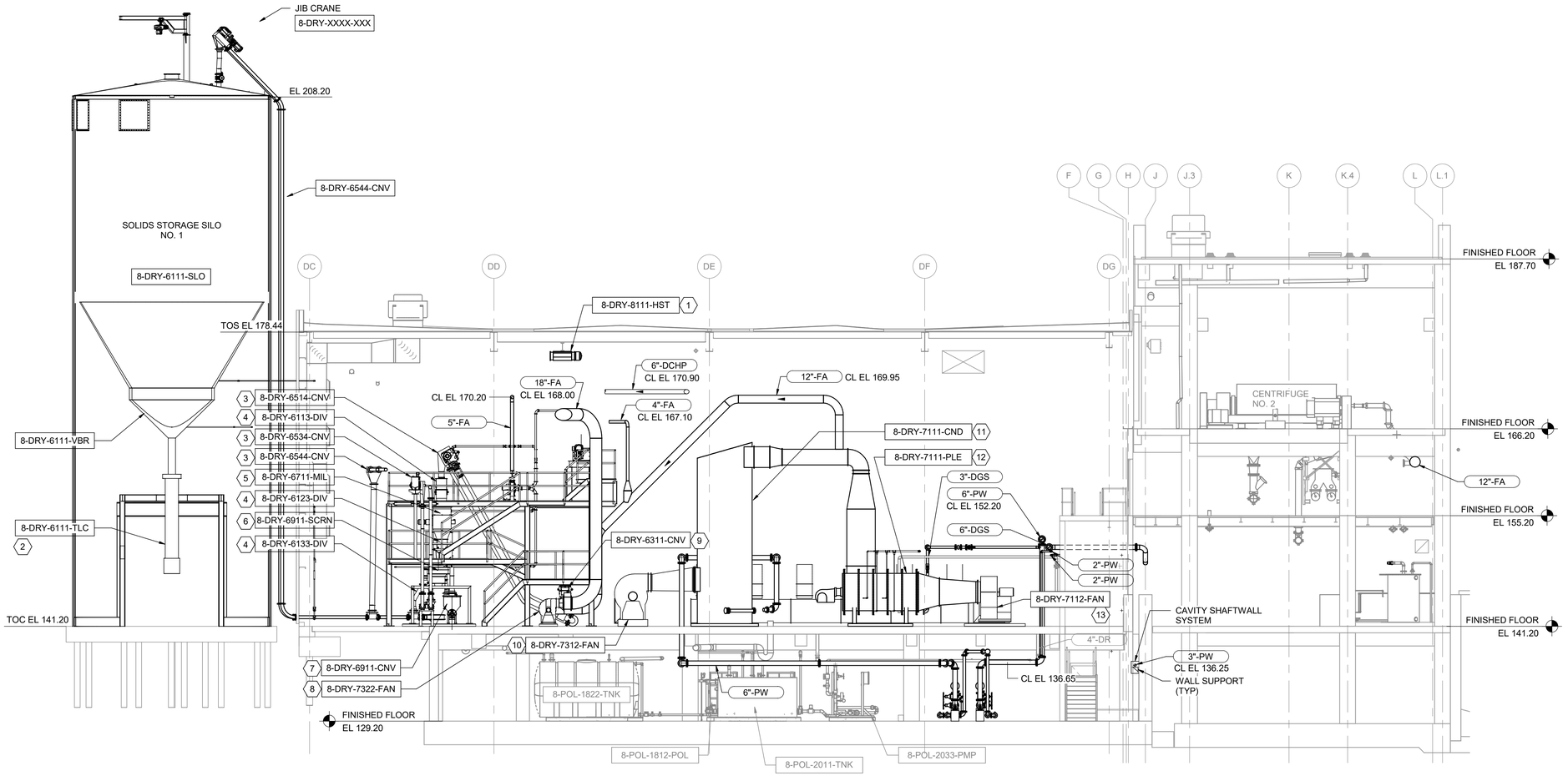

A M-502 SECTION
1/8" = 1'-0"

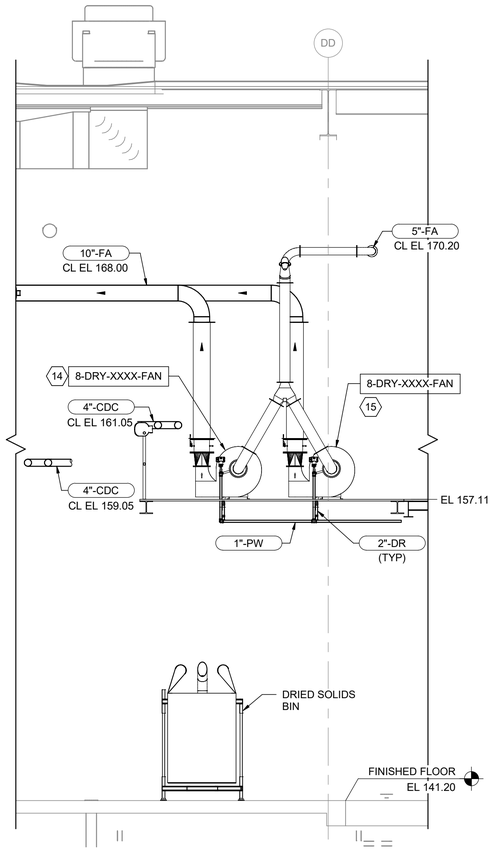

B M-505 SECTION
1/4" = 1'-0"

THE DRAWINGS IN THIS SET ARE RECORD DRAWINGS. THEY ARE CONSTRUCTION CONTRACT DRAWINGS WHICH HAVE BEEN REVISED BASED ON AVAILABLE FIELD INFORMATION RECORDED BY OTHERS DURING CONSTRUCTION OF THIS CONTRACT. THERE HAS BEEN NO VERIFICATION OF DIMENSIONS SHOWN ON THE CONSTRUCTION DRAWINGS OR THE ACCURACY/COMPLETENESS OF THE FIELD INFORMATION RECEIVED.

SIGNATURE — DATE 2/7/2022

1 4 8
SCALE: 1/4"=1'-0"

0 5 10 15
SCALE: 1/8"=1'-0"

BIM 360://10054364 – Little Patuxent WRP 8th Addition/264592_100_D_Y18.rvt
1/7/2022 1:34:02 PM

AS-BUILT REPLACEMENT SHEET

PROFESSIONAL CERTIFICATION

THIS DRAWING WAS ORIGINALLY APPROVED FOR CONSTRUCTION AND SEALED BY ADAM S. PARMENTER, A REGISTERED PROFESSIONAL ENGINEER IN THE STATE OF MARYLAND, NO. 39376

NOTICE TO CONTRACTORS

- PROJECT ELEVATIONS ARE BASED ON NAVD88 AND HOWARD COUNTY'S BENCHMARK SYSTEM
- PREVIOUS PROJECTS USED OTHER DATUMS
- APPLY THE FOLLOWING CONVERSIONS WHEN USING PREVIOUS CONTRACT DRAWINGS:
  - ADDITION NO. 6: SUBTRACT 0.80 FT
  - PRIOR ADDITIONS: SUBTRACT 1.04 FT

DEPARTMENT OF PUBLIC WORKS
HOWARD COUNTY, MARYLAND

CHIEF, BUREAU OF UTILITIES — DATE

DES: ADP
DRN: REE
CHK: JKP
DATE: 01/2019

DATE	REV	DESCRIPTION
03/2021		RECORD DRAWINGS

PROCESS

DEWATERING AND DRYER BUILDING SECTION 4

LITTLE PATUXENT WATER RECLAMATION PLANT
8TH ADDITION
BIOSOLIDS PROCESSING FACILITIES - PHASE 2

CAPITAL PROJECT S-6295
CONTRACT NO. 24-4936

ELECTION DISTRICT NO. 6
HOWARD COUNTY, MARYLAND

SCALE AS SHOWN

SHEET 138 OF 311

M-513

GENERAL NOTES:

1. UNLESS NOTED OTHERWISE, NOT ALL PIPE AND DUCT SUPPORTS ARE SHOWN. FOR SUPPORT DETAILS, SEE SHEETS M-905 THROUGH M-907.

KEY NOTES (X)

1 DRYER NO. 1 SOLIDS MIXER
2 DRAG CONVEYOR
3 DRYER NO. 1 SOLIDS DISTRIBUTER
4 DRYER NO. 1 DOSING UNIT
5 SOLIDS ROLLER PRESS NO. 1
6 DRYER DISCHARGE SCREW NO. 1
7 ROTO CLONE NO. 1
8 ROTO CLONE NO. 2

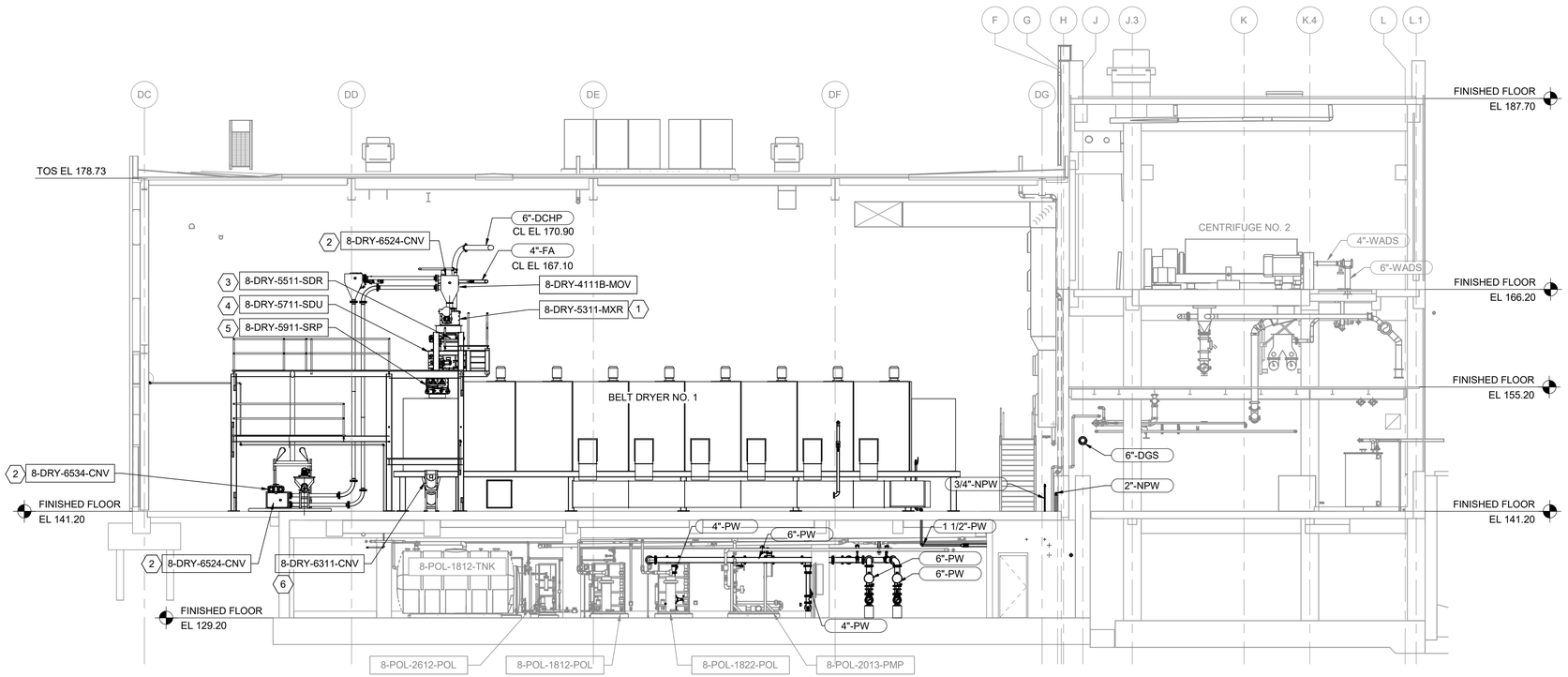

A M-502 SECTION
1/8" = 1'-0"

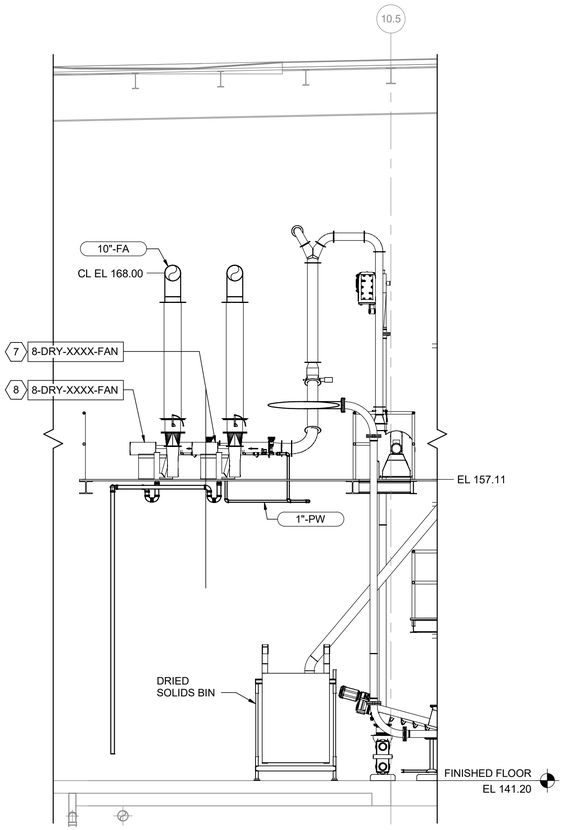

B M-505 SECTION
1/4" = 1'-0"

THE DRAWINGS IN THIS SET ARE RECORD DRAWINGS. THEY ARE CONSTRUCTION CONTRACT DRAWINGS WHICH HAVE BEEN REVISED BASED ON AVAILABLE FIELD INFORMATION RECORDED BY OTHERS DURING CONSTRUCTION OF THIS CONTRACT. THERE HAS BEEN NO VERIFICATION OF DIMENSIONS SHOWN ON THE CONSTRUCTION DRAWINGS OR THE ACCURACY/COMPLETENESS OF THE FIELD INFORMATION RECEIVED.

SIGNATURE

2/7/2023
DATE

1 4 8
SCALE: 1/4"=1'-0"

0 5 10 15
SCALE: 1/8"=1'-0"

AS-BUILT REPLACEMENT SHEET

PROFESSIONAL CERTIFICATION

THIS DRAWING WAS ORIGINALLY APPROVED FOR CONSTRUCTION AND SEALED BY ADAM S. PARMENTER, A REGISTERED PROFESSIONAL ENGINEER IN THE STATE OF MARYLAND, NO. 39376

NOTICE TO CONTRACTORS

- PROJECT ELEVATIONS ARE BASED ON NAVD88 AND HOWARD COUNTY'S BENCHMARK SYSTEM
- PREVIOUS PROJECTS USED OTHER DATUMS
- APPLY THE FOLLOWING CONVERSIONS WHEN USING PREVIOUS CONTRACT DRAWINGS:
  - ADDITION NO. 6: SUBTRACT 0.80 FT
  - PRIOR ADDITIONS: SUBTRACT 1.04 FT

DEPARTMENT OF PUBLIC WORKS
HOWARD COUNTY, MARYLAND

CHIEF, BUREAU OF UTILITIES DATE

DES: ADP
DRN: REE
CHK: JKP
DATE: 01/2019

DATE	REV	DESCRIPTION
03/2021		RECORD DRAWINGS

PROCESS

DEWATERING AND DRYER BUILDING SECTION 5

LITTLE PATUXENT WATER RECLAMATION PLANT
8TH ADDITION
BIOSOLIDS PROCESSING FACILITIES - PHASE 2

CAPITAL PROJECT S-6295
CONTRACT NO. 24-4936

ELECTION DISTRICT NO. 6
HOWARD COUNTY, MARYLAND

SCALE AS SHOWN

SHEET 139 OF 311

M-514

BIM 360://10054364 – Little Patuxent WRP 8th Addition/264592_100_D_V18.rvt
1/7/2022 1:34:24 PM

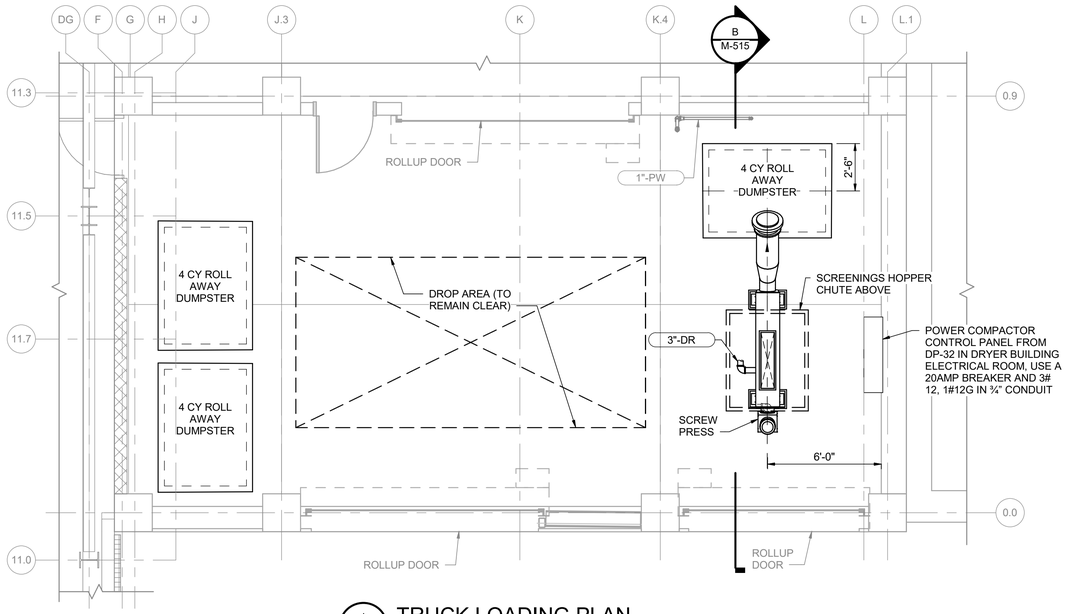

1 M-504 **TRUCK LOADING PLAN**
1/4" = 1'-0"

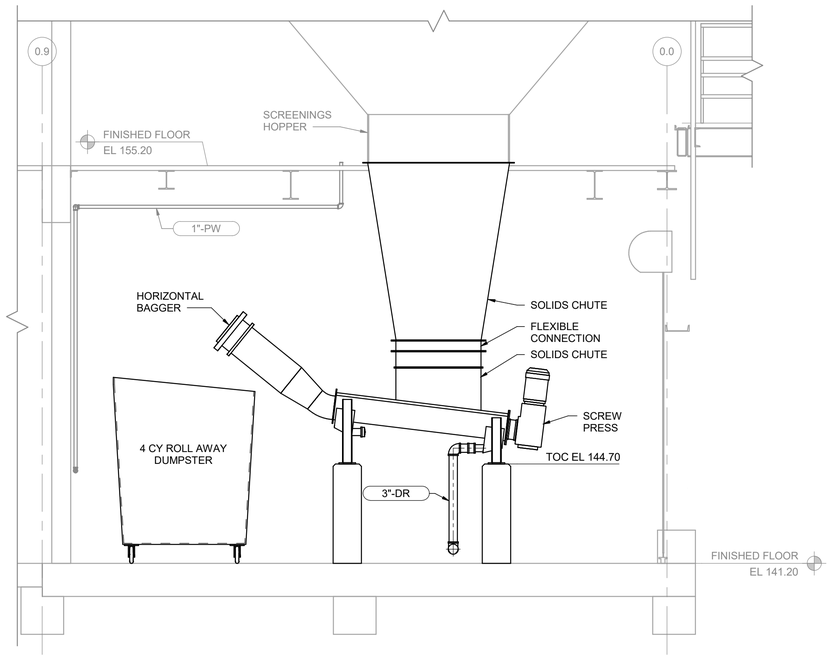

B M-515 **SECTION**
3/8" = 1'-0"

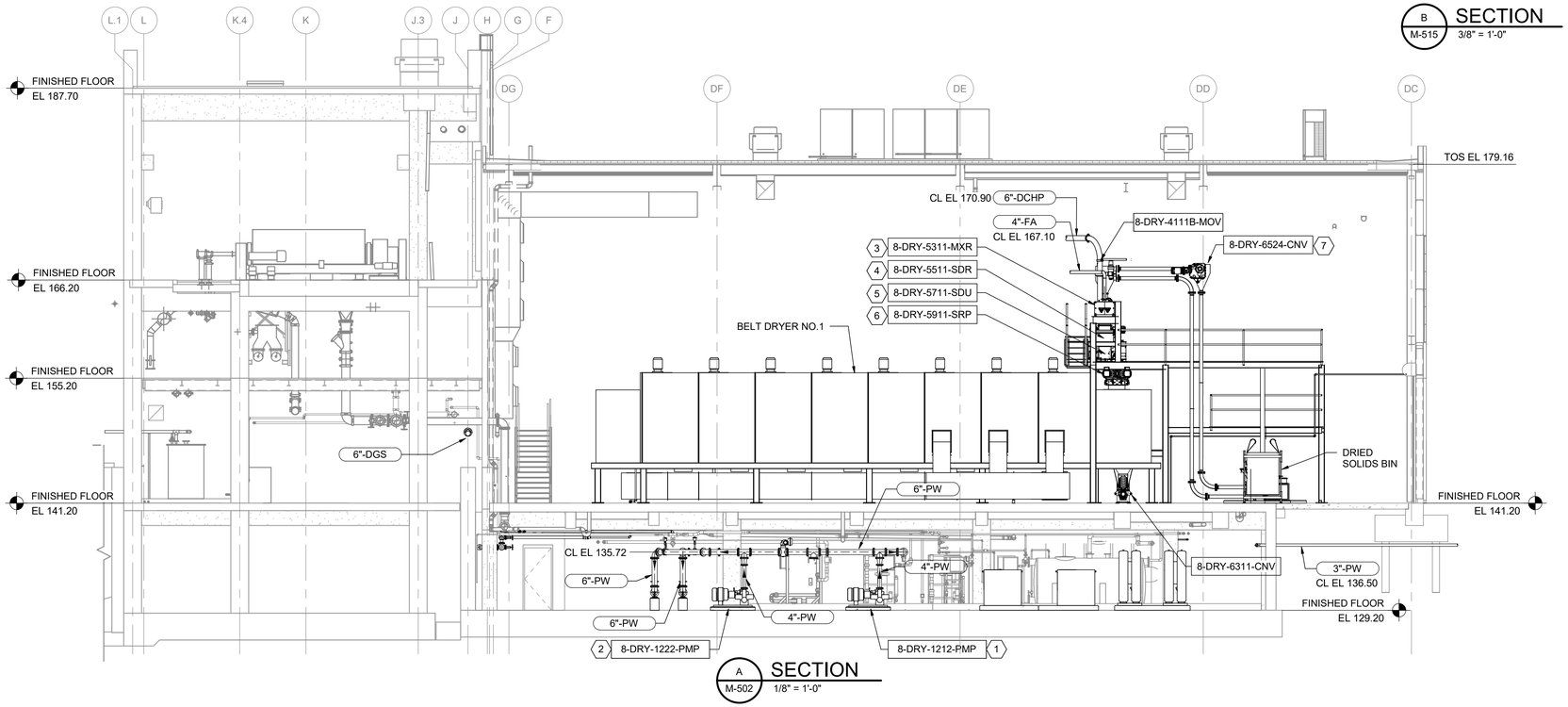

A M-502 **SECTION**
1/8" = 1'-0"

GENERAL NOTES:

1. UNLESS NOTED OTHERWISE, NOT ALL PIPE AND DUCT SUPPORTS ARE SHOWN. FOR SUPPORT DETAILS, SEE SHEETS M-905 THROUGH M-907.

KEY NOTES (X)

1 COOLING WATER PUMP NO. 1
2 COOLING WATER PUMP NO. 3
3 DRYER NO. 1 SOLIDS MIXER
4 DRYER NO. 1 SOLIDS DISTRIBUTER
5 DRYER NO. 1 DOSING UNIT
6 SOLIDS ROLLER PRESS NO. 1
7 DRAG CONVEYOR

THE DRAWINGS IN THIS SET ARE RECORD DRAWINGS. THEY ARE CONSTRUCTION CONTRACT DRAWINGS WHICH HAVE BEEN REVISED BASED ON AVAILABLE FIELD INFORMATION RECORDED BY OTHERS DURING CONSTRUCTION OF THIS CONTRACT. THERE HAS BEEN NO VERIFICATION OF DIMENSIONS SHOWN ON THE CONSTRUCTION DRAWINGS OR THE ACCURACY/COMPLETENESS OF THE FIELD INFORMATION RECEIVED.

SIGNATURE — DATE 2/7/2022

0 1 2 3 5
SCALE: 3/8"=1'-0"
1 4 8
SCALE: 1/4"=1'-0"
0 5 10 15
SCALE: 1/8"=1'-0"

AS-BUILT REPLACEMENT SHEET

PROFESSIONAL CERTIFICATION
THIS DRAWING WAS ORIGINALLY APPROVED FOR CONSTRUCTION AND SEALED BY ADAM S. PARMENTER, A REGISTERED PROFESSIONAL ENGINEER IN THE STATE OF MARYLAND, NO. 39376

NOTICE TO CONTRACTORS
- PROJECT ELEVATIONS ARE BASED ON NAVD88 AND HOWARD COUNTY'S BENCHMARK SYSTEM
- PREVIOUS PROJECTS USED OTHER DATUMS
- APPLY THE FOLLOWING CONVERSIONS WHEN USING PREVIOUS CONTRACT DRAWINGS:
  - ADDITION NO. 6: SUBTRACT 0.80 FT
  - PRIOR ADDITIONS: SUBTRACT 1.04 FT

DEPARTMENT OF PUBLIC WORKS
HOWARD COUNTY, MARYLAND

CHIEF, BUREAU OF UTILITIES — DATE

DES: ADP
DRN: REE
CHK: JKP
DATE: 01/2019

DATE	REV	DESCRIPTION
03/2021		RECORD DRAWINGS

PROCESS

DEWATERING AND DRYER BUILDING PLAN AND SECTIONS 6

LITTLE PATUXENT WATER RECLAMATION PLANT
8TH ADDITION
BIOSOLIDS PROCESSING FACILITIES - PHASE 2

CAPITAL PROJECT S-6295
CONTRACT NO. 24-4936

ELECTION DISTRICT NO. 6
HOWARD COUNTY, MARYLAND

SCALE AS SHOWN

SHEET 140 OF 311

M-515

BIM 360://10054364 – Little Patuxent WRP 8th Addition/264592_100_D_V18.rvt
1/7/2022 1:34:41 PM

GENERAL NOTES:

1. UNLESS NOTED OTHERWISE, NOT ALL PIPE AND DUCT SUPPORTS ARE SHOWN. FOR SUPPORT DETAILS, SEE SHEETS M-905 THROUGH M-907.

KEY NOTES (X)

1 FOUL AIR RELIEF DAMPER
2 DRYER NO. 1 SOLIDS MIXER
3 DRYER NO. 1 SOLIDS DISTRIBUTER
4 DRYER NO. 1 DOSING UNIT
5 SOLIDS ROLLER PRESS NO. 1
6 DRAG CONVEYOR
7 PANT LEG DIVERTER
8 DRYER DISCHARGE SCREW NO. 1
9 MIXER DOSING SCREW CONVEYOR NO. 1
10 DRUM MILL NO. 1
11 SOLIDS SCREEN NO. 1
12 DRYER NO. 2 SOLIDS MIXER
13 DRYER NO. 2 SOLIDS DISTRIBUTER
14 DRYER NO. 2 DOSING UNIT
15 SOLIDS ROLLER PRESS NO. 2
16 SOLIDS SCREEN NO. 2

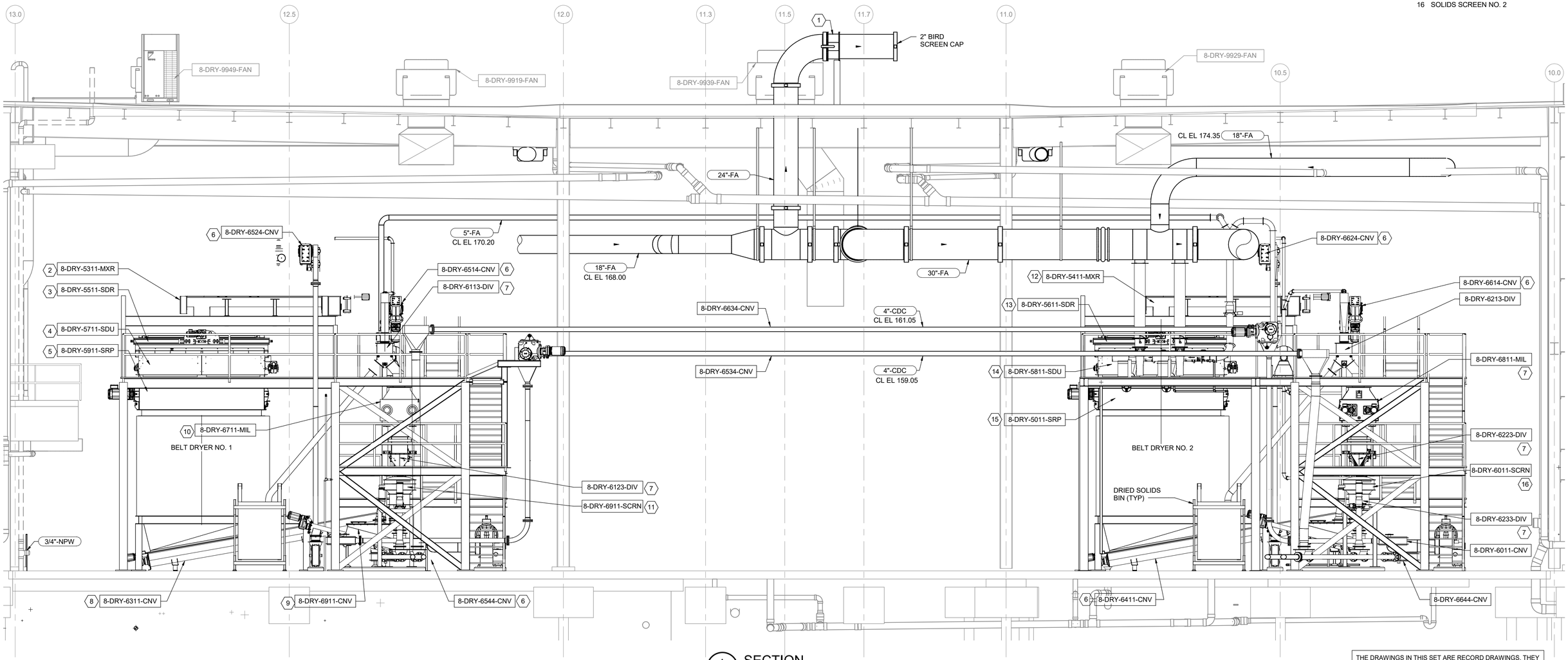

A
G-20
SECTION
1/4" = 1'-0"

0 5 10 15
SCALE: 1/8"=1'-0"

THE DRAWINGS IN THIS SET ARE RECORD DRAWINGS. THEY ARE CONSTRUCTION CONTRACT DRAWINGS WHICH HAVE BEEN REVISED BASED ON AVAILABLE FIELD INFORMATION RECORDED BY OTHERS DURING CONSTRUCTION OF THIS CONTRACT. THERE HAS BEEN NO VERIFICATION OF DIMENSIONS SHOWN ON THE CONSTRUCTION DRAWINGS OR THE ACCURACY/COMPLETENESS OF THE FIELD INFORMATION RECEIVED.

SIGNATURE — DATE 2/7/2023

AS-BUILT REPLACEMENT SHEET

PROFESSIONAL CERTIFICATION

THIS DRAWING WAS ORIGINALLY APPROVED FOR CONSTRUCTION AND SEALED BY ADAM S. PARMENTER, A REGISTERED PROFESSIONAL ENGINEER IN THE STATE OF MARYLAND, NO. 39376

NOTICE TO CONTRACTORS

- PROJECT ELEVATIONS ARE BASED ON NAVD88 AND HOWARD COUNTY'S BENCHMARK SYSTEM
- PREVIOUS PROJECTS USED OTHER DATUMS
- APPLY THE FOLLOWING CONVERSIONS WHEN USING PREVIOUS CONTRACT DRAWINGS:
  - ADDITION NO. 6: SUBTRACT 0.80 FT
  - PRIOR ADDITIONS: SUBTRACT 1.04 FT

DEPARTMENT OF PUBLIC WORKS
HOWARD COUNTY, MARYLAND

CHIEF, BUREAU OF UTILITIES — DATE

DES: ADP
DRN: REE
CHK: JKP
DATE: 01/2019

DATE	REV	DESCRIPTION
03/2021		RECORD DRAWINGS

PROCESS

DEWATERING AND DRYER BUILDING SECTION 7

LITTLE PATUXENT WATER RECLAMATION PLANT
8TH ADDITION
BIOSOLIDS PROCESSING FACILITIES - PHASE 2

CAPITAL PROJECT S-6295
CONTRACT NO. 24-4936

ELECTION DISTRICT NO. 6
HOWARD COUNTY, MARYLAND

SCALE AS SHOWN

SHEET 141 OF 311

M-516

BIM 360://10054364 – Little Patuxent WRP 8th Addition/264592_100_D_V18.rvt
1/7/2022 1:35:30 PM

GENERAL NOTES:

1. UNLESS NOTED OTHERWISE, NOT ALL PIPE AND DUCT SUPPORTS ARE SHOWN. FOR SUPPORT DETAILS, SEE SHEETS M-905 THROUGH M-907.

KEY NOTES (X)

1 BASE ELBOW PIPE SUPPORT, SEE DETAIL 5/M-905.
2 DEWATERED SOLIDS PROGRESSIVE CAVITY PUMP NO. 3
3 DEWATERED SOLIDS PROGRESSIVE CAVITY PUMP NO. 4
4 ANGLED SCREW CONVEYOR NO. 1
5 ANGLED SCREW CONVEYOR NO. 2
6 SOLIDS MIXER NO. 1
7 SOLIDS DISTRIBUTION SCREW NO. 1
8 SOLIDS DOSING UNIT NO. 1
9 SOLIDS ROLLER PRESS NO. 1
10 DRAG CONVEYOR
11 SPRAY CONDENSER NO. 1
12 EXHAUST FAN NO. 1
13 SPRAY CONDENSER NO. 2
14 EXHAUST FAN NO. 2
15 RIGID PIPE SUPPORT, SIMILAR TO DETAIL 5/M-906.
16 SADDLE PIPE SUPPORT, DETAIL 2/M-905.

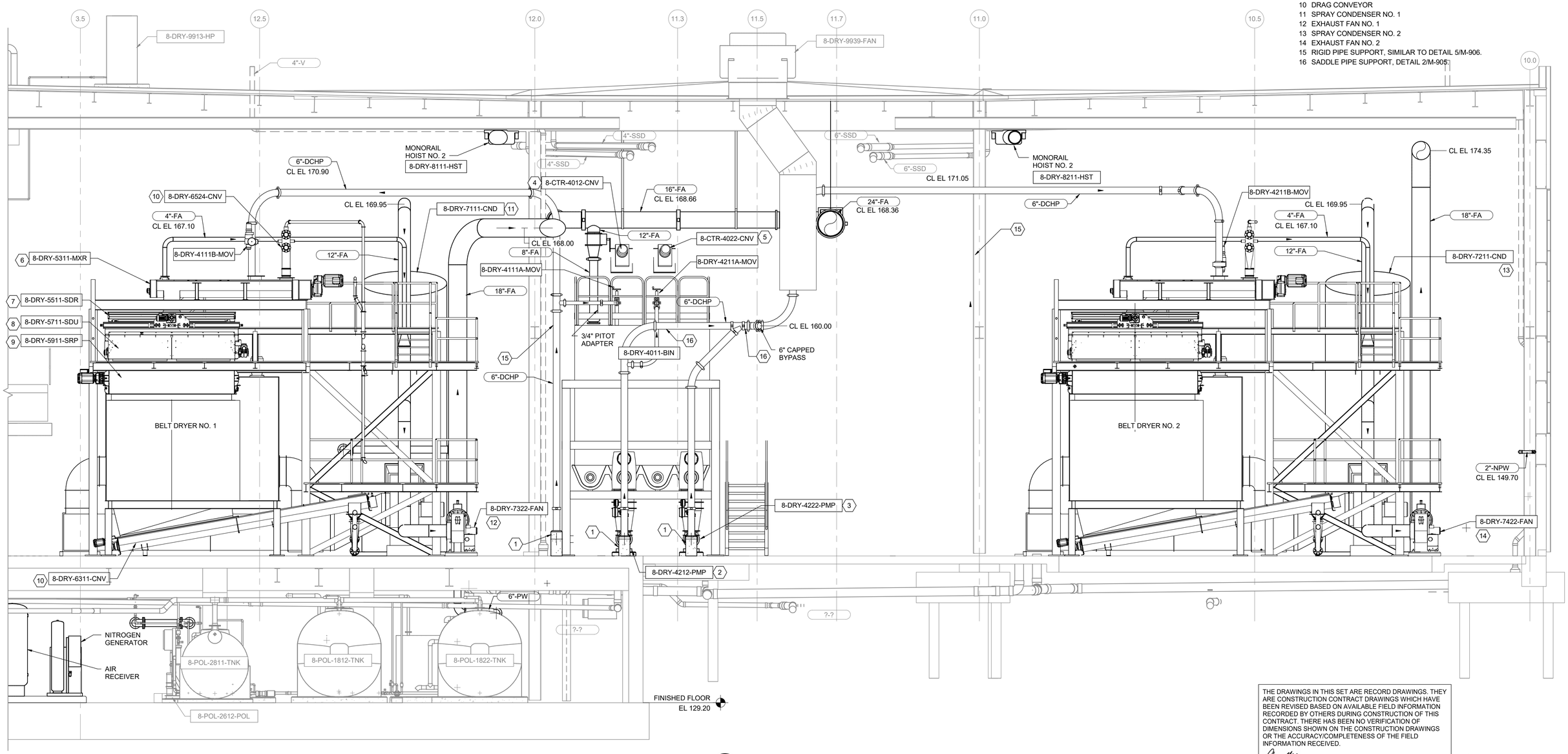

A / M-502 SECTION
1/4" = 1'-0"

THE DRAWINGS IN THIS SET ARE RECORD DRAWINGS. THEY ARE CONSTRUCTION CONTRACT DRAWINGS WHICH HAVE BEEN REVISED BASED ON AVAILABLE FIELD INFORMATION RECORDED BY OTHERS DURING CONSTRUCTION OF THIS CONTRACT. THERE HAS BEEN NO VERIFICATION OF DIMENSIONS SHOWN ON THE CONSTRUCTION DRAWINGS OR THE ACCURACY/COMPLETENESS OF THE FIELD INFORMATION RECEIVED.

SIGNATURE _____ DATE 2/7/2023

1 4 8
SCALE: 1/4"=1'-0"

AS-BUILT REPLACEMENT SHEET

PROFESSIONAL CERTIFICATION
THIS DRAWING WAS ORIGINALLY APPROVED FOR CONSTRUCTION AND SEALED BY ADAM S. PARMENTER, A REGISTERED PROFESSIONAL ENGINEER IN THE STATE OF MARYLAND, NO. 39376

NOTICE TO CONTRACTORS
- PROJECT ELEVATIONS ARE BASED ON NAVD88 AND HOWARD COUNTY'S BENCHMARK SYSTEM
- PREVIOUS PROJECTS USED OTHER DATUMS
- APPLY THE FOLLOWING CONVERSIONS WHEN USING PREVIOUS CONTRACT DRAWINGS:
  - ADDITION NO. 6: SUBTRACT 0.80 FT
  - PRIOR ADDITIONS: SUBTRACT 1.04 FT

DEPARTMENT OF PUBLIC WORKS
HOWARD COUNTY, MARYLAND

CHIEF, BUREAU OF UTILITIES DATE

DES: ADP
DRN: REE
CHK: JKP
DATE: 01/2019

DATE	REV	DESCRIPTION
03/2021		RECORD DRAWINGS

PROCESS

DEWATERING AND DRYER BUILDING SECTION 8

LITTLE PATUXENT WATER RECLAMATION PLANT
8TH ADDITION
BIOSOLIDS PROCESSING FACILITIES - PHASE 2

CAPITAL PROJECT S-6295
CONTRACT NO. 24-4936

ELECTION DISTRICT NO. 6
HOWARD COUNTY, MARYLAND

SCALE AS SHOWN

SHEET 142 OF 311

M-517

BIM 360://10054364 – Little Patuxent WRP 8th Addition/264592_100_D_V18.rvt
1/7/2022 1:35:59 PM

GENERAL NOTES:

1. UNLESS NOTED OTHERWISE, NOT ALL PIPE AND DUCT SUPPORTS ARE SHOWN. FOR SUPPORT DETAILS, SEE SHEETS M-905 THROUGH M-907.

KEY NOTES (X)

1 ANGLED SCREW CONVEYOR NO. 1
2 ANGLED SCREW CONVEYOR NO. 2
3 MOTORIZED CONVEYOR SLIDE GATE NO. 1
4 MOTORIZED CONVEYOR SLIDE GATE NO. 2
5 MOTORIZED CONVEYOR SLIDE GATE NO. 3
6 MOTORIZED CONVEYOR SLIDE GATE NO. 4
7 CAKE BIN LIVE BOTTON SCREW CONVERYOR NO. 1
8 CAKE BIN LIVE BOTTON SCREW CONVERYOR NO. 2
9 CAKE BIN LIVE BOTTON SCREW CONVERYOR NO. 3
10 CAKE BIN LIVE BOTTON SCREW CONVERYOR NO. 4
11 MOTORIZED CAKE PUMP SLIDE GATE NO. 1
12 MOTORIZED CAKE PUMP SLIDE GATE NO. 2
13 DEWATERED SOLIDS PROGRESSIVE CAVITY PUMP NO. 1
14 DEWATERED SOLIDS PROGRESSIVE CAVITY PUMP NO. 2
15 COOLING WATER PUMP NO. 1
16 GAS BURNER SYSTEM NO. 1
17 GAS PRESSURE REGULATING AND METERING STATION
18 GAS BUNNER SYSTEM NO. 2

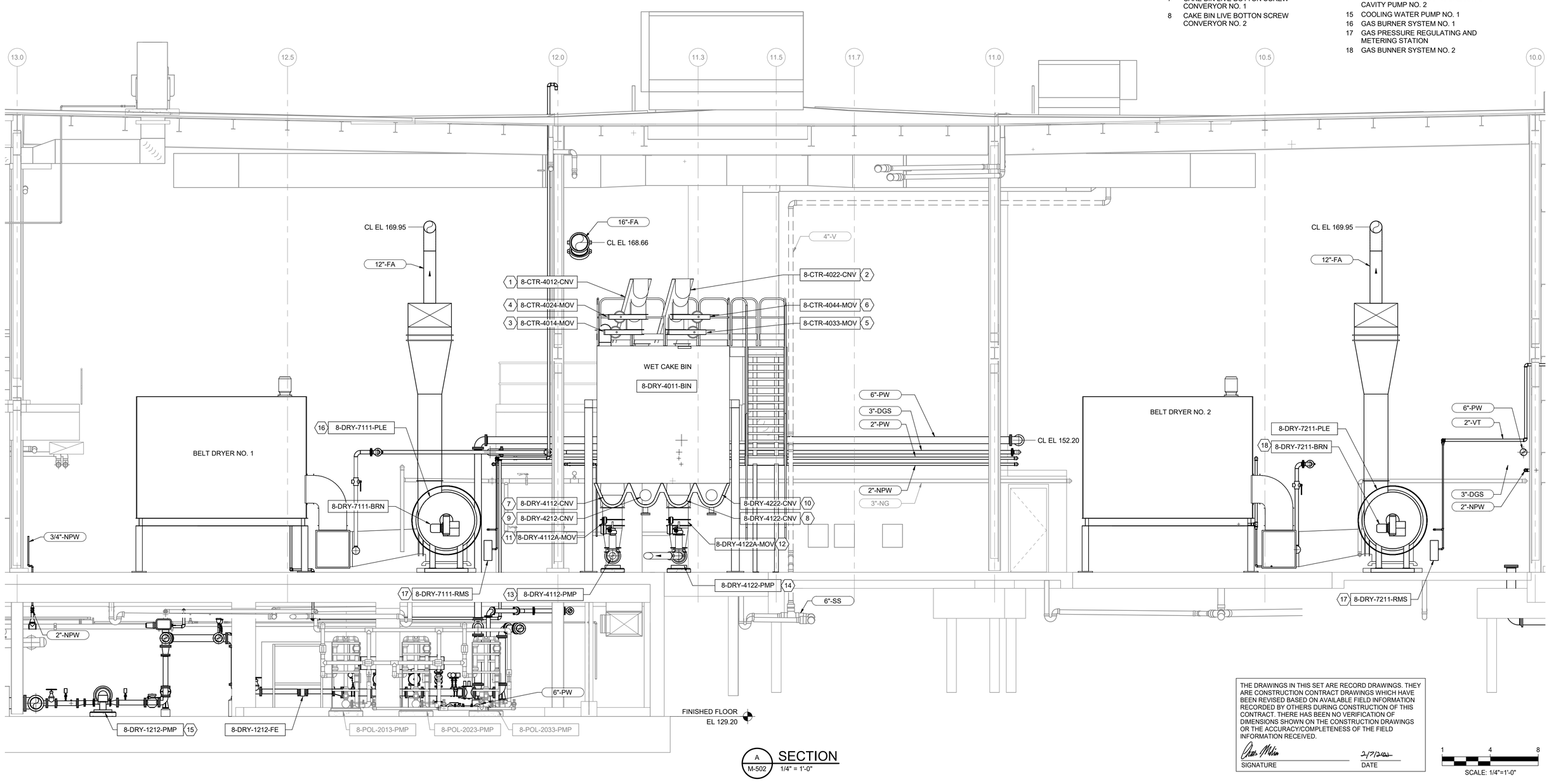

A M-502 SECTION
1/4" = 1'-0"

THE DRAWINGS IN THIS SET ARE RECORD DRAWINGS. THEY ARE CONSTRUCTION CONTRACT DRAWINGS WHICH HAVE BEEN REVISED BASED ON AVAILABLE FIELD INFORMATION RECORDED BY OTHERS DURING CONSTRUCTION OF THIS CONTRACT. THERE HAS BEEN NO VERIFICATION OF DIMENSIONS SHOWN ON THE CONSTRUCTION DRAWINGS OR THE ACCURACY/COMPLETENESS OF THE FIELD INFORMATION RECEIVED.

SIGNATURE 2/7/2023 DATE

1 4 8
SCALE: 1/4"=1'-0"

BIM 360://10054364 – Little Patuxent WRP 8th Addition/264592_100_D_V18.rvt
1/7/2022 1:36:04 PM

AS-BUILT REPLACEMENT SHEET

PROFESSIONAL CERTIFICATION
THIS DRAWING WAS ORIGINALLY APPROVED FOR CONSTRUCTION AND SEALED BY ADAM S. PARMENTER, A REGISTERED PROFESSIONAL ENGINEER IN THE STATE OF MARYLAND, NO. 39376

NOTICE TO CONTRACTORS
- PROJECT ELEVATIONS ARE BASED ON NAVD88 AND HOWARD COUNTY'S BENCHMARK SYSTEM
- PREVIOUS PROJECTS USED OTHER DATUMS
- APPLY THE FOLLOWING CONVERSIONS WHEN USING PREVIOUS CONTRACT DRAWINGS:
  - ADDITION NO. 6: SUBTRACT 0.80 FT
  - PRIOR ADDITIONS: SUBTRACT 1.04 FT

DEPARTMENT OF PUBLIC WORKS
HOWARD COUNTY, MARYLAND

CHIEF, BUREAU OF UTILITIES DATE

DES: ADP
DRN: REE
CHK: JKP
DATE: 01/2019

DATE	REV	DESCRIPTION
03/2021		RECORD DRAWINGS

PROCESS

DEWATERING AND DRYER BUILDING SECTION 9

LITTLE PATUXENT WATER RECLAMATION PLANT
8TH ADDITION
BIOSOLIDS PROCESSING FACILITIES - PHASE 2

CAPITAL PROJECT S-6295
CONTRACT NO. 24-4936

ELECTION DISTRICT NO. 6
HOWARD COUNTY, MARYLAND

SCALE AS SHOWN

SHEET 143 OF 311

M-518

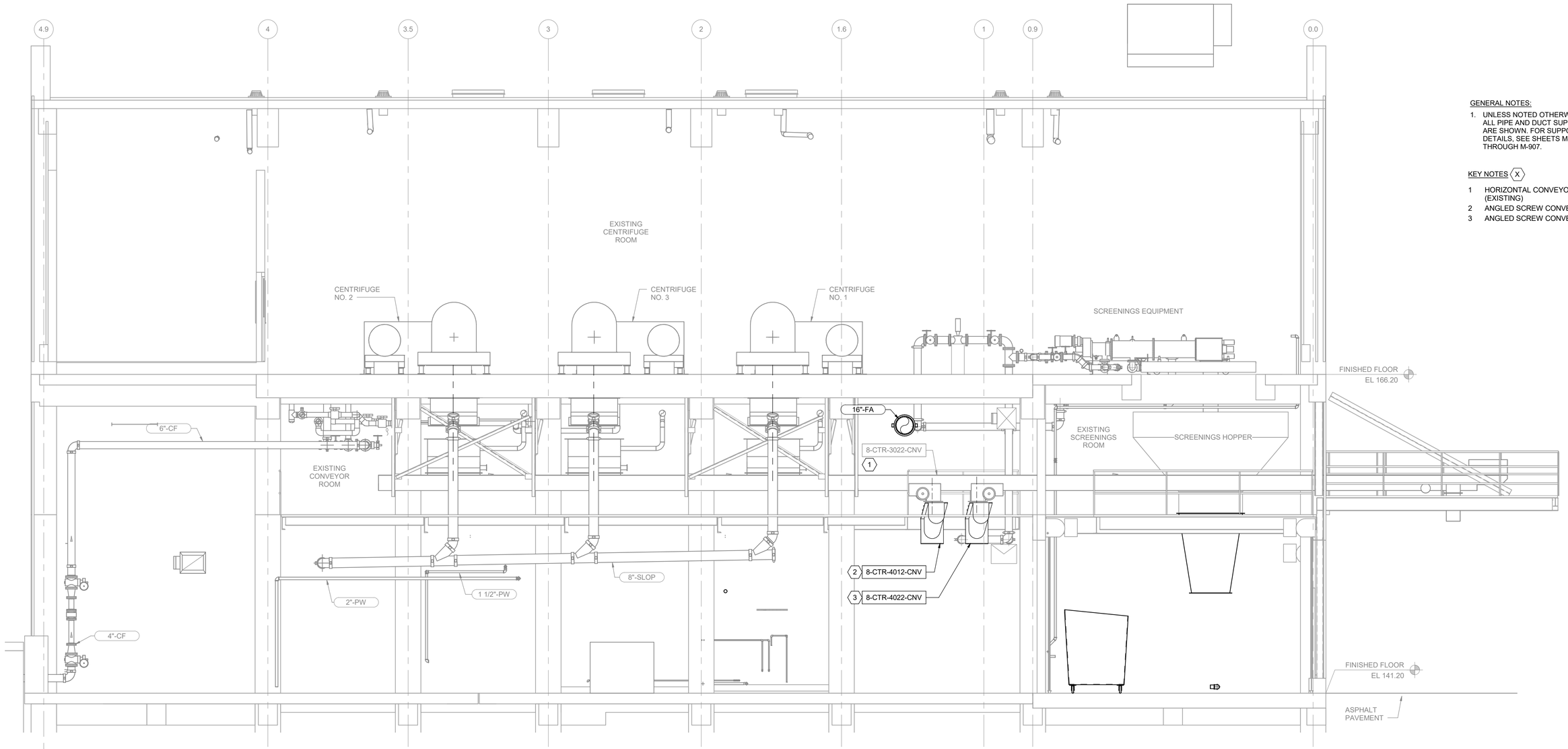

A M-504 SECTION
1/4" = 1'-0"

GENERAL NOTES:

1. UNLESS NOTED OTHERWISE, NOT ALL PIPE AND DUCT SUPPORTS ARE SHOWN. FOR SUPPORT DETAILS, SEE SHEETS M-905 THROUGH M-907.

KEY NOTES (X)

1 HORIZONTAL CONVEYOR NO. 2 (EXISTING)
2 ANGLED SCREW CONVEYOR NO. 1
3 ANGLED SCREW CONVEYOR NO. 2

THE DRAWINGS IN THIS SET ARE RECORD DRAWINGS. THEY ARE CONSTRUCTION CONTRACT DRAWINGS WHICH HAVE BEEN REVISED BASED ON AVAILABLE FIELD INFORMATION RECORDED BY OTHERS DURING CONSTRUCTION OF THIS CONTRACT. THERE HAS BEEN NO VERIFICATION OF DIMENSIONS SHOWN ON THE CONSTRUCTION DRAWINGS OR THE ACCURACY/COMPLETENESS OF THE FIELD INFORMATION RECEIVED.

SIGNATURE _____ DATE 2/7/2022

1 4 8
SCALE: 1/4"=1'-0"

AS-BUILT REPLACEMENT SHEET

PROFESSIONAL CERTIFICATION

THIS DRAWING WAS ORIGINALLY APPROVED FOR CONSTRUCTION AND SEALED BY ADAM S. PARMENTER, A REGISTERED PROFESSIONAL ENGINEER IN THE STATE OF MARYLAND, NO. 39376

NOTICE TO CONTRACTORS

- PROJECT ELEVATIONS ARE BASED ON NAVD88 AND HOWARD COUNTY'S BENCHMARK SYSTEM
- PREVIOUS PROJECTS USED OTHER DATUMS
- APPLY THE FOLLOWING CONVERSIONS WHEN USING PREVIOUS CONTRACT DRAWINGS:
  - ADDITION NO. 6: SUBTRACT 0.80 FT
  - PRIOR ADDITIONS: SUBTRACT 1.04 FT

DEPARTMENT OF PUBLIC WORKS
HOWARD COUNTY, MARYLAND

CHIEF, BUREAU OF UTILITIES DATE

DES: ADP
DRN: REE
CHK: JKP
DATE: 01/2019

DATE	REV	DESCRIPTION
03/2021		RECORD DRAWINGS

PROCESS

DEWATERING AND DRYER BUILDING SECTION 10

LITTLE PATUXENT WATER RECLAMATION PLANT
8TH ADDITION
BIOSOLIDS PROCESSING FACILITIES - PHASE 2

CAPITAL PROJECT S-6295
CONTRACT NO. 24-4936

ELECTION DISTRICT NO. 6
HOWARD COUNTY, MARYLAND

SCALE AS SHOWN

SHEET 144 OF 311

M-519

BIM 360://10054364 – Little Patuxent WRP 8th Addition/264592_100_D_V18.rvt
1/7/2022 1:36:07 PM

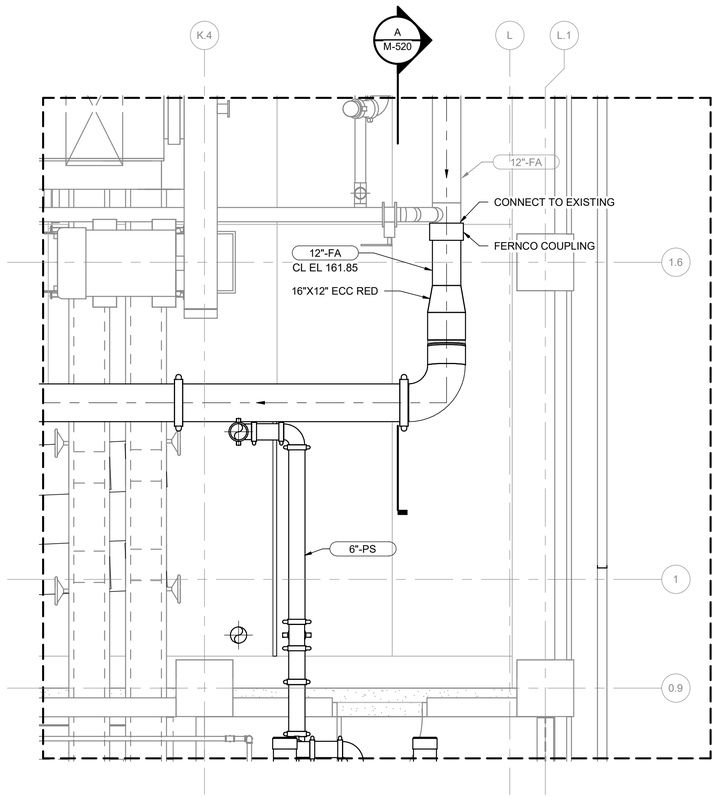

1 M-505 FOUL AIR DETAIL
3/8" = 1'-0"

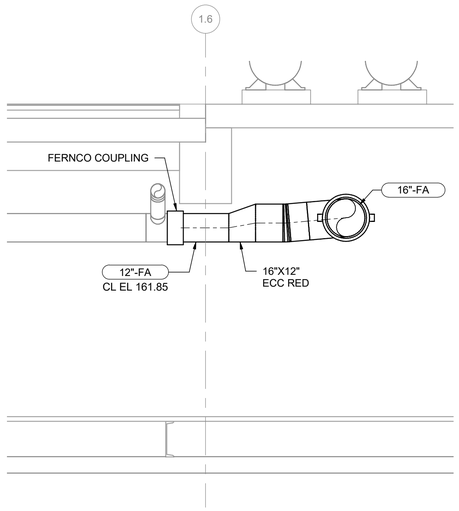

A M-520 SECTION
3/8" = 1'-0"

THE DRAWINGS IN THIS SET ARE RECORD DRAWINGS. THEY ARE CONSTRUCTION CONTRACT DRAWINGS WHICH HAVE BEEN REVISED BASED ON AVAILABLE FIELD INFORMATION RECORDED BY OTHERS DURING CONSTRUCTION OF THIS CONTRACT. THERE HAS BEEN NO VERIFICATION OF DIMENSIONS SHOWN ON THE CONSTRUCTION DRAWINGS OR THE ACCURACY/COMPLETENESS OF THE FIELD INFORMATION RECEIVED.

SIGNATURE DATE

AS-BUILT REPLACEMENT SHEET

PROFESSIONAL CERTIFICATION

THIS DRAWING WAS ORIGINALLY APPROVED FOR CONSTRUCTION AND SEALED BY ADAM S. PARMENTER, A REGISTERED PROFESSIONAL ENGINEER IN THE STATE OF MARYLAND, NO. 39376

NOTICE TO CONTRACTORS

- PROJECT ELEVATIONS ARE BASED ON NAVD88 AND HOWARD COUNTY'S BENCHMARK SYSTEM
- PREVIOUS PROJECTS USED OTHER DATUMS
- APPLY THE FOLLOWING CONVERSIONS WHEN USING PREVIOUS CONTRACT DRAWINGS:
  - ADDITION NO. 6: SUBTRACT 0.80 FT
  - PRIOR ADDITIONS: SUBTRACT 1.04 FT

DEPARTMENT OF PUBLIC WORKS
HOWARD COUNTY, MARYLAND

CHIEF, BUREAU OF UTILITIES DATE

DES: ADP
DRN: SLB
CHK: JKP
DATE: 01/2019

DATE	REV	DESCRIPTION
03/2021		RECORD DRAWINGS

PROCESS

FOUL ODOR DUCT

LITTLE PATUXENT WATER RECLAMATION PLANT
8TH ADDITION
BIOSOLIDS PROCESSING FACILITIES - PHASE 2

CAPITAL PROJECT S-6295
CONTRACT NO. 24-4936

ELECTION DISTRICT NO. 6
HOWARD COUNTY, MARYLAND

SCALE AS SHOWN

SHEET 145 OF 311

M-520

BIM 360://10054364 – Little Patuxent WRP 8th Addition/264592_100_D_V18.rvt
1/9/2022 11:23:55 AM

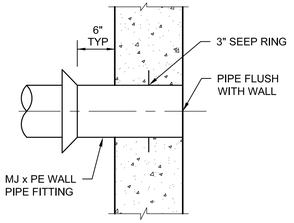

NOTES:
1. OPENING: TYPE E (EXISTING) OR TYPE F (NEW CONSTRUCTION).

1 - PIPE PENETRATION DETAIL

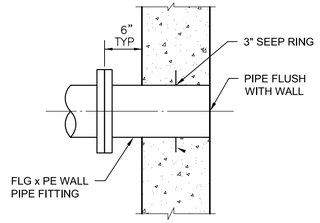

NOTES:
1. OPENING: TYPE E (EXISTING) OR TYPE F (NEW CONSTRUCTION).

2 - PIPE PENETRATION DETAIL

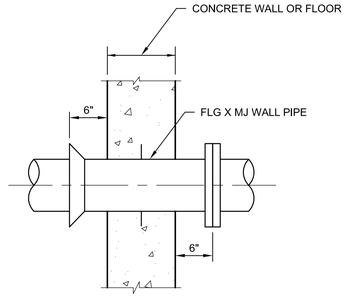

NOTES:
1. OPENING: TYPE E (EXISTING) OR TYPE F (NEW CONSTRUCTION).

3 - PIPE PENETRATION DETAIL

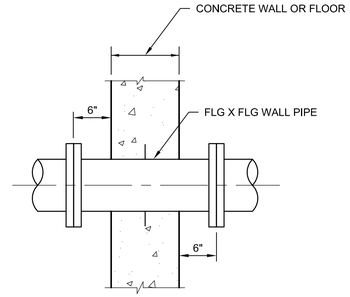

NOTES:
1. OPENING: TYPE E (EXISTING) OR TYPE F (NEW CONSTRUCTION).

4 - PIPE PENETRATION DETAIL

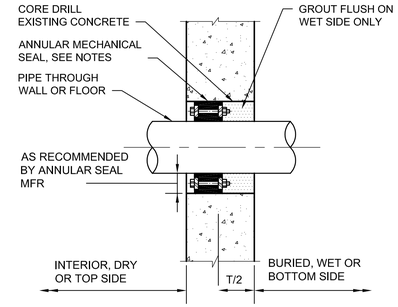

NOTES:
1. OPENING : TYPE H, SEAL: CATEGORY 1.
2. PROVIDE SINGLE ROW OF SEALS FOR PIPES LESS THAN 16" DIA. PROVIDE DOUBLE ROW OF SEALS FOR PIPES 16" DIA. AND LARGER.
3. USE TWO SEALS FOR WALLS THICKER THAN 8".

5 - PIPE PENETRATION DETAIL

GENERAL NOTES:
1. OPENINGS AND PENETRATIONS SHALL COMPLY WITH SECTION 01 73 20 AND DRAWING NOTES. REFER TO SPECIFICATION FOR OPENING TYPES AND SEAL CATEGORIES.
2. SEE STRUCTURAL DRAWINGS FOR ADDITIONAL DETAILS REGARDING CAST-IN WALL PIPES AND SLEEVES. REFER TO DETAIL 3/S-903 FOR NEW CONSTRUCTION AND DETAIL 9/S-903 FOR REHAB CONSTRUCTION.

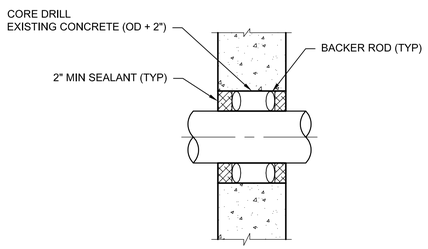

NOTES:
1. OPENING: TYPE H, SEAL : CATEGORY 4.

6 - PIPE PENETRATION DETAIL

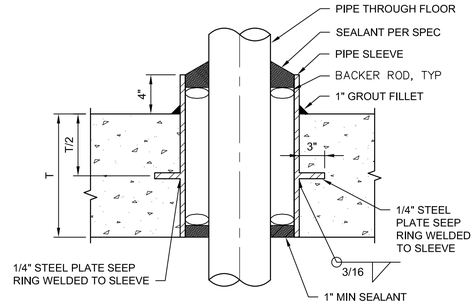

NOTES:
1. OPENING: TYPE C, SEAL : CATEGORY 4.

7 - PIPE PENETRATION DETAIL

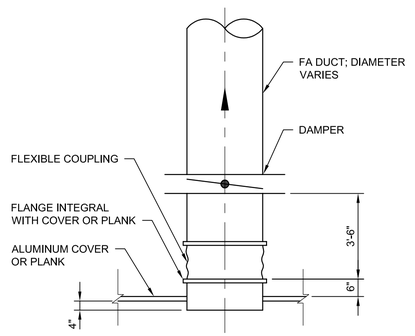

NOTE:
1. PROVIDE SUPPORTS BEFORE AND AFTER FLEXIBLE COUPLING

8 - FA CONNECTIONS (TO COVER OR PLANKS)

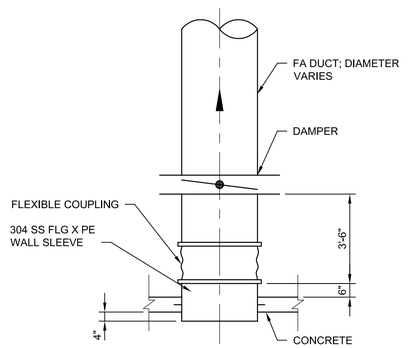

NOTE:
1. PROVIDE SUPPORTS BEFORE AND AFTER FLEXIBLE COUPLING

9 - FA CONNECTIONS (TO CONCRETE)

THE DRAWINGS IN THIS SET ARE RECORD DRAWINGS. THEY ARE CONSTRUCTION CONTRACT DRAWINGS WHICH HAVE BEEN REVISED BASED ON AVAILABLE FIELD INFORMATION RECORDED BY OTHERS DURING CONSTRUCTION OF THIS CONTRACT. THERE HAS BEEN NO VERIFICATION OF DIMENSIONS SHOWN ON THE CONSTRUCTION DRAWINGS OR THE ACCURACY/COMPLETENESS OF THE FIELD INFORMATION RECEIVED.

SIGNATURE 2/7/2023 DATE

AS-BUILT REPLACEMENT SHEET

PROFESSIONAL CERTIFICATION
THIS DRAWING WAS ORIGINALLY APPROVED FOR CONSTRUCTION AND SEALED BY ADAM S. PARMENTER, A REGISTERED PROFESSIONAL ENGINEER IN THE STATE OF MARYLAND, NO. 39376.

NOTICE TO CONTRACTORS
- PROJECT ELEVATIONS ARE BASED ON NAVD88 AND HOWARD COUNTY'S BENCHMARK SYSTEM
- PREVIOUS PROJECTS USED OTHER DATUMS
- APPLY THE FOLLOWING CONVERSIONS WHEN USING PREVIOUS CONTRACT DRAWINGS:
  - ADDITION NO. 6: SUBTRACT 0.80 FT
  - PRIOR ADDITIONS: SUBTRACT 1.04 FT

DEPARTMENT OF PUBLIC WORKS
HOWARD COUNTY, MARYLAND

CHIEF, BUREAU OF UTILITIES DATE

DES: ADP
DRN: REE
CHK: BMB
DATE: 01/2018

DATE	REV	DESCRIPTION
03/2021		RECORD DRAWINGS

PROCESS

MISCELLANEOUS DETAILS 1

LITTLE PATUXENT WATER RECLAMATION PLANT
8TH ADDITION
BIOSOLIDS PROCESSING FACILITIES - PHASE 2

CAPITAL PROJECT S-6295
CONTRACT NO. 24-4936

ELECTION DISTRICT NO. 6
HOWARD COUNTY, MARYLAND

SCALE AS SHOWN

SHEET 146 OF 311

M-900

C:\pwworking\pitt\d1900826\M-900.dwg 01/07/22_14:28

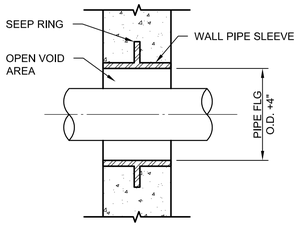

NOTES:
1. OPENING: TYPE C.

1 - PIPE PENETRATION DETAIL

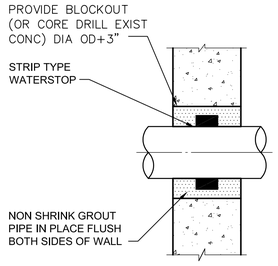

2 - PIPE PENETRATION DETAIL (GROUT IN PLACE)

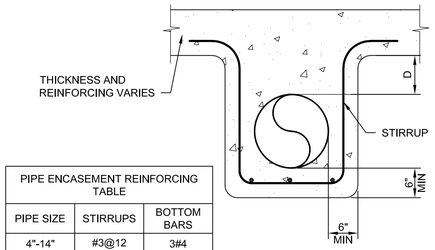

PIPE ENCASEMENT REINFORCING TABLE		
PIPE SIZE	STIRRUPS	BOTTOM BARS
4"-14"	#3@12	3#4
16"-20"	#3@12	4#4
24"-30"	#3@12	4#4
36"-48"	#4@8	5#4

NOTE:
FOR ALL UNDER SLAB PIPE ENCASEMENT WHERE "D" <= 3'-0".
IF GREATER, ENCASEMENT SHALL NOT BE LINKED TO STRUCTURE ABOVE (SEPARATE POUR).

3 - UNDERSLAB PIPE ENCASEMENT

GENERAL NOTES:
1. OPENINGS AND PENETRATIONS SHALL COMPLY WITH SECTION 01 73 20 AND DRAWING NOTES. REFER TO SPECIFICATION FOR OPENING TYPES AND SEAL CATEGORIES.
2. SEE STRUCTURAL DRAWINGS FOR ADDITIONAL DETAILS REGARDING CAST-IN WALL PIPES AND SLEEVES. REFER TO DETAIL 3/S-903 FOR NEW CONSTRUCTION AND DETAIL 9/S-903 FOR REHAB CONSTRUCTION.

THE DRAWINGS IN THIS SET ARE RECORD DRAWINGS. THEY ARE CONSTRUCTION CONTRACT DRAWINGS WHICH HAVE BEEN REVISED BASED ON AVAILABLE FIELD INFORMATION RECORDED BY OTHERS DURING CONSTRUCTION OF THIS CONTRACT. THERE HAS BEEN NO VERIFICATION OF DIMENSIONS SHOWN ON THE CONSTRUCTION DRAWINGS OR THE ACCURACY/COMPLETENESS OF THE FIELD INFORMATION RECEIVED.

SIGNATURE _____ DATE 2/7/2022

AS-BUILT REPLACEMENT SHEET

PROFESSIONAL CERTIFICATION
THIS DRAWING WAS ORIGINALLY APPROVED FOR CONSTRUCTION AND SEALED BY ADAM S. PARMENTER, A REGISTERED PROFESSIONAL ENGINEER IN THE STATE OF MARYLAND, NO. 39376.

NOTICE TO CONTRACTORS
- PROJECT ELEVATIONS ARE BASED ON NAVD88 AND HOWARD COUNTY'S BENCHMARK SYSTEM
- PREVIOUS PROJECTS USED OTHER DATUMS
- APPLY THE FOLLOWING CONVERSIONS WHEN USING PREVIOUS CONTRACT DRAWINGS:
  - ADDITION NO. 6: SUBTRACT 0.80 FT
  - PRIOR ADDITIONS: SUBTRACT 1.04 FT

DEPARTMENT OF PUBLIC WORKS
HOWARD COUNTY, MARYLAND

CHIEF, BUREAU OF UTILITIES DATE

DES: ADP
DRN: REE
CHK:
DATE: 01/2018

DATE	REV	DESCRIPTION
03/2021		RECORD DRAWINGS

PROCESS

MISCELLANEOUS DETAILS 2

LITTLE PATUXENT WATER RECLAMATION PLANT
8TH ADDITION
BIOSOLIDS PROCESSING FACILITIES - PHASE 2

CAPITAL PROJECT S-6295
CONTRACT NO. 24-4936

ELECTION DISTRICT NO. 6
HOWARD COUNTY, MARYLAND

SCALE AS SHOWN

SHEET 147 OF 311

M-901

C:\pwworking\pitt\d1900826\M-901.dwg 01/07/22_14:28

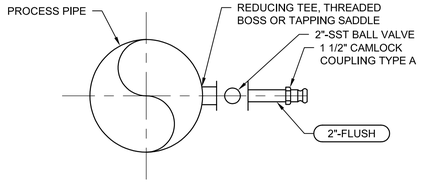

1 - FLUSHING CONNECTION 1

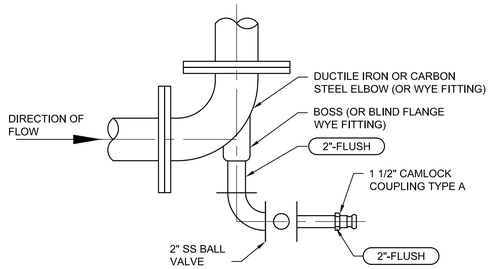

2 - FLUSHING CONNECTION 2

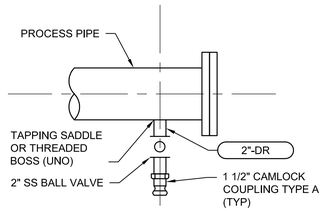

3 - DRAIN CONNECTION 1 DETAIL

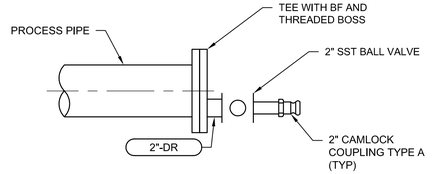

4 - DRAIN CONNECTION 2 DETAIL

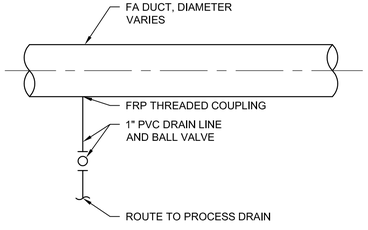

5 - FA CONDENSATION DRAIN

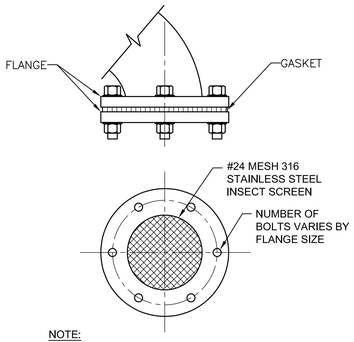

NOTE:

ALL NUTS, BOLTS, AND WASHERS SHALL BE 316 STAINLESS STEEL.

6 - INSECT SCREEN DETAIL

THE DRAWINGS IN THIS SET ARE RECORD DRAWINGS. THEY ARE CONSTRUCTION CONTRACT DRAWINGS WHICH HAVE BEEN REVISED BASED ON AVAILABLE FIELD INFORMATION RECORDED BY OTHERS DURING CONSTRUCTION OF THIS CONTRACT. THERE HAS BEEN NO VERIFICATION OF DIMENSIONS SHOWN ON THE CONSTRUCTION DRAWINGS OR THE ACCURACY/COMPLETENESS OF THE FIELD INFORMATION RECEIVED.

SIGNATURE — DATE 2/7/2023

AS-BUILT REPLACEMENT SHEET

PROFESSIONAL CERTIFICATION
THIS DRAWING WAS ORIGINALLY APPROVED FOR CONSTRUCTION AND SEALED BY ADAM S. PARMENTER, A REGISTERED PROFESSIONAL ENGINEER IN THE STATE OF MARYLAND, NO. 39376.

NOTICE TO CONTRACTORS
- PROJECT ELEVATIONS ARE BASED ON NAVD88 AND HOWARD COUNTY'S BENCHMARK SYSTEM
- PREVIOUS PROJECTS USED OTHER DATUMS
- APPLY THE FOLLOWING CONVERSIONS WHEN USING PREVIOUS CONTRACT DRAWINGS:
  - ADDITION NO. 6: SUBTRACT 0.80 FT
  - PRIOR ADDITIONS: SUBTRACT 1.04 FT

DEPARTMENT OF PUBLIC WORKS
HOWARD COUNTY, MARYLAND

CHIEF, BUREAU OF UTILITIES — DATE

DES: ADP
DRN: REE
CHK:
DATE: 01/2018

DATE	REV	DESCRIPTION
03/2021		RECORD DRAWINGS

PROCESS

MISCELLANEOUS DETAILS 3

LITTLE PATUXENT WATER RECLAMATION PLANT
8TH ADDITION
BIOSOLIDS PROCESSING FACILITIES - PHASE 2

CAPITAL PROJECT S-6295
CONTRACT NO. 24-4936

ELECTION DISTRICT NO. 6
HOWARD COUNTY, MARYLAND

SCALE AS SHOWN

SHEET 148 OF 311

M-902

C:\pwworking\pitt\d1900826\M-902.dwg 01/07/22 14:29

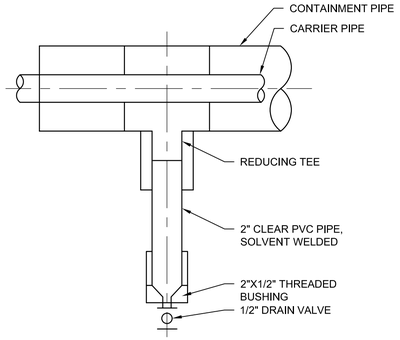

1 - CONTAINMENT PIPING LOW POINT DRAIN

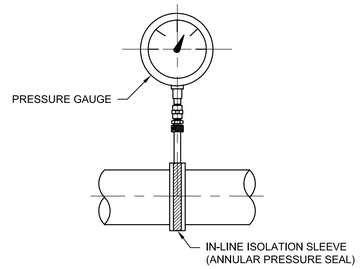

NOTES:

1. ANNULAR TYPE PRESSURE SENSOR ASSEMBLY TO BE FACTORY ASSEMBLED.

2 - PRESSURE INDICATOR WITH ANNULAR SEAL

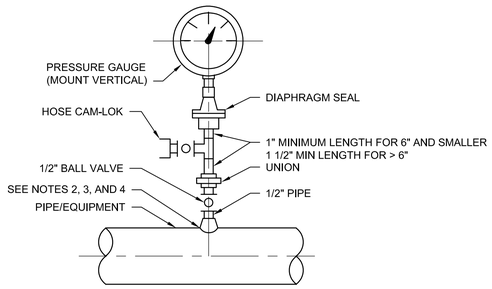

NOTES:

1. PIPE NIPPLES AND FITTINGS TO BE 316 STAINLESS STEEL.
2. FOR STEEL, GALVANIZED STEEL AND PVC 2½" AND SMALLER USE A BUSHING IN A TEE.
3. FOR DUCTILE IRON, ALL SIZES, USE PIPE SADDLE WITH BUSHING.
4. FOR STEEL AND STAINLESS STEEL PIPES 3" AND LARGER, USE A THRED-O-LET AS SHOWN.
5. NOT ALL REQUIRED COMPONENTS OR CONNECTIONS SHOWN; SEE SPECIFICATION SECTION 13422.

3 - PRESSURE INDICATOR

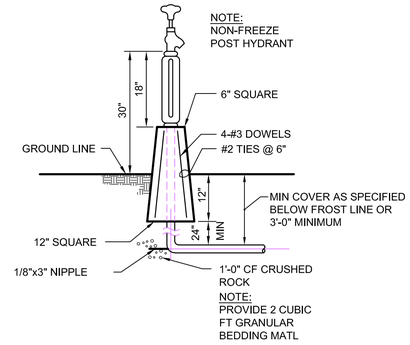

4 - YARD HYDRANT DETAIL

NOTE:

EQUIPMENT BASE DRAINAGE TO BE PROVIDED FOR ALL EQUIPMENT SUPPLIED WITH DRAINAGE TAPS OR CONNECTIONS.

5 - EQUIPMENT BASE DRAINAGE

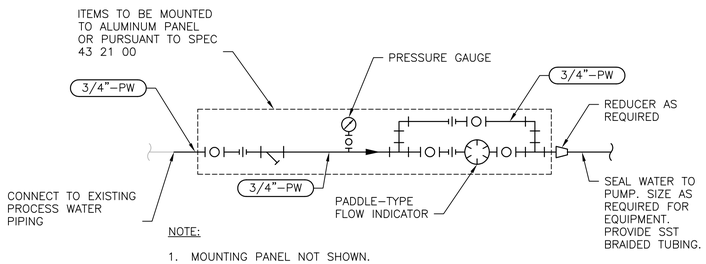

NOTE:

1. MOUNTING PANEL NOT SHOWN.

PUMP SEAL WATER SYSTEM SCHEMATIC DETAIL

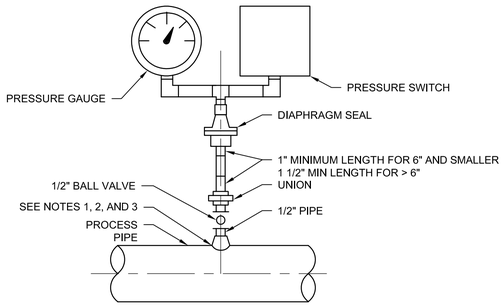

NOTES:

1. FOR STEEL, GALVANIZED STEEL AND PVC 2 1/2" AND SMALLER USE A BUSHING IN A TEE.
2. FOR DUCTILE IRON AND FRP ALL SIZES, USE PIPE SADDLE WITH BUSHING.
3. FOR STEEL AND STAINLESS STEEL PIPES 3" AND LARGER, USE A THRED-O-LET AS SHOWN.
4. DIAPHRAGM SEAL - PRESSURE SWITCH ASSEMBLY TO FACTORY ASSEMBLED.

7 - PRESSURE INDICATOR

THE DRAWINGS IN THIS SET ARE RECORD DRAWINGS. THEY ARE CONSTRUCTION CONTRACT DRAWINGS WHICH HAVE BEEN REVISED BASED ON AVAILABLE FIELD INFORMATION RECORDED BY OTHERS DURING CONSTRUCTION OF THIS CONTRACT. THERE HAS BEEN NO VERIFICATION OF DIMENSIONS SHOWN ON THE CONSTRUCTION DRAWINGS OR THE ACCURACY/COMPLETENESS OF THE FIELD INFORMATION RECEIVED.

SIGNATURE — DATE 2/7/2023

AS-BUILT REPLACEMENT SHEET

PROFESSIONAL CERTIFICATION
THIS DRAWING WAS ORIGINALLY APPROVED FOR CONSTRUCTION AND SEALED BY ADAM S. PARMENTER, A REGISTERED PROFESSIONAL ENGINEER IN THE STATE OF MARYLAND, NO. 39376.

NOTICE TO CONTRACTORS
- PROJECT ELEVATIONS ARE BASED ON NAVD88 AND HOWARD COUNTY'S BENCHMARK SYSTEM
- PREVIOUS PROJECTS USED OTHER DATUMS
- APPLY THE FOLLOWING CONVERSIONS WHEN USING PREVIOUS CONTRACT DRAWINGS:
  - ADDITION NO. 6: SUBTRACT 0.80 FT
  - PRIOR ADDITIONS: SUBTRACT 1.04 FT

DEPARTMENT OF PUBLIC WORKS
HOWARD COUNTY, MARYLAND

CHIEF, BUREAU OF UTILITIES — DATE

DES: CJM
DRN: REE
CHK: M.W.
DATE: 01/2018

DATE	REV	DESCRIPTION
03/2021		RECORD DRAWINGS

PROCESS

MISCELLANEOUS DETAILS 4

LITTLE PATUXENT WATER RECLAMATION PLANT
8TH ADDITION
BIOSOLIDS PROCESSING FACILITIES - PHASE 2

CAPITAL PROJECT S-6295
CONTRACT NO. 24-4936

ELECTION DISTRICT NO. 6
HOWARD COUNTY, MARYLAND

SCALE AS SHOWN

SHEET 149 OF 311

M-903

C:\pwworking\pitt\d1900826\ M-903.dwg 01/07/22 14:29

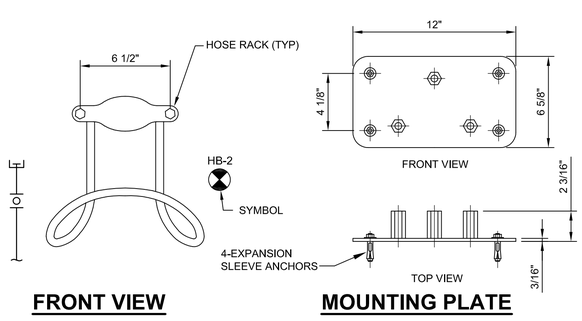

FRONT VIEW **MOUNTING PLATE**

NOTES:

1. FINISH AND GRIND ALL ROUGH EDGES.
2. 1" HOSE NOT SHOWN. PROVIDE 100 FT. LONG HOSE AT EACH LOCATION.

1 - HOSE RACK - 1 (FOR WALL MOUNTED LOCATIONS)

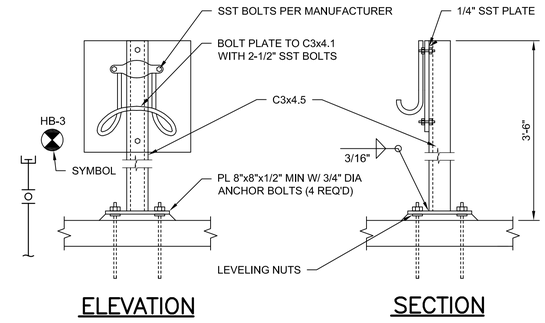

ELEVATION **SECTION**

NOTES:

1. 1" HOSE NOT SHOWN. PROVIDE 100 FT. LONG HOSE AT EACH LOCATION.

2 - HOSE RACK - 2 (FOR FLOOR MOUNTED LOCATIONS

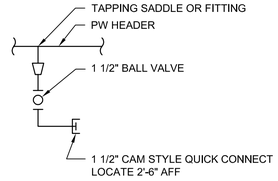

3 - HOSE BIBB

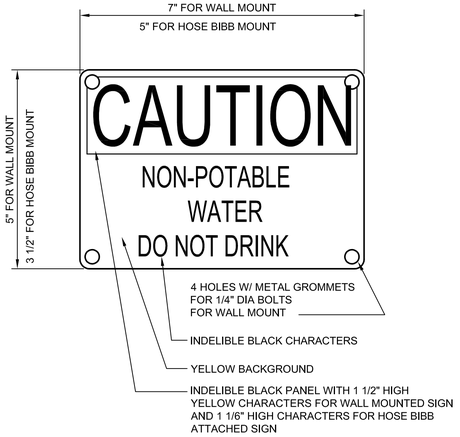

NOTES:

1. MATERIAL TO BE SIMI-RIGID BUTYRATE OR APPROVED EQUAL, AS MANUFACTURED BY W.H. BRADY CO., MILWAUKEE, WIS. 53201 OR EQUAL.
2. CONTRACTOR TO VERIFY COLORS AND LETTER SIZES ARE PER OSHA STANDARDS FOR CAUTION SIGNS.
3. PROVIDE AND INSTALL THIS SIGN AT ALL HOSE BIBB LOCATIONS DELIVERING NON-POTABLE WATER.
4. ATTACH TO HOSE BIBB WITH PLASTIC STRAPS AROUND VERTICAL RISER, OR SUSPEND FROM VALVE W/RETAINER CHAIN, AS DIRECTED BY OWNER.

4 - NON-POTABLE WATER SIGN STANDARD DETAIL

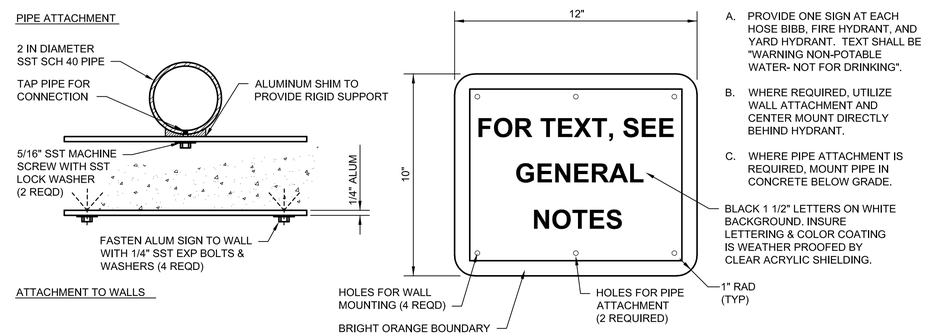

PLAN VIEWS **ELEVATION**

GENERAL NOTES:

A. PROVIDE ONE SIGN AT EACH HOSE BIBB, FIRE HYDRANT, AND YARD HYDRANT. TEXT SHALL BE "WARNING NON-POTABLE WATER- NOT FOR DRINKING".

B. WHERE REQUIRED, UTILIZE WALL ATTACHMENT AND CENTER MOUNT DIRECTLY BEHIND HYDRANT.

C. WHERE PIPE ATTACHMENT IS REQUIRED, MOUNT PIPE IN CONCRETE BELOW GRADE.

BLACK 1 1/2" LETTERS ON WHITE BACKGROUND. INSURE LETTERING & COLOR COATING IS WEATHER PROOFED BY CLEAR ACRYLIC SHIELDING.

5 - TYPICAL SIGN MOUNTING DETAIL

THE DRAWINGS IN THIS SET ARE RECORD DRAWINGS. THEY ARE CONSTRUCTION CONTRACT DRAWINGS WHICH HAVE BEEN REVISED BASED ON AVAILABLE FIELD INFORMATION RECORDED BY OTHERS DURING CONSTRUCTION OF THIS CONTRACT. THERE HAS BEEN NO VERIFICATION OF DIMENSIONS SHOWN ON THE CONSTRUCTION DRAWINGS OR THE ACCURACY/COMPLETENESS OF THE FIELD INFORMATION RECEIVED.

SIGNATURE DATE 2/7/2022

AS-BUILT REPLACEMENT SHEET

PROFESSIONAL CERTIFICATION
THIS DRAWING WAS ORIGINALLY APPROVED FOR CONSTRUCTION AND SEALED BY ADAM S. PARMENTER, A REGISTERED PROFESSIONAL ENGINEER IN THE STATE OF MARYLAND, NO. 39376.

NOTICE TO CONTRACTORS
- PROJECT ELEVATIONS ARE BASED ON NAVD88 AND HOWARD COUNTY'S BENCHMARK SYSTEM
- PREVIOUS PROJECTS USED OTHER DATUMS
- APPLY THE FOLLOWING CONVERSIONS WHEN USING PREVIOUS CONTRACT DRAWINGS:
  - ADDITION NO. 6: SUBTRACT 0.80 FT
  - PRIOR ADDITIONS: SUBTRACT 1.04 FT

DEPARTMENT OF PUBLIC WORKS
HOWARD COUNTY, MARYLAND

CHIEF, BUREAU OF UTILITIES DATE

DES: ADP
DRN: REE
CHK: BMB
DATE: 01/2018

DATE	REV	DESCRIPTION
03/2021		RECORD DRAWINGS

PROCESS

MISCELLANEOUS DETAILS 5

LITTLE PATUXENT WATER RECLAMATION PLANT
8TH ADDITION
BIOSOLIDS PROCESSING FACILITIES - PHASE 2

CAPITAL PROJECT S-6295
CONTRACT NO. 24-4936

ELECTION DISTRICT NO. 6
HOWARD COUNTY, MARYLAND

SCALE AS SHOWN

SHEET 150 OF 311

M-904

C:\pwworking\pitt\d1900826\M-904.dwg 01/07/22 14:30

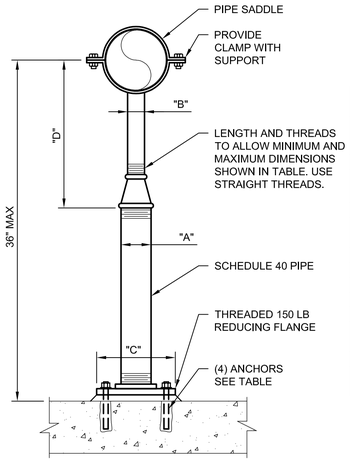

FLOOR PIPE SUPPORT SCHEDULE
DIMENSIONS IN INCHES

PIPE SIZE	"A"	"B"	"C"	"D"		ANCHORS	
				MINIMUM	MAXIMUM	DIA	EMBD
≤ 2 1/2	2 1/2	1 1/2	9	8	13	5/8	5
3	2 1/2	1 1/2	9	8 1/2	13 1/2	5/8	5
3 1/2	2 1/2	1 1/2	9	8 1/2	13 1/2	5/8	5
4	3	2 1/2	9	9 1/2	14	5/8	5
6	3	2 1/2	9	10 1/2	15 1/2	5/8	5
8	3	2 1/2	9	11 1/2	16 1/2	5/8	5
10	3	2 1/2	9	13 1/2	18 1/2	5/8	5
12	3	2 1/2	9	15	19 1/2	5/8	5
14	4	3	11	16 1/2	20 1/2	3/4	6 5/8
16	4	3	11	17 1/2	22 1/2	3/4	6 5/8
18	6	3 1/2	13 1/2	19 1/2	24	3/4	6 5/8
20	6	3 1/2	13 1/2	21	25 1/2	3/4	6 5/8
24	6	4	13 1/2	23 1/2	28 1/2	3/4	6 5/8
30	6	4	13 1/2	27	31 1/2	3/4	6 5/8
32	6	4	13 1/2	28 1/2	32 1/2	3/4	6 5/8
36	6	4	13 1/2	30 1/2	34 1/2	3/4	6 5/8

1 - ADJUSTABLE PIPE SUPPORT

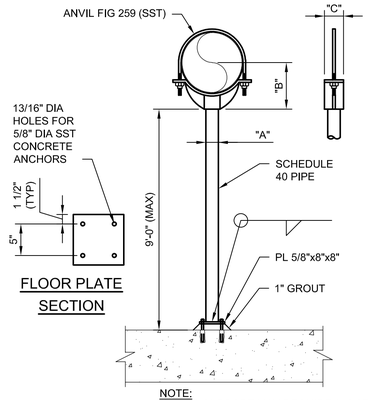

FLOOR PIPE SUPPORT SCHEDULE
DIMENSIONS IN INCHES

PIPE SIZE	"A"	"B"	"C"
4	3	4 3/16	3 5/8
5	3	4 13/16	3 5/8
6	3	5 7/16	3 5/8
8	3	6 15/16	3 5/8
10	3	8 7/16	3 5/8
12	3	9 15/16	3 5/8
14	4	10 1/2	6
16	4	11 1/2	6
18	6	13 1/2	6
20	6	14 1/2	6
22	6	15 1/2	6
24	6	17 1/2	6
26	6	18 1/2	6
30	6	20 5/8	6
32	6	21 5/8	6
36	6	23 5/8	6

NOTE:
1. THIS SUPPORT MAY REQUIRE 316 STAINLESS STEEL CONSTRUCTION. SEE PLANS FOR LOCATIONS.

2 - SADDLE PIPE SUPPORT

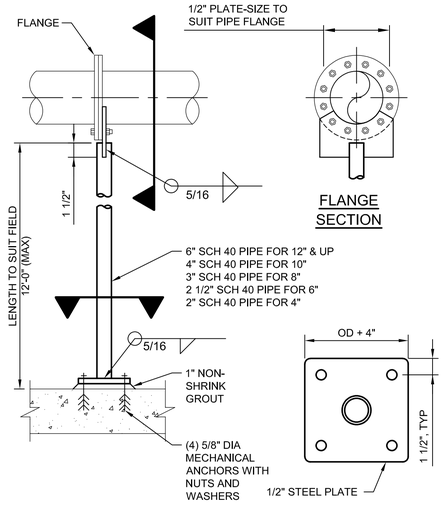

GENERAL NOTES:

1. NONE OF PIPE SUPPORTS SHOWN HERE ARE AXIAL THRUST RESTRAINTS, UNO.
2. ALL ANCHORS SHALL BE SST.

3 - FLANGED PIPE SUPPORT

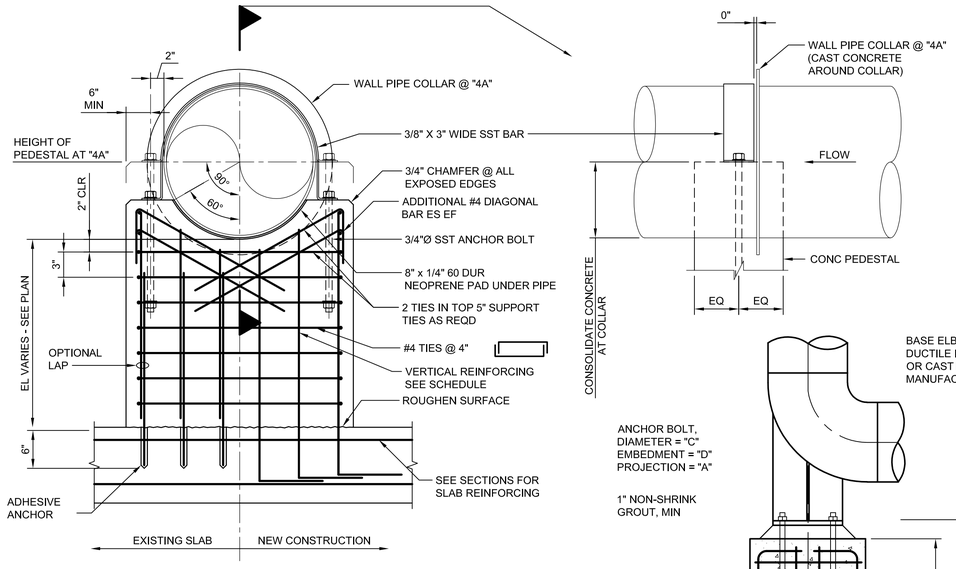

PIPE SIZE DIAMETER	PEDESTAL THICKNESS	VERTICAL REINFORCING @ EF	
		QUANTITY	BAR SIZE
6-12"	12"	3	#7
14-24"	16"	4	#7
30-48"	24"	6	#7

NOTES:

1. CONTRACTOR SHALL TEMPORARILY SUPPORT PIPE AT SPECIFIED ELEVATION AND POUR SUPPORT AROUND PIPE. DO NOT POUR PIPE SUPPORT WITHOUT PIPE IN PLACE.

4A - 4 - CONCRETE PEDESTAL PIPE SUPPORT DETAIL

PIPE SIZE	A	C	D	G	J	VERTICAL REINF	
						QTY	SIZE
8"	5X BOLT DIA (MIN)	1/8" LESS THAN BOLTS HOLE	8"	5"	12"	4	#6
10"			8"	5"	12"	4	#6
12"			10"	5"	14"	4	#6
14"			10"	5"	16"	8	#6
16"			10"	7 1/2"	16"	8	#6
18"			12"	7 1/2"	18"	8	#6
20"			12"	7 1/2"	20"	8	#7
24"			12"	7 1/2"	22"	8	#7
30"			14"	10"	26"	12	#7
36"			14"	10"	30"	12	#8
42"			16"	10"	34"	16	#8
48"			16"	10"	34"	16	#8
54"			18"	10"	34"	16	#8
60"			18"	10"	40"	20	#8

NOTE:

1. FOR TIE CONFIGURATION SEE TIE CONFIGURATION DETAIL BELOW.

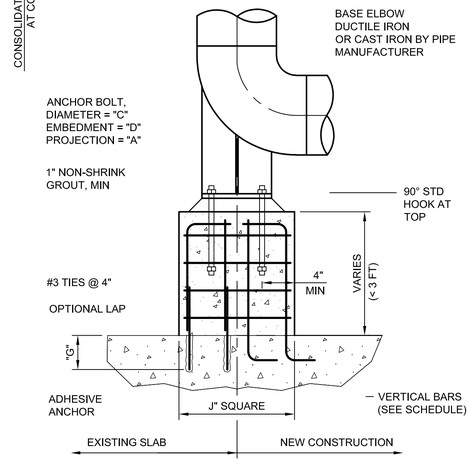

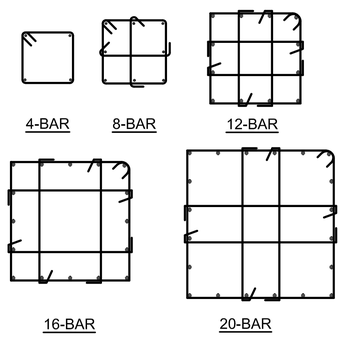

TIE CONFIGURATIONS

5 - BASE ELBOW - PIPE SUPPORT

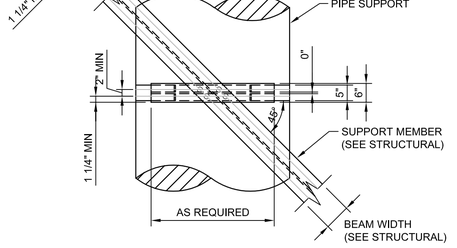

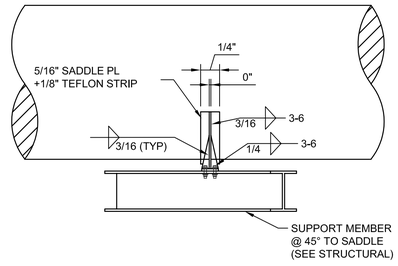

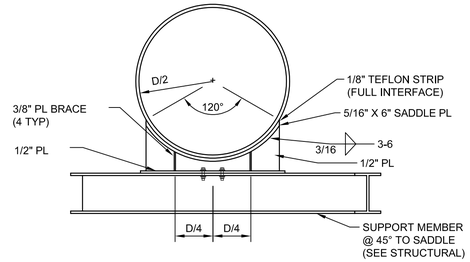

6 - PIPE SUPPORT (DIAGONAL GUIDE)

THE DRAWINGS IN THIS SET ARE RECORD DRAWINGS. THEY ARE CONSTRUCTION CONTRACT DRAWINGS WHICH HAVE BEEN REVISED BASED ON AVAILABLE FIELD INFORMATION RECORDED BY OTHERS DURING CONSTRUCTION OF THIS CONTRACT. THERE HAS BEEN NO VERIFICATION OF DIMENSIONS SHOWN ON THE CONSTRUCTION DRAWINGS OR THE ACCURACY/COMPLETENESS OF THE FIELD INFORMATION RECEIVED.

SIGNATURE — DATE 2/7/2020

AS-BUILT REPLACEMENT SHEET

PROFESSIONAL CERTIFICATION
THIS DRAWING WAS ORIGINALLY APPROVED FOR CONSTRUCTION AND SEALED BY ADAM S. PARMENTER, A REGISTERED PROFESSIONAL ENGINEER IN THE STATE OF MARYLAND, NO. 39376.

NOTICE TO CONTRACTORS
- PROJECT ELEVATIONS ARE BASED ON NAVD88 AND HOWARD COUNTY'S BENCHMARK SYSTEM
- PREVIOUS PROJECTS USED OTHER DATUMS
- APPLY THE FOLLOWING CONVERSIONS WHEN USING PREVIOUS CONTRACT DRAWINGS:
  - ADDITION NO. 6: SUBTRACT 0.80 FT
  - PRIOR ADDITIONS: SUBTRACT 1.04 FT

DEPARTMENT OF PUBLIC WORKS
HOWARD COUNTY, MARYLAND

CHIEF, BUREAU OF UTILITIES — DATE

DES: ADP
DRN: REE
CHK: BMB
DATE: 01/2018

DATE	REV	DESCRIPTION
03/2021		RECORD DRAWINGS

PROCESS

PIPE SUPPORT DETAILS 1

LITTLE PATUXENT WATER RECLAMATION PLANT
8TH ADDITION
BIOSOLIDS PROCESSING FACILITIES - PHASE 2

CAPITAL PROJECT S-6295
CONTRACT NO. 24-4936

ELECTION DISTRICT NO. 6
HOWARD COUNTY, MARYLAND

SCALE AS SHOWN

SHEET 151 OF 311

M-905

C:\pwworking\pit\d1900826\M-905.dwg 01/07/22 14:31

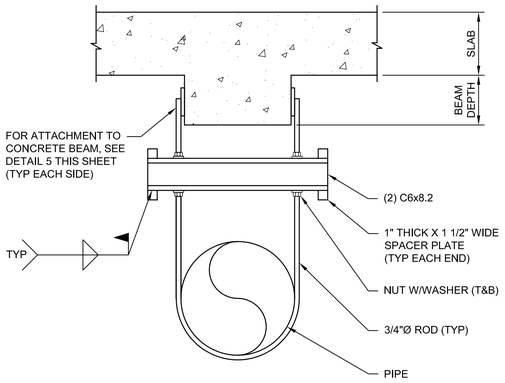

1 - PIPE SUPPORT DETAIL

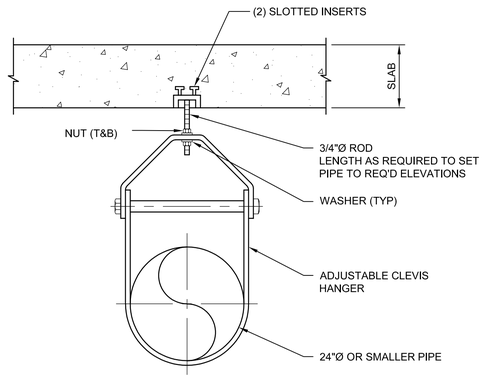

2 - PIPE SUPPORT DETAIL

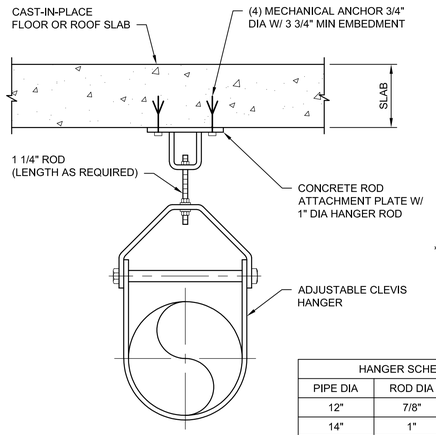

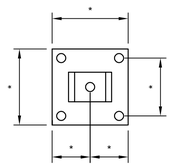

* DIMENSIONS VARY DEPENDING ON ROD DIAMETER UTILIZED. USE MANUFACTURER'S RECOMMENDED STANDARD UNIT.

CONCRETE ANCHOR PLATE PLAN

HANGER SCHEDULE		
PIPE DIA	ROD DIA	ANCHOR DIA
12"	7/8"	5/8"
14"	1"	3/4"
16"	1"	3/4"
18"	1"	3/4"
20"	1 1/4"	3/4"
24"	1 1/4"	7/8"

3 - PIPE SUPPORT DETAIL

GENERAL NOTES:

1. NONE OF PIPE SUPPORTS SHOWN HERE ARE AXIAL THRUST RESTRAINTS, UNO.
2. ALL ANCHORS SHALL BE SST.

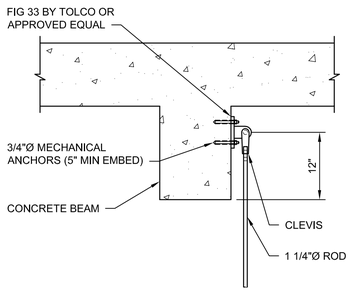

4 - PIPE HANGER DETAIL

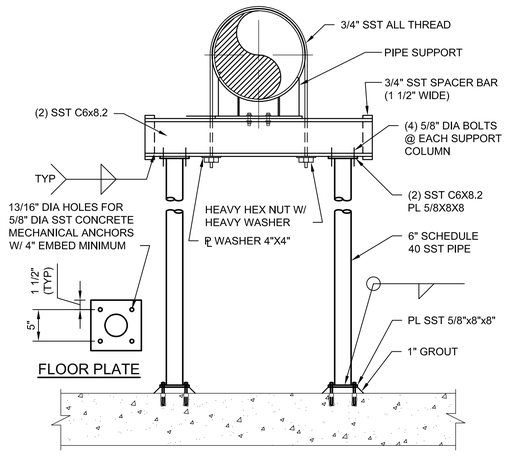

NOTE:

1. ALL MATERIAL IS 316 STAINLESS STEEL.

5 - PIPE SUPPORT DETAIL

THE DRAWINGS IN THIS SET ARE RECORD DRAWINGS. THEY ARE CONSTRUCTION CONTRACT DRAWINGS WHICH HAVE BEEN REVISED BASED ON AVAILABLE FIELD INFORMATION RECORDED BY OTHERS DURING CONSTRUCTION OF THIS CONTRACT. THERE HAS BEEN NO VERIFICATION OF DIMENSIONS SHOWN ON THE CONSTRUCTION DRAWINGS OR THE ACCURACY/COMPLETENESS OF THE FIELD INFORMATION RECEIVED.

SIGNATURE — DATE 2/7/2023

AS-BUILT REPLACEMENT SHEET

PROFESSIONAL CERTIFICATION
THIS DRAWING WAS ORIGINALLY APPROVED FOR CONSTRUCTION AND SEALED BY ADAM S. PARMENTER, A REGISTERED PROFESSIONAL ENGINEER IN THE STATE OF MARYLAND, NO. 39376.

NOTICE TO CONTRACTORS
- PROJECT ELEVATIONS ARE BASED ON NAVD88 AND HOWARD COUNTY'S BENCHMARK SYSTEM
- PREVIOUS PROJECTS USED OTHER DATUMS
- APPLY THE FOLLOWING CONVERSIONS WHEN USING PREVIOUS CONTRACT DRAWINGS:
  - ADDITION NO. 6: SUBTRACT 0.80 FT
  - PRIOR ADDITIONS: SUBTRACT 1.04 FT

DEPARTMENT OF PUBLIC WORKS
HOWARD COUNTY, MARYLAND

CHIEF, BUREAU OF UTILITIES — DATE

DES: ADP
DRN: REE
CHK: BMB
DATE: 01/2018

DATE	REV	DESCRIPTION
03/2021		RECORD DRAWINGS

PROCESS

PIPE SUPPORT DETAILS 2

LITTLE PATUXENT WATER RECLAMATION PLANT
8TH ADDITION
BIOSOLIDS PROCESSING FACILITIES - PHASE 2

CAPITAL PROJECT S-6295
CONTRACT NO. 24-4936

ELECTION DISTRICT NO. 6
HOWARD COUNTY, MARYLAND

SCALE AS SHOWN

SHEET 152 OF 311

M-906

C:\pwworking\pitt\d1900826\M-906.dwg 01/07/22 14:31

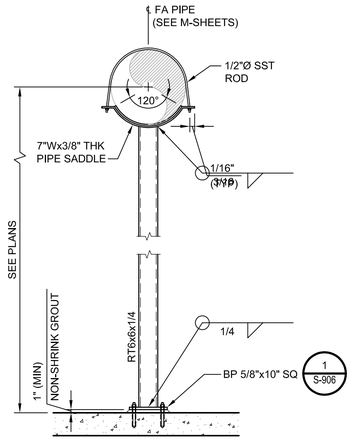

1 DETAIL
NTS

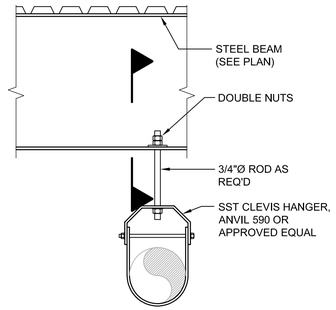

NOTE:
ALL MATERIAL TO BE H.D. GALVANIZED (UNO).

2 DETAIL
NTS

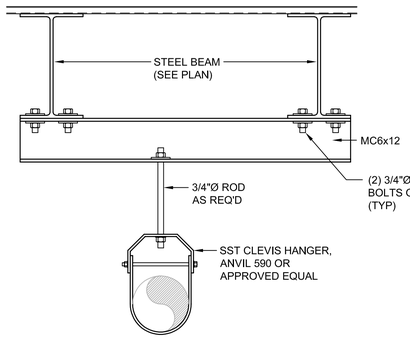

NOTE:
ALL MATERIAL TO BE H.D. GALVANIZED (UNO).

3 DETAIL
NTS

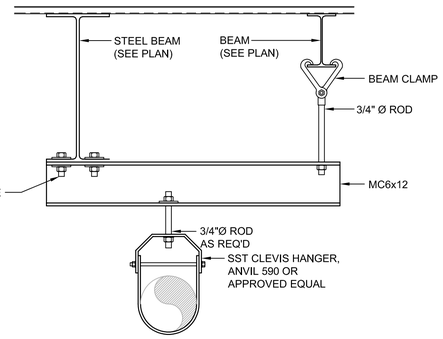

NOTE:
ALL MATERIAL TO BE H.D. GALVANIZED (UNO).

4 DETAIL
NTS

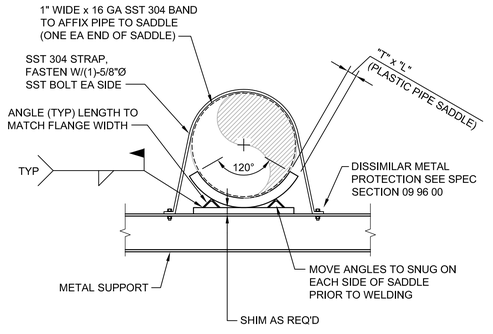

NOTE:
ANGLE AND SHIM MATERIAL TO MATCH METAL SUPPORT MATERIAL, UNO.

PIPE DIA	"T"	ANGLE SIZE	STRAP SIZE	"L" SADDLE LENGTH (CTR'D ON SUPPORT)
< 12"	3/4"	L2x2x1/4	1/4" x 3", QTY 1	PIPE DIA
12" ≤ Ø < 24"	1"	L3x3x1/4	3/8" x 4", QTY 1	PIPE DIA
24" ≤ Ø < 36"	1 1/4"	L4x4x1/4	3/8" x 3", QTY 2	3/4 PIPE DIA

5 FA SUPPORT
NTS

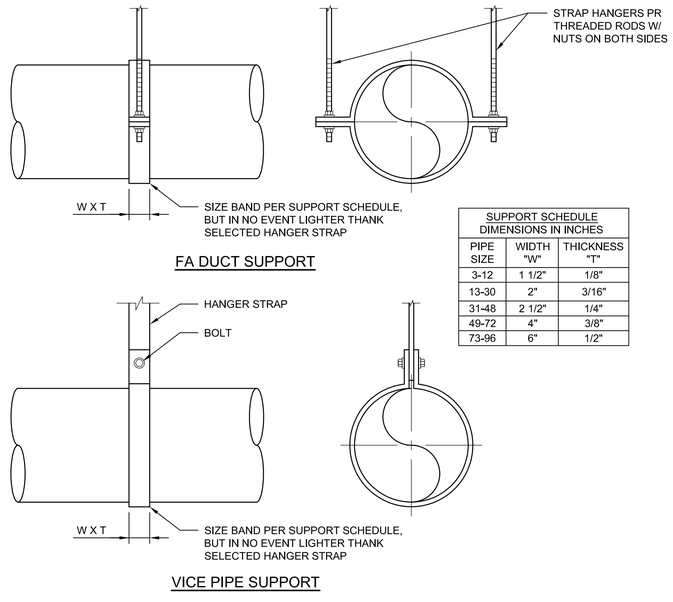

FA DUCT SUPPORT

SUPPORT SCHEDULE DIMENSIONS IN INCHES		
PIPE SIZE	WIDTH "W"	THICKNESS "T"
3-12	1 1/2"	1/8"
13-30	2"	3/16"
31-48	2 1/2"	1/4"
49-72	4"	3/8"
73-96	6"	1/2"

VICE PIPE SUPPORT

6 FA DUCT SUPPORT/
VICE PIPE SUPPORT DETAIL

THE DRAWINGS IN THIS SET ARE RECORD DRAWINGS. THEY ARE CONSTRUCTION CONTRACT DRAWINGS WHICH HAVE BEEN REVISED BASED ON AVAILABLE FIELD INFORMATION RECORDED BY OTHERS DURING CONSTRUCTION OF THIS CONTRACT. THERE HAS BEEN NO VERIFICATION OF DIMENSIONS SHOWN ON THE CONSTRUCTION DRAWINGS OR THE ACCURACY/COMPLETENESS OF THE FIELD INFORMATION RECEIVED.

SIGNATURE — DATE 2/1/2021

C:\pwworking\pitt\d1900826\M-907.dwg 01/07/22 14:32

AS-BUILT REPLACEMENT SHEET

PROFESSIONAL CERTIFICATION
THIS DRAWING WAS ORIGINALLY APPROVED FOR CONSTRUCTION AND SEALED BY ADAM S. PARMENTER, A REGISTERED PROFESSIONAL ENGINEER IN THE STATE OF MARYLAND, NO. 39376.

NOTICE TO CONTRACTORS
- PROJECT ELEVATIONS ARE BASED ON NAVD88 AND HOWARD COUNTY'S BENCHMARK SYSTEM
- PREVIOUS PROJECTS USED OTHER DATUMS
- APPLY THE FOLLOWING CONVERSIONS WHEN USING PREVIOUS CONTRACT DRAWINGS:
  - ADDITION NO. 6: SUBTRACT 0.80 FT
  - PRIOR ADDITIONS: SUBTRACT 1.04 FT

DEPARTMENT OF PUBLIC WORKS
HOWARD COUNTY, MARYLAND

CHIEF, BUREAU OF UTILITIES — DATE

DES: ADP
DRN: REE
CHK: BMB
DATE: 01/2018

DATE	REV	DESCRIPTION
03/2021		RECORD DRAWINGS

PROCESS

PIPE SUPPORT DETAILS 3

LITTLE PATUXENT WATER RECLAMATION PLANT
8TH ADDITION
BIOSOLIDS PROCESSING FACILITIES - PHASE 2

CAPITAL PROJECT S-6295
CONTRACT NO. 24-4936

ELECTION DISTRICT NO. 6
HOWARD COUNTY, MARYLAND

SCALE AS SHOWN

SHEET 153 OF 311

M-907

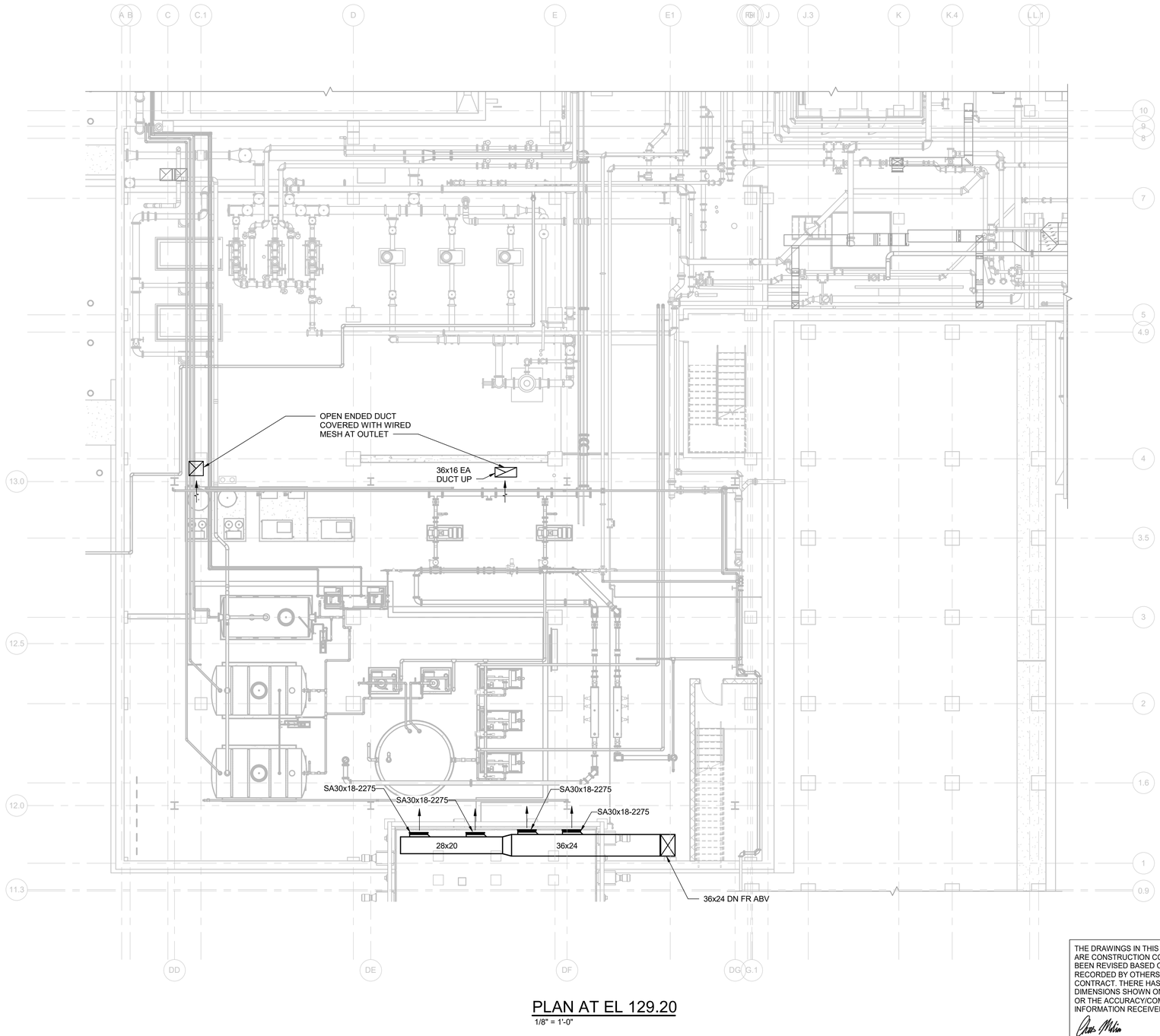

PLAN AT EL 129.20

1/8" = 1'-0"

THE DRAWINGS IN THIS SET ARE RECORD DRAWINGS. THEY ARE CONSTRUCTION CONTRACT DRAWINGS WHICH HAVE BEEN REVISED BASED ON AVAILABLE FIELD INFORMATION RECORDED BY OTHERS DURING CONSTRUCTION OF THIS CONTRACT. THERE HAS BEEN NO VERIFICATION OF DIMENSIONS SHOWN ON THE CONSTRUCTION DRAWINGS OR THE ACCURACY/COMPLETENESS OF THE FIELD INFORMATION RECEIVED.

SIGNATURE

2/7/2023
DATE

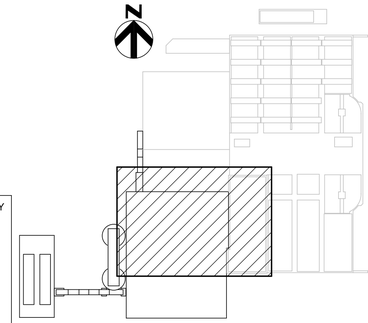

KEY PLAN

AS-BUILT REPLACEMENT SHEET

PROFESSIONAL CERTIFICATION
THIS DRAWING WAS ORIGINALLY APPROVED FOR CONSTRUCTION AND SEALED BY CHRISTOPHER S. WORK, A REGISTERED PROFESSIONAL ENGINEER IN THE STATE OF MARYLAND, NO. 50093

NOTICE TO CONTRACTORS
- PROJECT ELEVATIONS ARE BASED ON NAVD88 AND HOWARD COUNTY'S BENCHMARK SYSTEM
- PREVIOUS PROJECTS USED OTHER DATUMS
- APPLY THE FOLLOWING CONVERSIONS WHEN USING PREVIOUS CONTRACT DRAWINGS:
  - ADDITION NO. 6: SUBTRACT 0.80 FT
  - PRIOR ADDITIONS: SUBTRACT 1.04 FT

DEPARTMENT OF PUBLIC WORKS
HOWARD COUNTY, MARYLAND

CHIEF, BUREAU OF UTILITIES DATE

DES: CSW
DRN: JCS
CHK: MDD
DATE: 10/2017

DATE	REV	DESCRIPTION
03/2021		RECORD DRAWINGS

HVAC

DRYER BUILDING
PLAN AT EL 129.20

LITTLE PATUXENT WATER RECLAMATION PLANT
8TH ADDITION
BIOSOLIDS PROCESSING FACILITIES - PHASE 2

CAPITAL PROJECT S-6295
CONTRACT NO. 24-4936

ELECTION DISTRICT NO. 6
HOWARD COUNTY, MARYLAND

SCALE
AS
SHOWN

SHEET
154 OF 311

H-501

BIM 360://10054364 – Little Patuxent WRP 8th Addition/264592_100_HP_V18.rvt
1/7/2022 3:01:42 PM

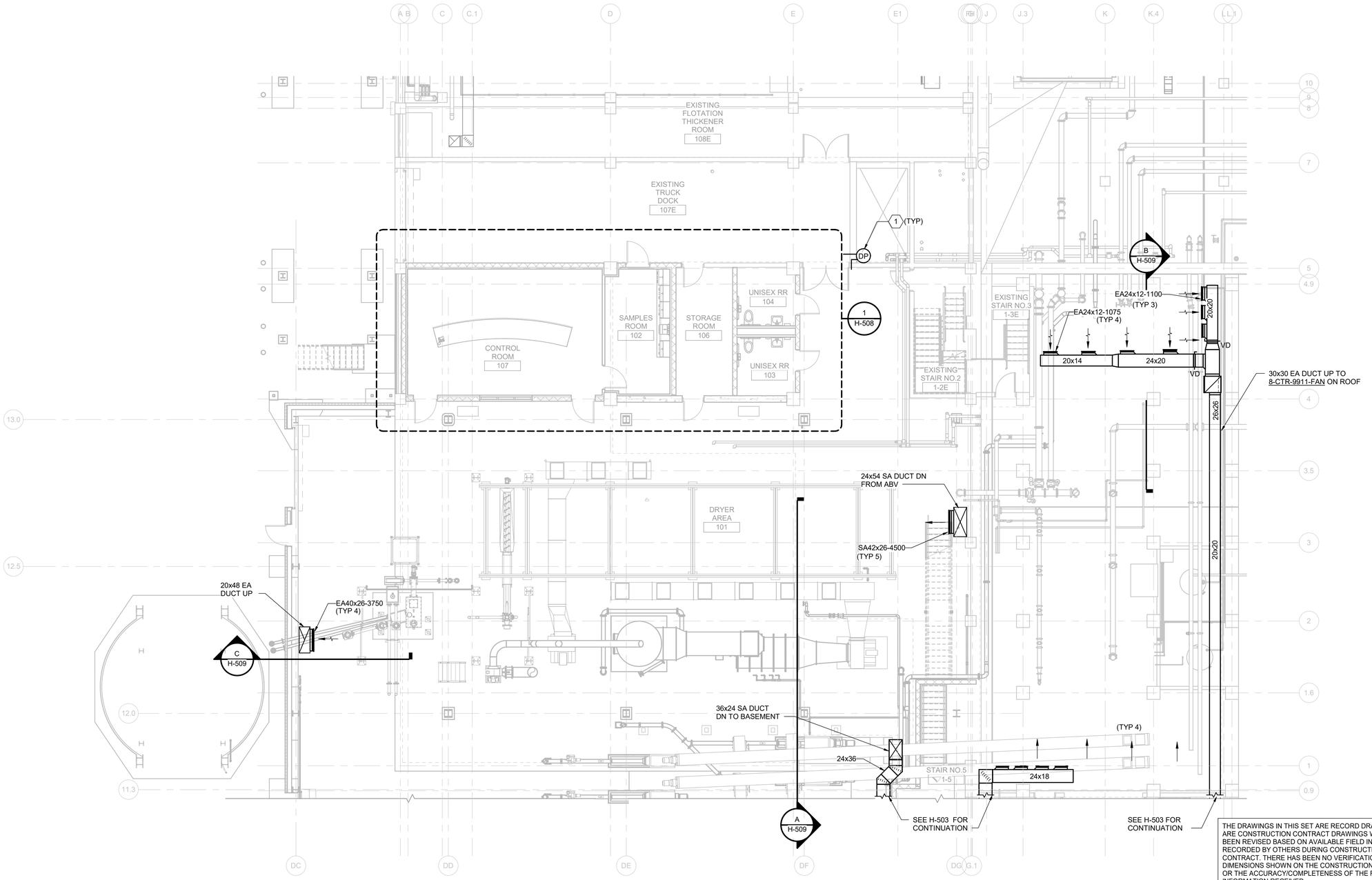

PLAN AT EL 141.20 - NORTH

1/8" = 1'-0"

KEY NOTES (X)

1 PROVIDE DIFFERENTIAL PRESSURE TO MEASURE POSITIVE PRESSURE IN THE INDICATED ROOM WITH RESPECT TO THE DRYER DRYER ROOM. PRESSURE TO BE TIED INTO MONITORED BY THE PLC. SEE ELECTRICAL DRAWINGS FOR 120 VOLT POWER CIRCUIT, CONTROL WIRING AND ASSOCIATED CONDUITS.

THE DRAWINGS IN THIS SET ARE RECORD DRAWINGS. THEY ARE CONSTRUCTION CONTRACT DRAWINGS WHICH HAVE BEEN REVISED BASED ON AVAILABLE FIELD INFORMATION RECORDED BY OTHERS DURING CONSTRUCTION OF THIS CONTRACT. THERE HAS BEEN NO VERIFICATION OF DIMENSIONS SHOWN ON THE CONSTRUCTION DRAWINGS OR THE ACCURACY/COMPLETENESS OF THE FIELD INFORMATION RECEIVED.

SIGNATURE 2/7/2022 DATE

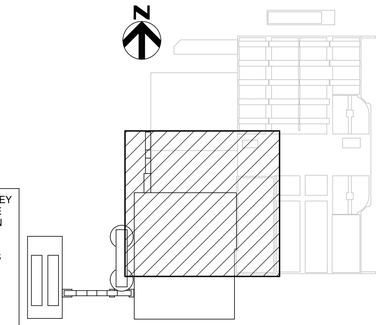

KEY PLAN

AS-BUILT REPLACEMENT SHEET

PROFESSIONAL CERTIFICATION
THIS DRAWING WAS ORIGINALLY APPROVED FOR CONSTRUCTION AND SEALED BY CHRISTOPHER S. WORK, A REGISTERED PROFESSIONAL ENGINEER IN THE STATE OF MARYLAND, NO. 50093

NOTICE TO CONTRACTORS
- PROJECT ELEVATIONS ARE BASED ON NAVD88 AND HOWARD COUNTY'S BENCHMARK SYSTEM
- PREVIOUS PROJECTS USED OTHER DATUMS
- APPLY THE FOLLOWING CONVERSIONS WHEN USING PREVIOUS CONTRACT DRAWINGS:
  - ADDITION NO. 6: SUBTRACT 0.80 FT
  - PRIOR ADDITIONS: SUBTRACT 1.04 FT

DEPARTMENT OF PUBLIC WORKS
HOWARD COUNTY, MARYLAND

CHIEF, BUREAU OF UTILITIES DATE

DES: CSW
DRN: JCS
CHK: MDD
DATE: 10/2017

DATE	REV	DESCRIPTION
03/2021		RECORD DRAWINGS

HVAC

DRYER BUILDING
PLAN AT EL 141.20 - NORTH

LITTLE PATUXENT WATER RECLAMATION PLANT
8TH ADDITION
BIOSOLIDS PROCESSING FACILITIES - PHASE 2

CAPITAL PROJECT S-6295
CONTRACT NO. 24-4936

ELECTION DISTRICT NO. 6
HOWARD COUNTY, MARYLAND

SCALE AS SHOWN

SHEET 155 OF 311

H-502

BIM 360://10054364 – Little Patuxent WRP 8th Addition/264592_100_HP_V18.rvt
1/7/2022 3:01:53 PM

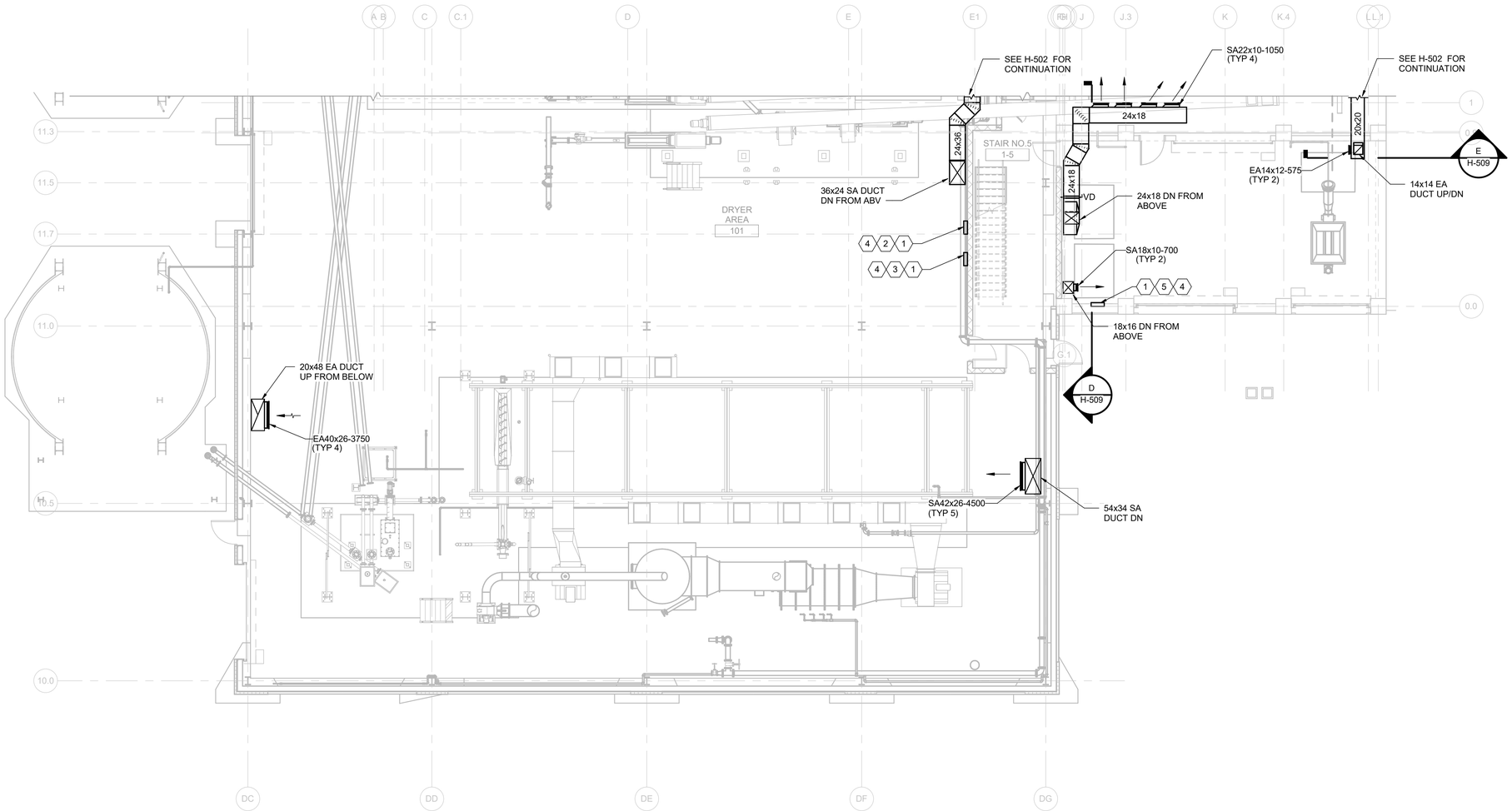

PLAN AT EL 141.20 - SOUTH

1/8" = 1'-0"

KEY NOTES (X)

1 TEMPERATURE CONTROL PANEL SHALL INCLUDE THE FOLLOWING FOR EXHAUST FAN AND MAKEUP AIR UNITS: VENTILATION FAIL, OFF, RUN, POWER AND SMOKE DETECTION INDICATING LIGHTS. HAND-OFF-AUTO SWITCHES FOR MAKEUP AIR AND EXHAUST FANS.

2 TEMPERATURE CONTROL PANEL SERVING 50-MAU01 AND ASSOCIATED EXHAUST FAN INTERLOCKS.

3 TEMPERATURE CONTROL PANEL SERVING 50-MAU03 AND ASSOCIATED EXHAUST FAN INTERLOCKS.

4 SEE ELECTRICAL DRAWINGS FOR 120/1/60 POWER SERVING TEMPERATURE CONTROL PANELS.

5 TEMPERATURE CONTROL PANEL SERVING 50-MAU02 AND ASSOCIATED EXHAUST FAN INTERLOCKS.

THE DRAWINGS IN THIS SET ARE RECORD DRAWINGS. THEY ARE CONSTRUCTION CONTRACT DRAWINGS WHICH HAVE BEEN REVISED BASED ON AVAILABLE FIELD INFORMATION RECORDED BY OTHERS DURING CONSTRUCTION OF THIS CONTRACT. THERE HAS BEEN NO VERIFICATION OF DIMENSIONS SHOWN ON THE CONSTRUCTION DRAWINGS OR THE ACCURACY/COMPLETENESS OF THE FIELD INFORMATION RECEIVED.

SIGNATURE — DATE 2/7/2023

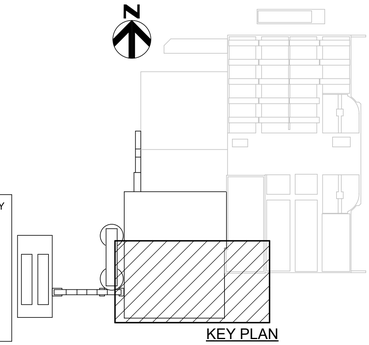

KEY PLAN

AS-BUILT REPLACEMENT SHEET

PROFESSIONAL CERTIFICATION
THIS DRAWING WAS ORIGINALLY APPROVED FOR CONSTRUCTION AND SEALED BY CHRISTOPHER S. WORK, A REGISTERED PROFESSIONAL ENGINEER IN THE STATE OF MARYLAND, NO. 50093

NOTICE TO CONTRACTORS
- PROJECT ELEVATIONS ARE BASED ON NAVD88 AND HOWARD COUNTY'S BENCHMARK SYSTEM
- PREVIOUS PROJECTS USED OTHER DATUMS
- APPLY THE FOLLOWING CONVERSIONS WHEN USING PREVIOUS CONTRACT DRAWINGS:
  - ADDITION NO. 6: SUBTRACT 0.80 FT
  - PRIOR ADDITIONS: SUBTRACT 1.04 FT

DEPARTMENT OF PUBLIC WORKS
HOWARD COUNTY, MARYLAND

CHIEF, BUREAU OF UTILITIES — DATE

DES: CSW
DRN: JCS
CHK: MDD
DATE: 10/2017

DATE	REV	DESCRIPTION
03/2021		RECORD DRAWINGS

HVAC

DRYER BUILDING
PLAN AT EL 141.20 - SOUTH

LITTLE PATUXENT WATER RECLAMATION PLANT
8TH ADDITION
BIOSOLIDS PROCESSING FACILITIES - PHASE 2

CAPITAL PROJECT S-6295
CONTRACT NO. 24-4936

ELECTION DISTRICT NO. 6
HOWARD COUNTY, MARYLAND

SCALE AS SHOWN

SHEET 156 OF 311

H-503

BIM 360://10054364 – Little Patuxent WRP 8th Addition/264592_100_HP_V18.rvt
1/7/2022 3:02:06 PM

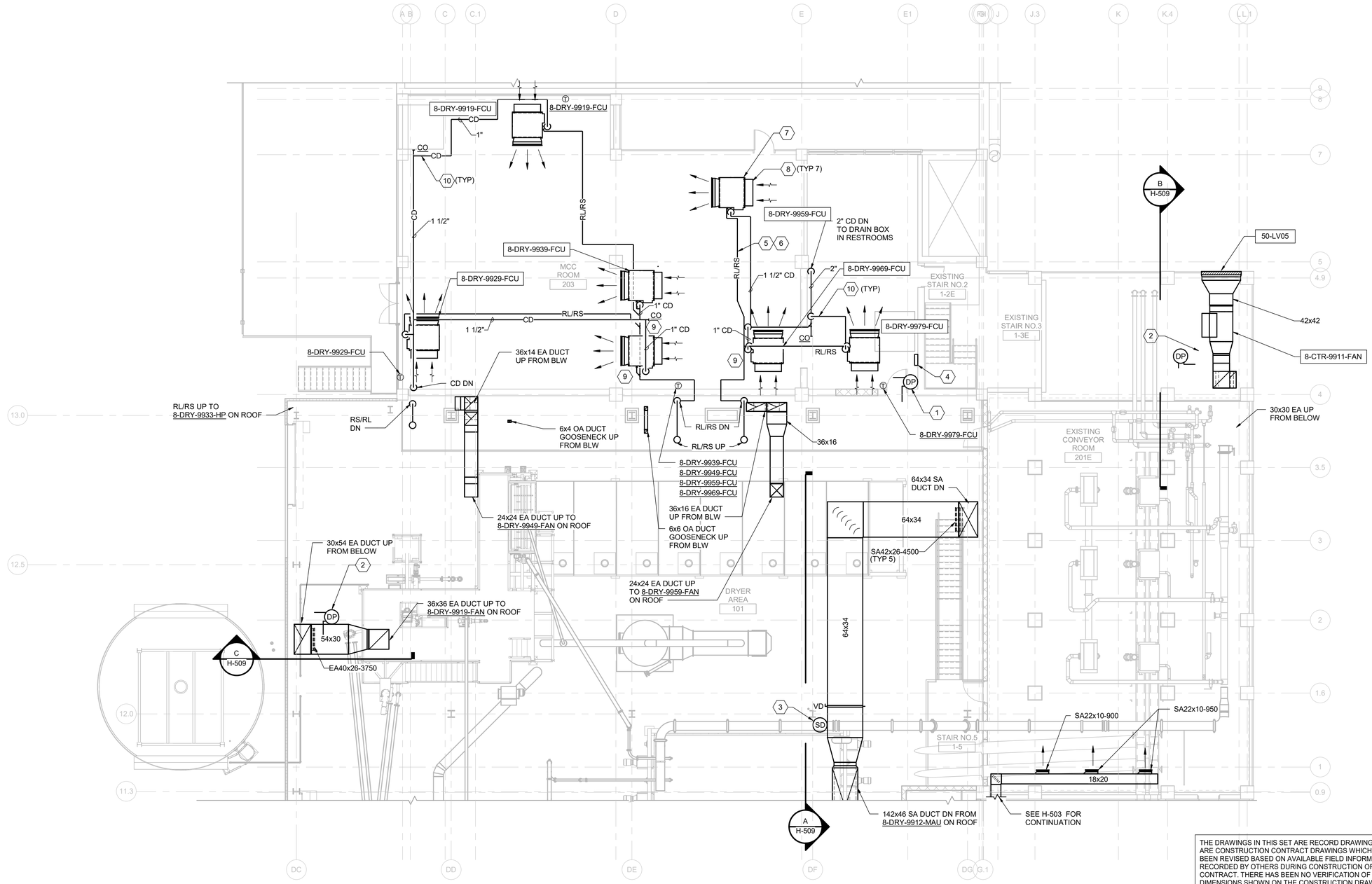

PLAN AT EL 155.20 - NORTH

1/8" = 1'-0"

KEY NOTES (X)

1. PROVIDE DIFFERENTIAL PRESSURE TO MEASURE POSITIVE PRESSURE IN THE INDICATED ROOM WITH RESPECT TO THE DRYER DRYER ROOM. PRESSURE TO BE TIED INTO MONITORED BY THE PLC. SEE ELECTRICAL DRAWINGS FOR 120 VOLT POWER CIRCUIT, CONTROL WIRING AND ASSOCIATED CONDUITS.
2. PROVIDE DIFFERENTIAL PRESSURE SWITCH FOR AIRFLOW MONITORING BY THE PLC SYSTEM. SEE ELECTRICAL DRAWINGS FOR 120 VOLT POWER CIRCUIT, CONTROL WIRING, AND ASSOCIATED CONDUITS.
3. PROVIDE DUCT SMOKE DETECTOR. DETECTOR SHALL BE TIED INTO THE FIRE ALARM CONTROL UNIT (FACU) AND SHALL SHUT DOWN VENTILATION SYSTEM UPON SMOKE DETECTION. SEE SPECIFICATION SECTION 28 31 00 FOR DETAILS ON FIRE ALARM SYSTEM REQUIREMENTS. SEE ELECTRICAL DRAWINGS FOR 120 VOLT POWER CIRCUIT.
4. PROVIDE HVAC DDC CONTROL WITH CONTROLLERS. TRANSFORMERS AND WIRING AS NECESSARY. SEE ELECTRICAL DRAWINGS FOR 120/1/60 POWER CONNECTION AND ALL CONDUITS WITH WIRE PULLS.
5. SIZE REFRIGERANT LINES PER MANUFACTURER'S RECOMMENDATIONS.
6. COORDINATE REFRIGERANT LINES WITH ALL ELECTRICAL EQUIPMENT, CABLE TRAYS AND CONDUITS. DO NOT INSTALL LINES ABOVE ANY ELECTRICAL EQUIPMENT OR CABLE TRAYS.
7. PROVIDE FAN COIL UNIT WITH SECONDARY DRAIN PAN. INSTALL FAN COIL UNITS 13'-3" ABOVE FINISHED FLOOR LEVEL TO BOTTOM OF DRAIN PAN.
8. PROVIDE FAN COIL WITH AIR FILTER AND CABINET KIT.
9. PROVIDE REFNET JOINT IN ACCORDANCE WITH MANUFACTURER'S RECOMMENDATIONS.
10. SIZE CONDENSATE DRAINS PER MANUFACTURER'S RECOMMENDATIONS. SLOPE 1/8" PER 1'-0".

THE DRAWINGS IN THIS SET ARE RECORD DRAWINGS. THEY ARE CONSTRUCTION CONTRACT DRAWINGS WHICH HAVE BEEN REVISED BASED ON AVAILABLE FIELD INFORMATION RECORDED BY OTHERS DURING CONSTRUCTION OF THIS CONTRACT. THERE HAS BEEN NO VERIFICATION OF DIMENSIONS SHOWN ON THE CONSTRUCTION DRAWINGS OR THE ACCURACY/COMPLETENESS OF THE FIELD INFORMATION RECEIVED.

SIGNATURE _____ DATE 2/7/2022

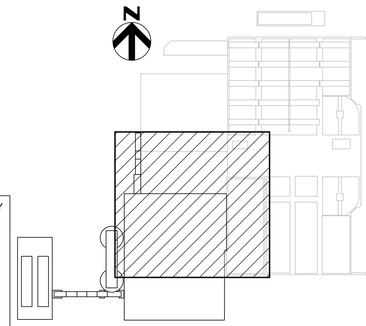

KEY PLAN

AS-BUILT REPLACEMENT SHEET

PROFESSIONAL CERTIFICATION
THIS DRAWING WAS ORIGINALLY APPROVED FOR CONSTRUCTION AND SEALED BY CHRISTOPHER S. WORK, A REGISTERED PROFESSIONAL ENGINEER IN THE STATE OF MARYLAND, NO. 50093

NOTICE TO CONTRACTORS
- PROJECT ELEVATIONS ARE BASED ON NAVD88 AND HOWARD COUNTY'S BENCHMARK SYSTEM
- PREVIOUS PROJECTS USED OTHER DATUMS
- APPLY THE FOLLOWING CONVERSIONS WHEN USING PREVIOUS CONTRACT DRAWINGS:
  - ADDITION NO. 6: SUBTRACT 0.80 FT
  - PRIOR ADDITIONS: SUBTRACT 1.04 FT

DEPARTMENT OF PUBLIC WORKS
HOWARD COUNTY, MARYLAND

CHIEF, BUREAU OF UTILITIES DATE

DES: CSW
DRN: JCS
CHK: MDD
DATE: 10/2017

DATE	REV	DESCRIPTION
03/2021		RECORD DRAWINGS

HVAC

DRYER BUILDING
PLAN AT EL 155.20 - NORTH

LITTLE PATUXENT WATER RECLAMATION PLANT
8TH ADDITION
BIOSOLIDS PROCESSING FACILITIES - PHASE 2

CAPITAL PROJECT S-6295
CONTRACT NO. 24-4936

ELECTION DISTRICT NO. 6
HOWARD COUNTY, MARYLAND

SCALE AS SHOWN

SHEET 157 OF 311

H-504

BIM 360://10054364 – Little Patuxent WRP 8th Addition/264592_100_HP_V18.rvt
1/7/2022 3:02:25 PM

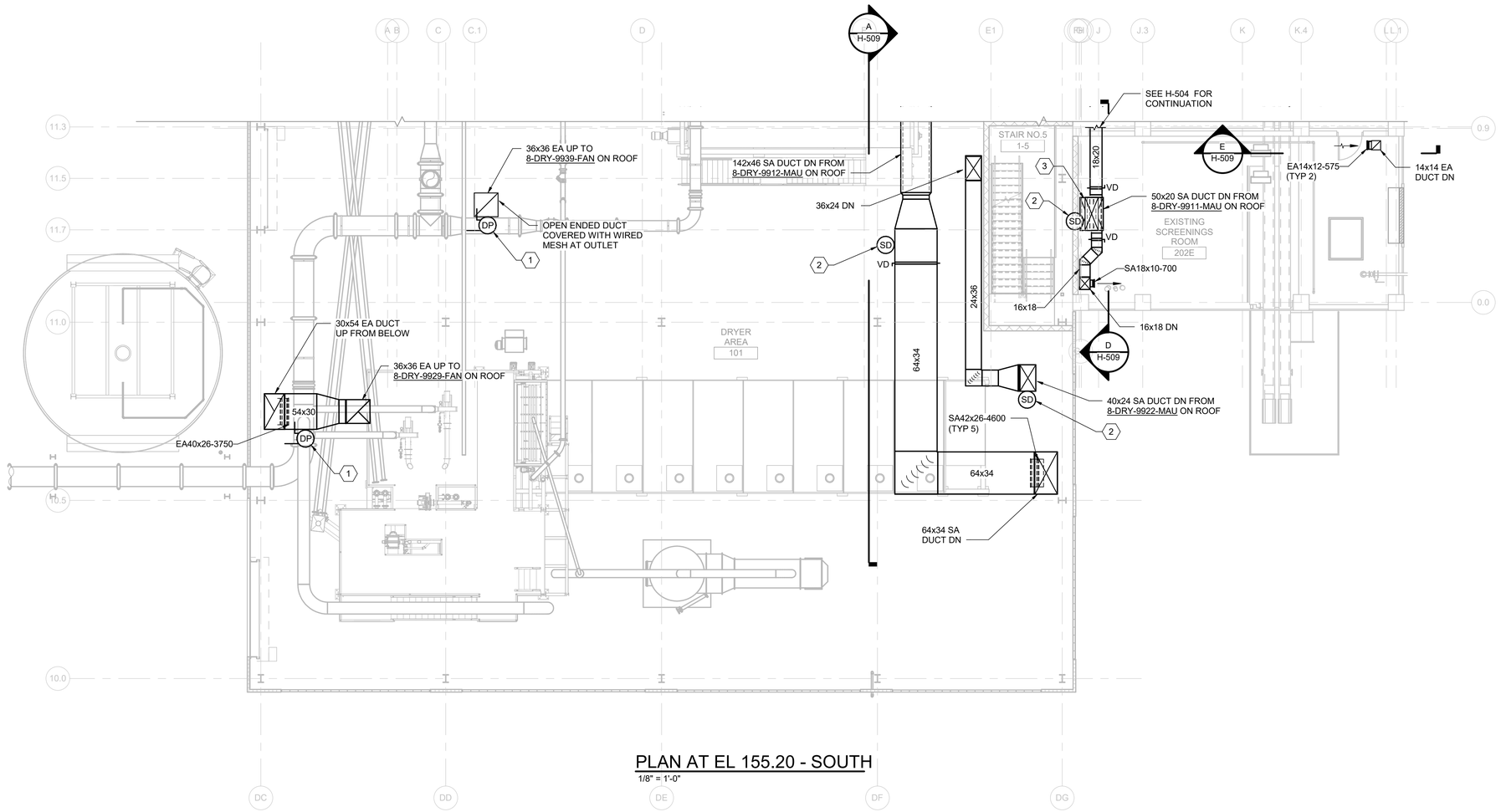

PLAN AT EL 155.20 - SOUTH

1/8" = 1'-0"

KEY NOTES (X)

1 PROVIDE DIFFERENTIAL PRESSURE SWITCH FOR AIRFLOW MONITORING BY THE PLC SYSTEM. SEE ELECTRICAL DRAWINGS FOR 120 VOLT POWER CIRCUIT, CONTROL WIRING, AND ASSOCIATED CONDUITS.

2 PROVIDE DUCT SMOKE DETECTOR. DETECTOR SHALL BE TIED INTO THE FIRE ALARM CONTROL UNIT (FACU) AND SHALL SHUT DOWN VENTILATION SYSTEM UPON SMOKE DETECTION. SEE SPECIFICATION SECTION 28 31 00 FOR DETAILS ON FIRE ALARM SYSTEM REQUIREMENTS. SEE ELECTRICAL DRAWINGS FOR 120 VOLT POWER CIRCUIT.

3 50x20 DOWN THROUGH EXISTING FLOOR PENETRATION.

THE DRAWINGS IN THIS SET ARE RECORD DRAWINGS. THEY ARE CONSTRUCTION CONTRACT DRAWINGS WHICH HAVE BEEN REVISED BASED ON AVAILABLE FIELD INFORMATION RECORDED BY OTHERS DURING CONSTRUCTION OF THIS CONTRACT. THERE HAS BEEN NO VERIFICATION OF DIMENSIONS SHOWN ON THE CONSTRUCTION DRAWINGS OR THE ACCURACY/COMPLETENESS OF THE FIELD INFORMATION RECEIVED.

SIGNATURE 2/7/2022 DATE

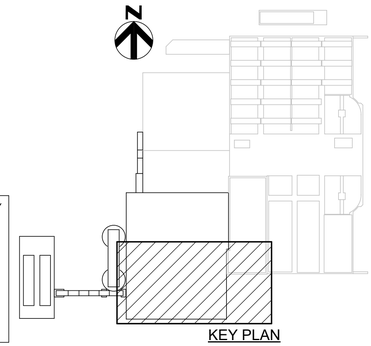

KEY PLAN

AS-BUILT REPLACEMENT SHEET

PROFESSIONAL CERTIFICATION
THIS DRAWING WAS ORIGINALLY APPROVED FOR CONSTRUCTION AND SEALED BY CHRISTOPHER S. WORK, A REGISTERED PROFESSIONAL ENGINEER IN THE STATE OF MARYLAND, NO. 50093

NOTICE TO CONTRACTORS
- PROJECT ELEVATIONS ARE BASED ON NAVD88 AND HOWARD COUNTY'S BENCHMARK SYSTEM
- PREVIOUS PROJECTS USED OTHER DATUMS
- APPLY THE FOLLOWING CONVERSIONS WHEN USING PREVIOUS CONTRACT DRAWINGS:
  - ADDITION NO. 6: SUBTRACT 0.80 FT
  - PRIOR ADDITIONS: SUBTRACT 1.04 FT

DEPARTMENT OF PUBLIC WORKS
HOWARD COUNTY, MARYLAND

CHIEF, BUREAU OF UTILITIES DATE

DES: CSW
DRN: JCS
CHK: MDD
DATE: 10/2017

DATE	REV	DESCRIPTION
03/2021		RECORD DRAWINGS

HVAC

DRYER BUILDING
PLAN AT EL 155.20 - SOUTH

LITTLE PATUXENT WATER RECLAMATION PLANT
8TH ADDITION
BIOSOLIDS PROCESSING FACILITIES - PHASE 2

CAPITAL PROJECT S-6295
CONTRACT NO. 24-4936

ELECTION DISTRICT NO. 6
HOWARD COUNTY, MARYLAND

SCALE AS SHOWN

SHEET 158 OF 311

H-505

BIM 360://10054364 – Little Patuxent WRP 8th Addition/264592_100_HP_V18.rvt
1/7/2022 3:02:45 PM

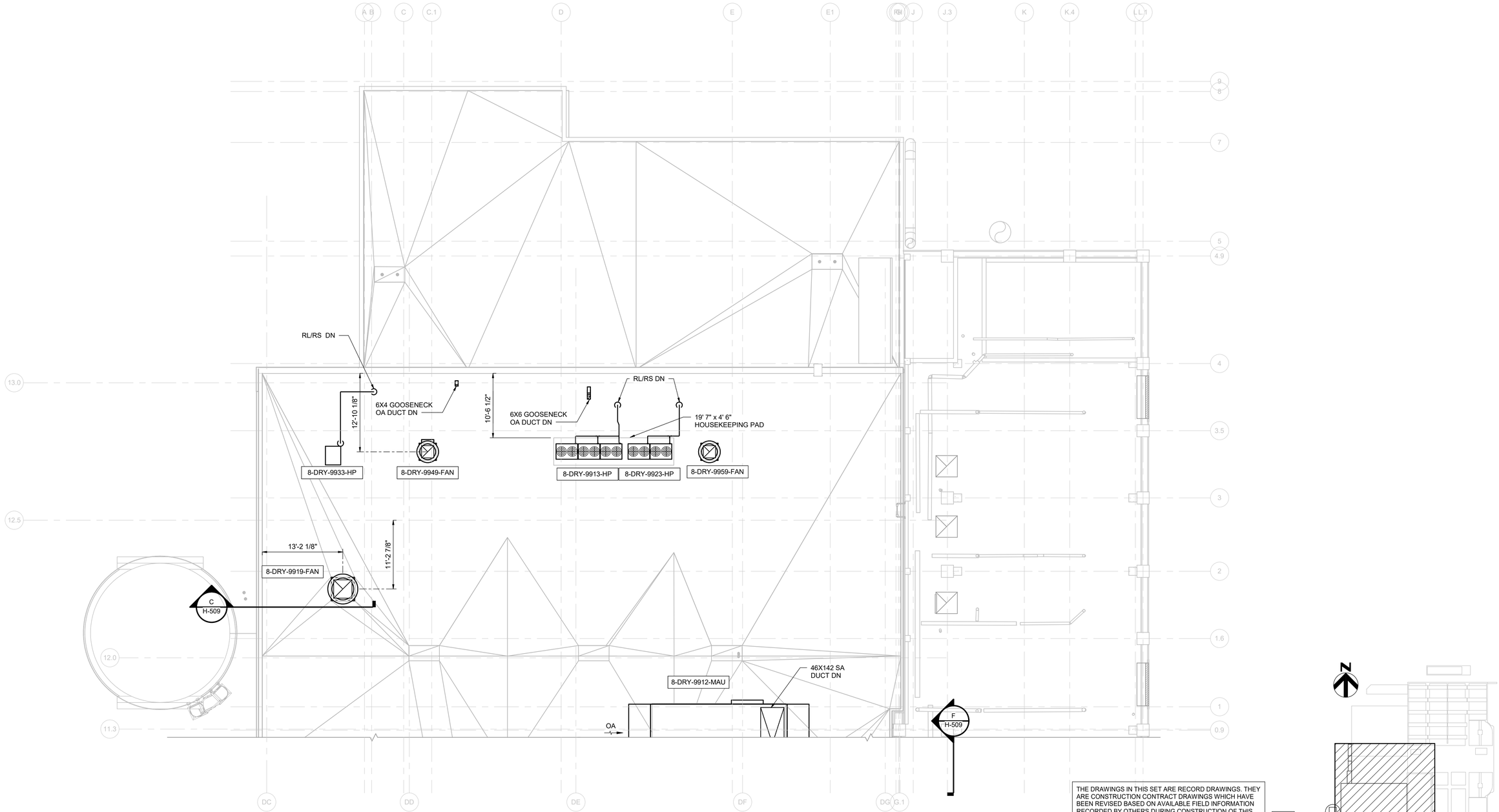

ROOF PLAN - NORTH

1/8" = 1'-0"

THE DRAWINGS IN THIS SET ARE RECORD DRAWINGS. THEY ARE CONSTRUCTION CONTRACT DRAWINGS WHICH HAVE BEEN REVISED BASED ON AVAILABLE FIELD INFORMATION RECORDED BY OTHERS DURING CONSTRUCTION OF THIS CONTRACT. THERE HAS BEEN NO VERIFICATION OF DIMENSIONS SHOWN ON THE CONSTRUCTION DRAWINGS OR THE ACCURACY/COMPLETENESS OF THE FIELD INFORMATION RECEIVED.

SIGNATURE _____ DATE 2/7/2022

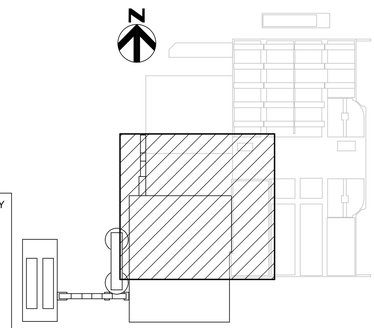

KEY PLAN

AS-BUILT REPLACEMENT SHEET

PROFESSIONAL CERTIFICATION
THIS DRAWING WAS ORIGINALLY APPROVED FOR CONSTRUCTION AND SEALED BY CHRISTOPHER S. WORK, A REGISTERED PROFESSIONAL ENGINEER IN THE STATE OF MARYLAND, NO. 50093

NOTICE TO CONTRACTORS
- PROJECT ELEVATIONS ARE BASED ON NAVD88 AND HOWARD COUNTY'S BENCHMARK SYSTEM
- PREVIOUS PROJECTS USED OTHER DATUMS
- APPLY THE FOLLOWING CONVERSIONS WHEN USING PREVIOUS CONTRACT DRAWINGS:
  - ADDITION NO. 6: SUBTRACT 0.80 FT
  - PRIOR ADDITIONS: SUBTRACT 1.04 FT

DEPARTMENT OF PUBLIC WORKS
HOWARD COUNTY, MARYLAND

CHIEF, BUREAU OF UTILITIES DATE

DES: CSW
DRN: JCS
CHK: MDD
DATE: 10/2017

DATE	REV	DESCRIPTION
03/2021		RECORD DRAWINGS

HVAC

DRYER BUILDING
ROOF PLAN - NORTH

LITTLE PATUXENT WATER RECLAMATION PLANT
8TH ADDITION
BIOSOLIDS PROCESSING FACILITIES - PHASE 2

CAPITAL PROJECT S-6295
CONTRACT NO. 24-4936

ELECTION DISTRICT NO. 6
HOWARD COUNTY, MARYLAND

SCALE AS SHOWN

SHEET 159 OF 311

H-506

BIM 360://10054364 – Little Patuxent WRP 8th Addition/264592_100_HP_V18.rvt
1/7/2022 3:02:49 PM

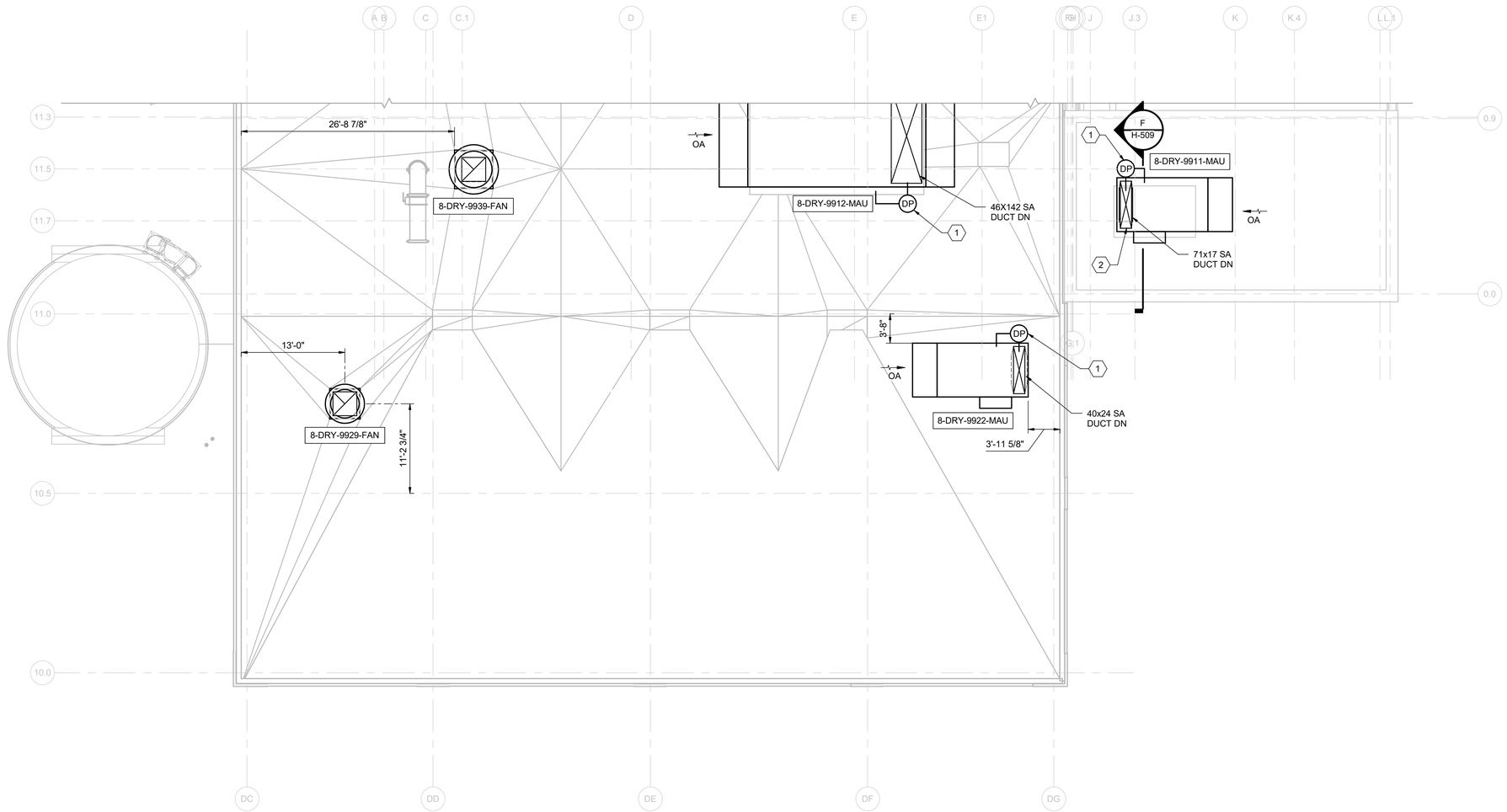

ROOF PLAN - SOUTH

1/8" = 1'-0"

KEY NOTES (X)

1 PROVIDE DIFFERENTIAL PRESSURE SWITCH FOR AIRFLOW MONITORING BY THE PLC SYSTEM. SEE ELECTRICAL DRAWINGS FOR 120 VOLT POWER CIRCUIT, CONTROL WIRING, AND ASSOCIATED CONDUITS.

2 TRANSITION DUCT FROM UNIT OPENING TO EXISTING ROOF PENETRATION IN VERTICAL. SIZE ROOF CURB TRANSITION ADAPTER AND HEIGHT AS NECESSARY TO ACCOMMODATE.

THE DRAWINGS IN THIS SET ARE RECORD DRAWINGS. THEY ARE CONSTRUCTION CONTRACT DRAWINGS WHICH HAVE BEEN REVISED BASED ON AVAILABLE FIELD INFORMATION RECORDED BY OTHERS DURING CONSTRUCTION OF THIS CONTRACT. THERE HAS BEEN NO VERIFICATION OF DIMENSIONS SHOWN ON THE CONSTRUCTION DRAWINGS OR THE ACCURACY/COMPLETENESS OF THE FIELD INFORMATION RECEIVED.

SIGNATURE 2/7/2023 DATE

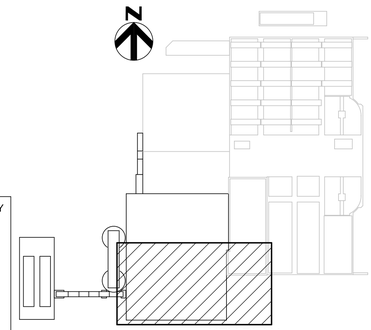

KEY PLAN

AS-BUILT REPLACEMENT SHEET

PROFESSIONAL CERTIFICATION
THIS DRAWING WAS ORIGINALLY APPROVED FOR CONSTRUCTION AND SEALED BY CHRISTOPHER S. WORK, A REGISTERED PROFESSIONAL ENGINEER IN THE STATE OF MARYLAND, NO. 50093

NOTICE TO CONTRACTORS
- PROJECT ELEVATIONS ARE BASED ON NAVD88 AND HOWARD COUNTY'S BENCHMARK SYSTEM
- PREVIOUS PROJECTS USED OTHER DATUMS
- APPLY THE FOLLOWING CONVERSIONS WHEN USING PREVIOUS CONTRACT DRAWINGS:
  - ADDITION NO. 6: SUBTRACT 0.80 FT
  - PRIOR ADDITIONS: SUBTRACT 1.04 FT

DEPARTMENT OF PUBLIC WORKS
HOWARD COUNTY, MARYLAND

CHIEF, BUREAU OF UTILITIES DATE

DES: CSW
DRN: JCS
CHK: MDD
DATE: 10/2017

DATE	REV	DESCRIPTION
03/2021		RECORD DRAWINGS

HVAC

DRYER BUILDING
ROOF PLAN - SOUTH

LITTLE PATUXENT WATER RECLAMATION PLANT
8TH ADDITION
BIOSOLIDS PROCESSING FACILITIES - PHASE 2

CAPITAL PROJECT S-6295
CONTRACT NO. 24-4936

ELECTION DISTRICT NO. 6
HOWARD COUNTY, MARYLAND

SCALE AS SHOWN

SHEET 160 OF 311

H-507

BIM 360://10054364 – Little Patuxent WRP 8th Addition/264592_100_HP_V18.rvt
1/7/2022 3:02:54 PM

KEY NOTES (X)

1 PROVIDE DIFFERENTIAL PRESSURE TO MEASURE POSITIVE PRESSURE IN THE INDICATED ROOM WITH RESPECT TO THE DRYER DRYER ROOM. PRESSURE TO BE TIED INTO MONITORED BY THE PLC. SEE ELECTRICAL DRAWINGS FOR 120 VOLT POWER CIRCUIT, CONTROL WIRING AND ASSOCIATED CONDUITS.

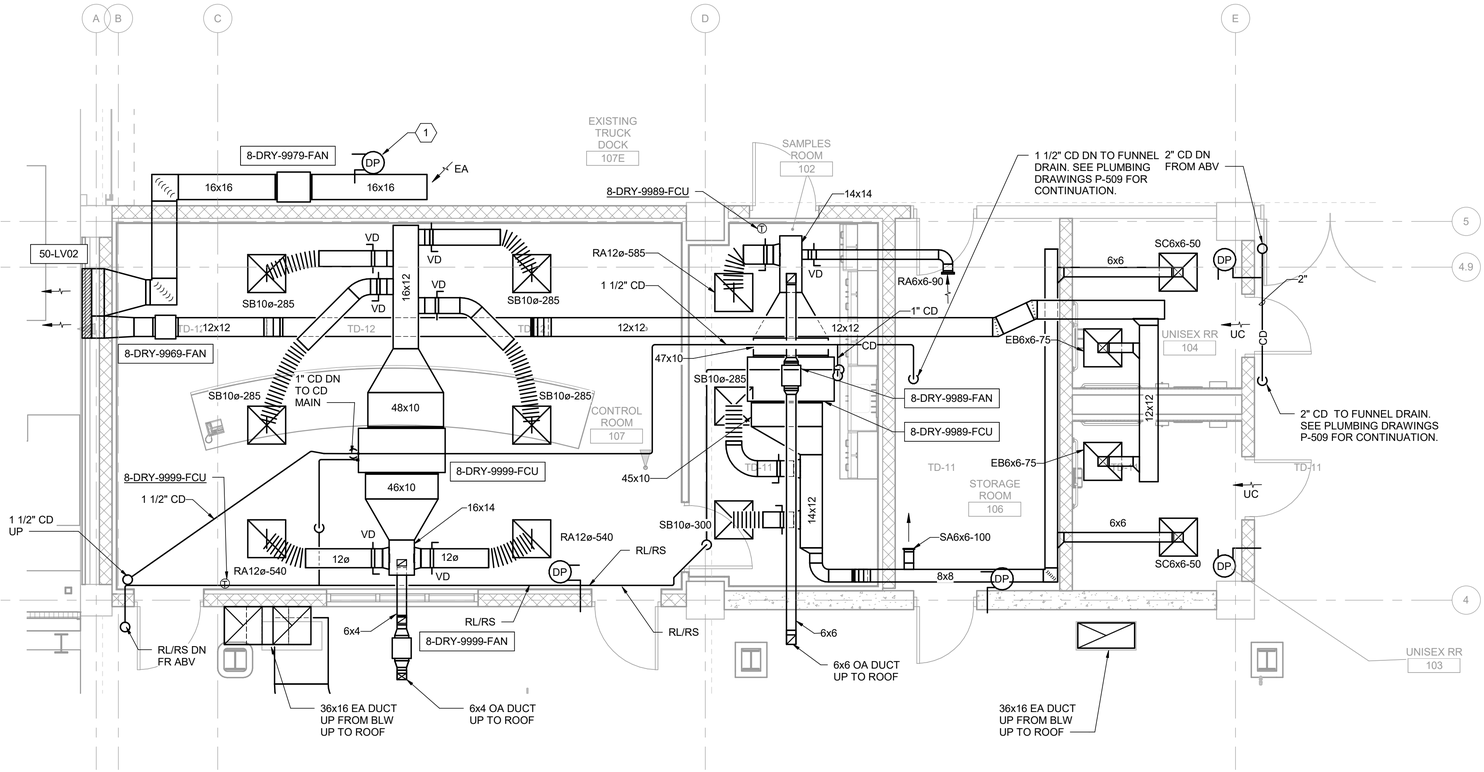

1 / - ENLARGED PLAN AT EL 141.20

1/4" = 1'-0"

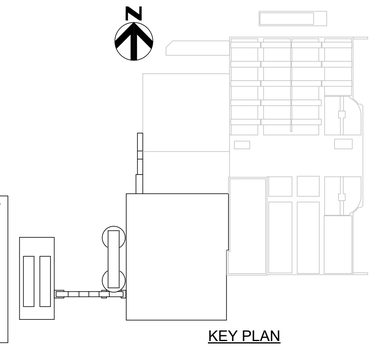

KEY PLAN

THE DRAWINGS IN THIS SET ARE RECORD DRAWINGS. THEY ARE CONSTRUCTION CONTRACT DRAWINGS WHICH HAVE BEEN REVISED BASED ON AVAILABLE FIELD INFORMATION RECORDED BY OTHERS DURING CONSTRUCTION OF THIS CONTRACT. THERE HAS BEEN NO VERIFICATION OF DIMENSIONS SHOWN ON THE CONSTRUCTION DRAWINGS OR THE ACCURACY/COMPLETENESS OF THE FIELD INFORMATION RECEIVED.

SIGNATURE _____ DATE 2/7/2022

AS-BUILT REPLACEMENT SHEET

PROFESSIONAL CERTIFICATION
THIS DRAWING WAS ORIGINALLY APPROVED FOR CONSTRUCTION AND SEALED BY CHRISTOPHER S. WORK, A REGISTERED PROFESSIONAL ENGINEER IN THE STATE OF MARYLAND, NO. 50093

NOTICE TO CONTRACTORS
- PROJECT ELEVATIONS ARE BASED ON NAVD88 AND HOWARD COUNTY'S BENCHMARK SYSTEM
- PREVIOUS PROJECTS USED OTHER DATUMS
- APPLY THE FOLLOWING CONVERSIONS WHEN USING PREVIOUS CONTRACT DRAWINGS:
  - ADDITION NO. 6: SUBTRACT 0.80 FT
  - PRIOR ADDITIONS: SUBTRACT 1.04 FT

DEPARTMENT OF PUBLIC WORKS
HOWARD COUNTY, MARYLAND

CHIEF, BUREAU OF UTILITIES DATE

DES: CSW
DRN: JCS
CHK: MDD
DATE: 10/2017

DATE	REV	DESCRIPTION
03/2021		RECORD DRAWINGS

HVAC

DRYER BUILDING
DRYER BUILDING ENLARGED PLAN

LITTLE PATUXENT WATER RECLAMATION PLANT
8TH ADDITION
BIOSOLIDS PROCESSING FACILITIES - PHASE 2

CAPITAL PROJECT S-6295
CONTRACT NO. 24-4936

ELECTION DISTRICT NO. 6
HOWARD COUNTY, MARYLAND

SCALE AS SHOWN

SHEET 161 OF 311

H-508

BIM 360://10054364 – Little Patuxent WRP 8th Addition/264592_100_HP_V18.rvt
1/7/2022 3:02:56 PM

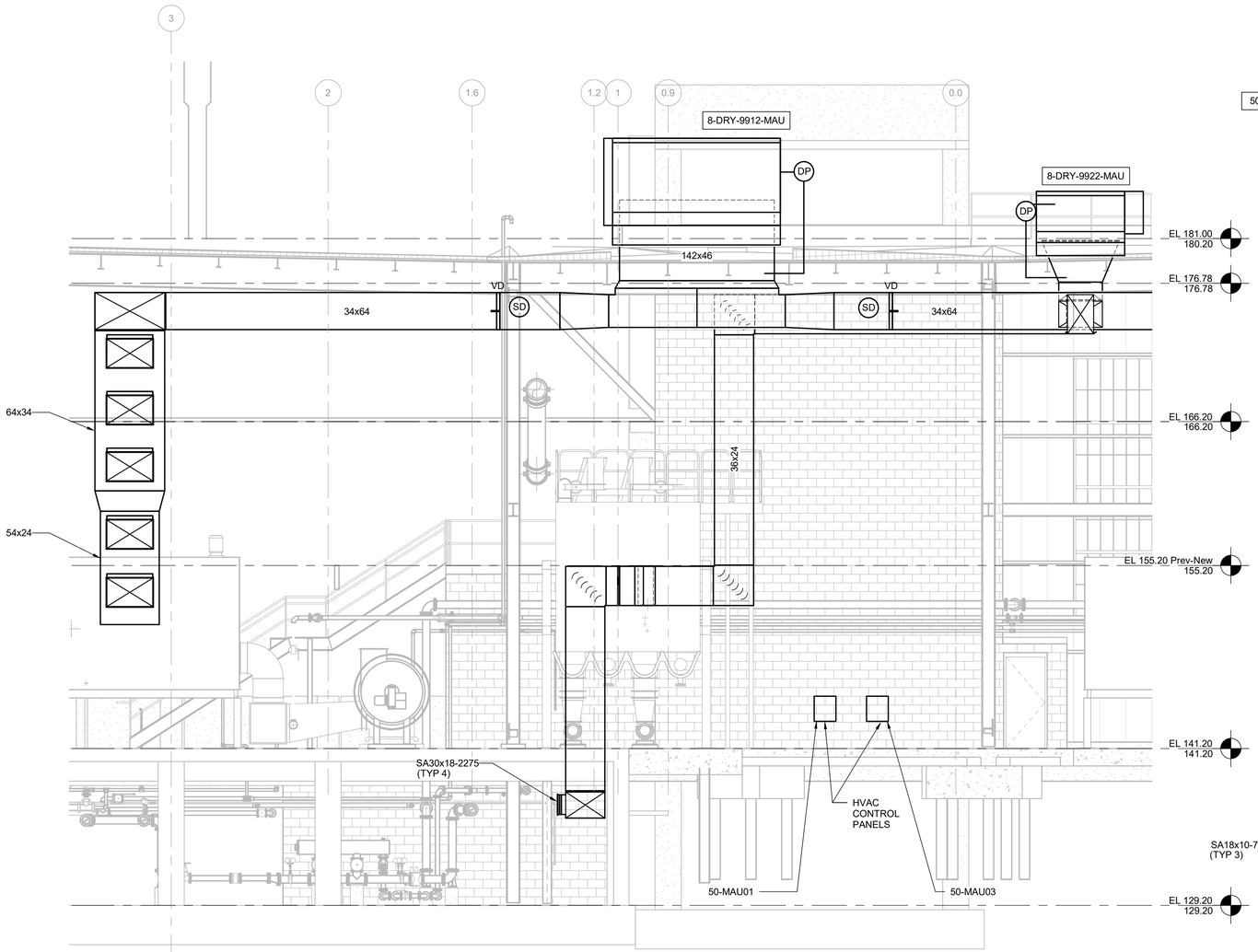

A - 3/16" = 1'-0"
SECTION VIEW

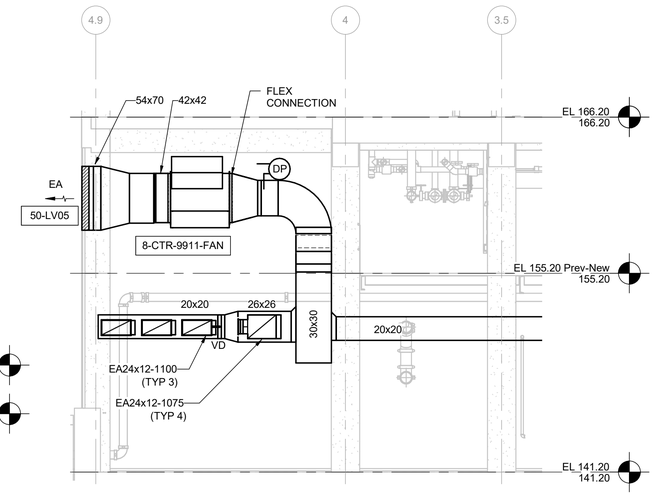

B - 3/16" = 1'-0"
SECTION VIEW

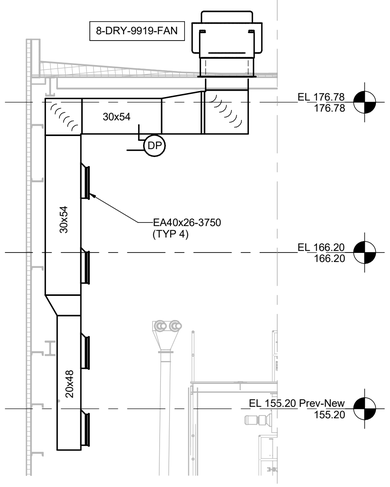

C - 3/16" = 1'-0"
SECTION VIEW

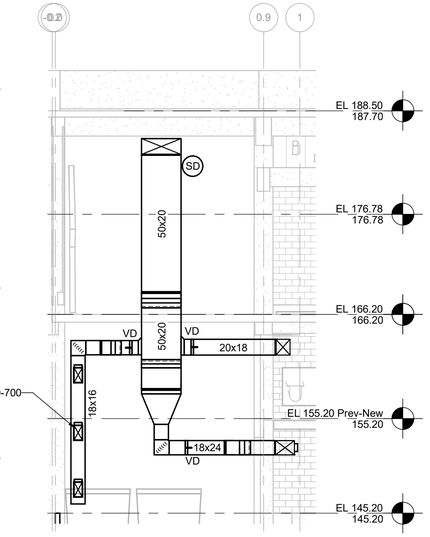

D - 1/8" = 1'-0"
SECTION VIEW

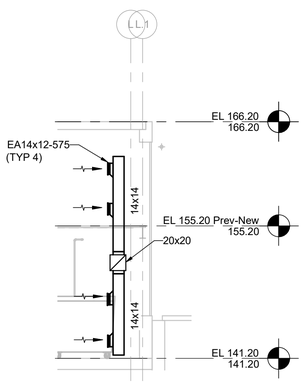

E - 1/8" = 1'-0"
SECTION VIEW

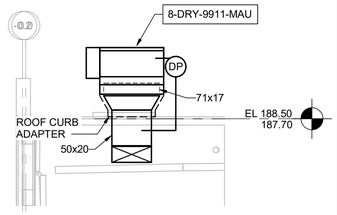

F - 1/8" = 1'-0"
SECTION VIEW

THE DRAWINGS IN THIS SET ARE RECORD DRAWINGS. THEY ARE CONSTRUCTION CONTRACT DRAWINGS WHICH HAVE BEEN REVISED BASED ON AVAILABLE FIELD INFORMATION RECORDED BY OTHERS DURING CONSTRUCTION OF THIS CONTRACT. THERE HAS BEEN NO VERIFICATION OF DIMENSIONS SHOWN ON THE CONSTRUCTION DRAWINGS OR THE ACCURACY/COMPLETENESS OF THE FIELD INFORMATION RECEIVED.

SIGNATURE — DATE 2/7/2023

BIM 360://10054364 – Little Patuxent WRP 8th Addition/264592_100_HP_V18.rvt
1/7/2022 3:03:12 PM

AS-BUILT REPLACEMENT SHEET

PROFESSIONAL CERTIFICATION
THIS DRAWING WAS ORIGINALLY APPROVED FOR CONSTRUCTION AND SEALED BY CHRISTOPHER S. WORK, A REGISTERED PROFESSIONAL ENGINEER IN THE STATE OF MARYLAND, NO. 50093

NOTICE TO CONTRACTORS
- PROJECT ELEVATIONS ARE BASED ON NAVD88 AND HOWARD COUNTY'S BENCHMARK SYSTEM
- PREVIOUS PROJECTS USED OTHER DATUMS
- APPLY THE FOLLOWING CONVERSIONS WHEN USING PREVIOUS CONTRACT DRAWINGS:
  - ADDITION NO. 6: SUBTRACT 0.80 FT
  - PRIOR ADDITIONS: SUBTRACT 1.04 FT

DEPARTMENT OF PUBLIC WORKS
HOWARD COUNTY, MARYLAND

CHIEF, BUREAU OF UTILITIES — DATE

DES: CSW
DRN: JCS
CHK: MDD
DATE: 10/2017

DATE	REV	DESCRIPTION
03/2021		RECORD DRAWINGS

HVAC

DRYER BUILDING SECTIONS

LITTLE PATUXENT WATER RECLAMATION PLANT
8TH ADDITION
BIOSOLIDS PROCESSING FACILITIES - PHASE 2

CAPITAL PROJECT S-6295
CONTRACT NO. 24-4936

ELECTION DISTRICT NO. 6
HOWARD COUNTY, MARYLAND

SCALE AS SHOWN

SHEET 162 OF 311

H-509

HVAC SYMBOLOGY

- 12x12 — RECTANGULAR DUCT
- 12ø — ROUND DUCT
- SUPPLY DUCT SECTION, RECTANGULAR
- RETURN DUCT SECTION, RECTANGULAR
- EXHAUST DUCT SECTION, RECTANGULAR
- 90° ELBOW TURNED UP, RECTANGULAR
- 90° ELBOW TURNED DOWN, RECTANGULAR
- 90° ELBOW TURNED UP, ROUND
- 90° ELBOW TURNED DOWN, ROUND
- TRANSITION - DOUBLE SIDED
- TRANSITION - ONE SIDED
- TRANSITION - RECTANGULAR TO ROUND DUCT
- STANDARD BRANCH - FOR SUPPLY AIR W/EXTRACTOR AND RETURN AIR W/O EXTRACTOR
- R — RECTANGULAR DUCT INCLINE - RISE OR DROP IN RESPECT TO THE AIR FLOW
- R — ROUND DUCT INCLINE - RISE OR DROP INRESPECT TO THE AIR FLOW
- ELBOW - W/TURNING VANE (RECTANGULAR)
- ELBOW - W/TURNING VANES (RECTANGULAR), SMOOTH RADIUS

- 24x18 — HIDDEN DUCT
- T 9'-10" / B 9'-0" / 18x10 — DUCT ELEVATION TAG ABOVE FINISH FLOOR
- PRESSURE/TEMPERATURE TEST PLUG (PETE PLUG OR EQUAL)
- SA — SOUND ATTENUATOR
- SUPPLY DIFFUSER (ROUND)
- SUPPLY AIR REGISTER OR GRILLE - W/DUCT-MOUNTED EXTRACTOR
- EXHAUST OR RETURN AIR REGISTER OR GRILLE

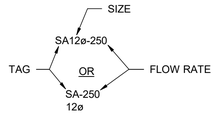

DIFFUSER, GRILLE OR REGISTER DESIGNATION TAG

- 12x12 — RETURN AIR GRILLE
- 12x12 — EXHAUST AIR GRILLE
- 12ø — SUPPLY DIFFUSER (NO ARROWS INDICATE 4-WAY)

- VD, BDD — VD = VOLUME DAMPER; BDD = BACKDRAFT DAMPER
- M — MOTOR OPERATED DAMPER
- 24x12 — FIRE DAMPER
- 24x12 — SMOKE DAMPER
- 24x12 — SMOKE AND FIRE DAMPER
- FLEXIBLE CONNECTION
- FLEXIBLE DUCT
- ACOUSTICAL LINING - DUCT DIMENSIONS FOR NET FREE AREA
- SD / SD — SPLITTER DAMPER
- AD PLAN / AD SECTION — ACCESS DOOR
- UC 3/4" — UNDERCUT DOOR 3/4"
- NEW CONNECTION TO EXISTING

ABBREVIATIONS

AD	ACCESS DOOR
ADJ	ADJUSTABLE
AFF	ABOVE FINISHED FLOOR
AFR	ABOVE FINISHED ROOF
AHU	AIR HANDLING UNIT
AI	ANALOG INPUT
ALT	ALTERNATIVE
AMB	AMBIENT
AO	ANALOG OUTPUT
APD	AIR PRESSURE DROP
ARF	ABOVE RAISED FLOOR
AV	AIR VALVE
AVG	AVERAGE
BAS	BUILDING AUTOMATION SYSTEM
BHP	BRAKE HORSE POWER
BDD	BACK DRAFT DAMPER
BOD	BOTTOM OF DUCT
BOE	BOTTOM OF EQUIPMENT
BOP	BOTTOM OF PIPE
BTUH	BRITISH THERMAL UNITS PER HOUR
CAV	CONSTANT AIR VOLUME
CFH	CUBIC FEET PER HOUR
CFM	CUBIC FEET PER MINUTE
CLG	CEILING, COOLING
CO	CLEAN OUT
CONN	CONNECTION
CONT	CONTINUOUS
CRAC	COMPUTER ROOM AIR CONDITIONER
CU	CONDENSING UNIT
DB	DRY BULB
dB	DECIBEL(S)
DDC	DIRECT DIGITAL CONTROL
DEG F	DEGREES FAHRENHEIT
DH	DEHUMIDIFIER
DIA	DIAMETER
DN	DOWN
DX	DIRECT EXPANSION
E	EXISTING
EA	EXAUST AIR
EAT	ENTERING AIR TEMPERATURE
EDH	ELECTRIC DUCT HEATER
EER	ENERGY EFFICIENCY RATIO
EF	EXHAUST FAN
EFF	EFFICIENCY
EMCS	ENERGY MANAGEMENT CONTROL SYSTEM
ESP	EXTERNAL STATIC PRESSURE
EWT	ENTERING WATER TEMPERATURE
F	FUTURE
FA	FREE AREA
FCP	FAN CONTROL PANEL
FCU	FAN COIL UNIT
FL	FILTER, FLOOR
FLA	FULL LOAD AMPS
FPB	FAN POWERED BOX
FPM	FEET PER MINUTE
GAL	GALLONS
GPH	GALLONS PER HOUR
GPM	GALLONS PER MINUTE
HP	HORSE POWER
HR	HOUR
HTG	HEATING
HVAC	HEATING, VENTILATION, & AIR CONDITIONING
HZ	HERTZ
IAQ	INDOOR AIR QUALITY
ID	INSIDE DIAMETER
IE	INVERT ELEVATION
IN	INCHES
I/O	INPUT/OUTPUT
I/P	CURRENT TO PNEUMATIC
KEF	KITCHEN EXHAUST FAN
KW	KILOWATT
LAT	LEAVING AIR TEMPERATURE
LB	POUNDS
LV	LOUVER
LWT	LEAVING WATER TEMPERATURE
MAU	MAKE-UP AIR UNIT
MAX	MAXIMUM
MBH	THOUSAND BTUH
MCC	MOTOR CONTROL CENTER
MISC	MISCELLANEOUS
MIN	MINIMUM, MINUTES
MFG	MANUFACTURING
MOD	MOTOR OPERATED DAMPER
NC	NORMALLY CLOSED, NOISE CRITERIA
NIC	NOT IN CONTRACT
NO	NORMALLY OPEN, NUMBER
NRC	NOISE REDUCTION COEFFICIENT
NTS	NOT TO SCALE
OA	OUTSIDE AIR
OD	OUTSIDE DIAMETER
OFCI	OWNER FURNISHED CONTRACTOR INSTALLED
OFOI	OWNER FURNISHED OWNER INSTALLED
OS&Y	OUTSIDE SCREW AND YOKE
PD	PRESSURE DROP
PH	PHASE
PLBG	PLUMBING
PPH	POUNDS PER HOUR
PSI	POUNDS PER SQUARE INCH
PSIA	POUNDS PER SQUARE INCH ABSOLUTE
PSIG	POUNDS PER SQUARE INCH GAUGE
QTY	QUANTITY
RA	RETURN AIR
REQD	REQUIRED
RH	RELATIVE HUMIDITY
RPM	REVOLUTIONS PER MINUTE
RTU	ROOFTOP UNIT
S	SIGNAL PORT
SA	SUPPLY AIR, SOUND ATTENUATOR
SCFM	STANDARD CUBIC FEET PER MINUTE
SF	SUPPLY FAN, SQUARE FEET
SP	STATIC PRESSURE
SQ	SQUARE
TCP	TEMPERATURE CONTROL PANEL
TD	TEMPERATURE DIFFERENTIAL
TEMP	TEMPERATURE, TEMPORARY
TES	THERMAL ENERGY STORAGE
TYP	TYPICAL
UNO	UNLESS NOTED OTHERWISE
UH	UNIT HEATER
V	VOLTS
VAV	VARIABLE AIR VOLUME
V&C	VALVE AND CAP
VFD	VARIABLE FREQUENCY DRIVE
VRF	VARIABLE REFRIGERANT FLOW
VTR	VENT THROUGH ROOF
W	WATTS
WB	WET BULB
WG	WATER GAUGE
WPD	WATER PRESSURE DROP

PIPING

- HWS — LOW TEMPERATURE HOT WATER SUPPLY
- HWR — LOW TEMPERATURE HOT WATER RETURN
- MTWS — MED. TEMPERATURE HOT WATER SUPPLY
- MTWS — MED. TEMPERATURE HOT WATER RETURN
- CHWS — CHILLED WATER SUPPLY
- CHWR — CHILLED WATER RETURN
- CWS — CONDENSER WATER SUPPLY
- CWR — CONDENSER WATER RETURN
- RL — REFRIGERANT LIQUID
- RS — REFRIGERANT SUCTION
- HGR — HOT-GAS REHEAT
- CD — CONDENSATE DRAIN
- MU — MAKEUP WATER

PIPING FITTINGS

- CONCENTRIC REDUCER
- ECCENTRIC REDUCER
- ELBOW, 90°
- ELBOW, 90° TURN DOWN
- ELBOW, 90° TURN UP
- ELBOW, 45° TURN DOWN
- ELBOW, 45° TURN UP
- TEE
- TEE, OUTLET UP
- TEE, OUTLET DOWN
- TEE, OUTLET UP W/ 90° TURN
- TEE, OUTLET DOWN W/ 90° TURN
- PIPE BREAK
- CAP
- BLIND FLANGE
- UNION
- FLOW ARROW

PIPING VALVES

- BALL VALVE
- GATE VALVE
- GLOBE VALVE
- CIRCUIT SETTER
- HOSE VALVE WITH CAP
- BUTTERFLY VALVE
- CHECK VALVE
- BALANCING VALVE
- CALIBRATED BALANCING VALVE
- M — PLUG VALVE
- S — SOLENOID VALVE
- SAFETY OR PRESSURE RELIEF, ANGLE VALVE
- SAFETY OR PRESSURE RELIEF, STRAIGHT THROUGH VALVE
- PRESSURE REDUCING VALVE (PRV)
- AUTOMATIC CONTROL VALVE, 2-WAY
- AUTOMATIC CONTROL VALVE, 3-WAY
- DOUBLE CHECK VALVE BACKFLOW PREVENTOR

PIPING SPECIALTIES

- PA — PIPE ANCHOR
- PG — PIPE GUIDE
- EXPANSION JOINT
- VENTURI
- PT — PRESSURE/TEMPERATURE PORT
- THERMOMETER
- THERMOWELL
- PRESSURE GAGE
- T — TEMPERATURE GAGE
- FLEXIBLE PIPE CONNECTION
- STRAINER
- BLIND FLANGE
- MANUAL AIR VENT
- A — AUTOMATIC AIR VENT

SCHEMATIC SYMBOLS

- M — MOTOR ACTUATOR
- F — FLOW SWITCH
- P — PRESSURE SENSOR
- ΔP — DIFFERENTIAL PRESSURE SENSOR
- CT — CURRENT TRANSMITTER
- T — TEMPERATURE TRANSMITTER
- TS — TEMPERATURE SWITCH
- TC — TEMPERATURE CONTROLLER
- FM — FLOW METER
- FLOW LIMITER
- FLOW MEASURING & BALANCING VALVE W/ 100% SHUT OFF

AIR FLOW SCHEMATIC AND TEMPERATURE CONTROL DIAGRAM SYMBOLOGY

- C/C — CHILLED WATER COOLING COIL
- H/C — HOT WATER HEATING COIL
- EP/R — DIRECT EVAPORATIVE COOLER
- D/X — DIRECT EXPANSION COOLING COIL
- EH/C — ELECTRIC HEATING COIL
- FB/C — FACE & BYPASS COIL
- GAS-FIRED DUCT FURNACE
- VFD — VFD (VARIABLE FREQUENCY DRIVE)
- CAV H/C — CONSTANT AIR VOLUME BOX WITH REHEAT COIL
- VAV H/C — VARIABLE AIR VOLUME BOX WITH REHEAT COIL
- EF — EXHAUST FAN
- SF — SUPPLY FAN
- S — SMOKE/DUCT DETECTOR
- GAS — GAS
- ELECT — ELECTRIC
- T — TEMPERATURE SENSOR
- AI — ANALOG INPUT
- AO — ANALOG OUTPUT
- FRZ — FREEZE STAT
- DI — DIGITAL INPUT
- DO — DIGITAL OUTPUT
- COMM — COMMUNICATION
- CT — CURRENT TRANSMITTER
- ΔP — FILTER SENSOR
- STARTER — MOTOR STARTER
- VFD — VARIABLE FREQUENCY DRIVE
- M — MOTORIZED OPPOSED BLADE DAMPER
- HP — DIRECT EXPANSION HEAT PUMP
- DX — DIRECT EXPANSION
- GRAVITY DAMPER
- M — MOTOR
- T — THERMOSTAT
- CO2 — CO2 SENSOR
- H — HUMIDISTAT
- CO — CARBON MONOXIDE SENSOR
- NO2 — NITROGEN DIOXIDE SENSOR
- LOUVER
- S — SMOKE DETECTOR
- NG — NATURAL GAS DETECTOR

GENERAL NOTES

1. PROVIDE AND INSTALL ALL MECHANICAL SYSTEMS IN ACCORDANCE WITH THE 2012 INTERNATIONAL MECHANICAL CODE AND ALL OTHER APPLICABLE STATE AND LOCAL CODES.
2. CONTRACT DOCUMENT DRAWINGS FOR MECHANICAL WORK (HVAC) ARE DIAGRAMMATIC AND ARE INTENDED TO CONVEY SCOPE AND GENERAL ARRANGEMENT ONLY. PLANS SHOULD NOT BE SCALED.
3. INSTALL ALL MECHANICAL EQUIPMENT AND APPURTENANCES IN ACCORDANCE WITH MANUFACTURERS' RECOMMENDATIONS.
4. VERIFY ALL CLEARANCES BEFORE FABRICATING AND INSTALLING WORK. COORDINATE WITH ALL OTHER TRADES.
5. DRAWINGS REFLECT DIMENSIONS OF DESIGN MFG. EQUIPMENT. ALLOWABLE ALTERNATES, WHILE EQUAL IN OUTPUT CAPACITY WILL BE THE RESPONSIBILITY OF THE CONTRACTOR TO MEET THE SPACE REQUIREMENTS AND PROVE EQUALITY WITH DESIGN MFG. EQUIPMENT.
6. TESTING, ADJUSTING, AND BALANCING AGENCY SHALL BE A MEMBER OF THE ASSOCIATED AIR BALANCE COUNCIL (AABC) OR THE NATIONAL ENVIRONMENTAL BALANCING BUREAU (NEBB). TESTING ADJUSTING AND BALANCING SHALL BE PERFORMED IN ACCORDANCE WITH THE AABC STANDARDS.
7. COORDINATE ALL EQUIPMENT CONNECTIONS WITH MANUFACTURER'S CERTIFIED DRAWINGS. COORDINATE AND PROVIDE ALL DUCT AND PIPING TRANSITIONS REQUIRED FOR FINAL EQUIPMENT CONNECTIONS TO FURNISHED EQUIPMENT. FIELD VERIFY AND COORDINATE ALL DUCT AND PIPING DIMENSIONS BEFORE FABRICATION.
8. ALL CONTROL WIRE AND CONDUIT SHALL COMPLY WITH THE INTERNATIONAL ELECTRICAL CODE (IEC) AND NFPA 70.
9. ALL MISCELLANEOUS STEEL REQUIRED TO ENSURE PROPER INSTALLATION AND AS SHOWN IN DETAILS FOR PIPING, DUCTWORK, AND EQUIPMENT (UNLESS OTHERWISE NOTED) SHALL BE FURNISHED AND INSTALLED BY THE MECHANICAL CONTRACTOR.
10. PROVIDE ACCESS PANELS FOR INSTALLATION IN DUCTWORK, WALLS AND CEILINGS, WHERE REQUIRED, TO SERVICE CONTROLS DEVICES, DAMPERS, VALVES, DUCTWORK, SMOKE DETECTORS, AND OTHER CONCEALED MECHANICAL EQUIPMENT. ACCESS PANEL INSTALLATION SHALL BE COORDINATED WITH PROCESS REQUIREMENTS, ARCHITECTURAL WORK TO MATCH MATERIALS AND FINISHES.
11. ALL DUCTWORK, PIPING, AND EQUIPMENT SUPPORTED FROM STRUCTURAL STEEL SHALL BE COORDINATED WITH ALL TRADES. ALL ATTACHMENTS TO STEEL BAR JOISTS, TRUSSES, OR JOIST GIRDERS SHALL BE AT PANEL POINTS OR AS SHOWN ON THE MECHANICAL AND STRUCTURAL DRAWINGS. PROVIDE BEAM CLAMPS MEETING MSS STANDARDS. WELDING TO STRUCTURAL MEMBERS SHALL NOT BE PERMITTED.
12. PROVIDE FLEXIBLE CONNECTIONS IN ALL DUCTWORK AND PIPING SYSTEMS CONNECTED TO FANS, PUMPS AND OTHER EQUIPMENT WHICH REQUIRE VIBRATION ISOLATION.
13. DUCTWORK SHALL BE FABRICATED AND INSTALLED PER LATEST SMACNA STANDARDS.
14. SEE SPECIFICATION SECTION 23 09 00 FOR INSTRUMENTATION AND CONTROL FOR HVAC SYSTEMS AND SEQUENCE OF OPERATIONS.

THE DRAWINGS IN THIS SET ARE RECORD DRAWINGS. THEY ARE CONSTRUCTION CONTRACT DRAWINGS WHICH HAVE BEEN REVISED BASED ON AVAILABLE FIELD INFORMATION RECORDED BY OTHERS DURING CONSTRUCTION OF THIS CONTRACT. THERE HAS BEEN NO VERIFICATION OF DIMENSIONS SHOWN ON THE CONSTRUCTION DRAWINGS OR THE ACCURACY/COMPLETENESS OF THE FIELD INFORMATION RECEIVED.

SIGNATURE — DATE 2/7/2022

AS-BUILT REPLACEMENT SHEET

PROFESSIONAL CERTIFICATION
THIS DRAWING WAS ORIGINALLY APPROVED FOR CONSTRUCTION AND SEALED BY CHRISTOPHER S. WORK, A REGISTERED PROFESSIONAL ENGINEER IN THE STATE OF MARYLAND, NO. 50093

NOTICE TO CONTRACTORS
- PROJECT ELEVATIONS ARE BASED ON NAVD88 AND HOWARD COUNTY'S BENCHMARK SYSTEM
- PREVIOUS PROJECTS USED OTHER DATUMS
- APPLY THE FOLLOWING CONVERSIONS WHEN USING PREVIOUS CONTRACT DRAWINGS:
  - ADDITION NO. 6: SUBTRACT 0.80 FT
  - PRIOR ADDITIONS: SUBTRACT 1.04 FT

DEPARTMENT OF PUBLIC WORKS
HOWARD COUNTY, MARYLAND

CHIEF, BUREAU OF UTILITIES — DATE

DES: CSW
DRN: JCS
CHK: MDD
DATE: 10/2017

DATE	REV	DESCRIPTION
03/2021		RECORD DRAWINGS

HVAC

DRYER BUILDING HVAC NOTES, LEGEND AND ABBREVIATIONS

LITTLE PATUXENT WATER RECLAMATION PLANT
8TH ADDITION
BIOSOLIDS PROCESSING FACILITIES - PHASE 2

CAPITAL PROJECT S-6295
CONTRACT NO. 24-4936

ELECTION DISTRICT NO. 6
HOWARD COUNTY, MARYLAND

SCALE AS SHOWN

SHEET 163 OF 311

H-901

BIM 360://10054364 – Little Patuxent WRP 8th Addition/264592_100_HP_V18.rvt
1/7/2022 3:03:12 PM

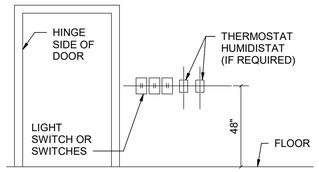

NOTES:

1. WHEN ABOVE MOUNTING PROCEDURE IS IMPOSSIBLE HINGE SIDE MOUNTING WILL BE PERMITTED WITH APPROX. 6" CLEARANCE FROM EDGE OF DOOR (IN OPEN POSITION) TO EDGE OF THERMOSTAT & LIGHT SWITCH. IF NEITHER INSTALLATION IS POSSIBLE, SWITCHES AND CONTROLS SHALL BE LOCATED AS DIRECTED BY ENGINEER. DO NOT INSTALL ABOVE DIMMER SWITCHES.

1 - THERMOSTAT AND SWITCH MOUNTING DETAIL

NOT TO SCALE

NOTE:

INSTALL MANUAL VOLUME DAMPERS IN ALL LOW PRESSURE SUPPLY, RETURN AND EXHAUST DUCT BRANCHES.

INSTALL SPLITTER DAMPER IN ALL LOW PRESSURE SUPPLY, RETURN AND EXHAUST DUCT BRANCHES SERVING TWO OR MORE OUTLETS.

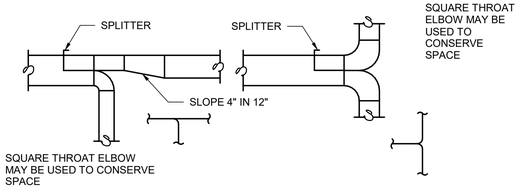

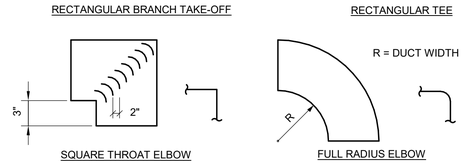

2 - TYPICAL LOW PRESSURE DUCT CONNECTION

NOT TO SCALE

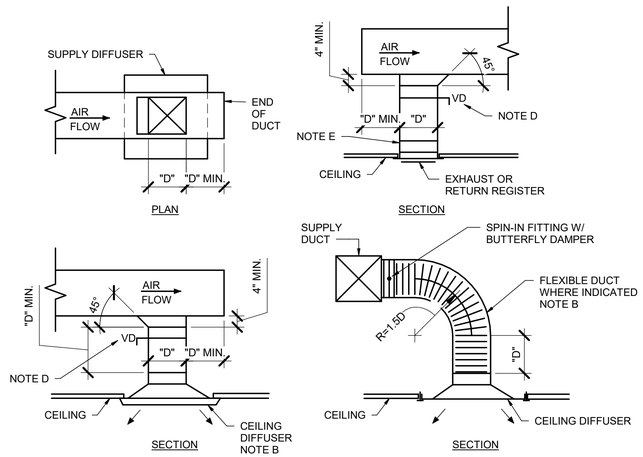

NOTES:

A. "D" IS THROAT DIA OR SIDE DIM. OF SQUARE CONN.

B. MIN. LENGTH OF STRAIGHT DUCT ABOVE CD IS "D".

C. ABOVE DETAILS ARE REPRESENTATIVE OF STANDARD DUCT CONNECTIONS. ONLY THESE DETAILS ARE NOT INTENDED TO SHOW ALL POSSIBLE DUCT CONNECTIONS.

D. BALANCING DAMPERS SHALL BE PROVIDED AT ALL TAKE-OFFS FOR BALANCING. DO NOT BALANCE AIR AT DIFFUSERS AND GRILLES.

E. ATTACH DUCT TO DIFFUSER NECK W/SHEET METAL SCREWS (4 MIN.) AND SEAL WITH CAULKING.

3 - TYPICAL DUCT CONNECTION DETAILS

NOT TO SCALE

THE DRAWINGS IN THIS SET ARE RECORD DRAWINGS. THEY ARE CONSTRUCTION CONTRACT DRAWINGS WHICH HAVE BEEN REVISED BASED ON AVAILABLE FIELD INFORMATION RECORDED BY OTHERS DURING CONSTRUCTION OF THIS CONTRACT. THERE HAS BEEN NO VERIFICATION OF DIMENSIONS SHOWN ON THE CONSTRUCTION DRAWINGS OR THE ACCURACY/COMPLETENESS OF THE FIELD INFORMATION RECEIVED.

SIGNATURE — DATE 2/7/2023

AS-BUILT REPLACEMENT SHEET

PROFESSIONAL CERTIFICATION
THIS DRAWING WAS ORIGINALLY APPROVED FOR CONSTRUCTION AND SEALED BY CHRISTOPHER S. WORK, A REGISTERED PROFESSIONAL ENGINEER IN THE STATE OF MARYLAND, NO. 50093

NOTICE TO CONTRACTORS
- PROJECT ELEVATIONS ARE BASED ON NAVD88 AND HOWARD COUNTY'S BENCHMARK SYSTEM
- PREVIOUS PROJECTS USED OTHER DATUMS
- APPLY THE FOLLOWING CONVERSIONS WHEN USING PREVIOUS CONTRACT DRAWINGS:
  - ADDITION NO. 6: SUBTRACT 0.80 FT
  - PRIOR ADDITIONS: SUBTRACT 1.04 FT

DEPARTMENT OF PUBLIC WORKS
HOWARD COUNTY, MARYLAND

CHIEF, BUREAU OF UTILITIES — DATE

DES: CSW
DRN: JCS
CHK: MDD
DATE: 10/2017

DATE	REV	DESCRIPTION
03/2021		RECORD DRAWINGS

HVAC

DRYER BUILDING HVAC DETAILS

LITTLE PATUXENT WATER RECLAMATION PLANT
8TH ADDITION
BIOSOLIDS PROCESSING FACILITIES - PHASE 2

CAPITAL PROJECT S-6295
CONTRACT NO. 24-4936

ELECTION DISTRICT NO. 6
HOWARD COUNTY, MARYLAND

SCALE AS SHOWN

SHEET 164 OF 311

H-902

BIM 360://10054364 – Little Patuxent WRP 8th Addition/264592_100_HP_V18.rvt
1/7/2022 3:03:13 PM

GAS MAKE-UP AIR UNIT SCHEDULE

MARK	LOCATION	ORIENTATION	AIRFLOW (CFM)	OUTSIDE AIR (CFM)	INPUT (BTU/H)	OUTPUT (BTU/H)	EAT (°F)	TEMP RISE (°F)	FAN DATA						ELECTRICAL DATA							WEIGHT (LBS.)	BASIS OF DESIGN		NOTES
									TYPE	E.S.P. (IN. WG.)	T.S.P. (IN. WG.)	FAN RPM	MOTOR QTY.	HP	MCA	MOCP	V	PH	HZ	DISC. BY	STARTER BY		MANUFACTURER	MODEL	
8-DRY-9911-MAU	ROOF, DRYER BLDG	HORIZONTAL WITH BOTTOM DISCHARGE	9,100	9,100	663,750	531,000	14	54	BAE-DW	1.50	3.10	1,677	1	7.5	15.0	20	460	3	60	DIV. 26	DIV. 26	4,170	ENGINEERED AIR	DJS100/O	
8-DRY-9912-MAU	ROOF, CENTRIFUGE BLDG	HORIZONTAL WITH BOTTOM DISCHARGE	45,000	45,000	3,226,250	2,581,000	14	53	BAE-DW	1.50	2.90	860	2	20	58.5	80	460	3	60	DIV. 26	DIV. 26	13,133	ENGINEERED AIR	DG350/O	
8-DRY-9922-MAU	ROOF, DRYER BLDG	HORIZONTAL WITH BOTTOM DISCHARGE	9,100	9,100	663,750	531,000	14	54	BAE-DW	1.50	3.10	1,677	1	7.5	15.0	20	460	3	60	DIV. 26	DIV. 26	4,170	ENGINEERED AIR	DJS100/O	

FAN SCHEDULE

MARK	SERVES	TYPE	AIRFLOW (CFM)	E.S.P. (IN. WG)	FAN (RPM)	MOTOR (RPM)	DRIVE	MAXIMUM SONES	ELECTRICAL DATA						WEIGHT (LBS)	BASIS OF DESIGN		NOTES
									HP	V	PH	HZ	DISC. BY	STARTER BY		MANUFACTURER	MODEL	
8-CTR-9911-FAN	EXISTING CONVEYOR ROOM	MIXED FLOW INLINE	9,900	1.3	768	1,725	BELT		5.0	460	3	60	DIV. 26	DIV. 26	1180	GREENHECK	QEI-30-II-50	
8-DRY-9919-FAN	DRYER BUILDING	UPBLAST CENTRIFUGAL	15,000	0.6	444	1,725	BELT	14.3	5.00	460	3	60	DIV. 26	DIV. 26	489	GREENHECK	CUBE-420-VGD-50	
8-DRY-9929-FAN	DRYER BUILDING	UPBLAST CENTRIFUGAL	15,000	0.6	444	1,725	BELT	14.3	5.00	460	3	60	DIV. 26	DIV. 26	489	GREENHECK	CUBE-420-VGD-50	
8-DRY-9939-FAN	DRYER BUILDING	UPBLAST CENTRIFUGAL	18,500	0.5	370	1,725	BELT	16.0	5.0	460	3	60	DIV. 26	DIV. 26	560	GREENHECK	CUBE-480-VGD-50	
8-DRY-9949-FAN	BASEMENT	UPBLAST CENTRIFUGAL	5,000	0.6	790	1,725	BELT	15.9	1 1/2	460	3	60	DIV. 26	DIV. 26	221	GREENHECK	CUBE-220-VGD-15	
8-DRY-9959-FAN	BASEMENT	UPBLAST CENTRIFUGAL	5,000	0.6	790	1,725	BELT	15.9	1 1/2	460	3	60	DIV. 26	DIV. 26	221	GREENHECK	CUBE-220-VGD-15	
8-DRY-9969-FAN	RESTROOMS	CENTRIFUGAL INLINE	150	0.5	1,409	1,725	DIRECT	10.3	1/4	115	1	60	DIV. 26	DIV. 26	54	GREENHECK	SQ-97-VG	
8-DRY-9979-FAN	EXISTING TRUCK DOCK	CENTRIFUGAL INLINE	1,330	0.5	1,455	1,725	DIRECT	9.6	1/2	115	1	60	DIV. 26	DIV. 26	72	GREENHECK	SQ-120-VG	
8-DRY-9989-FAN	SAMPLES ROOM OUTSIDE AIR	CENTRIFUGAL INLINE	90	0.3	1,364	1,725	DIRECT	3.7	1/10	115	1	60	DIV. 26	DIV. 26	37	GREENHECK	SQ-75-VG	1
8-DRY-9999-FAN	CONTROL ROOM OUTSIDE AIR	CENTRIFUGAL INLINE	60	0.3	1,409	1,725	DIRECT	3.6	1/10	115	1	60	DIV. 26	DIV. 26	37	GREENHECK	SQ-60-VG	1

NOTES:
1. INCLUDE CONTROLLER WITH INTEGRAL PRESSURE TRANSDUCER.

VRV SPLIT SYSTEM INDOOR UNIT SCHEDULE

MARK	LOCATION	TYPE	MATCHING OUTDOOR UNIT	AIRFLOW (CFM)	COOLING DATA					HEATING DATA		ELECTRICAL DATA							WEIGHT (LBS)	BASIS OF DESIGN		NOTES
					TYPE	EAT		MIN. CAPACITY		DB (°F)	CAPACITY (BTU/H)	MCA	MOCP	V	PH	HZ	DISC. BY			MANUFACTURER	MODEL	
						DB (°F)	WB (°F)	SENS. (BTU/H)	TOTAL (BTU/H)													
8-DRY-9919-FCU	ELECTRICAL ROOM	CONCEALED CEILING UNIT	50-HP01	2,500	DX	75	67	68,400	96,000	70	108,000	10.1	15	208	1	60	DIV. 26		302	DAIKIN	FXMQ96MVJU	
8-DRY-9929-FCU	ELECTRICAL ROOM	CONCEALED CEILING UNIT	50-HP01	2,500	DX	75	67	68,400	96,000	70	108,000	10.1	15	208	1	60	DIV. 26		302	DAIKIN	FXMQ96MVJU	
8-DRY-9939-FCU	ELECTRICAL ROOM	CONCEALED CEILING UNIT	50-HP01	2,500	DX	75	67	68,400	96,000	70	108,000	10.1	15	208	1	60	DIV. 26		302	DAIKIN	FXMQ96MVJU	
8-DRY-9949-FCU	ELECTRICAL ROOM	CONCEALED CEILING UNIT	50-HP02	2,500	DX	75	67	68,400	96,000	70	108,000	10.1	15	208	1	60	DIV. 26		302	DAIKIN	FXMQ96MVJU	
8-DRY-9959-FCU	ELECTRICAL ROOM	CONCEALED CEILING UNIT	50-HP01	2,500	DX	75	67	68,400	96,000	70	108,000	10.1	15	208	1	60	DIV. 26		302	DAIKIN	FXMQ96MVJU	
8-DRY-9969-FCU	ELECTRICAL ROOM	CONCEALED CEILING UNIT	50-HP02	2,500	DX	75	67	68,400	96,000	70	108,000	10.1	15	208	1	60	DIV. 26		302	DAIKIN	FXMQ96MVJU	
8-DRY-9979-FCU	ELECTRICAL ROOM	CONCEALED CEILING UNIT	50-HP02	2,500	DX	75	67	68,400	96,000	70	108,000	10.1	15	208	1	60	DIV. 26		302	DAIKIN	FXMQ96MVJU	
8-DRY-9989-FCU	SAMPLES ROOM	CONCEALED CEILING UNIT	50-HP03	1,000	DX	75	67	23,200	30,000	70	34,000	2.8	15	208	1	60	DIV. 26		102	DAIKIN	FXMQ30PBVJU	
8-DRY-9999-FCU	CONTROL ROOM	CONCEALED CEILING UNIT	50-HP03	1,140	DX	75	67	28,100	36,000	70	40,000	2.9	15	208	1	60	DIV. 26		102	DAIKIN	FXMQ36PBVJU	

VRV SPLIT SYSTEM OUTDOOR UNIT SCHEDULE

MARK	LOCATION	SERVES	AMB TEMP (°F)	NOMINAL CAPACITY (BTU/H)	HEATING AMBIENT (°F)	HEATING CAPACITY (BTU/H)	REFRIGERANT TYPE	ELECTRICAL DATA										WEIGHT (LBS)	BASIS OF DESIGN		NOTES
								CIRCUIT 1		CIRCUIT 2		CIRCUIT 3		V	PH	HZ	DISC. BY		MANUFACTURER	MODEL	
								MCA	MOCP	MCA	MOCP	MCA	MOCP								
8-DRY-9913-HP	ROOF	8-DRY-9919-FCU TO 8-DRY-9949-FCU	95	384,000	26	289,000	R-410A	25.9	35	20.6	25	20.6	25	460	3	60	DIV. 26	1,818	DAIKIN	RXYQ384TAYDU	1
8-DRY-9923-HP	ROOF	8-DRY-9959-FCU TO 8-DRY-9979-FCU	95	288,000	26	214,000	R-410A	25.9	35	25.9	35			460	3	60	DIV. 26	1,420	DAIKIN	RXYQ288TAYDU	1
8-DRY-9933-HP	ROOF	8-DRY-9989-FCU & 8-DRY-9999-FCU	95	72,000	26	71,140	R-410A	12.3	20					460	3	60	DIV. 26	451	DAIKIN	RXYQ72TAYDN	

NOTES:
1. PERFORMANCE INFORMATION IS FOR A COMBINATION OF INDEPENDENT UNITS. EACH CIRCUIT SHALL BE PROVIDED WITH A SEPARATE POWER CONNECTION. SEE ELECTRICAL DRAWINGS FOR CONNECTIONS.

DIFFUSER, REGISTER, AND GRILLE SCHEDULE

MARK	SERVES	TYPE	MOUNTING	MATERIAL	FINISH	NECK SIZE (IN.)	MAX APD (IN. WG.)	MAX NC AT PD SHOWN	BASIS OF DESIGN		NOTES
									MANUFACTURER	MODEL	
EA	EXHAUST AIR	3/4" SPACING, 45° DEFLECTION	DUCT	ALUMINUM	WHITE	SEE PLANS	0.1	30	PRICE	630DAL/S	1
EB	EXHAUST AIR	LOUVERED FACE RETURN	CEILING, LAY-IN	STEEL	WHITE	SEE PLANS	0.1	30	PRICE	530	1
RA	RETURN AIR	24 X 24 PERFORATED	CEILING, LAY-IN	ALUMINUM	WHITE	SEE PLANS	0.1	30	PRICE	APPDR	1
SA	SUPPLY AIR	DOUBLE DEFLECT REGISTER	DUCT	ALUMINUM	WHITE	SEE PLANS	0.1	30	PRICE	620DAL/S	1
SB	SUPPLY AIR	24 X 24 PLAQUE	CEILING, LAY-IN	ALUMINUM	WHITE	SEE PLANS	0.1	30	PRICE	ASPD	1
SC	SUPPLY AIR	LOUVERED FACE SUPPLY	CEILING, LAY-IN	STEEL	WHITE	SEE PLANS	0.1	30	PRICE	510	1

NOTES:
1. AIR TERMINAL DEVICES LOCATED IN LAY-IN CEILINGS SHALL HAVE 24"X24" FACE, ALL OTHER AIR TERMINALS FACE SIZE SHALL BE MINIMUM 1-1/4", MAXIMUM 2-1/4" LARGER THAN NECK SIZE IN EACH DIMENSION.

LOUVER SCHEDULE

MARK	TYPE	AREA SERVED	AIRFLOW (CFM)	VELOCITY (FPM)	MIN. FREE AREA (SQ. FT.)	MAX PRESSURE LOSS (IN. W.G.)	SIZE (INCHES)			BASIS OF DESIGN		NOTES
							WIDTH	HEIGHT	DEPTH	MANUFACTURER	MODEL	
50-LV02	STATIONARY (EXHAUST)	DRYER BUILDING	1,480	466	3.17	0.04	44	22	6	GREENHECK	EHH-601	
50-LV05	STATIONARY (EXHAUST)	EXISTING CONVEYOR ROOM (50-EF08)	9,900	759	12.99	0.13	72	54	6	GREENHECK	EHH-601	

THE DRAWINGS IN THIS SET ARE RECORD DRAWINGS. THEY ARE CONSTRUCTION CONTRACT DRAWINGS WHICH HAVE BEEN REVISED BASED ON AVAILABLE FIELD INFORMATION RECORDED BY OTHERS DURING CONSTRUCTION OF THIS CONTRACT. THERE HAS BEEN NO VERIFICATION OF DIMENSIONS SHOWN ON THE CONSTRUCTION DRAWINGS OR THE ACCURACY/COMPLETENESS OF THE FIELD INFORMATION RECEIVED.

SIGNATURE — DATE 2/7/2023

AS-BUILT REPLACEMENT SHEET

PROFESSIONAL CERTIFICATION
THIS DRAWING WAS ORIGINALLY APPROVED FOR CONSTRUCTION AND SEALED BY CHRISTOPHER S. WORK, A REGISTERED PROFESSIONAL ENGINEER IN THE STATE OF MARYLAND, NO. 50093

NOTICE TO CONTRACTORS
- PROJECT ELEVATIONS ARE BASED ON NAVD88 AND HOWARD COUNTY'S BENCHMARK SYSTEM
- PREVIOUS PROJECTS USED OTHER DATUMS
- APPLY THE FOLLOWING CONVERSIONS WHEN USING PREVIOUS CONTRACT DRAWINGS:
  - ADDITION NO. 6: SUBTRACT 0.80 FT
  - PRIOR ADDITIONS: SUBTRACT 1.04 FT

DEPARTMENT OF PUBLIC WORKS
HOWARD COUNTY, MARYLAND

CHIEF, BUREAU OF UTILITIES — DATE

DES: CSW
DRN: JCS
CHK: MDD
DATE: 10/2017

DATE	REV	DESCRIPTION
03/2021		RECORD DRAWINGS

HVAC

DRYER BUILDING HVAC SCHEDULES

LITTLE PATUXENT WATER RECLAMATION PLANT
8TH ADDITION
BIOSOLIDS PROCESSING FACILITIES - PHASE 2

CAPITAL PROJECT S-6295
CONTRACT NO. 24-4936

ELECTION DISTRICT NO. 6
HOWARD COUNTY, MARYLAND

SCALE AS SHOWN

SHEET 165 OF 311

H-903

BIM 360://10054364 – Little Patuxent WRP 8th Addition/284592_100_HP_V18.rvt
1/7/2022 3:03:16 PM

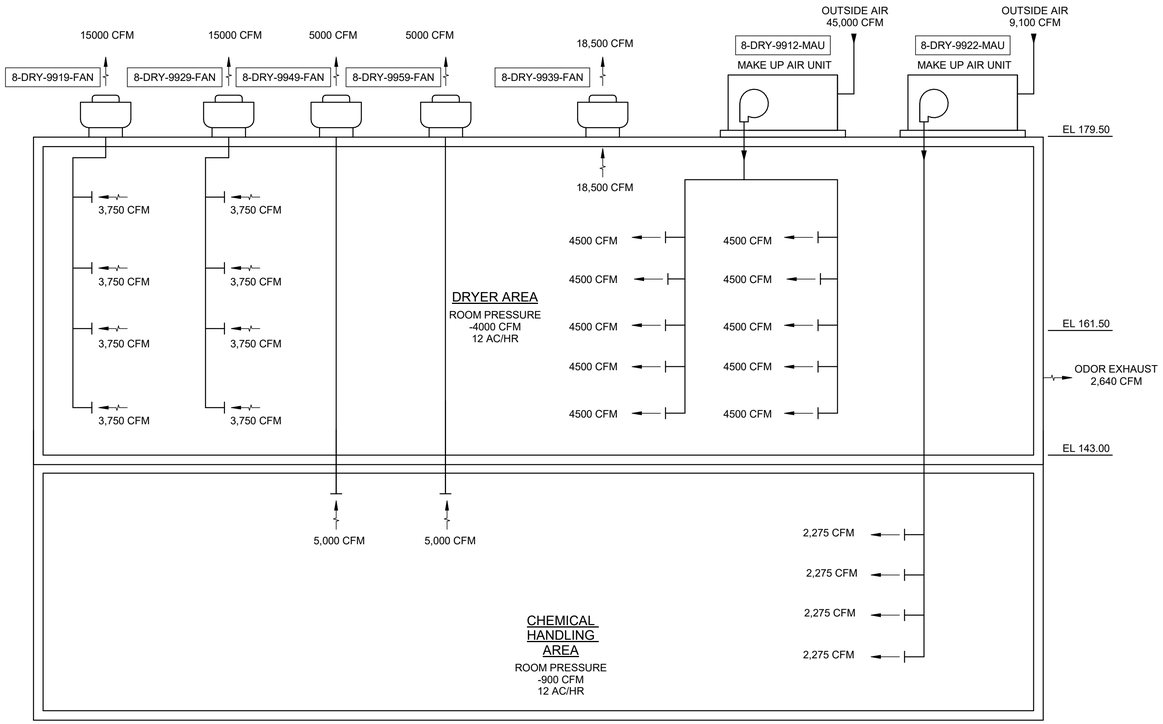

SERIES 500 - DRYER AREA

NOT TO SCALE

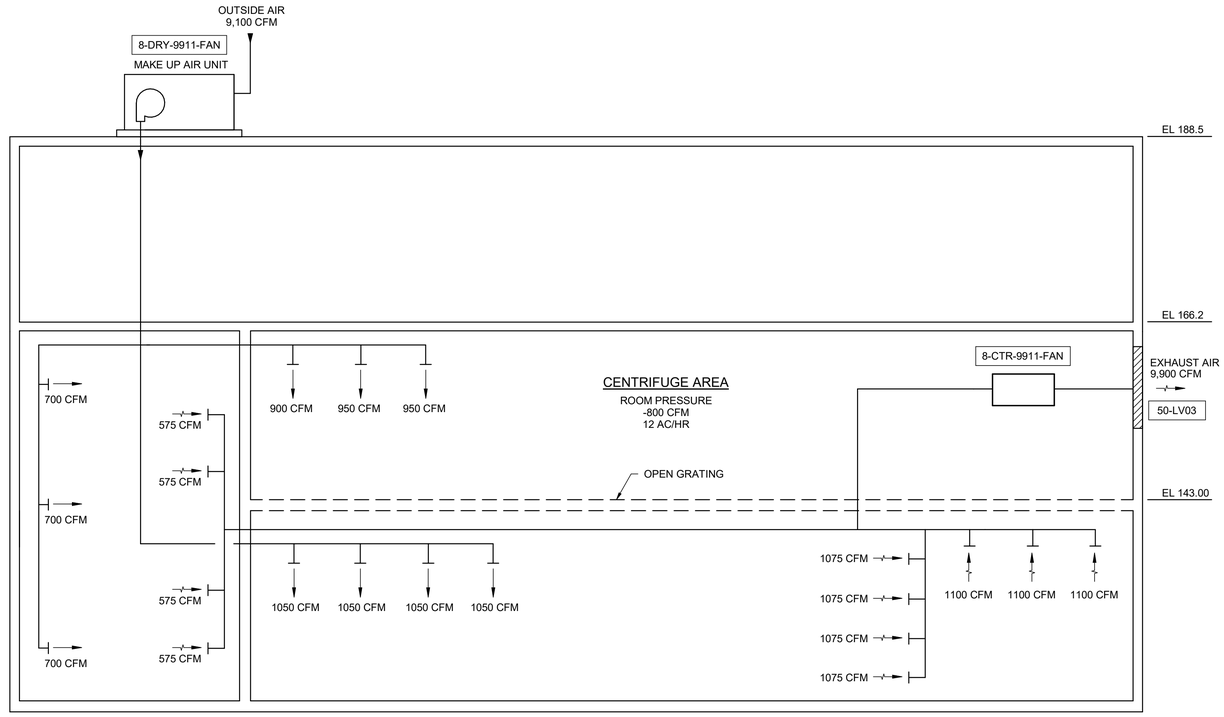

SERIES 500 - CENTRIFUGE AREA

NOT TO SCALE

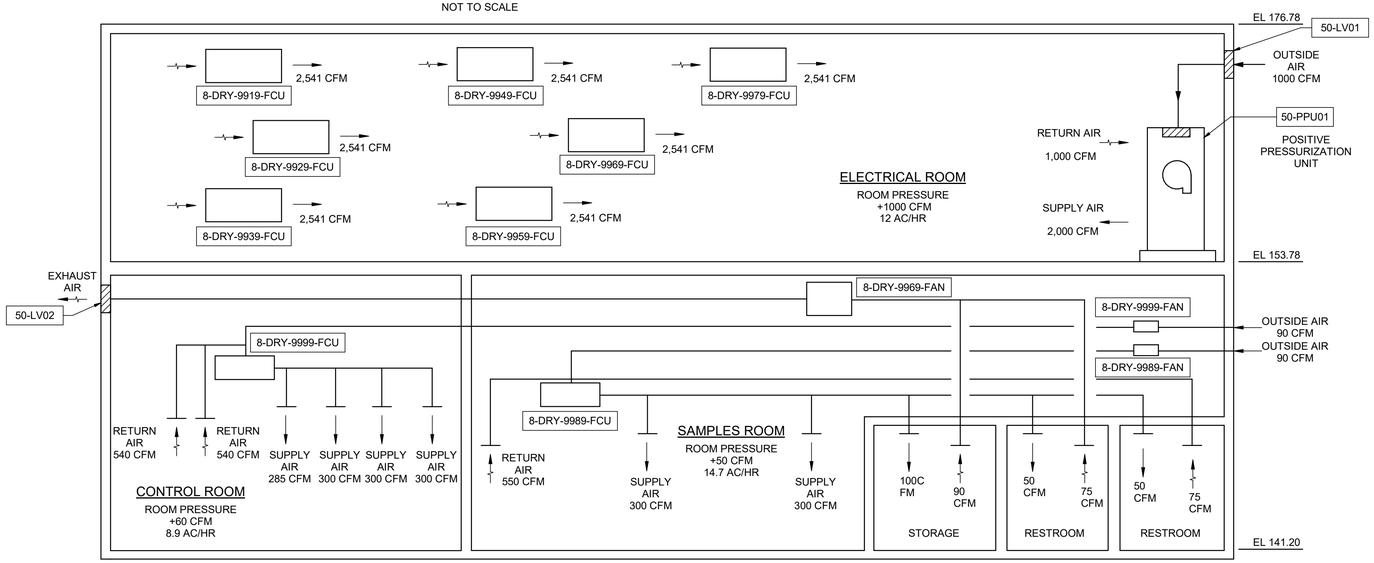

SERIES 500 - SAMPLES AND CONTROL ROOM

NOT TO SCALE

THE DRAWINGS IN THIS SET ARE RECORD DRAWINGS. THEY ARE CONSTRUCTION CONTRACT DRAWINGS WHICH HAVE BEEN REVISED BASED ON AVAILABLE FIELD INFORMATION RECORDED BY OTHERS DURING CONSTRUCTION OF THIS CONTRACT. THERE HAS BEEN NO VERIFICATION OF DIMENSIONS SHOWN ON THE CONSTRUCTION DRAWINGS OR THE ACCURACY/COMPLETENESS OF THE FIELD INFORMATION RECEIVED.

SIGNATURE — DATE 2/7/2023

AS-BUILT REPLACEMENT SHEET

PROFESSIONAL CERTIFICATION

THIS DRAWING WAS ORIGINALLY APPROVED FOR CONSTRUCTION AND SEALED BY CHRISTOPHER S. WORK, A REGISTERED PROFESSIONAL ENGINEER IN THE STATE OF MARYLAND, NO. 50093

NOTICE TO CONTRACTORS

- PROJECT ELEVATIONS ARE BASED ON NAVD88 AND HOWARD COUNTY'S BENCHMARK SYSTEM
- PREVIOUS PROJECTS USED OTHER DATUMS
- APPLY THE FOLLOWING CONVERSIONS WHEN USING PREVIOUS CONTRACT DRAWINGS:
  - ADDITION NO. 6: SUBTRACT 0.80 FT
  - PRIOR ADDITIONS: SUBTRACT 1.04 FT

DEPARTMENT OF PUBLIC WORKS
HOWARD COUNTY, MARYLAND

CHIEF, BUREAU OF UTILITIES — DATE

DES: CSW
DRN: JCS
CHK: MDD
DATE: 10/2017

DATE	REV	DESCRIPTION
03/2021		RECORD DRAWINGS

HVAC

DRYER BUILDING
HVAC AIRFLOW DIAGRAMS

LITTLE PATUXENT WATER RECLAMATION PLANT
8TH ADDITION
BIOSOLIDS PROCESSING FACILITIES - PHASE 2

CAPITAL PROJECT S-6295
CONTRACT NO. 24-4936

ELECTION DISTRICT NO. 6
HOWARD COUNTY, MARYLAND

SCALE
AS
SHOWN

SHEET
166 OF 311

H-904

BIM 360://10054364 – Little Patuxent WRP 8th Addition/264592_100_HP_V18.rvt
1/7/2022 3:03:17 PM

KEY NOTES ⟨X⟩

1 PROVIDE 8" DOWNSPOUT NOZZLE AT 24" ABOVE FINISHED GRADE LEVEL.

2 PROVIDE TRAP GUARDS ON ALL FLOOR DRAINS.

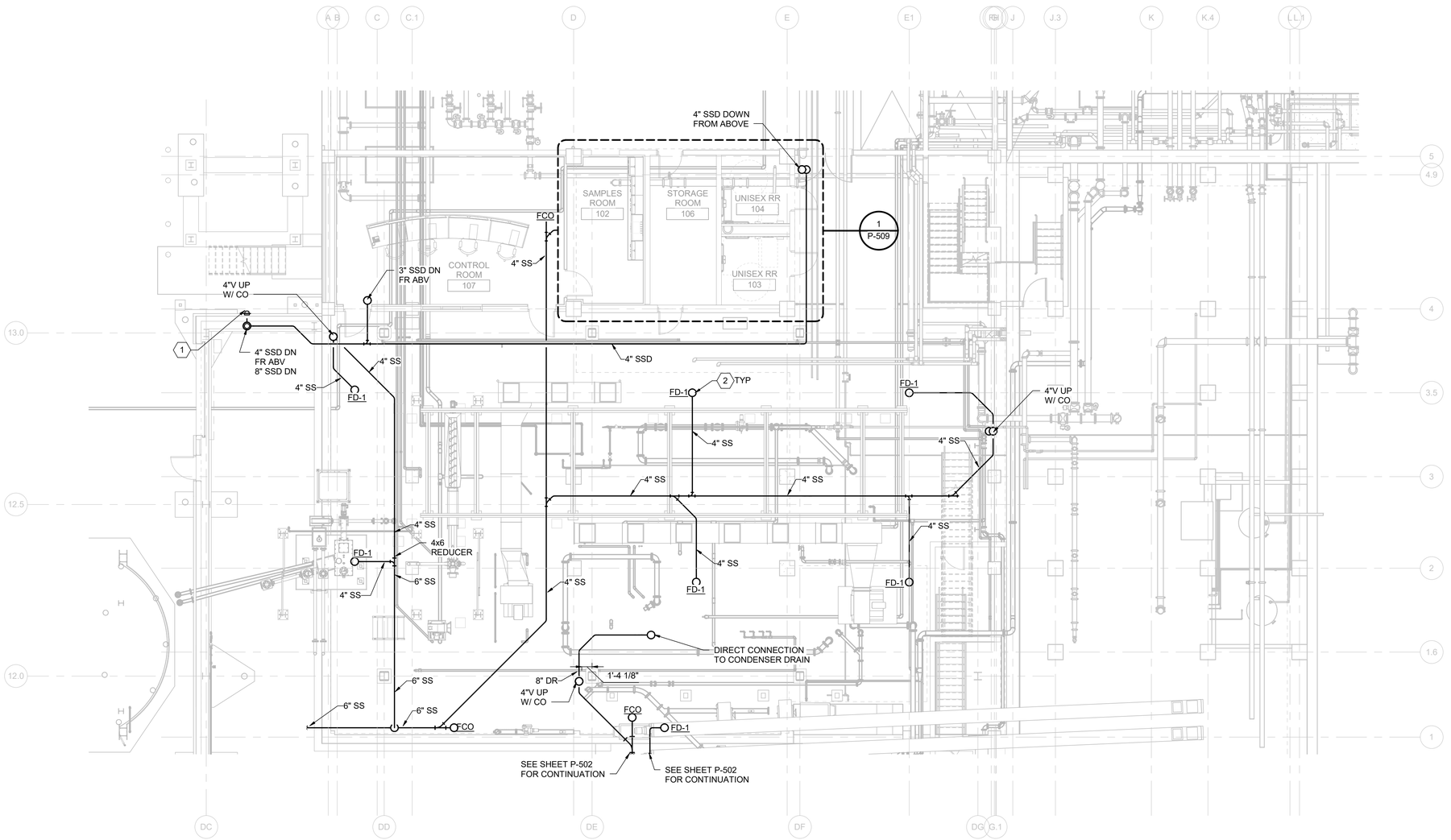

PLAN AT EL 141.20 - SOUTH

1/8" = 1'-0"

THE DRAWINGS IN THIS SET ARE RECORD DRAWINGS. THEY ARE CONSTRUCTION CONTRACT DRAWINGS WHICH HAVE BEEN REVISED BASED ON AVAILABLE FIELD INFORMATION RECORDED BY OTHERS DURING CONSTRUCTION OF THIS CONTRACT. THERE HAS BEEN NO VERIFICATION OF DIMENSIONS SHOWN ON THE CONSTRUCTION DRAWINGS OR THE ACCURACY/COMPLETENESS OF THE FIELD INFORMATION RECEIVED.

SIGNATURE — DATE 2/7/2023

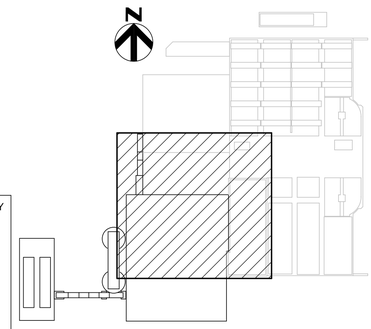

KEY PLAN

AS-BUILT REPLACEMENT SHEET

PROFESSIONAL CERTIFICATION
THIS DRAWING WAS ORIGINALLY APPROVED FOR CONSTRUCTION AND SEALED BY CHRISTOPHER S. WORK, A REGISTERED PROFESSIONAL ENGINEER IN THE STATE OF MARYLAND, NO. 50093

NOTICE TO CONTRACTORS
- PROJECT ELEVATIONS ARE BASED ON NAVD88 AND HOWARD COUNTY'S BENCHMARK SYSTEM
- PREVIOUS PROJECTS USED OTHER DATUMS
- APPLY THE FOLLOWING CONVERSIONS WHEN USING PREVIOUS CONTRACT DRAWINGS:
  - ADDITION NO. 6: SUBTRACT 0.80 FT
  - PRIOR ADDITIONS: SUBTRACT 1.04 FT

DEPARTMENT OF PUBLIC WORKS
HOWARD COUNTY, MARYLAND

CHIEF, BUREAU OF UTILITIES — DATE

DES: CSW
DRN: JCS
CHK: MDD
DATE: 10/2017

DATE	REV	DESCRIPTION
03/2021		RECORD DRAWINGS

PLUMBING

DRYER BUILDING
DRYER BUILDING WASTE AND VENT
PLAN AT EL 141.20 - NORTH

LITTLE PATUXENT WATER RECLAMATION PLANT
8TH ADDITION
BIOSOLIDS PROCESSING FACILITIES - PHASE 2

CAPITAL PROJECT S-6295
CONTRACT NO. 24-4936

ELECTION DISTRICT NO. 6
HOWARD COUNTY, MARYLAND

SCALE AS SHOWN

SHEET 167 OF 311

P-501

BIM 360://10054364 – Little Patuxent WRP 8th Addition/264592_100_HP_V18.rvt
1/7/2022 3:15:57 PM

KEY NOTES (X)

1 PROVIDE 6" DOWNSPOUT NOZZLE AT 24" ABOVE FINISHED GRADE LEVEL.

2 PROVIDE CLEANOUT IN VERTICAL.

3 PROVIDE TRAP GUARDS ON ALL FLOOR DRAINS.

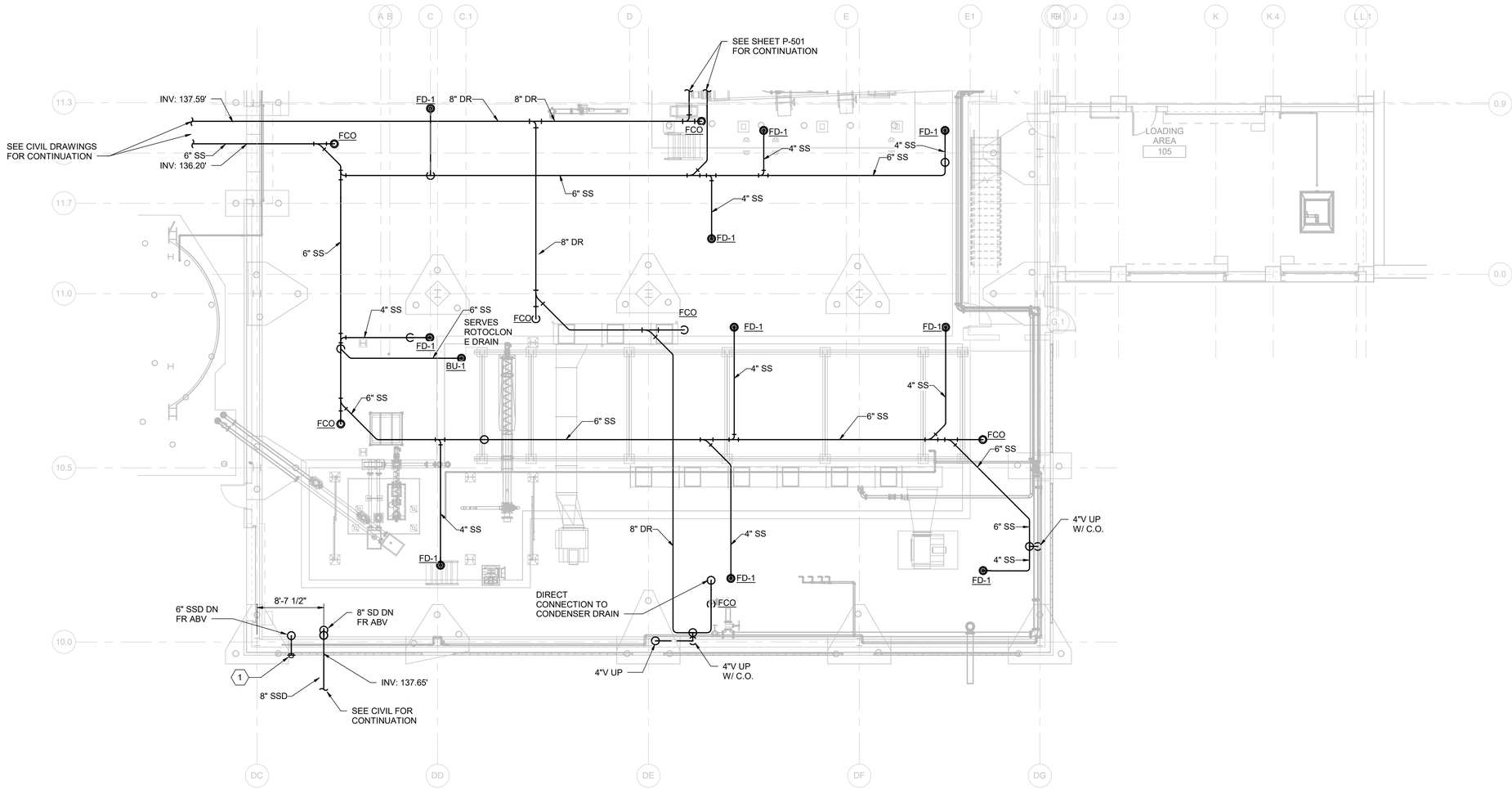

PLAN AT EL 141.20 - SOUTH

1/8" = 1'-0"

THE DRAWINGS IN THIS SET ARE RECORD DRAWINGS. THEY ARE CONSTRUCTION CONTRACT DRAWINGS WHICH HAVE BEEN REVISED BASED ON AVAILABLE FIELD INFORMATION RECORDED BY OTHERS DURING CONSTRUCTION OF THIS CONTRACT. THERE HAS BEEN NO VERIFICATION OF DIMENSIONS SHOWN ON THE CONSTRUCTION DRAWINGS OR THE ACCURACY/COMPLETENESS OF THE FIELD INFORMATION RECEIVED.

SIGNATURE 2/7/2023 DATE

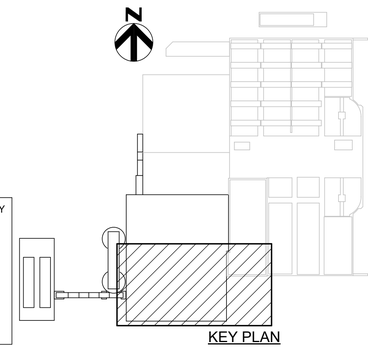

KEY PLAN

AS-BUILT REPLACEMENT SHEET

PROFESSIONAL CERTIFICATION
THIS DRAWING WAS ORIGINALLY APPROVED FOR CONSTRUCTION AND SEALED BY CHRISTOPHER S. WORK, A REGISTERED PROFESSIONAL ENGINEER IN THE STATE OF MARYLAND, NO. 50093

NOTICE TO CONTRACTORS
- PROJECT ELEVATIONS ARE BASED ON NAVD88 AND HOWARD COUNTY'S BENCHMARK SYSTEM
- PREVIOUS PROJECTS USED OTHER DATUMS
- APPLY THE FOLLOWING CONVERSIONS WHEN USING PREVIOUS CONTRACT DRAWINGS:
  - ADDITION NO. 6: SUBTRACT 0.80 FT
  - PRIOR ADDITIONS: SUBTRACT 1.04 FT

DEPARTMENT OF PUBLIC WORKS
HOWARD COUNTY, MARYLAND

CHIEF, BUREAU OF UTILITIES DATE

DES: CSW
DRN: JCS
CHK: MDD
DATE: 10/2017

DATE	REV	DESCRIPTION
03/2021		RECORD DRAWINGS

PLUMBING

DRYER BUILDING
DRYER BUILDING WASTE AND VENT
PLAN AT EL 141.20 - SOUTH

LITTLE PATUXENT WATER RECLAMATION PLANT
8TH ADDITION
BIOSOLIDS PROCESSING FACILITIES - PHASE 2

CAPITAL PROJECT S-6295
CONTRACT NO. 24-4936

ELECTION DISTRICT NO. 6
HOWARD COUNTY, MARYLAND

SCALE AS SHOWN

SHEET 168 OF 311

P-502

BIM 360://10054364 – Little Patuxent WRP 8th Addition/284592_100_HP_V18.rvt
1/7/2022 3:16:03 PM

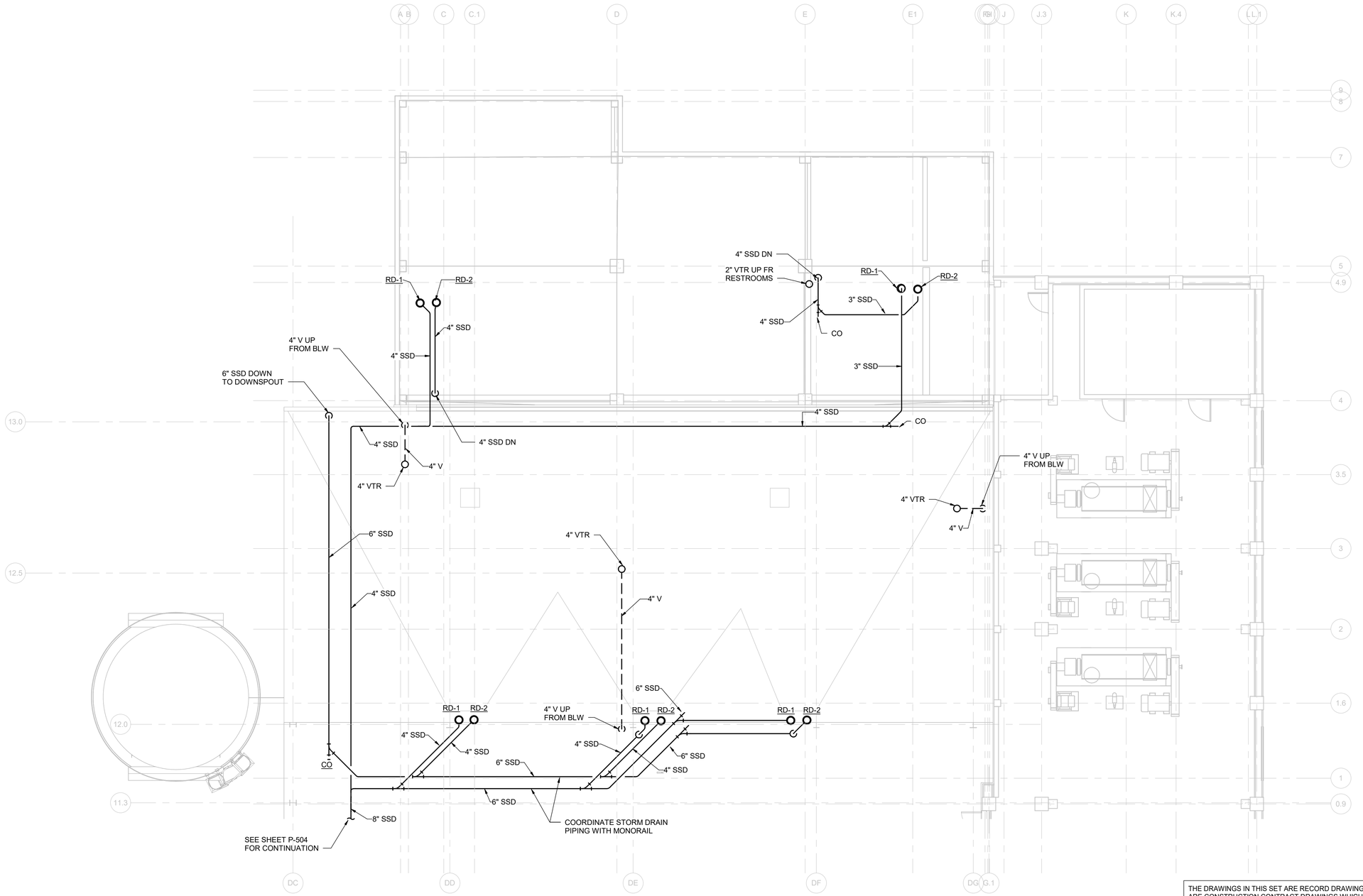

ROOF PLAN - NORTH

1/8" = 1'-0"

THE DRAWINGS IN THIS SET ARE RECORD DRAWINGS. THEY ARE CONSTRUCTION CONTRACT DRAWINGS WHICH HAVE BEEN REVISED BASED ON AVAILABLE FIELD INFORMATION RECORDED BY OTHERS DURING CONSTRUCTION OF THIS CONTRACT. THERE HAS BEEN NO VERIFICATION OF DIMENSIONS SHOWN ON THE CONSTRUCTION DRAWINGS OR THE ACCURACY/COMPLETENESS OF THE FIELD INFORMATION RECEIVED.

SIGNATURE _____ DATE 2/7/2023

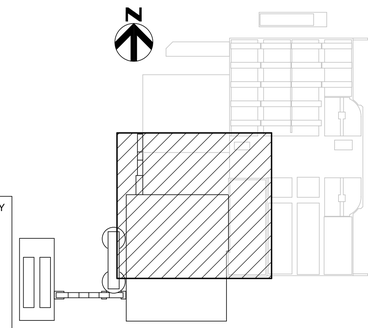

KEY PLAN

AS-BUILT REPLACEMENT SHEET

PROFESSIONAL CERTIFICATION
THIS DRAWING WAS ORIGINALLY APPROVED FOR CONSTRUCTION AND SEALED BY CHRISTOPHER S. WORK, A REGISTERED PROFESSIONAL ENGINEER IN THE STATE OF MARYLAND, NO. 50093

NOTICE TO CONTRACTORS
- PROJECT ELEVATIONS ARE BASED ON NAVD88 AND HOWARD COUNTY'S BENCHMARK SYSTEM
- PREVIOUS PROJECTS USED OTHER DATUMS
- APPLY THE FOLLOWING CONVERSIONS WHEN USING PREVIOUS CONTRACT DRAWINGS:
  - ADDITION NO. 6: SUBTRACT 0.80 FT
  - PRIOR ADDITIONS: SUBTRACT 1.04 FT

DEPARTMENT OF PUBLIC WORKS
HOWARD COUNTY, MARYLAND

CHIEF, BUREAU OF UTILITIES DATE

DES: CSW
DRN: JCS
CHK: MDD
DATE: 10/2017

DATE	REV	DESCRIPTION
03/2021		RECORD DRAWINGS

PLUMBING

DRYER BUILDING
DRYER BUILDING WASTE AND VENT
PLAN AT EL ROOF - NORTH

LITTLE PATUXENT WATER RECLAMATION PLANT
8TH ADDITION
BIOSOLIDS PROCESSING FACILITIES - PHASE 2

CAPITAL PROJECT S-6295
CONTRACT NO. 24-4936

ELECTION DISTRICT NO. 6
HOWARD COUNTY, MARYLAND

SCALE AS SHOWN

SHEET 169 OF 311

P-503

BIM 360://10054364 – Little Patuxent WRP 8th Addition/264592_100_HP_V18.rvt
1/7/2022 3:16:07 PM

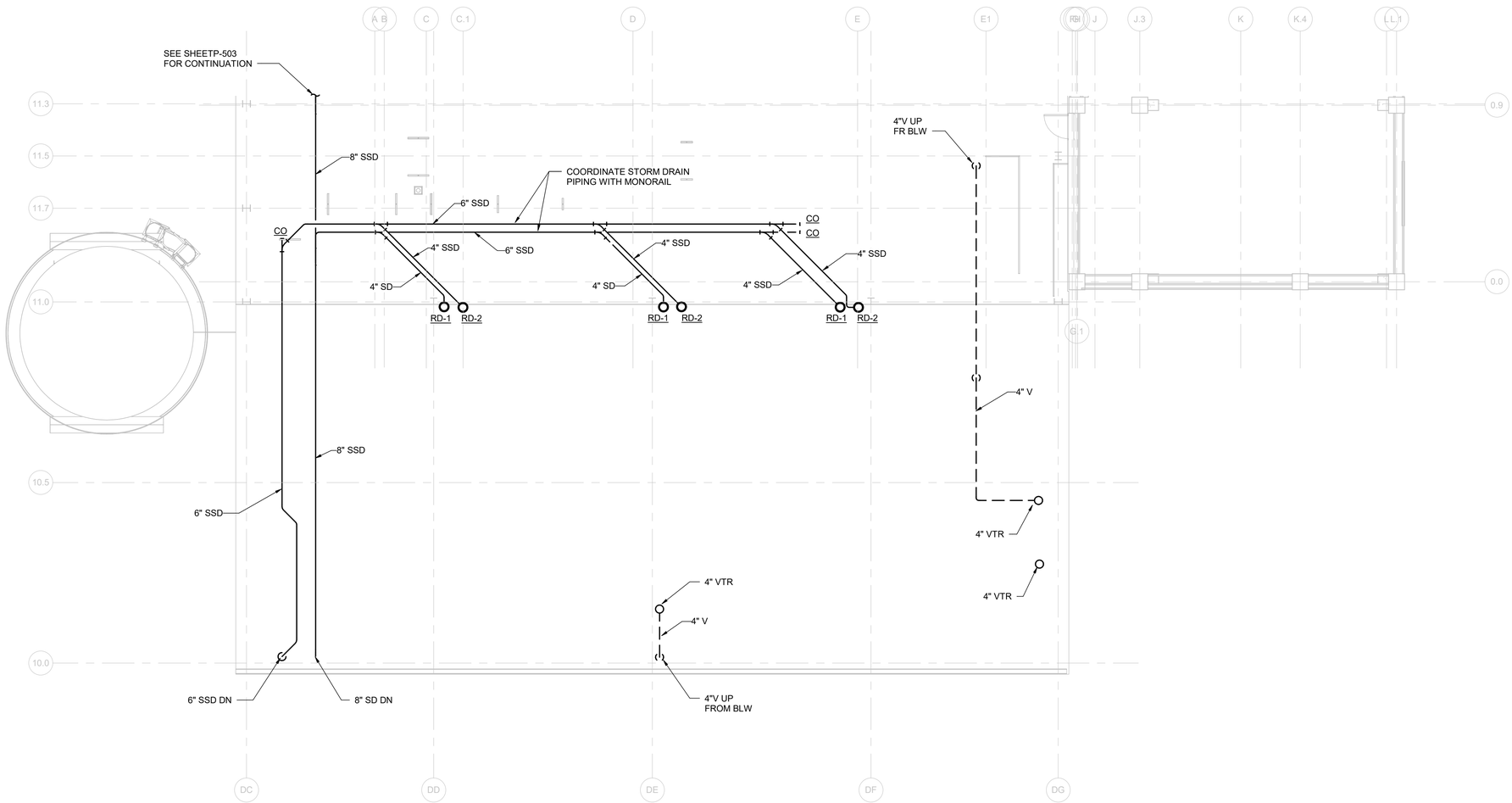

ROOF PLAN - SOUTH

1/8" = 1'-0"

THE DRAWINGS IN THIS SET ARE RECORD DRAWINGS. THEY ARE CONSTRUCTION CONTRACT DRAWINGS WHICH HAVE BEEN REVISED BASED ON AVAILABLE FIELD INFORMATION RECORDED BY OTHERS DURING CONSTRUCTION OF THIS CONTRACT. THERE HAS BEEN NO VERIFICATION OF DIMENSIONS SHOWN ON THE CONSTRUCTION DRAWINGS OR THE ACCURACY/COMPLETENESS OF THE FIELD INFORMATION RECEIVED.

SIGNATURE — DATE 2/7/2022

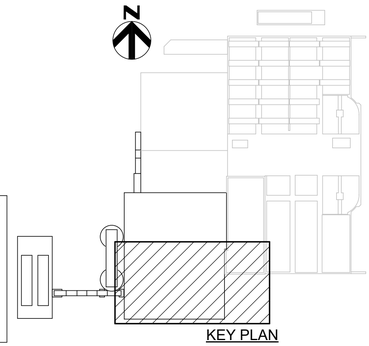

KEY PLAN

AS-BUILT REPLACEMENT SHEET

PROFESSIONAL CERTIFICATION
THIS DRAWING WAS ORIGINALLY APPROVED FOR CONSTRUCTION AND SEALED BY CHRISTOPHER S. WORK, A REGISTERED PROFESSIONAL ENGINEER IN THE STATE OF MARYLAND, NO. 50093

NOTICE TO CONTRACTORS
- PROJECT ELEVATIONS ARE BASED ON NAVD88 AND HOWARD COUNTY'S BENCHMARK SYSTEM
- PREVIOUS PROJECTS USED OTHER DATUMS
- APPLY THE FOLLOWING CONVERSIONS WHEN USING PREVIOUS CONTRACT DRAWINGS:
  - ADDITION NO. 6: SUBTRACT 0.80 FT
  - PRIOR ADDITIONS: SUBTRACT 1.04 FT

DEPARTMENT OF PUBLIC WORKS
HOWARD COUNTY, MARYLAND

CHIEF, BUREAU OF UTILITIES — DATE

DES: CSW
DRN: JCS
CHK: MDD
DATE: 10/2017

DATE	REV	DESCRIPTION
03/2021		RECORD DRAWINGS

PLUMBING

DRYER BUILDING
DRYER BUILDING WASTE AND VENT
PLAN AT EL ROOF - SOUTH

LITTLE PATUXENT WATER RECLAMATION PLANT
8TH ADDITION
BIOSOLIDS PROCESSING FACILITIES - PHASE 2

CAPITAL PROJECT S-6295
CONTRACT NO. 24-4936

ELECTION DISTRICT NO. 6
HOWARD COUNTY, MARYLAND

SCALE
AS SHOWN

SHEET
170 OF 311

P-504

BIM 360://10054364 – Little Patuxent WRP 8th Addition/264592_100_HP_V18.rvt
1/7/2022 3:16:11 PM

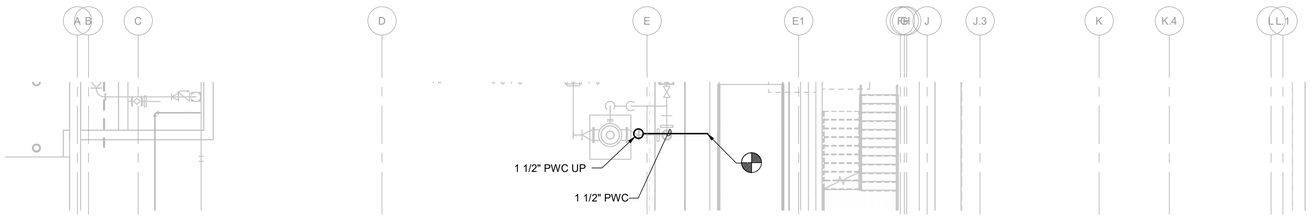

PLAN AT EL 141.20 - PARTIAL

1/8" = 1'-0"

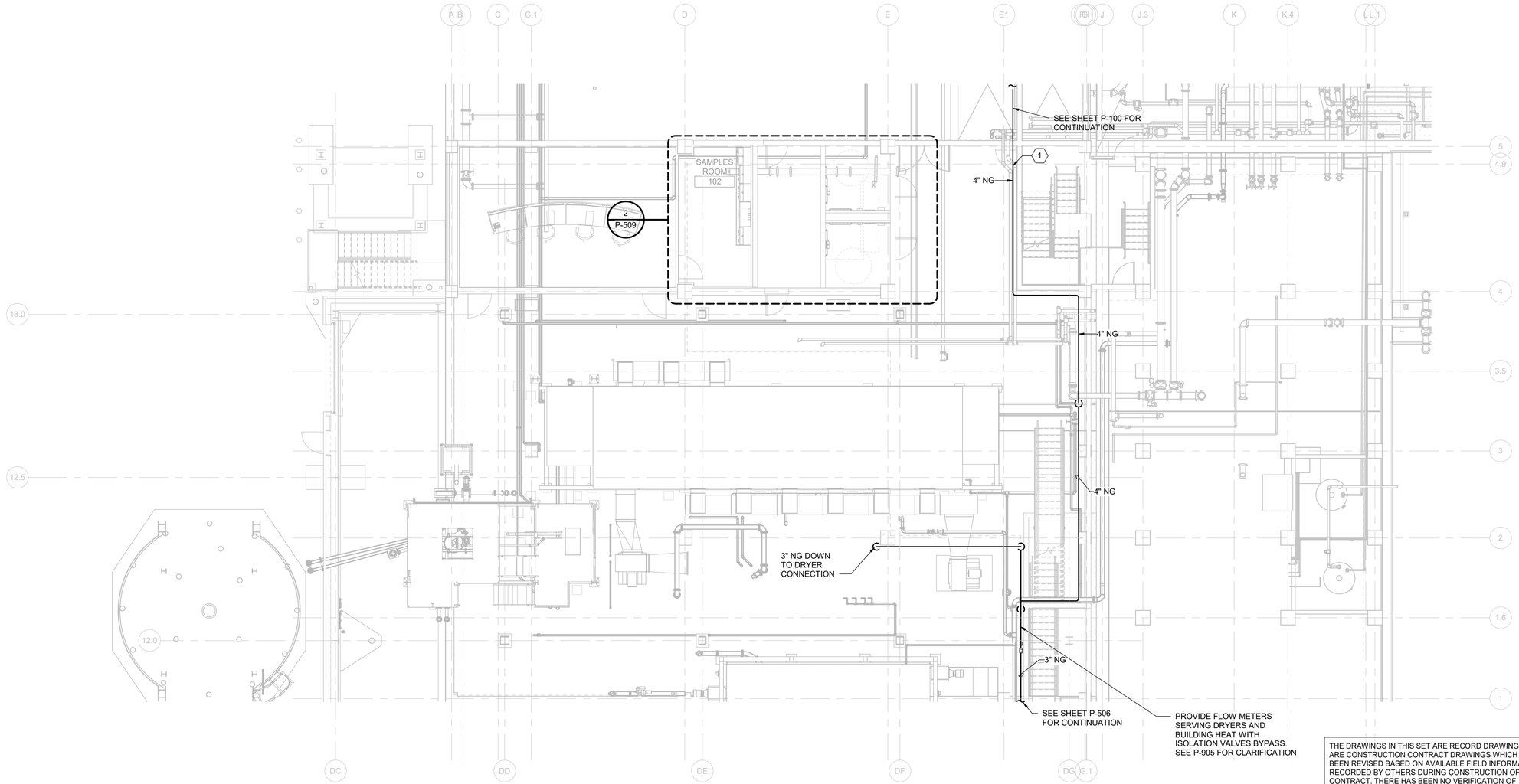

PLAN AT EL 141.20 - NORTH

1/8" = 1'-0"

KEYNOTE (X)

1. ROUTE 4" NATURAL GAS CLOSE TO WALL.

THE DRAWINGS IN THIS SET ARE RECORD DRAWINGS. THEY ARE CONSTRUCTION CONTRACT DRAWINGS WHICH HAVE BEEN REVISED BASED ON AVAILABLE FIELD INFORMATION RECORDED BY OTHERS DURING CONSTRUCTION OF THIS CONTRACT. THERE HAS BEEN NO VERIFICATION OF DIMENSIONS SHOWN ON THE CONSTRUCTION DRAWINGS OR THE ACCURACY/COMPLETENESS OF THE FIELD INFORMATION RECEIVED.

SIGNATURE — DATE 2/7/2023

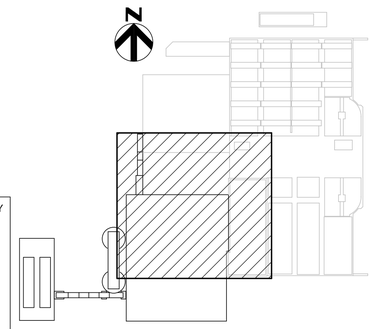

KEY PLAN

AS-BUILT REPLACEMENT SHEET

PROFESSIONAL CERTIFICATION
THIS DRAWING WAS ORIGINALLY APPROVED FOR CONSTRUCTION AND SEALED BY CHRISTOPHER S. WORK, A REGISTERED PROFESSIONAL ENGINEER IN THE STATE OF MARYLAND, NO. 50093

NOTICE TO CONTRACTORS
- PROJECT ELEVATIONS ARE BASED ON NAVD88 AND HOWARD COUNTY'S BENCHMARK SYSTEM
- PREVIOUS PROJECTS USED OTHER DATUMS
- APPLY THE FOLLOWING CONVERSIONS WHEN USING PREVIOUS CONTRACT DRAWINGS:
  - ADDITION NO. 6: SUBTRACT 0.80 FT
  - PRIOR ADDITIONS: SUBTRACT 1.04 FT

DEPARTMENT OF PUBLIC WORKS
HOWARD COUNTY, MARYLAND

CHIEF, BUREAU OF UTILITIES — DATE

DES: CSW
DRN: JCS
CHK: MDD
DATE: 10/2017

DATE	REV	DESCRIPTION
03/2021		RECORD DRAWINGS

PLUMBING

DRYER BUILDING SUPPLY PLAN AT EL 125.2 & EL 141.20 - NORTH

LITTLE PATUXENT WATER RECLAMATION PLANT
8TH ADDITION
BIOSOLIDS PROCESSING FACILITIES - PHASE 2

CAPITAL PROJECT S-6295
CONTRACT NO. 24-4936

ELECTION DISTRICT NO. 6
HOWARD COUNTY, MARYLAND

SCALE AS SHOWN

SHEET 171 OF 311

P-505

BIM 360://10054364 – Little Patuxent WRP 8th Addition/264592_100_HP_V18.rvt
1/7/2022 3:16:23 PM

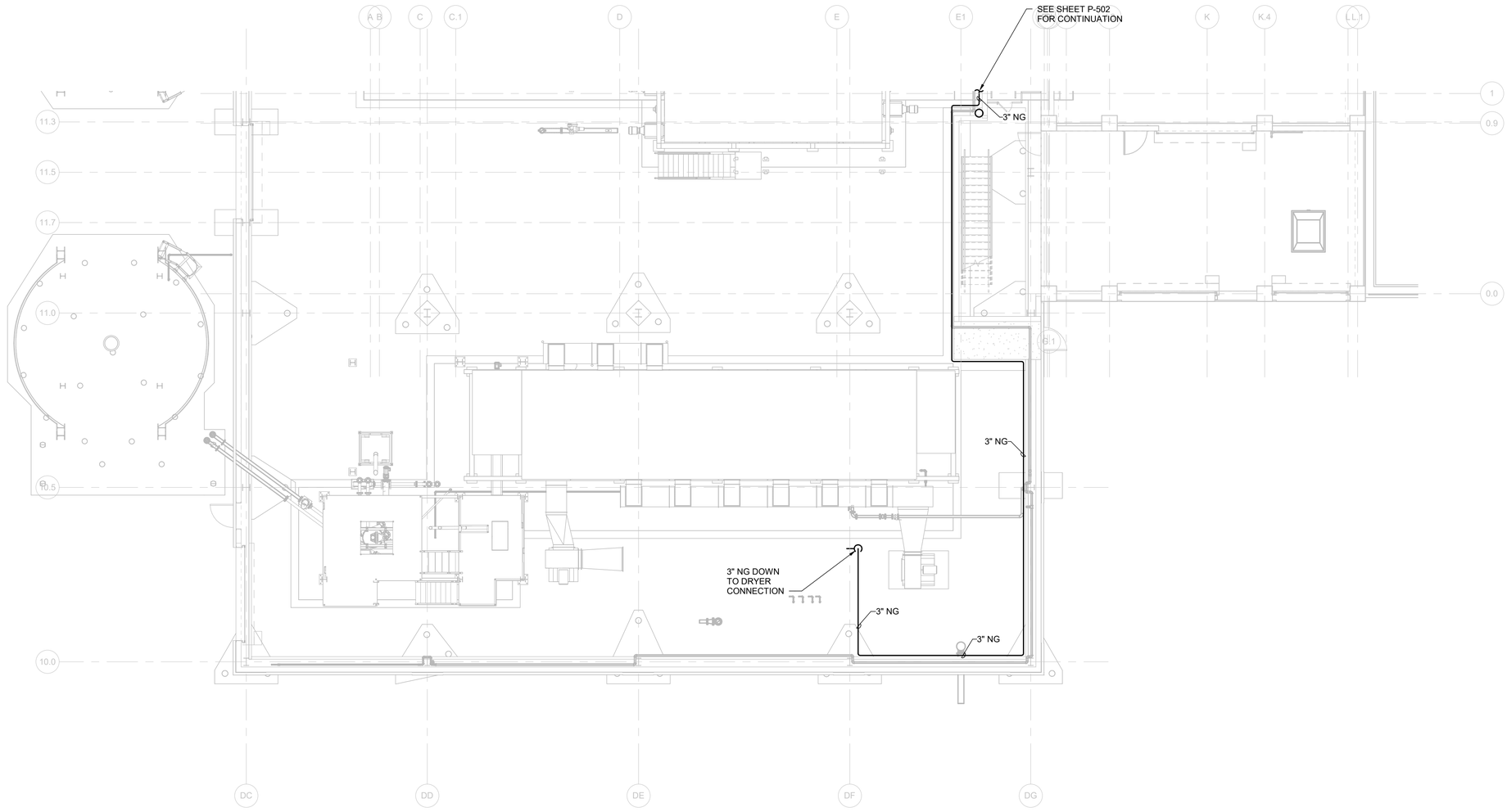

PLAN AT EL 141.20 - SOUTH

1/8" = 1'-0"

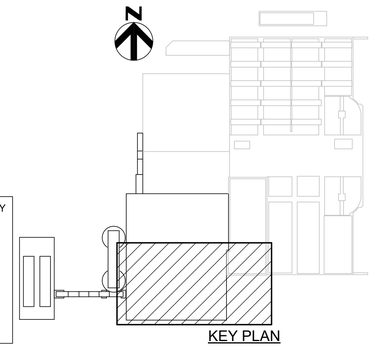

KEY PLAN

THE DRAWINGS IN THIS SET ARE RECORD DRAWINGS. THEY ARE CONSTRUCTION CONTRACT DRAWINGS WHICH HAVE BEEN REVISED BASED ON AVAILABLE FIELD INFORMATION RECORDED BY OTHERS DURING CONSTRUCTION OF THIS CONTRACT. THERE HAS BEEN NO VERIFICATION OF DIMENSIONS SHOWN ON THE CONSTRUCTION DRAWINGS OR THE ACCURACY/COMPLETENESS OF THE FIELD INFORMATION RECEIVED.

SIGNATURE

2/7/2023
DATE

AS-BUILT REPLACEMENT SHEET

PROFESSIONAL CERTIFICATION

THIS DRAWING WAS ORIGINALLY APPROVED FOR CONSTRUCTION AND SEALED BY CHRISTOPHER S. WORK, A REGISTERED PROFESSIONAL ENGINEER IN THE STATE OF MARYLAND, NO. 50093

NOTICE TO CONTRACTORS

- PROJECT ELEVATIONS ARE BASED ON NAVD88 AND HOWARD COUNTY'S BENCHMARK SYSTEM
- PREVIOUS PROJECTS USED OTHER DATUMS
- APPLY THE FOLLOWING CONVERSIONS WHEN USING PREVIOUS CONTRACT DRAWINGS:
  - ADDITION NO. 6: SUBTRACT 0.80 FT
  - PRIOR ADDITIONS: SUBTRACT 1.04 FT

DEPARTMENT OF PUBLIC WORKS
HOWARD COUNTY, MARYLAND

CHIEF, BUREAU OF UTILITIES DATE

DES: CSW
DRN: JCS
CHK: MDD
DATE: 10/2017

DATE	REV	DESCRIPTION
03/2021		RECORD DRAWINGS

PLUMBING

DRYER BUILDING
SUPPLY PLAN AT EL 141.20 - SOUTH

LITTLE PATUXENT WATER RECLAMATION PLANT
8TH ADDITION
BIOSOLIDS PROCESSING FACILITIES - PHASE 2

CAPITAL PROJECT S-6295
CONTRACT NO. 24-4936

ELECTION DISTRICT NO. 6
HOWARD COUNTY, MARYLAND

SCALE AS SHOWN

SHEET 172 OF 311

P-506

BIM 360://10054364 – Little Patuxent WRP 8th Addition/264592_100_HP_V18.rvt
1/7/2022 3:16:34 PM

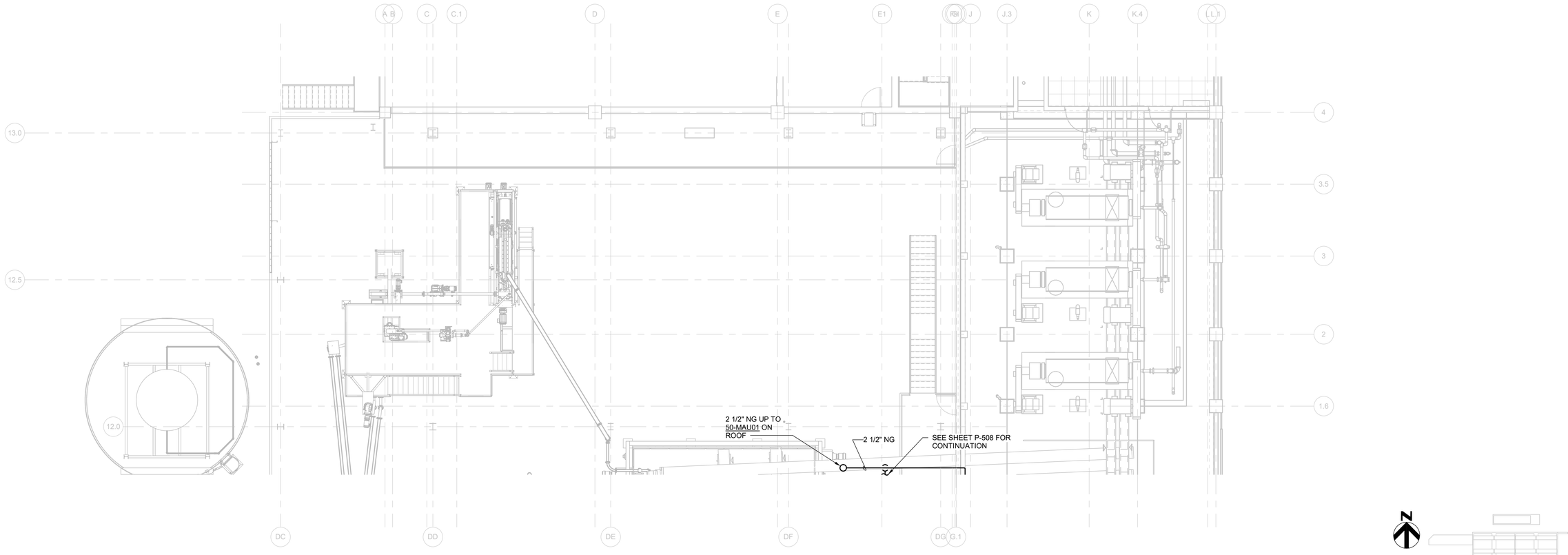

PLAN AT EL 155.20 - NORTH

1/8" = 1'-0"

THE DRAWINGS IN THIS SET ARE RECORD DRAWINGS. THEY ARE CONSTRUCTION CONTRACT DRAWINGS WHICH HAVE BEEN REVISED BASED ON AVAILABLE FIELD INFORMATION RECORDED BY OTHERS DURING CONSTRUCTION OF THIS CONTRACT. THERE HAS BEEN NO VERIFICATION OF DIMENSIONS SHOWN ON THE CONSTRUCTION DRAWINGS OR THE ACCURACY/COMPLETENESS OF THE FIELD INFORMATION RECEIVED.

SIGNATURE — DATE 2/7/2022

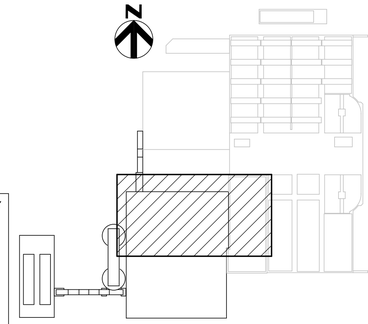

KEY PLAN

AS-BUILT REPLACEMENT SHEET

PROFESSIONAL CERTIFICATION

THIS DRAWING WAS ORIGINALLY APPROVED FOR CONSTRUCTION AND SEALED BY CHRISTOPHER S. WORK, A REGISTERED PROFESSIONAL ENGINEER IN THE STATE OF MARYLAND, NO. 50093

NOTICE TO CONTRACTORS

- PROJECT ELEVATIONS ARE BASED ON NAVD88 AND HOWARD COUNTY'S BENCHMARK SYSTEM
- PREVIOUS PROJECTS USED OTHER DATUMS
- APPLY THE FOLLOWING CONVERSIONS WHEN USING PREVIOUS CONTRACT DRAWINGS:
  - ADDITION NO. 6: SUBTRACT 0.80 FT
  - PRIOR ADDITIONS: SUBTRACT 1.04 FT

DEPARTMENT OF PUBLIC WORKS
HOWARD COUNTY, MARYLAND

CHIEF, BUREAU OF UTILITIES — DATE

DES: CSW
DRN: JCS
CHK: MDD
DATE: 10/2017

DATE	REV	DESCRIPTION
03/2021		RECORD DRAWINGS

PLUMBING

DRYER BUILDING
SUPPLY PLAN AT EL 155.20 - NORTH

LITTLE PATUXENT WATER RECLAMATION PLANT
8TH ADDITION
BIOSOLIDS PROCESSING FACILITIES - PHASE 2

CAPITAL PROJECT S-6295
CONTRACT NO. 24-4936

ELECTION DISTRICT NO. 6
HOWARD COUNTY, MARYLAND

SCALE AS SHOWN

SHEET 173 OF 311

P-507

BIM 360://10054364 – Little Patuxent WRP 8th Addition/264592_100_HP_V18.rvt
1/7/2022 3:16:51 PM

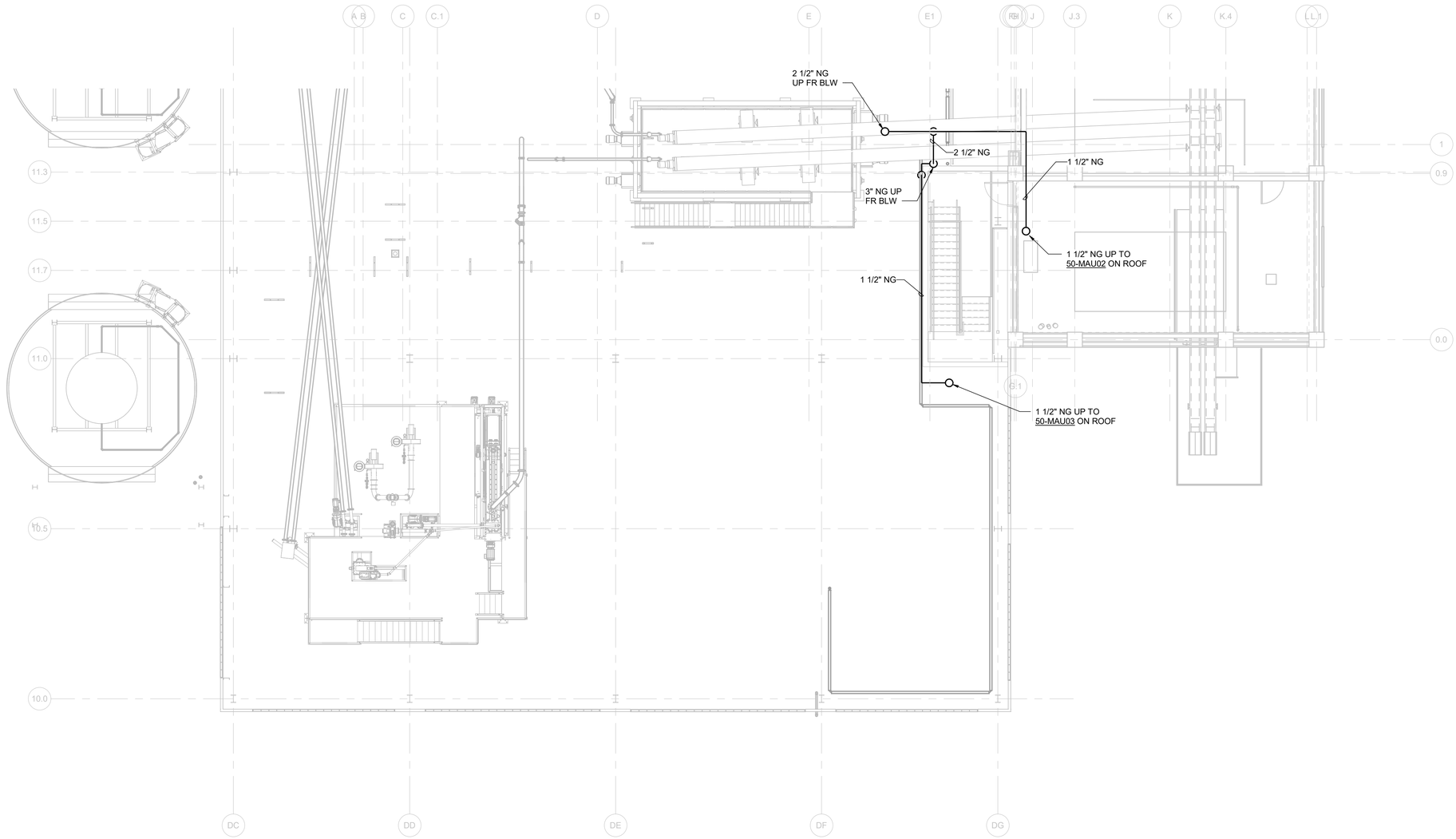

PLAN AT EL 155.20 - SOUTH

1/8" = 1'-0"

THE DRAWINGS IN THIS SET ARE RECORD DRAWINGS. THEY ARE CONSTRUCTION CONTRACT DRAWINGS WHICH HAVE BEEN REVISED BASED ON AVAILABLE FIELD INFORMATION RECORDED BY OTHERS DURING CONSTRUCTION OF THIS CONTRACT. THERE HAS BEEN NO VERIFICATION OF DIMENSIONS SHOWN ON THE CONSTRUCTION DRAWINGS OR THE ACCURACY/COMPLETENESS OF THE FIELD INFORMATION RECEIVED.

SIGNATURE

2/7/2023
DATE

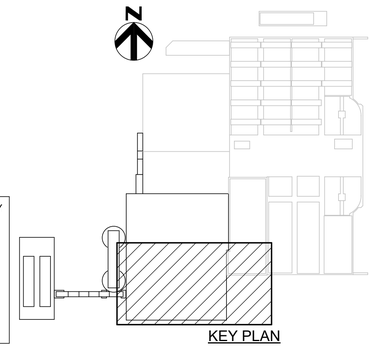

KEY PLAN

AS-BUILT REPLACEMENT SHEET

PROFESSIONAL CERTIFICATION

THIS DRAWING WAS ORIGINALLY APPROVED FOR CONSTRUCTION AND SEALED BY CHRISTOPHER S. WORK, A REGISTERED PROFESSIONAL ENGINEER IN THE STATE OF MARYLAND, NO. 50093

NOTICE TO CONTRACTORS

- PROJECT ELEVATIONS ARE BASED ON NAVD88 AND HOWARD COUNTY'S BENCHMARK SYSTEM
- PREVIOUS PROJECTS USED OTHER DATUMS
- APPLY THE FOLLOWING CONVERSIONS WHEN USING PREVIOUS CONTRACT DRAWINGS:
  - ADDITION NO. 6: SUBTRACT 0.80 FT
  - PRIOR ADDITIONS: SUBTRACT 1.04 FT

DEPARTMENT OF PUBLIC WORKS
HOWARD COUNTY, MARYLAND

CHIEF, BUREAU OF UTILITIES DATE

DES: CSW
DRN: JCS
CHK: MDD
DATE: 10/2017

DATE	REV	DESCRIPTION
03/2021		RECORD DRAWINGS

PLUMBING

DRYER BUILDING
SUPPLY PLAN AT EL 155.20 - SOUTH

LITTLE PATUXENT WATER RECLAMATION PLANT
8TH ADDITION
BIOSOLIDS PROCESSING FACILITIES - PHASE 2

CAPITAL PROJECT S-6295
CONTRACT NO. 24-4936

ELECTION DISTRICT NO. 6
HOWARD COUNTY, MARYLAND

SCALE AS SHOWN

SHEET 174 OF 311

P-508

BIM 360://10054364 – Little Patuxent WRP 8th Addition/264592_100_HP_V18.rvt
1/7/2022 3:17:13 PM

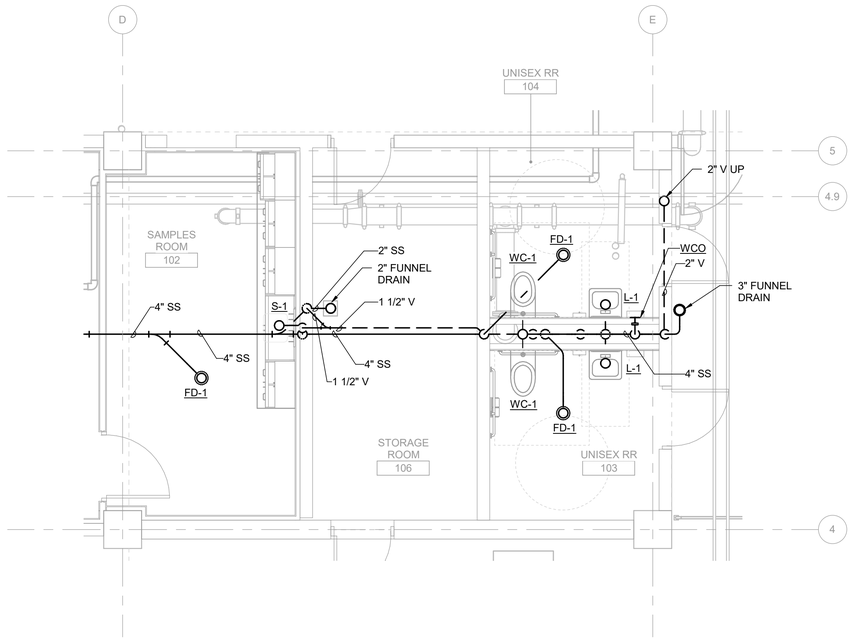

1 P-501 ENLARGED WASTE AND VENT PLAN AT EL 141.20

1/4" = 1'-0"

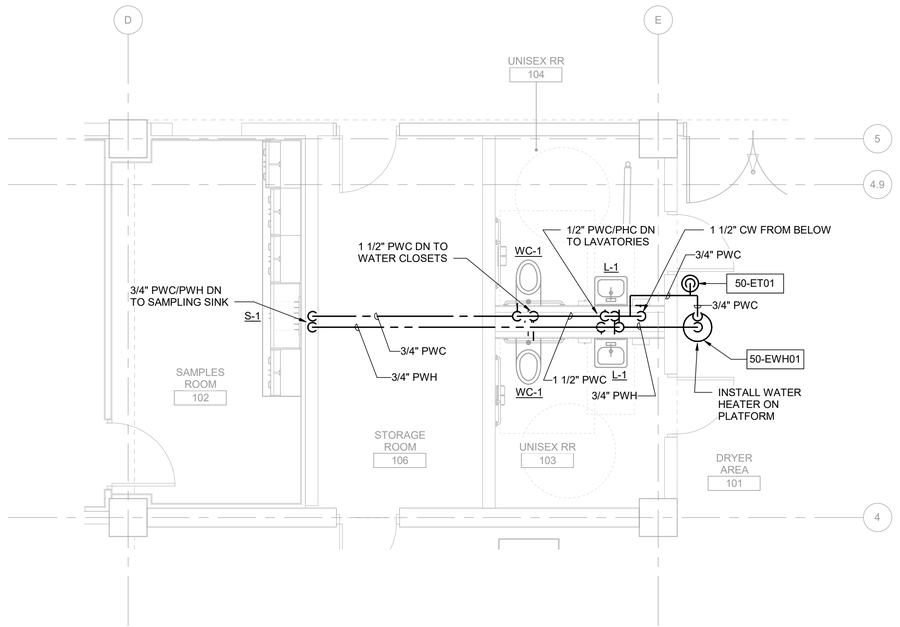

2 P-505 ENLARGED SUPPLY PLAN AT EL 141.20

1/4" = 1'-0"

THE DRAWINGS IN THIS SET ARE RECORD DRAWINGS. THEY ARE CONSTRUCTION CONTRACT DRAWINGS WHICH HAVE BEEN REVISED BASED ON AVAILABLE FIELD INFORMATION RECORDED BY OTHERS DURING CONSTRUCTION OF THIS CONTRACT. THERE HAS BEEN NO VERIFICATION OF DIMENSIONS SHOWN ON THE CONSTRUCTION DRAWINGS OR THE ACCURACY/COMPLETENESS OF THE FIELD INFORMATION RECEIVED.

SIGNATURE DATE

AS-BUILT REPLACEMENT SHEET

PROFESSIONAL CERTIFICATION

THIS DRAWING WAS ORIGINALLY APPROVED FOR CONSTRUCTION AND SEALED BY CHRISTOPHER S. WORK, A REGISTERED PROFESSIONAL ENGINEER IN THE STATE OF MARYLAND, NO. 50093

NOTICE TO CONTRACTORS

- PROJECT ELEVATIONS ARE BASED ON NAVD88 AND HOWARD COUNTY'S BENCHMARK SYSTEM
- PREVIOUS PROJECTS USED OTHER DATUMS
- APPLY THE FOLLOWING CONVERSIONS WHEN USING PREVIOUS CONTRACT DRAWINGS:
  - ADDITION NO. 6: SUBTRACT 0.80 FT
  - PRIOR ADDITIONS: SUBTRACT 1.04 FT

DEPARTMENT OF PUBLIC WORKS
HOWARD COUNTY, MARYLAND

CHIEF, BUREAU OF UTILITIES DATE

DES: CSW
DRN: JCS
CHK: MDD
DATE: 10/2017

DATE	REV	DESCRIPTION
03/2021		RECORD DRAWINGS

PLUMBING

DRYER BUILDING ENLARGED PLUMBING PLANS

LITTLE PATUXENT WATER RECLAMATION PLANT
8TH ADDITION
BIOSOLIDS PROCESSING FACILITIES - PHASE 2

CAPITAL PROJECT S-6295
CONTRACT NO. 24-4936

ELECTION DISTRICT NO. 6
HOWARD COUNTY, MARYLAND

SCALE AS SHOWN

SHEET 175 OF 311

P-509

BIM 360://10054364 – Little Patuxent WRP 8th Addition/264592_100_HP_V18.rvt
1/7/2022 3:17:16 PM

ELECTRIC WATER HEATER

MARK NO.	LOCATION	RECOVERY AT 90F RISE (GPH)	KW	STORAGE (GAL)	ELECTRICAL DATA			BASIS OF DESIGN	
					VOLTS	PHASE	HZ	MANUFACTURER	MODEL
8-DRY-2411-WHT	DRYER AREA	11	2.5	15	480	1	60	AO SMITH	DEL-15

EXPANSION TANK

MARK NO.	LOCATION	VOLUME (GAL)	ACCEPTANCE (GAL AT 60 PSI)	TYPE	BASIS OF DESIGN	
					MANUFACTURER	MODEL
50-ET01	DRYER AREA	4.8	2.16	DIAPHRAM	AO SMITH	TW-12

PLUMBING FIXTURE CONNECTION SCHEDULE

MARK	FIXTURE DESCRIPTION	CONNECTION SIZE (IN)				GAL/CYCLE (GPC)	MOUNTING HEIGHT (IN)	ADA COMPLIANT	NOTES
		PWC	PWH	WASTE	VENT				
WC-1	WATER CLOSET	1	-	4	2	1.28	INST	YES	-
L-1	LAVATORY	1/2	1/2	1-1/4	1-1/4	0.5	INST	YES	1
S-1	SINK	1/2	1/2	1-1/2	1-1/2	2.2	INST	TES	1
FCO	FLOOR CLEANOUT	-	-	PLANS	-	-	FLUSH	-	-
WCO	WALL CLEANOUT	-	-	PLANS	-	-	30	-	-
FD	DRAIN, FLOOR	-	-	PLANS	PLANS	-	-1/2	-	2
BU-1	BELL UP DRAIN, FLOOR	-	-	PLANS	-	-	4	-	3

NOTES:
1. PROVIDE AERATOR.
2. PROVIDE TRAP SEAL DEVICE.
3. PROVIDE FLOOR DRAIN (FD) WITH FUNNEL ASSEMBLY.

PLANS: SEE PLANS FOR INFORMATION
INST: REFER TO MANUFACTURER'S INSTALLATION INSTRUCTIONS

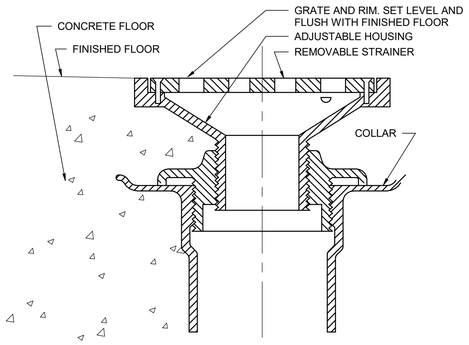

1 FLOOR DRAIN DETAIL
NOT TO SCALE

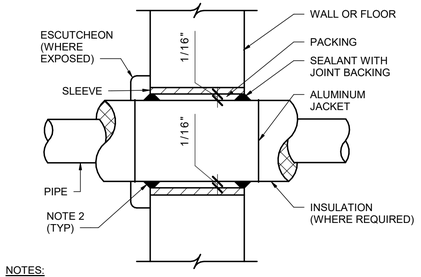

NOTES:

1. THIS DETAIL IS FOR NONFIRE-RATED CONSTRUCTION. PIPE PENETRATIONS IN FIRE-RATED CONSTRUCTION SHALL BE FIRESTOPPED WITH A UL-CLASSIFIED SYSTEM.
2. AT INSULATED WALLS PROVIDE PACKING AND SEALANT AT ANNULAR SPACE.

2 TYPICAL PIPE PENETRATION THROUGH WALLS AND FLOORS
NOT TO SCALE

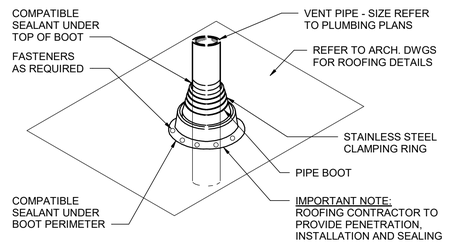

3 VENT THRU ROOF DETAIL
NOT TO SCALE

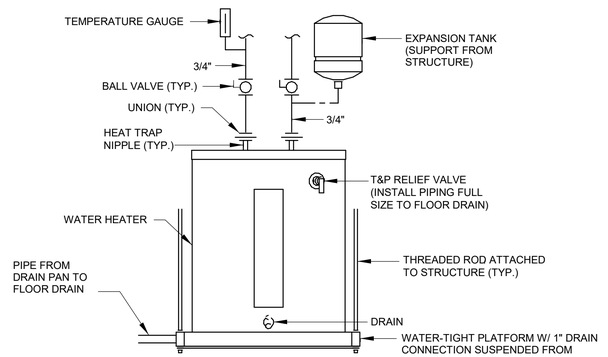

4 WATER HEATER DETAIL
NOT TO SCALE

THE DRAWINGS IN THIS SET ARE RECORD DRAWINGS. THEY ARE CONSTRUCTION CONTRACT DRAWINGS WHICH HAVE BEEN REVISED BASED ON AVAILABLE FIELD INFORMATION RECORDED BY OTHERS DURING CONSTRUCTION OF THIS CONTRACT. THERE HAS BEEN NO VERIFICATION OF DIMENSIONS SHOWN ON THE CONSTRUCTION DRAWINGS OR THE ACCURACY/COMPLETENESS OF THE FIELD INFORMATION RECEIVED.

SIGNATURE _____ DATE 2/7/2022

AS-BUILT REPLACEMENT SHEET

PROFESSIONAL CERTIFICATION
THIS DRAWING WAS ORIGINALLY APPROVED FOR CONSTRUCTION AND SEALED BY CHRISTOPHER S. WORK, A REGISTERED PROFESSIONAL ENGINEER IN THE STATE OF MARYLAND, NO. 50093

NOTICE TO CONTRACTORS
- PROJECT ELEVATIONS ARE BASED ON NAVD88 AND HOWARD COUNTY'S BENCHMARK SYSTEM
- PREVIOUS PROJECTS USED OTHER DATUMS
- APPLY THE FOLLOWING CONVERSIONS WHEN USING PREVIOUS CONTRACT DRAWINGS:
  - ADDITION NO. 6: SUBTRACT 0.80 FT
  - PRIOR ADDITIONS: SUBTRACT 1.04 FT

DEPARTMENT OF PUBLIC WORKS
HOWARD COUNTY, MARYLAND

CHIEF, BUREAU OF UTILITIES DATE

DES: CSW
DRN: JCS
CHK: BRP
DATE: 10/2017

DATE	REV	DESCRIPTION
03/2021		RECORD DRAWINGS

PLUMBING

DRYER BUILDING PLUMBING SCHEDULES AND DETAILS

LITTLE PATUXENT WATER RECLAMATION PLANT
8TH ADDITION
BIOSOLIDS PROCESSING FACILITIES - PHASE 2

CAPITAL PROJECT S-6295
CONTRACT NO. 24-4936

ELECTION DISTRICT NO. 6
HOWARD COUNTY, MARYLAND

SCALE AS SHOWN

SHEET 176 OF 311

P-901

BIM 360://10054364 – Little Patuxent WRP 8th Addition/264592_100_HP_V18.rvt
1/7/2022 3:17:16 PM

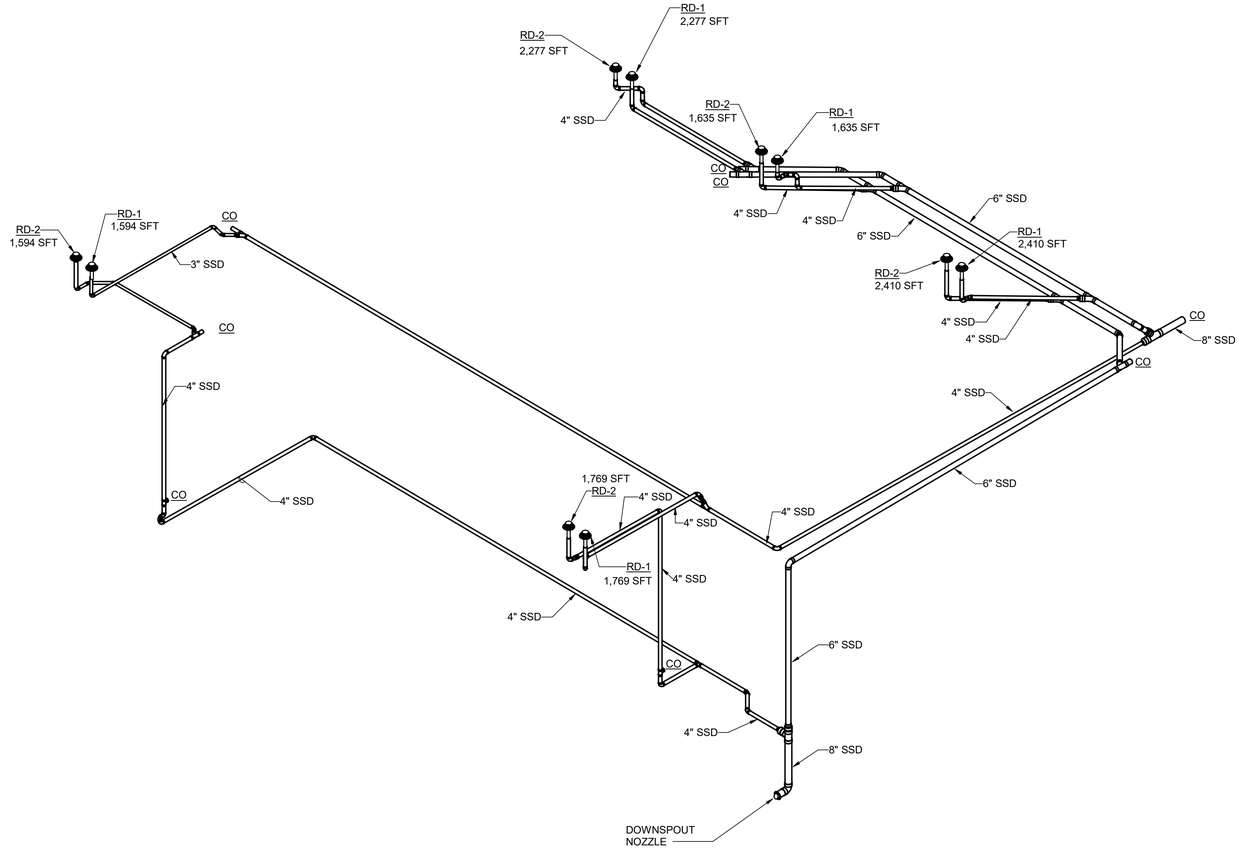

RISER DIAGRAM NORTH

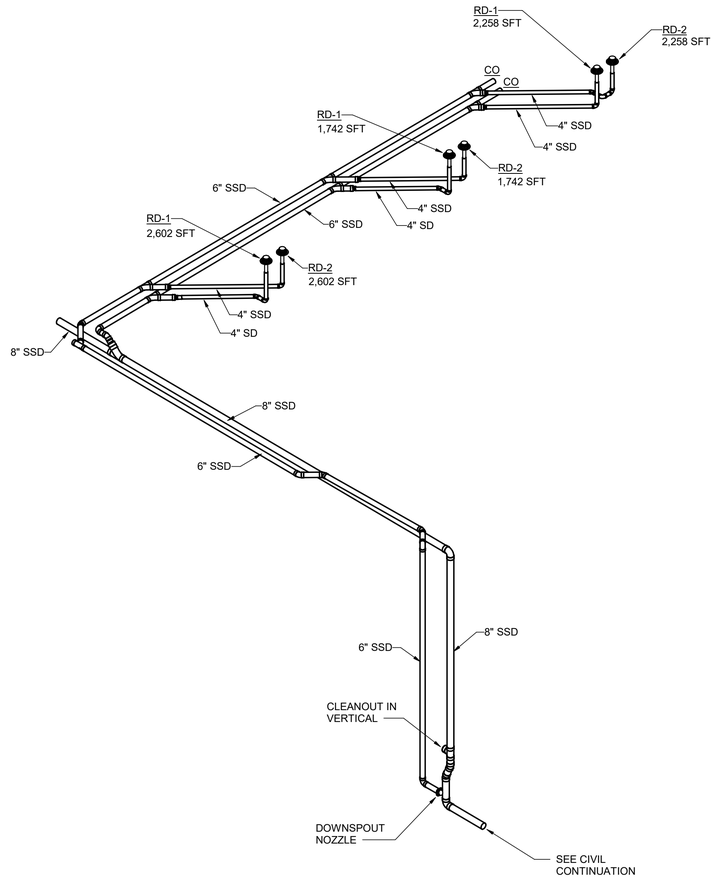

RISER DIAGRAM SOUTH

THE DRAWINGS IN THIS SET ARE RECORD DRAWINGS. THEY ARE CONSTRUCTION CONTRACT DRAWINGS WHICH HAVE BEEN REVISED BASED ON AVAILABLE FIELD INFORMATION RECORDED BY OTHERS DURING CONSTRUCTION OF THIS CONTRACT. THERE HAS BEEN NO VERIFICATION OF DIMENSIONS SHOWN ON THE CONSTRUCTION DRAWINGS OR THE ACCURACY/COMPLETENESS OF THE FIELD INFORMATION RECEIVED.

SIGNATURE — DATE 2/7/2022

AS-BUILT REPLACEMENT SHEET

PROFESSIONAL CERTIFICATION
THIS DRAWING WAS ORIGINALLY APPROVED FOR CONSTRUCTION AND SEALED BY CHRISTOPHER S. WORK, A REGISTERED PROFESSIONAL ENGINEER IN THE STATE OF MARYLAND, NO. 50093

NOTICE TO CONTRACTORS
- PROJECT ELEVATIONS ARE BASED ON NAVD88 AND HOWARD COUNTY'S BENCHMARK SYSTEM
- PREVIOUS PROJECTS USED OTHER DATUMS
- APPLY THE FOLLOWING CONVERSIONS WHEN USING PREVIOUS CONTRACT DRAWINGS:
  - ADDITION NO. 6: SUBTRACT 0.80 FT
  - PRIOR ADDITIONS: SUBTRACT 1.04 FT

DEPARTMENT OF PUBLIC WORKS
HOWARD COUNTY, MARYLAND

CHIEF, BUREAU OF UTILITIES — DATE

DES: CSW
DRN: JCS
CHK: MDD
DATE: 10/2017

DATE	REV	DESCRIPTION
03/2021		RECORD DRAWINGS

PLUMBING

DRYER BUILDING
RISERS - STORM PIPING

LITTLE PATUXENT WATER RECLAMATION PLANT
8TH ADDITION
BIOSOLIDS PROCESSING FACILITIES - PHASE 2

CAPITAL PROJECT S-6295
CONTRACT NO. 24-4936

ELECTION DISTRICT NO. 6
HOWARD COUNTY, MARYLAND

SCALE
AS
SHOWN

SHEET
177 OF 311

P-902

BIM 360://10054364 – Little Patuxent WRP 8th Addition/264592_100_HP_V18.rvt
1/7/2022 3:17:18 PM

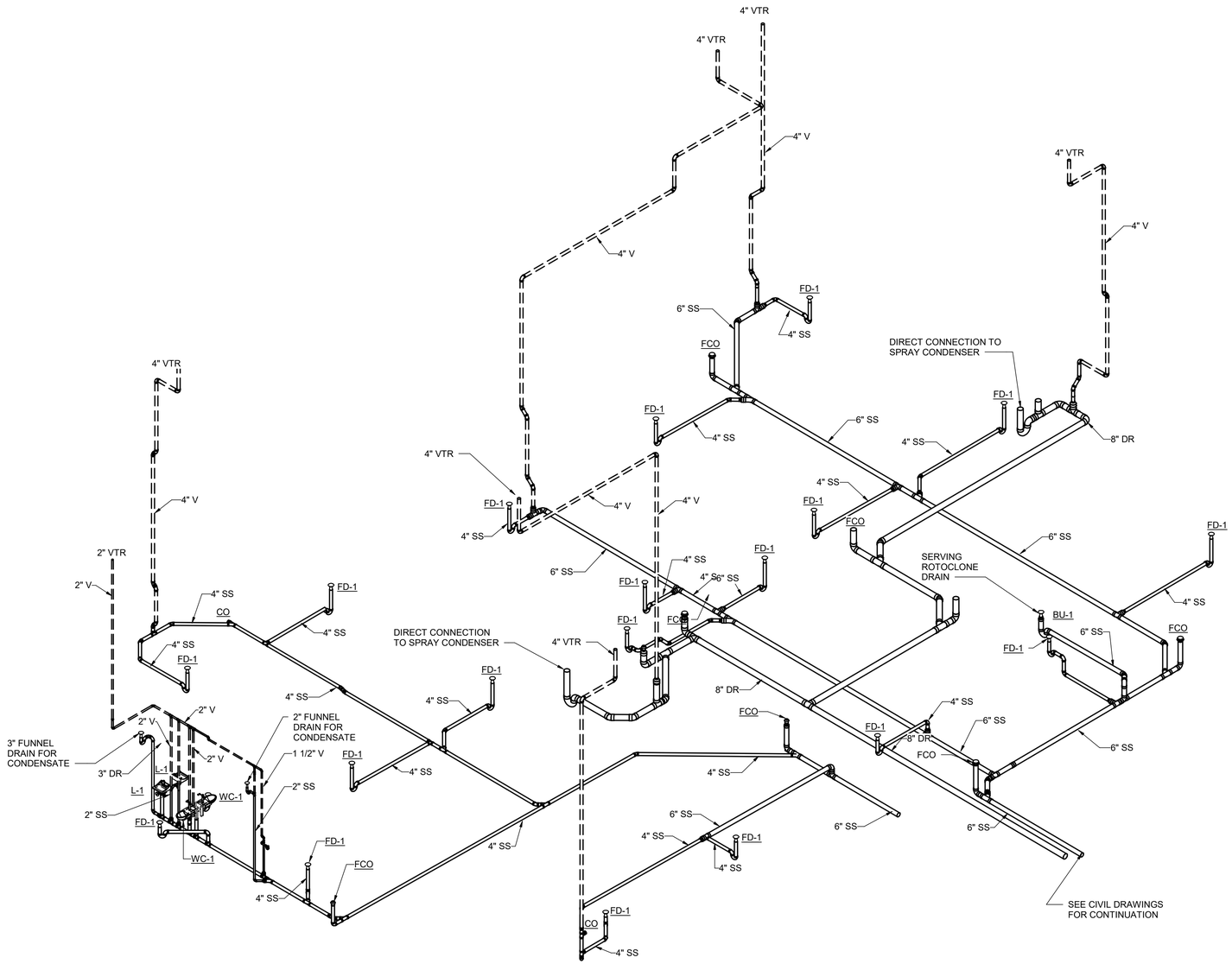

RISER DIAGRAM

THE DRAWINGS IN THIS SET ARE RECORD DRAWINGS. THEY ARE CONSTRUCTION CONTRACT DRAWINGS WHICH HAVE BEEN REVISED BASED ON AVAILABLE FIELD INFORMATION RECORDED BY OTHERS DURING CONSTRUCTION OF THIS CONTRACT. THERE HAS BEEN NO VERIFICATION OF DIMENSIONS SHOWN ON THE CONSTRUCTION DRAWINGS OR THE ACCURACY/COMPLETENESS OF THE FIELD INFORMATION RECEIVED.

SIGNATURE _____ DATE 2/7/2022

AS-BUILT REPLACEMENT SHEET

PROFESSIONAL CERTIFICATION
THIS DRAWING WAS ORIGINALLY APPROVED FOR CONSTRUCTION AND SEALED BY CHRISTOPHER S. WORK, A REGISTERED PROFESSIONAL ENGINEER IN THE STATE OF MARYLAND, NO. 50093

NOTICE TO CONTRACTORS
- PROJECT ELEVATIONS ARE BASED ON NAVD88 AND HOWARD COUNTY'S BENCHMARK SYSTEM
- PREVIOUS PROJECTS USED OTHER DATUMS
- APPLY THE FOLLOWING CONVERSIONS WHEN USING PREVIOUS CONTRACT DRAWINGS:
  - ADDITION NO. 6: SUBTRACT 0.80 FT
  - PRIOR ADDITIONS: SUBTRACT 1.04 FT

DEPARTMENT OF PUBLIC WORKS
HOWARD COUNTY, MARYLAND

CHIEF, BUREAU OF UTILITIES DATE

DES: CSW
DRN: JCS
CHK: MDD
DATE: 10/2017

DATE	REV	DESCRIPTION
03/2021		RECORD DRAWINGS

PLUMBING

DRYER BUILDING
RISERS - WASTE PIPING

LITTLE PATUXENT WATER RECLAMATION PLANT
8TH ADDITION
BIOSOLIDS PROCESSING FACILITIES - PHASE 2

CAPITAL PROJECT S-6295
CONTRACT NO. 24-4936

ELECTION DISTRICT NO. 6
HOWARD COUNTY, MARYLAND

SCALE AS SHOWN

SHEET 178 OF 311

P-903

BIM 360://10054364 – Little Patuxent WRP 8th Addition/284592_100_HP_V18.rvt
1/7/2022 3:17:19 PM

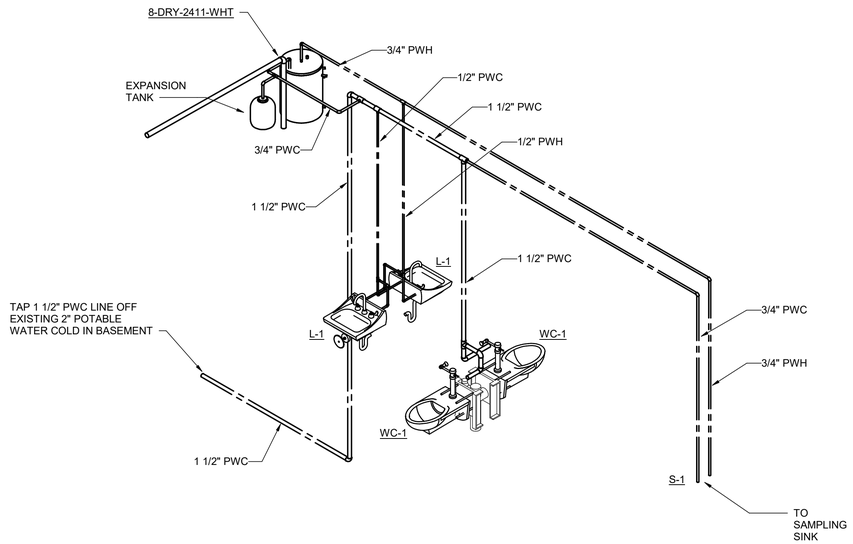

RISER DIAGRAM

THE DRAWINGS IN THIS SET ARE RECORD DRAWINGS. THEY ARE CONSTRUCTION CONTRACT DRAWINGS WHICH HAVE BEEN REVISED BASED ON AVAILABLE FIELD INFORMATION RECORDED BY OTHERS DURING CONSTRUCTION OF THIS CONTRACT. THERE HAS BEEN NO VERIFICATION OF DIMENSIONS SHOWN ON THE CONSTRUCTION DRAWINGS OR THE ACCURACY/COMPLETENESS OF THE FIELD INFORMATION RECEIVED.

SIGNATURE — DATE 2/7/2022

AS-BUILT REPLACEMENT SHEET

PROFESSIONAL CERTIFICATION
THIS DRAWING WAS ORIGINALLY APPROVED FOR CONSTRUCTION AND SEALED BY CHRISTOPHER S. WORK, A REGISTERED PROFESSIONAL ENGINEER IN THE STATE OF MARYLAND, NO. 50093

NOTICE TO CONTRACTORS
- PROJECT ELEVATIONS ARE BASED ON NAVD88 AND HOWARD COUNTY'S BENCHMARK SYSTEM
- PREVIOUS PROJECTS USED OTHER DATUMS
- APPLY THE FOLLOWING CONVERSIONS WHEN USING PREVIOUS CONTRACT DRAWINGS:
  - ADDITION NO. 6: SUBTRACT 0.80 FT
  - PRIOR ADDITIONS: SUBTRACT 1.04 FT

DEPARTMENT OF PUBLIC WORKS
HOWARD COUNTY, MARYLAND

CHIEF, BUREAU OF UTILITIES — DATE

DES: CSW
DRN: JCS
CHK: MDD
DATE: 10/2017

DATE	REV	DESCRIPTION
03/2021		RECORD DRAWINGS

PLUMBING

DRYER BUILDING
RISERS - SUPPLY PIPING

LITTLE PATUXENT WATER RECLAMATION PLANT
8TH ADDITION
BIOSOLIDS PROCESSING FACILITIES - PHASE 2

CAPITAL PROJECT S-6295
CONTRACT NO. 24-4936

ELECTION DISTRICT NO. 6
HOWARD COUNTY, MARYLAND

SCALE AS SHOWN

SHEET 179 OF 311

P-904

BIM 360://10054364 – Little Patuxent WRP 8th Addition/264592_100_HP_V18.rvt
1/7/2022 3:17:20 PM

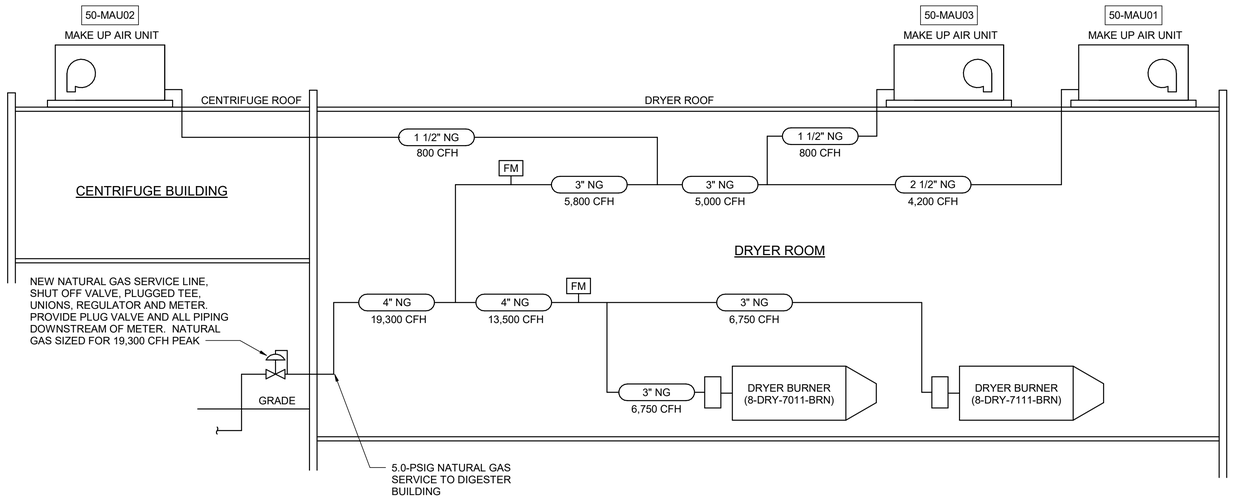

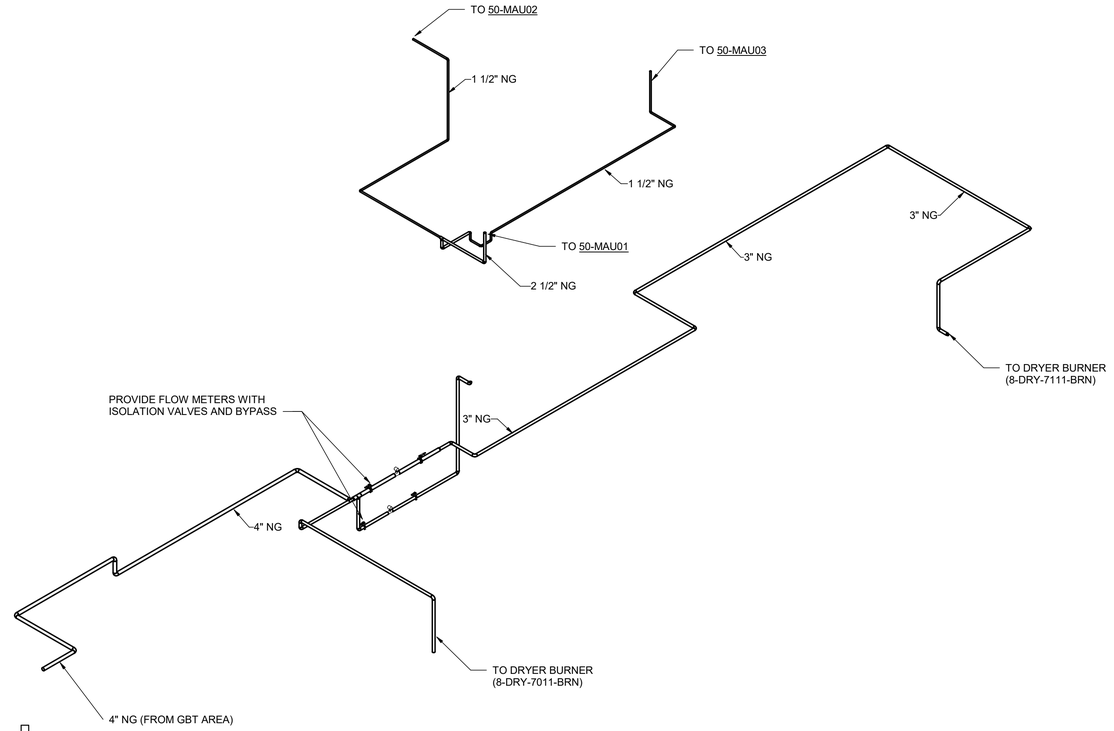

NOTES:

1. STREET PRESSURE UPSTREAM OF REGULATOR/METER: UNKNOWN.
2. GAS REGULATOR SERVING BUILDING SET AT 5.0 PSIG. PIPING IN BUILDING SHALL BE WELDED SCHEDULE 40 BLACK STEEL.
3. SIZING BASED ON TOTAL EQUIVALENT LENGTH OF PIPE TO FARTHEST APPLIANCE (DRYER 8-DRY-7111-BRN) 450 FEET WITH PRESSURE AT METER 5.0 PSIG AND PRESSURE AT FARTHEST APPLIANCE 4.5 PSIG (TO DRYER 8-DRY-7111-BRN REGULATOR).

NATURAL GAS PIPING SCHEMATIC

NOT TO SCALE

NATURAL GAS RISER DIAGRAM

THE DRAWINGS IN THIS SET ARE RECORD DRAWINGS. THEY ARE CONSTRUCTION CONTRACT DRAWINGS WHICH HAVE BEEN REVISED BASED ON AVAILABLE FIELD INFORMATION RECORDED BY OTHERS DURING CONSTRUCTION OF THIS CONTRACT. THERE HAS BEEN NO VERIFICATION OF DIMENSIONS SHOWN ON THE CONSTRUCTION DRAWINGS OR THE ACCURACY/COMPLETENESS OF THE FIELD INFORMATION RECEIVED.

SIGNATURE _____ DATE 2/7/2023

AS-BUILT REPLACEMENT SHEET

PROFESSIONAL CERTIFICATION
THIS DRAWING WAS ORIGINALLY APPROVED FOR CONSTRUCTION AND SEALED BY CHRISTOPHER S. WORK, A REGISTERED PROFESSIONAL ENGINEER IN THE STATE OF MARYLAND, NO. 50093

NOTICE TO CONTRACTORS
- PROJECT ELEVATIONS ARE BASED ON NAVD88 AND HOWARD COUNTY'S BENCHMARK SYSTEM
- PREVIOUS PROJECTS USED OTHER DATUMS
- APPLY THE FOLLOWING CONVERSIONS WHEN USING PREVIOUS CONTRACT DRAWINGS:
  - ADDITION NO. 6: SUBTRACT 0.80 FT
  - PRIOR ADDITIONS: SUBTRACT 1.04 FT

DEPARTMENT OF PUBLIC WORKS
HOWARD COUNTY, MARYLAND

CHIEF, BUREAU OF UTILITIES DATE

DES: CSW
DRN: JCS
CHK: BRP
DATE: 10/2017

DATE	REV	DESCRIPTION
03/2021		RECORD DRAWINGS

PLUMBING

DRYER BUILDING
RISERS - NATURAL GAS PIPING

LITTLE PATUXENT WATER RECLAMATION PLANT
8TH ADDITION
BIOSOLIDS PROCESSING FACILITIES - PHASE 2

CAPITAL PROJECT S-6295
CONTRACT NO. 24-4936

ELECTION DISTRICT NO. 6
HOWARD COUNTY, MARYLAND

SCALE AS SHOWN

SHEET 180 OF 311

P-905

BIM 360://10054364 – Little Patuxent WRP 8th Addition/264592_100_HP_V18.rvt
1/7/2022 3:17:21 PM

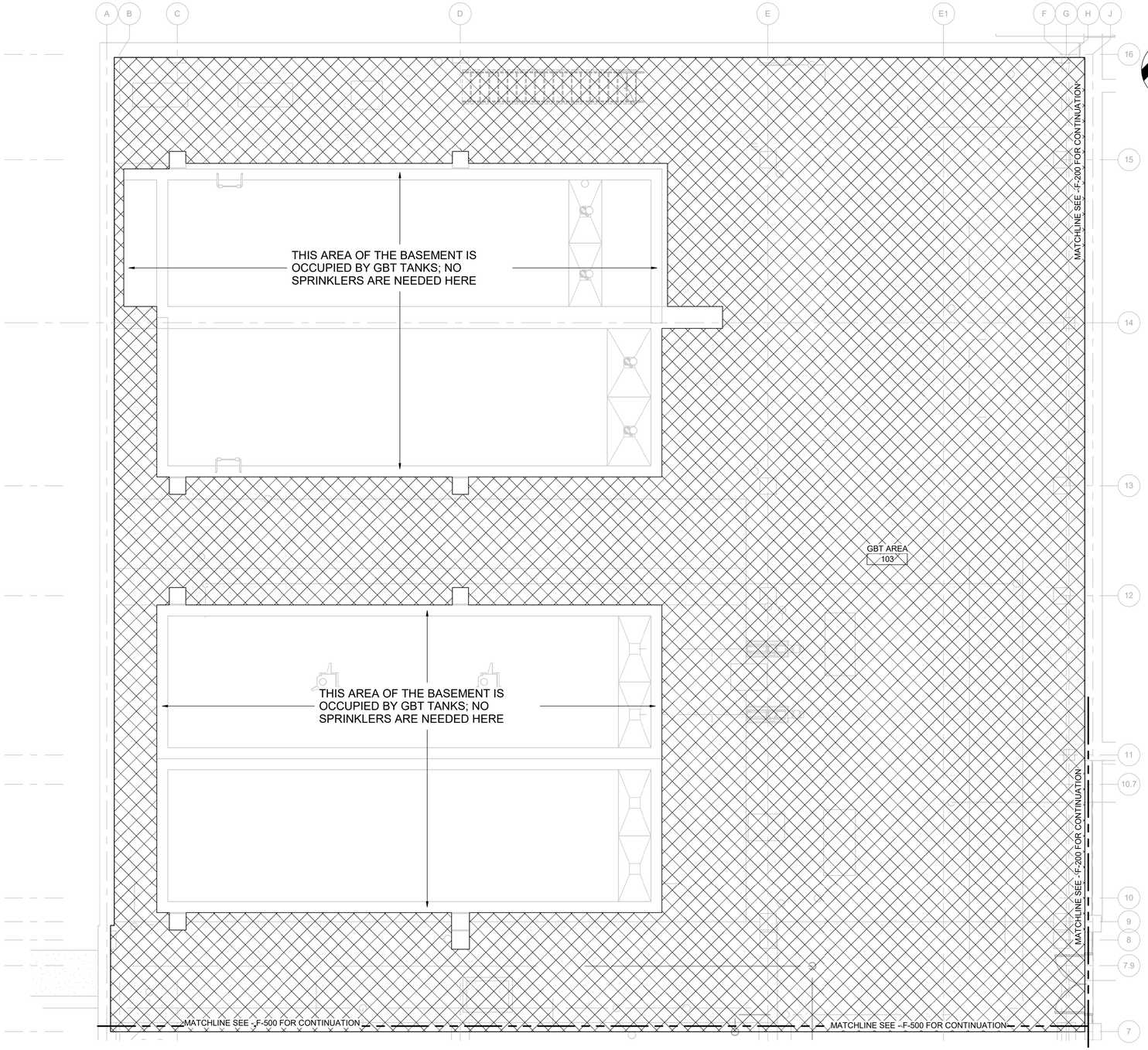

1 / F-100 PARTIAL FIRE SUPPRESSION AND FIRE ALARM PLAN - EL. 128.00

3/16" = 1'-0"

N

NFPA 13 SPRINKLER SYSTEM SCHEDULE (WET PIPE)					
AREA (HATCHING PATTERN)	NFPA 13 HAZARD OCCUPANCY	MIN. DENSITY (GPM/SF)	MINIMUM HYDRAULIC DESIGN AREA (SF)	HOSE (GPM)	DURATION (MIN.)
	LIGHT HAZARD (ALL AREAS NOT HATCHED)	0.10	1500	100	30
	ORDINARY HAZARD (GROUP 1), SINGLE-INTERLOCK PRE-ACTION (AUXILIARY SYSTEM)	0.15	1500	250	60
	ORDINARY HAZARD (GROUP 2)	0.20	1500	250	60

FIRE ALARM NOTES:

1. THE FIRE ALARM SYSTEM IS A DELEGATED DESIGN WITH PERFORMANCE SPECIFICATIONS. PROVIDE A CODE COMPLIANT FIRE ALARM SYSTEM SERVING THE EXISTING BIOSOLIDS PROCESSING FACILITY (INCLUDING THE EXISTING SOLIDS PIPE GALLERY, GRAVITY BELT THICKENER AREA, AND SOLIDS SCREENING AREA – AS WELL AS THE NEW DRYER BUILDING) THAT MEETS THE REQUIREMENTS OF ALL APPLICABLE LOCAL AND NATIONAL CODES. THIS PLAN TO BE READ IN CONJUNCTION WITH THE FIRE ALARM SYSTEM SPECIFICATION, 28 31 00.

2. THERE IS AN EXISTING FIRE ALARM SYSTEM SERVING THE BIOSOLIDS PROCESSING FACILITY THAT IS NON-FUNCTIONAL. THE SCOPE OF WORK SHALL INCLUDE THE DEMOLITION OF THE EXISTING FIRE ALARM SYSTEM IN ITS ENTIRETY, INCLUDING ALL FIRE ALARM PANELS, COMPONENTS, DEVICES, WIRING, CONDUIT, ACCESSORIES, AND OTHER APPURTENANCES. CONTRACTOR SHALL BE RESPONSIBLE TO REQUEST ANY RECORD DRAWINGS AVAILABLE FOR THE EXISTING FIRE ALARM SYSTEM FROM OWNER AND TO PERFORM FIELD VERIFICATION OF EXISTING CONDITIONS PRIOR TO BID SUBMITTAL. CONTRACTOR WILL BE RESPONSIBLE FOR PROTECTING EXISTING CONDITIONS INCLUDING BUT NOT LIMITED TO: STRUCTURES, CEILINGS, WALLS, EQUIPMENT, UTILITIES, ETC. DAMAGE TO EXISTING CONDITIONS WILL BE REPAIRED AT NO ADDITIONAL COST TO THE OWNER. CONTRACTOR WILL BE RESPONSIBLE FOR PATCHING AND REPAIRING FLOORS, CEILINGS, AND WALLS TO MATCH EXISTING CONDITIONS IN AREAS IMPACTED BY THE DEMOLITION OF THE EXISTING FIRE ALARM SYSTEM AND INSTALLATION OF THE NEW FIRE ALARM SYSTEM.

3. THE ABOVE GRADE PORTION OF THE DRYER BUILDING IS THE ONLY AREA IN THE BIOSOLIDS PROCESSING FACILITY PROJECT PHASE 2 THAT WILL BE NEW CONSTRUCTION. THE CONTRACTOR SHALL BE RESPONSIBLE TO PERFORM THOROUGH SITE INVESTIGATION TO EXAMINE THE EXISTING BIOSOLIDS PROCESSING FACILITY PRIOR TO BIDDING THE PROJECT. REFER TO SPECIFICATION 28 31 00 FOR ADDITIONAL REQUIREMENTS.

4. THE NEW FIRE ALARM CONTROL UNIT (FACU) TO SERVE THE EXISTING BIOSOLIDS PROCESSING FACILITY SHALL BE LOCATED IN THE DRYER BUILDING MCC ROOM 203 AT EL. 156. THE FACU SHALL MONITOR ANY DUCT DETECTOR(S) PROVIDED BY THE MECHANICAL CONTRACTOR AS PART OF THE AHU PACKAGE(S). REFER TO HVAC DRAWINGS FOR SMOKE DUCT DETECTOR LOCATIONS. COORDINATE SHUTDOWN OF UNITS AS NEEDED TO MEET CODE.

5. THE BIOSOLIDS PROCESSING FACILITY FIRE ALARM CONTROL UNIT (FACU) SHALL PROVIDE POINT ADDRESSABLE SIGNAL ANNUNCIATION (ALARM, TROUBLE, & SUPERVISORY SIGNALS BY DEVICE/MODULE ADDRESS) TO THE ADMINISTRATION BUILDING FACU VIA A DEDICATED FIRE ALARM NETWORK USING FIBER OPTIC CABLES BEING RUN BETWEEN BUILDINGS. THE NEW BIOSOLIDS PROCESSING FACILITY FACU MUST BE THE SAME MODEL AND MANUFACTURER AS THE ADMINISTRATION BUILDING AND DIGESTER BUILDING FACU'S WITH FULL NETWORKING CAPABILITIES. CONTRACTOR SHALL PROVIDE NEW, DEDICATED FIBER OPTIC CABLES AS NEEDED TO CONNECT THE BIOSOLIDS PROCESSING FACILITY FACU TO THE ADMINISTRATION BUILDING FACU. PROVIDE FIBER-TO-COPPER MODULES IN THE FACU'S OR REMOTE FACU'S, AS NEEDED FOR NETWORK FUNCTIONALITY. REFER TO THE PHASE 2 NETWORK DIAGRAM ON SHEET F-901 FOR ADDITIONAL DETAILS.

6. THE FACU IN THE DRYER BUILDING WILL PROVIDE DRY CONTACT TYPE RELAY OUTPUTS FOR ANCILLARY REPORTING OF 2 FIRE ALARM SYSTEM SIGNALS TO AREA PLC PANEL 8-GBT-0011-PNL IN THE DRYER BUILDING MCC ROOM 203. AT EL. 156; THESE SIGNALS SHALL BE 'FIRE ALARM' AND 'FA TROUBLE OR SUPERVISORY CONDITION'.

7. THE EXISTING ADMINISTRATION BUILDING FACU PROVIDED AS PART OF PHASE 1, FOR REFERENCE THAT WORK INCLUDED THE FOLLOWING:
A. THE ADMINISTRATION BUILDING FACU SERVES AS THE GLOBAL FIRE ALARM NETWORK ANNUNCIATOR FOR A CONTROL ROOM LOCATION MANNED 24 HOURS-A-DAY / 7 DAYS-A-WEEK IN AN NFPA 72 PROPRIETARY SUPERVISING STATION CONFIGURATION FOR EMERGENCY SERVICES NOTIFICATION. THE ADMINISTRATION BUILDING FACU PROVIDES POINT ADDRESSABLE SIGNAL ANNUNCIATION (ALARM, TROUBLE, & SUPERVISORY SIGNALS BY DEVICE/MODULE ADDRESS) OF ALL EVENTS ON THE FIRE ALARM NETWORK.
B. THE ADMINISTRATION BUILDING FACU IS LOCATED IN THE CONTROL ROOM. THE ADMINISTRATION BUILDING FACU AND DIGESTER BUILDING FACU ARE NETWORKED USING MULTI-MODE FIBER OPTIC CABLE BEING INSTALLED BY OTHERS BETWEEN PATCH PANELS IN THOSE RESPECTIVE BUILDINGS. REFER TO THE CONTRACT DOCUMENTS FOR THE FIBER NETWORK DIAGRAM (I-904) AND OVERALL ELECTRICAL SITE PLAN (E-3) FOR ADDITIONAL INFORMATION.
C. THE ADMINISTRATION BUILDING FACU IS FULLY CAPABLE OF ADDING A DACT (DIGITAL ALARM COMMUNICATOR TRANSMITTER) IN THE FUTURE. THE DACT WOULD ONLY BE REQUIRED IN THE EVENT THAT THE AHU REQUIRES HOWARD COUNTY LPWRP TO PROVIDE AUTOMATIC EMERGENCY SERVICES NOTIFICATION VIA A CENTRAL STATION SERVICE CONFIGURATION (INSTEAD OF A PROPRIETARY SUPERVISING STATION CONFIGURATION).

8. FOR PHASE 2, THE ADMINISTRATION BUILDING FACU SHALL BE UPDATED (IN BOTH HARDWARE AND SOFTWARE/PROGRAMMING) AS NEEDED TO ADD THE BIOSOLIDS PROCESSING FACILITY FACU TO THE NETWORK CONFIGURATION AND FULL GLOBAL REPORTING.

FIRE PROTECTION NOTES:

1. THE FIRE SPRINKLER SYSTEM IS A DELEGATED DESIGN WITH PERFORMANCE SPECIFICATIONS. PROVIDE A CODE COMPLIANT SPRINKLER SYSTEM SERVING THE EXISTING BIOSOLIDS PROCESSING FACILITY (INCLUDING THE EXISTING SOLIDS PIPE GALLERY, GRAVITY BELT THICKENER AREA, AND SOLIDS SCREENING AREA – AS WELL AS THE NEW DRYER BUILDING) THAT MEETS THE REQUIREMENTS OF ALL APPLICABLE LOCAL AND NATIONAL CODES. THIS PLAN TO BE READ IN CONJUNCTION WITH THE FIRE PROTECTION SYSTEMS SPECIFICATION, 21 05 00.

2. THE ABOVE GRADE PORTION OF THE DRYER BUILDING IS THE ONLY AREA IN THE BIOSOLIDS PROCESSING FACILITY PROJECT PHASE 2 THAT IS NEW CONSTRUCTION. A NEW WATER SERVICE AND FIRE SPRINKLER RISER SHALL BE PROVIDED IN THE DRYER BUILDING TO SERVE IT AND THE EXISTING BIOSOLIDS PROCESSING FACILITY. THE CONTRACTOR SHALL BE RESPONSIBLE TO PERFORM THOROUGH SITE INVESTIGATION TO EXAMINE THE EXISTING BIOSOLIDS PROCESSING FACILITY (INCLUDING THE SOLIDS PIPE GALLERY, GRAVITY BELT THICKENER AREA, AND SOLIDS SCREENING AREA) TO DETERMINE THE EXISTING CONDITIONS THEREIN. THE CONTRACTOR SHALL PROVIDE A DESIGN ANALYSIS TO DETERMINE THE BEST METHOD FOR INSTALLING A WET PIPE SPRINKLER SYSTEM THROUGHOUT THE BIOSOLIDS PROCESSING FACILITY. THE CONTRACTOR'S DESIGNATED SPRINKLER SYSTEM DESIGNER (WHO SHALL MEET THE DESIGNER QUALIFICATION REQUIREMENTS OF THE SPECIFICATION) SHALL EXAMINE EACH AREA AND DOCUMENT EXISTING CEILING HEIGHTS, OBSTRUCTIONS, CONSTRUCTION VARIATIONS, AND ARCHITECTURAL CONFIGURATIONS. THE CONTRACTOR'S DESIGNATED SPRINKLER SYSTEM DESIGNER SHALL EVALUATE THE EQUIPMENT HUNG FROM EXISTING CEILINGS AND COORDINATE SPRINKLER SYSTEM PIPING PLACEMENT ACCORDINGLY. THE CONTRACTOR SHALL REFER TO OTHER DISCIPLINES DRAWINGS (ARCHITECTURAL, ELECTRICAL, MECHANICAL, PROCESS, STRUCTURAL, ETC.), REVIEW THEM THOROUGHLY, AND COORDINATE NEW SPRINKLER PIPE ROUTING WITH ALL TRADES AND EXISTING CONDITIONS. THE CONTRACTOR SHALL BE FULLY RESPONSIBLE TO INCORPORATE ALL NEEDED ACCOMMODATIONS INTO FIRE SPRINKLER SYSTEM DESIGN TO MAKE THE SYSTEM WORK IN THE EXISTING ENVIRONMENT

3. INTERMEDIATE TEMPERATURE CLASSIFICATION SPRINKLER HEADS SHALL BE PROVIDED IN ALL MECHANICAL ROOMS AND OTHER LOCATIONS WITH HIGHER THAN NORMAL AMBIENT TEMPERATURES, IN ACCORDANCE WITH NFPA 13, 2013 EDITION.

4. ALL SPRINKLER HEADS SHALL BE PROVIDED WITH GUARDS IN MECHANICAL AND PROCESS ROOMS.

5. SPRINKLER HEADS SHALL BE HYDRAULICALLY CALCULATED IN ACCORDANCE WITH NFPA 13, 2013 EDITION.

6. PROVIDE THRUST RESTRAINT ON FIRE PROTECTION WATER SERVICE IN ACCORDANCE WITH NFPA 24.

7. A HYDRANT FLOW TEST WAS PERFORMED BY THE HOWARD COUNTY DEPARTMENT OF PUBLIC WORKS ON JULY 8, 2016 USING EXISTING HYDRANTS NEARBY THIS PLANNED BUILDING SITE AND THE RESULTS WERE 92 PSI STATIC PRESSURE AND 42 PSI RESIDUAL PRESSURE WITH 1,643 GPM FLOWING. THE CONTRACTOR SHALL BE RESPONSIBLE TO CONDUCT A HYDRANT FLOW TEST IN ACCORDANCE WITH NFPA 291 TO VERIFY THE AVAILABLE PRESSURE & FLOW OF THE WATER SUPPLY. THE CONTRACTOR SHALL THEN DESIGN FIRE SPRINKLER SYSTEM USING STATIC PRESSURE AND RESIDUAL PRESSURE/FLOWS AS DETERMINED DURING THEIR TESTING. THE SPRINKLER SYSTEM SHALL BE HYDRAULICALLY DESIGNED TO WORK WITHOUT ADDITION OF A FIRE PUMP; THE CONTRACTOR SHALL BE RESPONSIBLE FOR MINIMIZING THE PRESSURE LOSS OF THE SPRINKLER SYSTEM BY INCREASING PIPE SIZES, REDUCED HEAD SPACING, ADJUSTING SPRINKLER HEAD K-FACTORS, AND SO FORTH AS NECESSARY TO MAKE THE SYSTEM WORK WITH THE AVAILABLE WATER SUPPLY AND AVOID THE NEED FOR A FIRE PUMP.

THE DRAWINGS IN THIS SET ARE RECORD DRAWINGS. THEY ARE CONSTRUCTION CONTRACT DRAWINGS WHICH HAVE BEEN REVISED BASED ON AVAILABLE FIELD INFORMATION RECORDED BY OTHERS DURING CONSTRUCTION OF THIS CONTRACT. THERE HAS BEEN NO VERIFICATION OF DIMENSIONS SHOWN ON THE CONSTRUCTION DRAWINGS OR THE ACCURACY/COMPLETENESS OF THE FIELD INFORMATION RECEIVED.

SIGNATURE 2/7/2023 DATE

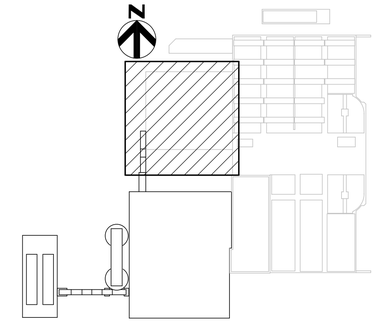

KEY PLAN

AS-BUILT REPLACEMENT SHEET

PROFESSIONAL CERTIFICATION

THIS DRAWING WAS ORIGINALLY APPROVED FOR CONSTRUCTION AND SEALED BY ADAM S. PARMENTER, A REGISTERED PROFESSIONAL ENGINEER IN THE STATE OF MARYLAND, NO. 39376

NOTICE TO CONTRACTORS

- PROJECT ELEVATIONS ARE BASED ON NAVD88 AND HOWARD COUNTY'S BENCHMARK SYSTEM
- PREVIOUS PROJECTS USED OTHER DATUMS
- APPLY THE FOLLOWING CONVERSIONS WHEN USING PREVIOUS CONTRACT DRAWINGS:
  - ADDITION NO. 6: SUBTRACT 0.80 FT
  - PRIOR ADDITIONS: SUBTRACT 1.04 FT

DEPARTMENT OF PUBLIC WORKS
HOWARD COUNTY, MARYLAND

CHIEF, BUREAU OF UTILITIES DATE

DES: MJS
DRN: TRF
CHK: ZJS
DATE: 01/2018

DATE	REV	DESCRIPTION
03/2021		RECORD DRAWINGS

FIRE PROTECTION

GRAVITY BELT THICKENER AREA FIRE SUPPRESSION AND FIRE ALARM PLAN AT EL 128.00

LITTLE PATUXENT WATER RECLAMATION PLANT
8TH ADDITION
BIOSOLIDS PROCESSING FACILITIES - PHASE 2

CAPITAL PROJECT S-6295
CONTRACT NO. 24-4936

ELECTION DISTRICT NO. 6
HOWARD COUNTY, MARYLAND

SCALE AS SHOWN

SHEET 181 OF 311

F-100

BIM 360://10054364 – Little Patuxent WRP 8th Addition/264592_100_A_V18.rvt
1/7/2022 11:56:17 AM

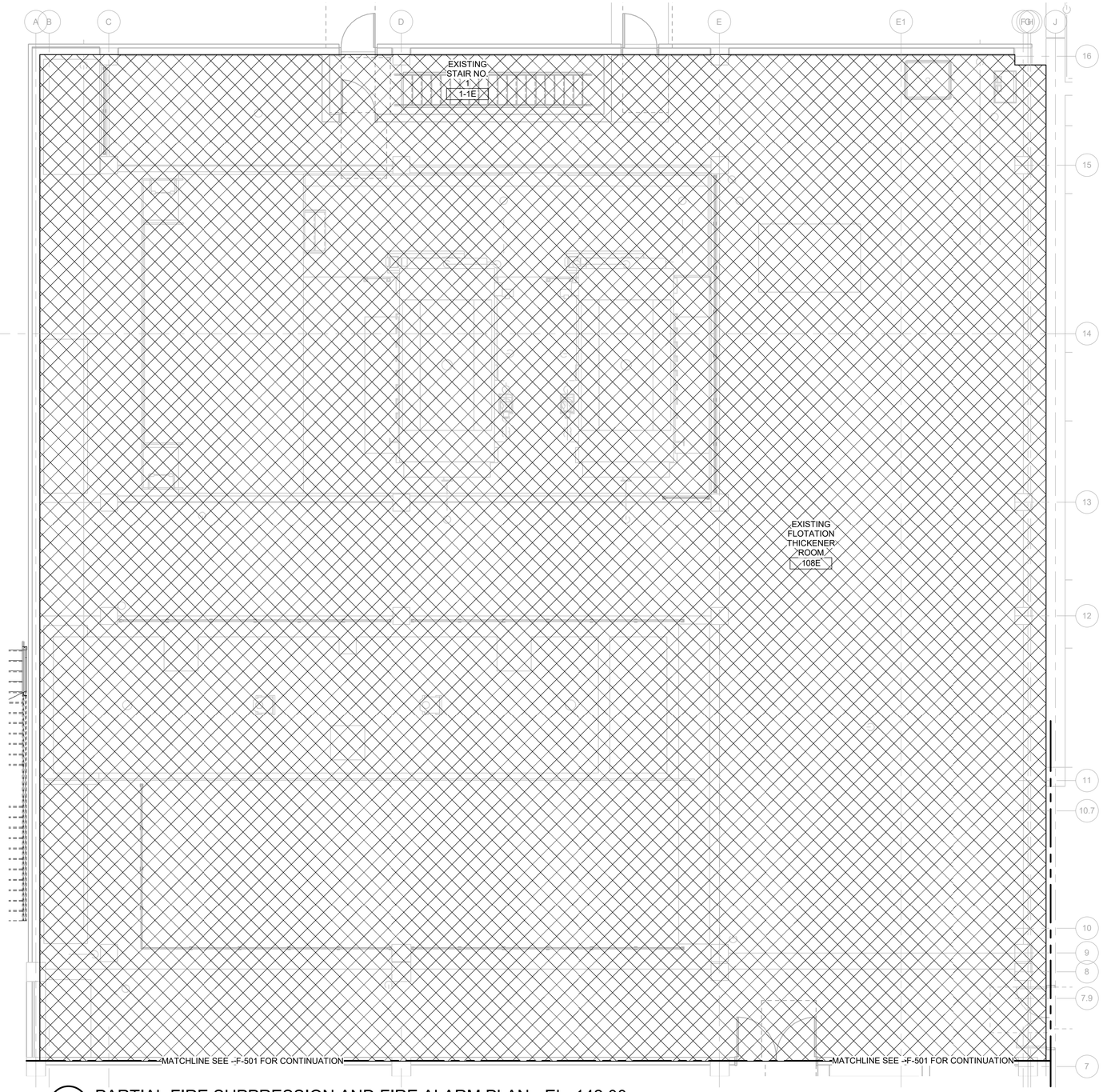

1 F-101 PARTIAL FIRE SUPPRESSION AND FIRE ALARM PLAN - EL. 142.00

3/16" = 1'-0"

N

NFPA 13 SPRINKLER SYSTEM SCHEDULE (WET PIPE)					
AREA (HATCHING PATTERN)	NFPA 13 HAZARD OCCUPANCY	MIN. DENSITY (GPM/SF)	MINIMUM HYDRAULIC DESIGN AREA (SF)	HOSE (GPM)	DURATION (MIN.)
	LIGHT HAZARD (ALL AREAS NOT HATCHED)	0.10	1500	100	30
	ORDINARY HAZARD (GROUP 1), SINGLE-INTERLOCK PRE-ACTION (AUXILIARY SYSTEM)	0.15	1500	250	60
	ORDINARY HAZARD (GROUP 2)	0.20	1500	250	60

FIRE ALARM NOTES:

1. THE FIRE ALARM SYSTEM IS A DELEGATED DESIGN WITH PERFORMANCE SPECIFICATIONS. PROVIDE A CODE COMPLIANT FIRE ALARM SYSTEM SERVING THE EXISTING BIOSOLIDS PROCESSING FACILITY (INCLUDING THE EXISTING SOLIDS PIPE GALLERY, GRAVITY BELT THICKENER AREA, AND SOLIDS SCREENING AREA – AS WELL AS THE NEW DRYER BUILDING) THAT MEETS THE REQUIREMENTS OF ALL APPLICABLE LOCAL AND NATIONAL CODES. THIS PLAN TO BE READ IN CONJUNCTION WITH THE FIRE ALARM SYSTEM SPECIFICATION, 28 31 00.

2. THERE IS AN EXISTING FIRE ALARM SYSTEM SERVING THE BIOSOLIDS PROCESSING FACILITY THAT IS NON-FUNCTIONAL. THE SCOPE OF WORK SHALL INCLUDE THE DEMOLITION OF THE EXISTING FIRE ALARM SYSTEM IN ITS ENTIRETY, INCLUDING ALL FIRE ALARM PANELS, COMPONENTS, DEVICES, WIRING, CONDUIT, ACCESSORIES, AND OTHER APPURTENANCES. CONTRACTOR SHALL BE RESPONSIBLE TO REQUEST ANY RECORD DRAWINGS AVAILABLE FOR THE EXISTING FIRE ALARM SYSTEM FROM OWNER AND TO PERFORM FIELD VERIFICATION OF EXISTING CONDITIONS PRIOR TO BID SUBMITTAL. CONTRACTOR WILL BE RESPONSIBLE FOR PROTECTING EXISTING CONDITIONS INCLUDING BUT NOT LIMITED TO: STRUCTURES, CEILINGS, WALLS, EQUIPMENT, UTILITIES, ETC. DAMAGE TO EXISTING CONDITIONS WILL BE REPAIRED AT NO ADDITIONAL COST TO THE OWNER. CONTRACTOR WILL BE RESPONSIBLE FOR PATCHING AND REPAIRING FLOORS, CEILINGS, AND WALLS TO MATCH EXISTING CONDITIONS IN AREAS IMPACTED BY THE DEMOLITION OF THE EXISTING FIRE ALARM SYSTEM AND INSTALLATION OF THE NEW FIRE ALARM SYSTEM.

3. THE ABOVE GRADE PORTION OF THE DRYER BUILDING IS THE ONLY AREA IN THE BIOSOLIDS PROCESSING FACILITY PROJECT PHASE 2 THAT WILL BE NEW CONSTRUCTION. THE CONTRACTOR SHALL BE RESPONSIBLE TO PERFORM THOROUGH SITE INVESTIGATION TO EXAMINE THE EXISTING BIOSOLIDS PROCESSING FACILITY PRIOR TO BIDDING THE PROJECT. REFER TO SPECIFICATION 28 31 00 FOR ADDITIONAL REQUIREMENTS.

4. THE NEW FIRE ALARM CONTROL UNIT (FACU) TO SERVE THE EXISTING BIOSOLIDS PROCESSING FACILITY SHALL BE LOCATED IN THE DRYER BUILDING MCC ROOM 203 AT EL. 156. THE FACU SHALL MONITOR ANY DUCT DETECTOR(S) PROVIDED BY THE MECHANICAL CONTRACTOR AS PART OF THE AHU PACKAGE(S). REFER TO HVAC DRAWINGS FOR SMOKE DUCT DETECTOR LOCATIONS. COORDINATE SHUTDOWN OF UNITS AS NEEDED TO MEET CODE.

5. THE BIOSOLIDS PROCESSING FACILITY FIRE ALARM CONTROL UNIT (FACU) SHALL PROVIDE POINT ADDRESSABLE SIGNAL ANNUNCIATION (ALARM, TROUBLE, & SUPERVISORY SIGNALS BY DEVICE/MODULE ADDRESS) TO THE ADMINISTRATION BUILDING FACU VIA A DEDICATED FIRE ALARM NETWORK USING FIBER OPTIC CABLES BEING RUN BETWEEN BUILDINGS. THE NEW BIOSOLIDS PROCESSING FACILITY FACU MUST BE THE SAME MODEL AND MANUFACTURER AS THE ADMINISTRATION BUILDING AND DIGESTER BUILDING FACU'S WITH FULL NETWORKING CAPABILITIES. CONTRACTOR SHALL PROVIDE NEW, DEDICATED FIBER OPTIC CABLES AS NEEDED TO CONNECT THE BIOSOLIDS PROCESSING FACILITY FACU TO THE ADMINISTRATION BUILDING FACU. PROVIDE FIBER-TO-COPPER MODULES IN THE FACU'S OR REMOTE FACU'S, AS NEEDED FOR NETWORK FUNCTIONALITY. REFER TO THE PHASE 2 NETWORK DIAGRAM ON SHEET F-901 FOR ADDITIONAL DETAILS.

6. THE FACU IN THE DRYER BUILDING WILL PROVIDE DRY CONTACT TYPE RELAY OUTPUTS FOR ANCILLARY REPORTING OF 2 FIRE ALARM SYSTEM SIGNALS TO AREA PLC PANEL 8-GBT-0011-PNL IN THE DRYER BUILDING MCC ROOM 203. AT EL. 156; THESE SIGNALS SHALL BE 'FIRE ALARM' AND 'FA TROUBLE OR SUPERVISORY CONDITION'.

7. THE EXISTING ADMINISTRATION BUILDING FACU PROVIDED AS PART OF PHASE 1, FOR REFERENCE THAT WORK INCLUDED THE FOLLOWING:
A. THE ADMINISTRATION BUILDING FACU SERVES AS THE GLOBAL FIRE ALARM NETWORK ANNUNCIATOR FOR A CONTROL ROOM LOCATION MANNED 24 HOURS-A-DAY / 7 DAYS-A-WEEK IN AN NFPA 72 PROPRIETARY SUPERVISING STATION CONFIGURATION FOR EMERGENCY SERVICES NOTIFICATION. THE ADMINISTRATION BUILDING FACU PROVIDES POINT ADDRESSABLE SIGNAL ANNUNCIATION (ALARM, TROUBLE, & SUPERVISORY SIGNALS BY DEVICE/MODULE ADDRESS) OF ALL EVENTS ON THE FIRE ALARM NETWORK.
B. THE ADMINISTRATION BUILDING FACU IS LOCATED IN THE CONTROL ROOM. THE ADMINISTRATION BUILDING FACU AND DIGESTER BUILDING FACU ARE NETWORKED USING MULTI-MODE FIBER OPTIC CABLE BEING INSTALLED BY OTHERS BETWEEN PATCH PANELS IN THOSE RESPECTIVE BUILDINGS. REFER TO THE CONTRACT DOCUMENTS FOR THE FIBER NETWORK DIAGRAM (I-904) AND OVERALL ELECTRICAL SITE PLAN (E-3) FOR ADDITIONAL INFORMATION.
C. THE ADMINISTRATION BUILDING FACU IS FULLY CAPABLE OF ADDING A DACT (DIGITAL ALARM COMMUNICATOR TRANSMITTER) IN THE FUTURE. THE DACT WOULD ONLY BE REQUIRED IN THE EVENT THAT THE AHJ REQUIRES HOWARD COUNTY LPWRP TO PROVIDE AUTOMATIC EMERGENCY SERVICES NOTIFICATION VIA A CENTRAL STATION SERVICE CONFIGURATION (INSTEAD OF A PROPRIETARY SUPERVISING STATION CONFIGURATION).

8. FOR PHASE 2, THE ADMINISTRATION BUILDING FACU SHALL BE UPDATED (IN BOTH HARDWARE AND SOFTWARE/PROGRAMMING) AS NEEDED TO ADD THE BIOSOLIDS PROCESSING FACILITY FACU TO THE NETWORK CONFIGURATION AND FULL GLOBAL REPORTING.

FIRE PROTECTION NOTES:

1. THE FIRE SPRINKLER SYSTEM IS A DELEGATED DESIGN WITH PERFORMANCE SPECIFICATIONS. PROVIDE A CODE COMPLIANT SPRINKLER SYSTEM SERVING THE EXISTING BIOSOLIDS PROCESSING FACILITY (INCLUDING THE EXISTING SOLIDS PIPE GALLERY, GRAVITY BELT THICKENER AREA, AND SOLIDS SCREENING AREA – AS WELL AS THE NEW DRYER BUILDING) THAT MEETS THE REQUIREMENTS OF ALL APPLICABLE LOCAL AND NATIONAL CODES. THIS PLAN TO BE READ IN CONJUNCTION WITH THE FIRE PROTECTION SYSTEMS SPECIFICATION, 21 05 00.

2. THE ABOVE GRADE PORTION OF THE DRYER BUILDING IS THE ONLY AREA IN THE BIOSOLIDS PROCESSING FACILITY PROJECT PHASE 2 THAT IS NEW CONSTRUCTION. A NEW WATER SERVICE AND FIRE SPRINKLER RISER SHALL BE PROVIDED IN THE DRYER BUILDING TO SERVE IT AND THE EXISTING BIOSOLIDS PROCESSING FACILITY. THE CONTRACTOR SHALL BE RESPONSIBILE TO PERFORM THOROUGH SITE INVESTIGATION TO EXAMINE THE EXISTING BIOSOLIDS PROCESSING FACILITY (INCLUDING THE SOLIDS PIPE GALLERY, GRAVITY BELT THICKENER AREA, AND SOLIDS SCREENING AREA) TO DETERMINE THE EXISTING CONDITIONS THEREIN. THE CONTRACTOR SHALL PROVIDE A DESIGN ANALYSIS TO DETERMINE THE BEST METHOD FOR INSTALLING A WET PIPE SPRINKLER SYSTEM THROUGHOUT THE BIOSOLIDS PROCESSING FACILITY. THE CONTRACTOR'S DESIGNATED SPRINKLER SYSTEM DESIGNER (WHO SHALL MEET THE DESIGNER QUALIFICATION REQUIREMENTS OF THE SPECIFICATION) SHALL EXAMINE EACH AREA AND DOCUMENT EXISTING CEILING HEIGHTS, OBSTRUCTIONS, CONSTRUCTION VARIATIONS, AND ARCHITECTURAL CONFIGURATIONS. THE CONTRACTOR'S DESIGNATED SPRINKLER SYSTEM DESIGNER SHALL EVALUATE THE EQUIPMENT HUNG FROM EXISTING CEILINGS AND COORDINATE SPRINKLER SYSTEM PIPING PLACEMENT ACCORDINGLY. THE CONTRACTOR SHALL REFER TO OTHER DISCIPLINES DRAWINGS (ARCHITECTURAL, ELECTRICAL, MECHANICAL, PROCESS, STRUCTURAL, ETC.), REVIEW THEM THOROUGHLY, AND COORDINATE NEW SPRINKLER PIPE ROUTING WITH ALL TRADES AND EXISTING CONDITIONS. THE CONTRACTOR SHALL BE FULLY RESPONSIBLE TO INCORPORATE ALL NEEDED ACCOMMODATIONS INTO FIRE SPRINKLER SYSTEM DESIGN TO MAKE THE SYSTEM WORK IN THE EXISTING ENVIRONMENT

3. INTERMEDIATE TEMPERATURE CLASSIFICATION SPRINKLER HEADS SHALL BE PROVIDED IN ALL MECHANICAL ROOMS AND OTHER LOCATIONS WITH HIGHER THAN NORMAL AMBIENT TEMPERATURES, IN ACCORDANCE WITH NFPA 13, 2013 EDITION.

4. ALL SPRINKLER HEADS SHALL BE PROVIDED WITH GUARDS IN MECHANICAL AND PROCESS ROOMS.

5. SPRINKLER HEADS SHALL BE HYDRAULICALLY CALCULATED IN ACCORDANCE WITH NFPA 13, 2013 EDITION.

6. PROVIDE THRUST RESTRAINT ON FIRE PROTECTION WATER SERVICE IN ACCORDANCE WITH NFPA 24.

7. A HYDRANT FLOW TEST WAS PERFORMED BY THE HOWARD COUNTY DEPARTMENT OF PUBLIC WORKS ON JULY 8, 2016 USING EXISTING HYDRANTS NEARBY THIS PLANNED BUILDING SITE AND THE RESULTS WERE 92 PSI STATIC PRESSURE AND 42 PSI RESIDUAL PRESSURE WITH 1,643 GPM FLOWING. THE CONTRACTOR SHALL BE RESPONSIBLE TO CONDUCT A HYDRANT FLOW TEST IN ACCORDANCE WITH NFPA 291 TO VERIFY THE AVAILABLE PRESSURE & FLOW OF THE WATER SUPPLY. THE CONTRACTOR SHALL THEN DESIGN FIRE SPRINKLER SYSTEM USING STATIC PRESSURE AND RESIDUAL PRESSURE/FLOWS AS DETERMINED DURING THEIR TESTING. THE SPRINKLER SYSTEM SHALL BE HYDRAULICALLY DESIGNED TO WORK WITHOUT ADDITION OF A FIRE PUMP; THE CONTRACTOR SHALL BE RESPONSIBLE FOR MINIMIZING THE PRESSURE LOSS OF THE SPRINKLER SYSTEM BY INCREASING PIPE SIZES, REDUCED HEAD SPACING, ADJUSTING SPRINKLER HEAD K-FACTORS, AND SO FORTH AS NECESSARY TO MAKE THE SYSTEM WORK WITH THE AVAILABLE WATER SUPPLY AND AVOID THE NEED FOR A FIRE PUMP.

THE DRAWINGS IN THIS SET ARE RECORD DRAWINGS. THEY ARE CONSTRUCTION CONTRACT DRAWINGS WHICH HAVE BEEN REVISED BASED ON AVAILABLE FIELD INFORMATION RECORDED BY OTHERS DURING CONSTRUCTION OF THIS CONTRACT. THERE HAS BEEN NO VERIFICATION OF DIMENSIONS SHOWN ON THE CONSTRUCTION DRAWINGS OR THE ACCURACY/COMPLETENESS OF THE FIELD INFORMATION RECEIVED.

SIGNATURE _____ DATE 2/7/2023

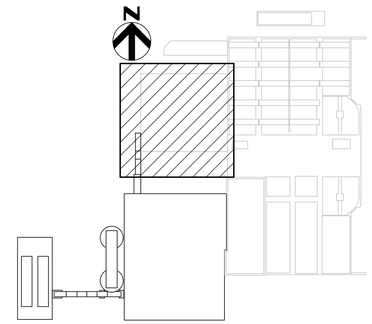

KEY PLAN

BIM 360://10054364 – Little Patuxent WRP 8th Addition/264592_100_A_V18.rvt
1/7/2022 11:56:20 AM

HDR

AS-BUILT REPLACEMENT SHEET

PROFESSIONAL CERTIFICATION

THIS DRAWING WAS ORIGINALLY APPROVED FOR CONSTRUCTION AND SEALED BY ADAM S. PARMENTER, A REGISTERED PROFESSIONAL ENGINEER IN THE STATE OF MARYLAND, NO. 39376

NOTICE TO CONTRACTORS

- PROJECT ELEVATIONS ARE BASED ON NAVD88 AND HOWARD COUNTY'S BENCHMARK SYSTEM
- PREVIOUS PROJECTS USED OTHER DATUMS
- APPLY THE FOLLOWING CONVERSIONS WHEN USING PREVIOUS CONTRACT DRAWINGS:
  - ADDITION NO. 6: SUBTRACT 0.80 FT
  - PRIOR ADDITIONS: SUBTRACT 1.04 FT

DEPARTMENT OF PUBLIC WORKS
HOWARD COUNTY, MARYLAND

CHIEF, BUREAU OF UTILITIES DATE

DES: MJS
DRN: TRF
CHK: ZJS
DATE: 01/2018

DATE	REV	DESCRIPTION
03/2021		RECORD DRAWINGS

FIRE PROTECTION

GRAVITY BELT THICKENER AREA FIRE SUPPRESSION AND FIRE ALARM PLAN AT EL 142.00

LITTLE PATUXENT WATER RECLAMATION PLANT
8TH ADDITION
BIOSOLIDS PROCESSING FACILITIES - PHASE 2

CAPITAL PROJECT S-6295
CONTRACT NO. 24-4936

ELECTION DISTRICT NO. 6
HOWARD COUNTY, MARYLAND

SCALE AS SHOWN

SHEET 182 OF 311

F-101

NFPA 13 SPRINKLER SYSTEM SCHEDULE (WET PIPE)					
AREA (HATCHING PATTERN)	NFPA 13 HAZARD OCCUPANCY	MIN. DENSITY (GPM/SF)	MINIMUM HYDRAULIC DESIGN AREA (SF)	HOSE (GPM)	DURATION (MIN.)
	LIGHT HAZARD (ALL AREAS NOT HATCHED)	0.10	1500	100	30
	ORDINARY HAZARD (GROUP 1), SINGLE-INTERLOCK PRE-ACTION (AUXILIARY SYSTEM)	0.15	1500	250	60
	ORDINARY HAZARD (GROUP 2)	0.20	1500	250	60

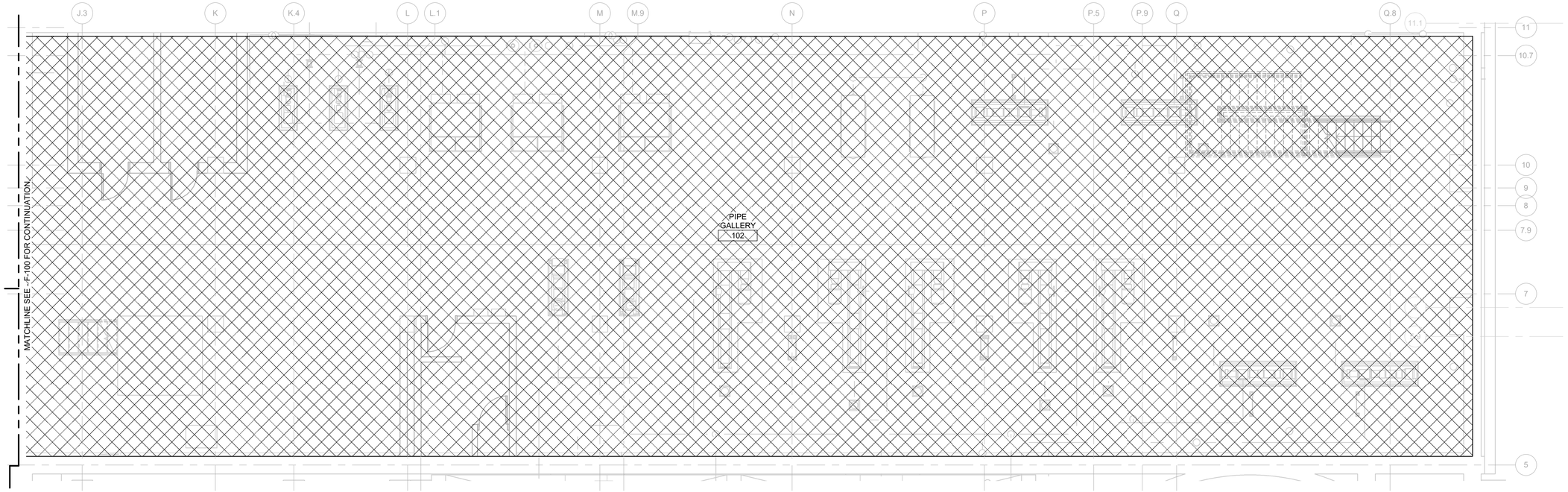

1 F-200 PARTIAL FIRE SUPPRESSION AND FIRE ALARM PLAN - EL. 128.00

3/16" = 1'-0"

FIRE ALARM NOTES:

1. THE FIRE ALARM SYSTEM IS A DELEGATED DESIGN WITH PERFORMANCE SPECIFICATIONS. PROVIDE A CODE COMPLIANT FIRE ALARM SYSTEM SERVING THE EXISTING BIOSOLIDS PROCESSING FACILITY (INCLUDING THE EXISTING SOLIDS PIPE GALLERY, GRAVITY BELT THICKENER AREA, AND SOLIDS SCREENING AREA – AS WELL AS THE NEW DRYER BUILDING) THAT MEETS THE REQUIREMENTS OF ALL APPLICABLE LOCAL AND NATIONAL CODES. THIS PLAN TO BE READ IN CONJUNCTION WITH THE FIRE ALARM SYSTEM SPECIFICATION, 28 31 00.

2. THERE IS AN EXISTING FIRE ALARM SYSTEM SERVING THE BIOSOLIDS PROCESSING FACILITY THAT IS NON-FUNCTIONAL. THE SCOPE OF WORK SHALL INCLUDE THE DEMOLITION OF THE EXISTING FIRE ALARM SYSTEM IN ITS ENTIRETY, INCLUDING ALL FIRE ALARM PANELS, COMPONENTS, DEVICES, WIRING, CONDUIT, ACCESSORIES, AND OTHER APPURTENANCES. CONTRACTOR SHALL BE RESPONSIBLE TO REQUEST ANY RECORD DRAWINGS AVAILABLE FOR THE EXISTING FIRE ALARM SYSTEM FROM OWNER AND TO PERFORM FIELD VERIFICATION OF EXISTING CONDITIONS PRIOR TO BID SUBMITTAL. CONTRACTOR WILL BE RESPONSIBLE FOR PROTECTING EXISTING CONDITIONS INCLUDING BUT NOT LIMITED TO: STRUCTURES, CEILINGS, WALLS, EQUIPMENT, UTILITIES, ETC. DAMAGE TO EXISTING CONDITIONS WILL BE REPAIRED AT NO ADDITIONAL COST TO THE OWNER. CONTRACTOR WILL BE RESPONSIBLE FOR PATCHING AND REPAIRING FLOORS, CEILINGS, AND WALLS TO MATCH EXISTING CONDITIONS IN AREAS IMPACTED BY THE DEMOLITION OF THE EXISTING FIRE ALARM SYSTEM AND INSTALLATION OF THE NEW FIRE ALARM SYSTEM.

3. THE ABOVE GRADE PORTION OF THE DRYER BUILDING IS THE ONLY AREA IN THE BIOSOLIDS PROCESSING FACILITY PROJECT PHASE 2 THAT WILL BE NEW CONSTRUCTION. THE CONTRACTOR SHALL BE RESPONSIBLE TO PERFORM THOROUGH SITE INVESTIGATION TO EXAMINE THE EXISTING BIOSOLIDS PROCESSING FACILITY PRIOR TO BIDDING THE PROJECT. REFER TO SPECIFICATION 28 31 00 FOR ADDITIONAL REQUIREMENTS.

4. THE NEW FIRE ALARM CONTROL UNIT (FACU) TO SERVE THE EXISTING BIOSOLIDS PROCESSING FACILITY SHALL BE LOCATED IN THE DRYER BUILDING MCC ROOM 203 AT EL. 156. THE FACU SHALL MONITOR ANY DUCT DETECTOR(S) PROVIDED BY THE MECHANICAL CONTRACTOR AS PART OF THE AHU PACKAGE(S). REFER TO HVAC DRAWINGS FOR SMOKE DUCT DETECTOR LOCATIONS. COORDINATE SHUTDOWN OF UNITS AS NEEDED TO MEET CODE.

5. THE BIOSOLIDS PROCESSING FACILITY FIRE ALARM CONTROL UNIT (FACU) SHALL PROVIDE POINT ADDRESSABLE SIGNAL ANNUNCIATION (ALARM, TROUBLE, & SUPERVISORY SIGNALS BY DEVICE/MODULE ADDRESS) TO THE ADMINISTRATION BUILDING FACU VIA A DEDICATED FIRE ALARM NETWORK USING FIBER OPTIC CABLES BEING RUN BETWEEN BUILDINGS. THE NEW BIOSOLIDS PROCESSING FACILITY FACU MUST BE THE SAME MODEL AND MANUFACTURER AS THE ADMINISTRATION BUILDING AND DIGESTER BUILDING FACU'S WITH FULL NETWORKING CAPABILITIES. CONTRACTOR SHALL PROVIDE NEW, DEDICATED FIBER OPTIC CABLES AS NEEDED TO CONNECT THE BIOSOLIDS PROCESSING FACILITY FACU TO THE ADMINISTRATION BUILDING FACU. PROVIDE FIBER-TO-COPPER MODULES IN THE FACU'S OR REMOTE FACU'S, AS NEEDED FOR NETWORK FUNCTIONALITY. REFER TO THE PHASE 2 NETWORK DIAGRAM ON SHEET F-901 FOR ADDITIONAL DETAILS.

6. THE FACU IN THE DRYER BUILDING WILL PROVIDE DRY CONTACT TYPE RELAY OUTPUTS FOR ANCILLARY REPORTING OF 2 FIRE ALARM SYSTEM SIGNALS TO AREA PLC PANEL 8-GBT-0011-PNL IN THE DRYER BUILDING MCC ROOM 203. AT EL. 156; THESE SIGNALS SHALL BE 'FIRE ALARM' AND 'FA TROUBLE OR SUPERVISORY CONDITION'.

7. THE EXISTING ADMINISTRATION BUILDING FACU PROVIDED AS PART OF PHASE 1, FOR REFERENCE THAT WORK INCLUDED THE FOLLOWING:
A. THE ADMINISTRATION BUILDING FACU SERVES AS THE GLOBAL FIRE ALARM NETWORK ANNUNCIATOR FOR A CONTROL ROOM LOCATION MANNED 24 HOURS-A-DAY / 7 DAYS-A-WEEK IN AN NFPA 72 PROPRIETARY SUPERVISING STATION CONFIGURATION FOR EMERGENCY SERVICES NOTIFICATION. THE ADMINISTRATION BUILDING FACU PROVIDES POINT ADDRESSABLE SIGNAL ANNUNCIATION (ALARM, TROUBLE, & SUPERVISORY SIGNALS BY DEVICE/MODULE ADDRESS) OF ALL EVENTS ON THE FIRE ALARM NETWORK.
B. THE ADMINISTRATION BUILDING FACU IS LOCATED IN THE CONTROL ROOM. THE ADMINISTRATION BUILDING FACU AND DIGESTER BUILDING FACU ARE NETWORKED USING MULTI-MODE FIBER OPTIC CABLE BEING INSTALLED BY OTHERS BETWEEN PATCH PANELS IN THOSE RESPECTIVE BUILDINGS. REFER TO THE CONTRACT DOCUMENTS FOR THE FIBER NETWORK DIAGRAM (I-904) AND OVERALL ELECTRICAL SITE PLAN (E-3) FOR ADDITIONAL INFORMATION.
C. THE ADMINISTRATION BUILDING FACU IS FULLY CAPABLE OF ADDING A DACT (DIGITAL ALARM COMMUNICATOR TRANSMITTER) IN THE FUTURE. THE DACT WOULD ONLY BE REQUIRED IN THE EVENT THAT THE AHJ REQUIRES HOWARD COUNTY LPWRP TO PROVIDE AUTOMATIC EMERGENCY SERVICES NOTIFICATION VIA A CENTRAL STATION SERVICE CONFIGURATION (INSTEAD OF A PROPRIETARY SUPERVISING STATION CONFIGURATION).

8. FOR PHASE 2, THE ADMINISTRATION BUILDING FACU SHALL BE UPDATED (IN BOTH HARDWARE AND SOFTWARE/PROGRAMMING) AS NEEDED TO ADD THE BIOSOLIDS PROCESSING FACILITY FACU TO THE NETWORK CONFIGURATION AND FULL GLOBAL REPORTING.

FIRE PROTECTION NOTES:

1. THE FIRE SPRINKLER SYSTEM IS A DELEGATED DESIGN WITH PERFORMANCE SPECIFICATIONS. PROVIDE A CODE COMPLIANT SPRINKLER SYSTEM SERVING THE EXISTING BIOSOLIDS PROCESSING FACILITY (INCLUDING THE EXISTING SOLIDS PIPE GALLERY, GRAVITY BELT THICKENER AREA, AND SOLIDS SCREENING AREA – AS WELL AS THE NEW DRYER BUILDING) THAT MEETS THE REQUIREMENTS OF ALL APPLICABLE LOCAL AND NATIONAL CODES. THIS PLAN TO BE READ IN CONJUNCTION WITH THE FIRE PROTECTION SYSTEMS SPECIFICATION, 21 05 00.

2. THE ABOVE GRADE PORTION OF THE DRYER BUILDING IS THE ONLY AREA IN THE BIOSOLIDS PROCESSING FACILITY PROJECT PHASE 2 THAT IS NEW CONSTRUCTION. A NEW WATER SERVICE AND FIRE SPRINKLER RISER SHALL BE PROVIDED IN THE DRYER BUILDING TO SERVE IT AND THE EXISTING BIOSOLIDS PROCESSING FACILITY. THE CONTRACTOR SHALL BE RESPONSIBLE TO PERFORM THOROUGH SITE INVESTIGATION TO EXAMINE THE EXISTING BIOSOLIDS PROCESSING FACILITY (INCLUDING THE SOLIDS PIPE GALLERY, GRAVITY BELT THICKENER AREA, AND SOLIDS SCREENING AREA) TO DETERMINE THE EXISTING CONDITIONS THEREIN. THE CONTRACTOR SHALL PROVIDE A DESIGN ANALYSIS TO DETERMINE THE BEST METHOD FOR INSTALLING A WET PIPE SPRINKLER SYSTEM THROUGHOUT THE BIOSOLIDS PROCESSING FACILITY. THE CONTRACTOR'S DESIGNATED SPRINKLER SYSTEM DESIGNER (WHO SHALL MEET THE DESIGNER QUALIFICATION REQUIREMENTS OF THE SPECIFICATION) SHALL EXAMINE EACH AREA AND DOCUMENT EXISTING CEILING HEIGHTS, OBSTRUCTIONS, CONSTRUCTION VARIATIONS, AND ARCHITECTURAL CONFIGURATIONS. THE CONTRACTOR'S DESIGNATED SPRINKLER SYSTEM DESIGNER SHALL EVALUATE THE EQUIPMENT HUNG FROM EXISTING CEILINGS AND COORDINATE SPRINKLER SYSTEM PIPING PLACEMENT ACCORDINGLY. THE CONTRACTOR SHALL REFER TO OTHER DISCIPLINES DRAWINGS (ARCHITECTURAL, ELECTRICAL, MECHANICAL, PROCESS, STRUCTURAL, ETC.), REVIEW THEM THOROUGHLY, AND COORDINATE NEW SPRINKLER PIPE ROUTING WITH ALL TRADES AND EXISTING CONDITIONS. THE CONTRACTOR SHALL BE FULLY RESPONSIBLE TO INCORPORATE ALL NEEDED ACCOMMODATIONS INTO FIRE SPRINKLER SYSTEM DESIGN TO MAKE THE SYSTEM WORK IN THE EXISTING ENVIRONMENT

3. INTERMEDIATE TEMPERATURE CLASSIFICATION SPRINKLER HEADS SHALL BE PROVIDED IN ALL MECHANICAL ROOMS AND OTHER LOCATIONS WITH HIGHER THAN NORMAL AMBIENT TEMPERATURES, IN ACCORDANCE WITH NFPA 13, 2013 EDITION.

4. ALL SPRINKLER HEADS SHALL BE PROVIDED WITH GUARDS IN MECHANICAL AND PROCESS ROOMS.

5. SPRINKLER HEADS SHALL BE HYDRAULICALLY CALCULATED IN ACCORDANCE WITH NFPA 13, 2013 EDITION.

6. PROVIDE THRUST RESTRAINT ON FIRE PROTECTION WATER SERVICE IN ACCORDANCE WITH NFPA 24.

7. A HYDRANT FLOW TEST WAS PERFORMED BY THE HOWARD COUNTY DEPARTMENT OF PUBLIC WORKS ON JULY 8, 2016 USING EXISTING HYDRANTS NEARBY THIS PLANNED BUILDING SITE AND THE RESULTS WERE 92 PSI STATIC PRESSURE AND 42 PSI RESIDUAL PRESSURE WITH 1,643 GPM FLOWING. THE CONTRACTOR SHALL BE RESPONSIBLE TO CONDUCT A HYDRANT FLOW TEST IN ACCORDANCE WITH NFPA 291 TO VERIFY THE AVAILABLE PRESSURE & FLOW OF THE WATER SUPPLY. THE CONTRACTOR SHALL THEN DESIGN FIRE SPRINKLER SYSTEM USING STATIC PRESSURE AND RESIDUAL PRESSURE/FLOWS AS DETERMINED DURING THEIR TESTING. THE SPRINKLER SYSTEM SHALL BE HYDRAULICALLY DESIGNED TO WORK WITHOUT ADDITION OF A FIRE PUMP; THE CONTRACTOR SHALL BE RESPONSIBLE FOR MINIMIZING THE PRESSURE LOSS OF THE SPRINKLER SYSTEM BY INCREASING PIPE SIZES, REDUCED HEAD SPACING, ADJUSTING SPRINKLER HEAD K-FACTORS, AND SO FORTH AS NECESSARY TO MAKE THE SYSTEM WORK WITH THE AVAILABLE WATER SUPPLY AND AVOID THE NEED FOR A FIRE PUMP.

THE DRAWINGS IN THIS SET ARE RECORD DRAWINGS. THEY ARE CONSTRUCTION CONTRACT DRAWINGS WHICH HAVE BEEN REVISED BASED ON AVAILABLE FIELD INFORMATION RECORDED BY OTHERS DURING CONSTRUCTION OF THIS CONTRACT. THERE HAS BEEN NO VERIFICATION OF DIMENSIONS SHOWN ON THE CONSTRUCTION DRAWINGS OR THE ACCURACY/COMPLETENESS OF THE FIELD INFORMATION RECEIVED.

SIGNATURE — DATE 2/7/2023

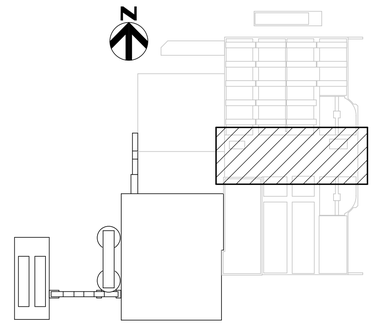

KEY PLAN

BIM 360://10054364 – Little Patuxent WRP 8th Addition/264592_100_A_V18.rvt
1/7/2022 11:56:24 AM

AS-BUILT REPLACEMENT SHEET

PROFESSIONAL CERTIFICATION

THIS DRAWING WAS ORIGINALLY APPROVED FOR CONSTRUCTION AND SEALED BY ADAM S. PARMENTER, A REGISTERED PROFESSIONAL ENGINEER IN THE STATE OF MARYLAND, NO. 39376

NOTICE TO CONTRACTORS

- PROJECT ELEVATIONS ARE BASED ON NAVD88 AND HOWARD COUNTY'S BENCHMARK SYSTEM
- PREVIOUS PROJECTS USED OTHER DATUMS
- APPLY THE FOLLOWING CONVERSIONS WHEN USING PREVIOUS CONTRACT DRAWINGS:
  - ADDITION NO. 6: SUBTRACT 0.80 FT
  - PRIOR ADDITIONS: SUBTRACT 1.04 FT

DEPARTMENT OF PUBLIC WORKS
HOWARD COUNTY, MARYLAND

CHIEF, BUREAU OF UTILITIES — DATE

DES: MJS
DRN: TRF
CHK: ZJS
DATE: 01/2018

DATE	REV	DESCRIPTION
03/2021		RECORD DRAWINGS

FIRE PROTECTION

SOLIDS PIPE GALLERY FIRE SUPPRESSION AND FIRE ALARM PLAN AT EL 128.00

LITTLE PATUXENT WATER RECLAMATION PLANT
8TH ADDITION
BIOSOLIDS PROCESSING FACILITIES - PHASE 2

CAPITAL PROJECT S-6295
CONTRACT NO. 24-4936

ELECTION DISTRICT NO. 6
HOWARD COUNTY, MARYLAND

SCALE AS SHOWN

SHEET 183 OF 311

F-200

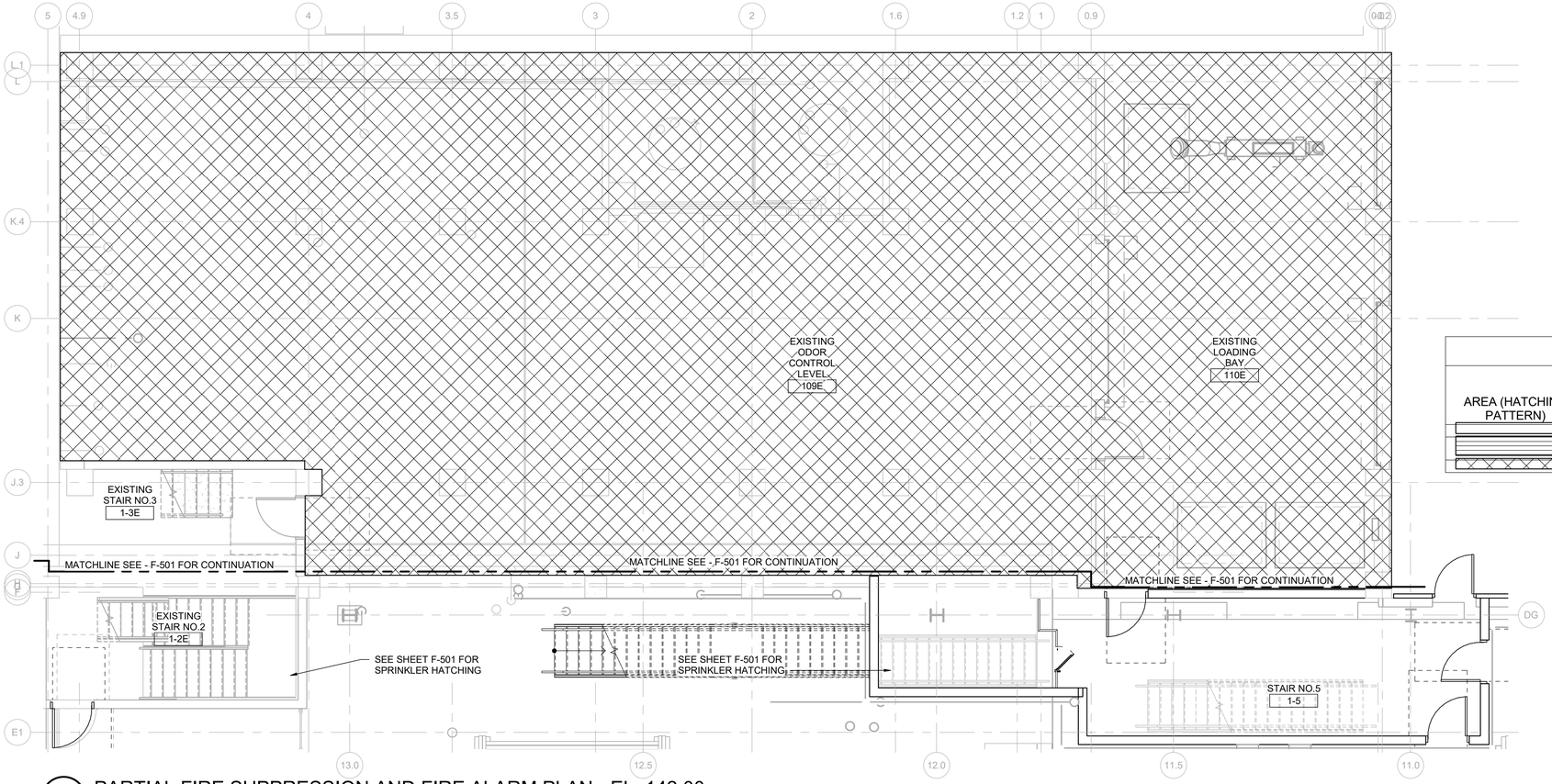

1 / F-240 PARTIAL FIRE SUPPRESSION AND FIRE ALARM PLAN - EL. 142.00

3/16" = 1'-0"

NFPA 13 SPRINKLER SYSTEM SCHEDULE (WET PIPE)					
AREA (HATCHING PATTERN)	NFPA 13 HAZARD OCCUPANCY	MIN. DENSITY (GPM/SF)	MINIMUM HYDRAULIC DESIGN AREA (SF)	HOSE (GPM)	DURATION (MIN.)
	LIGHT HAZARD (ALL AREAS NOT HATCHED)	0.10	1500	100	30
	ORDINARY HAZARD (GROUP 1), SINGLE-INTERLOCK PRE-ACTION (AUXILIARY SYSTEM)	0.15	1500	250	60
	ORDINARY HAZARD (GROUP 2)	0.20	1500	250	60

FIRE ALARM NOTES:

1. THE FIRE ALARM SYSTEM IS A DELEGATED DESIGN WITH PERFORMANCE SPECIFICATIONS. PROVIDE A CODE COMPLIANT FIRE ALARM SYSTEM SERVING THE EXISTING BIOSOLIDS PROCESSING FACILITY (INCLUDING THE EXISTING SOLIDS PIPE GALLERY, GRAVITY BELT THICKENER AREA, AND SOLIDS SCREENING AREA – AS WELL AS THE NEW DRYER BUILDING) THAT MEETS THE REQUIREMENTS OF ALL APPLICABLE LOCAL AND NATIONAL CODES. THIS PLAN TO BE READ IN CONJUNCTION WITH THE FIRE ALARM SYSTEM SPECIFICATION, 28 31 00.

2. THERE IS AN EXISTING FIRE ALARM SYSTEM SERVING THE BIOSOLIDS PROCESSING FACILITY THAT IS NON-FUNCTIONAL. THE SCOPE OF WORK SHALL INCLUDE THE DEMOLITION OF THE EXISTING FIRE ALARM SYSTEM IN ITS ENTIRETY, INCLUDING ALL FIRE ALARM PANELS, COMPONENTS, DEVICES, WIRING, CONDUIT, ACCESSORIES, AND OTHER APPURTENANCES. CONTRACTOR SHALL BE RESPONSIBLE TO REQUEST ANY RECORD DRAWINGS AVAILABLE FOR THE EXISTING FIRE ALARM SYSTEM FROM OWNER AND TO PERFORM FIELD VERIFICATION OF EXISTING CONDITIONS PRIOR TO BID SUBMITTAL. CONTRACTOR WILL BE RESPONSIBLE FOR PROTECTING EXISTING CONDITIONS INCLUDING BUT NOT LIMITED TO: STRUCTURES, CEILINGS, WALLS, EQUIPMENT, UTILITIES, ETC. DAMAGE TO EXISTING CONDITIONS WILL BE REPAIRED AT NO ADDITIONAL COST TO THE OWNER. CONTRACTOR WILL BE RESPONSIBLE FOR PATCHING AND REPAIRING FLOORS, CEILINGS, AND WALLS TO MATCH EXISTING CONDITIONS IN AREAS IMPACTED BY THE DEMOLITION OF THE EXISTING FIRE ALARM SYSTEM AND INSTALLATION OF THE NEW FIRE ALARM SYSTEM.

3. THE ABOVE GRADE PORTION OF THE DRYER BUILDING IS THE ONLY AREA IN THE BIOSOLIDS PROCESSING FACILITY PROJECT PHASE 2 THAT WILL BE NEW CONSTRUCTION. THE CONTRACTOR SHALL BE RESPONSIBLE TO PERFORM THOROUGH SITE INVESTIGATION TO EXAMINE THE EXISTING BIOSOLIDS PROCESSING FACILITY PRIOR TO BIDDING THE PROJECT. REFER TO SPECIFICATION 28 31 00 FOR ADDITIONAL REQUIREMENTS.

4. THE NEW FIRE ALARM CONTROL UNIT (FACU) TO SERVE THE EXISTING BIOSOLIDS PROCESSING FACILITY SHALL BE LOCATED IN THE DRYER BUILDING MCC ROOM 203 AT EL. 156. THE FACU SHALL MONITOR ANY DUCT DETECTOR(S) PROVIDED BY THE MECHANICAL CONTRACTOR AS PART OF THE AHU PACKAGE(S). REFER TO HVAC DRAWINGS FOR SMOKE DUCT DETECTOR LOCATIONS. COORDINATE SHUTDOWN OF UNITS AS NEEDED TO MEET CODE.

5. THE BIOSOLIDS PROCESSING FACILITY FIRE ALARM CONTROL UNIT (FACU) SHALL PROVIDE POINT ADDRESSABLE SIGNAL ANNUNCIATION (ALARM, TROUBLE, & SUPERVISORY SIGNALS BY DEVICE/MODULE ADDRESS) TO THE ADMINISTRATION BUILDING FACU VIA A DEDICATED FIRE ALARM NETWORK USING FIBER OPTIC CABLES BEING RUN BETWEEN BUILDINGS. THE NEW BIOSOLIDS PROCESSING FACILITY FACU MUST BE THE SAME MODEL AND MANUFACTURER AS THE ADMINISTRATION BUILDING AND DIGESTER BUILDING FACU'S WITH FULL NETWORKING CAPABILITIES. CONTRACTOR SHALL PROVIDE NEW, DEDICATED FIBER OPTIC CABLES AS NEEDED TO CONNECT THE BIOSOLIDS PROCESSING FACILITY FACU TO THE ADMINISTRATION BUILDING FACU. PROVIDE FIBER-TO-COPPER MODULES IN THE FACU'S OR REMOTE FACU'S, AS NEEDED FOR NETWORK FUNCTIONALITY. REFER TO THE PHASE 2 NETWORK DIAGRAM ON SHEET F-901 FOR ADDITIONAL DETAILS.

6. THE FACU IN THE DRYER BUILDING WILL PROVIDE DRY CONTACT TYPE RELAY OUTPUTS FOR ANCILLARY REPORTING OF 2 FIRE ALARM SYSTEM SIGNALS TO AREA PLC PANEL 8-GBT-0011-PNL IN THE DRYER BUILDING MCC ROOM 203. AT EL. 156; THESE SIGNALS SHALL BE 'FIRE ALARM' AND 'FA TROUBLE OR SUPERVISORY CONDITION'.

7. THE EXISTING ADMINISTRATION BUILDING FACU PROVIDED AS PART OF PHASE 1, FOR REFERENCE THAT WORK INCLUDED THE FOLLOWING:
A. THE ADMINISTRATION BUILDING FACU SERVES AS THE GLOBAL FIRE ALARM NETWORK ANNUNCIATOR FOR A CONTROL ROOM LOCATION MANNED 24 HOURS-A-DAY / 7 DAYS-A-WEEK IN AN NFPA 72 PROPRIETARY SUPERVISING STATION CONFIGURATION FOR EMERGENCY SERVICES NOTIFICATION. THE ADMINISTRATION BUILDING FACU PROVIDES POINT ADDRESSABLE SIGNAL ANNUNCIATION (ALARM, TROUBLE, & SUPERVISORY SIGNALS BY DEVICE/MODULE ADDRESS) OF ALL EVENTS ON THE FIRE ALARM NETWORK.
B. THE ADMINISTRATION BUILDING FACU IS LOCATED IN THE CONTROL ROOM. THE ADMINISTRATION BUILDING FACU AND DIGESTER BUILDING FACU ARE NETWORKED USING MULTI-MODE FIBER OPTIC CABLE BEING INSTALLED BY OTHERS BETWEEN PATCH PANELS IN THOSE RESPECTIVE BUILDINGS. REFER TO THE CONTRACT DOCUMENTS FOR THE FIBER NETWORK DIAGRAM (I-904) AND OVERALL ELECTRICAL SITE PLAN (E-3) FOR ADDITIONAL INFORMATION.
C. THE ADMINISTRATION BUILDING FACU IS FULLY CAPABLE OF ADDING A DACT (DIGITAL ALARM COMMUNICATOR TRANSMITTER) IN THE FUTURE. THE DACT WOULD ONLY BE REQUIRED IN THE EVENT THAT THE AHJ REQUIRES HOWARD COUNTY LPWRP TO PROVIDE AUTOMATIC EMERGENCY SERVICES NOTIFICATION VIA A CENTRAL STATION SERVICE CONFIGURATION (INSTEAD OF A PROPRIETARY SUPERVISING STATION CONFIGURATION).

8. FOR PHASE 2, THE ADMINISTRATION BUILDING FACU SHALL BE UPDATED (IN BOTH HARDWARE AND SOFTWARE/PROGRAMMING) AS NEEDED TO ADD THE BIOSOLIDS PROCESSING FACILITY FACU TO THE NETWORK CONFIGURATION AND FULL GLOBAL REPORTING.

FIRE PROTECTION NOTES:

1. THE FIRE SPRINKLER SYSTEM IS A DELEGATED DESIGN WITH PERFORMANCE SPECIFICATIONS. PROVIDE A CODE COMPLIANT SPRINKLER SYSTEM SERVING THE EXISTING BIOSOLIDS PROCESSING FACILITY (INCLUDING THE EXISTING SOLIDS PIPE GALLERY, GRAVITY BELT THICKENER AREA, AND SOLIDS SCREENING AREA – AS WELL AS THE NEW DRYER BUILDING) THAT MEETS THE REQUIREMENTS OF ALL APPLICABLE LOCAL AND NATIONAL CODES. THIS PLAN TO BE READ IN CONJUNCTION WITH THE FIRE PROTECTION SYSTEMS SPECIFICATION, 21 05 00.

2. THE ABOVE GRADE PORTION OF THE DRYER BUILDING IS THE ONLY AREA IN THE BIOSOLIDS PROCESSING FACILITY PROJECT PHASE 2 THAT IS NEW CONSTRUCTION. A NEW WATER SERVICE AND FIRE SPRINKLER RISER SHALL BE PROVIDED IN THE DRYER BUILDING TO SERVE IT AND THE EXISTING BIOSOLIDS PROCESSING FACILITY. THE CONTRACTOR SHALL BE RESPONSIBLE TO PERFORM THOROUGH SITE INVESTIGATION TO EXAMINE THE EXISTING BIOSOLIDS PROCESSING FACILITY (INCLUDING THE SOLIDS PIPE GALLERY, GRAVITY BELT THICKENER AREA, AND SOLIDS SCREENING AREA) TO DETERMINE THE EXISTING CONDITIONS THEREIN. THE CONTRACTOR SHALL PROVIDE A DESIGN ANALYSIS TO DETERMINE THE BEST METHOD FOR INSTALLING A WET PIPE SPRINKLER SYSTEM THROUGHOUT THE BIOSOLIDS PROCESSING FACILITY. THE CONTRACTOR'S DESIGNATED SPRINKLER SYSTEM DESIGNER (WHO SHALL MEET THE DESIGNER QUALIFICATION REQUIREMENTS OF THE SPECIFICATION) SHALL EXAMINE EACH AREA AND DOCUMENT EXISTING CEILING HEIGHTS, OBSTRUCTIONS, CONSTRUCTION VARIATIONS, AND ARCHITECTURAL CONFIGURATIONS. THE CONTRACTOR'S DESIGNATED SPRINKLER SYSTEM DESIGNER SHALL EVALUATE THE EQUIPMENT HUNG FROM EXISTING CEILINGS AND COORDINATE SPRINKLER SYSTEM PIPING PLACEMENT ACCORDINGLY. THE CONTRACTOR SHALL REFER TO OTHER DISCIPLINES DRAWINGS (ARCHITECTURAL, ELECTRICAL, MECHANICAL, PROCESS, STRUCTURAL, ETC.), REVIEW THEM THOROUGHLY, AND COORDINATE NEW SPRINKLER PIPE ROUTING WITH ALL TRADES AND EXISTING CONDITIONS. THE CONTRACTOR SHALL BE FULLY RESPONSIBLE TO INCORPORATE ALL NEEDED ACCOMMODATIONS INTO FIRE SPRINKLER SYSTEM DESIGN TO MAKE THE SYSTEM WORK IN THE EXISTING ENVIRONMENT

3. INTERMEDIATE TEMPERATURE CLASSIFICATION SPRINKLER HEADS SHALL BE PROVIDED IN ALL MECHANICAL ROOMS AND OTHER LOCATIONS WITH HIGHER THAN NORMAL AMBIENT TEMPERATURES, IN ACCORDANCE WITH NFPA 13, 2013 EDITION.

4. ALL SPRINKLER HEADS SHALL BE PROVIDED WITH GUARDS IN MECHANICAL AND PROCESS ROOMS.

5. SPRINKLER HEADS SHALL BE HYDRAULICALLY CALCULATED IN ACCORDANCE WITH NFPA 13, 2013 EDITION.

6. PROVIDE THRUST RESTRAINT ON FIRE PROTECTION WATER SERVICE IN ACCORDANCE WITH NFPA 24.

7. A HYDRANT FLOW TEST WAS PERFORMED BY THE HOWARD COUNTY DEPARTMENT OF PUBLIC WORKS ON JULY 8, 2016 USING EXISTING HYDRANTS NEARBY THIS PLANNED BUILDING SITE AND THE RESULTS WERE 92 PSI STATIC PRESSURE AND 42 PSI RESIDUAL PRESSURE WITH 1,643 GPM FLOWING. THE CONTRACTOR SHALL BE RESPONSIBLE TO CONDUCT A HYDRANT FLOW TEST IN ACCORDANCE WITH NFPA 291 TO VERIFY THE AVAILABLE PRESSURE & FLOW OF THE WATER SUPPLY. THE CONTRACTOR SHALL THEN DESIGN FIRE SPRINKLER SYSTEM USING STATIC PRESSURE AND RESIDUAL PRESSURE/FLOWS AS DETERMINED DURING THEIR TESTING. THE SPRINKLER SYSTEM SHALL BE HYDRAULICALLY DESIGNED TO WORK WITHOUT ADDITION OF A FIRE PUMP; THE CONTRACTOR SHALL BE RESPONSIBLE FOR MINIMIZING THE PRESSURE LOSS OF THE SPRINKLER SYSTEM BY INCREASING PIPE SIZES, REDUCED HEAD SPACING, ADJUSTING SPRINKLER HEAD K-FACTORS, AND SO FORTH AS NECESSARY TO MAKE THE SYSTEM WORK WITH THE AVAILABLE WATER SUPPLY AND AVOID THE NEED FOR A FIRE PUMP.

THE DRAWINGS IN THIS SET ARE RECORD DRAWINGS. THEY ARE CONSTRUCTION CONTRACT DRAWINGS WHICH HAVE BEEN REVISED BASED ON AVAILABLE FIELD INFORMATION RECORDED BY OTHERS DURING CONSTRUCTION OF THIS CONTRACT. THERE HAS BEEN NO VERIFICATION OF DIMENSIONS SHOWN ON THE CONSTRUCTION DRAWINGS OR THE ACCURACY/COMPLETENESS OF THE FIELD INFORMATION RECEIVED.

SIGNATURE _____ DATE 2/7/2022

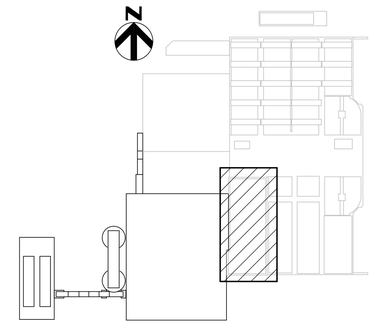

KEY PLAN

AS-BUILT REPLACEMENT SHEET

PROFESSIONAL CERTIFICATION

THIS DRAWING WAS ORIGINALLY APPROVED FOR CONSTRUCTION AND SEALED BY ADAM S. PARMENTER, A REGISTERED PROFESSIONAL ENGINEER IN THE STATE OF MARYLAND, NO. 39376

NOTICE TO CONTRACTORS

- PROJECT ELEVATIONS ARE BASED ON NAVD88 AND HOWARD COUNTY'S BENCHMARK SYSTEM
- PREVIOUS PROJECTS USED OTHER DATUMS
- APPLY THE FOLLOWING CONVERSIONS WHEN USING PREVIOUS CONTRACT DRAWINGS:
  - ADDITION NO. 6: SUBTRACT 0.80 FT
  - PRIOR ADDITIONS: SUBTRACT 1.04 FT

DEPARTMENT OF PUBLIC WORKS
HOWARD COUNTY, MARYLAND

CHIEF, BUREAU OF UTILITIES DATE

DES: MJS
DRN: TRF
CHK: ZJS
DATE: 01/2018

DATE	REV	DESCRIPTION
03/2021		RECORD DRAWINGS

FIRE PROTECTION

SOLIDS SCREENING AREA FIRE SUPPRESSION AND FIRE ALARM PLAN AT EL 142.00

LITTLE PATUXENT WATER RECLAMATION PLANT
8TH ADDITION
BIOSOLIDS PROCESSING FACILITIES - PHASE 2

CAPITAL PROJECT S-6295
CONTRACT NO. 24-4936

ELECTION DISTRICT NO. 6
HOWARD COUNTY, MARYLAND

SCALE AS SHOWN

SHEET 184 OF 311

F-240

BIM 360://10054364 – Little Patuxent WRP 8th Addition/284592_100_A_V18.rvt
1/7/2022 11:56:27 AM

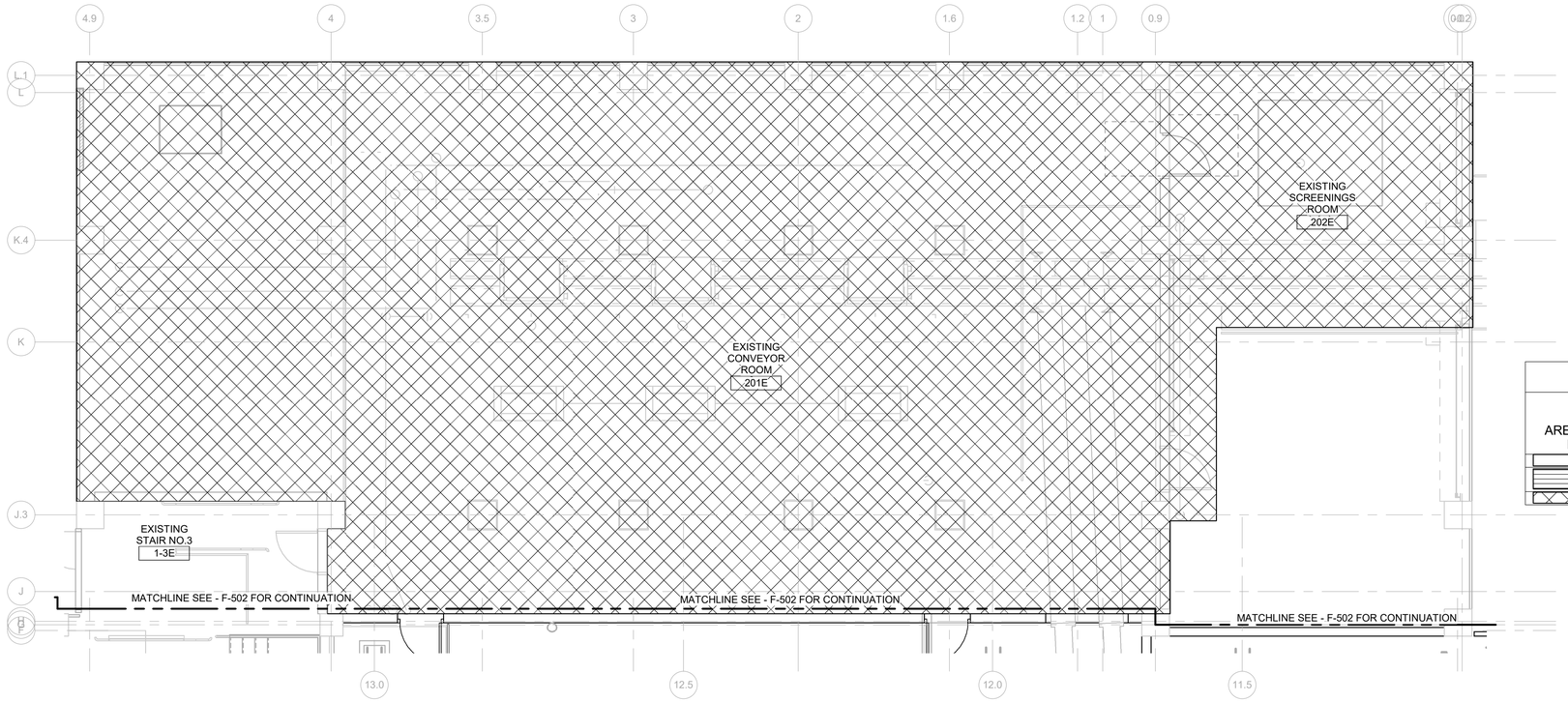

NFPA 13 SPRINKLER SYSTEM SCHEDULE (WET PIPE)					
AREA (HATCHING PATTERN)	NFPA 13 HAZARD OCCUPANCY	MIN. DENSITY (GPM/SF)	MINIMUM HYDRAULIC DESIGN AREA (SF)	HOSE (GPM)	DURATION (MIN.)
	LIGHT HAZARD (ALL AREAS NOT HATCHED)	0.10	1500	100	30
	ORDINARY HAZARD (GROUP 1), SINGLE-INTERLOCK PRE-ACTION (AUXILIARY SYSTEM)	0.15	1500	250	60
	ORDINARY HAZARD (GROUP 2)	0.20	1500	250	60

1 / F-241 FIRE SUPPRESSION AND FIRE ALARM PLAN - EL. 156.00

3/16" = 1'-0"

FIRE ALARM NOTES:

1. THE FIRE ALARM SYSTEM IS A DELEGATED DESIGN WITH PERFORMANCE SPECIFICATIONS. PROVIDE A CODE COMPLIANT FIRE ALARM SYSTEM SERVING THE EXISTING BIOSOLIDS PROCESSING FACILITY (INCLUDING THE EXISTING SOLIDS PIPE GALLERY, GRAVITY BELT THICKENER AREA, AND SOLIDS SCREENING AREA – AS WELL AS THE NEW DRYER BUILDING) THAT MEETS THE REQUIREMENTS OF ALL APPLICABLE LOCAL AND NATIONAL CODES. THIS PLAN TO BE READ IN CONJUNCTION WITH THE FIRE ALARM SYSTEM SPECIFICATION, 28 31 00.

2. THERE IS AN EXISTING FIRE ALARM SYSTEM SERVING THE BIOSOLIDS PROCESSING FACILITY THAT IS NON-FUNCTIONAL. THE SCOPE OF WORK SHALL INCLUDE THE DEMOLITION OF THE EXISTING FIRE ALARM SYSTEM IN ITS ENTIRETY, INCLUDING ALL FIRE ALARM PANELS, COMPONENTS, DEVICES, WIRING, CONDUIT, ACCESSORIES, AND OTHER APPURTENANCES. CONTRACTOR SHALL BE RESPONSIBLE TO REQUEST ANY RECORD DRAWINGS AVAILABLE FOR THE EXISTING FIRE ALARM SYSTEM FROM OWNER AND TO PERFORM FIELD VERIFICATION OF EXISTING CONDITIONS PRIOR TO BID SUBMITTAL. CONTRACTOR WILL BE RESPONSIBLE FOR PROTECTING EXISTING CONDITIONS INCLUDING BUT NOT LIMITED TO STRUCTURES, CEILINGS, WALLS, EQUIPMENT, UTILITIES, ETC. DAMAGE TO EXISTING CONDITIONS WILL BE REPAIRED AT NO ADDITIONAL COST TO THE OWNER. CONTRACTOR WILL BE RESPONSIBLE FOR PATCHING AND REPAIRING FLOORS, CEILINGS, AND WALLS TO MATCH EXISTING CONDITIONS IN AREAS IMPACTED BY THE DEMOLITION OF THE EXISTING FIRE ALARM SYSTEM AND INSTALLATION OF THE NEW FIRE ALARM SYSTEM.

3. THE ABOVE GRADE PORTION OF THE DRYER BUILDING IS THE ONLY AREA IN THE BIOSOLIDS PROCESSING FACILITY PROJECT PHASE 2 THAT WILL BE NEW CONSTRUCTION. THE CONTRACTOR SHALL BE RESPONSIBLE TO PERFORM THOROUGH SITE INVESTIGATION TO EXAMINE THE EXISTING BIOSOLIDS PROCESSING FACILITY PRIOR TO BIDDING THE PROJECT. REFER TO SPECIFICATION 28 31 00 FOR ADDITIONAL REQUIREMENTS.

4. THE NEW FIRE ALARM CONTROL UNIT (FACU) TO SERVE THE EXISTING BIOSOLIDS PROCESSING FACILITY SHALL BE LOCATED IN THE DRYER BUILDING MCC ROOM 203 AT EL. 156. THE FACU SHALL MONITOR ANY DUCT DETECTOR(S) PROVIDED BY THE MECHANICAL CONTRACTOR AS PART OF THE AHU PACKAGE(S). REFER TO HVAC DRAWINGS FOR SMOKE DUCT DETECTOR LOCATIONS. COORDINATE SHUTDOWN OF UNITS AS NEEDED TO MEET CODE.

5. THE BIOSOLIDS PROCESSING FACILITY FIRE ALARM CONTROL UNIT (FACU) SHALL PROVIDE POINT ADDRESSABLE SIGNAL ANNUNCIATION (ALARM, TROUBLE, & SUPERVISORY SIGNALS BY DEVICE/MODULE ADDRESS) TO THE ADMINISTRATION BUILDING FACU VIA A DEDICATED FIRE ALARM NETWORK USING FIBER OPTIC CABLES BEING RUN BETWEEN BUILDINGS. THE NEW BIOSOLIDS PROCESSING FACILITY FACU MUST BE THE SAME MODEL AND MANUFACTURER AS THE ADMINISTRATION BUILDING AND DIGESTER BUILDING FACU'S WITH FULL NETWORKING CAPABILITIES. CONTRACTOR SHALL PROVIDE NEW, DEDICATED FIBER OPTIC CABLES AS NEEDED TO CONNECT THE BIOSOLIDS PROCESSING FACILITY FACU TO THE ADMINISTRATION BUILDING FACU. PROVIDE FIBER-TO-COPPER MODULES IN THE FACU'S OR REMOTE FACU'S, AS NEEDED FOR NETWORK FUNCTIONALITY. REFER TO THE PHASE 2 NETWORK DIAGRAM ON SHEET F-901 FOR ADDITIONAL DETAILS.

6. THE FACU IN THE DRYER BUILDING WILL PROVIDE DRY CONTACT TYPE RELAY OUTPUTS FOR ANCILLARY REPORTING OF 2 FIRE ALARM SYSTEM SIGNALS TO AREA PLC PANEL 8-GBT-0011-PNL IN THE DRYER BUILDING MCC ROOM 203. AT EL. 156; THESE SIGNALS SHALL BE 'FIRE ALARM' AND 'FA TROUBLE OR SUPERVISORY CONDITION'.

7. THE EXISTING ADMINISTRATION BUILDING FACU PROVIDED AS PART OF PHASE 1, FOR REFERENCE THAT WORK INCLUDED THE FOLLOWING:
A. THE ADMINISTRATION BUILDING FACU SERVES AS THE GLOBAL FIRE ALARM NETWORK ANNUNCIATOR FOR A CONTROL ROOM LOCATION MANNED 24 HOURS-A-DAY / 7 DAYS-A-WEEK IN AN NFPA 72 PROPRIETARY SUPERVISING STATION CONFIGURATION FOR EMERGENCY SERVICES NOTIFICATION. THE ADMINISTRATION BUILDING FACU PROVIDES POINT ADDRESSABLE SIGNAL ANNUNCIATION (ALARM, TROUBLE, & SUPERVISORY SIGNALS BY DEVICE/MODULE ADDRESS) OF ALL EVENTS ON THE FIRE ALARM NETWORK.
B. THE ADMINISTRATION BUILDING FACU IS LOCATED IN THE CONTROL ROOM. THE ADMINISTRATION BUILDING FACU AND DIGESTER BUILDING FACU ARE NETWORKED USING MULTI-MODE FIBER OPTIC CABLE BEING INSTALLED BY OTHERS BETWEEN PATCH PANELS IN THOSE RESPECTIVE BUILDINGS. REFER TO THE CONTRACT DOCUMENTS FOR THE FIBER NETWORK DIAGRAM (I-904) AND OVERALL ELECTRICAL SITE PLAN (E-3) FOR ADDITIONAL INFORMATION.
C. THE ADMINISTRATION BUILDING FACU IS FULLY CAPABLE OF ADDING A DACT (DIGITAL ALARM COMMUNICATOR TRANSMITTER) IN THE FUTURE. THE DACT WOULD ONLY BE REQUIRED IN THE EVENT THAT THE AHJ REQUIRES HOWARD COUNTY LPWRP TO PROVIDE AUTOMATIC EMERGENCY SERVICES NOTIFICATION VIA A CENTRAL STATION SERVICE CONFIGURATION (INSTEAD OF A PROPRIETARY SUPERVISING STATION CONFIGURATION).

8. FOR PHASE 2, THE ADMINISTRATION BUILDING FACU SHALL BE UPDATED (IN BOTH HARDWARE AND SOFTWARE/PROGRAMMING) AS NEEDED TO ADD THE BIOSOLIDS PROCESSING FACILITY FACU TO THE NETWORK CONFIGURATION AND FULL GLOBAL REPORTING.

FIRE PROTECTION NOTES:

1. THE FIRE SPRINKLER SYSTEM IS A DELEGATED DESIGN WITH PERFORMANCE SPECIFICATIONS. PROVIDE A CODE COMPLIANT SPRINKLER SYSTEM SERVING THE EXISTING BIOSOLIDS PROCESSING FACILITY (INCLUDING THE EXISTING SOLIDS PIPE GALLERY, GRAVITY BELT THICKENER AREA, AND SOLIDS SCREENING AREA – AS WELL AS THE NEW DRYER BUILDING) THAT MEETS THE REQUIREMENTS OF ALL APPLICABLE LOCAL AND NATIONAL CODES. THIS PLAN TO BE READ IN CONJUNCTION WITH THE FIRE PROTECTION SYSTEMS SPECIFICATION, 21 05 00.

2. THE ABOVE GRADE PORTION OF THE DRYER BUILDING IS THE ONLY AREA IN THE BIOSOLIDS PROCESSING FACILITY PROJECT PHASE 2 THAT IS NEW CONSTRUCTION. A NEW WATER SERVICE AND FIRE SPRINKLER RISER SHALL BE PROVIDED IN THE DRYER BUILDING TO SERVE IT AND THE EXISTING BIOSOLIDS PROCESSING FACILITY. THE CONTRACTOR SHALL BE RESPONSIBLE TO PERFORM THOROUGH SITE INVESTIGATION TO EXAMINE THE EXISTING BIOSOLIDS PROCESSING FACILITY (INCLUDING THE SOLIDS PIPE GALLERY, GRAVITY BELT THICKENER AREA, AND SOLIDS SCREENING AREA) TO DETERMINE THE EXISTING CONDITIONS THEREIN. THE CONTRACTOR SHALL PROVIDE A DESIGN ANALYSIS TO DETERMINE THE BEST METHOD FOR INSTALLING A WET PIPE SPRINKLER SYSTEM THROUGHOUT THE BIOSOLIDS PROCESSING FACILITY. THE CONTRACTOR'S DESIGNATED SPRINKLER SYSTEM DESIGNER (WHO SHALL MEET THE DESIGNER QUALIFICATION REQUIREMENTS OF THE SPECIFICATION) SHALL EXAMINE EACH AREA AND DOCUMENT EXISTING CEILING HEIGHTS, OBSTRUCTIONS, CONSTRUCTION VARIATIONS, AND ARCHITECTURAL CONFIGURATIONS. THE CONTRACTOR'S DESIGNATED SPRINKLER SYSTEM DESIGNER SHALL EVALUATE THE EQUIPMENT HUNG FROM EXISTING CEILINGS AND COORDINATE SPRINKLER SYSTEM PIPING PLACEMENT ACCORDINGLY. THE CONTRACTOR SHALL REFER TO OTHER DISCIPLINES DRAWINGS (ARCHITECTURAL, ELECTRICAL, MECHANICAL, PROCESS, STRUCTURAL, ETC.), REVIEW THEM THOROUGHLY, AND COORDINATE NEW SPRINKLER PIPE ROUTING WITH ALL TRADES AND EXISTING CONDITIONS. THE CONTRACTOR SHALL BE FULLY RESPONSIBLE TO INCORPORATE ALL NEEDED ACCOMMODATIONS INTO FIRE SPRINKLER SYSTEM DESIGN TO MAKE THE SYSTEM WORK IN THE EXISTING ENVIRONMENT

3. INTERMEDIATE TEMPERATURE CLASSIFICATION SPRINKLER HEADS SHALL BE PROVIDED IN ALL MECHANICAL ROOMS AND OTHER LOCATIONS WITH HIGHER THAN NORMAL AMBIENT TEMPERATURES, IN ACCORDANCE WITH NFPA 13, 2013 EDITION.

4. ALL SPRINKLER HEADS SHALL BE PROVIDED WITH GUARDS IN MECHANICAL AND PROCESS ROOMS.

5. SPRINKLER HEADS SHALL BE HYDRAULICALLY CALCULATED IN ACCORDANCE WITH NFPA 13, 2013 EDITION.

6. PROVIDE THRUST RESTRAINT ON FIRE PROTECTION WATER SERVICE IN ACCORDANCE WITH NFPA 24.

7. A HYDRANT FLOW TEST WAS PERFORMED BY THE HOWARD COUNTY DEPARTMENT OF PUBLIC WORKS ON JULY 8, 2016 USING EXISTING HYDRANTS NEARBY THIS PLANNED BUILDING SITE AND THE RESULTS WERE 92 PSI STATIC PRESSURE AND 42 PSI RESIDUAL PRESSURE WITH 1,643 GPM FLOWING. THE CONTRACTOR SHALL BE RESPONSIBLE TO CONDUCT A HYDRANT FLOW TEST IN ACCORDANCE WITH NFPA 291 TO VERIFY THE AVAILABLE PRESSURE & FLOW OF THE WATER SUPPLY. THE CONTRACTOR SHALL THEN DESIGN FIRE SPRINKLER SYSTEM USING STATIC PRESSURE AND RESIDUAL PRESSURE/FLOWS AS DETERMINED DURING THEIR TESTING. THE SPRINKLER SYSTEM SHALL BE HYDRAULICALLY DESIGNED TO WORK WITHOUT ADDITION OF A FIRE PUMP; THE CONTRACTOR SHALL BE RESPONSIBLE FOR MINIMIZING THE PRESSURE LOSS OF THE SPRINKLER SYSTEM BY INCREASING PIPE SIZES, REDUCED HEAD SPACING, ADJUSTING SPRINKLER HEAD K-FACTORS, AND SO FORTH AS NECESSARY TO MAKE THE SYSTEM WORK WITH THE AVAILABLE WATER SUPPLY AND AVOID THE NEED FOR A FIRE PUMP.

THE DRAWINGS IN THIS SET ARE RECORD DRAWINGS. THEY ARE CONSTRUCTION CONTRACT DRAWINGS WHICH HAVE BEEN REVISED BASED ON AVAILABLE FIELD INFORMATION RECORDED BY OTHERS DURING CONSTRUCTION OF THIS CONTRACT. THERE HAS BEEN NO VERIFICATION OF DIMENSIONS SHOWN ON THE CONSTRUCTION DRAWINGS OR THE ACCURACY/COMPLETENESS OF THE FIELD INFORMATION RECEIVED.

SIGNATURE — DATE 2/7/2022

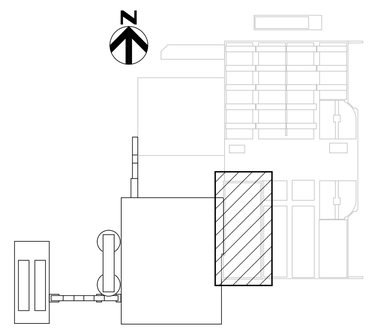

KEY PLAN

AS-BUILT REPLACEMENT SHEET

PROFESSIONAL CERTIFICATION

THIS DRAWING WAS ORIGINALLY APPROVED FOR CONSTRUCTION AND SEALED BY ADAM S. PARMENTER, A REGISTERED PROFESSIONAL ENGINEER IN THE STATE OF MARYLAND, NO. 39376

NOTICE TO CONTRACTORS

- PROJECT ELEVATIONS ARE BASED ON NAVD88 AND HOWARD COUNTY'S BENCHMARK SYSTEM
- PREVIOUS PROJECTS USED OTHER DATUMS
- APPLY THE FOLLOWING CONVERSIONS WHEN USING PREVIOUS CONTRACT DRAWINGS:
  - ADDITION NO. 6: SUBTRACT 0.80 FT
  - PRIOR ADDITIONS: SUBTRACT 1.04 FT

DEPARTMENT OF PUBLIC WORKS
HOWARD COUNTY, MARYLAND

CHIEF, BUREAU OF UTILITIES — DATE

DES: MJS
DRN: TRF
CHK: ZJS
DATE: 01/2018

DATE	REV	DESCRIPTION
03/2021		RECORD DRAWINGS

FIRE PROTECTION

SOLIDS SCREENING AREA FIRE SUPPRESSION AND FIRE ALARM PLAN AT EL 156.00

LITTLE PATUXENT WATER RECLAMATION PLANT
8TH ADDITION
BIOSOLIDS PROCESSING FACILITIES - PHASE 2

CAPITAL PROJECT S-6295
CONTRACT NO. 24-4936

ELECTION DISTRICT NO. 6
HOWARD COUNTY, MARYLAND

SCALE AS SHOWN

SHEET 185 OF 311

F-241

BIM 360://10054364 – Little Patuxent WRP 8th Addition/264592_100_A_V18.rvt
1/7/2022 11:56:30 AM

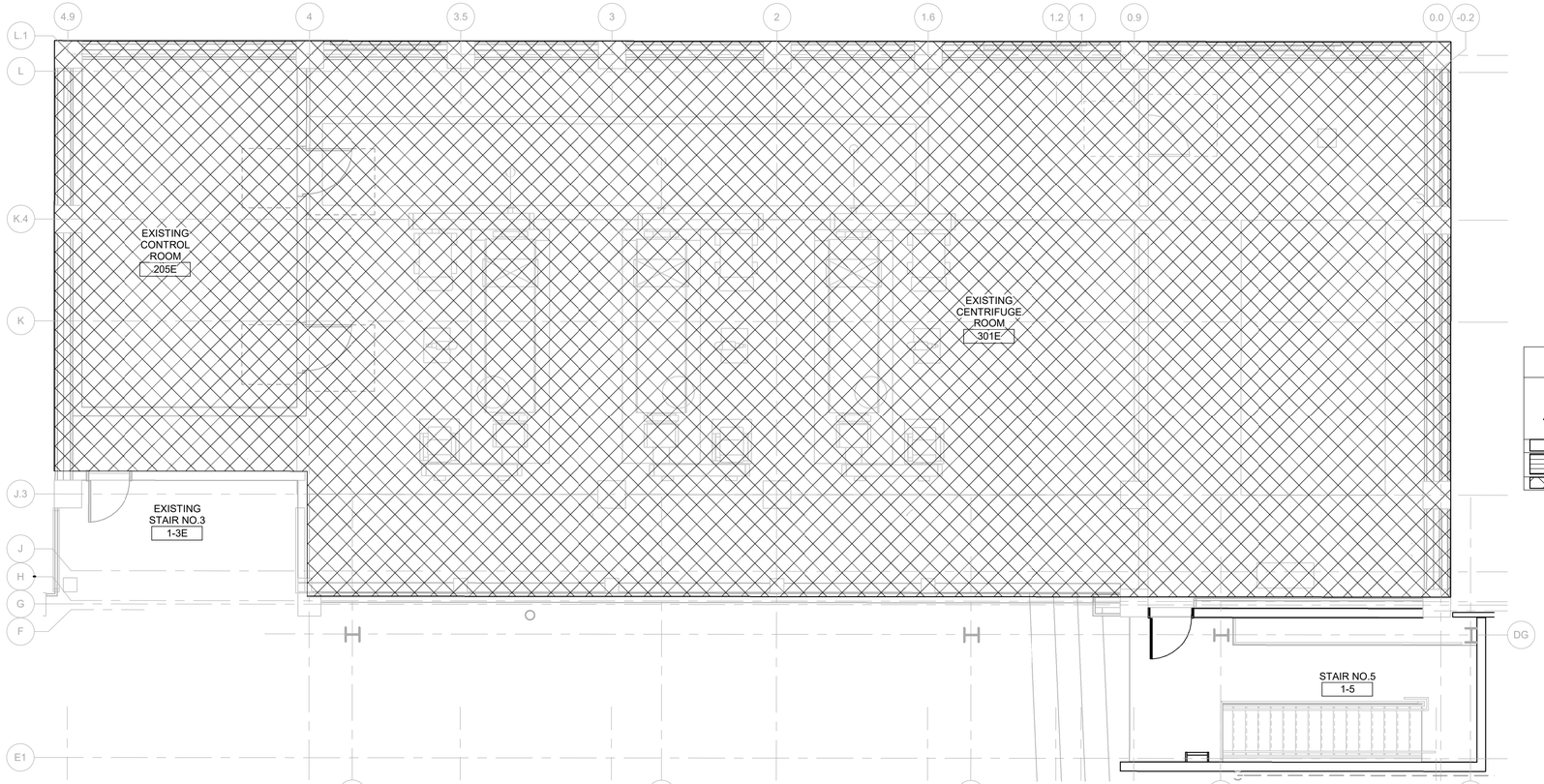

N

NFPA 13 SPRINKLER SYSTEM SCHEDULE (WET PIPE)					
AREA (HATCHING PATTERN)	NFPA 13 HAZARD OCCUPANCY	MIN. DENSITY (GPM/SF)	MINIMUM HYDRAULIC DESIGN AREA (SF)	HOSE (GPM)	DURATION (MIN.)
	LIGHT HAZARD (ALL AREAS NOT HATCHED)	0.10	1500	100	30
	ORDINARY HAZARD (GROUP 1), SINGLE-INTERLOCK PRE-ACTION (AUXILIARY SYSTEM)	0.15	1500	250	60
	ORDINARY HAZARD (GROUP 2)	0.20	1500	250	60

1 / F-242 FIRE SUPPRESSION AND FIRE ALARM PLAN - EL. 167.00

3/16" = 1'-0"

FIRE ALARM NOTES:

1. THE FIRE ALARM SYSTEM IS A DELEGATED DESIGN WITH PERFORMANCE SPECIFICATIONS. PROVIDE A CODE COMPLIANT FIRE ALARM SYSTEM SERVING THE EXISTING BIOSOLIDS PROCESSING FACILITY (INCLUDING THE EXISTING SOLIDS PIPE GALLERY, GRAVITY BELT THICKENER AREA, AND SOLIDS SCREENING AREA – AS WELL AS THE NEW DRYER BUILDING) THAT MEETS THE REQUIREMENTS OF ALL APPLICABLE LOCAL AND NATIONAL CODES. THIS PLAN TO BE READ IN CONJUNCTION WITH THE FIRE ALARM SYSTEM SPECIFICATION, 28 31 00.

2. THERE IS AN EXISTING FIRE ALARM SYSTEM SERVING THE BIOSOLIDS PROCESSING FACILITY THAT IS NON-FUNCTIONAL. THE SCOPE OF WORK SHALL INCLUDE THE DEMOLITION OF THE EXISTING FIRE ALARM SYSTEM IN ITS ENTIRETY, INCLUDING ALL FIRE ALARM PANELS, COMPONENTS, DEVICES, WIRING, CONDUIT, ACCESSORIES, AND OTHER APPURTENANCES. CONTRACTOR SHALL BE RESPONSIBLE TO REQUEST ANY RECORD DRAWINGS AVAILABLE FOR THE EXISTING FIRE ALARM SYSTEM FROM OWNER AND TO PERFORM FIELD VERIFICATION OF EXISTING CONDITIONS PRIOR TO BID SUBMITTAL. CONTRACTOR WILL BE RESPONSIBLE FOR PROTECTING EXISTING CONDITIONS INCLUDING BUT NOT LIMITED TO: STRUCTURES, CEILINGS, WALLS, EQUIPMENT, UTILITIES, ETC. DAMAGE TO EXISTING CONDITIONS WILL BE REPAIRED AT NO ADDITIONAL COST TO THE OWNER. CONTRACTOR WILL BE RESPONSIBLE FOR PATCHING AND REPAIRING FLOORS, CEILINGS, AND WALLS TO MATCH EXISTING CONDITIONS IN AREAS IMPACTED BY THE DEMOLITION OF THE EXISTING FIRE ALARM SYSTEM AND INSTALLATION OF THE NEW FIRE ALARM SYSTEM.

3. THE ABOVE GRADE PORTION OF THE DRYER BUILDING IS THE ONLY AREA IN THE BIOSOLIDS PROCESSING FACILITY PROJECT PHASE 2 THAT WILL BE NEW CONSTRUCTION. THE CONTRACTOR SHALL BE RESPONSIBLE TO PERFORM THOROUGH SITE INVESTIGATION TO EXAMINE THE EXISTING BIOSOLIDS PROCESSING FACILITY PRIOR TO BIDDING THE PROJECT. REFER TO SPECIFICATION 28 31 00 FOR ADDITIONAL REQUIREMENTS.

4. THE NEW FIRE ALARM CONTROL UNIT (FACU) TO SERVE THE EXISTING BIOSOLIDS PROCESSING FACILITY SHALL BE LOCATED IN THE DRYER BUILDING MCC ROOM 203 AT EL. 156. THE FACU SHALL MONITOR ANY DUCT DETECTOR(S) PROVIDED BY THE MECHANICAL CONTRACTOR AS PART OF THE AHU PACKAGE(S). REFER TO HVAC DRAWINGS FOR SMOKE DUCT DETECTOR LOCATIONS. COORDINATE SHUTDOWN OF UNITS AS NEEDED TO MEET CODE.

5. THE BIOSOLIDS PROCESSING FACILITY FIRE ALARM CONTROL UNIT (FACU) SHALL PROVIDE POINT ADDRESSABLE SIGNAL ANNUNCIATION (ALARM, TROUBLE, & SUPERVISORY SIGNALS BY DEVICE/MODULE ADDRESS) TO THE ADMINISTRATION BUILDING FACU VIA A DEDICATED FIRE ALARM NETWORK USING FIBER OPTIC CABLES BEING RUN BETWEEN BUILDINGS. THE NEW BIOSOLIDS PROCESSING FACILITY FACU MUST BE THE SAME MODEL AND MANUFACTURER AS THE ADMINISTRATION BUILDING AND DIGESTER BUILDING FACU'S WITH FULL NETWORKING CAPABILITIES. CONTRACTOR SHALL PROVIDE NEW, DEDICATED FIBER OPTIC CABLES AS NEEDED TO CONNECT THE BIOSOLIDS PROCESSING FACILITY FACU TO THE ADMINISTRATION BUILDING FACU. PROVIDE FIBER-TO-COPPER MODULES IN THE FACU'S OR REMOTE FACU'S, AS NEEDED FOR NETWORK FUNCTIONALITY. REFER TO THE PHASE 2 NETWORK DIAGRAM ON SHEET F-901 FOR ADDITIONAL DETAILS.

6. THE FACU IN THE DRYER BUILDING WILL PROVIDE DRY CONTACT TYPE RELAY OUTPUTS FOR ANCILLARY REPORTING OF 2 FIRE ALARM SYSTEM SIGNALS TO AREA PLC PANEL 8-GBT-0011-PNL IN THE DRYER BUILDING MCC ROOM 203. AT EL. 156; THESE SIGNALS SHALL BE 'FIRE ALARM' AND 'FA TROUBLE OR SUPERVISORY CONDITION'.

7. THE EXISTING ADMINISTRATION BUILDING FACU PROVIDED AS PART OF PHASE 1, FOR REFERENCE THAT WORK INCLUDED THE FOLLOWING:
A. THE ADMINISTRATION BUILDING FACU SERVES AS THE GLOBAL FIRE ALARM NETWORK ANNUNCIATOR FOR A CONTROL ROOM LOCATION MANNED 24 HOURS-A-DAY / 7 DAYS-A-WEEK IN AN NFPA 72 PROPRIETARY SUPERVISING STATION CONFIGURATION FOR EMERGENCY SERVICES NOTIFICATION. THE ADMINISTRATION BUILDING FACU PROVIDES POINT ADDRESSABLE SIGNAL ANNUNCIATION (ALARM, TROUBLE, & SUPERVISORY SIGNALS BY DEVICE/MODULE ADDRESS) OF ALL EVENTS ON THE FIRE ALARM NETWORK.
B. THE ADMINISTRATION BUILDING FACU IS LOCATED IN THE CONTROL ROOM. THE ADMINISTRATION BUILDING FACU AND DIGESTER BUILDING FACU ARE NETWORKED USING MULTI-MODE FIBER OPTIC CABLE BEING INSTALLED BY OTHERS BETWEEN PATCH PANELS IN THOSE RESPECTIVE BUILDINGS. REFER TO THE CONTRACT DOCUMENTS FOR THE FIBER NETWORK DIAGRAM (I-904) AND OVERALL ELECTRICAL SITE PLAN (E-3) FOR ADDITIONAL INFORMATION.
C. THE ADMINISTRATION BUILDING FACU IS FULLY CAPABLE OF ADDING A DACT (DIGITAL ALARM COMMUNICATOR TRANSMITTER) IN THE FUTURE. THE DACT WOULD ONLY BE REQUIRED IN THE EVENT THAT THE AHJ REQUIRES HOWARD COUNTY LPWRP TO PROVIDE AUTOMATIC EMERGENCY SERVICES NOTIFICATION VIA A CENTRAL STATION SERVICE CONFIGURATION (INSTEAD OF A PROPRIETARY SUPERVISING STATION CONFIGURATION).

8. FOR PHASE 2, THE ADMINISTRATION BUILDING FACU SHALL BE UPDATED (IN BOTH HARDWARE AND SOFTWARE/PROGRAMMING) AS NEEDED TO ADD THE BIOSOLIDS PROCESSING FACILITY FACU TO THE NETWORK CONFIGURATION AND FULL GLOBAL REPORTING.

FIRE PROTECTION NOTES:

1. THE FIRE SPRINKLER SYSTEM IS A DELEGATED DESIGN WITH PERFORMANCE SPECIFICATIONS. PROVIDE A CODE COMPLIANT SPRINKLER SYSTEM SERVING THE EXISTING BIOSOLIDS PROCESSING FACILITY (INCLUDING THE EXISTING SOLIDS PIPE GALLERY, GRAVITY BELT THICKENER AREA, AND SOLIDS SCREENING AREA – AS WELL AS THE NEW DRYER BUILDING) THAT MEETS THE REQUIREMENTS OF ALL APPLICABLE LOCAL AND NATIONAL CODES. THIS PLAN TO BE READ IN CONJUNCTION WITH THE FIRE PROTECTION SYSTEMS SPECIFICATION, 21 05 00.

2. THE ABOVE GRADE PORTION OF THE DRYER BUILDING IS THE ONLY AREA IN THE BIOSOLIDS PROCESSING FACILITY PROJECT PHASE 2 THAT IS NEW CONSTRUCTION. A NEW WATER SERVICE AND FIRE SPRINKLER RISER SHALL BE PROVIDED IN THE DRYER BUILDING TO SERVE IT AND THE EXISTING BIOSOLIDS PROCESSING FACILITY. THE CONTRACTOR SHALL BE RESPONSIBLE TO PERFORM THOROUGH SITE INVESTIGATION TO EXAMINE THE EXISTING BIOSOLIDS PROCESSING FACILITY (INCLUDING THE SOLIDS PIPE GALLERY, GRAVITY BELT THICKENER AREA, AND SOLIDS SCREENING AREA) TO DETERMINE THE EXISTING CONDITIONS THEREIN. THE CONTRACTOR SHALL PROVIDE A DESIGN ANALYSIS TO DETERMINE THE BEST METHOD FOR INSTALLING A WET PIPE SPRINKLER SYSTEM THROUGHOUT THE BIOSOLIDS PROCESSING FACILITY. THE CONTRACTOR'S DESIGNATED SPRINKLER SYSTEM DESIGNER (WHO SHALL MEET THE DESIGNER QUALIFICATION REQUIREMENTS OF THE SPECIFICATION) SHALL EXAMINE EACH AREA AND DOCUMENT EXISTING CEILING HEIGHTS, OBSTRUCTIONS, CONSTRUCTION VARIATIONS, AND ARCHITECTURAL CONFIGURATIONS. THE CONTRACTOR'S DESIGNATED SPRINKLER SYSTEM DESIGNER SHALL EVALUATE THE EQUIPMENT HUNG FROM EXISTING CEILINGS AND COORDINATE SPRINKLER SYSTEM PIPING PLACEMENT ACCORDINGLY. THE CONTRACTOR SHALL REFER TO OTHER DISCIPLINES DRAWINGS (ARCHITECTURAL, ELECTRICAL, MECHANICAL, PROCESS, STRUCTURAL, ETC.), REVIEW THEM THOROUGHLY, AND COORDINATE NEW SPRINKLER PIPE ROUTING WITH ALL TRADES AND EXISTING CONDITIONS. THE CONTRACTOR SHALL BE FULLY RESPONSIBLE TO INCORPORATE ALL NEEDED ACCOMMODATIONS INTO FIRE SPRINKLER SYSTEM DESIGN TO MAKE THE SYSTEM WORK IN THE EXISTING ENVIRONMENT

3. INTERMEDIATE TEMPERATURE CLASSIFICATION SPRINKLER HEADS SHALL BE PROVIDED IN ALL MECHANICAL ROOMS AND OTHER LOCATIONS WITH HIGHER THAN NORMAL AMBIENT TEMPERATURES, IN ACCORDANCE WITH NFPA 13, 2013 EDITION.

4. ALL SPRINKLER HEADS SHALL BE PROVIDED WITH GUARDS IN MECHANICAL AND PROCESS ROOMS.

5. SPRINKLER HEADS SHALL BE HYDRAULICALLY CALCULATED IN ACCORDANCE WITH NFPA 13, 2013 EDITION.

6. PROVIDE THRUST RESTRAINT ON FIRE PROTECTION WATER SERVICE IN ACCORDANCE WITH NFPA 24.

7. A HYDRANT FLOW TEST WAS PERFORMED BY THE HOWARD COUNTY DEPARTMENT OF PUBLIC WORKS ON JULY 8, 2016 USING EXISTING HYDRANTS NEARBY THIS PLANNED BUILDING SITE AND THE RESULTS WERE 92 PSI STATIC PRESSURE AND 42 PSI RESIDUAL PRESSURE WITH 1,643 GPM FLOWING. THE CONTRACTOR SHALL BE RESPONSIBLE TO CONDUCT A HYDRANT FLOW TEST IN ACCORDANCE WITH NFPA 291 TO VERIFY THE AVAILABLE PRESSURE & FLOW OF THE WATER SUPPLY. THE CONTRACTOR SHALL THEN DESIGN FIRE SPRINKLER SYSTEM USING STATIC PRESSURE AND RESIDUAL PRESSURE/FLOWS AS DETERMINED DURING THEIR TESTING. THE SPRINKLER SYSTEM SHALL BE HYDRAULICALLY DESIGNED TO WORK WITHOUT ADDITION OF A FIRE PUMP; THE CONTRACTOR SHALL BE RESPONSIBLE FOR MINIMIZING THE PRESSURE LOSS OF THE SPRINKLER SYSTEM BY INCREASING PIPE SIZES, REDUCED HEAD SPACING, ADJUSTING SPRINKLER HEAD K-FACTORS, AND SO FORTH AS NECESSARY TO MAKE THE SYSTEM WORK WITH THE AVAILABLE WATER SUPPLY AND AVOID THE NEED FOR A FIRE PUMP.

THE DRAWINGS IN THIS SET ARE RECORD DRAWINGS. THEY ARE CONSTRUCTION CONTRACT DRAWINGS WHICH HAVE BEEN REVISED BASED ON AVAILABLE FIELD INFORMATION RECORDED BY OTHERS DURING CONSTRUCTION OF THIS CONTRACT. THERE HAS BEEN NO VERIFICATION OF DIMENSIONS SHOWN ON THE CONSTRUCTION DRAWINGS OR THE ACCURACY/COMPLETENESS OF THE FIELD INFORMATION RECEIVED.

SIGNATURE _____ DATE 2/7/2023

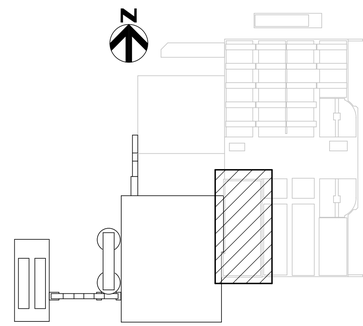

KEY PLAN

AS-BUILT REPLACEMENT SHEET

PROFESSIONAL CERTIFICATION

THIS DRAWING WAS ORIGINALLY APPROVED FOR CONSTRUCTION AND SEALED BY ADAM S. PARMENTER, A REGISTERED PROFESSIONAL ENGINEER IN THE STATE OF MARYLAND, NO. 39376

NOTICE TO CONTRACTORS

- PROJECT ELEVATIONS ARE BASED ON NAVD88 AND HOWARD COUNTY'S BENCHMARK SYSTEM
- PREVIOUS PROJECTS USED OTHER DATUMS
- APPLY THE FOLLOWING CONVERSIONS WHEN USING PREVIOUS CONTRACT DRAWINGS:
  - ADDITION NO. 6: SUBTRACT 0.80 FT
  - PRIOR ADDITIONS: SUBTRACT 1.04 FT

DEPARTMENT OF PUBLIC WORKS
HOWARD COUNTY, MARYLAND

CHIEF, BUREAU OF UTILITIES DATE

DES: MJS
DRN: TRF
CHK: ZJS
DATE: 01/2018

DATE	REV	DESCRIPTION
03/2021		RECORD DRAWINGS

FIRE PROTECTION

SOLIDS SCREENING AREA FIRE SUPPRESSION AND FIRE ALARM PLAN AT EL 167.00

LITTLE PATUXENT WATER RECLAMATION PLANT
8TH ADDITION
BIOSOLIDS PROCESSING FACILITIES - PHASE 2

CAPITAL PROJECT S-6295
CONTRACT NO. 24-4936

ELECTION DISTRICT NO. 6
HOWARD COUNTY, MARYLAND

SCALE AS SHOWN

SHEET 186 OF 311

F-242

BIM 360://10054364 – Little Patuxent WRP 8th Addition/264592_100_A_V18.rvt
1/7/2022 11:56:33 AM

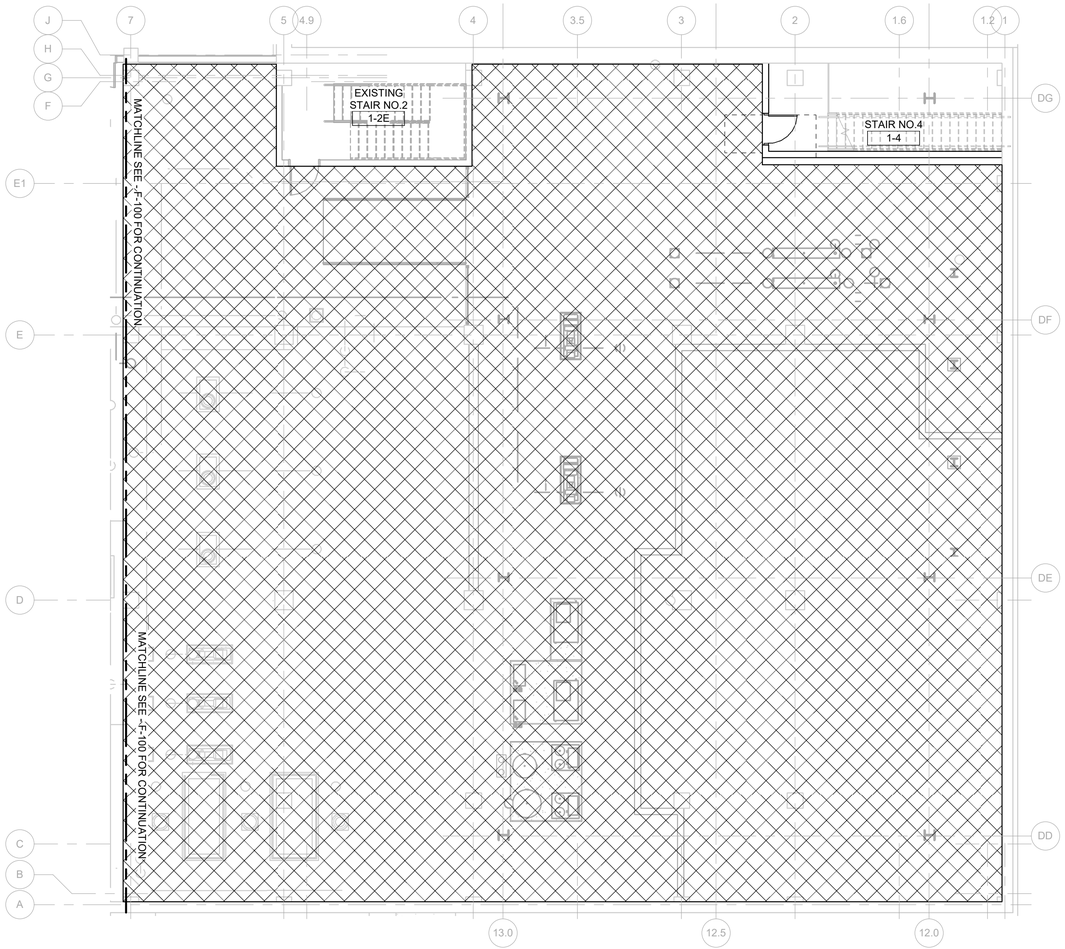

1 F-500 FIRE SUPPRESSION AND FIRE ALARM PLAN - EL. 130.00

1/8" = 1'-0"

N

NFPA 13 SPRINKLER SYSTEM SCHEDULE (WET PIPE)					
AREA (HATCHING PATTERN)	NFPA 13 HAZARD OCCUPANCY	MIN. DENSITY (GPM/SF)	MINIMUM HYDRAULIC DESIGN AREA (SF)	HOSE (GPM)	DURATION (MIN.)
	LIGHT HAZARD (ALL AREAS NOT HATCHED)	0.10	1500	100	30
	ORDINARY HAZARD (GROUP 1), SINGLE-INTERLOCK PRE-ACTION (AUXILIARY SYSTEM)	0.15	1500	250	60
	ORDINARY HAZARD (GROUP 2)	0.20	1500	250	60

FIRE ALARM NOTES:

1. THE FIRE ALARM SYSTEM IS A DELEGATED DESIGN WITH PERFORMANCE SPECIFICATIONS. PROVIDE A CODE COMPLIANT FIRE ALARM SYSTEM SERVING THE EXISTING BIOSOLIDS PROCESSING FACILITY (INCLUDING THE EXISTING SOLIDS PIPE GALLERY, GRAVITY BELT THICKENER AREA, AND SOLIDS SCREENING AREA – AS WELL AS THE NEW DRYER BUILDING) THAT MEETS THE REQUIREMENTS OF ALL APPLICABLE LOCAL AND NATIONAL CODES. THIS PLAN TO BE READ IN CONJUNCTION WITH THE FIRE ALARM SYSTEM SPECIFICATION, 28 31 00.

2. THERE IS AN EXISTING FIRE ALARM SYSTEM SERVING THE BIOSOLIDS PROCESSING FACILITY THAT IS NON-FUNCTIONAL. THE SCOPE OF WORK SHALL INCLUDE THE DEMOLITION OF THE EXISTING FIRE ALARM SYSTEM IN ITS ENTIRETY, INCLUDING ALL FIRE ALARM PANELS, COMPONENTS, DEVICES, WIRING, CONDUIT, ACCESSORIES, AND OTHER APPURTENANCES. CONTRACTOR SHALL BE RESPONSIBLE TO REQUEST ANY RECORD DRAWINGS AVAILABLE FOR THE EXISTING FIRE ALARM SYSTEM FROM OWNER AND TO PERFORM FIELD VERIFICATION OF EXISTING CONDITIONS PRIOR TO BID SUBMITTAL. CONTRACTOR WILL BE RESPONSIBLE FOR PROTECTING EXISTING CONDITIONS INCLUDING BUT NOT LIMITED TO: STRUCTURES, CEILINGS, WALLS, EQUIPMENT, UTILITIES, ETC. DAMAGE TO EXISTING CONDITIONS WILL BE REPAIRED AT NO ADDITIONAL COST TO THE OWNER. CONTRACTOR WILL BE RESPONSIBLE FOR PATCHING AND REPAIRING FLOORS, CEILINGS, AND WALLS TO MATCH EXISTING CONDITIONS IN AREAS IMPACTED BY THE DEMOLITION OF THE EXISTING FIRE ALARM SYSTEM AND INSTALLATION OF THE NEW FIRE ALARM SYSTEM.

3. THE ABOVE GRADE PORTION OF THE DRYER BUILDING IS THE ONLY AREA IN THE BIOSOLIDS PROCESSING FACILITY PROJECT PHASE 2 THAT WILL BE NEW CONSTRUCTION. THE CONTRACTOR SHALL BE RESPONSIBLE TO PERFORM THOROUGH SITE INVESTIGATION TO EXAMINE THE EXISTING BIOSOLIDS PROCESSING FACILITY PRIOR TO BIDDING THE PROJECT. REFER TO SPECIFICATION 28 31 00 FOR ADDITIONAL REQUIREMENTS.

4. THE NEW FIRE ALARM CONTROL UNIT (FACU) TO SERVE THE EXISTING BIOSOLIDS PROCESSING FACILITY SHALL BE LOCATED IN THE DRYER BUILDING MCC ROOM 203 AT EL. 156. THE FACU SHALL MONITOR ANY DUCT DETECTOR(S) PROVIDED BY THE MECHANICAL CONTRACTOR AS PART OF THE AHU PACKAGE(S). REFER TO HVAC DRAWINGS FOR SMOKE DUCT DETECTOR LOCATIONS. COORDINATE SHUTDOWN OF UNITS AS NEEDED TO MEET CODE.

5. THE BIOSOLIDS PROCESSING FACILITY FIRE ALARM CONTROL UNIT (FACU) SHALL PROVIDE POINT ADDRESSABLE SIGNAL ANNUNCIATION (ALARM, TROUBLE, & SUPERVISORY SIGNALS BY DEVICE/MODULE ADDRESS) TO THE ADMINISTRATION BUILDING FACU VIA A DEDICATED FIRE ALARM NETWORK USING FIBER OPTIC CABLES BEING RUN BETWEEN BUILDINGS. THE NEW BIOSOLIDS PROCESSING FACILITY FACU MUST BE THE SAME MODEL AND MANUFACTURER AS THE ADMINISTRATION BUILDING AND DIGESTER BUILDING FACU'S WITH FULL NETWORKING CAPABILITIES. CONTRACTOR SHALL PROVIDE NEW, DEDICATED FIBER OPTIC CABLES AS NEEDED TO CONNECT THE BIOSOLIDS PROCESSING FACILITY FACU TO THE ADMINISTRATION BUILDING FACU. PROVIDE FIBER-TO-COPPER MODULES IN THE FACU'S OR REMOTE FACU'S, AS NEEDED FOR NETWORK FUNCTIONALITY. REFER TO THE PHASE 2 NETWORK DIAGRAM ON SHEET F-901 FOR ADDITIONAL DETAILS.

6. THE FACU IN THE DRYER BUILDING WILL PROVIDE DRY CONTACT TYPE RELAY OUTPUTS FOR ANCILLARY REPORTING OF 2 FIRE ALARM SYSTEM SIGNALS TO AREA PLC PANEL 8-GBT-0011-PNL IN THE DRYER BUILDING MCC ROOM 203, AT EL. 156; THESE SIGNALS SHALL BE 'FIRE ALARM' AND 'FA TROUBLE OR SUPERVISORY CONDITION'.

7. THE EXISTING ADMINISTRATION BUILDING FACU PROVIDED AS PART OF PHASE 1, FOR REFERENCE THAT WORK INCLUDED THE FOLLOWING:
A. THE ADMINISTRATION BUILDING FACU SERVES AS THE GLOBAL FIRE ALARM NETWORK ANNUNCIATOR FOR A CONTROL ROOM LOCATION MANNED 24 HOURS-A-DAY / 7 DAYS-A-WEEK IN AN NFPA 72 PROPRIETARY SUPERVISING STATION CONFIGURATION FOR EMERGENCY SERVICES NOTIFICATION. THE ADMINISTRATION BUILDING FACU PROVIDES POINT ADDRESSABLE SIGNAL ANNUNCIATION (ALARM, TROUBLE, & SUPERVISORY SIGNALS BY DEVICE/MODULE ADDRESS) OF ALL EVENTS ON THE FIRE ALARM NETWORK.
B. THE ADMINISTRATION BUILDING FACU IS LOCATED IN THE CONTROL ROOM. THE ADMINISTRATION BUILDING FACU AND DIGESTER BUILDING FACU ARE NETWORKED USING MULTI-MODE FIBER OPTIC CABLE BEING INSTALLED BY OTHERS BETWEEN PATCH PANELS IN THOSE RESPECTIVE BUILDINGS. REFER TO THE CONTRACT DOCUMENTS FOR THE FIBER NETWORK DIAGRAM (I-904) AND OVERALL ELECTRICAL SITE PLAN (E-3) FOR ADDITIONAL INFORMATION.
C. THE ADMINISTRATION BUILDING FACU IS FULLY CAPABLE OF ADDING A DACT (DIGITAL ALARM COMMUNICATOR TRANSMITTER) IN THE FUTURE. THE DACT WOULD ONLY BE REQUIRED IN THE EVENT THAT THE AHJ REQUIRES HOWARD COUNTY LPWRP TO PROVIDE AUTOMATIC EMERGENCY SERVICES NOTIFICATION VIA A CENTRAL STATION SERVICE CONFIGURATION (INSTEAD OF A PROPRIETARY SUPERVISING STATION CONFIGURATION).

8. FOR PHASE 2, THE ADMINISTRATION BUILDING FACU SHALL BE UPDATED (IN BOTH HARDWARE AND SOFTWARE/PROGRAMMING) AS NEEDED TO ADD THE BIOSOLIDS PROCESSING FACILITY FACU TO THE NETWORK CONFIGURATION AND FULL GLOBAL REPORTING.

FIRE PROTECTION NOTES:

1. THE FIRE SPRINKLER SYSTEM IS A DELEGATED DESIGN WITH PERFORMANCE SPECIFICATIONS. PROVIDE A CODE COMPLIANT SPRINKLER SYSTEM SERVING THE EXISTING BIOSOLIDS PROCESSING FACILITY (INCLUDING THE EXISTING SOLIDS PIPE GALLERY, GRAVITY BELT THICKENER AREA, AND SOLIDS SCREENING AREA – AS WELL AS THE NEW DRYER BUILDING) THAT MEETS THE REQUIREMENTS OF ALL APPLICABLE LOCAL AND NATIONAL CODES. THIS PLAN TO BE READ IN CONJUNCTION WITH THE FIRE PROTECTION SYSTEMS SPECIFICATION, 21 05 00.

2. THE ABOVE GRADE PORTION OF THE DRYER BUILDING IS THE ONLY AREA IN THE BIOSOLIDS PROCESSING FACILITY PROJECT PHASE 2 THAT IS NEW CONSTRUCTION. A NEW WATER SERVICE AND FIRE SPRINKLER RISER SHALL BE PROVIDED IN THE DRYER BUILDING TO SERVE IT AND THE EXISTING BIOSOLIDS PROCESSING FACILITY. THE CONTRACTOR SHALL BE RESPONSIBILE TO PERFORM THOROUGH SITE INVESTIGATION TO EXAMINE THE EXISTING BIOSOLIDS PROCESSING FACILITY (INCLUDING THE SOLIDS PIPE GALLERY, GRAVITY BELT THICKENER AREA, AND SOLIDS SCREENING AREA) TO DETERMINE THE EXISTING CONDITIONS THEREIN. THE CONTRACTOR SHALL PROVIDE A DESIGN ANALYSIS TO DETERMINE THE BEST METHOD FOR INSTALLING A WET PIPE SPRINKLER SYSTEM THROUGHOUT THE BIOSOLIDS PROCESSING FACILITY. THE CONTRACTOR'S DESIGNATED SPRINKLER SYSTEM DESIGNER (WHO SHALL MEET THE DESIGNER QUALIFICATION REQUIREMENTS OF THE SPECIFICATION) SHALL EXAMINE EACH AREA AND DOCUMENT EXISTING CEILING HEIGHTS, OBSTRUCTIONS, CONSTRUCTION VARIATIONS, AND ARCHITECTURAL CONFIGURATIONS. THE CONTRACTOR'S DESIGNATED SPRINKLER SYSTEM DESIGNER SHALL EVALUATE THE EQUIPMENT HUNG FROM EXISTING CEILINGS AND COORDINATE SPRINKLER SYSTEM PIPING PLACEMENT ACCORDINGLY. THE CONTRACTOR SHALL REFER TO OTHER DISCIPLINES DRAWINGS (ARCHITECTURAL, ELECTRICAL, MECHANICAL, PROCESS, STRUCTURAL, ETC.), REVIEW THEM THOROUGHLY, AND COORDINATE NEW SPRINKLER PIPE ROUTING WITH ALL TRADES AND EXISTING CONDITIONS. THE CONTRACTOR SHALL BE FULLY RESPONSIBLE TO INCORPORATE ALL NEEDED ACCOMMODATIONS INTO FIRE SPRINKLER SYSTEM DESIGN TO MAKE THE SYSTEM WORK IN THE EXISTING ENVIRONMENT

3. INTERMEDIATE TEMPERATURE CLASSIFICATION SPRINKLER HEADS SHALL BE PROVIDED IN ALL MECHANICAL ROOMS AND OTHER LOCATIONS WITH HIGHER THAN NORMAL AMBIENT TEMPERATURES, IN ACCORDANCE WITH NFPA 13, 2013 EDITION.

4. ALL SPRINKLER HEADS SHALL BE PROVIDED WITH GUARDS IN MECHANICAL AND PROCESS ROOMS.

5. SPRINKLER HEADS SHALL BE HYDRAULICALLY CALCULATED IN ACCORDANCE WITH NFPA 13, 2013 EDITION.

6. PROVIDE THRUST RESTRAINT ON FIRE PROTECTION WATER SERVICE IN ACCORDANCE WITH NFPA 24.

7. A HYDRANT FLOW TEST WAS PERFORMED BY THE HOWARD COUNTY DEPARTMENT OF PUBLIC WORKS ON JULY 8, 2016 USING EXISTING HYDRANTS NEARBY THIS PLANNED BUILDING SITE AND THE RESULTS WERE 92 PSI STATIC PRESSURE AND 42 PSI RESIDUAL PRESSURE WITH 1,643 GPM FLOWING. THE CONTRACTOR SHALL BE RESPONSIBLE TO CONDUCT A HYDRANT FLOW TEST IN ACCORDANCE WITH NFPA 291 TO VERIFY THE AVAILABLE PRESSURE & FLOW OF THE WATER SUPPLY. THE CONTRACTOR SHALL THEN DESIGN FIRE SPRINKLER SYSTEM USING STATIC PRESSURE AND RESIDUAL PRESSURE/FLOWS AS DETERMINED DURING THEIR TESTING. THE SPRINKLER SYSTEM SHALL BE HYDRAULICALLY DESIGNED TO WORK WITHOUT ADDITION OF A FIRE PUMP; THE CONTRACTOR SHALL BE RESPONSIBLE FOR MINIMIZING THE PRESSURE LOSS OF THE SPRINKLER SYSTEM BY INCREASING PIPE SIZES, REDUCED HEAD SPACING, ADJUSTING SPRINKLER HEAD K-FACTORS, AND SO FORTH AS NECESSARY TO MAKE THE SYSTEM WORK WITH THE AVAILABLE WATER SUPPLY AND AVOID THE NEED FOR A FIRE PUMP.

8. CONTRACTOR SHALL PROVIDE A SINGLE INTERLOCK AUXILIARY DRY PIPE / PRE-ACTION SYSTEM FOR THE CONTROL ROOM 107 IN THE DRYER BUILDING ADHERING TO THE REQUIREMENTS OF NFPA 13.

THE DRAWINGS IN THIS SET ARE RECORD DRAWINGS. THEY ARE CONSTRUCTION CONTRACT DRAWINGS WHICH HAVE BEEN REVISED BASED ON AVAILABLE FIELD INFORMATION RECORDED BY OTHERS DURING CONSTRUCTION OF THIS CONTRACT. THERE HAS BEEN NO VERIFICATION OF DIMENSIONS SHOWN ON THE CONSTRUCTION DRAWINGS OR THE ACCURACY/COMPLETENESS OF THE FIELD INFORMATION RECEIVED.

SIGNATURE — DATE 2/7/2023

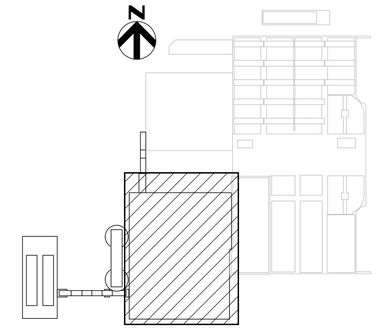

KEY PLAN

AS-BUILT REPLACEMENT SHEET

PROFESSIONAL CERTIFICATION

THIS DRAWING WAS ORIGINALLY APPROVED FOR CONSTRUCTION AND SEALED BY ADAM S. PARMENTER, A REGISTERED PROFESSIONAL ENGINEER IN THE STATE OF MARYLAND, NO. 39376

NOTICE TO CONTRACTORS

- PROJECT ELEVATIONS ARE BASED ON NAVD88 AND HOWARD COUNTY'S BENCHMARK SYSTEM
- PREVIOUS PROJECTS USED OTHER DATUMS
- APPLY THE FOLLOWING CONVERSIONS WHEN USING PREVIOUS CONTRACT DRAWINGS:
  - ADDITION NO. 6: SUBTRACT 0.80 FT
  - PRIOR ADDITIONS: SUBTRACT 1.04 FT

DEPARTMENT OF PUBLIC WORKS
HOWARD COUNTY, MARYLAND

CHIEF, BUREAU OF UTILITIES — DATE

DES: MJS
DRN: TRF
CHK: ZJS
DATE: 01/2018

DATE	REV	DESCRIPTION
03/2021		RECORD DRAWINGS

FIRE PROTECTION

DRYER BUILDING FIRE SUPPRESSION AND FIRE ALARM PLAN AT EL 130.00

LITTLE PATUXENT WATER RECLAMATION PLANT
8TH ADDITION
BIOSOLIDS PROCESSING FACILITIES - PHASE 2

CAPITAL PROJECT S-6295
CONTRACT NO. 24-4936

ELECTION DISTRICT NO. 6
HOWARD COUNTY, MARYLAND

SCALE AS SHOWN

SHEET 187 OF 311

F-500

BIM 360://10054364 – Little Patuxent WRP 8th Addition/264592_100_A_V18.rvt
1/7/2022 11:56:37 AM

NFPA 13 SPRINKLER SYSTEM SCHEDULE (WET PIPE)					
AREA (HATCHING PATTERN)	NFPA 13 HAZARD OCCUPANCY	MIN. DENSITY (GPM/SF)	MINIMUM HYDRAULIC DESIGN AREA (SF)	HOSE (GPM)	DURATION (MIN.)
	LIGHT HAZARD (ALL AREAS NOT HATCHED)	0.10	1500	100	30
	ORDINARY HAZARD (GROUP 1), SINGLE-INTERLOCK PRE-ACTION (AUXILIARY SYSTEM)	0.15	1500	250	60
	ORDINARY HAZARD (GROUP 2)	0.20	1500	250	60

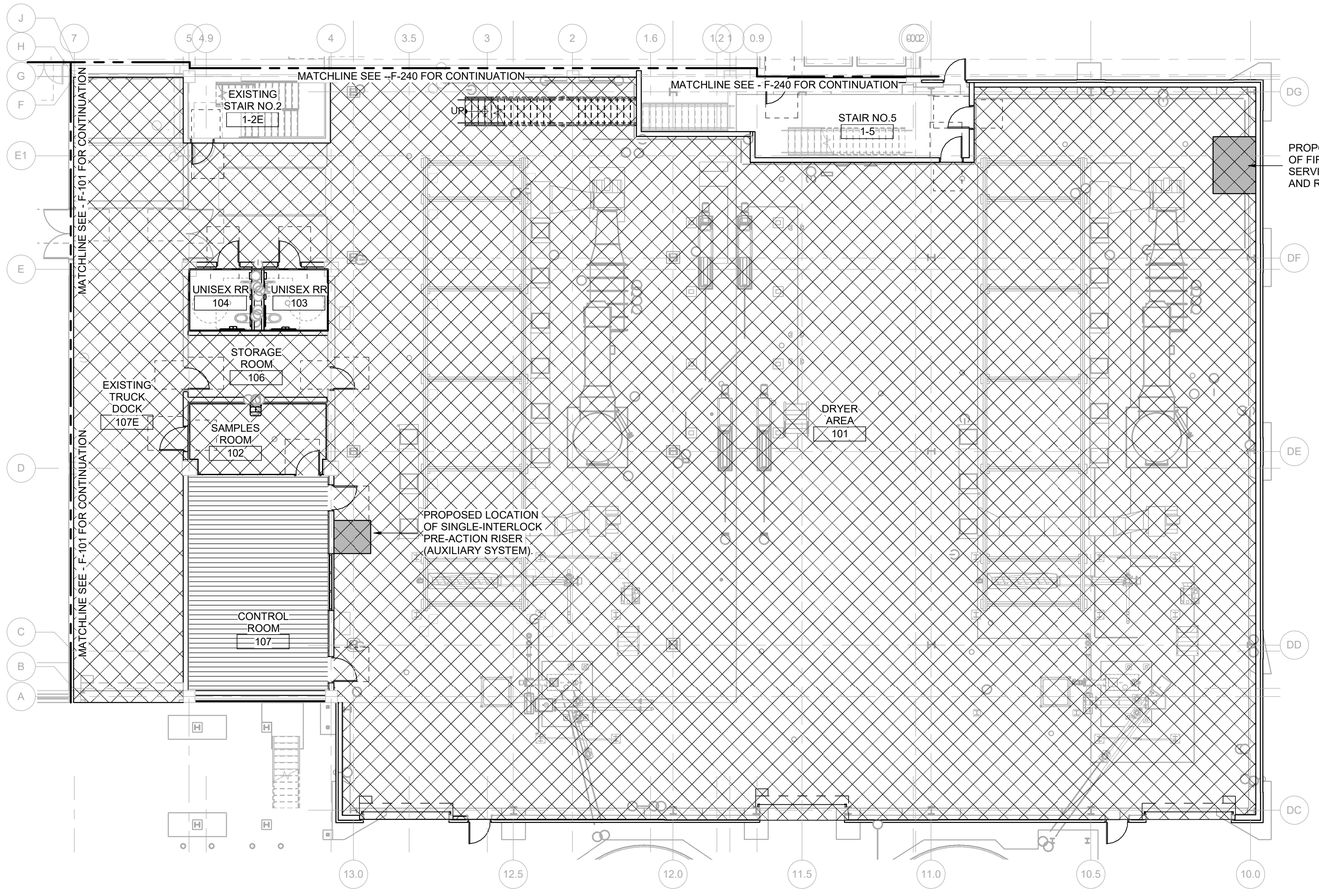

1 F-501 IRE SUPPRESSION AND FIRE ALARM PLAN - EL. 142.00

3/32" = 1'-0"

FIRE ALARM NOTES:

1. THE FIRE ALARM SYSTEM IS A DELEGATED DESIGN WITH PERFORMANCE SPECIFICATIONS. PROVIDE A CODE COMPLIANT FIRE ALARM SYSTEM SERVING THE EXISTING BIOSOLIDS PROCESSING FACILITY (INCLUDING THE EXISTING SOLIDS PIPE GALLERY, GRAVITY BELT THICKENER AREA, AND SOLIDS SCREENING AREA – AS WELL AS THE NEW DRYER BUILDING) THAT MEETS THE REQUIREMENTS OF ALL APPLICABLE LOCAL AND NATIONAL CODES. THIS PLAN TO BE READ IN CONJUNCTION WITH THE FIRE ALARM SYSTEM SPECIFICATION, 28 31 00.

2. THERE IS AN EXISTING FIRE ALARM SYSTEM SERVING THE BIOSOLIDS PROCESSING FACILITY THAT IS NON-FUNCTIONAL. THE SCOPE OF WORK SHALL INCLUDE THE DEMOLITION OF THE EXISTING FIRE ALARM SYSTEM IN ITS ENTIRETY, INCLUDING ALL FIRE ALARM PANELS, COMPONENTS, DEVICES, WIRING, CONDUIT, ACCESSORIES, AND OTHER APPURTENANCES. CONTRACTOR SHALL BE RESPONSIBLE TO REQUEST ANY RECORD DRAWINGS AVAILABLE FOR THE EXISTING FIRE ALARM SYSTEM FROM OWNER AND TO PERFORM FIELD VERIFICATION OF EXISTING CONDITIONS PRIOR TO BID SUBMITTAL. CONTRACTOR WILL BE RESPONSIBLE FOR PROTECTING EXISTING CONDITIONS INCLUDING BUT NOT LIMITED TO: STRUCTURES, CEILINGS, WALLS, EQUIPMENT, UTILITIES, ETC. DAMAGE TO EXISTING CONDITIONS WILL BE REPAIRED AT NO ADDITIONAL COST TO THE OWNER. CONTRACTOR WILL BE RESPONSIBLE FOR PATCHING AND REPAIRING FLOORS, CEILINGS, AND WALLS TO MATCH EXISTING CONDITIONS IN AREAS IMPACTED BY THE DEMOLITION OF THE EXISTING FIRE ALARM SYSTEM AND INSTALLATION OF THE NEW FIRE ALARM SYSTEM.

3. THE ABOVE GRADE PORTION OF THE DRYER BUILDING IS THE ONLY AREA IN THE BIOSOLIDS PROCESSING FACILITY PROJECT PHASE 2 THAT WILL BE NEW CONSTRUCTION. THE CONTRACTOR SHALL BE RESPONSIBLE TO PERFORM THOROUGH SITE INVESTIGATION TO EXAMINE THE EXISTING BIOSOLIDS PROCESSING FACILITY PRIOR TO BIDDING THE PROJECT. REFER TO SPECIFICATION 28 31 00 FOR ADDITIONAL REQUIREMENTS.

4. THE NEW FIRE ALARM CONTROL UNIT (FACU) TO SERVE THE EXISTING BIOSOLIDS PROCESSING FACILITY SHALL BE LOCATED IN THE DRYER BUILDING MCC ROOM 203 AT EL. 156. THE FACU SHALL MONITOR ANY DUCT DETECTOR(S) PROVIDED BY THE MECHANICAL CONTRACTOR AS PART OF THE AHU PACKAGE(S). REFER TO HVAC DRAWINGS FOR SMOKE DUCT DETECTOR LOCATIONS. COORDINATE SHUTDOWN OF UNITS AS NEEDED TO MEET CODE.

5. THE BIOSOLIDS PROCESSING FACILITY FIRE ALARM CONTROL UNIT (FACU) SHALL PROVIDE POINT ADDRESSABLE SIGNAL ANNUNCIATION (ALARM, TROUBLE, & SUPERVISORY SIGNALS BY DEVICE/MODULE ADDRESS) TO THE ADMINISTRATION BUILDING FACU VIA A DEDICATED FIRE ALARM NETWORK USING FIBER OPTIC CABLES BEING RUN BETWEEN BUILDINGS. THE NEW BIOSOLIDS PROCESSING FACILITY FACU MUST BE THE SAME MODEL AND MANUFACTURER AS THE ADMINISTRATION BUILDING AND DIGESTER BUILDING FACU'S WITH FULL NETWORKING CAPABILITIES. CONTRACTOR SHALL PROVIDE NEW, DEDICATED FIBER OPTIC CABLES AS NEEDED TO CONNECT THE BIOSOLIDS PROCESSING FACILITY FACU TO THE ADMINISTRATION BUILDING FACU. PROVIDE FIBER-TO-COPPER MODULES IN THE FACU'S OR REMOTE FACU'S, AS NEEDED FOR NETWORK FUNCTIONALITY. REFER TO THE PHASE 2 NETWORK DIAGRAM ON SHEET F-901 FOR ADDITIONAL DETAILS.

6. THE FACU IN THE DRYER BUILDING WILL PROVIDE DRY CONTACT TYPE RELAY OUTPUTS FOR ANCILLARY REPORTING OF 2 FIRE ALARM SYSTEM SIGNALS TO AREA PLC PANEL 8-GBT-0011-PNL IN THE DRYER BUILDING MCC ROOM 203. AT EL. 156; THESE SIGNALS SHALL BE 'FIRE ALARM' AND 'FA TROUBLE OR SUPERVISORY CONDITION'.

7. THE EXISTING ADMINISTRATION BUILDING FACU PROVIDED AS PART OF PHASE 1, FOR REFERENCE THAT WORK INCLUDED THE FOLLOWING:
A. THE ADMINISTRATION BUILDING FACU SERVES AS THE GLOBAL FIRE ALARM NETWORK ANNUNCIATOR FOR A CONTROL ROOM LOCATION MANNED 24 HOURS-A-DAY / 7 DAYS-A-WEEK IN AN NFPA 72 PROPRIETARY SUPERVISING STATION CONFIGURATION FOR EMERGENCY SERVICES NOTIFICATION. THE ADMINISTRATION BUILDING FACU PROVIDES POINT ADDRESSABLE SIGNAL ANNUNCIATION (ALARM, TROUBLE, & SUPERVISORY SIGNALS BY DEVICE/MODULE ADDRESS) OF ALL EVENTS ON THE FIRE ALARM NETWORK.
B. THE ADMINISTRATION BUILDING FACU IS LOCATED IN THE CONTROL ROOM. THE ADMINISTRATION BUILDING FACU AND DIGESTER BUILDING FACU ARE NETWORKED USING MULTI-MODE FIBER OPTIC CABLE BEING INSTALLED BY OTHERS BETWEEN PATCH PANELS IN THOSE RESPECTIVE BUILDINGS. REFER TO THE CONTRACT DOCUMENTS FOR THE FIBER NETWORK DIAGRAM (I-904) AND OVERALL ELECTRICAL SITE PLAN (E-3) FOR ADDITIONAL INFORMATION.
C. THE ADMINISTRATION BUILDING FACU IS FULLY CAPABLE OF ADDING A DACT (DIGITAL ALARM COMMUNICATOR TRANSMITTER) IN THE FUTURE. THE DACT WOULD ONLY BE REQUIRED IN THE EVENT THAT THE AHJ REQUIRES HOWARD COUNTY LPWRP TO PROVIDE AUTOMATIC EMERGENCY SERVICES NOTIFICATION VIA A CENTRAL STATION SERVICE CONFIGURATION (INSTEAD OF A PROPRIETARY SUPERVISING STATION CONFIGURATION).

8. FOR PHASE 2, THE ADMINISTRATION BUILDING FACU SHALL BE UPDATED (IN BOTH HARDWARE AND SOFTWARE/PROGRAMMING) AS NEEDED TO ADD THE BIOSOLIDS PROCESSING FACILITY FACU TO THE NETWORK CONFIGURATION AND FULL GLOBAL REPORTING.

FIRE PROTECTION NOTES:

1. THE FIRE SPRINKLER SYSTEM IS A DELEGATED DESIGN WITH PERFORMANCE SPECIFICATIONS. PROVIDE A CODE COMPLIANT SPRINKLER SYSTEM SERVING THE EXISTING BIOSOLIDS PROCESSING FACILITY (INCLUDING THE EXISTING SOLIDS PIPE GALLERY, GRAVITY BELT THICKENER AREA, AND SOLIDS SCREENING AREA – AS WELL AS THE NEW DRYER BUILDING) THAT MEETS THE REQUIREMENTS OF ALL APPLICABLE LOCAL AND NATIONAL CODES. THIS PLAN TO BE READ IN CONJUNCTION WITH THE FIRE PROTECTION SYSTEMS SPECIFICATION, 21 05 00.

2. THE ABOVE GRADE PORTION OF THE DRYER BUILDING IS THE ONLY AREA IN THE BIOSOLIDS PROCESSING FACILITY PROJECT PHASE 2 THAT IS NEW CONSTRUCTION. A NEW WATER SERVICE AND FIRE SPRINKLER RISER SHALL BE PROVIDED IN THE DRYER BUILDING TO SERVE IT AND THE EXISTING BIOSOLIDS PROCESSING FACILITY. THE CONTRACTOR SHALL BE RESPONSIBILE TO PERFORM THOROUGH SITE INVESTIGATION TO EXAMINE THE EXISTING BIOSOLIDS PROCESSING FACILITY (INCLUDING THE SOLIDS PIPE GALLERY, GRAVITY BELT THICKENER AREA, AND SOLIDS SCREENING AREA) TO DETERMINE THE EXISTING CONDITIONS THEREIN. THE CONTRACTOR SHALL PROVIDE A DESIGN ANALYSIS TO DETERMINE THE BEST METHOD FOR INSTALLING A WET PIPE SPRINKLER SYSTEM THROUGHOUT THE BIOSOLIDS PROCESSING FACILITY. THE CONTRACTOR'S DESIGNATED SPRINKLER SYSTEM DESIGNER (WHO SHALL MEET THE DESIGNER QUALIFICATION REQUIREMENTS OF THE SPECIFICATION) SHALL EXAMINE EACH AREA AND DOCUMENT EXISTING CEILING HEIGHTS, OBSTRUCTIONS, CONSTRUCTION VARIATIONS, AND ARCHITECTURAL CONFIGURATIONS. THE CONTRACTOR'S DESIGNATED SPRINKLER SYSTEM DESIGNER SHALL EVALUATE THE EQUIPMENT HUNG FROM EXISTING CEILINGS AND COORDINATE SPRINKLER SYSTEM PIPING PLACEMENT ACCORDINGLY. THE CONTRACTOR SHALL REFER TO OTHER DISCIPLINES DRAWINGS (ARCHITECTURAL, ELECTRICAL, MECHANICAL, PROCESS, STRUCTURAL, ETC.), REVIEW THEM THOROUGHLY, AND COORDINATE NEW SPRINKLER PIPE ROUTING WITH ALL TRADES AND EXISTING CONDITIONS. THE CONTRACTOR SHALL BE FULLY RESPONSIBLE TO INCORPORATE ALL NEEDED ACCOMMODATIONS INTO FIRE SPRINKLER SYSTEM DESIGN TO MAKE THE SYSTEM WORK IN THE EXISTING ENVIRONMENT

3. INTERMEDIATE TEMPERATURE CLASSIFICATION SPRINKLER HEADS SHALL BE PROVIDED IN ALL MECHANICAL ROOMS AND OTHER LOCATIONS WITH HIGHER THAN NORMAL AMBIENT TEMPERATURES, IN ACCORDANCE WITH NFPA 13, 2013 EDITION.

4. ALL SPRINKLER HEADS SHALL BE PROVIDED WITH GUARDS IN MECHANICAL AND PROCESS ROOMS.

5. SPRINKLER HEADS SHALL BE HYDRAULICALLY CALCULATED IN ACCORDANCE WITH NFPA 13, 2013 EDITION.

6. PROVIDE THRUST RESTRAINT ON FIRE PROTECTION WATER SERVICE IN ACCORDANCE WITH NFPA 24.

7. A HYDRANT FLOW TEST WAS PERFORMED BY THE HOWARD COUNTY DEPARTMENT OF PUBLIC WORKS ON JULY 8, 2016 USING EXISTING HYDRANTS NEARBY THIS PLANNED BUILDING SITE AND THE RESULTS WERE 92 PSI STATIC PRESSURE AND 42 PSI RESIDUAL PRESSURE WITH 1,643 GPM FLOWING. THE CONTRACTOR SHALL BE RESPONSIBLE TO CONDUCT A HYDRANT FLOW TEST IN ACCORDANCE WITH NFPA 291 TO VERIFY THE AVAILABLE PRESSURE & FLOW OF THE WATER SUPPLY. THE CONTRACTOR SHALL THEN DESIGN FIRE SPRINKLER SYSTEM USING STATIC PRESSURE AND RESIDUAL PRESSURE/FLOWS AS DETERMINED DURING THEIR TESTING. THE SPRINKLER SYSTEM SHALL BE HYDRAULICALLY DESIGNED TO WORK WITHOUT ADDITION OF A FIRE PUMP; THE CONTRACTOR SHALL BE RESPONSIBLE FOR MINIMIZING THE PRESSURE LOSS OF THE SPRINKLER SYSTEM BY INCREASING PIPE SIZES, REDUCED HEAD SPACING, ADJUSTING SPRINKLER HEAD K-FACTORS, AND SO FORTH AS NECESSARY TO MAKE THE SYSTEM WORK WITH THE AVAILABLE WATER SUPPLY AND AVOID THE NEED FOR A FIRE PUMP.

8. CONTRACTOR SHALL PROVIDE A SINGLE INTERLOCK AUXILIARY DRY PIPE / PRE-ACTION SYSTEM FOR THE CONTROL ROOM 107 IN THE DRYER BUILDING ADHERING TO THE REQUIREMENTS OF NFPA 13.

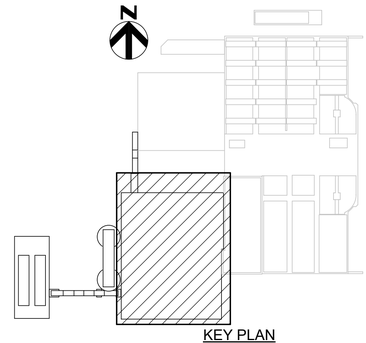

KEY PLAN

THE DRAWINGS IN THIS SET ARE RECORD DRAWINGS. THEY ARE CONSTRUCTION CONTRACT DRAWINGS WHICH HAVE BEEN REVISED BASED ON AVAILABLE FIELD INFORMATION RECORDED BY OTHERS DURING CONSTRUCTION OF THIS CONTRACT. THERE HAS BEEN NO VERIFICATION OF DIMENSIONS SHOWN ON THE CONSTRUCTION DRAWINGS OR THE ACCURACY/COMPLETENESS OF THE FIELD INFORMATION RECEIVED.

SIGNATURE — DATE 2/7/2022

AS-BUILT REPLACEMENT SHEET

PROFESSIONAL CERTIFICATION

THIS DRAWING WAS ORIGINALLY APPROVED FOR CONSTRUCTION AND SEALED BY ADAM S. PARMENTER, A REGISTERED PROFESSIONAL ENGINEER IN THE STATE OF MARYLAND, NO. 39376

NOTICE TO CONTRACTORS

- PROJECT ELEVATIONS ARE BASED ON NAVD88 AND HOWARD COUNTY'S BENCHMARK SYSTEM
- PREVIOUS PROJECTS USED OTHER DATUMS
- APPLY THE FOLLOWING CONVERSIONS WHEN USING PREVIOUS CONTRACT DRAWINGS:
  - ADDITION NO. 6: SUBTRACT 0.80 FT
  - PRIOR ADDITIONS: SUBTRACT 1.04 FT

DEPARTMENT OF PUBLIC WORKS
HOWARD COUNTY, MARYLAND

CHIEF, BUREAU OF UTILITIES — DATE

DES: MJS
DRN: TRF
CHK: ZJS
DATE: 01/2018

DATE	REV	DESCRIPTION
03/2021		RECORD DRAWINGS

FIRE PROTECTION

DRYER BUILDING FIRE SUPPRESSION AND FIRE ALARM PLAN AT EL 142.00

LITTLE PATUXENT WATER RECLAMATION PLANT
8TH ADDITION
BIOSOLIDS PROCESSING FACILITIES - PHASE 2

CAPITAL PROJECT S-6295
CONTRACT NO. 24-4936

ELECTION DISTRICT NO. 6
HOWARD COUNTY, MARYLAND

SCALE AS SHOWN

SHEET 188 OF 311

F-501

BIM 360://10054364 – Little Patuxent WRP 8th Addition/264592_100_A_V18.rvt
1/7/2022 11:56:50 AM

NFPA 13 SPRINKLER SYSTEM SCHEDULE (WET PIPE)					
AREA (HATCHING PATTERN)	NFPA 13 HAZARD OCCUPANCY	MIN. DENSITY (GPM/SF)	MINIMUM HYDRAULIC DESIGN AREA (SF)	HOSE (GPM)	DURATION (MIN.)
	LIGHT HAZARD (ALL AREAS NOT HATCHED)	0.10	1500	100	30
	ORDINARY HAZARD (GROUP 1), SINGLE-INTERLOCK PRE-ACTION (AUXILIARY SYSTEM)	0.15	1500	250	60
	ORDINARY HAZARD (GROUP 2)	0.20	1500	250	60

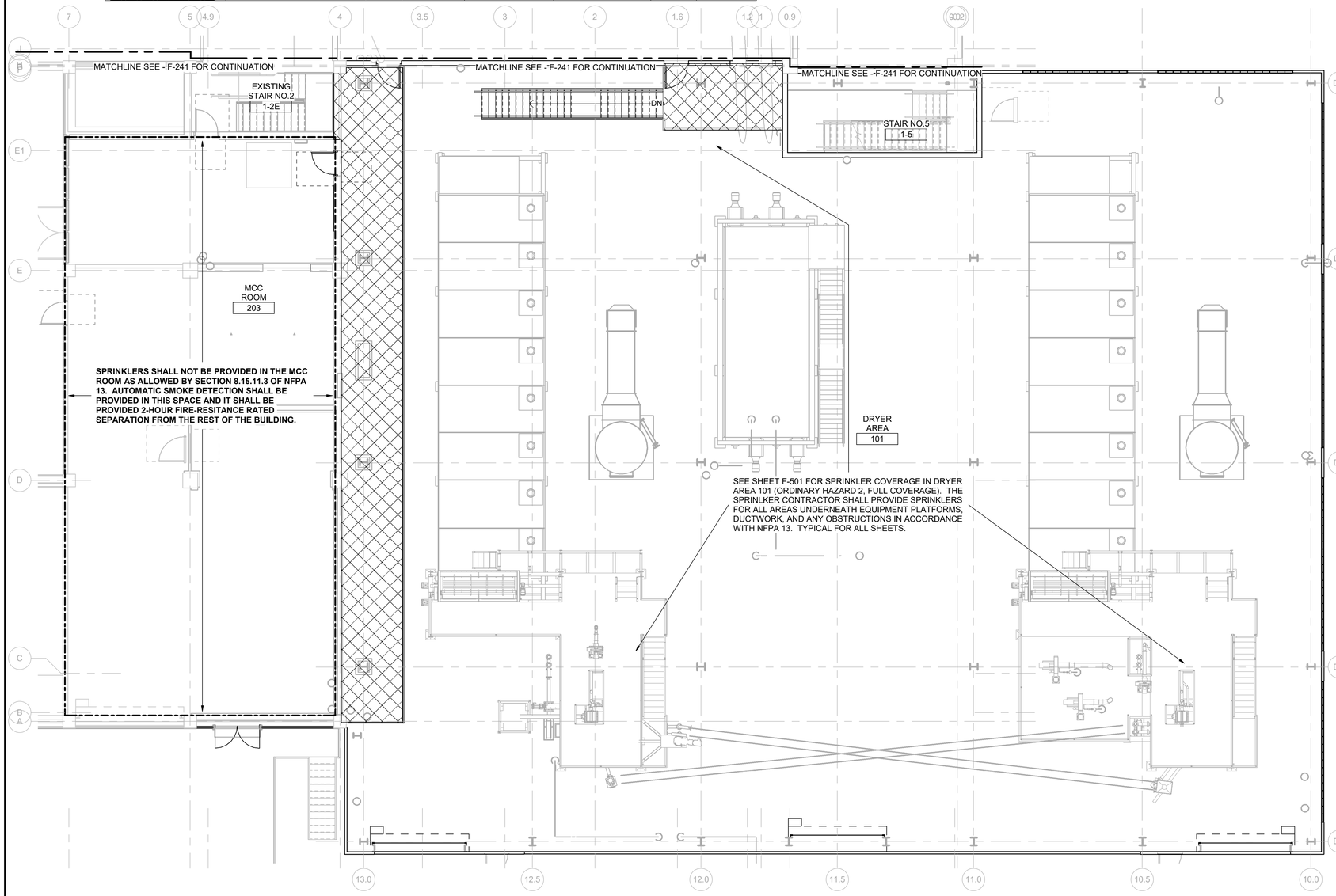

1 F-502 FIRE SUPPRESSION AND FIRE ALARM PLAN - EL. 156.00
1/8" = 1'-0"

FIRE ALARM NOTES:

1. THE FIRE ALARM SYSTEM IS A DELEGATED DESIGN WITH PERFORMANCE SPECIFICATIONS. PROVIDE A CODE COMPLIANT FIRE ALARM SYSTEM SERVING THE EXISTING BIOSOLIDS PROCESSING FACILITY (INCLUDING THE EXISTING SOLIDS PIPE GALLERY, GRAVITY BELT THICKENER AREA, AND SOLIDS SCREENING AREA – AS WELL AS THE NEW DRYER BUILDING) THAT MEETS THE REQUIREMENTS OF ALL APPLICABLE LOCAL AND NATIONAL CODES. THIS PLAN TO BE READ IN CONJUNCTION WITH THE FIRE ALARM SYSTEM SPECIFICATION, 28 31 00.

2. THERE IS AN EXISTING FIRE ALARM SYSTEM SERVING THE BIOSOLIDS PROCESSING FACILITY THAT IS NON-FUNCTIONAL. THE SCOPE OF WORK SHALL INCLUDE THE DEMOLITION OF THE EXISTING FIRE ALARM SYSTEM IN ITS ENTIRETY, INCLUDING ALL FIRE ALARM PANELS, COMPONENTS, DEVICES, WIRING, CONDUIT, ACCESSORIES, AND OTHER APPURTENANCES. CONTRACTOR SHALL BE RESPONSIBLE TO REQUEST ANY RECORD DRAWINGS AVAILABLE FOR THE EXISTING FIRE ALARM SYSTEM FROM OWNER AND TO PERFORM FIELD VERIFICATION OF EXISTING CONDITIONS PRIOR TO BID SUBMITTAL. CONTRACTOR WILL BE RESPONSIBLE FOR PROTECTING EXISTING CONDITIONS INCLUDING BUT NOT LIMITED TO: STRUCTURES, CEILINGS, WALLS, EQUIPMENT, UTILITIES, ETC. DAMAGE TO EXISTING CONDITIONS WILL BE REPAIRED AT NO ADDITIONAL COST TO THE OWNER. CONTRACTOR WILL BE RESPONSIBLE FOR PATCHING AND REPAIRING FLOORS, CEILINGS, AND WALLS TO MATCH EXISTING CONDITIONS IN AREAS IMPACTED BY THE DEMOLITION OF THE EXISTING FIRE ALARM SYSTEM AND INSTALLATION OF THE NEW FIRE ALARM SYSTEM.

3. THE ABOVE GRADE PORTION OF THE DRYER BUILDING IS THE ONLY AREA IN THE BIOSOLIDS PROCESSING FACILITY PROJECT PHASE 2 THAT WILL BE NEW CONSTRUCTION. THE CONTRACTOR SHALL BE RESPONSIBLE TO PERFORM THOROUGH SITE INVESTIGATION TO EXAMINE THE EXISTING BIOSOLIDS PROCESSING FACILITY PRIOR TO BIDDING THE PROJECT. REFER TO SPECIFICATION 28 31 00 FOR ADDITIONAL REQUIREMENTS.

4. THE NEW FIRE ALARM CONTROL UNIT (FACU) TO SERVE THE EXISTING BIOSOLIDS PROCESSING FACILITY SHALL BE LOCATED IN THE DRYER BUILDING MCC ROOM 203 AT EL. 156. THE FACU SHALL MONITOR ANY DUCT DETECTOR(S) PROVIDED BY THE MECHANICAL CONTRACTOR AS PART OF THE AHU PACKAGE(S). REFER TO HVAC DRAWINGS FOR SMOKE DUCT DETECTOR LOCATIONS. COORDINATE SHUTDOWN OF UNITS AS NEEDED TO MEET CODE.

5. THE BIOSOLIDS PROCESSING FACILITY FIRE ALARM CONTROL UNIT (FACU) SHALL PROVIDE POINT ADDRESSABLE SIGNAL ANNUNCIATION (ALARM, TROUBLE, & SUPERVISORY SIGNALS BY DEVICE/MODULE ADDRESS) TO THE ADMINISTRATION BUILDING FACU VIA A DEDICATED FIRE ALARM NETWORK USING FIBER OPTIC CABLES BEING RUN BETWEEN BUILDINGS. THE NEW BIOSOLIDS PROCESSING FACILITY FACU MUST BE THE SAME MODEL AND MANUFACTURER AS THE ADMINISTRATION BUILDING AND DIGESTER BUILDING FACU'S WITH FULL NETWORKING CAPABILITIES. CONTRACTOR SHALL PROVIDE NEW, DEDICATED FIBER OPTIC CABLES AS NEEDED TO CONNECT THE BIOSOLIDS PROCESSING FACILITY FACU TO THE ADMINISTRATION BUILDING FACU. PROVIDE FIBER-TO-COPPER MODULES IN THE FACU'S OR REMOTE FACU'S, AS NEEDED FOR NETWORK FUNCTIONALITY. REFER TO THE PHASE 2 NETWORK DIAGRAM ON SHEET F-901 FOR ADDITIONAL DETAILS.

6. THE FACU IN THE DRYER BUILDING WILL PROVIDE DRY CONTACT TYPE RELAY OUTPUTS FOR ANCILLARY REPORTING OF 2 FIRE ALARM SYSTEM SIGNALS TO AREA PLC PANEL 8-GBT-0011-PNL IN THE DRYER BUILDING MCC ROOM 203. AT EL. 156; THESE SIGNALS SHALL BE 'FIRE ALARM' AND 'FA TROUBLE OR SUPERVISORY CONDITION'.

7. THE EXISTING ADMINISTRATION BUILDING FACU PROVIDED AS PART OF PHASE 1, FOR REFERENCE THAT WORK INCLUDED THE FOLLOWING:
A. THE ADMINISTRATION BUILDING FACU SERVES AS THE GLOBAL FIRE ALARM NETWORK ANNUNCIATOR FOR A CONTROL ROOM LOCATION MANNED 24 HOURS-A-DAY / 7 DAYS-A-WEEK IN AN NFPA 72 PROPRIETARY SUPERVISING STATION CONFIGURATION FOR EMERGENCY SERVICES NOTIFICATION. THE ADMINISTRATION BUILDING FACU PROVIDES POINT ADDRESSABLE SIGNAL ANNUNCIATION (ALARM, TROUBLE, & SUPERVISORY SIGNALS BY DEVICE/MODULE ADDRESS) OF ALL EVENTS ON THE FIRE ALARM NETWORK.
B. THE ADMINISTRATION BUILDING FACU IS LOCATED IN THE CONTROL ROOM. THE ADMINISTRATION BUILDING FACU AND DIGESTER BUILDING FACU ARE NETWORKED USING MULTI-MODE FIBER OPTIC CABLE BEING INSTALLED BY OTHERS BETWEEN PATCH PANELS IN THOSE RESPECTIVE BUILDINGS. REFER TO THE CONTRACT DOCUMENTS FOR THE FIBER NETWORK DIAGRAM (I-904) AND OVERALL ELECTRICAL SITE PLAN (E-3) FOR ADDITIONAL INFORMATION.
C. THE ADMINISTRATION BUILDING FACU IS FULLY CAPABLE OF ADDING A DACT (DIGITAL ALARM COMMUNICATOR TRANSMITTER) IN THE FUTURE. THE DACT WOULD ONLY BE REQUIRED IN THE EVENT THAT THE AHJ REQUIRES HOWARD COUNTY LPWRP TO PROVIDE AUTOMATIC EMERGENCY SERVICES NOTIFICATION VIA A CENTRAL STATION SERVICE CONFIGURATION (INSTEAD OF A PROPRIETARY SUPERVISING STATION CONFIGURATION).

8. FOR PHASE 2, THE ADMINISTRATION BUILDING FACU SHALL BE UPDATED (IN BOTH HARDWARE AND SOFTWARE/PROGRAMMING) AS NEEDED TO ADD THE BIOSOLIDS PROCESSING FACILITY FACU TO THE NETWORK CONFIGURATION AND FULL GLOBAL REPORTING.

FIRE PROTECTION NOTES:

1. THE FIRE SPRINKLER SYSTEM IS A DELEGATED DESIGN WITH PERFORMANCE SPECIFICATIONS. PROVIDE A CODE COMPLIANT SPRINKLER SYSTEM SERVING THE EXISTING BIOSOLIDS PROCESSING FACILITY (INCLUDING THE EXISTING SOLIDS PIPE GALLERY, GRAVITY BELT THICKENER AREA, AND SOLIDS SCREENING AREA – AS WELL AS THE NEW DRYER BUILDING) THAT MEETS THE REQUIREMENTS OF ALL APPLICABLE LOCAL AND NATIONAL CODES. THIS PLAN TO BE READ IN CONJUNCTION WITH THE FIRE PROTECTION SYSTEMS SPECIFICATION, 21 05 00.

2. THE ABOVE GRADE PORTION OF THE DRYER BUILDING IS THE ONLY AREA IN THE BIOSOLIDS PROCESSING FACILITY PROJECT PHASE 2 THAT IS NEW CONSTRUCTION. A NEW WATER SERVICE AND FIRE SPRINKLER RISER SHALL BE PROVIDED IN THE DRYER BUILDING TO SERVE IT AND THE EXISTING BIOSOLIDS PROCESSING FACILITY. THE CONTRACTOR SHALL BE RESPONSIBILE TO PERFORM THOROUGH SITE INVESTIGATION TO EXAMINE THE EXISTING BIOSOLIDS PROCESSING FACILITY (INCLUDING THE SOLIDS PIPE GALLERY, GRAVITY BELT THICKENER AREA, AND SOLIDS SCREENING AREA) TO DETERMINE THE EXISTING CONDITIONS THEREIN. THE CONTRACTOR SHALL PROVIDE A DESIGN ANALYSIS TO DETERMINE THE BEST METHOD FOR INSTALLING A WET PIPE SPRINKLER SYSTEM THROUGHOUT THE BIOSOLIDS PROCESSING FACILITY. THE CONTRACTOR'S DESIGNATED SPRINKLER SYSTEM DESIGNER (WHO SHALL MEET THE DESIGNER QUALIFICATION REQUIREMENTS OF THE SPECIFICATION) SHALL EXAMINE EACH AREA AND DOCUMENT EXISTING CEILING HEIGHTS, OBSTRUCTIONS, CONSTRUCTION VARIATIONS, AND ARCHITECTURAL CONFIGURATIONS. THE CONTRACTOR'S DESIGNATED SPRINKLER SYSTEM DESIGNER SHALL EVALUATE THE EQUIPMENT HUNG FROM EXISTING CEILINGS AND COORDINATE SPRINKLER SYSTEM PIPING PLACEMENT ACCORDINGLY. THE CONTRACTOR SHALL REFER TO OTHER DISCIPLINES DRAWINGS (ARCHITECTURAL, ELECTRICAL, MECHANICAL, PROCESS, STRUCTURAL, ETC.), REVIEW THEM THOROUGHLY, AND COORDINATE NEW SPRINKLER PIPE ROUTING WITH ALL TRADES AND EXISTING CONDITIONS. THE CONTRACTOR SHALL BE FULLY RESPONSIBLE TO INCORPORATE ALL NEEDED ACCOMMODATIONS INTO FIRE SPRINKLER SYSTEM DESIGN TO MAKE THE SYSTEM WORK IN THE EXISTING ENVIRONMENT

3. INTERMEDIATE TEMPERATURE CLASSIFICATION SPRINKLER HEADS SHALL BE PROVIDED IN ALL MECHANICAL ROOMS AND OTHER LOCATIONS WITH HIGHER THAN NORMAL AMBIENT TEMPERATURES, IN ACCORDANCE WITH NFPA 13, 2013 EDITION.

4. ALL SPRINKLER HEADS SHALL BE PROVIDED WITH GUARDS IN MECHANICAL AND PROCESS ROOMS.

5. SPRINKLER HEADS SHALL BE HYDRAULICALLY CALCULATED IN ACCORDANCE WITH NFPA 13, 2013 EDITION.

6. PROVIDE THRUST RESTRAINT ON FIRE PROTECTION WATER SERVICE IN ACCORDANCE WITH NFPA 24.

7. A HYDRANT FLOW TEST WAS PERFORMED BY THE HOWARD COUNTY DEPARTMENT OF PUBLIC WORKS ON JULY 8, 2016 USING EXISTING HYDRANTS NEARBY THIS PLANNED BUILDING SITE AND THE RESULTS WERE 92 PSI STATIC PRESSURE AND 42 PSI RESIDUAL PRESSURE WITH 1,643 GPM FLOWING. THE CONTRACTOR SHALL BE RESPONSIBLE TO CONDUCT A HYDRANT FLOW TEST IN ACCORDANCE WITH NFPA 291 TO VERIFY THE AVAILABLE PRESSURE & FLOW OF THE WATER SUPPLY. THE CONTRACTOR SHALL THEN DESIGN FIRE SPRINKLER SYSTEM USING STATIC PRESSURE AND RESIDUAL PRESSURE/FLOWS AS DETERMINED DURING THEIR TESTING. THE SPRINKLER SYSTEM SHALL BE HYDRAULICALLY DESIGNED TO WORK WITHOUT ADDITION OF A FIRE PUMP; THE CONTRACTOR SHALL BE RESPONSIBLE FOR MINIMIZING THE PRESSURE LOSS OF THE SPRINKLER SYSTEM BY INCREASING PIPE SIZES, REDUCED HEAD SPACING, ADJUSTING SPRINKLER HEAD K-FACTORS, AND SO FORTH AS NECESSARY TO MAKE THE SYSTEM WORK WITH THE AVAILABLE WATER SUPPLY AND AVOID THE NEED FOR A FIRE PUMP.

8. CONTRACTOR SHALL PROVIDE A SINGLE INTERLOCK AUXILIARY DRY PIPE / PRE-ACTION SYSTEM FOR THE CONTROL ROOM 107 IN THE DRYER BUILDING ADHERING TO THE REQUIREMENTS OF NFPA 13.

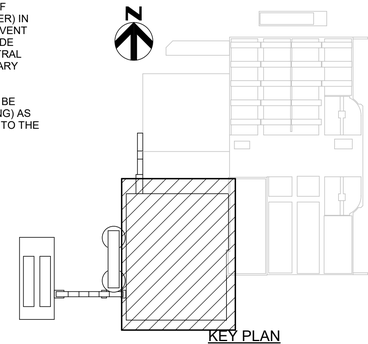

KEY PLAN

THE DRAWINGS IN THIS SET ARE RECORD DRAWINGS. THEY ARE CONSTRUCTION CONTRACT DRAWINGS WHICH HAVE BEEN REVISED BASED ON AVAILABLE FIELD INFORMATION RECORDED BY OTHERS DURING CONSTRUCTION OF THIS CONTRACT. THERE HAS BEEN NO VERIFICATION OF DIMENSIONS SHOWN ON THE CONSTRUCTION DRAWINGS OR THE ACCURACY/COMPLETENESS OF THE FIELD INFORMATION RECEIVED.

SIGNATURE 2/7/2023 DATE

AS-BUILT REPLACEMENT SHEET

PROFESSIONAL CERTIFICATION

THIS DRAWING WAS ORIGINALLY APPROVED FOR CONSTRUCTION AND SEALED BY ADAM S. PARMENTER, A REGISTERED PROFESSIONAL ENGINEER IN THE STATE OF MARYLAND, NO. 39376

NOTICE TO CONTRACTORS
- PROJECT ELEVATIONS ARE BASED ON NAVD88 AND HOWARD COUNTY'S BENCHMARK SYSTEM
- PREVIOUS PROJECTS USED OTHER DATUMS
- APPLY THE FOLLOWING CONVERSIONS WHEN USING PREVIOUS CONTRACT DRAWINGS:
  - ADDITION NO. 6: SUBTRACT 0.80 FT
  - PRIOR ADDITIONS: SUBTRACT 1.04 FT

DEPARTMENT OF PUBLIC WORKS
HOWARD COUNTY, MARYLAND

CHIEF, BUREAU OF UTILITIES DATE

DES: MJS
DRN: TRF
CHK: ZJS
DATE: 01/2018

DATE	REV	DESCRIPTION
03/2021		RECORD DRAWINGS

FIRE PROTECTION

DRYER BUILDING FIRE SUPPRESSION AND FIRE ALARM PLAN AT EL 156.00

LITTLE PATUXENT WATER RECLAMATION PLANT
8TH ADDITION
BIOSOLIDS PROCESSING FACILITIES - PHASE 2

CAPITAL PROJECT S-6295
CONTRACT NO. 24-4936

ELECTION DISTRICT NO. 6
HOWARD COUNTY, MARYLAND

SCALE AS SHOWN

SHEET 189 OF 311

F-502

BIM 360://10054364 – Little Patuxent WRP 8th Addition/264592_100_A_V18.rvt
1/7/2022 11:57:15 AM

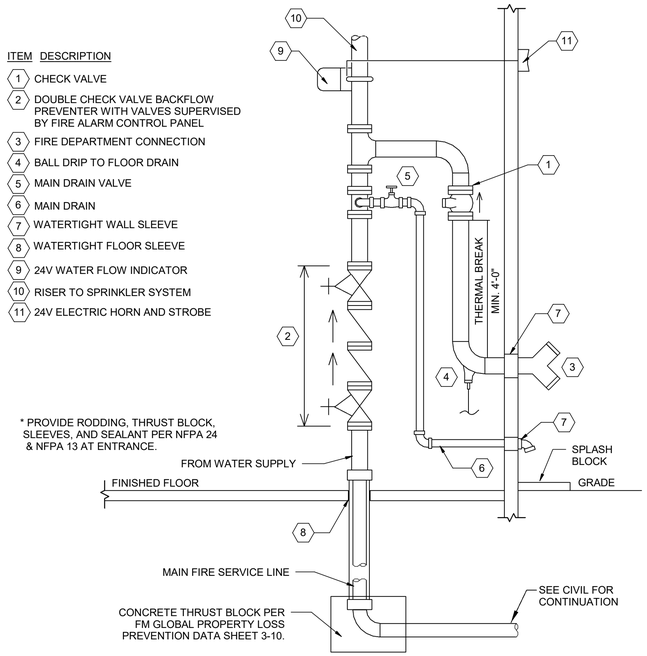

1 WATER SUPPLY RISER DETAIL
NOT TO SCALE

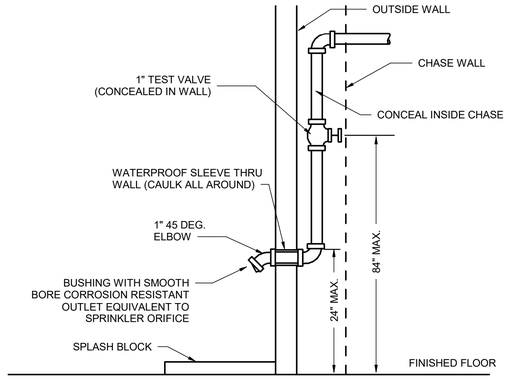

2 INSPECTOR'S TEST CONNECTION DETAIL
NOT TO SCALE

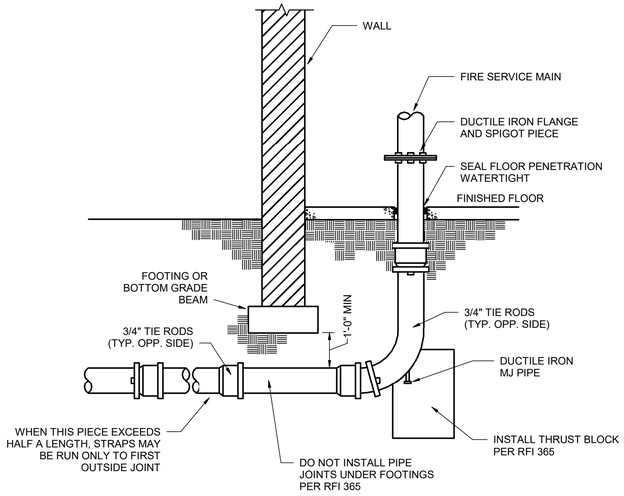

PER RFI 0458, CONTRACTOR MAY INSTALL
A CLASS 53 SPOOL INSTEAD OF CLASS 54

3 WATER MAIN BUILDING ENTRANCE DETAIL
NOT TO SCALE

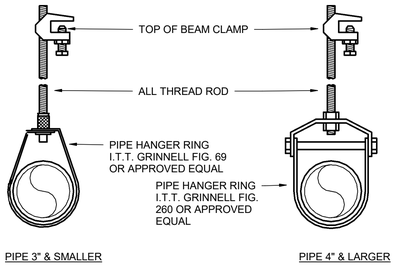

4 TOP BEAM CLAMP PIPE HANGER DETAIL
NOT TO SCALE

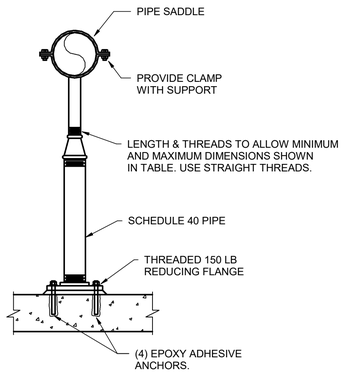

5 FLOOR PIPE SUPPORT DETAIL
NOT TO SCALE

THE DRAWINGS IN THIS SET ARE RECORD DRAWINGS. THEY ARE CONSTRUCTION CONTRACT DRAWINGS WHICH HAVE BEEN REVISED BASED ON AVAILABLE FIELD INFORMATION RECORDED BY OTHERS DURING CONSTRUCTION OF THIS CONTRACT. THERE HAS BEEN NO VERIFICATION OF DIMENSIONS SHOWN ON THE CONSTRUCTION DRAWINGS OR THE ACCURACY/COMPLETENESS OF THE FIELD INFORMATION RECEIVED.

SIGNATURE 2/7/2022 DATE

AS-BUILT REPLACEMENT SHEET

PROFESSIONAL CERTIFICATION
THIS DRAWING WAS ORIGINALLY APPROVED FOR CONSTRUCTION AND SEALED BY ADAM S. PARMENTER, A REGISTERED PROFESSIONAL ENGINEER IN THE STATE OF MARYLAND, NO. 39376

NOTICE TO CONTRACTORS
- PROJECT ELEVATIONS ARE BASED ON NAVD88 AND HOWARD COUNTY'S BENCHMARK SYSTEM
- PREVIOUS PROJECTS USED OTHER DATUMS
- APPLY THE FOLLOWING CONVERSIONS WHEN USING PREVIOUS CONTRACT DRAWINGS:
  - ADDITION NO. 6: SUBTRACT 0.80 FT
  - PRIOR ADDITIONS: SUBTRACT 1.04 FT

DEPARTMENT OF PUBLIC WORKS
HOWARD COUNTY, MARYLAND

CHIEF, BUREAU OF UTILITIES DATE

DES: MJS
DRN: TRF
CHK: ZJS
DATE: 01/2018

DATE	REV	DESCRIPTION
03/2021		RECORD DRAWINGS

FIRE PROTECTION

FIRE SUPPRESION DETAILS

LITTLE PATUXENT WATER RECLAMATION PLANT
8TH ADDITION
BIOSOLIDS PROCESSING FACILITIES - PHASE 2

CAPITAL PROJECT S-6295
CONTRACT NO. 24-4936

ELECTION DISTRICT NO. 6
HOWARD COUNTY, MARYLAND

SCALE AS SHOWN

SHEET 190 OF 311

F-901

BIM 360://10054364 – Little Patuxent WRP 8th Addition/284592_100_A_V18.rvt
1/7/2022 11:57:17 AM

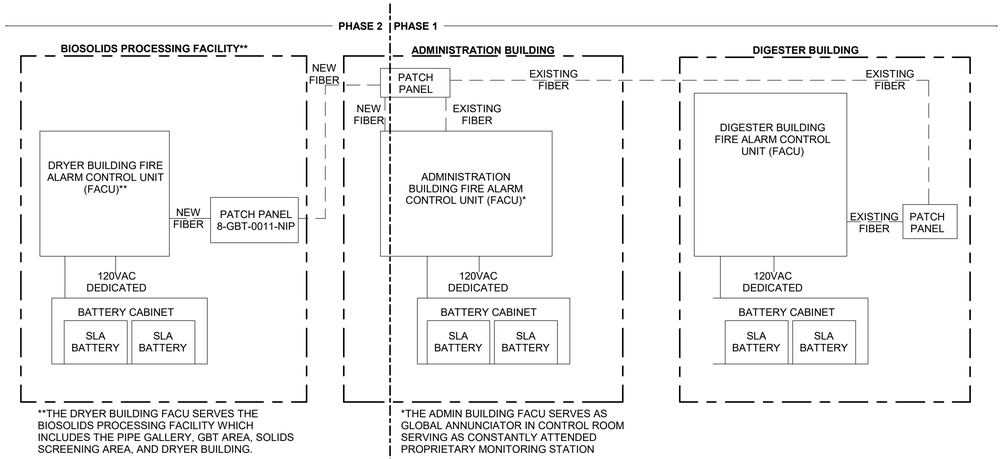

NOTE: FOR PHASE 2 WORK, REFER TO GENERAL FIRE ALARM NOTES ON FIRE ALARM PLANS, TO SHEET I-904, AND TO FIRE ALARM SYSTEM SPECIFICATION 28 31 00.

NOTE: PHASE 1 WORK IS BY OTHERS UNDER SEPARATE CONTRACT WORK. REFER TO FIRE ALARM SPECIFICATION SECTION 28 31 00 FRO DETAILS WORK COVERED IN PHASE 2.

FIRE ALARM NETWORK DIAGRAM

NOT TO SCALE

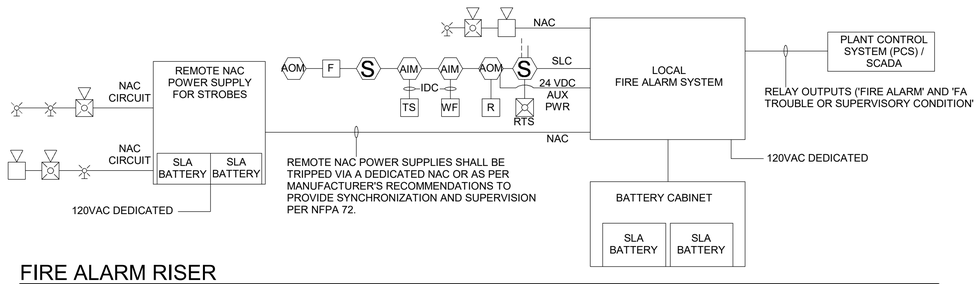

FIRE ALARM RISER

NOT TO SCALE

FIRE ALARM SYMBOLOGY

F	FIRE ALARM MANUAL PULL STATION
WF	FLOW DETECTOR (FLOW SWITCH)
VS	VALVE SUPERVISORY (TAMPER SWITCH)
R	RELAY (CONVENTIONAL, USES EXTERNAL POWER)
RTS	REMOTE TEST SWITCH (FOR DUCT DETECTOR)
AOM	ADDRESSABLE OUTPUT MODULE
AIM	ADDRESSABLE INPUT MODULE
S	SMOKE DETECTOR (PHOTOELECTRIC)
S	DUCT SMOKE DECTECTOR
	FIRE ALARM STROBE (WP) DESIGNATES WEATHERPROOF (C) DESIGNATES CEILING MOUNTED
	FIRE ALARM HORN/STROBE COMBO (WP) DESIGNATES WEATHERPROOF (C) DESIGNATES CEILING MOUNTED
	FIRE ALARM HORN COMBO (WP) DESIGNATES WEATHERPROOF (C) DESIGNATES CEILING MOUNTED

NFPA 72 TERMINOLOGY:
NAC = NOTIFICATION APPLIANCE CIRCUIT
SLC = SIGNALING LINE CIRCUIT
IDC = INITIATING DEVICE CIRCUIT

FIRE ALARM SYMBOLOGY

NOT TO SCALE

THE DRAWINGS IN THIS SET ARE RECORD DRAWINGS. THEY ARE CONSTRUCTION CONTRACT DRAWINGS WHICH HAVE BEEN REVISED BASED ON AVAILABLE FIELD INFORMATION RECORDED BY OTHERS DURING CONSTRUCTION OF THIS CONTRACT. THERE HAS BEEN NO VERIFICATION OF DIMENSIONS SHOWN ON THE CONSTRUCTION DRAWINGS OR THE ACCURACY/COMPLETENESS OF THE FIELD INFORMATION RECEIVED.

SIGNATURE _____ DATE 2/7/2023

AS-BUILT REPLACEMENT SHEET

PROFESSIONAL CERTIFICATION
THIS DRAWING WAS ORIGINALLY APPROVED FOR CONSTRUCTION AND SEALED BY ADAM S. PARMENTER, A REGISTERED PROFESSIONAL ENGINEER IN THE STATE OF MARYLAND, NO. 39376

NOTICE TO CONTRACTORS
- PROJECT ELEVATIONS ARE BASED ON NAVD88 AND HOWARD COUNTY'S BENCHMARK SYSTEM
- PREVIOUS PROJECTS USED OTHER DATUMS
- APPLY THE FOLLOWING CONVERSIONS WHEN USING PREVIOUS CONTRACT DRAWINGS:
  - ADDITION NO. 6: SUBTRACT 0.80 FT
  - PRIOR ADDITIONS: SUBTRACT 1.04 FT

DEPARTMENT OF PUBLIC WORKS
HOWARD COUNTY, MARYLAND

CHIEF, BUREAU OF UTILITIES DATE

DES: MJS
DRN: TRF
CHK: ZJS
DATE: 01/2018

DATE	REV	DESCRIPTION
03/2021		RECORD DRAWINGS

FIRE PROTECTION

FIRE ALARM RISER/NETWORK DIAGRAM

LITTLE PATUXENT WATER RECLAMATION PLANT
8TH ADDITION
BIOSOLIDS PROCESSING FACILITIES - PHASE 2

CAPITAL PROJECT S-6295
CONTRACT NO. 24-4936

ELECTION DISTRICT NO. 6
HOWARD COUNTY, MARYLAND

SCALE AS SHOWN

SHEET 191 OF 311

F-902

BIM 360://10054364 – Little Patuxent WRP 8th Addition/284592_100_A_V18.rvt
1/7/2022 11:57:19 AM

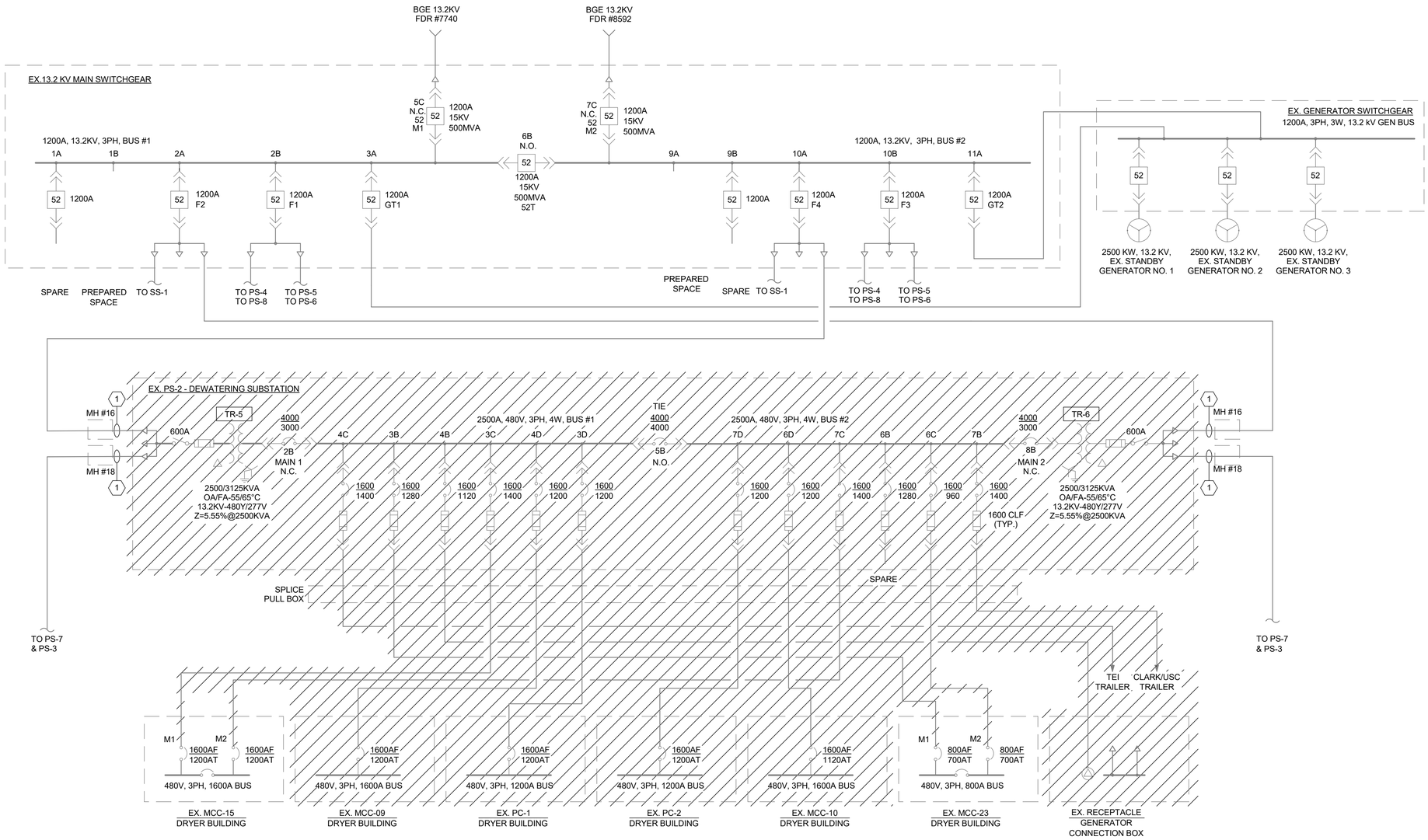

GENERAL NOTES:

1. FOR SYMBOLS AND ABBREVIATIONS, SEE DRAWING E-1.
2. FOR CONSTRUCTION SEQUENCE, SEE DRAWING E-2.
3. FOR OVERALL ELECTRICAL SITE PLAN EXISTING AND NEW WORK, SEE DRAWING E-3.
4. FOR EXISTING INDOOR MCCs AND PCs LOCATIONS, SEE DRAWING EX-16.

DRAWING NOTES:

1. EXISTING MEDIUM VOLTAGE FEEDER BETWEEN THE MAIN SWITCHGEAR AND EXISTING SUBSTATION PS-2 VAULT SHALL BE REUSED FOR NEW PS-2 AND EXISTING PS-7 AS FOLLOWS:
   a. DISCONNECT CABLE FROM EXISTING PS-2 PRIMARY SWITCH AND REMOVE UP TO EXISTING PS-2 VAULT.
   b. USE 15KV 4-WAY SUBMERSIBLE DEAD BREAK JUNCTION TO SPLICE THE REMAINING CABLE BETWEEN MAIN SWITCHGEAR AND EXISTING PS-2 VAULT WITH NEW CABLE FROM NEW PS-2 PRIMARY VACUUM BREAKER LOCATED ON THE ELEVATED PLATFORM.
   c. USE 15KV 4-WAY SUBMERSIBLE DEAD BREAK JUNCTION TO SPLICE THE EXISTING PS-7 FEEDERS WITH THE MEDIUM VOLTAGE CABLE FROM THE MAIN SWITCHGEAR.

THE DRAWINGS IN THIS SET ARE RECORD DRAWINGS. THEY ARE CONSTRUCTION CONTRACT DRAWINGS WHICH HAVE BEEN REVISED BASED ON AVAILABLE FIELD INFORMATION RECORDED BY OTHERS DURING CONSTRUCTION OF THIS CONTRACT. THERE HAS BEEN NO VERIFICATION OF DIMENSIONS SHOWN ON THE CONSTRUCTION DRAWINGS OR THE ACCURACY/COMPLETENESS OF THE FIELD INFORMATION RECEIVED.

SIGNATURE — DATE 2/7/2022

SHAH & ASSOCIATES

AS-BUILT REPLACEMENT SHEET

PROFESSIONAL CERTIFICATION
THIS DRAWING WAS ORIGINALLY APPROVED FOR CONSTRUCTION AND SEALED BY KANAIYALAL R. SHAH, A REGISTERED PROFESSIONAL ENGINEER IN THE STATE OF MARYLAND, NO. 11084

NOTICE TO CONTRACTORS
- PROJECT ELEVATIONS ARE BASED ON NAVD88 AND HOWARD COUNTY'S BENCHMARK SYSTEM
- PREVIOUS PROJECTS USED OTHER DATUMS
- APPLY THE FOLLOWING CONVERSIONS WHEN USING PREVIOUS CONTRACT DRAWINGS:
  - ADDITION NO. 6: SUBTRACT 0.80 FT
  - PRIOR ADDITIONS: SUBTRACT 1.04 FT

DEPARTMENT OF PUBLIC WORKS
HOWARD COUNTY, MARYLAND

CHIEF, BUREAU OF UTILITIES — DATE

DES: MM
DRN: DMG
CHK: KRS
DATE: 01/15/2018

DATE	REV	DESCRIPTION
03/2021		RECORD DRAWING

ELECTRICAL

OVERALL ONE LINE DIAGRAM EXISTING AND DEMOLITION

LITTLE PATUXENT WATER RECLAMATION PLANT
8TH ADDITION
BIOSOLIDS PROCESSING FACILITIES - PHASE 2

CAPITAL PROJECT S-6295
CONTRACT NO. 24-4936

ELECTION DISTRICT NO. 6
HOWARD COUNTY, MARYLAND

SCALE AS SHOWN

SHEET 192 OF 311

EX-1

BIM 360://10054364 – Little Patuxent WRP 8th Addition/264592_100_E_V18.rvt
1/8/2022 10:09:25 AM

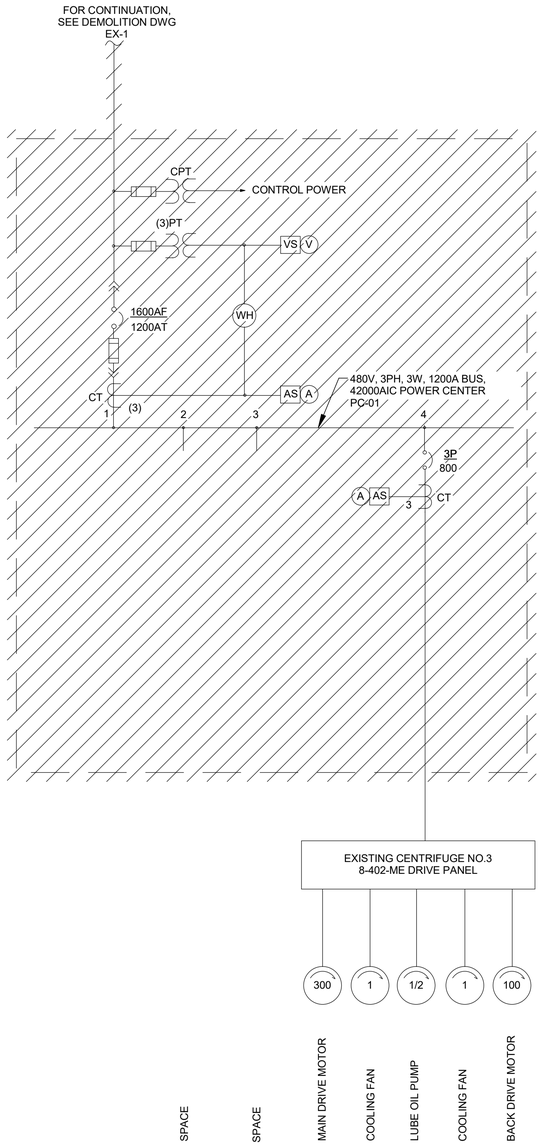

DRYER BUILDING - EXISTING POWER CENTER PC-1 - ONE LINE DIAGRAM - DEMOLITION

NO SCALE

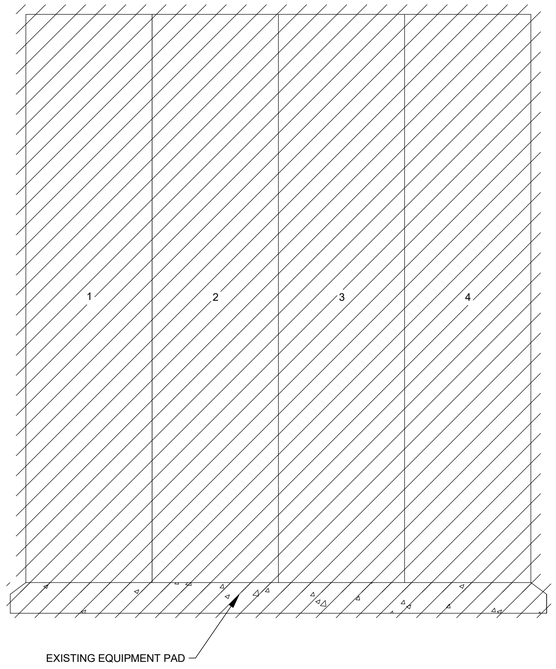

DRYER BUILDING - EXISTING POWER CENTER PC-1 - ELEVATION - DEMOLITION

NO SCALE

GENERAL NOTES:

1. FOR SYMBOLS AND ABBREVIATIONS, SEE DRAWING E-1.
2. FOR CONSTRUCTION SEQUENCE, SEE DRAWING E-2.
3. FOR OVERALL ELECTRICAL SITE PLAN EXISTING AND NEW WORK, SEE DRAWINGS E-3.
4. FOR EXISTING POWER CENTER PC-1 LOCATION, SEE DRAWING EX-16.
5. PERFORM DEMOLITION WORK PER GENERAL DEMOLITION SHEETS. DISCONNECT AND REMOVE ALL ELECTRICAL CONNECTIONS TO EQUIPMENT IMPACTED BY DEMOLITION WORK, FROM EQUIPMENT BACK TO CORRESPONDING MCC, POWER CENTER, PANELBOARD OR I/O CABINET AS APPLICABLE. DEMOLITION SHALL BE COMPLETE AND SHALL INCLUDE WIRING, CONDUIT, PULL BOXES, JUNCTION BOXES, ETC. ASSOCIATED WITH THE EQUIPMENT BEING DEMOLISHED UNLESS NOTED OTHERWISE WITH THE EXCEPTION OF CONDUITS EMBEDDED IN SLAB WHICH SHALL BE CUT FLUSH, CAPPED AND ABANDONED IN PLACE.

THE DRAWINGS IN THIS SET ARE RECORD DRAWINGS. THEY ARE CONSTRUCTION CONTRACT DRAWINGS WHICH HAVE BEEN REVISED BASED ON AVAILABLE FIELD INFORMATION RECORDED BY OTHERS DURING CONSTRUCTION OF THIS CONTRACT. THERE HAS BEEN NO VERIFICATION OF DIMENSIONS SHOWN ON THE CONSTRUCTION DRAWINGS OR THE ACCURACY/COMPLETENESS OF THE FIELD INFORMATION RECEIVED.

SIGNATURE _____ DATE 2/7/2023

SHAH & ASSOCIATES

AS-BUILT REPLACEMENT SHEET

PROFESSIONAL CERTIFICATION
THIS DRAWING WAS ORIGINALLY APPROVED FOR CONSTRUCTION AND SEALED BY KANAIYALAL R. SHAH, A REGISTERED PROFESSIONAL ENGINEER IN THE STATE OF MARYLAND, NO. 11084

NOTICE TO CONTRACTORS
- PROJECT ELEVATIONS ARE BASED ON NAVD88 AND HOWARD COUNTY'S BENCHMARK SYSTEM
- PREVIOUS PROJECTS USED OTHER DATUMS
- APPLY THE FOLLOWING CONVERSIONS WHEN USING PREVIOUS CONTRACT DRAWINGS:
  - ADDITION NO. 6: SUBTRACT 0.80 FT
  - PRIOR ADDITIONS: SUBTRACT 1.04 FT

DEPARTMENT OF PUBLIC WORKS
HOWARD COUNTY, MARYLAND

CHIEF, BUREAU OF UTILITIES DATE

DES: MM
DRN: DMG
CHK: KRS
DATE: 01/15/2018

DATE	REV	DESCRIPTION
03/2021		RECORD DRAWING

ELECTRICAL

DRYER BUILDING
EXISTING POWER CENTER PC-1
ONE LINE DIAGRAM AND
ELEVATION DEMOLITION

LITTLE PATUXENT WATER RECLAMATION PLANT
8TH ADDITION
BIOSOLIDS PROCESSING FACILITIES - PHASE 2

CAPITAL PROJECT S-6295
CONTRACT NO. 24-4936

ELECTION DISTRICT NO. 6
HOWARD COUNTY, MARYLAND

SCALE AS SHOWN

SHEET 193 OF 311

EX-2

BIM 360://10054364 – Little Patuxent WRP 8th Addition/264592_100_E_V18.rvt
1/8/2022 10:09:25 AM

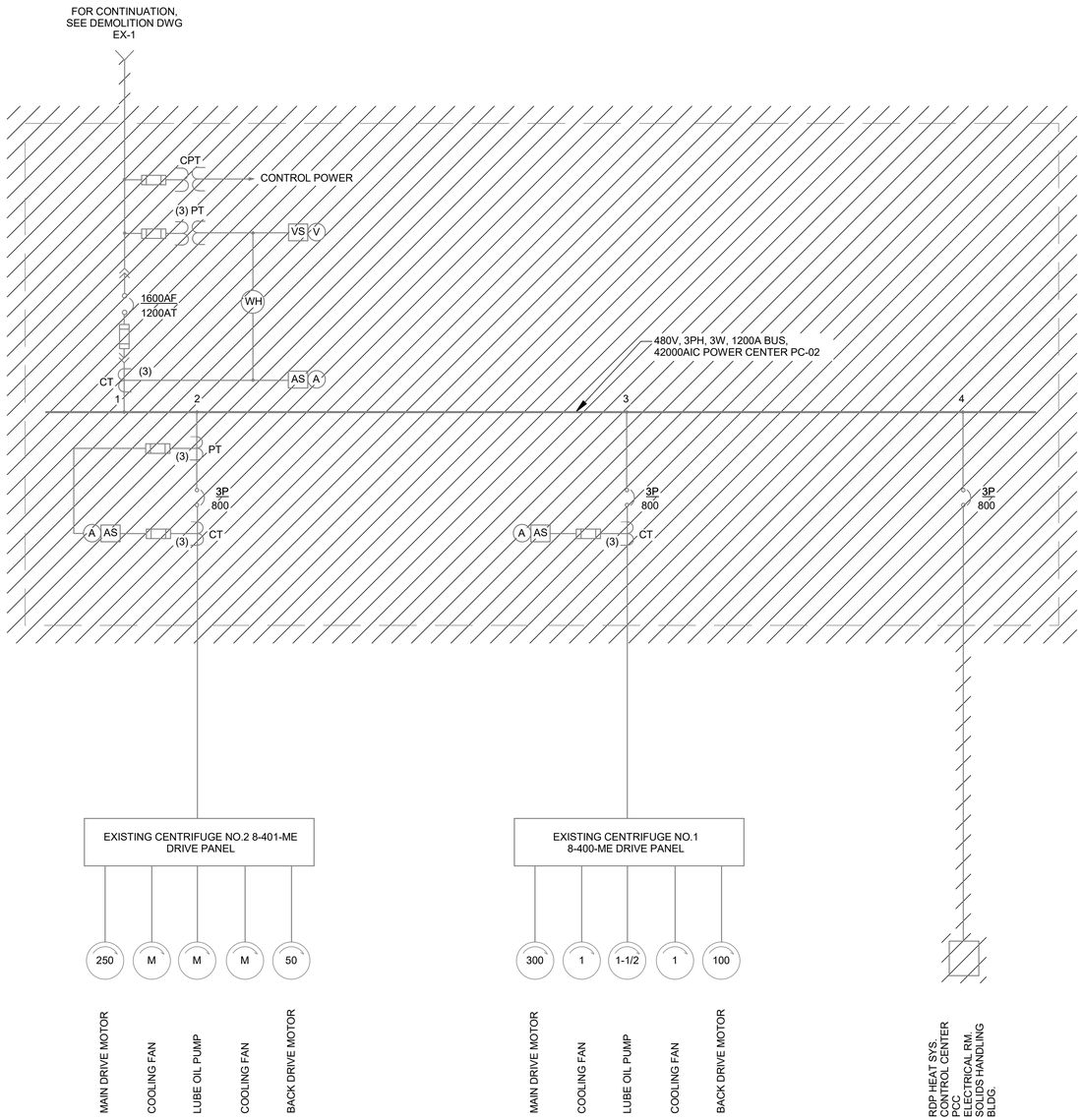

DRYER BUILDING - EXISTING POWER CENTER PC-2 - ONE LINE DIAGRAM - DEMOLITION

NO SCALE

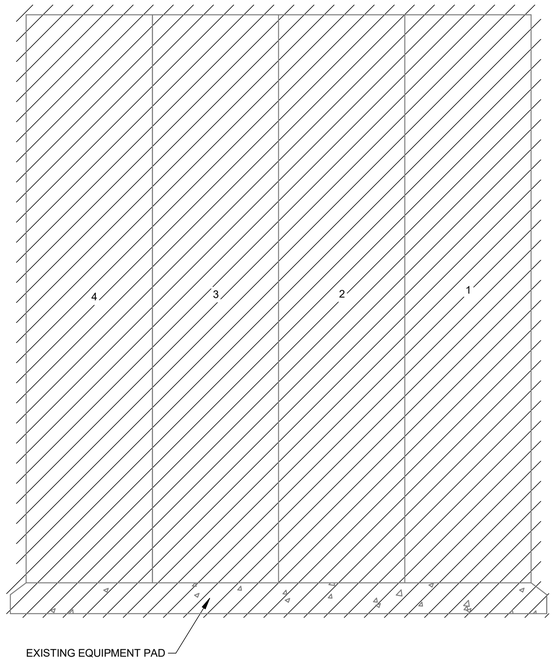

DRYER BUILDING - EXISTING POWER CENTER PC-2 - ELEVATION-DEMOLITION

NO SCALE

GENERAL NOTES:

1. FOR SYMBOLS AND ABBREVIATIONS, SEE DRAWING E-1.
2. FOR CONSTRUCTION SEQUENCE, SEE DRAWING E-2.
3. FOR OVERALL ELECTRICAL SITE PLAN EXISTING AND NEW WORK, SEE DRAWINGS E-3.
4. FOR EXISTING POWER CENTER PC-2 LOCATION, SEE DRAWING EX-16.
5. PERFORM DEMOLITION WORK PER GENERAL DEMOLITION SHEETS. DISCONNECT AND REMOVE ALL ELECTRICAL CONNECTIONS TO EQUIPMENT IMPACTED BY DEMOLITION WORK, FROM EQUIPMENT BACK TO CORRESPONDING MCC, POWER CENTER, PANELBOARD OR I/O CABINET AS APPLICABLE. DEMOLITION SHALL BE COMPLETE AND SHALL INCLUDE WIRING, CONDUIT, PULL BOXES, JUNCTION BOXES, ETC. ASSOCIATED WITH THE EQUIPMENT BEING DEMOLISHED UNLESS NOTED OTHERWISE WITH THE EXCEPTION OF CONDUITS EMBEDDED IN SLAB WHICH SHALL BE CUT FLUSH, CAPPED AND ABANDONED IN PLACE.

THE DRAWINGS IN THIS SET ARE RECORD DRAWINGS. THEY ARE CONSTRUCTION CONTRACT DRAWINGS WHICH HAVE BEEN REVISED BASED ON AVAILABLE FIELD INFORMATION RECORDED BY OTHERS DURING CONSTRUCTION OF THIS CONTRACT. THERE HAS BEEN NO VERIFICATION OF DIMENSIONS SHOWN ON THE CONSTRUCTION DRAWINGS OR THE ACCURACY/COMPLETENESS OF THE FIELD INFORMATION RECEIVED.

SIGNATURE _____ DATE 2/7/2023

SHAH & ASSOCIATES

AS-BUILT REPLACEMENT SHEET

PROFESSIONAL CERTIFICATION
THIS DRAWING WAS ORIGINALLY APPROVED FOR CONSTRUCTION AND SEALED BY KANAIYALAL R. SHAH, A REGISTERED PROFESSIONAL ENGINEER IN THE STATE OF MARYLAND, NO. 11084

NOTICE TO CONTRACTORS
- PROJECT ELEVATIONS ARE BASED ON NAVD88 AND HOWARD COUNTY'S BENCHMARK SYSTEM
- PREVIOUS PROJECTS USED OTHER DATUMS
- APPLY THE FOLLOWING CONVERSIONS WHEN USING PREVIOUS CONTRACT DRAWINGS:
  - ADDITION NO. 6: SUBTRACT 0.80 FT
  - PRIOR ADDITIONS: SUBTRACT 1.04 FT

DEPARTMENT OF PUBLIC WORKS
HOWARD COUNTY, MARYLAND

CHIEF, BUREAU OF UTILITIES DATE

DES: MM
DRN: DMG
CHK: KRS
DATE: 01/15/2018

DATE	REV	DESCRIPTION
03/2021		RECORD DRAWING

ELECTRICAL

DRYER BUILDING EXISTING POWER CENTER PC-2 ONE LINE DIAGRAM AND ELEVATION DEMOLITION

LITTLE PATUXENT WATER RECLAMATION PLANT
8TH ADDITION
BIOSOLIDS PROCESSING FACILITIES - PHASE 2

CAPITAL PROJECT S-6295
CONTRACT NO. 24-4936

ELECTION DISTRICT NO. 6
HOWARD COUNTY, MARYLAND

SCALE AS SHOWN

SHEET 194 OF 311

EX-3

BIM 360://10054364 – Little Patuxent WRP 8th Addition/264592_100_E_V18.rvt
1/8/2022 10:09:26 AM

GENERAL NOTES (CONTINUED):

5. FOR EXISTING MCC-9 ELEVATION - DEMOLITION, SEE DRAWING EX-12.
6. PERFORM DEMOLITION WORK PER GENERAL DEMOLITION SHEETS. DISCONNECT AND REMOVE ALL ELECTRICAL CONNECTIONS TO EQUIPMENT IMPACTED BY DEMOLITION WORK, FROM EQUIPMENT BACK TO CORRESPONDING MCC, POWER CENTER, PANELBOARD OR I/O CABINET AS APPLICABLE. DEMOLITION SHALL BE COMPLETE AND SHALL INCLUDE WIRING, CONDUIT, PULL BOXES, JUNCTION BOXES, ETC. ASSOCIATED WITH THE EQUIPMENT BEING DEMOLISHED UNLESS NOTED OTHERWISE WITH THE EXCEPTION OF CONDUITS EMBEDDED IN SLAB WHICH SHALL BE CUT FLUSH, CAPPED AND ABANDONED IN PLACE.

GENERAL NOTES:

1. FOR SYMBOLS AND ABBREVIATIONS, SEE DRAWING E-1.
2. FOR CONSTRUCTION SEQUENCE, SEE DRAWING E-2.
3. FOR OVERALL ONE LINE DIAGRAM - EXISTING AND DEMOLITION, SEE DRAWING EX-1.
4. FOR EXISTING MCC-9 LOCATION, SEE DRAWING EX-16.

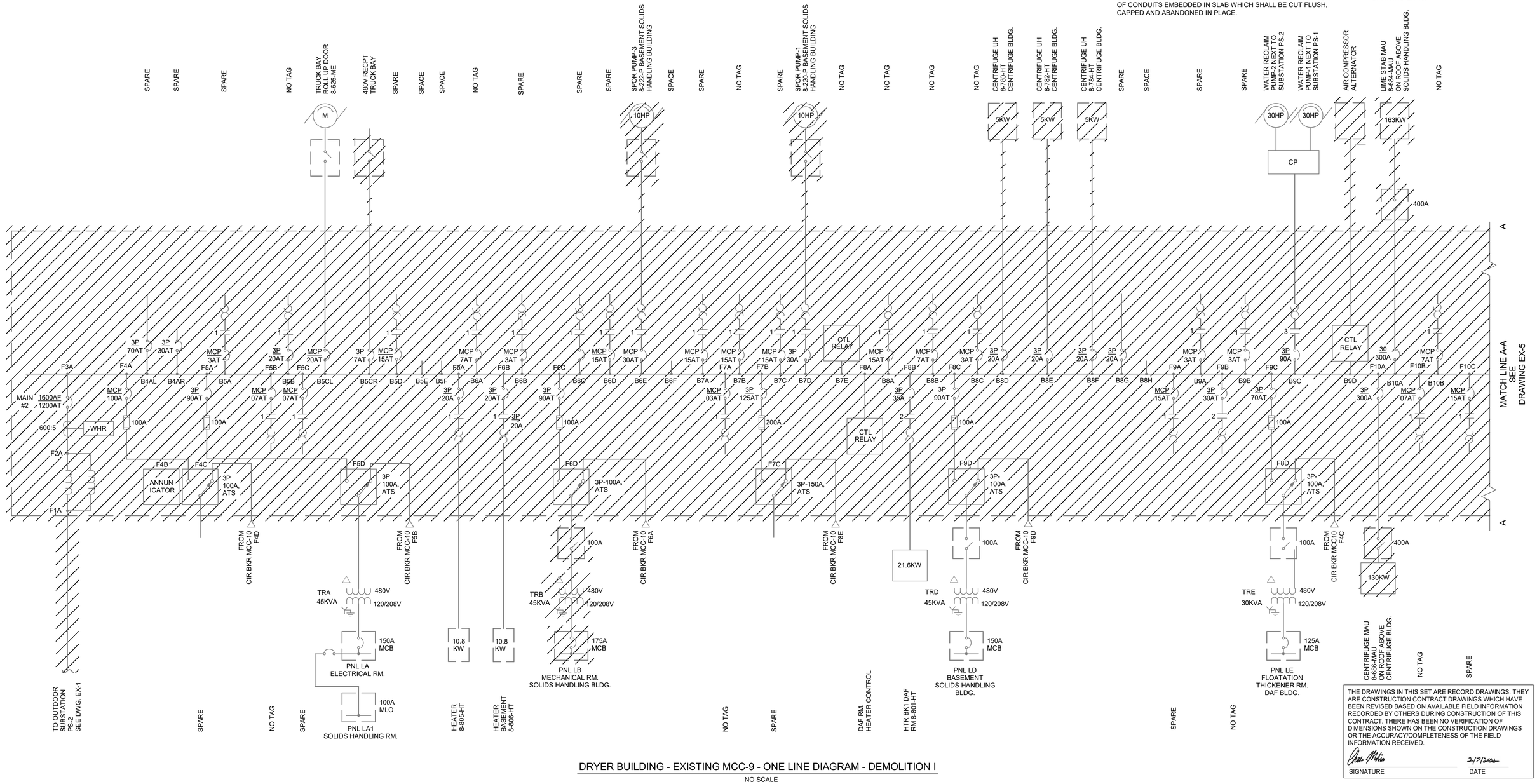

DRYER BUILDING - EXISTING MCC-9 - ONE LINE DIAGRAM - DEMOLITION I

NO SCALE

THE DRAWINGS IN THIS SET ARE RECORD DRAWINGS. THEY ARE CONSTRUCTION CONTRACT DRAWINGS WHICH HAVE BEEN REVISED BASED ON AVAILABLE FIELD INFORMATION RECORDED BY OTHERS DURING CONSTRUCTION OF THIS CONTRACT. THERE HAS BEEN NO VERIFICATION OF DIMENSIONS SHOWN ON THE CONSTRUCTION DRAWINGS OR THE ACCURACY/COMPLETENESS OF THE FIELD INFORMATION RECEIVED.

SIGNATURE _____ DATE 2/7/2023

SHAH & ASSOCIATES

AS-BUILT REPLACEMENT SHEET

PROFESSIONAL CERTIFICATION
THIS DRAWING WAS ORIGINALLY APPROVED FOR CONSTRUCTION AND SEALED BY KANAIYALAL R. SHAH, A REGISTERED PROFESSIONAL ENGINEER IN THE STATE OF MARYLAND, NO. 11084

NOTICE TO CONTRACTORS
- PROJECT ELEVATIONS ARE BASED ON NAVD88 AND HOWARD COUNTY'S BENCHMARK SYSTEM
- PREVIOUS PROJECTS USED OTHER DATUMS
- APPLY THE FOLLOWING CONVERSIONS WHEN USING PREVIOUS CONTRACT DRAWINGS:
  - ADDITION NO. 6: SUBTRACT 0.80 FT
  - PRIOR ADDITIONS: SUBTRACT 1.04 FT

DEPARTMENT OF PUBLIC WORKS
HOWARD COUNTY, MARYLAND

CHIEF, BUREAU OF UTILITIES DATE

DES: MM
DRN: DMG
CHK: KRS
DATE: 01/15/2018

DATE	REV	DESCRIPTION
03/2021		RECORD DRAWING

ELECTRICAL

DRYER BUILDING EXISTING MCC-9 - ONE LINE DIAGRAM - DEMOLITION I

LITTLE PATUXENT WATER RECLAMATION PLANT
8TH ADDITION
BIOSOLIDS PROCESSING FACILITIES - PHASE 2

CAPITAL PROJECT S-6295
CONTRACT NO. 24-4936

ELECTION DISTRICT NO. 6
HOWARD COUNTY, MARYLAND

SCALE AS SHOWN

SHEET 195 OF 311

EX-4

BIM 360://10054364 – Little Patuxent WRP 8th Addition/264592_100_E_V18.rvt
1/8/2022 10:09:27 AM

GENERAL NOTES:

1. FOR SYMBOLS AND ABBREVIATIONS, SEE DRAWING E-1.
2. FOR CONSTRUCTION SEQUENCE, SEE DRAWING E-2.
3. FOR OVERALL ONE LINE DIAGRAM - EXISTING AND DEMOLITION, SEE DRAWING EX-1.
4. FOR EXISTING MCC-9 LOCATION, SEE DRAWING EX-16.

GENERAL NOTES (CONTINUED):

5. FOR EXISTING MCC-9 ELEVATION - DEMOLITION, SEE DRAWING EX-12.
6. PERFORM DEMOLITION WORK PER GENERAL DEMOLITION SHEETS. DISCONNECT AND REMOVE ALL ELECTRICAL CONNECTIONS TO EQUIPMENT IMPACTED BY DEMOLITION WORK, FROM EQUIPMENT BACK TO CORRESPONDING MCC, POWER CENTER, PANELBOARD OR I/O CABINET AS APPLICABLE. DEMOLITION SHALL BE COMPLETE AND SHALL INCLUDE WIRING, CONDUIT, PULL BOXES, JUNCTION BOXES, ETC. ASSOCIATED WITH THE EQUIPMENT BEING DEMOLISHED UNLESS NOTED OTHERWISE WITH THE EXCEPTION OF CONDUITS EMBEDDED IN SLAB WHICH SHALL BE CUT FLUSH, CAPPED AND ABANDONED IN PLACE.

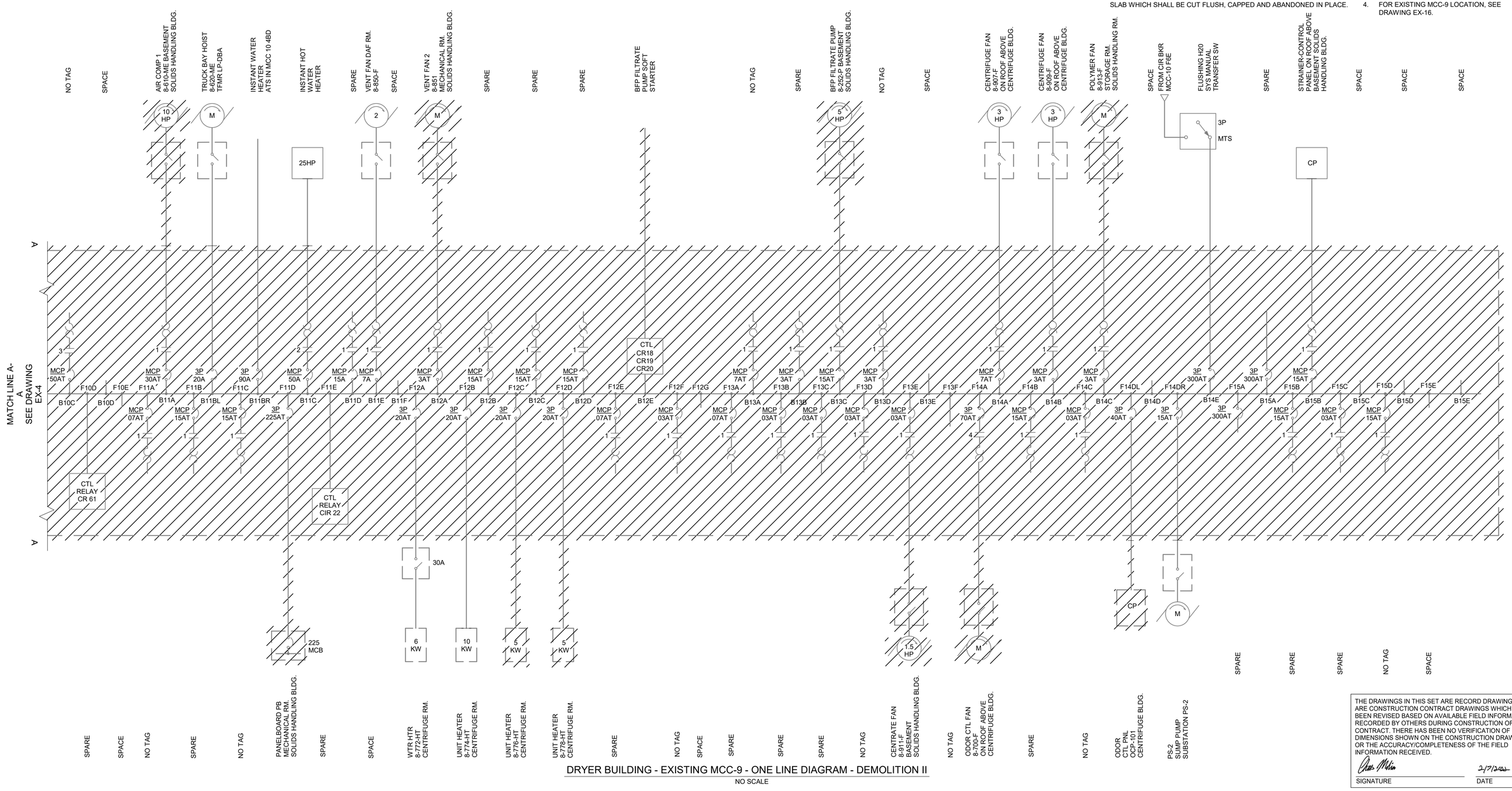

DRYER BUILDING - EXISTING MCC-9 - ONE LINE DIAGRAM - DEMOLITION II

NO SCALE

THE DRAWINGS IN THIS SET ARE RECORD DRAWINGS. THEY ARE CONSTRUCTION CONTRACT DRAWINGS WHICH HAVE BEEN REVISED BASED ON AVAILABLE FIELD INFORMATION RECORDED BY OTHERS DURING CONSTRUCTION OF THIS CONTRACT. THERE HAS BEEN NO VERIFICATION OF DIMENSIONS SHOWN ON THE CONSTRUCTION DRAWINGS OR THE ACCURACY/COMPLETENESS OF THE FIELD INFORMATION RECEIVED.

SIGNATURE — DATE 2/7/2022

SHAH & ASSOCIATES

AS-BUILT REPLACEMENT SHEET

PROFESSIONAL CERTIFICATION
THIS DRAWING WAS ORIGINALLY APPROVED FOR CONSTRUCTION AND SEALED BY KANAIYALAL R. SHAH, A REGISTERED PROFESSIONAL ENGINEER IN THE STATE OF MARYLAND, NO. 11084

NOTICE TO CONTRACTORS
- PROJECT ELEVATIONS ARE BASED ON NAVD88 AND HOWARD COUNTY'S BENCHMARK SYSTEM
- PREVIOUS PROJECTS USED OTHER DATUMS
- APPLY THE FOLLOWING CONVERSIONS WHEN USING PREVIOUS CONTRACT DRAWINGS:
  - ADDITION NO. 6: SUBTRACT 0.80 FT
  - PRIOR ADDITIONS: SUBTRACT 1.04 FT

DEPARTMENT OF PUBLIC WORKS
HOWARD COUNTY, MARYLAND

CHIEF, BUREAU OF UTILITIES — DATE

DES: MM
DRN: DMG
CHK: KRS
DATE: 01/15/2018

DATE	REV	DESCRIPTION
03/2021		RECORD DRAWING

ELECTRICAL

DRYER BUILDING EXISTING MCC-9 - ONE LINE DIAGRAM - DEMOLITION II

LITTLE PATUXENT WATER RECLAMATION PLANT
8TH ADDITION
BIOSOLIDS PROCESSING FACILITIES - PHASE 2

CAPITAL PROJECT S-6295
CONTRACT NO. 24-4936

ELECTION DISTRICT NO. 6
HOWARD COUNTY, MARYLAND

SCALE AS SHOWN

SHEET 196 OF 311

EX-5

BIM 360://10054364 – Little Patuxent WRP 8th Addition/264592_100_E_V18.rvt
1/8/2022 10:09:29 AM

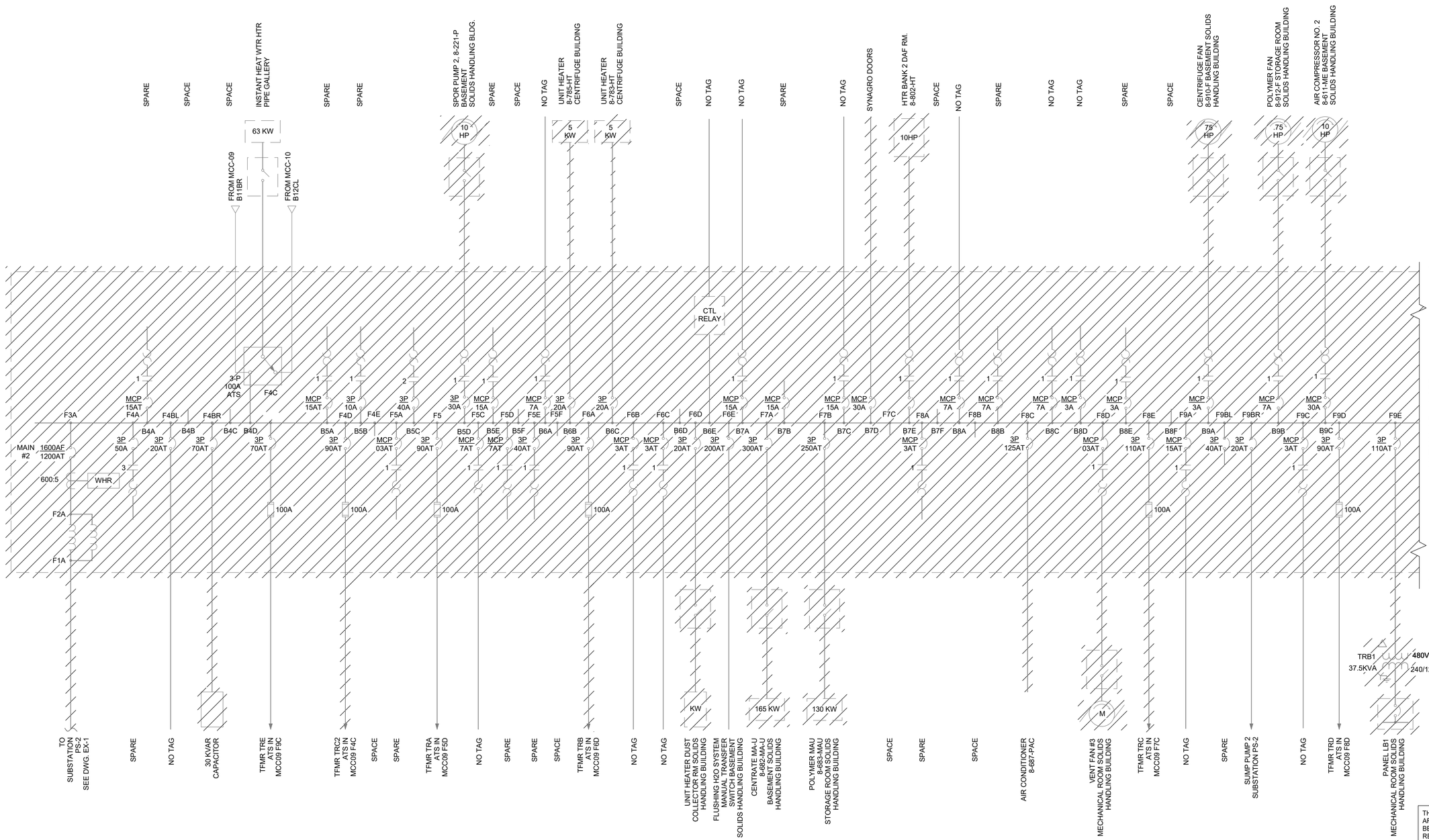

GENERAL NOTES:

1. FOR SYMBOLS AND ABBREVIATIONS, SEE DRAWING E-1.
2. FOR CONSTRUCTION SEQUENCE, SEE DRAWING E-2.
3. FOR OVERALL ONE LINE DIAGRAM EXISTING, SEE DRAWING EX-1.
4. FOR EXISTING MCC-10 LOCATION, SEE DRAWING EX-16.
5. FOR EXISTING MCC-10 ELEVATION - DEMOLITION, SEE DRAWING EX-13.
6. PERFORM DEMOLITION WORK PER GENERAL DEMOLITION SHEETS. DISCONNECT AND REMOVE ALL ELECTRICAL CONNECTIONS TO EQUIPMENT IMPACTED BY DEMOLITION WORK, FROM EQUIPMENT BACK TO CORRESPONDING MCC, POWER CENTER, PANELBOARD OR I/O CABINET AS APPLICABLE. DEMOLITION SHALL BE COMPLETE AND SHALL INCLUDE WIRING, CONDUIT, PULL BOXES, JUNCTION BOXES, ETC. ASSOCIATED WITH THE EQUIPMENT BEING DEMOLISHED UNLESS NOTED OTHERWISE WITH THE EXCEPTION OF CONDUITS EMBEDDED IN SLAB WHICH SHALL BE CUT FLUSH, CAPPED AND ABANDONED IN PLACE.

THE DRAWINGS IN THIS SET ARE RECORD DRAWINGS. THEY ARE CONSTRUCTION CONTRACT DRAWINGS WHICH HAVE BEEN REVISED BASED ON AVAILABLE FIELD INFORMATION RECORDED BY OTHERS DURING CONSTRUCTION OF THIS CONTRACT. THERE HAS BEEN NO VERIFICATION OF DIMENSIONS SHOWN ON THE CONSTRUCTION DRAWINGS OR THE ACCURACY/COMPLETENESS OF THE FIELD INFORMATION RECEIVED.

SIGNATURE _____ DATE 2/7/2023

SHAH & ASSOCIATES

AS-BUILT REPLACEMENT SHEET

PROFESSIONAL CERTIFICATION
THIS DRAWING WAS ORIGINALLY APPROVED FOR CONSTRUCTION AND SEALED BY KANAIYALAL R. SHAH, A REGISTERED PROFESSIONAL ENGINEER IN THE STATE OF MARYLAND, NO. 11084

NOTICE TO CONTRACTORS
- PROJECT ELEVATIONS ARE BASED ON NAVD88 AND HOWARD COUNTY'S BENCHMARK SYSTEM
- PREVIOUS PROJECTS USED OTHER DATUMS
- APPLY THE FOLLOWING CONVERSIONS WHEN USING PREVIOUS CONTRACT DRAWINGS:
  - ADDITION NO. 6: SUBTRACT 0.80 FT
  - PRIOR ADDITIONS: SUBTRACT 1.04 FT

DEPARTMENT OF PUBLIC WORKS
HOWARD COUNTY, MARYLAND

CHIEF, BUREAU OF UTILITIES DATE

DES: MM
DRN: DMG
CHK: KRS
DATE: 01/15/2018

DATE	REV	DESCRIPTION
03/2021		RECORD DRAWING

ELECTRICAL

DRYER BUILDING EXISTING MCC-10 - ONE LINE DIAGRAM - DEMOLITION I

LITTLE PATUXENT WATER RECLAMATION PLANT
8TH ADDITION
BIOSOLIDS PROCESSING FACILITIES - PHASE 2

CAPITAL PROJECT S-6295
CONTRACT NO. 24-4936

ELECTION DISTRICT NO. 6
HOWARD COUNTY, MARYLAND

SCALE AS SHOWN

SHEET 197 OF 311

EX-6

BIM 360://10054364 – Little Patuxent WRP 8th Addition/264592_100_E_V18.rvt
1/8/2022 10:09:29 AM

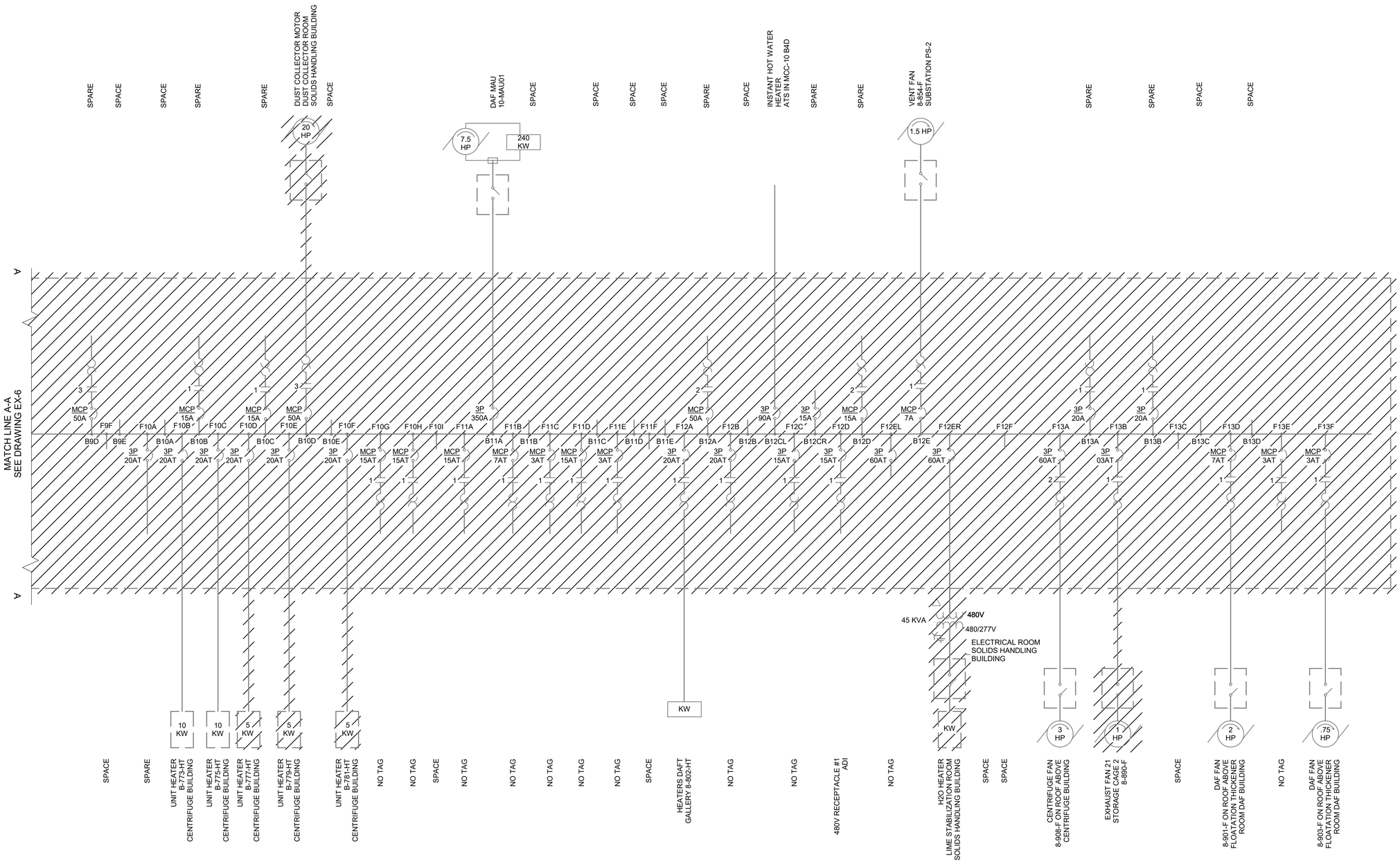

GENERAL NOTES:

1. FOR SYMBOLS AND ABBREVIATIONS, SEE DRAWING E-1.
2. FOR CONSTRUCTION SEQUENCE, SEE DRAWING E-2.
3. FOR OVERALL ONE LINE DIAGRAM - EXISTING AND DEMOLITION, SEE DRAWING EX-1.
4. FOR EXISTING MCC-10 LOCATION, SEE DRAWING EX-16.
5. FOR EXISTING MCC-10 ELEVATION - DEMOLITION, SEE DRAWING EX-13.
6. PERFORM DEMOLITION WORK PER GENERAL DEMOLITION SHEETS. DISCONNECT AND REMOVE ALL ELECTRICAL CONNECTIONS TO EQUIPMENT IMPACTED BY DEMOLITION WORK, FROM EQUIPMENT BACK TO CORRESPONDING MCC, POWER CENTER, PANELBOARD OR I/O CABINET AS APPLICABLE. DEMOLITION SHALL BE COMPLETE AND SHALL INCLUDE WIRING, CONDUIT, PULL BOXES, JUNCTION BOXES, ETC. ASSOCIATED WITH THE EQUIPMENT BEING DEMOLISHED UNLESS NOTED OTHERWISE WITH THE EXCEPTION OF CONDUITS EMBEDDED IN SLAB WHICH SHALL BE CUT FLUSH, CAPPED AND ABANDONED IN PLACE.

THE DRAWINGS IN THIS SET ARE RECORD DRAWINGS. THEY ARE CONSTRUCTION CONTRACT DRAWINGS WHICH HAVE BEEN REVISED BASED ON AVAILABLE FIELD INFORMATION RECORDED BY OTHERS DURING CONSTRUCTION OF THIS CONTRACT. THERE HAS BEEN NO VERIFICATION OF DIMENSIONS SHOWN ON THE CONSTRUCTION DRAWINGS OR THE ACCURACY/COMPLETENESS OF THE FIELD INFORMATION RECEIVED.

SIGNATURE — DATE 2/7/2023

DRYER BUILDING - EXISTING MCC-10 - ONE LINE DIAGRAM - DEMOLITION II

NO SCALE

SHAH & ASSOCIATES

AS-BUILT REPLACEMENT SHEET

PROFESSIONAL CERTIFICATION
THIS DRAWING WAS ORIGINALLY APPROVED FOR CONSTRUCTION AND SEALED BY KANAIYALAL R. SHAH, A REGISTERED PROFESSIONAL ENGINEER IN THE STATE OF MARYLAND, NO. 11084

NOTICE TO CONTRACTORS
- PROJECT ELEVATIONS ARE BASED ON NAVD88 AND HOWARD COUNTY'S BENCHMARK SYSTEM
- PREVIOUS PROJECTS USED OTHER DATUMS
- APPLY THE FOLLOWING CONVERSIONS WHEN USING PREVIOUS CONTRACT DRAWINGS:
  - ADDITION NO. 6: SUBTRACT 0.80 FT
  - PRIOR ADDITIONS: SUBTRACT 1.04 FT

DEPARTMENT OF PUBLIC WORKS
HOWARD COUNTY, MARYLAND

CHIEF, BUREAU OF UTILITIES — DATE

DES: MM
DRN: DMG
CHK: KRS
DATE: 01/15/2018

DATE	REV	DESCRIPTION
03/2021		RECORD DRAWING

ELECTRICAL

DRYER BUILDING EXISTING MCC-10 - ONE LINE DIAGRAM - DEMOLITION II

LITTLE PATUXENT WATER RECLAMATION PLANT
8TH ADDITION
BIOSOLIDS PROCESSING FACILITIES - PHASE 2

CAPITAL PROJECT S-6295
CONTRACT NO. 24-4936

ELECTION DISTRICT NO. 6
HOWARD COUNTY, MARYLAND

SCALE AS SHOWN

SHEET 198 OF 311

EX-7

BIM 360://10054364 – Little Patuxent WRP 8th Addition/264592_100_E_V18.rvt
1/8/2022 10:09:30 AM

GENERAL NOTES:

1. FOR SYMBOLS AND ABBREVIATIONS, SEE DRAWING E-1.
2. FOR CONSTRUCTION SEQUENCE, SEE DRAWING E-2.
3. FOR OVERALL ONE LINE DIAGRAM - EXISTING AND DEMOLITION, SEE DRAWING EX-1.
4. FOR EXISTING MCC-15 LOCATION, SEE DRAWING EX-16.
5. PERFORM DEMOLITION WORK PER GENERAL DEMOLITION SHEETS. DISCONNECT AND REMOVE ALL ELECTRICAL CONNECTIONS TO EQUIPMENT IMPACTED BY DEMOLITION WORK, FROM EQUIPMENT BACK TO CORRESPONDING MCC, POWER CENTER, PANELBOARD OR I/O CABINET AS APPLICABLE. DEMOLITION SHALL BE COMPLETE AND SHALL INCLUDE WIRING, CONDUIT, PULL BOXES, JUNCTION BOXES, ETC. ASSOCIATED WITH THE EQUIPMENT BEING DEMOLISHED UNLESS NOTED OTHERWISE WITH THE EXCEPTION OF CONDUITS EMBEDDED IN SLAB WHICH SHALL BE CUT FLUSH, CAPPED AND ABANDONED IN PLACE.

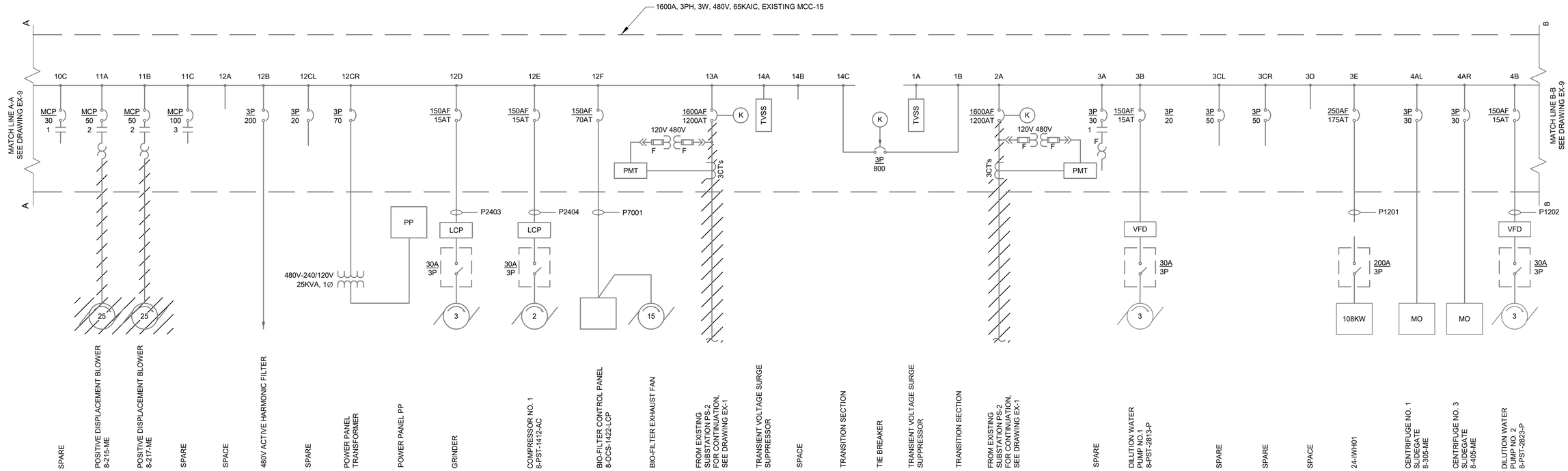

DRYER BUILDING - EXISTING MCC-15 - ONE LINE DIAGRAM - EXISTING AND DEMOLITION I

NO SCALE

THE DRAWINGS IN THIS SET ARE RECORD DRAWINGS. THEY ARE CONSTRUCTION CONTRACT DRAWINGS WHICH HAVE BEEN REVISED BASED ON AVAILABLE FIELD INFORMATION RECORDED BY OTHERS DURING CONSTRUCTION OF THIS CONTRACT. THERE HAS BEEN NO VERIFICATION OF DIMENSIONS SHOWN ON THE CONSTRUCTION DRAWINGS OR THE ACCURACY/COMPLETENESS OF THE FIELD INFORMATION RECEIVED.

SIGNATURE _____ DATE 2/7/2023

SHAH & ASSOCIATES

AS-BUILT REPLACEMENT SHEET

PROFESSIONAL CERTIFICATION

THIS DRAWING WAS ORIGINALLY APPROVED FOR CONSTRUCTION AND SEALED BY KANAIYALAL R. SHAH, A REGISTERED PROFESSIONAL ENGINEER IN THE STATE OF MARYLAND, NO. 11084

NOTICE TO CONTRACTORS

- PROJECT ELEVATIONS ARE BASED ON NAVD88 AND HOWARD COUNTY'S BENCHMARK SYSTEM
- PREVIOUS PROJECTS USED OTHER DATUMS
- APPLY THE FOLLOWING CONVERSIONS WHEN USING PREVIOUS CONTRACT DRAWINGS:
  - ADDITION NO. 6: SUBTRACT 0.80 FT
  - PRIOR ADDITIONS: SUBTRACT 1.04 FT

DEPARTMENT OF PUBLIC WORKS
HOWARD COUNTY, MARYLAND

CHIEF, BUREAU OF UTILITIES DATE

DES: MM
DRN: DMG
CHK: KRS
DATE: 01/15/2018

DATE	REV	DESCRIPTION
03/2021		RECORD DRAWING

ELECTRICAL

DRYER BUILDING EXISTING MCC-15 - ONE LINE DIAGRAM - DEMOLITION I

LITTLE PATUXENT WATER RECLAMATION PLANT
8TH ADDITION
BIOSOLIDS PROCESSING FACILITIES - PHASE 2

CAPITAL PROJECT S-6295
CONTRACT NO. 24-4936

ELECTION DISTRICT NO. 6
HOWARD COUNTY, MARYLAND

SCALE AS SHOWN

SHEET 199 OF 311

EX-8

BIM 360://10054364 – Little Patuxent WRP 8th Addition/264592_100_E_V18.rvt
1/8/2022 10:09:31 AM

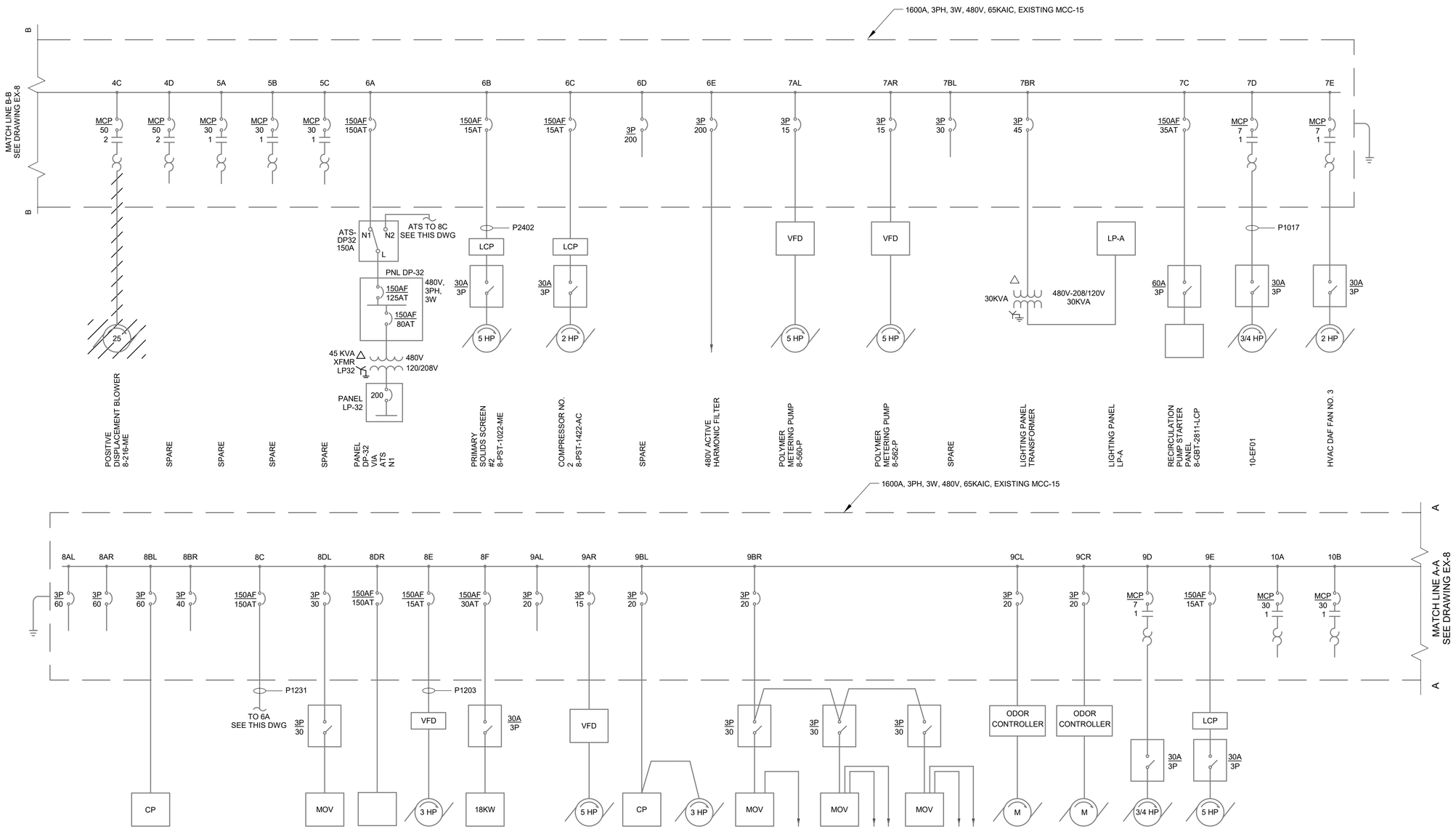

GENERAL NOTES:

1. FOR SYMBOLS AND ABBREVIATIONS, SEE DRAWING E-1.
2. FOR CONSTRUCTION SEQUENCE, SEE DRAWING E-2.
3. FOR OVERALL ONE LINE DIAGRAM - EXISTING AND DEMOLITION, SEE DRAWING EX-1.
4. FOR EXISTING MCC-15 LOCATION, SEE DRAWING EX-16.
5. PERFORM DEMOLITION WORK PER GENERAL DEMOLITION SHEETS. DISCONNECT AND REMOVE ALL ELECTRICAL CONNECTIONS TO EQUIPMENT IMPACTED BY DEMOLITION WORK, FROM EQUIPMENT BACK TO CORRESPONDING MCC, POWER CENTER, PANELBOARD OR I/O CABINET AS APPLICABLE. DEMOLITION SHALL BE COMPLETE AND SHALL INCLUDE WIRING, CONDUIT, PULL BOXES, JUNCTION BOXES, ETC. ASSOCIATED WITH THE EQUIPMENT BEING DEMOLISHED UNLESS NOTED OTHERWISE WITH THE EXCEPTION OF CONDUITS EMBEDDED IN SLAB WHICH SHALL BE CUT FLUSH, CAPPED AND ABANDONED IN PLACE.

THE DRAWINGS IN THIS SET ARE RECORD DRAWINGS. THEY ARE CONSTRUCTION CONTRACT DRAWINGS WHICH HAVE BEEN REVISED BASED ON AVAILABLE FIELD INFORMATION RECORDED BY OTHERS DURING CONSTRUCTION OF THIS CONTRACT. THERE HAS BEEN NO VERIFICATION OF DIMENSIONS SHOWN ON THE CONSTRUCTION DRAWINGS OR THE ACCURACY/COMPLETENESS OF THE FIELD INFORMATION RECEIVED.

SIGNATURE — DATE 2/7/2022

DRYER BUILDING - EXISTING MCC-15 - ONE LINE DIAGRAM - EXISTING AND DEMOLITION II

SHAH & ASSOCIATES

AS-BUILT REPLACEMENT SHEET

PROFESSIONAL CERTIFICATION
THIS DRAWING WAS ORIGINALLY APPROVED FOR CONSTRUCTION AND SEALED BY KANAIYALAL R. SHAH, A REGISTERED PROFESSIONAL ENGINEER IN THE STATE OF MARYLAND, NO. 11084

NOTICE TO CONTRACTORS
- PROJECT ELEVATIONS ARE BASED ON NAVD88 AND HOWARD COUNTY'S BENCHMARK SYSTEM
- PREVIOUS PROJECTS USED OTHER DATUMS
- APPLY THE FOLLOWING CONVERSIONS WHEN USING PREVIOUS CONTRACT DRAWINGS:
  - ADDITION NO. 6: SUBTRACT 0.80 FT
  - PRIOR ADDITIONS: SUBTRACT 1.04 FT

DEPARTMENT OF PUBLIC WORKS
HOWARD COUNTY, MARYLAND

CHIEF, BUREAU OF UTILITIES — DATE

DES: MM
DRN: DMG
CHK: KRS
DATE: 01/15/2018

DATE	REV	DESCRIPTION
03/2021		RECORD DRAWING

ELECTRICAL

DRYER BUILDING EXISTING MCC-15 - ONE LINE DIAGRAM - DEMOLITION II

LITTLE PATUXENT WATER RECLAMATION PLANT
8TH ADDITION
BIOSOLIDS PROCESSING FACILITIES - PHASE 2

CAPITAL PROJECT S-6295
CONTRACT NO. 24-4936

ELECTION DISTRICT NO. 6
HOWARD COUNTY, MARYLAND

SCALE AS SHOWN

SHEET 200 OF 311

EX-9

BIM 360://10054364 – Little Patuxent WRP 8th Addition/264592_100_E_Y18.rvt
1/8/2022 10:09:32 AM

GENERAL NOTES:

1. FOR SYMBOLS AND ABBREVIATIONS, SEE DRAWING E-1.
2. FOR CONSTRUCTION SEQUENCE, SEE DRAWING E-2.
3. FOR OVERALL ONE LINE DIAGRAM - EXISTING AND DEMOLITION, SEE DRAWING EX-1.
4. FOR EXISTING MCC-23 LOCATION, SEE DRAWING EX-16.
5. PERFORM DEMOLITION WORK PER GENERAL DEMOLITION SHEETS. DISCONNECT AND REMOVE ALL ELECTRICAL CONNECTIONS TO EQUIPMENT IMPACTED BY DEMOLITION WORK, FROM EQUIPMENT BACK TO CORRESPONDING MCC, POWER CENTER, PANELBOARD OR I/O CABINET AS APPLICABLE. DEMOLITION SHALL BE COMPLETE AND SHALL INCLUDE WIRING, CONDUIT, PULL BOXES, JUNCTION BOXES, ETC. ASSOCIATED WITH THE EQUIPMENT BEING DEMOLISHED UNLESS NOTED OTHERWISE WITH THE EXCEPTION OF CONDUITS EMBEDDED IN SLAB WHICH SHALL BE CUT FLUSH, CAPPED AND ABANDONED IN PLACE.

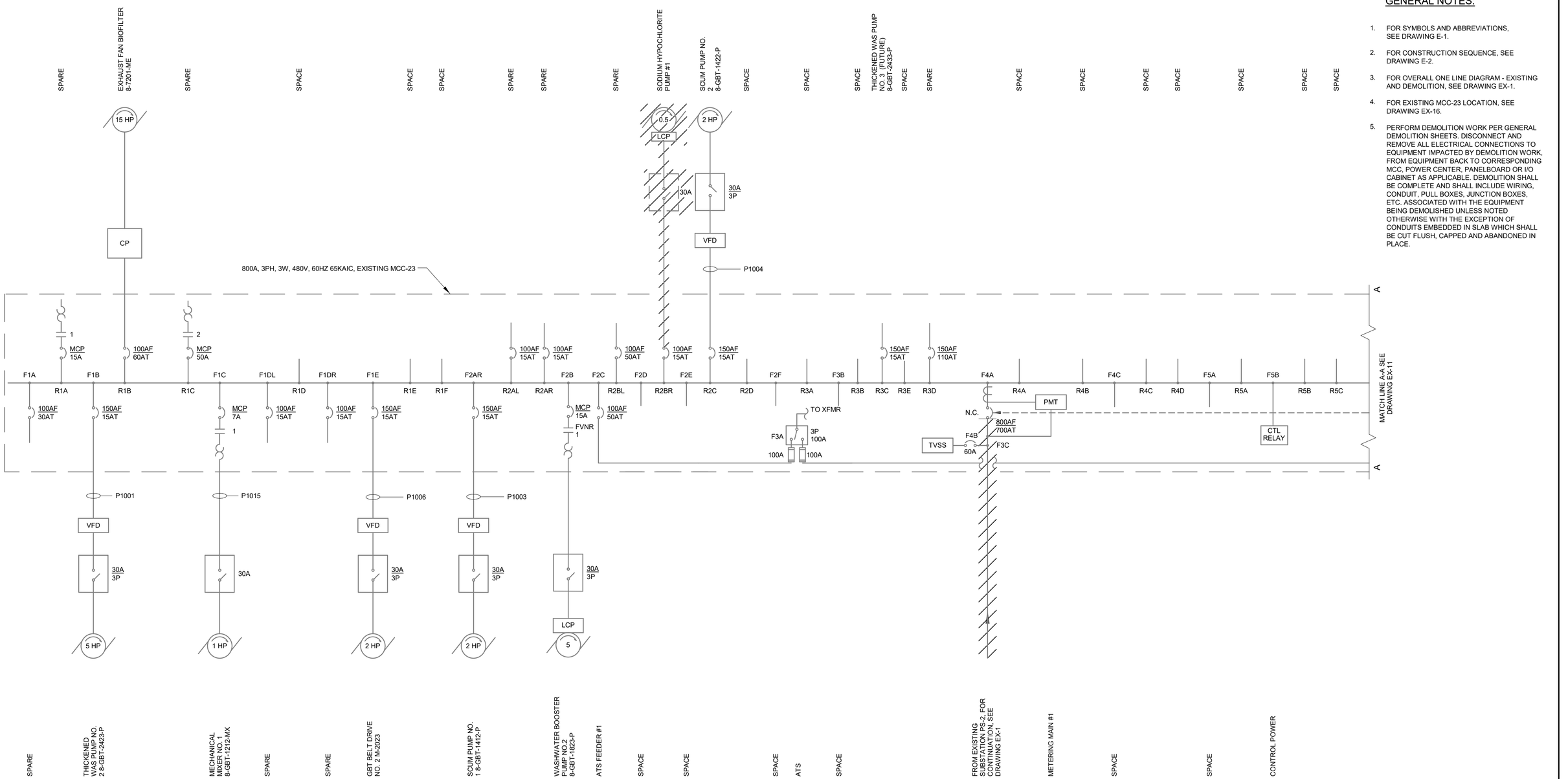

DRYER BUILDING - EXISTING MCC-23 - ONE LINE DIAGRAM - EXISTING AND DEMOLITION I

NO SCALE

THE DRAWINGS IN THIS SET ARE RECORD DRAWINGS. THEY ARE CONSTRUCTION CONTRACT DRAWINGS WHICH HAVE BEEN REVISED BASED ON AVAILABLE FIELD INFORMATION RECORDED BY OTHERS DURING CONSTRUCTION OF THIS CONTRACT. THERE HAS BEEN NO VERIFICATION OF DIMENSIONS SHOWN ON THE CONSTRUCTION DRAWINGS OR THE ACCURACY/COMPLETENESS OF THE FIELD INFORMATION RECEIVED.

SIGNATURE _____ DATE 2/7/2022

SHAH & ASSOCIATES

AS-BUILT REPLACEMENT SHEET

PROFESSIONAL CERTIFICATION
THIS DRAWING WAS ORIGINALLY APPROVED FOR CONSTRUCTION AND SEALED BY KANAIYALAL R. SHAH, A REGISTERED PROFESSIONAL ENGINEER IN THE STATE OF MARYLAND, NO. 11084

NOTICE TO CONTRACTORS
- PROJECT ELEVATIONS ARE BASED ON NAVD88 AND HOWARD COUNTY'S BENCHMARK SYSTEM
- PREVIOUS PROJECTS USED OTHER DATUMS
- APPLY THE FOLLOWING CONVERSIONS WHEN USING PREVIOUS CONTRACT DRAWINGS:
  - ADDITION NO. 6: SUBTRACT 0.80 FT
  - PRIOR ADDITIONS: SUBTRACT 1.04 FT

DEPARTMENT OF PUBLIC WORKS
HOWARD COUNTY, MARYLAND

CHIEF, BUREAU OF UTILITIES DATE

DES: MM
DRN: DMG
CHK: KRS
DATE: 01/15/2018

DATE	REV	DESCRIPTION
03/2021		RECORD DRAWING

ELECTRICAL

DRYER BUILDING EXISTING MCC-23 - ONE LINE DIAGRAM - DEMOLITION I

LITTLE PATUXENT WATER RECLAMATION PLANT
8TH ADDITION
BIOSOLIDS PROCESSING FACILITIES - PHASE 2

CAPITAL PROJECT S-6295
CONTRACT NO. 24-4936

ELECTION DISTRICT NO. 6
HOWARD COUNTY, MARYLAND

SCALE AS SHOWN

SHEET 201 OF 311

EX-10

BIM 360://10054364 – Little Patuxent WRP 8th Addition/264592_100_E_V18.rvt
1/8/2022 10:09:33 AM

GENERAL NOTES:

1. FOR SYMBOLS AND ABBREVIATIONS, SEE DRAWING E-1.
2. FOR CONSTRUCTION SEQUENCE, SEE DRAWING E-2.
3. FOR OVERALL ONE LINE DIAGRAM - EXISTING AND DEMOLITION, SEE DRAWING EX-1.
4. FOR EXISTING MCC-23 LOCATION, SEE DRAWING EX-16.
5. PERFORM DEMOLITION WORK PER GENERAL DEMOLITION SHEETS. DISCONNECT AND REMOVE ALL ELECTRICAL CONNECTIONS TO EQUIPMENT IMPACTED BY DEMOLITION WORK, FROM EQUIPMENT BACK TO CORRESPONDING MCC, POWER CENTER, PANELBOARD OR I/O CABINET AS APPLICABLE. DEMOLITION SHALL BE COMPLETE AND SHALL INCLUDE WIRING, CONDUIT, PULL BOXES, JUNCTION BOXES, ETC. ASSOCIATED WITH THE EQUIPMENT BEING DEMOLISHED UNLESS NOTED OTHERWISE WITH THE EXCEPTION OF CONDUITS EMBEDDED IN SLAB WHICH SHALL BE CUT FLUSH, CAPPED AND ABANDONED IN PLACE.

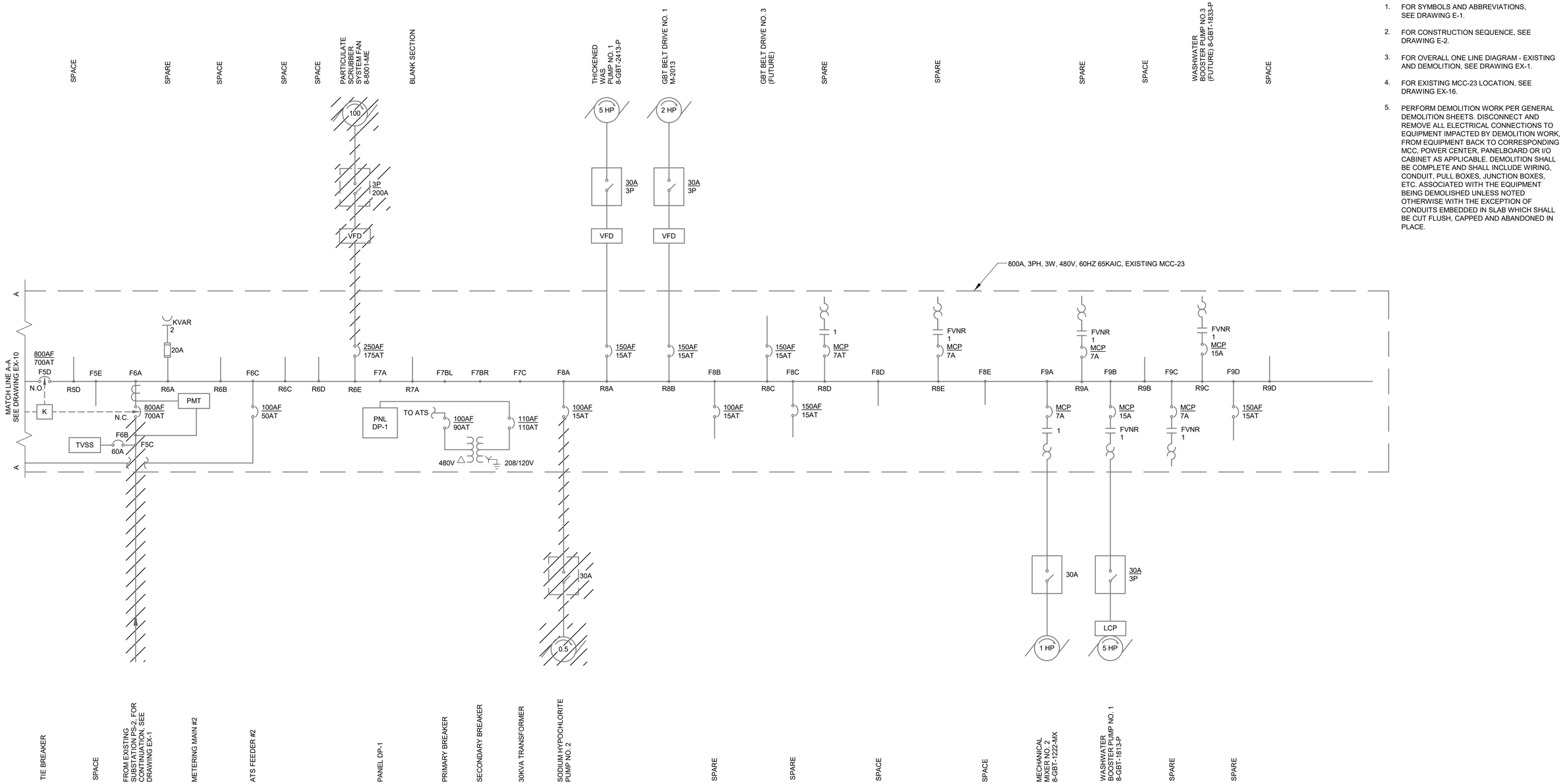

DRYER BUILDING - EXISTING MCC 23 - ONE LINE DIAGRAM - EXISTING AND DEMOLITION II

NO SCALE

THE DRAWINGS IN THIS SET ARE RECORD DRAWINGS. THEY ARE CONSTRUCTION CONTRACT DRAWINGS WHICH HAVE BEEN REVISED BASED ON AVAILABLE FIELD INFORMATION RECORDED BY OTHERS DURING CONSTRUCTION OF THIS CONTRACT. THERE HAS BEEN NO VERIFICATION OF DIMENSIONS SHOWN ON THE CONSTRUCTION DRAWINGS OR THE ACCURACY/COMPLETENESS OF THE FIELD INFORMATION RECEIVED.

SIGNATURE — DATE 2/7/2023

SHAH & ASSOCIATES

AS-BUILT REPLACEMENT SHEET

PROFESSIONAL CERTIFICATION
THIS DRAWING WAS ORIGINALLY APPROVED FOR CONSTRUCTION AND SEALED BY KANAIYALAL R. SHAH, A REGISTERED PROFESSIONAL ENGINEER IN THE STATE OF MARYLAND, NO. 11084

NOTICE TO CONTRACTORS
- PROJECT ELEVATIONS ARE BASED ON NAVD88 AND HOWARD COUNTY'S BENCHMARK SYSTEM
- PREVIOUS PROJECTS USED OTHER DATUMS
- APPLY THE FOLLOWING CONVERSIONS WHEN USING PREVIOUS CONTRACT DRAWINGS:
  - ADDITION NO. 6: SUBTRACT 0.80 FT
  - PRIOR ADDITIONS: SUBTRACT 1.04 FT

DEPARTMENT OF PUBLIC WORKS
HOWARD COUNTY, MARYLAND

CHIEF, BUREAU OF UTILITIES — DATE

DES: MM
DRN: DMG
CHK: KRS
DATE: 01/15/2018

DATE	REV	DESCRIPTION
03/2021		RECORD DRAWING

ELECTRICAL

DRYER BUILDING EXISTING MCC-23 - ONE LINE DIAGRAM - DEMOLITION II

LITTLE PATUXENT WATER RECLAMATION PLANT
8TH ADDITION
BIOSOLIDS PROCESSING FACILITIES - PHASE 2

CAPITAL PROJECT S-6295
CONTRACT NO. 24-4936

ELECTION DISTRICT NO. 6
HOWARD COUNTY, MARYLAND

SCALE AS SHOWN

SHEET 202 OF 311

EX-11

BIM 360://10054364 – Little Patuxent WRP 8th Addition/264592_100_E_V18.rvt
1/8/2022 10:09:34 AM

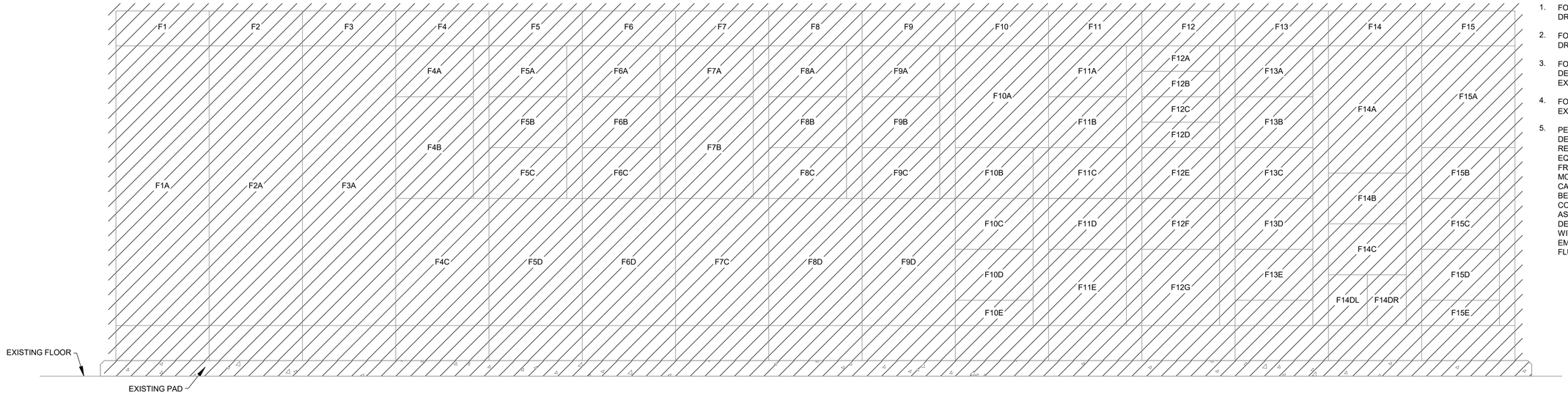

DRYER BUILDING - EXISTING MCC-9 FRONT ELEVATION - DEMOLITION

NO SCALE

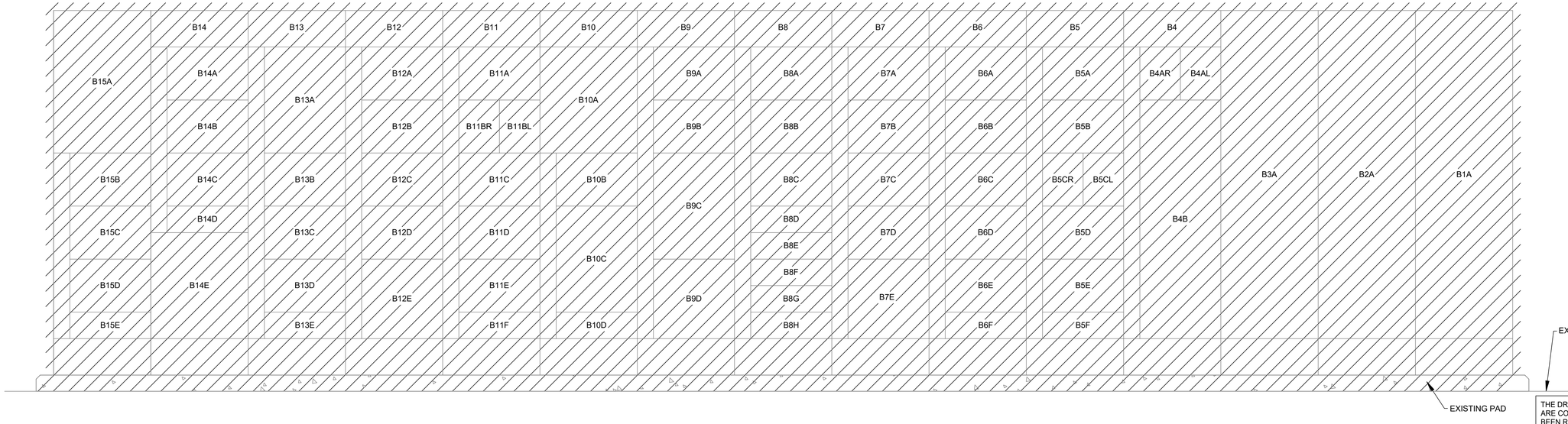

DRYER BUILDING - EXISTING MCC-9 REAR ELEVATION - DEMOLITION

NO SCALE

GENERAL NOTES:

1. FOR SYMBOLS AND ABBREVIATIONS, SEE DRAWING E-1.
2. FOR CONSTRUCTION SEQUENCE, SEE DRAWING E-2.
3. FOR EXISTING MCC-9 ONE LINE DIAGRAM DEMOLITION WORK, SEE DRAWINGS EX-4 AND EX-5.
4. FOR EXISTING MCC-9 LOCATION, SEE DRAWING EX-16.
5. PERFORM DEMOLITION WORK PER GENERAL DEMOLITION SHEETS. DISCONNECT AND REMOVE ALL ELECTRICAL CONNECTIONS TO EQUIPMENT IMPACTED BY DEMOLITION WORK, FROM EQUIPMENT BACK TO CORRESPONDING MCC, POWER CENTER, PANELBOARD OR I/O CABINET AS APPLICABLE. DEMOLITION SHALL BE COMPLETE AND SHALL INCLUDE WIRING, CONDUIT, PULL BOXES, JUNCTION BOXES, ETC. ASSOCIATED WITH THE EQUIPMENT BEING DEMOLISHED UNLESS NOTED OTHERWISE WITH THE EXCEPTION OF CONDUITS EMBEDDED IN SLAB WHICH SHALL BE CUT FLUSH, CAPPED AND ABANDONED IN PLACE.

THE DRAWINGS IN THIS SET ARE RECORD DRAWINGS. THEY ARE CONSTRUCTION CONTRACT DRAWINGS WHICH HAVE BEEN REVISED BASED ON AVAILABLE FIELD INFORMATION RECORDED BY OTHERS DURING CONSTRUCTION OF THIS CONTRACT. THERE HAS BEEN NO VERIFICATION OF DIMENSIONS SHOWN ON THE CONSTRUCTION DRAWINGS OR THE ACCURACY/COMPLETENESS OF THE FIELD INFORMATION RECEIVED.

SIGNATURE — DATE 2/7/2025

SHAH & ASSOCIATES

AS-BUILT REPLACEMENT SHEET

PROFESSIONAL CERTIFICATION
THIS DRAWING WAS ORIGINALLY APPROVED FOR CONSTRUCTION AND SEALED BY KANAIYALAL R. SHAH, A REGISTERED PROFESSIONAL ENGINEER IN THE STATE OF MARYLAND, NO. 11084

NOTICE TO CONTRACTORS
- PROJECT ELEVATIONS ARE BASED ON NAVD88 AND HOWARD COUNTY'S BENCHMARK SYSTEM
- PREVIOUS PROJECTS USED OTHER DATUMS
- APPLY THE FOLLOWING CONVERSIONS WHEN USING PREVIOUS CONTRACT DRAWINGS:
  - ADDITION NO. 6: SUBTRACT 0.80 FT
  - PRIOR ADDITIONS: SUBTRACT 1.04 FT

DEPARTMENT OF PUBLIC WORKS
HOWARD COUNTY, MARYLAND

CHIEF, BUREAU OF UTILITIES — DATE

DES: MM
DRN: DMG
CHK: KRS
DATE: 01/15/2018

DATE	REV	DESCRIPTION
03/2021		RECORD DRAWING

ELECTRICAL

DRYER BUILDING EXISTING MCC-9 - ELEVATION - DEMOLITION

LITTLE PATUXENT WATER RECLAMATION PLANT
8TH ADDITION
BIOSOLIDS PROCESSING FACILITIES - PHASE 2

CAPITAL PROJECT S-6295
CONTRACT NO. 24-4936

ELECTION DISTRICT NO. 6
HOWARD COUNTY, MARYLAND

SCALE AS SHOWN

SHEET 203 OF 311

EX-12

BIM 360://10054364 – Little Patuxent WRP 8th Addition/264592_100_E_V18.rvt
1/8/2022 10:09:34 AM

GENERAL NOTES:

1. FOR SYMBOLS AND ABBREVIATIONS, SEE DRAWING E-1.
2. FOR CONSTRUCTION SEQUENCE, SEE DRAWING E-2.
3. FOR EXISTING MCC-10 ONE LINE DIAGRAM DEMOLITION WORK, SEE DRAWINGS EX-6 AND EX-7.
4. FOR EXISTING MCC-10 LOCATION, SEE DRAWING EX-16.
5. PERFORM DEMOLITION WORK PER GENERAL DEMOLITION SHEETS. DISCONNECT AND REMOVE ALL ELECTRICAL CONNECTIONS TO EQUIPMENT IMPACTED BY DEMOLITION WORK, FROM EQUIPMENT BACK TO CORRESPONDING MCC, POWER CENTER, PANELBOARD OR I/O CABINET AS APPLICABLE. DEMOLITION SHALL BE COMPLETE AND SHALL INCLUDE WIRING, CONDUIT, PULL BOXES, JUNCTION BOXES, ETC. ASSOCIATED WITH THE EQUIPMENT BEING DEMOLISHED UNLESS NOTED OTHERWISE WITH THE EXCEPTION OF CONDUITS EMBEDDED IN SLAB WHICH SHALL BE CUT FLUSH, CAPPED AND ABANDONED IN PLACE.

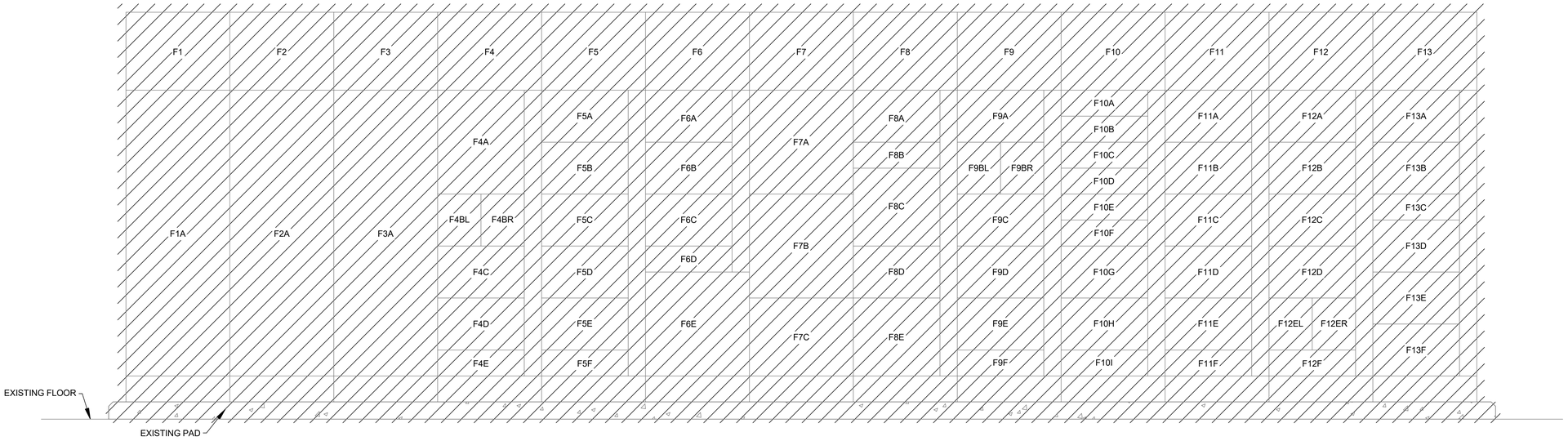

DRYER BUILDING - EXISTING MCC-10 FRONT ELEVATION - DEMOLITION

NO SCALE

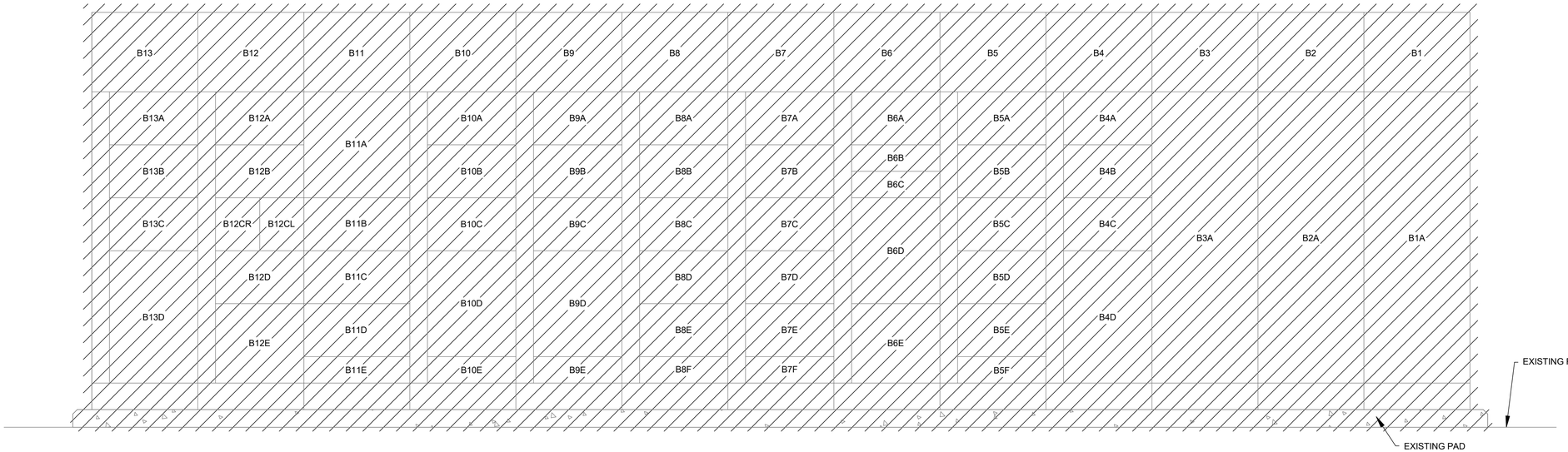

DRYER BUILDING - EXISTING MCC-10 REAR ELEVATION - DEMOLITION

NO SCALE

THE DRAWINGS IN THIS SET ARE RECORD DRAWINGS. THEY ARE CONSTRUCTION CONTRACT DRAWINGS WHICH HAVE BEEN REVISED BASED ON AVAILABLE FIELD INFORMATION RECORDED BY OTHERS DURING CONSTRUCTION OF THIS CONTRACT. THERE HAS BEEN NO VERIFICATION OF DIMENSIONS SHOWN ON THE CONSTRUCTION DRAWINGS OR THE ACCURACY/COMPLETENESS OF THE FIELD INFORMATION RECEIVED.

SIGNATURE _____ DATE 2/7/2022

SHAH & ASSOCIATES

AS-BUILT REPLACEMENT SHEET

PROFESSIONAL CERTIFICATION
THIS DRAWING WAS ORIGINALLY APPROVED FOR CONSTRUCTION AND SEALED BY KANAIYALAL R. SHAH, A REGISTERED PROFESSIONAL ENGINEER IN THE STATE OF MARYLAND, NO. 11084

NOTICE TO CONTRACTORS
- PROJECT ELEVATIONS ARE BASED ON NAVD88 AND HOWARD COUNTY'S BENCHMARK SYSTEM
- PREVIOUS PROJECTS USED OTHER DATUMS
- APPLY THE FOLLOWING CONVERSIONS WHEN USING PREVIOUS CONTRACT DRAWINGS:
  - ADDITION NO. 6: SUBTRACT 0.80 FT
  - PRIOR ADDITIONS: SUBTRACT 1.04 FT

DEPARTMENT OF PUBLIC WORKS
HOWARD COUNTY, MARYLAND

CHIEF, BUREAU OF UTILITIES DATE

DES: MM
DRN: DMG
CHK: KRS
DATE: 01/15/2018

DATE	REV	DESCRIPTION
03/2021		RECORD DRAWING

ELECTRICAL

DRYER BUILDING
EXISTING MCC-10 ELEVATION
DEMOLITION

LITTLE PATUXENT WATER RECLAMATION PLANT
8TH ADDITION
BIOSOLIDS PROCESSING FACILITIES - PHASE 2

CAPITAL PROJECT S-6295
CONTRACT NO. 24-4936

ELECTION DISTRICT NO. 6
HOWARD COUNTY, MARYLAND

SCALE AS SHOWN

SHEET 204 OF 311

EX-13

BIM 360://10054364 – Little Patuxent WRP 8th Addition/284592_100_E_V18.rvt
1/8/2022 10:09:34 AM

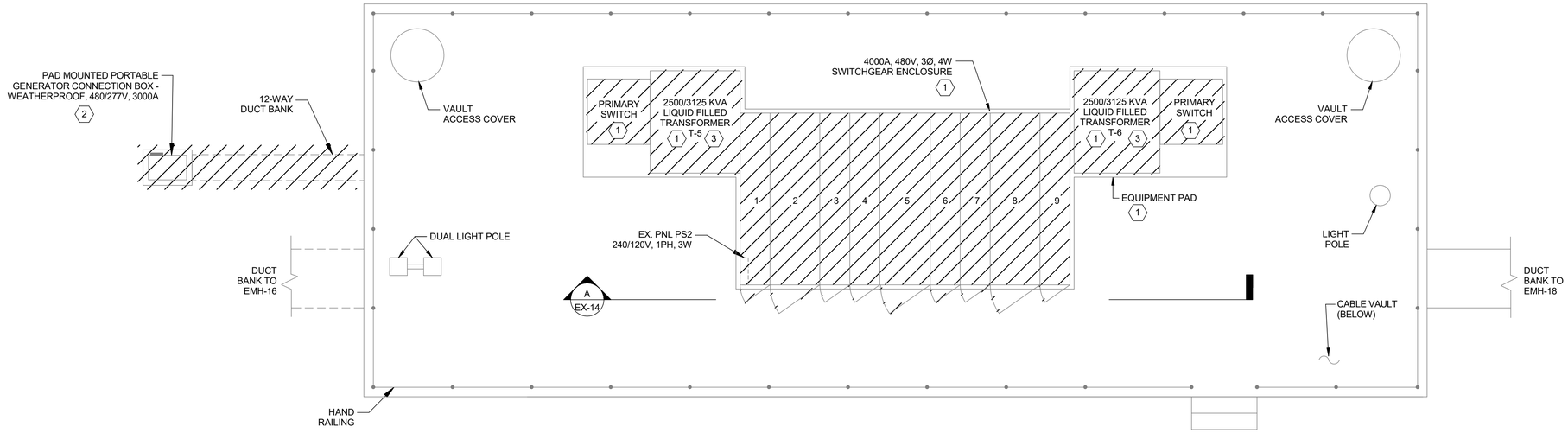

EXISTING SUBSTATION PS-2 - DEMOLITION PLAN

SCALE: 1/4" = 1'-0"

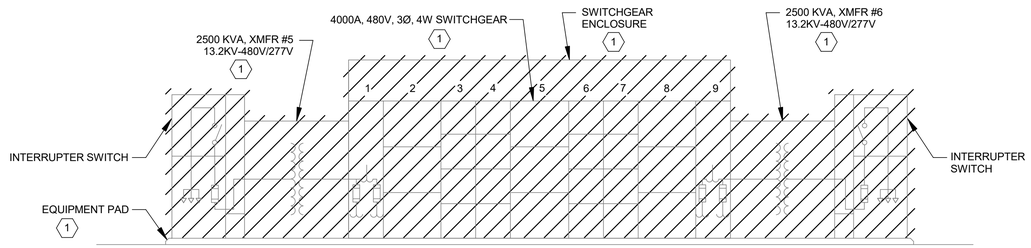

A
EX-14

EXISTING SUBSTATION PS-2 - ABOVE GROUND ELEVATION

SCALE: 1/4" = 1'-0"

GENERAL NOTES:

1. FOR SYMBOLS AND ABBREVIATIONS, SEE DRAWING E-1.
2. FOR CONSTRUCTION SEQUENCE, SEE DRAWING E-2.
3. FOR OVERALL ELECTRICAL SITE PLAN, SEE DRAWING E-3.
4. FOR OVERALL ONE LINE DIAGRAM EXISTING AND DEMOLITION, SEE DRAWING EX-1.

DRAWING NOTES:

1. DEMOLISH ENTIRE PRIMARY SUBSTATION PS-2 INCLUDING PRIMARY SWITCHES, LIQUID FILLED TRANSFORMERS, 480V SWITCHGEAR, ENCLOSURE, AS INDICATED.
2. DEMOLISH PAD MOUNTED GENERATOR CONNECTION BOX INCLUDING EQUIPMENT PAD, UNDERGROUND DUCTBANK CABLES ETC.
3. CONTRACTOR SHALL TEST THE TRANSFORMER FOR PCB CONTENT AND FOLLOW COUNTY AND FEDERAL REGULATIONS FOR THE DISPOSAL OF TRANSFORMER LIQUID BASED ON TEST RESULTS.

THE DRAWINGS IN THIS SET ARE RECORD DRAWINGS. THEY ARE CONSTRUCTION CONTRACT DRAWINGS WHICH HAVE BEEN REVISED BASED ON AVAILABLE FIELD INFORMATION RECORDED BY OTHERS DURING CONSTRUCTION OF THIS CONTRACT. THERE HAS BEEN NO VERIFICATION OF DIMENSIONS SHOWN ON THE CONSTRUCTION DRAWINGS OR THE ACCURACY/COMPLETENESS OF THE FIELD INFORMATION RECEIVED.

SIGNATURE — DATE 2/7/2022

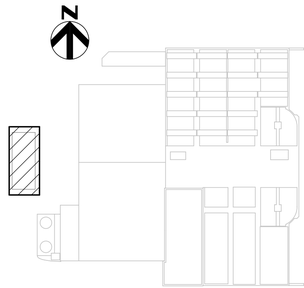

KEY PLAN

SHAH & ASSOCIATES

AS-BUILT REPLACEMENT SHEET

PROFESSIONAL CERTIFICATION
THIS DRAWING WAS ORIGINALLY APPROVED FOR CONSTRUCTION AND SEALED BY KANAIYALAL R. SHAH, A REGISTERED PROFESSIONAL ENGINEER IN THE STATE OF MARYLAND, NO. 11084

NOTICE TO CONTRACTORS
- PROJECT ELEVATIONS ARE BASED ON NAVD88 AND HOWARD COUNTY'S BENCHMARK SYSTEM
- PREVIOUS PROJECTS USED OTHER DATUMS
- APPLY THE FOLLOWING CONVERSIONS WHEN USING PREVIOUS CONTRACT DRAWINGS:
  - ADDITION NO. 6: SUBTRACT 0.80 FT
  - PRIOR ADDITIONS: SUBTRACT 1.04 FT

DEPARTMENT OF PUBLIC WORKS
HOWARD COUNTY, MARYLAND

CHIEF, BUREAU OF UTILITIES — DATE

DES: MM
DRN: DMG
CHK: KRS
DATE: 01/15/2018

DATE	REV	DESCRIPTION
03/2021		RECORD DRAWING

ELECTRICAL

EXISTING SUBSTATION PS2 DEMOLITION PLAN

LITTLE PATUXENT WATER RECLAMATION PLANT
8TH ADDITION
BIOSOLIDS PROCESSING FACILITIES - PHASE 2

CAPITAL PROJECT S-6295
CONTRACT NO. 24-4936

ELECTION DISTRICT NO. 6
HOWARD COUNTY, MARYLAND

SCALE AS SHOWN

SHEET 205 OF 311

EX-14

BIM 360://10054364 – Little Patuxent WRP 8th Addition/264592_100_E_V18.rvt
1/8/2022 10:09:34 AM

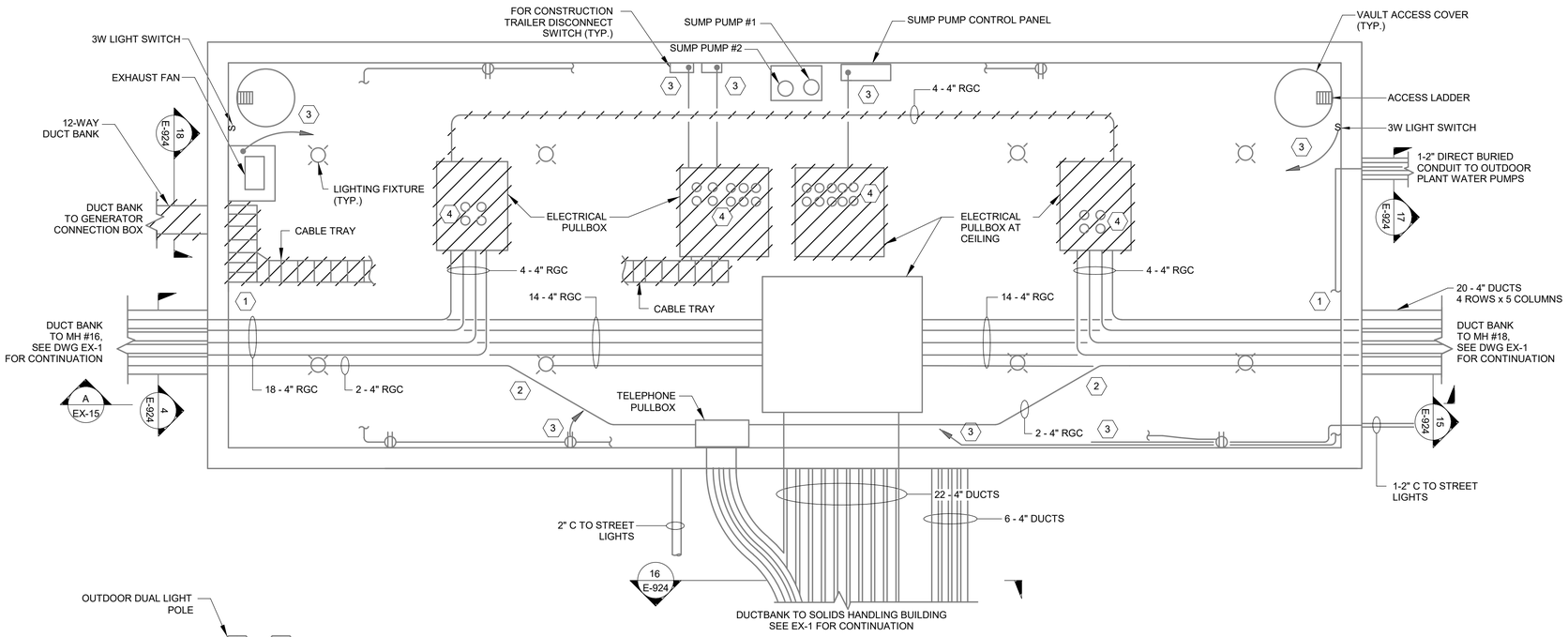

EXISTING SUBSTATION PS-2 CABLE VAULT - PLAN - EXISTING AND DEMOLITION

SCALE: 1/4" = 1'-0"

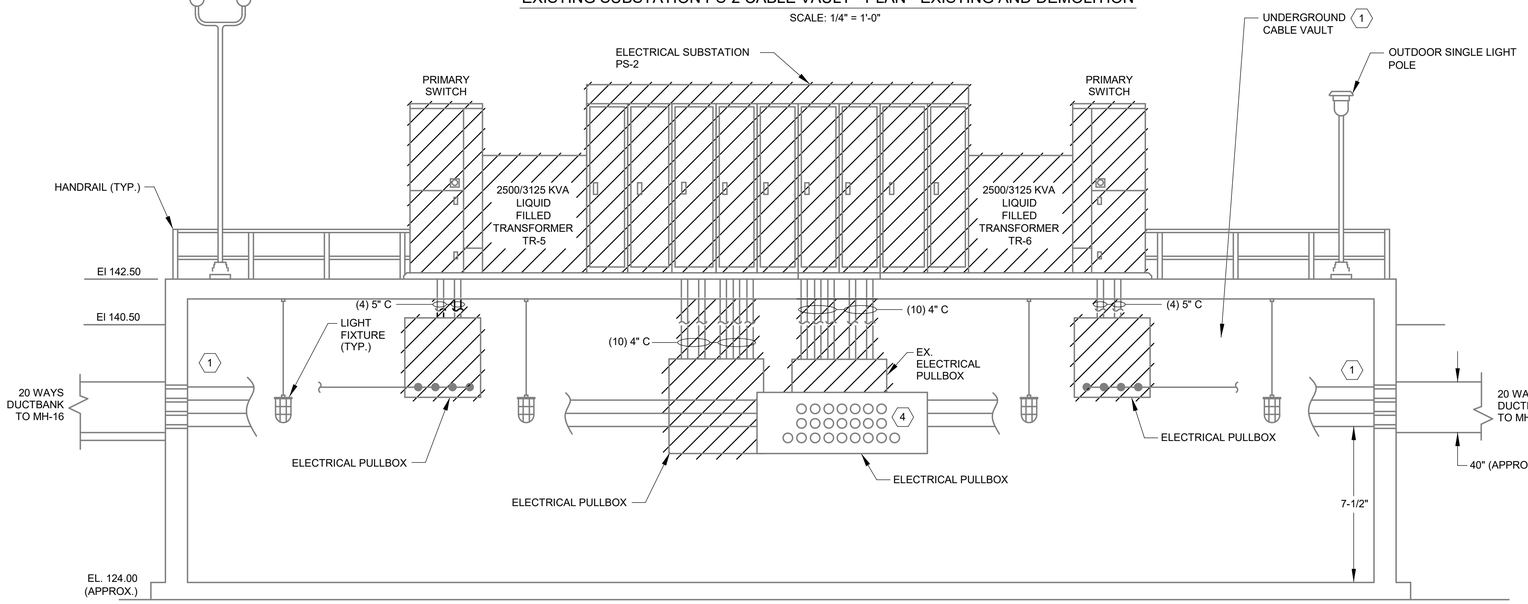

A EX-15 EXISTING SUBSTATION PS-2 CABLE VAULT - SECTION - EXISTING AND DEMOLITION

SCALE: 1/4" = 1'-0"

GENERAL NOTES:

1. FOR SYMBOLS AND ABBREVIATIONS, SEE DRAWING E-1.
2. FOR CONSTRUCTION SEQUENCE, SEE DRAWING E-2.
3. FOR OVERALL ELECTRICAL SITE PLAN, SEE DRAWING E-3.
4. FOR OVERALL ONE LINE DIAGRAM EXISTING AND DEMOLITION, SEE DRAWING EX-1.
5. FOR DUCT BANK SECTIONS EXISTING AND DEMOLITION, SEE DRAWING E-924.

DRAWING NOTES:

1. DEMOLISH THE TOP FOUR 4" RIGID GALV. CONDUITS UPTO THE LAST COUPLING CLOSE TO THE WALLS.
2. DO NOT DEMOLISH TELEPHONE CONDUITS.
3. CONTRACTOR TO IDENTIFY AND RETRACE THE POWER AND CONTROL CONNECTION SOURCE BEFORE REMOVAL. SEE PANEL BOARD SCHEDULE FOR PANEL IN DRYER BUILDING ELECTRICAL ROOM TO RECONNECT EXISTING CIRCUITS INSIDE AND OUTSIDE THE VAULT. NOT ALL CIRCUITS ARE IDENTIFIED. CONTRACTOR SHALL SURVEY/VERIFY ANY FEEDER THAT IS NOT IDENTIFIED AND RECONNECT TO THE PANELS IN THE DRYER ELECTRICAL ROOM.
4. PROVIDE WEATHER TIGHT SEAL FOR CONDUIT PENETRATIONS THROUGH THE SLAB.

THE DRAWINGS IN THIS SET ARE RECORD DRAWINGS. THEY ARE CONSTRUCTION CONTRACT DRAWINGS WHICH HAVE BEEN REVISED BASED ON AVAILABLE FIELD INFORMATION RECORDED BY OTHERS DURING CONSTRUCTION OF THIS CONTRACT. THERE HAS BEEN NO VERIFICATION OF DIMENSIONS SHOWN ON THE CONSTRUCTION DRAWINGS OR THE ACCURACY/COMPLETENESS OF THE FIELD INFORMATION RECEIVED.

SIGNATURE — DATE 2/7/2023

KEY PLAN

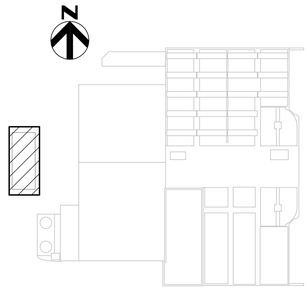

SHAH & ASSOCIATES

AS-BUILT REPLACEMENT SHEET

PROFESSIONAL CERTIFICATION

THIS DRAWING WAS ORIGINALLY APPROVED FOR CONSTRUCTION AND SEALED BY KANAIYALAL R. SHAH, A REGISTERED PROFESSIONAL ENGINEER IN THE STATE OF MARYLAND, NO. 11084

NOTICE TO CONTRACTORS

- PROJECT ELEVATIONS ARE BASED ON NAVD88 AND HOWARD COUNTY'S BENCHMARK SYSTEM
- PREVIOUS PROJECTS USED OTHER DATUMS
- APPLY THE FOLLOWING CONVERSIONS WHEN USING PREVIOUS CONTRACT DRAWINGS:
  - ADDITION NO. 6: SUBTRACT 0.80 FT
  - PRIOR ADDITIONS: SUBTRACT 1.04 FT

DEPARTMENT OF PUBLIC WORKS
HOWARD COUNTY, MARYLAND

CHIEF, BUREAU OF UTILITIES — DATE

DES: MM
DRN: DMG
CHK: KRS
DATE: 01/15/2018

DATE	REV	DESCRIPTION
03/2021		RECORD DRAWING

ELECTRICAL

EXISTING SUBTATION PS-2 VAULT - EXISTING AND DEMOLITION

LITTLE PATUXENT WATER RECLAMATION PLANT
8TH ADDITION
BIOSOLIDS PROCESSING FACILITIES - PHASE 2

CAPITAL PROJECT S-6295
CONTRACT NO. 24-4936

ELECTION DISTRICT NO. 6
HOWARD COUNTY, MARYLAND

SCALE AS SHOWN

SHEET 206 OF 311

EX-15

BIM 360://10054364 – Little Patuxent WRP 8th Addition/264592_100_E_V18.rvt
1/8/2022 10:09:35 AM

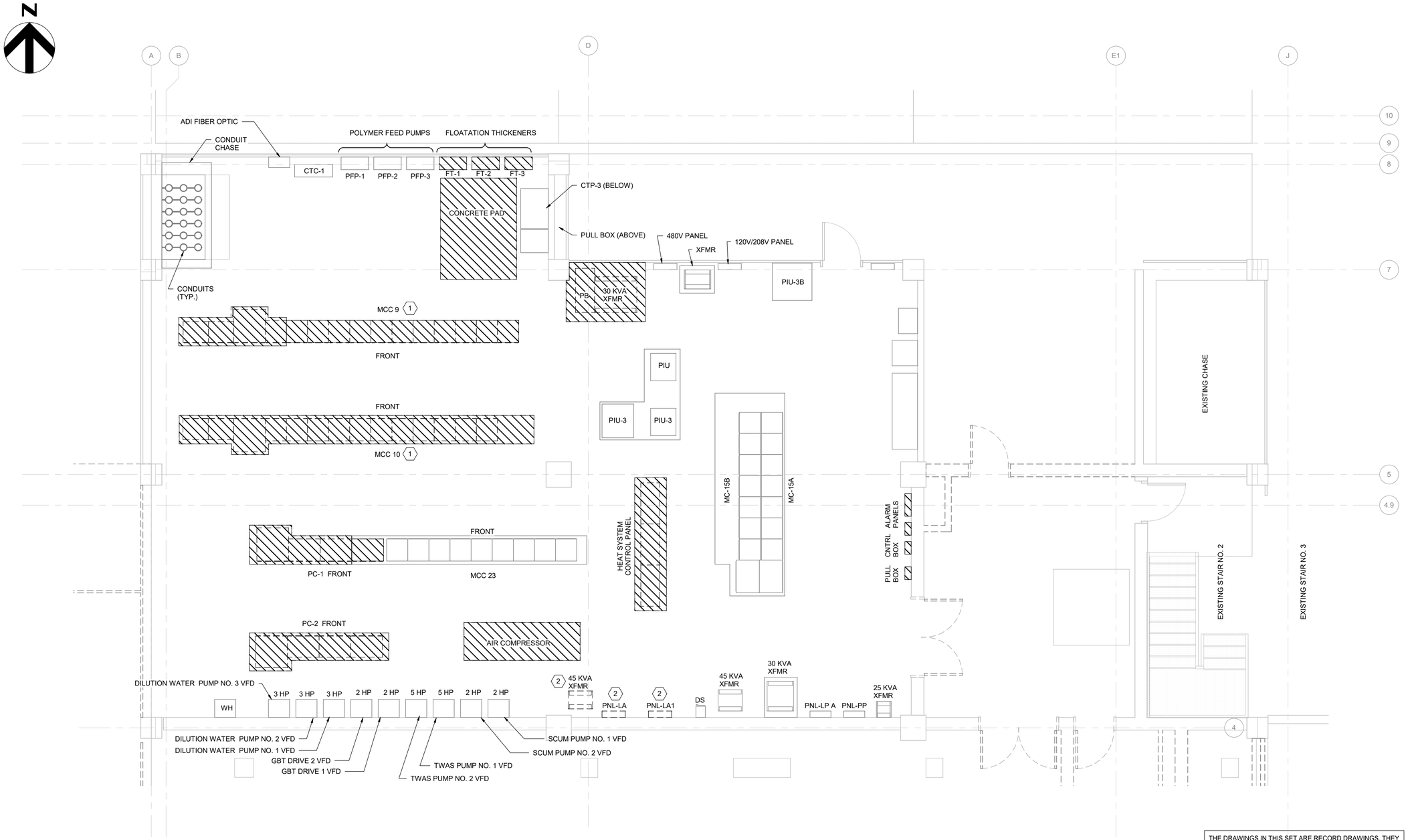

GENERAL NOTES

1. FOR SYMBOLS AND ABBREVIATIONS, SEE DRAWING E-1.
2. FOR CONSTRUCTION SEQUENCE, SEE DRAWING E-2.
3. FOR EXISTING MCC AND POWER CENTER ONE-LINES, SEE DRAWINGS EX-1 THRU EX-11.
4. PERFORM DEMOLITION WORK PER GENERAL DEMOLITION SHEETS. DISCONNECT AND REMOVE ALL ELECTRICAL CONNECTIONS TO EQUIPMENT IMPACTED BY DEMOLITION WORK, FROM EQUIPMENT BACK TO CORRESPONDING MCC, POWER CENTER, PANELBOARD OR I/O CABINET AS APPLICABLE. DEMOLITION SHALL BE COMPLETE AND SHALL INCLUDE WIRING, CONDUIT, PULL BOXES, JUNCTION BOXES, ETC. ASSOCIATED WITH THE EQUIPMENT BEING DEMOLISHED UNLESS NOTED OTHERWISE WITH THE EXCEPTION OF CONDUITS EMBEDDED IN SLAB WHICH SHALL BE CUT FLUSH, CAPPED AND ABANDONED IN PLACE.

DRAWING NOTES

1. EXISTING MCC-9 AND MCC-10 SHALL BE REPLACED WITH NEW MCC-9. CONTRACTOR SHALL PROVIDE NEW FEEDERS AND SHALL FIELD VERIFY TO REUSE EXISTING CONDUITS TO THE EXTENT POSSIBLE. IN CASES WHERE REUSING THE EXISTING CONDUITS IS NOT POSSIBLE, CONTRACTOR SHALL ROUTE NEW CONDUITS TO RUN NEW FEEDERS.
2. RELOCATE THE EXISTING 45KVA TRANSFORMER FROM FLOOR MOUNTED TO WALL MOUNTED. CONTRACTOR SHALL REPLACE THE PRIMARY FEEDER TO THE XFMR AND REPLACE THE SECONDARY FEEDER TO PANEL LA1 AND BRANCH CIRCUIT TO LA.

DRYER BUILDING - ELECTRICAL ROOM - EXISTING AND DEMOLITION

1/4" = 1'-0"

THE DRAWINGS IN THIS SET ARE RECORD DRAWINGS. THEY ARE CONSTRUCTION CONTRACT DRAWINGS WHICH HAVE BEEN REVISED BASED ON AVAILABLE FIELD INFORMATION RECORDED BY OTHERS DURING CONSTRUCTION OF THIS CONTRACT. THERE HAS BEEN NO VERIFICATION OF DIMENSIONS SHOWN ON THE CONSTRUCTION DRAWINGS OR THE ACCURACY/COMPLETENESS OF THE FIELD INFORMATION RECEIVED.

SIGNATURE — DATE 2/7/2025

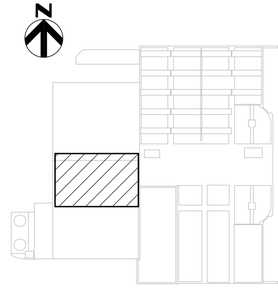

KEY PLAN

SHAH & ASSOCIATES

AS-BUILT REPLACEMENT SHEET

PROFESSIONAL CERTIFICATION
THIS DRAWING WAS ORIGINALLY APPROVED FOR CONSTRUCTION AND SEALED BY KANAIYALAL R. SHAH, A REGISTERED PROFESSIONAL ENGINEER IN THE STATE OF MARYLAND, NO. 11084

NOTICE TO CONTRACTORS
- PROJECT ELEVATIONS ARE BASED ON NAVD88 AND HOWARD COUNTY'S BENCHMARK SYSTEM
- PREVIOUS PROJECTS USED OTHER DATUMS
- APPLY THE FOLLOWING CONVERSIONS WHEN USING PREVIOUS CONTRACT DRAWINGS:
  - ADDITION NO. 6: SUBTRACT 0.80 FT
  - PRIOR ADDITIONS: SUBTRACT 1.04 FT

DEPARTMENT OF PUBLIC WORKS
HOWARD COUNTY, MARYLAND

CHIEF, BUREAU OF UTILITIES — DATE

DES: MM
DRN: DMG
CHK: KRS
DATE: 01/15/2018

DATE	REV	DESCRIPTION
03/2021		RECORD DRAWING

ELECTRICAL

DRYER BUILDING ELECTRICAL ROOM - EXISTING AND DEMOLITION

LITTLE PATUXENT WATER RECLAMATION PLANT
8TH ADDITION
BIOSOLIDS PROCESSING FACILITIES - PHASE 2

CAPITAL PROJECT S-6295
CONTRACT NO. 24-4936

ELECTION DISTRICT NO. 6
HOWARD COUNTY, MARYLAND

SCALE AS SHOWN

SHEET 207 OF 311

EX-16

BIM 360://10054364 – Little Patuxent WRP 8th Addition/264592_100_E_V18.rvt
1/8/2022 10:09:36 AM

SYMBOL	DESCRIPTION
J OR J	JUNCTION BOX
	CONVENIENCE RECEPTACLE - 120V, 1 ∅ DUPLEX UNLESS SPECIFIED OTHERWISE WP-WEATHERPROOF TL-TWIST LOCK CRE-CORROSION RESISTANT
	CIRCUIT BREAKER
	FUSE
400AF 400AT	CIRCUIT BREAKER, AMPERE FRAME AND AMPERE TRIP RATING SHOWN, 3 POLE UNLESS INDICATED OTHERWISE.
225A , 1200A	FUSE FIXED, DRAW OUT - (RATING INDICATED)
	DRAWOUT CIRCUIT BREAKER, LOW VOLTAGE
52	DRAWOUT CIRCUIT BREAKER
	GROUND
27	UNDER VOLTAGE RELAY
59	OVER VOLTAGE RELAY
86	LOCKING - OUT RELAY
120V or 120/240V 15 KVA 1 PH	PHASE AND RATING INDICATED AS APPLICABLE CONTROL POWER TRANSFORMER, SECONDARY VOLTAGES,
GFR 25A 0.1	PICK-UP SETTING TIME CURRENT CHARACTERISTIC } GROUND FAULT RELAY WITH CT
KX	KIRK KEY INTERLOCK
(3)	CURRENT TRANSFORMER, NUMBER INDICATED
A	INDICATING LIGHT - LETTER INDICATES COLOR A - AMBER G - GREEN B - BLUE R - RED C - CLEAR W - WHITE
	EMH - ELECTRICAL MANHOLE
PB	PULL BOX
	COMBINATION STARTER WITH DISCONNECT SWITCH
	SUBSTATION FENCE
	EXISTING CONDITION TO REMAIN UNLESS INDICATED OTHERWISE
	EXISTING CONDITION TO BE REMOVED.
	NEW WORK, AS NOTED.
	CABLE TERMINATION
	CONDUCTORS CONNECTED
	LIGHTNING ARRESTER
	POTENTIAL TRANSFORMER
	DELTA CONNECTED
AIT	ANALYSIS INDICATING TRANSMITTER
SV	SOLENOID VALVE
PSH	PRESSURE SWITCH
	SPLICE
	WYE CONNECTION - UNGROUNDED, GROUNDED
	POWER TRANSFORMER

SYMBOL	DESCRIPTION
A	AMMETER
AS	AMMETER SWITCH
V	VOLTMETER
K	KEY INTERLOCK - MECHANICAL
E	ELECTRICAL INTERLOCK
	PANELBOARD RATING AS INDICATED
M	ELECTRIC MOTOR
M OR 5	INDUCTION MOTOR, HORSEPOWER INDICATED
	SINGLE RECEPTACLE, 120V, 20A W/GFCI WP- WEATHERPROOF
S M	MANUAL MOTOR STARTING SWITCH
S-A1 2	SWITCH NUMBER OF POLES SWITCH NUMBER CIRCUIT IDENTIFIER
,	CONDUIT DOWN OR AWAY
,	CONDUIT UP OR TOWARD VIEWER
	CONDUIT, STUBBED AND CAPPED AS SHOWN
E	UNDERGROUND ELECTRIC
'	FOOT
"	INCHES
	PUSH BUTTON
, , 30	NONFUSED DISCONNECT SWITCH, SIZE AS INDICATED ON THE ONE LINE DIAGRAMS. 3-POLE, 30 AMPS AND NEMA 4X ENCLOSURE UNLESS INDICATED OTHERWISE.
30/20 F , 30/20	FUSED DISCONNECT SWITCH, SIZE INDICATED (30/20, 30 = SWITCH RATING: 20 = FUSE RATING) 3 POLE AND NEMA 4X ENCLOSURE UNLESS INDICATED OTHERWISE.
	CAPACITOR
1	MAGNETIC STARTER FVNR WITH NEMA SIZE INDICATED
MCP 15AT	MOTOR CIRCUIT PROTECTOR, MAXIMUM TRIP SETTING INDICATED
,	DRY CONTACTS - N.O., N.C.
V	ACTUATED VALVE
SPD	SURGE PROTECTION DEVICE
TVSS	TRANSIENT VOLTAGE SURGE SUPPRESSOR
PMT	MICROPROCESSOR BASED POWER MONITOR
PQM	POWER QUALITY METER
VFD	VARIABLE FREQUENCY DRIVE
FACU	FIRE ALARM CONTROL UNIT
FATP	FIRE ALARM TERMINAL PANEL
N1 N2 L	AUTOMATIC TRANSFER SWITCH
	DUCT BANK, NEW WORK
	DUCT BANK, EXISTING

ABBREVIATION	DESCRIPTION
A	AMMETER, AMPERE, AMBER
AC	ALTERNATING CURRENT
ACU, A/C	AIR CONDITIONING UNIT
AE/AIT	ANALYSIS INDICATOR/TRANSMITTER
AF	AMPERE FRAME
AFD	ADJUSTABLE FREQUENCY DRIVE
AFF	ABOVE FINISHED FLOOR
AHU	AIR HANDLING UNIT
AIC	AMPERES INTERRUPTING CURRENT
AL	ALARM, ALUMINUM
A-M	AUTOMATIC-MANUAL
ARMS	ARCFLASH REDUCTION MAINTENANCE SYSTEM
AS	AMMETER SWITCH, AMPERE SENSOR
AT	AMPERE TRIP
ATS	AUTOMATIC TRANSFER SWITCH
AUX.	AUXILIARY
AWG	AMERICAN WIRE GAUGE
BKR.	CIRCUIT BREAKER
BLDG.	BUILDING
BV	BALL VALVE
C	CONDUIT, CONTACTOR
CB	CIRCUIT BREAKER
C/C	CENTER-TO-CENTER
CKT	CIRCUIT
CL	CLOSE
CLF	CURRENT LIMITING FUSE
CMU	CONCRETE MASONRY UNIT
COL.	COLUMN
COMM.	COMMUNICATIONS
CONN.	CONNECTION
CP	CONTROL PANEL
CPT	CONTROL POWER TRANSFORMER
CR	CONTROL RELAY
CS	CONTROL SWITCH/BREAKER CONTROL SWITCH
CT	CURRENT TRANSFORMER
CU	COPPER
CV	CONE VALVE
DB	DUCT BANK
DC	DIRECT CURRENT
DIA.	DIAMETER
DM	DAMPER MOTOR
DN	DOWN
DP	DISTRIBUTION PANEL
DPCS	DIGITAL PROCESS CONTROL SYSTEM
DPST	DOUBLE POLE SINGLE THROW
DS	DISCONNECT SWITCH
DWG	DRAWING
EA	EACH
EC	EXISTING CABLE
EF	EXHAUST FAN
EL., ELEV.	ELEVATION
ELECT.	ELECTRICAL
EMH	ELECTRIC MANHOLE
EM, EMERG	EMERGENCY
EO	ELECTRIC OPERATOR
ETM	ELAPSED TIME METER
EX, EXIST	EXISTING
F	FUSE
FA	FRAME AMPERES, FIRE ALARM CIRCUIT
FCV	FLOW CONTROL VALVE
FDR	FEEDER, FEEDER DISCHARGE RESISTOR
FE/FIT	FLOW INDICATOR/TRANSMITTER
FO	FIBER OPTIC
FSH	FLOW SWITCH - HIGH FLOW
FSL	FLOW SWITCH - LOW FLOW
FU	FUSE BLOCK
FVNR	FULL VOLTAGE NON-REVERSING
FVR	FULL VOLTAGE REVERSING
G	GREEN, GROUND
GALV	GALVANIZED
GFI	GROUND FAULT INTERRUPTER

ABBREVIATION	DESCRIPTION
GFR	GROUND FAULT RELAY
GND, GD, GRD	GROUND
GS	GROUND FAULT SENSOR
GV	GATE VALVE
HCU	HARMONIC CORRECTION UNIT
H, HTR.	HEATER
HH	HANDHOLE
HMI	HUMAN MACHINE INTERFACE
H-O-A	HAND-OFF-AUTOMATIC
HP	HORSEPOWER
HVAC	HEATING, VENTILATING AND AIR CONDITIONING
HZ	HERTZ
I/O	INPUT/OUTPUT
J, J.B., J-BOX	JUNCTION BOX
K	KEY INTERLOCK
KA	KILOAMPERES
KAIC	THOUSANDS OF AMPERES INTERRUPTING CURRENT
KCMIL	THOUSANDS OF CIRCULAR MILS
KV	KILOVOLTS
KVA	KILOVOLT-AMPERES
KW	KILOWATTS
KWH	KILOWATT-HOUR METER
LA	LIGHTNING ARRESTER
LBS	LOAD BREAK SWITCH
L.C.	LOCKED CLOSED
LCP	LOCAL CONTROL PANEL
LE/LIT	LEVEL INDICATOR/TRANSMITTER
LIS	LOAD INTERRUPTER SWITCH
L.O.	LOCKED OPEN, LOCKOUT
L-O-R	LOCAL-OFF-REMOTE
L-R	LOCAL-REMOTE
LS	LIMIT SWITCH
LSH	LEVEL SWITCH - HIGH LEVEL
LSIG	LONGTIME, SHORT TIME, INSTANTANEOUS AND GROUND FAULT
LSL	LEVEL SWITCH - LOW LEVEL
LV	LOW VOLTAGE
LOH	LUBE OIL HEATER
LP	LIGHTING PANEL
LTG.	LIGHTING
M	MAIN CONTACTOR (ON ST EXCITER)
MAX.	MAXIMUM
MCB	MAIN CIRCUIT BREAKER
MCC	MOTOR CONTROL CENTER
MCM	THOUSANDS OF CIRCULAR MILS
MCP	MOTOR CIRCUIT PROTECTOR, MANUFACTURER'S CONTROL PANEL
MDP	MAIN DISTRIBUTION PANEL
MECH	MECHANICAL
MFG.	MANUFACTURING
MFR.	MULTI-FUNCTION RELAY
MH	MANHOLE, MONORAIL HOIST
MIN.	MINIMUM
MLO	MAIN LUGS ONLY
MM	MICROPROCESSOR BASED METER
MOCB	MAIN OIL CIRCUIT BREAKER
MOD	MOTOR OPERATED DAMPER
MR	MICROPROCESSOR BASED PROTECTIVE RELAYING DEVICE
MR-B	MICROPROCESSOR BASED BACK-UP PROTECTIVE RELAYING
MV	MEDIUM VOLTAGE
MVA	MEGAVOLT-AMPERES
MTS	MANUAL TRANSFER SWITCH
NEC	NATIONAL ELECTRICAL CODE
N/A	NOT APPLICABLE
N.C.	NORMALLY CLOSED
NEMA	NATIONAL ELECTRICAL MANUFACTURER'S ASSOCIATION

ABBREVIATION	DESCRIPTION
NEUT.	NEUTRAL
NFPA	NATIONAL FIRE PROTECTION ASSOCIATION
N.O.	NORMALLY OPEN
No., #	NUMBER
O.C.	ON CENTER
OCB	OIL CIRCUIT BREAKER
OH	OVERHEAD
OHP	OVERHEAD POLE
OL	MOTOR OVERLOAD HEATING ELEMENT
OP	OPEN
OPS	OPERATOR'S STATION
OSHA	OCCUPATIONAL SAFETY AND HEALTH ADMINISTRATION
P	POLE, POLES OR PUMP
PB	PULL BOX, PUSH-BUTTON
PC	POWER CONDITIONER
PCB	POWER CIRCUIT BREAKER
PH	PHASE
PIT	PRESSURE INDICATING TRANSMITTER
PLC	PROGRAMMABLE LOGIC CONTROLLER
PMT	POWER MONITOR
PQM	POWER QUALITY METER
PS	PRIMARY SUBSTATION
PSH	PRESSURE SWITCH
PT	POTENTIAL TRANSFORMER
PVC	POLYVINYL CHLORIDE
RECEPT.	RECEPTACLE
RES	RESISTOR
RIO	REMOTE I/O
RMS	ROOT MEAN SQUARE
RVNR	REDUCED VOLTAGE, NON-REVERSING
S	SPARE
SDBC	SOFT DRAWN BARE COPPER CONDUCTOR
SEC.	SECONDS
SPD	SURGE PROTECTION DEVICE
STA.	STATION
SUB	SUBSTATION
SWGR	SWITCHGEAR
SYS.	SYSTEM
TBD	TO BE DETERMINED
TCB	TIE CIRCUIT BREAKER
TEMP.	TEMPORARY, TEMPERATURE
TOL	THERMAL OVERLOAD
TSP	TWISTED SHIELDED PAIR
TR	TIMING RELAY
TSH	TEMPERATURE SWITCH - HIGH TEMP.
TSL	TEMPERATURE SWITCH - LOW TEMP.
TVSS	TRANSIENT VOLTAGE SURGE SUPPRESSOR
TYP.	TYPICAL
UH	UNIT HEATER
UL	UNDERWRITERS' LABORATORY
UON	UNLESS OTHERWISE NOTED
UPS	UNINTERRUPTIBLE POWER SUPPLY
USS	UNIT SUBSTATION
V	VOLTS, VOLTAGE
VCB	VACUUM CIRCUIT BREAKER
VFD	VARIABLE FREQUENCY DRIVE
W	WATTS, WIRE, WHITE, WIDTH
WD	WIDTH
WH	WATER HEATER
WP	WEATHERPROOF
XFMR	TRANSFORMER
Z	IMPEDANCE
#16 TCC	16 AWG THERMOCOUPLE CABLES
#16 TSP	16 AWG TWISTED SHIELDED PAIR CABLES
3P	THREE POLE

THE DRAWINGS IN THIS SET ARE RECORD DRAWINGS. THEY ARE CONSTRUCTION CONTRACT DRAWINGS WHICH HAVE BEEN REVISED BASED ON AVAILABLE FIELD INFORMATION RECORDED BY OTHERS DURING CONSTRUCTION OF THIS CONTRACT. THERE HAS BEEN NO VERIFICATION OF DIMENSIONS SHOWN ON THE CONSTRUCTION DRAWINGS OR THE ACCURACY/COMPLETENESS OF THE FIELD INFORMATION RECEIVED.

SIGNATURE — DATE 2/7/2022

SHAH & ASSOCIATES

HDR

AS-BUILT REPLACEMENT SHEET

PROFESSIONAL CERTIFICATION
THIS DRAWING WAS ORIGINALLY APPROVED FOR CONSTRUCTION AND SEALED BY KANAIYALAL R. SHAH, A REGISTERED PROFESSIONAL ENGINEER IN THE STATE OF MARYLAND, NO. 11084

NOTICE TO CONTRACTORS
- PROJECT ELEVATIONS ARE BASED ON NAVD88 AND HOWARD COUNTY'S BENCHMARK SYSTEM
- PREVIOUS PROJECTS USED OTHER DATUMS
- APPLY THE FOLLOWING CONVERSIONS WHEN USING PREVIOUS CONTRACT DRAWINGS:
  - ADDITION NO. 6: SUBTRACT 0.80 FT
  - PRIOR ADDITIONS: SUBTRACT 1.04 FT

DEPARTMENT OF PUBLIC WORKS
HOWARD COUNTY, MARYLAND

CHIEF, BUREAU OF UTILITIES — DATE

DES: MM
DRN: DMG
CHK: KRS
DATE: 01/15/2018

DATE	REV	DESCRIPTION
03/2021		RECORD DRAWING

ELECTRICAL

SYMBOLS AND ABBREVIATIONS

LITTLE PATUXENT WATER RECLAMATION PLANT
8TH ADDITION
BIOSOLIDS PROCESSING FACILITIES - PHASE 2

CAPITAL PROJECT S-6295
CONTRACT NO. 24-4936

ELECTION DISTRICT NO. 6
HOWARD COUNTY, MARYLAND

SCALE AS SHOWN

SHEET 208 OF 311

E-1

BIM 360://10054364 – Little Patuxent WRP 8th Addition/264592_100_E_V18.rvt
1/8/2022 10:29:17 AM

SUGGESTED ELECTRICAL CONSTRUCTION SEQUENCE:

THE FOLLOWING IS A GENERAL SEQUENCE OF CONSTRUCTION TO SHOW THE INTENTION BUT DOES NOT LIST ALL THE STEPS. CONTRACTOR SHALL FOLLOW ALL THE APPLICABLE NATIONAL AND LOCAL STANDARDS TO PERFORM THE WORK.

A. SITE PREPARATION FOR NEW PS-2 AND NEW MCC-9 CONSTRUCTION

1. PERFORM ALL THE NECESSARY MODIFICATIONS IN THE EXISTING ELECTRICAL ROOM INCLUDING NEW DOUBLE DOORS, MODIFICATIONS IN THE OFFICE AND LOBBY AREA, DEMOLITION OF CONCRETE PADS AND WALLS/DOORS, INSTALLATION OF NEW DOORS, ETC.
2. PERFORM HVAC DUCTWORK DEMOLITION IN THE ELECTRICAL ROOM TO MAKE ROOM FOR NEW BUS DUCT AND CONDUITS TO BE ROUTED TO THE NEW INDOOR SWITCHGEAR AND MCCs.
3. PERFORM DEMOLITION WORK FOR LOADS FED FROM EXISTING MCCS-9,10,15 AND 23 AND REMOVE CONDUITS AND CABLES BACK TO THEIR SOURCE. DO NOT DEMOLISH MCCS AT THIS STAGE
4. DEMOLISH THE CONCRETE PAD AT THE NORTH END OF THE ELECTRICAL ROOM.
5. INSTALL NEW ELEVATED PLATFORM, STAIRS, RAILINGS ETC. FOR NEW SUBSTATION PS-2.

B. INSTALLATION OF NEW MCC-9 & DEMOLITION OF EXISTING MCC-9 AND MCC-10

1. INSTALL NEW MCC-9 IN THE OFFICE/LOBBY AREA AS SHOWN ON THE DRAWINGS.
2. USE EXISTING MCC-9 AND MCC-10 MAIN FEEDER CABLES AND CONDUITS UP TO THE ELECTRICAL ROOM VIA THE CONDUIT CHASE AND PROVIDE NEW CONDUIT AND CABLES TO THE NEW MCC-9 TO TEMPORARILY FEED NEW MCC-9 FROM EXISTING PS-2. SPLICE CABLES AS NEEDED FOR TEMPORARY SERVICES.
3. PERFORM ALL THE NECESSARY TESTS AND ENERGIZE NEW MCC-9 FROM EXISTING PS-2 MCC-9 AND MCC-10 BREAKERS.
4. TRANSFER EXISTING TO REMAIN LOADS FROM EXISTING MCC-9 AND MCC-10 TO THE NEW MCC-9. NOT ALL EXISTING LOADS ARE IDENTIFIED AND LOCATED. CONTRACTOR SHALL FIELD VERIFY EXISTING LOADS BEFORE PERFORMING WORK.
5. PULL NEW WIRES IN EXISTING AND NEW CONDUITS FROM NEW MCC-9 TO EXISTING LOADS. REUSE EXISTING CONDUITS TO THE EXTENT POSSIBLE AND IN CASES WHERE REUSING EXISTING CONDUITS IS NOT POSSIBLE, INSTALL NEW CONDUITS.
6. DEMOLISH EXISTING MCC-9 AND MCC-10 TO MAKE ROOM FOR NEW SWITCHGEAR PS-2 INSTALLATION.

C. INSTALLATION OF NEW INDOOR SWITCHGEAR

1. INSTALL NEW INDOOR SWITCHGEAR PS-2 IN THE DRYER BUILDING ELECTRICAL ROOM.

D. INSTALLATION OF NEW SUBSTATION PS-2 AND MODIFICATION IN EXISTING PS-2 VAULT

1. INSTALL NEW SUBSTATION PS-2 (CAST COIL TRANSFORMERS AND PRIMARY VACUUM BREAKER SWITCHGEAR ASSEMBLY) ON THE NEW ELEVATED PLATFORM.
2. INSTALL NEW CONDUIT/CABLE FROM THE INDOOR SWITCHGEAR MAIN BREAKER 1 AND 2 SECTION - TO THE SECONDARY SIDE OF THE OUTDOOR TRANSFORMERS.
3. INSTALL TWO 4" OVERHEAD CONDUITS FROM EACH OF THE PRIMARY VACUUM CIRCUIT BREAKER SWITCHGEARS TO THE ELECTRICAL ROOM CONDUIT CHASE FOR THE MV FEEDER ROUTING.
4. INSTALL PULL BOXES, CABLE TRAY ETC. INSIDE THE EXISTING PS-2 VAULT.
5. INSTALL 15kV, 4-WAY JUNCTIONS IN EXISTING PS-2 VAULT, WEST WALL.
6. EXISTING FOUR CONDUITS IN EXISTING DUCTBANK TO MCC-23 SHALL BE REUSED FOR MV FEEDER ROUTING FROM ELECTRICAL ROOM TO THE EXISTING PS-2 VAULT. SEE STEPS E.1 THRU E.4 AND H.1 THRU H.5 BELOW.

E. MV FEEDER ROUTING FROM PS-2 VAULT TO NEW PS-2 PRIMARY BREAKER

1. SCHEDULE AN OUTAGE AT THE EXISTING MCC-23 BUS #1. OPEN THE MAIN BREAKER FOR MCC-23 MAIN #1 AT BOTH PS-2 & MCC-23.
2. DISCONNECT AND REMOVE THE CABLES FROM MCC-23 MAIN #1 BREAKER AND PULL THEM BACK TO MCC-23 BUS #1 MAIN BREAKER IN THE ELECTRICAL ROOM.
3. AT MCC-23, CLOSE TIE CIRCUIT BREAKER SO MCC-23 IS FED FROM ONE FEEDER.
4. NOW TWO CONDUITS ARE AVAILABLE FROM EXISTING VAULT TO THE ELECTRICAL ROOM TO ROUTE MV FEEDERS TO NEW SWITCHGEAR BUS #1 LOCATION.
5. SCHEDULE AN OUTAGE AT THE MAIN SWITCHGEAR AND OPEN MAIN BREAKERS FOR PS-2 AND PS-7.
6. DISCONNECT AND REMOVE THE 15KV FEEDERS FROM PS-2 PRIMARY SWITCH #1 BACK TO THE PULL BOX UNDER THE PRIMARY SWITCHES IN THE VAULT.
7. REROUTE THE CONDUITS FOR 15KV FEEDERS FROM MH#16 TO THE 15KV 4-WAY JUNCTIONS INSIDE THE VAULT.
8. CONNECT EXISTING 15KV CABLES FROM PS-7 TO THE 4-WAY SUBMERSIBLE DEAD BREAK JUNCTIONS IN EXISTING PS-2 VAULT. SPLICE CABLES IF REQUIRED.
9. PULL NEW 15KV CABLES FROM NEW PS-2 BUS #1 PRIMARY VACUUM BREAKER UP TO NEW CORRESPONDING 4-WAY JUNCTIONS IN EXISTING PS-2 VAULT VIA EXISTING 4" DUCTS IN EXISTING DUCT BANK AND NEW CONDUITS INSTALLED IN STEP D.3.
10. CABLES SHALL BE TESTED AS PER NETA STANDARDS BEFORE ENERGIZING. TESTS SHALL BE PERFORMED BY A THIRD PARTY CERTIFIED ELECTRICAL TESTING COMPANY.
11. SCHEDULE POWER OUTAGES FOR STEPS E.5 THRU E.10 AS REQUIRED.
12. ENERGIZE CABLE.
13. PERFORM STEPS FROM E.5 THRU E.10 FOR MV VACUUM BREAKER SIDE 1 FIRST.
14. VERIFY THE OPERATION OF ALL PRIMARY SUBSTATIONS AND ALL DOWNSTREAM EQUIPMENT.

F. TRANSFERRING EXISTING LOADS FROM EXISTING PS-2 TO NEW PS-2

1. TRANSFERRING EXISTING MCC-15, BUS #1 TO NEW SUBSTATION PS-2:
   a. SCHEDULE SHORT OUTAGE AT BUS #1 OF MCC-15, OPEN MAIN #1 BREAKER AND CLOSE TIE CIRCUIT BREAKER. NOW MCC15 IS BEING FED FROM ONE FEEDER.
   b. OPEN SWITCHGEAR FEEDER BREAKER FOR MCC-15 AT BOTH EXISTING AND NEW PS-2 SUBSTATIONS.
   c. DISCONNECT AND REMOVE THE FEEDER FOR MCC-15 BUS #1 BACK TO THE EXISTING PS-2 VAULT.
   d. INSTALL NEW CONDUITS FROM NEW INDOOR SWITCHGEAR TO MCC-15 BUS #1
   e. PULL NEW WIRES FROM NEW SWITCHGEAR TO MCC-15 BUS #1 VIA NEW CONDUIT AND, PULL BOXES ETC.
   f. TEST CABLES.
   g. CLOSE FEEDER BREAKER AT NEW PS-2 TO ENERGIZE CABLES.
   h. SCHEDULE AN OUTAGE AT BUS #1 OF MCC-15, OPEN TIE BREAKER AND CLOSE MAIN #1 BREAKER.
   i. VERIFY THE OPERATION OF NEW PS-2, MCC-15 AND ALL DOWNSTREAM EQUIPMENT.
   j. NOW EXISTING MCC-15, BUS #2 IS BEING FED FROM EXISTING PS-2 AND BUS #1 FROM NEW PS-2.
2. TRANSFERRING EXISTING MCC-23 TO NEW PS-2:
   a. FROM STEPS E.1 THRU E.3, MCC-23 IS ONLY FED FROM ONE BUS.
   b. SCHEDULE SHORT OUTAGE AT BUS #2 OF MCC-23, OPEN MAIN #1 BREAKER AND OPEN THE TIE CIRCUIT BREAKER. NOW MCC-23 IS DOWN.
   c. CLOSE MAIN #2 BREAKER SO ONE SIDE OF MCC-23 IS ENERGIZED.
   d. INSTALL NEW CONDUITS FROM NEW INDOOR SWITCHGEAR TO MCC-23 BUS #1.
   e. PULL NEW WIRES FROM NEW SWITCHGEAR TO MCC-23 BUS #1VIA NEW CONDUIT AND, PULL BOXES ETC.
   f. REPEAT ABOVE STEPS F.1.F THRU F.1.J FOR MCC-23.
3. TRANSFERRING EXISTING POWER CENTER PC-1 LOAD TO NEW PS-2:
   a. SCHEDULE A COMPLETE OUTAGE AT PC-1. OPEN MAIN BREAKER AT PC-1.
   b. OPEN SWITCHGEAR FEEDER BREAKER FOR PC-1 AT EXISTING PS-2 SUBSTATION AND FEEDER BREAKER FOR CENTRIFUGE #3 AT NEW PS-2 SUBSTATION.
   c. DISCONNECT THE FEEDER FOR PC-1 AND PULL THE CABLE BACK TO THE EXISTING PS-2 VAULT.
   d. INSTALL NEW CONDUIT FROM NEW INDOOR SWITCHGEAR TO A PULL BOX IN THE DRYER BUILDING TO ROUTE THE FEEDER TO CENTRIFUGE #3.
   e. PULL NEW WIRES FROM NEW INDOOR SWITCHGEAR PS-2 VIA NEW AND EXISTING CONDUIT, PULL BOXES ETC. UP TO THE CENTRIFUGE BUILDING AND CONNECT TO CENTRIFUGE #3 CONTROL PANEL.
   f. TEST NEW CABLES.
   g. CLOSE FEEDER BREAKER AT NEW PS-2.
   h. NOW CENTRIFUGE #3 IS BEING FED FROM NEW PS-2.
   i. VERIFY THE OPERATION OF ALL EQUIPMENT
4. TRANSFERRING EXISTING PC-2 LOADS TO NEW PS-2:
   a. REPEAT ABOVE STEPS F.3.a THRU F.3.i FOR CENTRIFUGES #1 AND #2.
5. TRANSFERRING NEW MCC-9 TO NEW PS-2:
   a. REPEAT ABOVE STEPS F.1.a THRU F.1.j FOR MCC-9.

G. DEMOLITION OF PC-1 AND PC-2

1. DEMOLISH EXISTING POWER CENTER 1 AND POWER CENTER-2 TO MAKE ROOM FOR NEW MCC-10

H. INSTALLATION OF THE MV AND 480V FEEDERS FOR BUS #2 OF NEW PS-2

1. SCHEDULE SHORT OUTAGE AT BUS #2 OF EXISTING PS-2, OPEN MAIN BREAKER #2 AND OPEN MAIN BREAKER #2 FOR MCC-9, MCC-15 AND MCC-23.
2. CLOSE THE TIE BREAKERS AT MCC-9, MCC-15 AND MCC-23.
3. NOW ALL MCCS ARE FED FROM NEW PS-2 BUS #1, THE FEEDERS FROM THE EXISTING SUBSTATION CAN BE DISCONNECTED.
4. DISCONNECT AND REMOVE ALL WIRES FROM EXISTING AND NEW MCCS, AND PCS BACK TO OUTDOOR EXISTING SWITCHGEAR.
5. NOW TWO CONDUITS FROM MCC-23 ARE AVAILABLE FROM EXISTING VAULT TO THE ELECTRICAL ROOM TO ROUTE MV FEEDERS TO NEW SWITCHGEAR BUS #2.
6. REPEAT STEPS E.5 THRU E.14 FOR BUS #2.
7. INSTALL NEW CONDUITS AND CABLES FROM NEW INDOOR SWITCHGEAR BUS #2 SECTIONS TO NEW MCC-9, EXISTING MCC-15 AND MCC-23 BUS #2.
8. REPEAT STEPS F.1.e THRU F.1.i. FOR MCC-9, 15 AND 23 BUS #2.

I. INSTALLATION OF NEW MCC-10 AND FEEDERS

1. INSTALL NEW MCC-10 IN THE DRYER BUILDING ELECTRICAL ROOM.
2. INSTALL BUS DUCT FROM NEW INDOOR SWITCHGEAR TO BOTH MAIN LUGS ONLY SECTIONS OF MCC-10.
3. INSTALL CABLES FROM NEW MCC-10 TO MCC-10 SEC (A, B, C) IN THE DRYER BUILDING ELECTRICAL ROOM.
4. TEST FEEDERS.
5. TERMINATE AT BOTH NEW SUBSTATION PS-2 AND MCC MLO SECTION.
6. ENERGIZE NEW MCC-10 FROM NEW PS-2.
7. VERIFY OPERATION OF NEW MCC-10.
8. ADD NEW LOADS AS SHOWN FROM NEW MCC-10 BY INSTALLING NEW CONDUITS, CABLES ETC. AND TERMINATING AND ENERGIZING FROM NEW MCC-10.

J. DEMOLITION OF EXISTING PS-2 AND GENERATOR DUCT BANK

1. VERIFY THAT ALL EXISTING LOADS HAVE BEEN TRANSFERRED TO NEW PS-2.
2. DEMOLISH PS-2 INCLUDING PRIMARY SWITCHES, TRANSFORMERS, SWITCHGEAR, PULL BOXES AND CONDUITS AS REQUIRED.
3. DEMOLISH THE GENERATOR CONNECTION BOX, THE DUCT BANKS AND CABLES ASSOCIATED WITH IT.

GENERAL SEQUENCE OF WHAT REMAINS TO BE COMPLETED IN THE FOLLOWING ORDER:

1. TRANSFER MCC-9 MAIN 1 TO NEW PS-2 AND DEMO FEEDER FROM OLD PS-2
2. TRANSFER MCC-9 MAIN 2 TO NEW PS-2
3. CENTRIFUGE 1 TO NEW PS-2
4. CENTRIFUGE 3 TO NEW PS-2
5. CENTRIFUGE 2 TO NEW PS-2
6. DEMO PC-1 AND PC-2
7. INSTALL MCC-10
8. TRANSFER MCC-23 MAIN 1 TO NEW PS-2
9. TRANSFER MCC-23 MAIN 2 TO NEW PS-2
10. TRANSFER MCC-15 MAIN 1 TO NEW PS-2
11. TRANSFER MCC-15 MAIN 2 TO NEW PS-2
12. DEMO OLD PS-2

GENERAL NOTES:

1. FOR EXISTING AREA INCLUDED IN THIS PROJECT FOR THE FIRE SUPPRESSION AND FIRE ALARM PLAN, CONTRACTOR SHALL FIELD VERIFY AND CONFIRM THAT EXISTING EXIT AND EMERGENCY LIGHTS IN EXISTING AREA OF BIOSOLIDS PROCESSING FACILITY ARE FUNCTIONAL AND MEET THE CODE. IN THE EVENT THAT THE EXIT AND EMERGENCY LIGHTS ARE NOT FUNCTIONAL OR DO NOT MEET THE CODE, CONTRACTOR SHALL REPLACE OR PROVIDE LIGHTS PER CODE. EXISTING AREAS INCLUDE THE PIPE GALLERY, GRAVITY BELT THICKENER AREA AND SOLIDS SCREENING AREA. REFER TO THE FIRE SUPPRESSION AND FIRE ALARM PLAN "F" SHEETS FOR MORE INFORMATION AND THE GENERAL "G" SHEETS FOR LAYOUT OF BIOSOLIDS PROCESSING FACILITY AND RELATIVE LOCATION OF EACH OF THESE EXISTING AREAS.
2. PS-2 FEEDER 1 IS INACTIVE. NORMAL CONDITIONS, TIE IS CLOSED.
3. IGNORE ALL REFERENCES TO BUS DUCT. THIS IS TO BE CONDUIT AND WIRE.
4. PS-2 FEEDER 1 IS REPLACED FIRST.
5. ITEM F.3. THROUGH G.1. WILL BE COMPLETED IN ADVANCE OF ITEM F.1.
6. ITEM I. WILL BE COMPLETED IN ADVANCE OF ITEM F.1.
7. AS THIS IS A SUGGESTED SEQUENCE, MARK UPS ARE INTENDED FOR REFERENCE TO CHANGES IN PLANS. NOT ALL CHANGES ARE MARKED UP, FOR EXAMPLE, SOME CONSTRUCTION ACTIVITIES THAT DO NOT AFFECT FEEDER/BREAKER STATUS WILL BE COMPLETED AS EXPEDIENT TO CONTRACTOR AND SCHEDULE DEMANDS.

THE DRAWINGS IN THIS SET ARE RECORD DRAWINGS. THEY ARE CONSTRUCTION CONTRACT DRAWINGS WHICH HAVE BEEN REVISED BASED ON AVAILABLE FIELD INFORMATION RECORDED BY OTHERS DURING CONSTRUCTION OF THIS CONTRACT. THERE HAS BEEN NO VERIFICATION OF DIMENSIONS SHOWN ON THE CONSTRUCTION DRAWINGS OR THE ACCURACY/COMPLETENESS OF THE FIELD INFORMATION RECEIVED.

SIGNATURE _____ DATE 2/7/2023

SHAH & ASSOCIATES

HDR

AS-BUILT REPLACEMENT SHEET

PROFESSIONAL CERTIFICATION
THIS DRAWING WAS ORIGINALLY APPROVED FOR CONSTRUCTION AND SEALED BY KANAIYALAL R. SHAH, A REGISTERED PROFESSIONAL ENGINEER IN THE STATE OF MARYLAND, NO. 11084

NOTICE TO CONTRACTORS
- PROJECT ELEVATIONS ARE BASED ON NAVD88 AND HOWARD COUNTY'S BENCHMARK SYSTEM
- PREVIOUS PROJECTS USED OTHER DATUMS
- APPLY THE FOLLOWING CONVERSIONS WHEN USING PREVIOUS CONTRACT DRAWINGS:
  - ADDITION NO. 6: SUBTRACT 0.80 FT
  - PRIOR ADDITIONS: SUBTRACT 1.04 FT

DEPARTMENT OF PUBLIC WORKS
HOWARD COUNTY, MARYLAND

CHIEF, BUREAU OF UTILITIES DATE

DES: MM
DRN: DMG
CHK: KRS
DATE: 01/15/2018

DATE	REV	DESCRIPTION
03/2021		RECORD DRAWING

ELECTRICAL

CONSTRUCTION SEQUENCE

LITTLE PATUXENT WATER RECLAMATION PLANT
8TH ADDITION
BIOSOLIDS PROCESSING FACILITIES - PHASE 2

CAPITAL PROJECT S-6295
CONTRACT NO. 24-4936

ELECTION DISTRICT NO. 6
HOWARD COUNTY, MARYLAND

SCALE AS SHOWN

SHEET 209 OF 311

E-2

BIM 360://10054364 – Little Patuxent WRP 8th Addition/264592_100_E_V18.rvt
1/8/2022 10:29:18 AM

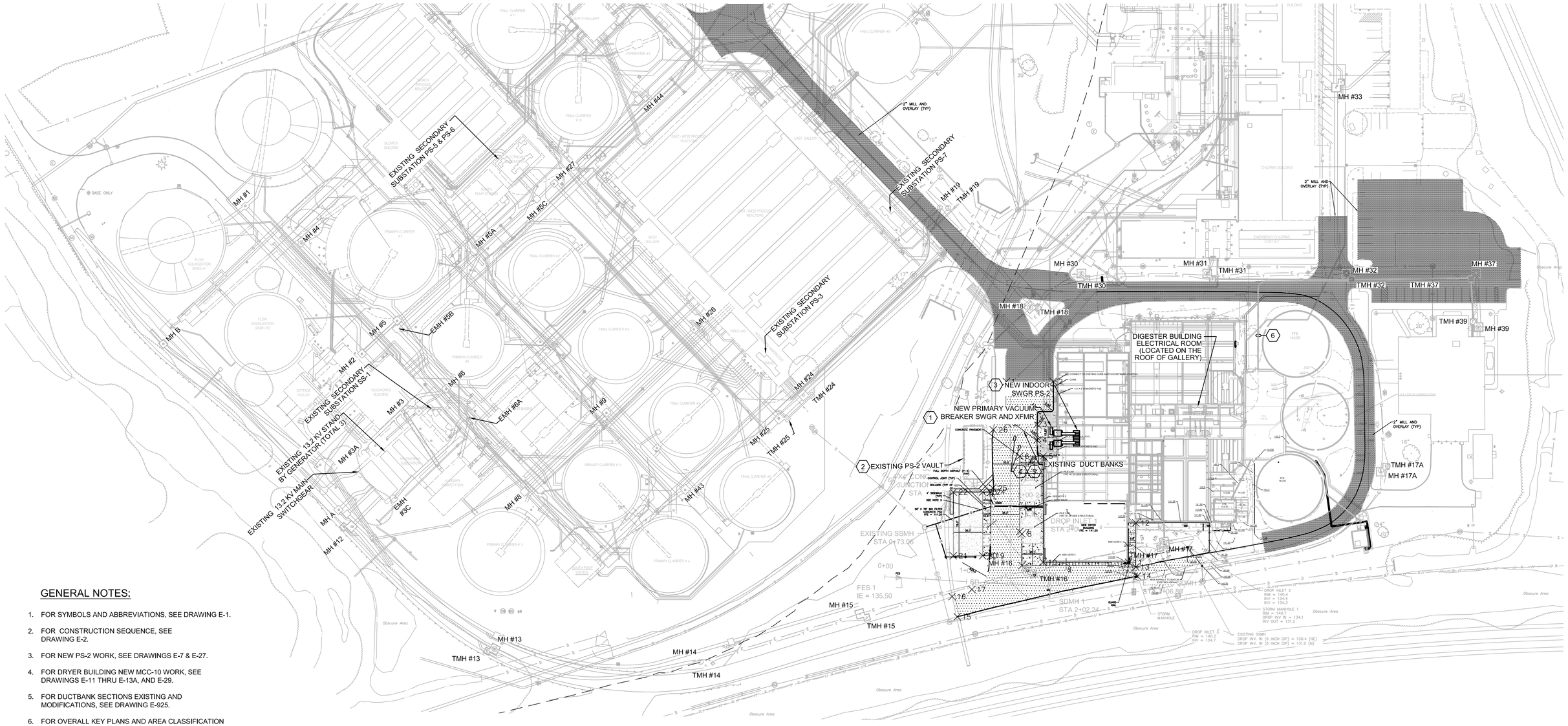

GENERAL NOTES:

1. FOR SYMBOLS AND ABBREVIATIONS, SEE DRAWING E-1.
2. FOR CONSTRUCTION SEQUENCE, SEE DRAWING E-2.
3. FOR NEW PS-2 WORK, SEE DRAWINGS E-7 & E-27.
4. FOR DRYER BUILDING NEW MCC-10 WORK, SEE DRAWINGS E-11 THRU E-13A, AND E-29.
5. FOR DUCTBANK SECTIONS EXISTING AND MODIFICATIONS, SEE DRAWING E-925.
6. FOR OVERALL KEY PLANS AND AREA CLASSIFICATION PLAN, SEE DRAWING G-17 THRU G-26.

DRAWING NOTES:

(1) PROVIDE AND INSTALL PRIMARY VACUUM BREAKER SWITCHGEAR AND DRY TYPE TRANSFORMER ON ELEVATED PLATFORM ADJACENT TO THE DRYER BUILDING ELECTRICAL ROOM.

(2) USE 15KV 4-WAY SUBMERSIBLE DEAD BREAK JUNCTION TO SPLICE MEDIUM VOLTAGE CABLES INSIDE SPLICE BOXES INSTALLED INSIDE THE EXISTING VAULT.

(3) PROVIDE AND INSTALL 480V INDOOR SWITCHGEAR.

(4) PROVIDE AND INSTALL NEW 15KV CABLES FROM THE VAULT TO THE OUTDOOR PS-2. USE EXISTING DUCTS IN THE EXISTING DUCTBANK FOR 4 CONDUITS.

DRAWING NOTES:

(5) CONTRACTOR SHALL FIELD VERIFY THAT THE EXISTING DUCT BANK CAN BE REUSED FOR THE NEW CABLES AND IF THE EXISTING DUCT BANK CAN NOT BE REUSED FOR THE NEW 15KV CABLES, INSTALL NEW DUCT BANK BETWEEN THE EXISTING VAULT AND THE DRYER BUILDING ELECTRICAL ROOM AND ROUTE THE 15KV CABLES TO THE OUTDOOR PS-2.

(6) PROVIDE AND INSTALL NEW FIBER OPTIC CABLES FROM THE ADMINISTRATION BUILDING NETWORK INTERFACE PANEL TO THE NEW DRYER AREA PLC NETWORK INTERFACE PANEL AS FOLLOWS:

a. IN EXISTING SPARE DUCTS INSTALLED IN PHASE 1 OF THIS PROJECT VIA MANHOLES TMH #39, TMH #37, TMH #32, THE DIGESTER BUILDING AND THE PIPE GALLERY.

b. IN CONDUIT FROM THE PIPE GALLERY TO THE DRYER BUILDING AREA PLC NETWORK INTERFACE PANEL ROUTED INSIDE THE BUILDING.

THE DRAWINGS IN THIS SET ARE RECORD DRAWINGS. THEY ARE CONSTRUCTION CONTRACT DRAWINGS WHICH HAVE BEEN REVISED BASED ON AVAILABLE FIELD INFORMATION RECORDED BY OTHERS DURING CONSTRUCTION OF THIS CONTRACT. THERE HAS BEEN NO VERIFICATION OF DIMENSIONS SHOWN ON THE CONSTRUCTION DRAWINGS OR THE ACCURACY/COMPLETENESS OF THE FIELD INFORMATION RECEIVED.

SIGNATURE _____ DATE 2/7/2023

N

0 60 120 180

SCALE: 1" = 60'

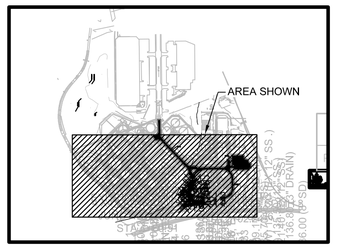

KEYMAP

SHAH & ASSOCIATES

AS-BUILT REPLACEMENT SHEET

PROFESSIONAL CERTIFICATION
THIS DRAWING WAS ORIGINALLY APPROVED FOR CONSTRUCTION AND SEALED BY KANAIYALAL R. SHAH, A REGISTERED PROFESSIONAL ENGINEER IN THE STATE OF MARYLAND, NO. 11084.

NOTICE TO CONTRACTORS
- PROJECT ELEVATIONS ARE BASED ON NAVD88 AND HOWARD COUNTY'S BENCHMARK SYSTEM
- PREVIOUS PROJECTS USED OTHER DATUMS
- APPLY THE FOLLOWING CONVERSIONS WHEN USING PREVIOUS CONTRACT DRAWINGS:
  - ADDITION NO. 6: SUBTRACT 0.80 FT
  - PRIOR ADDITIONS: SUBTRACT 1.04 FT

DEPARTMENT OF PUBLIC WORKS
HOWARD COUNTY, MARYLAND

CHIEF, BUREAU OF UTILITIES DATE

DES: MM
DRN: DMG
CHK: KRS
DATE:01/2018

DATE	REV	DESCRIPTION
03/2021		RECORD DRAWING

ELECTRICAL

OVERALL ELECTRICAL SITE PLAN EXISTING AND NEW WORK

LITTLE PATUXENT WATER RECLAMATION PLANT
8TH ADDITION
BIOSOLIDS PROCESSING FACILITIES - PHASE 2

CAPITAL PROJECT S-6295
CONTRACT NO. 24-4936

ELECTION DISTRICT NO. 6
HOWARD COUNTY, MARYLAND

SCALE AS SHOWN

SHEET 210 OF 311

E-3

C:\pwworking\pitt\d1900826\E-3 AND E-4.dwg 01/12/22 14:21

GENERAL NOTES:

1. FOR SYMBOLS AND ABBREVIATIONS, SEE DRAWING E-1.
2. FOR CONSTRUCTION SEQUENCE, SEE DRAWING E-2.
3. FOR NEW PS-2 ONE LINE DIAGRAM, SEE DRAWING E-7.
4. FOR DUCTBANK SECTIONS EXISTING AND MODIFICATIONS, SEE DRAWING E-925.

DRAWING NOTES:

(1) PROVIDE AND INSTALL NEW FIBER OPTIC CABLES FROM THE ADMINISTRATION BUILDING NETWORK INTERFACE PANEL TO THE NEW DRYER AREA PLC NETWORK INTERFACE PANEL AS FOLLOWS:

a. IN EXISTING SPARE DUCTS INSTALLED IN PHASE 1 OF THIS PROJECT VIA MANHOLES TMH #39, TMH #37, TMH #32, THE DIGESTER BUILDING AND THE PIPE GALLERY.

b. IN CONDUIT FROM THE PIPE GALLERY TO THE DRYER BUILDING AREA PLC NETWORK INTERFACE PANEL ROUTED INSIDE THE BUILDING.

TMH #18
MH #18
B E-925
CONNECT TO EXISTING CURB. MATCH EXISTING ELEVATION.
CURB
4.8' X 5' CONCRETE PAD
57.3'
2.50'
2.50'
CURB WIPE DOWN (TYP)
TO NEW INDOOR SWGR PS-2
3.00'
NEW PRIMARY VACUUM BREAKER SWGR AND XMFR
CONCRETE PAVEMENT
5.00'
4' SIDEWALK (TYP)
4.1' X 5.8' CONCRETE PAD
D E-925
2.50'
33.0'
28.8'
EXISTING DUCT BANKS
EXISTING PS-2 VAULT
FULL DEPTH ASPHALT (P-4) (TYP)
PILE CAP FFE 141.20 (SEE STRUCTURAL)
CONTROL JOINT (TYP)
BOLLARD (TYP OF 5)
4' SIDEWALK (TYP)
SEE NOTE 5
SSMH
BIOSOLIDS STORAGE TANK NO. 1
SEE NOTE 5
DROP INLET
36' X 78' BIO FILTER CONCRETE PAD FFE = 141.20
35.3'
10.01'
PILE CAP FFE 141.20 (SEE STRUCTURAL)
78.0'
36.0'
DROP INLET 1 STA 2+06.33
NEW DRYER BUILDING FFE = 141.20
BIOSOLIDS STORAGE TANK NO. 2
EXISTING SSMH STA 0+73.06
8.9'
SEE NOTE 5
MH #17
TMH #17
A E-925
26.1'
SEE NOTE 5
4.0'
MH #16
TMH #16
R35.0'
NEW ASPHALT TO MATCH EXISTING ASPHALT
EXISTING STA 3+06.86
FES
FES 1 IE = 135.50
MH
EX. MH 14
DIGESTER BUILDING ELECTRICAL ROOM (LOCATED ON THE ROOF OF GALLERY)
TO DRYER AREA PLC NETWORK INTERFACE PANEL
EXISTING PULL BOX
N
0 20 40 60
SCALE: 1" = 20'

THE DRAWINGS IN THIS SET ARE RECORD DRAWINGS. THEY ARE CONSTRUCTION CONTRACT DRAWINGS WHICH HAVE BEEN REVISED BASED ON AVAILABLE FIELD INFORMATION RECORDED BY OTHERS DURING CONSTRUCTION OF THIS CONTRACT. THERE HAS BEEN NO VERIFICATION OF DIMENSIONS SHOWN ON THE CONSTRUCTION DRAWINGS OR THE ACCURACY/COMPLETENESS OF THE FIELD INFORMATION RECEIVED.

SIGNATURE — DATE 2/7/2023

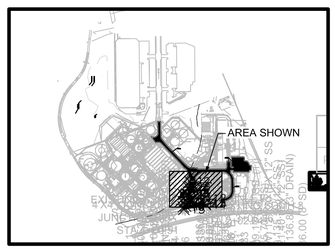

KEYMAP

SHAH & ASSOCIATES

AS-BUILT REPLACEMENT SHEET

PROFESSIONAL CERTIFICATION
THIS DRAWING WAS ORIGINALLY APPROVED FOR CONSTRUCTION AND SEALED BY KANAIYALAL R. SHAH, A REGISTERED PROFESSIONAL ENGINEER IN THE STATE OF MARYLAND, NO. 11084.

NOTICE TO CONTRACTORS
- PROJECT ELEVATIONS ARE BASED ON NAVD88 AND HOWARD COUNTY'S BENCHMARK SYSTEM
- PREVIOUS PROJECTS USED OTHER DATUMS
- APPLY THE FOLLOWING CONVERSIONS WHEN USING PREVIOUS CONTRACT DRAWINGS:

- ADDITION NO. 6: SUBTRACT 0.80 FT
- PRIOR ADDITIONS: SUBTRACT 1.04 FT

DEPARTMENT OF PUBLIC WORKS
HOWARD COUNTY, MARYLAND

CHIEF, BUREAU OF UTILITIES — DATE

DES: MM
DRN: DMG
CHK: KRS
DATE:01/2018

DATE	REV	DESCRIPTION
03/2021		RECORD DRAWING

ELECTRICAL

ELECTRICAL SITE PLAN EXISTING AND NEW WORK

LITTLE PATUXENT WATER RECLAMATION PLANT
8TH ADDITION
BIOSOLIDS PROCESSING FACILITIES - PHASE 2

CAPITAL PROJECT S-6295
CONTRACT NO. 24-4936

ELECTION DISTRICT NO. 6
HOWARD COUNTY, MARYLAND

SCALE AS SHOWN

SHEET 211 OF 311

E-4

C:\pwworking\pitt\d1900826\E-3 AND E-4.dwg 01/12/22_14:25

GENERAL NOTES:

1. FOR SYMBOLS AND ABBREVIATIONS, SEE DRAWING E-1.
2. FOR CONSTRUCTION SEQUENCE, SEE DRAWING E-2.
3. FOR ELECTRICAL SITE PLAN EXISTING AND NEW WORK, SEE DRAWINGS E-3 AND E-4.
4. FOR EXISTING SUBSTATION PS-2 VAULT, NEW SUBSTATION PS-2 LOCATION, SEE DRAWING E-3.
5. FOR EXISTING AND NEW INDOOR SWITCHGEAR AND MCCs LOCATIONS, SEE DRAWING E-29.

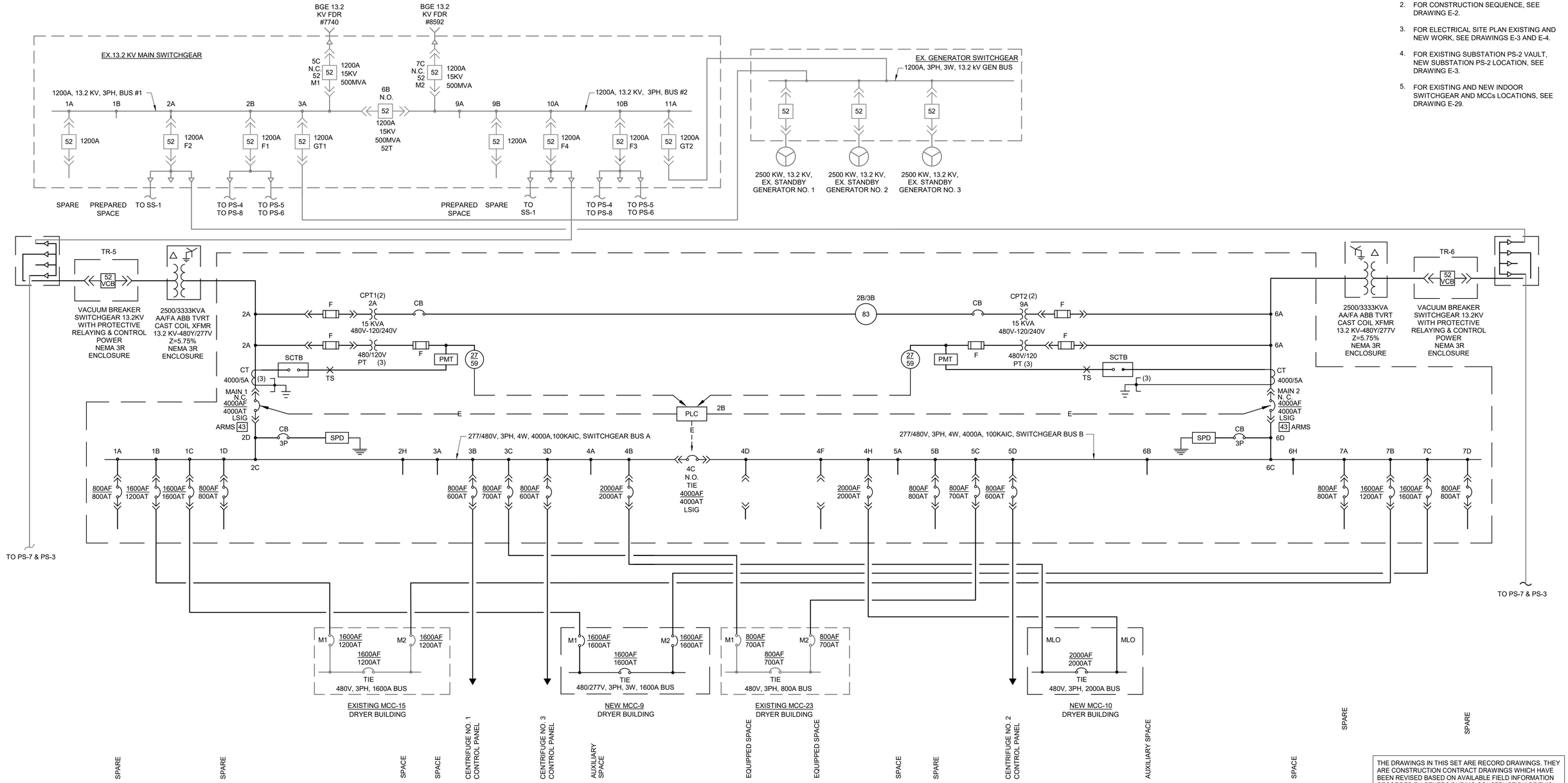

OVERALL ONE LINE DIAGRAM EXISTING AND MODIFICATION

NO SCALE

THE DRAWINGS IN THIS SET ARE RECORD DRAWINGS. THEY ARE CONSTRUCTION CONTRACT DRAWINGS WHICH HAVE BEEN REVISED BASED ON AVAILABLE FIELD INFORMATION RECORDED BY OTHERS DURING CONSTRUCTION OF THIS CONTRACT. THERE HAS BEEN NO VERIFICATION OF DIMENSIONS SHOWN ON THE CONSTRUCTION DRAWINGS OR THE ACCURACY/COMPLETENESS OF THE FIELD INFORMATION RECEIVED.

SIGNATURE — DATE 2/7/2022

SHAH & ASSOCIATES

AS-BUILT REPLACEMENT SHEET

PROFESSIONAL CERTIFICATION
THIS DRAWING WAS ORIGINALLY APPROVED FOR CONSTRUCTION AND SEALED BY KANAIYALAL R. SHAH, A REGISTERED PROFESSIONAL ENGINEER IN THE STATE OF MARYLAND, NO. 11084

NOTICE TO CONTRACTORS
- PROJECT ELEVATIONS ARE BASED ON NAVD88 AND HOWARD COUNTY'S BENCHMARK SYSTEM
- PREVIOUS PROJECTS USED OTHER DATUMS
- APPLY THE FOLLOWING CONVERSIONS WHEN USING PREVIOUS CONTRACT DRAWINGS:
  - ADDITION NO. 6: SUBTRACT 0.80 FT
  - PRIOR ADDITIONS: SUBTRACT 1.04 FT

DEPARTMENT OF PUBLIC WORKS
HOWARD COUNTY, MARYLAND

CHIEF, BUREAU OF UTILITIES — DATE

DES: MM
DRN: DMG
CHK: KRS
DATE: 01/15/2018

DATE	REV	DESCRIPTION
03/2021		RECORD DRAWING

ELECTRICAL

OVERALL ONE LINE DIAGRAM EXISTING AND MODIFICATION

LITTLE PATUXENT WATER RECLAMATION PLANT
8TH ADDITION
BIOSOLIDS PROCESSING FACILITIES - PHASE 2

CAPITAL PROJECT S-6295
CONTRACT NO. 24-4936

ELECTION DISTRICT NO. 6
HOWARD COUNTY, MARYLAND

SCALE AS SHOWN

SHEET 212 OF 311

E-6

BIM 360://10054364 – Little Patuxent WRP 8th Addition/264592_100_E_V18.rvt
1/8/2022 10:29:19 AM

DRAWING NOTES:

1. PROVIDE ELECTRICALLY OPERATED BREAKER WITH INTEGRAL TRIP UNIT FEATURING ARC FLASH REDUCTION MAINTENANCE SYSTEM(ARMS). PLACING "ARMS-43" SWITCH IN "MAINTENANCE" MODE SHALL ACTIVATE INSTANTANEOUS PROTECTION.
2. PROVIDE PLC BASED AUTOMATED CONTROLS BETWEEN MAINS AND TIE CIRCUIT BREAKERS FOR OPERATIONS DURING POWER OUTAGES OR MAINTENANCE. UPON RESTORATION, THERE SHALL BE OPEN TRANSITION BETWEEN TWO MAINS AND TIE. LOSS OF SINGLE UTILITY, EFFECTED MAIN BREAKER SHALL BE OPENED AND TIE CLOSED. LOSS OF BOTH UTILITY FEEDERS, BOTH MAINS AND TIE SHALL BE OPENED.
3. PROVIDE MICROPROCESSOR BASE MULTI-FUNCTION POWER QUALITY METER WITH ETHERNET COMMUNICATION CAPABILITY. PROVIDE POWER SUPPLY INPUT FUSES, CT AND PT TEST SWITCHES.
4. PROVIDE TIME DELAY FOR UNDER/OVER VOLTAGE RELAY TO AVOID NUISANCE OPERATION OF CIRCUIT BREAKERS.
5. CPT SIZE IS SHOWN AS MINIMUM REQUIREMENT. SWITCHGEAR MANUFACTURER SHALL BE RESPONSIBLE TO PROVIDE CPTs WITH ADEQUATE SIZE TO PROVIDE REQUIRED CONTROL POWER FOR ENTIRE SUBSTATION. CPT SHALL BE ACCOMMODATED IN THE SPACE AS INDICATED.
6. PROVIDE 13.2KV VACUUM CIRCUIT BREAKER SWITCHGEAR IN OUTDOOR WEATHER PROOF AISLESS ENCLOSURE, SWITCHING TRANSIENT VOLTAGE RESISTANT CAST COIL XFMR AND THROAT CONNECTION BETWEEN 13.2KV SWITCHGEAR AND THE XFMR.
7. PROVIDE AND INSTALL NON-SEGREGATED 480V, 4000A, 100 KAIC BUS DUCT FROM NEW SUBSTATION XFMR TO THE INDOOR SWITCHGEAR MAIN BREAKERS AS INDICATED. PROVIDE BUS DUCT HEATERS.
8. 4-WAY DEAD BREAK JUNCTION 15KV, 200A, SHIELDED AND SUBMERSIBLE HOUSING AND ELBOW CONNECTORS. TO BE INSTALLED IN EXISTING PS-2 VAULT.
9. PROVIDE AND INSTALL 480V, 2000A, 100KAIC BUS DUCT FROM NEW SWITCHGEAR TO NEW MCC-10.
10. PROVIDE KIRK BRAND KIRK KEY INTERLOCKS SUCH THAT INTERNAL ACCESS INTO THE TRANSFORMER ENCLOSURE AND OPERATION OF TAP CHANGER ARE PERMITTED ONLY WHEN TRANSFORMER IS DE-ENERGIZED FROM HV AND LV SIDES.
11. PROVIDE AND INSTALL KIRK KEY INTERLOCK CONFIGURED TO ONLY ALLOW TWO OF THREE BREAKERS TO BE CLOSED AT ANY TIME.

GENERAL NOTES:

1. FOR SYMBOLS AND ABBREVIATIONS, SEE DRAWING E-1.
2. FOR CONSTRUCTION SEQUENCE, SEE DRAWING E-2.
3. FOR ELECTRICAL SITE PLAN EXISTING AND NEW WORK, SEE DRAWINGS E-3 AND E-4.
4. FOR EXISTING SUBSTATION PS-2 VAULT LOCATION, SEE DRAWINGS E-3.
5. FOR EXISTING AND NEW INDOOR SWITCHGEAR AND MCCs LOCATIONS, SEE DRAWING E-29.
6. FOR NEW SUBSTATION PS-2 LOCATION, SEE DRAWING E-3 & E-29.

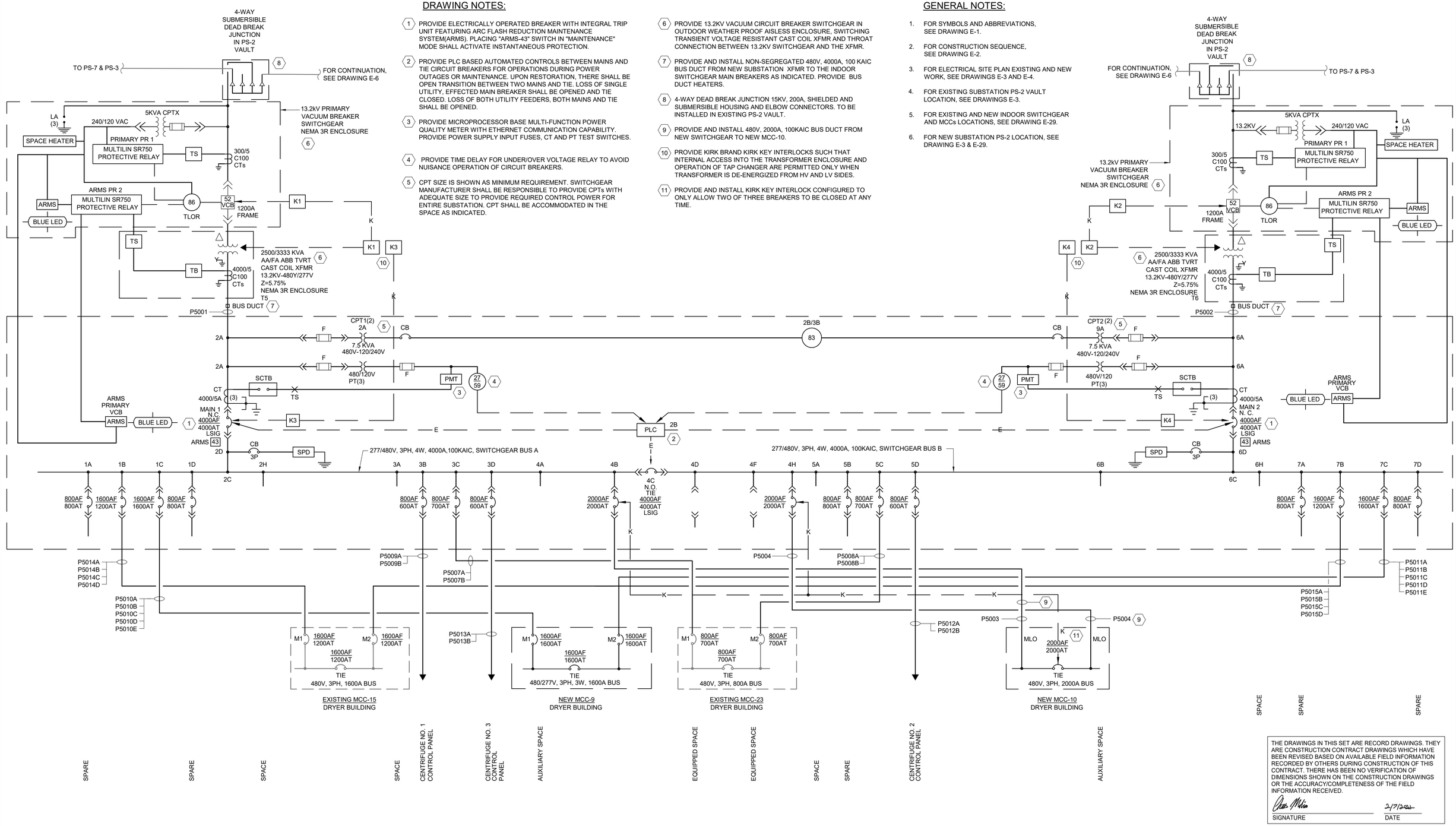

THE DRAWINGS IN THIS SET ARE RECORD DRAWINGS. THEY ARE CONSTRUCTION CONTRACT DRAWINGS WHICH HAVE BEEN REVISED BASED ON AVAILABLE FIELD INFORMATION RECORDED BY OTHERS DURING CONSTRUCTION OF THIS CONTRACT. THERE HAS BEEN NO VERIFICATION OF DIMENSIONS SHOWN ON THE CONSTRUCTION DRAWINGS OR THE ACCURACY/COMPLETENESS OF THE FIELD INFORMATION RECEIVED.

SIGNATURE — DATE 2/7/2020

SHAH & ASSOCIATES

AS-BUILT REPLACEMENT SHEET

PROFESSIONAL CERTIFICATION
THIS DRAWING WAS ORIGINALLY APPROVED FOR CONSTRUCTION AND SEALED BY KANAIYALAL R. SHAH, A REGISTERED PROFESSIONAL ENGINEER IN THE STATE OF MARYLAND, NO. 11084

NOTICE TO CONTRACTORS
- PROJECT ELEVATIONS ARE BASED ON NAVD88 AND HOWARD COUNTY'S BENCHMARK SYSTEM
- PREVIOUS PROJECTS USED OTHER DATUMS
- APPLY THE FOLLOWING CONVERSIONS WHEN USING PREVIOUS CONTRACT DRAWINGS:
  - ADDITION NO. 6: SUBTRACT 0.80 FT
  - PRIOR ADDITIONS: SUBTRACT 1.04 FT

DEPARTMENT OF PUBLIC WORKS
HOWARD COUNTY, MARYLAND

CHIEF, BUREAU OF UTILITIES — DATE

DES: MM
DRN: DMG
CHK: KRS
DATE: 01/15/2018

DATE	REV	DESCRIPTION
03/2021		RECORD DRAWING

ELECTRICAL

NEW ELECTRICAL SUBTATION PS-2 ONE LINE DIAGRAM

LITTLE PATUXENT WATER RECLAMATION PLANT
8TH ADDITION
BIOSOLIDS PROCESSING FACILITIES - PHASE 2

CAPITAL PROJECT S-6295
CONTRACT NO. 24-4936

ELECTION DISTRICT NO. 6
HOWARD COUNTY, MARYLAND

SCALE AS SHOWN

SHEET 213 OF 311

E-7

BIM 360://10054364 – Little Patuxent WRP 8th Addition/264592_100_E_V18.rvt
1/8/2022 10:29:20 AM

DRAWING NOTES:

1. EXISTING DISCONNECT SWITCHES TO REMAIN AND SIZE IS NOT SHOWN.
2. MAKE UP UNITS AND EXHAUST FANS ARE ALL BEING SUPPLIED WITH INTEGRAL DISCONNECT SWITCHES.

GENERAL NOTES:

1. FOR SYMBOLS AND ABBREVIATIONS, SEE DRAWING E-1.
2. FOR CONSTRUCTION SEQUENCE, SEE DRAWING E-2.
3. FOR MCC-9 ELEVATION, SEE DRAWINGS E-19 AND E-20.
4. FOR NEW MCC-9 LOCATION, SEE DRAWING E-29.
5. FOR CABLE AND CONDUIT SCHEDULE, SEE DRAWINGS E-908 THRU E-914A.
6. NOT ALL EXISTING LOADS ARE LOCATED ON PLAN DRAWINGS. CONTRACTOR SHALL SURVEY / VERIFY EXISTING MCC-9 AND MCC-10 LOADS LOCATION BEFORE PERFORMING WORK.

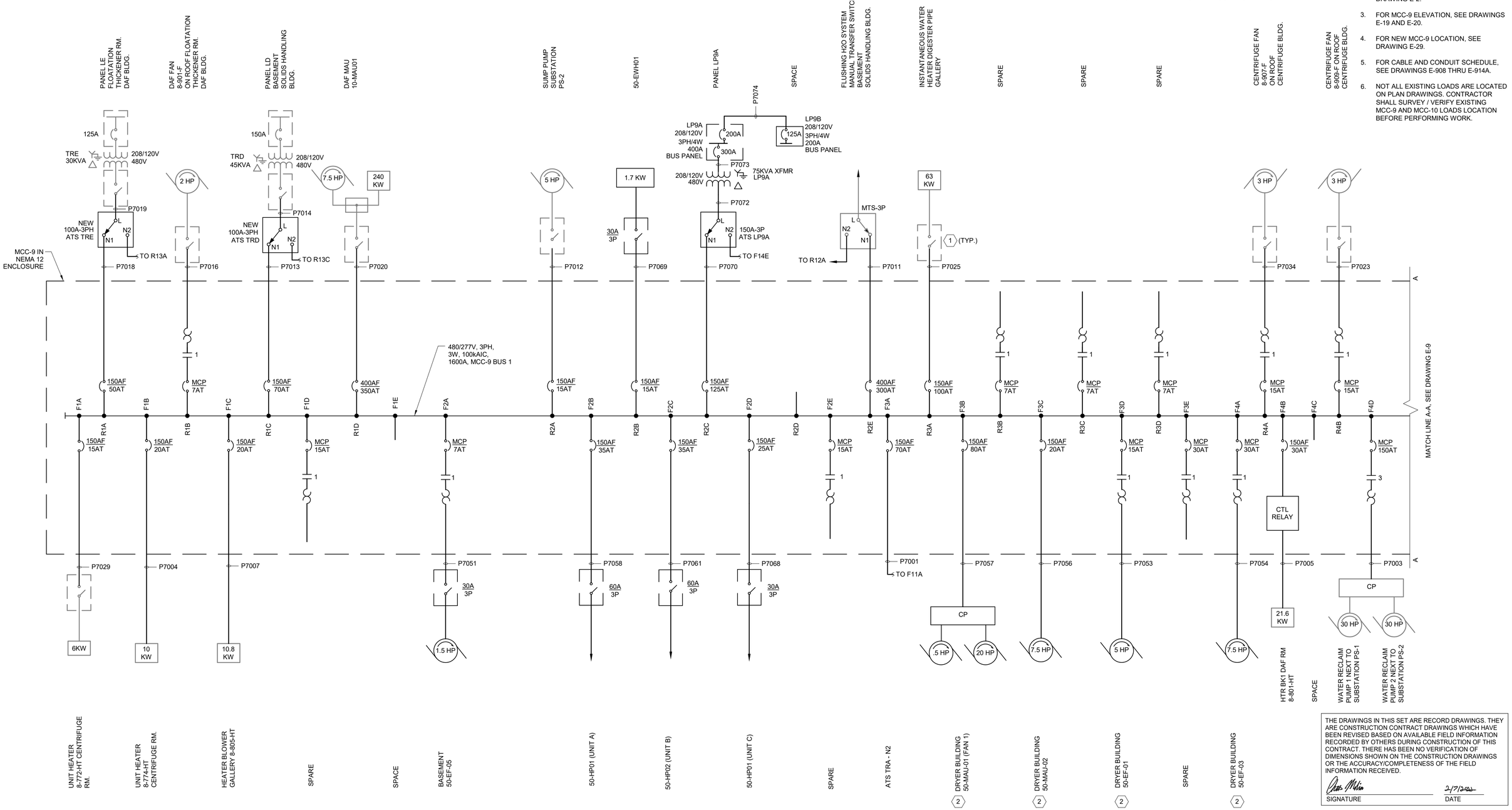

THE DRAWINGS IN THIS SET ARE RECORD DRAWINGS. THEY ARE CONSTRUCTION CONTRACT DRAWINGS WHICH HAVE BEEN REVISED BASED ON AVAILABLE FIELD INFORMATION RECORDED BY OTHERS DURING CONSTRUCTION OF THIS CONTRACT. THERE HAS BEEN NO VERIFICATION OF DIMENSIONS SHOWN ON THE CONSTRUCTION DRAWINGS OR THE ACCURACY/COMPLETENESS OF THE FIELD INFORMATION RECEIVED.

SIGNATURE — DATE 2/7/2023

SHAH & ASSOCIATES

AS-BUILT REPLACEMENT SHEET

PROFESSIONAL CERTIFICATION
THIS DRAWING WAS ORIGINALLY APPROVED FOR CONSTRUCTION AND SEALED BY KANAIYALAL R. SHAH, A REGISTERED PROFESSIONAL ENGINEER IN THE STATE OF MARYLAND, NO. 11084

NOTICE TO CONTRACTORS
- PROJECT ELEVATIONS ARE BASED ON NAVD88 AND HOWARD COUNTY'S BENCHMARK SYSTEM
- PREVIOUS PROJECTS USED OTHER DATUMS
- APPLY THE FOLLOWING CONVERSIONS WHEN USING PREVIOUS CONTRACT DRAWINGS:
  - ADDITION NO. 6: SUBTRACT 0.80 FT
  - PRIOR ADDITIONS: SUBTRACT 1.04 FT

DEPARTMENT OF PUBLIC WORKS
HOWARD COUNTY, MARYLAND

CHIEF, BUREAU OF UTILITIES — DATE

DES: SR
DRN: DMG
CHK: KRS
DATE: 01/15/2018

DATE	REV	DESCRIPTION
03/2021		RECORD DRAWING

ELECTRICAL

DRYER BUILDING
NEW MCC-9 ONE LINE DIAGRAM I

LITTLE PATUXENT WATER RECLAMATION PLANT
8TH ADDITION
BIOSOLIDS PROCESSING FACILITIES - PHASE 2

CAPITAL PROJECT S-6295
CONTRACT NO. 24-4936

ELECTION DISTRICT NO. 6
HOWARD COUNTY, MARYLAND

SCALE AS SHOWN

SHEET 214 OF 311

E-8

BIM 360://10054364 – Little Patuxent WRP 8th Addition/264592_100_E_V18.rvt
1/8/2022 10:29:21 AM

DRAWING NOTES:

1. PROVIDE KIRK KEY INTERLOCK CONFIGURED TO ONLY. ALLOW 2 OF 3 BREAKERS TO BE CLOSED AT ANY TIME.
2. EXISTING DISCONNECT SWITCHES TO REMAIN AND SIZE AS SHOWN.
3. MAKE-UP UNITS AND EXHAUST FANS ARE ALL BEING SUPLIED WITH INTEGRAL DISCONNECT SWITCHES.

GENERAL NOTES:

1. FOR SYMBOLS AND ABBREVIATIONS, SEE DRAWING E-1.
2. FOR CONSTRUCTION SEQUENCE, SEE DRAWING E-2.
3. FOR MCC-9 ELEVATION, SEE DRAWINGS E-19 AND E-20.
4. FOR NEW MCC-9 LOCATION, SEE DRAWING E-29.
5. FOR CABLE AND CONDUIT SCHEDULE, SEE DRAWINGS E-908 THRU E-914A.
6. NOT ALL EXISTING LOADS ARE LOCATED ON PLAN DRAWINGS. CONTRACTOR SHALL SURVEY / VERIFY EXISTING MCC-9 AND MCC-10 LOADS LOCATION BEFORE PERFORMING WORK.

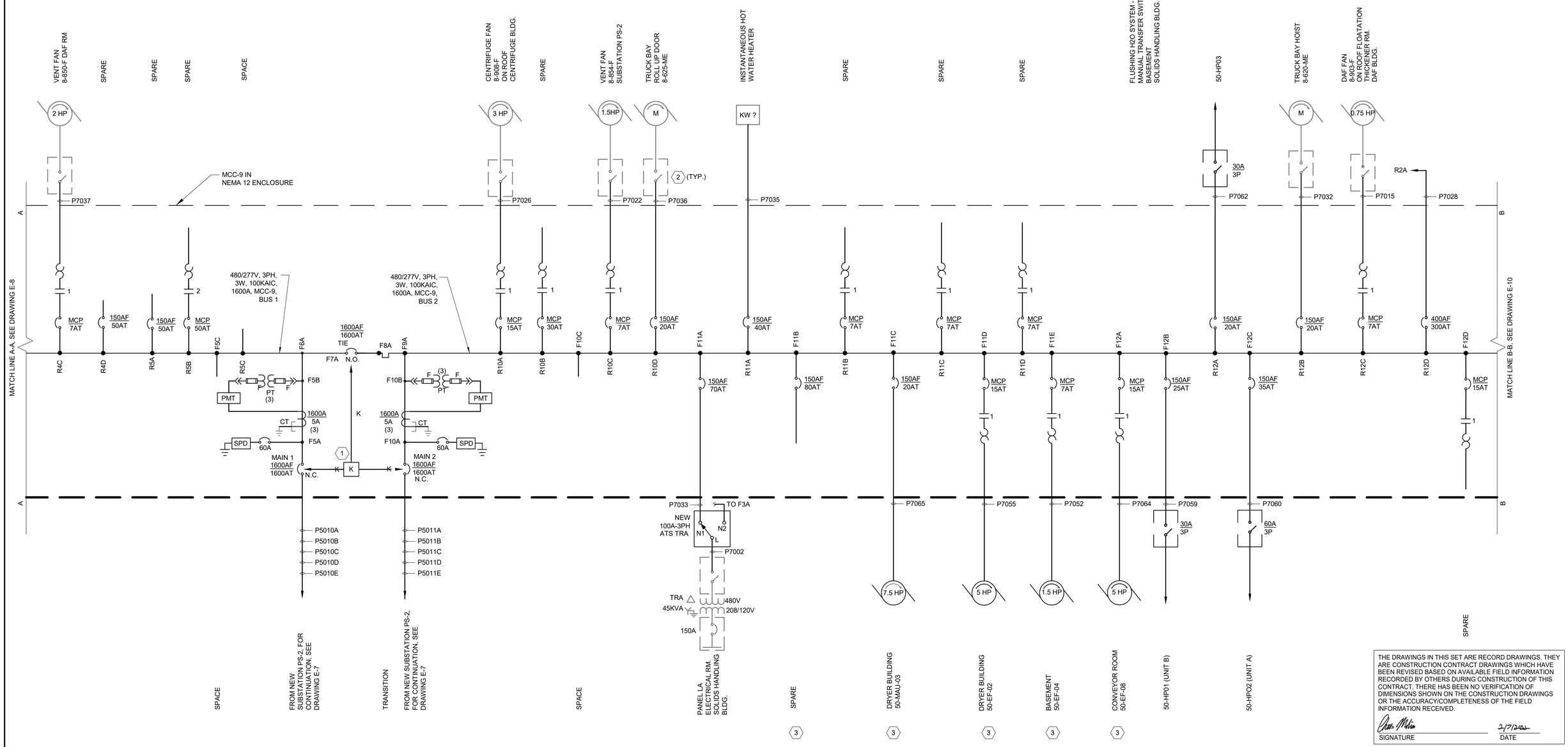

THE DRAWINGS IN THIS SET ARE RECORD DRAWINGS. THEY ARE CONSTRUCTION CONTRACT DRAWINGS WHICH HAVE BEEN REVISED BASED ON AVAILABLE FIELD INFORMATION RECORDED BY OTHERS DURING CONSTRUCTION OF THIS CONTRACT. THERE HAS BEEN NO VERIFICATION OF DIMENSIONS SHOWN ON THE CONSTRUCTION DRAWINGS OR THE ACCURACY/COMPLETENESS OF THE FIELD INFORMATION RECEIVED.

SIGNATURE 2/7/2020 DATE

SHAH & ASSOCIATES

AS-BUILT REPLACEMENT SHEET

PROFESSIONAL CERTIFICATION
THIS DRAWING WAS ORIGINALLY APPROVED FOR CONSTRUCTION AND SEALED BY KANAIYALAL R. SHAH, A REGISTERED PROFESSIONAL ENGINEER IN THE STATE OF MARYLAND, NO. 11084

NOTICE TO CONTRACTORS
- PROJECT ELEVATIONS ARE BASED ON NAVD88 AND HOWARD COUNTY'S BENCHMARK SYSTEM
- PREVIOUS PROJECTS USED OTHER DATUMS
- APPLY THE FOLLOWING CONVERSIONS WHEN USING PREVIOUS CONTRACT DRAWINGS:
  - ADDITION NO. 6: SUBTRACT 0.80 FT
  - PRIOR ADDITIONS: SUBTRACT 1.04 FT

DEPARTMENT OF PUBLIC WORKS
HOWARD COUNTY, MARYLAND

CHIEF, BUREAU OF UTILITIES DATE

DES: MM
DRN: DMG
CHK: KRS
DATE: 01/15/2018

DATE	REV	DESCRIPTION
03/2021		RECORD DRAWING

ELECTRICAL

DRYER BUILDING NEW MCC-9 ONE LINE DIAGRAM II

LITTLE PATUXENT WATER RECLAMATION PLANT
8TH ADDITION
BIOSOLIDS PROCESSING FACILITIES - PHASE 2

CAPITAL PROJECT S-6295
CONTRACT NO. 24-4936

ELECTION DISTRICT NO. 6
HOWARD COUNTY, MARYLAND

SCALE AS SHOWN

SHEET 215 OF 311

E-9

BIM 360://10054364 – Little Patuxent WRP 8th Addition/264592_100_E_V18.rvt
1/8/2022 10:29:22 AM

DRAWING NOTES:

1. EXISTING DISCONNECT SWITCHES TO REMAIN AND SIZE IS NOT SHOWN.

GENERAL NOTES: (CONT)

5. FOR CABLE AND CONDUIT SCHEDULE, SEE DRAWINGS E-908 THRU E-914A.
6. NOT ALL EXISTING LOADS ARE LOCATED ON PLAN DRAWINGS. CONTRACTOR SHALL SURVEY / VERIFY EXISTING MCC-9 AND MCC-10 LOADS LOCATION BEFORE PERFORMING WORK.

GENERAL NOTES:

1. FOR SYMBOLS AND ABBREVIATIONS, SEE DRAWING E-1.
2. FOR CONSTRUCTION SEQUENCE, SEE DRAWING E-2.
3. FOR MCC-9 ELEVATION, SEE DRAWINGS E-19 AND E-20.
4. FOR NEW MCC-9 LOCATION, SEE DRAWING E-29.

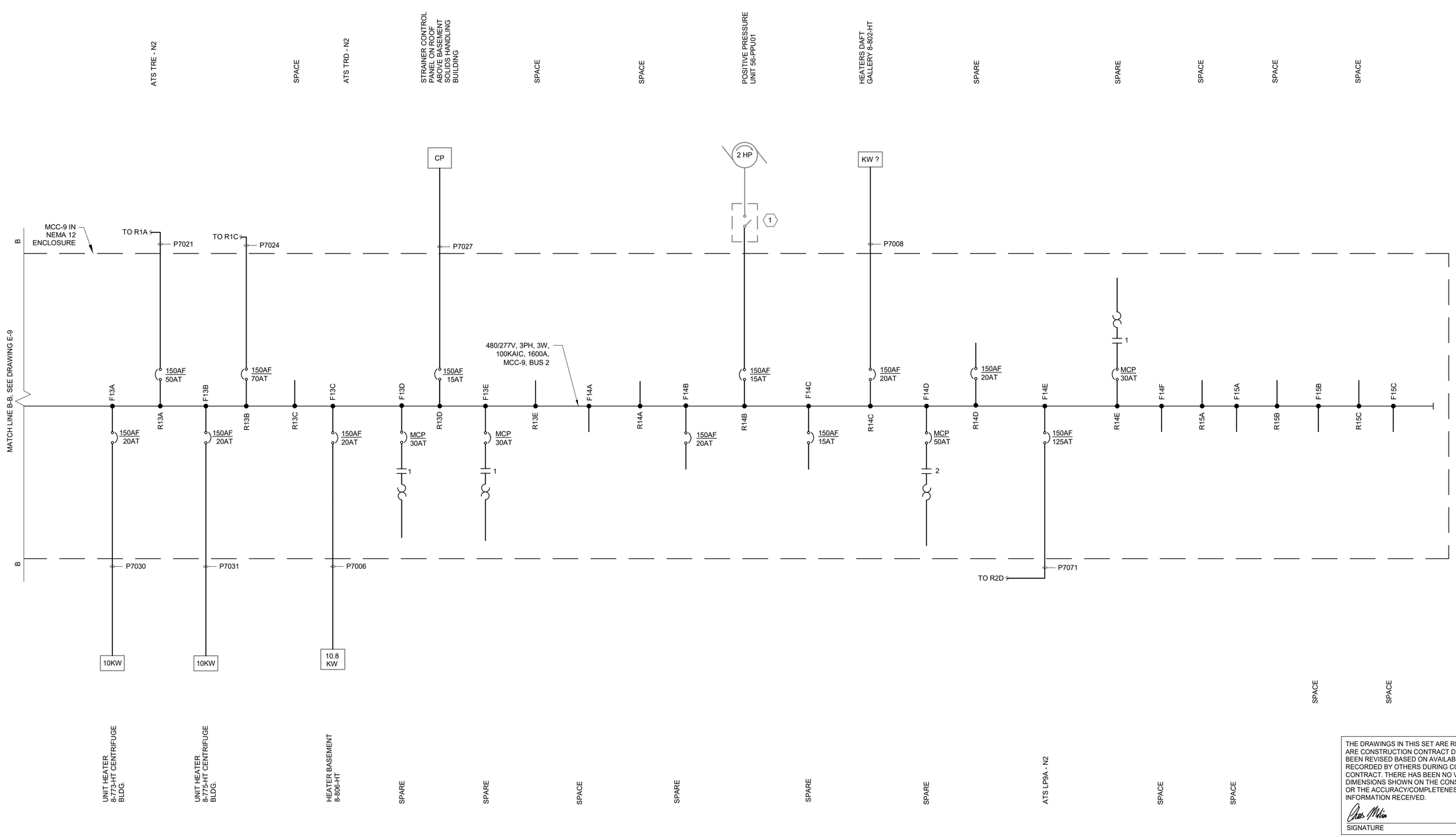

THE DRAWINGS IN THIS SET ARE RECORD DRAWINGS. THEY ARE CONSTRUCTION CONTRACT DRAWINGS WHICH HAVE BEEN REVISED BASED ON AVAILABLE FIELD INFORMATION RECORDED BY OTHERS DURING CONSTRUCTION OF THIS CONTRACT. THERE HAS BEEN NO VERIFICATION OF DIMENSIONS SHOWN ON THE CONSTRUCTION DRAWINGS OR THE ACCURACY/COMPLETENESS OF THE FIELD INFORMATION RECEIVED.

SIGNATURE _____ DATE 2/7/2023

SHAH & ASSOCIATES

AS-BUILT REPLACEMENT SHEET

PROFESSIONAL CERTIFICATION
THIS DRAWING WAS ORIGINALLY APPROVED FOR CONSTRUCTION AND SEALED BY KANAIYALAL R. SHAH, A REGISTERED PROFESSIONAL ENGINEER IN THE STATE OF MARYLAND, NO. 11084

NOTICE TO CONTRACTORS
- PROJECT ELEVATIONS ARE BASED ON NAVD88 AND HOWARD COUNTY'S BENCHMARK SYSTEM
- PREVIOUS PROJECTS USED OTHER DATUMS
- APPLY THE FOLLOWING CONVERSIONS WHEN USING PREVIOUS CONTRACT DRAWINGS:
  - ADDITION NO. 6: SUBTRACT 0.80 FT
  - PRIOR ADDITIONS: SUBTRACT 1.04 FT

DEPARTMENT OF PUBLIC WORKS
HOWARD COUNTY, MARYLAND

CHIEF, BUREAU OF UTILITIES DATE

DES: SR
DRN: DMG
CHK: KRS
DATE: 01/15/2018

DATE	REV	DESCRIPTION
03/2021		RECORD DRAWING

ELECTRICAL

DRYER BUILDING
NEW MCC-9 ONE LINE DIAGRAM III

LITTLE PATUXENT WATER RECLAMATION PLANT
8TH ADDITION
BIOSOLIDS PROCESSING FACILITIES - PHASE 2

CAPITAL PROJECT S-6295
CONTRACT NO. 24-4936

ELECTION DISTRICT NO. 6
HOWARD COUNTY, MARYLAND

SCALE AS SHOWN

SHEET 216 OF 311

E-10

BIM 360://10054364 – Little Patuxent WRP 8th Addition/264592_100_E_V18.rvt
1/8/2022 10:29:23 AM

DRAWING NOTES:

1. PROVIDE FULL VOLTAGE REVERSING STARTER.

GENERAL NOTES:

1. FOR SYMBOLS AND ABBREVIATIONS, SEE DRAWING E-1.
2. FOR CONSTRUCTION SEQUENCE, SEE DRAWING E-2.
3. FOR NEW MCC-10 LOCATION, SEE DRAWINGS E-3 AND E-29.
4. FOR NEW MCC-10 ELEVATION, SEE DRAWINGS E-21 THRU E-22.
5. FOR CABLE AND CONDUIT SCHEDULE, SEE DRAWINGS E-908 THRU E-914A.

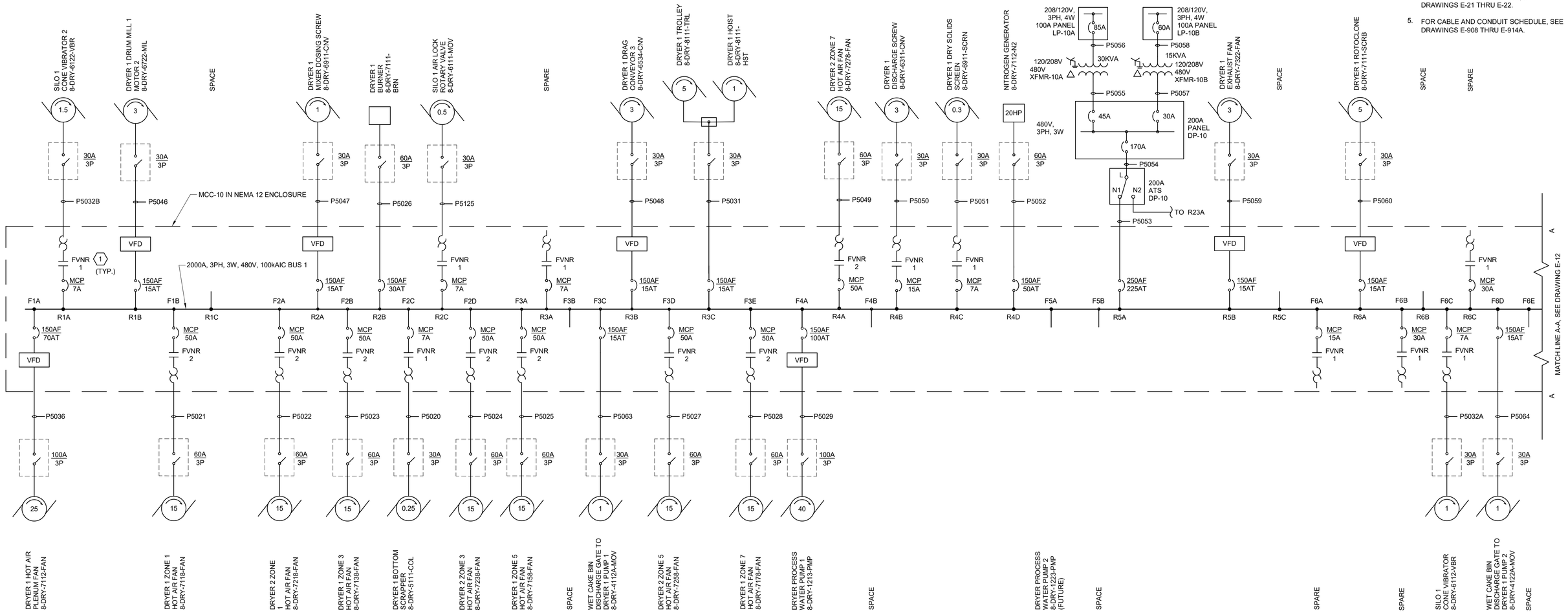

THE DRAWINGS IN THIS SET ARE RECORD DRAWINGS. THEY ARE CONSTRUCTION CONTRACT DRAWINGS WHICH HAVE BEEN REVISED BASED ON AVAILABLE FIELD INFORMATION RECORDED BY OTHERS DURING CONSTRUCTION OF THIS CONTRACT. THERE HAS BEEN NO VERIFICATION OF DIMENSIONS SHOWN ON THE CONSTRUCTION DRAWINGS OR THE ACCURACY/COMPLETENESS OF THE FIELD INFORMATION RECEIVED.

SIGNATURE — DATE 2/7/2022

SHAH & ASSOCIATES

AS-BUILT REPLACEMENT SHEET

PROFESSIONAL CERTIFICATION
THIS DRAWING WAS ORIGINALLY APPROVED FOR CONSTRUCTION AND SEALED BY KANAIYALAL R. SHAH, A REGISTERED PROFESSIONAL ENGINEER IN THE STATE OF MARYLAND, NO. 11084

NOTICE TO CONTRACTORS
- PROJECT ELEVATIONS ARE BASED ON NAVD88 AND HOWARD COUNTY'S BENCHMARK SYSTEM
- PREVIOUS PROJECTS USED OTHER DATUMS
- APPLY THE FOLLOWING CONVERSIONS WHEN USING PREVIOUS CONTRACT DRAWINGS:
  - ADDITION NO. 6: SUBTRACT 0.80 FT
  - PRIOR ADDITIONS: SUBTRACT 1.04 FT

DEPARTMENT OF PUBLIC WORKS
HOWARD COUNTY, MARYLAND

CHIEF, BUREAU OF UTILITIES — DATE

DES: MM
DRN: DMG
CHK: KRS
DATE: 01/15/2018

DATE	REV	DESCRIPTION
03/2021		RECORD DRAWING

ELECTRICAL

DRYER BUILDING
NEW MCC-10 ONE LINE DIAGRAM I

LITTLE PATUXENT WATER RECLAMATION PLANT
8TH ADDITION
BIOSOLIDS PROCESSING FACILITIES - PHASE 2

CAPITAL PROJECT S-6295
CONTRACT NO. 24-4936

ELECTION DISTRICT NO. 6
HOWARD COUNTY, MARYLAND

SCALE AS SHOWN

SHEET 217 OF 311

E-11

BIM 360://10054364 – Little Patuxent WRP 8th Addition/264592_100_E_V18.rvt
1/8/2022 10:29:24 AM

DRAWING NOTES:

1. PROVIDE ACTIVE HARMONICS FILTER, SIZE PER HARMONIC SYSTEM STUDY, MOUNTED IN MCC ENCLOSURE, CONNECTED CLOSE TO THE MAINS ON THE LOAD SIDE AS SHOWN.
2. VFD IS SIZED TWO TIMES FLA OF MOTOR. HENCE, 20HP VFD IS SELECTED. CONTRACTOR SHALL COORDINATE WITH KWS FOR VFD PROGRAMMING REQUIREMENT.

GENERAL NOTES:

1. FOR SYMBOLS AND ABBREVIATIONS, SEE DRAWING E-1.
2. FOR CONSTRUCTION SEQUENCE, SEE DRAWING E-2.
3. FOR NEW MCC-10 ELEVATION, SEE DRAWINGS E-21, E-22.
4. FOR NEW MCC-10 LOCATION, SEE DRAWINGS E-3 AND E-29.
5. FOR CABLE AND CONDUIT SCHEDULE, SEE DRAWINGS E-908 THRU E-914A.

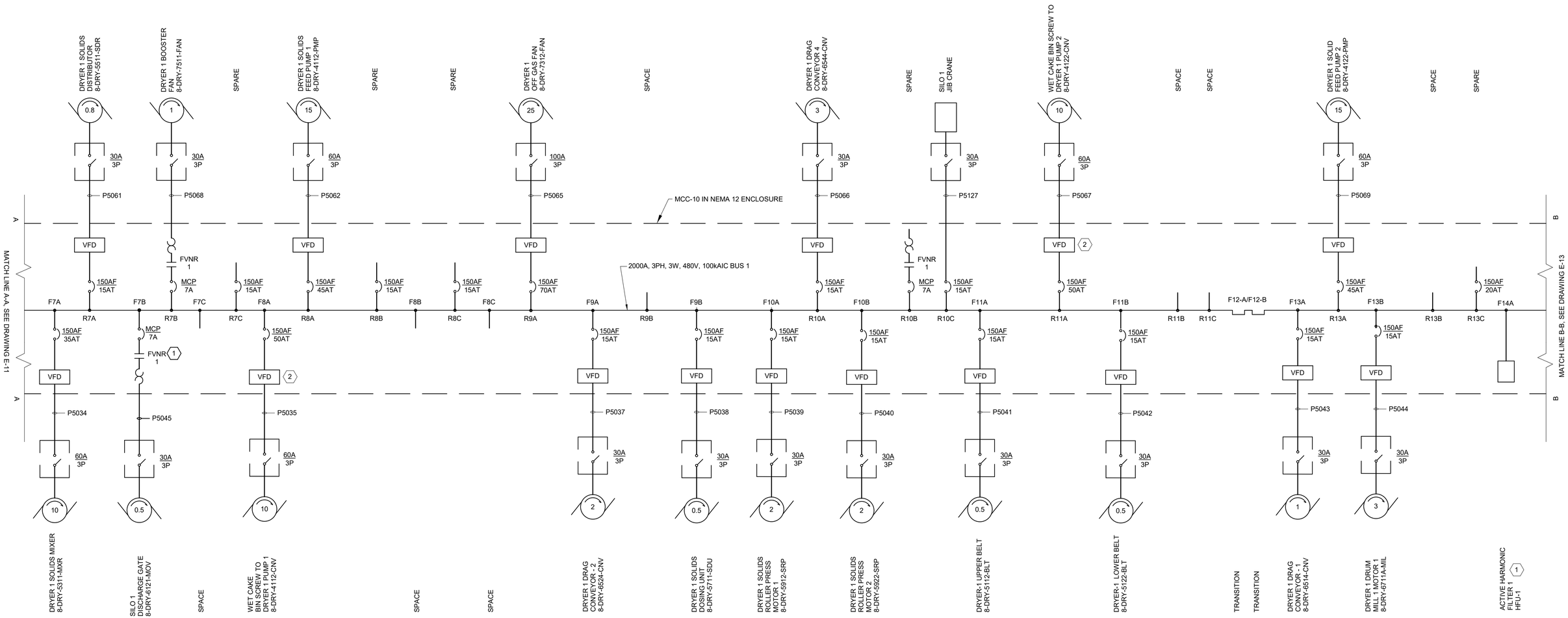

THE DRAWINGS IN THIS SET ARE RECORD DRAWINGS. THEY ARE CONSTRUCTION CONTRACT DRAWINGS WHICH HAVE BEEN REVISED BASED ON AVAILABLE FIELD INFORMATION RECORDED BY OTHERS DURING CONSTRUCTION OF THIS CONTRACT. THERE HAS BEEN NO VERIFICATION OF DIMENSIONS SHOWN ON THE CONSTRUCTION DRAWINGS OR THE ACCURACY/COMPLETENESS OF THE FIELD INFORMATION RECEIVED.

SIGNATURE 2/7/2022 DATE

SHAH & ASSOCIATES

AS-BUILT REPLACEMENT SHEET

PROFESSIONAL CERTIFICATION
THIS DRAWING WAS ORIGINALLY APPROVED FOR CONSTRUCTION AND SEALED BY KANAIYALAL R. SHAH, A REGISTERED PROFESSIONAL ENGINEER IN THE STATE OF MARYLAND, NO. 11084

NOTICE TO CONTRACTORS
- PROJECT ELEVATIONS ARE BASED ON NAVD88 AND HOWARD COUNTY'S BENCHMARK SYSTEM
- PREVIOUS PROJECTS USED OTHER DATUMS
- APPLY THE FOLLOWING CONVERSIONS WHEN USING PREVIOUS CONTRACT DRAWINGS:
  - ADDITION NO. 6: SUBTRACT 0.80 FT
  - PRIOR ADDITIONS: SUBTRACT 1.04 FT

DEPARTMENT OF PUBLIC WORKS
HOWARD COUNTY, MARYLAND

CHIEF, BUREAU OF UTILITIES DATE

DES: MM
DRN: DMG
CHK: KRS
DATE: 01/15/2018

DATE	REV	DESCRIPTION
03/2021		RECORD DRAWING

ELECTRICAL

DRYER BUILDING
NEW MCC-10 ONE LINE DIAGRAM II

LITTLE PATUXENT WATER RECLAMATION PLANT
8TH ADDITION
BIOSOLIDS PROCESSING FACILITIES - PHASE 2

CAPITAL PROJECT S-6295
CONTRACT NO. 24-4936

ELECTION DISTRICT NO. 6
HOWARD COUNTY, MARYLAND

SCALE AS SHOWN

SHEET 218 OF 311

E-12

BIM 360://10054364 – Little Patuxent WRP 8th Addition/264592_100_E_V18.rvt
1/8/2022 10:29:25 AM

GENERAL NOTES:

1. FOR SYMBOLS AND ABBREVIATIONS, SEE DRAWING E-1.
2. FOR CONSTRUCTION SEQUENCE, SEE DRAWING E-2.
3. FOR NEW MCC-10 LOCATION, SEE DRAWINGS E-3 AND E-29.
4. FOR MCC-10 SEC(A, B, C) ELEVATION, SEE DRAWING E-22.
5. FOR CABLE AND CONDUIT SCHEDULE, SEE DRAWINGS E-908 THRU E-914A.

DRAWING NOTES:

(1) NECESSARY PROVISION SHALL BE PROVIDED BY MANUFACTURER FOR TERMINATION OF 3, #250KCMIL & #4GND CABLES TO MCC-10 SEC (A, B, C) BUS, TO ACCOMMODATE MCC INCOMING CABLE FROM NEW MCC-10 FEEDER R22A.

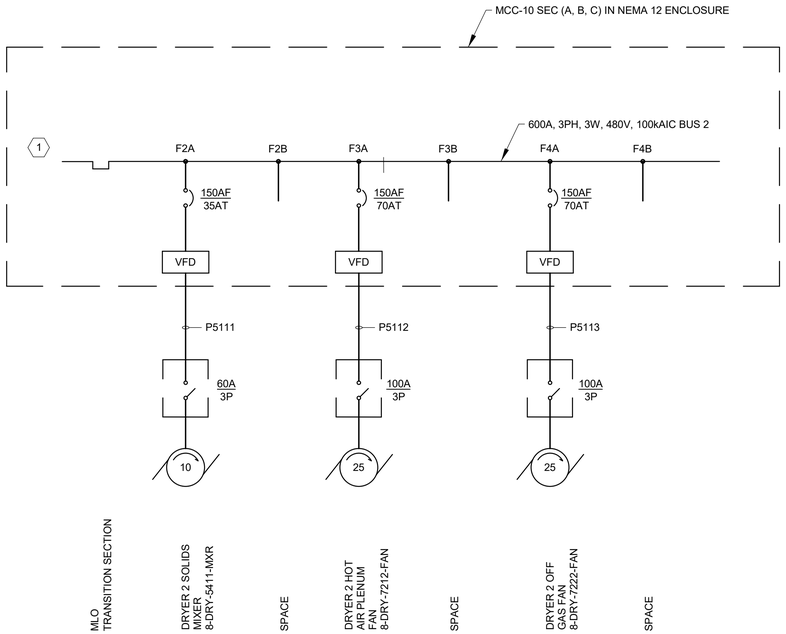

THE DRAWINGS IN THIS SET ARE RECORD DRAWINGS. THEY ARE CONSTRUCTION CONTRACT DRAWINGS WHICH HAVE BEEN REVISED BASED ON AVAILABLE FIELD INFORMATION RECORDED BY OTHERS DURING CONSTRUCTION OF THIS CONTRACT. THERE HAS BEEN NO VERIFICATION OF DIMENSIONS SHOWN ON THE CONSTRUCTION DRAWINGS OR THE ACCURACY/COMPLETENESS OF THE FIELD INFORMATION RECEIVED.

SIGNATURE _____ DATE 2/7/2023

SHAH & ASSOCIATES

AS-BUILT REPLACEMENT SHEET

PROFESSIONAL CERTIFICATION
THIS DRAWING WAS ORIGINALLY APPROVED FOR CONSTRUCTION AND SEALED BY KANAIYALAL R. SHAH, A REGISTERED PROFESSIONAL ENGINEER IN THE STATE OF MARYLAND, NO. 11084

NOTICE TO CONTRACTORS
- PROJECT ELEVATIONS ARE BASED ON NAVD88 AND HOWARD COUNTY'S BENCHMARK SYSTEM
- PREVIOUS PROJECTS USED OTHER DATUMS
- APPLY THE FOLLOWING CONVERSIONS WHEN USING PREVIOUS CONTRACT DRAWINGS:
  - ADDITION NO. 6: SUBTRACT 0.80 FT
  - PRIOR ADDITIONS: SUBTRACT 1.04 FT

DEPARTMENT OF PUBLIC WORKS
HOWARD COUNTY, MARYLAND

CHIEF, BUREAU OF UTILITIES DATE

DES: MM
DRN: DMG
CHK: KRS
DATE: 01/15/2018

DATE	REV	DESCRIPTION
03/2021		RECORD DRAWING

ELECTRICAL

DRYER BUILDING
NEW MCC-10 ONE LINE DIAGRAM III

LITTLE PATUXENT WATER RECLAMATION PLANT
8TH ADDITION
BIOSOLIDS PROCESSING FACILITIES - PHASE 2

CAPITAL PROJECT S-6295
CONTRACT NO. 24-4936

ELECTION DISTRICT NO. 6
HOWARD COUNTY, MARYLAND

SCALE AS SHOWN

SHEET 219 OF 311

E-12A

BIM 360://10054364 – Little Patuxent WRP 8th Addition/264592_100_E_V18.rvt
1/8/2022 10:29:26 AM

DRAWING NOTES:

1. PROVIDE ACTIVE HARMONICS FILTER, SIZE PER HARMONIC SYSTEM STUDY, MOUNTED IN MCC ENCLOSURE CONNECTED CLOSE TO THE MAINS ON THE LOAD SIDE AS SHOWN.
2. PROVIDE KIRK KEY INTERLOCK CONFIGURED TO ONLY ALLOW 2 OF 3 BREAKERS TO BE CLOSED AT ANY TIME.
3. VFD IS SIZED TWO TIMES FLA OF MOTOR. HENCE, 20 HP VFD IS SELECTED. CONTRACTOR SHALL COORDINATE WITH KWS FOR VFD PROGRAMMING REQUIREMENT.

GENERAL NOTES:

1. FOR SYMBOLS AND ABBREVIATIONS, SEE DRAWING E-1.
2. FOR CONSTRUCTION SEQUENCE, SEE DRAWING E-2.
3. FOR NEW MCC-10 LOCATION, SEE DRAWINGS E-3 AND E-29.
4. FOR NEW MCC-10 ELEVATION SEE DRAWINGS E-21 AND E-22.
5. FOR CABLE AND CONDUIT SCHEDULE, SEE DRAWINGS E-908 THRU E-914A.

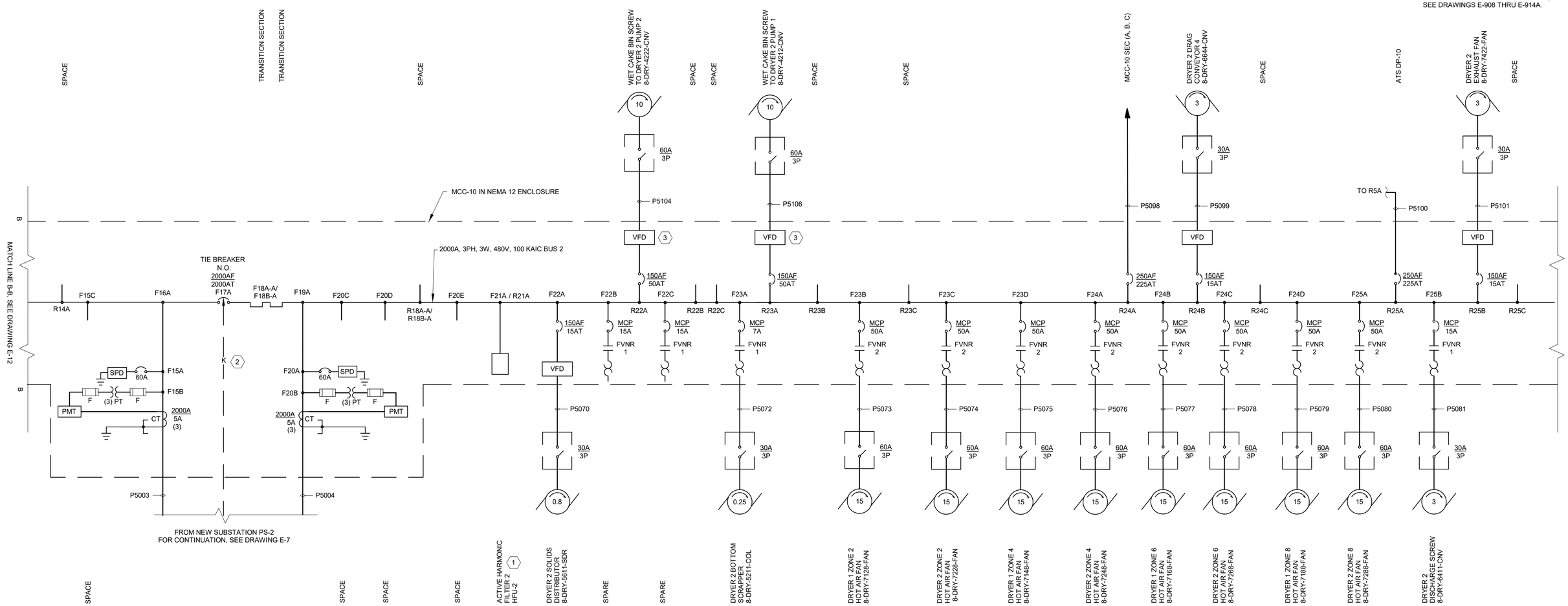

THE DRAWINGS IN THIS SET ARE RECORD DRAWINGS. THEY ARE CONSTRUCTION CONTRACT DRAWINGS WHICH HAVE BEEN REVISED BASED ON AVAILABLE FIELD INFORMATION RECORDED BY OTHERS DURING CONSTRUCTION OF THIS CONTRACT. THERE HAS BEEN NO VERIFICATION OF DIMENSIONS SHOWN ON THE CONSTRUCTION DRAWINGS OR THE ACCURACY/COMPLETENESS OF THE FIELD INFORMATION RECEIVED.

SIGNATURE — DATE 2/7/2022

SHAH & ASSOCIATES

AS-BUILT REPLACEMENT SHEET

PROFESSIONAL CERTIFICATION
THIS DRAWING WAS ORIGINALLY APPROVED FOR CONSTRUCTION AND SEALED BY KANAIYALAL R. SHAH, A REGISTERED PROFESSIONAL ENGINEER IN THE STATE OF MARYLAND, NO. 11084

NOTICE TO CONTRACTORS
- PROJECT ELEVATIONS ARE BASED ON NAVD88 AND HOWARD COUNTY'S BENCHMARK SYSTEM
- PREVIOUS PROJECTS USED OTHER DATUMS
- APPLY THE FOLLOWING CONVERSIONS WHEN USING PREVIOUS CONTRACT DRAWINGS:
  - ADDITION NO. 6: SUBTRACT 0.80 FT
  - PRIOR ADDITIONS: SUBTRACT 1.04 FT

DEPARTMENT OF PUBLIC WORKS
HOWARD COUNTY, MARYLAND

CHIEF, BUREAU OF UTILITIES — DATE

DES: MM
DRN: DMG
CHK: KRS
DATE: 01/15/2018

DATE	REV	DESCRIPTION
03/2021		RECORD DRAWING

ELECTRICAL

DRYER BUILDING NEW MCC-10 ONE LINE DIAGRAM IV

LITTLE PATUXENT WATER RECLAMATION PLANT
8TH ADDITION
BIOSOLIDS PROCESSING FACILITIES - PHASE 2

CAPITAL PROJECT S-6295
CONTRACT NO. 24-4936

ELECTION DISTRICT NO. 6
HOWARD COUNTY, MARYLAND

SCALE AS SHOWN

SHEET 220 OF 311

E-13

BIM 360://10054364 – Little Patuxent WRP 8th Addition/264592_100_E_V18.rvt
1/8/2022 10:29:27 AM

DRAWING NOTES:

1. PROVIDE FULL VOLTAGE REVERSING STARTER.

GENERAL NOTES:

1. FOR SYMBOLS AND ABBREVIATIONS, SEE DRAWING E-1.
2. FOR CONSTRUCTION SEQUENCE, SEE DRAWING E-2.
3. FOR NEW MCC-10 LOCATION, SEE DRAWINGS E-3 AND E-29.
4. FOR NEW MCC-10 ELEVATION SEE DRAWINGS E-21AND E-22.
5. FOR CABLE AND CONDUIT SCHEDULE, SEE DRAWINGS E-908 THRU E-914A.

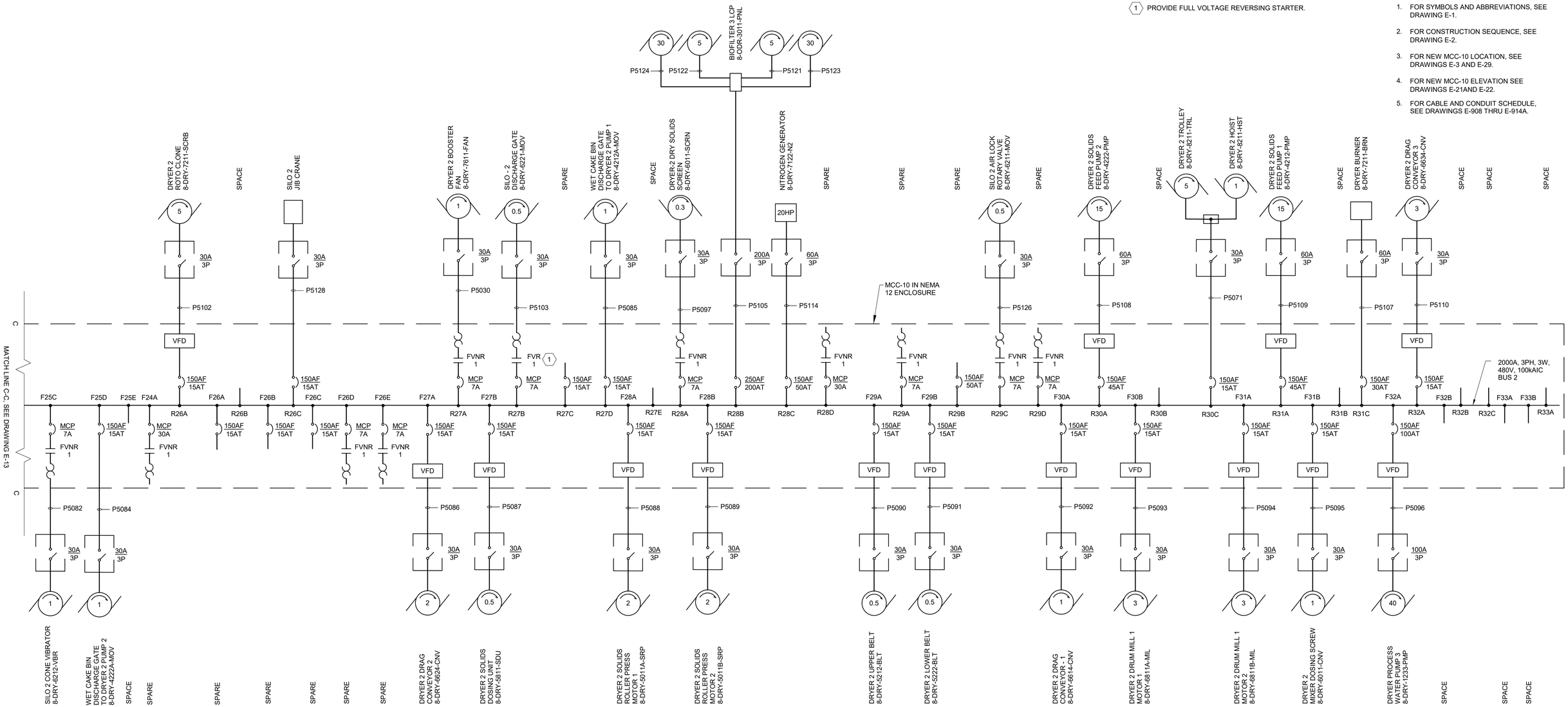

THE DRAWINGS IN THIS SET ARE RECORD DRAWINGS. THEY ARE CONSTRUCTION CONTRACT DRAWINGS WHICH HAVE BEEN REVISED BASED ON AVAILABLE FIELD INFORMATION RECORDED BY OTHERS DURING CONSTRUCTION OF THIS CONTRACT. THERE HAS BEEN NO VERIFICATION OF DIMENSIONS SHOWN ON THE CONSTRUCTION DRAWINGS OR THE ACCURACY/COMPLETENESS OF THE FIELD INFORMATION RECEIVED.

SIGNATURE — DATE 2/7/2022

SHAH & ASSOCIATES

AS-BUILT REPLACEMENT SHEET

PROFESSIONAL CERTIFICATION
THIS DRAWING WAS ORIGINALLY APPROVED FOR CONSTRUCTION AND SEALED BY KANAIYALAL R. SHAH, A REGISTERED PROFESSIONAL ENGINEER IN THE STATE OF MARYLAND, NO. 11084

NOTICE TO CONTRACTORS
- PROJECT ELEVATIONS ARE BASED ON NAVD88 AND HOWARD COUNTY'S BENCHMARK SYSTEM
- PREVIOUS PROJECTS USED OTHER DATUMS
- APPLY THE FOLLOWING CONVERSIONS WHEN USING PREVIOUS CONTRACT DRAWINGS:
  - ADDITION NO. 6: SUBTRACT 0.80 FT
  - PRIOR ADDITIONS: SUBTRACT 1.04 FT

DEPARTMENT OF PUBLIC WORKS
HOWARD COUNTY, MARYLAND

CHIEF, BUREAU OF UTILITIES — DATE

DES: MM
DRN: DMG
CHK: KRS
DATE: 01/15/2018

DATE	REV	DESCRIPTION
03/2021		RECORD DRAWING

ELECTRICAL

DRYER BUILDING
NEW MCC-10 ONE LINE DIAGRAM V

LITTLE PATUXENT WATER RECLAMATION PLANT
8TH ADDITION
BIOSOLIDS PROCESSING FACILITIES - PHASE 2

CAPITAL PROJECT S-6295
CONTRACT NO. 24-4936

ELECTION DISTRICT NO. 6
HOWARD COUNTY, MARYLAND

SCALE AS SHOWN

SHEET 221 OF 311

E-13A

BIM 360://10054364 – Little Patuxent WRP 8th Addition/264592_100_E_V18.rvt
1/8/2022 10:29:28 AM

GENERAL NOTES:

1. FOR SYMBOLS AND ABBREVIATIONS, SEE DRAWING E-1.
2. FOR CONSTRUCTION SEQUENCE, SEE DRAWING E-2.
3. FOR EXISTING MCC-15 LOCATION, SEE DRAWING E-29.
4. FOR CABLE AND CONDUIT SCHEDULE, SEE DRAWINGS E-908 THRU E-914.

DRAWING NOTES:

(1) PROVIDE NEW FEEDERS FROM NEW PS-2.

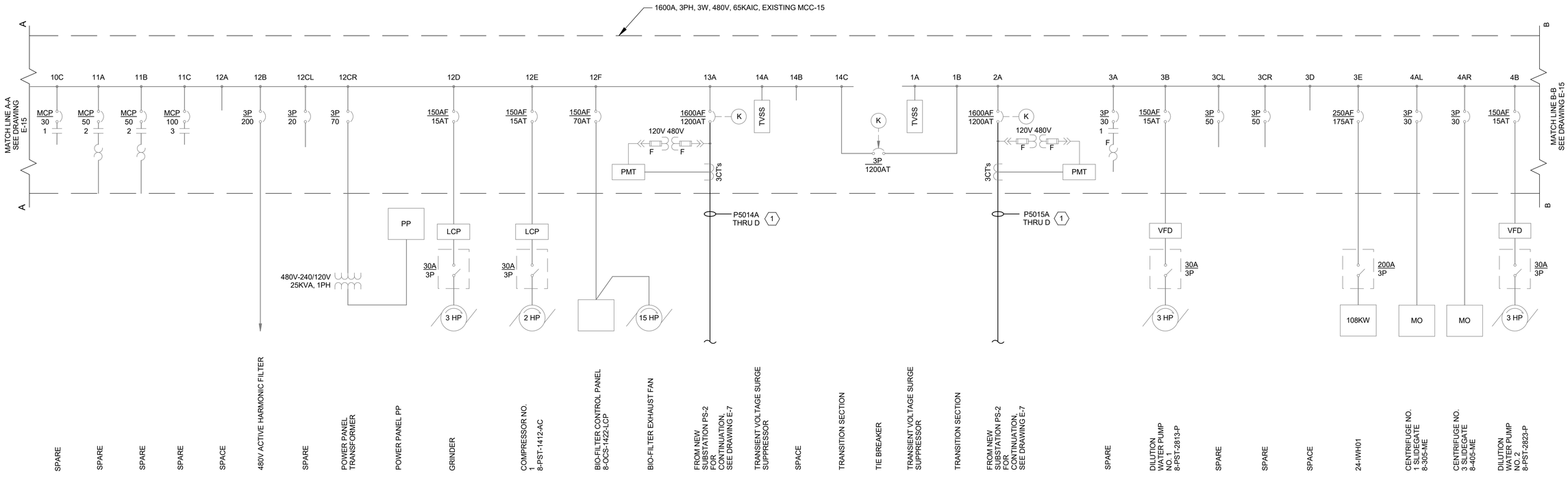

THE DRAWINGS IN THIS SET ARE RECORD DRAWINGS. THEY ARE CONSTRUCTION CONTRACT DRAWINGS WHICH HAVE BEEN REVISED BASED ON AVAILABLE FIELD INFORMATION RECORDED BY OTHERS DURING CONSTRUCTION OF THIS CONTRACT. THERE HAS BEEN NO VERIFICATION OF DIMENSIONS SHOWN ON THE CONSTRUCTION DRAWINGS OR THE ACCURACY/COMPLETENESS OF THE FIELD INFORMATION RECEIVED.

SIGNATURE — DATE 2/7/2023

SHAH & ASSOCIATES

AS-BUILT REPLACEMENT SHEET

PROFESSIONAL CERTIFICATION
THIS DRAWING WAS ORIGINALLY APPROVED FOR CONSTRUCTION AND SEALED BY KANAIYALAL R. SHAH, A REGISTERED PROFESSIONAL ENGINEER IN THE STATE OF MARYLAND, NO. 11084

NOTICE TO CONTRACTORS
- PROJECT ELEVATIONS ARE BASED ON NAVD88 AND HOWARD COUNTY'S BENCHMARK SYSTEM
- PREVIOUS PROJECTS USED OTHER DATUMS
- APPLY THE FOLLOWING CONVERSIONS WHEN USING PREVIOUS CONTRACT DRAWINGS:
  - ADDITION NO. 6: SUBTRACT 0.80 FT
  - PRIOR ADDITIONS: SUBTRACT 1.04 FT

DEPARTMENT OF PUBLIC WORKS
HOWARD COUNTY, MARYLAND

CHIEF, BUREAU OF UTILITIES — DATE

DES: SR
DRN: DMG
CHK: KRS
DATE: 01/15/2018

DATE	REV	DESCRIPTION
03/2021		RECORD DRAWING

ELECTRICAL

DRYER BUILDING EXISTING MCC-15 - ONE LINE DIAGRAM - EXISTING AND MODIFICATION I

LITTLE PATUXENT WATER RECLAMATION PLANT
8TH ADDITION
BIOSOLIDS PROCESSING FACILITIES - PHASE 2

CAPITAL PROJECT S-6295
CONTRACT NO. 24-4936

ELECTION DISTRICT NO. 6
HOWARD COUNTY, MARYLAND

SCALE AS SHOWN

SHEET 222 OF 311

E-14

BIM 360://10054364 – Little Patuxent WRP 8th Addition/264592_100_E_V18.rvt
1/8/2022 10:29:28 AM

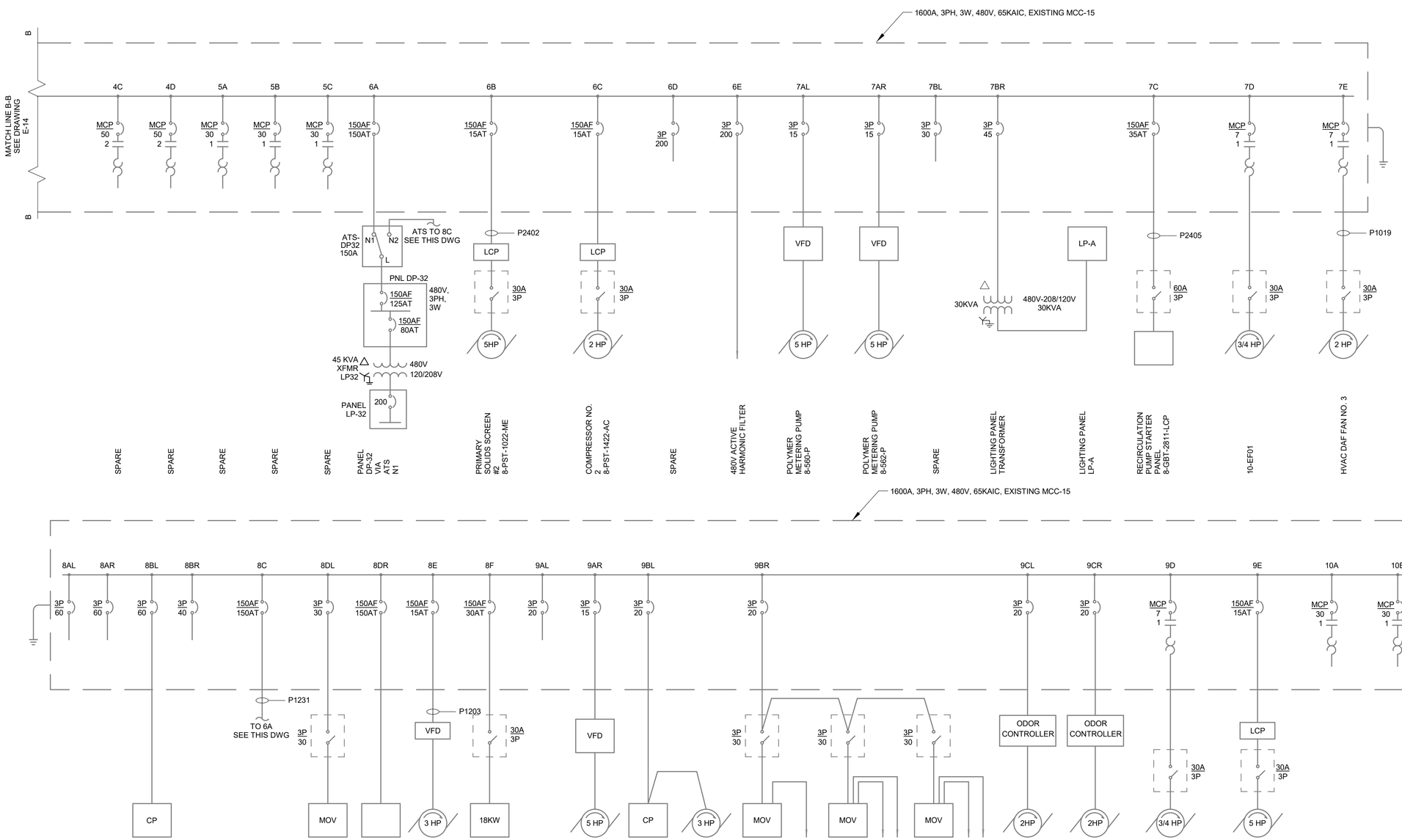

GENERAL NOTES:

1. FOR SYMBOLS AND ABBREVIATIONS, SEE DRAWING E-1.
2. FOR CONSTRUCTION SEQUENCE, SEE DRAWING E-2.
3. FOR EXISTING MCC-15 LOCATION, SEE DRAWING E-29.
4. FOR CABLE AND CONDUIT SCHEDULE, SEE DRAWINGS E-908 THRU E-914.
5. CONTRACTOR SHALL UPDATE THE NAMETAGS OF THE MCC CUBICLES WHERE EQUIPMENT IS DEMOLISHED. NO OTHER NEW WORK IS SHOWN ON THIS DRAWING.

THE DRAWINGS IN THIS SET ARE RECORD DRAWINGS. THEY ARE CONSTRUCTION CONTRACT DRAWINGS WHICH HAVE BEEN REVISED BASED ON AVAILABLE FIELD INFORMATION RECORDED BY OTHERS DURING CONSTRUCTION OF THIS CONTRACT. THERE HAS BEEN NO VERIFICATION OF DIMENSIONS SHOWN ON THE CONSTRUCTION DRAWINGS OR THE ACCURACY/COMPLETENESS OF THE FIELD INFORMATION RECEIVED.

SIGNATURE — DATE 2/7/2023

SHAH & ASSOCIATES

AS-BUILT REPLACEMENT SHEET

PROFESSIONAL CERTIFICATION
THIS DRAWING WAS ORIGINALLY APPROVED FOR CONSTRUCTION AND SEALED BY KANAIYALAL R. SHAH, A REGISTERED PROFESSIONAL ENGINEER IN THE STATE OF MARYLAND, NO. 11084

NOTICE TO CONTRACTORS
- PROJECT ELEVATIONS ARE BASED ON NAVD88 AND HOWARD COUNTY'S BENCHMARK SYSTEM
- PREVIOUS PROJECTS USED OTHER DATUMS
- APPLY THE FOLLOWING CONVERSIONS WHEN USING PREVIOUS CONTRACT DRAWINGS:
  - ADDITION NO. 6: SUBTRACT 0.80 FT
  - PRIOR ADDITIONS: SUBTRACT 1.04 FT

DEPARTMENT OF PUBLIC WORKS
HOWARD COUNTY, MARYLAND

CHIEF, BUREAU OF UTILITIES — DATE

DES: MM
DRN: DMG
CHK: KRS
DATE: 01/15/2018

DATE	REV	DESCRIPTION
03/2021		RECORD DRAWING

ELECTRICAL

DRYER BUILDING EXISTING MCC-15 - ONE LINE DIAGRAM - EXISTING AND MODIFICATION II

LITTLE PATUXENT WATER RECLAMATION PLANT
8TH ADDITION
BIOSOLIDS PROCESSING FACILITIES - PHASE 2

CAPITAL PROJECT S-6295
CONTRACT NO. 24-4936

ELECTION DISTRICT NO. 6
HOWARD COUNTY, MARYLAND

SCALE AS SHOWN

SHEET 223 OF 311

E-15

BIM 360://10054364 – Little Patuxent WRP 8th Addition/264592_100_E_Y18.rvt
1/8/2022 10:29:29 AM

GENERAL NOTES:

1. FOR SYMBOLS AND ABBREVIATIONS, SEE DRAWING E-1.
2. FOR CONSTRUCTION SEQUENCE, SEE DRAWING E-2.
3. FOR EXISTING MCC-23 LOCATION, SEE DRAWING E-29.
4. FOR CABLE AND CONDUIT SCHEDULE, SEE DRAWINGS E-908 THRU E-914A.

DRAWING NOTES:

(1) PROVIDE NEW FEEDERS FROM NEW PS-2.

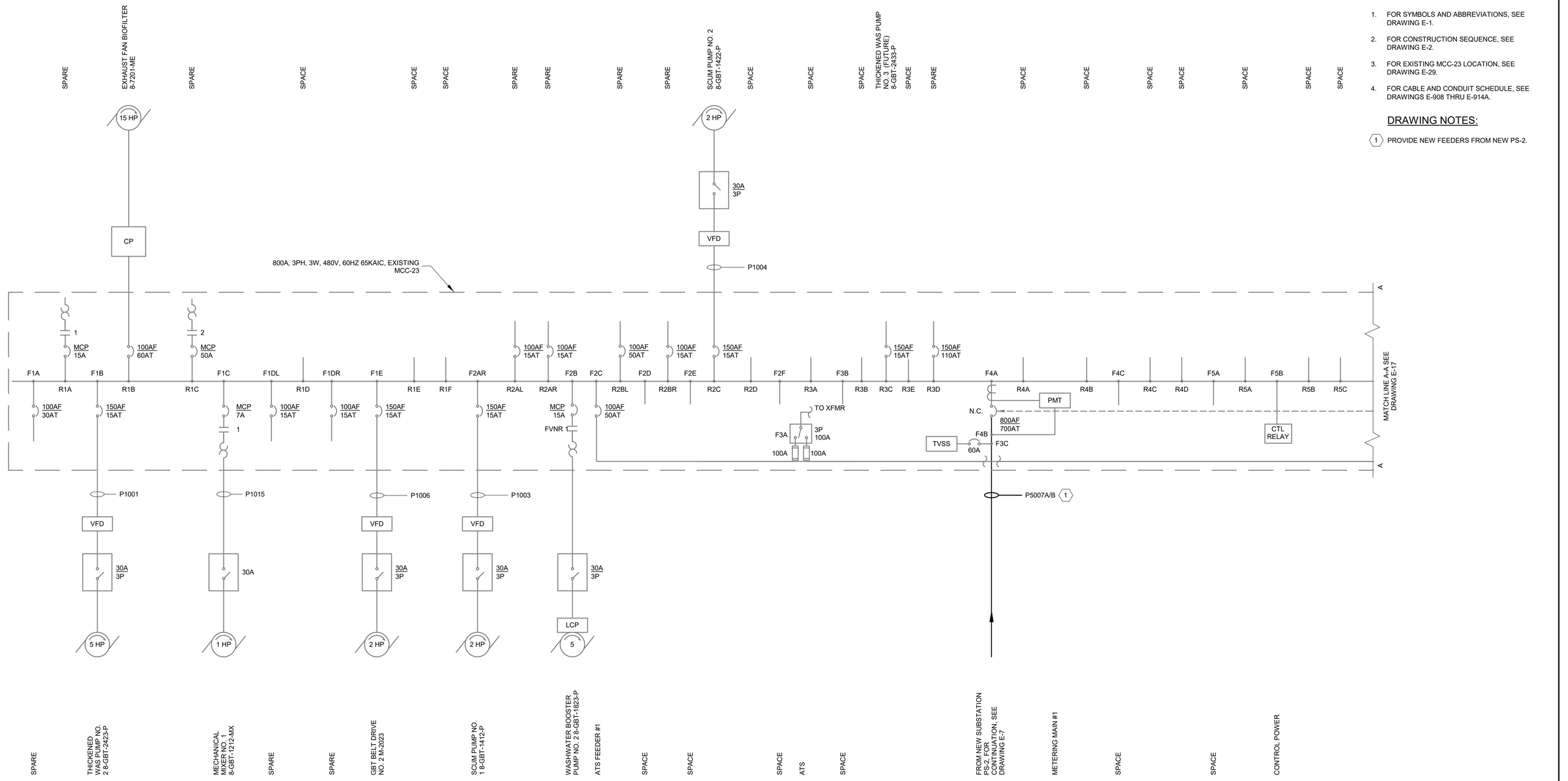

THE DRAWINGS IN THIS SET ARE RECORD DRAWINGS. THEY ARE CONSTRUCTION CONTRACT DRAWINGS WHICH HAVE BEEN REVISED BASED ON AVAILABLE FIELD INFORMATION RECORDED BY OTHERS DURING CONSTRUCTION OF THIS CONTRACT. THERE HAS BEEN NO VERIFICATION OF DIMENSIONS SHOWN ON THE CONSTRUCTION DRAWINGS OR THE ACCURACY/COMPLETENESS OF THE FIELD INFORMATION RECEIVED.

SIGNATURE _____ DATE 2/7/2023

SHAH & ASSOCIATES

AS-BUILT REPLACEMENT SHEET

PROFESSIONAL CERTIFICATION
THIS DRAWING WAS ORIGINALLY APPROVED FOR CONSTRUCTION AND SEALED BY KANAIYALAL R. SHAH, A REGISTERED PROFESSIONAL ENGINEER IN THE STATE OF MARYLAND, NO. 11084

NOTICE TO CONTRACTORS
- PROJECT ELEVATIONS ARE BASED ON NAVD88 AND HOWARD COUNTY'S BENCHMARK SYSTEM
- PREVIOUS PROJECTS USED OTHER DATUMS
- APPLY THE FOLLOWING CONVERSIONS WHEN USING PREVIOUS CONTRACT DRAWINGS:
  - ADDITION NO. 6: SUBTRACT 0.80 FT
  - PRIOR ADDITIONS: SUBTRACT 1.04 FT

DEPARTMENT OF PUBLIC WORKS
HOWARD COUNTY, MARYLAND

CHIEF, BUREAU OF UTILITIES DATE

DES: MM
DRN: DMG
CHK: KRS
DATE: 01/15/2018

DATE	REV	DESCRIPTION
03/2021		RECORD DRAWING

ELECTRICAL

DRYER BUILDING EXISTING MCC-23 - ONE LINE DIAGRAM - EXISTING AND MODIFICATION I

LITTLE PATUXENT WATER RECLAMATION PLANT
8TH ADDITION
BIOSOLIDS PROCESSING FACILITIES - PHASE 2

CAPITAL PROJECT S-6295
CONTRACT NO. 24-4936

ELECTION DISTRICT NO. 6
HOWARD COUNTY, MARYLAND

SCALE AS SHOWN

SHEET 224 OF 311

E-16

BIM 360://10054364 – Little Patuxent WRP 8th Addition/264592_100_E_V18.rvt
1/8/2022 10:29:30 AM

GENERAL NOTES:

1. FOR SYMBOLS AND ABBREVIATIONS, SEE DRAWING E-1.
2. FOR CONSTRUCTION SEQUENCE, SEE DRAWING E-2.
3. FOR EXISTING MCC-23 LOCATION, SEE DRAWING E-29.
4. FOR CABLE AND CONDUIT SCHEDULE, SEE DRAWINGS E-908 THRU E-914A.

DRAWING NOTES:

(1) PROVIDE NEW FEEDERS FROM NEW PS-2.

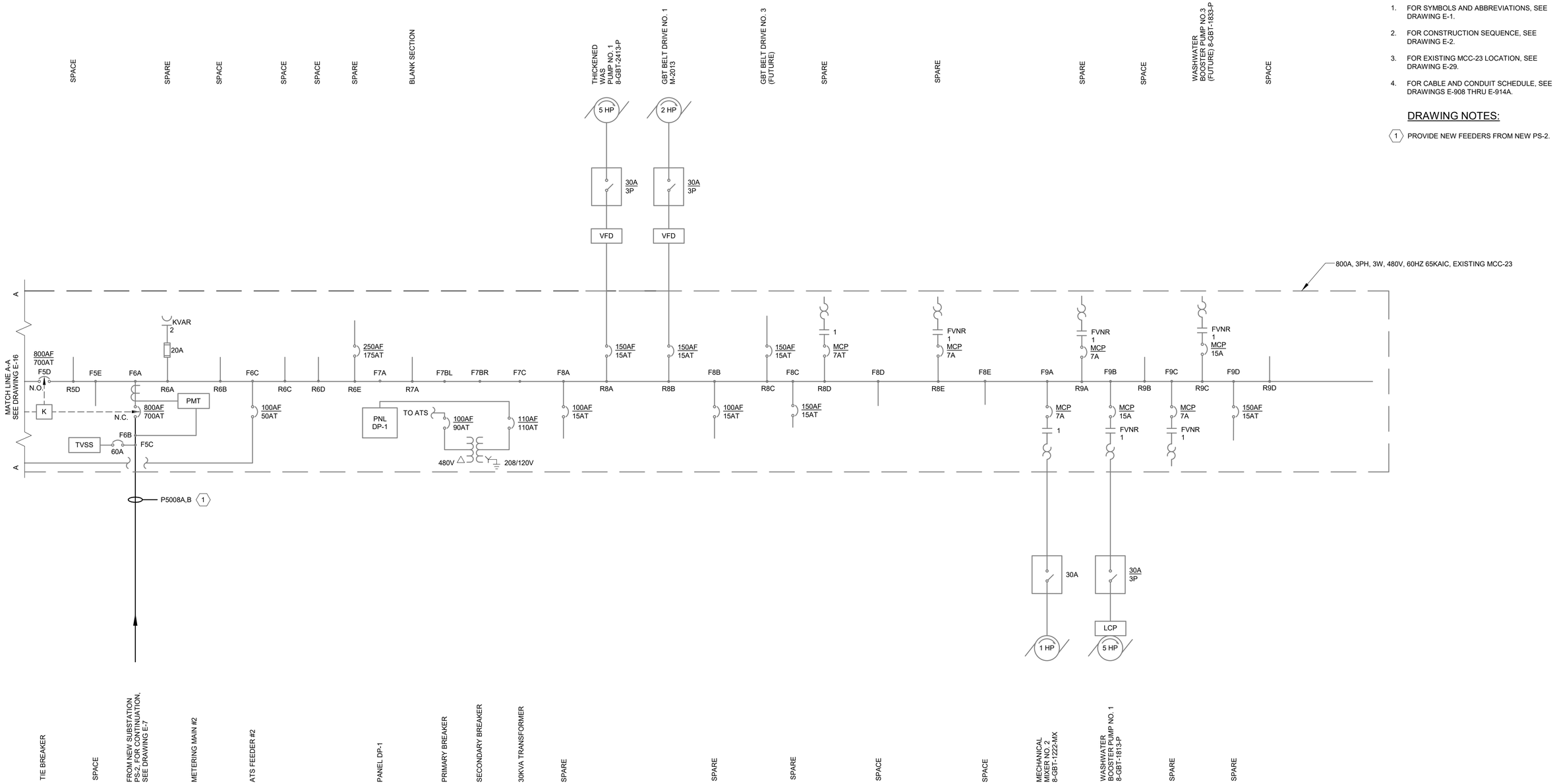

THE DRAWINGS IN THIS SET ARE RECORD DRAWINGS. THEY ARE CONSTRUCTION CONTRACT DRAWINGS WHICH HAVE BEEN REVISED BASED ON AVAILABLE FIELD INFORMATION RECORDED BY OTHERS DURING CONSTRUCTION OF THIS CONTRACT. THERE HAS BEEN NO VERIFICATION OF DIMENSIONS SHOWN ON THE CONSTRUCTION DRAWINGS OR THE ACCURACY/COMPLETENESS OF THE FIELD INFORMATION RECEIVED.

SIGNATURE — DATE 2/7/2022

SHAH & ASSOCIATES

AS-BUILT REPLACEMENT SHEET

PROFESSIONAL CERTIFICATION
THIS DRAWING WAS ORIGINALLY APPROVED FOR CONSTRUCTION AND SEALED BY KANAIYALAL R. SHAH, A REGISTERED PROFESSIONAL ENGINEER IN THE STATE OF MARYLAND, NO. 11084

NOTICE TO CONTRACTORS
- PROJECT ELEVATIONS ARE BASED ON NAVD88 AND HOWARD COUNTY'S BENCHMARK SYSTEM
- PREVIOUS PROJECTS USED OTHER DATUMS
- APPLY THE FOLLOWING CONVERSIONS WHEN USING PREVIOUS CONTRACT DRAWINGS:
  - ADDITION NO. 6: SUBTRACT 0.80 FT
  - PRIOR ADDITIONS: SUBTRACT 1.04 FT

DEPARTMENT OF PUBLIC WORKS
HOWARD COUNTY, MARYLAND

CHIEF, BUREAU OF UTILITIES — DATE

DES: MM
DRN: DMG
CHK: KRS
DATE: 01/15/2018

DATE	REV	DESCRIPTION
03/2021		RECORD DRAWING

ELECTRICAL

DRYER BUILDING EXISTING MCC-23 - ONE LINE DIAGRAM - EXISTING AND MODIFICATION II

LITTLE PATUXENT WATER RECLAMATION PLANT
8TH ADDITION
BIOSOLIDS PROCESSING FACILITIES - PHASE 2

CAPITAL PROJECT S-6295
CONTRACT NO. 24-4936

ELECTION DISTRICT NO. 6
HOWARD COUNTY, MARYLAND

SCALE AS SHOWN

SHEET 225 OF 311

E-17

BIM 360://10054364 – Little Patuxent WRP 8th Addition/264592_100_E_V18.rvt
1/8/2022 10:29:31 AM

GENERAL NOTES:

1. FOR SYMBOLS AND ABBREVIATIONS, SEE DRAWING E-1.
2. FOR CONSTRUCTION SEQUENCE, SEE DRAWING E-2.
3. FOR NEW ELECTRICAL SUBSTATION PS-2 ONE LINE DIAGRAM, SEE DRAWING E-7.
4. FOR NEW ELECTRICAL SUBSTATION PS-2 LAYOUT, SEE DRAWINGS E-27 AND E-29.

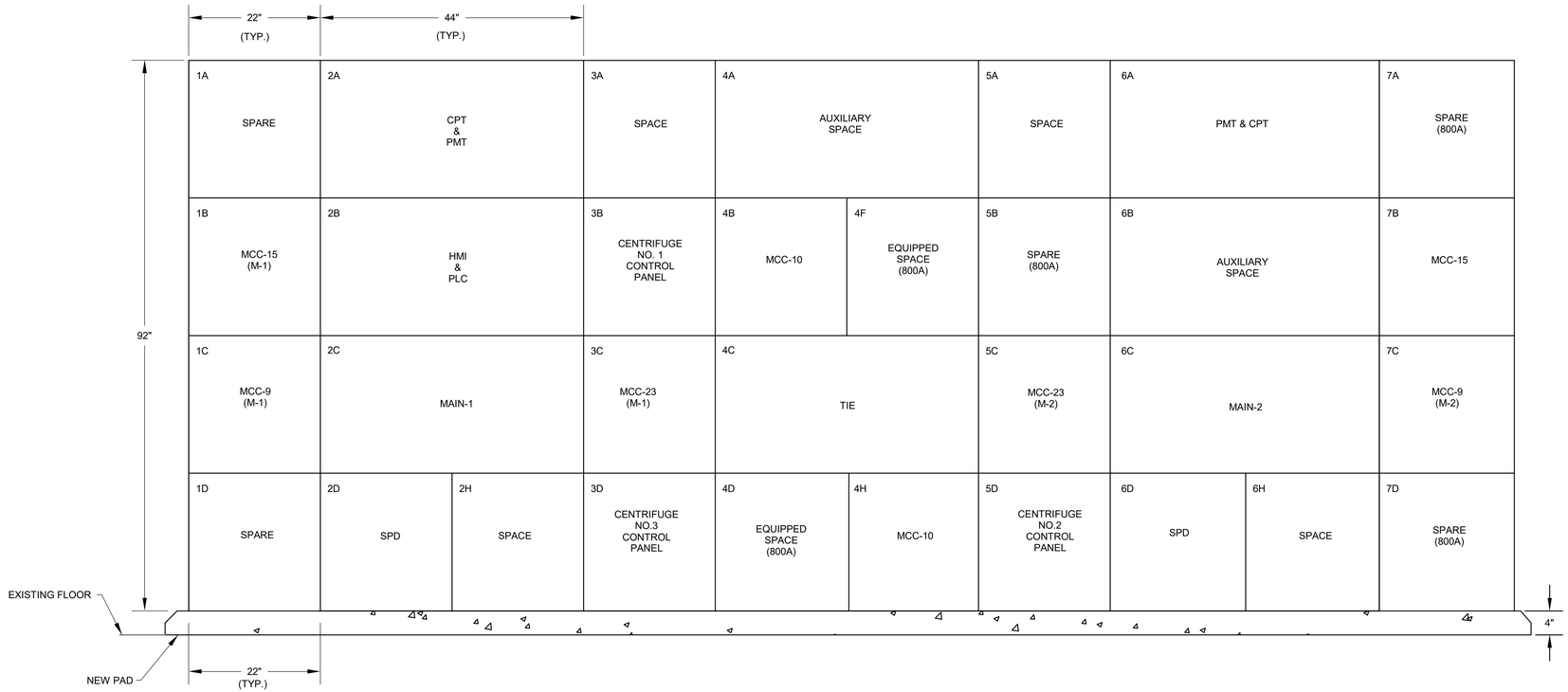

NEW ELECTRICAL SWITCHGEAR PS-2 ELEVATION

NO SCALE

THE DRAWINGS IN THIS SET ARE RECORD DRAWINGS. THEY ARE CONSTRUCTION CONTRACT DRAWINGS WHICH HAVE BEEN REVISED BASED ON AVAILABLE FIELD INFORMATION RECORDED BY OTHERS DURING CONSTRUCTION OF THIS CONTRACT. THERE HAS BEEN NO VERIFICATION OF DIMENSIONS SHOWN ON THE CONSTRUCTION DRAWINGS OR THE ACCURACY/COMPLETENESS OF THE FIELD INFORMATION RECEIVED.

SIGNATURE — DATE 2/7/2023

SHAH & ASSOCIATES

AS-BUILT REPLACEMENT SHEET

PROFESSIONAL CERTIFICATION
THIS DRAWING WAS ORIGINALLY APPROVED FOR CONSTRUCTION AND SEALED BY KANAIYALAL R. SHAH, A REGISTERED PROFESSIONAL ENGINEER IN THE STATE OF MARYLAND, NO. 11084

NOTICE TO CONTRACTORS
- PROJECT ELEVATIONS ARE BASED ON NAVD88 AND HOWARD COUNTY'S BENCHMARK SYSTEM
- PREVIOUS PROJECTS USED OTHER DATUMS
- APPLY THE FOLLOWING CONVERSIONS WHEN USING PREVIOUS CONTRACT DRAWINGS:
  - ADDITION NO. 6: SUBTRACT 0.80 FT
  - PRIOR ADDITIONS: SUBTRACT 1.04 FT

DEPARTMENT OF PUBLIC WORKS
HOWARD COUNTY, MARYLAND

CHIEF, BUREAU OF UTILITIES — DATE

DES: MM
DRN: DMG
CHK: KRS
DATE: 01/15/2018

DATE	REV	DESCRIPTION
03/2021		RECORD DRAWING

ELECTRICAL

NEW ELECTRICAL SWITCHGEAR PS-2 - ELEVATION

LITTLE PATUXENT WATER RECLAMATION PLANT
8TH ADDITION
BIOSOLIDS PROCESSING FACILITIES - PHASE 2

CAPITAL PROJECT S-6295
CONTRACT NO. 24-4936

ELECTION DISTRICT NO. 6
HOWARD COUNTY, MARYLAND

SCALE AS SHOWN

SHEET 226 OF 311

E-18

BIM 360://10054364 – Little Patuxent WRP 8th Addition/264592_100_E_V18.rvt
1/8/2022 10:29:32 AM

GENERAL NOTES:

1. FOR SYMBOLS AND ABBREVIATIONS, SEE DRAWING E-1.
2. FOR CONSTRUCTION SEQUENCE, SEE DRAWING E-2.
3. FOR MCC-9 ONE LINE DIAGRAM, SEE DRAWINGS E-8 THRU E-10.
4. FOR NEW MCC-9 LOCATION, SEE DRAWING E-29.

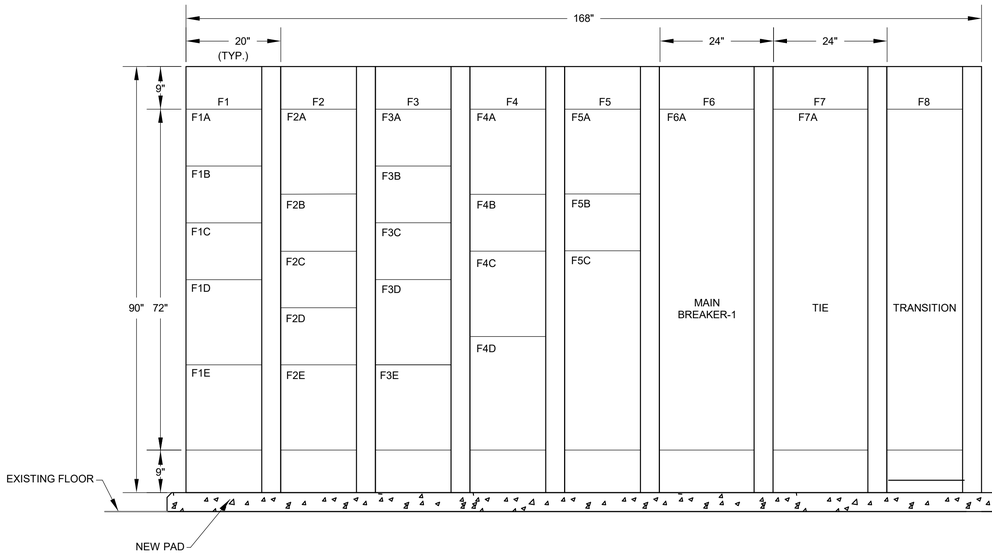

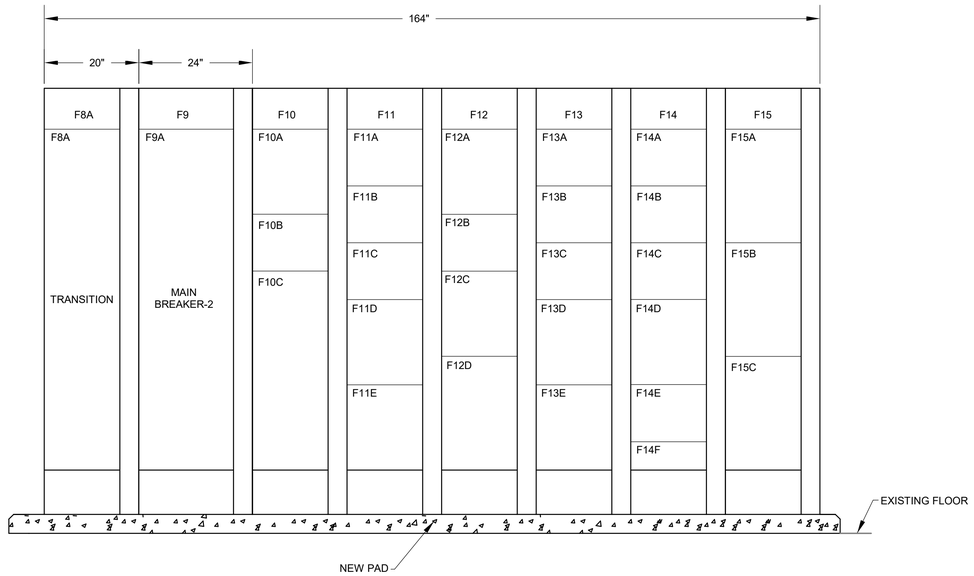

SEE PAGES 57-59 (BY EATON) FOR ADDITIONAL MCC INFORMATION

DRYER BUILDING - MCC-9 FRONT ELEVATION - NEW WORK

NO SCALE

THE DRAWINGS IN THIS SET ARE RECORD DRAWINGS. THEY ARE CONSTRUCTION CONTRACT DRAWINGS WHICH HAVE BEEN REVISED BASED ON AVAILABLE FIELD INFORMATION RECORDED BY OTHERS DURING CONSTRUCTION OF THIS CONTRACT. THERE HAS BEEN NO VERIFICATION OF DIMENSIONS SHOWN ON THE CONSTRUCTION DRAWINGS OR THE ACCURACY/COMPLETENESS OF THE FIELD INFORMATION RECEIVED.

SIGNATURE _____ DATE 2/7/2023

SHAH & ASSOCIATES

HDR

AS-BUILT REPLACEMENT SHEET

PROFESSIONAL CERTIFICATION

THIS DRAWING WAS ORIGINALLY APPROVED FOR CONSTRUCTION AND SEALED BY KANAIYALAL R. SHAH, A REGISTERED PROFESSIONAL ENGINEER IN THE STATE OF MARYLAND, NO. 11084

NOTICE TO CONTRACTORS

- PROJECT ELEVATIONS ARE BASED ON NAVD88 AND HOWARD COUNTY'S BENCHMARK SYSTEM
- PREVIOUS PROJECTS USED OTHER DATUMS
- APPLY THE FOLLOWING CONVERSIONS WHEN USING PREVIOUS CONTRACT DRAWINGS:
  - ADDITION NO. 6: SUBTRACT 0.80 FT
  - PRIOR ADDITIONS: SUBTRACT 1.04 FT

DEPARTMENT OF PUBLIC WORKS
HOWARD COUNTY, MARYLAND

CHIEF, BUREAU OF UTILITIES DATE

DES: MM

DRN: DMG

CHK: KRS

DATE: 01/15/2018

DATE	REV	DESCRIPTION
03/2021		RECORD DRAWING

ELECTRICAL

DRYER BUILDING
NEW MCC-9 - ELEVATION I

LITTLE PATUXENT WATER RECLAMATION PLANT
8TH ADDITION
BIOSOLIDS PROCESSING FACILITIES - PHASE 2

CAPITAL PROJECT S-6295
CONTRACT NO. 24-4936

ELECTION DISTRICT NO. 6
HOWARD COUNTY, MARYLAND

SCALE AS SHOWN

SHEET 227 OF 311

E-19

BIM 360://10054364 – Little Patuxent WRP 8th Addition/284592_100_E_V18.rvt
1/8/2022 10:29:32 AM

GENERAL NOTES:

1. FOR SYMBOLS AND ABBREVIATIONS, SEE DRAWING E-1.
2. FOR CONSTRUCTION SEQUENCE, SEE DRAWING E-2.
3. FOR MCC-9 ONE LINE DIAGRAM, SEE DRAWINGS E-8 THRU E-10.
4. FOR NEW MCC-9 LOCATION, SEE DRAWING E-29.

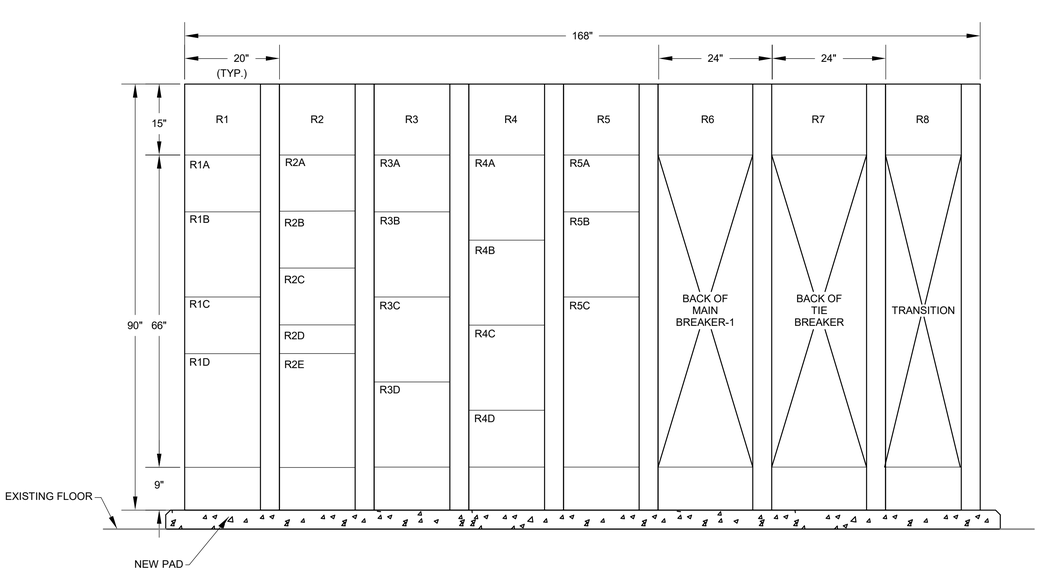

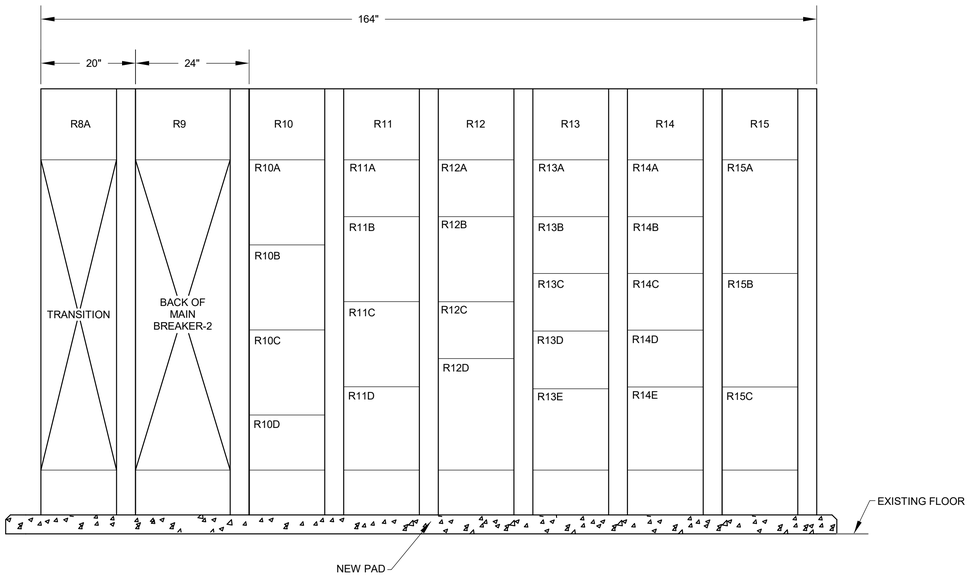

SEE PAGES 61-62 (BY EATON) FOR ADDITIONAL MCC INFORMATION

DRYER BUILDING - MCC-9 REAR ELEVATION - NEW WORK

NO SCALE

THE DRAWINGS IN THIS SET ARE RECORD DRAWINGS. THEY ARE CONSTRUCTION CONTRACT DRAWINGS WHICH HAVE BEEN REVISED BASED ON AVAILABLE FIELD INFORMATION RECORDED BY OTHERS DURING CONSTRUCTION OF THIS CONTRACT. THERE HAS BEEN NO VERIFICATION OF DIMENSIONS SHOWN ON THE CONSTRUCTION DRAWINGS OR THE ACCURACY/COMPLETENESS OF THE FIELD INFORMATION RECEIVED.

SIGNATURE _____ DATE 2/7/2023

S&A SHAH & ASSOCIATES

HDR

AS-BUILT REPLACEMENT SHEET

PROFESSIONAL CERTIFICATION
THIS DRAWING WAS ORIGINALLY APPROVED FOR CONSTRUCTION AND SEALED BY KANAIYALAL R. SHAH, A REGISTERED PROFESSIONAL ENGINEER IN THE STATE OF MARYLAND, NO. 11084

NOTICE TO CONTRACTORS
- PROJECT ELEVATIONS ARE BASED ON NAVD88 AND HOWARD COUNTY'S BENCHMARK SYSTEM
- PREVIOUS PROJECTS USED OTHER DATUMS
- APPLY THE FOLLOWING CONVERSIONS WHEN USING PREVIOUS CONTRACT DRAWINGS:
  - ADDITION NO. 6: SUBTRACT 0.80 FT
  - PRIOR ADDITIONS: SUBTRACT 1.04 FT

DEPARTMENT OF PUBLIC WORKS
HOWARD COUNTY, MARYLAND

CHIEF, BUREAU OF UTILITIES DATE

DES: MM
DRN: DMG
CHK: KRS
DATE: 01/15/2018

DATE	REV	DESCRIPTION
03/2021		RECORD DRAWING

ELECTRICAL

DRYER BUILDING
NEW MCC-9 - ELEVATION II

LITTLE PATUXENT WATER RECLAMATION PLANT
8TH ADDITION
BIOSOLIDS PROCESSING FACILITIES - PHASE 2

CAPITAL PROJECT S-6295
CONTRACT NO. 24-4936

ELECTION DISTRICT NO. 6
HOWARD COUNTY, MARYLAND

SCALE AS SHOWN

SHEET 228 OF 311

E-20

BIM 360://10054364 – Little Patuxent WRP 8th Addition/264592_100_E_V18.rvt
1/8/2022 10:29:33 AM

DRYER BUILDING - MCC-10 - FRONT ELEVATION

NO SCALE

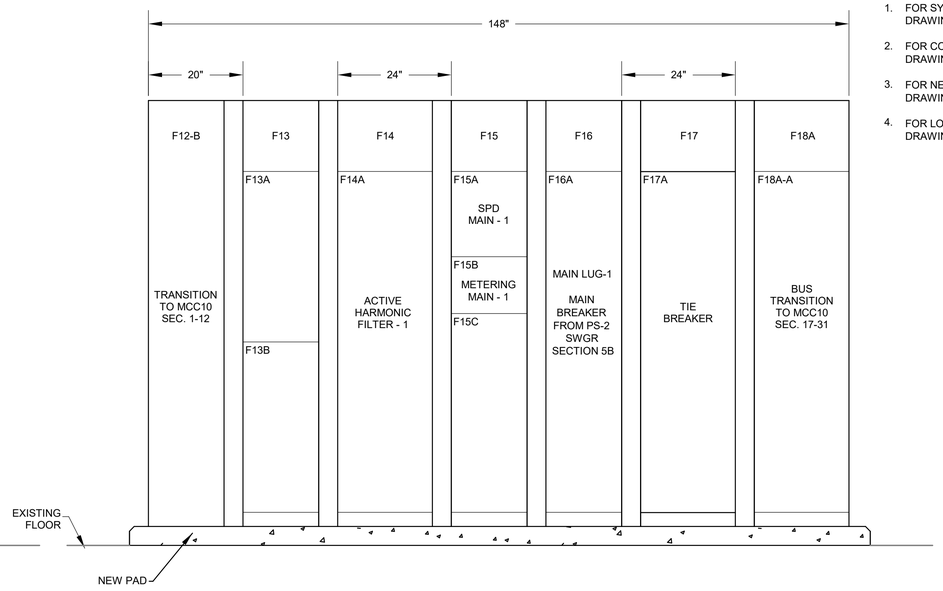

DRYER BUILDING - MCC-10 - FRONT ELEVATION

NO SCALE

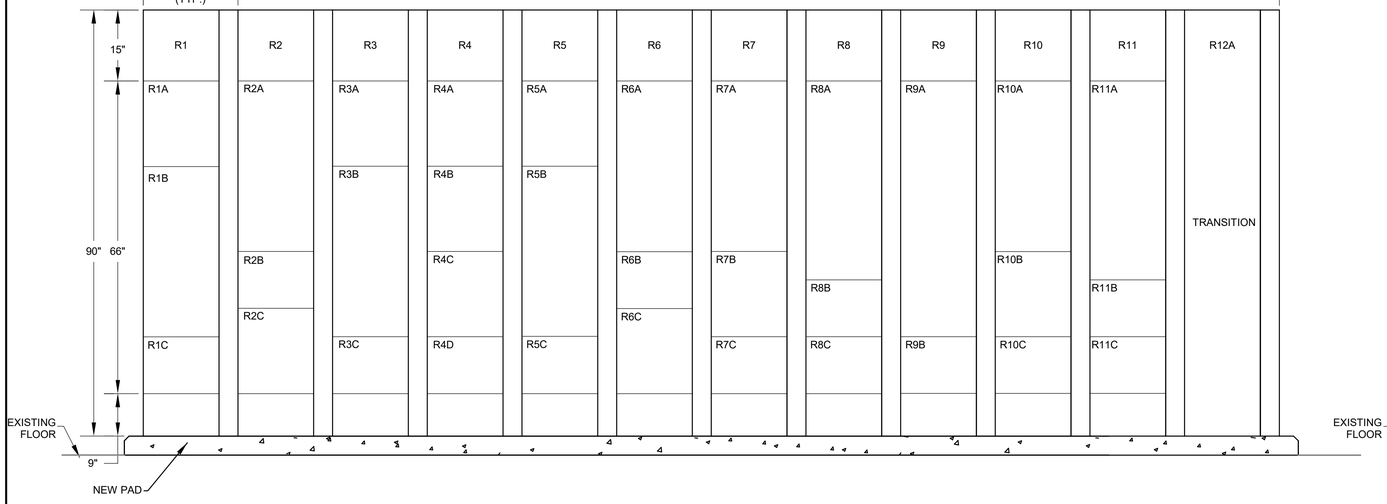

DRYER BUILDING - MCC-10 - REAR ELEVATION

NO SCALE

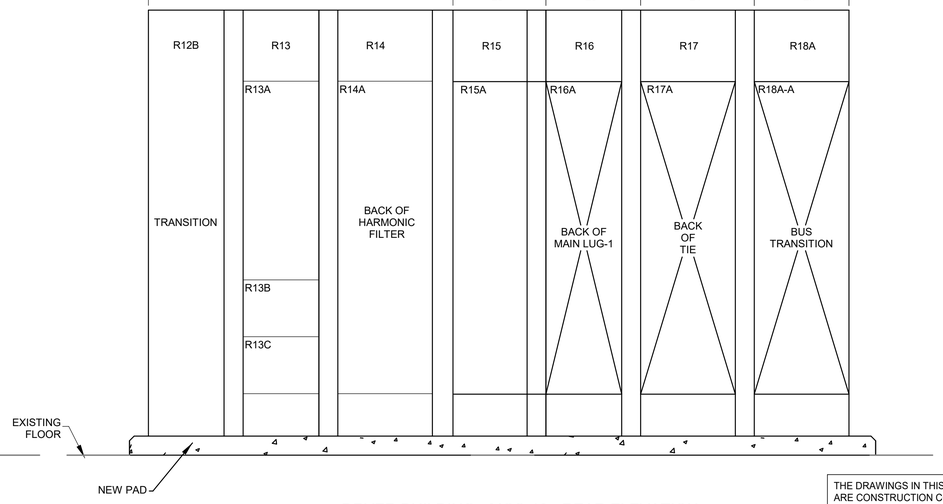

DRYER BUILDING - MCC-10 - REAR ELEVATION

NO SCALE

GENERAL NOTES:

1. FOR SYMBOLS AND ABBREVIATIONS, SEE DRAWING E-1.
2. FOR CONSTRUCTION SEQUENCE, SEE DRAWING E-2.
3. FOR NEW MCC-10 ONE LINE DIAGRAM, SEE DRAWINGS E-11 THRU E-13A.
4. FOR LOCATION OF NEW MCC-10, SEE DRAWINGS E-3 AND E-29.

SEE PAGES 65-69 (BY EATON) FOR ADDITIONAL MCC INFORMATION

THE DRAWINGS IN THIS SET ARE RECORD DRAWINGS. THEY ARE CONSTRUCTION CONTRACT DRAWINGS WHICH HAVE BEEN REVISED BASED ON AVAILABLE FIELD INFORMATION RECORDED BY OTHERS DURING CONSTRUCTION OF THIS CONTRACT. THERE HAS BEEN NO VERIFICATION OF DIMENSIONS SHOWN ON THE CONSTRUCTION DRAWINGS OR THE ACCURACY/COMPLETENESS OF THE FIELD INFORMATION RECEIVED.

SIGNATURE — DATE 2/7/2023

SHAH & ASSOCIATES

AS-BUILT REPLACEMENT SHEET

PROFESSIONAL CERTIFICATION

THIS DRAWING WAS ORIGINALLY APPROVED FOR CONSTRUCTION AND SEALED BY KANAIYALAL R. SHAH, A REGISTERED PROFESSIONAL ENGINEER IN THE STATE OF MARYLAND, NO. 11084

NOTICE TO CONTRACTORS

- PROJECT ELEVATIONS ARE BASED ON NAVD88 AND HOWARD COUNTY'S BENCHMARK SYSTEM
- PREVIOUS PROJECTS USED OTHER DATUMS
- APPLY THE FOLLOWING CONVERSIONS WHEN USING PREVIOUS CONTRACT DRAWINGS:
  - ADDITION NO. 6: SUBTRACT 0.80 FT
  - PRIOR ADDITIONS: SUBTRACT 1.04 FT

DEPARTMENT OF PUBLIC WORKS
HOWARD COUNTY, MARYLAND

CHIEF, BUREAU OF UTILITIES — DATE

DES: MM
DRN: DMG
CHK: KRS
DATE: 01/15/2018

DATE	REV	DESCRIPTION
03/2021		RECORD DRAWING

ELECTRICAL

DRYER BUILDING NEW MCC-10 ELEVATION I

LITTLE PATUXENT WATER RECLAMATION PLANT
8TH ADDITION
BIOSOLIDS PROCESSING FACILITIES - PHASE 2

CAPITAL PROJECT S-6295
CONTRACT NO. 24-4936

ELECTION DISTRICT NO. 6
HOWARD COUNTY, MARYLAND

SCALE AS SHOWN

SHEET 229 OF 311

E-21

BIM 360://10054364 – Little Patuxent WRP 8th Addition/264592_100_E_V18.rvt
1/8/2022 10:29:34 AM

GENERAL NOTES:

1. FOR SYMBOLS AND ABBREVIATIONS, SEE DRAWING E-1.
2. FOR CONSTRUCTION SEQUENCE, SEE DRAWING E-2.
3. FOR NEW MCC-10 ONE LINE DIAGRAM, SEE DRAWINGS E-11 THRU E-13A.
4. FOR LOCATION OF NEW MCC-10, SEE DRAWINGS E-3 AND E-29.

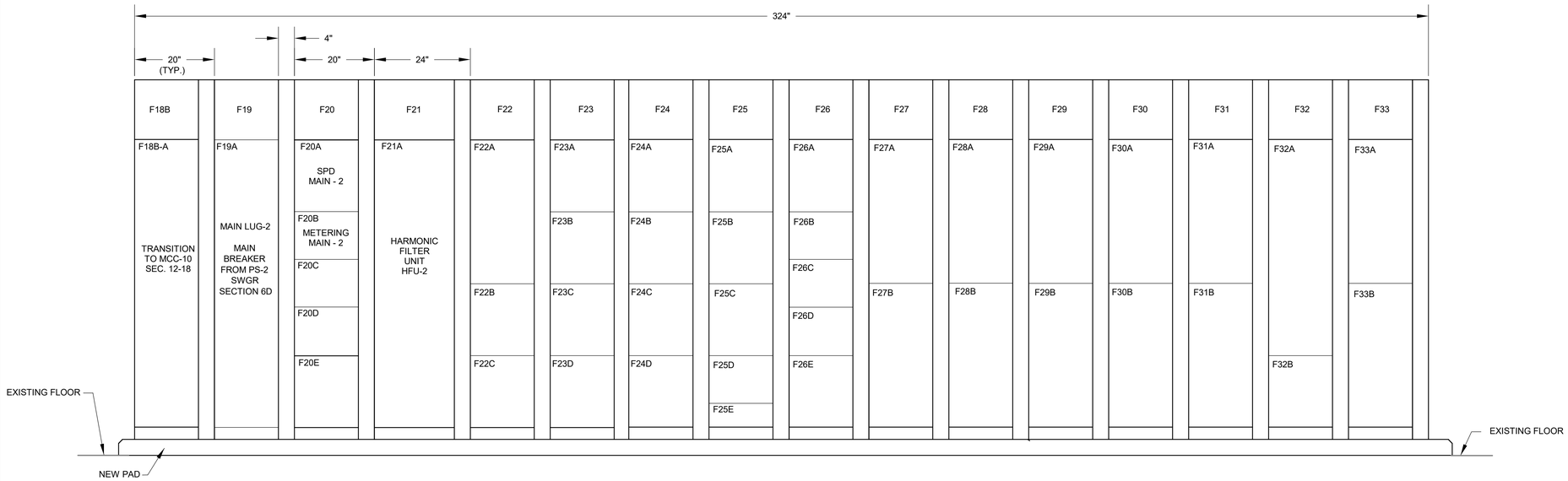

DRYER BUILDING - MCC10 - FRONT ELEVATION

NO SCALE

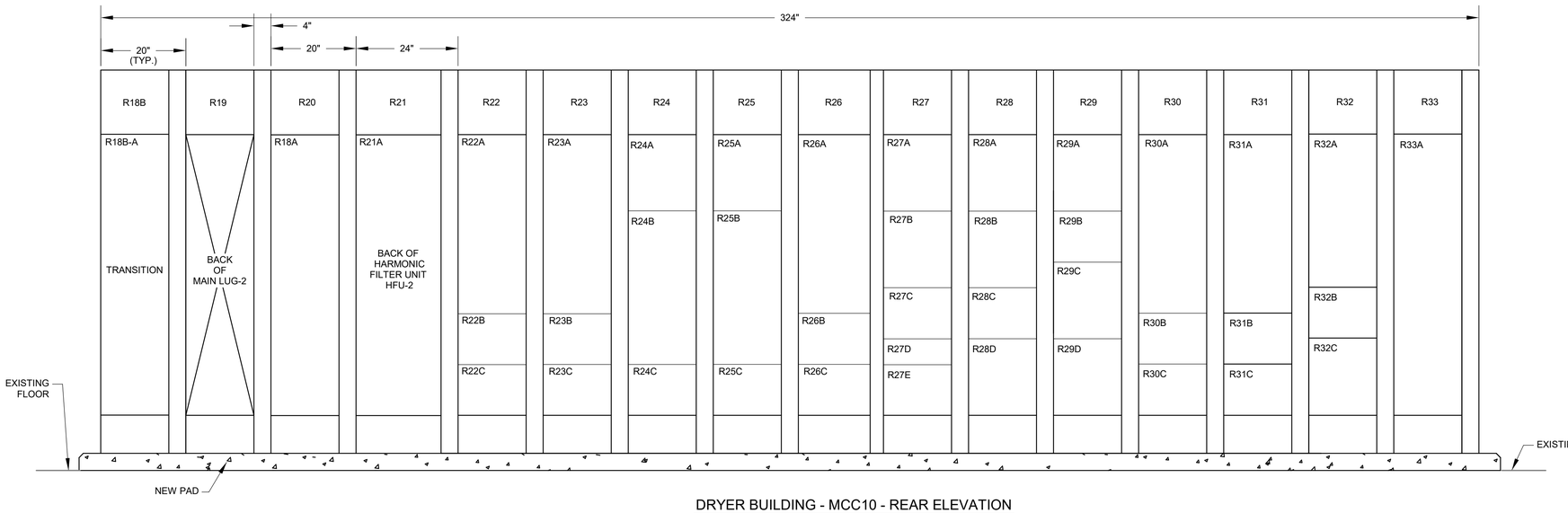

DRYER BUILDING - MCC10 - REAR ELEVATION

NO SCALE

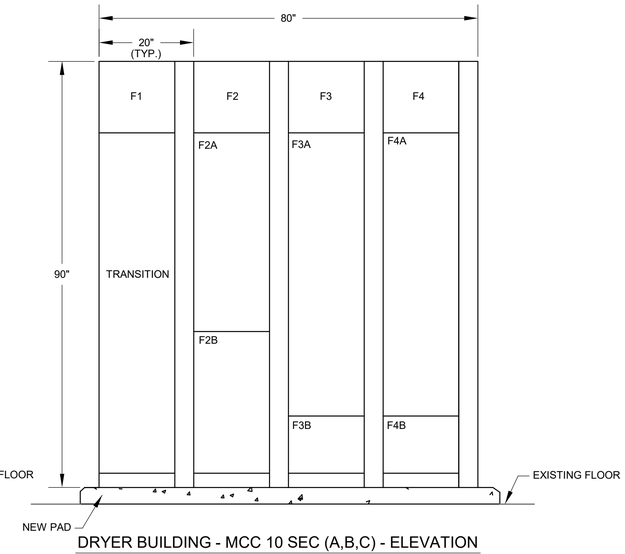

DRYER BUILDING - MCC 10 SEC (A,B,C) - ELEVATION

NO SCALE

THE DRAWINGS IN THIS SET ARE RECORD DRAWINGS. THEY ARE CONSTRUCTION CONTRACT DRAWINGS WHICH HAVE BEEN REVISED BASED ON AVAILABLE FIELD INFORMATION RECORDED BY OTHERS DURING CONSTRUCTION OF THIS CONTRACT. THERE HAS BEEN NO VERIFICATION OF DIMENSIONS SHOWN ON THE CONSTRUCTION DRAWINGS OR THE ACCURACY/COMPLETENESS OF THE FIELD INFORMATION RECEIVED.

SIGNATURE — DATE 2/7/2023

SEE PAGES 65-69 (BY EATON) FOR ADDITIONAL MCC INFORMATION

SHAH & ASSOCIATES

AS-BUILT REPLACEMENT SHEET

PROFESSIONAL CERTIFICATION
THIS DRAWING WAS ORIGINALLY APPROVED FOR CONSTRUCTION AND SEALED BY KANAIYALAL R. SHAH, A REGISTERED PROFESSIONAL ENGINEER IN THE STATE OF MARYLAND, NO. 11084

NOTICE TO CONTRACTORS
- PROJECT ELEVATIONS ARE BASED ON NAVD88 AND HOWARD COUNTY'S BENCHMARK SYSTEM
- PREVIOUS PROJECTS USED OTHER DATUMS
- APPLY THE FOLLOWING CONVERSIONS WHEN USING PREVIOUS CONTRACT DRAWINGS:
  - ADDITION NO. 6: SUBTRACT 0.80 FT
  - PRIOR ADDITIONS: SUBTRACT 1.04 FT

DEPARTMENT OF PUBLIC WORKS
HOWARD COUNTY, MARYLAND

CHIEF, BUREAU OF UTILITIES — DATE

DES: MM
DRN: DMG
CHK: KRS
DATE: 01/15/2018

DATE	REV	DESCRIPTION
03/2021		RECORD DRAWING

ELECTRICAL

DRYER BUILDING
NEW MCC-10 ELEVATION II

LITTLE PATUXENT WATER RECLAMATION PLANT
8TH ADDITION
BIOSOLIDS PROCESSING FACILITIES - PHASE 2

CAPITAL PROJECT S-6295
CONTRACT NO. 24-4936

ELECTION DISTRICT NO. 6
HOWARD COUNTY, MARYLAND

SCALE AS SHOWN

SHEET 230 OF 311

E-22

BIM 360://10054364 – Little Patuxent WRP 8th Addition/264592_100_E_V18.rvt
1/8/2022 10:29:34 AM

MOTOR CONTROL CENTER MCC-9 SCHEDULE

BUS - HORIZONTAL : 1600A , VERTICAL : 600A

VOLTS : 480V , PHASE : 3, WIRES : 3+1G, MIN. KAIC : 100 RMS, ENCLOSURE : NEMA 12 , LOCATION : ELECTRICAL ROOM - DRYER BUILDING

UNIT NO.	NAMEPLATE DATA	DEVICE	LOAD			CB OR MP			NEMA STARTER		REMARKS
			HP	KVA	AMP	P	FA	TA	TYPE	SIZE	
F1A	UNIT HEATER 8-772-HT CENTRIFUGE RM	BREAKER	-	6	-	3	150	15	-	-	-
F1B	UNIT HEATER 8-774-HT CENTRIFUGE RM	BREAKER	-	10	-	3	150	20	-	-	-
F1C	HEATER BLOWER GALLERY 8-805-HT	BREAKER	-	10.8	-	3	150	20	-	-	-
F1D	SPARE	COMB./STARTER	-	-	-	3	MCP	15	FVNR	1	-
F1E	SPACE	-	-	-	-	-	-	-	-	-	-
F2A	BASEMENT 50-EF-05	COMB./STARTER	1.5	-	-	3	MCP	7	FVNR	1	-
F2B	50-HP01 (UNIT A)	BREAKER	-	-	25.9	3	150	35	-	-	-
F2C	50-HP01 (UNIT C)	BREAKER	-	-	20.6	3	150	25	-	-	-
F2D	50-HP02 (UNIT B)	BREAKER	-	-	25.9	3	150	35	-	-	-
F2E	SPARE	COMB./STARTER	-	-	-	3	MCP	15	FVNR	1	-
F3A	ATS TRA - N2	BREAKER	-	45	-	3	150	70	-	-	-
F3B	DRYER BUILDING 50-MAU-01 (FAN 1)	BREAKER	20	-	-	3	150	80	-	-	-
F3C	DRYER BUILDING 50-MAU-02	BREAKER	7.5	-	-	3	150	20	-	-	-
F3D	DRYER BUILDING 50-EF-01	COMB./STARTER	5	-	-	3	MCP	15	FVNR	1	-
F3E	DRYER BUILDING 50-EF-03	COMB./STARTER	7.5	-	-	3	MCP	30	FVNR	1	-
F4A	SPARE	COMB./STARTER	-	-	-	3	MCP	30	FVNR	1	-
F4B	HTR BK1 DAF RM 8-801-HT	BREAKER	-	21.6	-	3	150	30	-	-	-
F4C	WATER RECLAIM PUMPS CP	COMB./STARTER	60	-	-	3	MCP	150	FVNR	3	-
F5A	SPD BUS 1	BREAKER	-	-	-	3	150	60	-	-	-
F5B	METERING BUS 1	-	-	-	-	-	-	-	-	-	-
F5C	SPACE	-	-	-	-	-	-	-	-	-	-
F6A	MAIN BUS 1	BREAKER	-	-	-	3	1600	1600	-	-	-
F7A	TIE BREAKER	BREAKER	-	-	-	3	1600	1600	-	-	-
F8A	TRANSITION	-	-	-	-	-	-	-	-	-	-
F9A	MAIN BUS 2	BREAKER	-	-	-	3	1600	1600	-	-	-
F10A	SPD BUS 2	BREAKER	-	-	-	3	150	60	-	-	-
F10B	METERING BUS 2	-	-	-	-	-	-	-	-	-	-
F10C	SPACE	-	-	-	-	-	-	-	-	-	-
F11A	ATS TRA - N1	BREAKER	-	45	-	3	150	70	-	-	-
F11B	DRYER BUILDING 50-MAU-01 (FAN 2)	BREAKER	20	-	-	3	150	80	-	-	-
F11C	DRYER BUILDING 50-MAU-03	BREAKER	7.5	-	-	3	150	20	-	-	-
F11D	DRYER BUILDING 50-EF-02	COMB./STARTER	5	-	-	3	MCP	15	FVNR	1	-
F11E	BASEMENT 50-EF-04	COMB./STARTER	1.5	-	-	3	MCP	7	FVNR	1	-
F12A	CONVEYOR ROOM 50-EF-08	COMB./STARTER	5	-	-	3	MCP	15	FVNR	1	-
F12B	50-HP01 (UNIT B)	BREAKER	-	-	20.6	3	150	25	-	-	-
F12C	50-HP02 (UNIT A)	BREAKER	-	-	25.9	3	150	35	-	-	-
F12D	50-HP03	BREAKER	-	-	12.3	3	150	20	-	-	-
F12E	SPARE	COMB./STARTER	-	-	-	3	MCP	15	FVNR	1	-
F13A	UNIT HEATER 8-773-HT CENTRIFUGE BLDG.	BREAKER	-	10	-	3	150	20	-	-	-
F13B	UNIT HEATER 8-775-HT CENTRIFUGE BLDG.	BREAKER	-	10	-	3	150	20	-	-	-
F13C	HEATER BASEMENT 8-806-HT	BREAKER	-	10.8	-	3	150	20	-	-	-
F13D	SPARE	COMB./STARTER	-	-	-	3	MCP	30	FVNR	1	-
F13E	SPARE	COMB./STARTER	-	-	-	3	MCP	30	FVNR	1	-

MOTOR CONTROL CENTER MCC-9 SCHEDULE

BUS - HORIZONTAL : 1600A , VERTICAL : 600A

VOLTS : 480V , PHASE : 3, WIRES : 3+1G, MIN. KAIC : 100 RMS, ENCLOSURE : NEMA 12, LOCATION : ELECTRICAL ROOM - DRYER BUILDING

UNIT NO.	NAMEPLATE DATA	DEVICE	LOAD			CB OR MP			NEMA STARTER		REMARKS
			HP	KVA	AMP	P	FA	TA	TYPE	SIZE	
F14A	SPACE	-	-	-	-	-	-	-	-	-	-
F14B	SPARE	BREAKER	-	-	-	3	150	20	-	-	-
F14C	SPARE	BREAKER	-	-	-	3	150	15	-	-	-
F14D	SPARE	COMB./STARTER	-	-	-	3	MCP	50	FVNR	2	-
F14E	ATS LP9A - N2	BREAKER	-	75	-	3	150	125	-	-	-
F14F	SPACE	-	-	-	-	-	-	-	-	-	
F15A	SPACE	-	-	-	-	-	-	-	-	-	-
F15B	SPACE	-	-	-	-	-	-	-	-	-	-
F15C	SPACE	-	-	-	-	-	-	-	-	-	-
R1A	ATS TRE - N1	BREAKER	-	30	-	3	150	50	-	-	-
R1B	DAF FAN 8-901-F DAF BUILDING	COMB./STARTER	2	-	-	3	MCP	7	FVNR	1	-
R1C	ATS TRD - N1	BREAKER	-	45	-	3	150	70	-	-	-
R1D	DAF MAU 10-MAU01	BREAKER	-	245	-	3	400	350	-	-	-
R2A	MTS FLUSHING H2O SYSTEM - N1	BREAKER	-	-	-	3	400	300	-	-	-
R2B	SUMP PUMP SUBSTATION PS2	BREAKER	5	-		3	150	15			
R2C	50-EWH01	BREAKER	-	1.7	-	3	150	15	-	-	-
R2D	ATS LP9A - N1	BREAKER	-	75	-	3	150	125	-	-	-
R2E	SPACE	-	-	-	-	-	-	-	-	-	-
R3A	INSTANTANEOUS WTR HTR DIGESTER PIPE GALLERY	BREAKER	-	63	-	3	150	100	-	-	-
R3B	SPARE	COMB./STARTER	-	-	-	3	MCP	7	FVNR	1	-
R3C	SPARE	COMB./STARTER	-	-	-	3	MCP	7	FVNR	1	-
R3D	SPARE	COMB./STARTER	-	-	-	3	MCP	7	FVNR	1	-
R4A	CENTRIFUGE FAN 8-907-F	COMB./STARTER	3	-	-	3	MCP	15	FVNR	1	-
R4B	CENTRIFUGE FAN 8-909-F	COMB./STARTER	3	-	-	3	MCP	15	FVNR	1	-
R4C	VENT FAN 8-850-F DAF RM	COMB./STARTER	2	-	-	3	MCP	7	FVNR	1	-
R4D	SPARE	BREAKER	-	-	-	3	150	50	-	-	-
R5A	SPARE	BREAKER	-	-	-	3	150	50	-	-	-
R5B	SPARE	COMB./STARTER	-	-	-	3	MCP	50	FVNR	2	-
R5C	SPACE	-	-	-	-	-	-	-	-	-	-
R6	BACK OF MAIN BUS 1	-	-	-	-	-	-	-	-	-	-
R7	BACK OF TIE BREAKER	-	-	-	-	-	-	-	-	-	-
R8	BACK OF TRANSITION	-	-	-	-	-	-	-	-	-	-
R9	BACK OF MAIN BUS 2	-	-	-	-	-	-	-	-	-	-
R10A	CENTRIFUGE FAN 8-908-F	COMB./STARTER	3	-	-	3	MCP	15	FVNR	1	-
R10B	SPARE	COMB./STARTER	-	-	-	3	MCP	30	FVNR	1	-
R10C	VENT FAN 8-854-F SUBSTATION PS2	COMB./STARTER	1.5	-	-	3	MCP	7	FVNR	1	-
R10D	TRUCK BAY ROOL UP DOOR 8-625-ME	BREAKER	-	-	-	3	150	20	-	-	-
R11A	INSTANTANEOUS HOT WTR HTR	BREAKER	-	-	-	3	150	40	-	-	-
R11B	SPARE	COMB./STARTER	-	-	-	3	MCP	7	FVNR	1	-
R11C	SPARE	COMB./STARTER	-	-	-	3	MCP	7	FVNR	1	-
R11D	SPARE	COMB./STARTER	-	-	-	3	MCP	7	FVNR	1	-
R12A	MTS FLUSHING H2O SYSTEM - N2	BREAKER	-	-	-	3	400	300	-	-	-
R12B	SYNAGRO TEMPORARY POWER	BREAKER	-	-	200	3	250	250	-	-	-

GENERAL NOTES:

1. FOR SYMBOLS AND ABBREVIATIONS, SEE DRAWING E-1.
2. FOR CONSTRUCTION SEQUENCE, SEE DRAWING E-2.
3. FOR MCC-9 ONE LINE DIAGRAM, SEE DRAWINGS E-8 THRU E-10.

THE DRAWINGS IN THIS SET ARE RECORD DRAWINGS. THEY ARE CONSTRUCTION CONTRACT DRAWINGS WHICH HAVE BEEN REVISED BASED ON AVAILABLE FIELD INFORMATION RECORDED BY OTHERS DURING CONSTRUCTION OF THIS CONTRACT. THERE HAS BEEN NO VERIFICATION OF DIMENSIONS SHOWN ON THE CONSTRUCTION DRAWINGS OR THE ACCURACY/COMPLETENESS OF THE FIELD INFORMATION RECEIVED.

SIGNATURE 2/7/2020 DATE

SHAH & ASSOCIATES

AS-BUILT REPLACEMENT SHEET

PROFESSIONAL CERTIFICATION
THIS DRAWING WAS ORIGINALLY APPROVED FOR CONSTRUCTION AND SEALED BY KANAIYALAL R. SHAH, A REGISTERED PROFESSIONAL ENGINEER IN THE STATE OF MARYLAND, NO. 11084

NOTICE TO CONTRACTORS
- PROJECT ELEVATIONS ARE BASED ON NAVD88 AND HOWARD COUNTY'S BENCHMARK SYSTEM
- PREVIOUS PROJECTS USED OTHER DATUMS
- APPLY THE FOLLOWING CONVERSIONS WHEN USING PREVIOUS CONTRACT DRAWINGS:
  - ADDITION NO. 6: SUBTRACT 0.80 FT
  - PRIOR ADDITIONS: SUBTRACT 1.04 FT

DEPARTMENT OF PUBLIC WORKS
HOWARD COUNTY, MARYLAND

CHIEF, BUREAU OF UTILITIES DATE

DES: MM
DRN: DMG
CHK: KRS
DATE: 01/15/2018

DATE	REV	DESCRIPTION
03/2021		RECORD DRAWING

ELECTRICAL

DRYER BUILDING NEW MCC-9 SCHEDULE I

LITTLE PATUXENT WATER RECLAMATION PLANT
8TH ADDITION
BIOSOLIDS PROCESSING FACILITIES - PHASE 2

CAPITAL PROJECT S-6295
CONTRACT NO. 24-4936

ELECTION DISTRICT NO. 6
HOWARD COUNTY, MARYLAND

SCALE AS SHOWN

SHEET 231 OF 311

E-23

BIM 360://10054364 – Little Patuxent WRP 8th Addition/264592_100_E_V18.rvt
1/8/2022 10:29:35 AM

MOTOR CONTROL CENTER MCC-9 SCHEDULE

BUS - HORIZONTAL : 1600A , VERTICAL : 600A

VOLTS : 480V , PHASE : 3, WIRES : 3+1G, MIN. KAIC : 100 RMS, ENCLOSURE : NEMA 12 , LOCATION : ELECTRICAL ROOM - DRYER BUILDING

UNIT NO.	NAMEPLATE DATA	DEVICE	LOAD			CB OR MP			NEMA STARTER		REMARKS
			HP	KVA	AMP	P	FA	TA	TYPE	SIZE	
R12C	TRUCK BAY HOIST 8-620-ME	BREAKER	-	-	-	3	150	20	-	-	-
R12D	SPACE	-	-	-	-	-	-	-	-	-	-
R13A	ATS TRE - N2	BREAKER	-	30	-	3	150	50	-	-	-
R13B	DAF FAN 8-903-F DAF BUILDING	COMB./STARTER	0.75	-	-	3	MCP	7	FVNR	1	-
R13C	ATS TRD - N2	BREAKER	-	45	-	3	150	70	-	-	-
R13D	STRAINER CTRL PNL	BREAKER	-	3.53	-	3	150	15	-	-	-
R13E	SPACE	-	-	-	-	-	-	-	-	-	-
R14A	SPACE	-	-	-	-	-	-	-	-	-	-
R14B	POSITIVE PRESSURE UNIT 50-PPU01	BREAKER	2	-	-	3	150	15	-	-	-
R14C	HEATERS DAFT GALLERY 8-802-HT	BREAKER	-	-	-	3	150	20	-	-	-
R14D	SPARE	BREAKER	-	-	-	3	150	20	-	-	-
R14E	SPARE	COMB./STARTER	-	-	-	3	MCP	30	FVNR	1	-
R15A	SPACE	-	-	-	-	-	-	-	-	-	-
R15B	SPACE	-	-	-	-	-	-	-	-	-	-
R15C	SPACE	-	-	-	-	-	-	-	-	-	-

GENERAL NOTES:

1. FOR SYMBOLS AND ABBREVIATIONS, SEE DRAWING E-1.
2. FOR CONSTRUCTION SEQUENCE, SEE DRAWING E-2.
3. FOR MCC-9 ONE LINE DIAGRAM, SEE DRAWINGS E-8 THRU E-10.

THE DRAWINGS IN THIS SET ARE RECORD DRAWINGS. THEY ARE CONSTRUCTION CONTRACT DRAWINGS WHICH HAVE BEEN REVISED BASED ON AVAILABLE FIELD INFORMATION RECORDED BY OTHERS DURING CONSTRUCTION OF THIS CONTRACT. THERE HAS BEEN NO VERIFICATION OF DIMENSIONS SHOWN ON THE CONSTRUCTION DRAWINGS OR THE ACCURACY/COMPLETENESS OF THE FIELD INFORMATION RECEIVED.

SIGNATURE 2/7/2023 DATE

SHAH & ASSOCIATES

HDR

AS-BUILT REPLACEMENT SHEET

PROFESSIONAL CERTIFICATION
THIS DRAWING WAS ORIGINALLY APPROVED FOR CONSTRUCTION AND SEALED BY KANAIYALAL R. SHAH, A REGISTERED PROFESSIONAL ENGINEER IN THE STATE OF MARYLAND, NO. 11084

NOTICE TO CONTRACTORS
- PROJECT ELEVATIONS ARE BASED ON NAVD88 AND HOWARD COUNTY'S BENCHMARK SYSTEM
- PREVIOUS PROJECTS USED OTHER DATUMS
- APPLY THE FOLLOWING CONVERSIONS WHEN USING PREVIOUS CONTRACT DRAWINGS:
  - ADDITION NO. 6: SUBTRACT 0.80 FT
  - PRIOR ADDITIONS: SUBTRACT 1.04 FT

DEPARTMENT OF PUBLIC WORKS
HOWARD COUNTY, MARYLAND

CHIEF, BUREAU OF UTILITIES DATE

DES: MM
DRN: DMG
CHK: KRS
DATE: 01/15/2018

DATE	REV	DESCRIPTION
03/2021		RECORD DRAWING

ELECTRICAL

DRYER BUILDING NEW MCC-9 SCHEDULE II

LITTLE PATUXENT WATER RECLAMATION PLANT
8TH ADDITION
BIOSOLIDS PROCESSING FACILITIES - PHASE 2

CAPITAL PROJECT S-6295
CONTRACT NO. 24-4936

ELECTION DISTRICT NO. 6
HOWARD COUNTY, MARYLAND

SCALE AS SHOWN

SHEET 232 OF 311

E-24

BIM 360://10054364 – Little Patuxent WRP 8th Addition/284592_100_E_V18.rvt
1/8/2022 10:29:36 AM

MOTOR CONTROL CENTER MCC-10 SCHEDULE

BUS - HORIZONTAL : 2000A , VERTICAL : 600A

VOLTS : 480V , PHASE : 3, WIRES : 3+1G, MIN. KAIC : 100 RMS, ENCLOSURE : NEMA 12 , LOCATION : ELECTRICAL ROOM - DRYER BUILDING

UNIT NO.	NAMEPLATE DATA	DEVICE	LOAD			CB OR MP			NEMA STARTER		REMARKS
			HP	KVA	AMP	P	FA	TA	TYPE	SIZE	
F1A	DRYER 1 HOT AIR PLENUM FAN 8-DRY-7112-FAN	BREAKER	25	-	-	3	150	70	-	-	VIA BUILT IN VFD
F1B	DRYER 1 ZONE 1 HOT AIR FAN 8-DRY-7118-FAN	COMB./STARTER	15	-	-	3	MCP	50	FVNR	2	-
-	-	-	-	-	-	-	-	-	-	-	-
F2A	DRYER 2 ZONE 1 HOT AIR FAN 8-DRY-7218-FAN	COMB./STARTER	15	-	-	3	MCP	50	FVNR	2	-
F2B	DRYER 1 ZONE 3 HOT AIR FAN 8-DRY-7138-FAN	COMB./STARTER	15	-	-	3	MCP	50	FVNR	2	-
F2C	DRYER 1 BOTTOM SCRAPPER 8-DRY-5111-COL	COMB./STARTER	0.25	-	-	3	MCP	7	FVNR	1	-
F2D	DRYER 2 ZONE 3 HOT AIR FAN 8-DRY-7238-FAN	COMB./STARTER	15	-	-	3	MCP	50	FVNR	2	-
F3A	DRYER 1 ZONE 5 HOT AIR FAN 8-DRY-7158-FAN	COMB./STARTER	15	-	-	3	MCP	50	FVNR	2	-
F3B	WET CAKE BIN DISCHARGE GATE TO DRYER 1 PUMP 1 8-DRY-4112A-MOV	BREAKER	1	-	-	3	150	15	-	-	-
F3C	DRYER 2 ZONE 5 HOT AIR FAN 8-DRY-7258-FAN	COMB./STARTER	15	-	-	3	MCP	50	FVNR	2	-
F3D	DRYER 1 ZONE 7 HOT AIR FAN 8-DRY-7178-FAN	COMB./STARTER	15	-	-	3	MCP	50	FVNR	2	-
F4A	DRYER PROCESS WATER PUMP1 8-DRY-1213-PMP	BREAKER	40	-	-	3	150	100	-	-	VIA BUILT IN VFD
F5A	SPACE RESERVED FOR DRYER PROCESS WATER PUMP2 (FUTURE) 8-DRY-1223 PMP	-	-	-	-	-	-	-	-	-	-
F6A	SPARE	COMB./STARTER	-	-	-	3	MCP	15	FVNR	1	-
F6B	SPARE	COMB./STARTER	-	-	-	3	MCP	30	FVNR	1	-
F6C	SILO 1 CONE VIBRATOR 8-DRY-6111-VBR	COMB./STARTER	1	-	-	3	MCP	7	FVNR	1	-
F6D	WET CAKE BIN DISCHARGE GATE TO DRYER 1 PUMP 2 8-DRY-4122A-MOV	BREAKER	1	-	-	3	150	15	-	-	-
F6E	SPACE	-	-	-	-	-	-	-	-	-	-
F7A	DRYER1 SOLIDS MIXER 8-DRY-5311-MXR	BREAKER	10	-	-	3	150	35	-	-	VIA BUILT IN VFD
F7B	SPARE	BREAKER	-	-	-	3	150	15	-	-	-
F7C	SPACE	-	-	-	-	-	-	-	-	-	-
F8A	WET CAKE BIN SCREW TO DRYER 1 PUMP 1 8-DRY-4112-CNV	BREAKER	10	-	-	3	150	50	-	-	VIA BUILT IN 20 HP VFD
F8B	SPACE	-	-	-	-	-	-	-	-	-	-
F9A	DRYER 1 DRAG CONVEYOR-2 8-DRY-6524-CNV	BREAKER	2	-	-	3	150	15	-	-	VIA BUILT IN VFD (REVERSIBLE)
F9B	DRYER 1 SOLIDS DOSING UNIT 8-DRY-5711-SDU	BREAKER	0.5	-	-	3	150	15	-	-	VIA BUILT IN VFD
F10A	DRYER 1 SOLIDS ROLLER PRESS MOTOR 1 8-DRY-5911A-SRP	BREAKER	2	-	-	3	150	15	-	-	VIA BUILT IN VFD
F10B	DRYER 1 SOLIDS ROLLER PRESS MOTOR 2 8-DRY-5911B-SRP	BREAKER	2	-	-	3	150	15	-	-	VIA BUILT IN VFD
F11A	DRYER 1 UPPER BELT 8-DRY-5112-BLT	BREAKER	0.5	-	-	3	150	15	-	-	VIA BUILT IN VFD
F11B	DRYER 1 LOWER BELT 8-DRY-5122-BLT	BREAKER	0.5	-	-	3	150	15	-	-	VIA BUILT IN VFD
	TRANSITION	-	-	-	-	-	-	-	-	-	-
	TRANSITION	-	-	-	-	-	-	-	-	-	-
F12A	DRYER 1 DRAG CONVEYOR 1 8-DRY-6514-CNV	BREAKER	1	-	-	3	150	15	-	-	VIA BUILT IN VFD (REVERSIBLE)
F12B	DRYER 1 DRUM MILL 1 MOTOR 1 8-DRY-6711A-MIL	BREAKER	3	-	-	3	150	15	-	-	VIA BUILT IN VFD
F13A	ACTIVE HARMONIC FILTER 1 HFU-1	-	-	-	-	-	-	-	-	-	-
F14A	SPD MAIN - 1	BREAKER	-	-	-	3	150	60	-	-	-
F14B	METERING MAIN - 1	-	-	-	-	-	-	-	-	-	-
F14C	SPACE	-	-	-	-	-	-	-	-	-	-
F15A	MAIN LUG - 1	-	-	-	-	-	-	-	-	-	-
F16A	TIE BREAKER	BREAKER	-	-	-	3	2000	2000	-	-	-
	TRANSITION	-	-	-	-	-	-	-	-	-	-
	TRANSITION	-	-	-	-	-	-	-	-	-	-
F17A	MAIN LUG - 2	-	-	-	-	-	-	-	-	-	-
F18A	SPD MAIN - 2	BREAKER	-	-	-	3	150	60	-	-	-
F18B	METERING MAIN - 2	-	-	-	-	-	-	-	-	-	-

MOTOR CONTROL CENTER MCC-10 SCHEDULE

BUS - HORIZONTAL : 2000A , VERTICAL : 600A

VOLTS : 480V , PHASE : 3, WIRES : 3+1G, MIN. KAIC : 100 RMS, ENCLOSURE : NEMA 12 , LOCATION : ELECTRICAL ROOM - DRYER BUILDING

UNIT NO.	NAMEPLATE DATA	DEVICE	LOAD			CB OR MP			NEMA STARTER		REMARKS
			HP	KVA	AMP	P	FA	TA	TYPE	SIZE	
F18C	SPACE	-	-	-	-	-	-	-	-	-	-
F19A	ACTIVE HARMONIC FILTER 2 HFU-2	-	-	-	-	-	-	-	-	-	-
F20A	DRYER 2 SOLIDS DISTRIBUTOR 8-DRY-5611-SDR	BREAKER	0.8	-	-	3	150	15	-	-	VIA BUILT IN VFD (REVERSIBLE)
F20B	SPARE	COMB./STARTER	-	-	-	3	MCP	15	FVNR	1	-
F20C	SPARE	COMB./STARTER	-	-	-	3	MCP	15	FVNR	1	-
F21A	DRYER 2 BOTTOM SCRAPPER 8-DRY-5211-COL	COMB./STARTER	0.25	-	-	3	MCP	7	FVNR	1	-
F21B	DRYER 1 ZONE 2 HOT AIR FAN 8-DRY-7128-FAN	COMB./STARTER	15	-	-	3	MCP	50	FVNR	2	-
F21C	DRYER 2 ZONE 2 HOT AIR FAN 8-DRY-7228-FAN	COMB./STARTER	15	-	-	3	MCP	50	FVNR	2	-
F21D	DRYER 1 ZONE 4 HOT AIR FAN 8-DRY-7148-FAN	COMB./STARTER	15	-	-	3	MCP	50	FVNR	2	-
F22A	DRYER 2 ZONE 4 HOT AIR FAN 8-DRY-7248-FAN	COMB./STARTER	15	-	-	3	MCP	50	FVNR	2	-
F22B	DRYER 1 ZONE 6 HOT AIR FAN 8-DRY-7168-FAN	COMB./STARTER	15	-	-	3	MCP	50	FVNR	2	-
F22C	DRYER 2 ZONE 6 HOT AIR FAN 8-DRY-7268-FAN	COMB./STARTER	15	-	-	3	MCP	50	FVNR	2	-
F22D	DRYER 1 ZONE 8 HOT AIR FAN 8-DRY-7188-FAN	COMB./STARTER	15	-	-	3	MCP	50	FVNR	2	-
F23A	DRYER 2 ZONE 8 HOT AIR FAN 8-DRY-7288-FAN	COMB./STARTER	15	-	-	3	MCP	50	FVNR	2	-
F23B	DRYER 2 DISCHARGE SCREW 8-DRY-6411-CNV	COMB./STARTER	3	-	-	3	MCP	15	FVNR	1	-
F23C	SILO 2 CONE VIBRATOR 8-DRY-6211-VBR	COMB./STARTER	1	-	-	3	MCP	7	FVNR	1	-
F23D	WET CAKE BIN DISCHARGE GATE TO DRYER 2 PUMP 2 8-DRY-4222A-MOV	BREAKER	1	-	-	3	150	15	-	-	-
F23E	SPACE	-	-	-	-	-	-	-	-	-	-
F24A	SPARE	COMB./STARTER	-	-	-	3	MCP	30	FVNR	1	-
F24B	SPARE	BREAKER	-	-	-	3	150	15	-	-	-
F24C	SPARE	BREAKER	-	-	-	3	150	15	-	-	-
F24D	SPARE	BREAKER	-	-	-	3	150	15	-	-	-
F24E	SPARE	COMB./STARTER	-	-	-	3	MCP	7	FVNR	1	-
F25A	DRYER 2 DRAG CONVEYOR 2 8-DRY-6624-CNV	BREAKER	2	-	-	3	150	15	-	-	VIA BUILT IN VFD
F25B	DRYER 2 SOLIDS DOSING UNIT 8-DRY-5811-SDU	BREAKER	0.5	-	-	3	150	15	-	-	VIA BUILT IN VFD
F26A	DRYER 2 SOLIDS ROLLER PRESS MOTOR 1 8-DRY-5011A-SRP	BREAKER	2	-	-	3	150	15	-	-	VIA BUILT IN VFD
F26B	DRYER 2 SOLIDS ROLLER PRESS MOTOR 2 8-DRY-5011B-SRP	BREAKER	2	-	-	3	150	15	-	-	VIA BUILT IN VFD
F27A	DRYER 2 UPPER BELT 8-DRY-5212-BLT	BREAKER	0.5	-	-	3	150	15	-	-	VIA BUILT IN VFD
F27B	DRYER 2 LOWER BELT 8-DRY-5222-BLT	BREAKER	0.5	-	-	3	150	15	-	-	VIA BUILT IN VFD
F28A	DRYER 2 DRAG CONVEYOR-1 8-DRY-6614-CNV	BREAKER	1	-	-	3	150	15	-	-	VIA BUILT IN VFD
F28B	DRYER 2 DRUM MILL 1 MOTOR 1 8-DRY-6811A-MIL	BREAKER	3	-	-	3	150	15	-	-	VIA BUILT IN VFD
F29A	DRYER 2 DRUM MILL 1 MOTOR 2 8-DRY-6811B-MIL	BREAKER	3	-	-	3	150	15	-	-	VIA BUILT IN VFD
F29B	DRYER 2 MIXER DOSING SCREW 8-DRY-6011-CNV	BREAKER	1	-	-	3	150	15	-	-	VIA BUILT IN VFD
F30A	DRYER PROCESS WATER PUMP 3 8-DRY-1233-PMP	BREAKER	40	-	-	3	150	100	-	-	VIA BUILT IN VFD
F31A	SPACE	-	-	-	-	-	-	-	-	-	-
F31B	SPACE	-	-	-	-	-	-	-	-	-	-
R1A	SILO 1 DISCHARGE GATE 8-DRY-6121-MOV	COMB./STARTER	0.5	-	-	3	MCP	7	FVR	1	FULL VOLTAGE REVERSING STARTER
R1B	DRYER 1 DRUM MILL 1 MOTOR 2 8-DRY-6711B-MIL	BREAKER	3	-	-	3	150	15	-	-	VIA BUILT IN VFD
R1C	SPACE	-	-	-	-	-	-		-	-	-
R2A	DRYER 1 MIXER DOSING SCREW 8-DRY-6911-CNV	BREAKER	1	-	-	3	150	15	-	-	VIA BUILT IN VFD
R2B	DRYER 1 BURNER 8-DRY-7111-BRN	BREAKER	-	-	-	3	150	30	-	-	-
R2C	SILO 1 AIR LOCK ROTARY VALVE 8-DRY-6111-MOV	COMB./STARTER	0.5	-	-	3	MCP	7	FVNR	1	-
R3A	SPARE	COMB./STARTER	-	-	-	3	MCP	7	FVNR	1	-
R3B	DRYER 1 DRAG CONVEYOR-3 8-DRY-6534-CNV	BREAKER	3	-	-	3	150	15	-	-	VIA BUILT IN VFD

GENERAL NOTES:

1. FOR SYMBOLS AND ABBREVIATIONS, SEE DRAWING E-1.
2. FOR CONSTRUCTION SEQUENCE, SEE DRAWING E-2.
3. FOR MCC-10 ONE LINE DIAGRAM, SEE DRAWINGS E-11 THRU E-13A.

THE DRAWINGS IN THIS SET ARE RECORD DRAWINGS. THEY ARE CONSTRUCTION CONTRACT DRAWINGS WHICH HAVE BEEN REVISED BASED ON AVAILABLE FIELD INFORMATION RECORDED BY OTHERS DURING CONSTRUCTION OF THIS CONTRACT. THERE HAS BEEN NO VERIFICATION OF DIMENSIONS SHOWN ON THE CONSTRUCTION DRAWINGS OR THE ACCURACY/COMPLETENESS OF THE FIELD INFORMATION RECEIVED.

SIGNATURE 2/7/2022 DATE

SHAH & ASSOCIATES

AS-BUILT REPLACEMENT SHEET

PROFESSIONAL CERTIFICATION
THIS DRAWING WAS ORIGINALLY APPROVED FOR CONSTRUCTION AND SEALED BY KANAIYALAL R. SHAH, A REGISTERED PROFESSIONAL ENGINEER IN THE STATE OF MARYLAND, NO. 11084

NOTICE TO CONTRACTORS
- PROJECT ELEVATIONS ARE BASED ON NAVD88 AND HOWARD COUNTY'S BENCHMARK SYSTEM
- PREVIOUS PROJECTS USED OTHER DATUMS
- APPLY THE FOLLOWING CONVERSIONS WHEN USING PREVIOUS CONTRACT DRAWINGS:
  - ADDITION NO. 6: SUBTRACT 0.80 FT
  - PRIOR ADDITIONS: SUBTRACT 1.04 FT

DEPARTMENT OF PUBLIC WORKS
HOWARD COUNTY, MARYLAND

CHIEF, BUREAU OF UTILITIES DATE

DES: MM
DRN: DMG
CHK: KRS
DATE: 01/15/2018

DATE	REV	DESCRIPTION
03/2021		RECORD DRAWING

ELECTRICAL

DRYER BUILDING
NEW MCC-10 SCHEDULE I

LITTLE PATUXENT WATER RECLAMATION PLANT
8TH ADDITION
BIOSOLIDS PROCESSING FACILITIES - PHASE 2

CAPITAL PROJECT S-6295
CONTRACT NO. 24-4936

ELECTION DISTRICT NO. 6
HOWARD COUNTY, MARYLAND

SCALE AS SHOWN

SHEET 233 OF 311

E-25

BIM 360://10054364 – Little Patuxent WRP 8th Addition/264592_100_E_V18.rvt
1/8/2022 10:29:39 AM

MOTOR CONTROL CENTER MCC-10 SCHEDULE

BUS - HORIZONTAL : 2000A , VERTICAL : 600A

VOLTS : 480V , PHASE : 3, WIRES : 3+1G, MIN. KAIC : 100 RMS, ENCLOSURE : NEMA 12 , LOCATION : ELECTRICAL ROOM - DRYER BUILDING

UNIT NO.	NAMEPLATE DATA	DEVICE	LOAD			CB OR MP			NEMA STARTER		REMARKS
			HP	KVA	AMP	P	FA	TA	TYPE	SIZE	
R3C	DRYER 1 TROLLEY/ HOIST 8-DRY-8111-TRL / 8-DRY-8111-HST	BREAKER	-	-	-	3	150	15	-	-	-
R4A	DRYER 2 ZONE 7 HOT AIR FAN 8-DRY-7278-FAN	COMB./STARTER	15	-	-	3	MCP	50	FVNR	2	-
R4B	DRYER 1 DISCHARGE SCREW 8-DRY-6311-CNV	COMB./STARTER	3	-	-	3	MCP	15	FVNR	1	-
R4C	DRYER 1 DRY SOLIDS SCREEN 8-DRY-6911-SCRN	COMB./STARTER	0.3	-	-	3	MCP	7	FVNR	1	-
R4D	NITROGEN GENERATOR 8-DRY-7112-N2	BREAKER	20	-	-	3	150	50	-	-	-
R5A	ATS DP-10 - N1	BREAKER	-	-	-	3	250	225	-	-	-
R5B	DRYER 1 EXHAUST FAN 8-DRY-7322-FAN	BREAKER	3	-	-	3	150	15	-	-	VIA BUILT IN VFD
R5C	SPACE	-	-	-	-	-	-	-	-	-	-
R6A	DRYER 1 ROTOCLONE 8-DRY-7111-SCRB	BREAKER	5	-	-	3	150	15	-	-	VIA BUILT IN VFD
R6B	SPACE	-	-	-	-	-	-	-	-	-	-
R6C	SPARE	COMB./STARTER	-	-	-	3	MCP	30	FVNR	1	-
R7A	DRYER 1 SOLIDS DISTRIBUTOR 8-DRY-5511-SDR	BREAKER	0.8	-	-	3	150	15	-	-	VIA BUILT IN VFD (REVERSIBLE)
R7B	DRYER 1 BOOSTER FAN 8-DRY-7511-FAN	COMB./STARTER	1	-	-	3	MCP	7	FVNR	1	-
R7C	SPARE	BREAKER	-	-	-	3	150	15	-	-	-
R8A	DRYER 1 SOLIDS FEED PUMP 1 8-DRY-4112-PMP	BREAKER	15	-	-	3	150	45	-	-	VIA BUILT IN VFD
R8B	SPARE	BREAKER	-	-	-	3	150	15	-	-	-
R8C	SPARE	BREAKER	-	-	-	3	150	15	-	-	-
R9A	DRYER 1 OFF GAS FAN 8-DRY-7312-FAN	BREAKER	25	-	-	3	150	70	-	-	VIA BUILT IN VFD
R9B	SPACE	-	-	-	-	-	-	-	-	-	-
R10A	DRYER 1 DRAG CONVEYOR 4 8-DRY-6544-CNV	BREAKER	3	-	-	3	150	15	-	-	VIA BUILT IN VFD (REVERSIBLE)
R10B	SPARE	COMB./STARTER	-	-	-	3	MCP	7	FVNR	1	-
R10C	SILO 1 JIB CRANE	BREAKER	-	-	-	3	150	15	-	-	-
R11A	WET CAKE BIN SCREW TO DRYER 1 PUMP 2 8-DRY-4122-CNV	BREAKER	10	-	-	3	150	50	-	-	VIA BUILT IN 20HP VFD
R11B	SPACE	-	-	-	-	-	-	-	-	-	-
	TRANSITION	-	-	-	-	-	-	-	-	-	-
	TRANSITION	-	-	-	-	-	-	-	-	-	-
R12A	DRYER 1 SOLIDS FEED PUMP 2 8-DRY- 4122-PMP	BREAKER	15	-	-	3	150	45	-	-	VIA BUILT IN VFD
R12B	SPACE	-	-	-	-		-	-	-	-	-
R12C	SPARE	BREAKER	-	-	-	3	150	20	-	-	-
R13A	BACK OF ACTIVE HARMONIC FILTER 1 HFU-1	-	-	-	-	-	-	-	-	-	-
R14A	SPACE	-	-	-	-	-	-	-	-	-	-
R15A	BACK OF MAIN LUG -1	-	-	-	-	-	-	-	-	-	-
R16A	BACK OF TIE BREAKER	-	-	-	-	-	-	-	-	-	-
	TRANSITION	-	-	-	-	-	-	-	-	-	-
	TRANSITION	-	-	-	-	-	-	-	-	-	-
R17A	BACK OF MAIN LUG -2	-	-	-	-	-	-	-	-	-	-
R18A	SPACE	-	-	-	-	-	-	-	-	-	-
R19A	BACK OF ACTIVE HARMONIC FILTER 2 HFU-2	-	-	-	-	-	-	-	-	-	-
R20A	WET CAKE BIN SCREW TO DRYER 2 PUMP 2 8-DRY-4222-CNV	BREAKER	10	-	-	3	150	50	-	-	VIA BUILT IN 20HP VFD
R20B	SPACE	-	-	-	-	-	-	-	-	-	-
R21A	WET CAKE BIN SCREW TO DRYER 2 PUMP 1 8-DRY-4212-CNV	BREAKER	10	-	-	3	150	50	-	-	VIA BUILT IN 20HP VFD
R21B	SPACE	-	-	-	-	-	-	-	-	-	-

MOTOR CONTROL CENTER MCC-10 SCHEDULE

BUS - HORIZONTAL : 2000A , VERTICAL : 600A

VOLTS : 480V , PHASE : 3, WIRES : 3+1G, MIN. KAIC : 100 RMS, ENCLOSURE : NEMA 12 , LOCATION : ELECTRICAL ROOM - DRYER BUILDING

UNIT NO.	NAMEPLATE DATA	DEVICE	LOAD			CB OR MP			NEMA STARTER		REMARKS
			HP	KVA	AMP	P	FA	TA	TYPE	SIZE	
R22A	MCC-10 SEC (A,B,C)	BREAKER	-	-	-	3	250	225	-	-	-
R22B	DRYER 2 DRAG CONVEYOR 4 8-DRY-6644-CNV	BREAKER	3	-	-	3	150	15	-	-	VIA BUILT IN VFD (REVERSIBLE)
R22C	SPACE	-	-	-	-	-	-	-	-	-	-
R23A	ATS DP-10 - N2	BREAKER	-	-	-	3	250	225	-	-	-
R23B	DRYER 2 EXHAUST FAN 8-DRY-7422-FAN	BREAKER	3	-	-	3	150	15	-	-	VIA BUILT IN VFD
R23C	SPACE	-	-	-	-	-	-	-	-	-	-
R24A	DRYER 2 ROTOCLONE 8-DRY-7211-SCRB	BREAKER	5	-	-	3	150	15	-	-	VIA BUILT IN VFD
R24B	SPACE	-	-	-	-	-	-	-	-	-	-
R24C	SILO 2 JIB CRANE	BREAKER	-	-	-	3	150	15	-	-	-
R25A	DRYER 2 BOOSTER FAN 8-DRY-7611-FAN	COMB./STARTER	1	-	-	3	MCP	7	FVNR	1	-
R25B	SILO 2 DISCHARGE GATE 8-DRY-6211-MOV	COMB./STARTER	0.5	-	-	3	MCP	7	FVR	1	FULL VOLTAGE REVERSING STARTER
R25C	SPARE	BREAKER	-	-	-	3	150	15	-	-	-
R25D	WET CAKE BIN DISCHARGE GATE TO DRYER 2 PUMP 1 8-DRY-4212A-MOV	BREAKER	1	-	-	3	150	15	-	-	-
R26A	DRYER 2 DRY SOLIDS SCREEN 8-DRY-6011-SCRN	COMB./STARTER	0.3	-	-	3	MCP	7	FVNR	1	-
R26B	BIOFILTER 3 LCP 8-ODR-3011-PNL	BREAKER	-	-	-	3	250	200	-	-	-
R26C	NITROGEN GENERATOR 8-DRY-7122-N2	BREAKER	20	-	-	3	150	50	-	-	-
R26D	SPARE	COMB./STARTER	-	-	-	3	MCP	30	FVNR	1	-
R27A	SPARE	COMB./STARTER	-	-	-	3	MCP	7	FVNR	1	-
R27B	SPARE	BREAKER	-	-	-	3	150	50	-	-	-
R27C	SILO 2 AIR LOCK ROTARY VALVE 8-DRY-6211-MOV	COMB./STARTER	0.5	-	-	3	MCP	7	FVNR	1	-
R27D	SPARE	COMB./STARTER	-	-	-	3	MCP	7	FVNR	1	-
R28A	DRYER 2 SOLIDS FEED PUMP 2 8-DRY-4222-PMP	BREAKER	15	-	-	3	150	45	-	-	VIA BUILT IN VFD
R28B	SPACE	-	-	-	-	-	-	-	-	-	-
R28C	DRYER 2 TROLLEY/ HOIST 8-DRY-8211-TRL / 8- DRY-8211-HST	BREAKER	-	-	-	3	150	15	-	-	-
R29A	DRYER 2 SOLIDS FEED PUMP 1 8-DRY-4212-PMP	BREAKER	15	-	-	3	150	45	-	-	VIA BUILT IN VFD
R29B	SPACE	-	-	-	-	-	-	-	-	-	-
R29C	DRYER 2 BURNER 8-DRY-7211-BRN	BREAKER	-	-	-	3	150	30	-	-	-
R30A	DRYER 2 DRAG CONVEYOR 3 8-DRY-6634-CNV	BREAKER	3	-	-	3	150	15	-	-	VIA BUILT IN VFD (REVERSIBLE)
R30B	SPACE	-	-	-	-	-	-	-	-	-	-
R31A	SPACE	-	-	-	-	-	-	-	-	-	-
	TRANSITION	-	-	-	-	-	-	-	-	-	-
A1	DRYER 2 SOLIDS MIXER 8-DRY-5411-MXR	BREAKER	10	-	-	3	150	35	-	-	VIA BUILT IN VFD
A2	SPACE	-	-	-	-	-	-	-	-	-	-
B1	DRYER 2 HOT AIR PLENUM FAN 8-DRY-7212-FAN	BREAKER	25	-	-	3	150	70	-	-	VIA BUILT IN VFD
B2	SPACE	-	-	-	-	-	-	-	-	-	-
C1	DRYER 2 OFF GAS FAN 8-DRY-7222-FAN	BREAKER	25	-	-	3	150	70	-	-	VIA BUILT IN VFD
C2	SPACE	-	-	-	-	-	-	-	-	-	-

GENERAL NOTES:

1. FOR SYMBOLS AND ABBREVIATIONS, SEE DRAWING E-1.
2. FOR CONSTRUCTION SEQUENCE, SEE DRAWING E-2.
3. FOR MCC-10 ONE LINE DIAGRAM, SEE DRAWINGS E-11 THRU E-13A.

THE DRAWINGS IN THIS SET ARE RECORD DRAWINGS. THEY ARE CONSTRUCTION CONTRACT DRAWINGS WHICH HAVE BEEN REVISED BASED ON AVAILABLE FIELD INFORMATION RECORDED BY OTHERS DURING CONSTRUCTION OF THIS CONTRACT. THERE HAS BEEN NO VERIFICATION OF DIMENSIONS SHOWN ON THE CONSTRUCTION DRAWINGS OR THE ACCURACY/COMPLETENESS OF THE FIELD INFORMATION RECEIVED.

SIGNATURE — DATE 2/7/2023

SHAH & ASSOCIATES

AS-BUILT REPLACEMENT SHEET

PROFESSIONAL CERTIFICATION

THIS DRAWING WAS ORIGINALLY APPROVED FOR CONSTRUCTION AND SEALED BY KANAIYALAL R. SHAH, A REGISTERED PROFESSIONAL ENGINEER IN THE STATE OF MARYLAND, NO. 11084

NOTICE TO CONTRACTORS

- PROJECT ELEVATIONS ARE BASED ON NAVD88 AND HOWARD COUNTY'S BENCHMARK SYSTEM
- PREVIOUS PROJECTS USED OTHER DATUMS
- APPLY THE FOLLOWING CONVERSIONS WHEN USING PREVIOUS CONTRACT DRAWINGS:
  - ADDITION NO. 6: SUBTRACT 0.80 FT
  - PRIOR ADDITIONS: SUBTRACT 1.04 FT

DEPARTMENT OF PUBLIC WORKS
HOWARD COUNTY, MARYLAND

CHIEF, BUREAU OF UTILITIES — DATE

DES: MM
DRN: DMG
CHK: KRS
DATE: 01/15/2018

DATE	REV	DESCRIPTION
03/2021		RECORD DRAWING

ELECTRICAL

DRYER BUILDING NEW MCC-10 SCHEDULE II

LITTLE PATUXENT WATER RECLAMATION PLANT
8TH ADDITION
BIOSOLIDS PROCESSING FACILITIES - PHASE 2

CAPITAL PROJECT S-6295
CONTRACT NO. 24-4936

ELECTION DISTRICT NO. 6
HOWARD COUNTY, MARYLAND

SCALE AS SHOWN

SHEET 234 OF 311

E-26

BIM 360://10054364 – Little Patuxent WRP 8th Addition/264592_100_E_V18.rvt
1/8/2022 10:29:42 AM

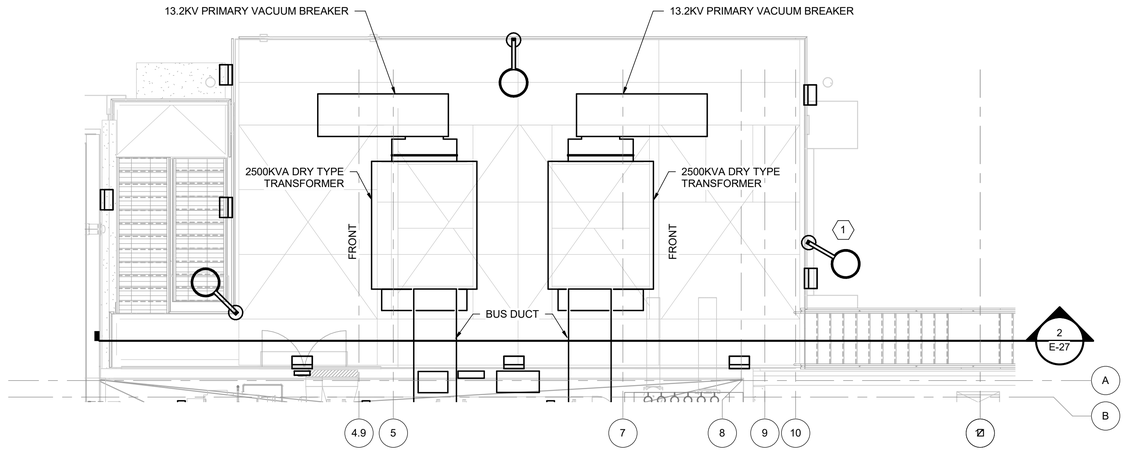

PS-2 - PLAN

3/16" = 1'-0"

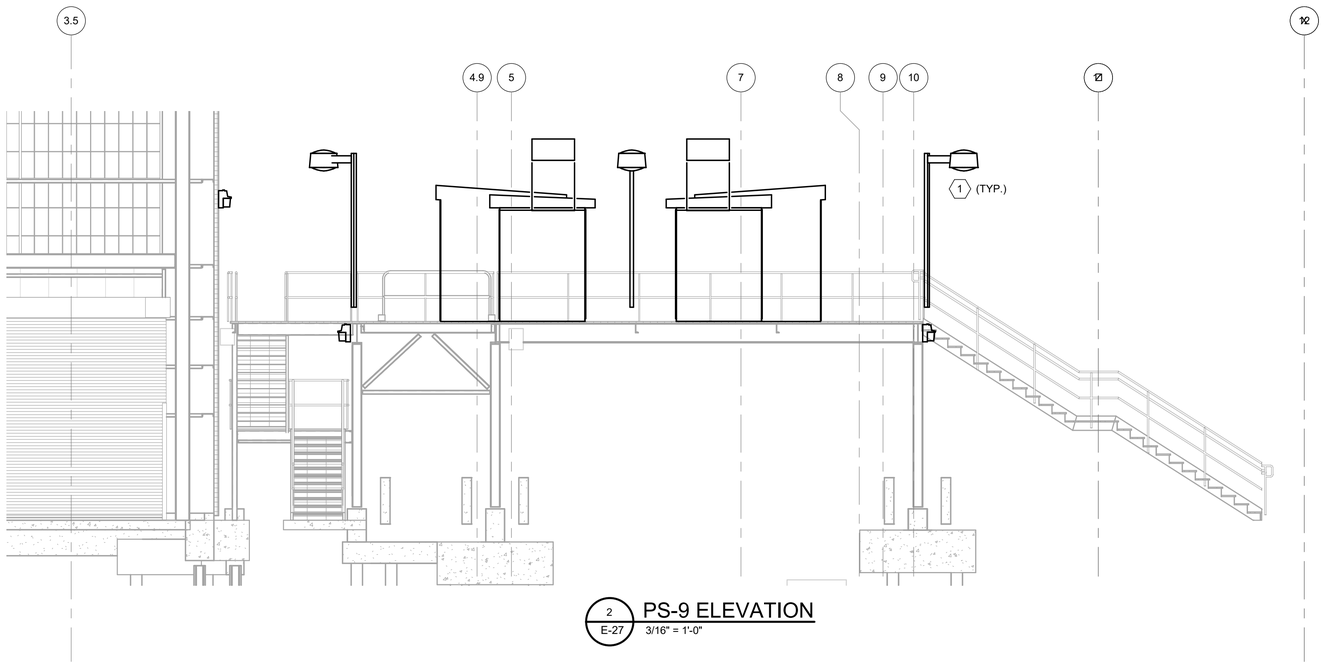

2 / E-27 PS-9 ELEVATION

3/16" = 1'-0"

GENERAL NOTES

1. FOR SYMBOLS AND ABBREVIATIONS, SEE DRAWING E-1.
2. FOR CONSTRUCTION SEQUENCE, SEE DRAWING E-2.
3. FOR SUBSTATION PS-2 LOCATION, SEE DRAWING E-3.
4. FOR NEW SUBSTATION PS-2 ONE LINE DIAGRAM, SEE DRAWING E-7.
5. FOR CABLE AND CONDUIT SCHEDULE, SEE DRAWINGS E-908 THRU E-914.
6. FOR SUBSTATION PLATFORM, EQUIPMENT PAD, ACCESS LADDER, RAILINGS, ETC. DETAILS, SEE STRUCTURAL DRAWINGS.

KEY NOTES

1. 10' LONG ALUMINUM POLE TO SUPPORT THE M-TYPE LIGHT FIXTURE TO BE SUPPORTED FROM HANDRAIL AND THE PLATFORM USING RIGID FLOOR FLANGE PLATE.

THE DRAWINGS IN THIS SET ARE RECORD DRAWINGS. THEY ARE CONSTRUCTION CONTRACT DRAWINGS WHICH HAVE BEEN REVISED BASED ON AVAILABLE FIELD INFORMATION RECORDED BY OTHERS DURING CONSTRUCTION OF THIS CONTRACT. THERE HAS BEEN NO VERIFICATION OF DIMENSIONS SHOWN ON THE CONSTRUCTION DRAWINGS OR THE ACCURACY/COMPLETENESS OF THE FIELD INFORMATION RECEIVED.

SIGNATURE — DATE 2/7/2023

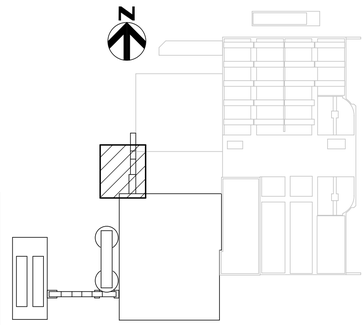

KEY PLAN

SHAH & ASSOCIATES

HDR

AS-BUILT REPLACEMENT SHEET

PROFESSIONAL CERTIFICATION

THIS DRAWING WAS ORIGINALLY APPROVED FOR CONSTRUCTION AND SEALED BY KANAIYALAL R. SHAH, A REGISTERED PROFESSIONAL ENGINEER IN THE STATE OF MARYLAND, NO. 11084

NOTICE TO CONTRACTORS

- PROJECT ELEVATIONS ARE BASED ON NAVD88 AND HOWARD COUNTY'S BENCHMARK SYSTEM
- PREVIOUS PROJECTS USED OTHER DATUMS
- APPLY THE FOLLOWING CONVERSIONS WHEN USING PREVIOUS CONTRACT DRAWINGS:
  - ADDITION NO. 6: SUBTRACT 0.80 FT
  - PRIOR ADDITIONS: SUBTRACT 1.04 FT

DEPARTMENT OF PUBLIC WORKS
HOWARD COUNTY, MARYLAND

CHIEF, BUREAU OF UTILITIES — DATE

DES: MM
DRN: DMG
CHK: KRS
DATE: 01/15/2018

DATE	REV	DESCRIPTION
03/2021		RECORD DRAWING

ELECTRICAL

NEW ELECTRICAL SUBSTATION PS-2 - LAYOUT

LITTLE PATUXENT WATER RECLAMATION PLANT
8TH ADDITION
BIOSOLIDS PROCESSING FACILITIES - PHASE 2

CAPITAL PROJECT S-6295
CONTRACT NO. 24-4936

ELECTION DISTRICT NO. 6
HOWARD COUNTY, MARYLAND

SCALE AS SHOWN

SHEET 235 OF 311

E-27

BIM 360://10054364 – Little Patuxent WRP 8th Addition/264592_100_E_V18.rvt
1/8/2022 10:29:45 AM

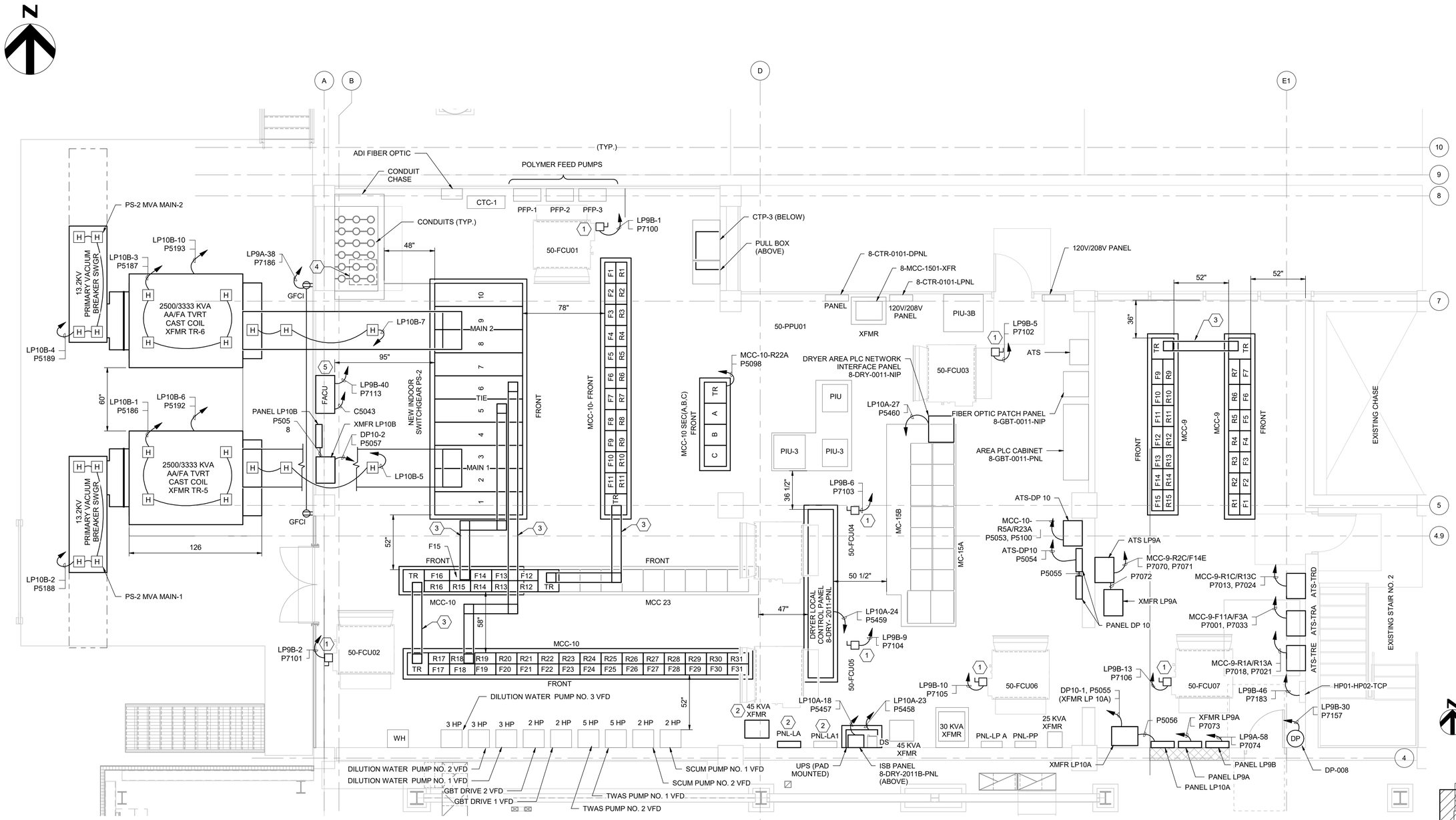

GENERAL NOTES

1. FOR SYMBOLS AND ABBREVIATIONS, SEE DRAWING E-1.
2. FOR CONSTRUCTION SEQUENCE, SEE DRAWING E-2.
3. FOR SWITCHGEAR ONE LINE DIAGRAM AND ELEVATIONS, SEE DRAWINGS E-7 AND E-18 RESPECTIVELY.
4. FOR MCC ONE LINE DIAGRAMS, SEE DRAWINGS E-8 THRU E-17.
5. FOR MCC-9 AND MCC-10 ELEVATION, SEE DRAWINGS E-19 THRU E-22.
6. FOR PANELBOARD SCHEDULES, SEE DRAWINGS E-901 THRU E-905.

KEY NOTES

1. DISCONNECT SWITCHES ARE SHOWN AS ANNOTATIVE SYMBOLS.
2. RELOCATE THE EXISTING 45KVA TRANSFORMER FROM FLOOR MOUNTED TO WALL MOUNTED. CONTRACTOR SHALL REPLACE THE PRIMARY FEEDER TO THE XFMR AND REPLACE THE SECONDARY FEEDER TO PANEL LA1 AND BRANCH CIRCUIT TO LA.
3. LOW VOLTAGE BUSWAYS.
4. EXISTING CONDUITS FROM EXISTING PS-2 TO MCC-23 WILL BE REUSED TO ROUTE MEDIUM VOLTAGE FEEDERS. CONTRACTOR SHALL PERFORM THE MODIFICATIONS NEEDED TO THE PULLBOX AT THE BOTTOM OF THE CONDUIT CHASE IN ORDER TO PHYSICALLY SEPERATE THE MEDIUM VOLTAGE AND THE LOW VOLTAGE FEEDERS.
5. THE FIRE ALARM SYSTEM IS A DELEGATED DESIGN WITH PERFORMANCE SPECIFICATIONS. CONTRACTOR SHALL PROVIDE A CODE COMPLIANT SYSTEM MEETING THE REQUIREMENTS OF FIRE ALARM SYSTEMS SPECIFICATION 283100 AND FULLY COORDINATE INSTALLATION WITH OTHER TRADES.

THE DRAWINGS IN THIS SET ARE RECORD DRAWINGS. THEY ARE CONSTRUCTION CONTRACT DRAWINGS WHICH HAVE BEEN REVISED BASED ON AVAILABLE FIELD INFORMATION RECORDED BY OTHERS DURING CONSTRUCTION OF THIS CONTRACT. THERE HAS BEEN NO VERIFICATION OF DIMENSIONS SHOWN ON THE CONSTRUCTION DRAWINGS OR THE ACCURACY/COMPLETENESS OF THE FIELD INFORMATION RECEIVED.

SIGNATURE _____ DATE 2/7/2022

KEY PLAN

DRYER BUILDING - ELECTRICAL ROOM - EXISTING AND NEW WORK

1/4" = 1'-0"

SHAH & ASSOCIATES | HDR

AS-BUILT REPLACEMENT SHEET

PROFESSIONAL CERTIFICATION
THIS DRAWING WAS ORIGINALLY APPROVED FOR CONSTRUCTION AND SEALED BY KANAIYALAL R SHAH, A REGISTERED PROFESSIONAL ENGINEER IN THE STATE OF MARYLAND, NO. 11084

NOTICE TO CONTRACTORS
- PROJECT ELEVATIONS ARE BASED ON NAVD88 AND HOWARD COUNTY'S BENCHMARK SYSTEM
- PREVIOUS PROJECTS USED OTHER DATUMS
- APPLY THE FOLLOWING CONVERSIONS WHEN USING PREVIOUS CONTRACT DRAWINGS:
  - ADDITION NO. 6: SUBTRACT 0.80 FT
  - PRIOR ADDITIONS: SUBTRACT 1.04 FT

DEPARTMENT OF PUBLIC WORKS
HOWARD COUNTY, MARYLAND

_____ CHIEF, BUREAU OF UTILITIES DATE

DES: MM
DRN: DMG
CHK: KRS
DATE: 01/15/2018

DATE	REV	DESCRIPTION
03/2021		RECORD DRAWING

ELECTRICAL

DRYER BUILDING ELECTRICAL ROOM LAYOUT EXISTING AND NEW WORK

LITTLE PATUXENT WATER RECLAMATION PLANT
8TH ADDITION
BIOSOLIDS PROCESSING FACILITIES - PHASE 2

CAPITAL PROJECT S-6295
CONTRACT NO. 24-4936

ELECTION DISTRICT NO. 6
HOWARD COUNTY, MARYLAND

SCALE AS SHOWN

SHEET 236 OF 311

E-29

BIM 360://10054364 – Little Patuxent WRP 8th Addition/264592_100_E_V18.rvt
1/8/2022 10:29:49 AM

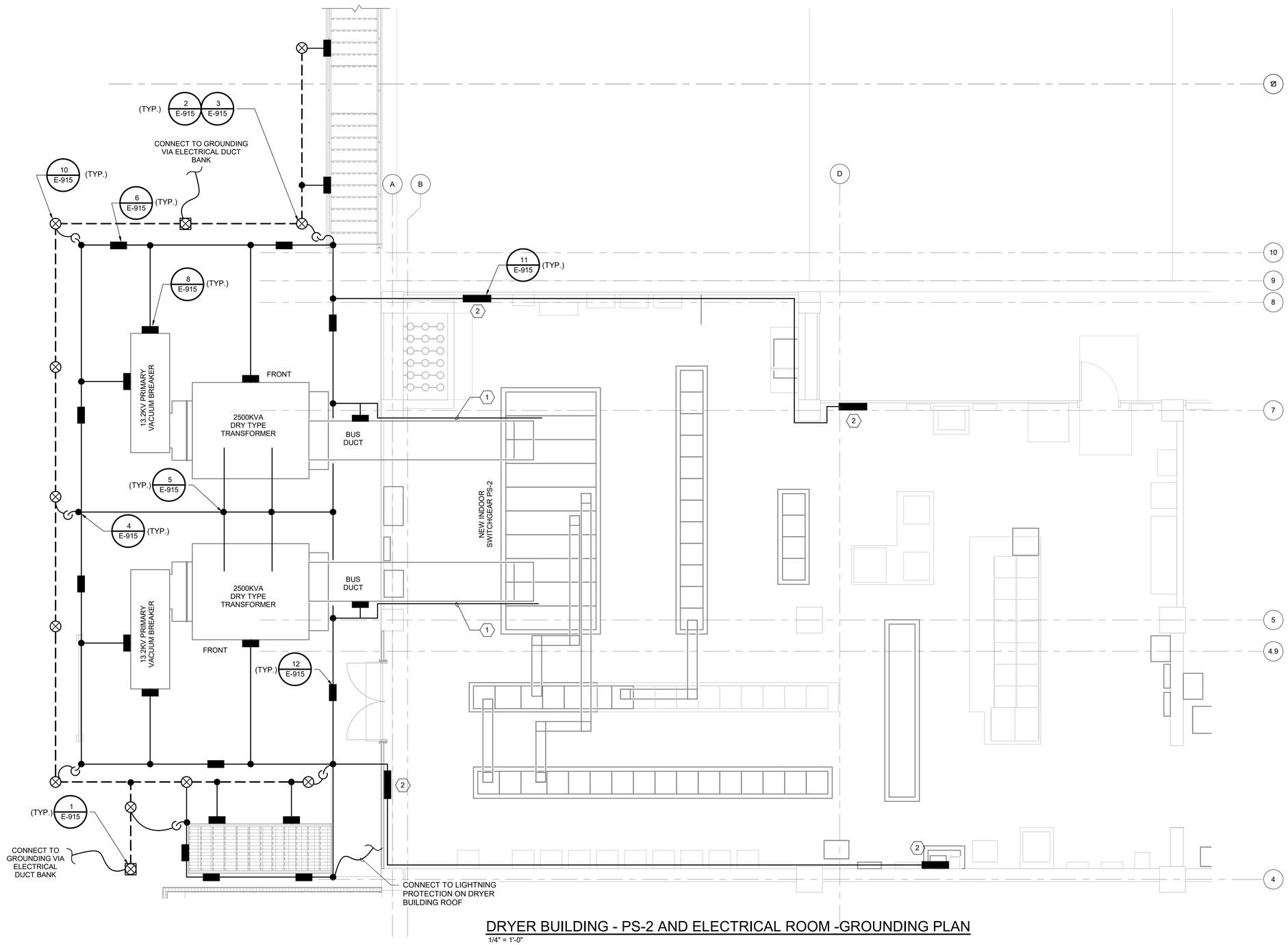

DRYER BUILDING - PS-2 AND ELECTRICAL ROOM -GROUNDING PLAN

1/4" = 1'-0"

GENERAL NOTES

1. FOR SYMBOLS AND ABBREVIATIONS, SEE DRAWING E-1.
2. FOR CONSTRUCTION SEQUENCE, SEE DRAWING E-2.
3. FOR GROUNDING AND LIGHTNING PROTECTION DETAILS, SEE DRAWING E-915.
4. NOT ALL BONDS TO GROUND ARE SHOWN. CONTRACTOR TO PROVIDE BONDING TO ALL STRUCTURAL SUPPORTS, METAL ENCLOSURES ETC. AS REQUIRED.
5. ALL NEW GROUND CONDUCTORS SHALL BE 4/0 COPPER AND BURIED TO A DEPTH OF MIN. 30" BELOW GRADE.
6. PROVIDE COPPER-CLAD GROUND RODS IN INDICATED LOCATIONS.

KEY NOTES

1. RUN GROUND WIRE TO THE INTERNAL GROUND BAR IN SWITCHGEAR PS-2 ALONG BUS DUCT.
2. ELECTRIC ROOM GROUND BAR QUANITY AND LOCATIONS ARE SHOWN SYMBOLICALLY. CONTRACTOR TO DETERMINE QUANITY AND LOCATIONS.

THE DRAWINGS IN THIS SET ARE RECORD DRAWINGS. THEY ARE CONSTRUCTION CONTRACT DRAWINGS WHICH HAVE BEEN REVISED BASED ON AVAILABLE FIELD INFORMATION RECORDED BY OTHERS DURING CONSTRUCTION OF THIS CONTRACT. THERE HAS BEEN NO VERIFICATION OF DIMENSIONS SHOWN ON THE CONSTRUCTION DRAWINGS OR THE ACCURACY/COMPLETENESS OF THE FIELD INFORMATION RECEIVED.

SIGNATURE — DATE 2/7/2023

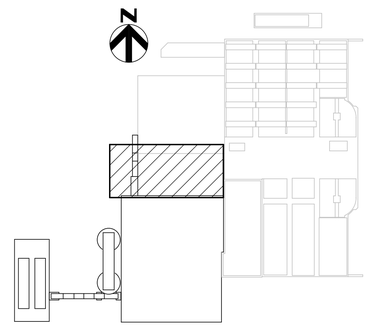

KEY PLAN

SHAH & ASSOCIATES

AS-BUILT REPLACEMENT SHEET

PROFESSIONAL CERTIFICATION
THIS DRAWING WAS ORIGINALLY APPROVED FOR CONSTRUCTION AND SEALED BY KANAIYALAL R SHAH, A REGISTERED PROFESSIONAL ENGINEER IN THE STATE OF MARYLAND, NO. 11084

NOTICE TO CONTRACTORS
- PROJECT ELEVATIONS ARE BASED ON NAVD88 AND HOWARD COUNTY'S BENCHMARK SYSTEM
- PREVIOUS PROJECTS USED OTHER DATUMS
- APPLY THE FOLLOWING CONVERSIONS WHEN USING PREVIOUS CONTRACT DRAWINGS:
  - ADDITION NO. 6: SUBTRACT 0.80 FT
  - PRIOR ADDITIONS: SUBTRACT 1.04 FT

DEPARTMENT OF PUBLIC WORKS
HOWARD COUNTY, MARYLAND

CHIEF, BUREAU OF UTILITIES — DATE

DES: MM
DRN: DMG
CHK: KRS
DATE: 01/15/2018

DATE	REV	DESCRIPTION
03/2021		RECORD DRAWING

ELECTRICAL

DRYER BUILDING PS-2 AND ELECTRICAL ROOM GROUNDING PLAN

LITTLE PATUXENT WATER RECLAMATION PLANT
8TH ADDITION
BIOSOLIDS PROCESSING FACILITIES - PHASE 2

CAPITAL PROJECT S-6295
CONTRACT NO. 24-4936

ELECTION DISTRICT NO. 6
HOWARD COUNTY, MARYLAND

SCALE AS SHOWN

SHEET 237 OF 311

E-30

BIM 360://10054364 – Little Patuxent WRP 8th Addition/264592_100_E_V18.rvt
1/8/2022 10:29:51 AM

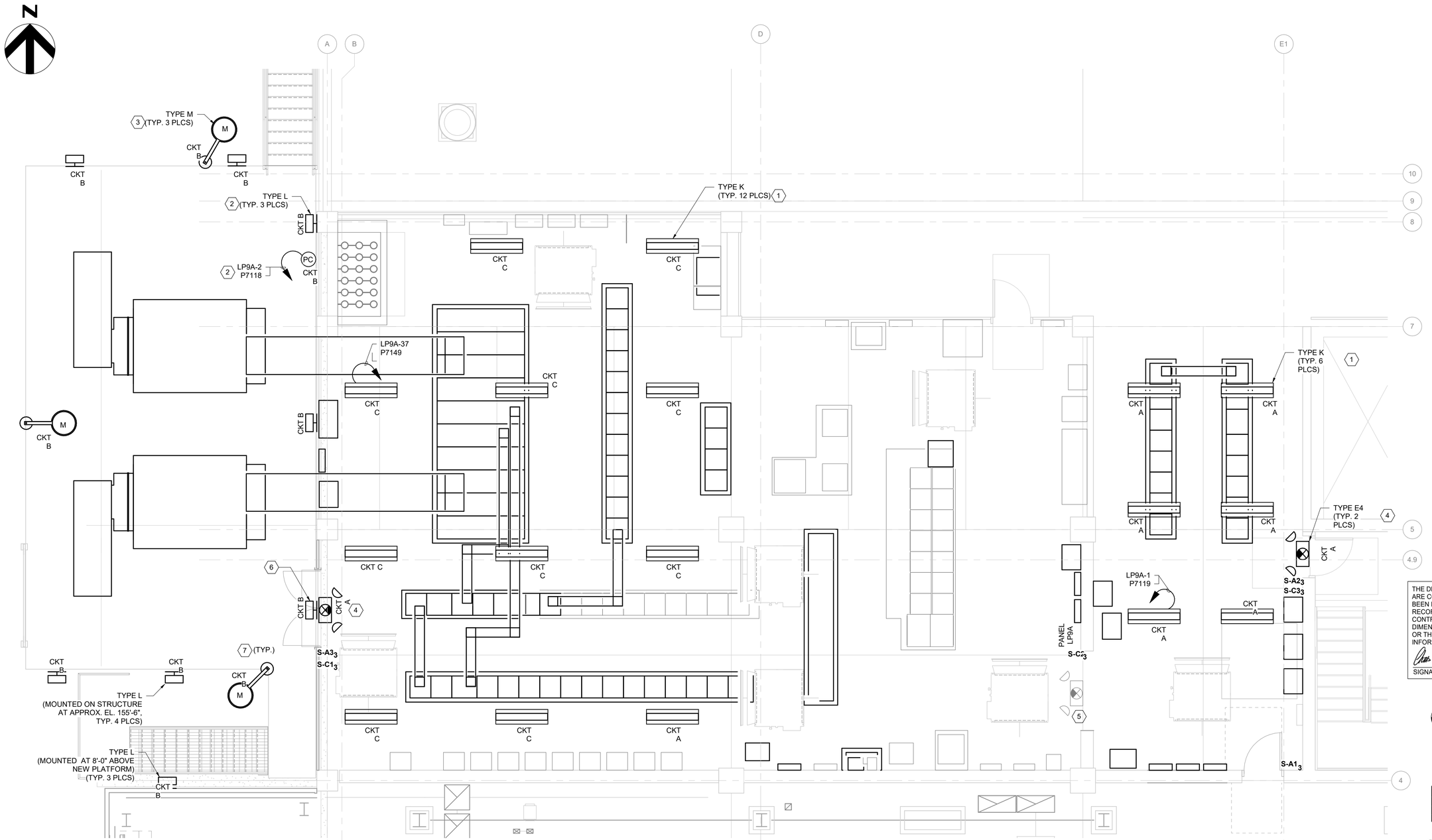

DRYER BUILDING - ELECTRICAL ROOM -LIGHTING PLAN

1/4" = 1'-0"

GENERAL NOTES

1. FOR SYMBOLS AND ABBREVIATIONS, SEE DRAWING E-1.
2. FOR CONSTRUCTION SEQUENCE, SEE DRAWING E-2.
3. FOR PANELBOARD SCHEDULES, SEE DRAWINGS E-901 THRU E-905.
4. FOR CABLE AND CONDUIT SCHEDULE, SEE DRAWING E-908 THRU E-914A.
5. FOR LIGHTING FIXTURE SCHEDULE AND DETAILS, SEE DRAWINGS E-916 AND E-917.

KEY NOTES

1. FIXTURE MOUNTING HEIGHT SHALL MATCH EXISTING ELECTRICAL ROOM LIGHTING FIXTURE HEIGHT.
2. CONNECT VIA PHOTOCELL.
3. LIGHT FIXTURE SHALL BE POLE MOUNTED.
4. CONNECT EXIT AND EMERGENCY LIGHTS AHEAD OF SWITCH.
5. EXISTING EXIT SIGN ABOVE DEMOLISHED DOOR SHALL REMAIN.
6. LIGHTING FIXTURE WITH BATTERY BACK-UP, WILLIAMS CAT# VWPV-L30/740-TFT-BLK-SDLG-EM/4W-PC-DIM-UNV OR APPROVED EQUAL. INSTALLED AT 1'-0" ABOVE DOOR.
7. 10' LONG ALUMINUM POLE TO SUPPORT THE M-TYPE LIGHT FIXTURE TO BE SUPPORTED FROM HANDRAIL AND THE PLATFORM USING RIGID FLOOR FLANGE PLATE.

THE DRAWINGS IN THIS SET ARE RECORD DRAWINGS. THEY ARE CONSTRUCTION CONTRACT DRAWINGS WHICH HAVE BEEN REVISED BASED ON AVAILABLE FIELD INFORMATION RECORDED BY OTHERS DURING CONSTRUCTION OF THIS CONTRACT. THERE HAS BEEN NO VERIFICATION OF DIMENSIONS SHOWN ON THE CONSTRUCTION DRAWINGS OR THE ACCURACY/COMPLETENESS OF THE FIELD INFORMATION RECEIVED.

SIGNATURE — DATE 2/7/2020

KEY PLAN

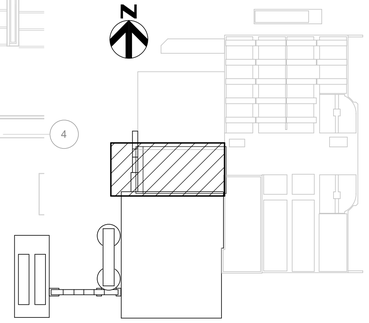

SHAH & ASSOCIATES

AS-BUILT REPLACEMENT SHEET

PROFESSIONAL CERTIFICATION
THIS DRAWING WAS ORIGINALLY APPROVED FOR CONSTRUCTION AND SEALED BY KANAIYALAL R. SHAH, A REGISTERED PROFESSIONAL ENGINEER IN THE STATE OF MARYLAND, NO. 11084

NOTICE TO CONTRACTORS
- PROJECT ELEVATIONS ARE BASED ON NAVD88 AND HOWARD COUNTY'S BENCHMARK SYSTEM
- PREVIOUS PROJECTS USED OTHER DATUMS
- APPLY THE FOLLOWING CONVERSIONS WHEN USING PREVIOUS CONTRACT DRAWINGS:
  - ADDITION NO. 6: SUBTRACT 0.80 FT
  - PRIOR ADDITIONS: SUBTRACT 1.04 FT

DEPARTMENT OF PUBLIC WORKS
HOWARD COUNTY, MARYLAND

CHIEF, BUREAU OF UTILITIES — DATE

DES: MM
DRN: DMG
CHK: KRS
DATE: 01/15/2018

DATE	REV	DESCRIPTION
03/2021		RECORD DRAWING

ELECTRICAL

DRYER BUILDING ELECTRICAL ROOM - LIGHTING PLAN

LITTLE PATUXENT WATER RECLAMATION PLANT
8TH ADDITION
BIOSOLIDS PROCESSING FACILITIES - PHASE 2

CAPITAL PROJECT S-6295
CONTRACT NO. 24-4936

ELECTION DISTRICT NO. 6
HOWARD COUNTY, MARYLAND

SCALE AS SHOWN

SHEET 238 OF 311

E-31

BIM 360://10054364 – Little Patuxent WRP 8th Addition/264592_100_E_V18.rvt
1/8/2022 10:29:53 AM

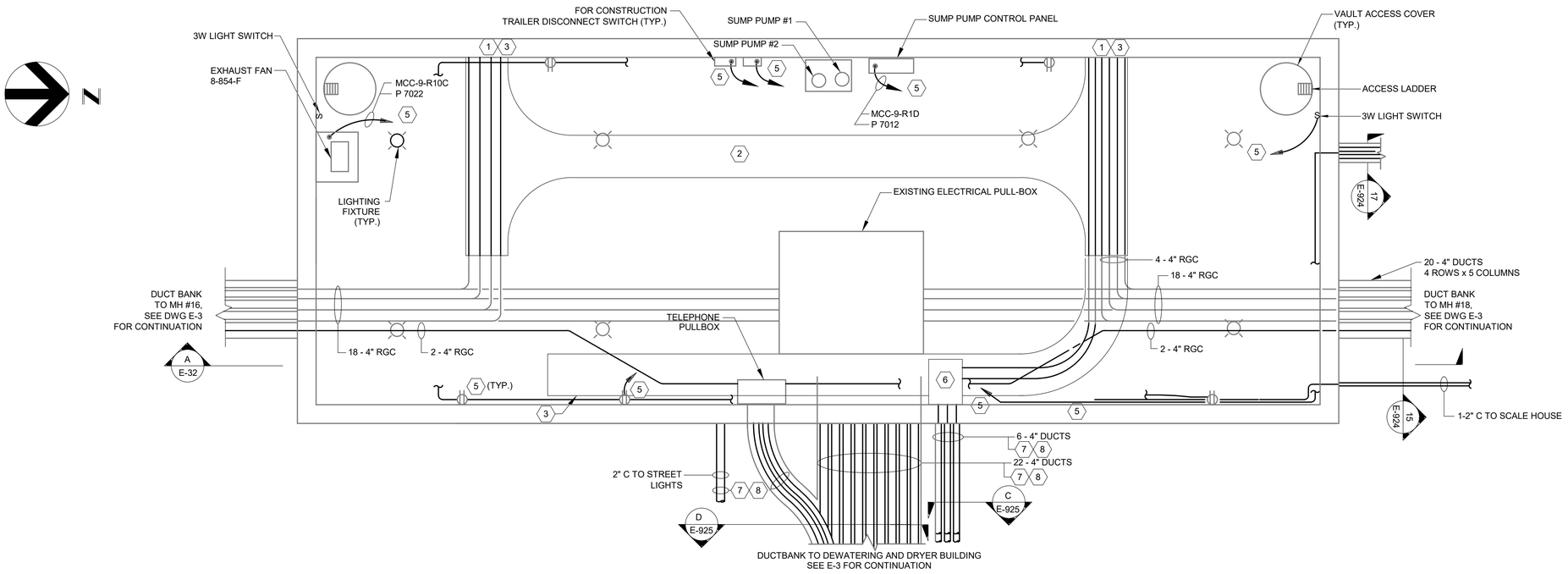

EXISTING SUBSTATION PS-2 CABLE VAULT - PLAN - EXISTING AND MODIFICATION

SCALE: 1/4" = 1'-0"

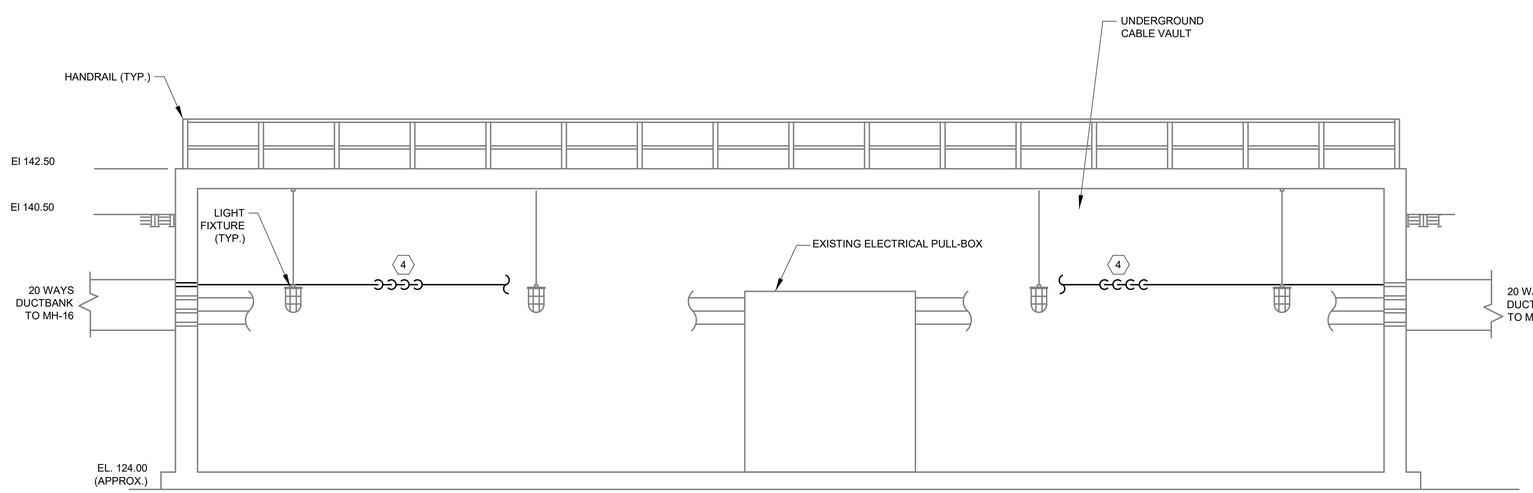

A E-32 EXISTING SUBSTATION PS-2 CABLE VAULT - SECTION - EXISTING AND MODIFICATION

SCALE: 1/4" = 1'-0"

GENERAL NOTES:

1. FOR SYMBOLS AND ABBREVIATIONS, SEE DRAWING E-1.
2. FOR CONSTRUCTION SEQUENCE, SEE DRAWING E-2.
3. FOR OVERALL ELECTRICAL SITE PLAN EXISTING AND NEW WORK, SEE DRAWINGS E-3 AND E-4.
4. FOR NEW OVERALL ONE LINE DIAGRAM, SEE DRAWING E-6.
5. FOR DUCT BANK SECTIONS EXISTING AND NEW WORK, SEE DRAWINGS E-924 AND E-925.

DRAWING NOTES:

1. USE 15KV 4-WAY SUBMERSIBLE DEAD BREAKS INSTALLED ON WEST WALL WITH NO JUNCTION BOXES.
2. CABLE TRAY INSTALLED UNDER EXISTING J-BOXES. 15 KV SPLICES IF NECESSARY TO BE MADE IN THE TRAY.
3. REMOVE EXISTING J-BOXES.
4. PROPOSED CABLE TRAY NOT SHOWN FOR CLARITY.
5. CONTRACTOR TO SURVEY/VERIFY AND RECONNECT FEEDERS TO CONSTRUCTION TRAILER, LIGHTING CIRCUITS, RECEPTACLES ETC. FROM PANEL IN SOLIDS HANDLING BLDG.
   a. SEE PANELBOARD SCHEDULE FOR EXISTING PANEL IN DRYER BUILDING ELECTRICAL ROOM TO RECONNECT EXISTING CIRCUITS INSIDE AND OUTSIDE THE VAULT. NOT ALL CIRCUITS ARE IDENTIFIED. CONTRACTOR SHALL SURVEY/VERIFY ANY FEEDER THAT IS NOT IDENTIFIED AND RECONNECT TO THE PANELS IN THE DRYER ELECTRICAL ROOM.
   b. CONTRACTOR SHALL PROVIDE NEW WIRE AND CONDUIT FROM THE EXISTING PANELBOARDS TO THE PULL BOX AT THE BOTTOM OF THE CONDUIT CHASE.
6. PROVIDE A PULLBOX TO PHYSICALLY SEPERATE THE MEDIUM VOLTAGE FEEDERS FROM LOW VOLTAGE FEEDERS.
7. FOR FEEDERS GOING BACK TO THE EXISTING VAULT, CONTRACTOR SHALL REUSE THE EXISTING UNDERGROUND DUCT.
8. CONTRACTOR SHALL FIELD VERIFY THAT THE EXISTING DUCT BANK CAN BE REUSED FOR THE NEW CABLE AND IF THE EXISTING DUCTBANK CAN NOT BE REUSED, INSTALL NEW DUCTBANK BETWEEN THE EXISTING DUCT BANK AND THE DRYER BUILDING ELECTRICAL ROOM.

THE DRAWINGS IN THIS SET ARE RECORD DRAWINGS. THEY ARE CONSTRUCTION CONTRACT DRAWINGS WHICH HAVE BEEN REVISED BASED ON AVAILABLE FIELD INFORMATION RECORDED BY OTHERS DURING CONSTRUCTION OF THIS CONTRACT. THERE HAS BEEN NO VERIFICATION OF DIMENSIONS SHOWN ON THE CONSTRUCTION DRAWINGS OR THE ACCURACY/COMPLETENESS OF THE FIELD INFORMATION RECEIVED.

SIGNATURE _____ DATE 2/7/2020

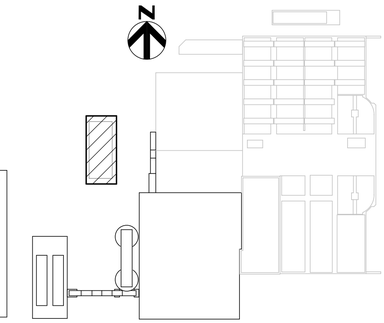

KEY PLAN

SHAH & ASSOCIATES

AS-BUILT REPLACEMENT SHEET

PROFESSIONAL CERTIFICATION
THIS DRAWING WAS ORIGINALLY APPROVED FOR CONSTRUCTION AND SEALED BY KANAIYALAL R. SHAH, A REGISTERED PROFESSIONAL ENGINEER IN THE STATE OF MARYLAND, NO. 11084

NOTICE TO CONTRACTORS
- PROJECT ELEVATIONS ARE BASED ON NAVD88 AND HOWARD COUNTY'S BENCHMARK SYSTEM
- PREVIOUS PROJECTS USED OTHER DATUMS
- APPLY THE FOLLOWING CONVERSIONS WHEN USING PREVIOUS CONTRACT DRAWINGS:
  - ADDITION NO. 6: SUBTRACT 0.80 FT
  - PRIOR ADDITIONS: SUBTRACT 1.04 FT

DEPARTMENT OF PUBLIC WORKS
HOWARD COUNTY, MARYLAND

CHIEF, BUREAU OF UTILITIES DATE

DES: MM
DRN: DMG
CHK: KRS
DATE: 01/15/2018

DATE	REV	DESCRIPTION
03/2021		RECORD DRAWING

ELECTRICAL

EXISTING SUBSTATION PS-2 VAULT - EXISTING AND MODIFICATION

LITTLE PATUXENT WATER RECLAMATION PLANT
8TH ADDITION
BIOSOLIDS PROCESSING FACILITIES - PHASE 2

CAPITAL PROJECT S-6295
CONTRACT NO. 24-4936

ELECTION DISTRICT NO. 6
HOWARD COUNTY, MARYLAND

SCALE AS SHOWN

SHEET 239 OF 311

E-32

BIM 360://10054364 – Little Patuxent WRP 8th Addition/264592_100_E_V18.rvt
1/8/2022 10:29:53 AM

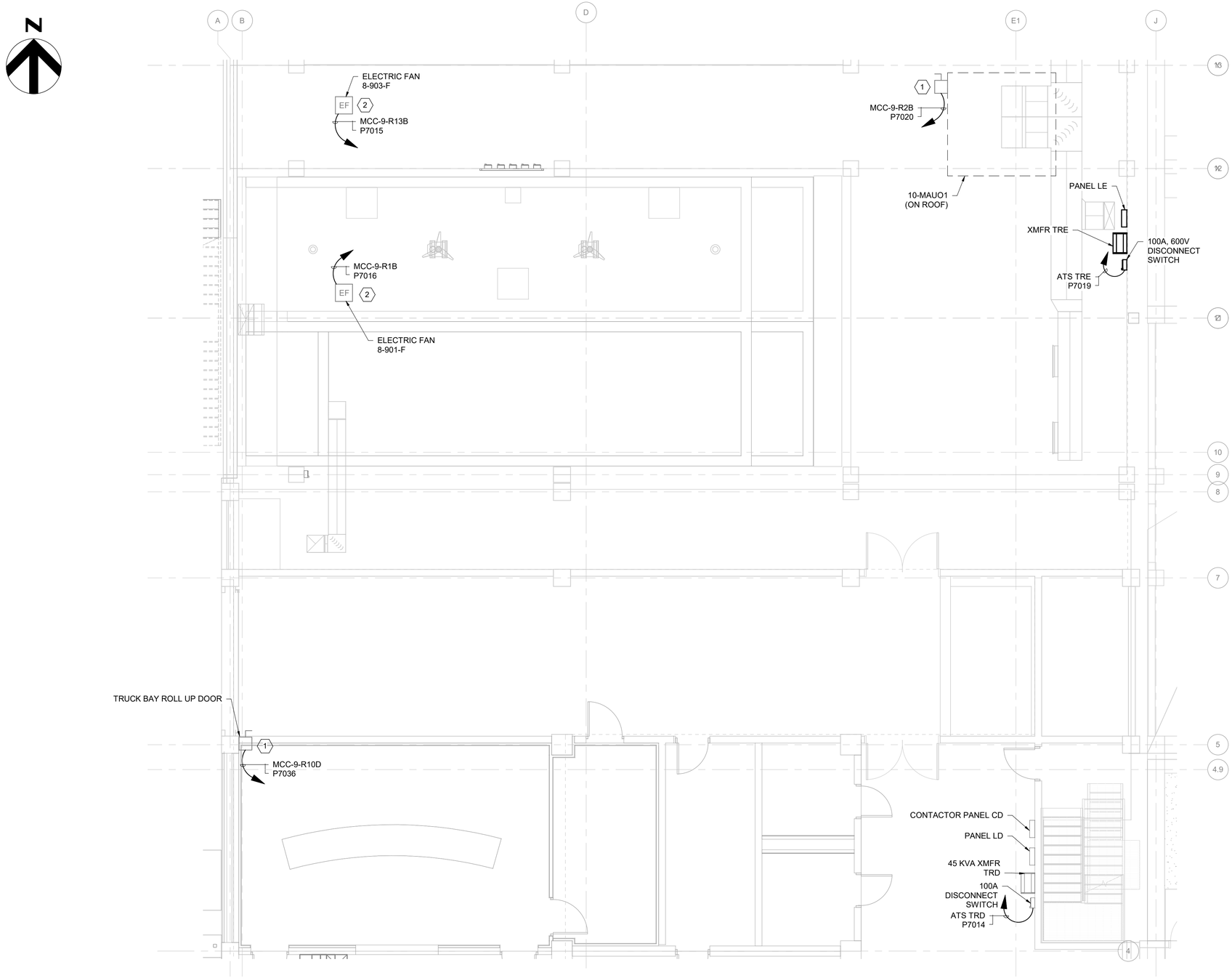

CHEMICAL HANDLING AREA POLYMER ROOM AT EL 142.00 - MCC-9 LOAD LOCATIONS

NOT TO SCALE

GENERAL NOTES

1. FOR SYMBOLS AND ABBREVIATIONS, SEE DRAWING E-1.
2. FOR CONSTRUCTION SEQUENCE, SEE DRAWING E-2.
3. EXISTING ELECTRICAL EQUIPMENT LOCATION IS APPROXIMATE ONLY FOR PRICING PURPOSES. CONTRACTOR SHALL FIELD VERIFY THE LOCATION OF EQUIPMENT BEFORE PERFORMING WORK.

KEY NOTES

1. DISCONNECT SWITCHES ARE SHOWN AS ANNOTATIVE SYMBOLS.
2. ELECTRIC FANS ARE SHOWN AS ANNOTATIVE SYMBOLS. SYMBOL IS INDICATIVE OF THE ELECTRIC FANS GENERAL LOCATION ONLY.

THE DRAWINGS IN THIS SET ARE RECORD DRAWINGS. THEY ARE CONSTRUCTION CONTRACT DRAWINGS WHICH HAVE BEEN REVISED BASED ON AVAILABLE FIELD INFORMATION RECORDED BY OTHERS DURING CONSTRUCTION OF THIS CONTRACT. THERE HAS BEEN NO VERIFICATION OF DIMENSIONS SHOWN ON THE CONSTRUCTION DRAWINGS OR THE ACCURACY/COMPLETENESS OF THE FIELD INFORMATION RECEIVED.

SIGNATURE — DATE 2/7/2023

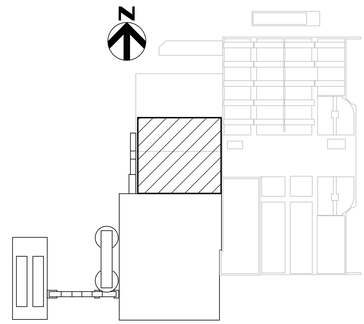

KEY PLAN

SHAH & ASSOCIATES

AS-BUILT REPLACEMENT SHEET

PROFESSIONAL CERTIFICATION
THIS DRAWING WAS ORIGINALLY APPROVED FOR CONSTRUCTION AND SEALED BY KANAIYALAL R. SHAH, A REGISTERED PROFESSIONAL ENGINEER IN THE STATE OF MARYLAND, NO. 11084

NOTICE TO CONTRACTORS
- PROJECT ELEVATIONS ARE BASED ON NAVD88 AND HOWARD COUNTY'S BENCHMARK SYSTEM
- PREVIOUS PROJECTS USED OTHER DATUMS
- APPLY THE FOLLOWING CONVERSIONS WHEN USING PREVIOUS CONTRACT DRAWINGS:
  - ADDITION NO. 6: SUBTRACT 0.80 FT
  - PRIOR ADDITIONS: SUBTRACT 1.04 FT

DEPARTMENT OF PUBLIC WORKS
HOWARD COUNTY, MARYLAND

CHIEF, BUREAU OF UTILITIES — DATE

DES: MM
DRN: DMG
CHK: KRS
DATE: 01/15/2018

DATE	REV	DESCRIPTION
03/2021		RECORD DRAWING

ELECTRICAL

EXISTING MCC-9 LOAD - EXISTING AND MODIFICATION

LITTLE PATUXENT WATER RECLAMATION PLANT
8TH ADDITION
BIOSOLIDS PROCESSING FACILITIES - PHASE 2

CAPITAL PROJECT S-6295
CONTRACT NO. 24-4936

ELECTION DISTRICT NO. 6
HOWARD COUNTY, MARYLAND

SCALE AS SHOWN

SHEET 240 OF 311

E-33

BIM 360://10054364 – Little Patuxent WRP 8th Addition/264592_100_E_V18.rvt
1/8/2022 10:29:55 AM

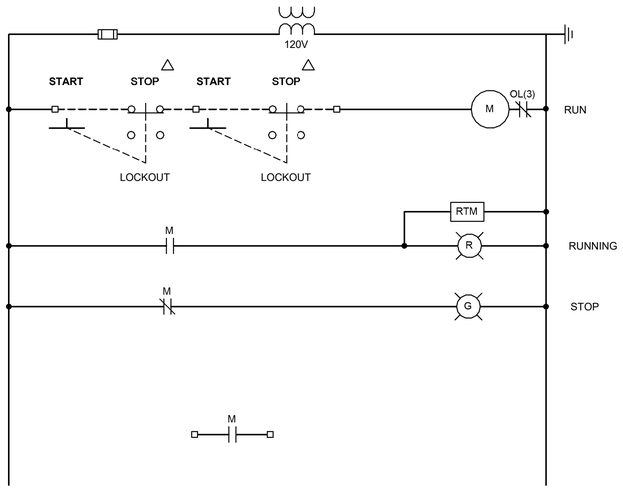

EXISTING FILTRATE PUMP 8-252-P SCHEMATIC

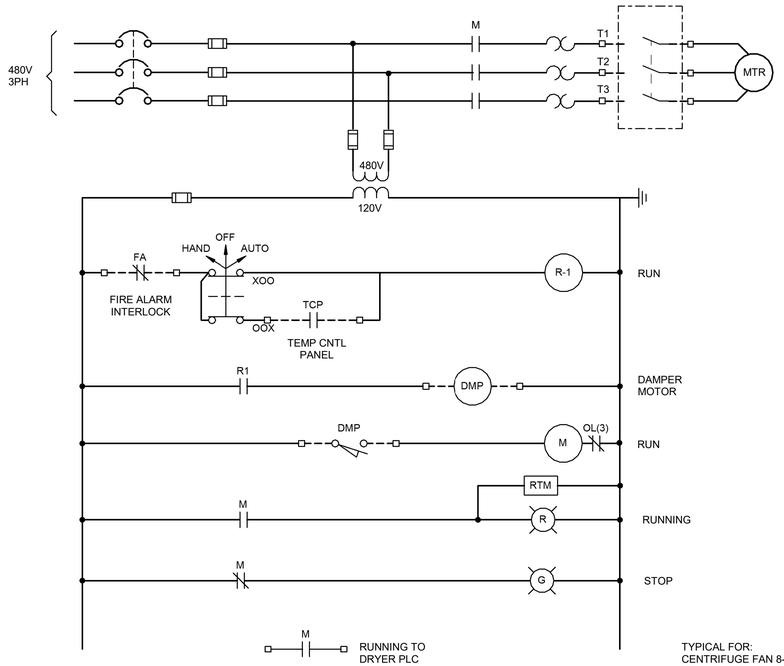

TYPICAL FOR:
CENTRIFUGE FAN 8-907-F
CENTRIFUGE FAM 8-908-F
CENTRIFUGE FAN 8-909-F

EXISTING CENTRATE FAN 8-910-F SCHEMATIC

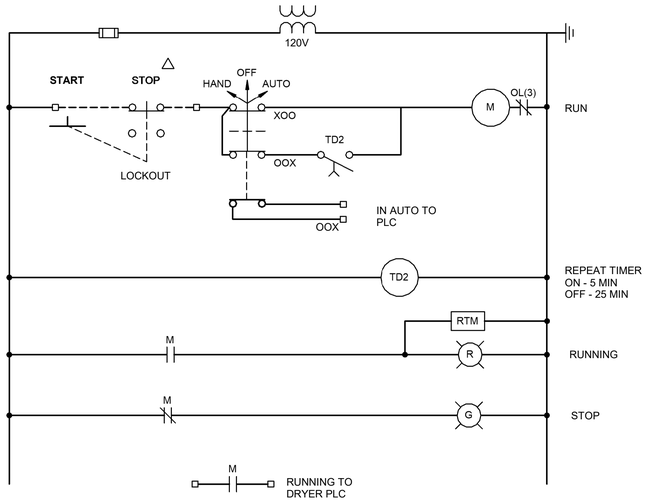

EXISTING SUBSTATION 2 FAN SCHEMATIC

GENERAL NOTES:

1. DEVICES SHOWN AS FIELD DEVICES ON THIS SHEET ARE EXISTING. CONNECTIONS SHOWN ARE FUNCTIONAL. CONTRACTOR TO REVIEW FIELD CONDITIONS AND CONNECT AS REQUIRED TO PROVIDE FUNCTIONALITY INIDCATED.

THE DRAWINGS IN THIS SET ARE RECORD DRAWINGS. THEY ARE CONSTRUCTION CONTRACT DRAWINGS WHICH HAVE BEEN REVISED BASED ON AVAILABLE FIELD INFORMATION RECORDED BY OTHERS DURING CONSTRUCTION OF THIS CONTRACT. THERE HAS BEEN NO VERIFICATION OF DIMENSIONS SHOWN ON THE CONSTRUCTION DRAWINGS OR THE ACCURACY/COMPLETENESS OF THE FIELD INFORMATION RECEIVED.

SIGNATURE 2/7/2023 DATE

AS-BUILT REPLACEMENT SHEET

PROFESSIONAL CERTIFICATION

THIS DRAWING WAS ORIGINALLY APPROVED FOR CONSTRUCTION AND SEALED BY ROBERT L. ANDERSON, A REGISTERED PROFESSIONAL ENGINEER IN THE STATE OF MARYLAND, NO. 37997

NOTICE TO CONTRACTORS

- PROJECT ELEVATIONS ARE BASED ON NAVD88 AND HOWARD COUNTY'S BENCHMARK SYSTEM
- PREVIOUS PROJECTS USED OTHER DATUMS
- APPLY THE FOLLOWING CONVERSIONS WHEN USING PREVIOUS CONTRACT DRAWINGS:
  - ADDITION NO. 6: SUBTRACT 0.80 FT
  - PRIOR ADDITIONS: SUBTRACT 1.04 FT

DEPARTMENT OF PUBLIC WORKS
HOWARD COUNTY, MARYLAND

CHIEF, BUREAU OF UTILITIES DATE

DES: WAC
DRN: WAC
CHK: RLA
DATE: 01/2018

DATE	REV	DESCRIPTION
03/2021		RECORD DRAWINGS

ELECTRICAL

NEW MCC-9 ELEMENTARY DIAGRAMS I ELECTRICAL

LITTLE PATUXENT WATER RECLAMATION PLANT
8TH ADDITION
BIOSOLIDS PROCESSING FACILITIES - PHASE 2

CAPITAL PROJECT S-6295
CONTRACT NO. 24-4936

ELECTION DISTRICT NO. 6
HOWARD COUNTY, MARYLAND

SCALE AS SHOWN

SHEET 241 OF 311

E-47

BIM 360://10054364 – Little Patuxent WRP 8th Addition/264592_E_HDR_V18.rvt
1/8/2022 1:42:57 PM

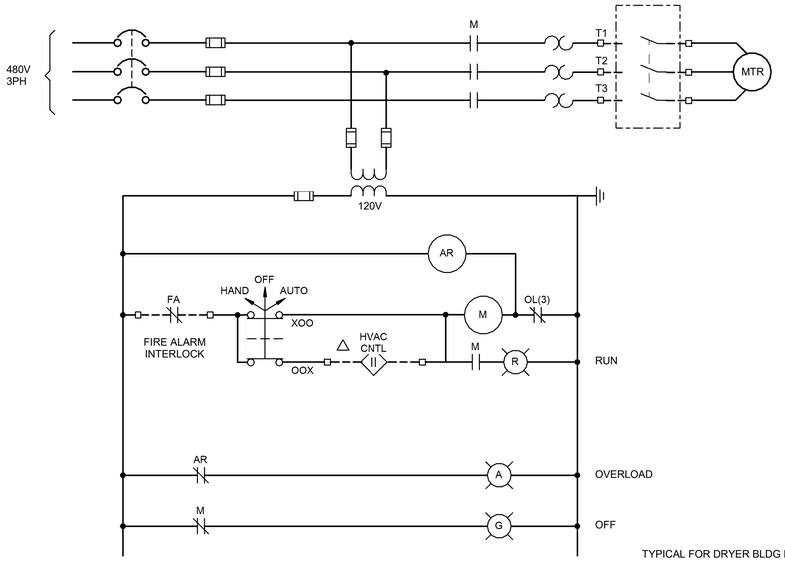

TYPICAL FOR DRYER BLDG FANS:
8-DRY-9919-FAN
8-DRY-9929-FAN
8-DRY-9939-FAN
8-DRY-9949-FAN
8-DRY-9959-FAN
8-DRY-9969-FAN
8-DRY-9979-FAN
8-CTR-9911-FAN

TYPICAL EXHAUST FAN SCHEMATIC

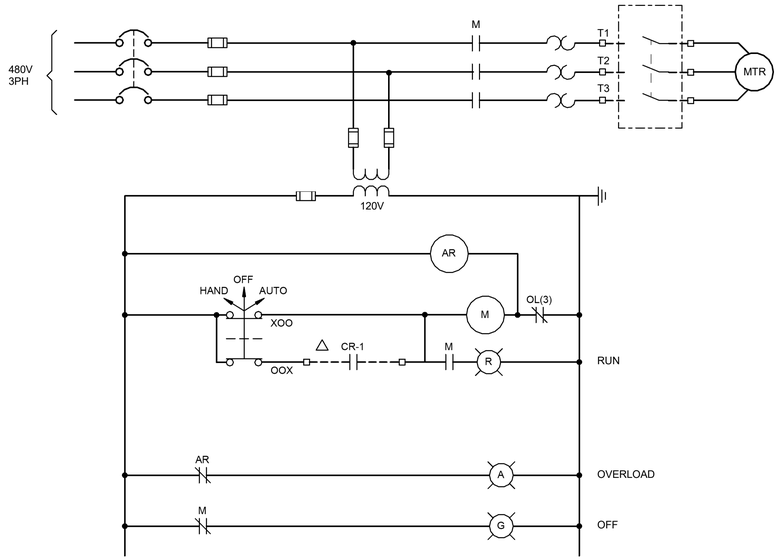

EXISTING AIR COMRESSOR 1 & 2 SCHEMATIC

CR-1 ALTERNATING RELAY FOR AIR COMPRESSOR 1; CR-2 IS THE RELAY FOR AIR COMPRESSOR 2

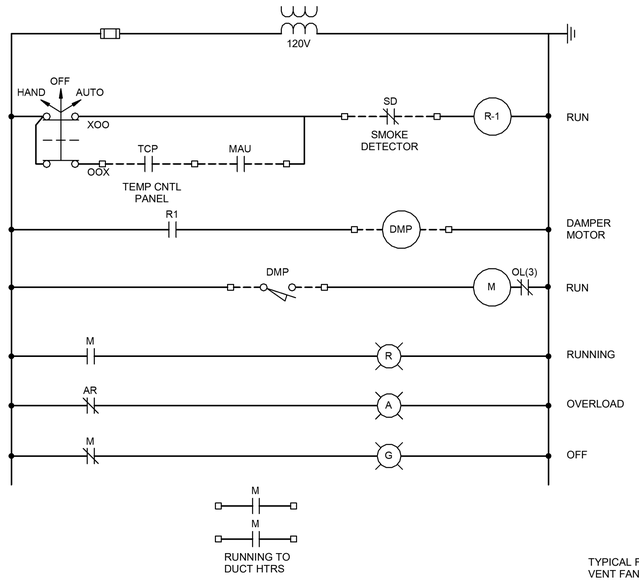

TYPICAL FOR:
VENT FAN 2 8-850-F
VENT FAN 2 8-851-F
DAF FAN 8-903-F
DAF FAN 8-901-F
DAF FAN 8-911-F

EXISTING EXHAUST FAN 21 (8-890-F) SCHEMATIC

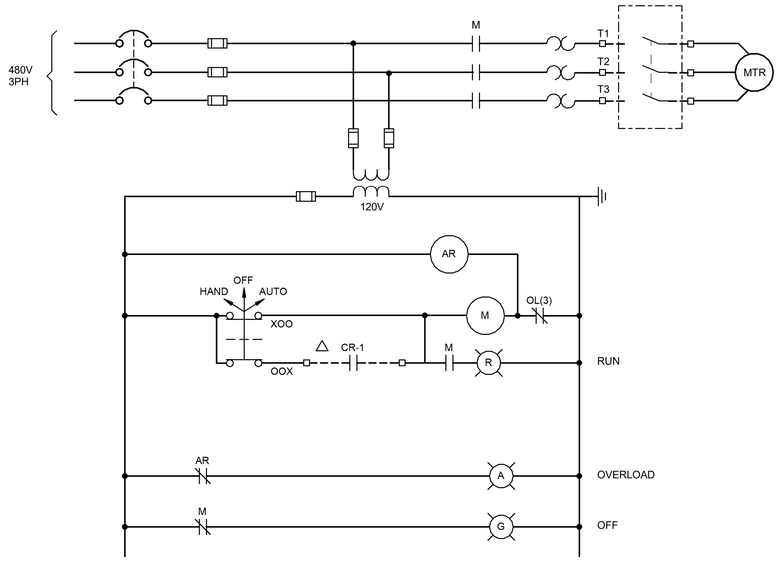

EXISTING HEATER SCHEMATIC

TYPICAL FOR HEATERS 8-805-HT AND 8-806-HT

THE DRAWINGS IN THIS SET ARE RECORD DRAWINGS. THEY ARE CONSTRUCTION CONTRACT DRAWINGS WHICH HAVE BEEN REVISED BASED ON AVAILABLE FIELD INFORMATION RECORDED BY OTHERS DURING CONSTRUCTION OF THIS CONTRACT. THERE HAS BEEN NO VERIFICATION OF DIMENSIONS SHOWN ON THE CONSTRUCTION DRAWINGS OR THE ACCURACY/COMPLETENESS OF THE FIELD INFORMATION RECEIVED.

SIGNATURE — DATE 2/7/2022

AS-BUILT REPLACEMENT SHEET

PROFESSIONAL CERTIFICATION
THIS DRAWING WAS ORIGINALLY APPROVED FOR CONSTRUCTION AND SEALED BY ROBERT L. ANDERSON, A REGISTERED PROFESSIONAL ENGINEER IN THE STATE OF MARYLAND, NO. 37997

NOTICE TO CONTRACTORS
- PROJECT ELEVATIONS ARE BASED ON NAVD88 AND HOWARD COUNTY'S BENCHMARK SYSTEM
- PREVIOUS PROJECTS USED OTHER DATUMS
- APPLY THE FOLLOWING CONVERSIONS WHEN USING PREVIOUS CONTRACT DRAWINGS:
  - ADDITION NO. 6: SUBTRACT 0.80 FT
  - PRIOR ADDITIONS: SUBTRACT 1.04 FT

DEPARTMENT OF PUBLIC WORKS
HOWARD COUNTY, MARYLAND

CHIEF, BUREAU OF UTILITIES — DATE

DES: WAC
DRN: WAC
CHK: RLA
DATE: 01/2018

DATE	REV	DESCRIPTION
03/2021		RECORD DRAWINGS

NEW MCC-9 ELEMENTARY DIAGRAMS II ELECTRICAL

LITTLE PATUXENT WATER RECLAMATION PLANT
8TH ADDITION
BIOSOLIDS PROCESSING FACILITIES - PHASE 2

CAPITAL PROJECT S-6295
CONTRACT NO. 24-4936

ELECTION DISTRICT NO. 6
HOWARD COUNTY, MARYLAND

SCALE AS SHOWN

SHEET 242 OF 311

E-48

BIM 360://10054364 – Little Patuxent WRP 8th Addition/264592_E_HDR_V18.rvt
1/8/2022 1:42:58 PM

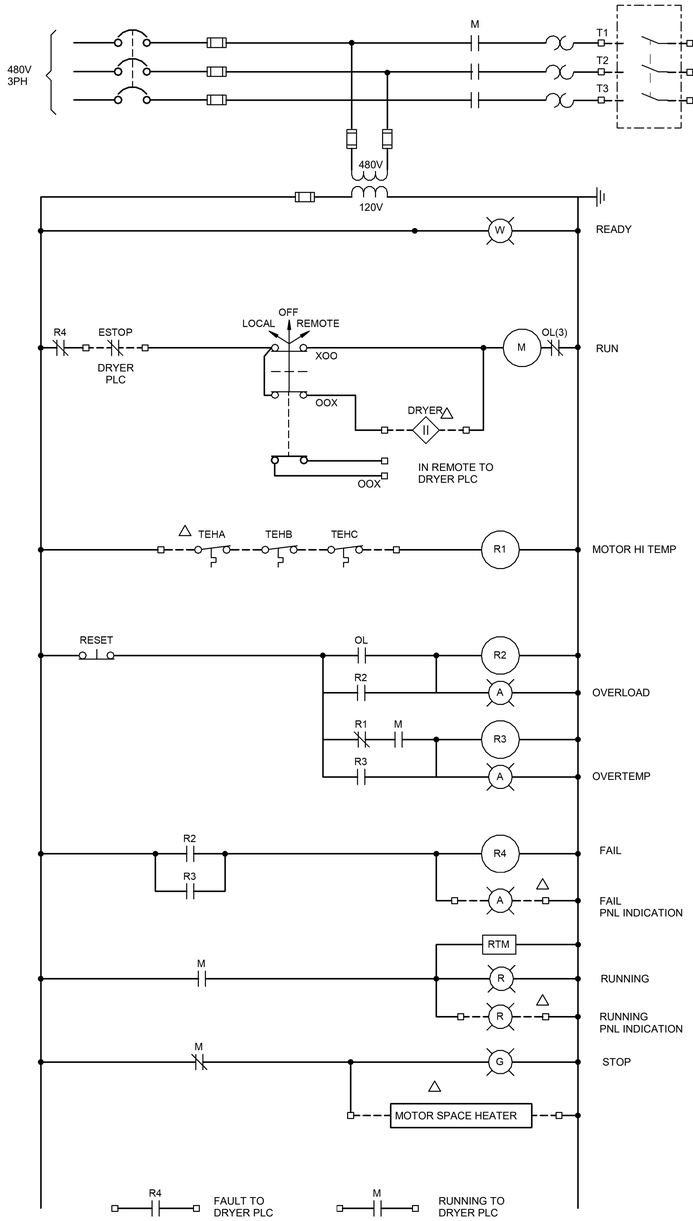

HOT AIR FAN SCHEMATIC (TYP OF 16)

8-DRY-7118 THROUGH 8-DRY-7188-FAN
8-DRY-7218 THROUGH 8-DRY-7288-FAN

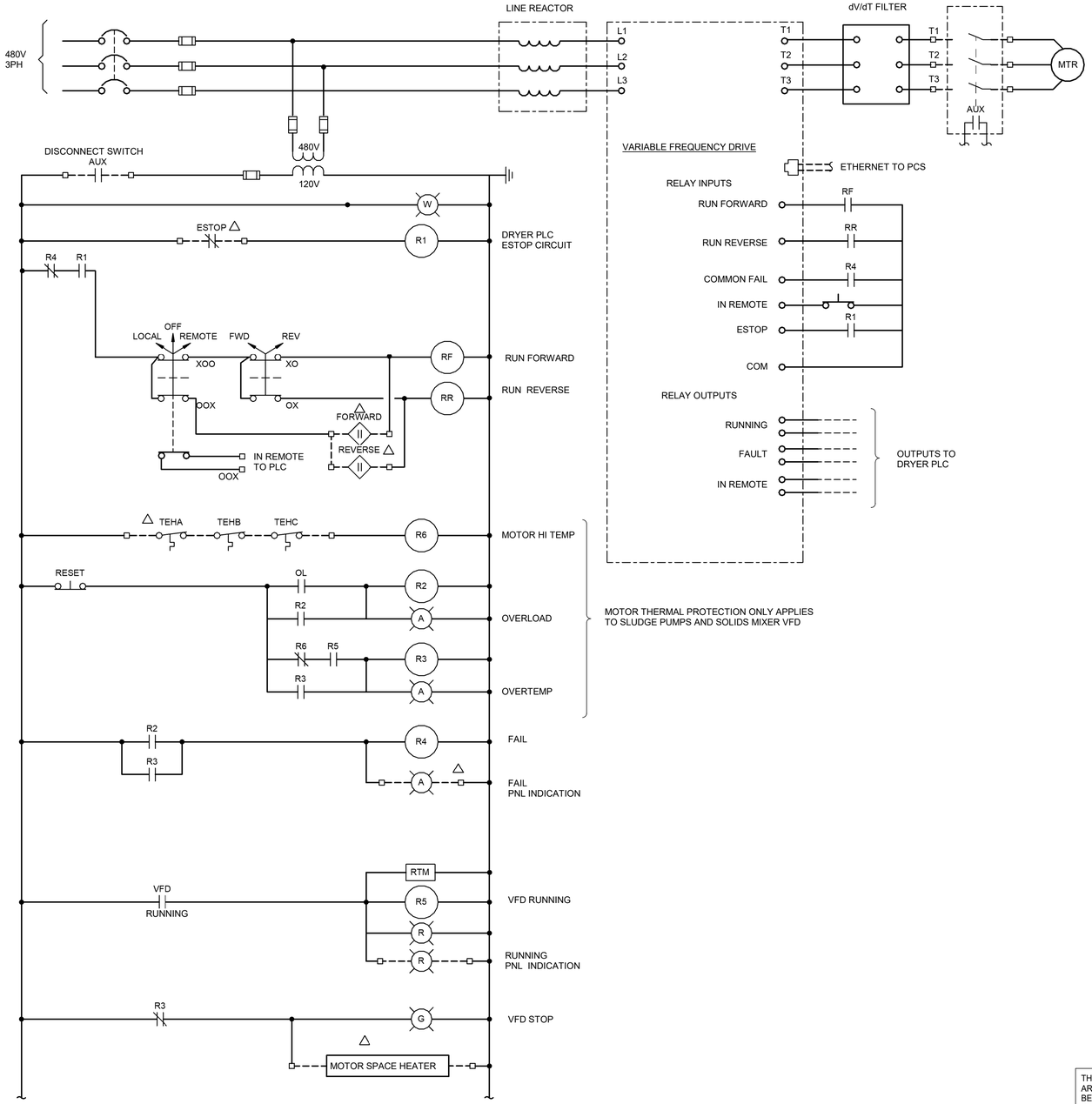

DRUM MILL SCHEMATIC (TYP OF 10)

TYPICAL FOR DRYER BELT AND SOLIDS MIXER
DRUM MILLS: 8-DRY-6712-MIL, 8-DRY-6722-MIL, 8-DRY-6812-MIL, 8-DRY-6822-MIL
DRYER BELTS: 8-DRY-5112-BLT, 8-DRY-5122-BLT, 8-DRY-5212-BLT, 8-DRY-5222-BLT
SOLIDS MIXERS: 8-DRY-5311-MXR, 8-DRY-5411-MXR

THE DRAWINGS IN THIS SET ARE RECORD DRAWINGS. THEY ARE CONSTRUCTION CONTRACT DRAWINGS WHICH HAVE BEEN REVISED BASED ON AVAILABLE FIELD INFORMATION RECORDED BY OTHERS DURING CONSTRUCTION OF THIS CONTRACT. THERE HAS BEEN NO VERIFICATION OF DIMENSIONS SHOWN ON THE CONSTRUCTION DRAWINGS OR THE ACCURACY/COMPLETENESS OF THE FIELD INFORMATION RECEIVED.

SIGNATURE — DATE 2/7/2023

AS-BUILT REPLACEMENT SHEET

PROFESSIONAL CERTIFICATION
THIS DRAWING WAS ORIGINALLY APPROVED FOR CONSTRUCTION AND SEALED BY ROBERT L. ANDERSON, A REGISTERED PROFESSIONAL ENGINEER IN THE STATE OF MARYLAND, NO. 37997

NOTICE TO CONTRACTORS
- PROJECT ELEVATIONS ARE BASED ON NAVD88 AND HOWARD COUNTY'S BENCHMARK SYSTEM
- PREVIOUS PROJECTS USED OTHER DATUMS
- APPLY THE FOLLOWING CONVERSIONS WHEN USING PREVIOUS CONTRACT DRAWINGS:
  - ADDITION NO. 6: SUBTRACT 0.80 FT
  - PRIOR ADDITIONS: SUBTRACT 1.04 FT

DEPARTMENT OF PUBLIC WORKS
HOWARD COUNTY, MARYLAND

CHIEF, BUREAU OF UTILITIES — DATE

DES: WAC
DRN: WAC
CHK: RLA
DATE: 01/2018

DATE	REV	DESCRIPTION
03/2021		RECORD DRAWINGS

ELECTRICAL

NEW MCC-10 ELEMENTARY DIAGRAMS I ELECTRICAL

LITTLE PATUXENT WATER RECLAMATION PLANT
8TH ADDITION
BIOSOLIDS PROCESSING FACILITIES - PHASE 2

CAPITAL PROJECT S-6295
CONTRACT NO. 24-4936

ELECTION DISTRICT NO. 6
HOWARD COUNTY, MARYLAND

SCALE AS SHOWN

SHEET 243 OF 311

E-49

BIM 360://10054364 – Little Patuxent WRP 8th Addition/264592_E_HDR_V18.rvt
1/8/2022 1:43:00 PM

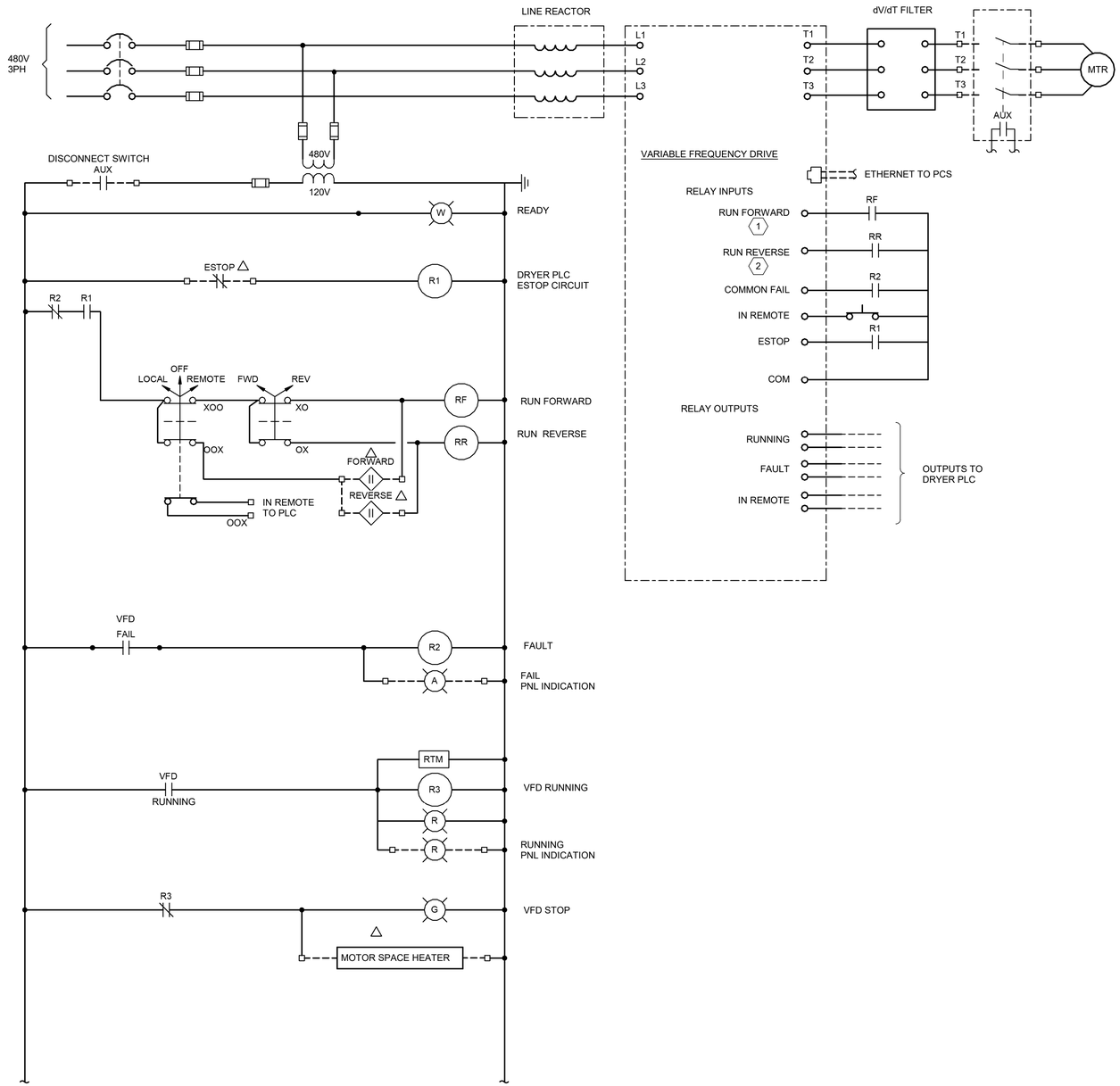

SOLIDS DOSING UNIT SCHEMATIC (TYP OF 18)

TYPICAL FOR:
SLUDGE DISTRIBUTORS 8-DRY-5511-SDR, 8-DRY-5611-SDR
DOSING UNITS: 8-DRY-5711-SDU, 8-DRY-5811-SDU
MIXER DOSING SCREW CONVEYORS 8-DRY-6911-DRV, 8-DRY-6011-DRV
SOLIDS ROLLER PRESSES: 8-DRY-5912-SRP, 8-DRY-5922-SRP, 8-DRY-5012-SRP. 8-DRY-5022-SRP
DRAG CHAIN CONVEYOR 1 8-DRY-6514-DRV. 8-DRY-6614-DRV
DRAG CHAIN CONVEYOR 2 8-DRY-6524-DRV, 8-DRY-6624-DRV
DRAG CHAIN CONVEYOR 3 8-DRY-6534-DRV, 8-DRY-6634-DRV
DRAG CHAIN CONVEYOR 4 8-DRY-6544-DRV, 8-DRY-6644-DRV

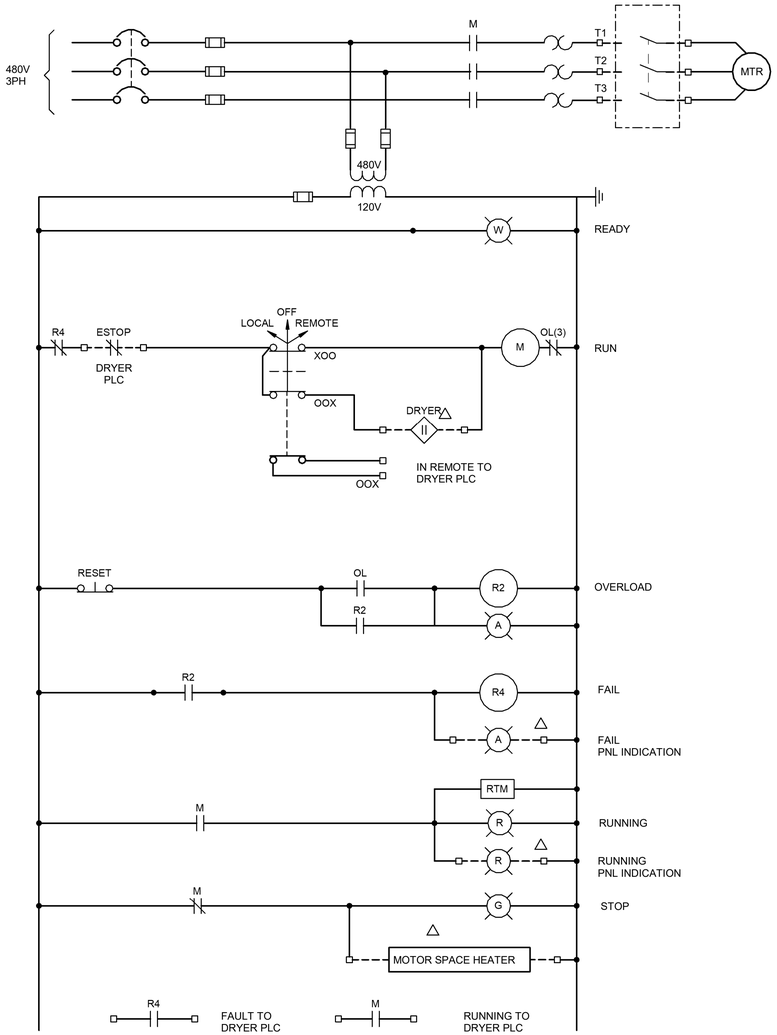

SOLID SCREENS SCHEMATIC (TYP 0F 14)

TYPICAL FOR :
SOLIDS SCREENS: 8-DRY-6911-SCRN, 8-DRY-6011-SCRN
DRYER BOTTOM SCRAPPER: 8-DRY-5111-COL, 8-DRY-5211-COL
DISCHARGE SCREW CONVEYOR 8-DRY-6311-CNV, 8 DRY-6411-CNV
DRYER BOOSTER FAN 8-DRY-7511-FAN, 8-DRY-7611-FAN
SILO AIR LOCK ROTARY VALVE 8-DRY-6111-MOV, 8-DRY-6211-MOV
SILO CONE VIBRATOR 8-DRY-6112-VBR, 8-DRY-6122-VBR, 8-DRY-6212-VBR, 8-DRY-6222-VBR

THE DRAWINGS IN THIS SET ARE RECORD DRAWINGS. THEY ARE CONSTRUCTION CONTRACT DRAWINGS WHICH HAVE BEEN REVISED BASED ON AVAILABLE FIELD INFORMATION RECORDED BY OTHERS DURING CONSTRUCTION OF THIS CONTRACT. THERE HAS BEEN NO VERIFICATION OF DIMENSIONS SHOWN ON THE CONSTRUCTION DRAWINGS OR THE ACCURACY/COMPLETENESS OF THE FIELD INFORMATION RECEIVED.

SIGNATURE

3/7/2023
DATE

AS-BUILT REPLACEMENT SHEET

PROFESSIONAL CERTIFICATION
THIS DRAWING WAS ORIGINALLY APPROVED FOR CONSTRUCTION AND SEALED BY ROBERT L. ANDERSON, A REGISTERED PROFESSIONAL ENGINEER IN THE STATE OF MARYLAND, NO. 37997

NOTICE TO CONTRACTORS
- PROJECT ELEVATIONS ARE BASED ON NAVD88 AND HOWARD COUNTY'S BENCHMARK SYSTEM
- PREVIOUS PROJECTS USED OTHER DATUMS
- APPLY THE FOLLOWING CONVERSIONS WHEN USING PREVIOUS CONTRACT DRAWINGS:
  - ADDITION NO. 6: SUBTRACT 0.80 FT
  - PRIOR ADDITIONS: SUBTRACT 1.04 FT

DEPARTMENT OF PUBLIC WORKS
HOWARD COUNTY, MARYLAND

CHIEF, BUREAU OF UTILITIES DATE

DES: WAC
DRN: WAC
CHK: RLA
DATE: 01/2018

DATE	REV	DESCRIPTION
03/2021		RECORD DRAWINGS

ELECTRICAL

NEW MCC-10 ELEMENTARY DIAGRAMS II ELECTRICAL

LITTLE PATUXENT WATER RECLAMATION PLANT
8TH ADDITION
BIOSOLIDS PROCESSING FACILITIES - PHASE 2

CAPITAL PROJECT S-6295
CONTRACT NO. 24-4936

ELECTION DISTRICT NO. 6
HOWARD COUNTY, MARYLAND

SCALE AS SHOWN

SHEET 244 OF 311

E-50

BIM 360://10054364 – Little Patuxent WRP 8th Addition/264592_E_HDR_V18.rvt
1/8/2022 1:43:02 PM

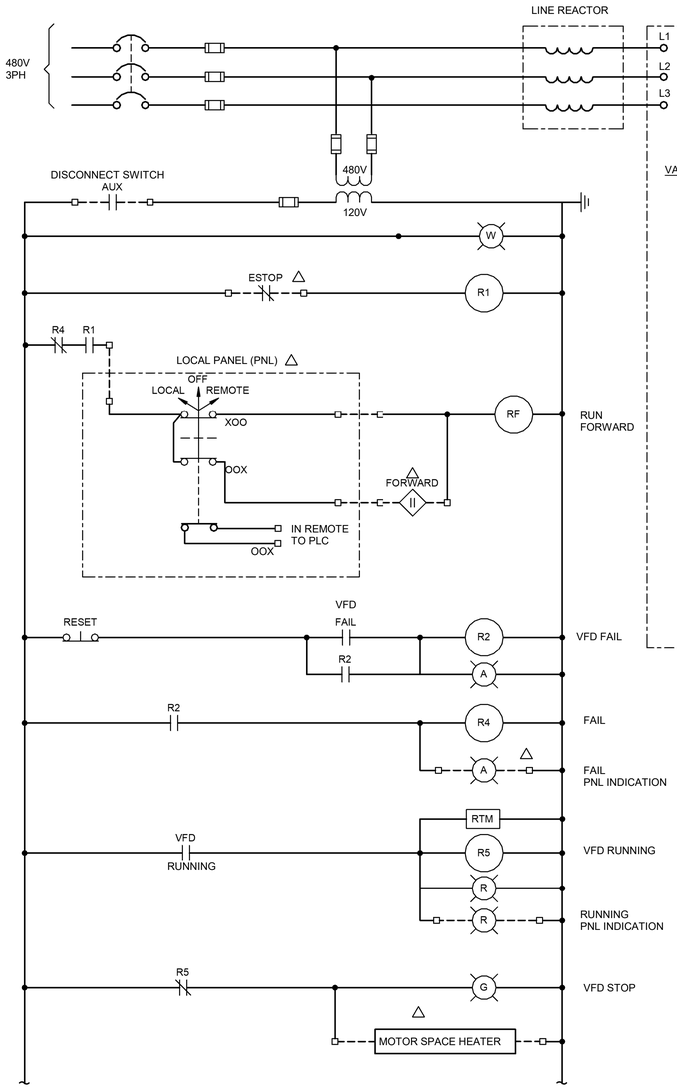

COOLING WATER PUMP SCHEMATIC(TYP 0F 6)

TYPICAL FOR:
8-DRY-1212-PMP, 8-DRY-1222-PMP

8-DRY-4112A-CNV, 8-DRY-4212A-CNV, 8-DRY-4122A-CNV, 8-DRY-4222A-CNV

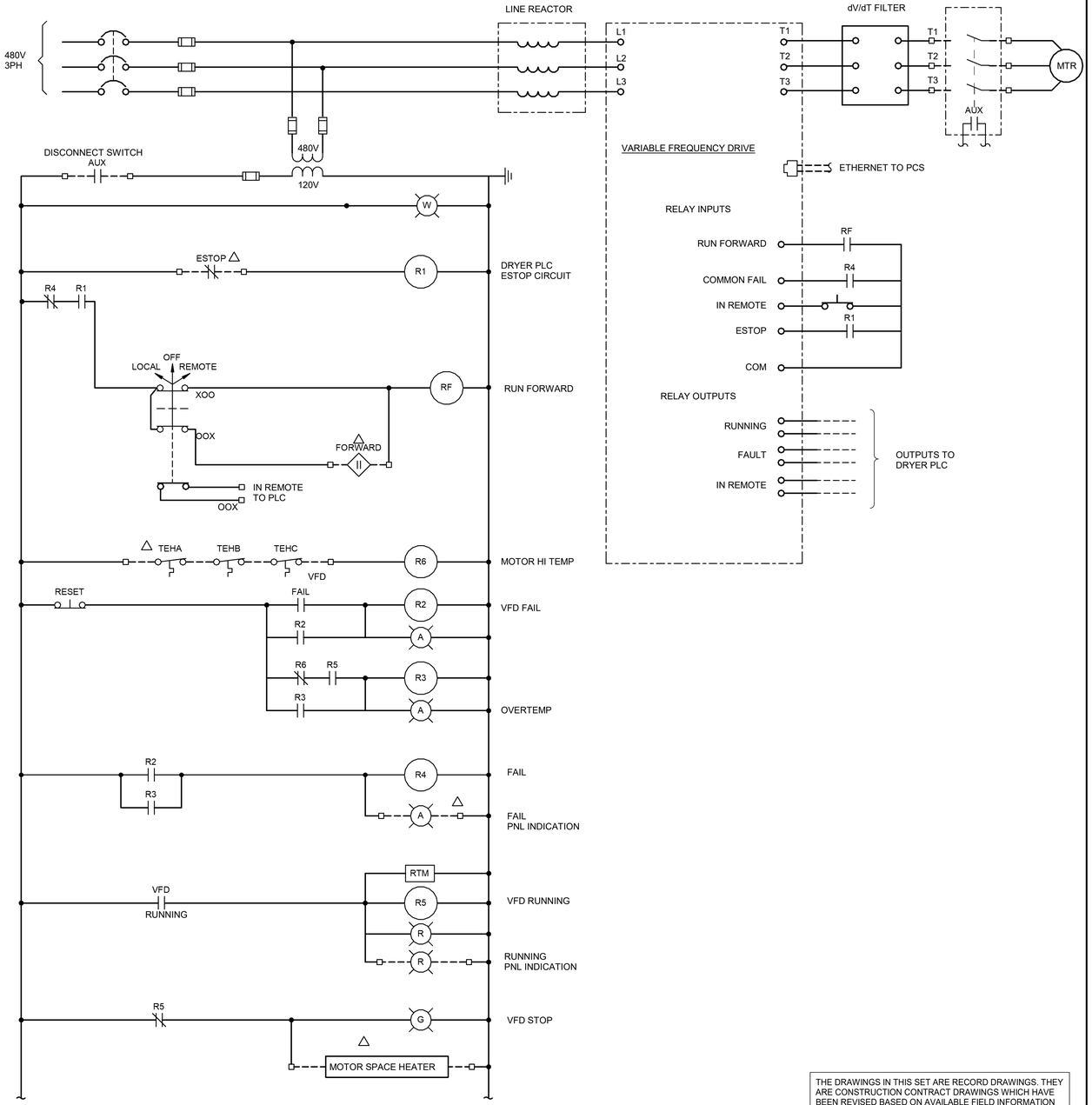

DRYER EXHAUST FAN SCHEMATIC (TYP 0F 8)

TYPICAL FOR:
ROTOCLONES 8-DRY-7511-SCRB, 8-DRY-7611-SCRB
DRYER EXHAUST FAN 8-DRY-7322-FAN, 8-DRY-7422-FAN
HOT AIR PLENUM FAN 8-DRY-7111-FAN, 8-DRY-7211-FAN
OFF GAS FAN 8-DRY-7312-FAN, 8-DRY-7212-FAN

THE DRAWINGS IN THIS SET ARE RECORD DRAWINGS. THEY ARE CONSTRUCTION CONTRACT DRAWINGS WHICH HAVE BEEN REVISED BASED ON AVAILABLE FIELD INFORMATION RECORDED BY OTHERS DURING CONSTRUCTION OF THIS CONTRACT. THERE HAS BEEN NO VERIFICATION OF DIMENSIONS SHOWN ON THE CONSTRUCTION DRAWINGS OR THE ACCURACY/COMPLETENESS OF THE FIELD INFORMATION RECEIVED.

SIGNATURE 2/7/2023 DATE

AS-BUILT REPLACEMENT SHEET

PROFESSIONAL CERTIFICATION
THIS DRAWING WAS ORIGINALLY APPROVED FOR CONSTRUCTION AND SEALED BY ROBERT L. ANDERSON, A REGISTERED PROFESSIONAL ENGINEER IN THE STATE OF MARYLAND, NO. 37997

NOTICE TO CONTRACTORS
- PROJECT ELEVATIONS ARE BASED ON NAVD88 AND HOWARD COUNTY'S BENCHMARK SYSTEM
- PREVIOUS PROJECTS USED OTHER DATUMS
- APPLY THE FOLLOWING CONVERSIONS WHEN USING PREVIOUS CONTRACT DRAWINGS:
  - ADDITION NO. 6: SUBTRACT 0.80 FT
  - PRIOR ADDITIONS: SUBTRACT 1.04 FT

DEPARTMENT OF PUBLIC WORKS
HOWARD COUNTY, MARYLAND

CHIEF, BUREAU OF UTILITIES DATE

DES: WAC
DRN: WAC
CHK: RLA
DATE: 01/2018

DATE	REV	DESCRIPTION
03/2021		RECORD DRAWINGS

NEW MCC-10 ELEMENTARY DIAGRAMS III ELECTRICAL

LITTLE PATUXENT WATER RECLAMATION PLANT
8TH ADDITION
BIOSOLIDS PROCESSING FACILITIES - PHASE 2

CAPITAL PROJECT S-6295
CONTRACT NO. 24-4936

ELECTION DISTRICT NO. 6
HOWARD COUNTY, MARYLAND

SCALE
AS
SHOWN

SHEET
245 OF 311

E-51

BIM 360://10054364 – Little Patuxent WRP 8th Addition/264592_E_HDR_V18.rvt
1/8/2022 1:43:04 PM

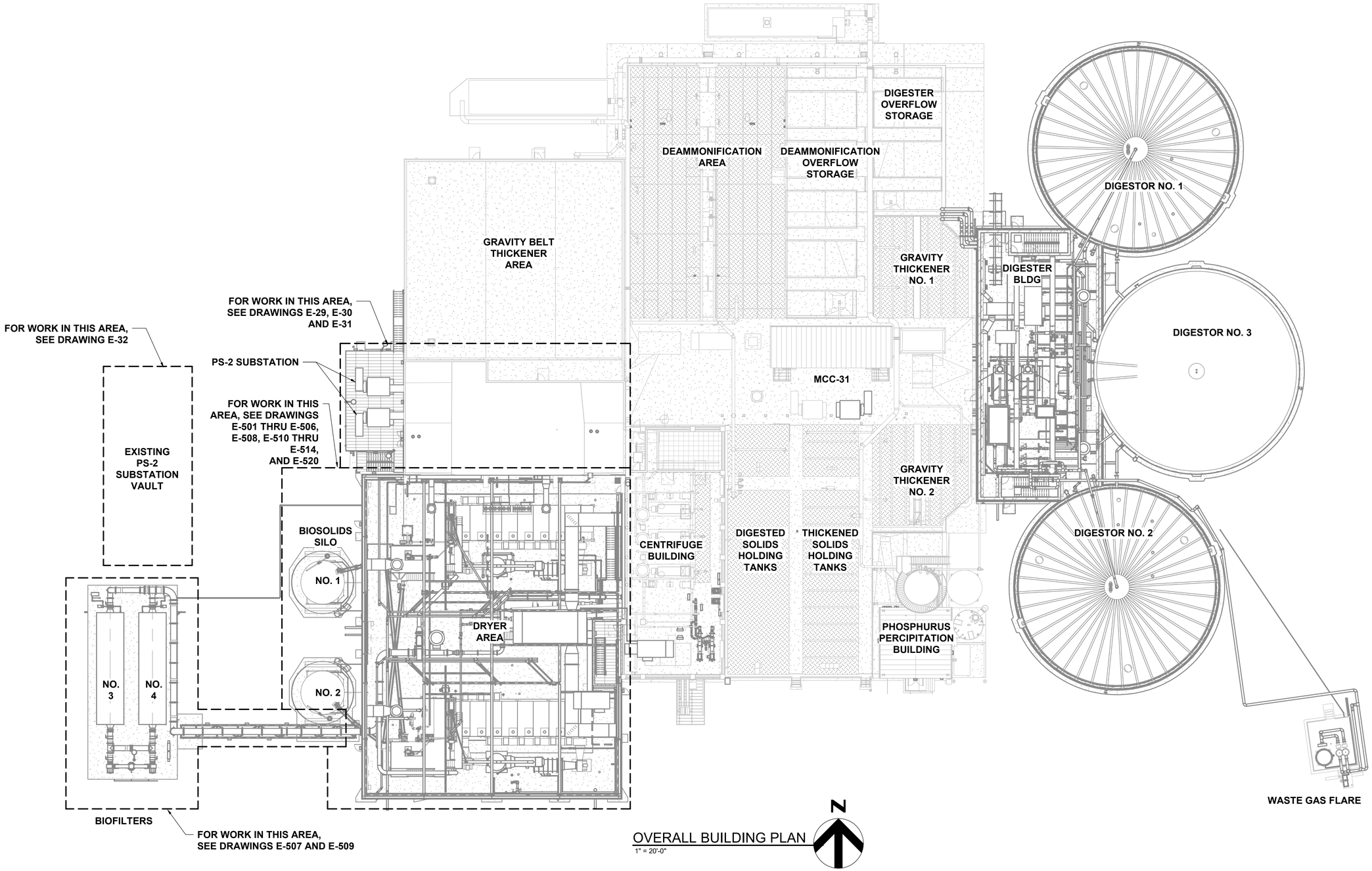

OVERALL BUILDING PLAN
1" = 20'-0"

GENERAL NOTES

1. FOR SYMBOLS AND ABBREVIATIONS, SEE DRAWING E-1.
2. FOR CONSTRUCTION SEQUENCE, SEE DRAWING E-2.

THE DRAWINGS IN THIS SET ARE RECORD DRAWINGS. THEY ARE CONSTRUCTION CONTRACT DRAWINGS WHICH HAVE BEEN REVISED BASED ON AVAILABLE FIELD INFORMATION RECORDED BY OTHERS DURING CONSTRUCTION OF THIS CONTRACT. THERE HAS BEEN NO VERIFICATION OF DIMENSIONS SHOWN ON THE CONSTRUCTION DRAWINGS OR THE ACCURACY/COMPLETENESS OF THE FIELD INFORMATION RECEIVED.

SIGNATURE — DATE 2/7/2023

SHAH & ASSOCIATES

AS-BUILT REPLACEMENT SHEET

PROFESSIONAL CERTIFICATION
THIS DRAWING WAS ORIGINALLY APPROVED FOR CONSTRUCTION AND SEALED BY KANAIYALAL R. SHAH, A REGISTERED PROFESSIONAL ENGINEER IN THE STATE OF MARYLAND, NO. 11084

NOTICE TO CONTRACTORS
- PROJECT ELEVATIONS ARE BASED ON NAVD88 AND HOWARD COUNTY'S BENCHMARK SYSTEM
- PREVIOUS PROJECTS USED OTHER DATUMS
- APPLY THE FOLLOWING CONVERSIONS WHEN USING PREVIOUS CONTRACT DRAWINGS:
  - ADDITION NO. 6: SUBTRACT 0.80 FT
  - PRIOR ADDITIONS: SUBTRACT 1.04 FT

DEPARTMENT OF PUBLIC WORKS
HOWARD COUNTY, MARYLAND

CHIEF, BUREAU OF UTILITIES — DATE

DES: MM
DRN: DMG
CHK: KRS
DATE: 01/15/2018

DATE	REV	DESCRIPTION
03/2021		RECORD DRAWING

ELECTRICAL

DEWATERING AND DRYER BUILDING
OVERALL ELECTRICAL AND I&C PLAN

LITTLE PATUXENT WATER RECLAMATION PLANT
8TH ADDITION
BIOSOLIDS PROCESSING FACILITIES - PHASE 2

CAPITAL PROJECT S-6295
CONTRACT NO. 24-4936

ELECTION DISTRICT NO. 6
HOWARD COUNTY, MARYLAND

SCALE AS SHOWN

SHEET 246 OF 311

E-500

BIM 360://10054364 – Little Patuxent WRP 8th Addition/264592_100_E_V18.rvt
1/8/2022 11:04:01 AM

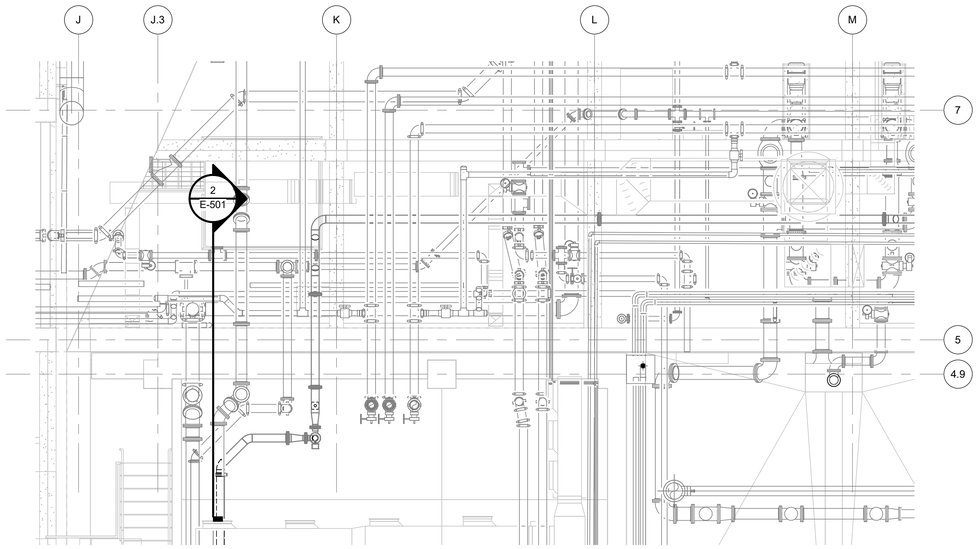

PART PLAN AT EL 142.00

3/16" = 1'-0"

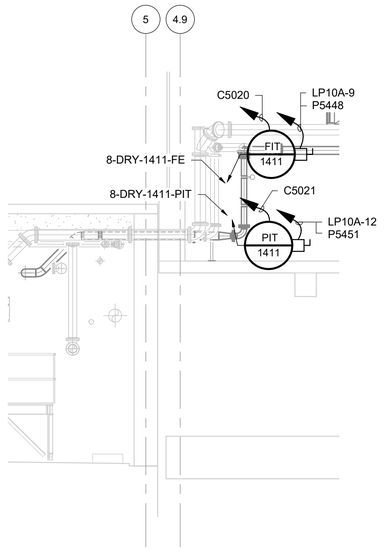

2 / E-501 Section

3/16" = 1'-0"

GENERAL NOTES

1. FOR SYMBOLS AND ABBREVIATIONS, SEE DRAWING E-1.
2. FOR CONSTRUCTION SEQUENCE, SEE DRAWING E-2.
3. FOR MCC-10 ONE LINE DIAGRAM, SEE DRAWINGS E-11 THRU E-13C.
4. FOR CABLE AND CONDUIT SCHEDULE, SEE DRAWINGS E-908 THRU E-914A AND E-918.
5. FOR PANELBOARD SCHEDULE, SEE DRAWINGS E-901 THRU E-905.
6. NOT ALL EQUIPMENT IS SHOWN AND IDENTIFIED ON THIS DRAWING. CONTRACTOR SHALL REFER TO PROCESS MECHANICAL, HVAC, INSTRUMENTATION AND CONTROL, ELECTRICAL INSTRUMENT RISER DRAWINGS FOR COMPLETE EQUIPMENT INFORMATION.
7. DISCONNECT SWITCHES SHOWN FOR INSTRUMENTS I.E., LIT'S, AIT'S, FIT'S, PIT'S, TIT'S ETC. ARE 20A SNAP SWITCHES.

THE DRAWINGS IN THIS SET ARE RECORD DRAWINGS. THEY ARE CONSTRUCTION CONTRACT DRAWINGS WHICH HAVE BEEN REVISED BASED ON AVAILABLE FIELD INFORMATION RECORDED BY OTHERS DURING CONSTRUCTION OF THIS CONTRACT. THERE HAS BEEN NO VERIFICATION OF DIMENSIONS SHOWN ON THE CONSTRUCTION DRAWINGS OR THE ACCURACY/COMPLETENESS OF THE FIELD INFORMATION RECEIVED.

SIGNATURE — DATE 2/7/2022

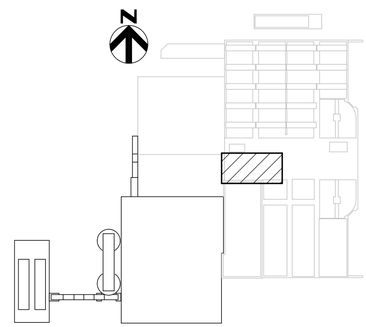

KEY PLAN

SHAH & ASSOCIATES

AS-BUILT REPLACEMENT SHEET

PROFESSIONAL CERTIFICATION

THIS DRAWING WAS ORIGINALLY APPROVED FOR CONSTRUCTION AND SEALED BY KANAIYALAL R. SHAH, A REGISTERED PROFESSIONAL ENGINEER IN THE STATE OF MARYLAND, NO. 11084

NOTICE TO CONTRACTORS

- PROJECT ELEVATIONS ARE BASED ON NAVD88 AND HOWARD COUNTY'S BENCHMARK SYSTEM
- PREVIOUS PROJECTS USED OTHER DATUMS
- APPLY THE FOLLOWING CONVERSIONS WHEN USING PREVIOUS CONTRACT DRAWINGS:
  - ADDITION NO. 6: SUBTRACT 0.80 FT
  - PRIOR ADDITIONS: SUBTRACT 1.04 FT

DEPARTMENT OF PUBLIC WORKS
HOWARD COUNTY, MARYLAND

CHIEF, BUREAU OF UTILITIES — DATE

DES: MM
DRN: DMG
CHK: KRS
DATE: 01/15/2018

DATE	REV	DESCRIPTION
03/2021		RECORD DRAWING

ELECTRICAL

DEWATERING AND DRYER BUILDING
ELECTRICAL AND I&C PLAN AT EL. 142.00

LITTLE PATUXENT WATER RECLAMATION PLANT
8TH ADDITION
BIOSOLIDS PROCESSING FACILITIES - PHASE 2

CAPITAL PROJECT S-6295
CONTRACT NO. 24-4936

ELECTION DISTRICT NO. 6
HOWARD COUNTY, MARYLAND

SCALE AS SHOWN

SHEET 247 OF 311

E-501

BIM 360://10054364 – Little Patuxent WRP 8th Addition/264592_100_E_V18.rvt
1/8/2022 11:04:07 AM

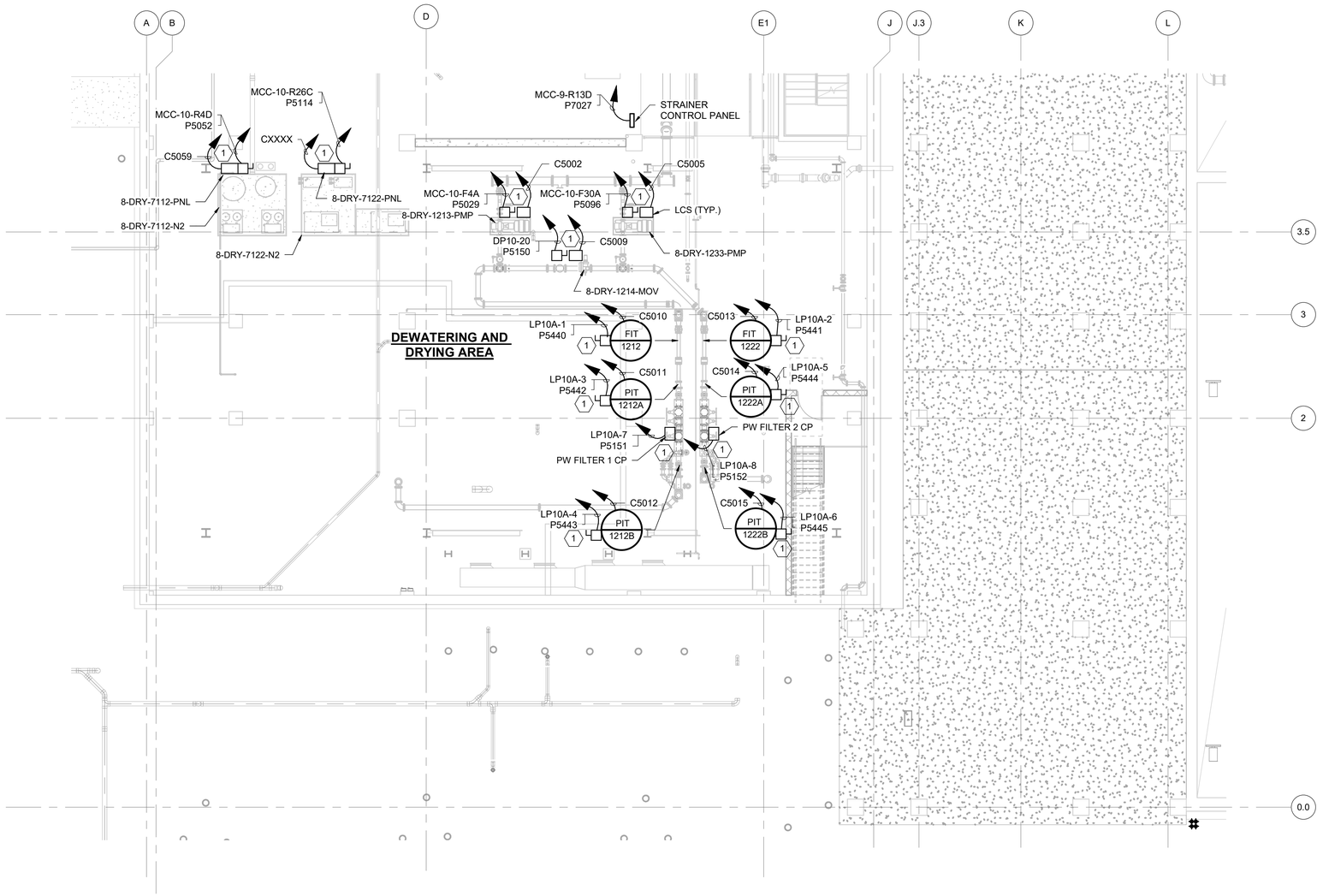

PARTIAL PLAN AT EL 129.2

1/8" = 1'-0"

GENERAL NOTES

1. FOR SYMBOLS AND ABBREVIATIONS, SEE DRAWING E-1.
2. FOR CONSTRUCTION SEQUENCE, SEE DRAWING E-2.
3. FOR MCC-9 AND MCC-10 ONE LINE DIAGRAM, SEE DRAWINGS E-8 THRU E-13A.
4. FOR CABLE AND CONDUIT SCHEDULE, SEE DRAWINGS E-908 THRU E-914A AND E-918.
5. FOR PANELBOARD SCHEDULE, SEE DRAWINGS E-901 THRU E-905.
6. NOT ALL EQUIPMENT IS SHOWN AND IDENTIFIED ON THIS DRAWING. CONTRACTOR SHALL REFER TO PROCESS MECHANICAL, HVAC, INSTRUMENTATION AND CONTROL, ELECTRICAL INSTRUMENT RISER DRAWINGS FOR COMPLETE EQUIPMENT INFORMATION.
7. DISCONNECT SWITCHES SHOWN FOR INSTRUMENTS I.E., LIT'S, AIT'S, FIT'S, PIT'S, TIT'S ETC. ARE 20A SNAP SWITCHES.

KEY NOTES

(1) DISCONNECT SWITCHES AND LOCAL CONTROL STATIONS ARE SHOWN AS ANNOTATIVE SYMBOLS. CONTRACTOR SHALL SELECT AND SUBMIT THE LOCATION FOR DISCONNECT SWITCHES AND LOCAL CONTROL PANEL LOCATIONS FOR ENGINEERS REVIEW AND APPROVAL.

THE DRAWINGS IN THIS SET ARE RECORD DRAWINGS. THEY ARE CONSTRUCTION CONTRACT DRAWINGS WHICH HAVE BEEN REVISED BASED ON AVAILABLE FIELD INFORMATION RECORDED BY OTHERS DURING CONSTRUCTION OF THIS CONTRACT. THERE HAS BEEN NO VERIFICATION OF DIMENSIONS SHOWN ON THE CONSTRUCTION DRAWINGS OR THE ACCURACY/COMPLETENESS OF THE FIELD INFORMATION RECEIVED.

SIGNATURE _____ DATE 2/7/2022

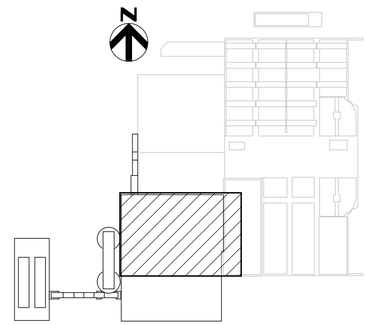

KEY PLAN

SHAH & ASSOCIATES

HDR

AS-BUILT REPLACEMENT SHEET

PROFESSIONAL CERTIFICATION
THIS DRAWING WAS ORIGINALLY APPROVED FOR CONSTRUCTION AND SEALED BY KANAIYALAL R. SHAH, A REGISTERED PROFESSIONAL ENGINEER IN THE STATE OF MARYLAND, NO. 11084

NOTICE TO CONTRACTORS
- PROJECT ELEVATIONS ARE BASED ON NAVD88 AND HOWARD COUNTY'S BENCHMARK SYSTEM
- PREVIOUS PROJECTS USED OTHER DATUMS
- APPLY THE FOLLOWING CONVERSIONS WHEN USING PREVIOUS CONTRACT DRAWINGS:
  - ADDITION NO. 6: SUBTRACT 0.80 FT
  - PRIOR ADDITIONS: SUBTRACT 1.04 FT

DEPARTMENT OF PUBLIC WORKS
HOWARD COUNTY, MARYLAND

CHIEF, BUREAU OF UTILITIES DATE

DES: MM
DRN: DMG
CHK: KRS
DATE: 01/15/2018

DATE	REV	DESCRIPTION
03/2021		RECORD DRAWING

ELECTRICAL

DEWATERING AND DRYER BUILDING
PARTIAL PLAN AT EL 129.20
ELECTRICAL AND I&C PLAN

LITTLE PATUXENT WATER RECLAMATION PLANT
8TH ADDITION
BIOSOLIDS PROCESSING FACILITIES - PHASE 2

CAPITAL PROJECT S-6295
CONTRACT NO. 24-4936

ELECTION DISTRICT NO. 6
HOWARD COUNTY, MARYLAND

SCALE AS SHOWN

SHEET 248 OF 311

E-502

BIM 360://10054364 – Little Patuxent WRP 8th Addition/264592_100_E_V18.rvt
1/8/2022 11:04:11 AM

GENERAL NOTES

1. FOR SYMBOLS AND ABBREVIATIONS, SEE DRAWING E-1.
2. FOR CONSTRUCTION SEQUENCE, SEE DRAWING E-2.
3. FOR MCC-9 AND MCC-10 ONE LINE DIAGRAM, SEE DRAWINGS E-8 THRU E-13A.
4. FOR CABLE AND CONDUIT SCHEDULE, SEE DRAWINGS E-908 THRU E-914A AND E-918.
5. FOR PANELBOARD SCHEDULE, SEE DRAWINGS E-901 THRU E-905.
6. NOT ALL EQUIPMENT IS SHOWN AND IDENTIFIED ON THIS DRAWING. CONTRACTOR SHALL REFER TO PROCESS MECHANICAL, HVAC, INSTRUMENTATION AND CONTROL, ELECTRICAL INSTRUMENT RISER DRAWINGS FOR COMPLETE EQUIPMENT INFORMATION.
7. DISCONNECT SWITCHES SHOWN FOR INSTRUMENTS I.E., LIT'S, AIT'S, FIT'S, PIT'S, TIT'S ETC. ARE 20A SNAP SWITCHES.

KEY NOTES

(1) DISCONNECT SWITCHES, ESTOPS AND LOCAL CONTROL STATIONS ARE SHOWN AS ANNOTATIVE SYMBOLS. CONTRACTOR SHALL SELECT SUBMIT THE LOCATION FOR DISCONNECT SWITCHES AND LOCAL CONTROL PANEL LOCATIONS FOR ENGINEERS REVIEW AND APPROVAL.

(2) PROVIDE (3) 480V, 20A CIRCUITS FROM (3) DISCONNECT SWITCHES IN A SHARED CONDUIT TO PANEL DP-10.

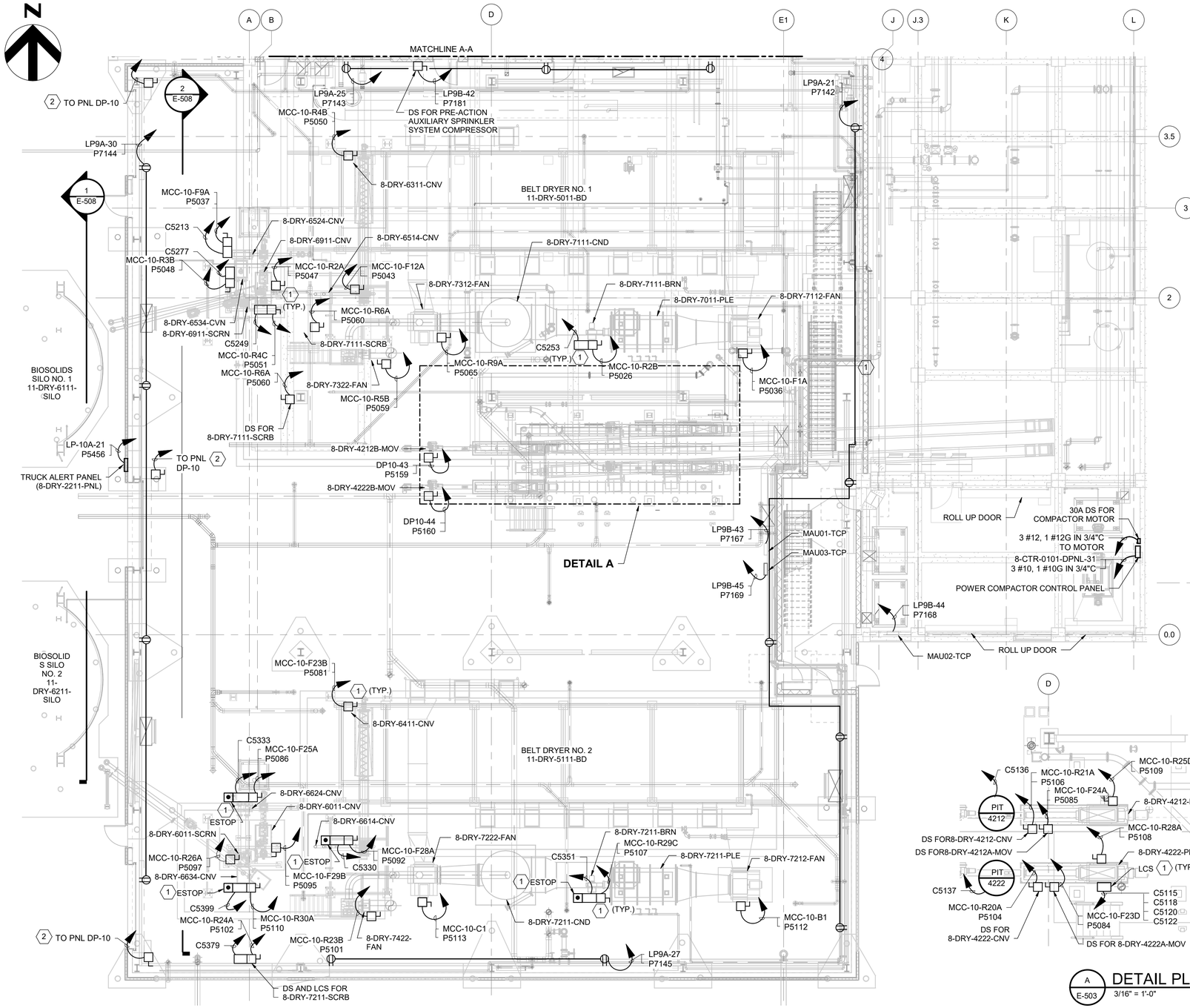

PLAN AT EL. 141.200

1/8" = 1'-0"

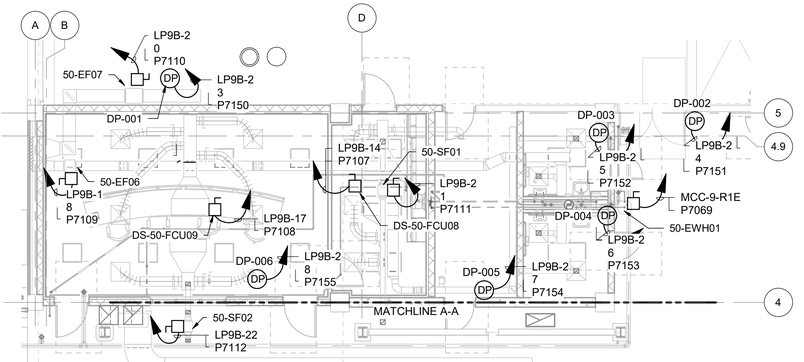

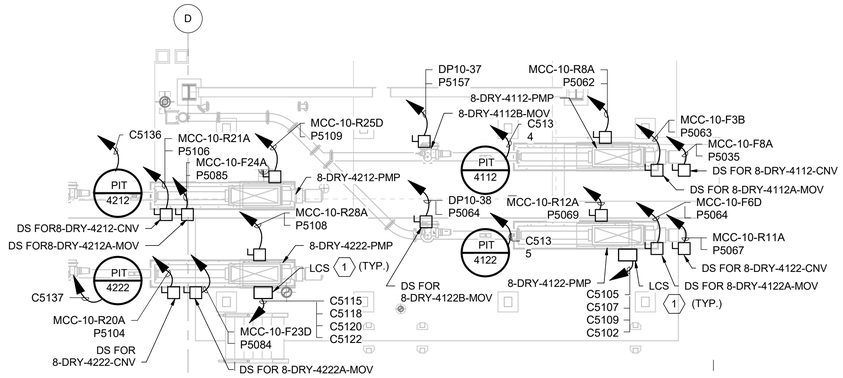

A E-503 DETAIL PLAN AT 141.20

3/16" = 1'-0"

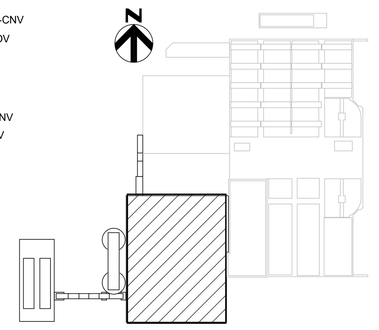

KEY PLAN

THE DRAWINGS IN THIS SET ARE RECORD DRAWINGS. THEY ARE CONSTRUCTION CONTRACT DRAWINGS WHICH HAVE BEEN REVISED BASED ON AVAILABLE FIELD INFORMATION RECORDED BY OTHERS DURING CONSTRUCTION OF THIS CONTRACT. THERE HAS BEEN NO VERIFICATION OF DIMENSIONS SHOWN ON THE CONSTRUCTION DRAWINGS OR THE ACCURACY/COMPLETENESS OF THE FIELD INFORMATION RECEIVED.

SIGNATURE — DATE 2/7/2022

SHAH & ASSOCIATES

AS-BUILT REPLACEMENT SHEET

PROFESSIONAL CERTIFICATION
THIS DRAWING WAS ORIGINALLY APPROVED FOR CONSTRUCTION AND SEALED BY KANAIYALAL R. SHAH, A REGISTERED PROFESSIONAL ENGINEER IN THE STATE OF MARYLAND, NO. 11084

NOTICE TO CONTRACTORS
- PROJECT ELEVATIONS ARE BASED ON NAVD88 AND HOWARD COUNTY'S BENCHMARK SYSTEM
- PREVIOUS PROJECTS USED OTHER DATUMS
- APPLY THE FOLLOWING CONVERSIONS WHEN USING PREVIOUS CONTRACT DRAWINGS:
  - ADDITION NO. 6: SUBTRACT 0.80 FT
  - PRIOR ADDITIONS: SUBTRACT 1.04 FT

DEPARTMENT OF PUBLIC WORKS
HOWARD COUNTY, MARYLAND

CHIEF, BUREAU OF UTILITIES — DATE

DES: MM
DRN: DMG
CHK: KRS
DATE: 01/15/2018

DATE	REV	DESCRIPTION
03/2021		RECORD DRAWING

ELECTRICAL

DEWATERING AND DRYER BUILDING PARTIAL PLAN AT EL 141.2 ELECTRICAL AND I&C PLAN

LITTLE PATUXENT WATER RECLAMATION PLANT
8TH ADDITION
BIOSOLIDS PROCESSING FACILITIES - PHASE 2

CAPITAL PROJECT S-6295
CONTRACT NO. 24-4936

ELECTION DISTRICT NO. 6
HOWARD COUNTY, MARYLAND

SCALE AS SHOWN

SHEET 249 OF 311

E-503

BIM 360://10054364 – Little Patuxent WRP 8th Addition/264592_100_E_V18.rvt
1/8/2022 11:04:26 AM

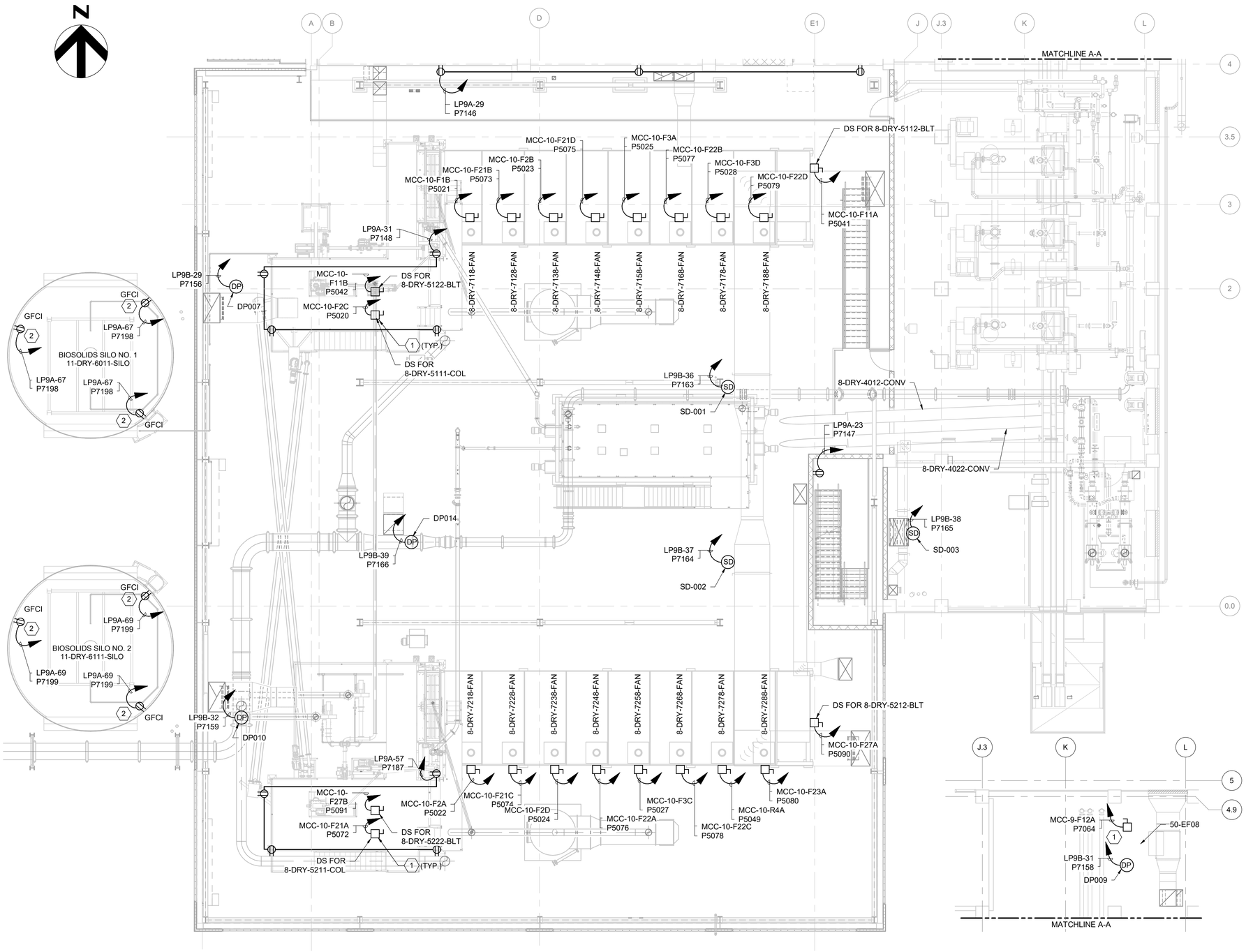

PARTIAL PLAN AT EL 155.20

1/8" = 1'-0"

GENERAL NOTES

1. FOR SYMBOLS AND ABBREVIATIONS, SEE DRAWING E-1.
2. FOR CONSTRUCTION SEQUENCE, SEE DRAWING E-2.
3. FOR MCC-9 AND MCC-10 ONE LINE DIAGRAM, SEE DRAWINGS E-8 THRU E-13A.
4. FOR CABLE AND CONDUIT SCHEDULE, SEE DRAWINGS E-908 THRU E-914A AND E-918.
5. FOR PANELBOARD SCHEDULE, SEE DRAWINGS E-901 THRU E-905.
6. NOT ALL EQUIPMENT IS SHOWN AND IDENTIFIED ON THIS DRAWING. CONTRACTOR SHALL REFER TO PROCESS MECHANICAL, HVAC, INSTRUMENTATION AND CONTROL, ELECTRICAL INSTRUMENT RISER DRAWINGS FOR COMPLETE EQUIPMENT INFORMATION.
7. DISCONNECT SWITCHES SHOWN FOR INSTRUMENTS I.E., LIT'S, AIT'S, FIT'S, PIT'S, TIT'S ETC. ARE 20A SNAP SWITCHES.

KEY NOTES

(1) DISCONNECT SWITCHES ARE SHOWN AS ANNOTATIVE SYMBOLS. CONTRACTOR SHALL SELECT AND SUBMIT THE LOCATION FOR DISCONNECT SWITCHES AND LOCAL CONTROL PANEL LOCATIONS FOR ENGINEERS REVIEW AND APPROVAL.

(2) PROVIDE 20A, 120V, GFCI INDUSTRIAL RECEPTACLE SUITABLE FOR CLASS II, DIVISION 1, GROUP G CLASSIFIED AREA. MOUNT RECEPTACLES AT 24" ABOVE SILO PLATFORM GRATING ON SILO STRUCTURAL BEAM INSIDE THE SILO.

THE DRAWINGS IN THIS SET ARE RECORD DRAWINGS. THEY ARE CONSTRUCTION CONTRACT DRAWINGS WHICH HAVE BEEN REVISED BASED ON AVAILABLE FIELD INFORMATION RECORDED BY OTHERS DURING CONSTRUCTION OF THIS CONTRACT. THERE HAS BEEN NO VERIFICATION OF DIMENSIONS SHOWN ON THE CONSTRUCTION DRAWINGS OR THE ACCURACY/COMPLETENESS OF THE FIELD INFORMATION RECEIVED.

SIGNATURE — DATE 2/7/2023

KEY PLAN

SHAH & ASSOCIATES

AS-BUILT REPLACEMENT SHEET

PROFESSIONAL CERTIFICATION
THIS DRAWING WAS ORIGINALLY APPROVED FOR CONSTRUCTION AND SEALED BY KANAIYALAL R. SHAH, A REGISTERED PROFESSIONAL ENGINEER IN THE STATE OF MARYLAND, NO. 11084

NOTICE TO CONTRACTORS
- PROJECT ELEVATIONS ARE BASED ON NAVD88 AND HOWARD COUNTY'S BENCHMARK SYSTEM
- PREVIOUS PROJECTS USED OTHER DATUMS
- APPLY THE FOLLOWING CONVERSIONS WHEN USING PREVIOUS CONTRACT DRAWINGS:
  - ADDITION NO. 6: SUBTRACT 0.80 FT
  - PRIOR ADDITIONS: SUBTRACT 1.04 FT

DEPARTMENT OF PUBLIC WORKS
HOWARD COUNTY, MARYLAND

CHIEF, BUREAU OF UTILITIES — DATE

DES: MM
DRN: DMG
CHK: KRS
DATE: 01/15/2018

DATE	REV	DESCRIPTION
03/2021		RECORD DRAWING

ELECTRICAL

DEWATERING AND DRYER BUILDING
PARTIAL PLAN AT EL 156.00
ELECTRICAL AND I&C PLAN

LITTLE PATUXENT WATER RECLAMATION PLANT
8TH ADDITION
BIOSOLIDS PROCESSING FACILITIES - PHASE 2

CAPITAL PROJECT S-6295
CONTRACT NO. 24-4936

ELECTION DISTRICT NO. 6
HOWARD COUNTY, MARYLAND

SCALE AS SHOWN

SHEET 250 OF 311

E-504

BIM 360://10054364 – Little Patuxent WRP 8th Addition/264592_100_E_V18.rvt
1/8/2022 11:05:06 AM

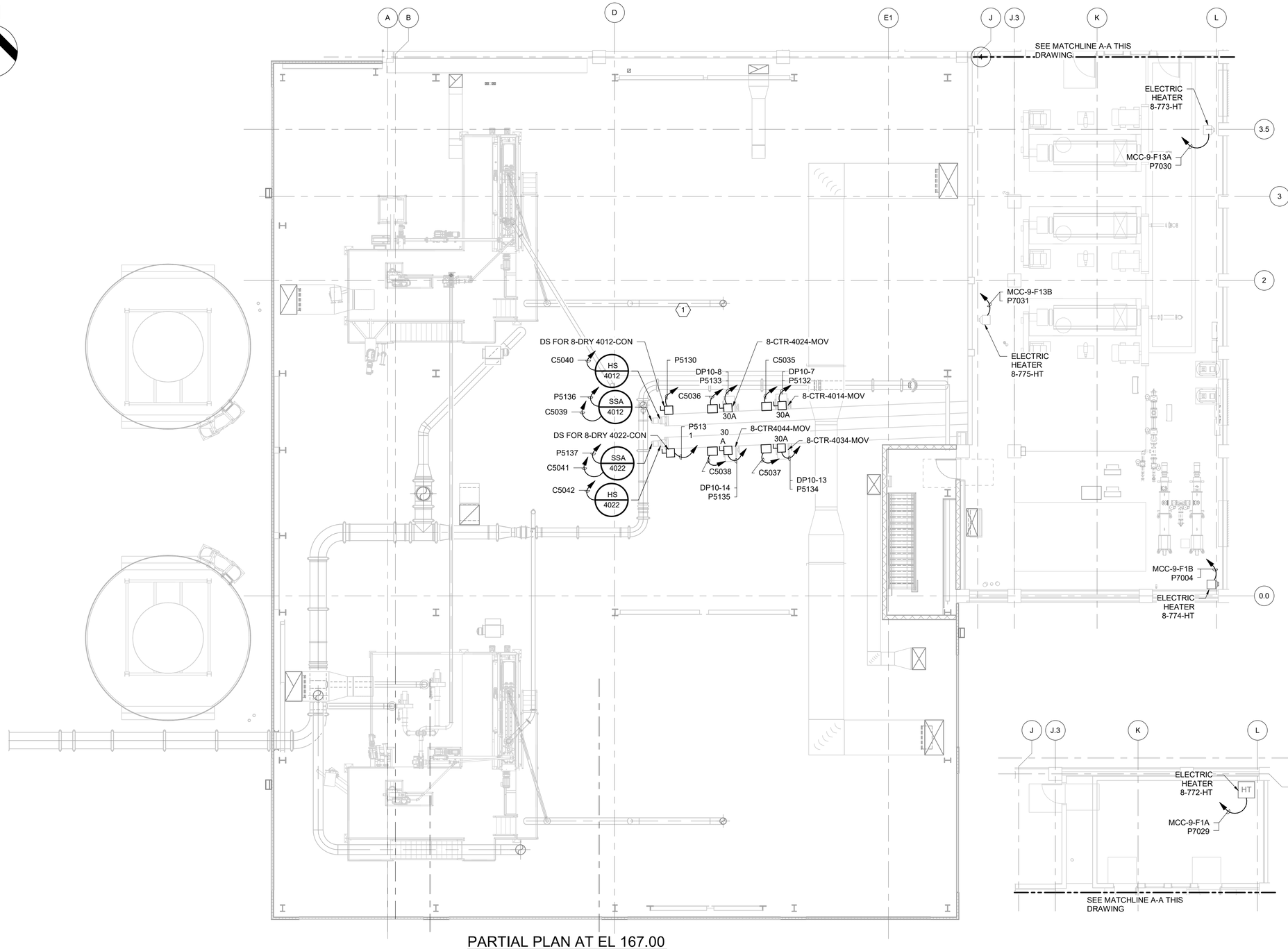

PARTIAL PLAN AT EL 167.00

1/8" = 1'-0"

GENERAL NOTES

1. FOR SYMBOLS AND ABBREVIATIONS, SEE DRAWING E-1.
2. FOR CONSTRUCTION SEQUENCE, SEE DRAWING E-2.
3. FOR MCC-9 AND MCC-10 ONE LINE DIAGRAM, SEE DRAWINGS E-8 THRU E-13A.
4. FOR CABLE AND CONDUIT SCHEDULE, SEE DRAWINGS E-908 THRU E-914A AND E-918.
5. FOR PANELBOARD SCHEDULE, SEE DRAWINGS E-901 THRU E-905.
6. NOT ALL EQUIPMENT IS SHOWN AND IDENTIFIED ON THIS DRAWING. CONTRACTOR SHALL REFER TO PROCESS MECHANICAL, HVAC, INSTRUMENTATION AND CONTROL, ELECTRICAL INSTRUMENT RISER DRAWINGS FOR COMPLETE EQUIPMENT INFORMATION.
7. DISCONNECT SWITCHES SHOWN FOR INSTRUMENTS I.E., LIT'S, AIT'S, FIT'S, PIT'S, TIT'S ETC. ARE 20A SNAP SWITCHES.
8. EXISTING ELECTRICAL EQUIPMENT LOCATION IS APPROXIMATE ONLY FOR PRICING PURPOSES. CONTRACTOR SHALL FIELD VERIFY THE LOCATION OF EQUIPMENT BEFORE PERFORMING WORK.

KEY NOTES

(1) DISCONNECT SWITCHES ARE SHOWN AS ANNOTATIVE SYMBOLS. CONTRACTOR SHALL SELECT SUBMIT THE LOCATION FOR DISCONNECT SWITCHES AND LOCAL CONTROL PANEL LOCATIONS FOR ENGINEERS REVIEW AND APPROVAL.

THE DRAWINGS IN THIS SET ARE RECORD DRAWINGS. THEY ARE CONSTRUCTION CONTRACT DRAWINGS WHICH HAVE BEEN REVISED BASED ON AVAILABLE FIELD INFORMATION RECORDED BY OTHERS DURING CONSTRUCTION OF THIS CONTRACT. THERE HAS BEEN NO VERIFICATION OF DIMENSIONS SHOWN ON THE CONSTRUCTION DRAWINGS OR THE ACCURACY/COMPLETENESS OF THE FIELD INFORMATION RECEIVED.

SIGNATURE — DATE 2/7/2023

KEY PLAN

SHAH & ASSOCIATES

AS-BUILT REPLACEMENT SHEET

PROFESSIONAL CERTIFICATION
THIS DRAWING WAS ORIGINALLY APPROVED FOR CONSTRUCTION AND SEALED BY KANAIYALAL R. SHAH, A REGISTERED PROFESSIONAL ENGINEER IN THE STATE OF MARYLAND, NO. 11084

NOTICE TO CONTRACTORS
- PROJECT ELEVATIONS ARE BASED ON NAVD88 AND HOWARD COUNTY'S BENCHMARK SYSTEM
- PREVIOUS PROJECTS USED OTHER DATUMS
- APPLY THE FOLLOWING CONVERSIONS WHEN USING PREVIOUS CONTRACT DRAWINGS:
  - ADDITION NO. 6: SUBTRACT 0.80 FT
  - PRIOR ADDITIONS: SUBTRACT 1.04 FT

DEPARTMENT OF PUBLIC WORKS
HOWARD COUNTY, MARYLAND

CHIEF, BUREAU OF UTILITIES — DATE

DES: MM
DRN: DMG
CHK: KRS
DATE: 01/15/2018

DATE	REV	DESCRIPTION
03/2021		RECORD DRAWING

ELECTRICAL

DEWATERING AND DRYER BUILDING
PARTIAL PLAN AT EL 167.00
ELECTRICAL AND I&C PLAN

LITTLE PATUXENT WATER RECLAMATION PLANT
8TH ADDITION
BIOSOLIDS PROCESSING FACILITIES - PHASE 2

CAPITAL PROJECT S-6295
CONTRACT NO. 24-4936

ELECTION DISTRICT NO. 6
HOWARD COUNTY, MARYLAND

SCALE AS SHOWN

SHEET 251 OF 311

E-505

BIM 360://10054364 – Little Patuxent WRP 8th Addition/264592_100_E_V18.rvt
1/8/2022 11:05:42 AM

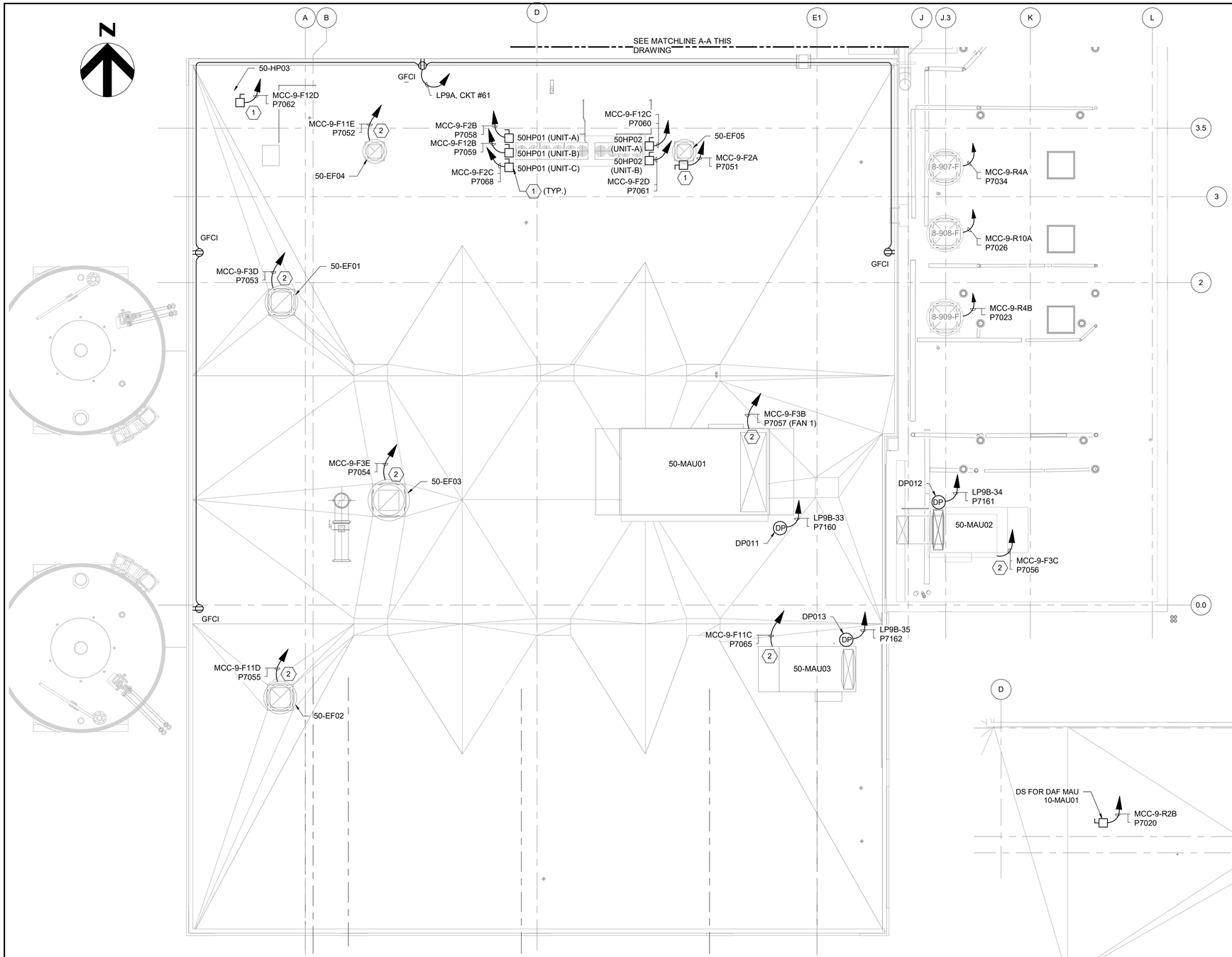

PARTIAL PLAN AT EL 185.00

1/8" = 1'-0"

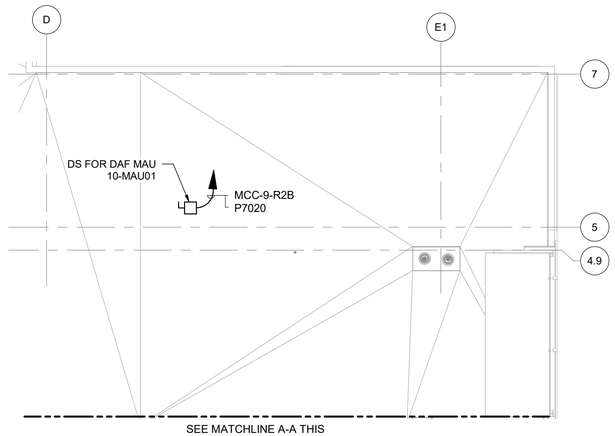

GENERAL NOTES

1. FOR SYMBOLS AND ABBREVIATIONS, SEE DRAWING E-1.
2. FOR CONSTRUCTION SEQUENCE, SEE DRAWING E-2.
3. FOR MCC-9 AND MCC-10 ONE LINE DIAGRAM, SEE DRAWINGS E-8 THRU E-13A.
4. FOR CABLE AND CONDUIT SCHEDULE, SEE DRAWINGS E-908 THRU E-914A AND E-918.
5. FOR PANELBOARD SCHEDULE, SEE DRAWINGS E-901 THRU E-905.
6. NOT ALL EQUIPMENT IS SHOWN AND IDENTIFIED ON THIS DRAWING. CONTRACTOR SHALL REFER TO PROCESS MECHANICAL, HVAC, INSTRUMENTATION AND CONTROL, ELECTRICAL INSTRUMENT RISER DRAWINGS FOR COMPLETE EQUIPMENT INFORMATION.
7. DISCONNECT SWITCHES SHOWN FOR INSTRUMENTS I.E., LIT'S, AIT'S, FIT'S, PIT'S, TIT'S ETC. ARE 20A SNAP SWITCHES.
8. EXISTING ELECTRICAL EQUIPMENT LOCATION IS APPROXIMATE ONLY FOR PRICING PURPOSES. CONTRACTOR SHALL FIELD VERIFY THE LOCATION OF EQUIPMENT BEFORE PERFORMING WORK.

KEY NOTES

(1) DISCONNECT SWITCHES ARE SHOWN AS ANNOTATIVE SYMBOLS. CONTRACTOR SHALL SELECT SUBMIT THE LOCATION FOR DISCONNECT SWITCHES AND LOCAL CONTROL PANEL LOCATIONS FOR ENGINEERS REVIEW AND APPROVAL.

(2) MAKE-UP AIR UNITS AND EXHAUST FANS ARE ALL BEING SUPPLIED WITH INTEGRAL DISCONNECT SWITCHES.

THE DRAWINGS IN THIS SET ARE RECORD DRAWINGS. THEY ARE CONSTRUCTION CONTRACT DRAWINGS WHICH HAVE BEEN REVISED BASED ON AVAILABLE FIELD INFORMATION RECORDED BY OTHERS DURING CONSTRUCTION OF THIS CONTRACT. THERE HAS BEEN NO VERIFICATION OF DIMENSIONS SHOWN ON THE CONSTRUCTION DRAWINGS OR THE ACCURACY/COMPLETENESS OF THE FIELD INFORMATION RECEIVED.

SIGNATURE — DATE 2/7/2023

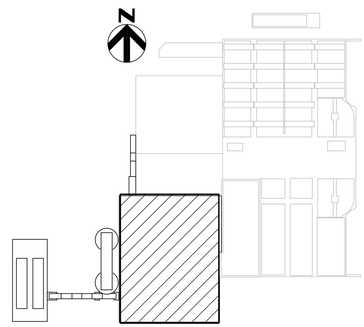

KEY PLAN

SHAH & ASSOCIATES

AS-BUILT REPLACEMENT SHEET

PROFESSIONAL CERTIFICATION
THIS DRAWING WAS ORIGINALLY APPROVED FOR CONSTRUCTION AND SEALED BY KANAIYALAL R. SHAH, A REGISTERED PROFESSIONAL ENGINEER IN THE STATE OF MARYLAND, NO. 11084

NOTICE TO CONTRACTORS
- PROJECT ELEVATIONS ARE BASED ON NAVD88 AND HOWARD COUNTY'S BENCHMARK SYSTEM
- PREVIOUS PROJECTS USED OTHER DATUMS
- APPLY THE FOLLOWING CONVERSIONS WHEN USING PREVIOUS CONTRACT DRAWINGS:
  - ADDITION NO. 6: SUBTRACT 0.80 FT
  - PRIOR ADDITIONS: SUBTRACT 1.04 FT

DEPARTMENT OF PUBLIC WORKS
HOWARD COUNTY, MARYLAND

CHIEF, BUREAU OF UTILITIES — DATE

DES: MM
DRN: DMG
CHK: KRS
DATE: 01/15/2018

DATE	REV	DESCRIPTION
03/2021		RECORD DRAWING

ELECTRICAL

DEWATERING AND DRYER BUILDING
PARTIAL PLAN AT EL 185.00
ELECTRICAL AND I&C PLAN

LITTLE PATUXENT WATER RECLAMATION PLANT
8TH ADDITION
BIOSOLIDS PROCESSING FACILITIES - PHASE 2

CAPITAL PROJECT S-6295
CONTRACT NO. 24-4936

ELECTION DISTRICT NO. 6
HOWARD COUNTY, MARYLAND

SCALE AS SHOWN

SHEET 252 OF 311

E-506

BIM 360://10054364 – Little Patuxent WRP 8th Addition/264592_100_E_V18.rvt
1/8/2022 11:05:56 AM

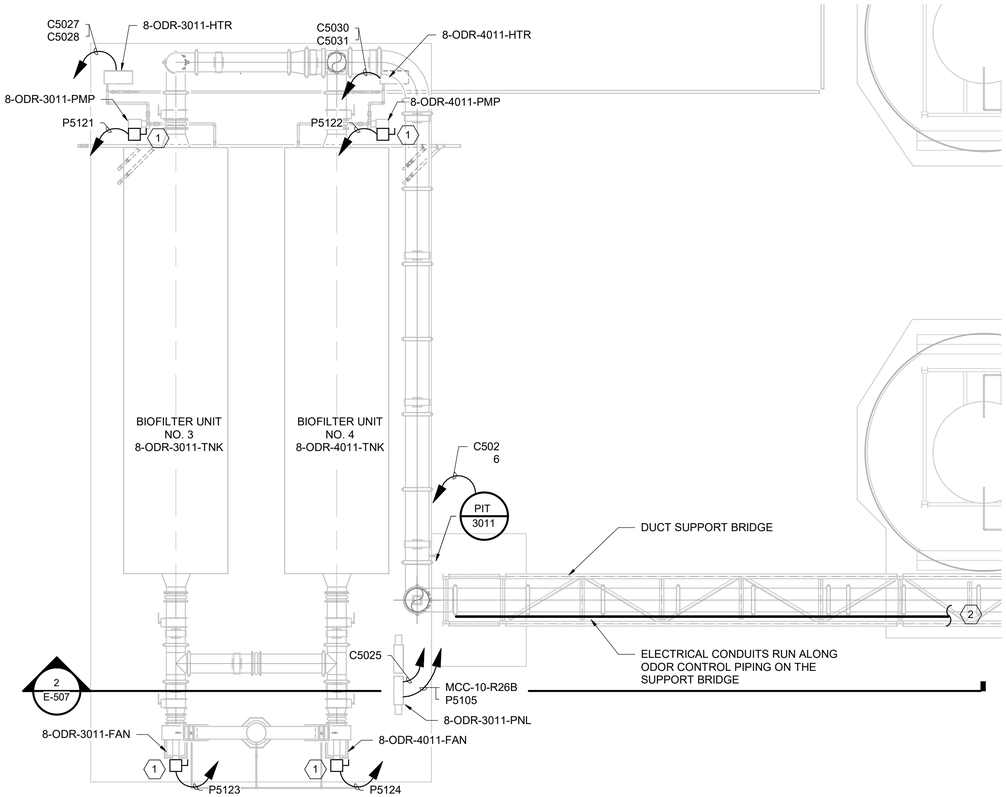

BIOFILTER PLAN AT EL 141.20

1/8" = 1'-0"

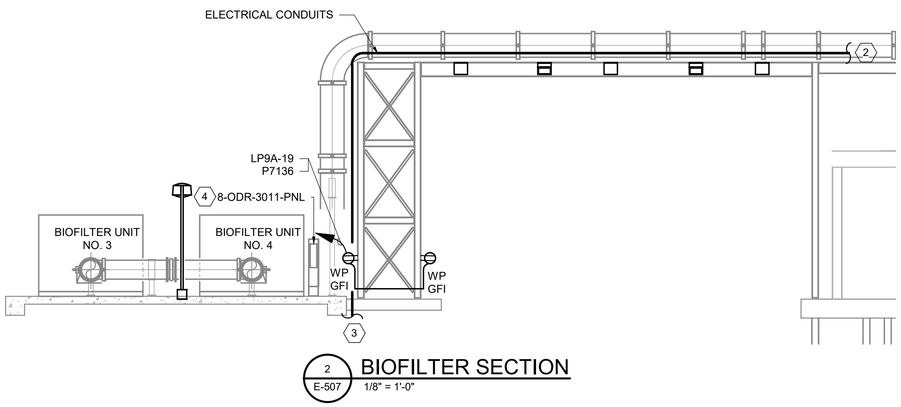

2 / E-507 BIOFILTER SECTION

1/8" = 1'-0"

GENERAL NOTES

1. FOR SYMBOLS AND ABBREVIATIONS, SEE DRAWING E-1.
2. FOR CONSTRUCTION SEQUENCE, SEE DRAWING E-2.
3. FOR MCC-10 ONE LINE DIAGRAM, SEE DRAWINGS E-11 THRU E-13A.
4. FOR CABLE AND CONDUIT SCHEDULE, SEE DRAWINGS E-908 THRU E-914A AND E-918.
5. NOT ALL EQUIPMENT IS SHOWN AND IDENTIFIED ON THIS DRAWING. CONTRACTOR SHALL REFER TO PROCESS MECHANICAL, HVAC, INSTRUMENTATION AND CONTROL, ELECTRICAL INSTRUMENT RISER DRAWINGS FOR COMPLETE EQUIPMENT INFORMATION.

KEY NOTES

1. DISCONNECT SWITCHES ARE SHOWN AS ANNOTATIVE SYMBOLS.
2. ELECTRICAL CONTROL AND COMMUNICATION CONDUITS TO AND FROM THE BIOFILTER RUN ALONG THE DUCT SUPPORT BRIDGE.
3. RUN CONDUITS IN SLAB TO EACH EQUIPMENT LOCATION.
4. HEAT TRACE CIRCUIT SHALL BE POWERED FROM VENDOR SUPPLIED PANEL 8-ODR-3011-PNL. PROVIDE THE ASSOCIATED CONDUITS, WIRES AND TERMINATION BETWEEN VENDOR PANEL AND HEAT TRACE CONTROLLERS.

THE DRAWINGS IN THIS SET ARE RECORD DRAWINGS. THEY ARE CONSTRUCTION CONTRACT DRAWINGS WHICH HAVE BEEN REVISED BASED ON AVAILABLE FIELD INFORMATION RECORDED BY OTHERS DURING CONSTRUCTION OF THIS CONTRACT. THERE HAS BEEN NO VERIFICATION OF DIMENSIONS SHOWN ON THE CONSTRUCTION DRAWINGS OR THE ACCURACY/COMPLETENESS OF THE FIELD INFORMATION RECEIVED.

SIGNATURE — DATE 2/7/2023

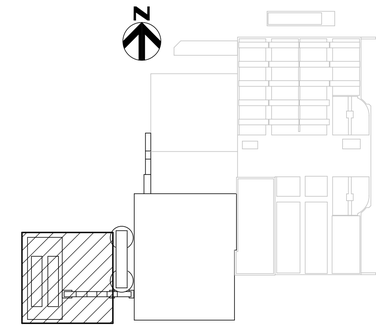

KEY PLAN

SHAH & ASSOCIATES

AS-BUILT REPLACEMENT SHEET

PROFESSIONAL CERTIFICATION
THIS DRAWING WAS ORIGINALLY APPROVED FOR CONSTRUCTION AND SEALED BY KANAIYALAL R. SHAH, A REGISTERED PROFESSIONAL ENGINEER IN THE STATE OF MARYLAND, NO. 11084

NOTICE TO CONTRACTORS
- PROJECT ELEVATIONS ARE BASED ON NAVD88 AND HOWARD COUNTY'S BENCHMARK SYSTEM
- PREVIOUS PROJECTS USED OTHER DATUMS
- APPLY THE FOLLOWING CONVERSIONS WHEN USING PREVIOUS CONTRACT DRAWINGS:
  - ADDITION NO. 6: SUBTRACT 0.80 FT
  - PRIOR ADDITIONS: SUBTRACT 1.04 FT

DEPARTMENT OF PUBLIC WORKS
HOWARD COUNTY, MARYLAND

CHIEF, BUREAU OF UTILITIES — DATE

DES: MM
DRN: DMG
CHK: KRS
DATE: 01/15/2018

DATE	REV	DESCRIPTION
03/2021		RECORD DRAWING

ELECTRICAL

DEWATERING AND DRYER BUILDING
BIOFILTER ELECTRICAL AND I&C PLAN

LITTLE PATUXENT WATER RECLAMATION PLANT
8TH ADDITION
BIOSOLIDS PROCESSING FACILITIES - PHASE 2

CAPITAL PROJECT S-6295
CONTRACT NO. 24-4936

ELECTION DISTRICT NO. 6
HOWARD COUNTY, MARYLAND

SCALE AS SHOWN

SHEET 253 OF 311

E-507

BIM 360://10054364 – Little Patuxent WRP 8th Addition/264592_100_E_V18.rvt
1/8/2022 11:06:03 AM

GENERAL NOTES

1. FOR SYMBOLS AND ABBREVIATIONS, SEE DRAWING E-1.
2. FOR CONSTRUCTION SEQUENCE, SEE DRAWING E-2.
3. FOR MCC-9 AND MCC-10 ONE LINE DIAGRAM, SEE DRAWINGS E-8 THRU E-13A.
4. FOR CABLE AND CONDUIT SCHEDULE, SEE DRAWINGS E-908 THRU E-914A AND E-918.
5. FOR PANELBOARD SCHEDULE, SEE DRAWINGS E-901 THRU E-905.
6. NOT ALL EQUIPMENT IS SHOWN AND IDENTIFIED ON THIS DRAWING. CONTRACTOR SHALL REFER TO PROCESS MECHANICAL, HVAC, INSTRUMENTATION AND CONTROL, ELECTRICAL INSTRUMENT RISER DRAWINGS FOR COMPLETE EQUIPMENT INFORMATION.
7. DISCONNECT SWITCHES SHOWN FOR INSTRUMENTS I.E., LIT'S, AIT'S, FIT'S, PIT'S, TIT'S ETC. ARE 20A SNAP SWITCHES.

KEY NOTES

(1) DISCONNECT SWITCHES AND LOCAL CONTROL STATIONS ARE SHOWN AS ANNOTATIVE SYMBOLS. CONTRACTOR SHALL SELECT SUBMIT THE LOCATION FOR DISCONNECT SWITCHES AND LOCAL CONTROL PANEL LOCATIONS FOR ENGINEERS REVIEW AND APPROVAL.

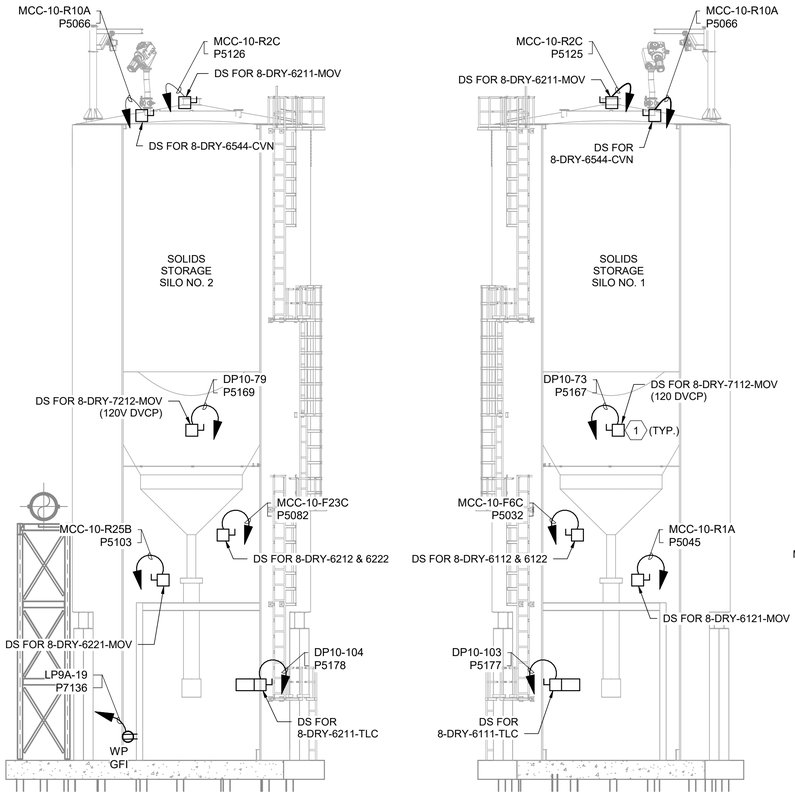

1 E-503 STORAGE SILOS
1/8" = 1'-0"

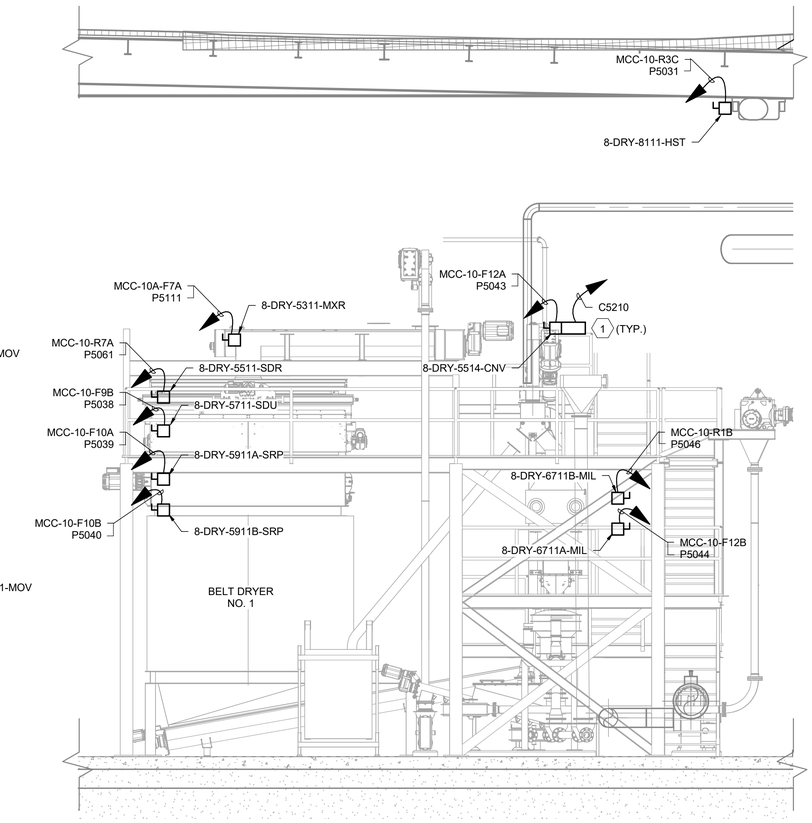

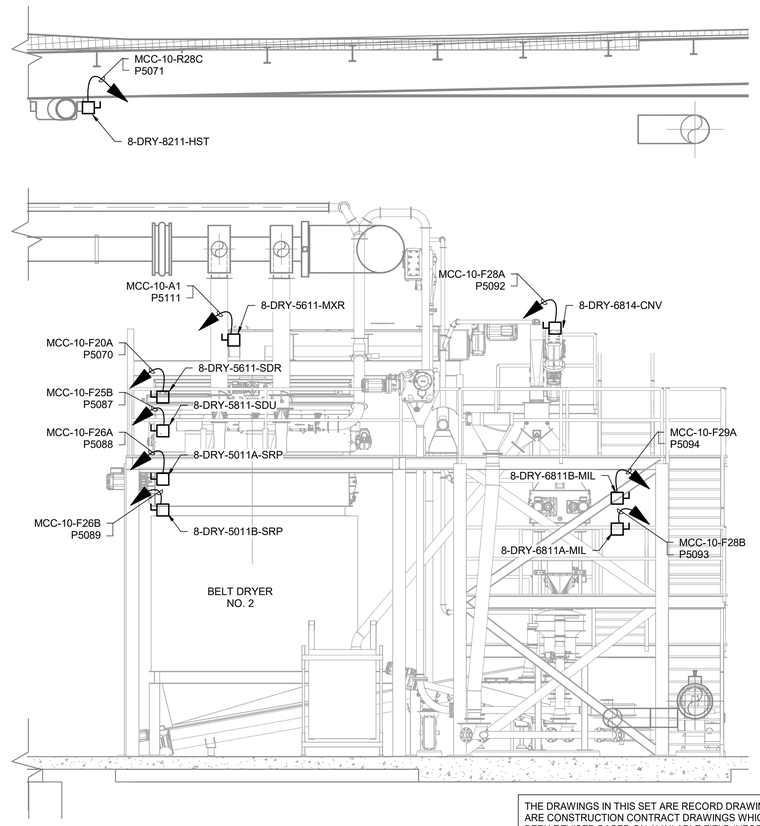

2 E-503 BELT DRYERS
1/4" = 1'-0"

THE DRAWINGS IN THIS SET ARE RECORD DRAWINGS. THEY ARE CONSTRUCTION CONTRACT DRAWINGS WHICH HAVE BEEN REVISED BASED ON AVAILABLE FIELD INFORMATION RECORDED BY OTHERS DURING CONSTRUCTION OF THIS CONTRACT. THERE HAS BEEN NO VERIFICATION OF DIMENSIONS SHOWN ON THE CONSTRUCTION DRAWINGS OR THE ACCURACY/COMPLETENESS OF THE FIELD INFORMATION RECEIVED.

SIGNATURE — DATE 2/7/2023

SHAH & ASSOCIATES

AS-BUILT REPLACEMENT SHEET

PROFESSIONAL CERTIFICATION
THIS DRAWING WAS ORIGINALLY APPROVED FOR CONSTRUCTION AND SEALED BY KANAIYALAL R. SHAH, A REGISTERED PROFESSIONAL ENGINEER IN THE STATE OF MARYLAND, NO. 11084

NOTICE TO CONTRACTORS
- PROJECT ELEVATIONS ARE BASED ON NAVD88 AND HOWARD COUNTY'S BENCHMARK SYSTEM
- PREVIOUS PROJECTS USED OTHER DATUMS
- APPLY THE FOLLOWING CONVERSIONS WHEN USING PREVIOUS CONTRACT DRAWINGS:
  - ADDITION NO. 6: SUBTRACT 0.80 FT
  - PRIOR ADDITIONS: SUBTRACT 1.04 FT

DEPARTMENT OF PUBLIC WORKS
HOWARD COUNTY, MARYLAND

CHIEF, BUREAU OF UTILITIES — DATE

DES: MM
DRN: DMG
CHK: KRS
DATE: 01/15/2018

DATE	REV	DESCRIPTION
03/2021		RECORD DRAWING

ELECTRICAL

DEWATERING AND DRYER BUILDING ELEVATIONS

LITTLE PATUXENT WATER RECLAMATION PLANT
8TH ADDITION
BIOSOLIDS PROCESSING FACILITIES - PHASE 2

CAPITAL PROJECT S-6295
CONTRACT NO. 24-4936

ELECTION DISTRICT NO. 6
HOWARD COUNTY, MARYLAND

SCALE AS SHOWN

SHEET 254 OF 311

E-508

BIM 360://10054364 – Little Patuxent WRP 8th Addition/264592_100_E_V18.rvt
1/8/2022 11:06:54 AM

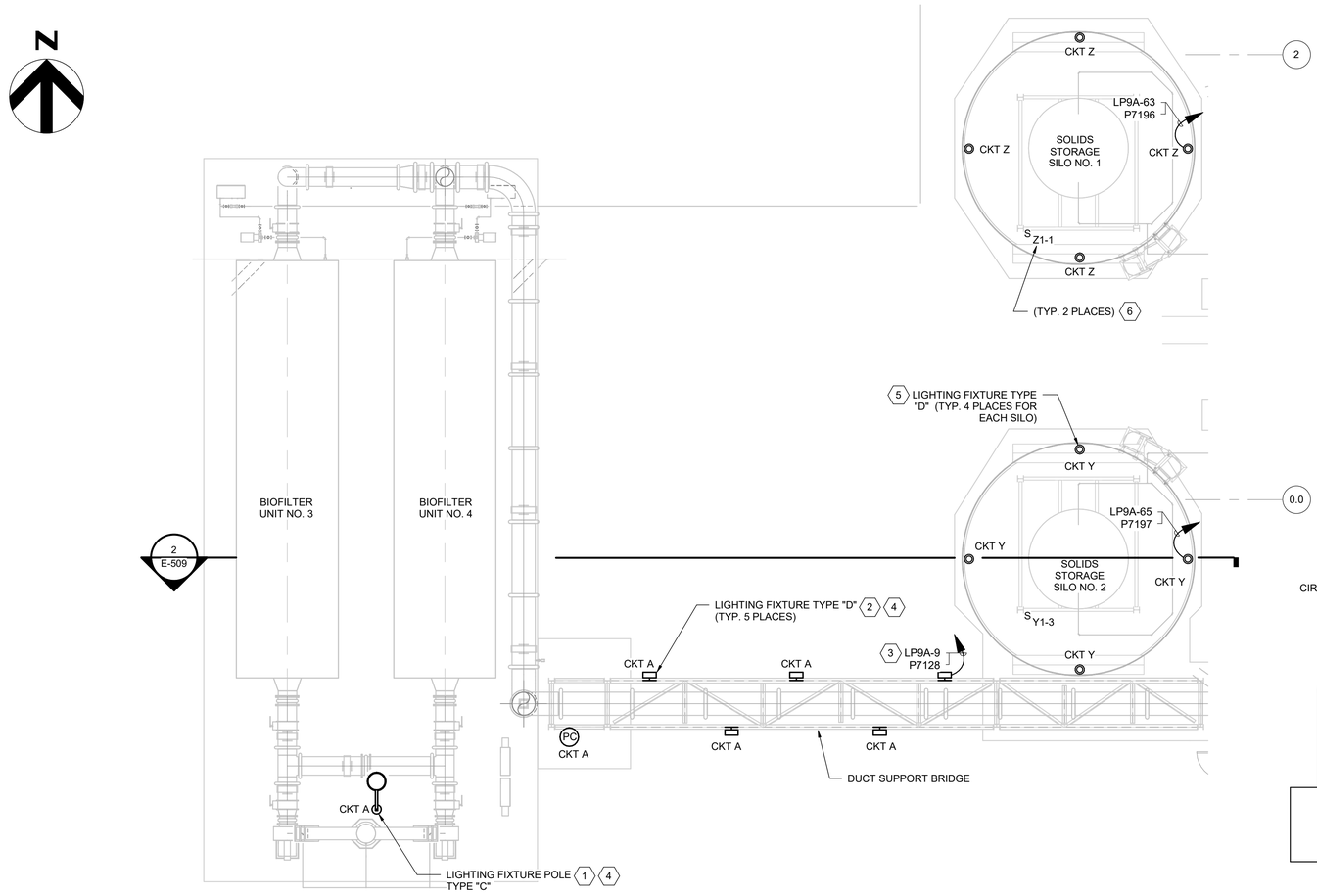

BIOFILTER LIGHTING PLAN

1/8" = 1'-0"

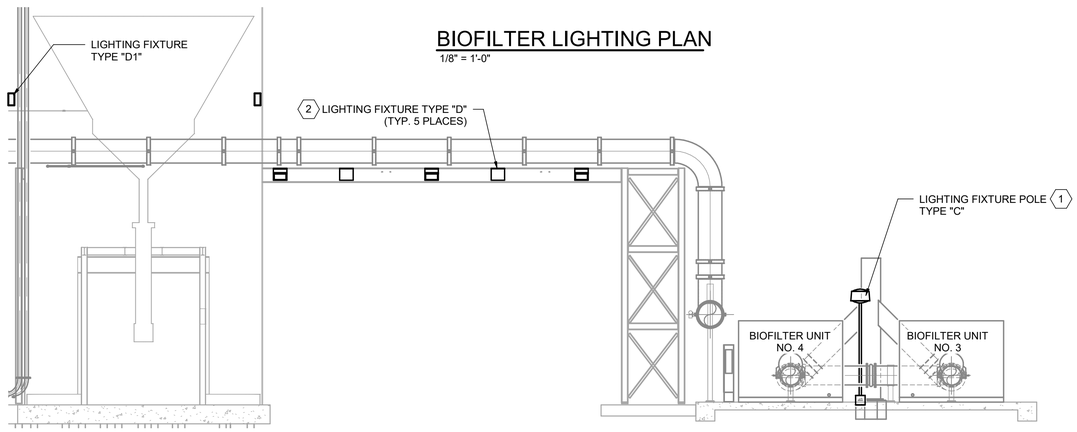

2 E-509 BIOFILTER LIGHTING SECTION

1/8" = 1'-0"

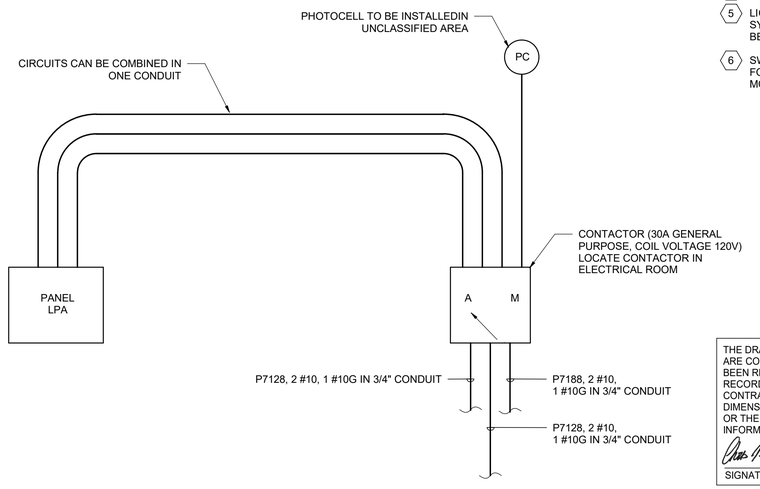

GENERAL NOTES

1. FOR SYMBOLS AND ABBREVIATIONS, SEE DRAWING E-1.
2. FOR CONSTRUCTION SEQUENCE, SEE DRAWING E-2.
3. FOR LIGHTING FIXTURES AND DETAILS, SEE DRAWING E-916.
4. FOR CABLE AND CONDUIT SCHEDULE, SEE DRAWINGS E-908 THRU E-914A.
5. FOR PANELBOARD SCHEDULES, SEE DRAWINGS E-901 THRU E-905.

KEY NOTES

1. EXPLOSION PROOF LIGHT MOUNTED ON 12'-0" ROUND TAPERED ALUMINUM POLE. SEE DRAWING E-916 FOR FIXTURE AND POLE DETAIL.
2. EXPLOSION PROOF FIXTURE TO BE INSTALLED TO A VERTICAL EXPLOSION PROOF JUCTION BOX. SEE DRAWING E-916 FOR FIXTURE DETAIL.
3. PROVIDE ONE GENERAL PURPOSE 20A (30A GENERAL PURPOSE) LIGHTING CONTACTOR WITH AUTO/MANUAL SELECTOR SWITCH ON THE WEST WALL OF THE DRYER BUILDING ELECTRICAL ROOM . AUTO/MANUAL SELECTOR SWITCH SHOULD BE ABLE TO BYPASS THE PHOTO CELL WHEN NEEDED.
   INSTALL THE CONTACTOR AND IN CLOSE PROXIMITY ONE PHOTOCELL, BOTH IN THE UNCLASSIFIED AREA.
4. PROVIDE EXPLOSION PROOF FIXTURES.
5. LIGHTING FIXTURES ARE SHOWN AS ANNOTATIVE SYMBOLS, AND ARE MOUNTED ON SILO STRUCTURAL BEAMS INSIDE THE SILO AT 173.02.
6. SWITCHES FOR LIGHT FIXTURES SHALL BE SUITABLE FOR CLASS II DIVISION 1, GROUP G CLASSIFIED AREA. MOUNT THE SWITCHES 48" ABOVE FINISHED FLOOR.

THE DRAWINGS IN THIS SET ARE RECORD DRAWINGS. THEY ARE CONSTRUCTION CONTRACT DRAWINGS WHICH HAVE BEEN REVISED BASED ON AVAILABLE FIELD INFORMATION RECORDED BY OTHERS DURING CONSTRUCTION OF THIS CONTRACT. THERE HAS BEEN NO VERIFICATION OF DIMENSIONS SHOWN ON THE CONSTRUCTION DRAWINGS OR THE ACCURACY/COMPLETENESS OF THE FIELD INFORMATION RECEIVED.

SIGNATURE — DATE 2/7/2020

LIGHTING FIXTURE SCHEDULE

FIXTURE TYPE	MOUNTING HEIGHT	CABLE		VOLTS	DESCRIPTIONS WITH CATALOG NO.	REMARKS
		WATTAGE	LAMP			
D1	SEE LIGHTING PLAN	107	LED	120	CLASS II DIVISION 1 EXPLOSION PROOF LED AREA LIGHTING WITH A360 ALUNIMUN WITH BAKED ON GRAY EPOXY FINISH BODY, SILICON GASKETS, TEMPERED GLASS LENS AND STAINLESS STEEL HARDWARE. RIG-A-LITE CAT. NO. XHBF11-L-U-G-T	

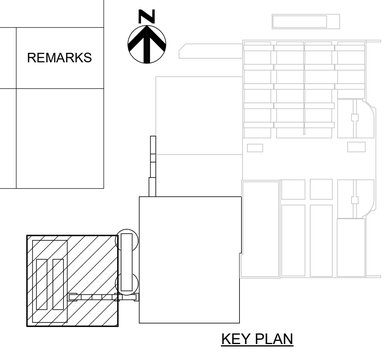

KEY PLAN

SHAH & ASSOCIATES

AS-BUILT REPLACEMENT SHEET

PROFESSIONAL CERTIFICATION
THIS DRAWING WAS ORIGINALLY APPROVED FOR CONSTRUCTION AND SEALED BY KANAIYALAL R. SHAH, A REGISTERED PROFESSIONAL ENGINEER IN THE STATE OF MARYLAND, NO. 11084

NOTICE TO CONTRACTORS
- PROJECT ELEVATIONS ARE BASED ON NAVD88 AND HOWARD COUNTY'S BENCHMARK SYSTEM
- PREVIOUS PROJECTS USED OTHER DATUMS
- APPLY THE FOLLOWING CONVERSIONS WHEN USING PREVIOUS CONTRACT DRAWINGS:
  - ADDITION NO. 6: SUBTRACT 0.80 FT
  - PRIOR ADDITIONS: SUBTRACT 1.04 FT

DEPARTMENT OF PUBLIC WORKS
HOWARD COUNTY, MARYLAND

CHIEF, BUREAU OF UTILITIES — DATE

DES: MM
DRN: DMG
CHK: KRS
DATE: 01/15/2018

DATE	REV	DESCRIPTION
03/2021		RECORD DRAWING

ELECTRICAL

DEWATERING AND DRYER BUILDING BIOFILTER AREA LIGHTING PLAN

LITTLE PATUXENT WATER RECLAMATION PLANT
8TH ADDITION
BIOSOLIDS PROCESSING FACILITIES - PHASE 2

CAPITAL PROJECT S-6295
CONTRACT NO. 24-4936

ELECTION DISTRICT NO. 6
HOWARD COUNTY, MARYLAND

SCALE AS SHOWN

SHEET 255 OF 311

E-509

BIM 360://10054364 – Little Patuxent WRP 8th Addition/264592_100_E_V18.rvt
1/8/2022 11:07:03 AM

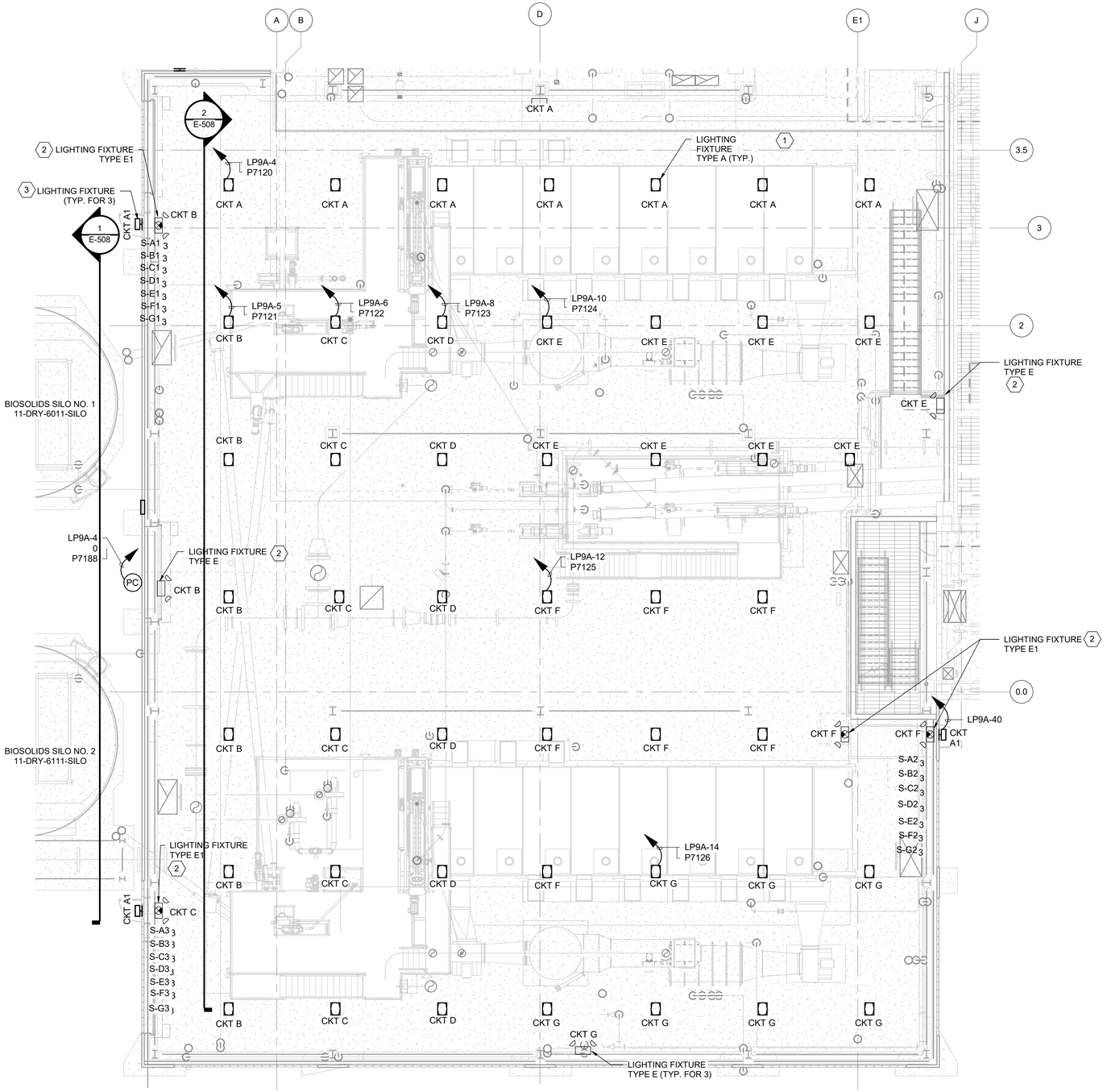

LIGHTING PLAN AT EL 176.2

1/8" = 1'-0"

GENERAL NOTES

1. FOR SYMBOLS AND ABBREVIATIONS, SEE DRAWING E-1.
2. FOR CONSTRUCTION SEQUENCE, SEE DRAWING E-2.
3. FOR LIGHTING FIXTURE SCHEDULE AND DETAILS, SEE DRAWING E-916.
4. FOR CABLE AND CONDUIT SCHEDULE, SEE DRAWINGS E-908 THRU E-914A.
5. FOR PANELBOARD SCHEDULE, SEE DRAWINGS E-901 THRU E-905.

KEY NOTES

1. LIGHTING FIXTURES ARE SHOWN AS ANNOTATIVE SYMBOLS, AND ARE MOUNTED AT EL 176.2'. POWER FROM LIGHTING PANEL LP10B IN DRYER BUILDING ELECTRICAL ROOM.
2. CONNECT EXIT AND EMERGENCY LIGHTS AHEAD OF SWITCH.
3. LIGHTING FIXTURE WITH BATTERY BACK-UP, WILLIAMS CAT# VWPV-L30/740-TFT-BLK-SDLG-EM/4W-PC-DIM-UNV OR APPROVED EQUAL. CONNECT VIA PHOTOCELL FIXTURE INSTALLED ABOVE DOOR.

THE DRAWINGS IN THIS SET ARE RECORD DRAWINGS. THEY ARE CONSTRUCTION CONTRACT DRAWINGS WHICH HAVE BEEN REVISED BASED ON AVAILABLE FIELD INFORMATION RECORDED BY OTHERS DURING CONSTRUCTION OF THIS CONTRACT. THERE HAS BEEN NO VERIFICATION OF DIMENSIONS SHOWN ON THE CONSTRUCTION DRAWINGS OR THE ACCURACY/COMPLETENESS OF THE FIELD INFORMATION RECEIVED.

SIGNATURE — DATE 2/7/2023

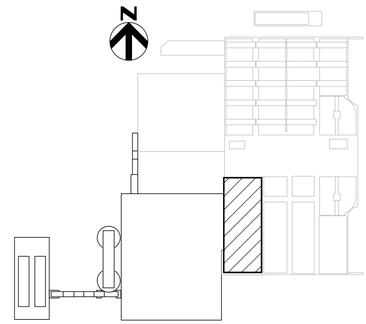

KEY PLAN

SHAH & ASSOCIATES

AS-BUILT REPLACEMENT SHEET

PROFESSIONAL CERTIFICATION
THIS DRAWING WAS ORIGINALLY APPROVED FOR CONSTRUCTION AND SEALED BY KANAIYALAL R. SHAH, A REGISTERED PROFESSIONAL ENGINEER IN THE STATE OF MARYLAND, NO. 11084

NOTICE TO CONTRACTORS
- PROJECT ELEVATIONS ARE BASED ON NAVD88 AND HOWARD COUNTY'S BENCHMARK SYSTEM
- PREVIOUS PROJECTS USED OTHER DATUMS
- APPLY THE FOLLOWING CONVERSIONS WHEN USING PREVIOUS CONTRACT DRAWINGS:
  - ADDITION NO. 6: SUBTRACT 0.80 FT
  - PRIOR ADDITIONS: SUBTRACT 1.04 FT

DEPARTMENT OF PUBLIC WORKS
HOWARD COUNTY, MARYLAND

CHIEF, BUREAU OF UTILITIES — DATE

DES: MM
DRN: DMG
CHK: KRS
DATE: 01/15/2018

DATE	REV	DESCRIPTION
03/2021		RECORD DRAWING

ELECTRICAL

DEWATERING AND DRYER BUILDING LIGHTING PLAN I

LITTLE PATUXENT WATER RECLAMATION PLANT
8TH ADDITION
BIOSOLIDS PROCESSING FACILITIES - PHASE 2

CAPITAL PROJECT S-6295
CONTRACT NO. 24-4936

ELECTION DISTRICT NO. 6
HOWARD COUNTY, MARYLAND

SCALE AS SHOWN

SHEET 256 OF 311

E-510

BIM 360://10054364 – Little Patuxent WRP 8th Addition/264592_100_E_V18.rvt
1/8/2022 11:07:51 AM

GENERAL NOTES:

1. FOR SYMBOLS AND ABBREVIATIONS, SEE DRAWING E-1.
2. FOR LIGHTING FIXTURE SCHEDULE AND DETAIL, SEE THIS DRAWING AND DRAWING E-916.

DRAWING NOTES:

1. PROVIDE AND INSTALL CORROSION RESISTANT GE FIXTURE CATALOG #ABR111T479NN22ANR.
2. PROVIDE AND INSTALL CORROSION RESISTANT GE FIXTURE, CAT #ABR112T479NN22ANR.
3. PROVIDE AND INSTALL CORROSION RESISTANT FIXTURE CAT #ABR111T479NNRBANR.
4. PROVIDE AND INSTALL WIRE AND CONDUIT FROM THREE, 120V, 1P, 20AMP SPARE CIRCUITS IN LIGHTING PANEL LP-32 LOCATED IN DRYER BUILDING ELECTRICAL ROOM. PANEL LP-32 WAS INSTALLED IN PH 1 ADDITION #8. PROVIDE UPDATED PANEL LOG.

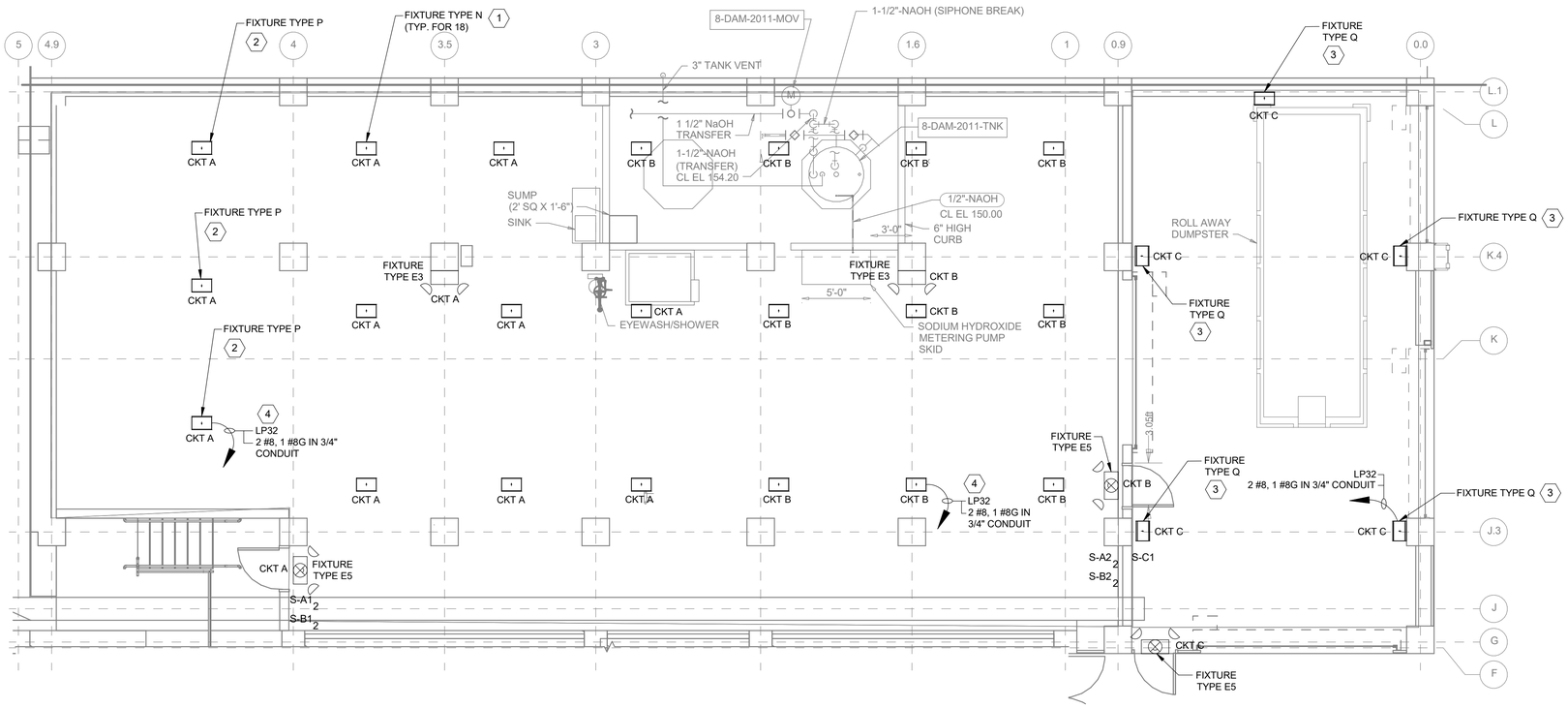

LIGHTING FIXTURE SCHEDULE

FIXTURE TYPE	WATTAGE	LAMP	VOLTS	CATALOG NO.
N	64	LED	120	GE CAT #ABR111T479NN22ANR
P	125	LED	120	GE CAT #ABR112T479NN22ANR
Q	64	LED	120	GE CAT #ABR111T479NNRBANR
E5	13	LED	120	LIGHT ALARMS CAT #XV12E1RD4X/2MR16

CENTRIFUGE BUILDING AT EL 142.00 - LIGHTING PLAN

SCALE: 3/16" = 1'-0"

THE DRAWINGS IN THIS SET ARE RECORD DRAWINGS. THEY ARE CONSTRUCTION CONTRACT DRAWINGS WHICH HAVE BEEN REVISED BASED ON AVAILABLE FIELD INFORMATION RECORDED BY OTHERS DURING CONSTRUCTION OF THIS CONTRACT. THERE HAS BEEN NO VERIFICATION OF DIMENSIONS SHOWN ON THE CONSTRUCTION DRAWINGS OR THE ACCURACY/COMPLETENESS OF THE FIELD INFORMATION RECEIVED.

SIGNATURE — DATE 2/7/2023

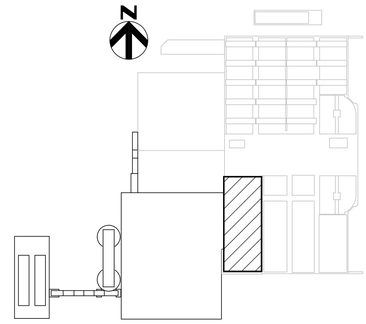

KEY PLAN

SHAH & ASSOCIATES

AS-BUILT REPLACEMENT SHEET

PROFESSIONAL CERTIFICATION
THIS DRAWING WAS ORIGINALLY APPROVED FOR CONSTRUCTION AND SEALED BY KANAIYALAL R. SHAH, A REGISTERED PROFESSIONAL ENGINEER IN THE STATE OF MARYLAND, NO. 11084

NOTICE TO CONTRACTORS
- PROJECT ELEVATIONS ARE BASED ON NAVD88 AND HOWARD COUNTY'S BENCHMARK SYSTEM
- PREVIOUS PROJECTS USED OTHER DATUMS
- APPLY THE FOLLOWING CONVERSIONS WHEN USING PREVIOUS CONTRACT DRAWINGS:
  - ADDITION NO. 6: SUBTRACT 0.80 FT
  - PRIOR ADDITIONS: SUBTRACT 1.04 FT

DEPARTMENT OF PUBLIC WORKS
HOWARD COUNTY, MARYLAND

CHIEF, BUREAU OF UTILITIES — DATE

DES: MM
DRN: DMG
CHK: KRS
DATE: 01/15/2018

DATE	REV	DESCRIPTION
03/2021		RECORD DRAWING

ELECTRICAL

CENTRIFUGE BUILDING AT EL 142.00 - LIGHTING PLAN

LITTLE PATUXENT WATER RECLAMATION PLANT
8TH ADDITION
BIOSOLIDS PROCESSING FACILITIES - PHASE 2

CAPITAL PROJECT S-6295
CONTRACT NO. 24-4936

ELECTION DISTRICT NO. 6
HOWARD COUNTY, MARYLAND

SCALE AS SHOWN

SHEET 257 OF 311

E-510A

BIM 360://10054364 – Little Patuxent WRP 8th Addition/264592_100_E_V18.rvt
1/8/2022 11:07:53 AM

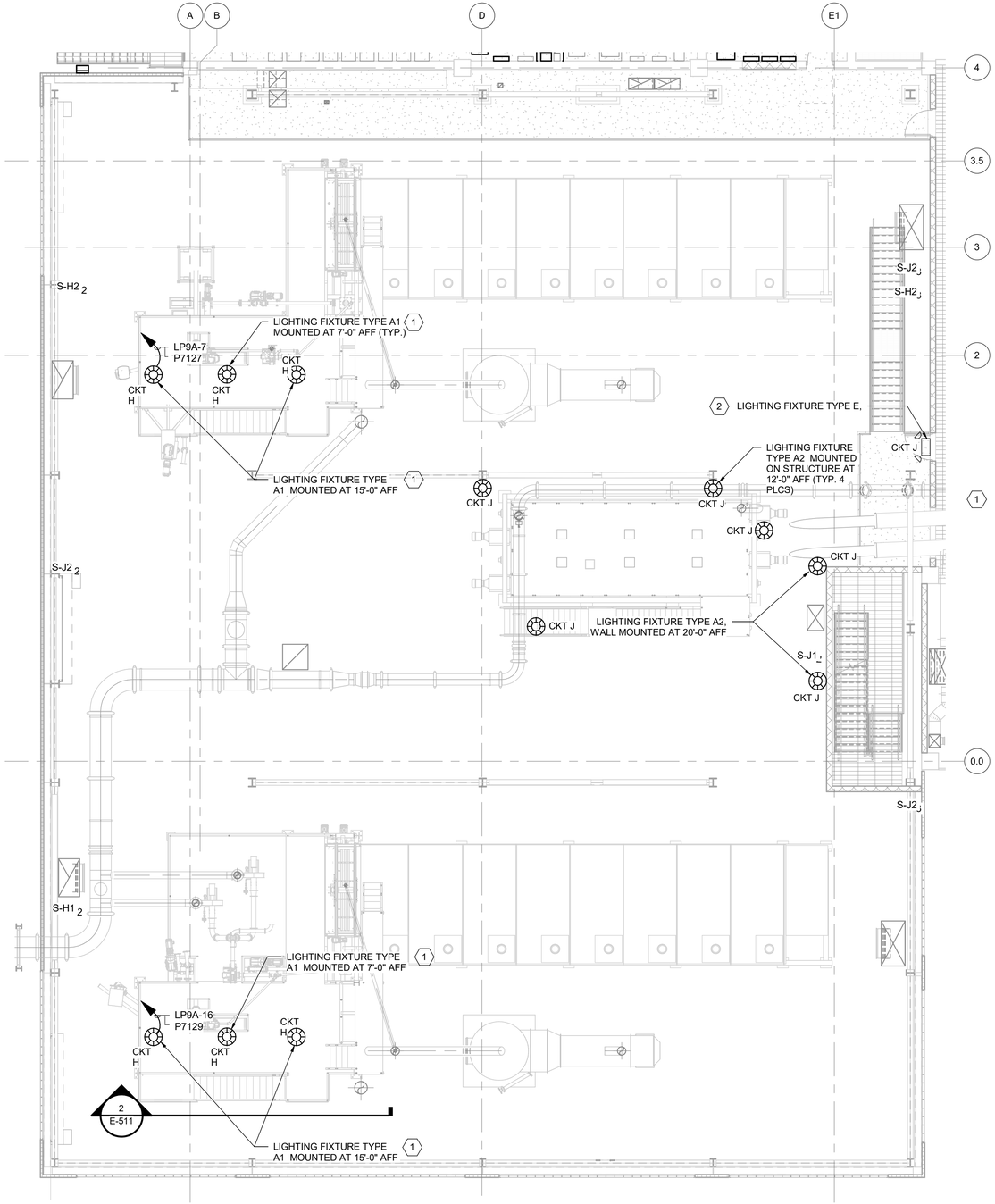

PARTIAL LIGHTING PLAN
1/8" = 1'-0"

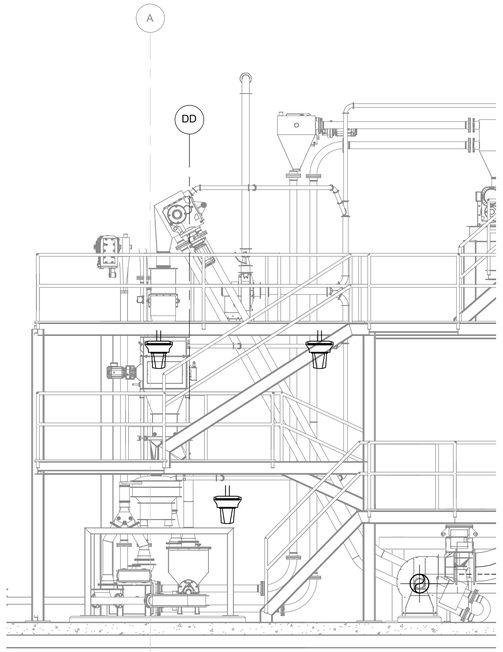

SOUTH PLATFORM SECTION
(TYPICAL FOR NORTH PLATFORM)
2 / E-511 — 1/4" = 1'-0"

GENERAL NOTES

1. FOR CABLE AND CONDUIT SCHEDULE, SEE DRAWINGS E-908 THRU E-914A.FOR SYMBOLS AND ABBREVIATIONS, SEE DRAWING E-1.
2. FOR CONSTRUCTION SEQUENCE, SEE DRAWING E-2.
3. FOR LIGHTING FIXTURE SCHEDULE AND DETAILS, SEE DRAWING E-916.
4. FOR PANELBOARD SCHEDULE, SEE DRAWINGS E-901 THRU E-905.
5. FOR CABLE AND CONDUIT SCHEDULE, SEE DRAWINGS E-908 THRU E-914A.

KEY NOTES

(1) LIGHTING FIXTURES ARE SHOWN AS ANNOTATIVE SYMBOLS, AND ARE MOUNTED AT ELEVATIONS SHOWN ON DRAWINGS.

(2) CONNECT EXIT AND EMERGENCY LIGHTS AHEAD OF SWITCH.

THE DRAWINGS IN THIS SET ARE RECORD DRAWINGS. THEY ARE CONSTRUCTION CONTRACT DRAWINGS WHICH HAVE BEEN REVISED BASED ON AVAILABLE FIELD INFORMATION RECORDED BY OTHERS DURING CONSTRUCTION OF THIS CONTRACT. THERE HAS BEEN NO VERIFICATION OF DIMENSIONS SHOWN ON THE CONSTRUCTION DRAWINGS OR THE ACCURACY/COMPLETENESS OF THE FIELD INFORMATION RECEIVED.

SIGNATURE _____ DATE 2/7/2023

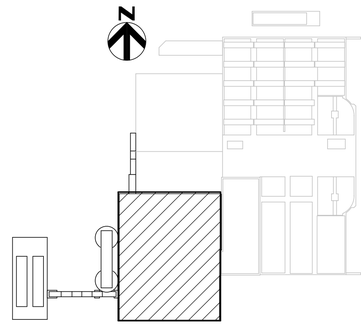

KEY PLAN

SHAH & ASSOCIATES

AS-BUILT REPLACEMENT SHEET

PROFESSIONAL CERTIFICATION
THIS DRAWING WAS ORIGINALLY APPROVED FOR CONSTRUCTION AND SEALED BY KANAIYALAL R. SHAH, A REGISTERED PROFESSIONAL ENGINEER IN THE STATE OF MARYLAND, NO. 11084

NOTICE TO CONTRACTORS
- PROJECT ELEVATIONS ARE BASED ON NAVD88 AND HOWARD COUNTY'S BENCHMARK SYSTEM
- PREVIOUS PROJECTS USED OTHER DATUMS
- APPLY THE FOLLOWING CONVERSIONS WHEN USING PREVIOUS CONTRACT DRAWINGS:
  - ADDITION NO. 6: SUBTRACT 0.80 FT
  - PRIOR ADDITIONS: SUBTRACT 1.04 FT

DEPARTMENT OF PUBLIC WORKS
HOWARD COUNTY, MARYLAND

CHIEF, BUREAU OF UTILITIES DATE

DES: MM
DRN: DMG
CHK: KRS
DATE: 01/15/2018

DATE	REV	DESCRIPTION
03/2021		RECORD DRAWING

ELECTRICAL

DEWATERING AND DRYER BUILDING LIGHTING PLAN II

LITTLE PATUXENT WATER RECLAMATION PLANT
8TH ADDITION
BIOSOLIDS PROCESSING FACILITIES - PHASE 2

CAPITAL PROJECT S-6295
CONTRACT NO. 24-4936

ELECTION DISTRICT NO. 6
HOWARD COUNTY, MARYLAND

SCALE AS SHOWN

SHEET 258 OF 311

E-511

BIM 360://10054364 – Little Patuxent WRP 8th Addition/264592_100_E_V18.rvt
1/8/2022 11:08:42 AM

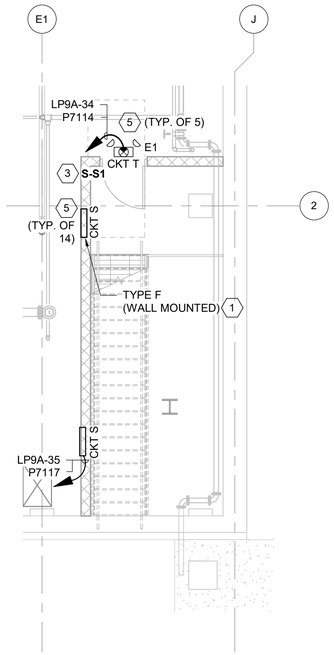

STAIR LIGHTING PLAN AT EL 129.2

3/16" = 1'-0"

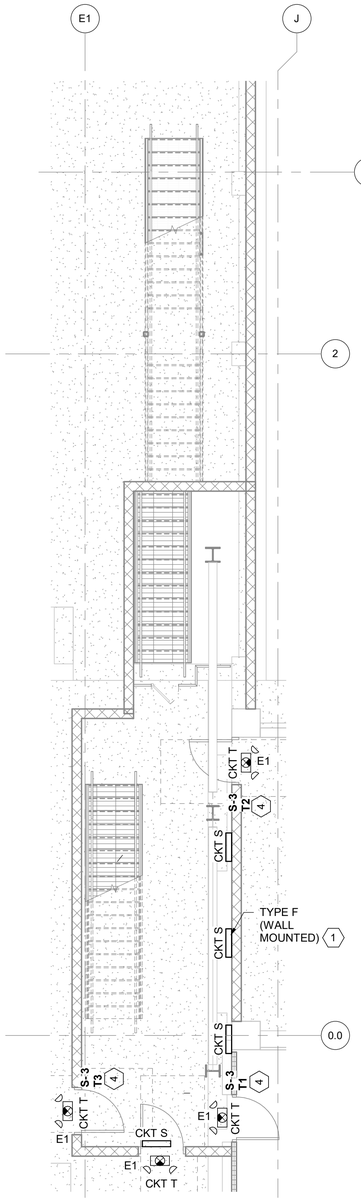

STAIR LIGHTING PLAN AT EL 141.20

3/16" = 1'-0"

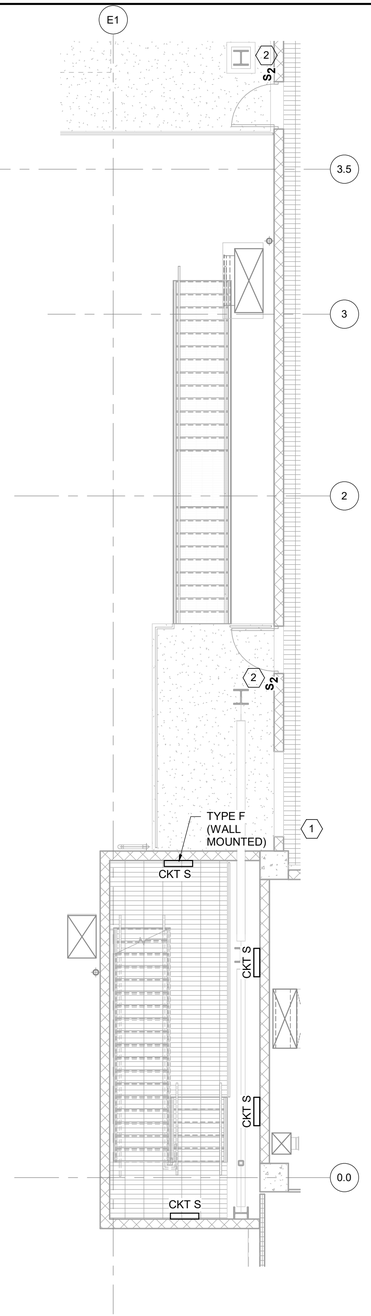

STAIR LIGHTING PLAN AT EL 156.00

3/16" = 1'-0"

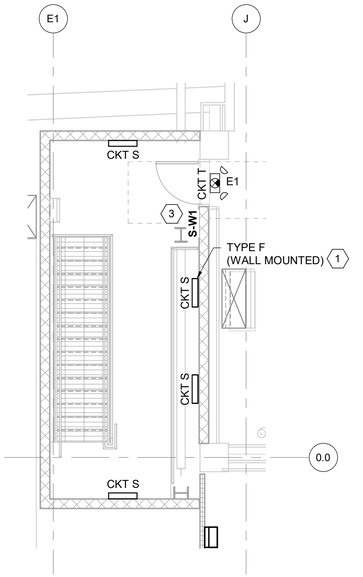

STAIR LIGHTING PLAN AT EL 167.00

3/16" = 1'-0"

GENERAL NOTES

1. FOR SYMBOLS AND ABBREVIATIONS, SEE DRAWING E-1.
2. FOR CONSTRUCTION SEQUENCE, SEE DRAWING E-2.
3. FOR LIGHTING FIXTURE SCHEDULE AND DETAILS, SEE DRAWING E-916.
4. FOR PANELBOARD SCHEDULE, SEE DRAWINGS E-901 THRU E-905.

KEY NOTES

1. LIGHTING FIXTURES ARE SHOWN AS ANNOTATIVE SYMBOLS, AND ARE MOUNTED AT 8'-0" ABOVE LANDING.
2. CONTRACTOR TO RELOCATE EXISTING LIGHT SWITCHES TO ALIGN WITH NEW DOOR LOCATIONS. REPLACE EXISTING SWITCH BOXES, COVER PLATES AND SWITCHES. REPLACE EXISTING PULL BOX WITH NEW PULLBOX, SIZE PER NEC. SPLICE NEW WIRE IN NEW PULLBOX WITH EXISTING WIRE TO NEW NORTH SWITCH BOX LOCATION.
3. FURNISH AND INSTALL 3-WAY SWITCH AT THE BOTTOM OF STAIR 4 AND TOP OF STAIR 5.
4. FURNISH AND INSTALL 4-WAY SWITCH.
5. CONSOLIDATE EXIT/EMERGENCY LIGHTING TO ONE CIRCUIT. CONSOLIDATE ALL TYPE-F LIGHTING FIXTURES TO A SINGLE CIRCUIT CONTROLLED BY SWITCHES.

THE DRAWINGS IN THIS SET ARE RECORD DRAWINGS. THEY ARE CONSTRUCTION CONTRACT DRAWINGS WHICH HAVE BEEN REVISED BASED ON AVAILABLE FIELD INFORMATION RECORDED BY OTHERS DURING CONSTRUCTION OF THIS CONTRACT. THERE HAS BEEN NO VERIFICATION OF DIMENSIONS SHOWN ON THE CONSTRUCTION DRAWINGS OR THE ACCURACY/COMPLETENESS OF THE FIELD INFORMATION RECEIVED.

SIGNATURE — DATE 2/7/2022

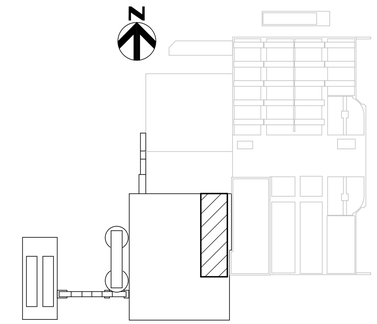

KEY PLAN

SHAH & ASSOCIATES

AS-BUILT REPLACEMENT SHEET

PROFESSIONAL CERTIFICATION
THIS DRAWING WAS ORIGINALLY APPROVED FOR CONSTRUCTION AND SEALED BY KANAIYALAL R. SHAH, A REGISTERED PROFESSIONAL ENGINEER IN THE STATE OF MARYLAND, NO. 11084

NOTICE TO CONTRACTORS
- PROJECT ELEVATIONS ARE BASED ON NAVD88 AND HOWARD COUNTY'S BENCHMARK SYSTEM
- PREVIOUS PROJECTS USED OTHER DATUMS
- APPLY THE FOLLOWING CONVERSIONS WHEN USING PREVIOUS CONTRACT DRAWINGS:
  - ADDITION NO. 6: SUBTRACT 0.80 FT
  - PRIOR ADDITIONS: SUBTRACT 1.04 FT

DEPARTMENT OF PUBLIC WORKS
HOWARD COUNTY, MARYLAND

CHIEF, BUREAU OF UTILITIES — DATE

DES: MM
DRN: DMG
CHK: KRS
DATE: 01/15/2018

DATE	REV	DESCRIPTION
03/2021		RECORD DRAWING

ELECTRICAL

DEWATERING AND DRYER BUILDIMG LIGHTING PLAN III

LITTLE PATUXENT WATER RECLAMATION PLANT
8TH ADDITION
BIOSOLIDS PROCESSING FACILITIES - PHASE 2

CAPITAL PROJECT S-6295
CONTRACT NO. 24-4936

ELECTION DISTRICT NO. 6
HOWARD COUNTY, MARYLAND

SCALE AS SHOWN

SHEET 259 OF 311

E-513

BIM 360://10054364 – Little Patuxent WRP 8th Addition/264592_100_E_V18.rvt
1/8/2022 11:08:47 AM

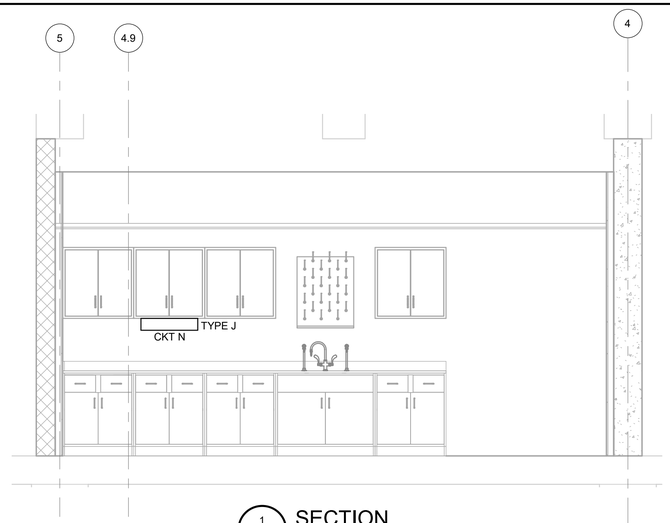

1 E-514 SECTION
3/8" = 1'-0"

LIGHTING FIXTURE SCHEDULE

FIXTURE TYPE	MOUNTING HEIGHT	CABLE		VOLTS	DESCRIPTIONS WITH CATALOG NO.	REMARKS
		WATTAGE	LAMP			
B2	SEE LIGHTING PLAN	33	LED	120	6" LED RECESSED DOWN LIGHT, BLACK BAFFLE , WHITE TRIM, DIMABLE LITHONIA L6 33LM 40K 120 G4 80CRI ZT BAF BL PF	
B3	SEE LIGHTING PLAN	34	LED	120	2x2 RECESSED LED TROFFER, DIMMING DRIVER LITHONIA 2ESL2 33L MVOLT EZ1 LP840	
B4	SEE LIGHTING PLAN	30	LED	120	48" LONG, SURFACE MOUNTED, FULLY GASKETED DUST AND MOISTURE RESISTANT LIGHT FIXTURE WILLIAMS CAT. NO. 96-4-L40-840-HIAFR-DRY-UNV	

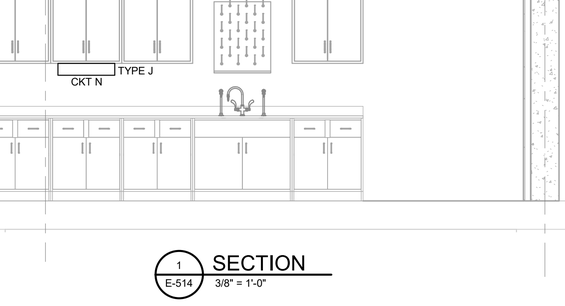

CONTROL ROOM LIGHTING DIMMERS WIRING DIAGRAM (4)
NOT TO SCALE

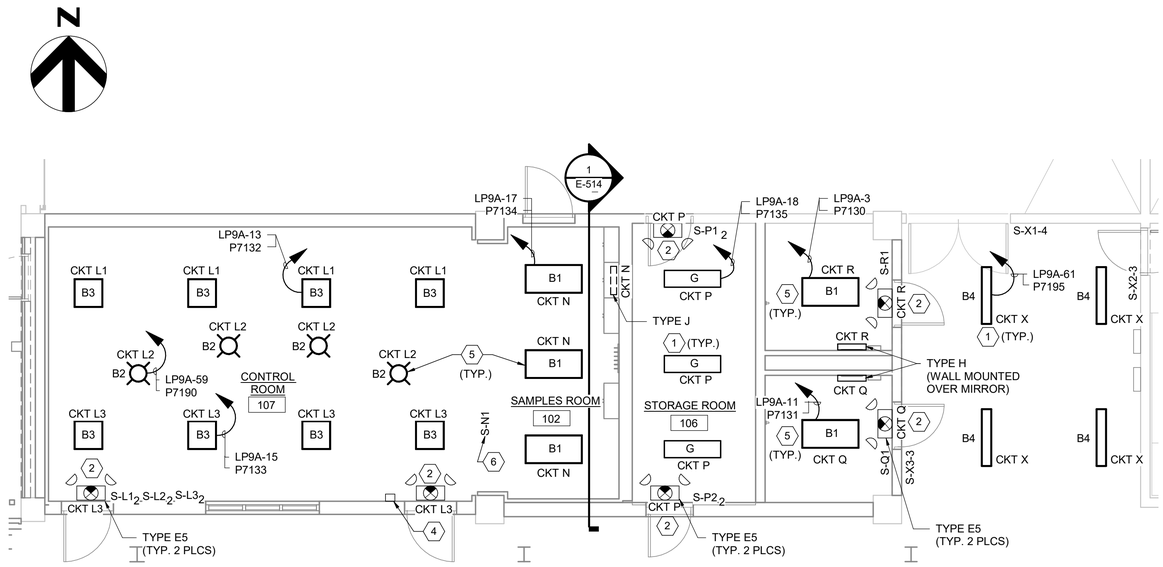

PLAN AT EL. 141.200
3/16" = 1'-0"

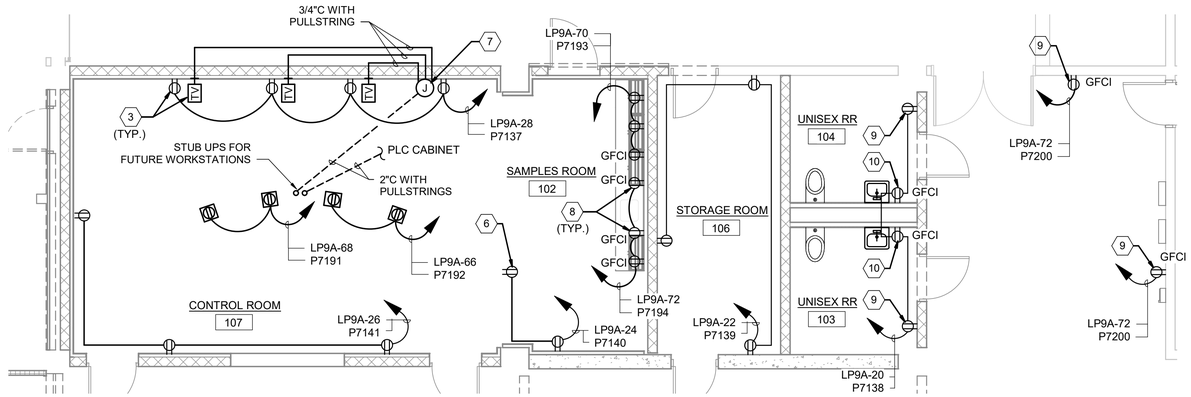

PARTIAL RECEPTACLE PLAN
3/16" = 1'-0"

GENERAL NOTES

1. FOR SYMBOLS AND ABBREVIATIONS, SEE DRAWING E-1.
2. FOR CONSTRUCTION SEQUENCE, SEE DRAWING E-2.
3. FOR LIGHTING FIXTURE SCHEDULE AND DETAILS, SEE DRAWING E-916.
4. FOR PANELBOARD SCHEDULE, SEE DRAWINGS E-901 THRU E-905.
5. FOR CABLE AND CONDUIT SCHEDULE, SEE DRAWINGS E-908 THRU E-914A.

KEY NOTES

1. LIGHTING FIXTURES ARE SHOWN AS ANNOTATIVE SYMBOLS, AND ARE MOUNTED AT CEILING.
2. CONNECT EXIT AND EMERGENCY LIGHTS AHEAD OF SWITCH.
3. INSTALL OUTLETS AND LOW VOLTAGE BOXS FOR FUTURE VIDEO MONITOR SCREEN AT APPROXIMATELY 5'-6"' AFF. COORDINATE EXACT LOCATION AND HEIGHT WITH EQUIPMENT PROVIDER.
4. WALL BOX DIMMERS, ONE PER ZONE, INSTALLED IN A 3-GANG ARRANGEMENT TO ACHIEVE 3 DIMMABLE ZONES WITH ZONE 1 BEING ON RARELY. DIMMER CATALOG # IP710-LFZ-1200VA@120VAC-Z. COORDINATE WITH EQUIPMENT PROVIDER.
5. CEILING GRID TO BE PROVIDED BY OTHERS. HANG LIGHTS FROM STRUCTURE. PROVIDE FLEXIBLE CONDUIT WITH ADEQUATE LENGTH TO ALLOW INSTALLATION IN CELING GRID BY OTHERS.
6. SUSPEND LIGHT SWITCH AND RECEPTACLE FROM STRUCTURE. PROVIDE FLEXIBLE CONDUIT WITH ADEQUATE LENGTH TO ALLOW INSTALLATION IN NEW WALL PROVIDED BY OTHERS.
7. PROVIDE 6"x6"x6" JUNCTION BOX MOUNTED 18" AFF.
8. MOUNT RECEPTACLES 4" ABOVE COUNTERTOP BACKSPLASH.
9. MOUNT RECEPTACLES AT 18" ABOVE FINISHED FLOOR.
10. MOUNT GFCI RECEPTACLE AT 48" ABOVE FINISHED FLOOR.

THE DRAWINGS IN THIS SET ARE RECORD DRAWINGS. THEY ARE CONSTRUCTION CONTRACT DRAWINGS WHICH HAVE BEEN REVISED BASED ON AVAILABLE FIELD INFORMATION RECORDED BY OTHERS DURING CONSTRUCTION OF THIS CONTRACT. THERE HAS BEEN NO VERIFICATION OF DIMENSIONS SHOWN ON THE CONSTRUCTION DRAWINGS OR THE ACCURACY/COMPLETENESS OF THE FIELD INFORMATION RECEIVED.

SIGNATURE — DATE 2/7/2023

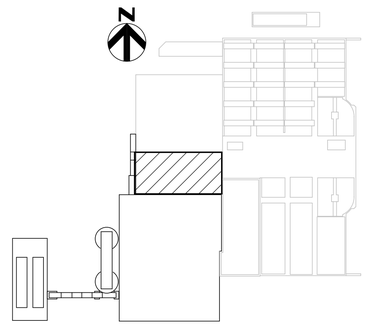

KEY PLAN

SHAH & ASSOCIATES

AS-BUILT REPLACEMENT SHEET

PROFESSIONAL CERTIFICATION
THIS DRAWING WAS ORIGINALLY APPROVED FOR CONSTRUCTION AND SEALED BY KANAIYALAL R. SHAH, A REGISTERED PROFESSIONAL ENGINEER IN THE STATE OF MARYLAND, NO. 11084

NOTICE TO CONTRACTORS
- PROJECT ELEVATIONS ARE BASED ON NAVD88 AND HOWARD COUNTY'S BENCHMARK SYSTEM
- PREVIOUS PROJECTS USED OTHER DATUMS
- APPLY THE FOLLOWING CONVERSIONS WHEN USING PREVIOUS CONTRACT DRAWINGS:
  - ADDITION NO. 6: SUBTRACT 0.80 FT
  - PRIOR ADDITIONS: SUBTRACT 1.04 FT

DEPARTMENT OF PUBLIC WORKS
HOWARD COUNTY, MARYLAND

CHIEF, BUREAU OF UTILITIES — DATE

DES: MM
DRN: DMG
CHK: KRS
DATE: 01/15/2018

DATE	REV	DESCRIPTION
03/2021		RECORD DRAWING

ELECTRICAL

DEWATERING AND DRYER BUILDING LIGHTING PLAN IV

LITTLE PATUXENT WATER RECLAMATION PLANT
8TH ADDITION
BIOSOLIDS PROCESSING FACILITIES - PHASE 2

CAPITAL PROJECT S-6295
CONTRACT NO. 24-4936

ELECTION DISTRICT NO. 6
HOWARD COUNTY, MARYLAND

SCALE AS SHOWN

SHEET 260 OF 311

E-514

BIM 360://10054364 – Little Patuxent WRP 8th Addition/284592_100_E_V18.rvt
1/8/2022 11:08:51 AM

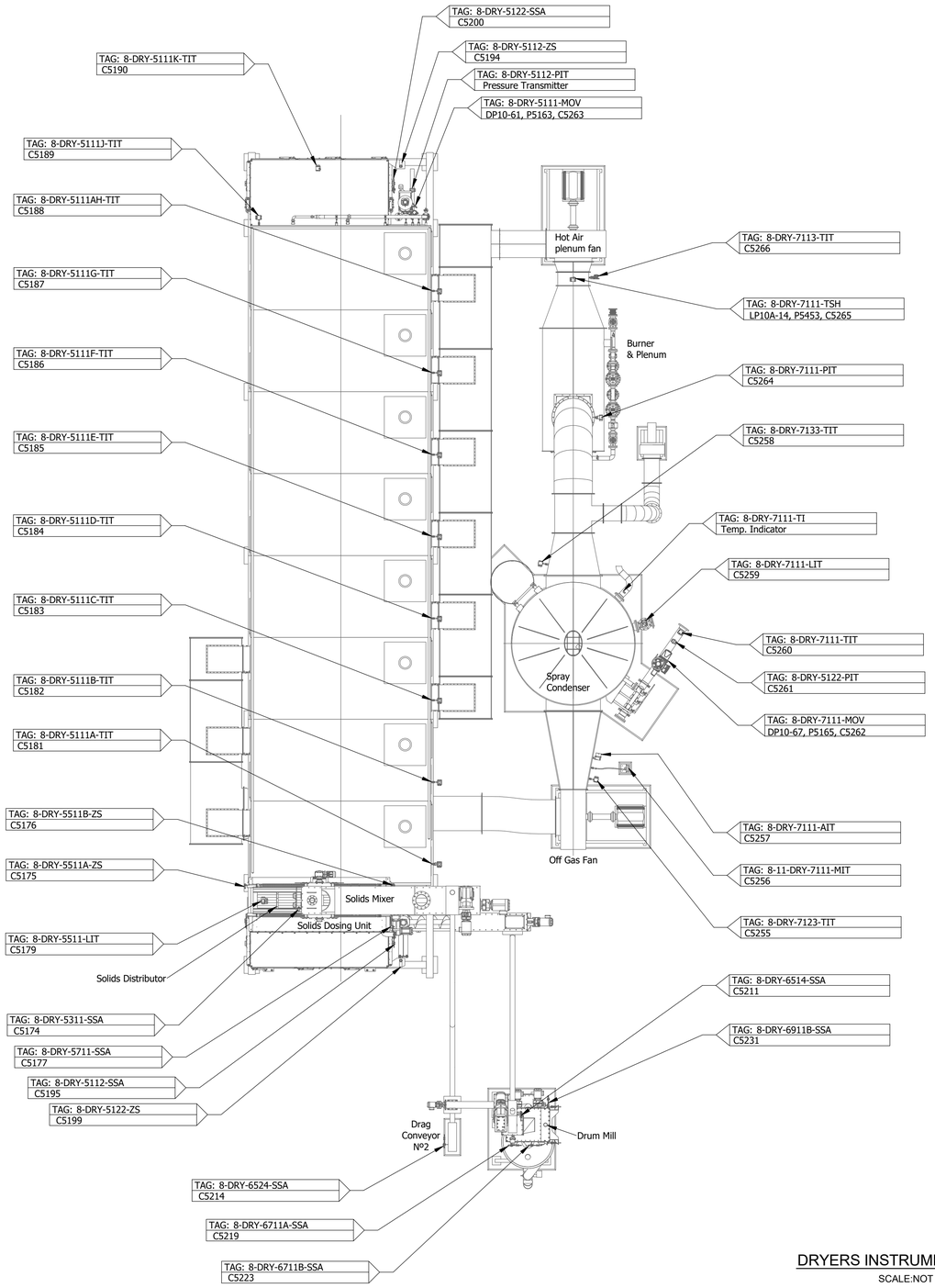

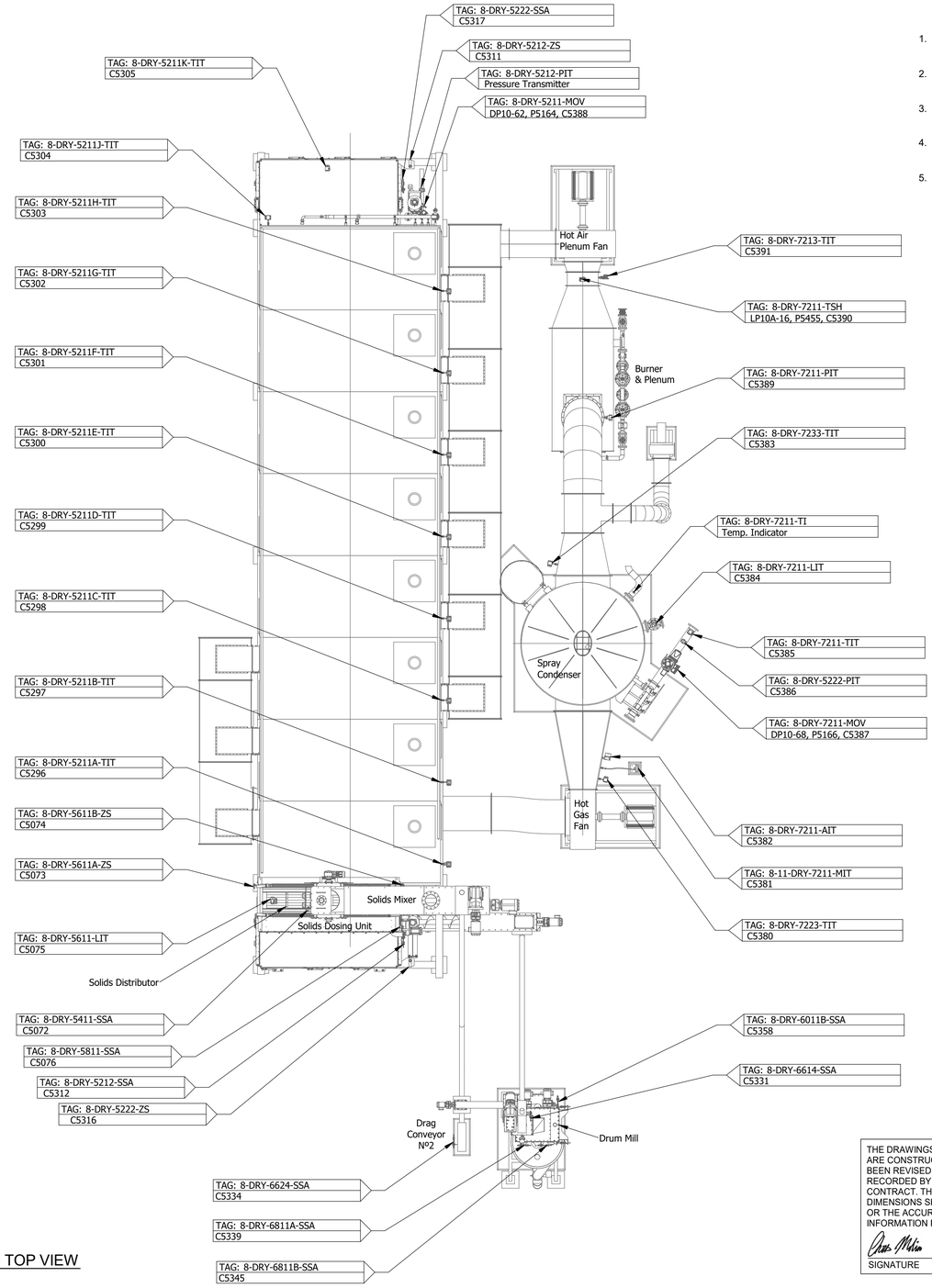

GENERAL NOTES:

1. FOR SYMBOLS AND ABBREVIATIONS, SEE DRAWING E-1.
2. FOR CONSTRUCTION SEQUENCE, SEE DRAWING E-2.
3. FOR INSTRUMENT ONE LINE DIAGRAM, SEE DRAWING E-522 THRU E-528.
4. FOR CABLE AND CONDUIT SCHEDULE, SEE DRAWING E-908 THRU E-914A AND E-918.
5. FOR PANELBOARD SCHEDULE, SEE DRAWINGS E-901 THRU E-905.

THE DRAWINGS IN THIS SET ARE RECORD DRAWINGS. THEY ARE CONSTRUCTION CONTRACT DRAWINGS WHICH HAVE BEEN REVISED BASED ON AVAILABLE FIELD INFORMATIO RECORDED BY OTHERS DURING CONSTRUCTION OF THIS CONTRACT. THERE HAS BEEN NO VERIFICATION OF DIMENSIONS SHOWN ON THE CONSTRUCTION DRAWINGS OR THE ACCURACY/COMPLETENESS OF THE FIELD INFORMATION RECEIVED.

SIGNATURE — DATE 2/7/2023

DRYERS INSTRUMENTATION TOP VIEW

SCALE:NOT TO SCALE

SHAH & ASSOCIATES

AS-BUILT REPLACEMENT SHEET

PROFESSIONAL CERTIFICATION
THIS DRAWING WAS ORIGINALLY APPROVED FOR CONSTRUCTION AND SEALED BY KANAIYALAL R. SHAH, A REGISTERED PROFESSIONAL ENGINEER IN THE STATE OF MARYLAND, NO. 11084

NOTICE TO CONTRACTORS
- PROJECT ELEVATIONS ARE BASED ON NAVD88 AND HOWARD COUNTY'S BENCHMARK SYSTEM
- PREVIOUS PROJECTS USED OTHER DATUMS
- APPLY THE FOLLOWING CONVERSIONS WHEN USING PREVIOUS CONTRACT DRAWINGS:
  - ADDITION NO. 6: SUBTRACT 0.80 FT
  - PRIOR ADDITIONS: SUBTRACT 1.04 FT

DEPARTMENT OF PUBLIC WORKS
HOWARD COUNTY, MARYLAND

CHIEF, BUREAU OF UTILITIES — DATE

DES: MM
DRN: DMG
CHK: KRS
DATE: 01/15/2018

DATE	REV	DESCRIPTION
03/2021		RECORD DRAWING

ELECTRICAL

DRYERS INSTRUMENTATION TOP VIEW

LITTLE PATUXENT WATER RECLAMATION PLANT
8TH ADDITION
BIOSOLIDS PROCESSING FACILITIES - PHASE 2

CAPITAL PROJECT S-6295
CONTRACT NO. 24-4936

ELECTION DISTRICT NO. 6
HOWARD COUNTY, MARYLAND

SCALE AS SHOWN

SHEET 261 OF 311

E-515

BIM 360://10054364 – Little Patuxent WRP 8th Addition/264592_100_E_V18.rvt
1/8/2022 11:08:51 AM

GENERAL NOTES:

1. FOR SYMBOLS AND ABBREVIATIONS, SEE DRAWING E-1.
2. FOR CONSTRUCTION SEQUENCE, SEE DRAWING E-2.
3. FOR INSTRUMENT ONE LINE DIAGRAM, SEE DRAWING E-522 THRU E-528.
4. FOR CABLE AND CONDUIT SCHEDULE, SEE DRAWING E-908 THRU E-914A AND E-918.
5. FOR PANELBOARD SCHEDULE, SEE DRAWINGS E-901 THRU E-905.

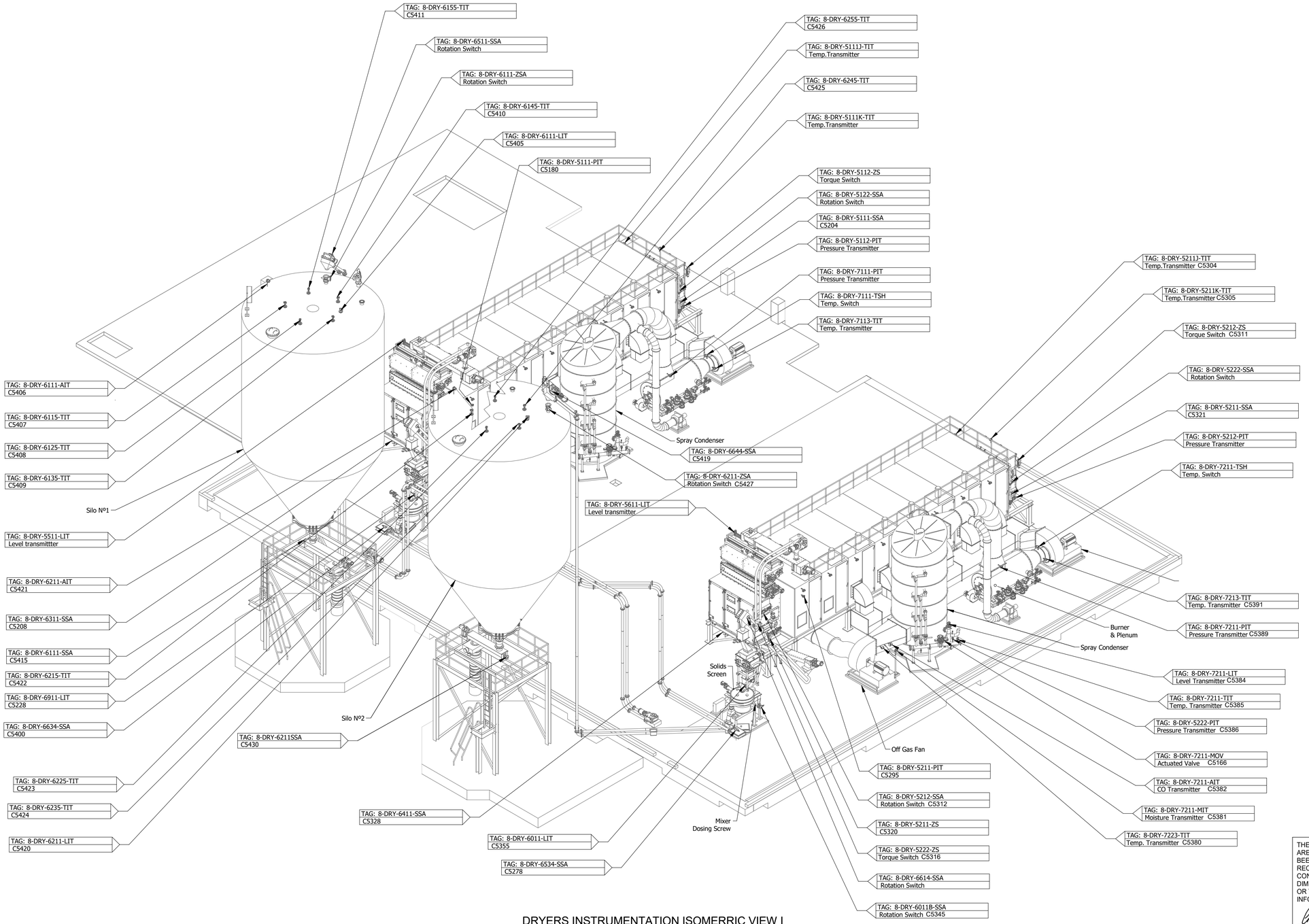

DRYERS INSTRUMENTATION ISOMERRIC VIEW I

SCALE:NOT TO SCALE

THE DRAWINGS IN THIS SET ARE RECORD DRAWINGS. THEY ARE CONSTRUCTION CONTRACT DRAWINGS WHICH HAVE BEEN REVISED BASED ON AVAILABLE FIELD INFORMATION RECORDED BY OTHERS DURING CONSTRUCTION OF THIS CONTRACT. THERE HAS BEEN NO VERIFICATION OF DIMENSIONS SHOWN ON THE CONSTRUCTION DRAWINGS OR THE ACCURACY/COMPLETENESS OF THE FIELD INFORMATION RECEIVED.

SIGNATURE 2/7/2022 DATE

SHAH & ASSOCIATES

AS-BUILT REPLACEMENT SHEET

PROFESSIONAL CERTIFICATION
THIS DRAWING WAS ORIGINALLY APPROVED FOR CONSTRUCTION AND SEALED BY KANAIYALAL R. SHAH, A REGISTERED PROFESSIONAL ENGINEER IN THE STATE OF MARYLAND, NO. 11084

NOTICE TO CONTRACTORS
- PROJECT ELEVATIONS ARE BASED ON NAVD88 AND HOWARD COUNTY'S BENCHMARK SYSTEM
- PREVIOUS PROJECTS USED OTHER DATUMS
- APPLY THE FOLLOWING CONVERSIONS WHEN USING PREVIOUS CONTRACT DRAWINGS:
  - ADDITION NO. 6: SUBTRACT 0.80 FT
  - PRIOR ADDITIONS: SUBTRACT 1.04 FT

DEPARTMENT OF PUBLIC WORKS
HOWARD COUNTY, MARYLAND

CHIEF, BUREAU OF UTILITIES DATE

DES: MM
DRN: DMG
CHK: KRS
DATE: 01/15/2018

DATE	REV	DESCRIPTION
03/2021		RECORD DRAWING

ELECTRICAL

DRYERS INSTRUMENTATION ISOMERRIC VIEW I

LITTLE PATUXENT WATER RECLAMATION PLANT
8TH ADDITION
BIOSOLIDS PROCESSING FACILITIES - PHASE 2

CAPITAL PROJECT S-6295
CONTRACT NO. 24-4936

ELECTION DISTRICT NO. 6
HOWARD COUNTY, MARYLAND

SCALE AS SHOWN

SHEET 262 OF 311

E-516

BIM 360://10054364 – Little Patuxent WRP 8th Addition/264592_100_E_V18.rvt
1/8/2022 11:08:52 AM

GENERAL NOTES:

1. FOR SYMBOLS AND ABBREVIATIONS, SEE DRAWING E-1.
2. FOR CONSTRUCTION SEQUENCE, SEE DRAWING E-2.
3. FOR INSTRUMENT ONE LINE DIAGRAM, SEE DRAWING E-522 THRU E-528.
4. FOR CABLE AND CONDUIT SCHEDULE, SEE DRAWING E-908 THRU E-914A AND E-918.
5. FOR PANELBOARD SCHEDULE, SEE DRAWINGS E-901 THRU E-905.

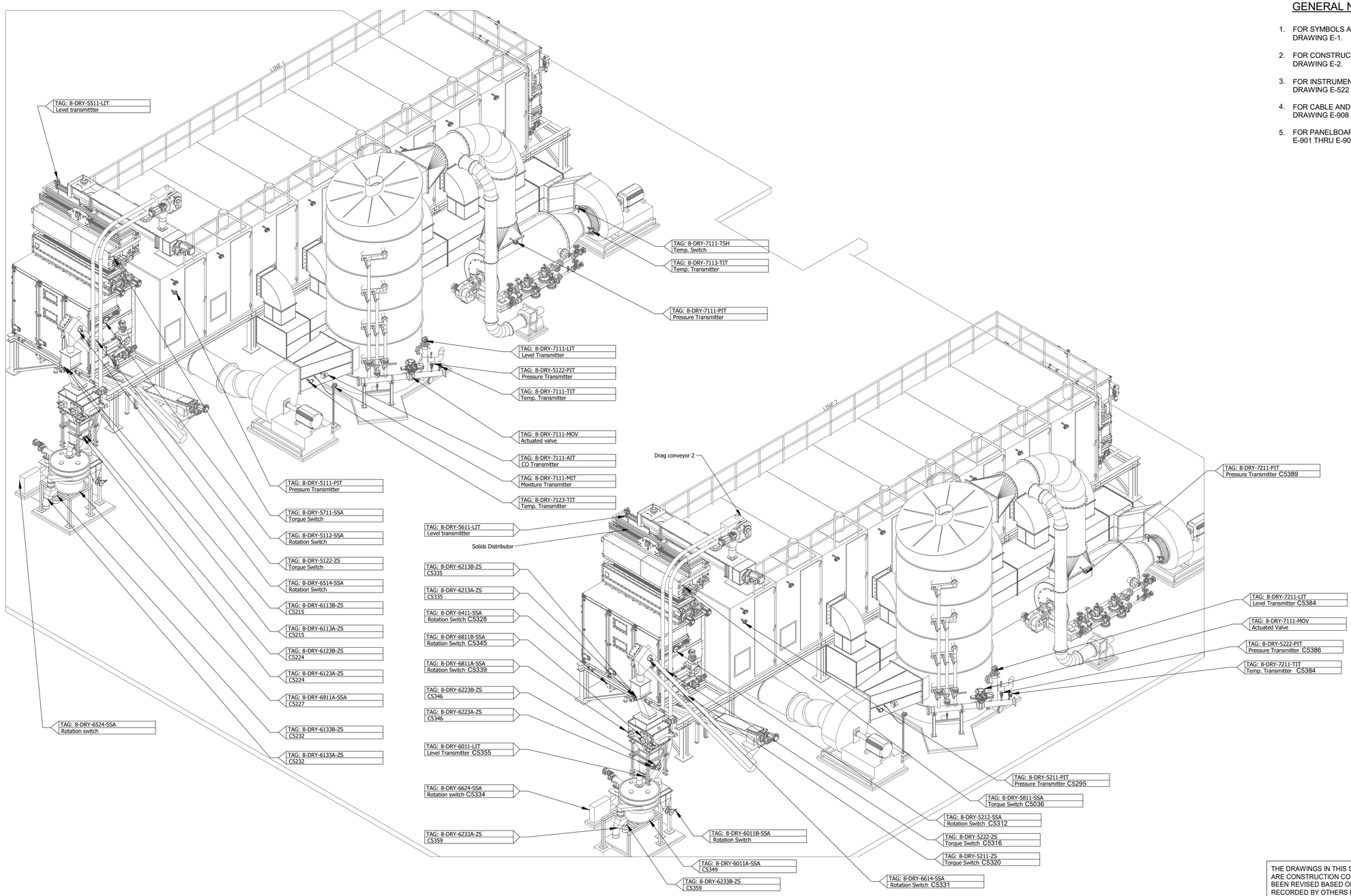

DRYERS INSTRUMENTATION ISOMERRIC VIEW II

SCALE:NOT TO SCALE

THE DRAWINGS IN THIS SET ARE RECORD DRAWINGS. THEY ARE CONSTRUCTION CONTRACT DRAWINGS WHICH HAVE BEEN REVISED BASED ON AVAILABLE FIELD INFORMATION RECORDED BY OTHERS DURING CONSTRUCTION OF THIS CONTRACT. THERE HAS BEEN NO VERIFICATION OF DIMENSIONS SHOWN ON THE CONSTRUCTION DRAWINGS OR THE ACCURACY/COMPLETENESS OF THE FIELD INFORMATION RECEIVED.

SIGNATURE — DATE 2/7/2023

SHAH & ASSOCIATES

AS-BUILT REPLACEMENT SHEET

PROFESSIONAL CERTIFICATION
THIS DRAWING WAS ORIGINALLY APPROVED FOR CONSTRUCTION AND SEALED BY KANAIYALAL R. SHAH, A REGISTERED PROFESSIONAL ENGINEER IN THE STATE OF MARYLAND, NO. 11084

NOTICE TO CONTRACTORS
- PROJECT ELEVATIONS ARE BASED ON NAVD88 AND HOWARD COUNTY'S BENCHMARK SYSTEM
- PREVIOUS PROJECTS USED OTHER DATUMS
- APPLY THE FOLLOWING CONVERSIONS WHEN USING PREVIOUS CONTRACT DRAWINGS:
  - ADDITION NO. 6: SUBTRACT 0.80 FT
  - PRIOR ADDITIONS: SUBTRACT 1.04 FT

DEPARTMENT OF PUBLIC WORKS
HOWARD COUNTY, MARYLAND

CHIEF, BUREAU OF UTILITIES — DATE

DES: MM
DRN: DMG
CHK: KRS
DATE: 01/15/2018

DATE	REV	DESCRIPTION
03/2021		RECORD DRAWING

ELECTRICAL

DRYERS INSTRUMENTATION ISOMERRIC VIEW II

LITTLE PATUXENT WATER RECLAMATION PLANT
8TH ADDITION
BIOSOLIDS PROCESSING FACILITIES - PHASE 2

CAPITAL PROJECT S-6295
CONTRACT NO. 24-4936

ELECTION DISTRICT NO. 6
HOWARD COUNTY, MARYLAND

SCALE AS SHOWN

SHEET 263 OF 311

E-517

BIM 360://10054364 – Little Patuxent WRP 8th Addition/264592_100_E_V18.rvt
1/8/2022 11:08:54 AM

GENERAL NOTES:

1. FOR SYMBOLS AND ABBREVIATIONS, SEE DRAWING E-1.
2. FOR CONSTRUCTION SEQUENCE, SEE DRAWING E-2.
3. FOR INSTRUMENT ONE LINE DIAGRAM, SEE DRAWING E-522 THRU E-528.
4. FOR CABLE AND CONDUIT SCHEDULE, SEE DRAWING E-908 THRU E-914A AND E-918.
5. FOR PANELBOARD SCHEDULE, SEE DRAWINGS E-901 THRU E-905.

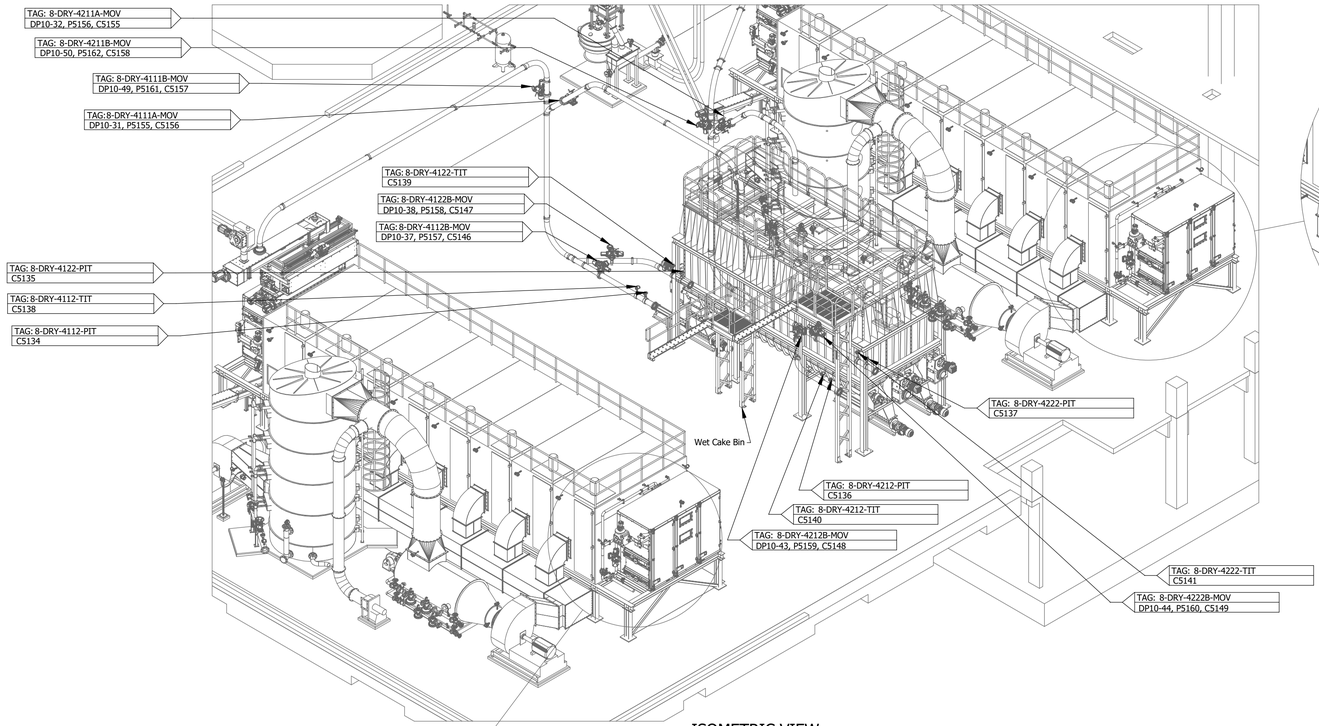

ISOMETRIC VIEW
GENERAL BACK RIGHT
NOT TO SCALE

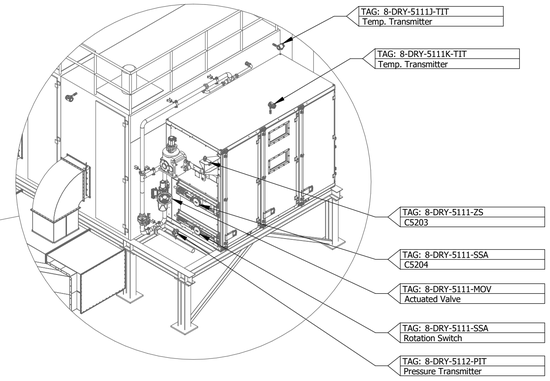

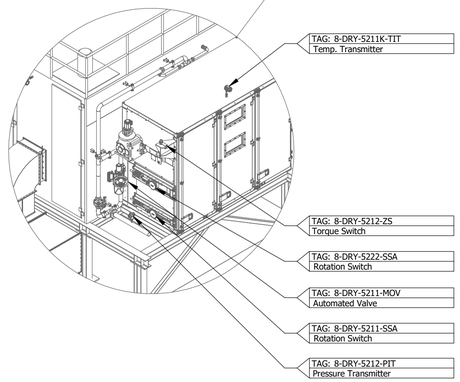

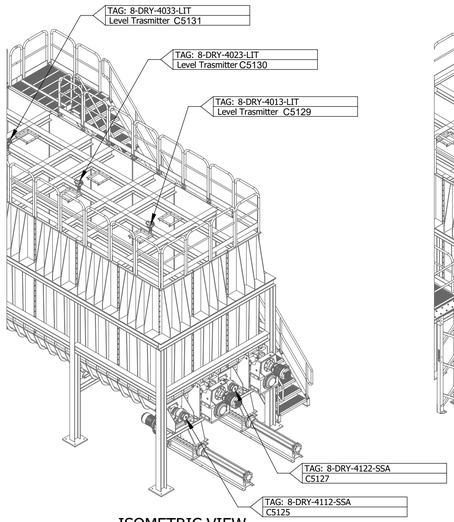

ISOMETRIC VIEW
WET CAKE BIN LEFT FRONT
NOT TO SCALE

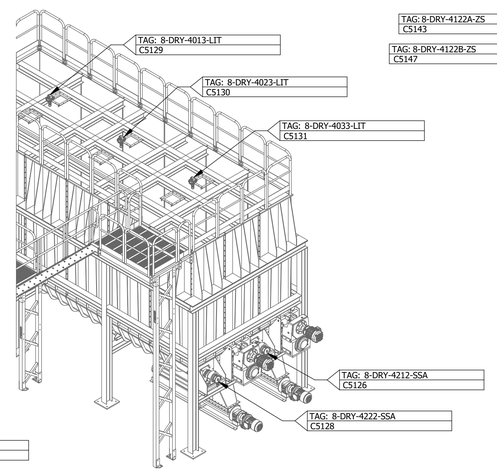

ISOMETRIC VIEW
WET CAKE BIN BACK RIGHT
NOT TO SCALE

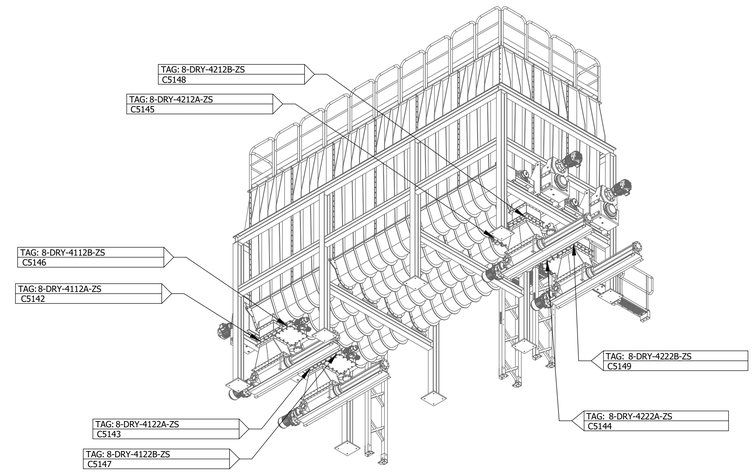

ISOMETRIC VIEW
WET CAKE BIN DOWN FRONT LEFT
NOT TO SCALE

THE DRAWINGS IN THIS SET ARE RECORD DRAWINGS. THEY ARE CONSTRUCTION CONTRACT DRAWINGS WHICH HAVE BEEN REVISED BASED ON AVAILABLE FIELD INFORMATION RECORDED BY OTHERS DURING CONSTRUCTION OF THIS CONTRACT. THERE HAS BEEN NO VERIFICATION OF DIMENSIONS SHOWN ON THE CONSTRUCTION DRAWINGS OR THE ACCURACY/COMPLETENESS OF THE FIELD INFORMATION RECEIVED.

SIGNATURE — DATE 2/7/2022

SHAH & ASSOCIATES

AS-BUILT REPLACEMENT SHEET

PROFESSIONAL CERTIFICATION
THIS DRAWING WAS ORIGINALLY APPROVED FOR CONSTRUCTION AND SEALED BY KANAIYALAL R. SHAH, A REGISTERED PROFESSIONAL ENGINEER IN THE STATE OF MARYLAND, NO. 11084

NOTICE TO CONTRACTORS
- PROJECT ELEVATIONS ARE BASED ON NAVD88 AND HOWARD COUNTY'S BENCHMARK SYSTEM
- PREVIOUS PROJECTS USED OTHER DATUMS
- APPLY THE FOLLOWING CONVERSIONS WHEN USING PREVIOUS CONTRACT DRAWINGS:
  - ADDITION NO. 6: SUBTRACT 0.80 FT
  - PRIOR ADDITIONS: SUBTRACT 1.04 FT

DEPARTMENT OF PUBLIC WORKS
HOWARD COUNTY, MARYLAND

CHIEF, BUREAU OF UTILITIES — DATE

DES: MM
DRN: DMG
CHK: KRS
DATE: 01/15/2018

DATE	REV	DESCRIPTION
03/2021		RECORD DRAWING

ELECTRICAL

DRYERS INSTRUMENTATION ISOMETRIC DETAILS

LITTLE PATUXENT WATER RECLAMATION PLANT
8TH ADDITION
BIOSOLIDS PROCESSING FACILITIES - PHASE 2

CAPITAL PROJECT S-6295
CONTRACT NO. 24-4936

ELECTION DISTRICT NO. 6
HOWARD COUNTY, MARYLAND

SCALE AS SHOWN

SHEET 264 OF 311

E-518

BIM 360://10054364 – Little Patuxent WRP 8th Addition/264592_100_E_V18.rvt
1/8/2022 11:08:56 AM

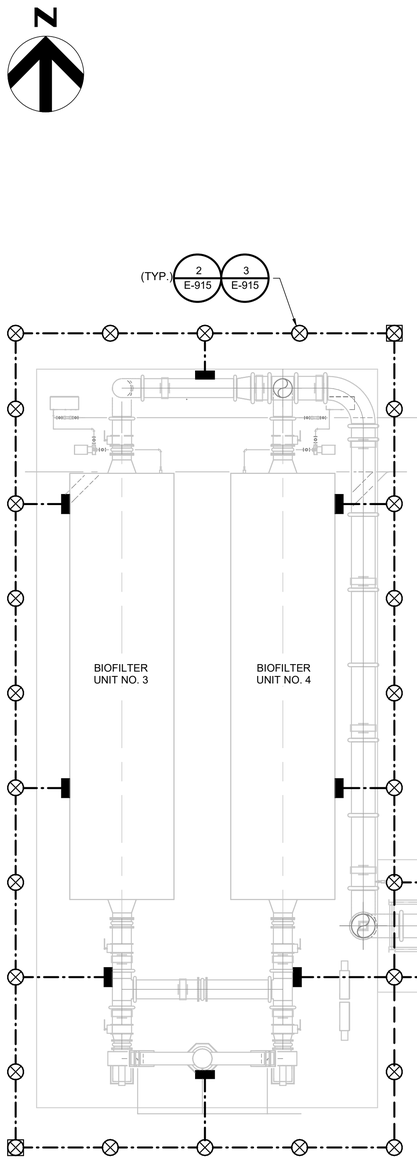

ELECTRICAL CONTRACTOR SHALL PROVIDE A MINIMUM OF (2) 4/0 COPPER TAILS FOR EACH TANK. THE LIGHTNING PROTECTION FOR THE TANKS WILL BE COURSED TO PROVIDE TAILS FOR GROUNDING

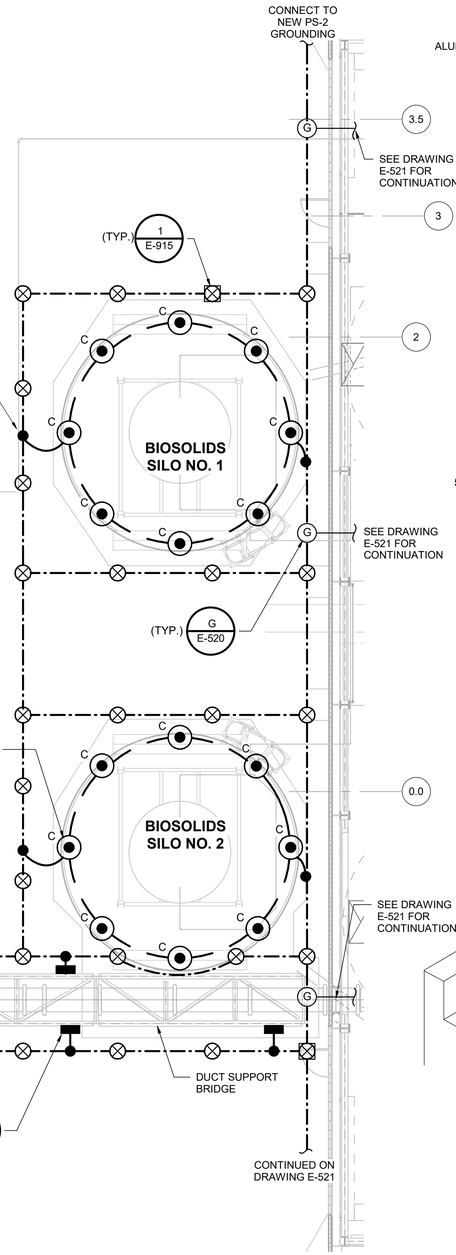

BIOFILTER GROUNDING PLAN
1/8" = 1'-0"

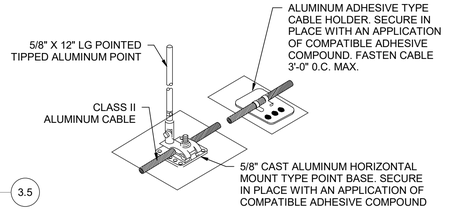

A E-520 **AIR TERMINAL**

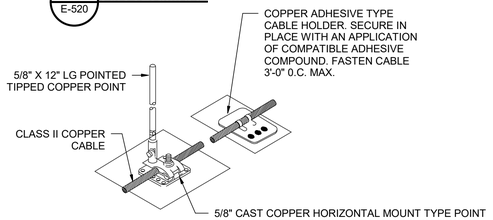

B E-520 **AIR TERMINAL**

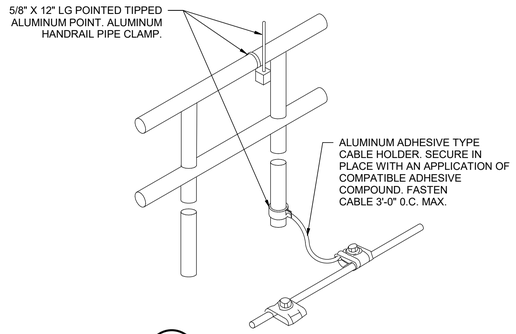

C E-520 **TANK HANDRAIL AIR TERMINAL**

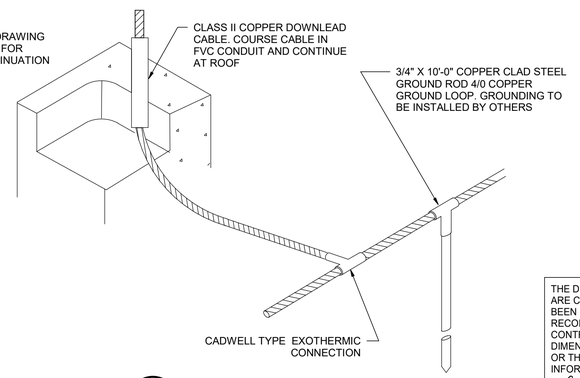

G E-520 **DOWNLEAD TO GROUND LOOP**

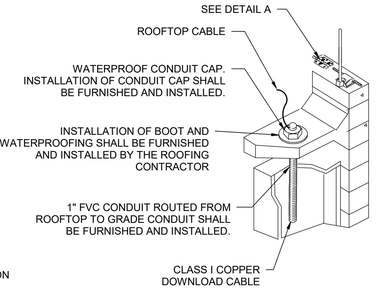

T E-520 **THRU-ROOF ASSEMBLY**

GENERAL NOTES

1. FOR SYMBOLS AND ABBREVIATIONS, SEE DRAWING E-1.
2. FOR CONSTRUCTION SEQUENCE, SEE DRAWING E-2.
3. FOR ADDITIONAL GROUNDING AND LIGHTNING PROTECTION DETAILS, SEE DRAWING E-915.

LEGEND

- A — 5/8" X 12" GENTLY TAPERED SOLID ALUMINUM AIR TERMINAL WITH ALUMINUM UNIVERSAL STYLE BASE MOUNTED VERTICALLY. (SEE DETAIL A)
- B — 5/8" X 12" GENTLY TAPERED SOLID COPPER AIR TERMINAL WITH COPPER UNIVERSAL STYLE BASE MOUNTED HORIZONTALLY. (SEE DETAIL B)
- C — 5/8" X 12" GENTLY TAPERED SOLID ALUMINUM AIR TERMINAL WITH ALUMINUM HANDRAIL STYLE BASE MOUNTED VERTICALLY. (SEE DETAIL C)
- T — THRU ROOF CONNECTOR ASSEMBLY WITH CLASS II COPPER DOWN CONDUCTOR (SEE DETAIL T)
- G — CALDWELL CONNECTION OF DOWNLEAD TO GROUND LOOP (SEE DETAIL G)
- ——— CLASS II ALUMINUM LIGHTNING CONDUCTOR. SEE AIR TERMINAL DETAILS FOR METHOD OF FASTENING. SECURE TO BUILDING EVERY THREE FEET MAXIMUM.
- - - - CLASS II COPPER LIGHTNING CONDUCTOR. SEE AIR TERMINAL DETAILS FOR METHOD OF FASTENING. SECURE TO BUILDING EVERY THREE FEET MAXIMUM.
- -·- 4/0 COPPER GROUND LOOP MUST BE BURIED 18" BELOW GRADE. GROUND LOOP SHALL BE FURNISHED AND INSTALLED BY OTHERS

GROUNDING NOTES

1. SURGE PROTECTION DEVICES ARE ALL INTEGRAL COMPONENT OF A COMPLETE LIGHTNING PROTECTION SYSTEM AND SHOULD BE PROVIDED ON ALL THE INCOMING AND EXISTING ELECTRIC POWER, DATA AND COMMUNICATION SERVICES. THE INSTALLATION OF SURGE DEVICES IS OUT OF OUR SCOPE OF WORK.
2. ROOFTOP EQUIPMENT NOT SHOWN ON THIS DRAWING SHALL BE PROTECTED AS REQUIRED TO MEET THE LATEST STANDARD SET FORTH BY THE APPLICABLE CODE.
3. THE "ZONE OF PROTECTION" IS DEFINED AS THE SPACE ADJACENT TO A GROUNDED AIR TERMINAL OR MAST OR OVERHEAD GROUND WIRE THAT IS SUBSTANTIALLY IMMUNE TO DIRECT STRIKES OF LIGHTNING.
4. ALL LIGHTNING CONDUCTORS SHALL MAINTAIN A HORIZONTAL AND DOWNWARD PATH. ALL BENDS IN THE CONDUCTOR SHALL HAVE A RADIUS OF 8 INCHES OR GREATER.
5. CONDUCTORS SHALL INTERCONNECT ALL AIR TERMINALS AND SHALL FORM A TWO-WAY PATH FROM EACH AIR TERMINAL HORIZONTALLY OR DOWNWARD TO CONNECTIONS WITH GROUND TERMINALS.
6. ALL LIGHTNING PROTECTION CONDUCTORS SHALL BE FASTENED NOT MORE THAN 3'-0" MAXIMUM SPACING.
7. AIR TERMINALS ARE TO BE LOCATED AS SHOWN. THEY ARE TO BE A MAXIMUM OF 24" FROM THE EDGE OF THE ROOF EDGE AND PROTECT A MINIMUM 10" ABOVE THE PROTECTED EDGE. THE SPACING OF TERMINALS IS NOT TO EXCEED 20'.
8. BARE COPPER LIGHTNING PROTECTION MATERIALS SHALL NOT BE INSTALLED ON ALUMINUM ROOF OR SIDING OR OTHER ALUMINUM SURFACES AND VICE-VERSA. ALUMINUM LIGHTNING PROTECTION MATERIALS SHALL NOT BE INSTALLED ON COPPER ROOFING OR COPPER SIDING OR OTHER COPPER SURFACES.
9. THE LIGHTNING PROTECTION SYSTEM SHALL BE INSTALLED IN A NEAT AND INCONSPICUOUS MANNER SO THAT ALL COMPONENTS WILL BLEND IN WITH THE APPEARANCE OF THE BUILDING.
10. ACTUAL JOB-SITE CONDITIONS MAY NECESSITATE SLIGHT ALTERATIONS IN AIR TERMINAL AND GROUND ROD LOCATIONS AS WELL AS THE MATERIALS USED DUE TO CONFLICTING METAL PROPERTIES.
11. MID-ROOF AIR TERMINALS SHALL BE PLACED 50'-0" MAXIMUM SPACING.
12. THE LAYOUT SHOWN FOR THIS SYSTEM IS SCHEMATIC AND IS INTENDED TO SHOW BASIC SYSTEM LAYOUT. CONTRACTOR SHALL VERIFY DIMENSIONS AND SITE CONDITIONS AND PROVIDE SYSTEMS THAT COMPLY TO CODE REQUIREMENTS.
13. A METAL BODY 3/16" OR THICK OR GREATER THAT IS SUBJECT TO A LIGHTNING STRIKE MAY SERVE AS A STRIKE TERMINATION DEVICE AND SHALL BE CONNECTED TO THE LIGHTNING PROTECTION SYSTEM. THE CONNECTIONS SHALL BE MAIN SIZE AND PROVIDE A TWO WAY TO GROUND AS REQUIRED FOR AIR TERMINALS.
14. ROOF PAD, PAVERS, FLASHING OR ANY OTHER SPECIFIC ROOFING MATERIALS FOR THE INSTALLATION OF THE LIGHTNING PROTECTION SYSTEM SHALL BE FURNISHED AND INSTALLED BY OTHERS.
15. EACH INDIVIDUAL ITEM OF THE LIGHTNING PROTECTION SYSTEM IS NOT LABELED FOR THE SAKE OF CLARITY. ITEMS ARE INDICATED AT RANDOM LOCATIONS ONLY, BUT A COMPLETE SYSTEM SHALL BE PROVIDED TO MEET THE RQUIREMENTS LISTED ABOVE.

THE DRAWINGS IN THIS SET ARE RECORD DRAWINGS. THEY ARE CONSTRUCTION CONTRACT DRAWINGS WHICH HAVE BEEN REVISED BASED ON AVAILABLE FIELD INFORMATION RECORDED BY OTHERS DURING CONSTRUCTION OF THIS CONTRACT. THERE HAS BEEN NO VERIFICATION OF DIMENSIONS SHOWN ON THE CONSTRUCTION DRAWINGS OR THE ACCURACY/COMPLETENESS OF THE FIELD INFORMATION RECEIVED.

SIGNATURE _____ DATE 2/7/2023

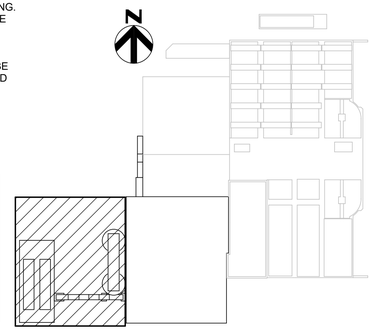

KEY PLAN

BIM 360://10054364 – Little Patuxent WRP 8th Addition/264592_100_E_V18.rvt
1/8/2022 11:09:02 AM

SHAH & ASSOCIATES

AS-BUILT REPLACEMENT SHEET

PROFESSIONAL CERTIFICATION
THIS DRAWING WAS ORIGINALLY APPROVED FOR CONSTRUCTION AND SEALED BY KANAIYALAL R. SHAH, A REGISTERED PROFESSIONAL ENGINEER IN THE STATE OF MARYLAND, NO. 11084

NOTICE TO CONTRACTORS
- PROJECT ELEVATIONS ARE BASED ON NAVD88 AND HOWARD COUNTY'S BENCHMARK SYSTEM
- PREVIOUS PROJECTS USED OTHER DATUMS
- APPLY THE FOLLOWING CONVERSIONS WHEN USING PREVIOUS CONTRACT DRAWINGS:
  - ADDITION NO. 6: SUBTRACT 0.80 FT
  - PRIOR ADDITIONS: SUBTRACT 1.04 FT

DEPARTMENT OF PUBLIC WORKS
HOWARD COUNTY, MARYLAND

CHIEF, BUREAU OF UTILITIES DATE

DES: MM
DRN: DMG
CHK: KRS
DATE: 01/15/2018

DATE	REV	DESCRIPTION
03/2021		RECORD DRAWING

ELECTRICAL

DEWATERING AND DRYER AREA GROUNDING AND LIGHTNING PROTECTION I

LITTLE PATUXENT WATER RECLAMATION PLANT
8TH ADDITION
BIOSOLIDS PROCESSING FACILITIES - PHASE 2

CAPITAL PROJECT S-6295
CONTRACT NO. 24-4936

ELECTION DISTRICT NO. 6
HOWARD COUNTY, MARYLAND

SCALE AS SHOWN

SHEET 265 OF 311

E-520

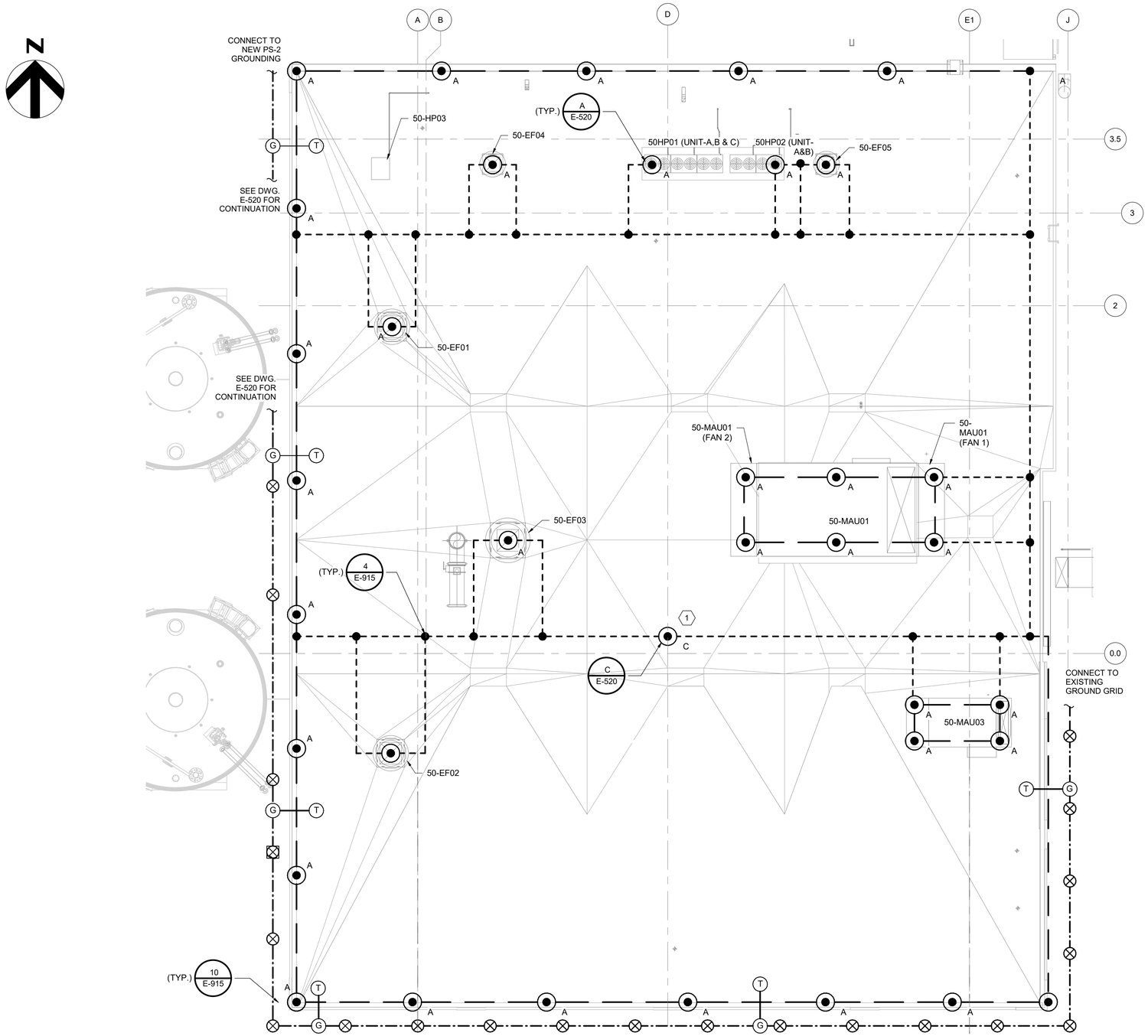

GROUNDING AND LIGHTNING PROTECTION - II

1/8" = 1'-0"

GENERAL NOTES

1. FOR SYMBOLS AND ABBREVIATIONS, SEE DRAWING E-1.
2. FOR CONSTRUCTION SEQUENCE, SEE DRAWING E-2.
3. FOR GROUNDING NOTES, LEGEND AND ADDITIONAL GROUNDING DETAILS, SEE DRAWING E-520.

KEY NOTES

(1) BLUNT SAFETY TIP ON MID ROOF AIR TERMINALS REST LOW ON ROOF SHALL BE PROVIDED.

THE DRAWINGS IN THIS SET ARE RECORD DRAWINGS. THEY ARE CONSTRUCTION CONTRACT DRAWINGS WHICH HAVE BEEN REVISED BASED ON AVAILABLE FIELD INFORMATION RECORDED BY OTHERS DURING CONSTRUCTION OF THIS CONTRACT. THERE HAS BEEN NO VERIFICATION OF DIMENSIONS SHOWN ON THE CONSTRUCTION DRAWINGS OR THE ACCURACY/COMPLETENESS OF THE FIELD INFORMATION RECEIVED.

SIGNATURE _____ DATE 2/7/2022

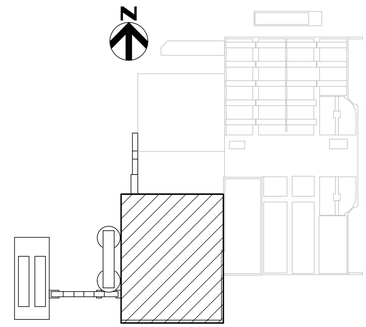

KEY PLAN

SHAH & ASSOCIATES

AS-BUILT REPLACEMENT SHEET

PROFESSIONAL CERTIFICATION
THIS DRAWING WAS ORIGINALLY APPROVED FOR CONSTRUCTION AND SEALED BY KANAIYALAL R. SHAH, A REGISTERED PROFESSIONAL ENGINEER IN THE STATE OF MARYLAND, NO. 11084

NOTICE TO CONTRACTORS
- PROJECT ELEVATIONS ARE BASED ON NAVD88 AND HOWARD COUNTY'S BENCHMARK SYSTEM
- PREVIOUS PROJECTS USED OTHER DATUMS
- APPLY THE FOLLOWING CONVERSIONS WHEN USING PREVIOUS CONTRACT DRAWINGS:
  - ADDITION NO. 6: SUBTRACT 0.80 FT
  - PRIOR ADDITIONS: SUBTRACT 1.04 FT

DEPARTMENT OF PUBLIC WORKS
HOWARD COUNTY, MARYLAND

CHIEF, BUREAU OF UTILITIES DATE

DES: MM
DRN: DMG
CHK: KRS
DATE: 01/15/2018

DATE	REV	DESCRIPTION
03/2021		RECORD DRAWING

ELECTRICAL

DEWATERING AND DRYER AREA GROUNDING AND LIGHTNING PROTECTION II

LITTLE PATUXENT WATER RECLAMATION PLANT
8TH ADDITION
BIOSOLIDS PROCESSING FACILITIES - PHASE 2

CAPITAL PROJECT S-6295
CONTRACT NO. 24-4936

ELECTION DISTRICT NO. 6
HOWARD COUNTY, MARYLAND

SCALE AS SHOWN

SHEET 266 OF 311

E-521

BIM 360://10054364 – Little Patuxent WRP 8th Addition/264592_100_E_V18.rvt
1/8/2022 11:09:15 AM

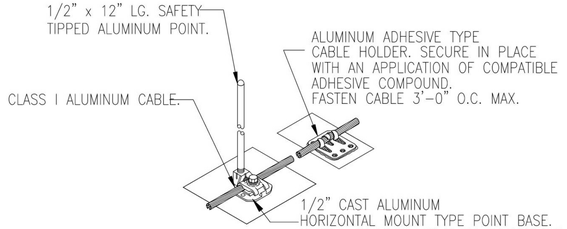

A AIR TERMINAL
NOT TO SCALE

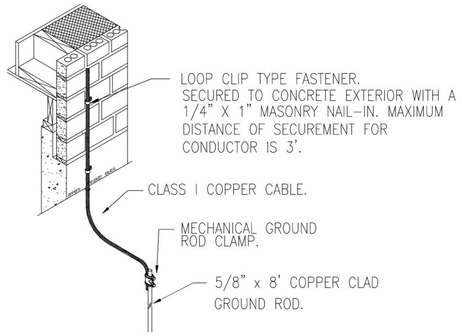

G EXPOSED DOWNLEAD TO GROUND ROD
NOT TO SCALE

AILUMINUM FLAT STRAP CONDUCTOR
NOT TO SCALE

- A 1/2" X 12" GENTLY TAPERED SOLID ALUMINUM AIR TERMINAL WITH ALUMINUM UNIVERSAL STYLE BASE MOUNTED VERTICALLY. -SEE DETAIL "A"
- G 5/8" X 8'-0" COPPERCLAD GROUND ROD WITH ULTRAWELD CONNECTIONS. -SEE DETAIL "G"
- CLASS I ALUMINUM LIGHTNING CONDUCTOR SEE AIR TERMINAL DETAILS FOR METHOD OF FASTENING. SECURE TO BUILDING EVERY THREE FEET MAXIMUM.
- CLASS I ALUMINUM LIGHTNING FLAT STRAP CONDUCTOR. FASTENED TO CONCRETE FLOOR WITH MASONRY NAIL-IN ANCHORS. SECURE TO BUILDING EVERY THREE FEET MAXIMUM.
- EXGR EXISTING GROUNDING POINT.

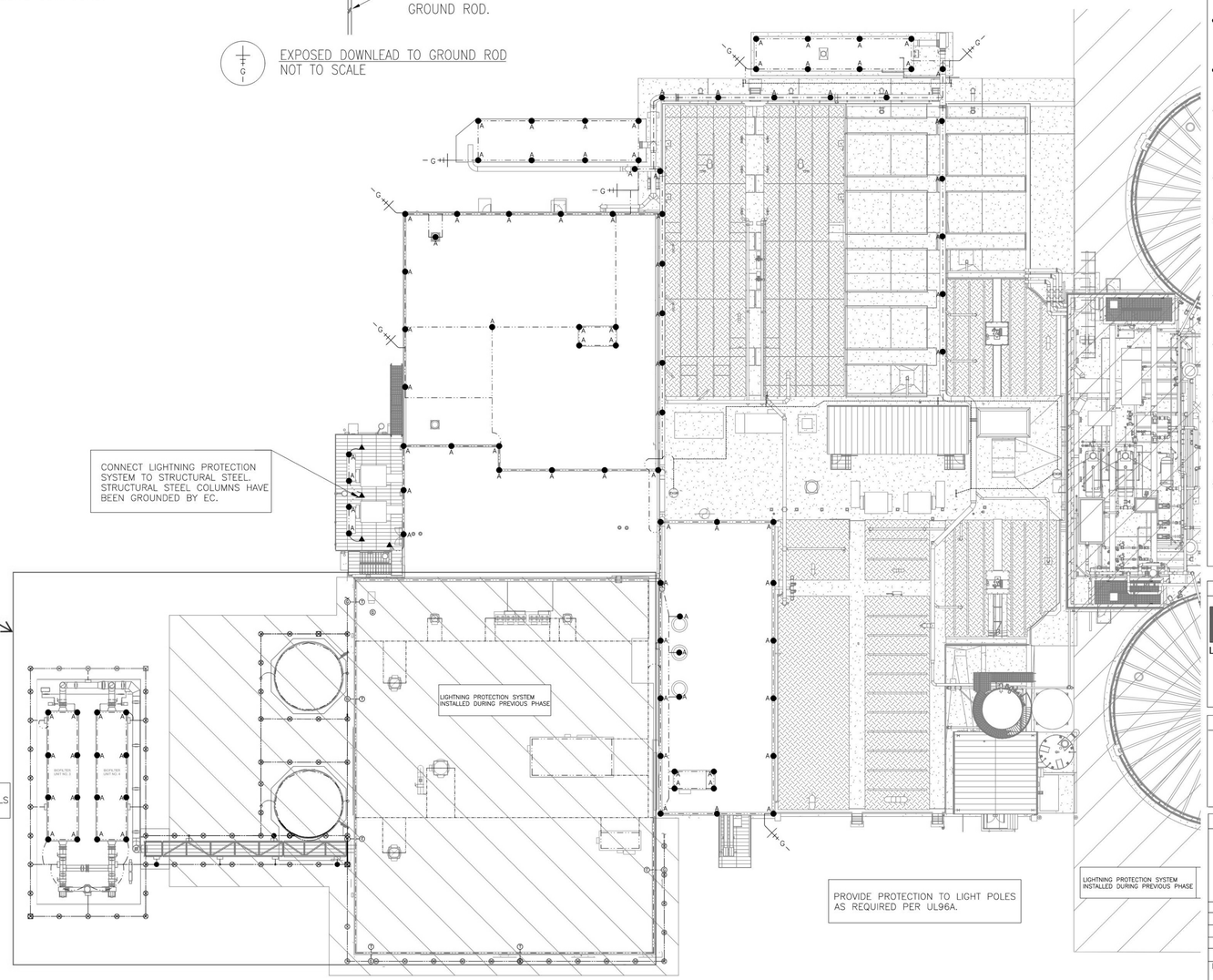

THE DRAWINGS IN THIS SET ARE RECORD DRAWINGS. THEY ARE CONSTRUCTION CONTRACT DRAWINGS WHICH HAVE BEEN REVISED BASED ON AVAILABLE FIELD INFORMATION RECORDED BY OTHERS DURING CONSTRUCTION OF THIS CONTRACT. THERE HAS BEEN NO VERIFICATION OF DIMENSIONS SHOWN ON THE CONSTRUCTION DRAWINGS OR THE ACCURACY/COMPLETENESS OF THE FIELD INFORMATION RECEIVED.

SIGNATURE _____ DATE 2/7/2020

- SECONDARY SURGE ARRESTORS OR TVSS LISTED FOR LPD ARE REQUIRED ON THE MAIN ELECTRICAL SERVICE PANEL, DATA, TELEPHONE AND ANTENNA SERVICE PROTECTION ARE ALSO REQUIRED BY ELECTRICAL CONTRACTOR OR VARIOUS UTILITY AGENCIES. PLEASE CONTACT DILLON LIGHTNING PROTECTION FOR ADVICE AS REQUIRED.
- ROOFTOP EQUIPMENT NOT SHOWN ON THIS DRAWING SHALL BE PROTECTED AS REQUIRED TO MEET TODAY'S STANDARD SET FORTH BY THE APPLICABLE CODE.
- THE "ZONE OF PROTECTION" IS DEFINED AS THE SPACE ADJACENT TO A GROUNDED AIR TERMINAL OR MAST OR OVERHEAD GROUND WIRE THAT IS SUBSTANTIALLY IMMUNE TO DIRECT STRIKES OF LIGHTNING
- ALL LIGHTNING CONDUCTORS ARE TO MAINTAIN A HORIZONTAL AND DOWNWARD PATH. ALL BENDS IN THE CONDUCTORS SHALL HAVE A RADIUS BEND OF 8 INCHES OR GREATER.
- CONDUCTORS SHALL INTERCONNECT ALL AIR TERMINALS AND SHALL FORM A TWO-WAY PATH FROM EACH AIR TERMINAL HORIZONTALLY OR DOWNWARD TO CONNECTIONS WITH GROUND TERMINALS.
- ALL LIGHTNING PROTECTION CONDUCTORS SHALL BE FASTENED NOT MORE THAN 3'0" MAXIMUM SPACING.
- FOR THE SAKE OF CLARITY, WE HAVE NOT LABELED EACH INDIVIDUAL ITEM OF LIGHTING PROTECTION MATERIALS ON THE ROOF PLAN. WE HAVE SHOWN INSTALLATION DETAILS AND HAVE CALLED OUT EACH OF THESE DETAILS ON THE ROOF PLAN ONLY AT RANDOM LOCATIONS.
- BOND ALL METALLIC PIPES SUCH AS WATER, FIRE, GAS, WHICH ENTER THE STRUCTURE TO NEAREST DOWNLEAD, GROUND ROD OR GROUND LOOP.
- BARE COPPER LIGHTING PROTECTION MATERIALS SHALL NOT BE INSTALLED ON ALUMINUM ROOF OR SIDING OR OTHER ALUMINUM SURFACES AND VISA VERSA, ALUMINUM LIGHTING PROTECTION MATERIALS SHALL NOT BE INSTALLED ON COPPER ROOFING OR COPPER SIDING OR OTHER COPPER SURFACES.
- THE LIGHTING PROTECTION SYSTEM SHALL BE INSTALLED IN A NEAT AND INCONSPICUOUS MANNER SO THAT ALL COMPONENTS WILL BLEND IN WITH THE APPEARANCE OF THE BUILDING.
- ACTUAL JOB-SITE CONDITIONS MAY NECESSITATE SLIGHT ALTERATIONS IN AIR TERMINAL AND GROUND ROD LOCATIONS AS WELL AS THE MATERIALS USED DUE TO CONFLICTING METAL PROPERTIES.
- MID-ROOF AIR TERMINALS SHALL BE PLACED 50'-0" MAXIMUM SPACING.
- THE LAYOUT SHOWN FOR THESE SYSTEMS ARE SCHEMATIC AND ARE INTENDED TO SHOW BASIC SYSTEM LAYOUT. CONTRACTOR SHALL VERIFY DIMENSIONS AND SITE CONDITIONS AND PROIVDE SYSTEMS THAT COMPLY TO CODE REQUIREMENTS.
- A METAL BODY 3/16" OR THICK OR GREATER THAT IS SUBJECT TO A LIGHTNING STRIKE MAY SERVE AS A STRIKE TERMINATION DEVICE AND SHALL BE CONNECTED TO THE LIGHTNING PROTECTION SYSTEM. THE CONNECTIONS SHALL BE MAIN SIZE AND PROVIDE A TWO WAY TO GROUND AS IS REQUIRED FOR AIR TERMINALS.

Installing Contractor/Contact Information

DILLON
LIGHTNING PROTECTION SYSTEMS, INC.
4702 Fishers Hollow Road
Myersville, Maryland 21773
301-696-9027
Contact@DillonLP.com/DillonLP.com

Electrical Contractor/Contact Information

SINGLETON ELECTRIC CO.
7860 Cessna Avenue
Gaithersburg, MD 20879
301-258-2600

Project Name and Address

LITTLE PATUXENT WRP CORBALIS
8900 Greenwood Place
Savage, MD 20763

Reference Drawings/Specifications	
Drawing	E-500

Date 6/4/2020	Maximum Elevation N/A
Scale 1/16" = 1'	Drawn By Josh Sprinkle

SHAH & ASSOCIATES

AS-BUILT REPLACEMENT SHEET

PROFESSIONAL CERTIFICATION

NOTICE TO CONTRACTORS
- PROJECT ELEVATIONS ARE BASED ON NAVD88 AND HOWARD COUNTY'S BENCHMARK SYSTEM
- PREVIOUS PROJECTS USED OTHER DATUMS
- APPLY THE FOLLOWING CONVERSIONS WHEN USING PREVIOUS CONTRACT DRAWINGS:
  - ADDITION NO. 6: SUBTRACT 0.80 FT
  - PRIOR ADDITIONS: SUBTRACT 1.04 FT

DEPARTMENT OF PUBLIC WORKS
HOWARD COUNTY, MARYLAND

CHIEF, BUREAU OF UTILITIES DATE

DES: -
DRN: -
CHK: -
DATE: 01/15/2018

DATE	REV	DESCRIPTION
03/2021		RECORD DRAWING

ELECTRICAL

GROUNDING AND LIGHTNING PROTECTION III

LITTLE PATUXENT WATER RECLAMATION PLANT
8TH ADDITION
BIOSOLIDS PROCESSING FACILITIES - PHASE 2

CAPITAL PROJECT S-6295
CONTRACT NO. 24-4936

ELECTION DISTRICT NO. 6
HOWARD COUNTY, MARYLAND

SCALE AS SHOWN

SHEET 267 OF 311

E-521A

BIM 360://10054364 – Little Patuxent WRP 8th Addition/264592_100_E_V18.rvt
1/8/2022 11:09:16 AM

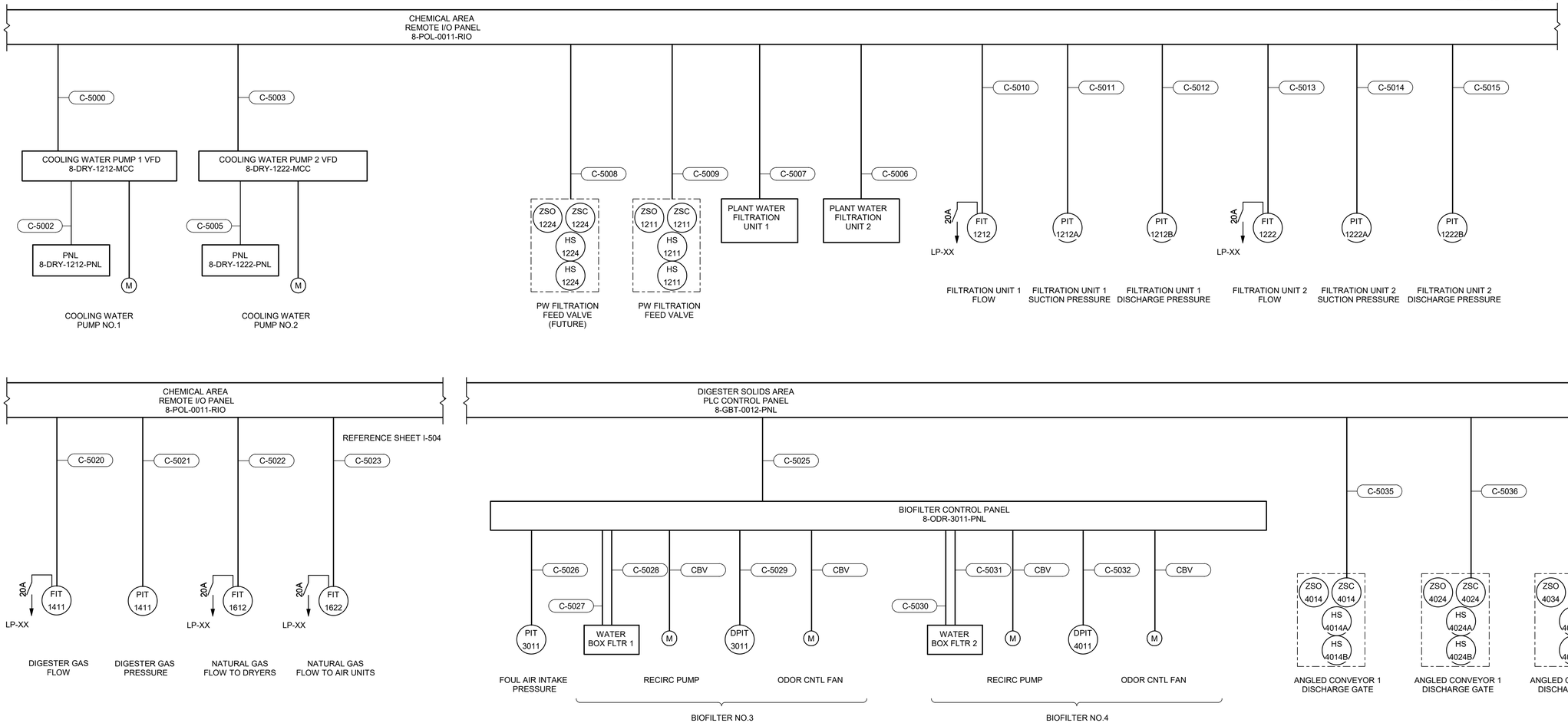

THE DRAWINGS IN THIS SET ARE RECORD DRAWINGS. THEY ARE CONSTRUCTION CONTRACT DRAWINGS WHICH HAVE BEEN REVISED BASED ON AVAILABLE FIELD INFORMATION RECORDED BY OTHERS DURING CONSTRUCTION OF THIS CONTRACT. THERE HAS BEEN NO VERIFICATION OF DIMENSIONS SHOWN ON THE CONSTRUCTION DRAWINGS OR THE ACCURACY/COMPLETENESS OF THE FIELD INFORMATION RECEIVED.

SIGNATURE — DATE 2/7/2023

AS-BUILT REPLACEMENT SHEET

PROFESSIONAL CERTIFICATION

THIS DRAWING WAS ORIGINALLY APPROVED FOR CONSTRUCTION AND SEALED BY ROBERT L. ANDERSON, A REGISTERED PROFESSIONAL ENGINEER IN THE STATE OF MARYLAND, NO. 37997

NOTICE TO CONTRACTORS

- PROJECT ELEVATIONS ARE BASED ON NAVD88 AND HOWARD COUNTY'S BENCHMARK SYSTEM
- PREVIOUS PROJECTS USED OTHER DATUMS
- APPLY THE FOLLOWING CONVERSIONS WHEN USING PREVIOUS CONTRACT DRAWINGS:
  - ADDITION NO. 6: SUBTRACT 0.80 FT
  - PRIOR ADDITIONS: SUBTRACT 1.04 FT

DEPARTMENT OF PUBLIC WORKS
HOWARD COUNTY, MARYLAND

CHIEF, BUREAU OF UTILITIES — DATE

DES: WAC
DRN: WAC
CHK: RLA
DATE: 01/2018

DATE	REV	DESCRIPTION
03/2021		RECORD DRAWINGS

ELECTRICAL

PROCESS WATER AND DIGESTED SOLIDS INSTRUMENT ONE-LINE DIAGRAM ELECTRICAL

LITTLE PATUXENT WATER RECLAMATION PLANT
8TH ADDITION
BIOSOLIDS PROCESSING FACILITIES - PHASE 2

CAPITAL PROJECT S-6295
CONTRACT NO. 24-4936

ELECTION DISTRICT NO. 6
HOWARD COUNTY, MARYLAND

SCALE AS SHOWN

SHEET 268 OF 311

E-522

BIM 360://10054364 – Little Patuxent WRP 8th Addition/264592_E_HDR_V18.rvt
1/8/2022 1:43:06 PM

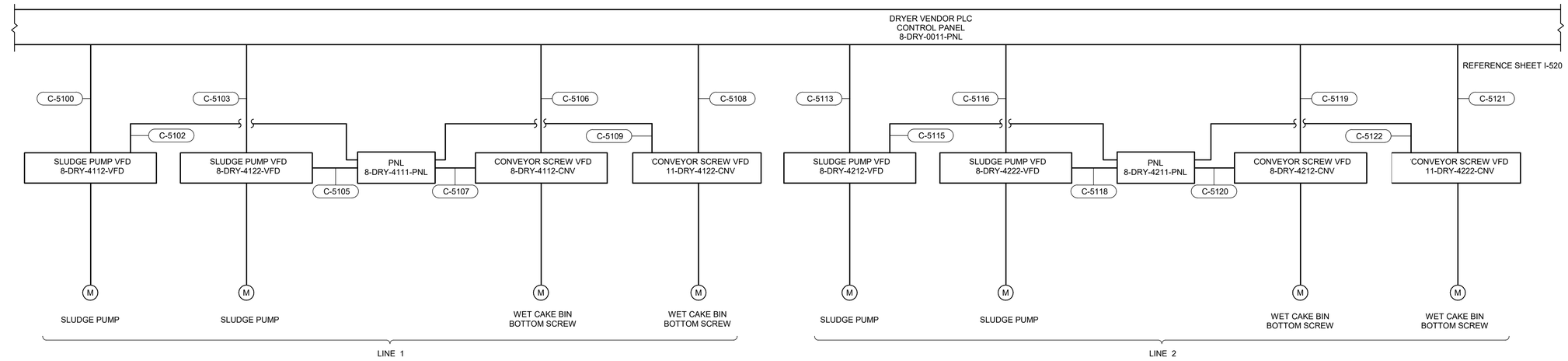

GENERAL NOTES:

1. SEE ELECTRICAL ONE-LINE DIAGRAMS AND CONDUIT AND WIRE SCHEDULES FOR DRIVE,STATER AND MOTOR POWER CONDUIT.
2. INCLUDE 2#14 FOR MOTOR HEATER, 2#14 FOR DISCONNECT SWITCH AUXILARY CONTACT AND 2#14 FOR MOTOR THERMOSTATS IN 3/4" CONDUIT FROM CONTROLLER (STARTER OR VFD) TO MOTOR AS INDICATED IN SCHEMATIC DIAGRAM. TYPICAL FOR MOTORS
3. SEE PANEL SCHEDULES FOR INSTRUMENT POWER CIRCUIT NUMBER.

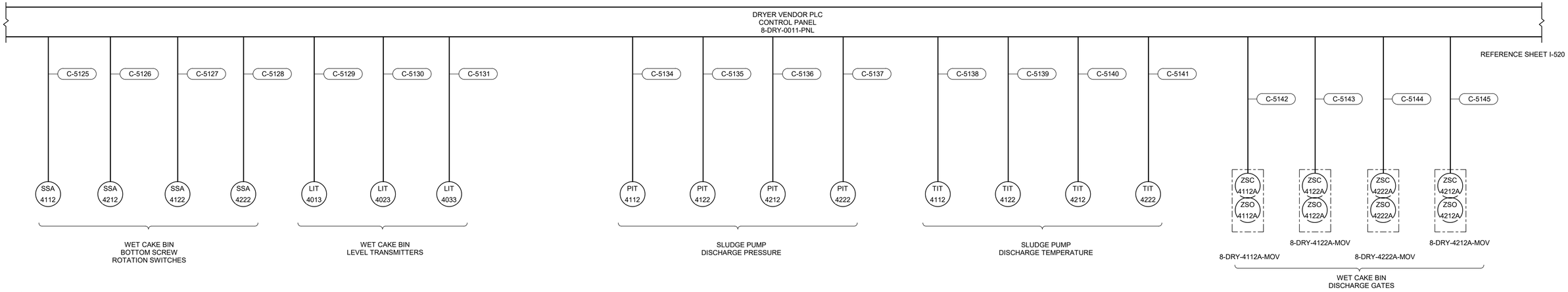

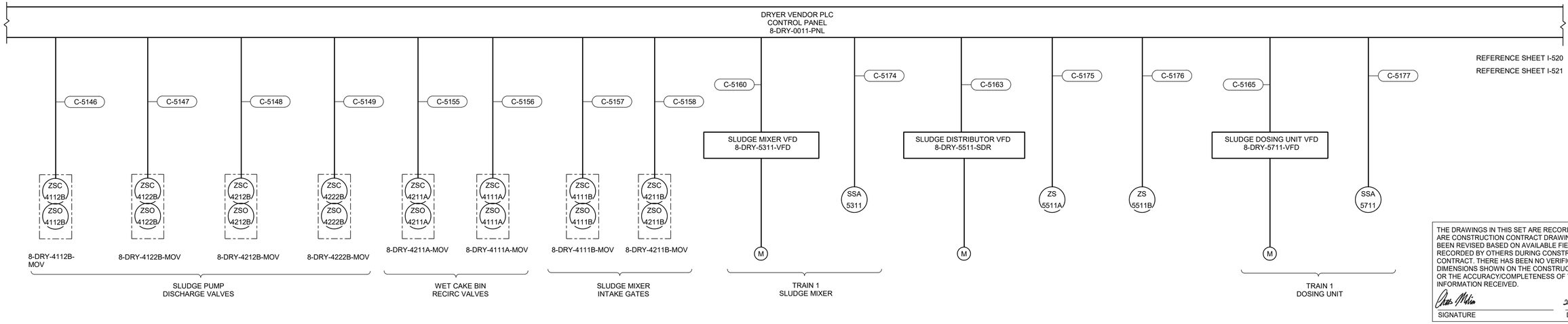

THE DRAWINGS IN THIS SET ARE RECORD DRAWINGS. THEY ARE CONSTRUCTION CONTRACT DRAWINGS WHICH HAVE BEEN REVISED BASED ON AVAILABLE FIELD INFORMATION RECORDED BY OTHERS DURING CONSTRUCTION OF THIS CONTRACT. THERE HAS BEEN NO VERIFICATION OF DIMENSIONS SHOWN ON THE CONSTRUCTION DRAWINGS OR THE ACCURACY/COMPLETENESS OF THE FIELD INFORMATION RECEIVED.

SIGNATURE — DATE 2/7/2022

AS-BUILT REPLACEMENT SHEET

PROFESSIONAL CERTIFICATION

THIS DRAWING WAS ORIGINALLY APPROVED FOR CONSTRUCTION AND SEALED BY ROBERT L. ANDERSON, A REGISTERED PROFESSIONAL ENGINEER IN THE STATE OF MARYLAND, NO. 37997

NOTICE TO CONTRACTORS

- PROJECT ELEVATIONS ARE BASED ON NAVD88 AND HOWARD COUNTY'S BENCHMARK SYSTEM
- PREVIOUS PROJECTS USED OTHER DATUMS
- APPLY THE FOLLOWING CONVERSIONS WHEN USING PREVIOUS CONTRACT DRAWINGS:
  - ADDITION NO. 6: SUBTRACT 0.80 FT
  - PRIOR ADDITIONS: SUBTRACT 1.04 FT

DEPARTMENT OF PUBLIC WORKS
HOWARD COUNTY, MARYLAND

CHIEF, BUREAU OF UTILITIES — DATE

DES: WAC
DRN: WAC
CHK: RLA
DATE: 01/2018

DATE	REV	DESCRIPTION
03/2021		RECORD DRAWINGS

WET CAKE BIN INSTRUMENT ONE-LINE DIAGRAM ELECTRICAL

LITTLE PATUXENT WATER RECLAMATION PLANT
8TH ADDITION
BIOSOLIDS PROCESSING FACILITIES - PHASE 2

CAPITAL PROJECT S-6295
CONTRACT NO. 24-4936

ELECTION DISTRICT NO. 6
HOWARD COUNTY, MARYLAND

SCALE AS SHOWN

SHEET 269 OF 311

E-523

BIM 360://10054364 – Little Patuxent WRP 8th Addition/264592_E_HDR_V18.rvt
1/8/2022 1:43:08 PM

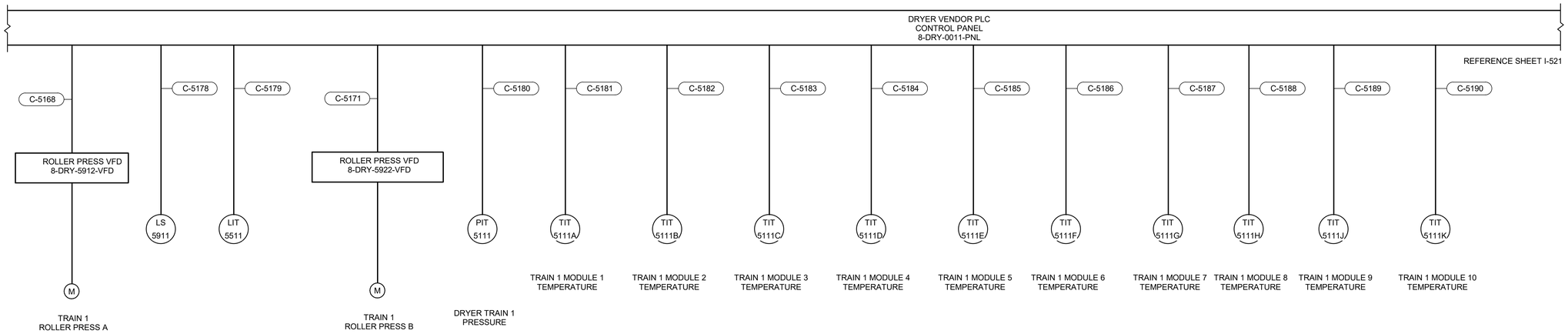

GENERAL NOTES:

1. SEE ELECTRICAL ONE-LINE DIAGRAMS AND CONDUIT AND WIRE SCHEDULES FOR DRIVE,STATER AND MOTOR POWER CONDUIT.
2. INCLUDE 2#14 FOR MOTOR HEATER, 2#14 FOR DISCONNECT SWITCH AUXILARY CONTACT AND 2#14 FOR MOTOR THERMOSTATS IN 3/4" CONDUIT FROM CONTROLLER (STARTER OR VFD) TO MOTOR AS INDICATED IN SCHEMATIC DIAGRAM. TYPICAL FOR MOTORS
3. SEE PANEL SCHEDULES FOR INSTRUMENT POWER CIRCUIT NUMBER.

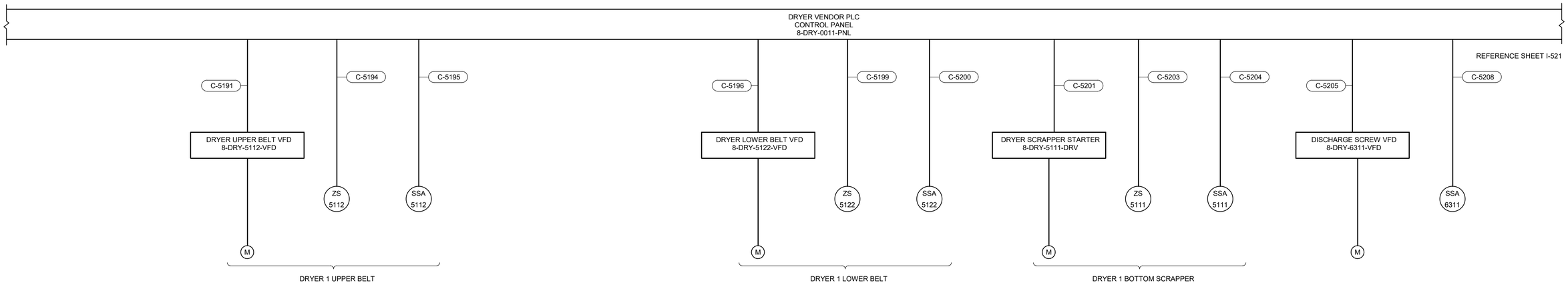

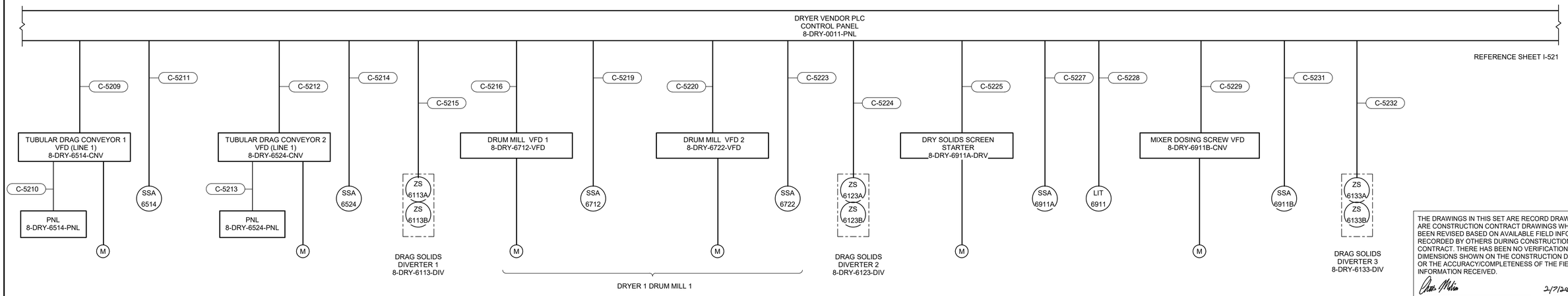

THE DRAWINGS IN THIS SET ARE RECORD DRAWINGS. THEY ARE CONSTRUCTION CONTRACT DRAWINGS WHICH HAVE BEEN REVISED BASED ON AVAILABLE FIELD INFORMATION RECORDED BY OTHERS DURING CONSTRUCTION OF THIS CONTRACT. THERE HAS BEEN NO VERIFICATION OF DIMENSIONS SHOWN ON THE CONSTRUCTION DRAWINGS OR THE ACCURACY/COMPLETENESS OF THE FIELD INFORMATION RECEIVED.

SIGNATURE — DATE 2/7/2022

AS-BUILT REPLACEMENT SHEET

PROFESSIONAL CERTIFICATION

THIS DRAWING WAS ORIGINALLY APPROVED FOR CONSTRUCTION AND SEALED BY ROBERT L. ANDERSON, A REGISTERED PROFESSIONAL ENGINEER IN THE STATE OF MARYLAND, NO. 37997

NOTICE TO CONTRACTORS

- PROJECT ELEVATIONS ARE BASED ON NAVD88 AND HOWARD COUNTY'S BENCHMARK SYSTEM
- PREVIOUS PROJECTS USED OTHER DATUMS
- APPLY THE FOLLOWING CONVERSIONS WHEN USING PREVIOUS CONTRACT DRAWINGS:
  - ADDITION NO. 6: SUBTRACT 0.80 FT
  - PRIOR ADDITIONS: SUBTRACT 1.04 FT

DEPARTMENT OF PUBLIC WORKS
HOWARD COUNTY, MARYLAND

CHIEF, BUREAU OF UTILITIES — DATE

DES: WAC
DRN: WAC
CHK: RLA
DATE: 01/2018

DATE	REV	DESCRIPTION
03/2021		RECORD DRAWINGS

DRYER 1 INSTRUMENT ONELINE DIAGRAM I ELECTRICAL

LITTLE PATUXENT WATER RECLAMATION PLANT
8TH ADDITION
BIOSOLIDS PROCESSING FACILITIES - PHASE 2

CAPITAL PROJECT S-6295
CONTRACT NO. 24-4936

ELECTION DISTRICT NO. 6
HOWARD COUNTY, MARYLAND

SCALE AS SHOWN

SHEET 270 OF 311

E-524

BIM 360://10054364 – Little Patuxent WRP 8th Addition/264592_E_HDR_V18.rvt
1/8/2022 1:43:10 PM

GENERAL NOTES:

1. SEE ELECTRICAL ONE-LINE DIAGRAMS AND CONDUIT AND WIRE SCHEDULES FOR DRIVE,STATER AND MOTOR POWER CONDUIT.
2. INCLUDE 2#14 FOR MOTOR HEATER, 2#14 FOR DISCONNECT SWITCH AUXILARY CONTACT AND 2#14 FOR MOTOR THERMOSTATS IN 3/4" CONDUIT FROM CONTROLLER (STARTER OR VFD) TO MOTOR AS INDICATED IN SCHEMATIC DIAGRAM. TYPICAL FOR MOTORS
3. SEE PANEL SCHEDULES FOR INSTRUMENT POWER CIRCUIT NUMBER.

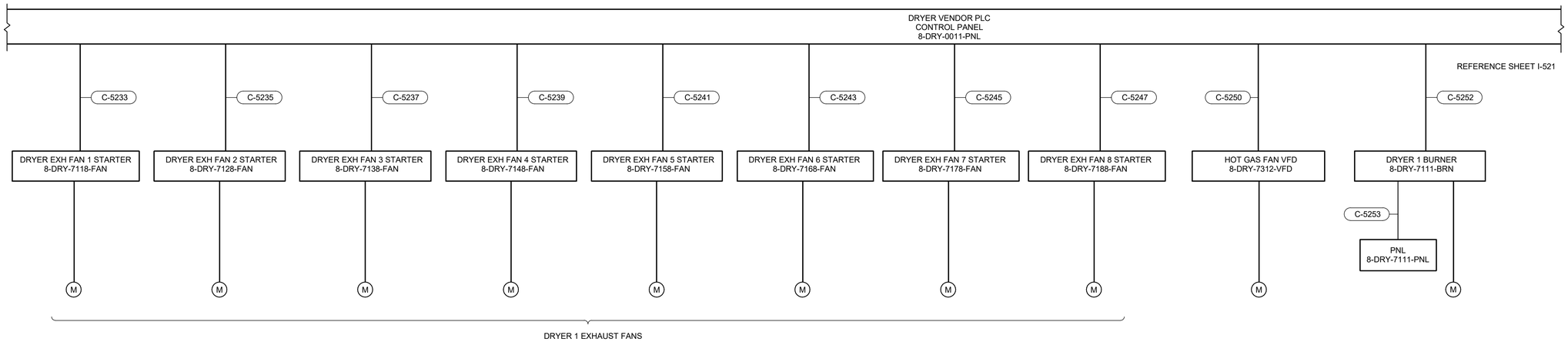

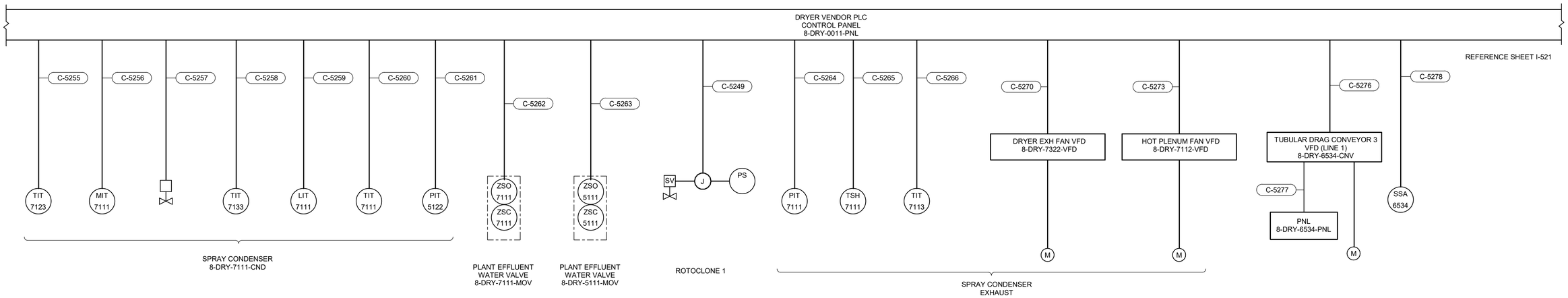

THE DRAWINGS IN THIS SET ARE RECORD DRAWINGS. THEY ARE CONSTRUCTION CONTRACT DRAWINGS WHICH HAVE BEEN REVISED BASED ON AVAILABLE FIELD INFORMATION RECORDED BY OTHERS DURING CONSTRUCTION OF THIS CONTRACT. THERE HAS BEEN NO VERIFICATION OF DIMENSIONS SHOWN ON THE CONSTRUCTION DRAWINGS OR THE ACCURACY/COMPLETENESS OF THE FIELD INFORMATION RECEIVED.

SIGNATURE 2/7/2022 DATE

AS-BUILT REPLACEMENT SHEET

PROFESSIONAL CERTIFICATION

THIS DRAWING WAS ORIGINALLY APPROVED FOR CONSTRUCTION AND SEALED BY ROBERT L. ANDERSON, A REGISTERED PROFESSIONAL ENGINEER IN THE STATE OF MARYLAND, NO. 37997

NOTICE TO CONTRACTORS

- PROJECT ELEVATIONS ARE BASED ON NAVD88 AND HOWARD COUNTY'S BENCHMARK SYSTEM
- PREVIOUS PROJECTS USED OTHER DATUMS
- APPLY THE FOLLOWING CONVERSIONS WHEN USING PREVIOUS CONTRACT DRAWINGS:
  - ADDITION NO. 6: SUBTRACT 0.80 FT
  - PRIOR ADDITIONS: SUBTRACT 1.04 FT

DEPARTMENT OF PUBLIC WORKS
HOWARD COUNTY, MARYLAND

CHIEF, BUREAU OF UTILITIES DATE

DES: WAC
DRN: WAC
CHK: RLA
DATE: 01/2018

DATE	REV	DESCRIPTION
03/2021		RECORD DRAWINGS

DRYER 1 INSTRUMENTATION ONELINE DIAGRAM II ELECTRICAL

LITTLE PATUXENT WATER RECLAMATION PLANT
8TH ADDITION
BIOSOLIDS PROCESSING FACILITIES - PHASE 2

CAPITAL PROJECT S-6295
CONTRACT NO. 24-4936

ELECTION DISTRICT NO. 6
HOWARD COUNTY, MARYLAND

SCALE AS SHOWN

SHEET 271 OF 311

E-525

BIM 360://10054364 – Little Patuxent WRP 8th Addition/264592_E_HDR_V18.rvt
1/8/2022 1:43:13 PM

DRYER VENDOR PLC
CONTROL PANEL
8-DRY-0011-PNL

REFERENCE SHEET I-522

C-5280 — SLUDGE MIXER VFD 8-DRY-5411-VFD — M — TRAIN 2 SLUDGE MIXER
C-5072 — SSA 5411
C-5283 — SLUDGE DISTRIBUTOR VFD 8-DRY-5611-SDR — M
C-5073 — ZS 5611A
C-5074 — ZS 5611B
C-5075 — LIT 5611
C-5285 — SLUDGE DOSING UNIT VFD 8-DRY-5811-VFD — M — TRAIN 2 DOSING UNIT
C-5076 — SSA 5811
C-5288 — ROLLER PRESS VFD 8-DRY-5012-VFD — M — TRAIN 2 ROLLER PRESS A
C-5291 — ROLLER PRESS VFD 8-DRY-5022-VFD — M — TRAIN 2 ROLLER PRESS B
C-5077 — LS 5011
C-5295 — PIT 5211 — DRYER TRAIN 2 PRESSURE

GENERAL NOTES:

1. SEE ELECTRICAL ONE-LINE DIAGRAMS AND CONDUIT AND WIRE SCHEDULES FOR DRIVE,STATER AND MOTOR POWER CONDUIT.
2. INCLUDE 2#14 FOR MOTOR HEATER, 2#14 FOR DISCONNECT SWITCH AUXILARY CONTACT AND 2#14 FOR MOTOR THERMOSTATS IN 3/4" CONDUIT FROM CONTROLLER (STARTER OR VFD) TO MOTOR AS INDICATED IN SCHEMATIC DIAGRAM. TYPICAL FOR MOTORS
3. SEE PANEL SCHEDULES FOR INSTRUMENT POWER CIRCUIT NUMBER.

THE DRAWINGS IN THIS SET ARE RECORD DRAWINGS. THEY ARE CONSTRUCTION CONTRACT DRAWINGS WHICH HAVE BEEN REVISED BASED ON AVAILABLE FIELD INFORMATION RECORDED BY OTHERS DURING CONSTRUCTION OF THIS CONTRACT. THERE HAS BEEN NO VERIFICATION OF DIMENSIONS SHOWN ON THE CONSTRUCTION DRAWINGS OR THE ACCURACY/COMPLETENESS OF THE FIELD INFORMATION RECEIVED.

SIGNATURE _____ DATE 2/7/2022

REFERENCE SHEET I-522

DRYER VENDOR PLC
CONTROL PANEL
8-DRY-0011-PNL

C-5296 — TIT 5211A — TRAIN 2 MODULE 1 TEMPERATURE
C-5297 — TIT 5211B — TRAIN 2 MODULE 2 TEMPERATURE
C-5298 — TIT 5211C — TRAIN 2 MODULE 3 TEMPERATURE
C-5299 — TIT 5211D — TRAIN 2 MODULE 4 TEMPERATURE
C-5300 — TIT 5211E — TRAIN 2 MODULE 5 TEMPERATURE
C-5301 — TIT 5211F — TRAIN 2 MODULE 6 TEMPERATURE
C-5302 — TIT 5211G — TRAIN 2 MODULE 7 TEMPERATURE
C-5303 — TIT 5211H — TRAIN 2 MODULE 8 TEMPERATURE
C-5304 — TIT 5211J — TRAIN 2 MODULE 9 TEMPERATURE
C-5305 — TIT 5211K — TRAIN 2 MODULE 10 TEMPERATURE
C-5308 — DRYER UPPER BELT VFD 8-DRY-5212-VFD — M — DRYER 2 UPPER BELT
C-5311 — ZS 5212
C-5312 — SSA 5212
C-5313 — DRYER LOWER BELT VFD 8-DRY-5222-VFD — M — DRYER 2 LOWER BELT
C-5316 — ZS 5222
C-5317 — SSA 5222
C-5318 — DRYER SCRAPPER STARTER 8-DRY-5211-DRV — M — DRYER 2 BOTTOM SCRAPPER
C-5320 — ZS 5211
C-5321 — SSA 5211

REFERENCE SHEET I-522

DRYER VENDOR PLC
CONTROL PANEL
8-DRY-0011-PNL

C-5325 — DISCHARGE SCREW VFD 8-DRY-6411-VFD — M
C-5328 — SSA 6411
C-5329 — TUBULAR DRAG CONVEYOR 1 VFD (LINE 2) 8-DRY-6614-CNV
C-5330 — PNL 8-DRY-6614-PNL — M
C-5331 — SSA 6614
C-5332 — TUBULAR DRAG CONVEYOR 2 VFD (LINE 2) 8-DRY-6624-CNV
C-5333 — PNL 8-DRY-6624-PNL — M
C-5334 — SSA 6624
C-5335 — ZS 6213A, ZS 6213B — DRAG SOLIDS DIVERTER 1 8-DRY-6213-DIV
C-5336 — DRUM MILL VFD 1 8-DRY-6812-VFD — M
C-5339 — SSA 6812
C-5340 — DRUM MILL VFD 2 8-DRY-6822-VFD — M — DRYER 2 DRUM MILL 1
C-5345 — SSA 6822
C-5346 — ZS 6223A, ZS 6223B — DRAG SOLIDS DIVERTER 2 8-DRY-6223-DIV
C-5347 — DRY SOLIDS SCREEN STARTER 8-DRY-6011A-DRV — M
C-5349 — SSA 6011A
C-5350 — DRYER 2 BURNER 8-DRY-7211-BRN — M
C-5351 — PNL 8-DRY-7211-PNL

AS-BUILT REPLACEMENT SHEET

PROFESSIONAL CERTIFICATION

THIS DRAWING WAS ORIGINALLY APPROVED FOR CONSTRUCTION AND SEALED BY ROBERT L. ANDERSON, A REGISTERED PROFESSIONAL ENGINEER IN THE STATE OF MARYLAND, NO. 37997

NOTICE TO CONTRACTORS

- PROJECT ELEVATIONS ARE BASED ON NAVD88 AND HOWARD COUNTY'S BENCHMARK SYSTEM
- PREVIOUS PROJECTS USED OTHER DATUMS
- APPLY THE FOLLOWING CONVERSIONS WHEN USING PREVIOUS CONTRACT DRAWINGS:
  - ADDITION NO. 6: SUBTRACT 0.80 FT
  - PRIOR ADDITIONS: SUBTRACT 1.04 FT

DEPARTMENT OF PUBLIC WORKS
HOWARD COUNTY, MARYLAND

CHIEF, BUREAU OF UTILITIES DATE

DES: WAC
DRN: WAC
CHK: RLA
DATE: 01/2018

DATE	REV	DESCRIPTION
03/2021		RECORD DRAWINGS

ELECTRICAL

DRYER 2 INSTRUMENTATION ONELINE DIAGRAM I ELECTRICAL

LITTLE PATUXENT WATER RECLAMATION PLANT
8TH ADDITION
BIOSOLIDS PROCESSING FACILITIES - PHASE 2

CAPITAL PROJECT S-6295
CONTRACT NO. 24-4936

ELECTION DISTRICT NO. 6
HOWARD COUNTY, MARYLAND

SCALE AS SHOWN

SHEET 272 OF 311

E-526

BIM 360://10054364 – Little Patuxent WRP 8th Addition/264592_E_HDR_V18.rvt
1/8/2022 1:43:16 PM

GENERAL NOTES:

1. SEE ELECTRICAL ONE-LINE DIAGRAMS AND CONDUIT AND WIRE SCHEDULES FOR DRIVE,STATER AND MOTOR POWER CONDUIT.
2. INCLUDE 2#14 FOR MOTOR HEATER, 2#14 FOR DISCONNECT SWITCH AUXILARY CONTACT AND 2#14 FOR MOTOR THERMOSTATS IN 3/4" CONDUIT FROM CONTROLLER (STARTER OR VFD) TO MOTOR AS INDICATED IN SCHEMATIC DIAGRAM. TYPICAL FOR MOTORS
3. SEE PANEL SCHEDULES FOR INSTRUMENT POWER CIRCUIT NUMBER.

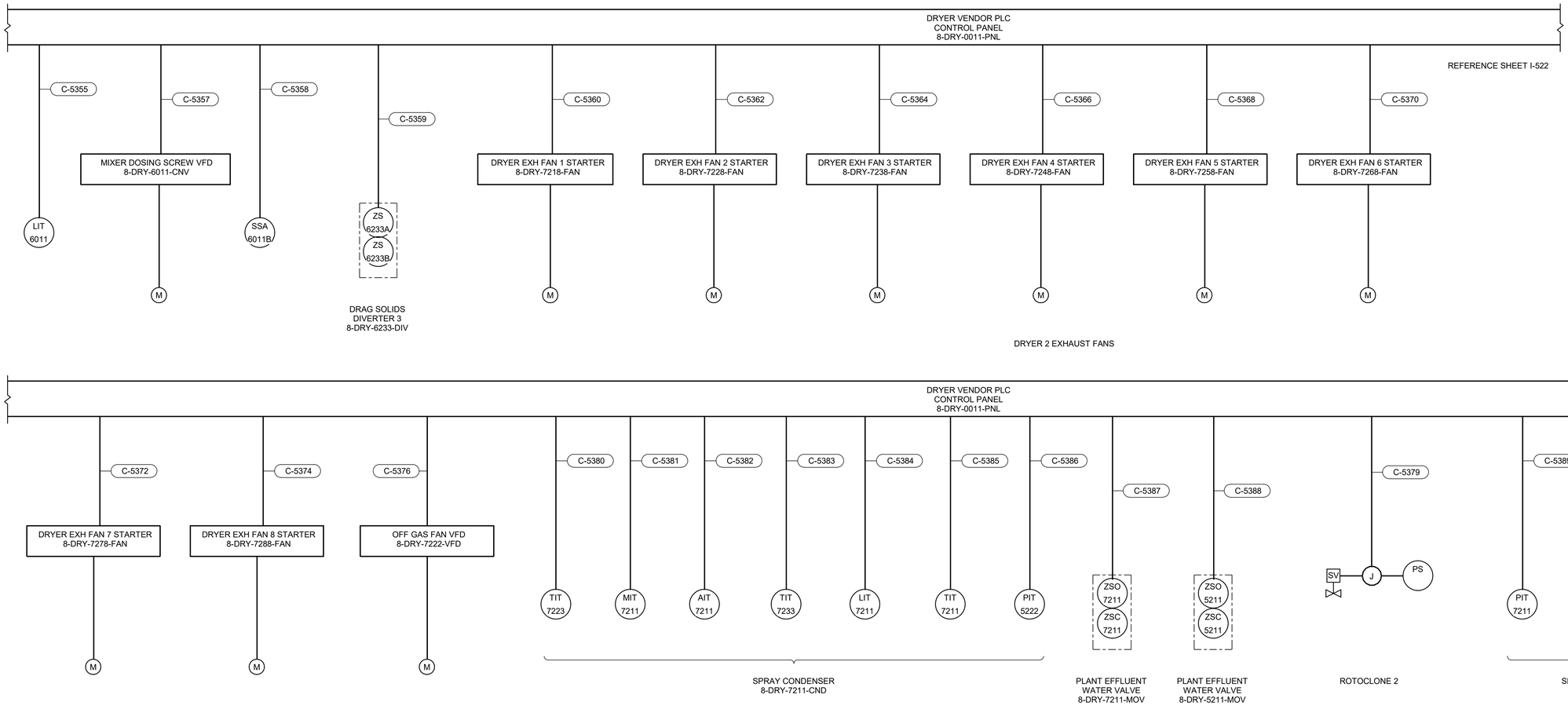

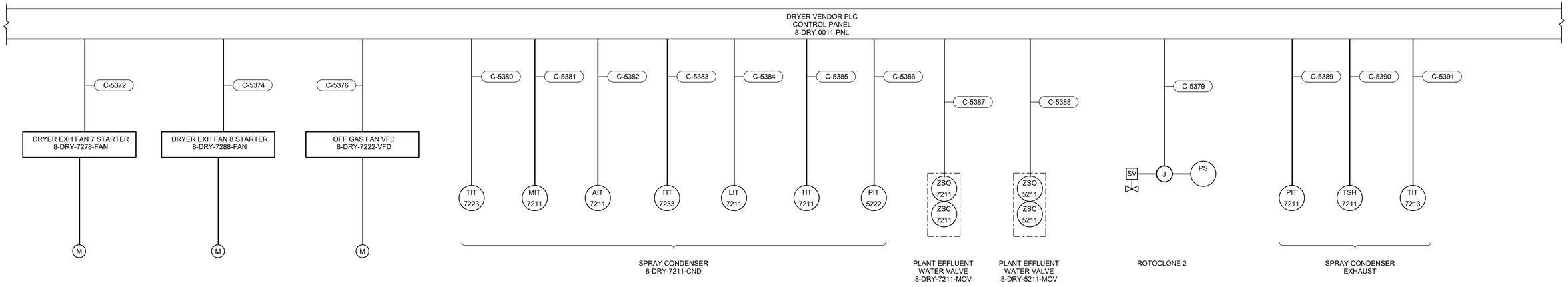

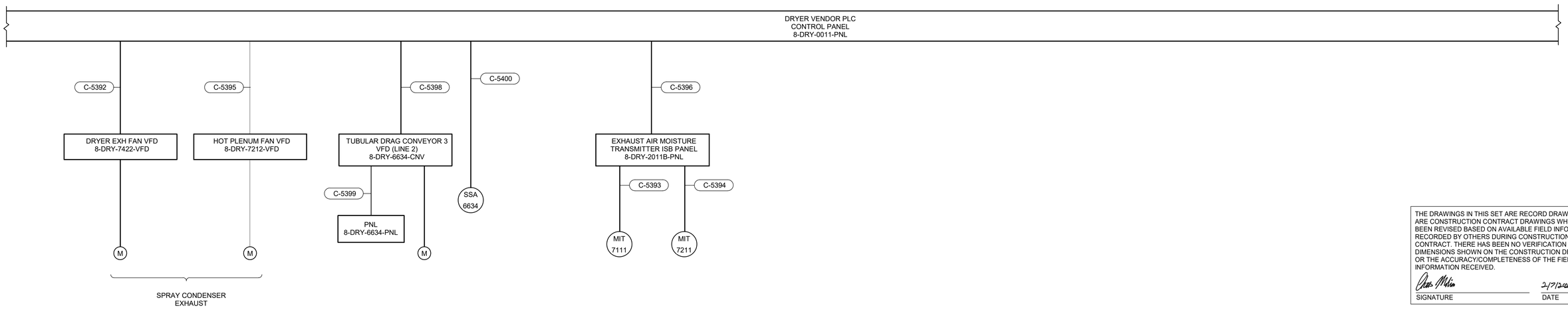

THE DRAWINGS IN THIS SET ARE RECORD DRAWINGS. THEY ARE CONSTRUCTION CONTRACT DRAWINGS WHICH HAVE BEEN REVISED BASED ON AVAILABLE FIELD INFORMATION RECORDED BY OTHERS DURING CONSTRUCTION OF THIS CONTRACT. THERE HAS BEEN NO VERIFICATION OF DIMENSIONS SHOWN ON THE CONSTRUCTION DRAWINGS OR THE ACCURACY/COMPLETENESS OF THE FIELD INFORMATION RECEIVED.

SIGNATURE — DATE 2/7/2023

AS-BUILT REPLACEMENT SHEET

PROFESSIONAL CERTIFICATION

THIS DRAWING WAS ORIGINALLY APPROVED FOR CONSTRUCTION AND SEALED BY ROBERT L. ANDERSON, A REGISTERED PROFESSIONAL ENGINEER IN THE STATE OF MARYLAND, NO. 37997

NOTICE TO CONTRACTORS

- PROJECT ELEVATIONS ARE BASED ON NAVD88 AND HOWARD COUNTY'S BENCHMARK SYSTEM
- PREVIOUS PROJECTS USED OTHER DATUMS
- APPLY THE FOLLOWING CONVERSIONS WHEN USING PREVIOUS CONTRACT DRAWINGS:
  - ADDITION NO. 6: SUBTRACT 0.80 FT
  - PRIOR ADDITIONS: SUBTRACT 1.04 FT

DEPARTMENT OF PUBLIC WORKS
HOWARD COUNTY, MARYLAND

CHIEF, BUREAU OF UTILITIES — DATE

DES: WAC
DRN: WAC
CHK: RLA
DATE: 01/2018

DATE	REV	DESCRIPTION
03/2021		RECORD DRAWINGS

ELECTRICAL

DRYER 2 INSTRUMENTATION ONELINE DIAGRAM II ELECTRICAL

LITTLE PATUXENT WATER RECLAMATION PLANT
8TH ADDITION
BIOSOLIDS PROCESSING FACILITIES - PHASE 2

CAPITAL PROJECT S-6295
CONTRACT NO. 24-4936

ELECTION DISTRICT NO. 6
HOWARD COUNTY, MARYLAND

SCALE AS SHOWN

SHEET 273 OF 311

E-527

BIM 360://10054364 – Little Patuxent WRP 8th Addition/264592_E_HDR_V18.rvt
1/8/2022 1:43:18 PM

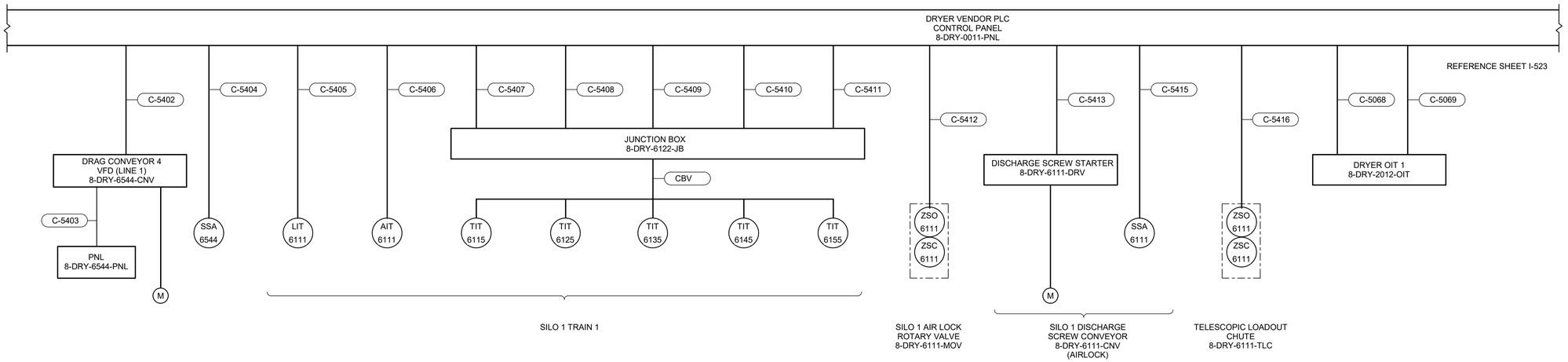

GENERAL NOTES:

1. SEE ELECTRICAL ONE-LINE DIAGRAMS AND CONDUIT AND WIRE SCHEDULES FOR DRIVE,STATER AND MOTOR POWER CONDUIT.
2. INCLUDE 2#14 FOR MOTOR HEATER, 2#14 FOR DISCONNECT SWITCH AUXILARY CONTACT AND 2#14 FOR MOTOR THERMOSTATS IN 3/4" CONDUIT FROM CONTROLLER (STARTER OR VFD) TO MOTOR AS INDICATED IN SCHEMATIC DIAGRAM. TYPICAL FOR MOTORS
3. SEE PANEL SCHEDULES FOR INSTRUMENT POWER CIRCUIT NUMBER.

CBV: CABLE ACCORDING TO VENDOR SPECIFICATIONS

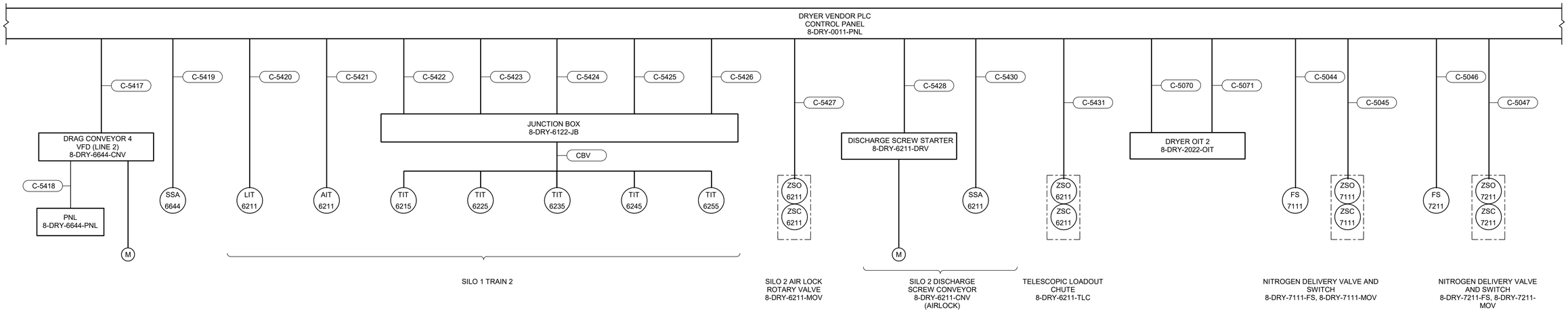

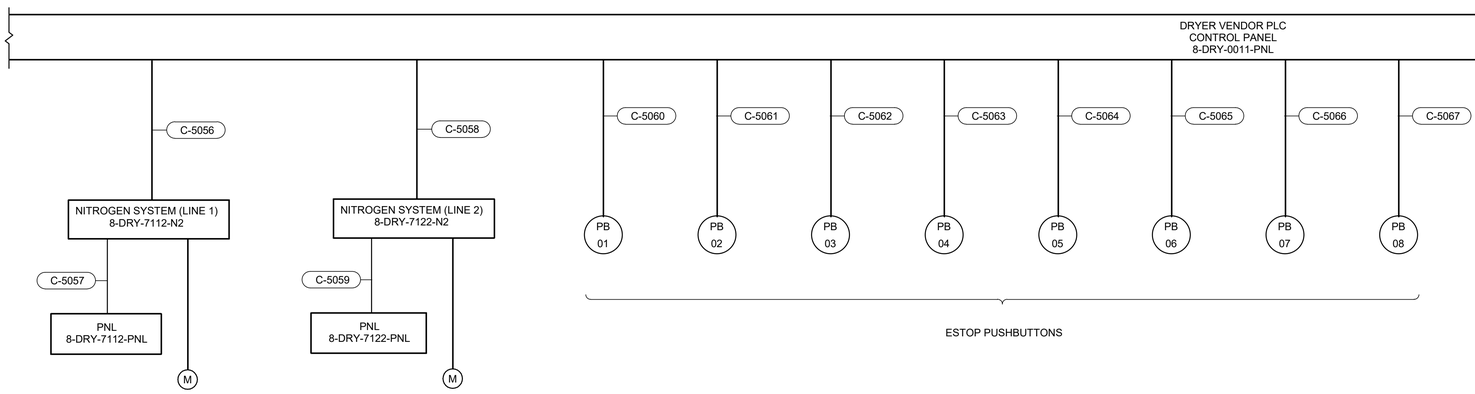

THE DRAWINGS IN THIS SET ARE RECORD DRAWINGS. THEY ARE CONSTRUCTION CONTRACT DRAWINGS WHICH HAVE BEEN REVISED BASED ON AVAILABLE FIELD INFORMATION RECORDED BY OTHERS DURING CONSTRUCTION OF THIS CONTRACT. THERE HAS BEEN NO VERIFICATION OF DIMENSIONS SHOWN ON THE CONSTRUCTION DRAWINGS OR THE ACCURACY/COMPLETENESS OF THE FIELD INFORMATION RECEIVED.

SIGNATURE _____ DATE 2/7/2022

AS-BUILT REPLACEMENT SHEET

PROFESSIONAL CERTIFICATION

THIS DRAWING WAS ORIGINALLY APPROVED FOR CONSTRUCTION AND SEALED BY ROBERT L. ANDERSON, A REGISTERED PROFESSIONAL ENGINEER IN THE STATE OF MARYLAND, NO. 37997

NOTICE TO CONTRACTORS

- PROJECT ELEVATIONS ARE BASED ON NAVD88 AND HOWARD COUNTY'S BENCHMARK SYSTEM
- PREVIOUS PROJECTS USED OTHER DATUMS
- APPLY THE FOLLOWING CONVERSIONS WHEN USING PREVIOUS CONTRACT DRAWINGS:
  - ADDITION NO. 6: SUBTRACT 0.80 FT
  - PRIOR ADDITIONS: SUBTRACT 1.04 FT

DEPARTMENT OF PUBLIC WORKS
HOWARD COUNTY, MARYLAND

CHIEF, BUREAU OF UTILITIES DATE

DES: WAC
DRN: WAC
CHK: RLA
DATE: 01/2018

DATE	REV	DESCRIPTION
03/2021		RECORD DRAWINGS

ELECTRICAL

SILO INSTRUMENTATION ONELINE ELECTRICAL

LITTLE PATUXENT WATER RECLAMATION PLANT
8TH ADDITION
BIOSOLIDS PROCESSING FACILITIES - PHASE 2

CAPITAL PROJECT S-6295
CONTRACT NO. 24-4936

ELECTION DISTRICT NO. 6
HOWARD COUNTY, MARYLAND

SCALE AS SHOWN

SHEET 274 OF 311

E-528

BIM 360://10054364 – Little Patuxent WRP 8th Addition/284592_E_HDR_V18.rvt
1/8/2022 1:43:21 PM

GENERAL NOTES:

1. FOR SYMBOLS AND ABBREVIATIONS, SEE DRAWING E-1.
2. FOR CONSTRUCTION SEQUENCE, SEE DRAWING E-2.
3. FOR PANELBOARD LOCATION, SEE DRAWING E-29.

PANELBOARD SCHEDULE

PANEL : DP-10 SECTION 1 , BUS AMPS : 200A VOLTS : 480 V , PHASE : 3 , WIRES : 3 + G , MAIN CB: 170A , CKT'S : 60

MOUNTING: SURFACE , ENCLOSURE : NEMA 12 , LOCATION : DRYER BUILDING ELECTRICAL ROOM, INT. CURRENT : 42 KA, RMS AIC

LOAD NAME	VA ØA	VA ØB	VA ØC	FA	TA	P	SNOP	BUS A B C	SNOP	P	TA	FA	VA ØA	VA ØB	VA ØC	LOAD NAME
XFMR FOR PANEL LP10A	10000	-	-	100	45	3	1	A	2	3	30	100	5000	-	-	XFMR FOR PANEL LP10B
-	-	10000	-	-	-	-	3	B	4	-	-	-	-	5000	-	-
-	-	-	10000	-	-	-	5	C	6	-	-	-	-	-	5000	-
8-CTR-4014-MOV	-	-	-	100	20	3	7	A	8	3	20	100	-	-	-	8-CTR-4024-MOV
-	-	-	-	-	-	-	9	B	10	-	-	-	-	-	-	-
-	-	-	-	-	-	-	11	C	12	-	-	-	-	-	-	-
8-CTR-4034-MOV	582	-	-	100	20	3	13	A	14	3	20	100	582	-	-	8-CTR-4044-MOV
-	-	582	-	-	-	-	15	B	16	-	-	-	-	582	-	-
-	-	-	582	-	-	-	17	C	18	-	-	-	-	-	582	-
PROCESS WATER FILTRATION FEED VALVE 8-DRY-1224-MOV (FUTURE)	582	-	-	100	20	3	19	A	20	3	20	100	582	-	-	PROCESS WATER FILTRATION FEED VALVE 8-DRY-1214-MOV
-	-	582	-	-	-	-	21	B	22	-	-	-	-	582	-	-
-	-	-	582	-	-	-	23	C	24	-	-	-	-	-	582	-
SPARE	-	-	-	100	20	3	25	A	26	3	20	100	-	-	-	SPARE
-	-	-	-	-	-	-	27	B	28	-	-	-	-	-	-	-
-	-	-	-	-	-	-	29	C	30	-	-	-	-	-	-	-
DRYER 1 SOLIDS RETURN VALVE 8-DRY-4111A-MOV	582	-	-	100	20	3	31	A	32	3	20	100	582	-	-	DRYER 2 SOLIDS RETURN VALVE 8-DRY-4211A-MOV
-	-	582	-	-	-	-	33	B	34	-	-	-	-	582	-	-
-	-	-	582	-	-	-	35	C	36	-	-	-	-	-	582	-
DRYER 1 SOLIDS FEED PUMP 1 MOTORIZED VALVE 8-DRY-4112B-MOV	582	-	-	100	20	3	37	A	38	3	20	100	582	-	-	DRYER 1 SOLIDS FEED PUMP 2 MOTORIZED VALVE 8-DRY-4122B-MOV
-	-	582	-	-	-	-	39	B	40	-	-	-	-	582	-	-
-	-	-	582	-	-	-	41	C	42	-	-	-	-	-	582	-
DRYER 2 SOLIDS FEED PUMP 1 MOTORIZED VALVE 8-DRY-4212B-MOV	582	-	-	100	20	3	43	A	44	3	20	100	582	-	-	DRYER 2 SOLIDS FEED PUMP 2 MOTORIZED VALVE 8-DRY-4222B-MOV
-	-	582	-	-	-	-	45	B	46	-	-	-	-	582	-	-
-	-	-	582	-	-	-	47	C	48	-	-	-	-	-	582	-
DRYER 1 SOLIDS FEED MOTORIZED VALVE 8-DRY-4111B-MOV	582	-	-	100	20	3	49	A	50	3	20	100	582	-	-	DRYER 2 SOLIDS FEED MOTORIZED VALVE 8-DRY-4211B-MOV
-	-	582	-	-	-	-	51	B	52	-	-	-	-	582	-	-
-	-	-	582	-	-	-	53	C	54	-	-	-	-	-	582	-
SPARE	-	-	-	100	20	3	55	A	56	3	20	100	-	-	-	SPARE
-	-	-	-	-	-	-	57	B	58	-	-	-	-	-	-	-
-	-	-	-	-	-	-	59	C	60	-	-	-	-	-	-	-
SUB TOTAL PER PHASE DP-10 SECTION 1	13492	13492	13492										8492	8492	8492	
SUB TOTAL PER PHASE DP-10 SECTION 2	3576	3576	3576										1497	1497	1497	
TOTAL LOAD PER PHASE	27097	27097	27097													

CONTINUOUS LOAD =	87240 VA
25% SPARE + OTHER LOAD =	21810 VA
TOTAL LOAD =	109050 VA
TOTAL LOAD (AMPS) =	131.71 A

PANELBOARD SCHEDULE

PANEL : DP-10 SECTION 2 , BUS AMPS : 200A VOLTS : 480 V , PHASE : 3 , WIRES : 3 + G , MAIN CB: MLO , CKT'S : 60

MOUNTING: SURFACE , ENCLOSURE : NEMA 12 , LOCATION : DRYER BUILDING ELECTRICAL ROOM, INT. CURRENT : 42 KA, RMS AIC

LOAD NAME	VA ØA	VA ØB	VA ØC	FA	TA	P	SNOP	BUS A B C	SNOP	P	TA	FA	VA ØA	VA ØB	VA ØC	LOAD NAME
DRYER 1 PIPING DRYER DELUGE SYSTEM 8-DRY-5111-MOV	582	-	-	100	20	3	61	A	62	3	20	100	582	-	-	DRYER 2 PIPING DRYER DELUGE SYSTEM 8-DRY-5211-MOV
-	-	582	-	-	-	-	63	B	64	-	-	-	-	582	-	-
-	-	-	582	-	-	-	65	C	66	-	-	-	-	-	582	-
DRYER 1 CONDENSER SPRAY WATER BUTTERFLY VALVE 8-DRY-7111-MOV	582	-	-	100	20	3	67	A	68	3	20	100	-	-	-	SPARE
-	-	582	-	-	-	-	69	B	70	-	-	-	-	-	-	-
-	-	-	582	-	-	-	71	C	72	-	-	-	-	-	-	-
SILO 1 MOTOR OPERATED NITROGEN VALVE 1, 8-DRY-7112-MOV-	582	-	-	100	20	3	73	A	74	3	20	100	-	-	-	SPARE
-	-	582	-	-	-	-	75	B	76	-	-	-	-	-	-	-
-	-	-	582	-	-	-	77	C	78	-	-	-	-	-	-	-
SILO 2 MOTOR OPERATED NITROGEN VALVE 1, 8-DRY-7212-MOV-	582	-	-	100	20	3	79	A	80	3	20	100	-	-	-	SPARE
-	-	582	-	-	-	-	81	B	82	-	-	-	-	-	-	-
-	-	-	582	-	-	-	83	C	84	-	-	-	-	-	-	-
DRYER 1 DRY SOLIDS DIVERTER 1 8-DRY-6113-DIV	305	-	-	100	20	3	85	A	86	3	20	100	305	-	-	DRYER 2 DRY SOLIDS DIVERTER 1 8-DRY-6213-DIV
-	-	305	-	-	-	-	87	B	88	-	-	-	-	305	-	-
-	-	-	305	-	-	-	89	C	90	-	-	-	-	-	305	-
DRYER 1 DRY SOLIDS DIVERTER 2 8-DRY-6123-DIV	305	-	-	100	20	3	91	A	92	3	20	100	305	-	-	DRYER 2 DRY SOLIDS DIVERTER 2
-	-	305	-	-	-	-	93	B	94	-	-	-	-	305	-	-
-	-	-	305	-	-	-	95	C	96	-	-	-	-	-	305	-
DRYER 1 DRY SOLIDS DIVERTER 3 8-DRY-6133-DIV	305	-	-	100	20	3	97	A	98	3	20	100	305	-	-	DRYER 2 DRY SOLIDS DIVERTER 3 8-DRY-6233-DIV
-	-	305	-	-	-	-	99	B	100	-	-	-	-	305	-	-
-	-	-	305	-	-	-	101	C	102	-	-	-	-	-	305	-
SPARE	-	-	-	100	20	3	103	A	104	3	20	100	-	-	-	SPARE
-	-	-	-	-	-	-	105	B	106	-	-	-	-	-	-	-
-	-	-	-	-	-	-	107	C	108	-	-	-	-	-	-	-
DRYER ROOM RU DOOR #1 (NORTH)	-	-	-	100	20	3	109	A	110	3	20	100	-	-	-	DRYER ROOM RU DOOR #2 (MIDDLE)
-	-	-	-	-	-	-	111	B	112	-	-	-	-	-	-	-
-	-	-	-	-	-	-	113	C	114	-	-	-	-	-	-	-
DRYER ROOM RU DOOR #3 (SOUTH)	-	-	-	100	20	3	115	A	116	3	20	100	-	-	-	SPARE
-	-	-	-	-	-	-	117	B	118	-	-	-	-	-	-	-
-	-	-	-	-	-	-	119	C	120	-	-	-	-	-	-	-
SUB TOTAL PER PHASE DP-10 SECTION 2	3243	3243	3243										1497	1497	1497	
TOTAL LOAD PER PHASE	4740	4740	4740													

THE DRAWINGS IN THIS SET ARE RECORD DRAWINGS. THEY ARE CONSTRUCTION CONTRACT DRAWINGS WHICH HAVE BEEN REVISED BASED ON AVAILABLE FIELD INFORMATION RECORDED BY OTHERS DURING CONSTRUCTION OF THIS CONTRACT. THERE HAS BEEN NO VERIFICATION OF DIMENSIONS SHOWN ON THE CONSTRUCTION DRAWINGS OR THE ACCURACY/COMPLETENESS OF THE FIELD INFORMATION RECEIVED.

SIGNATURE — DATE 2/7/2023

SHAH & ASSOCIATES

AS-BUILT REPLACEMENT SHEET

PROFESSIONAL CERTIFICATION
THIS DRAWING WAS ORIGINALLY APPROVED FOR CONSTRUCTION AND SEALED BY KANAIYALAL R. SHAH, A REGISTERED PROFESSIONAL ENGINEER IN THE STATE OF MARYLAND, NO. 11084

NOTICE TO CONTRACTORS
- PROJECT ELEVATIONS ARE BASED ON NAVD88 AND HOWARD COUNTY'S BENCHMARK SYSTEM
- PREVIOUS PROJECTS USED OTHER DATUMS
- APPLY THE FOLLOWING CONVERSIONS WHEN USING PREVIOUS CONTRACT DRAWINGS:
  - ADDITION NO. 6: SUBTRACT 0.80 FT
  - PRIOR ADDITIONS: SUBTRACT 1.04 FT

DEPARTMENT OF PUBLIC WORKS
HOWARD COUNTY, MARYLAND

CHIEF, BUREAU OF UTILITIES — DATE

DES: MM
DRN: DMG
CHK: KRS
DATE: 01/15/2018

DATE	REV	DESCRIPTION
03/2021		RECORD DRAWING

ELECTRICAL

PANELBOARD SCHEDULE - I

LITTLE PATUXENT WATER RECLAMATION PLANT
8TH ADDITION
BIOSOLIDS PROCESSING FACILITIES - PHASE 2

CAPITAL PROJECT S-6295
CONTRACT NO. 24-4936

ELECTION DISTRICT NO. 6
HOWARD COUNTY, MARYLAND

SCALE AS SHOWN

SHEET 275 OF 311

E-901

BIM 360://10054364 – Little Patuxent WRP 8th Addition/264592_100_E_V18.rvt
1/8/2022 11:27:22 AM

GENERAL NOTES:

1. FOR SYMBOLS AND ABBREVIATIONS, SEE DRAWING E-1.
2. FOR CONSTRUCTION SEQUENCE, SEE DRAWING E-2.
3. FOR PANELBOARD LOCATION, SEE DRAWING E-29

PANELBOARD SCHEDULE

PANEL : LP10A , BUS AMPS : 100A VOLTS : 120/208 V , PHASE : 3 , WIRES : 4 + G , MAIN CB: 85A , CKT'S : 60

MOUNTING: SURFACE , ENCLOSURE : NEMA 12 , LOCATION : DRYER BUILDING ELECTRICAL ROOM, INT. CURRENT : 22KA, RMS AIC

LOAD NAME	VA			FA	TA	P	SNOP	BUS A B C	SNOP	P	TA	FA	VA			LOAD NAME
	ØA	ØB	ØC										ØA	ØB	ØC	
FIT 1212	100	-	-	100	20	1	1		2	1	20	100	100	-	-	FIT 1222
8-DRY-7112-N2 CONTROL PANEL	-	100	-	100	20	1	3		4	1	20	100	-	100	-	8-DRY-7122-N2 CONTROL PANEL
8-DRY-7011-AD	-	-	100	100	20	1	5		6	1	20	100	-	-	100	8-DRY-7021-AD
PW FILTER 1 CP	250	-	-	100	20	1	7		8	1	20	100	250	-	-	PW FILTER 2 CP
FIT 1411	-	100	-	100	20	1	9		10	1	20	100	-	100	-	FIT 1612
FIT 1622	-	-	100	100	20	1	11		12	1	20	100	-	-	100	PIT 1411
DRYER 1 SOLIDS ROLLER PRESS LS 8-DRY-5911-LS	100	-	-	100	20	1	13		14	1	20	100	100	-	-	DRYER 1 HOT AIR PLENUM TEMP. SWITCH 8-DRY-7111-TSH
DRYER 1 SOLIDS ROLLER PRESS LS 8-DRY-5011-LS	-	100	-	100	20	1	15		16	1	20	100	-	100	-	DRYER 2 HOT AIR PLENUM TEMP. SWITCH 8-DRY-7211-TSH
SPACE	-	-	-	-	-	-	17		18	1	20	100	-	-	-	ISB PANEL 8-DRY-2011B-PNL
SPARE	-	-	-	100	20	1	19		20	1	20	100	-	-	-	SPARE
TRUCK ALERT LCS 8-DRY-2211-PNL	-	-	-	100	20	1	21		22	1	20	100	-	-	-	SPARE
DRYER LOCAL CONTROL PANEL 8-DRY-291A-PNL UPS	-	-	3000	100	40	2	23		24	1	100	40	-	-	2500	DRYER LOCAL CONTROL PANEL 8-DRY-2011A-PNL
-	3000	-	-	-	-	-	25		26	1	20	100	-	-	-	SPARE
DRYER AREA PLC NETWORK INTERFACE PANEL 8-DRY-0011-NIP	-	3000	-	100	35	1	27		28	1	20	100	-	-	-	SPARE
SPARE	-	-	-	100	20	1	29		30	1	20	100	-	-		SPARE
SPARE	-	-	-	100	20	1	31		32	1	20	100	-	-	-	SPARE
SPARE	-	-	-	100	20	1	33		34	1	20	100	-	-	-	SPARE
SPARE	-	-	-	100	20	1	35		36	1	20	100	-	-	-	SPARE
SPARE	-	-	-	100	20	1	37		38	1	20	100	-	-	-	SPARE
SPARE	-	-	-	100	20	2	39		40	2	30	100	-	-	-	SPARE
SPARE	-	-	-	-	-	-	41		42	-	-	-	-	-	-	SPARE
SPARE	-	-	-	100	40	2	43		44	1	30	100	-	-	-	SPARE
SPARE	-	-	-	-	-	-	45		46	1	30	100	-	-	-	SPARE
SPARE	-	-	-	100	20	1	47		48	1	20	100	-	-	-	SPARE
SPARE	-	-	-	100	20	1	49		50	1	20	100	-	-	-	SPARE
SPACE	-	-	-	-	-	-	51		52	-	-	-	-	-	-	SPACE
SPACE	-	-	-	-	-	-	53		54	-	-	-	-	-	-	SPACE
SPACE	-	-	-	-	-	-	55		56	-	-	-	-	-	-	SPACE
SPACE	-	-	-	-	-	-	57		58	-	-	-	-	-	-	SPACE
SPACE	-	-	-	-	-	-	59		60	-	-	-	-	-	-	SPACE
SUB TOTAL PER PHASE	3450	3300	3200										450	300	2700	
TOTAL LOAD PER PHASE	3900	3600	5900													

CONTINUOUS LOAD =	13400 VA
25% SPARE + OTHER LOAD =	3350 VA
TOTAL LOAD =	16750 VA
TOTAL LOAD (AMPS) =	46.50 A

THE DRAWINGS IN THIS SET ARE RECORD DRAWINGS. THEY ARE CONSTRUCTION CONTRACT DRAWINGS WHICH HAVE BEEN REVISED BASED ON AVAILABLE FIELD INFORMATION RECORDED BY OTHERS DURING CONSTRUCTION OF THIS CONTRACT. THERE HAS BEEN NO VERIFICATION OF DIMENSIONS SHOWN ON THE CONSTRUCTION DRAWINGS OR THE ACCURACY/COMPLETENESS OF THE FIELD INFORMATION RECEIVED.

SIGNATURE — DATE 2/7/2023

SHAH & ASSOCIATES

AS-BUILT REPLACEMENT SHEET

PROFESSIONAL CERTIFICATION
THIS DRAWING WAS ORIGINALLY APPROVED FOR CONSTRUCTION AND SEALED BY KANAIYALAL R. SHAH, A REGISTERED PROFESSIONAL ENGINEER IN THE STATE OF MARYLAND, NO. 11084

NOTICE TO CONTRACTORS
- PROJECT ELEVATIONS ARE BASED ON NAVD88 AND HOWARD COUNTY'S BENCHMARK SYSTEM
- PREVIOUS PROJECTS USED OTHER DATUMS
- APPLY THE FOLLOWING CONVERSIONS WHEN USING PREVIOUS CONTRACT DRAWINGS:
  - ADDITION NO. 6: SUBTRACT 0.80 FT
  - PRIOR ADDITIONS: SUBTRACT 1.04 FT

DEPARTMENT OF PUBLIC WORKS
HOWARD COUNTY, MARYLAND

CHIEF, BUREAU OF UTILITIES — DATE

DES: MM
DRN: DMG
CHK: KRS
DATE: 01/15/2018

DATE	REV	DESCRIPTION
03/2021		RECORD DRAWING

ELECTRICAL

PANELBOARD SCHEDULE - II

LITTLE PATUXENT WATER RECLAMATION PLANT
8TH ADDITION
BIOSOLIDS PROCESSING FACILITIES - PHASE 2

CAPITAL PROJECT S-6295
CONTRACT NO. 24-4936

ELECTION DISTRICT NO. 6
HOWARD COUNTY, MARYLAND

SCALE AS SHOWN

SHEET 276 OF 311

E-902

BIM 360://10054364 – Little Patuxent WRP 8th Addition/264592_100_E_V18.rvt
1/8/2022 11:27:24 AM

GENERAL NOTES:

1. FOR SYMBOLS AND ABBREVIATIONS, SEE DRAWING E-1.
2. FOR CONSTRUCTION SEQUENCE, SEE DRAWING E-2.
3. FOR PANELBOARD LOCATION, SEE DRAWING E-29

PANELBOARD SCHEDULE

PANEL : LP10B , BUS AMPS : 100A VOLTS : 120/208 V , PHASE : 3 , WIRES : 4 + G , MAIN CB: 60A , CKT'S : 30

MOUNTING: SURFACE , ENCLOSURE : NEMA 12 , LOCATION : DRYER BUILDING ELECTRICAL ROOM, INT. CURRENT : 22KA, RMS AIC

LOAD NAME	VA ØA	VA ØB	VA ØC	FA	TA	P	SNOP	BUS A B C	SNOP	P	TA	FA	VA ØA	VA ØB	VA ØC	LOAD NAME
SPARE	-	-	-	100	20	1	1		2	1	20	100	-	-	-	SPARE
SPARE	-	-	-	100	20	1	3		4	1	20	100	-	-	-	SPARE
SPARE	-	-	-	100	20	1	5		6	2	30	100	-	-	-	SPARE
SPARE	-	-	-	100	20	1	7		8	-	-	-	-	-	-	-
SPARE	-	-	-	100	40	2	9		10	2	30	100	-	-	-	SPARE
-	-	-	-	-	-	-	11		12	-	-	-	-	-	-	-
SPARE	-	-	-	100	40	2	13		14	2	30	100	-	-	-	SPARE
-	-	-	-	-	-	-	15		16	-	-	-	-	-	-	-
SPARE	-	-	-	100	20	2	17		18	2	20	100	-	-	-	SPARE
-	-	-	-	-	-	-	19		20	-	-	-	-	-	-	-
SPARE	-	-	-	100	30	1	21		22	1	30	100	-	-	-	SPARE
SPARE	-	-	-	100	20	1	23		24	1	20	100	-	-	-	SPARE
SPARE	-	-	-	100	20	1	25		26	1	20	100	-	-	-	SPARE
SPACE	-	-	-	-	-	-	27		28	-	-	-	-	-	-	SPACE
SPACE	-	-	-	-	-	-	29		30	-	-	-	-	-		SPACE
SUB TOTAL PER PHASE	1200	600	600										1100	1100	1000	
TOTAL LOAD PER PHASE	2300	1700	1600													

CONTINUOUS LOAD =	5600 VA
25% SPARE + OTHER LOAD =	1400 VA
TOTAL LOAD =	7000 VA
TOTAL LOAD (AMPS) =	19.43 A

THE DRAWINGS IN THIS SET ARE RECORD DRAWINGS. THEY ARE CONSTRUCTION CONTRACT DRAWINGS WHICH HAVE BEEN REVISED BASED ON AVAILABLE FIELD INFORMATION RECORDED BY OTHERS DURING CONSTRUCTION OF THIS CONTRACT. THERE HAS BEEN NO VERIFICATION OF DIMENSIONS SHOWN ON THE CONSTRUCTION DRAWINGS OR THE ACCURACY/COMPLETENESS OF THE FIELD INFORMATION RECEIVED.

SIGNATURE — DATE 2/7/2023

SHAH & ASSOCIATES

AS-BUILT REPLACEMENT SHEET

PROFESSIONAL CERTIFICATION
THIS DRAWING WAS ORIGINALLY APPROVED FOR CONSTRUCTION AND SEALED BY KANAIYALAL R. SHAH, A REGISTERED PROFESSIONAL ENGINEER IN THE STATE OF MARYLAND, NO. 11084

NOTICE TO CONTRACTORS
- PROJECT ELEVATIONS ARE BASED ON NAVD88 AND HOWARD COUNTY'S BENCHMARK SYSTEM
- PREVIOUS PROJECTS USED OTHER DATUMS
- APPLY THE FOLLOWING CONVERSIONS WHEN USING PREVIOUS CONTRACT DRAWINGS:
  - ADDITION NO. 6: SUBTRACT 0.80 FT
  - PRIOR ADDITIONS: SUBTRACT 1.04 FT

DEPARTMENT OF PUBLIC WORKS
HOWARD COUNTY, MARYLAND

CHIEF, BUREAU OF UTILITIES — DATE

DES: MM
DRN: DMG
CHK: KRS
DATE: 01/15/2018

DATE	REV	DESCRIPTION
03/2021		RECORD DRAWING

ELECTRICAL

PANELBOARD SCHEDULE - III

LITTLE PATUXENT WATER RECLAMATION PLANT
8TH ADDITION
BIOSOLIDS PROCESSING FACILITIES - PHASE 2

CAPITAL PROJECT S-6295
CONTRACT NO. 24-4936

ELECTION DISTRICT NO. 6
HOWARD COUNTY, MARYLAND

SCALE AS SHOWN

SHEET 277 OF 311

E-903

BIM 360://10054364 – Little Patuxent WRP 8th Addition/264592_100_E_V18.rvt
1/8/2022 11:27:25 AM

GENERAL NOTES:

1. FOR SYMBOLS AND ABBREVIATIONS, SEE DRAWING E-1.
2. FOR CONSTRUCTION SEQUENCE, SEE DRAWING E-2.
3. FOR PANELBOARD LOCATION, SEE DRAWING E-29.
4. CIRCUIT NUMBER 49, 51, 50, 52 CIRCUIT BREAKER SHALL BE GFCI BREAKER.

PANELBOARD SCHEDULE

PANEL : LP9A , BUS AMPS : 400A VOLTS : 120/208 V , PHASE : 3 , WIRES : 4 + G , MAIN CB: 300A , CKT'S : 72

MOUNTING: SURFACE , ENCLOSURE : NEMA 12 , LOCATION : DRYER BUILDING ELECTRICAL ROOM, INT. CURRENT : 22KA, RMS AIC

LOAD NAME	VA			FA	TA	P	SNOP	BUS			SNOP	P	TA	FA	VA			LOAD NAME
	ØA	ØB	ØC					A	B	C					ØA	ØB	ØC	
LIGHTING DRYER BUILDING ELECTRICAL ROOM	522	-	-	100	15	1	1				2	1	15	100	477	-	-	DRYER BUILDING ELECTRICAL ROOM OUTDOOR LIGHTING
LIGHTING DRYER BUILDING BATHROOM	-	96	-	100	15	1	3				4	1	15	100	-	1331	-	LIGHTING DRYER BUILDING
LIGHTING DRYER BUILDING	-	-	1158	100	15	1	5				6	1	15	100	-	-	1128	LIGHTING DRYER BUILDING
LIGHTING DRYER BUILDING	195	-	-	100	15	1	7				8	1	15	100	1128	-	-	LIGHTING DRYER BUILDING
LIGHTING BIOFILTER	-	209	-	100	15	1	9				10	1	15	100	-	1519	-	LIGHTING DRYER BUILDING
LIGHTING DRYER BUILDING BATHROOM	-	-	96	100	15	1	11				12	1	15	100	-	-	1331	LIGHTING DRYER BUILDING
DRYER BUILDING CONTROL ROOM LIGHTING ZONE 1	258	-	-	100	15	1	13				14	1	15	100	1331	-	-	LIGHTING DRYER BUILDING
DRYER BUILDING CONTROL ROOM LIGHTING ZONE 3	-	258	-	100	15	1	15				16	1	15	100	-	300	-	LIGHTING DRYER BUILDING
LIGHTING DRYER BUILDING SAMPLES ROOM	-	-	206	100	15	1	17				18	1	20	100	-	-	129	LIGHTING DRYER BUILDING STORAGE ROOM
BIOFILTER RECEPTACLE	360	-	-	100	20	1	19				20	1	20	100	720	-	-	DRYER BUILDING BATH ROOM RECEPTACLES
DRYER BUILDING RECEPTACLES @141.2	-	900	-	100	20	1	21				22	1	20	100	-	540	-	DRYER BUILDING STORAGE ROOM RECEPTACLES
DRYER BUILDING RECEPTACLES @155.2	-	-	180	100	20	1	23				24	1	20	100	-	-	360	DRYER BUILDING SAMPLE ROOM RECEPTACLES
DRYER BUILDING RECEPTACLES @141.2	540	-	-	100	20	1	25				26	1	20	100	540	-	-	DRYER BUILDING CONTROL ROOM RECEPTACLES
DRYER BUILDING RECEPTACLES @141.2	-	540	-	100	20	1	27				28	1	20	100	-	360	-	DRYER BUILDING CONTROL ROOM RECEPTACLES
DRYER BUILDING RECEPTACLES @155.2	-	-	540	100	20	1	29				30	1	20	100	-	-	720	DRYER BUILDING RECEPTACLES @141.2
DRYER BUILDING RECEPTACLES @155.2	720	-	-	100	20	1	31				32	1	20	100	232	-	-	DRYER BUILDING STAIRS LIGHTING
DRYER BUILDING STAIRS LIGHTING	-	232	-	100	20	1	33				34	1	20	100	-	232	-	DRYER BUILDING STAIRS LIGHTING
DRYER BUILDING STAIRS LIGHTING	-	-	116	100	20	1	35				36	1	20	100	-	-	232	DRYER BUILDING STAIRS LIGHTING
LIGHTING DRYER BUILDING ELECTRICAL ROOM	957	-	-	100	20	1	37				38	1	20	100	360	-	-	PS-2 SUBSTATION PLAT FORM RECEPTACLES
-	-	-	-	100	20	1	39				40	1	20	100	-	312	-	DRYER BUILDING OUTDOOR LIGHTING
EXISTING ROAD LIGHT-1 NEAR EXISTING PS-2 VAULT	-	-	-	100	20	2	41				42	2	20	100	-	-	-	EXISTING ROAD LIGHT-3 NEAR EXISTING PS-2 VAULT
-	-	-	-	-	-	-	43				44	-	-	-	-	-	-	-
EXISTING ROAD LIGHT-2 NEAR EXISTING PS-2 VAULT	-	-	-	100	20	2	45				46	2	20	100	-	-	-	EXISTING ROAD LIGHT-4 NEAR EXISTING PS-2 VAULT
-	-	-	-	-	-	-	47				48	-	-	-	-	-	-	-
EXISTING LOAD-ON (GFCI)	-	-	-	100	20	1	49				50	1	20	100	-	-	-	EXISTING FEED TO TRAILER / OFF (GFCI)
EXISTING LOAD-ON (GFCI)	-	-	-	100	20	1	51				52	1	20	100	-	-	-	EXISTING LOAD (GFCI)
EXISTING LIGHT EXISTING PS-2 VAULT	-	-	-	100	20	1	53				54	1	20	100	-	-	-	EXISTING RECEPTACLES ON PS-2 SUBSTATION DECK
EXISTING RECEPTACLE EXISTING PS-2 VAULT	-	-	-	100	20	1	55				56	1	20	100	-	-	-	EXISTING LIGHT EXISTING PS-2 DECK
DRYER BUILDING RECEPTACLES @155.2	-	720	-	100	20	1	57				58	3	200	200	10720	-	-	LP9B
DRYER BUILDING CONTROL ROOM LIGHTING ZONE 2	-	-	-	100	20	1	59				60	-	-	-	-	10720	-	-
WALKWAY BETWEEN DRYER ROOM AND TRUCK BAY LIGHT FIXTURES	120	-	-	100	20	1	61				62	-	-	-	-	-	10720	-
SILO 1 SKIRT LIGHT FIXTURES	-	428	-	100	20	1	63				64	1	20	100	-	360	-	DRYER BUILDING CONTROL ROOM WORK STATION RECEPTACLES
SILO 2 SKIRT LIGHT FIXTURES	-	-	428	100	20	1	65				66	1	20	100	-	-	360	DRYER BUILDING CONTROL ROOM WORK STATION RECEPTACLES
SILO 1 SKIRT RECEPTACLES	540	-	-	100	20	1	67				68	1	20	100	360	-	-	DRYER BUILDING SAMPLE ROOM COUNTER RECEPTACLES
SILO 2 SKIRT RECEPTACLES	-	540	-	100	20	1	69				70	1	20	100	-	360	-	DRYER BUILDING SAMPLE ROOM COUNTER RECEPTACLES
SPARE	-	-	-	100	20	1	71				72	1	20	100	-	-	360	WALKWAY BETWEEN DRYER ROOM AND TRUCK BAY LIGHT RECEPTACLES
SUB TOTAL PER PHASE LP9A	4212	3923	2724												15868	16034	15340	
TOTAL LOAD PER PHASE	20080	19957	18064															

CONTINUOUS LOAD =	558101 VA
25% SPARE + OTHER LOAD =	14525 VA
TOTAL LOAD =	72626 VA
TOTAL LOAD (AMPS) =	202 A

THE DRAWINGS IN THIS SET ARE RECORD DRAWINGS. THEY ARE CONSTRUCTION CONTRACT DRAWINGS WHICH HAVE BEEN REVISED BASED ON AVAILABLE FIELD INFORMATION RECORDED BY OTHERS DURING CONSTRUCTION OF THIS CONTRACT. THERE HAS BEEN NO VERIFICATION OF DIMENSIONS SHOWN ON THE CONSTRUCTION DRAWINGS OR THE ACCURACY/COMPLETENESS OF THE FIELD INFORMATION RECEIVED.

SIGNATURE _____ DATE 2/7/2023

SHAH & ASSOCIATES

AS-BUILT REPLACEMENT SHEET

PROFESSIONAL CERTIFICATION
THIS DRAWING WAS ORIGINALLY APPROVED FOR CONSTRUCTION AND SEALED BY KANAIYALAL R. SHAH, A REGISTERED PROFESSIONAL ENGINEER IN THE STATE OF MARYLAND, NO. 11084

NOTICE TO CONTRACTORS
- PROJECT ELEVATIONS ARE BASED ON NAVD88 AND HOWARD COUNTY'S BENCHMARK SYSTEM
- PREVIOUS PROJECTS USED OTHER DATUMS
- APPLY THE FOLLOWING CONVERSIONS WHEN USING PREVIOUS CONTRACT DRAWINGS:
  - ADDITION NO. 6: SUBTRACT 0.80 FT
  - PRIOR ADDITIONS: SUBTRACT 1.04 FT

DEPARTMENT OF PUBLIC WORKS
HOWARD COUNTY, MARYLAND

CHIEF, BUREAU OF UTILITIES DATE

DES: MM
DRN: DMG
CHK: KRS
DATE: 01/15/2018

DATE	REV	DESCRIPTION
03/2021		RECORD DRAWING

ELECTRICAL

PANELBOARD SCHEDULE - IV

LITTLE PATUXENT WATER RECLAMATION PLANT
8TH ADDITION
BIOSOLIDS PROCESSING FACILITIES - PHASE 2

CAPITAL PROJECT S-6295
CONTRACT NO. 24-4936

ELECTION DISTRICT NO. 6
HOWARD COUNTY, MARYLAND

SCALE AS SHOWN

SHEET 278 OF 311

E-904

BIM 360://100543364 – Little Patuxent WRP 8th Addition/264592_100_E_V18.rvt
1/8/2022 11:27:26 AM

GENERAL NOTES:

1. FOR SYMBOLS AND ABBREVIATIONS, SEE DRAWING E-1.
2. FOR CONSTRUCTION SEQUENCE, SEE DRAWING E-2.
3. FOR PANELBOARD LOCATION, SEE DRAWING E-29.
4. CIRCUIT NUMBER 49, 51, 50, 52 CIRCUIT BREAKER SHALL BE GFCI BREAKER.

PANELBOARD SCHEDULE

PANEL : LP9B , BUS AMPS : 200A VOLTS : 120/208 V , PHASE : 3 , WIRES : 4 + G , MAIN CB: 125A , CKT'S : 60

MOUNTING: SURFACE , ENCLOSURE : NEMA 12 , LOCATION : DRYER BUILDING ELECTRICAL ROOM, INT. CURRENT : 22KA, RMS AIC

LOAD NAME	VA ØA	VA ØB	VA ØC	FA	TA	P	SNO/P	BUS A B C	SNO/P	P	TA	FA	VA ØA	VA ØB	VA ØC	LOAD NAME
FAN COOLING UNIT-50-FCU01	1113	-	-	100	15	2	1		2	2	15	100	1113	-	-	FAN COOLING UNIT-50-FCU02
-	-	1113	-	-	-	-	3		4	-	-	-	-	1113	-	-
FAN COOLING UNIT-50-FCU03	-	-	1113	100	15	2	5		6	2	15	100	-	-	1113	FAN COOLING UNIT-50-FCU04
-	1113	-	-	-	-	-	7		8	-	-	-	1113	-	-	-
FAN COOLING UNIT-50-FCU05	-	1113	-	100	15	2	9		10	2	15	100	-	1113	-	FAN COOLING UNIT-50-FCU06
-	-	-	1113	-	-	-	11		12	-	-	-	-	-	1113	-
FAN COOLING UNIT-50-FCU07	1113	-	-	100	15	2	13		14	2	15	100	291	-	-	FAN COOLING UNIT-50-FCU08
-	-	1113	-	-	-	-	15		16	-	-	-	-	291	-	-
FAN COOLING UNIT-50-FCU09	-	-	291	100	15	2	17		18	1	20	100	-	-	667	EXHAUST FAN 50-EF06/SF-01
-	291	-	-	100	-	-	19		20	1	20	100	1127	-	-	EXHAUST FAN 50-EF07
SUPPLY FAN 50-SF01	-	345	-	100	20	1	21		22	1	20	100	-	345	-	SUPPLY FAN 50-SF02
SPARE	-	-	100	100	20	1	23		24	1	20	100	-	-	100	SPARE
SPARE	100	-	-	100	20	1	25		26	1	20	100	100	-	-	SPARE
SPARE	-	100	-	100	20	1	27		28	1	20	100	-	100	-	SPARE
SPARE	-	-	100	100	20	1	29		30	1	20	100	-	-	100	SPARE
SPARE	100	-	-	100	20	1	31		32	1	20	100	100	-	-	SPARE
SPARE	-	100	-	100	20	1	33		34	1	20	100	-	100	-	SPARE
SPARE	-	-	100	100	20	1	35		36	1	20	100	-	-	100	SPARE
SPARE	100	-	-	100	20	1	37		38	1	20	100	100	-	-	SPARE
SPARE	-	100	-	100	20	1	39		40	1	20	100	-	1600	-	FACU
SPARE	-	-	-	100	20	1	41		42	1	45	100	-	-	2798	PRE-ACTION AUXILIARY SPRINKLER SYSTEM COMPRESSOR
MAU01-TCP	-	100	-	100	20	1	43		44	1	20	100	100	-	-	MAU02-TCP
MAU03-TCP	-	-	100	100	20	1	45		46	1	20	100	-	100	-	HP01-HP02-TCP
SPARE	-	-	-	100	20	2	47		48	2	20	100	-	-	-	SPARE
-	-	-	-	-	-	-	49		50	-	-	-	-	-	-	-
SPARE	-	-	-	100	30	1	51		52	2	30	100	-	-	-	SPARE
SPARE	-	-	-	100	40	2	53		54	-	-	-	-	-	-	-
-	-	-	-	-	-	-	55		56	1	20	100	-	-	-	GBT-4911-CCP
SPARE	-	-	-	100	20	1	57		58	1	20	100	-	-	-	SPARE
SPARE	-	-	-	100	20	1	59		60	1	20	100	-	-	-	SPARE
SUB TOTAL PER PHASE	3930	4084	2917										4044	4762	5991	
TOTAL LOAD PER PHASE	7974	8846	8908													

CONTINUOUS LOAD =	25728 VA
25% SPARE + OTHER LOAD =	6432 VA
TOTAL LOAD =	32160 VA
TOTAL LOAD (AMPS) =	89.27 A

THE DRAWINGS IN THIS SET ARE RECORD DRAWINGS. THEY ARE CONSTRUCTION CONTRACT DRAWINGS WHICH HAVE BEEN REVISED BASED ON AVAILABLE FIELD INFORMATION RECORDED BY OTHERS DURING CONSTRUCTION OF THIS CONTRACT. THERE HAS BEEN NO VERIFICATION OF DIMENSIONS SHOWN ON THE CONSTRUCTION DRAWINGS OR THE ACCURACY/COMPLETENESS OF THE FIELD INFORMATION RECEIVED.

SIGNATURE _____ DATE 2/7/2023

SHAH & ASSOCIATES

AS-BUILT REPLACEMENT SHEET

PROFESSIONAL CERTIFICATION
THIS DRAWING WAS ORIGINALLY APPROVED FOR CONSTRUCTION AND SEALED BY KANAIYALAL R. SHAH, A REGISTERED PROFESSIONAL ENGINEER IN THE STATE OF MARYLAND, NO. 11084

NOTICE TO CONTRACTORS
- PROJECT ELEVATIONS ARE BASED ON NAVD88 AND HOWARD COUNTY'S BENCHMARK SYSTEM
- PREVIOUS PROJECTS USED OTHER DATUMS
- APPLY THE FOLLOWING CONVERSIONS WHEN USING PREVIOUS CONTRACT DRAWINGS:
  - ADDITION NO. 6: SUBTRACT 0.80 FT
  - PRIOR ADDITIONS: SUBTRACT 1.04 FT

DEPARTMENT OF PUBLIC WORKS
HOWARD COUNTY, MARYLAND

CHIEF, BUREAU OF UTILITIES DATE

DES: MM
DRN: DMG
CHK: KRS
DATE: 01/15/2018

DATE	REV	DESCRIPTION
03/2021		RECORD DRAWING

ELECTRICAL

PANELBOARD SCHEDULE - V

LITTLE PATUXENT WATER RECLAMATION PLANT
8TH ADDITION
BIOSOLIDS PROCESSING FACILITIES - PHASE 2

CAPITAL PROJECT S-6295
CONTRACT NO. 24-4936

ELECTION DISTRICT NO. 6
HOWARD COUNTY, MARYLAND

SCALE AS SHOWN

SHEET 279 OF 311

E-905

BIM 360://10054364 – Little Patuxent WRP 8th Addition/264592_100_E_V18.rvt
1/8/2022 11:27:28 AM

GENERAL NOTES:

1. FOR SYMBOLS AND ABBREVIATIONS, SEE DRAWING E-1.
2. FOR CONSTRUCTION SEQUENCE, SEE DRAWING E-2.
3. FOR PANELBOARD LOCATION, SEE DRAWING E-29.

KEY NOTES

(1) PROVIDE NEW 25A 3 POLE BREAKER IN EXISTING PANEL 8-CTR-0101-DPNL FOR NEW POWER COMPACTOR CONTROL PANEL. SEE DRAWING E-503 FOR COMPACTOR CONTROL PANEL LOCATION AND WIRE SIZES.

PANELBOARD SCHEDULE

PANEL : 8-CTR-0101-DPNL , BUS AMPS : 150A VOLTS : 480 VAC , PHASE : 3 , WIRES : 3 , MAIN CB: 125A , CKT'S : 60

MOUNTING: SURFACE , ENCLOSURE : NEMA 12 , LOCATION : DRYER BUILDING ELECTRICAL ROOM CURRENT : 22 KA, RMS AIC

LOAD NAME	VA ØA	VA ØB	VA ØC	FA	TA	P	SNOP	BUS A B C	SNOP	P	TA	FA	VA ØA	VA ØB	VA ØC	LOAD NAME
SPARE	-	-	-	100	20	3	1		2	3	20	100	-	-	-	SPARE
	-	-	-	-	-	-	3		4	-	-	-	-	-	-	
	-	-	-	-	-	-	5		6	-	-	-	-	-	-	
SPARE	300	-	-	100	20	3	7		8	3	20	100	300	-	-	SPARE
	-	300	-	-	-	-	9		10	-	-	-	-	300	-	
	-	-	300	-	-	-	11		12	-	-	-	-	-	300	
SPARE	-	-	-	100	20	3	13		14	3	20	100	300	-	-	SPARE
	-	-	-	-	-	-	15		16	-	-	-	-	300	-	
	-	-	-	-	-	-	17		18	-	-	-	-	-	300	
SPARE	300	-	-	100	20	3	19		20	3	20	100	-	-	-	CENTRIFUGE ROLL-UP DOOR
	-	300	-	-	-	-	21		22	-	-	-	-	-	-	
	-	-	300	-	-	-	23		24	-	-	-	-	-	-	
CENTRIFUGE ROLL-UP DOOR	-	-	-	100	20	3	25		26	3	20	100	300	-	-	CENTRATE FEED MOV-2
	-	-	-	-	-	-	27		28	-	-	-	-	300	-	
	-	-	-	-	-	-	29		30	-	-	-	-	-	300	
(1) POWER COMPACTOR CONTROL PANEL	1995	-	-	100	25	3	31		32	3	20	100	300	-	-	AERATION SYSTEM MOV-2
	-	1995	-	-	-	-	33		34	-	-	-	-	300	-	
	-	-	1995	-	-	-	35		36	-	-	-	-	-	300	
SPARE	-	-	-	100	20	3	37		38	3	80	100	15000	-	-	TRANSFORMER 8-MCC-1501-XFR
	-	-	-	-	-	-	39		40	-	-	-	-	15000	-	
	-	-	-	-	-	-	41		42	-	-	-	-	-	15000	
WASHWATER MODULATING VALVE NO.1 8-GBT-1812-MOV	300	-	-	100	20	3	43		44	3	20	100	300	-	-	WASHWATER MODULATING VALVE NO.2 8-GBT-1822-MOV
	-	300	-	-	-	-	45		46	-	-	-	-	300	-	
	-	-	300	-	-	-	47		48	-	-	-	-	-	300	
WASHWATER MODULATING VALVE NO.3 (FUTURE) 8-GBT-1832-FV	-	-	-	100	20	3	49		50	3	20	100	-	-	-	SCREENING AREA ROLL UP DOOR
	-	-	-	-	-	-	51		52	-	-	-	-	-	-	
	-	-	-	-	-	-	53		54	-	-	-	-	-	-	
SPARE	-	-	-	100	20	3	55		56	3	20	100	-	-	-	SCREENING AREA ROLL UP DOOR
	-	-	-	-	-	-	57		58	-	-	-	-	-	-	
	-	-	-	-	-	-	59		60	-	-	-	-	-	-	
SUB TOTAL PER PHASE	-	-	-										-	-	-	
TOTAL LOAD PER PHASE	-	-	-													

THE DRAWINGS IN THIS SET ARE RECORD DRAWINGS. THEY ARE CONSTRUCTION CONTRACT DRAWINGS WHICH HAVE BEEN REVISED BASED ON AVAILABLE FIELD INFORMATION RECORDED BY OTHERS DURING CONSTRUCTION OF THIS CONTRACT. THERE HAS BEEN NO VERIFICATION OF DIMENSIONS SHOWN ON THE CONSTRUCTION DRAWINGS OR THE ACCURACY/COMPLETENESS OF THE FIELD INFORMATION RECEIVED.

SIGNATURE _____ DATE 2/7/2023

SHAH & ASSOCIATES

AS-BUILT REPLACEMENT SHEET

PROFESSIONAL CERTIFICATION
THIS DRAWING WAS ORIGINALLY APPROVED FOR CONSTRUCTION AND SEALED BY KANAIYALAL R. SHAH, A REGISTERED PROFESSIONAL ENGINEER IN THE STATE OF MARYLAND, NO. 11084

NOTICE TO CONTRACTORS
- PROJECT ELEVATIONS ARE BASED ON NAVD88 AND HOWARD COUNTY'S BENCHMARK SYSTEM
- PREVIOUS PROJECTS USED OTHER DATUMS
- APPLY THE FOLLOWING CONVERSIONS WHEN USING PREVIOUS CONTRACT DRAWINGS:
  - ADDITION NO. 6: SUBTRACT 0.80 FT
  - PRIOR ADDITIONS: SUBTRACT 1.04 FT

DEPARTMENT OF PUBLIC WORKS
HOWARD COUNTY, MARYLAND

CHIEF, BUREAU OF UTILITIES DATE

DES: MM
DRN: DMG
CHK: KRS
DATE: 01/15/2018

DATE	REV	DESCRIPTION
03/2021		RECORD DRAWING

ELECTRICAL

PANELBOARD SCHEDULE VI

LITTLE PATUXENT WATER RECLAMATION PLANT
8TH ADDITION
BIOSOLIDS PROCESSING FACILITIES - PHASE 2

CAPITAL PROJECT S-6295
CONTRACT NO. 24-4936

ELECTION DISTRICT NO. 6
HOWARD COUNTY, MARYLAND

SCALE AS SHOWN

SHEET 280 OF 311

E-906

BIM 360://10054364 – Little Patuxent WRP 8th Addition/284592_100_E_V18.rvt
1/8/2022 11:27:30 AM

CABLE AND CONDUIT SCHEDULE

CONDUIT		CABLE		FROM	T0	REMARKS
FEEDER NUMBER	SIZE	QTY	SIZE			
P5001	-	-	-	TRANSFORMER T-5	SWGR PS-2 MAIN-1	4000A BUSWAY
		-	-			
P5002	-	-	-	TRANSFORMER T-6	SWGR PS-2 MAIN-2	4000A BUSWAY
		-	-			
P5003	-	-	-	SWGR PS-2	MCC-10 MAIN LUG ONLY 1	2000A BUSWAY
		-	-			
P5004	-	-	-	SWGR PS-2	MCC-10 MAIN LUG ONLY 2	2000A BUSWAY
		-	-			
P5005A	4"	3-1/C	#4/0 AWG	SPLICE IN EXISTING PS-2 VAULT WITH EXISTING MV CABLE	PS-2 15KV PRIMARY SWGR MAIN 1	15KV POWER
		1	#2 AWG			GROUND
P5005B	-	-	-	NOT USED	-	-
		-	-			-
P5006A	4"	3-1/C	#4/0 AWG	SPLICE IN EXISTING PS-2 VAULT WITH EXISTING MV CABLE	PS-2 15KV PRIMARY SWGR MAIN 2	15KV POWER
		1	#2 AWG			GROUND
P5006B	-	-	-	NOT USED	-	-
		-	-			-
P5007A	4"	3	500 KCMIL	SWGR PS-2	EXISTING MCC-23 MAIN-1	480V POWER
		1	4/0 AWG			GROUND
P5007B	4"	3	500 KCMIL	SWGR PS-2	EXISTING MCC-23 MAIN-1	480V POWER
		1	4/0 AWG			GROUND
P5008A	4"	3	500 KCMIL	SWGR PS-2	EXISTING MCC-23 MAIN-2	480V POWER
		1	4/0 AWG			GROUND
P5008B	4"	3	500 KCMIL	SWGR PS-2	EXISTING MCC-23 MAIN-2	480V POWER
		1	4/0 AWG			GROUND
P5009A	4"	3	500 KCMIL	SWGR PS-2	CENTRIFUGE NO. 1	480V POWER
		1	4/0 AWG			GROUND
P5009B	4"	3	500 KCMIL	SWGR PS-2	CENTRIFUGE NO. 1	480V POWER
		1	4/0 AWG			GROUND
P5010A	4"	3	500 KCMIL	SWGR PS-2	MCC-9 MAIN-1	480V POWER
		1	4/0 AWG			GROUND
P5010B	4"	3	500 KCMIL	SWGR PS-2	MCC-9 MAIN-1	480V POWER
		1	4/0 AWG			GROUND
P5010C	4"	3	500 KCMIL	SWGR PS-2	MCC-9 MAIN-1	480V POWER
		1	4/0 AWG			GROUND
P5010D	4"	3	500 KCMIL	SWGR PS-2	MCC-9 MAIN-1	480V POWER
		1	4/0 AWG			GROUND
P5010E	4"	3	500 KCMIL	SWGR PS-2	MCC-9 MAIN-1	480V POWER
		1	4/0 AWG			GROUND
P5011A	4"	3	500 KCMIL	SWGR PS-2	MCC-9 MAIN-2	480V POWER
		1	4/0 AWG			GROUND
P5011B	4"	3	500 KCMIL	SWGR PS-2	MCC-9 MAIN-2	480V POWER
		1	4/0 AWG			GROUND
P5011C	4"	3	500 KCMIL	SWGR PS-2	MCC-9 MAIN-2	480V POWER
		1	4/0 AWG			GROUND
P5011D	4"	3	500 KCMIL	SWGR PS-2	MCC-9 MAIN-2	480V POWER
		1	4/0 AWG			GROUND
P5011E	4"	3	500 KCMIL	SWGR PS-2	MCC-9 MAIN-2	480V POWER
		1	4/0 AWG			GROUND
P5012A	4"	3	500 KCMIL	SWGR PS-2	CENTRIFUGE NO. 2	480V POWER
		1	4/0 AWG			GROUND
P5012B	4"	3	500 KCMIL	SWGR PS-2	CENTRIFUGE NO. 2	480V POWER
		1	4/0 AWG			GROUND
P5013A	4"	3	500 KCMIL	SWGR PS-2	CENTRIFUGE NO. 3	480V POWER
		1	4/0 AWG			GROUND

CABLE AND CONDUIT SCHEDULE

CONDUIT		CABLE		FROM	T0	REMARKS
FEEDER NUMBER	SIZE	QTY	SIZE			
P5013B	4"	3	500 KCMIL	SWGR PS-2	CENTRIFUGE NO. 3	480V POWER
		1	4/0 AWG			GROUND
P5014A	4"	3	500 KCMIL	SWGR PS-2	EXISTING MCC-15 MAIN-1	480V POWER
		1	4/0 AWG			GROUND
P5014B	4"	3	500 KCMIL	SWGR PS-2	EXISTING MCC-15 MAIN-1	480V POWER
		1	4/0 AWG			GROUND
P5014C	4"	3	500 KCMIL	SWGR PS-2	EXISTING MCC-15 MAIN-1	480V POWER
		1	4/0 AWG			GROUND
P5014D	4"	3	500 KCMIL	SWGR PS-2	EXISTING MCC-15 MAIN-1	480V POWER
		1	4/0 AWG			GROUND
P5015A	4"	3	500 KCMIL	SWGR PS-2	EXISTING MCC-15 MAIN-2	480V POWER
		1	4/0 AWG			GROUND
P5015B	4"	3	500 KCMIL	SWGR PS-2	EXISTING MCC-15 MAIN-2	480V POWER
		1	4/0 AWG			GROUND
P5015C	4"	3	500 KCMIL	SWGR PS-2	EXISTING MCC-15 MAIN-2	480V POWER
		1	4/0 AWG			GROUND
P5015D	4"	3	500 KCMIL	SWGR PS-2	EXISTING MCC-15 MAIN-2	480V POWER
		1	4/0 AWG			GROUND

CABLE AND CONDUIT SCHEDULE

CONDUIT		CABLE		FROM	T0	REMARKS
FEEDER NUMBER	SIZE	QTY	SIZE			
P5020	3/4"	3	#12 AWG	MCC-10	DRYER 1 BOTTOM SCRAPPER 8-DRY-5111-COL	480 V POWER
		1	#12 AWG			GROUND
P5021	1"	3	#4 AWG	MCC-10	DRYER 1 ZONE 1 HOT AIR FAN 8-DRY-7118-FAN	480 V POWER
		1	#8 AWG			GROUND
P5022	1"	3	#4 AWG	MCC-10	DRYER 2 ZONE 1 HOT AIR FAN 8-DRY-7218-FAN	480 V POWER
		1	#8 AWG			GROUND
P5023	1"	3	#4 AWG	MCC-10	DRYER 1 ZONE 3 HOT AIR FAN 8-DRY-7138-FAN	480 V POWER
		1	#8 AWG			GROUND
P5024	1"	3	#4 AWG	MCC-10	DRYER 2 ZONE 3 HOT AIR FAN 8-DRY-7238-FAN	480 V POWER
		1	#8 AWG			GROUND
P5025	1"	3	#4 AWG	MCC-10	DRYER 1 ZONE 5 HOT AIR FAN 8-DRY-7158-FAN	480 V POWER
		1	#8 AWG			GROUND
P5026	1"	3	#6 AWG	MCC-10	DRYER 1 BURNER 8-DRY-7111-BRN	480 V POWER
		1	#8 AWG			GROUND
P5027	1"	3	#4 AWG	MCC-10	DRYER 2 ZONE 5 HOT AIR FAN 8-DRY-7258-FAN	480 V POWER
		1	#8 AWG			GROUND
P5028	1"	3	#4 AWG	MCC-10	DRYER 1 ZONE 7 HOT AIR FAN 8-DRY-7178-FAN	480 V POWER
		1	#8 AWG			GROUND
P5029	3"	3	#2 AWG	MCC-10	DRYER PROCESS WATER PUMP1 8-DRY-1213-PMP	480 V POWER
		1	#6 AWG			GROUND
P5030	3/4"	3	#12 AWG	MCC-10	DRYER 2 BOOSTER FAN 8-DRY-7611-FAN	480 V POWER
		1	#12 AWG			GROUND
P5031	3/4"	3	#12 AWG	MCC-10	DRYER 1 TROLLEY/ HOIST 8-DRY-8111-TRL / 8-DRY-8111-HST	480 V POWER
		1	#12 AWG			GROUND
P5032	3/4"	3	#10 AWG	MCC-10	SILO 1 CONE VIBRATOR 8-DRY-6111-VBR	480 V POWER
		1	#10 AWG			GROUND
P5033				NOT USED		
P5034	2"	3	#8 AWG	MCC-10	DRYER1 SOLIDS MIXER 8-DRY-5311-MXR	480 V POWER
		1	#8 AWG			GROUND
P5035	2"	3	#6 AWG	MCC-10	WET CAKE BIN SCREW TO DRYER 1 PUMP 1 8-DRY-4112-CNV	480 V POWER
		1	#8 AWG			GROUND
P5036	3"	3	#2 AWG	MCC-10	DRYER 1 HOT AIR PLENUM FAN 8-DRY-7112-FAN	480 V POWER
		1	#8 AWG			GROUND
P5037	1 1/4"	3	#12 AWG	MCC-10	DRYER 1 DRAG CONVEYOR-2 8-DRY-6524-CNV	480 V POWER
		1	#12 AWG			GROUND
P5038	1 1/4"	3	#12 AWG	MCC-10	DRYER 1 SOLIDS DOSING UNIT 8-DRY-5711-SDU	480 V POWER
		1	#12 AWG			GROUND
P5039	1 1/4"	3	#12 AWG	MCC-10	DRYER 1 SOLIDS ROLLER PRESS MOTOR 1 8-DRY-5911A-SRP	480 V POWER
		1	#12 AWG			GROUND
P5040	1 1/4"	3	#12 AWG	MCC-10	DRYER 1 SOLIDS ROLLER PRESS MOTOR 2 8-DRY-5911B-SRP	480 V POWER
		1	#12 AWG			GROUND
P5041	1 1/4"	3	#12 AWG	MCC-10	DRYER 1 UPPER BELT 8-DRY-5112-BLT	480 V POWER
		1	#12 AWG			GROUND
P5042	1 1/4"	3	#12 AWG	MCC-10	DRYER 1 LOWER BELT 8-DRY-5122-BLT	480 V POWER
		1	#12 AWG			GROUND
P5043	1 1/4"	3	#12 AWG	MCC-10	DRYER 1 DRAG CONVEYOR-1 8-DRY-6514-CNV	480 V POWER
		1	#12 AWG			GROUND
P5044	1 1/4"	3	#12 AWG	MCC-10	DRYER 1 DRUM MILL 1 MOTOR 1 8-DRY-6711A-MIL	480 V POWER
		1	#12 AWG			GROUND
P5045	3/4"	3	#10 AWG	MCC-10	SILO 1 DISHCHARGE GATE 8-DRY-6121-MOV	480 V POWER
		1	#10 AWG			GROUND
P5046	1 1/4"	3	#12 AWG	MCC-10	DRYER 1 DRUM MILL 1 MOTOR 2 8-DRY-6711B-MIL	480 V POWER
		1	#12 AWG			GROUND

CABLE AND CONDUIT SCHEDULE

CONDUIT		CABLE		FROM	T0	REMARKS
FEEDER NUMBER	SIZE	QTY	SIZE			
P5047	1 1/4"	3	#12 AWG	MCC-10	DRYER 1 MIXER DOSING SCREW 8-DRY-6911-CNV	480 V POWER
		1	#12 AWG			GROUND
P5048	1 1/4"	3	#12 AWG	MCC-10	DRYER 1 DRAG CONVEYOR-3 8-DRY-6534-CNV	480 V POWER
		1	#12 AWG			GROUND
P5049	1"	3	#4 AWG	MCC-10	DRYER 2 ZONE 7 HOT AIR FAN 8-DRY-7278-FAN	480 V POWER
		1	#8 AWG			GROUND
P5050	3/4"	3	#12 AWG	MCC-10	DRYER 1 DISCHARGE SCREW 8-DRY-6311-CNV	480 V POWER
		1	#12 AWG			GROUND
P5051	3/4"	3	#12 AWG	MCC-10	DRYER 1 DRY SOLIDS SCREEN 8-DRY-6911-SCRN	480 V POWER
		1	#12 AWG			GROUND
P5052	1"	3	#6 AWG	MCC-10	NITROGEN GENERATOR 8-DRY-7112-N2	480 V POWER
		1	#8 AWG			GROUND
P5053	2 1/2"	3	#250 KCMIL	MCC-10	ATS DP-10	480 V POWER
		1	#2 AWG			GROUND
P5054	2 1/2"	3	#250 KCMIL	ATS DP-10	DP-10	480 V POWER
		1	#2 AWG			GROUND
P5055	3/4"	3	#8 AWG	DP-10	XFMR-10A	480 V POWER
		1	#8 AWG			GROUND
P5056	1 1/2"	4	#2 AWG	XFMR-10A	LP-10A	208 V POWER
		1	#8 AWG			GROUND
P5057	1"	3	#8 AWG	DP-10	XFMR-10B	480 V POWER
		1	#8 AWG			GROUND
P5058	1 1/4"	4	#4 AWG	XFMR-10B	LP-10B	208 V POWER
		1	#8 AWG			GROUND
P5059	1 1/4"	3	#12 AWG	MCC-10	DRYER 1 EXHAUST FAN 8-DRY-7322-FAN	480 V POWER
		1	#12 AWG			GROUND
P5060	1 1/4"	3	#10 AWG	MCC-10	DRYER 1 ROTOCLONE 8-DRY-7111-SCRB	480 V POWER
		1	#10 AWG			GROUND
P5061	1 1/4"	3	#12 AWG	MCC-10	DRYER 1 SOLIDS DISTRIBUTOR 8-DRY-5511-SDR	480 V POWER
		1	#12 AWG			GROUND
P5062	2"	3	#4 AWG	MCC-10	DRYER 1 SOLIDS FEED PUMP 1 8-DRY-4112-PMP	480 V POWER
		1	#10 AWG			GROUND
P5063	3/4"	3	#12 AWG	MCC-10	WET CAKE BIN DISCHARGE GATE TO DRYER 1 PUMP 1 8-DRY-4112A-MOV	480 V POWER
		1	#12 AWG			GROUND
P5064	3/4"	3	#12 AWG	MCC-10	WET CAKE BIN DISCHARGE GATE TO DRYER 1 PUMP 2 8-DRY-4122A-MOV	480 V POWER
		1	#12 AWG			GROUND
P5065	3"	3	#2 AWG	MCC-10	DRYER 1 OFF GAS FAN 8-DRY-7312-FAN	480 V POWER
		1	#8 AWG			GROUND
P5066	1 1/4"	3	#10 AWG	MCC-10	DRYER 1 DRAG CONVEYOR 4 8-DRY-6544-CNV	480 V POWER
		1	#10 AWG			GROUND
P5067	2"	3	#6 AWG	MCC-10	WET CAKE BIN SCREW TO DRYER 1 PUMP 2 8-DRY-4122-CNV	480 V POWER
		1	#8 AWG			GROUND
P5068	3/4"	3	#12 AWG	MCC-10	DRYER 1 BOOSTER FAN 8-DRY-7511-FAN	480 V POWER
		1	#12 AWG			GROUND
P5069	2"	3	#4 AWG	MCC-10	DRYER 1 SOLIDS FEED PUMP 2 8-DRY-4122-PMP	480 V POWER
		1	#8 AWG			GROUND
P5070	1 1/4"	3	#12 AWG	MCC-10	DRYER 2 SOLIDS DISTRIBUTOR 8-DRY-5611-SDR	480 V POWER
		1	#12 AWG			GROUND
P5071	3/4"	3	#12 AWG	MCC-10	DRYER 2 TROLLEY/ HOIST 8-DRY-8211-TRL / 8-DRY-8211-HST	480 V POWER
		1	#12 AWG			GROUND
P5072	3/4"	3	#12 AWG	MCC-10	DRYER 2 BOTTOM SCRAPPER 8-DRY-5211-COL	480 V POWER
		1	#12 AWG			GROUND
P5073	1"	3	#4 AWG	MCC-10	DRYER 1 ZONE 2 HOT AIR FAN 8-DRY-7128-FAN	480 V POWER
		1	#8 AWG			GROUND

GENERAL NOTES:

1. FOR SYMBOLS AND ABBREVIATIONS, SEE DRAWING E-1.
2. FOR CONSTRUCTION SEQUENCE, SEE DRAWING E-2.
3. FOR EQUIPMENT FED THROUGH VFDs, PROVIDE VFD CABLES BETWEEN EQUIPMENT AND VFD.

THE DRAWINGS IN THIS SET ARE RECORD DRAWINGS. THEY ARE CONSTRUCTION CONTRACT DRAWINGS WHICH HAVE BEEN REVISED BASED ON AVAILABLE FIELD INFORMATION RECORDED BY OTHERS DURING CONSTRUCTION OF THIS CONTRACT. THERE HAS BEEN NO VERIFICATION OF DIMENSIONS SHOWN ON THE CONSTRUCTION DRAWINGS OR THE ACCURACY/COMPLETENESS OF THE FIELD INFORMATION RECEIVED.

SIGNATURE _____ DATE 2/7/2022

SHAH & ASSOCIATES

HDR

AS-BUILT REPLACEMENT SHEET

PROFESSIONAL CERTIFICATION
THIS DRAWING WAS ORIGINALLY APPROVED FOR CONSTRUCTION AND SEALED BY KANAIYALAL R. SHAH, A REGISTERED PROFESSIONAL ENGINEER IN THE STATE OF MARYLAND, NO. 11084

NOTICE TO CONTRACTORS
- PROJECT ELEVATIONS ARE BASED ON NAVD88 AND HOWARD COUNTY'S BENCHMARK SYSTEM
- PREVIOUS PROJECTS USED OTHER DATUMS
- APPLY THE FOLLOWING CONVERSIONS WHEN USING PREVIOUS CONTRACT DRAWINGS:
  - ADDITION NO. 6: SUBTRACT 0.80 FT
  - PRIOR ADDITIONS: SUBTRACT 1.04 FT

DEPARTMENT OF PUBLIC WORKS
HOWARD COUNTY, MARYLAND

CHIEF, BUREAU OF UTILITIES DATE

DES: MM
DRN: DMG
CHK: KRS
DATE: 01/15/2018

DATE	REV	DESCRIPTION
03/2021		RECORD DRAWING

ELECTRICAL

CABLE AND CONDUIT SCHEDULE - II

LITTLE PATUXENT WATER RECLAMATION PLANT
8TH ADDITION
BIOSOLIDS PROCESSING FACILITIES - PHASE 2

CAPITAL PROJECT S-6295
CONTRACT NO. 24-4936

ELECTION DISTRICT NO. 6
HOWARD COUNTY, MARYLAND

SCALE AS SHOWN

SHEET 282 OF 311

E-909

BIM 360://10054364 – Little Patuxent WRP 8th Addition/264592_100_E_V18.rvt
1/8/2022 11:27:32 AM

CABLE AND CONDUIT SCHEDULE

CONDUIT		CABLE		FROM	TO	REMARKS
FEEDER NUMBER	SIZE	QTY	SIZE			
P5074	1"	3	#4 AWG	MCC-10	DRYER 2 ZONE 2 HOT AIR FAN 8-DRY-7228-FAN	480 V POWER
		1	#8 AWG			GROUND
P5075	1"	3	#4 AWG	MCC-10	DRYER 1 ZONE 4 HOT AIR FAN 8-DRY-7148-FAN	480 V POWER
		1	#8 AWG			GROUND
P5076	1"	3	#4 AWG	MCC-10	DRYER 2 ZONE 4 HOT AIR FAN 8-DRY-7248-FAN	480 V POWER
		1	#8 AWG			GROUND
P5077	1"	3	#4 AWG	MCC-10	DRYER 1 ZONE 6 HOT AIR FAN 8-DRY-7168-FAN	480 V POWER
		1	#8 AWG			GROUND
P5078	1"	3	#4 AWG	MCC-10	DRYER 2 ZONE 6 HOT AIR FAN 8-DRY-7268-FAN	480 V POWER
		1	#8 AWG			GROUND
P5079	1"	3	#4 AWG	MCC-10	DRYER 1 ZONE 8 HOT AIR FAN 8-DRY-7188-FAN	480 V POWER
		1	#8 AWG			GROUND
P5080	1"	3	#4 AWG	MCC-10	DRYER 2 ZONE 8 HOT AIR FAN 8-DRY-7288-FAN	480 V POWER
		1	#8 AWG			GROUND
P5081	3/4"	3	#12 AWG	MCC-10	DRYER 2 DISCHARGE SCREW 8-DRY-6411-CNV	480 V POWER
		1	#12 AWG			GROUND
P5082	3/4"	3	#10 AWG	MCC-10	SILO 2 CONE VIBRATOR 8-DRY-6211-VBR	480 V POWER
		1	#10 AWG			GROUND
P5083				NOT USED		
P5084	3/4"	3	#12 AWG	MCC-10	WET CAKE BIN DISCHARGE GATE TO DRYER 2 PUMP 2 8-DRY-4222A-MOV	480 V POWER
		1	#12 AWG			GROUND
P5085	3/4"	3	#12 AWG	MCC-10	WET CAKE BIN DISCHARGE GATE TO DRYER 2 PUMP 1 8-DRY-4212A-MOV	480 V POWER
		1	#12 AWG			GROUND
P5086	1 1/4"	3	#12 AWG	MCC-10	DRYER 2 DRAG CONVEYOR 2 8-DRY-6624-CNV	480 V POWER
		1	#12 AWG			GROUND
P5087	1 1/4"	3	#12 AWG	MCC-10	DRYER 2 SOLIDS DOSING UNIT 8-DRY-5811-SDU	480 V POWER
		1	#12 AWG			GROUND
P5088	1 1/4"	3	#12 AWG	MCC-10	DRYER 2 SOLIDS ROLLER PRESS MOTOR 1 8-DRY-5011A-SRP	480 V POWER
		1	#12 AWG			GROUND
P5089	1 1/4"	3	#12 AWG	MCC-10	DRYER 2 SOLIDS ROLLER PRESS MOTOR 2 8-DRY-5011B-SRP	480 V POWER
		1	#12 AWG			GROUND
P5090	1 1/4"	3	#12 AWG	MCC-10	DRYER 2 UPPER BELT 8-DRY-5212-BLT	480 V POWER
		1	#12 AWG			GROUND
P5091	1 1/4"	3	#12 AWG	MCC-10	DRYER 2 LOWER BELT 8-DRY-5222-BLT	480 V POWER
		1	#12 AWG			GROUND
P5092	1 1/4"	3	#12 AWG	MCC-10	DRYER 2 DRAG CONVEYOR -1 8-DRY-6614-CNV	480 V POWER
		1	#12 AWG			GROUND
P5093	1 1/4"	3	#12 AWG	MCC-10	DRYER 2 DRUM MILL 1 MOTOR 1 8-DRY-6811A-MIL	480 V POWER
		1	#12 AWG			GROUND
P5094	1 1/4"	3	#12 AWG	MCC-10	DRYER 2 DRUM MILL 1 MOTOR 2 8-DRY-6811B-MIL	480 V POWER
		1	#12 AWG			GROUND
P5095	1 1/4"	3	#12 AWG	MCC-10	DRYER 2 MIXER DOSING SCREW 8-DRY-6011-CNV	480 V POWER
		1	#12 AWG			GROUND
P5096	3"	3	#2 AWG	MCC-10	DRYER PROCESS WATER PUMP 3 8-DRY-1233-PMP	480 V POWER
		1	#6 AWG			GROUND
P5097	3/4"	3	#12 AWG	MCC-10	DRYER 2 DRY SOLIDS SCREEN 8-DRY-6011-SCRN	480 V POWER
		1	#12 AWG			GROUND
P5098	2 1/2"	3	#250 KCMIL	MCC-10	MCC-10 SEC (A,B,C)	480 V POWER
		1	#2 AWG			GROUND
P5099	1 1/4"	3	#10 AWG	MCC-10	DRYER 2 DRAG CONVEYOR 4 8-DRY-6644-CNV	480 V POWER
		1	#10 AWG			GROUND
P5100	2 1/2"	3	#250 KCMIL	MCC-10	ATS DP-10	480 V POWER
		1	#2 AWG			GROUND

CABLE AND CONDUIT SCHEDULE

CONDUIT		CABLE		FROM	TO	REMARKS
FEEDER NUMBER	SIZE	QTY	SIZE			
P5101	1 1/4"	3	#12 AWG	MCC-10	DRYER 2 EXHAUST FAN 8-DRY-7422-FAN	480 V POWER
		1	#12 AWG			GROUND
P5102	1 1/4"	3	#10 AWG	MCC-10	DRYER 2 ROTOCLONE 8-DRY-7211-SCRB	480 V POWER
		1	#10 AWG			GROUND
P5103	3/4"	3	#10 AWG	MCC-10	SILO 2 DISHCHARGE GATE 8-DRY-6221-MOV	480 V POWER
		1	#10 AWG			GROUND
P5104	2"	3	#6 AWG	MCC-10	WET CAKE BIN SCREW TO DRYER 2 PUMP 2 8-DRY-4222-CNV	480 V POWER
		1	#8 AWG			GROUND
P5105	2 1/2"	3	#4/0 AWG	MCC-10	BIOFILTER 3 LCP 8-ODR-3011-PNL	480 V POWER
		1	#2 AWG			GROUND
P5106	2"	3	#6 AWG	MCC-10	WET CAKE BIN SCREW TO DRYER 2 PUMP 1 8-DRY-4212-CNV	480 V POWER
		1	#8 AWG			GROUND
P5107	1"	3	#6 AWG	MCC-10	DRYER 2 BURNER 8-DRY-7211-BRN	480 V POWER
		1	#8 AWG			GROUND
P5108	2"	3	#4 AWG	MCC-10	DRYER 2 SOLIDS FEED PUMP 2 8-DRY-4222-PMP	480 V POWER
		1	#8 AWG			GROUND
P5109	2"	3	#4 AWG	MCC-10	DRYER 2 SOLIDS FEED PUMP 1 8-DRY-4212-PMP	480 V POWER
		1	#8 AWG			GROUND
P5110	1 1/4"	3	#12 AWG	MCC-10	DRYER 2 DRAG CONVEYOR 3 8-DRY-6634-CNV	480 V POWER
		1	#12 AWG			GROUND
P5111	2"	3	#8 AWG	MCC-10	DRYER 2 SOLIDS MIXER 8-DRY-5411-MXR	480 V POWER
		1	#8 AWG			GROUND
P5112	3"	3	#2 AWG	MCC-10	DRYER 2 HOT AIR PLENUM FAN 8-DRY-7212-FAN	480 V POWER
		1	#8 AWG			GROUND
P5113	3"	3	#2 AWG	MCC-10	DRYER 2 OFF GAS FAN 8-DRY-7222-FAN	480 V POWER
		1	#8 AWG			GROUND
P5114	1"	3	#6 AWG	MCC-10	NITROGEN GENERATOR 8-DRY-7122-N2	480 V POWER
		1	#8 AWG			GROUND
P5115 THRU P5120				NOT USED		
P5121	3/4"	3	#12 AWG	BIOFILTER 3 LCP 8-ODR-3011-PNL	RECIRCULATION PUMP NO. 1 8-ODR-3011-PMP	480 V POWER
		1	#12 AWG			GROUND
P5122	3/4"	3	#12 AWG	BIOFILTER 3 LCP 8-ODR-3011-PNL	RECIRCULATION PUMP NO. 2 8-ODR-4011-PMP	480 V POWER
		1	#12 AWG			GROUND
P5123	2"	3	#6 AWG	BIOFILTER 3 LCP 8-ODR-3011-PNL	BIOFILTER FAN NO. 3 8-ODR-3011-FAN	480 V POWER
		1	#8 AWG			GROUND
P5124	2"	3	#6 AWG	BIOFILTER 3 LCP 8-ODR-3011-PNL	BIOFILTER FAN NO. 4 8-ODR-4011-FAN	480 V POWER
		1	#8 AWG			GROUND
P5125	3/4"	3	#10 AWG	MCC-10	SILO 1 AIR LOCK ROTARY VALVE 8-DRY-6111-MOV	480 V POWER
		1	#10 AWG			GROUND
P5126	3/4"	3	#10 AWG	MCC-10	SILO 2 AIR LOCK ROTARY VALVE 8-DRY-6211-MOV	480 V POWER
		1	#10 AWG			GROUND
P5127	3/4"	3	#10 AWG	MCC-10	SILO 1 JIB CRANE	480 V POWER
		1	#10 AWG			GROUND
P5128	3/4"	3	#10 AWG	MCC-10	SILO 2 JIB CRANE	480 V POWER
		1	#10 AWG			GROUND
P5129				NOT USED		480 V POWER
						GROUND
P5130	3/4"	3	#8 AWG	CONVEYOR MASTER CONTROL PANEL 8-CTR-3011-PNL	ANGLED CONVEYOR NO. 1 8-CTR-4012-CNV	480 V POWER
		1	#8 AWG			GROUND
P5131	3/4"	3	#8 AWG	CONVEYOR MASTER CONTROL PANEL 8-CTR-3011-PNL	ANGLED CONVEYOR NO. 2 8-CTR-4022-CNV	480 V POWER
		1	#8 AWG			GROUND
P5132	3/4"	3	#12 AWG	DP-10	8-CTR-4014-MOV	480 V POWER
		1	#12 AWG			GROUND

GENERAL NOTES:

1. FOR SYMBOLS AND ABBREVIATIONS, SEE DRAWING E-1.
2. FOR CONSTRUCTION SEQUENCE, SEE DRAWING E-2.
3. FOR EQUIPMENT FED THROUGH VFDs, PROVIDE VFD CABLES BETWEEN EQUIPMENT AND VFD.

THE DRAWINGS IN THIS SET ARE RECORD DRAWINGS. THEY ARE CONSTRUCTION CONTRACT DRAWINGS WHICH HAVE BEEN REVISED BASED ON AVAILABLE FIELD INFORMATION RECORDED BY OTHERS DURING CONSTRUCTION OF THIS CONTRACT. THERE HAS BEEN NO VERIFICATION OF DIMENSIONS SHOWN ON THE CONSTRUCTION DRAWINGS OR THE ACCURACY/COMPLETENESS OF THE FIELD INFORMATION RECEIVED.

SIGNATURE _____ DATE 2/7/2022

SHAH & ASSOCIATES

AS-BUILT REPLACEMENT SHEET

PROFESSIONAL CERTIFICATION
THIS DRAWING WAS ORIGINALLY APPROVED FOR CONSTRUCTION AND SEALED BY KANAIYALAL R SHAH, A REGISTERED PROFESSIONAL ENGINEER IN THE STATE OF MARYLAND, NO. 11084

NOTICE TO CONTRACTORS
- PROJECT ELEVATIONS ARE BASED ON NAVD88 AND HOWARD COUNTY'S BENCHMARK SYSTEM
- PREVIOUS PROJECTS USED OTHER DATUMS
- APPLY THE FOLLOWING CONVERSIONS WHEN USING PREVIOUS CONTRACT DRAWINGS:
  - ADDITION NO. 6: SUBTRACT 0.80 FT
  - PRIOR ADDITIONS: SUBTRACT 1.04 FT

DEPARTMENT OF PUBLIC WORKS
HOWARD COUNTY, MARYLAND

CHIEF, BUREAU OF UTILITIES DATE

DES: MM
DRN: DMG
CHK: KRS
DATE: 01/15/2018

DATE	REV	DESCRIPTION
03/2021		RECORD DRAWING

ELECTRICAL

CABLE AND CONDUIT SCHEDULE - III

LITTLE PATUXENT WATER RECLAMATION PLANT
8TH ADDITION
BIOSOLIDS PROCESSING FACILITIES - PHASE 2

CAPITAL PROJECT S-6295
CONTRACT NO. 24-4936

ELECTION DISTRICT NO. 6
HOWARD COUNTY, MARYLAND

SCALE AS SHOWN

SHEET 283 OF 311

E-910

BIM 360://10054364 – Little Patuxent WRP 8th Addition/264592_100_E_V18.rvt
1/8/2022 11:27:34 AM

CABLE AND CONDUIT SCHEDULE

CONDUIT		CABLE		FROM	TO	REMARKS
FEEDER NUMBER	SIZE	QTY	SIZE			
P5133	3/4"	3	#12 AWG	DP-10	8-CTR-4024-MOV	480V POWER
		1	#12 AWG			GROUND
P5134	3/4"	3	#12 AWG	DP-10	8-CTR-4034-MOV	480V POWER
		1	#12 AWG			GROUND
P5135	3/4"	3	#12 AWG	DP-10	8-CTR-4044-MOV	480V POWER
		1	#12 AWG			GROUND
P5136	3/4"	3	#10 AWG	CONVEYOR MASTER CONTROL PANEL 8-CTR-3011-PNL	SSA 4012	480V POWER
		1	#12 AWG			GROUND
P5137	3/4"	3	#10 AWG	CONVEYOR MASTER CONTROL PANEL 8-CTR-3011-PNL	SSA 4022	480V POWER
		1	#12 AWG			GROUND
P5138 THRU P5149				NOT USED		
P5150	3/4"	3	#12 AWG	DP-10	PROCESS WATER FILTERATION FEED VALVE 8-DRY-1214-MOV	480V POWER
		1	#12 AWG			GROUND
P5151	3/4"	2	#12 AWG	LP10A	PW FILTER 1 CP	120V POWER
		1	#12 AWG			GROUND
P5152	3/4"	2	#12 AWG	LP10A	PW FILTER 2 CP	120V POWER
		1	#12 AWG			GROUND
P5153				NOT USED		
P5154				NOT USED		
P5155	3/4"	3	#12 AWG	DP-10	DRYER 1 SOLIDS RETURN VALVE 8-DRY-4111A-MOV	480V POWER
		1	#12 AWG			GROUND
P5156	3/4"	3	#12 AWG	DP-10	DRYER 2 SOLIDS RETURN VALVE 8-DRY-4211A-MOV	480V POWER
		1	#12 AWG			GROUND
P5157	3/4"	3	#12 AWG	DP-10	DRYER 1 SOLIDS FEED PUMP 1 MOTORIZED VALVE 8-DRY-4112B-MOV	480V POWER
		1	#12 AWG			GROUND
P5158	3/4"	3	#12 AWG	DP-10	DRYER 1 SOLIDS FEED PUMP 2 MOTORIZED VALVE 8-DRY-4122B-MOV	480V POWER
		1	#12 AWG			GROUND
P5159	3/4"	3	#12 AWG	DP-10	DRYER 2 SOLIDS FEED PUMP 1 MOTORIZED VALVE 8-DRY-4212B-MOV	480V POWER
		1	#12 AWG			GROUND
P5160	3/4"	3	#12 AWG	DP-10	DRYER 2 SOLIDS FEED PUMP 2 MOTORIZED VALVE 8-DRY-4222B	480V POWER
		1	#12 AWG			GROUND
P5161	3/4"	3	#12 AWG	DP-10	DRYER 1 SOLIDS FEED MOTORIZED VALVE 8-DRY-4111B-MOV	480V POWER
		1	#12 AWG			GROUND
P5162	3/4"	3	#12 AWG	DP-10	DRYER 2 SOLIDS FEED MOTORIZED VALVE 8-DRY-4211B-MOV	480V POWER
		1	#12 AWG			GROUND
P5163	3/4"	3	#12 AWG	DP-10	DRYER 1 PIPING DRYER DELUGE SYSTEM 8-DRY-5111-MOV	480V POWER
		1	#12 AWG			GROUND
P5164	3/4"	3	#12 AWG	DP-10	DRYER 2 PIPING DRYER DELUGE SYSTEM 8-DRY-5211-MOV	480V POWER
		1	#12 AWG			GROUND
P5165	3/4"	3	#12 AWG	DP-10	DRYER 1 CONDENSER SPRAY WATER BUTTERFLY VALVE 8-DRY-7111-MOV	480V POWER
		1	#12 AWG			GROUND
P5166	3/4"	3	#12 AWG	DP-10	DRYER 2 CONDENSER SPRAY WATER BUTTERFLY VALVE 8-DRY-7211-MOV	480V POWER
		1	#12 AWG			GROUND
P5167	3/4"	3	#12 AWG	DP-10	SILO 1 MOTOR OPERATED NITROGEN VALVE 1 8-DRY-7112-MOV	480V POWER
		1	#12 AWG			GROUND
P5168	3/4"	3	#12 AWG	DP-10	SILO 1 MOTOR OPERATED NITROGEN VALVE 2 8-DRY-7122-MOV	480V POWER
		1	#12 AWG			GROUND
P5169	3/4"	3	#12 AWG	DP-10	SILO 2 MOTOR OPERATED NITROGEN VALVE 1 8-DRY-7212-MOV	480V POWER
		1	#12 AWG			GROUND
P5170	3/4"	3	#12 AWG	DP-10	SILO 2 MOTOR OPERATED NITROGEN VALVE 2 8-DRY-7222-MOV	480V POWER
		1	#12 AWG			GROUND

CABLE AND CONDUIT SCHEDULE

CONDUIT		CABLE		FROM	TO	REMARKS
FEEDER NUMBER	SIZE	QTY	SIZE			
P5171	3/4"	3	#12 AWG	DP-10	DRYER 1 DRY SOLIDS DIVERTER 1 8-DRY-6113-DIV	480V POWER
		1	#12 AWG			GROUND
P5172	3/4"	3	#12 AWG	DP-10	DRYER 2 DRY SOLIDS DIVERTER 1 8-DRY-6213-DIV	480V POWER
		1	#12 AWG			GROUND
P5173	3/4"	3	#12 AWG	DP-10	DRYER 1 DRY SOLIDS DIVERTER 2 8-DRY-6123-DIV	480V POWER
		1	#12 AWG			GROUND
P5174	3/4"	3	#12 AWG	DP-10	DRYER 2 DRY SOLIDS DIVERTER 2 8-DRY-6223-DIV	480V POWER
		1	#12 AWG			GROUND
P5175	3/4"	3	#12 AWG	DP-10	DRYER 1 DRY SOLIDS DIVERTER 3 8-DRY-6133-DIV	480V POWER
		1	#12 AWG			GROUND
P5176	3/4"	3	#12 AWG	DP-10	DRYER 2 DRY SOLIDS DIVERTER 3 8-DRY-6233-DIV	480V POWER
		1	#12 AWG			GROUND
P5177	3/4"	3	#10 AWG	DP-10	SILO 1 TELESCOPING LOADOUT CHUTE 8-DRY-6111-TLC	480V POWER
		1	#10 AWG			GROUND
P5178	3/4"	3	#10 AWG	DP-10	SILO 2 TELESCOPING LOADOUT CHUTE 8-DRY-6211-TLC	480V POWER
		1	#10 AWG			GROUND
P5179 THRU P5185				NOT USED		
P5186	3/4"	2	#12 AWG	LP10B	TRANSFORMER SPACE HEATER	120V POWER
		1	#12 AWG			GROUND
P5187	3/4"	2	#12 AWG	LP10B	TRANSFORMER SPACE HEATER	120V POWER
		1	#12 AWG			GROUND
P5188	3/4"	2	#12 AWG	LP10B	MV VACUUM BREAKER SWITCHGEAR HEATER	120V POWER
		1	#12 AWG			GROUND
P5189	3/4"	2	#12 AWG	LP10B	MV VACUUM BREAKER SWITCHGEAR HEATER	120V POWER
		1	#12 AWG			GROUND
P5190	3/4"	2	#12 AWG	LP10B	BUS DUCT HEATER	120V POWER
		1	#12 AWG			GROUND
P5191	3/4"	2	#12 AWG	LP10B	BUS DUCT HEATER	120V POWER
		1	#12 AWG			GROUND
P5192	3/4"	2	#8 AWG	LP10B	TRANSFORMER FAN CONTROL	208V POWER
		1	#10 AWG			GROUND
P5193	3/4"	2	#8 AWG	LP10B	TRANSFORMER FAN CONTROL	208V POWER
		1	#10 AWG			GROUND
P5194 THRU P5439				NOT USED		
P5440	3/4"	2	#12 AWG	LP10A	FIT 1212	120 V POWER
		1	#12 AWG			GROUND
P5441	3/4"	2	#12 AWG	LP10A	FIT 1222	120 V POWER
		1	#12 AWG			GROUND
P5442	3/4"	2	#12 AWG	LP10A	PIT 1212A	120 V POWER
		1	#12 AWG			GROUND
P5443	3/4"	2	#12 AWG	LP10A	PIT 1212B	120 V POWER
		1	#12 AWG			GROUND
P5444	3/4"	2	#12 AWG	LP10A	PIT 1222A	120 V POWER
		1	#12 AWG			GROUND
P5445	3/4"	2	#12 AWG	LP10A	PIT 1222B	120 V POWER
		1	#12 AWG			GROUND
P5446	3/4"	2	#12 AWG	LP10A	8-DRY-1212-PNL	120 V POWER
		1	#12 AWG			GROUND
P5447	3/4"	2	#12 AWG	LP10A	8-DRY-1222-PNL	120 V POWER
		1	#12 AWG			GROUND
P5448	3/4"	2	#12 AWG	LP10A	FIT 1411	120 V POWER
		1	#12 AWG			GROUND

GENERAL NOTES:

1. FOR SYMBOLS AND ABBREVIATIONS, SEE DRAWING E-1.
2. FOR CONSTRUCTION SEQUENCE, SEE DRAWING E-2.
3. FOR EQUIPMENT FED THROUGH VFDs, PROVIDE VFD CABLES BETWEEN EQUIPMENT AND VFD.

THE DRAWINGS IN THIS SET ARE RECORD DRAWINGS. THEY ARE CONSTRUCTION CONTRACT DRAWINGS WHICH HAVE BEEN REVISED BASED ON AVAILABLE FIELD INFORMATION RECORDED BY OTHERS DURING CONSTRUCTION OF THIS CONTRACT. THERE HAS BEEN NO VERIFICATION OF DIMENSIONS SHOWN ON THE CONSTRUCTION DRAWINGS OR THE ACCURACY/COMPLETENESS OF THE FIELD INFORMATION RECEIVED.

SIGNATURE _____ DATE 2/7/2023

SHAH & ASSOCIATES

HDR

AS-BUILT REPLACEMENT SHEET

PROFESSIONAL CERTIFICATION
THIS DRAWING WAS ORIGINALLY APPROVED FOR CONSTRUCTION AND SEALED BY KANAIYALAL R. SHAH, A REGISTERED PROFESSIONAL ENGINEER IN THE STATE OF MARYLAND, NO. 11084

NOTICE TO CONTRACTORS
- PROJECT ELEVATIONS ARE BASED ON NAVD88 AND HOWARD COUNTY'S BENCHMARK SYSTEM
- PREVIOUS PROJECTS USED OTHER DATUMS
- APPLY THE FOLLOWING CONVERSIONS WHEN USING PREVIOUS CONTRACT DRAWINGS:
  - ADDITION NO. 6: SUBTRACT 0.80 FT
  - PRIOR ADDITIONS: SUBTRACT 1.04 FT

DEPARTMENT OF PUBLIC WORKS
HOWARD COUNTY, MARYLAND

CHIEF, BUREAU OF UTILITIES DATE

DES: MM
DRN: DMG
CHK: KRS
DATE: 01/15/2018

DATE	REV	DESCRIPTION
03/2021		RECORD DRAWING

ELECTRICAL

CABLE AND CONDUIT SCHEDULE - IV

LITTLE PATUXENT WATER RECLAMATION PLANT
8TH ADDITION
BIOSOLIDS PROCESSING FACILITIES - PHASE 2

CAPITAL PROJECT S-6295
CONTRACT NO. 24-4936

ELECTION DISTRICT NO. 6
HOWARD COUNTY, MARYLAND

SCALE AS SHOWN

SHEET 284 OF 311

E-911

BIM 360://10054364 – Little Patuxent WRP 8th Addition/284592_100_E_V18.rvt
1/8/2022 11:27:35 AM

GENERAL NOTES:

1. FOR SYMBOLS AND ABBREVIATIONS, SEE DRAWING E-1.
2. FOR CONSTRUCTION SEQUENCE, SEE DRAWING E-2.
3. FOR EQUIPMENT FED THROUGH VFDs, PROVIDE VFD CABLES BETWEEN EQUIPMENT AND VFD.

CABLE AND CONDUIT SCHEDULE

CONDUIT		CABLE		FROM	TO	REMARKS
FEEDER NUMBER	SIZE	QTY	SIZE			
P5449	3/4"	2	#12 AWG	LP10A	FIT 1612	120 V POWER
		1	#12 AWG			GROUND
P5450	3/4"	2	#12 AWG	LP10A	FIT 1622	120 V POWER
		1	#12 AWG			GROUND
P5451	3/4"	2	#12 AWG	LP10A	PIT 1411	120 V POWER
		1	#12 AWG			GROUND
P5452	3/4"	2	#12 AWG	LP10A	DRYER 1 SOLIDS ROLLER PRESS LS 8-DRY-5911-LS	120 V POWER
		1	#12 AWG			GROUND
P5453	3/4"	2	#12 AWG	LP10A	DRYER 1 HOT AIR PLENUM TEMPERATURE SWITCH 8-DRY-7111-TSH	120 V POWER
		1	#12 AWG			GROUND
P5454	3/4"	2	#12 AWG	LP10A	DRYER 2 SOLIDS ROLLER PRESS LS 8-DRY-5011-LS	120 V POWER
		1	#12 AWG			GROUND
P5455	3/4"	2	#12 AWG	LP10A	DRYER 2 HOT AIR PLENUM TEMPERATURE SWITCH 8 8-DRY-7211-TSH	120 V POWER
		1	#12 AWG			GROUND
P5456	3/4"	2	#12 AWG	LP10A	TRUCK ALERT LCS 8-DRY-2211-PNL	120 V POWER
		1	#12 AWG			GROUND
P5457	3/4"	2	#12 AWG	LP10A	ISB PANEL 8-DRY-2011B-PNL	120 V POWER
		1	#12 AWG			GROUND
P5458	1"	3	#6 AWG	LP10A	DRYER LOCAL CONTROL PANEL 8-DRY-2011-PNL UPS	208 V POWER
		1	#6 AWG			GROUND
P5459	3/4"	2	#6 AWG	LP10A	DRYER LOCAL CONTROL PANEL 8-DRY-2011-PNL	120 V POWER
		1	#8 AWG			GROUND
P5460	3/4"	2	#8 AWG	LP10A	DRYER AREA PLC NETWORK INTERFACE PANEL 8-DRY-0011-NIP	120 V POWER
		1	#10 AWG			GROUND

CABLE AND CONDUIT SCHEDULE

CONDUIT		CABLE		FROM	T0	REMARKS
FEEDER NUMBER	SIZE	QTY	SIZE			
P7001	1"	3	#4 AWG	MCC-9	ATS TRA N2	480V POWER
		1	#8 AWG			GROUND
P7002	1"	3	#4 AWG	ATS TRA	TRA DS	480V POWER
		1	#8 AWG			GROUND
P7003	2"	3	#2/0 AWG	MCC-9	CONTROL PANEL FOR WATER RECLAIM PUMPS	480V POWER
		1	#6 AWG			GROUND
P7004	3/4"	3	#12 AWG	MCC-9	UNIT HEATER 8-774-HT	480V POWER
		1	#12 AWG			GROUND
P7005	3/4"	3	#10 AWG	MCC-9	HTR BK1 DAF RM 8-801-HT	480V POWER
		1	#10 AWG			GROUND
P7006	3/4"	3	#12 AWG	MCC-9	HEATER BASEMENT 8-806-HT	480V POWER
		1	#12 AWG			GROUND
P7007	3/4"	3	#12 AWG	MCC-9	HEATER BLOWER GALLERY 8-805-HT	480V POWER
		1	#12 AWG			GROUND
P7008	3/4"	3	#12 AWG	MCC-9	HTR DAFT GALLERY 8-802-HT	480V POWER
		1	#12 AWG			GROUND
P7009				NOT USED		
P7010				NOT USED		
P7011	3"	3	350 KCMIL	MCC-9	FLUSHING H2O SYSTEM MTS BASEMENT SOLIDS HANDLING BLDG	480V POWER
		1	#3 AWG			GROUND
P7012	3/4"	3	#10 AWG	MCC-9	SUMP PUMP SUBSTATION PS-2	480V POWER
		1	#10 AWG			GROUND
P7013	1"	3	#4 AWG	MCC-9	ATS TRD N1	480V POWER
		1	#8 AWG			GROUND
P7014	1"	3	#4 AWG	ATS TRD	TRD DS	480V POWER
		1	#8 AWG			GROUND
P7015	3/4"	3	#12 AWG	MCC-9	DAF FAN 8-903-F ON ROOF FLOTATION THICKENER RM DAF	480V POWER
		1	#12 AWG			GROUND
P7016	3/4"	3	#12 AWG	MCC-9	DAF FAN 8-901-F ON ROOF FLOTATION THICKENER RM DAF BLDG	480V POWER
		1	#12 AWG			GROUND
P7017				NOT USED		
P7018	1"	3	#6 AWG	MCC-9	ATS TRE N1	480V POWER
		1	#10 AWG			GROUND
P7019	1"	3	#6 AWG	ATS TRE	TRE DS	480V POWER
		1	#10 AWG			GROUND
P7020	3"	3	500 KCMIL	MCC-9	DAF MAU 10-MAU01	480V POWER
		1	#3 AWG			GROUND
P7021	1"	3	#6 AWG	MCC-9	ATS TRE N2	-
		1	#10 AWG			-
P7022	3/4"	3	#12 AWG	MCC-9	VENT FAN 8-854-F SUBSTATION PS-2	480V POWER
		1	#12 AWG			GROUND
P7023	3/4"	3	#12 AWG	MCC-9	CENTRIFUGE FAN 8-909-F ON ROOF CENTRIFUGE BLDG	480V POWER
		1	#12 AWG			GROUND
P7024	1"	3	#4 AWG	MCC-9	ATS TRD N2	480V POWER
		1	#8 AWG			GROUND
P7025	1-1/2"	3	#2 AWG	MCC-9	INSTANTANEOUS WATER HEATER DIGESTER PIPE GALLERY	480V POWER
		1	#6 AWG			GROUND
P7026	3/4"	3	#12 AWG	MCC-9	CENTRIFUGE FAN 8-908-F-ON ROOF CENTRIFUGE BLDG	480V POWER
		1	#12 AWG			GROUND
P7027	3/4"	3	#12 AWG	MCC-9	STRAINER CONTROL PANEL ON ROOF ABOVE BASEMENT	480V POWER
		1	#12 AWG			GROUND

CABLE AND CONDUIT SCHEDULE

CONDUIT		CABLE		FROM	T0	REMARKS
FEEDER NUMBER	SIZE	QTY	SIZE			
P7028	3"	3	350 KCMIL	MCC-9	FLUSHING H2O SYSTEM MTS BASEMENT SOLIDS HANDLING BLDG	480V POWER
		1	#3 AWG			GROUND
P7029	3/4"	3	#12 AWG	MCC-9	UNIT HEATER 8-772-HT CENTRIFUGE RM	480V POWER
		1	#12 AWG			GROUND
P7030	3/4"	3	#12 AWG	MCC-9	UNIT HEATER 8-773-HT CENTRIFUGE BLDG	480V POWER
		1	#12 AWG			GROUND
P7031	3/4"	3	#12 AWG	MCC-9	UNIT HEATER 8-775-HT CENTRIFUGE BLDG	480V POWER
		1	#12 AWG			GROUND
P7032	3/4"	3	#12 AWG	MCC-9	TRUCK BAY HOIST 8-620-ME	480V POWER
		1	#12 AWG			GROUND
P7033	1"	3	#4 AWG	MCC-9	ATS TRA N1	480V POWER
		1	#8 AWG			GROUND
P7034	3/4"	3	#12 AWG	MCC-9	CENTRIFUGE FAN 8-907-F-ON ROOF CENTRIFUGE BLDG	480V POWER
		1	#12 AWG			GROUND
P7035	3/4"	3	#8 AWG	MCC-9	INSTANTANEOUS HOT WATER HEATER	480V POWER
		1	#10 AWG			GROUND
P7036	3/4"	3	#12 AWG	MCC-9	TRUCK BAY ROLL UP DOOR 8-625-ME	480V POWER
		1	#12 AWG			GROUND
P7037	3/4"	3	#12 AWG	MCC-9	VENT FAN 8-850-F DAF RM	480V POWER
		1	#12 AWG			GROUND
P7038 THRU P7050				NOT USED		
P7051	3/4"	3	#12 AWG	MCC-9	BASEMENT 50-EF-05	480V POWER
		1	#12 AWG			GROUND
P7052	3/4"	3	#12 AWG	MCC-9	BASEMENT 50-EF-04	480V POWER
		1	#12 AWG			GROUND
P7053	3/4"	3	#12 AWG	MCC-9	DRYER BLDG 50-EF-01	480V POWER
		1	#12 AWG			GROUND
P7054	3/4"	3	#10 AWG	MCC-9	DRYER BLDG 50-EF-03	480V POWER
		1	#10 AWG			GROUND
P7055	3/4"	3	#12 AWG	MCC-9	DRYER BLDG 50-EF-02	480V POWER
		1	#12 AWG			GROUND
P7056	3/4"	3	#12 AWG	MCC-9	DRYER BLDG 50-MAU-02	480V POWER
		1	#12 AWG			GROUND
P7057	1"	3	#4 AWG	MCC-9	DRYER BLDG 50-MAU-01 (FAN 1)	480V POWER
		1	#8 AWG			GROUND
P7058	3/4"	3	#8 AWG	MCC-9	50-HP01 (UNIT A)	480V POWER
		1	#10 AWG			GROUND
P7059	3/4"	3	#10 AWG	MCC-9	50-HP01 (UNIT B)	480V POWER
		1	#10 AWG			GROUND
P7060	3/4"	3	#8 AWG	MCC-9	50-HP02 (UNIT A)	480V POWER
		1	#10 AWG			GROUND
P7061	3/4"	3	#8 AWG	MCC-9	50-HP02 (UNIT B)	480V POWER
		1	#10 AWG			GROUND
P7062	3/4"	3	#12 AWG	MCC-9	50-HP03	480V POWER
		1	#12 AWG			GROUND
P7063				NOT USED		
P7064	3/4"	3	#12 AWG	MCC-9	CONVEYOR ROOM 50-EF-08	480V POWER
		1	#12 AWG			GROUND
P7065	3/4"	3	#12 AWG	MCC-9	DRYER BLDG 50-MAU-03	480V POWER
		1	#12 AWG			GROUND
P7066	3"	3	300 KCMIL	MCC-9	SYNAGRO TEMPORARY POWER	480V POWER
		1	#4 AWG			GROUND

GENERAL NOTES:

1. FOR SYMBOLS AND ABBREVIATIONS, SEE DRAWING E-1.
2. FOR CONSTRUCTION SEQUENCE, SEE DRAWING E-2.
3. FOR EQUIPMENT FED THROUGH VFDs, PROVIDE VFD CABLES BETWEEN EQUIPMENT AND VFD.
4. FOR FEEDERS FROM NEW MCC-9, CONTRACTOR SHALL FIELD VERIFY AND REUSE EXISTING CONDUITS TO THE EXTENT POSSIBLE. IN CASES WHERE REUSING THE EXISTING CONDUITS IS NOT POSSIBLE, CONTRACTOR SHALL ROUTE NEW CONDUITS TO RUN NEW FEEDERS.

THE DRAWINGS IN THIS SET ARE RECORD DRAWINGS. THEY ARE CONSTRUCTION CONTRACT DRAWINGS WHICH HAVE BEEN REVISED BASED ON AVAILABLE FIELD INFORMATION RECORDED BY OTHERS DURING CONSTRUCTION OF THIS CONTRACT. THERE HAS BEEN NO VERIFICATION OF DIMENSIONS SHOWN ON THE CONSTRUCTION DRAWINGS OR THE ACCURACY/COMPLETENESS OF THE FIELD INFORMATION RECEIVED.

SIGNATURE — DATE 2/7/2023

SHAH & ASSOCIATES

AS-BUILT REPLACEMENT SHEET

PROFESSIONAL CERTIFICATION
THIS DRAWING WAS ORIGINALLY APPROVED FOR CONSTRUCTION AND SEALED BY KANAIYALAL R. SHAH, A REGISTERED PROFESSIONAL ENGINEER IN THE STATE OF MARYLAND, NO. 11084

NOTICE TO CONTRACTORS
- PROJECT ELEVATIONS ARE BASED ON NAVD88 AND HOWARD COUNTY'S BENCHMARK SYSTEM
- PREVIOUS PROJECTS USED OTHER DATUMS
- APPLY THE FOLLOWING CONVERSIONS WHEN USING PREVIOUS CONTRACT DRAWINGS:
  - ADDITION NO. 6: SUBTRACT 0.80 FT
  - PRIOR ADDITIONS: SUBTRACT 1.04 FT

DEPARTMENT OF PUBLIC WORKS
HOWARD COUNTY, MARYLAND

CHIEF, BUREAU OF UTILITIES — DATE

DES: MM
DRN: DMG
CHK: KRS
DATE: 01/15/2018

DATE	REV	DESCRIPTION
03/2021		RECORD DRAWING

ELECTRICAL

CABLE AND CONDUIT SCHEDULE - VI

LITTLE PATUXENT WATER RECLAMATION PLANT
8TH ADDITION
BIOSOLIDS PROCESSING FACILITIES - PHASE 2

CAPITAL PROJECT S-6295
CONTRACT NO. 24-4936

ELECTION DISTRICT NO. 6
HOWARD COUNTY, MARYLAND

SCALE AS SHOWN

SHEET 286 OF 311

E-913

BIM 360://10054364 – Little Patuxent WRP 8th Addition/264592_100_E_V18.rvt
1/8/2022 11:27:38 AM

CABLE AND CONDUIT SCHEDULE

CONDUIT		CABLE		FROM	TO	REMARKS
FEEDER NUMBER	SIZE	QTY	SIZE			
P7067	3/4"	3	#12 AWG	MCC-9	POSITIVE PRESSURE UNIT 50-PPU01	480V POWER
		1	#12 AWG			GROUND
P7068	3/4"	3	#10 AWG	MCC-9	50-HP01 (UNIT C)	480V POWER
		1	#10 AWG			GROUND
P7069	3/4"	3	#12 AWG	MCC-9	50-EWH01	480V POWER
		1	#12 AWG			GROUND
P7070	2"	3	#1/0 AWG	MCC-9	ATS LP9A N1	480V POWER
		1	#6 AWG			GROUND
P7071	2"	3	#1/0 AWG	MCC-9	ATS LP9A N2	480V POWER
		1	#6 AWG			GROUND
P7072	2"	3	#1/0 AWG	ATS LP9A	XFMR LP9A	480V POWER
		1	#6 AWG			GROUND
P7073	3 1/2"	4	350KCMIL	XFMR LP9A	PNL LP9A	208V POWER
		1	#3 AWG			GROUND
P7074	2 1/2"	4	#4/0 AWG	LP9A	LP9B	208V POWER
		1	#6 AWG			GROUND
P7075 THRU P7099				NOT USED		
P7100	3/4"	3	#12 AWG	LP9B	FAN COOLING UNIT 50-FCU01	208V POWER
		1	#12 AWG			GROUND
P7101	3/4"	3	#12 AWG	LP9B	FAN COOLING UNIT 50-FCU02	208V POWER
		1	#12 AWG			GROUND
P7102	3/4"	3	#12 AWG	LP9B	FAN COOLING UNIT 50-FCU03	208V POWER
		1	#12 AWG			GROUND
P7103	3/4"	3	#12 AWG	LP9B	FAN COOLING UNIT 50-FCU04	208V POWER
		1	#12 AWG			GROUND
P7104	3/4"	3	#12 AWG	LP9B	FAN COOLING UNIT 50-FCU05	208V POWER
		1	#12 AWG			GROUND
P7105	3/4"	3	#12 AWG	LP9B	FAN COOLING UNIT 50-FCU06	208V POWER
		1	#12 AWG			GROUND
P7106	3/4"	3	#12 AWG	LP9B	FAN COOLING UNIT 50-FCU07	208V POWER
		1	#12 AWG			GROUND
P7107	3/4"	3	#12 AWG	LP9B	FAN COOLING UNIT 50-FCU08	208V POWER
		1	#12 AWG			GROUND
P7108	3/4"	3	#12 AWG	LP9B	FAN COOLING UNIT 50-FCU09	208V POWER
		1	#12 AWG			GROUND
P7109	3/4"	2	#12 AWG	LP9B	EXHAUST FAN 50-EF06	120V POWER
		1	#12 AWG			GROUND
P7110	3/4"	2	#12 AWG	LP9B	EXHAUST FAN 50-EF07	120V POWER
		1	#12 AWG			GROUND
P7111	3/4"	2	#12 AWG	LP9B	50-SF01	120V POWER
		1	#12 AWG			GROUND
P7112	3/4"	2	#12 AWG	LP9B	50-SF02	120V POWER
		1	#12 AWG			GROUND
P7113	3/4"	2	#12 AWG	LP9B	FACU	120V POWER
		1	#12 AWG			GROUND
P7114	3/4"	2	#12 AWG	LP9A	DRYER BUILDING STAIRS LIGHTING	120V POWER
		1	#12 AWG			GROUND
P7115	3/4"	2	#12 AWG	LP9A	DRYER BUILDING STAIRS LIGHTING	120V POWER
		1	#12 AWG			GROUND
P7116	3/4"	2	#12 AWG	LP9A	DRYER BUILDING STAIRS LIGHTING	120V POWER
		1	#12 AWG			GROUND
P7117	3/4"	2	#12 AWG	LP9A	DRYER BUILDING STAIRS LIGHTING	120V POWER
		1	#12 AWG			GROUND

CABLE AND CONDUIT SCHEDULE

CONDUIT		CABLE		FROM	TO	REMARKS
FEEDER NUMBER	SIZE	QTY	SIZE			
P7118	3/4"	2	#12 AWG	LP9A	DRYER BUILDING ELECTRICAL ROOM OUTDOOR LIGHTING	120V POWER
		1	#12 AWG			GROUND
P7119	3/4"	2	#12 AWG	LP9A	LIGHTING DRYER BUILDING ELECTRICAL ROOM	120V POWER
		1	#12 AWG			GROUND
P7120	3/4"	2	#12 AWG	LP9A	LIGHTING DRYER BUILDING	120V POWER
		1	#12 AWG			GROUND
P7121	3/4"	2	#12 AWG	LP9A	LIGHTING DRYER BUILDING	120V POWER
		1	#12 AWG			GROUND
P7122	3/4"	2	#12 AWG	LP9A	LIGHTING DRYER BUILDING	120V POWER
		1	#12 AWG			GROUND
P7123	3/4"	2	#12 AWG	LP9A	LIGHTING DRYER BUILDING	120V POWER
		1	#12 AWG			GROUND
P7124	3/4"	2	#12 AWG	LP9A	LIGHTING DRYER BUILDING	120V POWER
		1	#12 AWG			GROUND
P7125	3/4"	2	#12 AWG	LP9A	LIGHTING DRYER BUILDING	120V POWER
		1	#12 AWG			GROUND
P7126	3/4"	2	#12 AWG	LP9A	LIGHTING DRYER BUILDING	120V POWER
		1	#12 AWG			GROUND
P7127	3/4"	2	#12 AWG	LP9A	LIGHTING DRYER BUILDING	120V POWER
		1	#12 AWG			GROUND
P7128	3/4"	2	#10 AWG	LP9A	LIGHTING BIOFILTER	120V POWER
		1	#10 AWG			GROUND
P7129	3/4"	2	#12 AWG	LP9A	LIGHTING DRYER BUILDING	120V POWER
		1	#12 AWG			GROUND
P7130	3/4"	2	#12 AWG	LP9A	LIGHTING DRYER BUILDING BATHROOM	120V POWER
		1	#12 AWG			GROUND
P7131	3/4"	2	#12 AWG	LP9A	LIGHTING DRYER BUILDING BATHROOM	120V POWER
		1	#12 AWG			GROUND
P7132	3/4"	2	#12 AWG	LP9A	DRYER BUILDING CONTROL ROOM LIGHTING ZONE 1	120V POWER
		1	#12 AWG			GROUND
P7133	3/4"	2	#12 AWG	LP9A	DRYER BUILDING CONTROL ROOM LIGHTING ZONE 3	120V POWER
		1	#12 AWG			GROUND
P7134	3/4"	2	#12 AWG	LP9A	DRYER BUILDING SAMPLES ROOM LIGHTING	120V POWER
		1	#12 AWG			GROUND
P7135	3/4"	2	#12 AWG	LP9A	DRYER BUILDING STORAGE ROOM LIGHTING	120V POWER
		1	#12 AWG			GROUND
P7136	3/4"	2	#10 AWG	LP9A	BIOFILTER RECEPTACLE	120V POWER
		1	#10 AWG			GROUND
P7137	3/4"	2	#12 AWG	LP9A	DRYER BUILDING CONTROL ROOM RECEPTACLES	120V POWER
		1	#12 AWG			GROUND
P7138	3/4"	2	#12 AWG	LP9A	DRYER BUILDING BATH ROOM RECEPTACLES	120V POWER
		1	#12 AWG			GROUND
P7139	3/4"	2	#12 AWG	LP9A	DRYER BUILDING STORAGE ROOM RECEPTACLES	120V POWER
		1	#12 AWG			GROUND
P7140	3/4"	2	#12 AWG	LP9A	DRYER BUILDING SAMPLES ROOM RECEPTACLES	120V POWER
		1	#12 AWG			GROUND
P7141	3/4"	2	#12 AWG	LP9A	DRYER BUILDING CONTROL ROOM RECEPTACLES	120V POWER
		1	#12 AWG			GROUND
P7142	3/4"	2	#12 AWG	LP9A	DRYER BUILDING RECEPTACLES @ 141.2	120V POWER
		1	#12 AWG			GROUND
P7143	3/4"	2	#12 AWG	LP9A	DRYER BUILDING RECEPTACLES @ 141.2	120V POWER
		1	#12 AWG			GROUND
P7144	3/4"	2	#12 AWG	LP9A	DRYER BUILDING RECEPTACLES @ 141.2	120V POWER
		1	#12 AWG			GROUND

GENERAL NOTES:

1. FOR SYMBOLS AND ABBREVIATIONS, SEE DRAWING E-1.
2. FOR CONSTRUCTION SEQUENCE, SEE DRAWING E-2.
3. FOR EQUIPMENT FED THROUGH VFDs, PROVIDE VFD CABLES BETWEEN EQUIPMENT AND VFD.
4. FOR FEEDERS FROM NEW MCC-9, CONTRACTOR SHALL FIELD VERIFY AND REUSE EXISTING CONDUITS TO THE EXTENT POSSIBLE. IN CASES WHERE REUSING THE EXISTING CONDUITS IS NOT POSSIBLE, CONTRACTOR SHALL ROUTE NEW CONDUITS TO RUN NEW FEEDERS.

THE DRAWINGS IN THIS SET ARE RECORD DRAWINGS. THEY ARE CONSTRUCTION CONTRACT DRAWINGS WHICH HAVE BEEN REVISED BASED ON AVAILABLE FIELD INFORMATION RECORDED BY OTHERS DURING CONSTRUCTION OF THIS CONTRACT. THERE HAS BEEN NO VERIFICATION OF DIMENSIONS SHOWN ON THE CONSTRUCTION DRAWINGS OR THE ACCURACY/COMPLETENESS OF THE FIELD INFORMATION RECEIVED.

SIGNATURE _____ DATE 2/7/2022

SHAH & ASSOCIATES

HDR

AS-BUILT REPLACEMENT SHEET

PROFESSIONAL CERTIFICATION
THIS DRAWING WAS ORIGINALLY APPROVED FOR CONSTRUCTION AND SEALED BY KANAIYALAL R. SHAH, A REGISTERED PROFESSIONAL ENGINEER IN THE STATE OF MARYLAND, NO. 11084

NOTICE TO CONTRACTORS
- PROJECT ELEVATIONS ARE BASED ON NAVD88 AND HOWARD COUNTY'S BENCHMARK SYSTEM
- PREVIOUS PROJECTS USED OTHER DATUMS
- APPLY THE FOLLOWING CONVERSIONS WHEN USING PREVIOUS CONTRACT DRAWINGS:
  - ADDITION NO. 6: SUBTRACT 0.80 FT
  - PRIOR ADDITIONS: SUBTRACT 1.04 FT

DEPARTMENT OF PUBLIC WORKS
HOWARD COUNTY, MARYLAND

CHIEF, BUREAU OF UTILITIES DATE

DES: MM
DRN: DMG
CHK: KRS
DATE: 01/15/2018

DATE	REV	DESCRIPTION
03/2021		RECORD DRAWING

ELECTRICAL

CABLE AND CONDUIT SCHEDULE - VII

LITTLE PATUXENT WATER RECLAMATION PLANT
8TH ADDITION
BIOSOLIDS PROCESSING FACILITIES - PHASE 2

CAPITAL PROJECT S-6295
CONTRACT NO. 24-4936

ELECTION DISTRICT NO. 6
HOWARD COUNTY, MARYLAND

SCALE AS SHOWN

SHEET 287 OF 311

E-914

BIM 360://10054364 – Little Patuxent WRP 8th Addition/264592_100_E_V18.rvt
1/8/2022 11:27:39 AM

CABLE AND CONDUIT SCHEDULE

CONDUIT		CABLE		FROM	T0	REMARKS
FEEDER NUMBER	SIZE	QTY	SIZE			
P7145	3/4"	2	#12 AWG	LP9A	DRYER BUILDING RECEPTACLES @ 141.2	120V POWER
		1	#12 AWG			GROUND
P7146	3/4"	2	#12 AWG	LP9A	DRYER BUILDING RECEPTACLES @ 155.2	120V POWER
		1	#12 AWG			GROUND
P7147	3/4"	2	#12 AWG	LP9A	DRYER BUILDING RECEPTACLES @ 155.2	120V POWER
		1	#12 AWG			GROUND
P7148	3/4"	2	#12 AWG	LP9A	DRYER BUILDING RECEPTACLES @ 155.2	120V POWER
		1	#12 AWG			GROUND
P7149	3/4"	2	#12 AWG	LP9A	LIGHTING DRYER BUILDING ELECTRICAL ROOM	120V POWER
		1	#12 AWG			GROUND
P7150	3/4"	2	#12 AWG	LP9B	DP-001	120V POWER
		1	#12 AWG			GROUND
P7151	3/4"	2	#12 AWG	LP9B	DP-002	120V POWER
		1	#12 AWG			GROUND
P7152	3/4"	2	#12 AWG	LP9B	DP-003	120V POWER
		1	#12 AWG			GROUND
P7153	3/4"	2	#12 AWG	LP9B	DP-004	120V POWER
		1	#12 AWG			GROUND
P7154	3/4"	2	#12 AWG	LP9B	DP-005	120V POWER
		1	#12 AWG			GROUND
P7155	3/4"	2	#12 AWG	LP9B	DP-006	120V POWER
		1	#12 AWG			GROUND
P7156	3/4"	2	#12 AWG	LP9B	DP-007	120V POWER
		1	#12 AWG			GROUND
P7157	3/4"	2	#12 AWG	LP9B	DP-008	120V POWER
		1	#12 AWG			GROUND
P7158	3/4"	2	#12 AWG	LP9B	DP-009	120V POWER
		1	#12 AWG			GROUND
P7159	3/4"	2	#12 AWG	LP9B	DP-010	120V POWER
		1	#12 AWG			GROUND
P7160	3/4"	2	#12 AWG	LP9B	DP-011	120V POWER
		1	#12 AWG			GROUND
P7161	3/4"	2	#12 AWG	LP9B	DP-012	120V POWER
		1	#12 AWG			GROUND
P7162	3/4"	2	#12 AWG	LP9B	DP-013	120V POWER
		1	#12 AWG			GROUND
P7163	3/4"	2	#12 AWG	LP9B	SD-001	120V POWER
		1	#12 AWG			GROUND
P7164	3/4"	2	#12 AWG	LP9B	SD-002	120V POWER
		1	#12 AWG			GROUND
P7165	3/4"	2	#12 AWG	LP9B	SD-003	120V POWER
		1	#12 AWG			GROUND
P7166	3/4"	2	#12 AWG	LP9B	DP-014	120V POWER
		1	#12 AWG			GROUND
P7167	3/4"	2	#12 AWG	LP9B	MAU01-TCP	120V POWER
		1	#12 AWG			GROUND
P7168	3/4"	2	#12 AWG	LP9B	MAU02-TCP	120V POWER
		1	#12 AWG			GROUND
P7169	3/4"	2	#12 AWG	LP9B	MAU03-TCP	120V POWER
		1	#12 AWG			GROUND
P7170	3/4"	2	#12 AWG	LP9B	HPO1-HPO2-TCP	120V POWER
		1	#12 AWG			GROUND
P7171	3/4"	2	#10 AWG	LP9A	EXISTING ROAD LIGHT-1 NEAR PS-2 VAULT	208V POWER
		1	#10 AWG			GROUND

CABLE AND CONDUIT SCHEDULE

CONDUIT		CABLE		FROM	T0	REMARKS
FEEDER NUMBER	SIZE	QTY	SIZE			
P7172	3/4"	2	#10 AWG	LP9A	EXISTING ROAD LIGHT-2 NEAR PS-2 VAULT	208V POWER
		1	#10 AWG			GROUND
P7173	3/4"	2	#10 AWG	LP9A	EXISTING ROAD LIGHT-3 NEAR PS-2 VAULT	208V POWER
		1	#10 AWG			GROUND
P7174	3/4"	2	#10 AWG	LP9A	EXISTING ROAD LIGHT-4 NEAR PS-2 VAULT	208V POWER
		1	#10 AWG			GROUND
P7175	3/4"	2	#10 AWG	LP9A	EXISTING LOAD ON (GFCI)	120V POWER
		1	#10 AWG			GROUND
P7176	3/4"	2	#10 AWG	LP9A	EXISTING LOAD ON (GFCI)	120V POWER
		1	#10 AWG			GROUND
P7177	3/4"	2	#10 AWG	LP9A	EXISTING LIGHT PS-2 VAULT	120V POWER
		1	#10 AWG			GROUND
P7178	3/4"	2	#10 AWG	LP9A	EXISTING RECEPTACLE PS-2 VAULT	120V POWER
		1	#10 AWG			GROUND
P7179	3/4"	2	#10 AWG	LP9A	EXISTING FEED TO TRAILER / OFF (GFCI)	120V POWER
		1	#10 AWG			GROUND
P7180	3/4"	2	#10 AWG	LP9A	EXISTING LOAD (GFCI)	120V POWER
		1	#10 AWG			GROUND
P7181	3/4"	2	#10 AWG	LP9A	EXISTING RECEPTACLES - PS-2 SUBSTATION DECK	120V POWER
		1	#10 AWG			GROUND
P7182	3/4"	2	#10 AWG	LP9A	EXISTING LIGHT PS-2 SUBSTATION - DECK	120V POWER
		1	#10 AWG			GROUND
P7183	1"	2	#6 AWG	EXST PANEL PP	EXISTING SCALE HOUSE NEAR EXISTING PS-2 SUBSTATION	240V POWER
		1	#6 AWG			GROUND
P7184				NOT USED		
P7185				NOT USED		
P7186	3/4"	2	#12 AWG	LP9A	PS-2 SUBSTATION PLATFORM RECEPTACLES	120V POWER
		1	#12 AWG			GROUND
P7187	3/4"	2	#12 AWG	LP9A	RECEPTACLES @ 155.2	120V POWER
		1	#12 AWG			GROUND
P7188	3/4"	2	#12 AWG	LP9A	DRYER BUILDING OUTDOOR LIGHTING	120V POWER
		1	#12 AWG			GROUND
P7189	3/4"	2	#8 AWG	LP9B	PRE-ACTION AUXILIARY SPRINKLER SYSTEM COMPRESSOR	120V POWER
		1	#10 AWG			GROUND
P7190	3/4"	2	#12 AWG	LP9A	DRYER BUILDING CONTROL ROOM LIGHTING ZONE 2	120V POWER
		1	#12 AWG			GROUND
P7191	3/4"	2	#12 AWG	LP9A	DRYER BUILDING CONTROL ROOM WORKSTATIONS	120V POWER
		1	#12 AWG			GROUND
P7192	3/4"	2	#12 AWG	LP9A	DRYER BUILDING CONTROL ROOM WORKSTATIONS	120V POWER
		1	#12 AWG			GROUND
P7193	3/4"	2	#12 AWG	LP9A	DRYER BUILDING SAMPLE ROOM COUNTER RECEPTS	120V POWER
		1	#12 AWG			GROUND
P7194	3/4"	2	#12 AWG	LP9A	DRYER BUILDING SAMPLE ROOM COUNTER RECEPTS	120V POWER
		1	#12 AWG			GROUND
P7195	3/4"	2	#12 AWG	LP9A	WALKWAY BETWEEN DRYER ROOM & TRUCK BAY LIGHTS	120V POWER
		1	#12 AWG			GROUND
P7196	3/4"	2	#10 AWG	LP9A	SILO 1 SKIRT LIGHTS	120V POWER
		1	#10 AWG			GROUND
P7197	3/4"	2	#10 AWG	LP9A	SILO 2 SKIRT LIGHTS	120V POWER
		1	#10 AWG			GROUND
P7198	3/4"	2	#4 AWG	LP9A	SILO 1 SKIRT RECEPTACLES	120V POWER
		1	#4 AWG			GROUND
P7199	3/4"	2	#4 AWG	LP9A	SILO 2 SKIRT RECEPTACLES	120V POWER
		1	#4 AWG			GROUND
P7200	3/4"	2	#12 AWG	LP9A	WALKWAY BETWEEN DRYER ROOM AND TRUCK BAY RECEPTACLES	120V POWER
		1	#12 AWG			GROUND

GENERAL NOTES:

1. FOR SYMBOLS AND ABBREVIATIONS, SEE DRAWING E-1.
2. FOR CONSTRUCTION SEQUENCE, SEE DRAWING E-2.
3. FOR EQUIPMENT FED THROUGH VFDs, PROVIDE VFD CABLES BETWEEN EQUIPMENT AND VFD.
4. FOR FEEDERS FROM NEW MCC-9 CONTRACTOR SHALL FIELD VERIFY AND REUSE EXISTING CONDUITS TO THE EXTENT POSSIBLE. IN CASES WHERE REUSING THE EXISTING CONDUITS IS NOT POSSIBLE, CONTRACTOR SHALL ROUTE NEW CONDUITS TO RUN NEW FEEDERS.

THE DRAWINGS IN THIS SET ARE RECORD DRAWINGS. THEY ARE CONSTRUCTION CONTRACT DRAWINGS WHICH HAVE BEEN REVISED BASED ON AVAILABLE FIELD INFORMATION RECORDED BY OTHERS DURING CONSTRUCTION OF THIS CONTRACT. THERE HAS BEEN NO VERIFICATION OF DIMENSIONS SHOWN ON THE CONSTRUCTION DRAWINGS OR THE ACCURACY/COMPLETENESS OF THE FIELD INFORMATION RECEIVED.

SIGNATURE — DATE 2/7/2023

SHAH & ASSOCIATES

AS-BUILT REPLACEMENT SHEET

PROFESSIONAL CERTIFICATION
THIS DRAWING WAS ORIGINALLY APPROVED FOR CONSTRUCTION AND SEALED BY KANAIYALAL R. SHAH, A REGISTERED PROFESSIONAL ENGINEER IN THE STATE OF MARYLAND, NO. 11084

NOTICE TO CONTRACTORS
- PROJECT ELEVATIONS ARE BASED ON NAVD88 AND HOWARD COUNTY'S BENCHMARK SYSTEM
- PREVIOUS PROJECTS USED OTHER DATUMS
- APPLY THE FOLLOWING CONVERSIONS WHEN USING PREVIOUS CONTRACT DRAWINGS:
  - ADDITION NO. 6: SUBTRACT 0.80 FT
  - PRIOR ADDITIONS: SUBTRACT 1.04 FT

DEPARTMENT OF PUBLIC WORKS
HOWARD COUNTY, MARYLAND

CHIEF, BUREAU OF UTILITIES — DATE

DES: MM
DRN: DMG
CHK: KRS
DATE: 01/15/2018

DATE	REV	DESCRIPTION
03/2021		RECORD DRAWING

ELECTRICAL

CABLE AND CONDUIT SCHEDULE - VIII

LITTLE PATUXENT WATER RECLAMATION PLANT
8TH ADDITION
BIOSOLIDS PROCESSING FACILITIES - PHASE 2

CAPITAL PROJECT S-6295
CONTRACT NO. 24-4936

ELECTION DISTRICT NO. 6
HOWARD COUNTY, MARYLAND

SCALE AS SHOWN

SHEET 288 OF 311

E-914A

BIM 360://10054364 – Little Patuxent WRP 8th Addition/264592_100_E_V18.rvt
1/8/2022 11:27:40 AM

GENERAL NOTES:

1. FOR SYMBOLS AND ABBREVIATIONS, SEE DRAWING E-1.

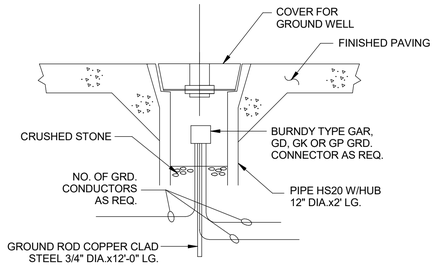

1 E-915 **TEST WELL DETAIL**
SCALE: NONE

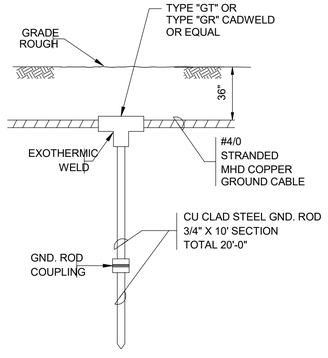

2 E-915 **GROUND ROD DETAIL**
SCALE: NONE

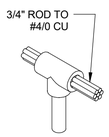

3 E-915 **CABLE TO GROUND ROD DETAIL**
SCALE: NONE

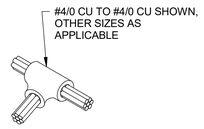

4 E-915 **CABLE CROSS CONNECTION DETAIL**
SCALE: NONE

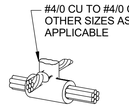

5 E-915 **CABLE TEE CONNECTION DETAIL**
SCALE: NONE

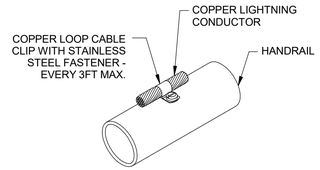

6 E-915 **CABLE TO HANDRAIL DETAIL**
SCALE: NONE

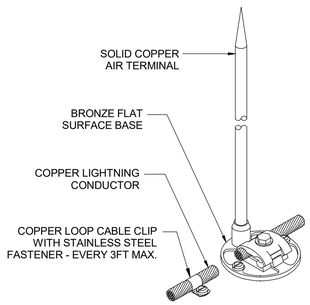

7 E-915 **AIR FLASK DETAIL**
SCALE: NONE

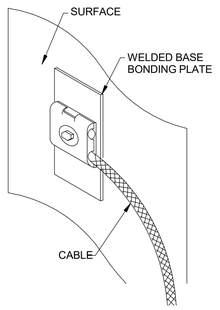

8 E-915 **BOND TO EQUIPMENT DETAIL**
SCALE: NONE

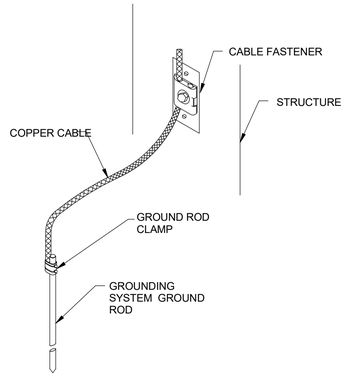

9 E-915 **BOND TO STRUCTURE DETAIL**
SCALE: NONE

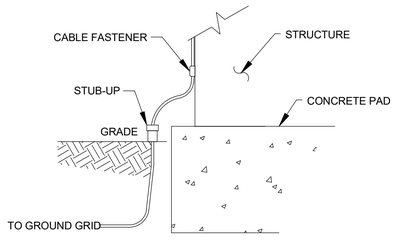

10 E-915 **STUB-UP GROUNDING DETAIL**
SCALE: NONE

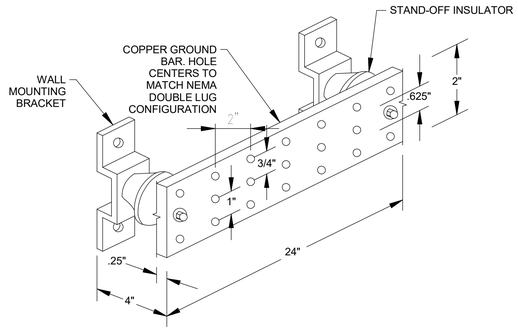

11 E-915 **GROUND BAR DETAIL**
SCALE: NONE

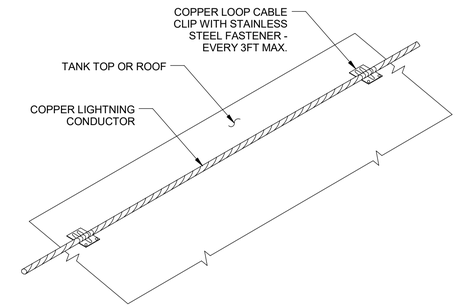

12 E-915 **CABLE MOUNTED TO PLATFORM DETAIL**
SCALE: NONE

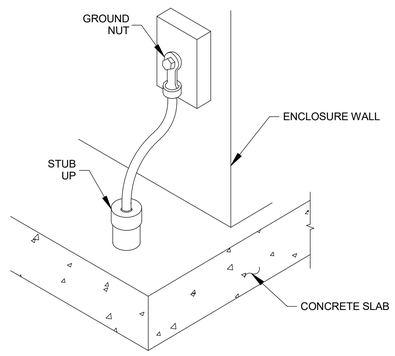

13 E-915 **CABLE BONDED TO STRUCTURE DETAIL**
SCALE: NONE

THE DRAWINGS IN THIS SET ARE RECORD DRAWINGS. THEY ARE CONSTRUCTION CONTRACT DRAWINGS WHICH HAVE BEEN REVISED BASED ON AVAILABLE FIELD INFORMATION RECORDED BY OTHERS DURING CONSTRUCTION OF THIS CONTRACT. THERE HAS BEEN NO VERIFICATION OF DIMENSIONS SHOWN ON THE CONSTRUCTION DRAWINGS OR THE ACCURACY/COMPLETENESS OF THE FIELD INFORMATION RECEIVED.

SIGNATURE — DATE 2/7/2023

SHAH & ASSOCIATES

AS-BUILT REPLACEMENT SHEET

PROFESSIONAL CERTIFICATION
THIS DRAWING WAS ORIGINALLY APPROVED FOR CONSTRUCTION AND SEALED BY KANAIYALAL R SHAH, A REGISTERED PROFESSIONAL ENGINEER IN THE STATE OF MARYLAND, NO. 11084

NOTICE TO CONTRACTORS
- PROJECT ELEVATIONS ARE BASED ON NAVD88 AND HOWARD COUNTY'S BENCHMARK SYSTEM
- PREVIOUS PROJECTS USED OTHER DATUMS
- APPLY THE FOLLOWING CONVERSIONS WHEN USING PREVIOUS CONTRACT DRAWINGS:
  - ADDITION NO. 6: SUBTRACT 0.80 FT
  - PRIOR ADDITIONS: SUBTRACT 1.04 FT

DEPARTMENT OF PUBLIC WORKS
HOWARD COUNTY, MARYLAND

CHIEF, BUREAU OF UTILITIES — DATE

DES: MM
DRN: DMG
CHK: KRS
DATE: 01/15/2018

DATE	REV	DESCRIPTION
03/2021		RECORD DRAWING

ELECTRICAL

GROUNDING AND LIGHTNING PROTECTION DETAILS

LITTLE PATUXENT WATER RECLAMATION PLANT
8TH ADDITION
BIOSOLIDS PROCESSING FACILITIES - PHASE 2

CAPITAL PROJECT S-6295
CONTRACT NO. 24-4936

ELECTION DISTRICT NO. 6
HOWARD COUNTY, MARYLAND

SCALE AS SHOWN

SHEET 289 OF 311

E-915

BIM 360://10054364 – Little Patuxent WRP 8th Addition/264592_100_E_V18.rvt
1/8/2022 11:27:41 AM

LIGHTING FIXTURE SCHEDULE

FIXTURE TYPE	MOUNTING HEIGHT	CABLE WATTAGE	CABLE LAMP	VOLTS	DESCRIPTIONS WITH CATALOG NO.	REMARKS
A	SEE LIGHTING PLAN	188	LED	120	HAZARDOUS AREA CLASS II DIV 1 & 2 GROUP E F G PENDANT HIGHBAY, A360 DIECAST ALUMINUM, BAKED ON GRAY EPOXY FINISH, 55 DEGREES C AMBIENT. FIELD REPLACEABLE BOARDS & DRIVERS WITH QUICK DISCONNECTS, TEMPERED GLASS LENS, RIG-A-LITE LHFL-20-L-U-P-76-40	SEE DETAIL A
A1	SEE LIGHTING PLAN	30	LED	120	HAZARDOUS AREA CLASS II DIV 1 & 2 GROUP E F G CEILING LUMINAIRE. WIDE DISTRIBUTION WITH UPLIGHT, A360 DIECAST ALUMINUM, BAKED ON GRAY EPOXY FINISH FIELD REPLACEABLE BOARDS, DRIVERS WITH QUICK DISCONNECTS, BOROSILICATE LENS, RIG-A-LITE SAFJ-03-L2-U-LFG-C	SEE DETAIL A1
A2	SEE LIGHTING PLAN	70	LED	120	HAZARDOUS AREA CLASS II DIV 1 & 2 GROUP E F G WALL MOUNT LUMINAIRE. WIDE DISTRIBUTION, A360 DIECAST ALUMINUM, BAKED ON GRAY EPOXY FINISH. FIELD REPLACEABLE BOARDS & DRIVERS, QUICK DISCONNECTS, RIG-A-LITE SAFR-09-L2-U-LCG-W	SEE DETAIL A2
B	SEE LIGHTING PLAN	41	LED	120	RECESSED DOWN LIGHT, 0-10V DIMMING, ATLANTIC LED 6-DLM15-35K-U-6LED10-CL	SEE DETAIL B
B1	SEE LIGHTING PLAN	59	LED	120	RECESSED TROFFER, CENTER CURVED LENS, WILLIAMS CAT #AT1-24-LSS-830-SH-XXX-DIM-UNV	SEE DETAIL B1
C	SEE LIGHTING PLAN	70	LED	120	CLASS 1 DIVISION 2 LED FLOODLIGHT CAT# LHFLJ-07-L-U-TP-76 USE RIG-A-LITE POLE TOP MOUNTING KIT CAT# FLB-5	SEE DETAIL C
D	SEE LIGHTING PLAN	18	LED	120	CLASS 1 DIV 2 GLOBE AND GUARD LUMINAIRE, A360 DIECAST ALUMINUM HOUSING WITH BAKES ON GRAY EPOXY FINISH, BOROSILICATE GLASS LENS, RIG-A-LITE CAT #AVPH-18L2-U-HF-G-W-50.	SEE DETAIL D
E	SEE LIGHTING PLAN	36	DCB	120	EXPLOSION PROOF EMERGENCY LIGHTING CLASS 2 DIVISION 2. SINGLE PIECE HEAVY GAUGE CORROSION RESISTANT COPPER - FREE CAST ALUMINUM. LIGHTALARMS CAT # EXP6N50-E402L9-TS-2 OR APPROVED EQUAL.	SEE DETAIL E
E1	SEE LIGHTING PLAN	60	DCB	120	EXPLOSION PROOF COMBINATION OF EXIT AND EMERGENCY LIGHTING, CLASS 2 DIVISION 2. SINGLE PIECE HEAVY GAUGE CORROSION RESISTANT COPPER FREE CAST ALUMINUM. LIGHT ALARM CAT #EXP6N50-E402LH1-TS-X402-12 OR APPROVED EQUAL	SEE DETAIL E1
E3	SEE LIGHTING PLAN	20	LED	120	NEMA 4X HARSH ENVIRONMENT, EMERGENCY LIGHT DIE CAST ALUMINUM BACK PLATE WITH INTERNAL THERMOPLASTIC HOUSING. LIGHTALARMS CAT #2 V12N2/LD10-M-D.	SEE DETAIL E3
E4	SEE LIGHTING PLAN	1.2	LED	120	SEVERE AND HARSH ENVIRONMENTS LED EXIT SIGN WITH SELF-TESTING. NEMA 4X WITH SEALED MAINTENANCE-FREE BATTERIES. DOUBLE FACE. LIGHTALARMS CAT # XVE-2R-D-4X OR APPROVED EQUAL.	SEE DETAIL E4
E5	SEE LIGHTING PLAN	1.2	LED	120	SEVERE AND HARSH ENVIRONMENTS LED EXIT SIGN WITH SELF-TESTING. NEMA 4X WITH SEALED MAINTENANCE-FREE BATTERIES. SINGLE FACE. LIGHTALARMS CAT # XVE-1R-D-4X OR APPROVED EQUAL.	SEE DETAIL E5
F	SEE LIGHTING PLAN	58	LED	120	FOUR FOOT WELDED 16 GALVINIZED STEEL HOUSING, FROSTED HIGH IMPACT ACRYLIC LENS, WHITE POLYESTER POWER COAT FINISH, ALL PARTS PAINTED AFTER FABRICATION. WILLIAMS CAT # SLF-4-L52/840-HIA-UNV.	SEE DETAIL F AND H
G	SEE LIGHTING PLAN	43	LED	120	LENSED STRIP LIGHT, WILLIAM, 75L-4-L38-835-A12125-UNV.	SEE DETAIL G
H	SEE LIGHTING PLAN	37	LED	120	TWO FEET WELDED 16 GALVANIZED STEEL HOUSING, FROSTED HIGH IMPACT ACRYLIC LENS, WHITE POLYESTER POWER COAT FINISH. WILLIAMS CAT #SLF-2-L35-835-HIA-UNV.	SEE DETAIL F AND H
J	SEE LIGHTING PLAN	29	LED	120	SOLID FRONT UNDER CABINET LIGHT HE WILLIAMS CAT #1SF-4-L24-835-AF12125-WRS/120-UNV.	SEE DETAIL J
K	SEE LIGHTING	87	LED	120	WILLIAMS CAT # 82-4-L107-840-DRV-UNV.	SEE DETAIL K

LIGHTING FIXTURE SCHEDULE (CONTINUED)

FIXTURE TYPE	MOUNTING HEIGHT	CABLE WATTAGE	CABLE LAMP	VOLTS	DESCRIPTIONS WITH CATALOG NO.	REMARKS
L	SEE LIGHTING PLAN	104	LED	120	DIE-CAST ALUMINUM ENCLOSURE WITH INTEGRAL DIE-CAST ALUMINUM HEATSINK AND LED SOURCE PROVIDE PASSIVE THERMAL MANAGEMENT. SUPER DURABLE POLYESTER POWDER COAT FINISH. SURFACE MOUNTED. LUMINAIRE IS IP65 RATED. WILLIAMS CAT #VWM-V-L10-740-TL-BLK-SDGL-PC-120V.	SEE DETAIL L
M	SEE LIGHTING PLAN	55	LED	120	COPPER-FREE CAST ALUMINUM HOUSING. 6500 LUMENS, ANGLED STANCHION 1-1/2" THREADED MOUNTED, TYPE V MEDIUM 70° FWHM3 OPTICS AND LENS GUARD. LDPI CAT #LE300-PS-V1-X5-M-G.	SEE DETAIL M

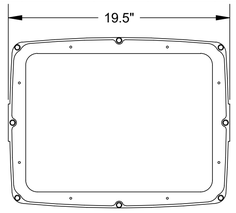

TYPE "A"

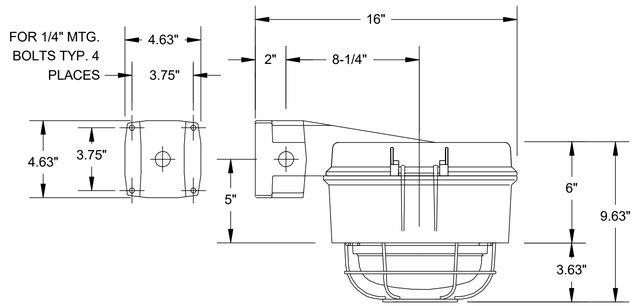

WALL MOUNT WITH GLASS GLOBE AND GUARD

TYPE "A2"

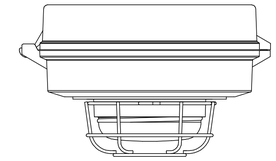

CEILING PENDANT

TYPE "A1"

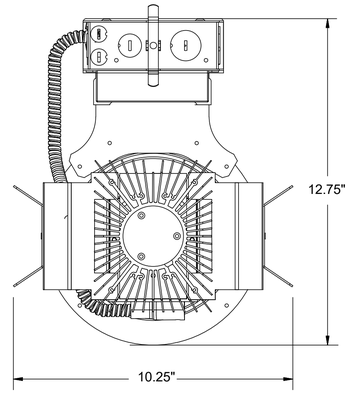

TYPE "B"

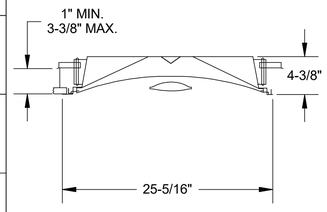

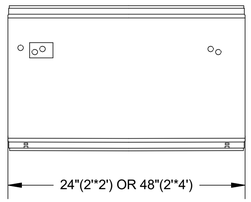

TYPE "B1"

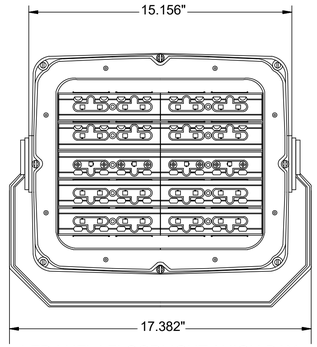

LED LHFLJ FLOODLIGHT / HIGH-BAY

TYPE "C"

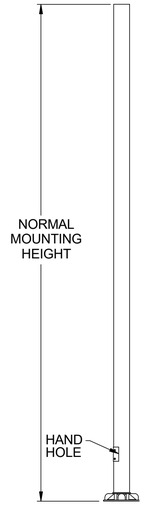

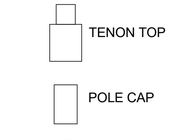

NUT COVERS (STANDARD)

DART SQUARE-2T (OPTIONAL)

ANCHOR BASE DETAIL (AS VIEWED FROM TOP OF POLE)

VALMONT STRUCTURES 8' TO 16' ROUND TAPERED ALUMINUM 4-BOLT ANCHOR BASE

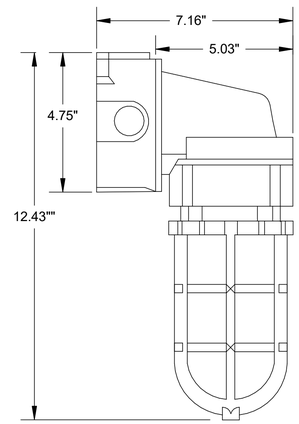

TYPE "D"

GENERAL NOTES:

1. FOR SYMBOLS AND ABBREVIATIONS, SEE DRAWING E-1.
2. FOR LIGHTING PLANS, SEE DRAWINGS E-31, E-509 THRU E-514.

THE DRAWINGS IN THIS SET ARE RECORD DRAWINGS. THEY ARE CONSTRUCTION CONTRACT DRAWINGS WHICH HAVE BEEN REVISED BASED ON AVAILABLE FIELD INFORMATION RECORDED BY OTHERS DURING CONSTRUCTION OF THIS CONTRACT. THERE HAS BEEN NO VERIFICATION OF DIMENSIONS SHOWN ON THE CONSTRUCTION DRAWINGS OR THE ACCURACY/COMPLETENESS OF THE FIELD INFORMATION RECEIVED.

SIGNATURE — DATE 2/7/2022

SHAH & ASSOCIATES

AS-BUILT REPLACEMENT SHEET

PROFESSIONAL CERTIFICATION
THIS DRAWING WAS ORIGINALLY APPROVED FOR CONSTRUCTION AND SEALED BY KANAIYALAL R. SHAH, A REGISTERED PROFESSIONAL ENGINEER IN THE STATE OF MARYLAND, NO. 11084

NOTICE TO CONTRACTORS
- PROJECT ELEVATIONS ARE BASED ON NAVD88 AND HOWARD COUNTY'S BENCHMARK SYSTEM
- PREVIOUS PROJECTS USED OTHER DATUMS
- APPLY THE FOLLOWING CONVERSIONS WHEN USING PREVIOUS CONTRACT DRAWINGS:
  - ADDITION NO. 6: SUBTRACT 0.80 FT
  - PRIOR ADDITIONS: SUBTRACT 1.04 FT

DEPARTMENT OF PUBLIC WORKS
HOWARD COUNTY, MARYLAND

CHIEF, BUREAU OF UTILITIES — DATE

DES: MM
DRN: DMG
CHK: KRS
DATE: 01/15/2018

DATE	REV	DESCRIPTION
03/2021		RECORD DRAWING

ELECTRICAL

LIGHTING FIXTURE AND DETAILS I

LITTLE PATUXENT WATER RECLAMATION PLANT
8TH ADDITION
BIOSOLIDS PROCESSING FACILITIES - PHASE 2

CAPITAL PROJECT S-6295
CONTRACT NO. 24-4936

ELECTION DISTRICT NO. 6
HOWARD COUNTY, MARYLAND

SCALE AS SHOWN

SHEET 290 OF 311

E-916

BIM 360://10054364 – Little Patuxent WRP 8th Addition/264592_100_E_V18.rvt
1/8/2022 11:27:41 AM

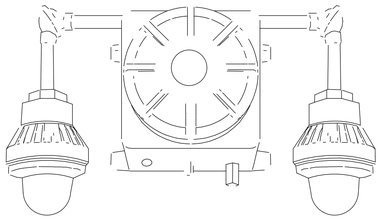

HOUSING : 12" X 12" X 9-1/2"
MOUNTING LUGS: 10" AND 13-1/2" ON CENTER
OVERALL DIMENSIONS (INCLUDING FIXTURES): 38" X 38" X 10"

TYPE "E"

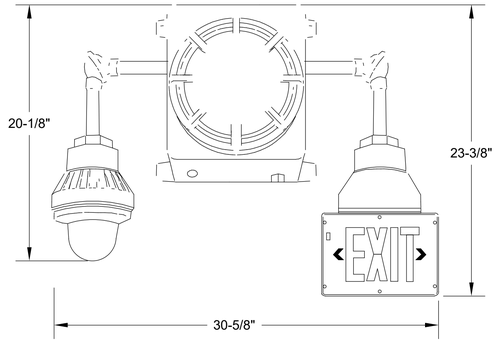

TYPE "E1"

GENERAL NOTES:

1. FOR SYMBOLS AND ABBREVIATIONS, SEE DRAWING E-1.
2. FOR LIGHTING PLANS, SEE DRAWINGS E-509 THRU E-512.

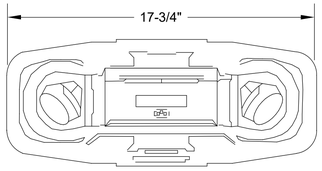

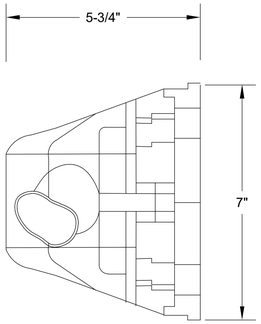

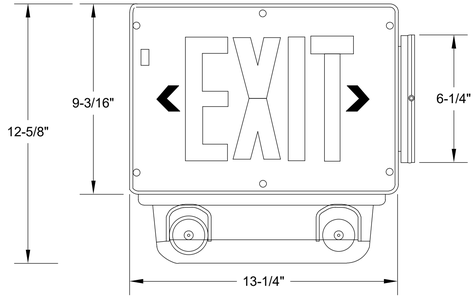

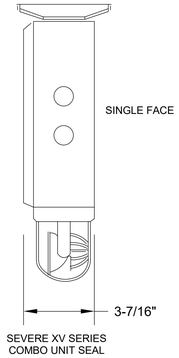

SEVERE XV SERIES
COMBO UNIT SEAL

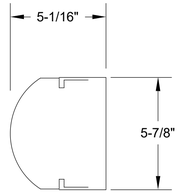

MOUNTING INFORMATION

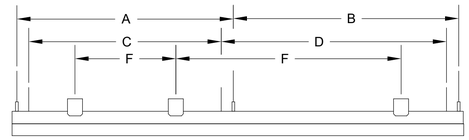

STAND ALONE — SUBSEQUENT

	MOUNTING LENGTH					
	AIRCRAFT CABLE		VBY HANGER		315 SPACER	
	A	B	C	D	E	F
2'	21-1/2"	21-1/2"	19"	21-1/2"	10"	21-1/2"
4'	43-5/8"	44-5/8"	41-1/4"	44-5/8"	32"	44-5/8"
8'	88-3/16"	89-1/4"	85"	89-1/4"	77"	89-1/4"

TYPE "E3"

TYPE "E4" AND "E5"

TYPE "F" AND TYPE "H"

TYPE "G"

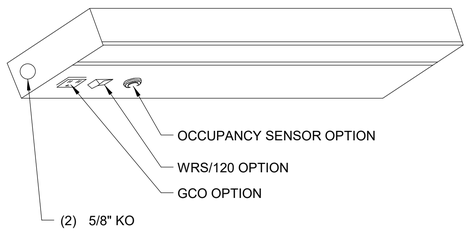

TYPE "J"

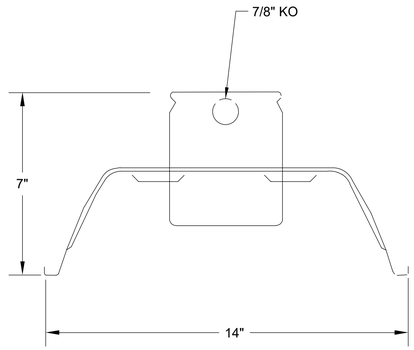

TYPE "K"

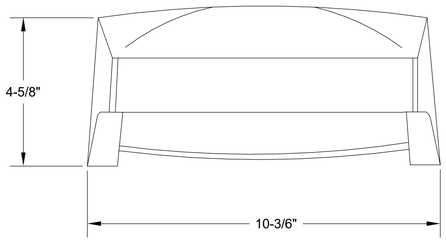

TYPE "L"

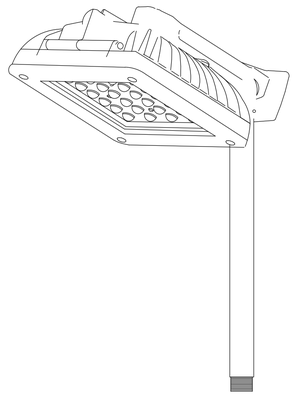

25° ANGLED STANCHION MOUNT

TYPE "M"

THE DRAWINGS IN THIS SET ARE RECORD DRAWINGS. THEY ARE CONSTRUCTION CONTRACT DRAWINGS WHICH HAVE BEEN REVISED BASED ON AVAILABLE FIELD INFORMATION RECORDED BY OTHERS DURING CONSTRUCTION OF THIS CONTRACT. THERE HAS BEEN NO VERIFICATION OF DIMENSIONS SHOWN ON THE CONSTRUCTION DRAWINGS OR THE ACCURACY/COMPLETENESS OF THE FIELD INFORMATION RECEIVED.

SIGNATURE — DATE

SHAH & ASSOCIATES

AS-BUILT REPLACEMENT SHEET

PROFESSIONAL CERTIFICATION
THIS DRAWING WAS ORIGINALLY APPROVED FOR CONSTRUCTION AND SEALED BY KANAIYALAL R. SHAH, A REGISTERED PROFESSIONAL ENGINEER IN THE STATE OF MARYLAND, NO. 11084

NOTICE TO CONTRACTORS
- PROJECT ELEVATIONS ARE BASED ON NAVD88 AND HOWARD COUNTY'S BENCHMARK SYSTEM
- PREVIOUS PROJECTS USED OTHER DATUMS
- APPLY THE FOLLOWING CONVERSIONS WHEN USING PREVIOUS CONTRACT DRAWINGS:
  - ADDITION NO. 6: SUBTRACT 0.80 FT
  - PRIOR ADDITIONS: SUBTRACT 1.04 FT

DEPARTMENT OF PUBLIC WORKS
HOWARD COUNTY, MARYLAND

CHIEF, BUREAU OF UTILITIES — DATE

DES: MM
DRN: DMG
CHK: KRS
DATE: 01/15/2018

DATE	REV	DESCRIPTION
03/2021		RECORD DRAWING

ELECTRICAL

LIGHTING FIXTURE AND DETAILS 2

LITTLE PATUXENT WATER RECLAMATION PLANT
8TH ADDITION
BIOSOLIDS PROCESSING FACILITIES - PHASE 2

CAPITAL PROJECT S-6295
CONTRACT NO. 24-4936

ELECTION DISTRICT NO. 6
HOWARD COUNTY, MARYLAND

SCALE AS SHOWN

SHEET 291 OF 311

E-917

BIM 360://10054364 – Little Patuxent WRP 8th Addition/264592_100_E_V18.rvt
1/8/2022 11:27:42 AM

CONDUCTOR AND CONDUIT SCHEDULE
CONTROL CONDUITS

DWG MARK	CONDUCTOR	CONDUIT SIZE METAL	PVC	FLEX
C-5000	CAT 6	3/4"	3/4"	3/4"
C-5001	NOT USED			
C-5002	12#14 & #14G	3/4"	3/4"	3/4"
C-5003	CAT 6	3/4"	3/4"	3/4"
C-5004	NOT USED			
C-5005	12#14 & #14G	3/4"	3/4"	3/4"
C-5006	10#14	3/4"	3/4"	3/4"
C-5007	10#14	3/4"	3/4"	3/4"
C-5008	10#14	3/4"	3/4"	3/4"
C-5009	10#14	3/4"	3/4"	3/4"
C-5010	1#16 TSP	3/4"	3/4"	3/4"
C-5011	1#16 TSP	3/4"	3/4"	3/4"
C-5012	1#16 TSP	3/4"	3/4"	3/4"
C-5013	1#16 TSP	3/4"	3/4"	3/4"
C-5014	1#16 TSP	3/4"	3/4"	3/4"
C-5015	1#16 TSP	3/4"	3/4"	3/4"
C-5016	NOT USED			
C-5017	NOT USED			
C-5018	NOT USED			
C-5019	NOT USED			
C-5020	1#16 TSP	3/4"	3/4"	3/4"
C-5021	1#16 TSP	3/4"	3/4"	3/4"
C-5022	1#16 TSP	3/4"	3/4"	3/4"
C-5023	1#16 TSP	3/4"	3/4"	3/4"
C-5024	NOT USED			
C-5025	6 STR FO	3/4"	3/4"	3/4"
C-5026	1#16 TSP	3/4"	3/4"	3/4"
C-5027	1#16 TSP	3/4"	3/4"	3/4"
C-5028	8#14 & #14G	3/4"	3/4"	3/4"
C-5029	1#16 TSP	3/4"	3/4"	3/4"
C-5030	1#16 TSP	3/4"	3/4"	3/4"
C-5031	8#14 & #14G	3/4"	3/4"	3/4"
C-5032	1#16 TSP	3/4"	3/4"	3/4"
C-5033	NOT USED			
C-5034	NOT USED			
C-5035	10#14	3/4"	3/4"	3/4"
C-5036	10#14	3/4"	3/4"	3/4"
C-5037	10#14	3/4"	3/4"	3/4"
C-5038	10#14	3/4"	3/4"	3/4"
C-5039	2#14 & #14G	3/4"	3/4"	3/4"
C-5040	2#14 & #14G	3/4"	3/4"	3/4"
C-5041	2#14 & #14G	3/4"	3/4"	3/4"
C-5042	2#14 & #14G	3/4"	3/4"	3/4"
C-5043	8#14	3/4"	3/4"	3/4"
C-5044	2#14 & #14G	3/4"	3/4"	3/4"
C-5045	10#14	3/4"	3/4"	3/4"
C-5046	2#14 & #14G	3/4"	3/4"	3/4"
C-5047	10#14	3/4"	3/4"	3/4"
C-5048	NOT USED			
C-5049	NOT USED			
C-5050	NOT USED			
C-5051	NOT USED			
C-5052	NOT USED			
C-5053	NOT USED			
C-5054	NOT USED			
C-5055	NOT USED			
C-5056	12#14 & #14G	3/4"	3/4"	3/4"
C-5057	12#14 & #14G	3/4"	3/4"	3/4"
C-5058	12#14 & #14G	3/4"	3/4"	3/4"
C-5059	12#14 & #14G	3/4"	3/4"	3/4"
C-5060	2#14 & #14G	3/4"	3/4"	3/4"
C-5061	2#14 & #14G	3/4"	3/4"	3/4"
C-5062	2#14 & #14G	3/4"	3/4"	3/4"
C-5063	2#14 & #14G	3/4"	3/4"	3/4"
C-5064	2#14 & #14G	3/4"	3/4"	3/4"
C-5065	2#14 & #14G	3/4"	3/4"	3/4"
C-5066	2#14 & #14G	3/4"	3/4"	3/4"
C-5067	2#14 & #14G	3/4"	3/4"	3/4"
C-5068	CAT 6	3/4"	3/4"	3/4"
C-5069	2#14 & #14G	3/4"	3/4"	3/4"
C-5070	CAT 6	3/4"	3/4"	3/4"
C-5071	2#14 & #14G	3/4"	3/4"	3/4"
C-5072	2#14 & #14G	3/4"	3/4"	3/4"
C-5073	2#14 & #14G	3/4"	3/4"	3/4"
C-5074	2#14 & #14G	3/4"	3/4"	3/4"
C-5075	1#16 TSP	3/4"	3/4"	3/4"
C-5076	2#14 & #14G	3/4"	3/4"	3/4"
C-5077	2#14 & #14G	3/4"	3/4"	3/4"
C-5078	NOT USED			
C-5079	NOT USED			
C-5080	NOT USED			
C-5081	NOT USED			
C-5082	NOT USED			
C-5083	NOT USED			
C-5084	NOT USED			
C-5085	NOT USED			
C-5086	NOT USED			
C-5087	NOT USED			
C-5088	NOT USED			
C-5089	NOT USED			
C-5090	NOT USED			
C-5091	NOT USED			
C-5092	NOT USED			
C-5093	NOT USED			
C-5094	NOT USED			
C-5095	NOT USED			
C-5096	NOT USED			
C-5097	NOT USED			
C-5098	NOT USED			
C-5099	NOT USED			
C-5100	CAT 6	3/4"	3/4"	3/4"
C-5101	NOT USED			
C-5102	12#14 & #14G	3/4"	3/4"	3/4"
C-5103	CAT 6	3/4"	3/4"	3/4"
C-5104	NOT USED			
C-5105	12#14 & #14G	3/4"	3/4"	3/4"
C-5106	CAT 6	3/4"	3/4"	3/4"
C-5107	12#14 & #14G	3/4"	3/4"	3/4"
C-5108	CAT 6	3/4"	3/4"	3/4"
C-5109	12#14 & #14G	3/4"	3/4"	3/4"
C-5110	NOT USED			
C-5111	NOT USED			
C-5112	NOT USED			
C-5113	CAT 6	3/4"	3/4"	3/4"
C-5114	NOT USED			
C-5115	12#14 & #14G	3/4"	3/4"	3/4"
C-5116	12#14 & #14G	3/4"	3/4"	3/4"
C-5117	10#14 & #14G	3/4"	3/4"	3/4"
C-5118	12#14 & #14G	3/4"	3/4"	3/4"
C-5119	CAT 6	3/4"	3/4"	3/4"
C-5120	12#14 & #14G	3/4"	3/4"	3/4"
C-5121	CAT 6	3/4"	3/4"	3/4"
C-5122	12#14 & #14G	3/4"	3/4"	3/4"
C-5123	NOT USED			
C-5124	NOT USED			
C-5125	2#14 & #14G	3/4"	3/4"	3/4"
C-5126	2#14 & #14G	3/4"	3/4"	3/4"
C-5127	2#14 & #14G	3/4"	3/4"	3/4"
C-5128	2#14 & #14G	3/4"	3/4"	3/4"
C-5129	1#16 TSP	3/4"	3/4"	3/4"
C-5130	1#16 TSP	3/4"	3/4"	3/4"
C-5131	1#16 TSP	3/4"	3/4"	3/4"
C-5132	NOT USED			
C-5133	NOT USED			
C-5134	1#16 TSP	3/4"	3/4"	3/4"
C-5135	1#16 TSP	3/4"	3/4"	3/4"
C-5136	1#16 TSP	3/4"	3/4"	3/4"
C-5137	1#16 TSP	3/4"	3/4"	3/4"
C-5138	1#16 TSP	3/4"	3/4"	3/4"
C-5139	1#16 TSP	3/4"	3/4"	3/4"
C-5140	1#16 TSP	3/4"	3/4"	3/4"
C-5141	1#16 TSP	3/4"	3/4"	3/4"
C-5142	8#14	3/4"	3/4"	3/4"
C-5143	8#14	3/4"	3/4"	3/4"

CONDUCTOR AND CONDUIT SCHEDULE
CONTROL CONDUITS

DWG MARK	CONDUCTOR	CONDUIT SIZE METAL	PVC	FLEX
C-5144	8#14	3/4"	3/4"	3/4"
C-5145	8#14	3/4"	3/4"	3/4"
C-5146	8#14	3/4"	3/4"	3/4"
C-5147	8#14	3/4"	3/4"	3/4"
C-5148	8#14	3/4"	3/4"	3/4"
C-5149	8#14	3/4"	3/4"	3/4"
C-5150	8#14	3/4"	3/4"	3/4"
C-5151	8#14	3/4"	3/4"	3/4"
C-5152	8#14	3/4"	3/4"	3/4"
C-5153	8#14	3/4"	3/4"	3/4"
C-5154	8#14	3/4"	3/4"	3/4"
C-5155	8#14	3/4"	3/4"	3/4"
C-5156	8#14	3/4"	3/4"	3/4"
C-5157	8#14	3/4"	3/4"	3/4"
C-5158	8#14	3/4"	3/4"	3/4"
C-5159	NOT USED			
C-5160	CAT 6	3/4"	3/4"	3/4"
C-5161	NOT USED			
C-5162	NOT USED			
C-5163	CAT 6	3/4"	3/4"	3/4"
C-5164	NOT USED			
C-5165	CAT 6	3/4"	3/4"	3/4"
C-5166	NOT USED			
C-5167	NOT USED			
C-5168	CAT 6	3/4"	3/4"	3/4"
C-5169	NOT USED			
C-5170	NOT USED			
C-5171	CAT 6	3/4"	3/4"	3/4"
C-5172	NOT USED			
C-5173	NOT USED			
C-5174	2#14 & #14G	3/4"	3/4"	3/4"
C-5175	2#14 & #14G	3/4"	3/4"	3/4"
C-5176	2#14 & #14G	3/4"	3/4"	3/4"
C-5177	2#14 & #14G	3/4"	3/4"	3/4"
C-5178	2#14 & #14G	3/4"	3/4"	3/4"
C-5179	1#16 TSP	3/4"	3/4"	3/4"
C-5180	1#16 TSP	3/4"	3/4"	3/4"
C-5181	1#16 TSP	3/4"	3/4"	3/4"
C-5182	1#16 TSP	3/4"	3/4"	3/4"
C-5183	1#16 TSP	3/4"	3/4"	3/4"
C-5184	1#16 TSP	3/4"	3/4"	3/4"
C-5185	1#16 TSP	3/4"	3/4"	3/4"
C-5186	1#16 TSP	3/4"	3/4"	3/4"
C-5187	1#16 TSP	3/4"	3/4"	3/4"
C-5188	1#16 TSP	3/4"	3/4"	3/4"
C-5189	1#16 TSP	3/4"	3/4"	3/4"
C-5190	1#16 TSP	3/4"	3/4"	3/4"
C-5191	CAT 6	3/4"	3/4"	3/4"
C-5192	NOT USED			
C-5193	NOT USED			
C-5194	2#14 & #14G	3/4"	3/4"	3/4"
C-5195	2#14 & #14G	3/4"	3/4"	3/4"
C-5196	CAT 6	3/4"	3/4"	3/4"
C-5197	NOT USED			
C-5198	NOT USED			
C-5199	2#14 & #14G	3/4"	3/4"	3/4"
C-5200	2#14 & #14G	3/4"	3/4"	3/4"
C-5201	10#14 & #14G	3/4"	3/4"	3/4"
C-5202	NOT USED			
C-5203	2#14 & #14G	3/4"	3/4"	3/4"
C-5204	2#14 & #14G	3/4"	3/4"	3/4"
C-5205	CAT 6	3/4"	3/4"	3/4"
C-5206	NOT USED			
C-5207	NOT USED			
C-5208	2#14 & #14G	3/4"	3/4"	3/4"
C-5209	CAT 6	3/4"	3/4"	3/4"
C-5210	12#14 & #14G	3/4"	3/4"	3/4"
C-5211	2#14 & #14G	3/4"	3/4"	3/4"
C-5212	CAT 6	3/4"	3/4"	3/4"
C-5213	12#14 & #14G	3/4"	3/4"	3/4"
C-5214	2#14 & #14G	3/4"	3/4"	3/4"
C-5215	10#14	3/4"	3/4"	3/4"
C-5216	CAT 6	3/4"	3/4"	3/4"
C-5217	NOT USED			
C-5218	NOT USED			
C-5219	2#14 & #14G	3/4"	3/4"	3/4"
C-5220	CAT 6	3/4"	3/4"	3/4"
C-5221	NOT USED			
C-5222	NOT USED			
C-5223	2#14 & #14G	3/4"	3/4"	3/4"
C-5224	10#14	3/4"	3/4"	3/4"
C-5225	10#14 & #14G	3/4"	3/4"	3/4"
C-5226	NOT USED			
C-5227	2#14 & #14G	3/4"	3/4"	3/4"
C-5228	1#16 TSP	3/4"	3/4"	3/4"
C-5229	CAT 6	3/4"	3/4"	3/4"
C-5230	NOT USED			
C-5231	2#14 & #14G	3/4"	3/4"	3/4"
C-5232	10#14	3/4"	3/4"	3/4"
C-5233	10#14 & #14G	3/4"	3/4"	3/4"
C-5234	NOT USED			
C-5235	10#14 & #14G	3/4"	3/4"	3/4"
C-5236	NOT USED			
C-5237	10#14 & #14G	3/4"	3/4"	3/4"
C-5238	NOT USED			
C-5239	10#14 & #14G	3/4"	3/4"	3/4"
C-5240	NOT USED			
C-5241	10#14 & #14G	3/4"	3/4"	3/4"
C-5242	NOT USED			
C-5243	10#14 & #14G	3/4"	3/4"	3/4"
C-5244	NOT USED			
C-5245	10#14 & #14G	3/4"	3/4"	3/4"
C-5246	NOT USED			
C-5247	10#14 & #14G	3/4"	3/4"	3/4"
C-5248	NOT USED			
C-5249	8#14 & #14G	3/4"	3/4"	3/4"
C-5250	CAT 6	3/4"	3/4"	3/4"
C-5251	NOT USED			
C-5252	12#14 & #14G	3/4"	3/4"	3/4"
C-5253	12#14 & #14G	3/4"	3/4"	3/4"
C-5254	NOT USED			
C-5255	1#16 TSP	3/4"	3/4"	3/4"
C-5256	1#16 TSP	3/4"	3/4"	3/4"
C-5257	1#16 TSP	3/4"	3/4"	3/4"
C-5258	1#16 TSP	3/4"	3/4"	3/4"
C-5259	1#16 TSP	3/4"	3/4"	3/4"
C-5260	1#16 TSP	3/4"	3/4"	3/4"
C-5261	1#16 TSP	3/4"	3/4"	3/4"
C-5262	10#14	3/4"	3/4"	3/4"
C-5263	10#14	3/4"	3/4"	3/4"
C-5264	1#16 TSP	3/4"	3/4"	3/4"
C-5265	2#14 & #14G	3/4"	3/4"	3/4"
C-5266	1#16 TSP	3/4"	3/4"	3/4"
C-5267	NOT USED			
C-5268	NOT USED			
C-5269	NOT USED			
C-5270	CAT 6	3/4"	3/4"	3/4"
C-5271	NOT USED			
C-5272	NOT USED			
C-5273	CAT 6	3/4"	3/4"	3/4"
C-5274	NOT USED			
C-5275	NOT USED			
C-5276	CAT 6	3/4"	3/4"	3/4"
C-5277	12#14 & #14G	3/4"	3/4"	3/4"
C-5278	12#14 & #14G	3/4"	3/4"	3/4"
C-5279	NOT USED			
C-5280	CAT 6	3/4"	3/4"	3/4"
C-5281	NOT USED			
C-5282	NOT USED			
C-5283	CAT 6	3/4"	3/4"	3/4"
C-5284	NOT USED			
C-5285	2#16 TSP	3/4"	3/4"	3/4"
C-5286	NOT USED			
C-5287	12#14 & #14G	3/4"	3/4"	3/4"

CONDUCTOR AND CONDUIT SCHEDULE
CONTROL CONDUITS

DWG MARK	CONDUCTOR	CONDUIT SIZE METAL	PVC	FLEX
C-5288	CAT 6	3/4"	3/4"	3/4"
C-5289	NOT USED			
C-5290	NOT USED			
C-5291	CAT 6	3/4"	3/4"	3/4"
C-5292	NOT USED			
C-5293	NOT USED			
C-5294	NOT USED			
C-5295	1#16 TSP	3/4"	3/4"	3/4"
C-5296	1#16 TSP	3/4"	3/4"	3/4"
C-5297	1#16 TSP	3/4"	3/4"	3/4"
C-5298	1#16 TSP	3/4"	3/4"	3/4"
C-5299	1#16 TSP	3/4"	3/4"	3/4"
C-5300	1#16 TSP	3/4"	3/4"	3/4"
C-5301	1#16 TSP	3/4"	3/4"	3/4"
C-5302	1#16 TSP	3/4"	3/4"	3/4"
C-5303	1#16 TSP	3/4"	3/4"	3/4"
C-5304	1#16 TSP	3/4"	3/4"	3/4"
C-5305	1#16 TSP	3/4"	3/4"	3/4"
C-5306	NOT USED			
C-5307	NOT USED			
C-5308	CAT 6	3/4"	3/4"	3/4"
C-5309	NOT USED			
C-5310	NOT USED			
C-5311	2#14 & #14G	3/4"	3/4"	3/4"
C-5312	2#14 & #14G	3/4"	3/4"	3/4"
C-5313	CAT 6	3/4"	3/4"	3/4"
C-5314	NOT USED			
C-5315	NOT USED			
C-5316	2#14 & #14G	3/4"	3/4"	3/4"
C-5317	2#14 & #14G	3/4"	3/4"	3/4"
C-5318	10#14 & #14G	3/4"	3/4"	3/4"
C-5319	NOT USED			
C-5320	2#14 & #14G	3/4"	3/4"	3/4"
C-5321	2#14 & #14G	3/4"	3/4"	3/4"
C-5322	NOT USED			
C-5323	NOT USED			
C-5324	NOT USED			
C-5325	CAT 6	3/4"	3/4"	3/4"
C-5326	NOT USED			
C-5327	NOT USED			
C-5328	2#14 & #14G	3/4"	3/4"	3/4"
C-5329	CAT 6	3/4"	3/4"	3/4"
C-5330	12#14 & #14G	3/4"	3/4"	3/4"
C-5331	2#14 & #14G	3/4"	3/4"	3/4"
C-5332	CAT 6	3/4"	3/4"	3/4"
C-5333	12#14 & #14G	3/4"	3/4"	3/4"
C-5334	2#14 & #14G	3/4"	3/4"	3/4"
C-5335	10#14	3/4"	3/4"	3/4"
C-5336	CAT 6	3/4"	3/4"	3/4"
C-5337	NOT USED			
C-5338	NOT USED			
C-5339	2#14 & #14G	3/4"	3/4"	3/4"
C-5340	CAT 6	3/4"	3/4"	3/4"
C-5341	NOT USED			
C-5342	NOT USED			
C-5343	NOT USED			
C-5344	NOT USED			
C-5345	2#14 & #14G	3/4"	3/4"	3/4"
C-5346	10#14	3/4"	3/4"	3/4"
C-5347	10#14 & #14G	3/4"	3/4"	3/4"
C-5348	NOT USED			
C-5349	2#14 & #14G	3/4"	3/4"	3/4"
C-5350	12#14 & #14G	3/4"	3/4"	3/4"
C-5351	12#14 & #14G	3/4"	3/4"	3/4"
C-5352	NOT USED			
C-5353	NOT USED			
C-5354	NOT USED			
C-5355	1#16 TSP	3/4"	3/4"	3/4"
C-5356	NOT USED			
C-5357	CAT 6	3/4"	3/4"	3/4"
C-5358	2#14 & #14G	3/4"	3/4"	3/4"
C-5359	10#14	3/4"	3/4"	3/4"
C-5360	10#14 & #14G	3/4"	3/4"	3/4"
C-5361	NOT USED			
C-5362	10#14 & #14G	3/4"	3/4"	3/4"
C-5363	NOT USED			
C-5364	10#14 & #14G	3/4"	3/4"	3/4"
C-5365	NOT USED			
C-5366	10#14 & #14G	3/4"	3/4"	3/4"
C-5367	NOT USED			
C-5368	10#14 & #14G	3/4"	3/4"	3/4"
C-5369	NOT USED			
C-5370	10#14 & #14G	3/4"	3/4"	3/4"
C-5371	NOT USED			
C-5372	10#14 & #14G	3/4"	3/4"	3/4"
C-5373	NOT USED			
C-5374	10#14 & #14G	3/4"	3/4"	3/4"
C-5375	NOT USED			
C-5376	CAT 6	3/4"	3/4"	3/4"
C-5377	NOT USED			
C-5378	NOT USED			
C-5379	10#14 & #14G	3/4"	3/4"	3/4"
C-5380	1#16 TSP	3/4"	3/4"	3/4"
C-5381	1#16 TSP	3/4"	3/4"	3/4"
C-5382	1#16 TSP	3/4"	3/4"	3/4"
C-5383	1#16 TSP	3/4"	3/4"	3/4"
C-5384	1#16 TSP	3/4"	3/4"	3/4"
C-5385	1#16 TSP	3/4"	3/4"	3/4"
C-5386	1#16 TSP	3/4"	3/4"	3/4"
C-5387	10#14	3/4"	3/4"	3/4"
C-5388	10#14	3/4"	3/4"	3/4"
C-5389	1#16 TSP	3/4"	3/4"	3/4"
C-5390	1#16 TSP	3/4"	3/4"	3/4"
C-5391	1#16 TSP	3/4"	3/4"	3/4"
C-5392	CAT 6	3/4"	3/4"	3/4"
C-5393	1#16 TSP	3/4"	3/4"	3/4"
C-5394	1#16 TSP	3/4"	3/4"	3/4"
C-5395	CAT 6	3/4"	3/4"	3/4"
C-5396	1#16 TSP	3/4"	3/4"	3/4"
C-5397	NOT USED			
C-5398	CAT 6	3/4"	3/4"	3/4"
C-5399	12#14 & #14G	3/4"	3/4"	3/4"
C-5400	2#14 & #14G	3/4"	3/4"	3/4"
C-5401	NOT USED			
C-5402	CAT 6	3/4"	3/4"	3/4"
C-5403	12#14 & #14G	3/4"	3/4"	3/4"
C-5404	2#14 & #14G	3/4"	3/4"	3/4"
C-5405	1#16 TSP	3/4"	3/4"	3/4"
C-5406	1#16 TSP	3/4"	3/4"	3/4"
C-5407	1#16 TSP	3/4"	3/4"	3/4"
C-5408	1#16 TSP	3/4"	3/4"	3/4"
C-5409	1#16 TSP	3/4"	3/4"	3/4"
C-5410	1#16 TSP	3/4"	3/4"	3/4"
C-5411	1#16 TSP	3/4"	3/4"	3/4"
C-5412	10#14	3/4"	3/4"	3/4"
C-5413	10#14 & #14G	3/4"	3/4"	3/4"
C-5414	NOT USED			
C-5415	2#14 & #14G	3/4"	3/4"	3/4"
C-5416	10#14	3/4"	3/4"	3/4"
C-5417	CAT 6	3/4"	3/4"	3/4"
C-5418	12#14 & #14G	3/4"	3/4"	3/4"
C-5419	2#14 & #14G	3/4"	3/4"	3/4"
C-5420	1#16 TSP	3/4"	3/4"	3/4"
C-5421	1#16 TSP	3/4"	3/4"	3/4"
C-5422	1#16 TSP	3/4"	3/4"	3/4"
C-5423	1#16 TSP	3/4"	3/4"	3/4"
C-5424	1#16 TSP	3/4"	3/4"	3/4"
C-5425	1#16 TSP	3/4"	3/4"	3/4"
C-5426	1#16 TSP	3/4"	3/4"	3/4"
C-5427	10#14	3/4"	3/4"	3/4"
C-5428	10#14 & #14G	3/4"	3/4"	3/4"
C-5429	NOT USED			
C-5430	2#14 & #14G	3/4"	3/4"	3/4"
C-5431	10#14	3/4"	3/4"	3/4"

GENERAL NOTES

1. WHERE A 1" CONDUIT IS SPECIFIED FOR FIBER OPTIC (FO) CABLES, LARGE RADIUS ELBOWS AND BENDS SHALL BE USED. MIN RADIUS FOR FITTINGS SHALL BE 12 INCHES.
2. FLEXIBLE CONDUIT SHALL NOT BE USED FOR FIBER OPTIC (FO) CABLES.

THE DRAWINGS IN THIS SET ARE RECORD DRAWINGS. THEY ARE CONSTRUCTION CONTRACT DRAWINGS WHICH HAVE BEEN REVISED BASED ON AVAILABLE FIELD INFORMATION RECORDED BY OTHERS DURING CONSTRUCTION OF THIS CONTRACT. THERE HAS BEEN NO VERIFICATION OF DIMENSIONS SHOWN ON THE CONSTRUCTION DRAWINGS OR THE ACCURACY/COMPLETENESS OF THE FIELD INFORMATION RECEIVED.

SIGNATURE _____ DATE 2/7/2023

AS-BUILT REPLACEMENT SHEET

PROFESSIONAL CERTIFICATION

THIS DRAWING WAS ORIGINALLY APPROVED FOR CONSTRUCTION AND SEALED BY ROBERT L. ANDERSON, A REGISTERED PROFESSIONAL ENGINEER IN THE STATE OF MARYLAND, NO. 37997

NOTICE TO CONTRACTORS

- PROJECT ELEVATIONS ARE BASED ON NAVD88 AND HOWARD COUNTY'S BENCHMARK SYSTEM
- PREVIOUS PROJECTS USED OTHER DATUMS
- APPLY THE FOLLOWING CONVERSIONS WHEN USING PREVIOUS CONTRACT DRAWINGS:
  - ADDITION NO. 6: SUBTRACT 0.80 FT
  - PRIOR ADDITIONS: SUBTRACT 1.04 FT

DEPARTMENT OF PUBLIC WORKS
HOWARD COUNTY, MARYLAND

CHIEF, BUREAU OF UTILITIES DATE

DES: WAC
DRN: WAC
CHK: RLA
DATE: 01/2018

DATE	REV	DESCRIPTION
03/2021		RECORD DRAWINGS

ELECTRICAL

INSTRUMENT CONDUIT SCHEDULE
I
ELECTRICAL

LITTLE PATUXENT WATER RECLAMATION PLANT
8TH ADDITION
BIOSOLIDS PROCESSING FACILITIES - PHASE 2

CAPITAL PROJECT S-6295
CONTRACT NO. 24-4936

ELECTION DISTRICT NO. 6
HOWARD COUNTY, MARYLAND

SCALE AS SHOWN

SHEET 292 OF 311

E-918

BIM 360://10054364 – Little Patuxent WRP 8th Addition/264592_E_HDR_V18.rvt
1/8/2022 1:43:23 PM

GENERAL NOTES:

1. FOR SYMBOLS AND ABBREVIATIONS, SEE DRAWING E-1.
2. FOR CONSTRUCTION SEQUENCE, SEE DRAWING E-2.
3. FOR SITE PLAN, SEE DRAWING E-3.

LEGEND:

EC - ELECTRIC CABLE

FO - FIBER OPTIC CABLE

S - SPARE

G - GROUND

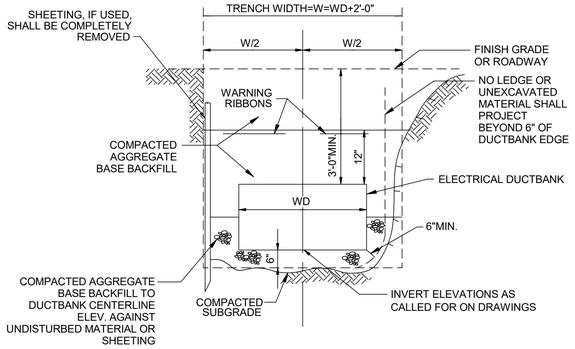

DUCT BANK TRENCH SECTION

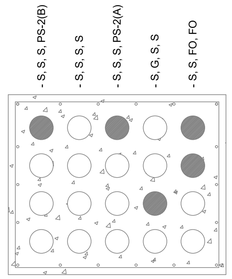

4 / EX-15 DUCT BANK SECTION
SCALE: NONE

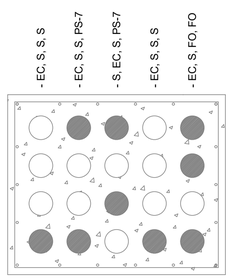

15 / E-32, EX-15 DUCT BANK SECTION
SCALE: NONE

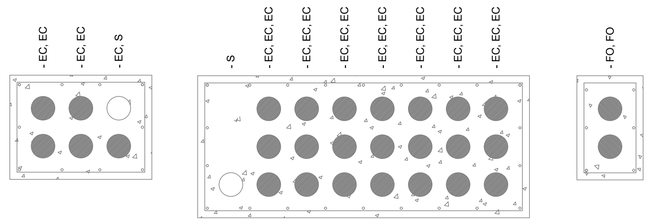

16 / EX-15 DUCT BANK SECTION
SCALE: NONE

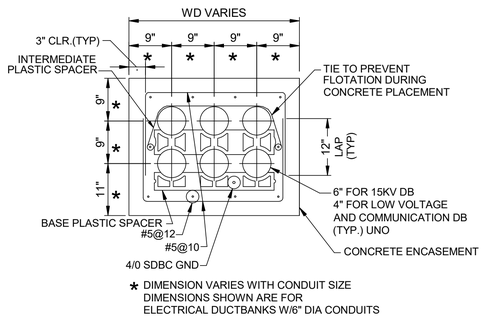

DUCT BANK SECTION

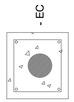

17 / E-32, EX-15 DUCT BANK SECTION
SCALE: NONE

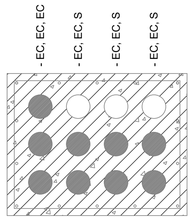

18 / EX-15 DUCT BANK SECTION
SCALE: NONE

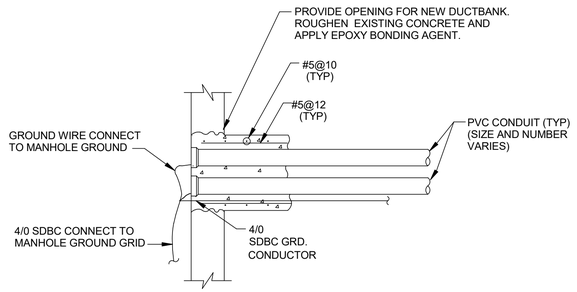

TYPICAL DUCT BANK ENTRY INTO EXISTING MANHOLE/WALL

THE DRAWINGS IN THIS SET ARE RECORD DRAWINGS. THEY ARE CONSTRUCTION CONTRACT DRAWINGS WHICH HAVE BEEN REVISED BASED ON AVAILABLE FIELD INFORMATION RECORDED BY OTHERS DURING CONSTRUCTION OF THIS CONTRACT. THERE HAS BEEN NO VERIFICATION OF DIMENSIONS SHOWN ON THE CONSTRUCTION DRAWINGS OR THE ACCURACY/COMPLETENESS OF THE FIELD INFORMATION RECEIVED.

SIGNATURE — DATE 2/7/2023

SHAH & ASSOCIATES

AS-BUILT REPLACEMENT SHEET

PROFESSIONAL CERTIFICATION
THIS DRAWING WAS ORIGINALLY APPROVED FOR CONSTRUCTION AND SEALED BY KANAIYALAL R. SHAH, A REGISTERED PROFESSIONAL ENGINEER IN THE STATE OF MARYLAND, NO. 11084

NOTICE TO CONTRACTORS
- PROJECT ELEVATIONS ARE BASED ON NAVD88 AND HOWARD COUNTY'S BENCHMARK SYSTEM
- PREVIOUS PROJECTS USED OTHER DATUMS
- APPLY THE FOLLOWING CONVERSIONS WHEN USING PREVIOUS CONTRACT DRAWINGS:
  - ADDITION NO. 6: SUBTRACT 0.80 FT
  - PRIOR ADDITIONS: SUBTRACT 1.04 FT

DEPARTMENT OF PUBLIC WORKS
HOWARD COUNTY, MARYLAND

CHIEF, BUREAU OF UTILITIES — DATE

DES: MM
DRN: DMG
CHK: KRS
DATE: 01/15/2018

DATE	REV	DESCRIPTION
03/2021		RECORD DRAWING

ELECTRICAL

DUCT BANK SECTIONS - EXISTING AND DEMOLITION

LITTLE PATUXENT WATER RECLAMATION PLANT
8TH ADDITION
BIOSOLIDS PROCESSING FACILITIES - PHASE 2

CAPITAL PROJECT S-6295
CONTRACT NO. 24-4936

ELECTION DISTRICT NO. 6
HOWARD COUNTY, MARYLAND

SCALE AS SHOWN

SHEET 293 OF 311

E-924

BIM 360://10054364 – Little Patuxent WRP 8th Addition/284592_100_E_V18.rvt
1/8/2022 11:27:42 AM

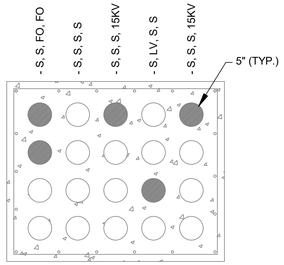

A / E-4 DUCT BANK SECTION
SCALE: NONE

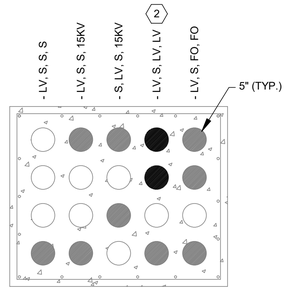

B / E-4 DUCT BANK SECTION
SCALE: NONE

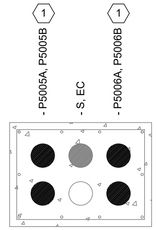

C / E-4, E-32 DUCT BANK SECTION
SCALE: NONE

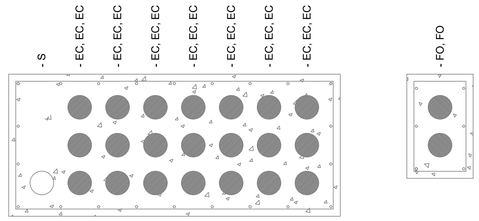

D / E-4, E-32 DUCT BANK SECTION
SCALE: NONE

GENERAL NOTES:

1. FOR SYMBOLS AND ABBREVIATIONS, SEE DRAWING E-1.
2. FOR CONSTRUCTION SEQUENCE, SEE DRAWING E-2.
3. FOR OVERALL ELECTRICAL SITE PLAN, SEE DRAWING E-3.
4. FOR CABLE AND CONDUIT SCHEDULE, SEE DRAWINGS E-908 THRU E-914A.

DRAWING NOTES:

1. PROVIDE A PULLBOX TO PHYSICALLY SEPARATE THE MEDIUM VOLTAGE FEEDERS FROM LOW VOLTAGE FEEDERS WHEN THE FEEDERS EXIT THE DUCT BANK AND ENTER THE VAULT AND ENTER THE DRYER BUILDING.
2. USE EXISTING DUCTS TO ROUTE LOW VOLTAGE FEEDERS FROM ELECTRICAL ROOM TO EXISTING PS-2 VAULT TO FEED EXISTING LIGHT, RECEPTACLE ETC LOADS THAT WERE PREVIOUSLY FED BY PANELBOARD IN EXISTING PS-2 SWITCHGEAR.

LEGEND:

FO - FIBER OPTIC CABLE
LV - LOW VOLTAGE
MV - MEDIUM VOLTAGE
S - SPARE
EC - ELECTRIC CABLE

THE DRAWINGS IN THIS SET ARE RECORD DRAWINGS. THEY ARE CONSTRUCTION CONTRACT DRAWINGS WHICH HAVE BEEN REVISED BASED ON AVAILABLE FIELD INFORMATION RECORDED BY OTHERS DURING CONSTRUCTION OF THIS CONTRACT. THERE HAS BEEN NO VERIFICATION OF DIMENSIONS SHOWN ON THE CONSTRUCTION DRAWINGS OR THE ACCURACY/COMPLETENESS OF THE FIELD INFORMATION RECEIVED.

SIGNATURE 2/7/2023 DATE

SHAH & ASSOCIATES

AS-BUILT REPLACEMENT SHEET

PROFESSIONAL CERTIFICATION
THIS DRAWING WAS ORIGINALLY APPROVED FOR CONSTRUCTION AND SEALED BY KANAIYALAL R. SHAH, A REGISTERED PROFESSIONAL ENGINEER IN THE STATE OF MARYLAND, NO. 11084

NOTICE TO CONTRACTORS
- PROJECT ELEVATIONS ARE BASED ON NAVD88 AND HOWARD COUNTY'S BENCHMARK SYSTEM
- PREVIOUS PROJECTS USED OTHER DATUMS
- APPLY THE FOLLOWING CONVERSIONS WHEN USING PREVIOUS CONTRACT DRAWINGS:
  - ADDITION NO. 6: SUBTRACT 0.80 FT
  - PRIOR ADDITIONS: SUBTRACT 1.04 FT

DEPARTMENT OF PUBLIC WORKS
HOWARD COUNTY, MARYLAND

CHIEF, BUREAU OF UTILITIES DATE

DES: MM
DRN: DMG
CHK: KRS
DATE: 01/15/2018

DATE	REV	DESCRIPTION
03/2021		RECORD DRAWING

ELECTRICAL

DUCTBANK SECTIONS - EXISTING AND MODIFICATION

LITTLE PATUXENT WATER RECLAMATION PLANT
8TH ADDITION
BIOSOLIDS PROCESSING FACILITIES - PHASE 2

CAPITAL PROJECT S-6295
CONTRACT NO. 24-4936

ELECTION DISTRICT NO. 6
HOWARD COUNTY, MARYLAND

SCALE AS SHOWN

SHEET 294 OF 311

E-925

BIM 360://10054364 – Little Patuxent WRP 8th Addition/264592_100_E_V18.rvt
1/8/2022 11:27:42 AM

PRIMARY ELEMENT SYMBOLOGY

- ULTRASONIC LEVEL TRANSMITTER
- RADAR TYPE LEVEL TRANSMITTER
- FI — ROTOMETER
- U — SONIC OR ULTRASONIC FLOWMETER
- DM — SUSPENDED SOLIDS DENSITY FLOWMETER
- M — MAGNETIC FLOWMETER
- TD — MASS DISPERSION FLOWMETER
- FLUME
- WEIR
- PROPELLER OR TURBINE METER
- VENTURI TUBE
- FLOAT SWITCH
- FG — SIGHT FLOW GLASS
- DIAPHRAGM SEAL
- PITOT TUBE
- INLINE SEAL

LINE TYPES

- MAIN PROCESS LINE
- SECONDARY PROCESS LINE
- AUXILIARY PROCESS LINE
- DIRECTION OF FLOW
- PNEUMATIC SIGNAL
- ELECTRICAL SIGNAL
- HYDRAULIC SIGNAL
- O — O — SOFTWARE OR DATA LINK
- SIGNAL CONNECTION
- CROSSOVER - NO CONNECTION
- X — X — CAPILLARY
- E — E — ETHERNET
- FO — FO — FIBER OPTIC
- D — D — DEVICENET

CROSS REFERENCE SYMBOLOGY

- Y-3 X — CONTINUATION TO SHEET Y-3
- X Y-3 — CONTINUATION FROM SHEET Y-3

X= DENOTES LETTER DESIGNATION TO MATCH ARROW ON CONNECTED DRAWINGS

INSTRUMENT SYMBOLOGY

- LOCALLY MOUNTED FIELD INSTRUMENTATION
- MOUNTED ON PANEL FRONT
- MOUNTED INSIDE PANEL
- XXX — FRONT PANEL MOUNTED ON AUXILIARY PANEL (SUBSCRIPT INDICATES PANEL)
- MOUNTED INSIDE AUXILIARY PANEL
- XXX — PILOT LIGHT
- INSTRUMENT FUNCTIONS SHARING COMMON HOUSING
- I — - MCC INTERLOCK - PLC LOGIC FUNTION
- SHARED DISPLAY, SHARED CONTROL, FIELD MOUNTED
- HMI OR OIT FUNCTION (HMI - WONDERWARE, OIT - PANELVIEW)
- PROGRAMMABLE LOGIC CONTROL, INPUT/OUTPUT
- SP / PID / PV / CO — PROGRAMMABLE LOGIC CONTROL, PDO FUNCTION (PV - PROCESS VARIABLE, SP - SETPOINT, CO - CONTROL OUTPUT)

ACTUATOR SYMBOLOGY

- X — OPERATOR ABBREVIATIONS: M = MOTOR, P = PNEUMATIC, S = SOLENOID
- FLOAT OPERATOR
- SPRING-OPPOSED SINGLE-ACTING PNEUMATIC CYLINDER
- DOUBLE-ACTING PNEUMATIC CYLINDER
- PNEUMATIC DIAPHRAGM
- PNEUMATIC DIAPHRAGM WITH POSITIONER

TYPES OF POWER SUPPLY

A	PLANT COMPRESSED AIR
IA	INSTRUMENTATION AIR
AC	ELECTRIC SUPPLY
NG	NATURAL GAS
HYD	HYDRAULIC
120VAC	120VAC POWER
480VAC	480VAC POWER

INSTRUMENT IDENTIFICATION LETTERS

	FIRST LETTER		SUCCEEDING LETTERS		
	MEASURED OR INITIATING VARIABLE	MODIFIER	READOUT OR PASSIVE FUNCTION	OUTPUT FUNCTION	MODIFIER
A	ANALYZER		ALARM		IN AUTO
B	BURNER, COMBUSTION		BUTTON	CLOSE STOP DECREASABLE	IN REMOTE
C	CONDUCTIVITY			CONTROL	CLOSE, CLOSED
D	DENSITY	DIFFERENTIAL		OPEN, START, INCREASABLE	
E	VOLTAGE		SENSOR (PRIMARY ELEMENT)		
F	FLOW	RATIO (FRACTION)			FAULT
G	GAUGE		GLASS, VIEWING DEVICE		
H	HAND				HIGH
I	CURRENT (ELECTRICAL)		INDICATE		
J	POWER	SCAN	SCAN		
K	TIME	TIME; RATE OF CHANGE		CONTROL STATION	READY
L	LEVEL, LEAK		LIGHT		LOW
M	MOTOR, METERING, MOISTURE	MOMENTARY			MIDDLE, INTERMEDIATE
N	INTRUSION		ISOLATE	ISOLATOR	
O	TORQUE		ORIFICE, RESTRICTION		OPEN, OPENED
P	PRESSURE, VACUUM, PUSH		POINT (TEST) CONNECTION		
Q	QUANTITY	INTEGRATE, TOTALIZE			REQUIRED
R	RADIATION		RECORD		RUN, RUNNING
S	SPEED, SOLENOID	SAFETY		SWITCH	STOP, STOPPED
T	TEMPERATURE			TRANSMIT	
U	MULTIVARIABLE		MULTIFUNCTION	MULTIFUNCTION	MULTIFUNCTION
V	VIBRATION			VALVE, DAMPER, LOUVER	
W	WEIGHT		WELL		
X	TEST STATE	X AXIS	UNCLASSIFIED	UNCLASSIFIED	UNCLASSIFIED
Y	EVENT, STATE	Y AXIS		RELAY, COMPUTE, CONVERT	
Z	POSITION	Z AXIS		DRIVER, ACTUATOR, UNCLASSIFIED FINAL CONTROL ELEMENT	

MISCELLANEOUS INSTRUMENTATION ABBREVIATIONS

AI	ANALOG INPUT
AO	ANALOG OUTPUT
CO	CARBON MONOXIDE
COMB	COMBUSTIBLES
CW	CHAIN WHEEL
DI	DIGITAL INPUT
DO	DIGITAL OUTPUT DOWNWARD OPENING WEIR GATE
DWG	E/P VOLTAGE TO PNEUMATIC
H2S	HYDROGEN SULFIDE
HW	HAND WHEEL
I/O	INPUT/OUTPUT
I/P	CURRENT TO PNEUMATIC
LEL	LOWER EXPLOSIVE LIMIT
LO	LOCKED OPEN
O2	OXYGEN
OIT	OPERATOR INTERFACE TERMINAL
P&ID	PROCESS AND INSTRUMENTATION DIAGRAM
SS	SUSPENDED SOLIDS (ANALYZER MODIFIER)
RIO	REMOTE INPUT OUTPUT
RTD	RESISTANCE TEMPERATURE DEVICE
TC	THERMOCOUPLE
TCJ	THERMOCOUPLE, TYPE J
VFD	VARIABLE FREQUENCY DRIVE
LCS	LOCAL CONTROL STATION
MCC	MOTOR CONTROL CENTER
LAS	LOCAL ALARM STATION
GAS	GAS ALARM STATION

△ DISCRETE INPUT (DI) ▽ DISCRETE OUTPUT (DO)

▲ ANALOG INPUT (AI) ▼ ANALOG OUTPUT (AO)

THE DRAWINGS IN THIS SET ARE RECORD DRAWINGS. THEY ARE CONSTRUCTION CONTRACT DRAWINGS WHICH HAVE BEEN REVISED BASED ON AVAILABLE FIELD INFORMATION RECORDED BY OTHERS DURING CONSTRUCTION OF THIS CONTRACT. THERE HAS BEEN NO VERIFICATION OF DIMENSIONS SHOWN ON THE CONSTRUCTION DRAWINGS OR THE ACCURACY/COMPLETENESS OF THE FIELD INFORMATION RECEIVED.

SIGNATURE _____ DATE 2/7/2022

CONTROL SWITCH NOTATION ABBREVIATIONS

XXX / XXXX

ACK	ACKNOWLEDGE
ESTOP	EMERGENCY STOP
FAIL	FAILURE
FOR	FORWARD-OFF-REVERSE
FR	FORWARD-REVERSE
FS	FAST-SLOW
HA	HAND-AUTO
HOA	HAND-OFF-AUTO
HOR	HAND-OFF-REMOTE
LL	LEAD-LAG
LOR	LOCAL-OFF-REMOTE
LR	LOCAL-REMOTE
LS	LEAD-STANDBY
MA	MANUAL-AUTO
OAC	OPEN-AUTO-CLOSE
OC	OPEN-CLOSE
OO	ON-OFF
OSC	OPEN-STOP-CLOSE
RJ	RUN-JOG
SIL	SILENCE
SS	START-STOP

VALVES

- BALL VALVE
- V PORT BALL VALVE
- BUTTERFLY VALVE
- CONE VALVE
- CHECK VALVE
- DOUBLE-DISK CHECK VALVE
- BALL CHECK VALVE
- DIAPHRAGM VALVE
- GATE VALVE
- GATE VALVE-NORMALLY CLOSED
- GLOBE VALVE
- KNIFE GATE VALVE
- NEEDLE VALVE
- PINCH VALVE
- PLUG VALVE
- PLUG VALVE-NORMALLY CLOSED
- THREE-WAY BALL VALVE
- THREE-WAY PLUG VALVE
- PRESSURE-REDUCING VALVE
- PRESSURE-REGULATING VALVE
- THREE-WAY CONTROL VALVE
- OR OR — PRESSURE-RELIEF VALVE
- X — AIR-RELEASE VACUUM VALVE, A = AIR RELEASE, VAC = VACUUM
- BASKET STRAINER
- MALE CONNECTION
- FLAME ARRESTOR
- FLAME CHECK
- PULSATION DAMPENER
- PRESSURE SUSTAINING VALVE
- LEVEL AND FLOW CONTROL VALVE (FLOAT)
- STRAINER
- DAMPER

MISCELLANEOUS SYMBOLOGY

- ROTARY LOBE PUMP
- GEAR PUMP
- CENTRIFUGAL PUMP
- SUBMERSIBLE PUMP
- PROGRESSIVE CAVITY PUMP
- AIR LIFT PUMP
- SCREEN PRESS
- CHEMICAL FEED PUMP
- M — MOTOR
- SIDE CHANNEL BLOWER
- POSITIVE DISPLACEMENT BLOWER
- BLOWER
- SILENCER
- M — COMPRESSOR
- STATIC MIXER
- M — MIXER
- FILTER SEPARATOR WITH AUTO DRAIN
- AIR FILTER
- MULTI STAGE MICROFILTER
- HEAT EXCHANGER
- ◆ INSTRUMENTS/EQUIPMENT SUPPLIED BY EQUIPMENT VENDOR
- ▲ INSTRUMENTS/EQUIPMENT SUPPLIED BY ELECTRICAL CONTRACTOR

PROCESS ABBREVIATIONS

NOTES:

1. SEE GENERAL DRAWINGS FOR PROCESS ABBREVIATIONS.

GENERAL NOTES:

1. THIS IS A STANDARD INSTRUMENTATION SYMBOLOGY AND ABBREVIATIONS SHEET. LISTING OF SYMBOLS AND ABBREVIATIONS DOES NOT IMPLY ALL SYMBOLS AND ABBREVIATIONS HAVE BEEN USED ON THIS PROJECT.
2. SEE PROCESS, MECHANICAL AND PLUMBING LEGEND SHEET FOR MISCELLANEOUS PIPING SYMBOLS.
3. SCREENING OR SHADING OF WORK IS USED TO INDICATE EXISTING COMPONENTS OR TO DE-EMPHASIZE PROPOSED IMPROVEMENTS TO HIGHLIGHT SELECTED TRADE WORK. REFER TO CONTEXT OF EACH SHEET FOR USAGE.
4. VALVE SYMBOLS SHOWN HERE ARE APPLICABLE ONLY TO INSTRUMENTATION DIAGRAMS. SEE PROCESS, MECHANICAL AND PLUMBING LEGEND SHEET FOR VALVE SYMBOLS USED ELSEWHERE ON THE SHEETS.

AS-BUILT REPLACEMENT SHEET

PROFESSIONAL CERTIFICATION

THIS DRAWING WAS ORIGINALLY APPROVED FOR CONSTRUCTION AND SEALED BY BILLY J. FOX , A REGISTERED PROFESSIONAL ENGINEER IN THE STATE OF MARYLAND, NO. 46603

NOTICE TO CONTRACTORS

- PROJECT ELEVATIONS ARE BASED ON NAVD88 AND HOWARD COUNTY'S BENCHMARK SYSTEM
- PREVIOUS PROJECTS USED OTHER DATUMS
- APPLY THE FOLLOWING CONVERSIONS WHEN USING PREVIOUS CONTRACT DRAWINGS:
  - ADDITION NO. 6: SUBTRACT 0.80 FT
  - PRIOR ADDITIONS: SUBTRACT 1.04 FT

DEPARTMENT OF PUBLIC WORKS
HOWARD COUNTY, MARYLAND

CHIEF, BUREAU OF UTILITIES DATE

DES: LH
DRN: LH
CHK: BF
DATE: 01/2018

DATE	REV	DESCRIPTION
03/2021		RECORD DRAWINGS

INSTRUMENTATION & CONTROLS

LEGEND AND SYMBOLS 1

LITTLE PATUXENT WATER RECLAMATION PLANT
8TH ADDITION
BIOSOLIDS PROCESSING FACILITIES - PHASE 2

CAPITAL PROJECT S-6295
CONTRACT NO. 24-4936

ELECTION DISTRICT NO. 6
HOWARD COUNTY, MARYLAND

SCALE AS SHOWN

SHEET 295 OF 311

I-001

BIM 360://10054364 – Little Patuxent WRP 8th Addition/264592_Y_V18.rvt
1/8/2022 1:56:00 PM

SCADA HMI

PCS

8-GBT-0012-PNL

8-POL-0011-RIO

FIRE ALARM SYSTEM

ALARM

TROUBLE OR SUPERVISORY CONDITION

FACP

COOLING WATER PUMP (TYP. OF 3)

RUN COMMAND

IN REMOTE

RUN STATUS

FAIL

SPEED INDICATION

SPEED CONTROL

PROCESS WATER FILTRATION FEED VALVE

CLOSE COMMAND

OPEN COMMAND

OPENED INDICATION

CLOSED INDICATION

IN REMOTE

PROCESS WATER

FLOW

FLOW

PROCESS WATER FILTRATION UNIT (TYP. OF 2)

INLET PRESSURE

FILTER SYSTEM ALARM

BACKWASH 1 STATUS

BACKWASH COMMAND

OUTLET PRESSURE

480 VAC

COOLING WATER PUMP NO. 3

YA 1233B FAIL

YI 1233B RUN

SI 1233

SC 1233

8-DRY-1233-MCC (TYPICAL OF 3)

YA 1233A FAIL

YI 1233A RUN

HS 1233 LOR

8-DRY-1233-PNL (TYPICAL OF 3)

HS 1222A ON/OFF

HS 1222B START

HS 1222C RUN/ ALARM/ COUNTER RESET

HS 1222D PERIODIC

HS 1222E DWELL

KI 1222A ELAPSED TIME

KI 1222B BACKWASH COUNTER

HS 1222F TIME-MIN

HS 1222G TIME-SEC

8-DRY-1222-PNL (TYPICAL OF 2)

1/2"-PW PDI 1222 1/2"-PW

6"-PW

PI 1222A

PIT 1222A

120VAC

FIT 1222

FE 1222

PIT 1222B

PI 1222B

1

I-522

REFER TO HAARSLEV PROCESS FLOW DIAGRAM

DRYER NO. 2

16"-PW

10"-PW

FROM PROCESS WATER DISTRIBUTION SYSTEM

PI 1233A

PI 1233B

M

3"-PW

4"-PW

6"-PW

D

COOLING WATER PUMP NO.3

8-DRY-1233-PMP

ZSO 1214

ZSC 1214

HS 1214 OC

HS 1214 L/R

480 VAC

8-DRY-1211-MOV

PW FILTRATION UNIT NO. 2

8-DRY-1222-FIL

8-DRY-1222-MOV

TO DRAIN

PI 1223A

PI 1223B

COOLING WATER PUMP NO.2 (FUTURE)

8-DRY-1223-PMP

(FUTURE)

10"-PW

10"-PW

1/2"-PW PDI 1212 1/2"-PW

6"-PW

PI 1212A

PIT 1212A

120VAC

FIT 1212

FE 1212

PIT 1212B

PI 1212B

PI 1213A

PI 1213B

COOLING WATER PUMP NO.1

8-DRY-1213-PMP

PW FILTRATION UNIT NO. 1

8-DRY-1212-FIL

8-DRY-1212-MOV

TO DRAIN

I-521

REFER TO HAARSLEV PROCESS FLOW DIAGRAM

DRYER NO. 1

GENERAL NOTES

1. SEE SHEET I-001 FOR PROCESS CONTROL SYSTEM ABBREVIATIONS,SYMBOLS AND NOTES.
2. SEE SHEET I-904 AND I-905 FOR SCADA NETWORK ARCHITECTURE DIAGRAM.
3. REFERENCE SPECIFICATION 40 90 05 FOR CONTROL DESCRIPTIONS.
4. REFERENCE SPECIFICATION 40 91 10 FOR INSTRUMENT SCHEDULE.
5. REFERENCE SPECIFICATION 40 94 43 FOR PLC I/O SCHEDULE.
6. INSTRUMENTATION AND CONTROL EQUIPMENT SHALL BE SUITABLE FOR INSTALLATION IN HAZARDOUS AS DEFINED ON SHEET 00G-06, HAZARDOUS AREA PLAN.
7. MAJOR FUNCTIONS FOR PACKAGED EQUIPMENT VENDOR SUPPLIED CONTROL PANELS ARE SHOWN. ACTUAL EQUIPMENT VENDOR PANELS MAY OFFER ADDITIONAL FUNCTIONALITY.
8. SEE INSTRUMENT SCHEDULE FOR COMPLETE TAG NUMBER.

KEY NOTES

1. THE BUTTERFLY VALVE CLOSES WHEN THE UNIT IS CALLED TO BACKWASH. THE COMPRESSED AIR IS PROVIDED BY THE COMPRESSORS FOR THE NITROGEN GENERATION SYSTEM (I-523).

THE DRAWINGS IN THIS SET ARE RECORD DRAWINGS. THEY ARE CONSTRUCTION CONTRACT DRAWINGS WHICH HAVE BEEN REVISED BASED ON AVAILABLE FIELD INFORMATION RECORDED BY OTHERS DURING CONSTRUCTION OF THIS CONTRACT. THERE HAS BEEN NO VERIFICATION OF DIMENSIONS SHOWN ON THE CONSTRUCTION DRAWINGS OR THE ACCURACY/COMPLETENESS OF THE FIELD INFORMATION RECEIVED.

SIGNATURE

DATE 2/7/2023

HDR

AS-BUILT REPLACEMENT SHEET

PROFESSIONAL CERTIFICATION

THIS DRAWING WAS ORIGINALLY APPROVED FOR CONSTRUCTION AND SEALED BY BILLY J. FOX , A REGISTERED PROFESSIONAL ENGINEER IN THE STATE OF MARYLAND, NO. 46603

NOTICE TO CONTRACTORS

- PROJECT ELEVATIONS ARE BASED ON NAVD88 AND HOWARD COUNTY'S BENCHMARK SYSTEM
- PREVIOUS PROJECTS USED OTHER DATUMS
- APPLY THE FOLLOWING CONVERSIONS WHEN USING PREVIOUS CONTRACT DRAWINGS:
  - ADDITION NO. 6: SUBTRACT 0.80 FT
  - PRIOR ADDITIONS: SUBTRACT 1.04 FT

DEPARTMENT OF PUBLIC WORKS
HOWARD COUNTY, MARYLAND

CHIEF, BUREAU OF UTILITIES DATE

DES: LH

DRN: LH

CHK: BF

DATE: 01/2018

DATE	REV	DESCRIPTION
03/2021		RECORD DRAWINGS

INSTRUMENTATION AND CONTROLS

COOLING WATER PUMPING SYSTEM
UP 08.07.01

LITTLE PATUXENT WATER RECLAMATION PLANT
8TH ADDITION
BIOSOLIDS PROCESSING FACILITIES - PHASE 2

CAPITAL PROJECT S-6295
CONTRACT NO. 24-4936

ELECTION DISTRICT NO. 6
HOWARD COUNTY, MARYLAND

SCALE AS SHOWN

SHEET 296 OF 311

I-503

BIM 360://10054364 – Little Patuxent WRP 8th Addition/2844592_Y_V18.rvt
1/8/2022 1:56:02 PM

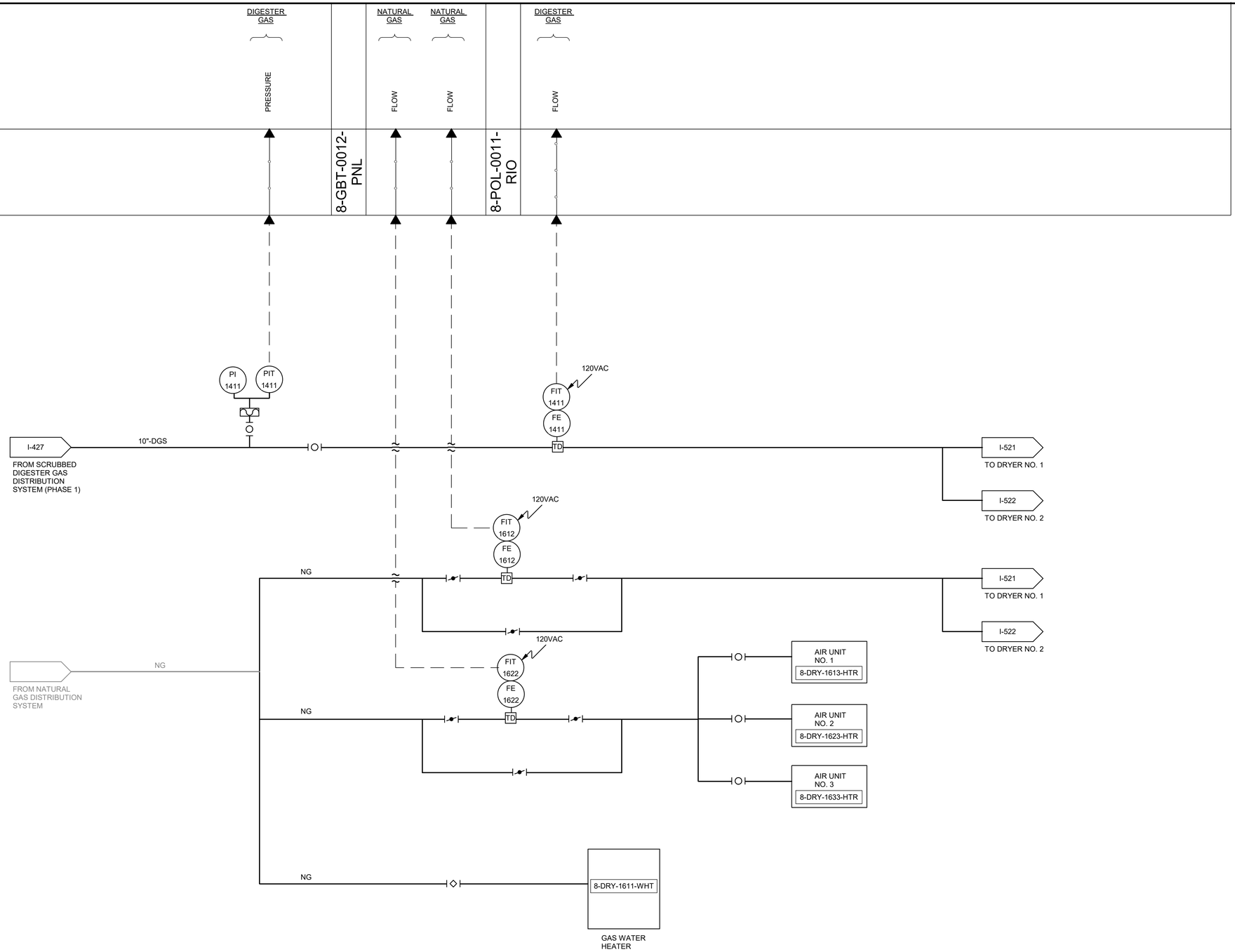

GENERAL NOTES

1. SEE SHEET I-001 FOR PROCESS CONTROL SYSTEM ABBREVIATIONS,SYMBOLS AND NOTES.
2. SEE SHEET I-904 AND I-905 FOR SCADA NETWORK ARCHITECTURE DIAGRAM.
3. REFERENCE SPECIFICATION 40 90 05 FOR CONTROL DESCRIPTIONS.
4. REFERENCE SPECIFICATION 40 91 10 FOR INSTRUMENT SCHEDULE.
5. REFERENCE SPECIFICATION 40 94 43 FOR PLC I/O SCHEDULE.
6. INSTRUMENTATION AND CONTROL EQUIPMENT SHALL BE SUITABLE FOR INSTALLATION IN HAZARDOUS AS DEFINED ON SHEET 00G-06, HAZARDOUS AREA PLAN.
7. MAJOR FUNCTIONS FOR PACKAGED EQUIPMENT VENDOR SUPPLIED CONTROL PANELS ARE SHOWN. ACTUAL EQUIPMENT VENDOR PANELS MAY OFFER ADDITIONAL FUNCTIONALITY.
8. SEE INSTRUMENT SCHEDULE FOR COMPLETE TAG NUMBER.

THE DRAWINGS IN THIS SET ARE RECORD DRAWINGS. THEY ARE CONSTRUCTION CONTRACT DRAWINGS WHICH HAVE BEEN REVISED BASED ON AVAILABLE FIELD INFORMATION RECORDED BY OTHERS DURING CONSTRUCTION OF THIS CONTRACT. THERE HAS BEEN NO VERIFICATION OF DIMENSIONS SHOWN ON THE CONSTRUCTION DRAWINGS OR THE ACCURACY/COMPLETENESS OF THE FIELD INFORMATION RECEIVED.

SIGNATURE — DATE 2/7/2023

AS-BUILT REPLACEMENT SHEET

PROFESSIONAL CERTIFICATION

THIS DRAWING WAS ORIGINALLY APPROVED FOR CONSTRUCTION AND SEALED BY BILLY J. FOX , A REGISTERED PROFESSIONAL ENGINEER IN THE STATE OF MARYLAND, NO. 46603

NOTICE TO CONTRACTORS

- PROJECT ELEVATIONS ARE BASED ON NAVD88 AND HOWARD COUNTY'S BENCHMARK SYSTEM
- PREVIOUS PROJECTS USED OTHER DATUMS
- APPLY THE FOLLOWING CONVERSIONS WHEN USING PREVIOUS CONTRACT DRAWINGS:
  - ADDITION NO. 6: SUBTRACT 0.80 FT
  - PRIOR ADDITIONS: SUBTRACT 1.04 FT

DEPARTMENT OF PUBLIC WORKS
HOWARD COUNTY, MARYLAND

CHIEF, BUREAU OF UTILITIES — DATE

DES: LH
DRN: LH
CHK: BF
DATE: 01/2018

DATE	REV	DESCRIPTION
03/2021		RECORD DRAWINGS

INSTRUMENTATION AND CONTROLS

NATURAL GAS AND BIOGAS
UP 08.07.01

LITTLE PATUXENT WATER RECLAMATION PLANT
8TH ADDITION
BIOSOLIDS PROCESSING FACILITIES - PHASE 2

CAPITAL PROJECT S-6295
CONTRACT NO. 24-4936

ELECTION DISTRICT NO. 6
HOWARD COUNTY, MARYLAND

SCALE AS SHOWN

SHEET 297 OF 311

I-504

BIM 360://10054364 – Little Patuxent WRP 8th Addition/284592_Y_V18.rvt
1/8/2022 1:56:04 PM

SCADA HMI

PCS 8-GBT-0012-PNL

BIOFILTER NO.3

BIOFILTER EXHAUST FAN: NUMBER OF DRYERS IN SERVICE; DUCT LOW PRESSURE ALARM; RUN STATUS; FAIL; HIGH DIFFERENTIAL PRESSURE; SPEED INDICATION; SPEED CONTROL

PROCESS WATER: LOW PRESSURE

HUMIDIFICATION: LOW PRESSURE; LOW FLOW

RECIRCULATION PUMP: RUN STATUS; FAIL ALARM

BIOFILTER NO.4

BIOFILTER EXHAUST FAN: RUN STATUS; FAIL; HIGH DIFFERENTIAL PRESSURE; SPEED INDICATION; SPEED CONTROL

PROCESS WATER: LOW PRESSURE

HUMIDIFICATION: LOW PRESSURE; LOW FLOW

RECIRCULATION PUMP: RUN STATUS; FAIL ALARM

GENERAL NOTES

1. SEE SHEET I-001 FOR PROCESS CONTROL SYSTEM ABBREVIATIONS,SYMBOLS AND NOTES.
2. SEE SHEET I-904 AND I-905 FOR SCADA NETWORK ARCHITECTURE DIAGRAM.
3. REFERENCE SPECIFICATION 40 90 05 FOR CONTROL DESCRIPTIONS.
4. REFERENCE SPECIFICATION 40 91 10 FOR INSTRUMENT SCHEDULE.
5. REFERENCE SPECIFICATION 40 94 43 FOR PLC I/O SCHEDULE.
6. INSTRUMENTATION AND CONTROL EQUIPMENT SHALL BE SUITABLE FOR INSTALLATION IN HAZARDOUS AS DEFINED ON SHEET 00G-06, HAZARDOUS AREA PLAN.
7. MAJOR FUNCTIONS FOR PACKAGED EQUIPMENT VENDOR SUPPLIED CONTROL PANELS ARE SHOWN. ACTUAL EQUIPMENT VENDOR PANELS MAY OFFER ADDITIONAL FUNCTIONALITY.
8. SEE INSTRUMENT SCHEDULE FOR COMPLETE TAG NUMBER.

KEY NOTES

1. MOTOR STARTERS AND VFDS INCLUDED IN PANEL 8-ODR-3011-PNL.
2. WATER BOX PIPES PVC OR EPM.

BIOFILTER TRAIN NO.1

480 VAC

BIOFILTER NO.3

IRRIGATION VALVE NO.3: HS 3011 OCA

RECIRCULATION PUMP NO.3: HS 3011 HOA; YI 3011 RUN; YA 3011A FAIL; KI 3011 TIMER

EXHAUST FAN NO.3: HS 3011 HOA; YI 3011 RUN; YA 3011A FAIL; SC 3011 ESTOP; SI 3011 RESET; PB 3011A ESTOP; PB 3011B RESET; YA 3011B GENERAL ALARM

PLC

BIOFILTER NO.4

IRRIGATION VALVE NO.4: HS 4011 OCA; KI 4011 TIMER

RECIRCULATION PUMP NO.4: HS 4011 HOA; YI 4011 RUN; YA 4011A FAIL

EXHAUST FAN NO.4: HS 4011 HOA; YI 4011 RUN; YA 4011A FAIL; SC 4011 ESTOP; SI 1022 RESET; PB 4011A ESTOP; PB 4011B RESET; YA 4011B GENERAL ALARM

VFD 8-ODR-3011-PNL (1)

TO EXHAUST ATMOSPHERE

24"

8-ODR-009-DMP PRESSURE RELIEF DAMPER

30"

BACKDRAFT DAMPER 16" 8-ODR-004-DMP

DRYER CONDENSER EXHAUST DRYER NO. 1

BACKDRAFT DAMPER 16" 8-ODR-005-DMP

DRYER CONDENSER EXHAUST DRYER NO. 2

PIT 3011

30"

24"

BACKDRAFT DAMPER 8-ODR-008-DMP

16"

8-ODR-011-DMP I-522 12"-FA

DRYER TRAIN NO.2 SLUDGE MIXER

8-ODR-010-DMP I-521 12"-FA

DRYER TRAIN NO.1 SLUDGE MIXER

8-ODR-006-DMP I-520 12"-FA

CAKE BIN

8-ODR-012-DMP I-501 16"-FA

CENTRIFUGES NO. 1, 2 AND 3

8-ODR-007-DMP GRAVITY RELIEF DAMPER

24"

PI 3011D; PSL 3011B

PDI 3011A

PI 3011A; PSL 3011A

8-ODR-016-DMP

1/2 "

24VDC

FIT 3011; FE 3011; PI 3011C

8-ODR-001-PVR S

PLANT WATER 2"-PW PW

1" 8-ODR-3011-VLV

I-507 A TO BIOFILTER IRRIGATION WATER (THIS SHEET)

2

WATER BOX INSULATED AND HEATED NO.1 8-ODR-3011-HTR

M RECIRCULATION PUMP No.3 8-ODR-3011-PMP

BLOWDOWN

TRAP

DRAIN WATER TO COMMON DRAIN

SUMP MAKE UP WATER

I-507 A FROM WATER BOX (THIS SHEET)

2"

1"

PRE-HUMIDIFICATION MEDIA

BIOFILTER MEDIA

TI 3011; TE 3011 TEMP

PDI 3011B

PDIT 3011

M FLEX BACKDRAFT DAMPER

8-ODR-015-DMP

8-ODR-014-DMP ISOLATION DAMPER

8-ODR-013-DMP

BIOFILTER FAN NO.3 8-ODR-3011-FAN

TREATED AIR EXHAUST TO ATMOSPHERE

SHARED EXHAUST STACK

TO DRAIN

BIOFILTER VESSEL NO.3 8-ODR-3011-TNK

3"

24"

3"-DR

TRAP

DRAIN WATER TO COMMON DRAIN

BIOFILTER TRAIN NO. 2

8-ODR-023-DMP

2

WATER BOX INSULATED AND HEATED NO.4 (SIMILAR TO NO.3) 8-ODR-4011-HTR

RECIRCULATION PUMP No.4 (SIMILAR TO NO.3) 8-ODR-4011-PMP

PLANT WATER 2"-PW PW

THE DRAWINGS IN THIS SET ARE RECORD DRAWINGS. THEY ARE CONSTRUCTION CONTRACT DRAWINGS WHICH HAVE BEEN REVISED BASED ON AVAILABLE FIELD INFORMATION RECORDED BY OTHERS DURING CONSTRUCTION OF THIS CONTRACT. THERE HAS BEEN NO VERIFICATION OF DIMENSIONS SHOWN ON THE CONSTRUCTION DRAWINGS OR THE ACCURACY/COMPLETENESS OF THE FIELD INFORMATION RECEIVED.

SIGNATURE DATE 2/7/2022

BIOFILTER TRAIN NO.4 (SIMILAR TO BIOFILTER NO.3) 8-ODR-4011-TNK

FLEX

PDI 4011B

PDIT 4011

M 8-ODR-020-DMP 24"

BIOFILTER FAN NO.4 8-ODR-4011-FAN

8-ODR-021-DMP ISOLATION DAMPER

24" 8-ODR-022-DMP

TO DRAIN

BIM 360://10054364 – Little Patuxent WRP 8th Addition/264592_Y_V18.rvt
1/8/2022 1:56:07 PM

AS-BUILT REPLACEMENT SHEET

PROFESSIONAL CERTIFICATION

THIS DRAWING WAS ORIGINALLY APPROVED FOR CONSTRUCTION AND SEALED BY BILLY J. FOX , A REGISTERED PROFESSIONAL ENGINEER IN THE STATE OF MARYLAND, NO. 46603

NOTICE TO CONTRACTORS

- PROJECT ELEVATIONS ARE BASED ON NAVD88 AND HOWARD COUNTY'S BENCHMARK SYSTEM
- PREVIOUS PROJECTS USED OTHER DATUMS
- APPLY THE FOLLOWING CONVERSIONS WHEN USING PREVIOUS CONTRACT DRAWINGS:
  - ADDITION NO. 6: SUBTRACT 0.80 FT
  - PRIOR ADDITIONS: SUBTRACT 1.04 FT

DEPARTMENT OF PUBLIC WORKS
HOWARD COUNTY, MARYLAND

CHIEF, BUREAU OF UTILITIES DATE

DES: LH
DRN: LH
CHK: BF
DATE: 01/2018

DATE	REV	DESCRIPTION
03/2021		RECORD DRAWINGS

INSTRUMENTATION AND CONTROLS

ODOR CONTROL
UP 08.09.03

LITTLE PATUXENT WATER RECLAMATION PLANT
8TH ADDITION
BIOSOLIDS PROCESSING FACILITIES - PHASE 2

CAPITAL PROJECT S-6295
CONTRACT NO. 24-4936

ELECTION DISTRICT NO. 6
HOWARD COUNTY, MARYLAND

SCALE AS SHOWN

SHEET 298 OF 311

I-507

SCADA HMI

PCS

8-GBT-0012-PNL

ANGLED CONVEYOR NO.1 GATE (TYP. OF 2): CLOSE COMMAND; OPEN COMMAND; OPEN INDICATION; CLOSED INDICATION; IN REMOTE

ANGLED CONVEYOR NO.2 GATE (TYP. OF 2): CLOSE COMMAND; OPEN COMMAND; OPEN INDICATION; CLOSED INDICATION; IN REMOTE

WET CAKE BIN 1 LEVEL; WET CAKE BIN 2 LEVEL; WET CAKE BIN 3 LEVEL

DIVERTER GATE NO. 3: CLOSE COMMAND; OPEN COMMAND; OPEN INDICATION; CLOSED INDICATION; IN REMOTE

DIVERTER GATE NO. 2: CLOSE COMMAND; OPEN COMMAND; OPEN INDICATION; CLOSED INDICATION; IN REMOTE

DIVERTER GATE NO. 1: CLOSE COMMAND; OPEN COMMAND; OPEN INDICATION; CLOSED INDICATION; IN REMOTE

HORIZONTAL CONVEYOR NO. 1: RUN STATUS; FAIL; PULL CORD; ZERO SPEED; IN REMOTE; RUN COMMAND

HORIZONTAL CONVEYOR NO. 2: RUN STATUS; FAIL; PULL CORD; ZERO SPEED; IN REMOTE; RUN COMMAND; E-STOP

ANGLED CONVEYOR NO. 1: RUN STATUS; FAIL; PULL CORD; ZERO SPEED; IN REMOTE; RUN COMMAND; E-STOP

ANGLED CONVEYOR NO. 2: RUN STATUS; FAIL; PULL CORD; ZERO SPEED; IN REMOTE; RUN COMMAND

480VAC

I-501 A — CS — FROM CENTRIFUGE NO.1

I-501 B — CS — FROM CENTRIFUGE NO.2

I-501 C — CS — FROM CENTRIFUGE NO.3

ZSO 2033; ZSC 2033; HS 2033 OSC; HS 2033 L/R — DIVERTER GATE NO.3 — 8-CTR-2033-DIV

ZSO 2023; ZSC 2023; HS 2023 OSC; HS 2023 L/R — DIVERTER GATE NO.2 — 8-CTR-2023-DIV

ZSO 2013; ZSC 2013; HS 2013 OSC; HS 2013 L/R — DIVERTER GATE NO.1 — 8-CTR-2013-DIV

CONVEYOR MASTER CONTROL PANEL LCP (1)

PLC

YL 3011 POWER ON

PB 3011 E-STOP

OIT

HORIZONTAL CONVEYOR NO. 1: HS 3015 HOA; YI 3015 RUNNING; HS 3015 START; YA 3015 FAIL; HS 3015 STOP

HORIZONTAL CONVEYOR NO. 2: HS 3025 HOA; YI 3025 RUNNING; HS 3025 START; YA 3025 FAIL; HS 3025 STOP

ANGLED CONVEYOR NO. 1: HS 3035 HOA; YI 3035 RUNNING; HS 3035 START; YA 3035 FAIL; HS 3035 STOP

ANGLED CONVEYOR NO. 2: HS 3045 HOA; YI 3045 RUNNING; HS 3045 START; YA 3045 FAIL; HS 3045 STOP

8-CTR-3011-PNL

TO I-501 (2)

(1) → SSA 3012 ZERO SPEED; (2) → HS 3012 PULL CORD

HORIZONTAL CONVEYOR NO.1 — 8-CTR-3012-CNV

8-CTR-3012-DRV — SCREW CONVEYOR DRIVE

(3) SSA 3022 ZERO SPEED; HS 3022 PULL CORD

HORIZONTAL CONVEYOR NO.2 — 8-CTR-3022-CNV

8-CTR-3022-DRV — SCREW CONVEYOR DRIVE

TO TRUCK

8-CTR-3024-GAT; 8-CTR-3034-GAT; 8-CTR-3044-GAT; 8-CTR-3014-GAT

(1) (3) SSA 4012 ZERO SPEED; (2) HS 4012 PULL CORD

8-CTR-4012-DRV — SCREW CONVEYOR DRIVE

(5) ZSC 4014; ZSO 4014 OSC; HS 4014 L/R — 8-CTR-4014-MOV

(6) ZSC 4024; ZSO 4024 OSC; (4) HS 4024 L/R — 8-CTR-4024-MOV

8-CTR-4022-DRV — SCREW CONVEYOR DRIVE

ANGLED CONVEYOR NO.1 — 8-CTR-4012-CNV

(7) ZSC 4034; ZSO 4034 OSC; (4) HS 4034 L/R — 8-CTR-4034-MOV

(8) ZSC 4044; ZSO 4044 OSC; (4) HS 4044 L/R — 8-CTR-4044-MOV

(3) SSA 4022 ZERO SPEED; (4) HS 4022 PULL CORD

ANGLED CONVEYOR NO.2 — 8-CTR-4022-CNV

TO WET CAKE BIN — I-520

GENERAL NOTES

1. SEE SHEET I-001 FOR PROCESS CONTROL SYSTEM ABBREVIATIONS,SYMBOLS AND NOTES.
2. SEE SHEET I-904 AND I-905 FOR SCADA NETWORK ARCHITECTURE DIAGRAM.
3. REFERENCE SPECIFICATION 40 90 05 FOR CONTROL DESCRIPTIONS.
4. REFERENCE SPECIFICATION 40 91 10 FOR INSTRUMENT SCHEDULE.
5. REFERENCE SPECIFICATION 40 94 43 FOR PLC I/O SCHEDULE.
6. INSTRUMENTATION AND CONTROL EQUIPMENT SHALL BE SUITABLE FOR INSTALLATION IN HAZARDOUS AS DEFINED ON SHEET 00G-06, HAZARDOUS AREA PLAN.
7. MAJOR FUNCTIONS FOR PACKAGED EQUIPMENT VENDOR SUPPLIED CONTROL PANELS ARE SHOWN. ACTUAL EQUIPMENT VENDOR PANELS MAY OFFER ADDITIONAL FUNCTIONALITY.
8. SEE INSTRUMENT SCHEDULE FOR COMPLETE TAG NUMBER.

KEY NOTES

(1) CONVEYOR MASTER CONTROL PANEL SHALL INCLUDE STARTERS FOR ALL CONVEYORS MOTORS INCLUDING STARTERS FOR MOTORS THAT WILL BE INSTALLED IN PHASE 2. CONVEYOR MASTER CONTROL PANEL SHALL INCLUDE SPARE TERMINAL BLCOKS AND I/O POINTS FOR INSTRUMENTS AND SIGNALS ASSOCIATED WITH THE ANGLED CONVEYORS THAT WILL BE INSTALLED IN PHASE 2.

(2) HARDWIRED CONVEYOR RUN STATUS TO EACH OF THE EXISTING CENTRIFUGE CONTROL PANELS.

(3) THIS LINE REPRESENTS INSTRUMENT SIGNAL AND 120 VAC POWER.

(4) ALL FOUR (4) SLIDE GATES CORRESPONDING TO THE ANGLED CONVEYORS SHALL HAVE MOTORIZED VALVES WITH ACTUATORS AND SIGNALS SHALL INTERFACE WITH 8-GBT-0011-PNL AREA PANEL

THE DRAWINGS IN THIS SET ARE RECORD DRAWINGS. THEY ARE CONSTRUCTION CONTRACT DRAWINGS WHICH HAVE BEEN REVISED BASED ON AVAILABLE FIELD INFORMATION RECORDED BY OTHERS DURING CONSTRUCTION OF THIS CONTRACT. THERE HAS BEEN NO VERIFICATION OF DIMENSIONS SHOWN ON THE CONSTRUCTION DRAWINGS OR THE ACCURACY/COMPLETENESS OF THE FIELD INFORMATION RECEIVED.

SIGNATURE — DATE 2/7/2023

HDR

AS-BUILT REPLACEMENT SHEET

PROFESSIONAL CERTIFICATION

THIS DRAWING WAS ORIGINALLY APPROVED FOR CONSTRUCTION AND SEALED BY BILLY J. FOX , A REGISTERED PROFESSIONAL ENGINEER IN THE STATE OF MARYLAND, NO. 46603

NOTICE TO CONTRACTORS

- PROJECT ELEVATIONS ARE BASED ON NAVD88 AND HOWARD COUNTY'S BENCHMARK SYSTEM
- PREVIOUS PROJECTS USED OTHER DATUMS
- APPLY THE FOLLOWING CONVERSIONS WHEN USING PREVIOUS CONTRACT DRAWINGS:
  - ADDITION NO. 6: SUBTRACT 0.80 FT
  - PRIOR ADDITIONS: SUBTRACT 1.04 FT

DEPARTMENT OF PUBLIC WORKS
HOWARD COUNTY, MARYLAND

CHIEF, BUREAU OF UTILITIES — DATE

DES: LH
DRN: LH
CHK: BF
DATE: 01/2018

DATE	REV	DESCRIPTION
03/2021		RECORD DRAWINGS

INSTRUMENTATION AND CONTROLS

DEWATERED SOLIDS MATERIALS HANDLING SYSTEM UP 08.06.02

LITTLE PATUXENT WATER RECLAMATION PLANT
8TH ADDITION
BIOSOLIDS PROCESSING FACILITIES - PHASE 2

CAPITAL PROJECT S-6295
CONTRACT NO. 24-4936

ELECTION DISTRICT NO. 6
HOWARD COUNTY, MARYLAND

SCALE AS SHOWN

SHEET 299 OF 311

I-508

BIM 360://10054364 – Little Patuxent WRP 8th Addition/264592_Y_V18.rvt
1/8/2022 1:56:11 PM

SCADA HMI

PCS

8-GBT-0012-PNL

DRYER NO.1

- SLUDGE MIXER LOW SPEED
- TUBUILAR DRAG CONV LOW SPEED
- SLUDGE DISTRIBUTOR: LEVEL, RIGHT POSITION, LEFT POSITION
- DOSING UNIT: HIGH TORQUE
- SLUDGE ROLLER PRESS: LEVEL
- BELT DRYER PRESSURE
- DELUGE WATER PRESSURE
- MODULE NO.1 TEMPERATURE
- MODULE NO.2 TEMPERATURE
- MODULE NO.3 TEMPERATURE
- MODULE NO.4 TEMPERATURE
- MODULE NO.5 TEMPERATURE
- MODULE NO.6 TEMPERATURE
- MODULE NO.7 TEMPERATURE
- MODULE NO.8 TEMPERATURE
- BURNER PLENUM TEMPERATURE
- UPPER BELT: TEMPERATURE, POSITION MISALIGNED, HIGH TORQUE
- LOWER BELT: POSITION MISALIGNED, HIGH TORQUE
- FLOOR SWEEPER BELT: POSITION MISALIGNED, HIGH TORQUE
- DISCHARGE SCREW: POSITION MISALIGNED
- BUCKET ELEVATOR POSITION
- DIVERTER NO. 1: TO BIN, TO DRUM MILL
- DIVERTER NO. 2: TO SCREENER, TO BACK MIX SCREW HOPPER
- DIVERTER NO. 3: TO SCREW SILO LINE 2, TO SCREW SILO LINE 1
- DRUM MILL (CRUSHER): POSITION NO. 1, POSITION NO. 2
- MIXER DOSING SCREW: LEVEL, POSITION
- SCREEN POSITION
- BUCKET ELEVATOR POSITION
- TRAVERSING SCREW POSITION
- SILO SLIDE GATE NO. 1: OPEN, CLOSED
- SILO SLIDE GATE NO. 2: CLOSED, OPEN

DRYER LOCAL CONTROL PANEL

OIT

PLC

(TO SHEET I-511)

8-DRY-2011A-PNL

1

GENERAL NOTES

1. SEE SHEET I-001 FOR PROCESS CONTROL SYSTEM ABBREVIATIONS,SYMBOLS AND NOTES.
2. SEE SHEET I-904 AND I-905 FOR SCADA NETWORK ARCHITECTURE DIAGRAM.
3. REFERENCE SPECIFICATION 40 90 05 FOR CONTROL DESCRIPTIONS.
4. REFERENCE SPECIFICATION 40 91 10 FOR INSTRUMENT SCHEDULE.
5. REFERENCE SPECIFICATION 40 94 43 FOR PLC I/O SCHEDULE.
6. INSTRUMENTATION AND CONTROL EQUIPMENT SHALL BE SUITABLE FOR INSTALLATION IN HAZARDOUS AS DEFINED ON SHEET 00G-06, HAZARDOUS AREA PLAN.
7. MAJOR FUNCTIONS FOR PACKAGED EQUIPMENT VENDOR SUPPLIED CONTROL PANELS ARE SHOWN. ACTUAL EQUIPMENT VENDOR PANELS MAY OFFER ADDITIONAL FUNCTIONALITY.
8. SEE INSTRUMENT SCHEDULE FOR COMPLETE TAG NUMBER.
9. ONLY I/O FROM DRYER LOCAL CONTROL PANEL TO BIOSOLIDS PCS ARE SHOWN ON THIS DRAWING. REFER TO DRYER P&IDs I-520 THROUGH I-523 FOR COMPLETE DRYER PROCESS INFORMATION.

KEY NOTES

1. DRYER LOCAL CONTROL PANEL "8-DRY-2011A-PNL" IS THE SAME SHOWN IN -510, I-511, I-512 AND I-513.

THE DRAWINGS IN THIS SET ARE RECORD DRAWINGS. THEY ARE CONSTRUCTION CONTRACT DRAWINGS WHICH HAVE BEEN REVISED BASED ON AVAILABLE FIELD INFORMATION RECORDED BY OTHERS DURING CONSTRUCTION OF THIS CONTRACT. THERE HAS BEEN NO VERIFICATION OF DIMENSIONS SHOWN ON THE CONSTRUCTION DRAWINGS OR THE ACCURACY/COMPLETENESS OF THE FIELD INFORMATION RECEIVED.

SIGNATURE _____ DATE 2/7/2022

AS-BUILT REPLACEMENT SHEET

PROFESSIONAL CERTIFICATION

THIS DRAWING WAS ORIGINALLY APPROVED FOR CONSTRUCTION AND SEALED BY BILLY J. FOX , A REGISTERED PROFESSIONAL ENGINEER IN THE STATE OF MARYLAND, NO. 46603

NOTICE TO CONTRACTORS

- PROJECT ELEVATIONS ARE BASED ON NAVD88 AND HOWARD COUNTY'S BENCHMARK SYSTEM
- PREVIOUS PROJECTS USED OTHER DATUMS
- APPLY THE FOLLOWING CONVERSIONS WHEN USING PREVIOUS CONTRACT DRAWINGS:
  - ADDITION NO. 6: SUBTRACT 0.80 FT
  - PRIOR ADDITIONS: SUBTRACT 1.04 FT

DEPARTMENT OF PUBLIC WORKS
HOWARD COUNTY, MARYLAND

CHIEF, BUREAU OF UTILITIES DATE

DES: LH
DRN: LH
CHK: BF
DATE: 01/2018

DATE	REV	DESCRIPTION
03/2021		RECORD DRAWINGS

INSTRUMENTATION AND CONTROLS

DRYER TRAIN NO.1-SHEET 1
UP 08.06.02

LITTLE PATUXENT WATER RECLAMATION PLANT
8TH ADDITION
BIOSOLIDS PROCESSING FACILITIES - PHASE 2

CAPITAL PROJECT S-6295
CONTRACT NO. 24-4936

ELECTION DISTRICT NO. 6
HOWARD COUNTY, MARYLAND

SCALE AS SHOWN

SHEET 300 OF 311

I-510

BIM 360://10054364 – Little Patuxent WRP 8th Addition/284592_Y_V18.rvt
1/8/2022 1:56:12 PM

SCADA HMI

PCS

8-GBT-0012-PNL

DRYER NO.1

SPRAY CONDENSER

- LEVEL
- COOLING WATER SUPPLY PRESSURE
- EXHAUST TEMPERATURE
- COOLING WATER SUPPLY TEMPERATURE

SCRUBBER

- INTAKE pH
- RECIRC WASH FLOW CONDUCTIVITY
- POTABLE WATER LOW PRESSURE SWITCH
- RECIRCULATION WASH PRESSURE
- TEMPERATURE

- AIR LOCK ROTARY VLAVE OPEN
- H2SO4 TANK LEVEL
- SCRUBBER BOTTOM ACID MIX LEVEL

SPRAY CONDENSER INTAKE

- CARBON MONOXIDE
- MOISTURE
- TEMPERATURE

- NATURAL GAS FLOW
- BIOGAS FLOW
- NATURAL GAS PRESSURE
- BIOGAS PRESSURE

NATURAL GAS

- PRESSURE SWITCH HIGH
- PRESSURE SWITCH LOW
- PROVING PRESSURE SWITCH HIGH

BIOGAS

- PRESSURE SWITCH HIGH
- PRESSURE SWITCH LOW
- PROVING PRESSURE SWITCH HIGH

- HOT GAS DUCT TO DRYER TEMPERATURE
- BURNER CONTROLLER TEMPERATURE

DRYER LOCAL CONTROL PANEL

(FROM SHEET I-510)

OIT

PLC

(TO SHEET I-512)

8-DRY-2011A-PNL

1

GENERAL NOTES

1. SEE SHEET I-001 FOR PROCESS CONTROL SYSTEM ABBREVIATIONS,SYMBOLS AND NOTES.
2. SEE SHEET I-904 AND I-905 FOR SCADA NETWORK ARCHITECTURE DIAGRAM.
3. REFERENCE SPECIFICATION 40 90 05 FOR CONTROL DESCRIPTIONS.
4. REFERENCE SPECIFICATION 40 91 10 FOR INSTRUMENT SCHEDULE.
5. REFERENCE SPECIFICATION 40 94 43 FOR PLC I/O SCHEDULE.
6. INSTRUMENTATION AND CONTROL EQUIPMENT SHALL BE SUITABLE FOR INSTALLATION IN HAZARDOUS AS DEFINED ON SHEET 00G-06, HAZARDOUS AREA PLAN.
7. MAJOR FUNCTIONS FOR PACKAGED EQUIPMENT VENDOR SUPPLIED CONTROL PANELS ARE SHOWN. ACTUAL EQUIPMENT VENDOR PANELS MAY OFFER ADDITIONAL FUNCTIONALITY.
8. SEE INSTRUMENT SCHEDULE FOR COMPLETE TAG NUMBER.
9. ONLY I/O FROM DRYER LOCAL CONTROL PANEL TO BIOSOLIDS PCS ARE SHOWN ON THIS DRAWING. REFER TO DRYER P&IDs I-520 THROUGH I-523 FOR COMPLETE DRYER PROCESS INFORMATION.

KEY NOTES

1. DRYER LOCAL CONTROL PANEL "8-DRY-2011A-PNL" IS THE SAME SHOWN IN -510, I-511, I-512 AND I-513.

THE DRAWINGS IN THIS SET ARE RECORD DRAWINGS. THEY ARE CONSTRUCTION CONTRACT DRAWINGS WHICH HAVE BEEN REVISED BASED ON AVAILABLE FIELD INFORMATION RECORDED BY OTHERS DURING CONSTRUCTION OF THIS CONTRACT. THERE HAS BEEN NO VERIFICATION OF DIMENSIONS SHOWN ON THE CONSTRUCTION DRAWINGS OR THE ACCURACY/COMPLETENESS OF THE FIELD INFORMATION RECEIVED.

SIGNATURE _____ DATE 2/7/2022

AS-BUILT REPLACEMENT SHEET

PROFESSIONAL CERTIFICATION

THIS DRAWING WAS ORIGINALLY APPROVED FOR CONSTRUCTION AND SEALED BY BILLY J. FOX , A REGISTERED PROFESSIONAL ENGINEER IN THE STATE OF MARYLAND, NO. 46603

NOTICE TO CONTRACTORS

- PROJECT ELEVATIONS ARE BASED ON NAVD88 AND HOWARD COUNTY'S BENCHMARK SYSTEM
- PREVIOUS PROJECTS USED OTHER DATUMS
- APPLY THE FOLLOWING CONVERSIONS WHEN USING PREVIOUS CONTRACT DRAWINGS:
  - ADDITION NO. 6: SUBTRACT 0.80 FT
  - PRIOR ADDITIONS: SUBTRACT 1.04 FT

DEPARTMENT OF PUBLIC WORKS
HOWARD COUNTY, MARYLAND

CHIEF, BUREAU OF UTILITIES DATE

DES: LH
DRN: LH
CHK: BF
DATE: 01/2018

DATE	REV	DESCRIPTION
03/2021		RECORD DRAWINGS

INSTRUMENTATION AND CONTROLS

DRYER TRAIN NO.1-SHEET 2
UP 08.06.02

LITTLE PATUXENT WATER RECLAMATION PLANT
8TH ADDITION
BIOSOLIDS PROCESSING FACILITIES - PHASE 2

CAPITAL PROJECT S-6295
CONTRACT NO. 24-4936

ELECTION DISTRICT NO. 6
HOWARD COUNTY, MARYLAND

SCALE AS SHOWN

SHEET 301 OF 311

I-511

BIM 360://10054364 – Little Patuxent WRP 8th Addition/284592_Y_V18.rvt
1/8/2022 1:56:14 PM

SCADA HMI

PCS 8-GBT-0012-PNL

DRYER NO.2

- SLUDGE DISTRIBUTOR: LEVEL; RIGHT POSITION; LEFT POSITION
- DOSING UNIT: HIGH TORQUE
- SLUDGE ROLLER PRESS: LEVEL
- SLUDGE MIXER LOW SPEED
- TUBULAR DRAG CONV LOW SPEED
- BELT DRYER PRESSURE
- DELUGE WATER PRESSURE
- MODULE NO.1 TEMPERATURE
- MODULE NO.2 TEMPERATURE
- MODULE NO.3 TEMPERATURE
- MODULE NO.4 TEMPERATURE
- MODULE NO.5 TEMPERATURE
- MODULE NO.6 TEMPERATURE
- MODULE NO.7 TEMPERATURE
- MODULE NO.8 TEMPERATURE
- BURNER PLENUM TEMPERATURE
- UPPER BELT: TEMPERATURE; POSITION MISALIGNED; HIGH TORQUE
- LOWER BELT: POSITION MISALIGNED; HIGH TORQUE
- FLOOR SWEEPER BELT: POSITION MISALIGNED; HIGH TORQUE
- DISCHARGE SCREW: POSITION MISALIGNED
- BUCKET ELEVATOR POSITION
- DIVERTER NO. 1: TO BIN; TO DRUM MILL
- DIVERTER NO. 2: TO SCREENER; TO BACK MIX SCREW HOPPER
- DIVERTER NO. 3: TO SCREW SILO LINE 2; TO SCREW SILO LINE 1
- DRUM MILL (CRUSHER): POSITION NO. 1; POSITION NO. 2
- MIXER DOSING SCREW: LEVEL; POSITION
- SCREEN POSITION
- BUCKET ELEVATOR POSITION
- TRAVERSING SCREW POSITION
- SILO SLIDE GATE NO. 1: OPEN; CLOSED
- SILO SLIDE GATE NO. 2: CLOSED; OPEN

DRYER LOCAL CONTROL PANEL

(FROM SHEET I-511)

OIT

PLC

(TO SHEET I-513)

8-DRY-2011A-PNL

(1)

GENERAL NOTES

1. SEE SHEET I-001 FOR PROCESS CONTROL SYSTEM ABBREVIATIONS,SYMBOLS AND NOTES.
2. SEE SHEET I-904 AND I-905 FOR SCADA NETWORK ARCHITECTURE DIAGRAM.
3. REFERENCE SPECIFICATION 40 90 05 FOR CONTROL DESCRIPTIONS.
4. REFERENCE SPECIFICATION 40 91 10 FOR INSTRUMENT SCHEDULE.
5. REFERENCE SPECIFICATION 40 94 43 FOR PLC I/O SCHEDULE.
6. INSTRUMENTATION AND CONTROL EQUIPMENT SHALL BE SUITABLE FOR INSTALLATION IN HAZARDOUS AS DEFINED ON SHEET 00G-06, HAZARDOUS AREA PLAN.
7. MAJOR FUNCTIONS FOR PACKAGED EQUIPMENT VENDOR SUPPLIED CONTROL PANELS ARE SHOWN. ACTUAL EQUIPMENT VENDOR PANELS MAY OFFER ADDITIONAL FUNCTIONALITY.
8. SEE INSTRUMENT SCHEDULE FOR COMPLETE TAG NUMBER.
9. ONLY I/O FROM DRYER LOCAL CONTROL PANEL TO BIOSOLIDS PCS ARE SHOWN ON THIS DRAWING. REFER TO DRYER P&IDs I-520 THROUGH I-523 FOR COMPLETE DRYER PROCESS INFORMATION.

KEY NOTES

(1) DRYER LOCAL CONTROL PANEL "8-DRY-2011A-PNL" IS THE SAME SHOWN IN -510, I-511, I-512 AND I-513.

THE DRAWINGS IN THIS SET ARE RECORD DRAWINGS. THEY ARE CONSTRUCTION CONTRACT DRAWINGS WHICH HAVE BEEN REVISED BASED ON AVAILABLE FIELD INFORMATION RECORDED BY OTHERS DURING CONSTRUCTION OF THIS CONTRACT. THERE HAS BEEN NO VERIFICATION OF DIMENSIONS SHOWN ON THE CONSTRUCTION DRAWINGS OR THE ACCURACY/COMPLETENESS OF THE FIELD INFORMATION RECEIVED.

SIGNATURE _____ DATE 2/7/2023

AS-BUILT REPLACEMENT SHEET

PROFESSIONAL CERTIFICATION

THIS DRAWING WAS ORIGINALLY APPROVED FOR CONSTRUCTION AND SEALED BY BILLY J. FOX , A REGISTERED PROFESSIONAL ENGINEER IN THE STATE OF MARYLAND, NO. 46603

NOTICE TO CONTRACTORS

- PROJECT ELEVATIONS ARE BASED ON NAVD88 AND HOWARD COUNTY'S BENCHMARK SYSTEM
- PREVIOUS PROJECTS USED OTHER DATUMS
- APPLY THE FOLLOWING CONVERSIONS WHEN USING PREVIOUS CONTRACT DRAWINGS:
  - ADDITION NO. 6: SUBTRACT 0.80 FT
  - PRIOR ADDITIONS: SUBTRACT 1.04 FT

DEPARTMENT OF PUBLIC WORKS
HOWARD COUNTY, MARYLAND

CHIEF, BUREAU OF UTILITIES DATE

DES: LH
DRN: LH
CHK: BF
DATE: 01/2018

DATE	REV	DESCRIPTION
03/2021		RECORD DRAWINGS

INSTRUMENTATION AND CONTROLS

DRYER TRAIN NO.2-SHEET 1
UP 08.06.02

LITTLE PATUXENT WATER RECLAMATION PLANT
8TH ADDITION
BIOSOLIDS PROCESSING FACILITIES - PHASE 2

CAPITAL PROJECT S-6295
CONTRACT NO. 24-4936

ELECTION DISTRICT NO. 6
HOWARD COUNTY, MARYLAND

SCALE AS SHOWN

SHEET 302 OF 311

I-512

BIM 360://10054364 – Little Patuxent WRP 8th Addition/284592_Y_V18.rvt
1/8/2022 1:56:15 PM

SCADA HMI

PCS

8-GBT-0012-PNL

DRYER NO.2

SPRAY CONDENSER

- AIR LOCK ROTARY VLAVE OPEN
- LEVEL
- COOLING WATER SUPPLY PRESSURE
- EXHAUST TEMPERATURE
- COOLING WATER SUPPLY TEMPERATURE

SCRUBBER

- INTAKE pH
- RECIRC WASH FLOW CONDUCTIVITY
- POTABLE WATER LOW PRESSURE SWITCH
- RECIRCULATION WASH PRESSURE
- TEMPERATURE
- H2SO4 TANK LEVEL
- SCRUBBER BOTTOM ACID MIX LEVEL

SPRAY CONDENSER INTAKE

- CARBON MONOXIDE
- MOISTURE
- TEMPERATURE

NATURAL GAS

- NATURAL GAS FLOW
- BIOGAS FLOW
- NATURAL GAS PRESSURE
- BIOGAS PRESSURE
- PRESSURE SWITCH HIGH
- PRESSURE SWITCH LOW
- PROVING PRESSURE SWITCH HIGH

BIOGAS

- PRESSURE SWITCH HIGH
- PRESSURE SWITCH LOW
- PROVING PRESSURE SWITCH HIGH

- HOT GAS DUCT TO DRYER TEMPERATURE
- BURNER CONTROLLER TEMPERATURE

CHUTE PANEL

TRUCK ALERT

- CHUTE NOT FULLY RETRACTED

(2) YA — STROBE (2) — HORN

120VAC

TRUCK ALERT LCS (3)

8-DRY-2211-PNL

DRYER LOCAL CONTROL PANEL

(FROM SHEET I-512)

OIT

PLC

(TO SHEET I-514)

8-DRY-2011A-PNL (1)

GENERAL NOTES

1. SEE SHEET I-001 FOR PROCESS CONTROL SYSTEM ABBREVIATIONS,SYMBOLS AND NOTES.
2. SEE SHEET I-904 AND I-905 FOR SCADA NETWORK ARCHITECTURE DIAGRAM.
3. REFERENCE SPECIFICATION 40 90 05 FOR CONTROL DESCRIPTIONS.
4. REFERENCE SPECIFICATION 40 91 10 FOR INSTRUMENT SCHEDULE.
5. REFERENCE SPECIFICATION 40 94 43 FOR PLC I/O SCHEDULE.
6. INSTRUMENTATION AND CONTROL EQUIPMENT SHALL BE SUITABLE FOR INSTALLATION IN HAZARDOUS AS DEFINED ON SHEET 00G-06, HAZARDOUS AREA PLAN.
7. MAJOR FUNCTIONS FOR PACKAGED EQUIPMENT VENDOR SUPPLIED CONTROL PANELS ARE SHOWN. ACTUAL EQUIPMENT VENDOR PANELS MAY OFFER ADDITIONAL FUNCTIONALITY.
8. SEE INSTRUMENT SCHEDULE FOR COMPLETE TAG NUMBER.
9. ONLY I/O FROM DRYER LOCAL CONTROL PANEL TO BIOSOLIDS PCS ARE SHOWN ON THIS DRAWING. REFER TO DRYER P&IDs I-520 THROUGH I-523 FOR COMPLETE DRYER PROCESS INFORMATION.

KEY NOTES

(1) DRYER LOCAL CONTROL PANEL "8-DRY-2011A-PNL" IS THE SAME SHOWN IN -510, I-511, I-512 AND I-513.

(2) COMBINATION OUTDOOR STROBE AND HORN LOCATED IN THE MEZZANIE OF EACH SILO. THE STROBE AND HORN SHALL BE ACTIVATED FROM THE CHUTE NOT FULLY RETRACTED CONTACT IN THE CHUTE PANEL.

(3) AS PER RFI-615.

THE DRAWINGS IN THIS SET ARE RECORD DRAWINGS. THEY ARE CONSTRUCTION CONTRACT DRAWINGS WHICH HAVE BEEN REVISED BASED ON AVAILABLE FIELD INFORMATION RECORDED BY OTHERS DURING CONSTRUCTION OF THIS CONTRACT. THERE HAS BEEN NO VERIFICATION OF DIMENSIONS SHOWN ON THE CONSTRUCTION DRAWINGS OR THE ACCURACY/COMPLETENESS OF THE FIELD INFORMATION RECEIVED.

SIGNATURE — DATE 2/7/2022

BIM 360://10054364 – Little Patuxent WRP 8th Addition/284592_Y_V18.rvt
1/8/2022 1:56:17 PM

AS-BUILT REPLACEMENT SHEET

PROFESSIONAL CERTIFICATION

THIS DRAWING WAS ORIGINALLY APPROVED FOR CONSTRUCTION AND SEALED BY BILLY J. FOX , A REGISTERED PROFESSIONAL ENGINEER IN THE STATE OF MARYLAND, NO. 46603

NOTICE TO CONTRACTORS

- PROJECT ELEVATIONS ARE BASED ON NAVD88 AND HOWARD COUNTY'S BENCHMARK SYSTEM
- PREVIOUS PROJECTS USED OTHER DATUMS
- APPLY THE FOLLOWING CONVERSIONS WHEN USING PREVIOUS CONTRACT DRAWINGS:
  - ADDITION NO. 6: SUBTRACT 0.80 FT
  - PRIOR ADDITIONS: SUBTRACT 1.04 FT

DEPARTMENT OF PUBLIC WORKS
HOWARD COUNTY, MARYLAND

CHIEF, BUREAU OF UTILITIES — DATE

DES: LH
DRN: LH
CHK: BF
DATE: 01/2018

DATE	REV	DESCRIPTION
03/2021		RECORD DRAWINGS

INSTRUMENTATION AND CONTROLS

DRYER TRAIN NO.2-SHEET 2
UP 08.06.02

LITTLE PATUXENT WATER RECLAMATION PLANT
8TH ADDITION
BIOSOLIDS PROCESSING FACILITIES - PHASE 2

CAPITAL PROJECT S-6295
CONTRACT NO. 24-4936

ELECTION DISTRICT NO. 6
HOWARD COUNTY, MARYLAND

SCALE AS SHOWN

SHEET 303 OF 311

I-513

SCADA HMI

PCS

8-GBT-0012-PNL

WET CAKE BIN		LIVE BOTTOM FEED SCREW				WET CAKE BIN DISCHARGE SLIDE GATE							DRYER FEED PUMP NO. 1		DRYER FEED PUMP NO. 2		DRYER FEED PUMP NO. 3		DRYER FEED PUMP NO. 4		SILO DISCH SCREW		DRY BIOSOLIDS STORAGE SILO NO. 1						DRY BIOSOLIDS STORAGE SILO NO. 2						NITROGEN				
LEVEL 1	LEVEL 2	NO. 1 OPEN	NO. 2 OPEN	NO. 3 OPEN	NO. 4 OPEN	NO. 1 OPEN	NO. 1 CLOSED	NO. 2 OPEN	NO. 2 CLOSED	NO. 3 OPEN	NO. 3 CLOSED	NO. 4 OPEN	NO. 4 CLOSED	DISCHARGE PRESSURE	DISCHARGE TEMP	DISCHARGE PRESSURE	DISCHARGE TEMP	DISCHARGE PRESSURE	DISCHARGE TEMP	DISCHARGE PRESSURE	DISCHARGE TEMP	NO. 1 OPEN	NO. 2 OPEN	LEVEL	CO	TEMP 1	TEMP 2	TEMP 3	TEMP 4	TEMP 5	LEVEL	CO	TEMP 1	TEMP 2	TEMP 3	TEMP 4	TEMP 5	TANK HIGH PRESSURE	TANK HIGH PRESSURE	N2 TO SILO NO. 1 HIGH PRESSURE	N2 TO SILO NO. 2 HIGH PRESSURE	N2 TO AIR RECEIVER HIGH PRESSURE

DRYER LOCAL CONTROL PANEL

(FROM SHEET I-513)

OIT

PLC

8-DRY-2011A-PNL

GENERAL NOTES

1. SEE SHEET I-001 FOR PROCESS CONTROL SYSTEM ABBREVIATIONS,SYMBOLS AND NOTES.
2. SEE SHEET I-904 AND I-905 FOR SCADA NETWORK ARCHITECTURE DIAGRAM.
3. REFERENCE SPECIFICATION 40 90 05 FOR CONTROL DESCRIPTIONS.
4. REFERENCE SPECIFICATION 40 91 10 FOR INSTRUMENT SCHEDULE.
5. REFERENCE SPECIFICATION 40 94 43 FOR PLC I/O SCHEDULE.
6. INSTRUMENTATION AND CONTROL EQUIPMENT SHALL BE SUITABLE FOR INSTALLATION IN HAZARDOUS AS DEFINED ON SHEET 00G-06, HAZARDOUS AREA PLAN.
7. MAJOR FUNCTIONS FOR PACKAGED EQUIPMENT VENDOR SUPPLIED CONTROL PANELS ARE SHOWN. ACTUAL EQUIPMENT VENDOR PANELS MAY OFFER ADDITIONAL FUNCTIONALITY.
8. SEE INSTRUMENT SCHEDULE FOR COMPLETE TAG NUMBER.
9. ONLY I/O FROM DRYER LOCAL CONTROL PANEL TO BIOSOLIDS PCS ARE SHOWN ON THIS DRAWING. REFER TO DRYER P&IDs I-520 THROUGH I-523 FOR COMPLETE DRYER PROCESS INFORMATION.

KEY NOTES

(1) DRYER LOCAL CONTROL PANEL "8-DRY-2011A-PNL" IS THE SAME SHOWN IN -510, I-511, I-512 AND I-513.

THE DRAWINGS IN THIS SET ARE RECORD DRAWINGS. THEY ARE CONSTRUCTION CONTRACT DRAWINGS WHICH HAVE BEEN REVISED BASED ON AVAILABLE FIELD INFORMATION RECORDED BY OTHERS DURING CONSTRUCTION OF THIS CONTRACT. THERE HAS BEEN NO VERIFICATION OF DIMENSIONS SHOWN ON THE CONSTRUCTION DRAWINGS OR THE ACCURACY/COMPLETENESS OF THE FIELD INFORMATION RECEIVED.

SIGNATURE 2/7/2022 DATE

AS-BUILT REPLACEMENT SHEET

PROFESSIONAL CERTIFICATION

THIS DRAWING WAS ORIGINALLY APPROVED FOR CONSTRUCTION AND SEALED BY BILLY J. FOX , A REGISTERED PROFESSIONAL ENGINEER IN THE STATE OF MARYLAND, NO. 46603

NOTICE TO CONTRACTORS

- PROJECT ELEVATIONS ARE BASED ON NAVD88 AND HOWARD COUNTY'S BENCHMARK SYSTEM
- PREVIOUS PROJECTS USED OTHER DATUMS
- APPLY THE FOLLOWING CONVERSIONS WHEN USING PREVIOUS CONTRACT DRAWINGS:

- ADDITION NO. 6: SUBTRACT 0.80 FT
- PRIOR ADDITIONS: SUBTRACT 1.04 FT

DEPARTMENT OF PUBLIC WORKS
HOWARD COUNTY, MARYLAND

CHIEF, BUREAU OF UTILITIES DATE

DES: LH
DRN: LH
CHK: BF
DATE: 01/2018

DATE	REV	DESCRIPTION
03/2021		RECORD DRAWINGS

INSTRUMENTATION AND CONTROLS

DRYER COMMON UP 08.06.02

LITTLE PATUXENT WATER RECLAMATION PLANT
8TH ADDITION
BIOSOLIDS PROCESSING FACILITIES - PHASE 2

CAPITAL PROJECT S-6295
CONTRACT NO. 24-4936

ELECTION DISTRICT NO. 6
HOWARD COUNTY, MARYLAND

SCALE AS SHOWN

SHEET 304 OF 311

I-514

BIM 360://10054364 – Little Patuxent WRP 8th Addition/284592_Y_V18.rvt
1/8/2022 1:56:18 PM

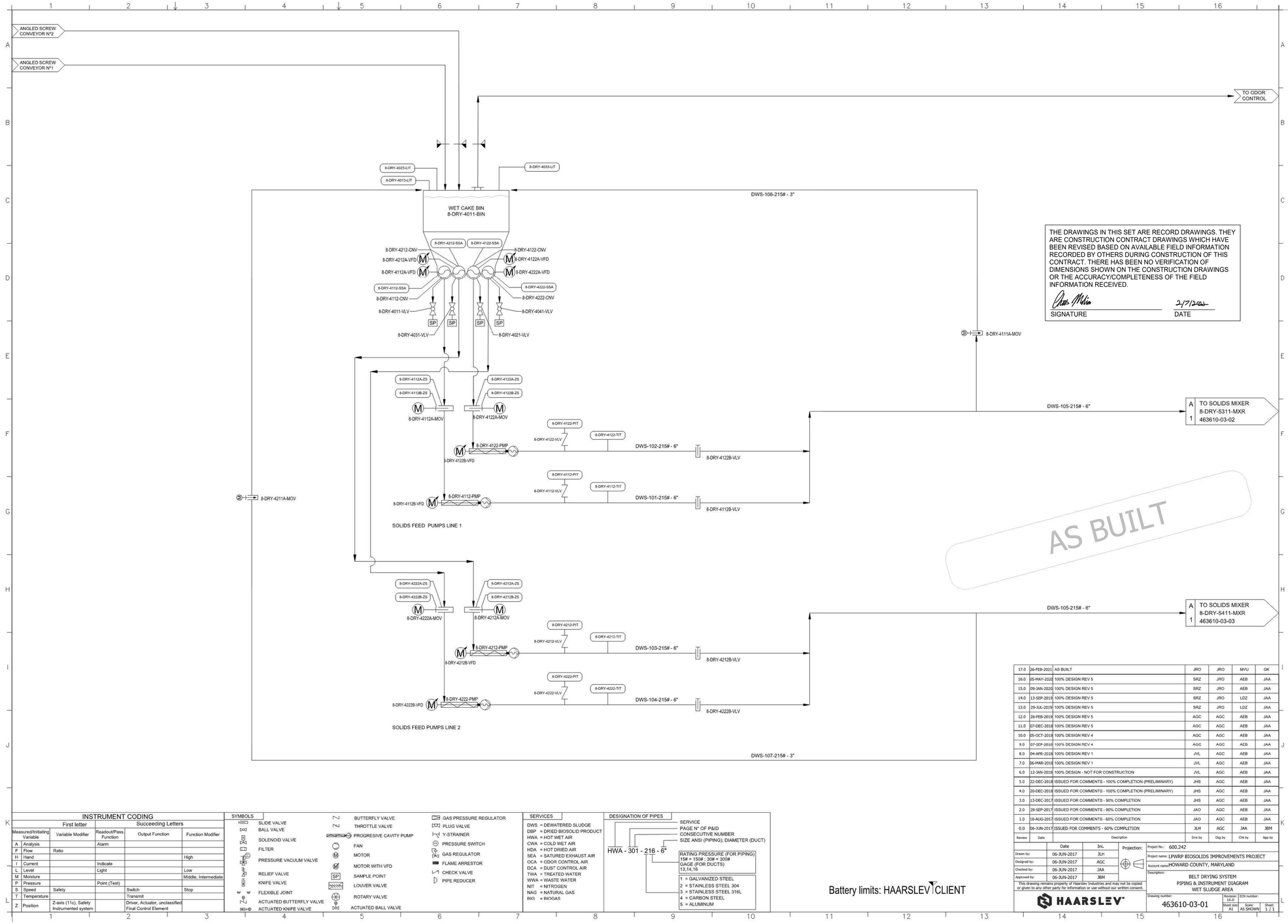

THE DRAWINGS IN THIS SET ARE RECORD DRAWINGS. THEY ARE CONSTRUCTION CONTRACT DRAWINGS WHICH HAVE BEEN REVISED BASED ON AVAILABLE FIELD INFORMATION RECORDED BY OTHERS DURING CONSTRUCTION OF THIS CONTRACT. THERE HAS BEEN NO VERIFICATION OF DIMENSIONS SHOWN ON THE CONSTRUCTION DRAWINGS OR THE ACCURACY/COMPLETENESS OF THE FIELD INFORMATION RECEIVED.

SIGNATURE _____ DATE 2/7/2023

INSTRUMENT CODING

Measured/Initiating Variable	First letter: Variable Modifier	Succeeding Letters: Readout/Pass. Function	Succeeding Letters: Output Function	Succeeding Letters: Function Modifier
A Analysis		Alarm		
F Flow	Ratio			
H Hand				High
I Current		Indicate		
L Level		Light		Low
M Moisture				Middle, Intermediate
P Pressure		Point (Test)		
S Speed	Safety		Switch	Stop
T Temperature			Transmit	
Z Position	Z-axis (11c), Safety Instrumented system		Driver, Actuator, unclassified Final Control Element	

SYMBOLS

SLIDE VALVE, BALL VALVE, SOLENOID VALVE, FILTER, PRESSURE VACUUM VALVE, RELIEF VALVE, KNIFE VALVE, FLEXIBLE JOINT, ACTUATED BUTTERFLY VALVE, ACTUATED KNIFE VALVE, BUTTERFLY VALVE, THROTTLE VALVE, PROGRESIVE CAVITY PUMP, FAN, MOTOR, MOTOR WITH VFD, SAMPLE POINT, LOUVER VALVE, ROTARY VALVE, ACTUATED BALL VALVE, GAS PRESSURE REGULATOR, PLUG VALVE, Y-STRAINER, PRESSURE SWITCH, GAS REGULATOR, FLAME ARRESTOR, CHECK VALVE, PIPE REDUCER

SERVICES

DWS = DEWATERED SLUDGE
DBP = DRIED BIOSOLID PRODUCT
HWA = HOT WET AIR
CWA = COLD WET AIR
HDA = HOT DRIED AIR
SEA = SATURED EXHAUST AIR
OCA = ODOR CONTROL AIR
DCA = DUST CONTROL AIR
TWA = TREATED WATER
WWA = WASTE WATER
NIT = NITROGEN
NAG = NATURAL GAS
BIG = BIOGAS

DESIGNATION OF PIPES

HWA - 301 - 216 - 6"

SERVICE
PAGE N° OF P&ID
CONSECUTIVE NUMBER
SIZE ANSI (PIPING); DIAMETER (DUCT)

RATING PRESSURE (FOR PIPING) 15# = 150# ; 30# = 300# GAGE (FOR DUCTS) 13,14,16

1 = GALVANIZED STEEL
2 = STAINLESS STEEL 304
3 = STAINLESS STEEL 316L
4 = CARBON STEEL
5 = ALUMINUM

Battery limits: HAARSLEV | CLIENT

17.0	06-FEB-2021	AS BUILT	JRO	JRO	MVU	GK
16.0	05-MAY-2020	100% DESIGN REV 5	SRZ	JRO	AEB	JAA
15.0	09-JAN-2020	100% DESIGN REV 5	SRZ	JRO	AEB	JAA
14.0	13-SEP-2019	100% DESIGN REV 5	SRZ	JRO	LDZ	JAA
13.0	29-JUL-2019	100% DESIGN REV 5	SRZ	JRO	LDZ	JAA
12.0	28-FEB-2019	100% DESIGN REV 5	AGC	AGC	AEB	JAA
11.0	07-DEC-2018	100% DESIGN REV 5	AGC	AGC	AEB	JAA
10.0	05-OCT-2018	100% DESIGN REV 4	AGC	AGC	AEB	JAA
9.0	07-SEP-2018	100% DESIGN REV 4	AGC	AGC	ACD	JAA
8.0	04-APR-2018	100% DESIGN REV 1	JVL	AGC	AEB	JAA
7.0	06-MAR-2018	100% DESIGN REV 1	JVL	AGC	AEB	JAA
6.0	12-JAN-2018	100% DESIGN - NOT FOR CONSTRUCTION	JVL	AGC	AEB	JAA
5.0	22-DEC-2016	ISSUED FOR COMMENTS - 100% COMPLETION (PRELIMINARY)	JHS	AGC	AEB	JAA
4.0	20-DEC-2016	ISSUED FOR COMMENTS - 100% COMPLETION (PRELIMINARY)	JHS	AGC	AEB	JAA
3.0	13-DEC-2017	ISSUED FOR COMMENTS - 90% COMPLETION	JHS	AGC	AEB	JAA
2.0	28-SEP-2017	ISSUED FOR COMMENTS - 90% COMPLETION	JAO	AGC	AEB	JAA
1.0	18-AUG-2017	ISSUED FOR COMMENTS - 60% COMPLETION	JAO	AGC	AEB	JAA
0.0	06-JUN-2017	ISSUED FOR COMMENTS - 60% COMPLETION	JLH	AGC	JAA	JBM
Review	Date	Description	Drw by	Dsg by	Chk by	App by

	Date	Ini.
Drawn by:	06-JUN-2017	JLH
Designed by:	06-JUN-2017	AGC
Checked by:	06-JUN-2017	JAA
Approved by:	06-JUN-2017	JBM

Projection:

This drawing remains property of Haarslev Industries and may not be copied or given to any other party for information or use without our written consent.

HAARSLEV

Project No.: 600.242
Project name: LPWRP BIOSOLIDS IMPROVEMENTS PROJECT
Account name: HOWARD COUNTY, MARYLAND
Description: BELT DRYING SYSTEM PIPING & INSTRUMENT DIAGRAM WET SLUDGE AREA
Drawing number: 463610-03-01
Revision: 16.0
ECN number:
Sheet size: A1
Scale: AS SHOWN
Sheet: 1 / 1

DELEGATED DESIGN

NOTICE TO CONTRACTORS
- PROJECT ELEVATIONS ARE BASED ON NAVD88 AND HOWARD COUNTY'S BENCHMARK SYSTEM
- PREVIOUS PROJECTS USED OTHER DATUMS
- APPLY THE FOLLOWING CONVERSIONS WHEN USING PREVIOUS CONTRACT DRAWINGS:
  - ADDITION NO. 6: SUBTRACT 0.80 FT
  - PRIOR ADDITIONS: SUBTRACT 1.04 FT

DEPARTMENT OF PUBLIC WORKS
HOWARD COUNTY, MARYLAND

CHIEF, BUREAU OF UTILITIES DATE

DES: LH
DRN: LH
CHK: BF
DATE: 01/2018

DATE	REV	DESCRIPTION
03/2021		RECORD DRAWINGS

INSTRUMENTATION AND CONTROLS

DRYER WET SLUDGE AREA
UP 08.06.02

LITTLE PATUXENT WATER RECLAMATION PLANT
8TH ADDITION
BIOSOLIDS PROCESSING FACILITIES - PHASE 2

CAPITAL PROJECT S-6295
CONTRACT NO. 24-4936

ELECTION DISTRICT NO. 6
HOWARD COUNTY, MARYLAND

SCALE AS SHOWN

SHEET 305 OF 310

I-520

BIM 360://10054364 – Little Patuxent WRP 8th Addition/264592_Y_V18.rvt
1/8/2022 1:56:21 PM

THE DRAWINGS IN THIS SET ARE RECORD DRAWINGS. THEY ARE CONSTRUCTION CONTRACT DRAWINGS WHICH HAVE BEEN REVISED BASED ON AVAILABLE FIELD INFORMATION RECORDED BY OTHERS DURING CONSTRUCTION OF THIS CONTRACT. THERE HAS BEEN NO VERIFICATION OF DIMENSIONS SHOWN ON THE CONSTRUCTION DRAWINGS OR THE ACCURACY/COMPLETENESS OF THE FIELD INFORMATION RECEIVED.

SIGNATURE _____ DATE 2/7/2022

F 16 FROM SLUDGE PUMPS 8-DRY-4112-PMP & 8-DRY-4122-PMP 463610-03-01

DWS-105-215# - 6"

8-DRY-4111B-MOV

DCA-204-216- 2 5/16"

DCA-203-216- 2 5/16"

DCA-205-216-4 - 3 1/4"

DCA-205-216-3 1/4"

DCA-207-216-4 5/8"

DCA-202-216- 2 5/16"

DCA-201-216- 2 5/16"

8-DRY-6524-VFD

SOLIDS MIXER 8-DRY-5311-MXR

8-DRY-5311-VFD

8-DRY-5311-SSA

8-DRY-5511-LIT

8-DRY-5511A-ZS

8-DRY-5511B-ZS

SOLIDS DISTRIBUTOR 8-DRY-5511-SDR

8-DRY-5511-VFD

8-DRY-5111-PIT

8-DRY-5711-VFD

8-DRY-5711-SSA

SOLIDS DOSING UNIT 8-DRY-5711-SDU

SOLIDS ROLLER PRESS 8-DRY-5911-SRP

8-DRY-5911A-VFD

8-DRY-5911B-VFD

8-DRY-5911-LS

8-DRY-6514-SSA

8-DRY-6514-VFD

DRY SOLIDS DIVERTER 1 8-DRY-6113-DIV

8-DRY-6113A-ZS

8-DRY-6113B-ZS

DRUM MILL 1 8-DRY-6711-MIL

8-DRY-6711A-VFD

8-DRY-6711B-VFD

8-DRY-6711A-SSA

8-DRY-6711B-SSA

DRY SOLIDS DIVERTER 2 8-DRY-6123-DIV

8-DRY-6123A-ZS

8-DRY-6123B-ZS

8-DRY-7119-LVR

8-DRY-7129-LVR

8-DRY-7139-LVR

8-DRY-7149-LVR

8-DRY-7159-LVR

8-DRY-7169-LVR

8-DRY-6111A-TIT

8-DRY-6111B-TIT

8-DRY-6111C-TIT

8-DRY-6111D-TIT

8-DRY-6111E-TIT

8-DRY-6111F-TIT

8-DRY-6111G-TIT

8-DRY-6111H-TIT

8-DRY-6111J-TIT

8-DRY-7118-FAN

8-DRY-7128-FAN

8-DRY-7138-FAN

8-DRY-7148-FAN

8-DRY-7158-FAN

8-DRY-7168-FAN

8-DRY-7178-FAN

8-DRY-7188-FAN

8-DRY-5111-MOV

8-DRY-105-VLV

8-DRY-104-VLV

8-DRY-5112-ZS

8-DRY-5112-VFD

8-DRY-5112-SSA

DRYER UPPER BELT 8-DRY-5112-BLT

8-DRY-5122-ZS

8-DRY-5122-VFD

DRYER LOWER BELT 8-DRY-5122-BLT

8-DRY-5111-DRV

8-DRY-5122-SSA

8-DRY-5111-ZS

DRYER BOTTOM SCRAPPER 8-DRY-5111-CDL

8-DRY-5111-SSA

BELT DRYER N°1

8-DRY-5112-PIT

8-DRY-4311-SSA

DISCHARGE SCREW 8-DRY-6311-CNV

8-DRY-6311-DRV

8-DRY-7179-LVR

8-DRY-7189-LVR

8-DRY-7199-LVR

HWA-201-213-32"

8-DRY-7133-TIT

SEA-201-213- 35 1/2"

SEA-202-216-14"

8-DRY-7322-VFD

EXHAUST FAN 8-DRY-7322-FAN

8-DRY-7322-VLV

TO ODOR CONTROL

E G 16 FROM BACK MIXING DRYER 2 BELT DRYER N°2 463610-03-03

8-DRY-108-VLV

8-DRY-107-VLV

DRYER 1 BOOSTER FAN 8-DRY-7511-FAN

8-DRY-7111-PS

ROTOCLONE'S DIVERTER 8-DRY-7111-DV

8-DRY-7111A-ZS

8-DRY-7111B-ZS

8-DRY-6911A-SSA

DRY SOLIDS SCREEN 8-DRY-6911-SCRN

8-DRY-6911-LSH

8-DRY-6911-LSL

8-DRY-6911B-SSA

DRY SOLIDS DIVERTER 3 8-DRY-6133-DIV

8-DRY-6911-DRV

MIXER DOSING SCREW 8-DRY-6911-CNV

8-DRY-6911-VFD

8-DRY-6133A-ZS

8-DRY-6133B-ZS

8-DRY-6524-SSA

DRAG CONVEYOR 2 8-DRY-6524-CNV

DRAG CONVEYOR 1 8-DRY-6514-CNV

8-DRY-7311-MOV

8-DRY-7211-PS

8-DRY-7411-MOV

8-DRY-7211-VFD

8-DRY-7111-VFD

PW PUMPS

ROTOCLONE 8-DRY-7211-SCRB

ROTOCLONE 8-DRY-7111-SCRB

8-DRY-109-VLV

8-DRY-110-VLV

8-DRY-7111-AIT

8-DRY-7111-MIT

8-DRY-7123-TIT

8-DRY-7312-VFD

OFF GAS FAN 8-DRY-7312-FAN

8-DRY-101-VLV

8-DRY-102-VLV

8-DRY-103-VLV

SPRAY CONDENSER 8-DRY-7111-CND

8-DRY-7111-LS

8-DRY-7111-PIT

SEA-203-213- 35 1/2"

BURNER 8-DRY-7111-BRN

PLENUM 8-DRY-7111-PLE

8-DRY-7111-T3H

8-DRY-7113-TIT

8-DRY-7112-VFD

HOT AIR PLENUM FAN 8-DRY-7112-FAN

PLANT DRAIN

WWA-201-215# - 3/4"

8-DRY-7122-PIT

8-DRY-7111-TIT

G COOLING WATER PUMPS

PROCESS WATER PUMPS

TWA-203-215# - 2 1/2"

OCA-201-216-10 3/4"

TO ODOR CONTROL

OCA-202-216-10 3/4"

TO ODOR CONTROL

H A 16 FROM GAS TRAIN STATION 8-DRY-7111-RMS 463610-03-05

AS BUILT

A 1 TO DRAG CONVEYOR 4 8-DRY-6544-CNV 463610-03-04

D 1 TO DRAG CONVEYOR 4 8-DRY-6644-CNV 463610-03-04

8-DRY-6534-VFD

8-DRY-6534-SSA

DRAG CONVEYOR 3 8-DRY-6534-CNV

			JRO	JRO	MVU	GK
17.0	26-FEB-2021	AS BUILT				
16.0	05-MAY-2020	100% DESIGN REV 5	SRZ	JRO	AEB	JAA
15.0	09-JAN-2020	100% DESIGN REV 5	SRZ	JRO	AEB	JAA
14.0	13-SEP-2019	100% DESIGN REV 5	SRZ	JRO	LDZ	JAA
13.0	29-JUL-2019	100% DESIGN REV 5	SRZ	JRO	LDZ	JAA
12.0	28-FEB-2019	100% DESIGN REV 5	AGC	AGC	AEB	JAA
11.0	07-DEC-2018	100% DESIGN REV 5	AGC	AGC	AEB	JAA
10.0	05-OCT-2018	100% DESIGN REV 4	AGC	AGC	AEB	JAA
9.0	07-SEP-2018	100% DESIGN REV 4	AGC	AGC	AEB	JAA
8.0	04-APR-2018	100% DESIGN REV 1	JVL	AGC	AEB	JAA
7.0	06-MAR-2018	100% DESIGN REV 1	JVL	AGC	AEB	JAA
6.0	12-JAN-2018	100% DESIGN - NOT FOR CONSTRUCTION	JVL	AGC	AEB	JAA
5.0	22-DEC-2017	ISSUED FOR COMMENTS - 100% COMPLETION (PRELIMINARY)	JHS	AGC	AEB	JAA
4.0	20-DEC-2017	ISSUED FOR COMMENTS - 100% COMPLETION (PRELIMINARY)	JHS	AGC	AEB	JAA
3.0	13-DEC-2017	ISSUED FOR COMMENTS - 90% COMPLETION	JHS	AGC	AEB	JAA
2.0	28-SEP-2017	ISSUED FOR COMMENTS - 90% COMPLETION	JAO	AGC	AEB	JAA
1.0	18-AUG-2017	ISSUED FOR COMMENTS - 60% COMPLETION	JAO	AGC	AEB	JAA
0.0	06-JUN-2017	ISSUED FOR COMMENTS - 60% COMPLETION	JLH	AGC	JAA	JBM
Review	Date	Description	Drw by	Dsg by	Chk by	App by

Battery limits: HAARSLEV CLIENT

INSTRUMENT CODING

	First letter: Measured/Initiating Variable	First letter: Variable Modifier	Succeeding Letters: Readout/Pass. Function	Succeeding Letters: Output Function	Succeeding Letters: Function Modifier
A	Analysis		Alarm		
F	Flow	Ratio			
H	Hand				High
I	Current		Indicate		
L	Level		Light		Low
M	Moisture				Middle, Intermediate
P	Pressure		Point (Test)		
S	Speed	Safety		Switch	Stop
T	Temperature			Transmit	
Z	Position	Z-axis (11c), Safety Instrumented system		Driver, Actuator, unclassified Final Control Element	

SYMBOLS

SLIDE VALVE; BALL VALVE; SOLENOID VALVE; FILTER; PRESSURE VACUUM VALVE; RELIEF VALVE; KNIFE VALVE; FLEXIBLE JOINT; ACTUATED BUTTERFLY VALVE; ACTUATED KNIFE VALVE; BUTTERFLY VALVE; THROTTLE VALVE; PROGRESIVE CAVITY PUMP; FAN; MOTOR; MOTOR WITH VFD; SAMPLE POINT; LOUVER VALVE; ROTARY VALVE; ACTUATED BALL VALVE; GAS PRESSURE REGULATOR; PLUG VALVE; Y-STRAINER; PRESSURE SWITCH; GAS REGULATOR; FLAME ARRESTOR; CHECK VALVE; PIPE REDUCER

SERVICES

DWS = DEWATERED SLUDGE
DBP = DRIED BIOSOLID PRODUCT
HWA = HOT WET AIR
CWA = COLD WET AIR
HDA = HOT DRIED AIR
SEA = SATURED EXHAUST AIR
OCA = ODOR CONTROL AIR
DCA = DUST CONTROL AIR
TWA = TREATED WATER
WWA = WASTE WATER
NIT = NITROGEN
NAG = NATURAL GAS
BIG = BIOGAS

DESIGNATION OF PIPES

HWA - 301 - 216 - 6"
SERVICE
PAGE N° OF P&ID
CONSECUTIVE NUMBER
SIZE ANSI (PIPING); DIAMETER (DUCT)
RATING PRESSURE (FOR PIPING) 15# = 150# ; 30# = 300#
GAGE (FOR DUCTS) 13,14,16
1 = GALVANIZED STEEL
2 = STAINLESS STEEL 304
3 = STAINLESS STEEL 316L
4 = CARBON STEEL
5 = ALUMINUM

Drawn by:	06-JUN-2017	JLH	Projection:
Designed by:	06-JUN-2017	AGC	
Checked by:	06-JUN-2017	JAA	
Approved by:	06-JUN-2017	JBM	

Project No.: 600.242
Project name: LPWRP BIOSOLIDS IMPROVEMENTS PROJECT
Account name: HOWARD COUNTY, MARYLAND
Description: BELT DRYING SYSTEM PIPING & INSTRUMENT DIAGRAM LINE 1
Drawing number: 463610-03-02
Revision: 16.0
Sheet size: A1
Scale: AS SHOWN
Sheet: 1 / 1

This drawing remains property of Haarslev Industries and may not be copied or given to any other party for information or use without our written consent.

HAARSLEV

BIM 360://10054364 – Little Patuxent WRP 8th Addition/264592_Y_V18.rvt
1/8/2022 1:56:23 PM

DELEGATED DESIGN

NOTICE TO CONTRACTORS
- PROJECT ELEVATIONS ARE BASED ON NAVD88 AND HOWARD COUNTY'S BENCHMARK SYSTEM
- PREVIOUS PROJECTS USED OTHER DATUMS
- APPLY THE FOLLOWING CONVERSIONS WHEN USING PREVIOUS CONTRACT DRAWINGS:
  - ADDITION NO. 6: SUBTRACT 0.80 FT
  - PRIOR ADDITIONS: SUBTRACT 1.04 FT

DEPARTMENT OF PUBLIC WORKS
HOWARD COUNTY, MARYLAND

CHIEF, BUREAU OF UTILITIES DATE

DES: LH
DRN: LH
CHK: BF
DATE: 01/2018

DATE	REV	DESCRIPTION
03/2021		RECORD DRAWINGS

INSTRUMENTATION AND CONTROLS

DRYER TRAIN NO. 1
UP 08.06.02

LITTLE PATUXENT WATER RECLAMATION PLANT
8TH ADDITION
BIOSOLIDS PROCESSING FACILITIES - PHASE 2

CAPITAL PROJECT S-6295
CONTRACT NO. 24-4936

ELECTION DISTRICT NO. 6
HOWARD COUNTY, MARYLAND

SCALE AS SHOWN

SHEET 306 OF 310

I-521

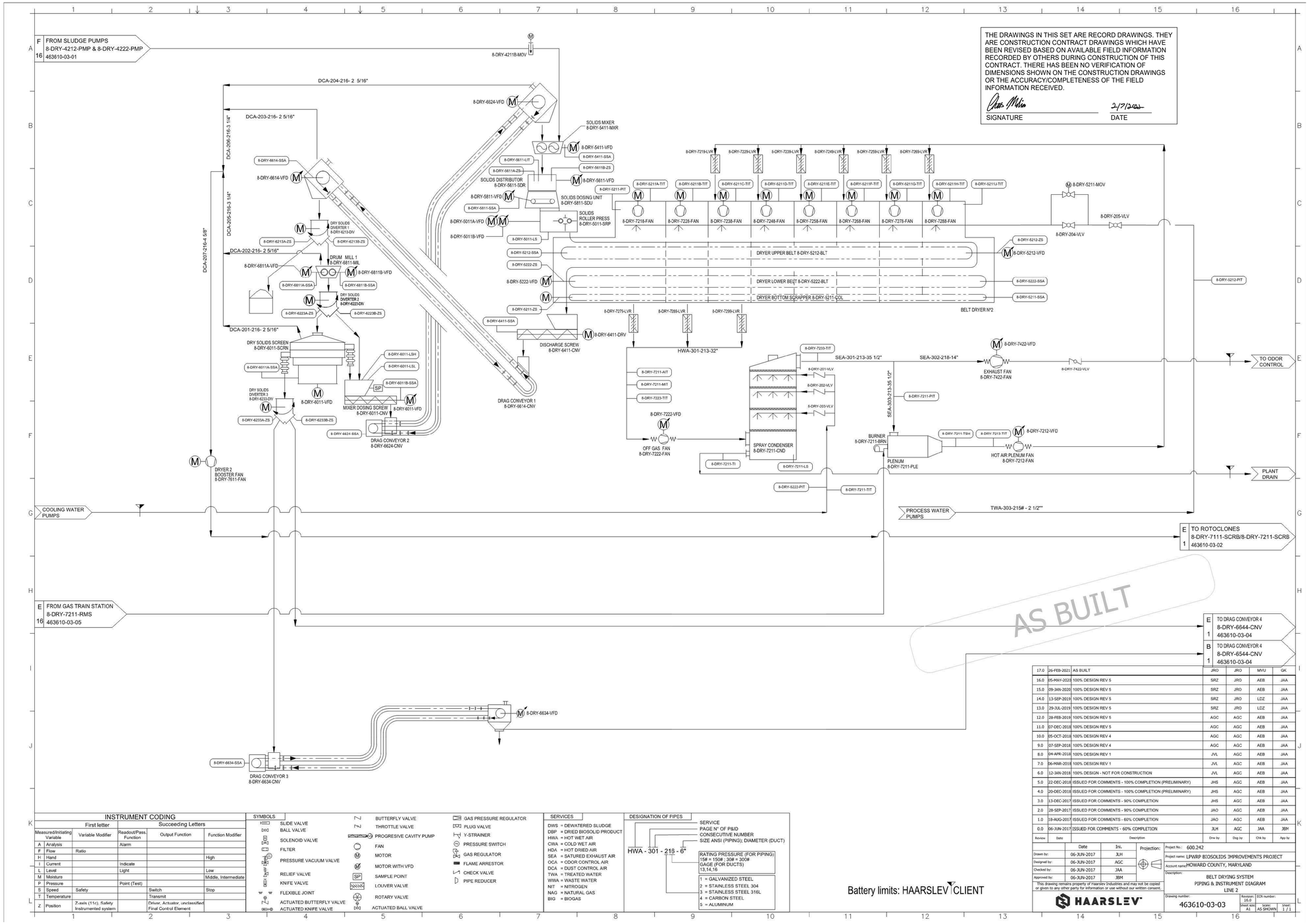

Rev	Date	Description	Drw by	Dsg by	Chk by	App by
17.0	26-FEB-2021	AS BUILT	JRO	JRO	MVU	GK
16.0	05-MAY-2020	100% DESIGN REV 5	SRZ	JRO	AEB	JAA
15.0	09-JAN-2020	100% DESIGN REV 5	SRZ	JRO	AEB	JAA
14.0	13-SEP-2019	100% DESIGN REV 5	SRZ	JRO	LDZ	JAA
13.0	29-JUL-2019	100% DESIGN REV 5	SRZ	JRO	LDZ	JAA
12.0	28-FEB-2019	100% DESIGN REV 5	AGC	AGC	AEB	JAA
11.0	07-DEC-2018	100% DESIGN REV 5	AGC	AGC	AEB	JAA
10.0	05-OCT-2018	100% DESIGN REV 4	AGC	AGC	AEB	JAA
9.0	07-SEP-2018	100% DESIGN REV 4	AGC	AGC	AEB	JAA
8.0	04-APR-2018	100% DESIGN REV 1	JVL	AGC	AEB	JAA
7.0	06-MAR-2018	100% DESIGN REV 1	JVL	AGC	AEB	JAA
6.0	12-JAN-2018	100% DESIGN - NOT FOR CONSTRUCTION	JVL	AGC	AEB	JAA
5.0	22-DEC-2018	ISSUED FOR COMMENTS - 100% COMPLETION (PRELIMINARY)	JHS	AGC	AEB	JAA
4.0	20-DEC-2018	ISSUED FOR COMMENTS - 100% COMPLETION (PRELIMINARY)	JHS	AGC	AEB	JAA
3.0	13-DEC-2017	ISSUED FOR COMMENTS - 90% COMPLETION	JHS	AGC	AEB	JAA
2.0	28-SEP-2017	ISSUED FOR COMMENTS - 90% COMPLETION	JAO	AGC	AEB	JAA
1.0	18-AUG-2017	ISSUED FOR COMMENTS - 60% COMPLETION	JAO	AGC	AEB	JAA
0.0	06-JUN-2017	ISSUED FOR COMMENTS - 60% COMPLETION	JLH	AGC	JAA	JBM

	Date	Init.
Drawn by:	06-JUN-2017	JLH
Designed by:	06-JUN-2017	AGC
Checked by:	06-JUN-2017	JAA
Approved by:	06-JUN-2017	JBM

Projection:

This drawing remains property of Haarslev Industries and may not be copied or given to any other party for information or use without our written consent.

HAARSLEV

Project No.: 600.242
Project name: LPWRP BIOSOLIDS IMPROVEMENTS PROJECT
Account name: HOWARD COUNTY, MARYLAND
Description: BELT DRYING SYSTEM PIPING & INSTRUMENT DIAGRAM LINE 2
Drawing number: 463610-03-03
Revision: 16.0
Sheet size: A1
Scale: AS SHOWN
Sheet: 1 / 1

INSTRUMENT CODING

Measured/Initiating Variable	First letter: Variable Modifier	Readout/Pass. Function	Succeeding Letters: Output Function	Function Modifier
A Analysis		Alarm		
F Flow	Ratio			
H Hand				High
I Current		Indicate		
L Level		Light		Low
M Moisture				Middle, Intermediate
P Pressure		Point (Test)		
S Speed	Safety		Switch	Stop
T Temperature			Transmit	
Z Position	Z-axis (1/c), Safety Instrumented system		Driver, Actuator, unclassified Final Control Element	

SYMBOLS

SLIDE VALVE; BALL VALVE; SOLENOID VALVE; FILTER; PRESSURE VACUUM VALVE; RELIEF VALVE; KNIFE VALVE; FLEXIBLE JOINT; ACTUATED BUTTERFLY VALVE; ACTUATED KNIFE VALVE; BUTTERFLY VALVE; THROTTLE VALVE; PROGRESIVE CAVITY PUMP; FAN; MOTOR; MOTOR WITH VFD; SAMPLE POINT; LOUVER VALVE; ROTARY VALVE; ACTUATED BALL VALVE; GAS PRESSURE REGULATOR; PLUG VALVE; Y-STRAINER; PRESSURE SWITCH; GAS REGULATOR; FLAME ARRESTOR; CHECK VALVE; PIPE REDUCER

SERVICES

DWS = DEWATERED SLUDGE
DBP = DRIED BIOSOLID PRODUCT
HWA = HOT WET AIR
CWA = COLD WET AIR
HDA = HOT DRIED AIR
SEA = SATURED EXHAUST AIR
OCA = ODOR CONTROL AIR
DCA = DUST CONTROL AIR
TWA = TREATED WATER
WWA = WASTE WATER
NIT = NITROGEN
NAG = NATURAL GAS
BIG = BIOGAS

DESIGNATION OF PIPES

HWA - 301 - 215 - 6"
SERVICE
PAGE N° OF P&ID
CONSECUTIVE NUMBER
SIZE ANSI (PIPING); DIAMETER (DUCT)
RATING PRESSURE (FOR PIPING) 15# = 150# ; 30# = 300# GAGE (FOR DUCTS) 13,14,16
1 = GALVANIZED STEEL
2 = STAINLESS STEEL 304
3 = STAINLESS STEEL 316L
4 = CARBON STEEL
5 = ALUMINUM

Battery limits: HAARSLEV | CLIENT

NOTICE TO CONTRACTORS
- PROJECT ELEVATIONS ARE BASED ON NAVD88 AND HOWARD COUNTY'S BENCHMARK SYSTEM
- PREVIOUS PROJECTS USED OTHER DATUMS
- APPLY THE FOLLOWING CONVERSIONS WHEN USING PREVIOUS CONTRACT DRAWINGS:
  - ADDITION NO. 6: SUBTRACT 0.80 FT
  - PRIOR ADDITIONS: SUBTRACT 1.04 FT

DEPARTMENT OF PUBLIC WORKS
HOWARD COUNTY, MARYLAND

CHIEF, BUREAU OF UTILITIES DATE

DES: LH
DRN: LH
CHK: BF
DATE: 01/2018

DATE	REV	DESCRIPTION
03/2021		RECORD DRAWINGS

DELEGATED DESIGN

INSTRUMENTATION AND CONTROLS

DRYER TRAIN NO. 2
UP 08.06.02

LITTLE PATUXENT WATER RECLAMATION PLANT
8TH ADDITION
BIOSOLIDS PROCESSING FACILITIES - PHASE 2

CAPITAL PROJECT S-6295
CONTRACT NO. 24-4936

ELECTION DISTRICT NO. 6
HOWARD COUNTY, MARYLAND

SCALE AS SHOWN

SHEET 307 OF 310

I-522

BIM 360://10054364 – Little Patuxent WRP 8th Addition/264592_Y_V18.rvt
1/8/2022 1:56:26 PM

H 16 FROM DIVERTER 3 8-DRY-6133-MOV 463610-03-02

I 16 FROM DRAG CONVEYOR 3 8-DRY-6634-CNV 463610-03-03

I 16 FROM DRAG CONVEYOR 3 8-DRY-6534-CNV 463610-03-02

H 16 FROM DIVERTER 3 8-DRY-6233-DIV 463610-03-03

8-DRY-6644-VFD

SP 8-DRY-6211-ZSA

AIR LOCK ROTARY VALVE 8-DRY-6211-MOV

PRV 8-DRY-002-PVRV

8-DRY-6211-LIT

8-DRY-6211-AIT

8-DRY-6213-TIT

8-DRY-6223-TIT

8-DRY-6233-TIT

8-DRY-6644-SSA

DRAG CONVEYOR 4 8-DRY-6644-CNV

SILO 2 8-DRY-6211-SLO

8-DRY-6544-VFD

SP 8-DRY-6111-ZSA

AIR LOCK ROTARY VALVE 8-DRY-6111-MOV

PRV 8-DRY-001-PVRV

8-DRY-6111-LIT

8-DRY-6111-AIT

8-DRY-6113-TIT

8-DRY-6123-TIT

8-DRY-6133-TIT

8-DRY-6544-SSA

DRAG CONVEYOR 4 8-DRY-6544-CNV

SILO 1 8-DRY-6111-SLO

NIT-405-415# - 1"

1" TO 1/2"

S 8-DRY-7211-FS

8-DRY-7211-MOV

8-DRY-7211-FI

CONE VIBRATOR 8-DRY-6221-VBR

8-DRY-6221-MOV

8-DRY-6221B-ZS

8-DRY-6221A-ZS

TELESCOPIC LOADOUT CHUTE 8-DRY-6211-TLC

NIT-402-415# - 1"

NIT-401-415# - 1"

1" TO 1/2"

S 8-DRY-7111-FS

8-DRY-7111-MOV

8-DRY-7111-FI

CONE VIBRATOR 8-DRY-6121-VBR

8-DRY-6121-MOV

8-DRY-6121B-ZS

8-DRY-6121A-ZS

TELESCOPIC LOADOUT CHUTE 8-DRY-6111-TLC

OIL-WATER SEPARATOR

FILTER

DRAIN

AIR COMPRESSOR 2

DRYER 2

NITROGEN GENERATOR 2

AIR TANK

NITROGEN TANK

NITROGEN GENERATOR 1

NITROGEN GENERATOR 8-DRY-7112-N2

THE DRAWINGS IN THIS SET ARE RECORD DRAWINGS. THEY ARE CONSTRUCTION CONTRACT DRAWINGS WHICH HAVE BEEN REVISED BASED ON AVAILABLE FIELD INFORMATION RECORDED BY OTHERS DURING CONSTRUCTION OF THIS CONTRACT. THERE HAS BEEN NO VERIFICATION OF DIMENSIONS SHOWN ON THE CONSTRUCTION DRAWINGS OR THE ACCURACY/COMPLETENESS OF THE FIELD INFORMATION RECEIVED.

SIGNATURE 2/7/2021 DATE

AS BUILT

INSTRUMENT CODING					
	First letter	Succeeding Letters			
	Measured/Initiating Variable	Variable Modifier	Readout/Pass. Function	Output Function	Function Modifier
A	Analysis		Alarm		
F	Flow	Ratio			
H	Hand				High
I	Current		Indicate		
L	Level		Light		Low
M	Moisture				Middle, Intermediate
P	Pressure		Point (Test)		
S	Speed	Safety		Switch	Stop
T	Temperature			Transmit	
Z	Position	Z-axis (11c), Safety Instrumented system		Driver, Actuator, unclassified Final Control Element	

SYMBOLS

- SLIDE VALVE
- BALL VALVE
- SOLENOID VALVE
- FILTER
- PRESSURE VACUUM VALVE
- RELIEF VALVE
- KNIFE VALVE
- FLEXIBLE JOINT
- ACTUATED BUTTERFLY VALVE
- ACTUATED KNIFE VALVE
- BUTTERFLY VALVE
- THROTTLE VALVE
- PROGRESIVE CAVITY PUMP
- FAN
- MOTOR
- MOTOR WITH VFD
- SAMPLE POINT
- LOUVER VALVE
- ROTATIV VALVE
- ACTUATED BALL VALVE
- GAS PRESSURE REGULATOR
- PLUG VALVE
- Y-STRAINER
- PRESSURE SWITCH
- GAS REGULATOR
- FLAME ARRESTOR
- CHECK VALVE
- PIPE REDUCER

SERVICES

DWS = DEWATERED SLUDGE
DBP = DRIED BIOSOLID PRODUCT
HWA = HOT WET AIR
CWA = COLD WET AIR
HDA = HOT DRIED AIR
SEA = SATURED EXHAUST AIR
OCA = ODOR CONTROL AIR
DCA = DUST CONTROL AIR
TWA = TREATED WATER
WWA = WASTE WATER
NIT = NITROGEN
NAG = NATURAL GAS
BIG = BIOGAS

DESIGNATION OF PIPES

HWA - 301 - 216 - 6"

- SERVICE
- PAGE N° OF P&ID
- CONSECUTIVE NUMBER
- SIZE ANSI (PIPING); DIAMETER (DUCT)

RATING PRESSURE (FOR PIPING) 15# = 150# ; 30# = 300# GAGE (FOR DUCTS) 13,14,16

1 = GALVANIZED STEEL
2 = STAINLESS STEEL 304
3 = STAINLESS STEEL 316L
4 = CARBON STEEL
5 = ALUMINUM

Battery limits: HAARSLEV / CLIENT

Rev	Date	Description	Drw by	Dsg by	Chk by	App by
17.0	26-FEB-2021	AS BUILT	JRO	JRO	MVU	GK
16.0	05-MAY-2020	100% DESIGN REV 5	SRZ	JRO	AEB	JAA
15.0	09-JAN-2020	100% DESIGN REV 5	SRZ	JRO	AEB	JAA
14.0	13-SEP-2019	100% DESIGN REV 5	SRZ	JRO	LDZ	JAA
13.0	29-JUL-2019	100% DESIGN REV 5	SRZ	JRO	LDZ	JAA
12.0	28-FEB-2019	100% DESIGN REV 5	AGC	AGC	AEB	JAA
11.0	07-DEC-2018	100% DESIGN REV 5	AGC	AGC	AEB	JAA
10.0	05-OCT-2018	100% DESIGN REV 4	AGC	AGC	AEB	JAA
9.0	07-SEP-2018	100% DESIGN REV 4	AGC	AGC	AEB	JAA
8.0	04-APR-2018	100% DESIGN REV 1	JVL	AGC	AEB	JAA
7.0	06-MAR-2018	100% DESIGN REV 1	JVL	AGC	AEB	JAA
6.0	12-JAN-2018	100% DESIGN - NOT FOR CONSTRUCTION	JVL	AGC	AEB	JAA
5.0	22-DEC-2018	ISSUED FOR COMMENTS - 100% COMPLETION (PRELIMINARY)	JHS	AGC	AEB	JAA
4.0	20-DEC-2018	ISSUED FOR COMMENTS - 100% COMPLETION (PRELIMINARY)	JHS	AGC	AEB	JAA
3.0	13-DEC-2017	ISSUED FOR COMMENTS - 90% COMPLETION	JHS	AGC	AEB	JAA
2.0	28-SEP-2017	ISSUED FOR COMMENTS - 90% COMPLETION	JAO	AGC	AEB	JAA
1.0	18-AUG-2017	ISSUED FOR COMMENTS - 60% COMPLETION	JAO	AGC	AEB	JAA
0.0	06-JUN-2017	ISSUED FOR COMMENTS - 60% COMPLETION	JLH	AGC	JAA	JBM

	Date	Init.
Drawn by:	06-JUN-2017	JLH
Designed by:	06-JUN-2017	AGC
Checked by:	06-JUN-2017	JAA
Approved by:	06-JUN-2017	JBM

Projection:

Project No.: 600.242
Project name: LPWRP BIOSOLIDS IMPROVEMENTS PROJECT
Account name: HOWARD COUNTY, MARYLAND
Description: BELT DRYING SYSTEM PIPING & INSTRUMENT DIAGRAM STORAGE SILOS

This drawing remains property of Haarslev Industries and may not be copied or given to any other party for information or use without our written consent.

HAARSLEV

Drawing number: 463610-03-04 Revision: 16.0 RTN number: Sheet, size: A1 Scale: AS SHOWN Sheet: 1 / 1

BIM 360://10054364 – Little Patuxent WRP 8th Addition/264592_Y_V18.rvt
1/8/2022 1:56:28 PM

DELEGATED DESIGN

NOTICE TO CONTRACTORS
- PROJECT ELEVATIONS ARE BASED ON NAVD88 AND HOWARD COUNTY'S BENCHMARK SYSTEM
- PREVIOUS PROJECTS USED OTHER DATUMS
- APPLY THE FOLLOWING CONVERSIONS WHEN USING PREVIOUS CONTRACT DRAWINGS:
  - ADDITION NO. 6: SUBTRACT 0.80 FT
  - PRIOR ADDITIONS: SUBTRACT 1.04 FT

DEPARTMENT OF PUBLIC WORKS
HOWARD COUNTY, MARYLAND

CHIEF, BUREAU OF UTILITIES DATE

DES: LH
DRN: LH
CHK: BF
DATE: 01/2018

DATE	REV	DESCRIPTION
03/2021		RECORD DRAWINGS

INSTRUMENTATION AND CONTROLS

DRYER BIOSOLIDS SILOS AREA UP 08.06.02

LITTLE PATUXENT WATER RECLAMATION PLANT
8TH ADDITION
BIOSOLIDS PROCESSING FACILITIES - PHASE 2

CAPITAL PROJECT S-6295
CONTRACT NO. 24-4936

ELECTION DISTRICT NO. 6
HOWARD COUNTY, MARYLAND

SCALE AS SHOWN

SHEET 308 OF 310

I-523

ADMINISTRATION BLDG.

BIOSOLIDS PLANT ENGINEERING WORKSTATION

FOXBORO NETWORK RACK 45U 8-ADM-0011-NIP (4)

BUSINESS NETWORK RACK 45U (5)

DRYER BUILDING MCC ROOM

DRYER BLDG. NETWORK INTERFACE PANEL 24U 8-DRY-0011-NIP

PCS PRIMARY I/O SERVER (2U) (7)

TIER-1 (PRIMARY) HISTORIAN SERVER (2U) (8)

KVM SWITCH (1U)

UPS (4U)

FIBER OPTIC PATCH PANEL (4U)

MEDIA CONVERTER (2U)

24 PORT ETHERNET SWITCH (1U)

24 PORT ETHERNET SWITCH (1U)

PCS SECONDARY I/O SERVER (2U) (9)

UPS (2U) (10)

UPS BATTERY (2U) (13)

FIBER RING B

FIBER RING A

(1) TO FOXBORO FDSI FBM233 MODULES IN PIU-1

FIREWALL (1U)

TIER-2 HISTORIAN SERVER (2U) (6)

UPS (2U) (11)

UPS BATTERY (2U) (13)

(12) (12)

THE DRAWINGS IN THIS SET ARE RECORD DRAWINGS. THEY ARE CONSTRUCTION CONTRACT DRAWINGS WHICH HAVE BEEN REVISED BASED ON AVAILABLE FIELD INFORMATION RECORDED BY OTHERS DURING CONSTRUCTION OF THIS CONTRACT. THERE HAS BEEN NO VERIFICATION OF DIMENSIONS SHOWN ON THE CONSTRUCTION DRAWINGS OR THE ACCURACY/COMPLETENESS OF THE FIELD INFORMATION RECEIVED.

SIGNATURE — DATE 2/7/2023

GENERAL NOTES

1. TWO (2) FIBER OPTIC STRANDS FROM EACH FIBER OPTIC CABLE SHALL BE RESERVED FOR FIRE PROTECTION USE BY OTHERS.

DIGESTER BLDG. ELECTRICAL ROOM

DIGESTER BLDG. AREA PLC NETWORK INTERFACE PANEL 24U 8-DIG-0011-NIP

FIBER RING A

FIBER RING B

FIBER OPTIC PATCH PANEL (4U)

KVM SWITCH (1U)

MEDIA CONVERTER (2U)

24 PORT ETHERNET SWITCH (1U)

UPS (2U)

24 PORT ETHERNET SWITCH (1U)

HWS PUMP NO. 1 VFD 8-DIG-2613-VFD

HWS PUMP NO. 2 VFD 8-DIG-2623-VFD

HWS PUMP NO. 3 VFD 8-DIG-2633-VFD

GRAVITY THICKENER NO. 1 VFD 8-PST-1612-VFD

GRAVITY THICKENER NO. 2 VFD 8-PST-1622-VFD

GT TRANSFER PUMP NO. 1 VFD 8-PST-2614-VFD

GT TRANSFER PUMP NO. 2 VFD 8-PST-2624-VFD

GT TRANSFER PUMP NO. 3 VFD 8-PST-2634-VFD

GT TRANSFER PUMP NO. 4 VFD 8-PST-2644-VFD

DIGESTER BLDG AREA PLC CONTROL PANEL 8-DIG-0014-PNL

DIGESTER FEED PUMP NO. 1 VFD 8-THS-1412-VFD

DIGESTER FEED PUMP NO. 2 VFD 8-THS-1422-VFD

DIGESTER MIXING PUMP NO. 1 VFD 8-DIG-1213-VFD

DIGESTER MIXING PUMP NO. 2 VFD 14-1223-VFD

DIGESTER MIXING PUMP NO. 3 VFD 14-1233-VFD

ANAEROBIC DIGESTER TRANSFER PUMP NO. 1 VFD 8-DIG-1613-VFD

ANAEROBIC DIGESTER TRANSFER PUMP NO. 2 VFD 8-DIG-1623-VFD

ANAEROBIC DIGESTER TRANSFER PUMP NO. 3 VFD 8-DIG-1633-VFD

DIGESTED SOLIDS MIXING PUMP NO. 1 VFD 8-DSS-2012-VFD

DIGESTED SOLIDS MIXING PUMP NO. 2 VFD 8-DSS-2022-VFD

CENTRIFUGE FEED PUMP NO. 1 VFD 8-DSS-2213-VFD

CENTRIFUGE FEED PUMP NO. 2 VFD 8-DSS-2223-VFD

CENTRIFUGE FEED PUMP NO. 3 VFD 8-DSS-2233-VFD

DIGESTER RECIRCULATION PUMP NO. 3 VFD 8-DIG-1033-VFD

FIBER RING A

FIBER RING B

SOLIDS PLANT ELECTRICAL ROOM

DIGESTED SOLIDS AREA PLC NETWORK INTERFACE PANEL 24U 8-GBT-0011-NIP

FIBER OPTIC PATCH PANEL (4U)

MEDIA CONVERTER (2U)

KVM SWITCH (1U)

24 PORT ETHERNET SWITCH (1U)

24 PORT ETHERNET SWITCH (1U)

UPS (2U)

DIGESTER SOLIDS AREA PLC CONTROL PANEL 8-GBT-0012-PNL

SCUM PUMP 1 VFD 8-GBT-1412-VFD

SCUM PUMP 2 VFD 8-GBT-1422-VFD

THICKENED WAS PUMP 1 VFD 8-GBT-2412-VFD

THICKENED WAS PUMP 2 VFD 8-GBT-2422-VFD

DILUTION WATER PUMP NO. 1 VFD 8-PST-2813-VFD

DILUTION WATER PUMP NO. 2 VFD 8-PST-2823-VFD

DILUTION WATER PUMP NO. 3 VFD 8-PST-2833-VFD

KEY NOTES

1. CONNECT TO FOXBORO FDSI FBM233 MODULES FOR BIOSOLIDS HMI INTERFACE WITH EXISTING FOXBORO DCS. SEE I-905 FOR DETAILS.
2. REDUNDANT SELF-HEALING COUNTER ROTATING RING CONFIGURATION.
3. REFER TO SHEET I-904A FOR TPYICAL NETWORK TOPOLOGY SKETCH.
4. EXISTING FOXBORO NETWORK RACK.
5. EXISTING BUSINESS NETWORK RACK.
6. TIER-2 (SECONDARY) HISTORIAN TO BE INSTALLED IN BUSINESS RACK. CONNECT TIER-2 HISTORIAN TO EXISTING DMZ NETWORK SWITCH.
7. PCS PRIMARY SCADA SERVER (I/O SERVER)
8. TIER-1 (PRIMARY) HISTORIAN SERVER.
9. PCS SECONDARY SCADA SERVER (I/O SERVER)
10. UPSIZE UPS TO PROVIDE AT LEAST 30 MINUTES OF BACKUP POWER FOR 150% LOAD OF ENTIRE RACK. SYSTEMS INTEGRATOR TO PROVIDE LOAD CALCULATIONS FOR RACK INCLUDING EXISTING COMPONENTS. UPS SHALL BE MANUFACTURED BY APC TO MATCH EXISTING UPS.
11. UPSIZE UPS TO PROVIDE AT LEAST 30 MINUTES OF BACKUP POWER FOR 150% LOAD OF ENTIRE RACK. SYSTEMS INTEGRATOR TO PROVIDE LOAD CALCULATIONS FOR RACK INCLUDING EXISTING COMPONENTS. UPS SHALL BE MANUFACTURED BY APC TO MATCH EXISTING UPS.
12. EXISTING EQUIPMENT.
13. CONFIRM EXISTING CIRCUITS FEEDING THE RACKS WILL SUPPORT NEW EQUIPMENT IN THE RACKS.
14. WIRE UPS FAULT, UP ON BATTERY POWER AND UPS LOW BATTERY ALARM DRY CONTACTS FROM I/O SMARTSLOT CARD TO SPARE DISCRETE INPUT (DI) POINTS IN EXISTING PIU-1. UTILIZE 3/4" RGS CONDUIT AND AWG #14 CABLES. CONFIGURE THESE ALARMS FOR DISPLAY ON BOTH FOXBORO STATIONS AND BIOSOLIDS PCS HMI SCREENS.

LEGEND

FIBER OPTIC

COPPER ETHERNET

BIM 360://10054364 – Little Patuxent WRP 8th Addition/264592_Y_V18.rvt
1/8/2022 1:56:31 PM

HDR

AS-BUILT REPLACEMENT SHEET

PROFESSIONAL CERTIFICATION

THIS DRAWING WAS ORIGINALLY APPROVED FOR CONSTRUCTION AND SEALED BY BILLY J. FOX , A REGISTERED PROFESSIONAL ENGINEER IN THE STATE OF MARYLAND, NO. 46603

NOTICE TO CONTRACTORS

- PROJECT ELEVATIONS ARE BASED ON NAVD88 AND HOWARD COUNTY'S BENCHMARK SYSTEM
- PREVIOUS PROJECTS USED OTHER DATUMS
- APPLY THE FOLLOWING CONVERSIONS WHEN USING PREVIOUS CONTRACT DRAWINGS:
  - ADDITION NO. 6: SUBTRACT 0.80 FT
  - PRIOR ADDITIONS: SUBTRACT 1.04 FT

DEPARTMENT OF PUBLIC WORKS
HOWARD COUNTY, MARYLAND

CHIEF, BUREAU OF UTILITIES — DATE

DES: LH

DRN: LH

CHK: BF

DATE: 01/2018

DATE	REV	DESCRIPTION
03/2021		RECORD DRAWINGS

INSTRUMENTATION AND CONTROLS

PCS PHYSICAL NETWORK DIAGRAM UP 08.06.02

LITTLE PATUXENT WATER RECLAMATION PLANT
8TH ADDITION
BIOSOLIDS PROCESSING FACILITIES - PHASE 2

CAPITAL PROJECT S-6295
CONTRACT NO. 24-4936

ELECTION DISTRICT NO. 6
HOWARD COUNTY, MARYLAND

SCALE AS SHOWN

SHEET 309 OF 311

I-904

PROCESS AREA (TYPICAL)

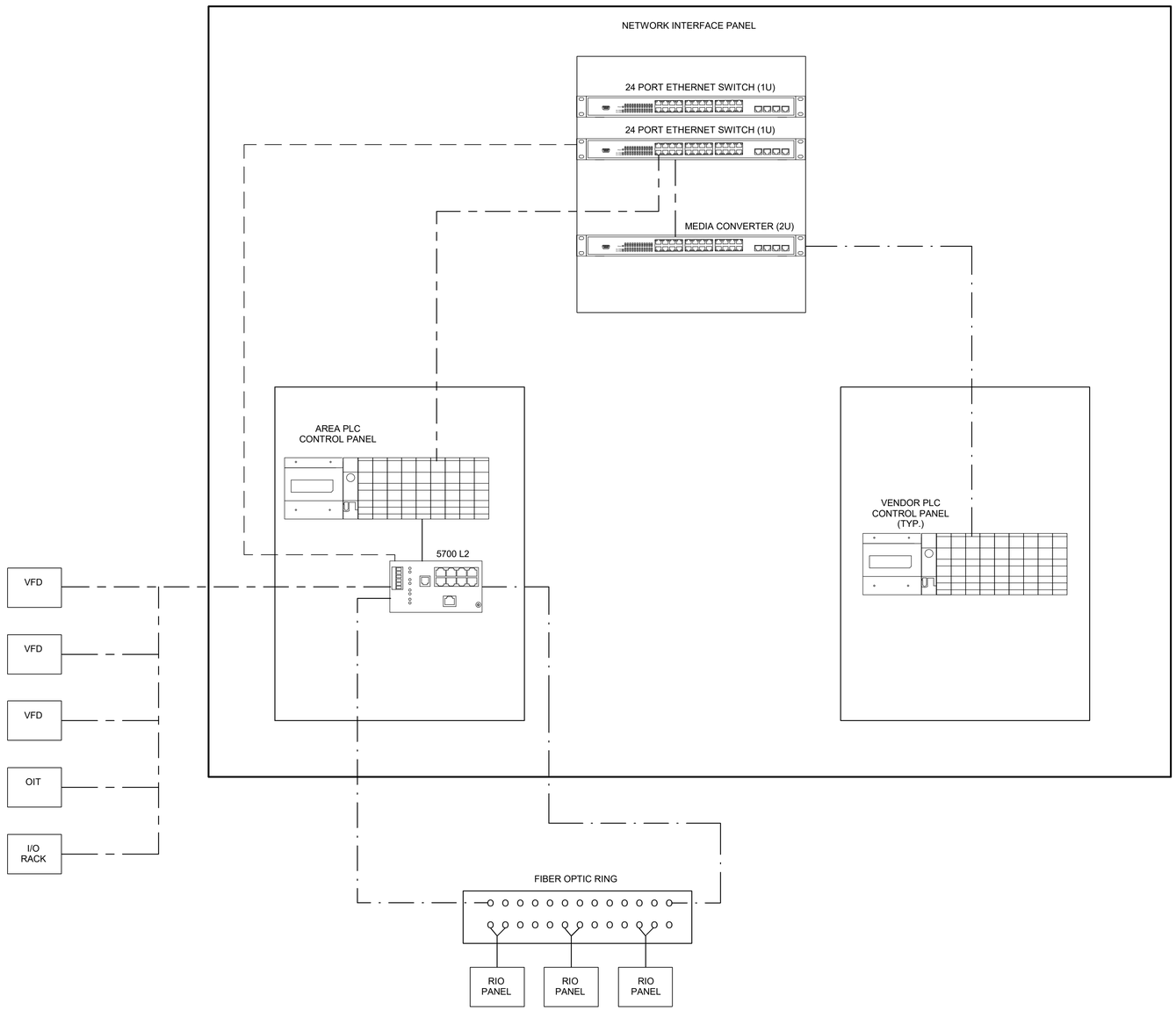

LEGEND

FIBER OPTIC

COPPER ETHERNET

VLAN

THE DRAWINGS IN THIS SET ARE RECORD DRAWINGS. THEY ARE CONSTRUCTION CONTRACT DRAWINGS WHICH HAVE BEEN REVISED BASED ON AVAILABLE FIELD INFORMATION RECORDED BY OTHERS DURING CONSTRUCTION OF THIS CONTRACT. THERE HAS BEEN NO VERIFICATION OF DIMENSIONS SHOWN ON THE CONSTRUCTION DRAWINGS OR THE ACCURACY/COMPLETENESS OF THE FIELD INFORMATION RECEIVED.

SIGNATURE

2/7/2022
DATE

AS-BUILT REPLACEMENT SHEET

PROFESSIONAL CERTIFICATION

THIS DRAWING WAS ORIGINALLY APPROVED FOR CONSTRUCTION AND SEALED BY BILLY J. FOX , A REGISTERED PROFESSIONAL ENGINEER IN THE STATE OF MARYLAND, NO. 46603

NOTICE TO CONTRACTORS

- PROJECT ELEVATIONS ARE BASED ON NAVD88 AND HOWARD COUNTY'S BENCHMARK SYSTEM
- PREVIOUS PROJECTS USED OTHER DATUMS
- APPLY THE FOLLOWING CONVERSIONS WHEN USING PREVIOUS CONTRACT DRAWINGS:
  - ADDITION NO. 6: SUBTRACT 0.80 FT
  - PRIOR ADDITIONS: SUBTRACT 1.04 FT

DEPARTMENT OF PUBLIC WORKS
HOWARD COUNTY, MARYLAND

CHIEF, BUREAU OF UTILITIES DATE

DES: LH
DRN: LH
CHK: BF
DATE: 01/2018

DATE	REV	DESCRIPTION
03/2021		RECORD DRAWINGS

INSTRUMENTATION AND CONTROLS

PCS PHYSICAL NETWORK TOPOLOGY UP 08.06.02

LITTLE PATUXENT WATER RECLAMATION PLANT
8TH ADDITION
BIOSOLIDS PROCESSING FACILITIES - PHASE 2

CAPITAL PROJECT S-6295
CONTRACT NO. 24-4936

ELECTION DISTRICT NO. 6
HOWARD COUNTY, MARYLAND

SCALE AS SHOWN

SHEET 310 OF 311

I-904A

BIM 360://10054364 – Little Patuxent WRP 8th Addition/264592_Y_V18.rvt
1/8/2022 1:56:32 PM

DRYER BUILDING

BIOSOLIDS PLANT OPERATOR WORKSTATION (1)

BIOSOLIDS PLANT OPERATOR WORKSTATION (1)

FOXBORO PLANT ENGINEERING WORKSTATION (1)

BIOSOLIDS PLANT ENGINEERING WORKSTATION (1)

DRYER VENDOR PLC CONTROL PANEL (1)
8-DRY-2011A-PNL

DRYER AREA PLC NETWORK INTERFACE PANEL
42U
8-DRY-0011-NIP

(2) (3) 24 PORT ETHERNET SWITCH 1U (TYP)

FIBER OPTIC PATCH PANEL 4U

THE DRAWINGS IN THIS SET ARE RECORD DRAWINGS. THEY ARE CONSTRUCTION CONTRACT DRAWINGS WHICH HAVE BEEN REVISED BASED ON AVAILABLE FIELD INFORMATION RECORDED BY OTHERS DURING CONSTRUCTION OF THIS CONTRACT. THERE HAS BEN NO VERIFICATION OF DIMENSIONS SHOWN ON THE CONSTRUCTION DRAWINGS OR THE ACCURACY/COMPLETENESS OF THE FIELD INFORMATION RECEIVED.

SIGNATURE 2/7/2022 DATE

CENTRIFUGE PCS OPERATOR CONSOLE (6)

24 VDC POWER SUPPLIES WITH REDUNDANCY

PROTOCOL CONVERTER (TYP OF 2) (7)

CAT6

MB SERIAL (TYP OF 2)

CAT6

CENTRIFUGE NO. 1, 2, 3 CONTROL PANELS (TYP OF 3) (5) (1)

BIOFILTER NO. 3 AND NO. 4 LCP (1)
8-ODR-3011-PNL

DEWATERED SOLIDS MATERIALS HANDLING SYSTEM LCP (1)

LASER PRINTER (1)

ADMINISTRATION BLDG.
NETWORK INTERFACE PANEL
8-ADM-0011-NIP

BIOSOLIDS PLANT ENGINEERING WORKSTATION

FOXBORO FDSI FBM-233

FOXBORO FDSI FBM-233 (4)

ADMINISTRATION BLDG.

FIBER RING A
FIBER RING B
FIBER RING B
FIBER RING A

CENTRATE EQ TANK VCP
8-DAM-1011-PNL

CONTROLLER

THICKENED SOLIDS STORAGE TANK VCP
8-THS-1011-PNL

CONTROLLER

SOLIDS PIPE GALLERY RIO PANEL
8-SPG-0011-RIO

GRAVITY THICKENER TRANSFER PUMPS
DIGESTED SOLIDS MIXING PUMPS CENTRIFUGE FEED PUMPS
CENTRATE FEED PUMPS GRAVITY THICKENERS

FIBER RING A
FIBER RING B

DEAMMONIFICATION SYSTEM VENDOR PLC CONTROL PANEL
8-DAM-1811-PNL

DIGESTER BLDG. RIO PANEL
8-DIG-0011-RIO

PHOSPHOROUS PRECIPITATION VENDOR PLC CONTROL PANEL
8-PHO-0012-PNL

ANAEROBIC DIGESTERS
DIGESTER RECIRCULATION PUMPS
DIGESTER MIXING PUMPS
ANAEROBIC DIGESTER TRANSFER PUMPS
DIGESTER HEAT EXCHANGERS
HOT WATER SUPPLY PUMPS

DIGESTER BLDG. AREA NETWORK INTERFACE PANEL
8-DIG-0011-NIP

DIGESTER BLDG. AREA PLC CONTROL PANEL
8-DIG-0014-PNL

DIGESTER BUILDING ELECTRICAL ROOM

FIBER RING A
FIBER RING B

FIBER RING A
FIBER RING B

GBT AREA RIO PANEL
8-GBT-0011-RIO

THICKENED WAS PUMPS SCUM PUMPS SCUM TANK MIXERS
WASH WATER BOOSTER PUMPS GBT

LIQUID POLYMER FEED SYSTEM CONTROL PANEL
8-POL-2612-PNL
8-POL-2622-PNL

XXXXXXXXXX
XXXXXXXXXX
LCD DISPLAY

CONTROLLER

THICKENER AREA NETWORK INTERFACE PANEL
8-GBT-0011-NIP

PRIMARY SOLIDS SCREEN LCP (TYP OF TWO)
8-PST-1012A-PNL
8-PST-1022A-PNL

HC AIR COMPRESSOR LCP (TYP OF 2)
8-THS-1212-PNL
8-THS-1222-PNL

WASTE GAS BURNER NO. 1 AND 2 LCP (TYP OF TWO)
8-DGT-1412-PNL
8-DGT-1422-PNL

CHEMICAL HANDLING AREA RIO PANEL
8-POL-0011-RIO

DILUTION WATER PUMPS

GRAVITY BELT THICKENER 1 & 2 LCP (TYP OF 2)
8-GBT-2012-PNL
8-GBT-2022-PNL

THICKENER AREA PLC CONTROL PANEL
8-GBT-0012-PNL

SOLIDS PLANT ELECTRICAL ROOM

SOLIDS SCREENING AREA RIO PANEL
8-PST-0011-RIO

SODIUM HYDROXIDE FEED

PRIMARY SOLIDS SCREENS

DUAL MEMBRANE GAS HOLDER PLC CONTROL PANEL (MGHP)
8-DIG-3211-PNL

HOT WATER BOILER PLC CONTROL PANEL (TYP OF 2)
8-DIG-2412-PNL
8-DIG-2422-PNL

LEGEND:
FIBER OPTIC
COPPER ETHERNET
HARDWIRED

KEY NOTES
1. THIS EQUIPMENT SHALL BE INSTALLED AS PART OF PHASE 2 OF THE PROJECT.
2. ONLY PARTIAL RACK SHOWN. SEE DRAWING I-904 (PHASE 1) FOR COMPLETE RACK COMPONENTS.
3. CONTRACTOR SHALL PROVIDE TEMPORARY LOCATION FOR NETWORK RACK IN EXISTING ADMINISTRATION BLDG CONTROL ROOM UNTIL CONTROL ROOM IN DRYER BLDG IS COMPLETED IN PHASE 2. AFTER CONSTRUCTION OF CONTROL ROOM IN DRYER BLDG CONTRACTOR SHALL RELOCATE NETWORK RACK TO THE CONTROL ROOM IN DRYER BLDG. CONTRACTOR TO COORDINATE EXACT TEMPORARY LOCATION WITH PLANT.
4. INSTALL FOXBORO FDSI FBM-233 MODULES IN EXISTING FOXBORO CABINET.
5. CENTRIFUGE PANELS TO BE UPGRADED BY OWNER (TYP OF 3).
6. USE EXISTING FOXBORO CONSOLE IN CENTRIFUGE CONTROL ROOM. INSTALL ETHERNET SWITCH, WORKSTATION, POWER SUPPLIES AND PROTOCOL CONVERTERS INSIDE CONSOLE. INSTALL MONITOR ON TOP OF CONSOLE.
7. MODBUS SERIAL TO ETHERNET/IP PROTOCOL CONVERTERS FOR CENTRIFUGE NO.1 & 3.

BIM 360://10054364 – Little Patuxent WRP 8th Addition/264592_Y_V18.rvt
1/8/2022 1:56:33 PM

AS-BUILT REPLACEMENT SHEET

PROFESSIONAL CERTIFICATION
THIS DRAWING WAS ORIGINALLY APPROVED FOR CONSTRUCTION AND SEALED BY BILLY J. FOX , A REGISTERED PROFESSIONAL ENGINEER IN THE STATE OF MARYLAND, NO. 46603

NOTICE TO CONTRACTORS
- PROJECT ELEVATIONS ARE BASED ON NAVD88 AND HOWARD COUNTY'S BENCHMARK SYSTEM
- PREVIOUS PROJECTS USED OTHER DATUMS
- APPLY THE FOLLOWING CONVERSIONS WHEN USING PREVIOUS CONTRACT DRAWINGS:
  - ADDITION NO. 6: SUBTRACT 0.80 FT
  - PRIOR ADDITIONS: SUBTRACT 1.04 FT

DEPARTMENT OF PUBLIC WORKS
HOWARD COUNTY, MARYLAND

CHIEF, BUREAU OF UTILITIES DATE

DES: LH
DRN: LH
CHK: BF
DATE: 01/2018

DATE	REV	DESCRIPTION
03/2021		RECORD DRAWINGS

INSTRUMENTATION & CONTROLS

PCS NETWORK DIAGRAM - DETAILED

LITTLE PATUXENT WATER RECLAMATION PLANT
8TH ADDITION
BIOSOLIDS PROCESSING FACILITIES - PHASE 2

CAPITAL PROJECT S-6295
CONTRACT NO. 24-4936

ELECTION DISTRICT NO. 6
HOWARD COUNTY, MARYLAND

SCALE AS SHOWN

SHEET 311 OF 311

I-905