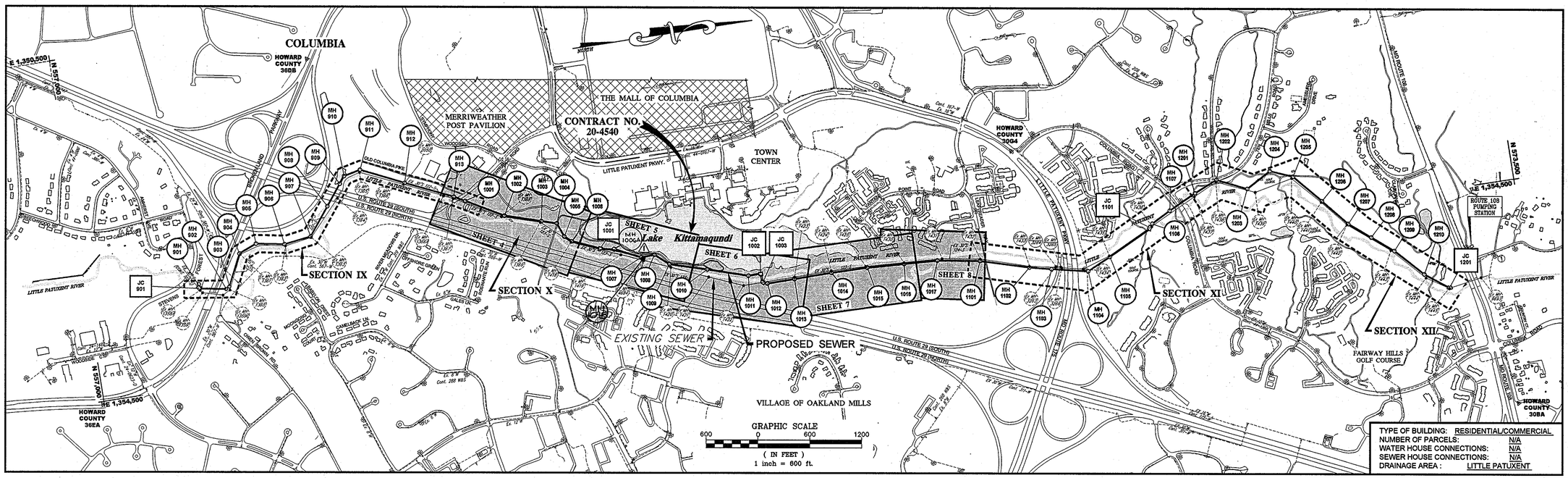

VICINITY MAP
SCALE : 1" = 600'

LITTLE PATUXENT PARALLEL INTERCEPTOR SEWER

CAPITAL PROJECT S-6175
CONTRACT NO. 20-4540

HOWARD COUNTY, MARYLAND

6' DOGHOUSE MANHOLE 3 EA.

BILL OF MATERIALS

ITEM	ESTIMATED QUANTITY	MATERIAL	AS-BUILT QUANTITY	SUPPLIER
12" SEWER	46.5 L.F.	PVC	55	
30" SEWER	158 L.F.	DIP CL 54 RJ.	158	
36" SEWER	4,286 L.F.	PVC-FRP	4260	
42" SEWER	1,853 L.F	PVC-FRP	1869	CROUSE ENG. HOBAS
42" ø CASING	122 L.F.	STEEL	122	PITTSBURGH PIPE
48" ø CASING	80 L.F.	STEEL	80	PITTSBURGH PIPE
4' MANHOLE	1 EA.	CONC/BRICK	1	ATLANTIC/ ESA
5' MANHOLE	10 EA.	CONC/BRICK	10	ATLANTIC
1 6' MANHOLE	5 ~~4~~ EA.	CONC/BRICK	5	ATLANTIC
8' MANHOLE	3 EA.	CONC/BRICK	3	ATLANTIC
4' ADDITIONAL MH	5 V.F.	CONC/BRICK	4.49	ATLANTIC
5' ADDITIONAL MH	64 V.F.	CONC/BRICK	64.14	ATLANTIC
6' ADDITIONAL MH	22 V.F.	CONC/BRICK	24.95	ATLANTIC
8' ADDITIONAL MH	20 V.F.	CONC/BRICK	19.51	ATLANTIC
JUNCTION CHAMBER	3 EA.	CONC/BRICK	3 EA.	AGGREGATE INDS.

NAME OF UTILITY CONTRACTOR :
CHECK BOX :
AS-BUILT DATE :

Sediment control measures for this contract will be implemented in accordance with Section 219 of the Specifications and as shown on these plans.

This plan is approved for soil erosion and sediment control by the Howard Soil Conservation District.

HOWARD SOIL CONSERVATION DISTRICT — DATE 6/3/10

BY THE DELVELOPER :

I/WE CERTIFY THAT ALL DEVELOPMENT AND CONSTRUCTION WILL BE DONE ACCORDING TO THIS PLAN, AND THAT ANY RESPONSIBLE PERSONNEL INVOLVED IIN THE CONSTRUCTION PROJECT WILL HAVE A CERTIFICATE OF ATTENDANCE AT A DEPARTMENT OF THE ENVIRONMENT APPROVED TRAINING PROGRAM FOR THE CONTROL OF SEDIMENT AND EROSION BEFORE BEGINNING THE PROJECT. I ALSO AUTHORIZE PERIODIC ON-SITE INSPECTIONS BY THE HOWARD SOIL CONSERVATION DISTRICT.

DEVELOPER — DATE 6/2/10

BY THE ENGINEER :

I CERTIFY THAT THIS PLAN FOR EROSION AND SEDIMENT CONTROL REFERENTS A PRACTICAL AND WORKABLE PLAN BASED ON MY PERSONAL KNOWLEDGE OF THE SITE CONDITIONS AND THAT IT WAS PREPARED IN ACCORDANCE WITH THE REQUIREMENTS OF THE HOWARD SOIL CONSERVATION DISTRICT.

ENGINEER — DATE 6/2/10

PROFESSIONAL CERTIFICATION

I, HEREBY CERTIFY THAT THESE DOCUMENTS WERE PREPARED OR APPROVED BY ME, AND THAT I AM A DULY LICENSED PROFESSIONAL ENGINEER UNDER THE LAWS OF THE STATE OF MARYLAND, LICENSE NO. 10966 EXPIRATION DATE: MAY 31, 2012

THOMAS N. DALLAPALU — Date 6/2/10

INDEX OF SHEETS

SHT. NO.	DESCRIPTION
1	TITLE SHEET
2	OVERALL PROFILE
3	GENERAL NOTES
4	PLAN AND PROFILE SHEET
5	PLAN AND PROFILE SHEET
6	PLAN AND PROFILE SHEET
7	PLAN AND PROFILE SHEET
8	PLAN AND PROFILE SHEET
9	MISCELLANEOUS DETAILS
10	MISCELLANEOUS DETAILS
11	MAINTENANCE OF TRAFFIC ACCESS ROAD PLAN
12	EROSION AND SEDIMENT CONTROL PLAN
13	EROSION AND SEDIMENT CONTROL PLAN
14	EROSION AND SEDIMENT CONTROL PLAN
15	EROSION AND SEDIMENT CONTROL PLAN
16	EROSION AND SEDIMENT CONTROL PLAN
17	EROSION AND SEDIMENT CONTROL NOTES & DETAILS
18	EROSION AND SEDIMENT CONTROL NOTES & DETAILS
19	EROSION AND SEDIMENT CONTROL NOTES & DETAILS
20	EROSION AND SEDIMENT CONTROL NOTES & DETAILS
21	JUNCTION CHAMBER 1001 PLAN, SECTIONS & DETAILS
22	JUNCTION CHAMBER 1002 PLAN, SECTIONS & DETAILS
23	JUNCTION CHAMBER 1003 PLAN, SECTIONS & DETAILS
24	JUNCTION CHAMBER 1001-1003 REINFORCEMENT DETAILS
25	JUNCTION CHAMBER 1001-1003 MISCELLANEOUS & REINFORCEMENT DETAILS & CAST IN PLACE CONCRETE NOTES
26	BY-PASS PLAN AND DETAILS & SUGGESTED SEQUENCE OF CONSTRUCTION

AS-BUILTS
Jan. 17, 2013

ESC 1 OF 10

DEPARTMENT OF PUBLIC WORKS
HOWARD COUNTY, MARYLAND

DIRECTOR OF PUBLIC WORKS — DATE 6/3/10
CHIEF, BUREAU OF ENGINEERING — DATE 6/2/10
CHIEF, BUREAU OF UTILITIES — DATE 6/2/10
CHIEF, UTILITY DESIGN DIVISION — DATE 6/2/10 WD

Dewberry
Dewberry & Davis LLC
3108 LORD BALTIMORE DRIVE
SUITE 110
BALTIMORE, MD 21244-2662
410.265.9500
FAX: 410.265.8875

STATE OF MARYLAND — THOMAS N. DALLAPALU — No. 10966 — REGISTERED PROFESSIONAL ENGINEER

DES: LAL
DRN: CD
CHK: TND
DATE: 5.28.10

BY	NO.	REVISIONS	DATE
LAL	1	SEE SHEETS 1,2,3,5,13 & 26 ADD MH 1006A	5-31-11
LAL	2	SEE SHEETS 2,3,5,21,22 & 23	7-20-11
JJJ	3	SEE NOTE OF SSF ON SHEETS 13 & 14	10-11-11
LAL	3	REVISED CHANNELS & CROSS SECTIONS	5-12-12
LAL	3	REV'D ELEVATIONS AND ADDED DIMS FOR SLUICE GATE OPERATIONS	07/11

TITLE SHEET

600' SCALE MAP NO. 37, 43 BLOCK NO. 5, 23

LITTLE PATUXENT PARALLEL INTERCEPTOR
CAPITAL PROJECT S-6175
CONTRACT NO. 20-4540

ELECTION DISTRICT NO. 5 HOWARD COUNTY, MARYLAND

SCALE: SHOWN

SHEET 1 OF 26

Plotted by: (ednalcaza) on Plot Date: Jun 01, 2010 - 3:28pm
Path--> R:\Projects\S6125000-Little Patuxent Interceptor\CADD\SECTION X\01-D-LPPI X -COVER SHEET 1.dwg
Base: May 28, 2010 - 10:45am
Last Saved: May 28, 2010 - 10:40am
XREFS-->R:\Projects\S6125000-Little Patuxent Interceptor\CADD\base for LOCATION PLAN.dwg; XREFS-->R:\Projects\S6125000-Little Patuxent Interceptor\CADD\SECTION X\1-LPPI X -Border.dwg

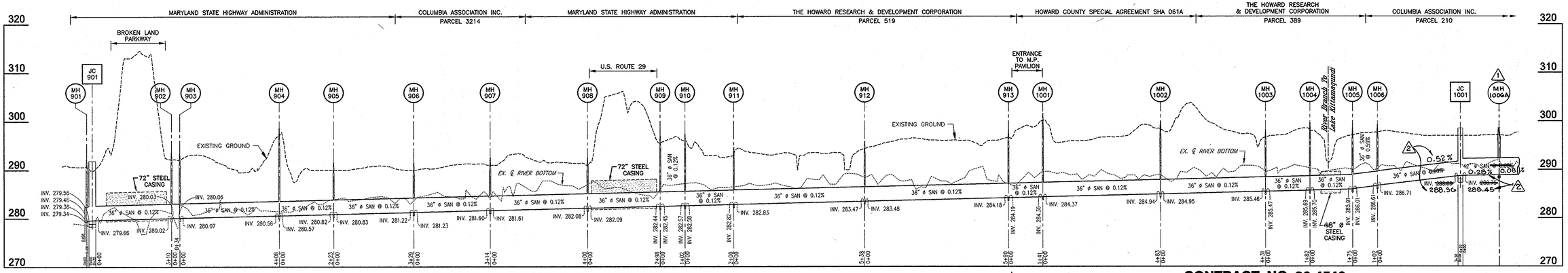

PROFILE

SCALE : HORIZ. 1" = 200'
VERT. 1" = 10'

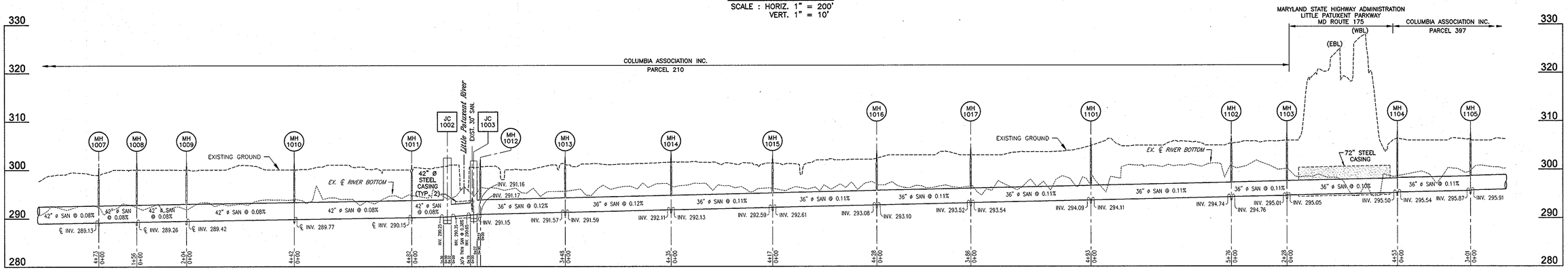

PROFILE

SCALE : HORIZ. 1" = 200'
VERT. 1" = 10'

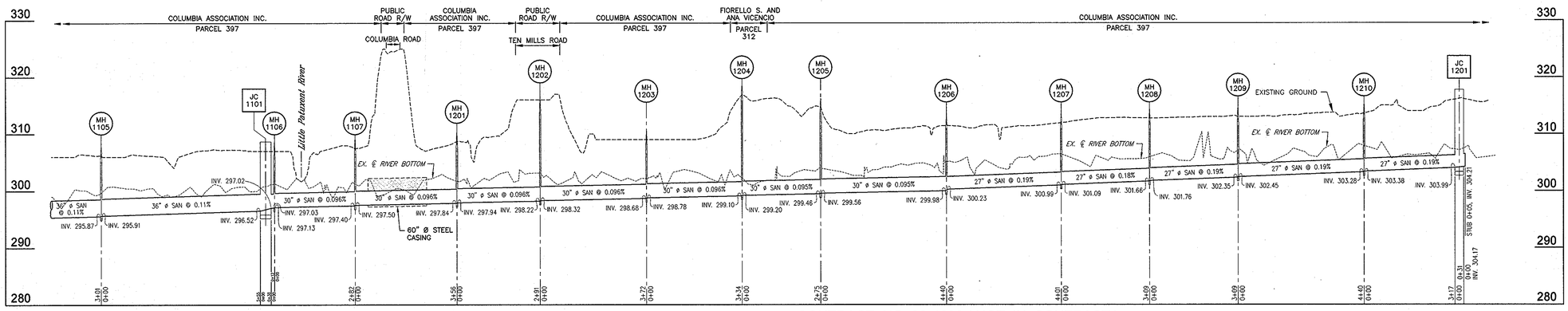

PROFILE

SCALE : HORIZ. 1" = 200'
VERT. 1" = 10'

AS-BUILTS
Jan. 17, 2013

DEPARTMENT OF PUBLIC WORKS
HOWARD COUNTY, MARYLAND

DIRECTOR OF PUBLIC WORKS — DATE 6/3/10
CHIEF, BUREAU OF ENGINEERING — DATE 6/2/10
CHIEF, BUREAU OF UTILITIES — DATE 6/2/10
CHIEF, UTILITY DESIGN DIVISION — DATE 6/2/10 W/D

Dewberry
Dewberry & Davis LLC
3106 LORD BALTIMORE DRIVE
SUITE 110
BALTIMORE, MD 21244-2662
410.265.9500
FAX: 410.265.8875

STATE OF MARYLAND — THOMAS N. DALLAS — No. 10968 — REGISTERED PROFESSIONAL ENGINEER

DES: LAL
DRN: CD
CHK: TND
DATE: 5.28.10

BY	NO.	REVISIONS	DATE
LAL	1	ADD MH 1006A	5-31-11
LAL	2	CHANGE ELEVATIONS @ JC-1001	7-20-11

OVERALL PROFILE

600' SCALE MAP NO. 37, 43 — BLOCK NO. 5, 23

LITTLE PATUXENT PARALLEL INTERCEPTOR
CAPITAL PROJECT S-6175
CONTRACT NO. 20-4540

ELECTION DISTRICT NO. 5 — HOWARD COUNTY, MARYLAND

SCALE: SHOWN

SHEET 2 OF 26

Plotted by: (computerized) on Plot Date: Jun 01, 2010 - 3:27pm
Plot Scale: 1:1 Drawing Name: C:\Projects\Interceptor\CADD\SECTION X\02-0-LPPI X-PROFILE SHEET-200 scale.dwg
Last Layout Name: Layout1
Last Saved by: TNDALLAS Last Saved: Jun 01, 2010 - 10:48am
XREFS: -:\X:\Projects\S6125000-Little Patuxent Interceptor\CADD\SECTION X\1-LPPI X -Border.dwg

GENERAL NOTES

1. Approximate location of existing mains are shown. The Contractor shall take all necessary precautions to protect existing mains and services and maintain uninterrupted service. Any damage incurred shall be repaired immediately to the satisfaction of the Engineer by the Contractor at the Contractor's expense.
2. Topographic field surveys were performed in August of 2006 by Dewberry & Davis LLC.
3. Horizontal and Vertical Survey Controls:
   The coordinates shown on the drawings are based on Maryland State Reference System NAD 83/91 as projected by Howard County Geodetic Control Stations Howard Co. B.M. 30 BA and B.M. 36 EA.
   All vertical control are based on NAVD 88. Vertical controls provided on the drawings are B.M. 30 BA and B.M. 36 EA.
4. All pipe elevations shown are invert elevations unless otherwise noted on the plans.
5. Clear all utilities by a minimum of 12". Clear all poles by 5'-0" minimum or tunnel as required unless otherwise noted. The owner has contacted the utility companies and has made arrangements for bracing of poles as shown on the drawings. In the event the Contractor's work requires the bracing of additional poles, any cost incurred by the owner for the bracing of additional poles or damages shall be deducted from monies owed the Contractor. The Contractor shall coordinate with the utility companies to schedule the bracing of the poles.
6. For details not shown on the drawings, and for materials and construction methods, use Howard County Design Manual, Volume IV, Standard Specifications and Details for Construction (Latest Edition). The Contractor shall have a copy of Volume IV on the job at all times.
7. All existing utilities shall be test pitted/located as necessary and in advance of the proposed construction, in order to properly make all required utility crossings and/or connections. Any discrepancies or utility conflicts shall be immediately reported to the Engineer. Where test pits have been made on existing utilities, they are noted by the symbol at the location of the test pit. A note or notes containing the results of the test pit or pits is included on the drawings or specifications. Existing utilities in the vicinity of the proposed work for which test pits have not been dug shall be located by the Contractor two (2) weeks in advance of construction operations at his own expense.
8. Contractor shall notify the following utility companies or agencies at least five (5) working days before starting work shown on these plans:
   AT&T 1-800-252-1133
   BGE – Contractor Services 410-850-4620
   BGE – Emergency 410-685-1400
   Colonial Pipeline Co. 410-795-1390
   Howard County Bureau of Highways 410-313-7450
   Howard County Bureau of Utilities (DPW) 410-313-4900
   Miss Utility 1-800-257-7777
   State Highway Administration 410-531-5533
   Verizon .... 1-800-743-0033 / 410-224-9210
9. Trees and shrubs are to be protected from damage to the maximum extent. Trees and shrubs located within the construction strip are not to be removed or damaged by the Contractor.
10. Contractor shall remove trees, stumps and roots along the line of excavation. Payment for such removal shall be included in the unit price bid for construction of the main.
11. The Contractor shall notify the Howard County Bureau of Highways at (410) 313-7450 at least five (5) working days before any open cut, boring/jacking or trenchless installation operation of any county roads for laying water/sewer mains or house connections. The approval of these drawings will constitute compliance with DPW requirements per Section 18.114(a) of the Howard County Code.
12. The Contractor shall provide all necessary lines, grades and elevations, and cut sheets shall be prepared based on the lines and grades shown on the Contract drawings.
13. Spoil from trenching operations is to be placed on the uphill side of the trench.
14. MDE Tracking No. 20076408/07-NT-3268.
15. The Contractor shall be responsible for repairing and replacing any existing fences, concrete curb, driveways, paving, curb and gutter pan, paved park pathways*, ramps and bridges, etc. damaged or removed during construction. All disturbed areas shall be returned to their original or better condition.
16. All existing fill shall be removed from the 100 year floodplain & preconstruction contours shall be restored once the utility has been installed and substantially accepted.
17. There shall be no mounding or wasting of materials within the LOD.
18. Contractor will stockpile top 6" of excavated soil to be utilized for final layer of trench backfill 6" thick minimum. See Technical Specification 02660. Stockpile wetland topsoil separately for reinstallation of wetland.
19. Temporary culvert and/or bridge access crossings should be designed and submitted in advance for approval and constructed in accordance with MARYLAND DEPARTMENT OF THE ENVIRONMENT, WATER MANAGEMENT ADMINISTRATION guidelines ISSUED SEPTEMBER 1999, REVISED NOVEMBER, 2000.

* Paved pathways in the LOD from MH 1007 through to JC 1002 will be replaced by the Columbia Association.

SANITARY SEWER MAIN NOTES

1. All sanitary sewer mains shall be FRP or PVC SDR 25 unless otherewise noted. For pipe to manhole and junction chamber connections, see Sheet 9.
2. Distances shown for the sanitary sewer main in profile are along the centerline of the pipe from manhole centerline to manhole centerline. Estimate quantities shown on the Bill of Materials exclude distances within manhole interiors.
3. Manhole diameters are as indicated on the plans.
4. Manholes designated as W.T. in Plan and Profile shall have water tight frames and covers similar to, Standard Detail G5.52 / G5.53 (and as specified in the Special Provisions). Where water tight frame and cover is used, set top of frame 1'-6" above existing ground unless otherwise noted on Drawings.

HOWARD COUNTY GEODETIC SURVEY CONTROL

CONTROL NO.	COORDINATES		ELEVATION
	NORTHING	EASTING	
30BA	N 573,149.0857	E 1,357,083.1827	397.124
30G4	N 567,815.2315	E 1,353,271.2411	360.234
36DB	N 559,940.8266	E 1,350,945.589	344.632
36DA	N 560,849.3435	E 1,350,037.4477	363.635
36EA	N 556,986.8135	E 1,354,535.2071	354.849

TRAVERSE TABLE

NO.	LOCATION	
KCI-215	N 558,017.72	E 1,353,093.30
KCI-216	N 558,250.74	E 1,353,305.40
KCI-217	N 558,429.68	E 1,353,388.24
LPS-15	N 558,462.31	E 1,353,453.01
KCI-220	N 558,639.76	E 1,353,641.69
KCI-221	N 558,866.84	E 1,353,374.43
KCI-222	N 558,783.12	E 1,353,217.52
KCI-223	N 558,907.19	E 1,353,034.33
KCI-225	N 559,414.93	E 1,353,051.00
KCI-226	N 559,681.09	E 1,352,983.21
KCI-227	N 559,905.90	E 1,352,711.75
KCI-228	N 560,080.77	E 1,352,554.62
KCI-229	N 560,299.70	E 1,352,318.33
KCI-230	N 560,586.72	E 1,352,444.11
KCI-231	N 560,801.61	E 1,352,548.30
KCI-232	N 561,067.13	E 1,352,659.37
KCI-233	N 561,361.99	E 1,352,813.97
LPS-12	N 561,761.78	E 1,352,647.07
KCI-538	N 561,882.76	E 1,353,103.80
KCI-537	N 562,313.29	E 1,353,242.49
KCI-536	N 562,563.90	E 1,353,487.40
KCI-535	N 562,854.26	E 1,353,632.47
KCI-534	N 563,261.94	E 1,353,787.40
KCI-533	N 563,536.01	E 1,353,853.57
LPS-10	N 563,818.90	E 1,353,966.39
LPS-09	N 564,332.70	E 1,354,093.03
KCI-530	N 564,572.15	E 1,354,332.85
KCI-529	N 565,139.40	E 1,354,327.57
KCI-528	N 565,672.89	E 1,354,326.35
KCI-527	N 566,148.50	E 1,354,342.94
KCI-526	N 566,546.94	E 1,354,361.92
KCI-525	N 566,980.63	E 1,354,406.68
LPS-07	N 567,364.97	E 1,354,478.56
KCI-522	N 567,730.00	E 1,354,597.26
KCI-521	N 568,074.60	E 1,354,669.36
KCI-520	N 568,451.37	E 1,354,755.74
KCI-519	N 568,804.24	E 1,354,624.94
KCI-518	N 569,311.34	E 1,354,377.54
LPS-05	N 569,479.21	E 1,353,979.70
KCI-517	N 569,616.98	E 1,354,393.16
KCI-516	N 569,821.76	E 1,354,121.65
KCI-515	N 570,073.28	E 1,354,000.00
LPS-04	N 570,268.59	E 1,353,973.08
KCI-512	N 570,483.98	E 1,354,166.85
LPS-03	N 570,800.41	E 1,354,209.87
KCI-509	N 570,962.71	E 1,354,088.58
KCI-508	N 571,165.07	E 1,354,309.39
KCI-507	N 571,374.40	E 1,354,541.07
KCI-506	N 571,565.56	E 1,354,761.51
KCI-505	N 571,824.43	E 1,354,999.29
KCI-504	N 572,028.28	E 1,355,174.38
KCI-503	N 572,235.57	E 1,355,386.06
KCI-502	N 572,541.95	E 1,355,640.90
KCI-501	N 572,771.68	E 1,355,567.27
LPS-01	N 572,796.86	E 1,355,364.85

STRUCTURE SCHEDULE

STRUCTURE NUMBER	DETAIL SHEET NO.	TYPE	LOCATION	INV. IN	INV. OUT	RIM ELEV.
MH-1001	SHEET 10	5' PRECAST MANHOLE	N 561,~~490.67~~ 89.22 E 1,352,858~~.41~~ 6.41	~~284.37~~ 284.40	~~284.36~~ 284.32	~~301.61~~ 301.51
MH-1002	SHEET 10	5' PRECAST MANHOLE	N 561,9~~10.93~~ 08.12 E 1,353,097.~~30~~ .87	~~284.95~~ 284.73	~~284.84~~ 284.68	~~299.91~~ 299.40
MH-1003	SHEET 10	5' PRECAST MANHOLE	N 562,32~~2.20~~ 5.67 E 1,353,22~~5.06~~ 3.16	~~285.47~~ 285.32	~~285.46~~ 285.20	~~298.18~~ 298.12
MH-1004	SHEET 10	8' PRECAST MANHOLE	N 562,49~~6.01~~ 86.70 E 1,353,27~~9.01~~ 3.36	~~285.70~~ 285.59	~~285.69~~ 285.42	~~299.60~~ 299.93
MH-1005	SHEET 10	5' PRECAST MANHOLE	N 562,55~~7.84~~ 8.35 E 1,353,44~~2.25~~ 0.20	~~286.01~~ 285.94	~~285.91~~ 285.80	~~298.61~~ 298.04
MH-1006	SHEET 10	5' PRECAST MANHOLE	N 562,63~~3.71~~ 4.26 E 1,353,51~~0.33~~ 1.49	~~286.71~~ 286.78	~~286.61~~ 286.72	~~299.16~~ 299.00
JC-1001	SHEET 21 24 & 25	JUNCTION CHAMBER 1 - N562,958.04 E1,353,641.57 2 - N562,938.54 E1,353,633.24	POINT 1, SEE SHEET 5 ~~N 562,959.23~~ ~~E 1,353,643.20~~ POINT 2, SEE SHEET 5 ~~N 562,939.67~~ ~~E 1,353,634.81~~ POINT S-1, SEE SHEET 21 ~~N 562,946.03~~ ~~E 1,353,658.05~~ POINT S-2, SEE SHEET 21 ~~N 562,932.24~~ ~~E 1,353,652.14~~	~~288.75~~ (2) ~~288.45~~ 288.40	~~288.88~~ (2) ~~288.36~~ 288.23 288.33	~~299.38~~ (2) ~~299.06~~ 299.10
MH-1007	SHEET 10	8' PRECAST MANHOLE	N 563,39~~8.02~~ 7.03 E 1,353,8~~18.85~~ 20.64	℄ ~~289.13~~ 288.77	288.71	~~300.46~~ 299.82
MH-1008	SHEET 10	8' PRECAST MANHOLE	N 563,554.~~24~~ .53 E 1,353,81~~2.82~~ 0.91	℄ ~~289.26~~ 289.37	289.27	~~301.50~~ 301.98
MH-1009	SHEET 10	6' PRECAST MANHOLE	N 563,70~~6.72~~ 5.60 E 1,353,948.~~21~~ .54	℄ ~~289.42~~ 289.51	289.40	~~301.48~~ 301.65
MH-1010	SHEET 10	6' PRECAST MANHOLE	N 564,12~~9.24~~ 7.54 E 1,354,07~~7.50~~ 5.61	℄ ~~289.77~~ 289.74	289.70	~~301.46~~ 301.45
MH-1011	SHEET 10	6' PRECAST MANHOLE	N 564,58~~8.17~~ 6.09 E 1,354,22~~4.28~~ 3.06	℄ ~~290.15~~ 290.29	290.16	~~300.99~~ 301.33
JC-1002	SHEET 22 24 & 25	JUNCTION CHAMBER 3-N 564,743.13 E 1,354,218.04 4-N 564,717.93 E 1,354,217.97	POINT 3, SEE SHEET 6 ~~N 564,743.62~~ ~~E 1,354,217.83~~ POINT 4, SEE SHEET 6 ~~N 564,718.10~~ ~~E 1,354,217.98~~	~~290.35~~ 290.23	~~290.25~~ 290.23	~~301.50~~ 301.63
(1) MH 1006A	SHEET 10	6' PRECAST MANHOLE	N 563,10~~8.30~~ 4.13 E 1,353,68~~2.20~~ 0.94	~~288.87~~ 288.79	~~288.87~~ 288.76	~~298.50~~ 298.20

LEGEND

- EX. BUILDING
- EX. UNDERGROUND CABLE
- EX. UNDERGROUND ELECTRIC
- EX. OVERHEAD ELECTRIC LINES
- EX. 100 YR. FLOODPLAIN EASEMENT
- EX. UTILITY EASEMENT
- EX. UTILITY EASEMENT TO BE ABANDONED
- EX. CHAIN LINK FENCE
- EX. WOOD FENCE
- EX. 100 YR. FLOODPLAIN
- EX. UNDERGROUND GAS MAIN
- EX. 5 & 10 FOOT CONTOURS
- EX. 1 FOOT CONTOURS
- EX. FOOT PATH
- EX. PROPERTY BOUNDARY
- EX. ADJACENT PROPERTY BOUNDARY
- EX. BRIDGE
- EX. CENTERLINE ROAD
- EX. CURB & GUTTER
- EX. EDGE OF PAVEMENT
- EX. GUARDRAIL
- EX. WATER MAIN, FIRE HYDRANT, VALVE & REDUCER
- PROPOSED UTILITY EASEMENT
- TEMPORARY CONSTRUCTION STRIP
- TEMPORARY ACCESS EASEMENT
- PROPOSED SANITARY SEWER MAIN
- PROPOSED 10 FOOT CONTOUR
- PROPOSED 2 FOOT CONTOUR
- EARTH DIKE
- LIMIT OF DISTURBANCE
- SILT FENCE
- SUPER SILT FENCE
- TREE PROTECTION FENCE
- ABANDONED EXISTING SEWER
- EX. EVERGREEN TREE
- EX. DECIDUOUS TREE
- EX. SPECIMEN TREE (DEWBERRY)
- EX. SPECIMEN TREE (KCI)
- EX. ELECTRICAL MANHOLE
- EX. SEWER MANHOLE
- EX. WATER METER
- EX. AIR RELEASE MANHOLE
- EX. STORM DRAIN MANHOLE
- EX. TELEPHONE MANHOLE
- EX. LIGHT POLE
- EX. GAS MANHOLE
- EX. UTILITY PEDESTAL
- EX. UTILITY POLE
- EX. SIGN
- BENCHMARK
- SOIL BORING
- TRAVERSE
- TEST PIT
- CLAY DAM (SEE DETAIL SHEET 9)
- EX. PAVEMENT MARKINGS
- EX. ROAD RIGHT-OF-WAY
- EX. RIVER
- EX. RAILROAD TRACKS
- EX. SANITARY SEWER
- EX. STORM DRAIN
- EX. UNDERGROUND TELEPHONE LINE
- EX. WOODS LINE
- EX. SIDEWALK
- EX. WALLS
- EX. STREAM
- EX. WATERS OF THE U.S.
- EX. WETLANDS
- EX. WETLAND BUFFER
- EX. VEGETATION BUFFER

STRUCTURE SCHEDULE CONT.

STRUCTURE NUMBER	DETAIL SHT. NO.	TYPE	LOCATION	INV. IN	INV. OUT	RIM ELEV.
JC-1003	SHEET 23 24 & 25	JUNCTION CHAMBER 5 - N 564,741.76 E 1,354,337.69 6 - N 564,730.31 E 1,354,314.51	POINT 5, SEE SHEET 6 ~~N 564,741.36~~ ~~E 1,354,337.72~~ POINT 6, SEE SHEET 6 ~~N 564,730.19~~ ~~E 1,354,314.20~~ POINT S-3, SEE SHEET 23 ~~N 564,727.73~~ ~~E 1,354,327.48~~	~~291.15~~ 291.21	~~290.65~~ 290.83	~~301.81~~ 302.02
MH-1012	SHEET 10	6' PRECAST MANHOLE	N 564,760.~~62~~ .53 E 1,354,34~~7.26~~ 8.28	~~291.17~~ 291.10	~~291.16~~ 290.99	~~302.12~~ 302.23
MH-1013	SHEET 10	5' PRECAST MANHOLE	N 565,108.~~35~~ .89 E 1,354,345.~~13~~ .92	~~291.59~~ 291.66	~~291.57~~ 291.42	~~302.60~~ 302.20
MH-1014	SHEET 10	5' PRECAST MANHOLE	N 565,5~~43.79~~ 39.37 E 1,354,34~~0.53~~ 2.12	~~292.13~~ 292.10	~~292.11~~ 292.01	~~303.06~~ 302.68
MH-1015	SHEET 10	5' PRECAST MANHOLE	N 565,961.~~13~~ .53 E 1,354,347.9~~2~~ .99	~~292.61~~ 292.48	~~292.59~~ 292.42	~~302.83~~ 302.63
MH-1016	SHEET 10	5' PRECAST MANHOLE	N 566,388.2~~7~~ .23 E 1,354,37~~1.37~~ 0.22	~~293.10~~ 292.91	~~293.08~~ 292.83	~~303.83~~ 303.49
MH-1017	SHEET 10	5' PRECAST MANHOLE	N 566,7~~73.77~~ 68.43 E 1,354,39~~3.23~~ 4.88	~~293.54~~ 293.30	~~293.52~~ 293.22	~~304.50~~ 303.90
MH-1018	*	4' PRECAST MANHOLE	N 563,42~~4.32~~ 5.23 E 1,353,849.~~72~~ .47	~~289.36~~ 289.07	~~289.26~~ 288.90	~~299.75~~ 299.25

* REFER TO HOWARD COUNTY DESIGN DETAILS G-5.11 AND G-5.12

AS-BUILTS
Jan. 17, 2013

DEPARTMENT OF PUBLIC WORKS
HOWARD COUNTY, MARYLAND

DIRECTOR OF PUBLIC WORKS — DATE 6/3/10
CHIEF, BUREAU OF ENGINEERING — DATE 6/2/10
CHIEF, BUREAU OF UTILITIES — DATE 6/2/10
CHIEF, UTILITY DESIGN DIVISION — DATE 6/2/10 WD

Dewberry
Dewberry & Davis LLC
3106 LORD BALTIMORE DRIVE
SUITE 110
BALTIMORE, MD 21244-2662
410.265.9500
FAX: 410.265.8875

STATE OF MARYLAND — THOMAS N. DALL... — No. 10966 — REGISTERED PROFESSIONAL ENGINEER

DES: LAL
DRN: CD
CHK: TND
DATE: 5.28.10

BY	NO.	REVISIONS	DATE
LAL	1	ADD MH 1006A ELEVATIONS	5-31-11
LAL	2	REVISE JC-1001 ELEVATIONS	7-20-11

GENERAL NOTES

600' SCALE MAP NO. 37, 43 — BLOCK NO. 5, 23

LITTLE PATUXENT PARALLEL INTERCEPTOR
CAPITAL PROJECT S-6175
CONTRACT NO. 20-4540

ELECTION DISTRICT NO. 5 — HOWARD COUNTY, MARYLAND

SCALE: SHOWN

Plotted by: (cdallaterza) on Plot Date: Jun 01, 2010 - 3:44pm
Path—> R:\Projects\58125000-Little Patuxent Interceptor\CADD\SECTION X\03-0-LPPI X-GENERAL NOTES.dwg
Tab-Layout Name: GENERAL NOTES
Last Saved: May 28, 2010 - 10:50am
XREFS—>R:\Projects\58125000-Little Patuxent Interceptor\CADD\SECTION X\1-LPPI X -Border.dwg

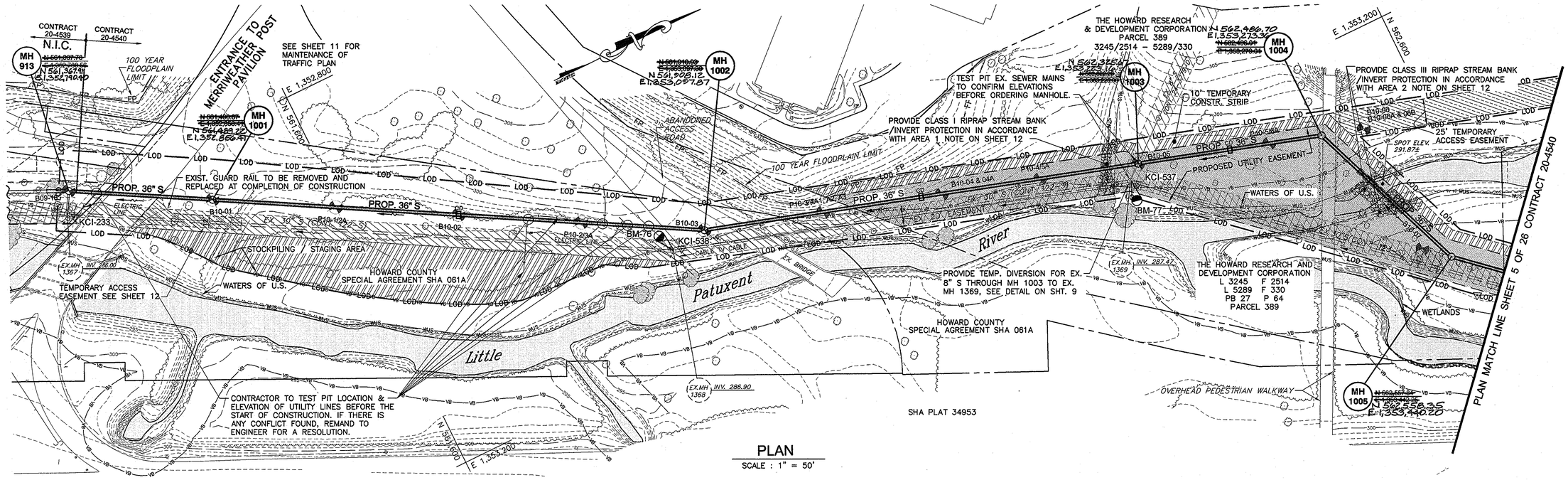

PLAN

SCALE : 1" = 50'

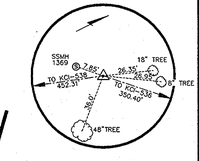

KCI-537
3/4" REBAR W/ KCI CAP
N 562,313.28
E 1,353,242.51
ELEV. 296.30

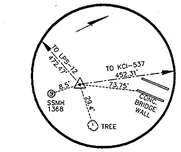

KCI-538
3/4" REBAR W/ KCI CAP
N 561,882.76
E 1,353,103.82
ELEV. 297.61

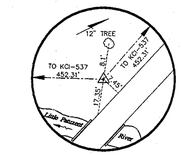

KCI-233
3/4" REBAR W/ KCI CAP
N 561,381.94
E 1,352,814.00
ELEV. 297.13

NOTE:
THE LOD IS COINCIDENT WITH THE PROPOSED UTILITY EASEMENT LINE AND SHOWN FIVE (5) FEET OUTSIDE THE ACTUAL LIMIT OF DISTURBANCE FOR CLARITY

NOTE:
1. PRECONSTRUCTION CONTOURS SHALL BE RESTORED AFTER THE UTILITY HAS BEEN INSTALLED AND ALL EXCESS SPOIL SHALL BE REMOVED FROM SITE. THERE SHALL BE NO MOUNDING OR DISPOSING OF MATERIALS WITHIN THE LIMITS OF DISTURBANCE OR ANYWHERE ELSE ON SITE.
2. SEE GENERAL NOTE 18 ON SHEET 3 OF 26.

BENCH MARK BM-76
MANHOLE # 1368 ELEV. 297.87
PUNCH HOLE ON MANHOLE RIM
N 561,875 E 1,353,094

BENCH MARK BM-78
MANHOLE # 1418 ELEV. 298.76
PUNCH HOLE ON MANHOLE RIM
N 562,621 E 1,353,519

BENCH MARK BM-77
MANHOLE # 1369 ELEV. 297.61
PUNCH HOLE ON MANHOLE RIM
N 562,309 E 1,353,233

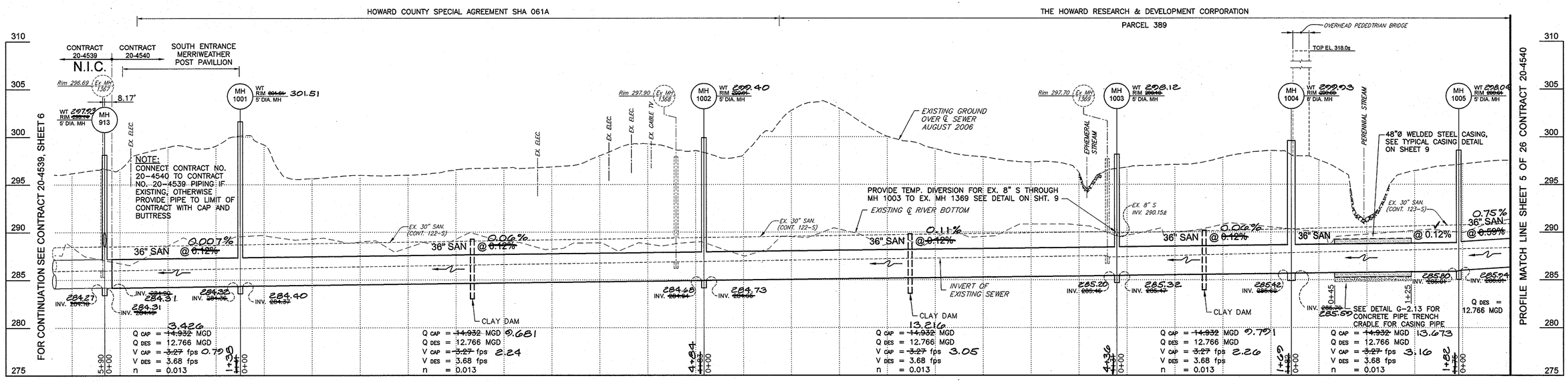

PROFILE

SCALE : HORIZ. 1" = 50'
VERT. 1" = 5'

AS-BUILTS
Jan. 17, 2013

DEPARTMENT OF PUBLIC WORKS
HOWARD COUNTY, MARYLAND

DIRECTOR OF PUBLIC WORKS — DATE 6/3/10
CHIEF, BUREAU OF ENGINEERING — DATE 6/2/10
CHIEF, BUREAU OF UTILITIES — DATE 6/2/10
CHIEF, UTILITY DESIGN DIVISION — DATE 6/2/10 WD

Dewberry
Dewberry & Davis LLC
3106 LORD BALTIMORE DRIVE
SUITE 110
BALTIMORE, MD 21244-2662
410.265.9500
FAX: 410.265.8875

STATE OF MARYLAND — THOMAS N. DUGAN — No. 19962 — REGISTERED PROFESSIONAL ENGINEER

DES: LAL
DRN: CD
CHK: TND
DATE: 5.28.10

BY	NO.	REVISIONS	DATE

PLAN AND PROFILE SHEET
600' SCALE MAP NO. 37, 43 BLOCK NO. 5, 23

LITTLE PATUXENT PARALLEL INTERCEPTOR
CAPITAL PROJECT S-6175
CONTRACT NO. 20-4540
ELECTION DISTRICT NO. 5 HOWARD COUNTY, MARYLAND

SCALE: SHOWN

SHEET 4 OF 26

BENCH MARK BM-78
MANHOLE # 1418 ELEV. 298.76
PUNCH HOLE ON MANHOLE RIM
N 562,621 E 1,353,519

BENCH MARK BM-79
MANHOLE # 1419 ELEV. 299.35
PUNCH HOLE ON MANHOLE RIM
N 563,166 E 1,353,747

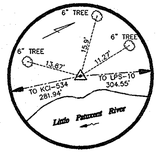

KCI-533
3/4" REBAR W/ KCI CAP
N 563,535.99
E 1,353,853.52
ELEV. 299.45

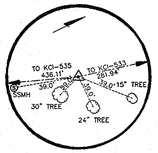

KCI-534
3/4" REBAR W/ KCI CAP
N 563,261.93
E 1,353,787.36
ELEV. 297.66

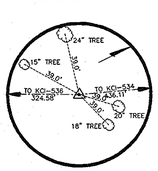

KCI-535
3/4" REBAR W/ KCI CAP
N 562,854.25
E 1,353,632.46
ELEV. 297.06

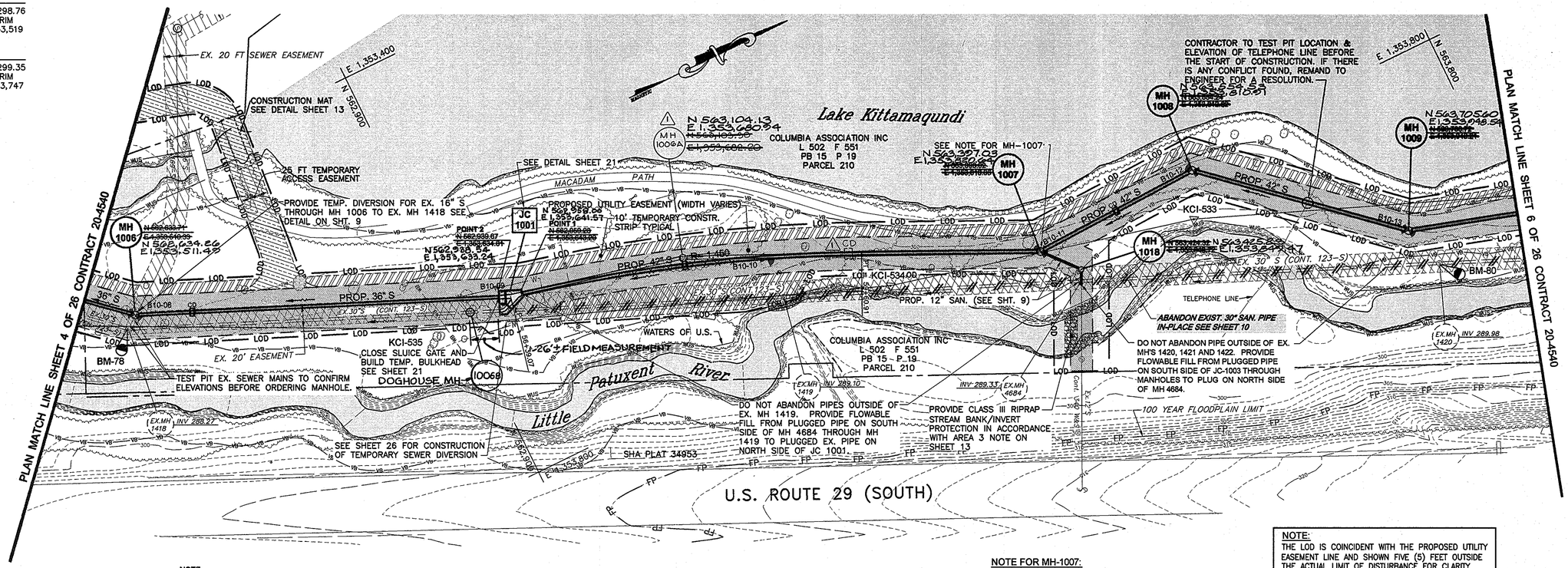

NOTE:
1. PRECONSTRUCTION CONTOURS SHALL BE RESTORED AFTER THE UTILITY HAS BEEN INSTALLED AND ALL EXCESS SPOIL SHALL BE REMOVED FROM SITE. THERE SHALL BE NO MOUNDING OR DISPOSING OF MATERIALS WITHIN THE LIMITS OF DISTURBANCE OR ANYWHERE ELSE ON SITE.
2. SEE GENERAL NOTE 18 ON SHEET 3 OF 26.

PLAN
SCALE : 1" = 50'

NOTE FOR MH-1007:
MAINTAIN A MINIMUM OF 12" CLEARANCE BETWEEN THE OPENINGS FOR INCOMING 42" SEWER AND 12" SEWER TO MH-1007

NOTE:
THE LOD IS COINCIDENT WITH THE PROPOSED UTILITY EASEMENT LINE AND SHOWN FIVE (5) FEET OUTSIDE THE ACTUAL LIMIT OF DISTURBANCE FOR CLARITY

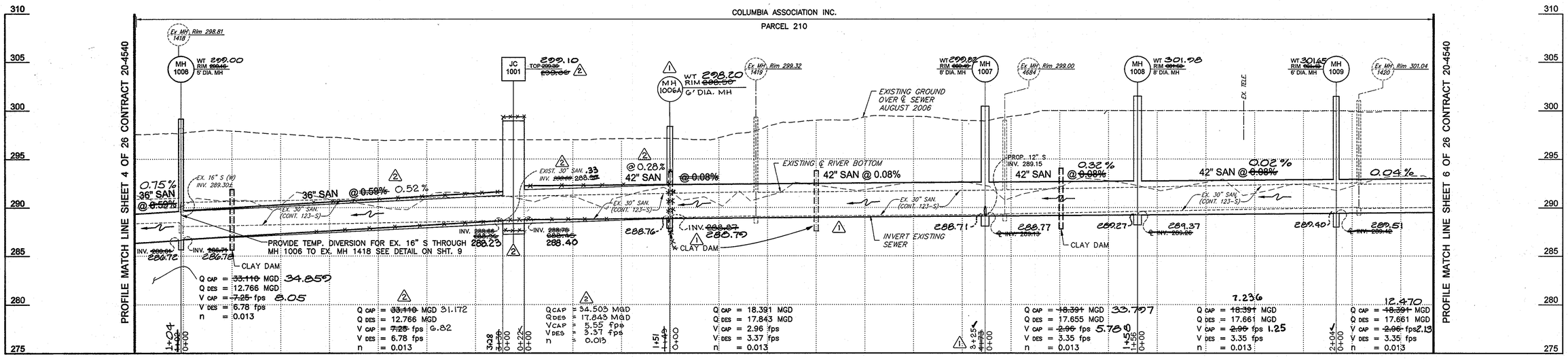

PROFILE
SCALE : HORIZ. 1" = 50'
VERT. 1" = 5'

AS-BUILTS
Jan. 17, 2013

DEPARTMENT OF PUBLIC WORKS
HOWARD COUNTY, MARYLAND

DIRECTOR OF PUBLIC WORKS — DATE 6/3/10
CHIEF, BUREAU OF ENGINEERING — DATE 6/2/10
CHIEF, BUREAU OF UTILITIES — DATE 6/2/10
CHIEF, UTILITY DESIGN DIVISION — DATE 6/2/10 WD

Dewberry
Dewberry & Davis LLC
3106 LORD BALTIMORE DRIVE
SUITE 110
BALTIMORE, MD 21244-2662
410.265.9500
FAX: 410.265.8875

STATE OF MARYLAND — HOWARD N. DALLAS — No. 12962 — PROFESSIONAL ENGINEER

DES: LAL
DRN: CD
CHK: TND
DATE: 5.28.10

BY	NO.	REVISIONS	DATE
LAL	1	ADD MH 1006A	5-31-11
LAL	2	CHANGE ELEVATIONS AT JC-1001	7-20-11

PLAN AND PROFILE SHEET
600' SCALE MAP NO. 37, 43 BLOCK NO. 5, 23

LITTLE PATUXENT PARALLEL INTERCEPTOR
CAPITAL PROJECT S-6175
CONTRACT NO. 20-4540
ELECTION DISTRICT NO. 5 HOWARD COUNTY, MARYLAND

SCALE: SHOWN

SHEET 5 OF 26

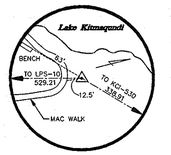

LPS-09
3/4" REBAR & COLLAR
N 564,332.70
E 1,354,093.00
ELEV. 300.77

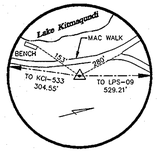

LPS-10
3/4" REBAR & COLLAR
N 563,818.87
E 1,353,966.33
ELEV. 300.96

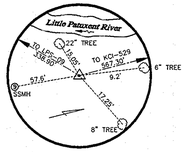

KCI-530
3/4" REBAR & KCI CAP
N 564,572.14
E 1,354,332.84
ELEV. 299.77

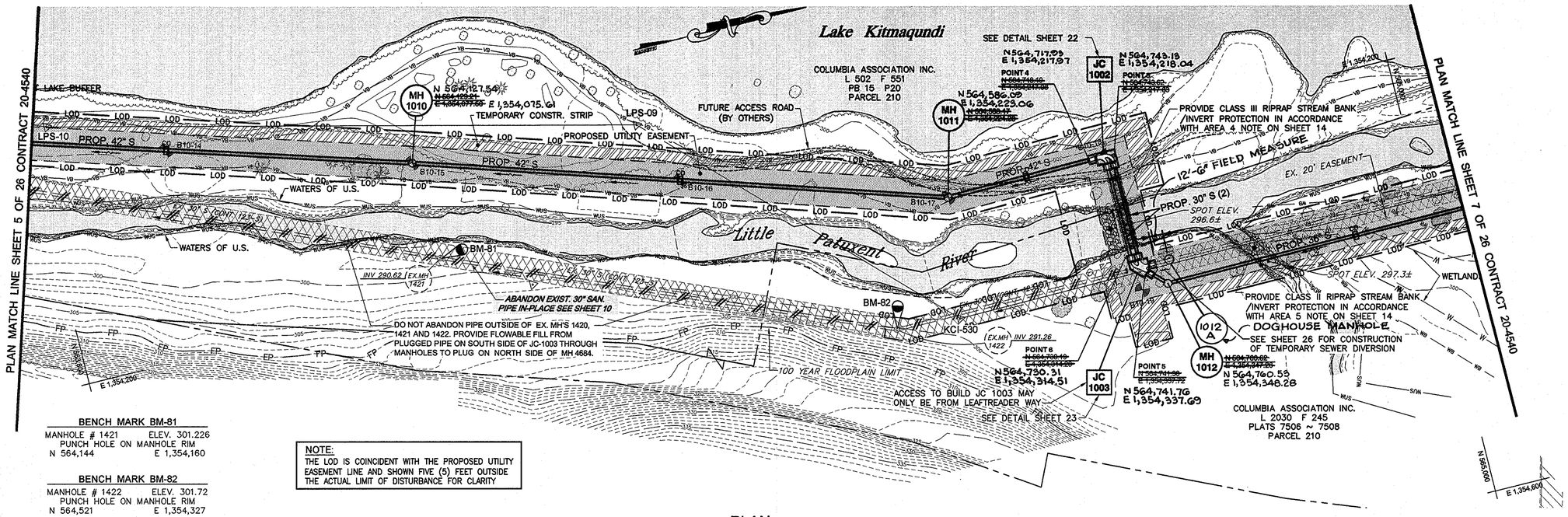

BENCH MARK BM-81
MANHOLE # 1421 ELEV. 301.226
PUNCH HOLE ON MANHOLE RIM
N 564,144 E 1,354,160

BENCH MARK BM-82
MANHOLE # 1422 ELEV. 301.72
PUNCH HOLE ON MANHOLE RIM
N 564,521 E 1,354,327

NOTE:
THE LOD IS COINCIDENT WITH THE PROPOSED UTILITY EASEMENT LINE AND SHOWN FIVE (5) FEET OUTSIDE THE ACTUAL LIMIT OF DISTURBANCE FOR CLARITY

PLAN
SCALE : 1" = 50'

NOTE:
1. PRECONSTRUCTION CONTOURS SHALL BE RESTORED AFTER THE UTILITY HAS BEEN INSTALLED AND ALL EXCESS SPOIL SHALL BE REMOVED FROM SITE. THERE SHALL BE NO MOUNDING OR DISPOSING OF MATERIALS WITHIN THE LIMITS OF DISTURBANCE OR ANYWHERE ELSE ON SITE.
2. SEE GENERAL NOTE 18 ON SHEET 3 OF 26.

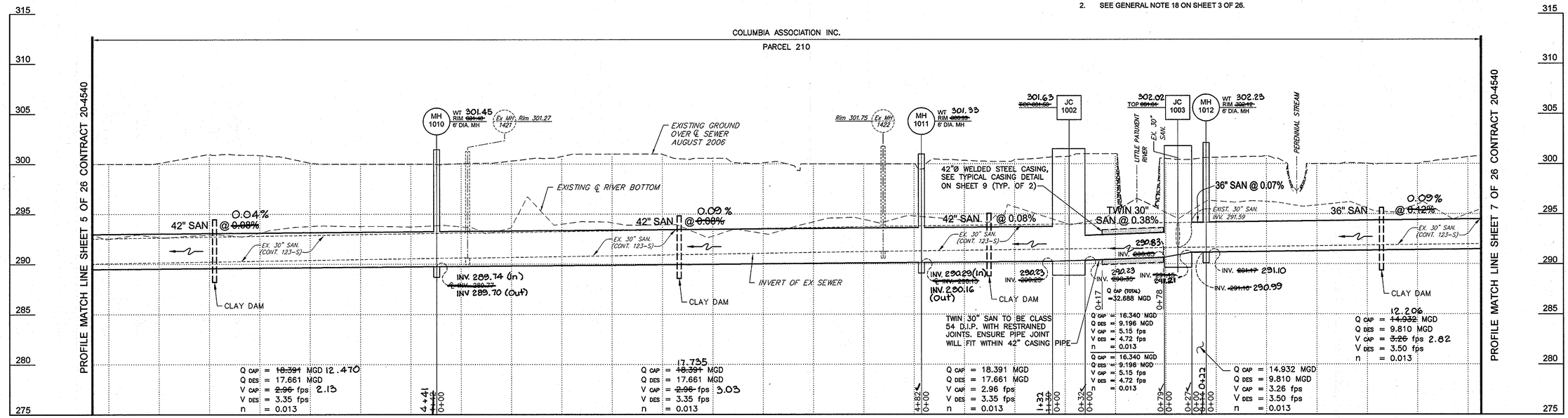

PROFILE
SCALE : HORIZ. 1" = 50'
VERT. 1" = 5'

AS-BUILTS
Jan 17, 2013

DEPARTMENT OF PUBLIC WORKS
HOWARD COUNTY, MARYLAND

DIRECTOR OF PUBLIC WORKS — DATE 6/3/10
CHIEF, BUREAU OF ENGINEERING — DATE 6/2/10
CHIEF, BUREAU OF UTILITIES — DATE 6/2/10
CHIEF, UTILITY DESIGN DIVISION — DATE 6/2/10 WD

Dewberry
Dewberry & Davis LLC
3108 LORD BALTIMORE DRIVE
SUITE 110
BALTIMORE, MD 21244-2662
410.265.9500
FAX: 410.265.8875

STATE OF MARYLAND — THOMAS N. DALLAVALLE — No. 10968 — REGISTERED PROFESSIONAL ENGINEER

DES: LAL
DRN: CD
CHK: TND
DATE: 5.28.10

BY	NO.	REVISIONS	DATE

PLAN AND PROFILE SHEET
600' SCALE MAP NO. 37, 43 BLOCK NO. 5, 23

LITTLE PATUXENT PARALLEL INTERCEPTOR
CAPITAL PROJECT S-6175
CONTRACT NO. 20-4540
ELECTION DISTRICT NO. 5 HOWARD COUNTY, MARYLAND

SCALE: SHOWN

SHEET 6 OF 26

BENCH MARK BM-83
MANHOLE # 1423 ELEV. 301.21
"X" CUT ON MANHOLE RIM
N 565,102 E 1,354,326

BENCH MARK BM-85
MANHOLE # 1425 ELEV. 302.46
"X" CUT ON MANHOLE RIM
N 565,945 E 1,354,328

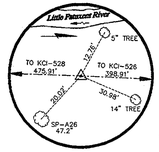

KCI-527
3/4" REBAR & KCI CAP
N 566,148.55
E 1,354,343.03
ELEV. 301.65

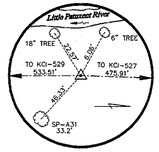

KCI-528
3/4" REBAR & KCI CAP
N 565,672.93
E 1,354,326.42
ELEV. 301.40

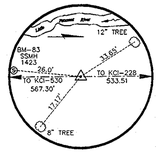

KCI-529
3/4" REBAR W/ KCI CAP
N 565,139.42
E 1,354,327.60
ELEV. 300.53

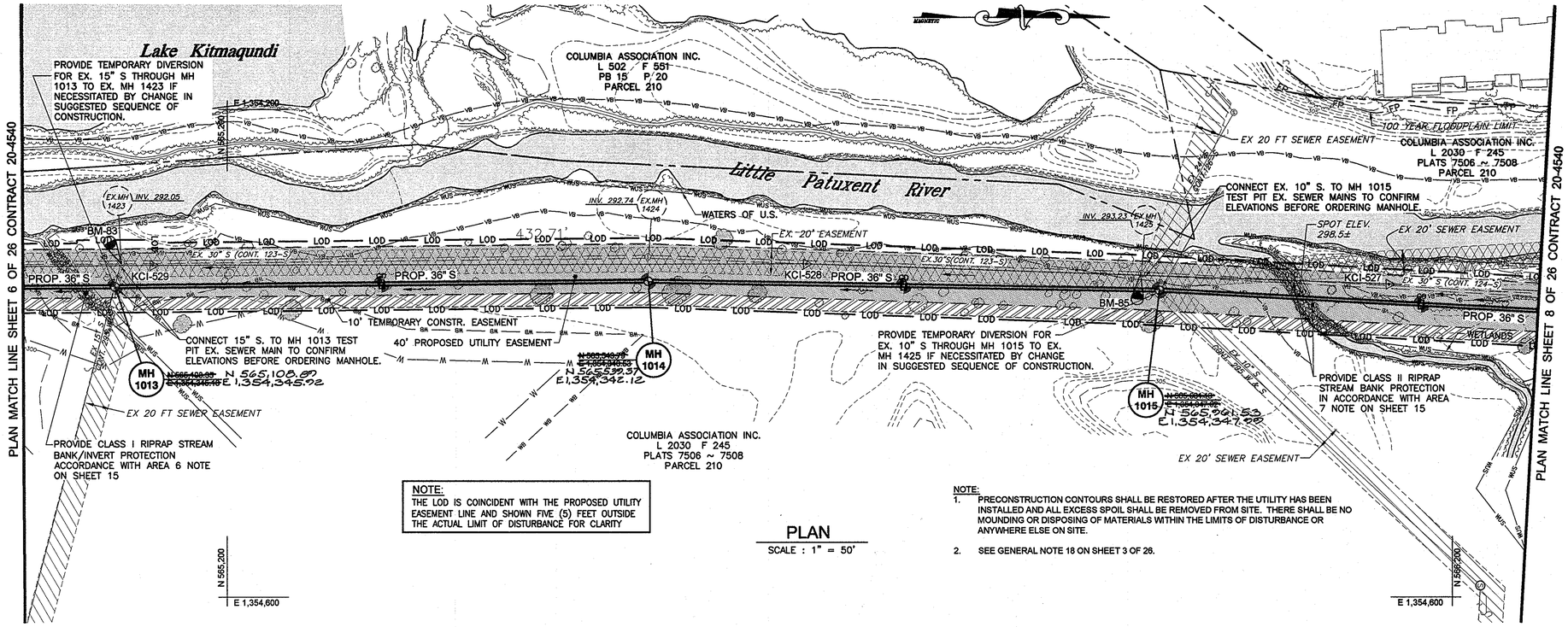

NOTE:
THE LOD IS COINCIDENT WITH THE PROPOSED UTILITY EASEMENT LINE AND SHOWN FIVE (5) FEET OUTSIDE THE ACTUAL LIMIT OF DISTURBANCE FOR CLARITY

PLAN
SCALE : 1" = 50'

NOTE:
1. PRECONSTRUCTION CONTOURS SHALL BE RESTORED AFTER THE UTILITY HAS BEEN INSTALLED AND ALL EXCESS SPOIL SHALL BE REMOVED FROM SITE. THERE SHALL BE NO MOUNDING OR DISPOSING OF MATERIALS WITHIN THE LIMITS OF DISTURBANCE OR ANYWHERE ELSE ON SITE.
2. SEE GENERAL NOTE 18 ON SHEET 3 OF 26.

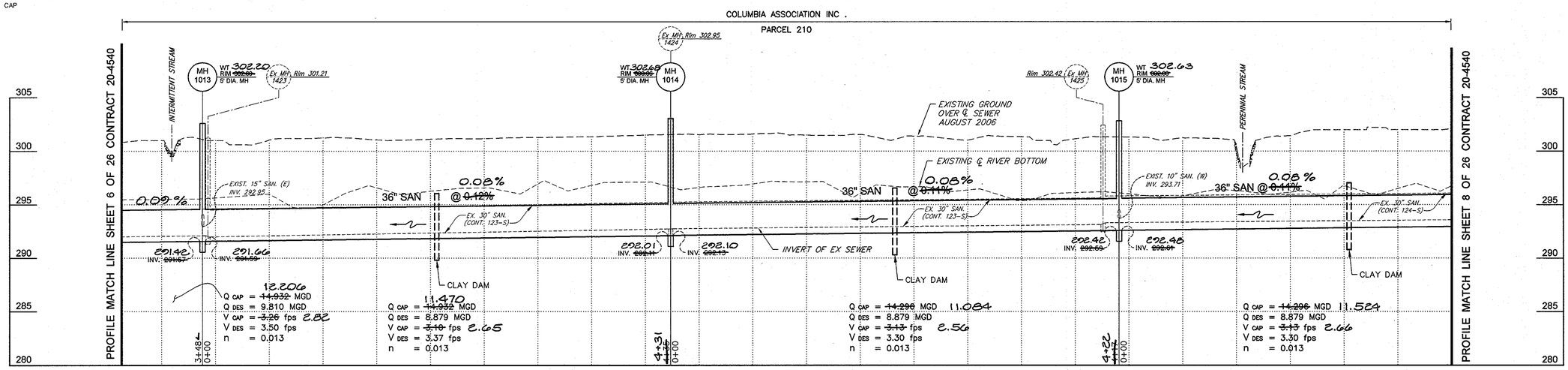

PROFILE
SCALE : HORIZ. 1" = 50'
VERT. 1" = 5'

AS-BUILTS
Jan 17, 2013

DEPARTMENT OF PUBLIC WORKS
HOWARD COUNTY, MARYLAND

DIRECTOR OF PUBLIC WORKS — DATE 6/3/10
CHIEF, BUREAU OF ENGINEERING — DATE 6/2/10
CHIEF, BUREAU OF UTILITIES — DATE 6/3/10
CHIEF, UTILITY DESIGN DIVISION — DATE 6/2/10 WD

Dewberry
Dewberry & Davis LLC
3106 LORD BALTIMORE DRIVE
SUITE 110
BALTIMORE, MD 21244-2662
410.265.9500
FAX: 410.265.8875

STATE OF MARYLAND — THOMAS N. DAVIS III — No. 10062 — REGISTERED PROFESSIONAL ENGINEER

DES: LAL
DRN: CD
CHK: TND
DATE: 5.28.10

BY	NO.	REVISIONS	DATE

PLAN AND PROFILE SHEET
600' SCALE MAP NO. 37, 43 BLOCK NO. 5, 23

LITTLE PATUXENT PARALLEL INTERCEPTOR
CAPITAL PROJECT S-6175
CONTRACT NO. 20-4540
ELECTION DISTRICT NO. 5 HOWARD COUNTY, MARYLAND

SCALE: SHOWN

SHEET 7 OF 26

Plotted by: (cdavis2) on Plot Date: Jan 01, 2010 – 3:58pm
Path:--> R:\Projects\38125000~Little Patuxent Interceptor\CADD\SECTION X\07-0-LPPI X-PLAN SHEET 4.dwg
Plotted: Jan 01, 2010 – 1:24pm
Last Saved: Jan 01, 2010 – 1:24pm
XREFS-->JR:\Projects\38125000~Little Patuxent Interceptor\CADD\SECTION X\11-LPPI X -Border.dwg; XREFS-->JR:\Projects\38125000~Little Patuxent Interceptor\CADD\Accurate Existing\07-0-0586-HOCO_SEWER-UTIL-FINAL.dwg; XREFS-->JR:\Projects\38125000~Little Patuxent Interceptor

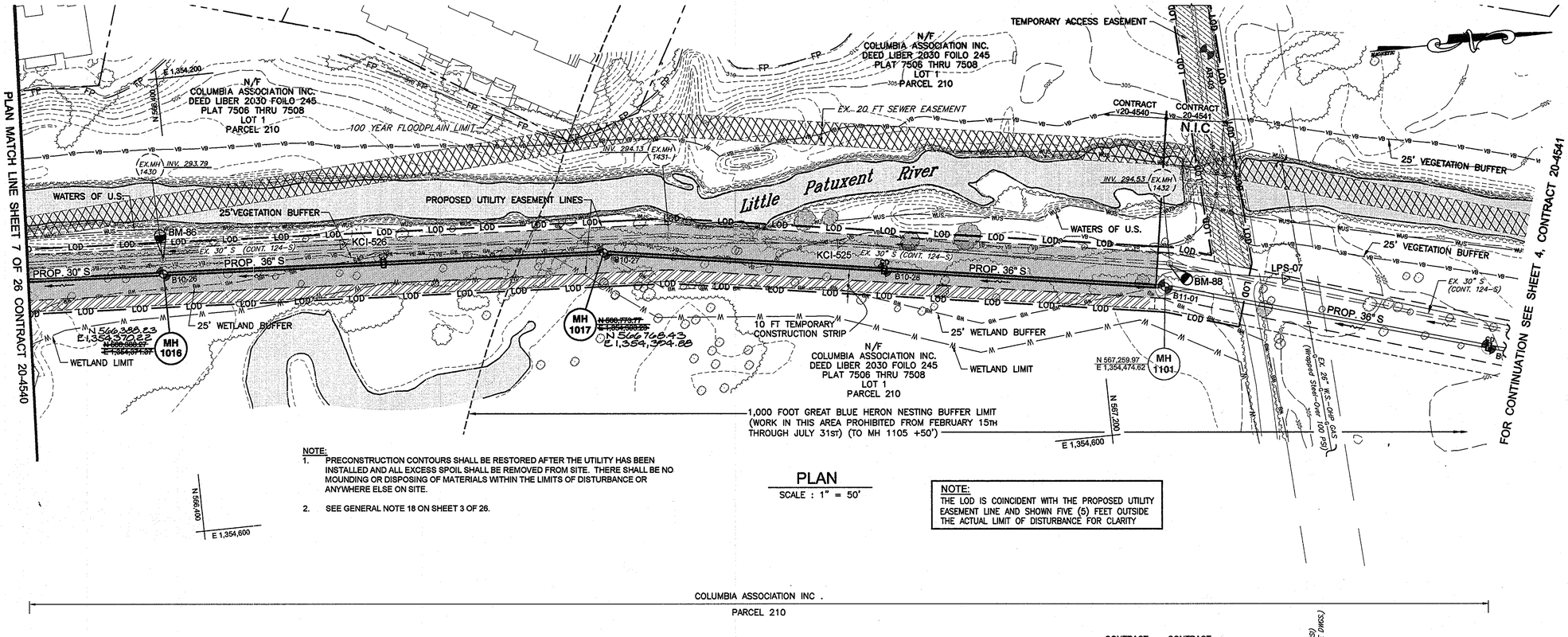

NOTE:
1. PRECONSTRUCTION CONTOURS SHALL BE RESTORED AFTER THE UTILITY HAS BEEN INSTALLED AND ALL EXCESS SPOIL SHALL BE REMOVED FROM SITE. THERE SHALL BE NO MOUNDING OR DISPOSING OF MATERIALS WITHIN THE LIMITS OF DISTURBANCE OR ANYWHERE ELSE ON SITE.
2. SEE GENERAL NOTE 18 ON SHEET 3 OF 26.

PLAN
SCALE : 1" = 50'

NOTE:
THE LOD IS COINCIDENT WITH THE PROPOSED UTILITY EASEMENT LINE AND SHOWN FIVE (5) FEET OUTSIDE THE ACTUAL LIMIT OF DISTURBANCE FOR CLARITY

BENCH MARK BM-86
MANHOLE # 1430 ELEV. 303.90
"X" CUT ON MANHOLE RIM
N 566,389 E 1,354,354

BENCH MARK BM-88
MANHOLE # 1432 ELEV. 305.22
"X" CUT ON MANHOLE RIM
N 567,269 E 1,354,450

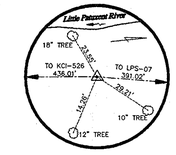

KCI-525
3/4" REBAR & KCI CAP
N 566,980.72
E 1,354,406.79
ELEV. 303.20

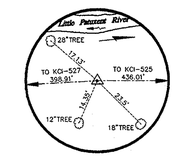

KCI-526
3/4" REBAR & KCI CAP
N 566,547.01
E 1,354,362.03
ELEV. 302.90

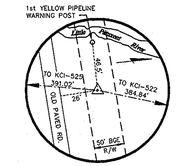

LPS-07
3/4" REBAR & RED CAP
N 567,365.08
E 1,354,478.65
ELEV. 305.91

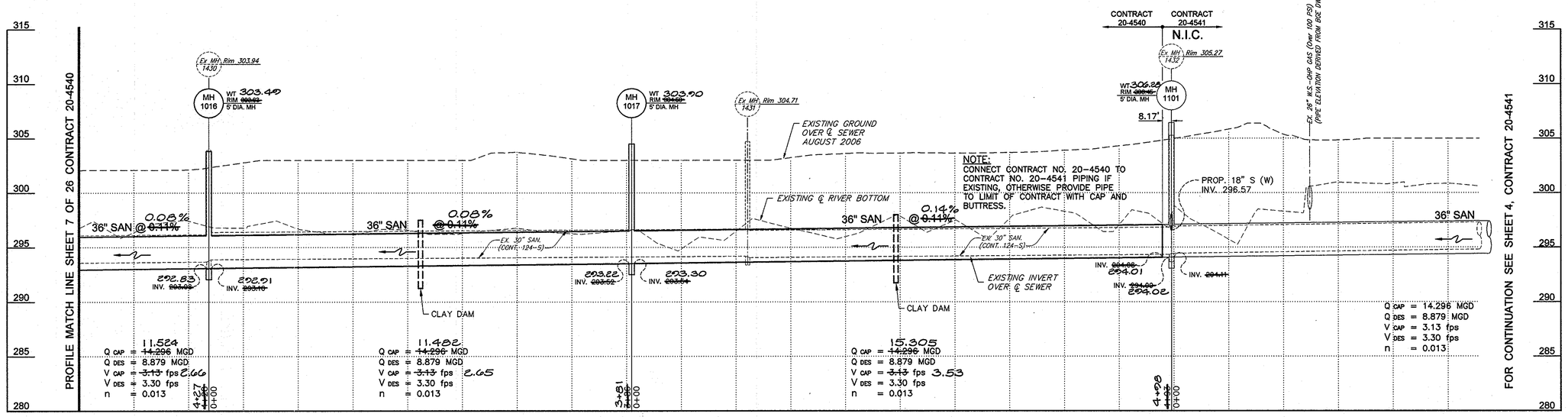

PROFILE
SCALE : HORIZ. 1" = 50'
VERT. 1" = 5'

AS-BUILTS

DEPARTMENT OF PUBLIC WORKS
HOWARD COUNTY, MARYLAND

DIRECTOR OF PUBLIC WORKS — DATE 6/3/10
CHIEF, BUREAU OF ENGINEERING — DATE 6/2/10
CHIEF, BUREAU OF UTILITIES — DATE 6/2/10
CHIEF, UTILITY DESIGN DIVISION — DATE 6/2/10 WD

Dewberry
Dewberry & Davis LLC
3108 LORD BALTIMORE DRIVE
SUITE 110
BALTIMORE, MD 21244-2662
410.265.9500
FAX: 410.265.8875

STATE OF MARYLAND — THOMAS N. DALTON — No. 19962 — REGISTERED PROFESSIONAL ENGINEER

DES: LAL
DRN: CD
CHK: TND
DATE: 5.28.10

BY	NO.	REVISIONS	DATE

PLAN AND PROFILE SHEET
600' SCALE MAP NO. 37, 43 BLOCK NO. 5, 23

LITTLE PATUXENT PARALLEL INTERCEPTOR
CAPITAL PROJECT S-6175
CONTRACT NO. 20-4540
ELECTION DISTRICT NO. 5 HOWARD COUNTY, MARYLAND

SCALE: SHOWN

SHEET 8 OF 26

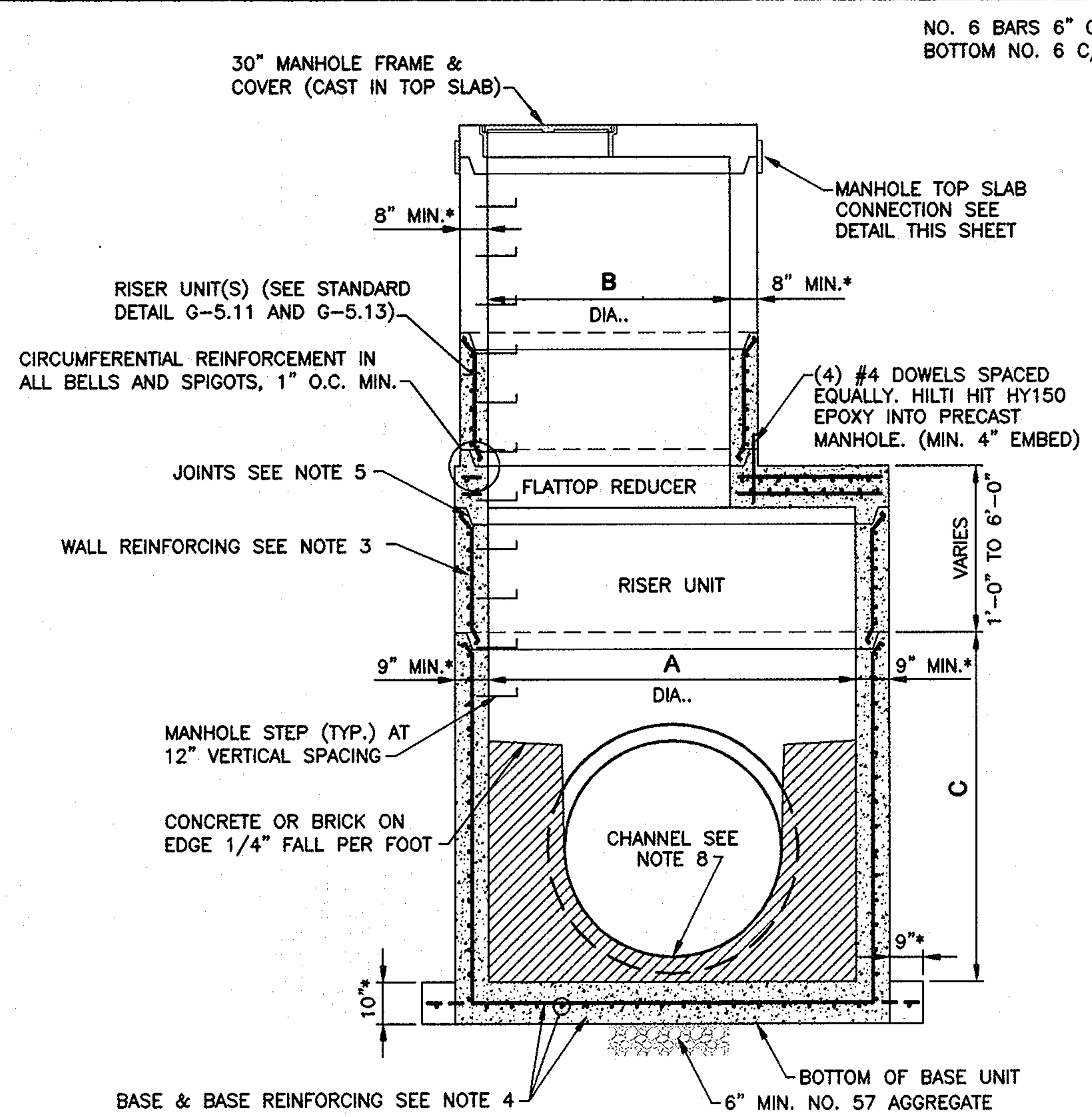

ELEVATION VIEW

* DIMENSIONS TO BE CONFIRMED BY THE MANUFACTURER.

NOTE:
"STANDARD DETAIL" REFERS TO DETAILS IN HOWARD COUNTY DESIGN MANUAL VOLUME IV, STANDARD SPECIFICATIONS AND DETAILS FOR CONSTRUCTION.

6'-0" & 8'-0" DIAMETER PRECAST MANHOLE

NO SCALE

6' AND 8' DIAMETER MANHOLE DIMENSION SCHEDULE								
MH DIA..	A	B	C	D*	E*	F*	G*	H*
6'	6'	4'	6'	7'-6"	2'-9"	2'-9"	5'-4"	1'-11"
8'	8'	5'	8'	9'-6"	3'-9"	3'-3"	6'-4"	1'-11"

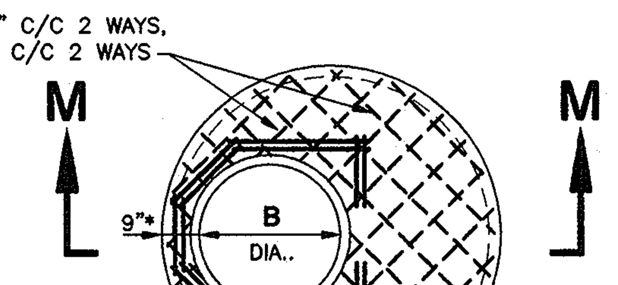

MANHOLE FLAT TOP SLAB REDUCER PLAN

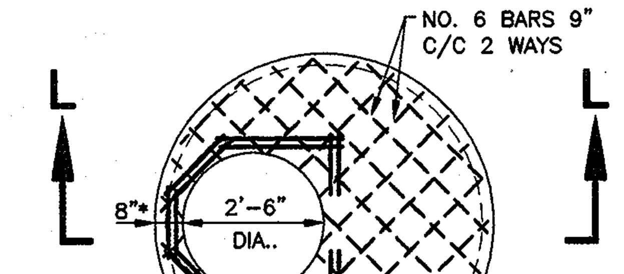

MANHOLE FLAT TOP SLAB PLAN

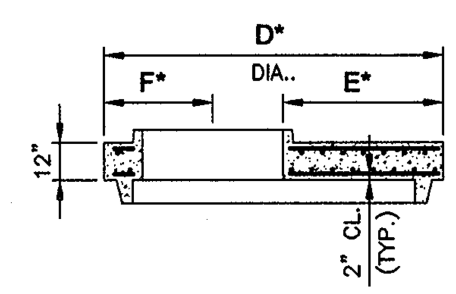

SECTION M-M

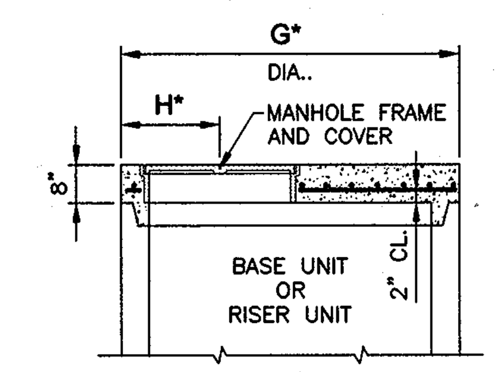

SECTION L-L

6'-0" & 8'-0" DIAMETER MANHOLE NOTES:

1. MANHOLES SHALL BE CONSTRUCTED IN ACCORDANCE WITH ASTM C-478 AND THE GENERAL NOTES APPLICABLE TO PRECAST MANHOLES ON STANDARD DETAIL G-5.11.
2. CONCRETE SHALL BE MIX NO. 6 (4500 PSI).
3. WALL REINFORCEMENT FOR BASE AND RISER UNITS SHALL BE REINFORCEMENT BARS OR WELDED WIRE FABRIC WITH A MINIMUM AREA OF 0.28 IN^2/FT FOR THE 72" DIAMETER MANHOLES AND 0.37 IN^2/FT. FOR THE 96" DIAMETER MANHOLES, RESPECTIVELY. WELDED WIRE FABRIC SHALL CONFORM TO ASTM A-185 AND A-82. REINFORCEMENT BARS SHALL MEET ASTM A-615, GRADE 60.
4. BASE REINFORCEMENT TO BE REINFORCEMENT BARS OR WELDED WIRE FABRIC WITH A MINIMUM AREA OF 0.28 IN^2/FT. FOR THE 72" DIAMETER MANHOLES AND 0.37 IN^2/FT. FOR THE 96" DIAMETER MANHOLES, RESPECTIVELY. THE BASE SHALL BE MONOLITHIC WITH THE BASE UNIT OR JOINTED PER MANUFACTURER'S DESIGN.
5. THE MANUFACTURER SHALL FORM MALE AND FEMALE ENDS OF JOINTS USING THEIR OWN DESIGN. THE JOINTS SHALL BE SEALED BY THE CONTRACTOR AND MADE WATERTIGHT USING RUBBER O-RING GASKETS ASTM A-361 & C-443.
6. MINIMUM DISTANCE BETWEEN PIPE OPENINGS IN MANHOLE WALL SHALL BE 12 INCHES.
7. LIFT HOLES OR LIFT EYES SHALL BE PROVIDED IN EACH SECTION FOR HANDLING.
8. MIX NO. 6 PRECAST CONCRETE OR BRICK CHANNEL SHALL BE PROVIDED AND SHALL SLOPE TOWARD OUTLET AS DIRECTED BY THE ENGINEER.
9. NO MORE THAN ONE 1' HIGH RISER SECTION MAY BE USED PER MANHOLE.
10. MANHOLE INTERIOR LINER REQUIRED. REFER TO "SANITARY SEWER MANHOLES" SECTION OF THE SPECIAL PROVISIONS.

4'-0" DIAMETER MANHOLE NOTES:

MANHOLES SHALL BE CONSTRUCTED ACCORDING TO HOWARD COUNTY DESIGN MANUAL VOLUME IV STANDARD DETAILS G-5.11 AND G-5.12 EXCEPT THAT THE TOP RISER UNIT WILL BE CYLINDRICAL, NOT CONE SHAPED, WITH A 30" MANHOLE FRAME AND COVER CAST INTO A FLAT TOP SLAB WHICH HAS SAME CONFIGURATION, DIMENSIONS AND REINFORCEMENT AS THE TOP SLAB FOR THE 6'-0" DIAMETER MANHOLE SHOWN ON THIS SHEET.

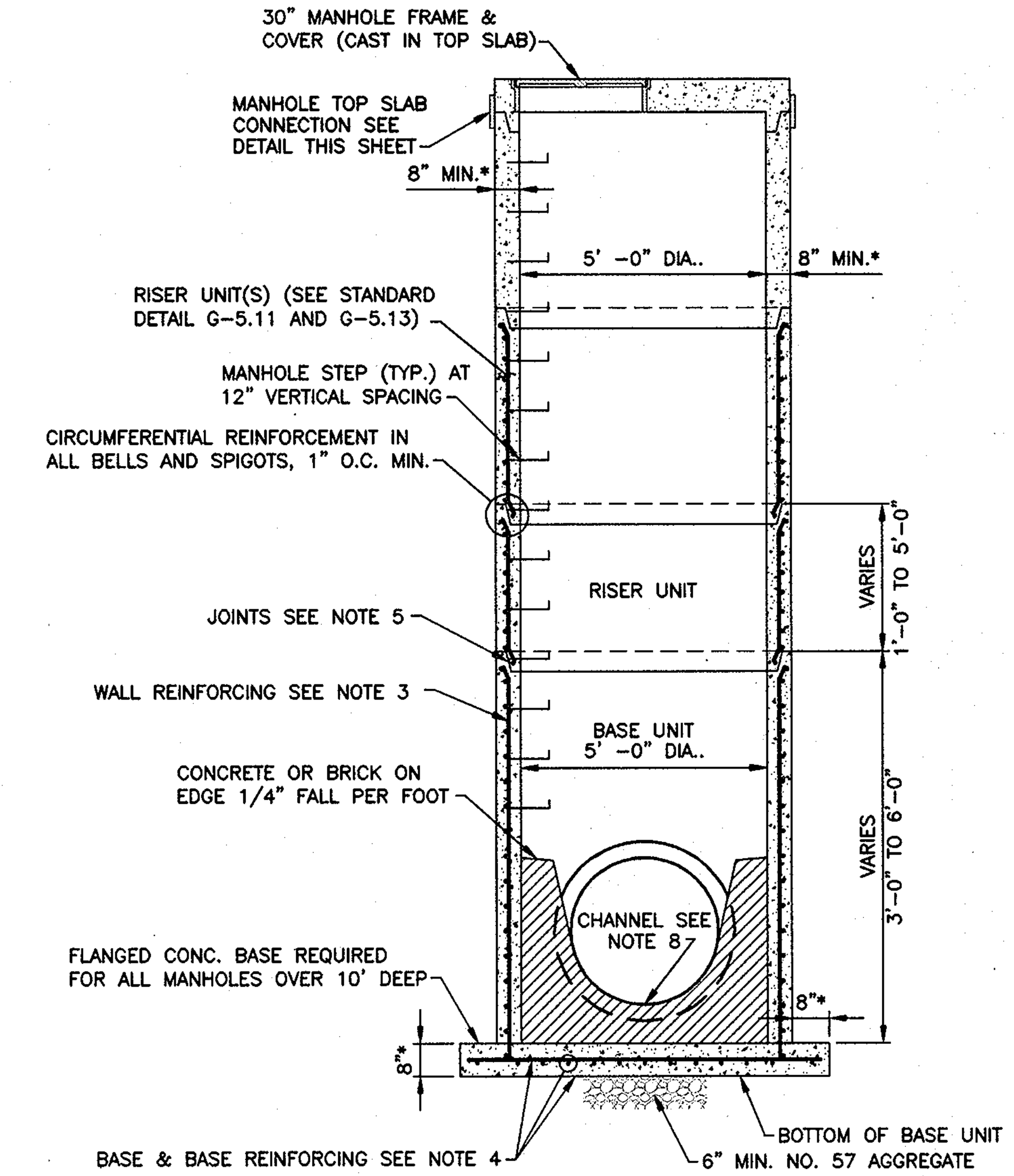

ELEVATION VIEW

* DIMENSIONS TO BE CONFIRMED BY THE MANUFACTURER.

NOTE:
"STANDARD DETAIL" REFERS TO DETAILS IN HOWARD COUNTY DESIGN MANUAL VOLUME IV, STANDARD SPECIFICATIONS AND DETAILS FOR CONSTRUCTION.

5'-0" DIAMETER PRECAST MANHOLE

NO SCALE

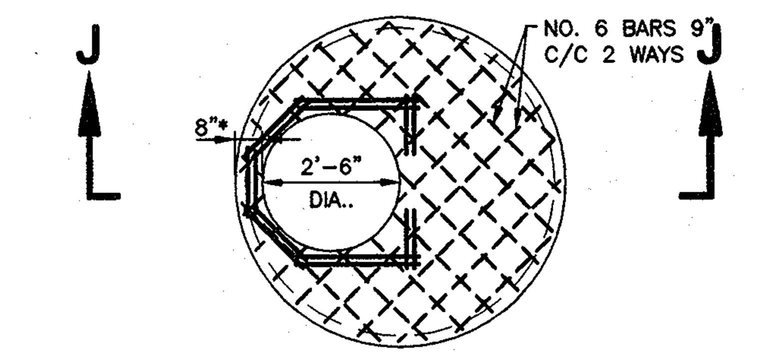

5' Ø MANHOLE FLAT TOP SLAB PLAN

(SHOWN WITHOUT FRAME & COVER

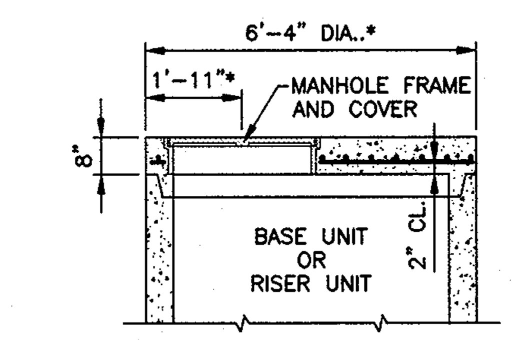

SECTION J-J

5'-0" DIAMETER MANHOLE NOTES:

1. MANHOLES SHALL BE CONSTRUCTED IN ACCORDANCE WITH ASTM C-478 AND THE GENERAL NOTES APPLICABLE TO PRECAST MANHOLES ON STANDARD DETAIL G-5.11.
2. CONCRETE SHALL BE MIX NO. 6 (4500 PSI).
3. WALL REINFORCEMENT FOR BASE AND RISER UNITS SHALL BE REINFORCEMENT BARS OR WELDED WIRE FABRIC WITH A MINIMUM AREA OF 0.23 IN^2/FT. FOR THE 60" DIAMETER MANHOLES. WELDED WIRE FABRIC SHALL CONFORM TO ASTM A-185 AND A-82. REINFORCEMENT BARS SHALL MEET ASTM A-615, GRADE 60.
4. BASE REINFORCEMENT TO BE REINFORCEMENT BARS OR WELDED WIRE FABRIC WITH A MINIMUM AREA OF 0.23 IN^2/FT. THE BASE SHALL BE MONOLITHIC WITH THE BASE UNIT OR JOINTED PER MANUFACTURER'S DESIGN.
5. THE MANUFACTURER SHALL FORM MALE AND FEMALE ENDS OF JOINTS USING THEIR OWN DESIGN. THE JOINTS SHALL BE SEALED BY THE CONTRACTOR AND MADE WATERTIGHT USING RUBBER O-RING GASKETS ASTM A-361 & C-443.
6. MINIMUM DISTANCE BETWEEN PIPE OPENINGS IN MANHOLE WALL SHALL BE 12 INCHES.
7. LIFT HOLES OR LIFT EYES SHALL BE PROVIDED IN EACH SECTION FOR HANDLING.
8. MIX NO. 6 PRECAST CONCRETE OR BRICK CHANNEL SHALL BE PROVIDED AND SHALL SLOPE TOWARD OUTLET AS DIRECTED BY THE ENGINEER.
9. NO MORE THAN ONE 1' HIGH RISER SECTION MAY BE USED PER MANHOLE.
10. MANHOLE INTERIOR LINER REQUIRED. REFER TO "SANITARY SEWER MANHOLES" SECTION OF THE SPECIAL PROVISIONS.

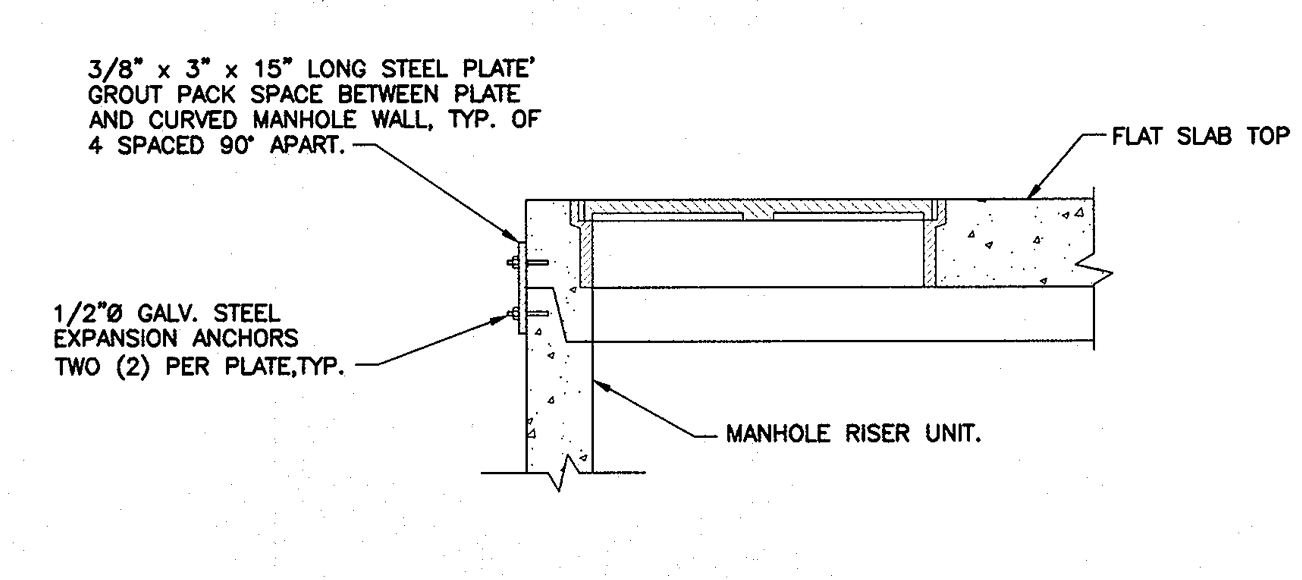

MANHOLE SLAB TOP CONNECTION

NO SCALE

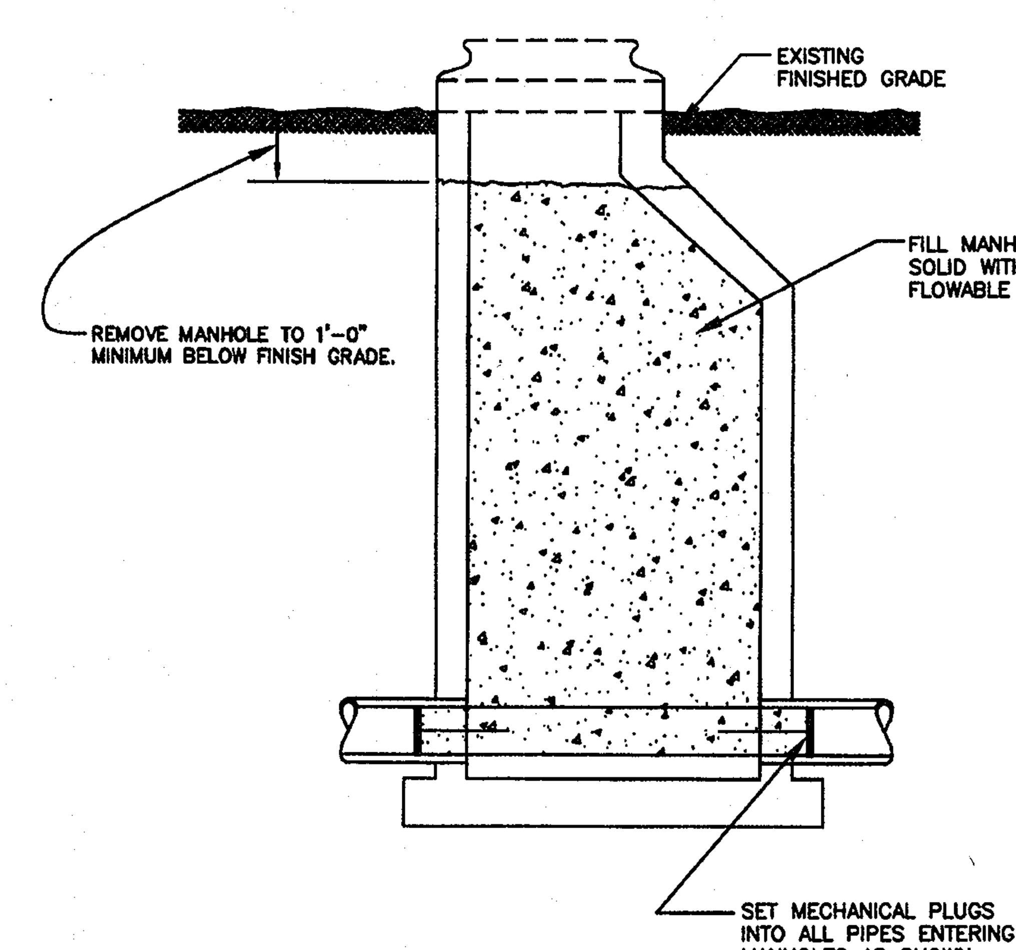

COMPLETE MANHOLE ABANDONMENT

NO SCALE

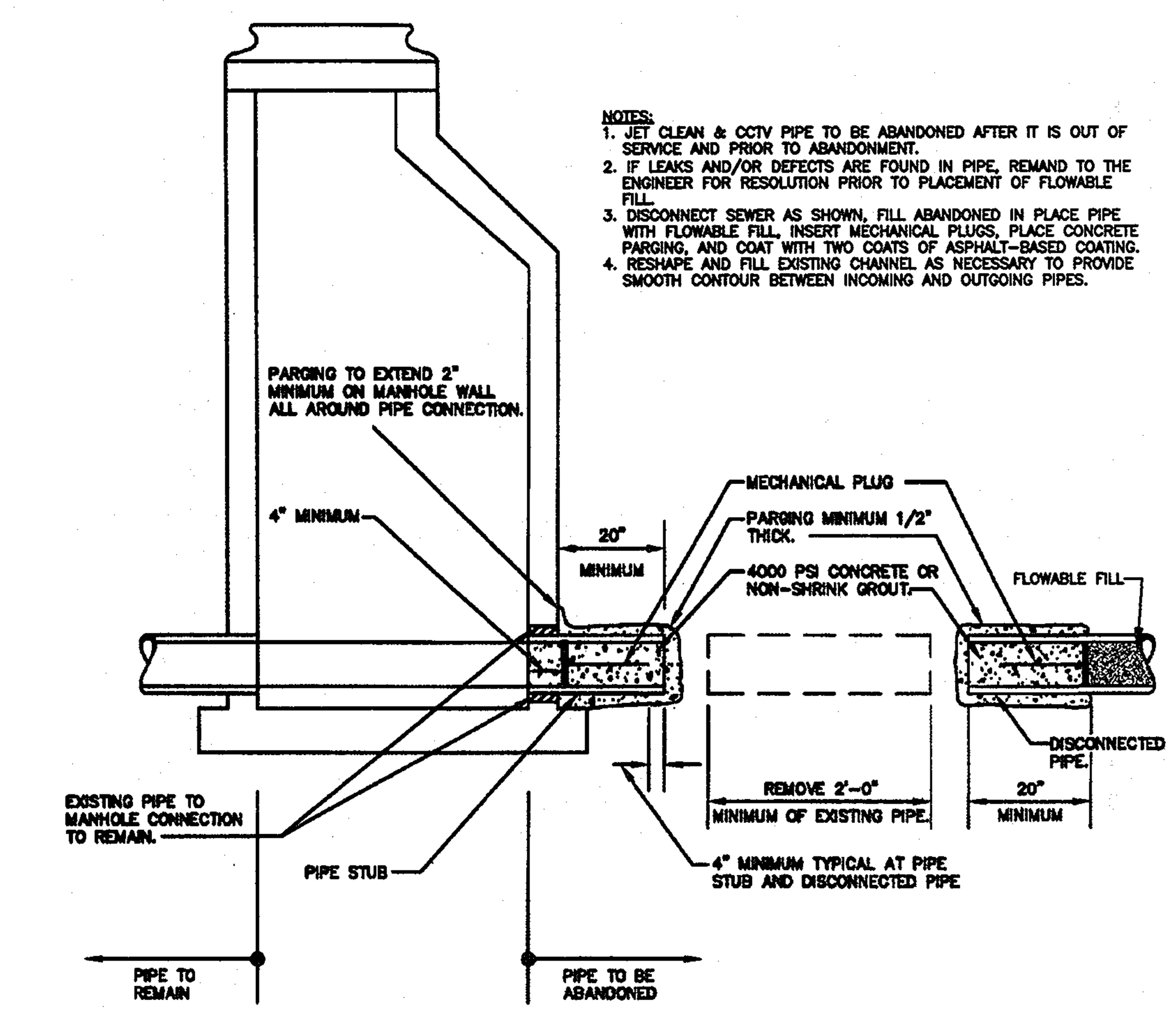

NOTES:
1. JET CLEAN & CCTV PIPE TO BE ABANDONED AFTER IT IS OUT OF SERVICE AND PRIOR TO ABANDONMENT.
2. IF LEAKS AND/OR DEFECTS ARE FOUND IN PIPE, REMAND TO THE ENGINEER FOR RESOLUTION PRIOR TO PLACEMENT OF FLOWABLE FILL.
3. DISCONNECT SEWER AS SHOWN, FILL ABANDONED IN PLACE PIPE WITH FLOWABLE FILL, INSERT MECHANICAL PLUGS, PLACE CONCRETE PARGING, AND COAT WITH TWO COATS OF ASPHALT-BASED COATING.
4. RESHAPE AND FILL EXISTING CHANNEL AS NECESSARY TO PROVIDE SMOOTH CONTOUR BETWEEN INCOMING AND OUTGOING PIPES.

ABANDONMENT OF PIPE AT MANHOLE & LEFT IN PLACE

NO SCALE

AS-BUILTS

DEPARTMENT OF PUBLIC WORKS
HOWARD COUNTY, MARYLAND

DIRECTOR OF PUBLIC WORKS — DATE 6/3/10
CHIEF, BUREAU OF ENGINEERING — DATE 6/2/10
CHIEF, BUREAU OF UTILITIES — DATE 6/2/10
CHIEF, UTILITY DESIGN DIVISION — DATE 6/2/10 WD

Dewberry
Dewberry & Davis LLC
3106 LORD BALTIMORE DRIVE
SUITE 110
BALTIMORE, MD 21244-2662
410.265.9500
FAX: 410.265.8675

STATE OF MARYLAND — THOMAS N. DALLARDO — No. 10966 — REGISTERED PROFESSIONAL ENGINEER

DES: LAL	BY	NO.	REVISIONS	DATE
DRN: CD				
CHK: TND				
DATE: 5.28.10				

MISCELLANEOUS DETAILS

600' SCALE MAP NO. 37, 43 — BLOCK NO. 5, 23

LITTLE PATUXENT PARALLEL INTERCEPTOR

CAPITAL PROJECT S-6175
CONTRACT NO. 20-4540

ELECTION DISTRICT NO. 5 — **HOWARD COUNTY, MARYLAND**

SCALE: SHOWN

SHEET 10 OF 26

Plotted by: (cdallatezzo) on Plot Date: Jun 02, 2010 - 7:10am
Path--> R:\Projects\58125000-Little Patuxent Interceptor\CADD\SECTION X\09-10-0-LPPI X-DETAILS.dwg
Tab-Layout Name: 10 DETAIL
Last Saved: Jun 01, 2010 - 4:02pm
XREFS-->R:\Projects\58125000-Little Patuxent Interceptor\CADD\SECTION X\1-LPPI X -Border.dwg

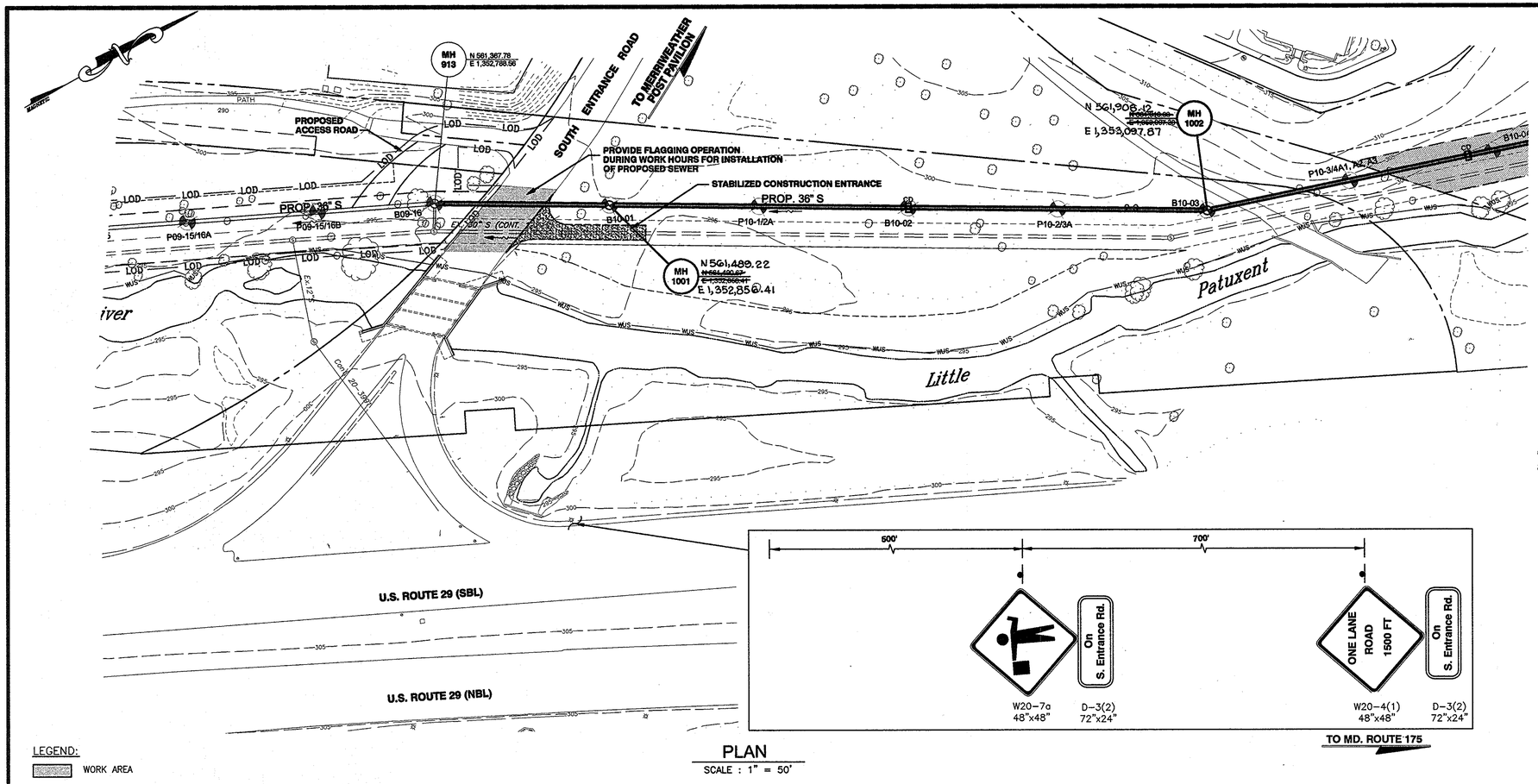

PLAN

SCALE : 1" = 50'

LEGEND:

WORK AREA

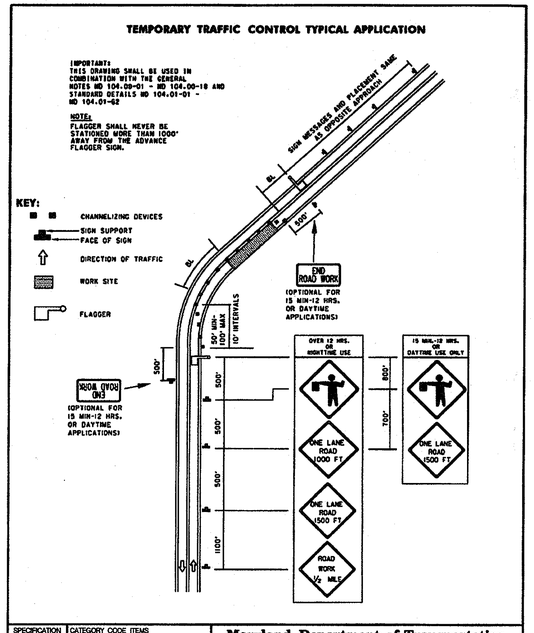

SPECIFICATION 104	CATEGORY CODE ITEMS	Maryland Department of Transportation STATE HIGHWAY ADMINISTRATION STANDARDS FOR HIGHWAYS AND INCIDENTAL STRUCTURES
APPROVED	DIRECTOR - OFFICE OF TRAFFIC AND SAFETY	FLAGGING OPERATION/2-LANE, 2-WAY EQL/LESS THAN 40 MPH
SHA State Highway Administration	APPROVAL & SHA REVISIONS / APPROVAL & FEDERAL HIGHWAY ADMINISTRATION	
	APPROVAL 6-20-03 / APPROVAL 6-23-03	
	REVIEWED / REVIEWED	
	REVIEWED / REVIEWED	
	REVIEWED / REVIEWED	STANDARD NO. MD 104.02-10

GENERAL NOTES FOR TEMPORARY TRAFFIC CONTROL TYPICAL APPLICATIONS (TTCTA)

1.0 INTRODUCTION

1.1 The General Notes (GN) supplement the Standard Details and the TTCTAs, and have been assembled to provide additional direction on the installation and application of traffic control devices shown in these standards. The GNs also provide additional guidelines and other useful information that will facilitate the installation of appropriate temporary traffic controls. Users of these standards shall also comply with provisions of FHWA's Manual on Uniform Traffic Control Devices (MUTCD) and SHA's Supplement to the MUTCD, Standard Specifications for Construction and Materials, and General Provisions for Construction Contracts.

1.2 The TTCTA show the minimum requirements necessary to plan for the safety of workers, motorists, pedestrians, and other system users throughout the temporary traffic control zone for various types of work activities. Typically, more traffic control devices are required for long-term stationary work activities than for short-term stationary work activities. Additional temporary traffic control devices may be necessary because of other traffic factors, such as the roadway's accident history, expected traffic backups, high truck traffic, roadway geometrics or characteristics, and other conditions that may adversely affect the flow of traffic. Users of these TTCTA should review the temporary traffic control setup once in place to ensure that traffic is traveling smoothly throughout the traffic control zone, driver expectancy is being met, and no other adjustments to the temporary traffic control devices are necessary. This review is to be repeated on a regular basis as noted elsewhere.

1.3 The TTCTA address a wide variety of different conditions; however, every situation could not be shown. Therefore, charts have been provided showing standard devices to be used for the proposed work zone activity and the placement of these devices for certain roadway conditions and work durations. The user is expected to combine the information from these charts into a workable traffic control plan.

1.4 In applying these standards and guidelines, questions about applications and interpretations should be referred to the State Highway Administration's Assistant District Engineer-Traffic, County Traffic Engineer, City Traffic Engineer, Public Works Engineer, or other responsible party, who has expertise in traffic engineering and has jurisdiction on the appropriate roadways. Such consultation may be required, for example, to determine the appropriate TTCTA for the work zone condition.

2.0 CHANNELIZING DEVICES

2.1 Taper Formulas:

$L = WS$ for speeds greater than (>) 40 mph.
$L = WS^2/60$ for speeds equal to or less than (≤) 40 mph

Where: L = minimum length of taper (ft)
S = numerical value of prevailing travel speed or speed limit (MPH), whichever is higher, prior to work starting,
W = width of offset (ft)

2.2 Maximum spacing between channelizing devices:
Taper Channelization: equal in feet to the posted speed limit.
Tangent Channelization: equal in feet to twice the posted speed limit.

2.3 At horizontal or vertical curves, channelizing devices should be extended to a point where they are visible to approaching traffic. On two-lane, two-way roadways, a full taper length shall always be provided in advance of curves.

2.4 Drums, not cones, should always be used to form the taper on roadways having a prevailing travel speed greater than 40 MPH.

2.5 Storing channelizing devices within 30 feet of the edge of open section roadway or 15 feet of a closed section roadway along any roadway is prohibited without approval of the Engineer.

2.6 Type 3 object markers (VP-1) are required for barrier flare/tangent points.

2.7 The appropriate channelizing devices (including approved barrier) to separate opposing traffic shall be as shown on the plans or as directed by the Engineer.

2.8 On straight sections of roadway with full dimension center and/or lane lines, but without edge lines, channelizing drums shall be used to delineate the edge of the roadway, except at locations designated by the Engineer. Examples would include roadways with curbs, parking, bicycle lanes, or other markings. The channelizing drums may be spaced up to 500' apart where no undue hazards exist unless otherwise directed by the Engineer. On curves, these spacings shall be reduced to a value equal to the posted speed limit, unless otherwise directed by the Engineer.

2.9 For information on channelizing devices, refer to Standard Nos. MD 104.01-30B and MD 104.01-30C.

3.0 TRAFFIC CONTROL PLANS

3.1 Alternate traffic control plans may be presented to the County Traffic Engineer and/or SHA District Office for approval in conformance with Section 104.01 of the Standard Specifications for Construction and Materials.

3.2 All signs, channelizing devices, and other traffic control devices shall be in conformance with the latest edition of the MUTCD.

3.3 Access to all entrances, driveways, and side streets along S. Entrance Road shall be maintained at all times during work operations. The contractor shall provide advanced notice to business owners for work access entrances/driveways.

3.4 Work on S. Entrance Road shall be completed using a single lane closure with a flagging operation. Refer to Standard No. MD 104.02-10 and this plan for temporary lane closure and flagging operations. Maintain a minimum 10' lane width. Provide recessed steel plates over any open trenches at the end of each working day in order to open S. Entrance Road for 2-way traffic.

3.5 Storage of construction equipment and materials shall be located off the travel lanes at all times. The clear zone width for the work zone along S. Entrance Road is to be a minimum 16'.

3.6 Existing signs located within the work area shall either remain in place or be relocated/maintained as directed by the Engineer.

4.0 SEQUENCE OF CONSTRUCTION

4.1 Install Sediment and Erosion Control measures as indicated on the Sediment and Erosion Control Plans.

4.2 Install temporary traffic channelization devices and temporary signs as indicated on the details and this plan.

4.3 Construct proposed sewer main.

4.4 Construct full-depth patches on S. Entrance Road.

AS-BUILTS

97% SUBMITTAL DATE 5-12-10

DEPARTMENT OF PUBLIC WORKS HOWARD COUNTY, MARYLAND				Dewberry Dewberry & Davis LLC 3106 LORD BALTIMORE DRIVE SUITE 110 BALTIMORE, MD 21244-2662 410.265.9500 FAX: 410.265.8875	DES: LAL DRN: CD CHK: TND DATE: 5.28.10	BY	NO.	REVISIONS	DATE	MAINTENANCE OF TRAFFIC ACCESS ROAD PLAN	LITTLE PATUXENT PARALLEL INTERCEPTOR CAPITAL PROJECT S-6175 CONTRACT NO. 20-4540	SCALE: SHOWN
DIRECTOR OF PUBLIC WORKS	DATE 6/3/10	CHIEF, BUREAU OF ENGINEERING	DATE 6/2/10							600' SCALE MAP NO. 37, 43	BLOCK NO. 5, 23	ELECTION DISTRICT NO. 5 / HOWARD COUNTY, MARYLAND	SHEET 11 OF 26
CHIEF, BUREAU OF UTILITIES	DATE 6/2/10	CHIEF, UTILITY DESIGN DIVISION	DATE 6/2/10 WD										

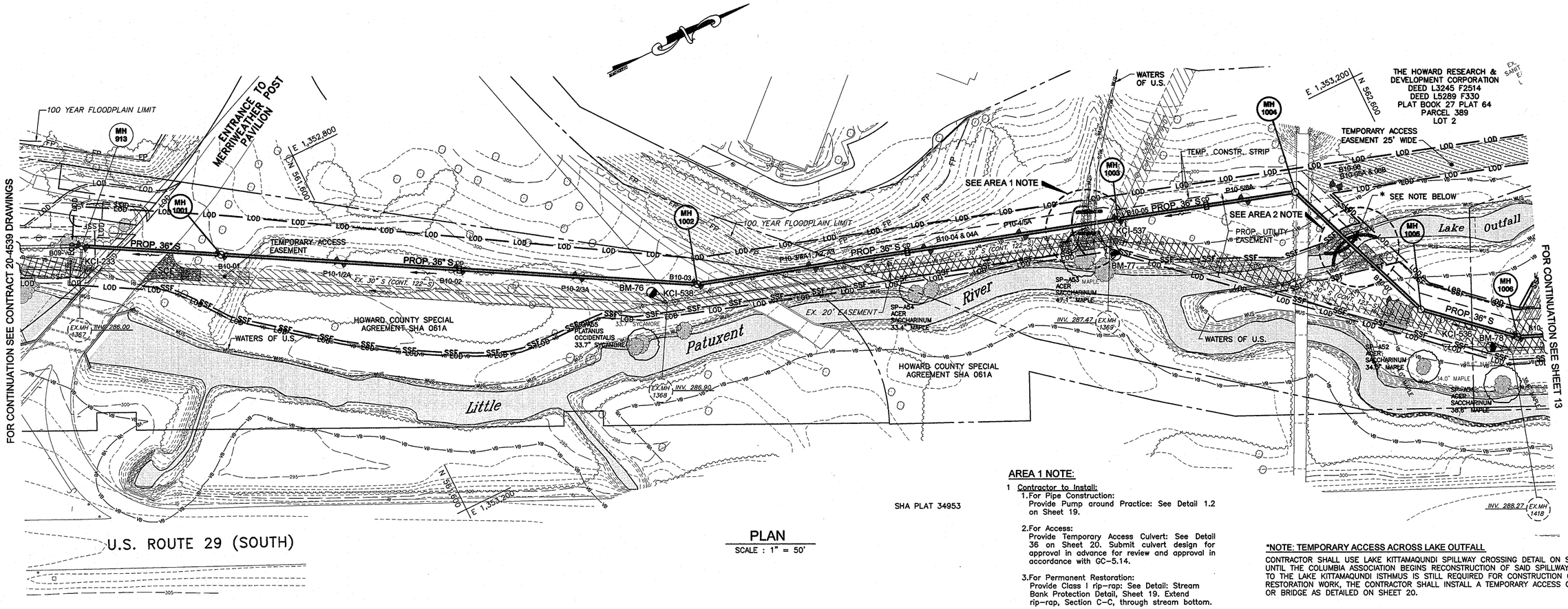

PLAN

SCALE : 1" = 50'

NOTE:
THE LOD IS COINCIDENT WITH THE PROPOSED UTILITY EASEMENT LINE AND SHOWN FIVE (5) FEET OUTSIDE THE ACTUAL LIMIT OF DISTURBANCE FOR CLARITY

RESTORATION NOTES:

1. NON-TIDAL WETLANDS AND ASSOCIATED NON-TIDAL WETLAND BUFFERS WITHIN THE LIMITS OF DISTURBANCE (LOD) HAVE BEEN SHADED ON THIS PLAN FOR CLARITY. FOR WORKING IN THESE AREAS AND FOR RESTORING THEM ONCE THE SEWER INSTALLATION IS COMPLETE, THE CONTRACTOR SHALL ABIDE BY THE REQUIREMENTS OF THE "BEST MANAGEMENT PRACTICES FOR WORKING IN NON-TIDAL WETLANDS, WETLAND BUFFERS, WATERWAYS, AND 100-YEAR FLOODPLAIN" ON SHEET 18.
2. FOR GROUND PREPARATION, SOIL MODIFICATIONS, DISTURBED AREAS OUTSIDE OF THE WETLAND AND WETLAND BUFFER AREAS, SEE SHEET 17. THESE BASIC REQUIREMENTS ARE SUPPLEMENTED BY TECHNICAL SPECIFICATION, SECTION 02260-"FINISH GRADING AND LANDSCAPING," IN THE SPECIFICATIONS, WHICH ADDRESS SPECIFIC SUB-GRADE PREPARATION AND FINISH GRADING REQUIREMENTS.
3. SHADING (SEE LEGEND THIS SHEET) DENOTES AREAS OF NON-TIDAL WETLANDS AND BUFFER WITHIN THE LOD

ESC LEGEND

- SCE — STABILIZED CONSTRUCTION ENTRANCE
- LOD — LIMITS OF DISTURBANCE
- SSF — SUPER SILT FENCE
- DEWATERING BASIN (WPD 1.1)
- PUMP-AROUND PRACTICE (WPD 1.2)
- CULVERT PIPE WITH ACCESS ROAD (MDE H-29-12 & 12A)
- SANDBAG / STONE DIVERSION (WPD 1.5)
- AREA OF NON-TIDAL WETLANDS AND BUFFER WITHIN LOD

AREA 1 NOTE:

1 Contractor to Install:

1. For Pipe Construction:
   Provide Pump around Practice: See Detail 1.2 on Sheet 19.
2. For Access:
   Provide Temporary Access Culvert: See Detail 36 on Sheet 20. Submit culvert design for approval in advance for review and approval in accordance with GC-5.14.
3. For Permanent Restoration:
   Provide Class I rip-rap: See Detail: Stream Bank Protection Detail, Sheet 19. Extend rip-rap, Section C-C, through stream bottom.

AREA 2 NOTE:

2 Contractor to Install:

1. For Pipe Construction:
   Provide Sandbag/Stone Diversion: See Detail 1.5 on Sheet 20.
2. For Access:
   Provide Temporary Access Culvert: (Detail 36) or Temporary Access Bridge (Detail 4.8) See Details on Sheet 20. Submit design for selected practice in accordance with GC-5.14.
3. For Permanent Restoration:
   Provide Class III rip-rap: See Detail: Stream Bank/Invert Protection, Sheet 19.

*NOTE: TEMPORARY ACCESS ACROSS LAKE OUTFALL

CONTRACTOR SHALL USE LAKE KITTAMAQUNDI SPILLWAY CROSSING DETAIL ON SHEET 13, UNTIL THE COLUMBIA ASSOCIATION BEGINS RECONSTRUCTION OF SAID SPILLWAY. IF ACCESS TO THE LAKE KITTAMAQUNDI ISTHMUS IS STILL REQUIRED FOR CONSTRUCTION OR RESTORATION WORK, THE CONTRACTOR SHALL INSTALL A TEMPORARY ACCESS CULVERT OR BRIDGE AS DETAILED ON SHEET 20.

AS-BUILTS
JAN 07 2013

ESC
2 OF 10

DEPARTMENT OF PUBLIC WORKS
HOWARD COUNTY, MARYLAND

DIRECTOR OF PUBLIC WORKS — DATE 6/3/10
CHIEF, BUREAU OF ENGINEERING — DATE 6/2/10
CHIEF, BUREAU OF UTILITIES — DATE 6/2/10
CHIEF, UTILITY DESIGN DIVISION — DATE 6/2/10 WD

Dewberry
Dewberry & Davis LLC
3106 LORD BALTIMORE DRIVE
SUITE 110
BALTIMORE, MD 21244-2662
410.265.6500
FAX: 410.265.8875

STATE OF MARYLAND — THOMAS N. DAVIS — No. 10963 — REGISTERED PROFESSIONAL ENGINEER

DES: LAL
DRN: CD
CHK: TND
DATE: 5.28.10

BY	NO.	REVISIONS	DATE

EROSION AND SEDIMENT CONTROL PLAN

600' SCALE MAP NO. 37, 43 — BLOCK NO. 5, 23

LITTLE PATUXENT PARALLEL INTERCEPTOR
CAPITAL PROJECT S-6175
CONTRACT NO. 20-4540

ELECTION DISTRICT NO. 5 — HOWARD COUNTY, MARYLAND

SCALE: SHOWN

SHEET 12 OF 26

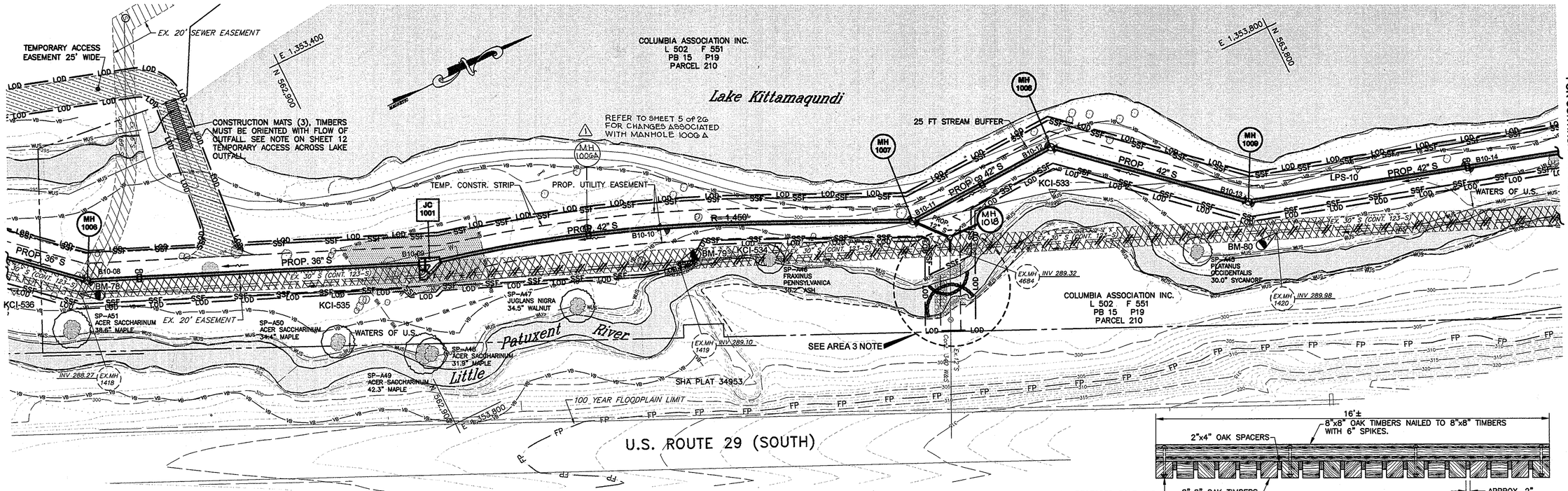

PLAN

SCALE : 1" = 50'

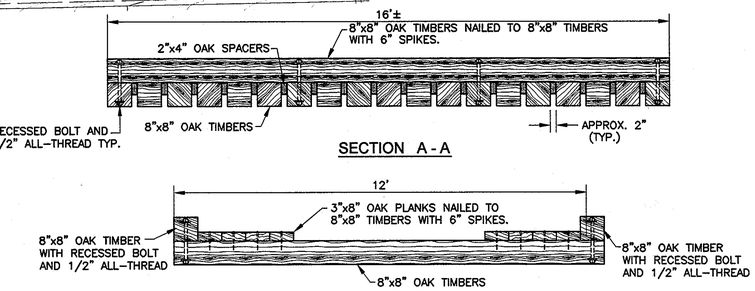

SECTION A - A

SECTION B - B

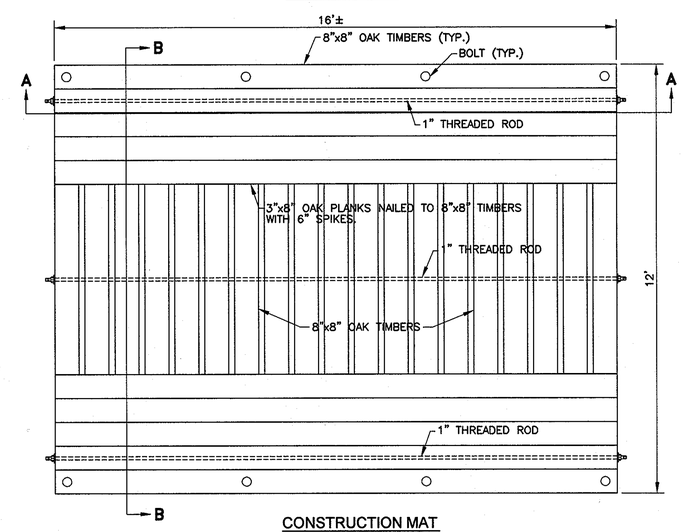

CONSTRUCTION MAT

SCALE 1/2" = 1'
(3 NEEDED)

NOTE:
THE LOD IS COINCIDENT WITH THE PROPOSED UTILITY EASEMENT LINE AND SHOWN FIVE (5) FEET OUTSIDE THE ACTUAL LIMIT OF DISTURBANCE FOR CLARITY

AREA 3 NOTE:

3 Contractor to Install:
1. For Stream Bank/Invert Protection Installation:
   Provide Sandbag/Stone Diversion: See Detail 1.5 on Sheet 20.
2. For Access:
   Provide Temporary Access Culvert: (Detail 36) or Temporary Access Bridge (Detail 4.8.) See Details on Sheet 20. Submit design for selected practice in advance for review and approval in accordance with GC-5.14.
3. For Permanent Restoration:
   Provide Class III rip-rap: See Detail: Stream Bank/Invert Protection, Sheet 19.

ESC LEGEND

- STABILIZED CONSTRUCTION ENTRANCE
- LOD — LIMITS OF DISTURBANCE
- SSF — SUPER SILT FENCE
- DEWATERING BASIN (WPD 1.1)
- PUMP-AROUND PRACTICE (WPD 1.2)
- CULVERT PIPE WITH ACCESS ROAD (MDE H-29-12 & 12A)
- SANDBAG / STONE DIVERSION (WPD 1.5)
- CONSTRUCTION MAT
- AREA OF NON-TIDAL WETLANDS AND BUFFER WITHIN LOD

RESTORATION NOTES:

1. NON-TIDAL WETLANDS AND ASSOCIATED NON-TIDAL WETLAND BUFFERS WITHIN THE LIMITS OF DISTURBANCE (LOD) HAVE BEEN SHADED ON THIS PLAN FOR CLARITY. FOR WORKING IN THESE AREAS AND FOR RESTORING THEM ONCE THE SEWER INSTALLATION IS COMPLETE, THE CONTRACTOR SHALL ABIDE BY THE REQUIREMENTS OF THE "BEST MANAGEMENT PRACTICES FOR WORKING IN NON-TIDAL WETLANDS, WETLAND BUFFERS, WATERWAYS, AND 100-YEAR FLOODPLAIN" ON SHEET 18.
2. FOR GROUND PREPARATION, SOIL MODIFICATIONS, DISTURBED AREAS OUTSIDE OF THE WETLAND AND WETLAND BUFFER AREAS, REFER TO SHEET 17. THESE BASIC REQUIREMENTS ARE SUPPLEMENTED BY TECHNICAL SPECIFICATION, SECTION 02260-"FINISH GRADING AND LANDSCAPING," IN THE SPECIFICATIONS, WHICH ADDRESS SPECIFIC SUB-GRADE PREPARATION AND FINISH GRADING REQUIREMENTS.
3. SHADING (SEE LEGEND THIS SHEET) DENOTES AREAS OF NON-TIDAL WETLANDS AND BUFFER WITHIN THE LOD

AS-BUILTS
JUN 17 2010

ESC
3 OF 10

DEPARTMENT OF PUBLIC WORKS
HOWARD COUNTY, MARYLAND

DIRECTOR OF PUBLIC WORKS — DATE 6/2/10
CHIEF, BUREAU OF ENGINEERING — DATE 6/2/10
CHIEF, BUREAU OF UTILITIES — DATE 6/2/10
CHIEF, UTILITY DESIGN DIVISION — DATE 6/2/10 WD

Dewberry
Dewberry & Davis LLC
3106 LORD BALTIMORE DRIVE
SUITE 110
BALTIMORE, MD 21244-2662
410.265.9500
FAX: 410.265.8875

STATE OF MARYLAND — THOMAS N. DALTON — No. 10968 — REGISTERED PROFESSIONAL ENGINEER

DES: LAL
DRN: CD
CHK: TND
DATE: 5.28.10

BY	NO.	REVISIONS	DATE
LAL	1	ADD MH 1006A	5-31-11

EROSION AND SEDIMENT CONTROL PLAN

600' SCALE MAP NO. 37, 43 — BLOCK NO. 5, 23

LITTLE PATUXENT PARALLEL INTERCEPTOR
CAPITAL PROJECT S-6175
CONTRACT NO. 20-4540

ELECTION DISTRICT NO. 5 — HOWARD COUNTY, MARYLAND

SCALE: SHOWN

SHEET 13 OF 26

AREA 4 NOTE:

4 Contractor to Install:
1. For Pipe Construction:
   Provide Sandbag/Stone Diversion: See Detail 1.5 Sheet 20.
2. For Permanent Restoration:
   Provide Class III rip-rap: See Detail: Stream Bank/Invert Protection, Sheet 19.

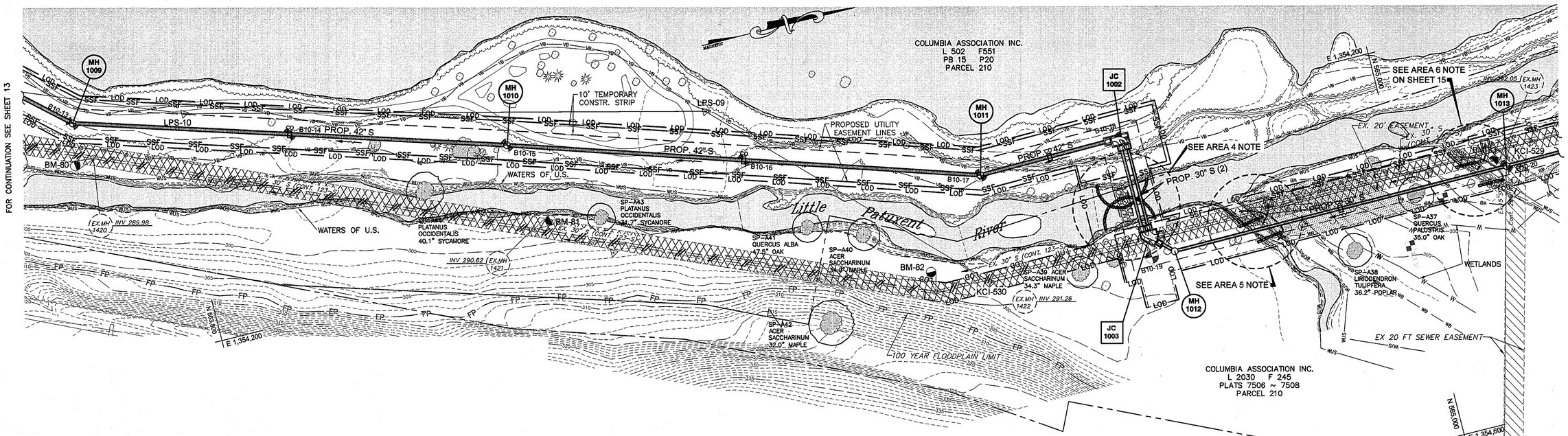

PLAN

SCALE : 1" = 50'

AREA 5 NOTE:

5 Contractor to Install:
1. For Pipe Construction:
   Provide Pump Around Practice: See Detail 1.2– Sheet 19.
2. For Access:
   Provide Temporary Access Culvert: See Detail 36, Sheet 20. Submit design for approval in advance for review and approval in accordance with GC–5.14.
3. For Permanent Restoration:
   Provide Class II rip-rap: See Detail: Stream Bank/Invert Protection, Sheet 19.

NOTE:
THE LOD IS COINCIDENT WITH THE PROPOSED UTILITY EASEMENT LINE AND SHOWN FIVE (5) FEET OUTSIDE THE ACTUAL LIMIT OF DISTURBANCE FOR CLARITY

ESC LEGEND

- SCE — STABILIZED CONSTRUCTION ENTRANCE
- LOD — LIMITS OF DISTURBANCE
- SSF — SUPER SILT FENCE
- DEWATERING BASIN (WPD 1.1)
- PUMP–AROUND PRACTICE (WPD 1.2)
- CULVERT PIPE WITH ACCESS ROAD (MDE H–29–12 &12A)
- SANDBAG / STONE DIVERSION (WPD 1.5)
- AREA OF NON–TIDAL WETLANDS AND BUFFER WITHIN LOD

RESTORATION NOTES:

1. NON–TIDAL WETLANDS AND ASSOCIATED NON–TIDAL WETLAND BUFFERS WITHIN THE LIMITS OF DISTURBANCE (LOD) HAVE BEEN SHADED ON THIS PLAN FOR CLARITY. FOR WORKING IN THESE AREAS AND FOR RESTORING THEM ONCE THE SEWER INSTALLATION IS COMPLETE, THE CONTRACTOR SHALL ABIDE BY THE REQUIREMENTS OF THE "BEST MANAGEMENT PRACTICES FOR WORKING IN NON–TIDAL WETLANDS, WETLAND BUFFERS, WATERWAYS, AND 100–YEAR FLOODPLAIN" ON SHEET 18.
2. FOR GROUND PREPARATION, SOIL MODIFICATIONS, DISTURBED AREAS OUTSIDE OF THE WETLAND AND WETLAND BUFFER AREAS, REFER TO SHEET 17. THESE BASIC REQUIREMENTS ARE SUPPLEMENTED BY TECHNICAL SPECIFICATION, SECTION 02260–"FINISH GRADING AND LANDSCAPING," IN THE SPECIFICATIONS, WHICH ADDRESS SPECIFIC SUB–GRADE PREPARATION AND FINISH GRADING REQUIREMENTS.
3. SHADING (SEE LEGEND THIS SHEET) DENOTES AREAS OF NON–TIDAL WETLANDS AND BUFFER WITHIN THE LOD

AS-BUILTS
AUG 0 7 2013

ESC 4 OF 10

DEPARTMENT OF PUBLIC WORKS
HOWARD COUNTY, MARYLAND

DIRECTOR OF PUBLIC WORKS	6/3/10 DATE	CHIEF, BUREAU OF ENGINEERING	6/2/10 DATE
CHIEF, BUREAU OF UTILITIES	6/2/10 DATE	CHIEF, UTILITY DESIGN DIVISION	6/2/10 DATE WD

Dewberry
Dewberry & Davis LLC
3106 LORD BALTIMORE DRIVE
SUITE 110
BALTIMORE, MD 21244-2662
410.265.9500
FAX: 410.265.8875

STATE OF MARYLAND — THOMAS N. CALLAWAY — No. 10962 — REGISTERED PROFESSIONAL ENGINEER

DES: LAL
DRN: CD
CHK: TND
DATE: 5.28.10

BY	NO.	REVISIONS	DATE

EROSION AND SEDIMENT CONTROL PLAN

600' SCALE MAP NO. 37, 43 BLOCK NO. 5, 23

LITTLE PATUXENT PARALLEL INTERCEPTOR
CAPITAL PROJECT S-6175
CONTRACT NO. 20-4540

ELECTION DISTRICT NO. 5 HOWARD COUNTY, MARYLAND

SCALE: SHOWN

SHEET 14 OF 26

Plotted by: (jcasteel) on Plot Date: Jun 01, 2010 - 3:20pm
Plotted Drawing: XREFS-->R:\Projects\S8125000-Little Patuxent Interceptor\CADD\SECTION X\14-0-LPPI X - ESC - PLANS SHEET 14.dwg
Tab Layout Name: ESC PLAN SHEET 14
XREFS-->R:\Projects\S8125000-Little Patuxent Interceptor\CADD\SECTION X\1-LPPI X - Bndcr.dwg; XREFS-->R:\Projects\S8125000-Little Patuxent Interceptor\CADD\SECTION X\1-LPPI X - proposed boring plan.dwg; XREFS-->R:\Projects\S8125000-Little Patuxent Interceptor\CADD\associatedpp.dwg; XREFS-->R:\Projects\S8125000-Little Patuxent Interceptor\CADD\wetlands_trees\little_patuxent_w-

AREA 6 NOTE:

6 Contractor to Install:
1. For Pipe Construction:
   Provide Pump Around Practice: See Detail 1.2–Sheet 19.
2. For Access:
   Provide Temporary Access Culvert: See Detail 36, Sheet 20. Submit design for approval in advance for review and approval in accordance with GC–5.14.
3. For Permanent Restoration:
   Provide Class I rip–rap: See Detail: Stream Bank Protection, Sheet 19. Extend rip–rap, Section C–C, through stream bottom.

AREA 7 NOTE:

7 Contractor to Install:
1. For Pipe Construction:
   Provide Pump Around Practice: See Detail 1.2, Sheet 19.
2. For Access:
   Provide Temporary Access Culvert: See Detail 36, Sheet 20. Submit design for approval in advance for review and approval in accordance with GC–5.14.
3. For Permanent Restoration:
   Provide Class II rip–rap: See Detail: Stream Bank Protection, Sheet 19. Extend rip–rap, Section C–C, through stream bottom.

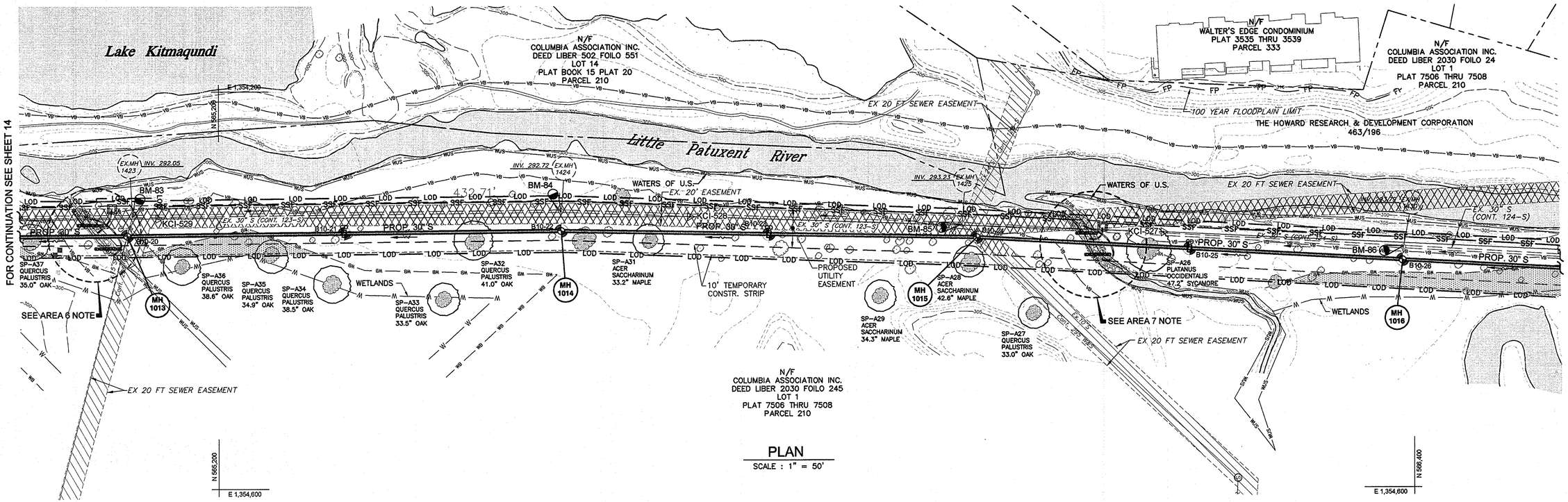

PLAN

SCALE : 1" = 50'

NOTE:
THE LOD IS COINCIDENT WITH THE PROPOSED UTILITY EASEMENT LINE AND SHOWN FIVE (5) FEET OUTSIDE THE ACTUAL LIMIT OF DISTURBANCE FOR CLARITY

ESC LEGEND

- SCE — STABILIZED CONSTRUCTION ENTRANCE
- LOD — LIMITS OF DISTURBANCE
- SSF — SUPER SILT FENCE
- DEWATERING BASIN (WPD 1.1)
- PUMP–AROUND PRACTICE (WPD 1.2)
- CULVERT PIPE WITH ACCESS ROAD (MDE H–29–12 &12A)
- SANDBAG / STONE DIVERSION (WPD 1.5)
- AREA OF NON–TIDAL WETLANDS AND BUFFER WITHIN LOD

RESTORATION NOTES:
1. NON–TIDAL WETLANDS AND ASSOCIATED NON–TIDAL WETLAND BUFFERS WITHIN THE LIMITS OF DISTURBANCE (LOD) HAVE BEEN SHADED ON THIS PLAN FOR CLARITY. FOR WORKING IN THESE AREAS AND FOR RESTORING THEM ONCE THE SEWER INSTALLATION IS COMPLETE, THE CONTRACTOR SHALL ABIDE BY THE REQUIREMENTS OF THE "BEST MANAGEMENT PRACTICES FOR WORKING IN NON–TIDAL WETLANDS, WETLAND BUFFERS, WATERWAYS, AND 100–YEAR FLOODPLAIN" ON SHEET 18.
2. FOR GROUND PREPARATION, SOIL MODIFICATIONS, DISTURBED AREAS OUTSIDE OF THE WETLAND AND WETLAND BUFFER AREAS, REFER TO SHEET 17. THESE BASIC REQUIREMENTS ARE SUPPLEMENTED BY TECHNICAL SPECIFICATION, SECTION 02260–"FINISH GRADING AND LANDSCAPING," IN THE SPECIFICATIONS, WHICH ADDRESS SPECIFIC SUB–GRADE PREPARATION AND FINISH GRADING REQUIREMENTS.
3. SHADING (SEE LEGEND THIS SHEET) DENOTES AREAS OF NON–TIDAL WETLANDS AND BUFFER WITHIN THE LOD

AS-BUILTS
JUN 17 2010

ESC
5 OF 10

DEPARTMENT OF PUBLIC WORKS
HOWARD COUNTY, MARYLAND

DIRECTOR OF PUBLIC WORKS — DATE 6/8/10
CHIEF, BUREAU OF ENGINEERING — DATE 6/2/10
CHIEF, BUREAU OF UTILITIES — DATE 6/8/10
CHIEF, UTILITY DESIGN DIVISION — DATE 6/2/10 WD

Dewberry
Dewberry & Davis LLC
3106 LORD BALTIMORE DRIVE
SUITE 110
BALTIMORE, MD 21244-2662
410.265.9500
FAX: 410.265.8875

STATE OF MARYLAND — THOMAS N. DALLAVALLE — No. 30905 — REGISTERED PROFESSIONAL ENGINEER

DES: LAL
DRN: CD
CHK: TND
DATE: 5.28.10

BY	NO.	REVISIONS	DATE

EROSION AND SEDIMENT CONTROL PLAN

600' SCALE MAP NO. 37, 43 — BLOCK NO. 5, 23

LITTLE PATUXENT PARALLEL INTERCEPTOR
CAPITAL PROJECT S-6175
CONTRACT NO. 20-4540

ELECTION DISTRICT NO. 5 — HOWARD COUNTY, MARYLAND

SCALE: SHOWN

SHEET 15 OF 26

Plotted by (User) on Plot Date: Jun 01, 2010 – 3:58pm
Plot Layout Name: ESC-PLAN SHEET 15 Layout Name: ESC-PLAN SHEET 15
Tab: Layout Name: ESC-PLAN SHEET 15
XREFS-->J:\Projects\S812500-Little Patuxent Interceptor\CADD\SECTION X\1-LPPI X -Border.dwg, XREFS-->J:\Projects\S812500-Little Patuxent Interceptor\CADD\Associatlpp.dwg, XREFS-->J:\Projects\S812500-Little Patuxent Interceptor\CADD\Lt. Property lds-Lines 102008.dwg, XREFS-->J:\Projects\S812500-Little Patuxent Interceptor\CADD\wetlands_trees\Variable_feb2007\

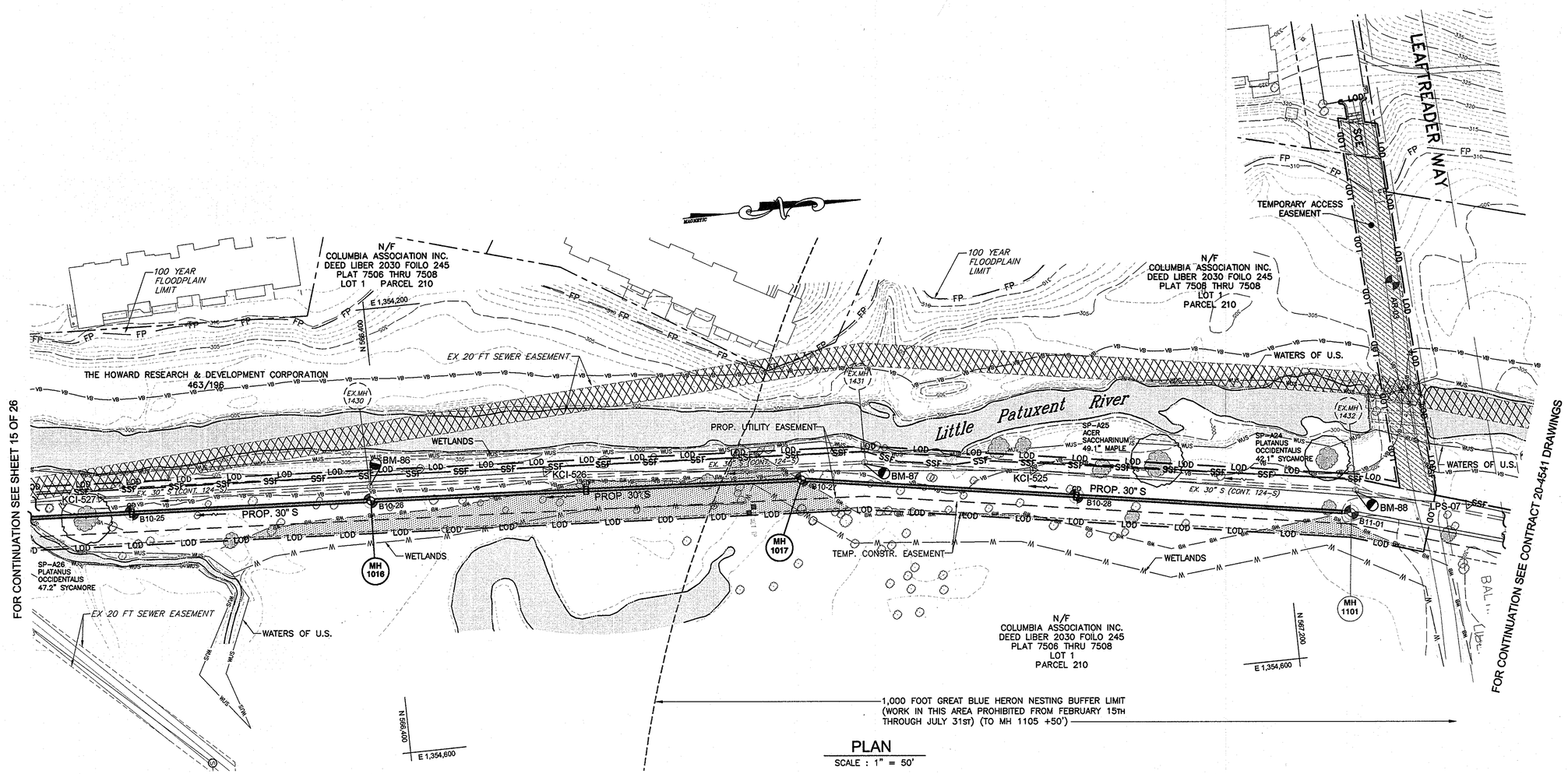

PLAN

SCALE : 1" = 50'

ESC LEGEND

- SCE — STABILIZED CONSTRUCTION ENTRANCE
- LOD — LIMITS OF DISTURBANCE
- SSF — SUPER SILT FENCE
- DEWATERING BASIN (WPD 1.1)
- PUMP-AROUND PRACTICE (WPD 1.2)
- CULVERT PIPE WITH ACCESS ROAD (MDE H-29-12 & 12A)
- SANDBAG / STONE DIVERSION (WPD 1.5)
- AREA OF NON-TIDAL WETLANDS AND BUFFER WITHIN LOD

NOTE:
THE LOD IS COINCIDENT WITH THE PROPOSED UTILITY EASEMENT LINE AND SHOWN FIVE (5) FEET OUTSIDE THE ACTUAL LIMIT OF DISTURBANCE FOR CLARITY

RESTORATION NOTES:

1. NON-TIDAL WETLANDS AND ASSOCIATED NON-TIDAL WETLAND BUFFERS WITHIN THE LIMITS OF DISTURBANCE (LOD) HAVE BEEN SHADED ON THIS PLAN FOR CLARITY. FOR WORKING IN THESE AREAS AND FOR RESTORING THEM ONCE THE SEWER INSTALLATION IS COMPLETE, THE CONTRACTOR SHALL ABIDE BY THE REQUIREMENTS OF THE "BEST MANAGEMENT PRACTICES FOR WORKING IN NON-TIDAL WETLANDS, WETLAND BUFFERS, WATERWAYS, AND 100-YEAR FLOODPLAIN" ON SHEET 18.
2. FOR GROUND PREPARATION, SOIL MODIFICATIONS, DISTURBED AREAS OUTSIDE OF THE WETLAND AND WETLAND BUFFER AREAS, REFER TO SHEET 17. THESE BASIC REQUIREMENTS ARE SUPPLEMENTED BY TECHNICAL SPECIFICATION, SECTION 02260-"FINISH GRADING AND LANDSCAPING," IN THE SPECIFICATIONS, WHICH ADDRESS SPECIFIC SUB-GRADE PREPARATION AND FINISH GRADING REQUIREMENTS.
3. SHADING (SEE LEGEND THIS SHEET) DENOTES AREAS OF NON-TIDAL WETLANDS AND BUFFER WITHIN THE LOD

AS-BUILTS
JUN 17 2010

ESC
6 OF 10

DEPARTMENT OF PUBLIC WORKS
HOWARD COUNTY, MARYLAND

for DIRECTOR OF PUBLIC WORKS — DATE 6/3/10
CHIEF, BUREAU OF ENGINEERING — DATE 6/2/10
CHIEF, BUREAU OF UTILITIES — DATE 6/2/10
CHIEF, UTILITY DESIGN DIVISION — DATE 6/2/10 WD

Dewberry
Dewberry & Davis LLC
3106 LORD BALTIMORE DRIVE
SUITE 110
BALTIMORE, MD 21244-2662
410.265.9500
FAX: 410.265.8875

STATE OF MARYLAND — THOMAS N. DALLAVO — No. 10965 — PROFESSIONAL ENGINEER

DES: LAL
DRN: CD
CHK: TND
DATE: 5.28.10

BY	NO.	REVISIONS	DATE

EROSION AND SEDIMENT CONTROL PLAN

600' SCALE MAP NO. 37, 43 — BLOCK NO. 5, 23

LITTLE PATUXENT PARALLEL INTERCEPTOR
CAPITAL PROJECT S-6175
CONTRACT NO. 20-4540

ELECTION DISTRICT NO. 5 — HOWARD COUNTY, MARYLAND

SCALE: SHOWN

SHEET 16 OF 26

Plotted by: (rcnd) on PSU. Date: Jun 01, 2010 - 4:22pm
Plot Scale: 1:1 Plot Offset: 0,0 Plot Layout: Plot Layout Name: ESC PLAN SHEET 16
Tab-Layout Name: ESC PLAN SHEET 16
XREFS-->J:\Projects\S815250D0-Little Patuxent Interceptor\CADD\SECTION X\1-0-LPPI X - ESC - PLANS SHEET 16.dwg
XREFS-->J:\Projects\S815250D0-Little Patuxent Interceptor\CADD\SECTION X\1-LPPI X -Border.dwg; XREFS-->J:\Projects\S815250D0-Little Patuxent Interceptor\CADD\Easements\ep-dwg; XREFS-->J:\Projects\S815250D0-Little Patuxent Interceptor\CADD\wetlands_lines\wetlands_4ft2007\

STANDARDS AND SPECIFICATIONS FOR VEGETATIVE STABILIZATION

Section I – Vegetative Stabilization Methods and Materials

A. Site Preparation

i. Install erosion and sediment control structures (either temporary or permanent) such as diversions, grade stabilization structures, berms, waterways, or sediment control basins.

ii. Perform all grading operations at right angles to the slope. Final grading and shaping is not usually necessary for temporary seeding.

iii. Schedule required soil tests to determine soil amendment composition and application rates for sites having disturbed area over 5 acres.

B. Soil Amendments (Fertilizer and Lime Specifications)

i. Soil tests must be performed to determine the exact ratios and application rates for both lime and fertilizer on sites having disturbed areas over 5 acres. Soil analysis may be performed by the University of Maryland or a recognized commercial laboratory. Soil samples taken for engineering purposes may also be used for chemical analyses.

ii. Fertilizers shall be uniform in composition, free flowing and suitable for accurate application by approved equipment. Manure may be substituted for fertilizer with prior approval from the appropriate approval authority. Fertilizers shall all be delivered to the site fully labeled according to the applicable state fertilizer laws and shall bear the name, trade name or trademark and warrantee of the producer.

iii. Lime materials shall be ground limestone (hydrated or burnt lime may be substituted) which contains at least 50% total oxides (calcium oxide plus magnesium oxide). Limestone shall be ground to such fineness that at least 50% will pass through a #100 mesh sieve and 98–100% will pass through a #20 mesh sieve.

iv. Incorporate lime and fertilizer into the top 3– 5" of soil by disking or other suitable means.

C. Seedbed Protection

i. Temporary Seeding

a. Seedbed preparation shall consist of loosening soil to a depth of 3" to 5" by means of suitable agricultural or construction equipment, such as disc harrows or chisel plows or rippers mounted on construction equipment. After the soil is loosened it should not be rolled or dragged smooth but left in the roughened condition. Sloped areas (greater than 3:1) should be tracked leaving the surface in an irregular condition with ridges running parallel to the contour of the slope.

b. Apply fertilizer and lime as prescribed on the plans.

c. Incorporate lime and fertilizer into the top 3 – 5" of soil by disking or other suitable means.

ii. Permanent Seeding

a. Minimum soil conditions required for permanent vegetative establishment:

1. Soil pH shall be between 6.0 and 7.0.
2. Soluble salts shall be less than 500 parts per million (ppm).
3. The soil shall contain less than 40% clay but enough fine grained material (>30% silt plus clay) to provide the capacity to hold a moderate amount of moisture. An exception is if lovegrass or serecia lespedeza is to be planted, then a sandy soil (<30% silt plus clay) would be acceptable.
4. Soil shall contain 1.5% minimum organic matter by weight.
5. Soil must contain sufficient pore space to permit adequate root penetration.
6. If these conditions cannot be met by soils on site, adding topsoil is required in accordance with Section 21 Standard and Specification for Topsoil.

b. Areas previously graded in conformance with the drawings shall be maintained in a true and even grade, then scarified or otherwise loosened to a depth of 3 – 5 " to permit bonding of the topsoil to the surface area and to create horizontal erosion check slots to prevent topsoil from sliding down a slope.

c. Apply soil amendments as per soil tests or as included on the plans.

d. Mix soil amendments into the top 3 – 5" of topsoil by disking or other suitable means. Lawn areas should be raked to smooth the surface, remove large objects like stones and branches, and ready the area for seed application. Where site conditions will not permit normal seedbed preparation, loosen surface soil by dragging with a heavy chain or other equipment to roughen the surface. Steep slopes (steeper than 3:1) should be tracked by a dozer leaving the soil in an irregular condition with ridges running parallel to the contour of the slope. The top 1"– 3" of soil should be loose and friable. Seedbed loosening may not be necessary on newly disturbed areas.

D. Seed Specifications

i. All seed must meet the requirements of the Maryland State Seed Law. All seed shall be subject to re-testing by a recognized seed laboratory. All seed used shall have been tested within the 6 months immediately preceding the date of sowing such material on this job.

Note: Seed tags shall be made available to the inspector to verify type and rate of seed used.

ii. Inoculant – The inoculant for treating legume seed in the seed mixtures shall be a pure culture of nitrogen–fixing bacteria prepared specifically for the species. Inoculants shall not be used later than the date indicated on the container. Add fresh inoculant as directed on package. Use four times the recommended rate when hydroseeding. Note: It is very important to keep inoculant as cool as possible until used. Temperatures above 75–80° F. can weaken bacteria and make the inoculant less effective.

E. Methods of Seeding

i. Hydroseeding: Apply seed uniformly with hydroseeder (slurry includes seed and fertilizer), broadcast or drop seeder, or a cultipacker seeder.

a. If fertilizer is being applied at the time of seeding, the application rate amounts will not exceed the following: nitrogen; maximum of 100 lbs. per acre total of soluble nitrogen; P205 (phosphorous): 200 lbs/ac; K20 (potassium); 200 lbs/ac.

b. Lime – use only ground agricultural limestone, (Up to 3 tons per acre may be applied by hydroseeding). Normally, not more than 2 tons are applied by hydroseeding at any one time. Do not use burnt or hydrated lime when hydroseeding.

c. Seed and fertilizer shall be mixed on site and seeding shall be done immediately and without interruption.

ii. Dry Seeding: This includes use of conventional drop or broadcast spreaders.

a. Seed spread dry shall be incorporated into the subsoil at the rates prescribed on the Temporary or Permanent Seeding Summaries or Tables 25 or 26. The seeded area shall then be rolled with a weighted roller to provide good seed to soil contact.

b. Where practical, seed should be applied in two directions perpendicular to each other. Apply half the seeding rate in each direction.

iii. Drill or Cultipacker Seeding : Mechanized seeders that apply and cover seed with soil.

a. Cultipacking seeders are required to bury the seed in such a fashion as to provide at least 1/4 inch of soil covering. Seedbed must be firm after planting.

b. Where practical, seed should be applied in two directions perpendicular to each other. Apply half the seeding rate in each direction.

F. Mulch Specifications (in order of preference)

i. Straw shall consist of thoroughly threshed wheat, rye or oat straw, reasonably bright in color, and shall not be musty, moldy, caked, decayed, or excessively dusty and shall be free of noxious weed seeds as specified in the Maryland Seed Law.

ii. Wood Cellulose Fiber Mulch (WCFM)

a. WCFM shall consist of specially prepared wood cellulose processed into a uniform fibrous physical state.

b. WCFM shall be dyed green or contain a green dye in the package that will provide an appropriate color to facilitate visual inspection of the uniformly spread slurry.

c. WCFM, including dye, shall contain no germination or growth inhibiting factors.

d. WCFM materials shall be manufactured and processed in such a manner that the wood cellulose fiber mulch will remain in uniform suspension in water under agitation and will blend with seed, fertilizer and other additives to form a homogeneous slurry. The mulch material shall form a blotter–like ground cover, on application having moisture absorption and percolation properties and shall cover and hold grass seed in contact with the soil without inhibiting the growth of the grass seedlings.

e. WCFM material shall contain no elements or compounds at concentration levels that will be phyto–toxic.

f. WCFM must conform to the following physical requirements: fiber length to approximately 10 mm., diameter approximately 1 mm., pH range of 4.0 to 8.5, ash content of 1.6% maximum and water holding capacity of 90% minimum.

Note: Only sterile straw mulch should be used in areas where one species of grass is desired.

G. Mulching Seeded Areas – Mulch shall be applied to all seeded areas immediately after seeding.

i. If grading is completed outside of the seeding season, mulch alone shall be applied as prescribed in this section and maintained until the seeding season returns and seeding can be performed in accordance with these specifications.

ii. When straw mulch is used, it shall be spread over all seeded areas at the rate of 2 tons/acre. Mulch shall be applied to a uniform loose depth of between 1" and 2". Mulch applied shall achieve a uniform distribution and depth so that the soil surface is not exposed. If a mulch anchoring tool is to be used, the rate should be increased to 2.5 tons/acre.

iii. Wood cellulose fiber used as a mulch shall be applied at a net dry weight of 1,500 lbs. per acre. The wood cellulose fiber shall be mixed with water,and the mixture shall contain a maximum of of 50 lbs. of wood cellulose fiber per 100 gallons water.

H. Securing Straw Mulch (Mulch Anchoring): Mulch anchoring shall be performed immediately following mulch application to minimize loss by wind or water. This may be done by one of the following methods (listed by preference), depending upon size of area and erosion hazard:

i. A mulch anchoring tool is a tractor drawn implement designed to punch and anchor mulch into soil surface a minimum of two (2) inches. This practice is most effective on large areas, but is limited to flatter slopes where equipment can operate safely. If used on sloping land, this practice should be used on the contour if possible.

ii. Wood Cellulose fiber may be used for anchoring straw. The fiber binder shall be applied at a net dry weight of 750 pounds/acre. The wood cellulose fiber shall be mixed with water and the mixture shall contain a maximum of 50 pounds of wood cellulose fiber per 100 gallons of water.

iii. Application of liquid binders should be heavier at the edges where wind catches mulch, such as in valleys and on crests of banks. The remainder of area should be appear uniform after binder application. Synthetic binders– such as Acrylic DLR (Agro–Tack), DCA–70, Petroset, Terra Tax II, Terra Tack AR or other approved equal may be used at rates recommended by the manufacturer to anchor mulch.

iv. Lightweight plastic netting may be stapled over the mulch according to manufacturer's recommendations. Netting is usually available in rolls 4' to 15' feet wide and 300 to 3,000 feet long.

I. Incremental Stabilization – Cut Slopes

i. All cut slopes shall be dressed, prepared, seeded and mulched as the work progresses. Slopes shall be excavated and stabilized in equal increments not to exceed 15'.

ii. Construction sequence (refer to Figure 4 below):

a. Excavate and stabilize all temporary swales, side ditches, or berms that will be used to convey runoff from the excavation.
b. Perform phase 1 excavation, dress and stabilize.
c. Perform phase 2 excavation, dress, and stabilize. Overseed phase I areas as necessary.
d. Perform final phase excavation, dress, and stabilize. Overseed previously seeded areas as necessary.

Note: Once excavation has begun, the operation should be continuous from grubbing through completion of grading and placement of topsoil (if required) and permanent seed and mulch. Any interruptions in the operation or completing the operation out of the season will necessitate the application of temporary stabilization.

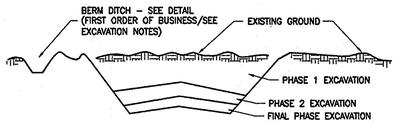

Figure 4 Incremental Stabilization – Cut

J. Incremental Stabilization of Embankments – Fill Slopes

i. Embankments shall be constructed in lifts as prescribed on the plans.

ii. Slopes shall be stabilized immediately when the vertical height of the multiple lifts reaches 15', or when the grading operation cease as prescribed in the plans.

iii. At the end of each day, temporary berms and pipe slope drains should be constructed along the top edge of the embankment to intercept surface runoff and convey it down the slope in a non–erosive manner to a sediment trapping device.

iv. Construction sequence: Refer to Figure 5 (below):

a. Excavate and stabilize all temporary swales, side ditches, or berms that will be used to divert runoff around the fill. Construct Slope Silt Fence on low side of fill as shown in Figure 4, unless other methods shown on the plans address this area.
b. Place phase 1 embankment, dress and stabilize.
c. Place phase 2 embankment, dress and stabilize.
d. Place final phase embankment, dress and stabilize. Overseed previously seeded areas as necessary.

Note: Once the placement of fill has begun, the operation should be continuous from grubbing through the completion of grading and placement of topsoil (if required) and permanent seed and mulch. Any interruptions in the operation or completing the operation out of the seeding season will necessitate the application of temporary stabilization.

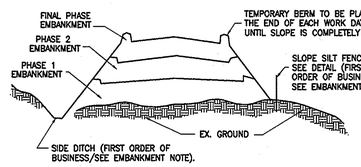

Figure 5 Incremental Stabilization – Embankment Fill
Comply with MD 378 Specifications.

Section II – Temporary Seeding

Vegetation – annual grass or grain used to provide cover on disturbed areas for up to 12 months. For longer duration of vegetative cover, Permanent Seeding is required.

A. Seed Mixtures – Temporary Seeding

i. Select one or more of the species or mixtures listed in Table 26 for the appropriate Plant Hardiness Zone (from Figure 5) and enter them in the Temporary Seeding Summary below, along with application rates, seeding dates and seeding depths. If this Summary is not put on the plans and completed, then Table 26 must be put on the plans.

ii. For sites having soil tests performed, the rates shown on this table shall be deleted and the rates recommended by the testing agency shall be written in. Soil tests are not required for Temporary Seeding.

TEMPORARY SEEDING SUMMARY

SEED MIXTURE (HARDINESS ZONE 6b) FROM TABLE 26					FERTILIZER RATE (10–10–10)	LIME RATE
NO.	SPECIES	APPLICATION RATE (LB/AC)	SEEDING DATES	SEEDING DEPTHS		
	ANNUAL RYEGRASS	50 LB/AC	3/1 – 4/30 8/15 – 11/1	1/4"–1/2"	600 LB/AC (15 LB/ /1000 SF)	2 TONS/AC (100 LB /1000 SF)
	MILLET	50 LB/AC	5/1 – 8/14	1/2"		

Section III: Permanent Seeding

Seeding grass and legumes to establish ground cover for a minimum period of one year on disturbed areas generally receiving low maintenance.

A. Seed Mixtures – Permanent Seeding

i. Select one or more of the species or mixtures listed in Table 25 for the appropriate Plant Hardiness Zone (from Figure 5) and enter them in the Permanent Seed Summary below, along with application rates and seeding dates. Seeding depths can be estimated using Table 26. If this Summary is not put on the construction plans and completed, then Table 25 must be put on the plans. Additional planting specifications for exceptional sites such as shorelines, streambanks, or dunes or for special purposes such as wildlife or aesthetic treatment may be found in USDA–SCS Technical Field Office Guide, Section 342 – Critical Area Planting. For special lawn maintenance areas, see Section IV Sod and V Turfgrass.

ii. For sites having disturbed area over 5 acres, the rates shown on this table shall be deleted and the rates recommended by the soil testing agency shall be written in.

iii. For areas receiving low maintenance, apply ureaform fertilizer (46–0–0) at 3 1/2 lbs/1000 sq. ft. (150 lbs/ac), in addition to the above soil amendments shown in the table below, to be performed at the time of seeding.

PERMANENT SEEDING SUMMARY

SEED MIXTURE (HARDINESS ZONE 6B) FROM TABLE 25					FERTILIZER RATE (10–20–20)			LIME RATE
NO.	SPECIES	APPLICATION RATE(LB/AC)	SEEDING DATES	SEEDING DEPTHS	N	P205	K20	
1	CREEPING RED FESCUE (30%) CHEWINGS FESCUE (30%) ROUGH BLUE GRASS (20%) CATALINA PERENNIAL RYEGRASS (20%)	200	3/1 – 5/15 AND 8/15 – 10/15	1"	90 LB/AC (2 LB/ 1000 SF)	175 LB/AC (4 LB/ 1000 SF)	175 LB/AC (4 LB/ 1000 SF)	2 TONS/AC (100 LB/ 1000 SF)

Section IV – Sod: To provide quick cover on disturbed areas (2:1 grade or flatter).

A. General specifications

i. Class of turfgrass sod shall be Maryland or Virginia State Certified or Approved. Sod labels shall be made available to the job foreman and inspector.

ii. Sod shall be machine cut at a uniform soil thickness of 3/4", plus or minus 1/4", at the time of cutting. Measurement for thickness shall exclude top growth and thatch. Individual pieces of sod shall be cut to the suppliers width and length. Maximum allowable deviation from standard widths and lengths shall be 5 percent. Broken pads and torn or uneven ends will not be acceptable.

iii. Standard size sections of sod shall be strong enough to support their own weight and retain their size and shape when suspended vertically with a firm grasp on the upper 10 percent of the section.

iv. Sod shall not be harvested or transplanted when moisture content (excessively dry or wet) may adversely affect its survival.

v. Sod shall be harvested, delivered, and installed within a period of 36 hours. Sod not transplanted within this period shall be approved by an agronomist or soil scientist prior to its installation.

B. Sod Installation

i. During periods of excessively high temperature or in areas having dry subsoil, the subsoil shall be lightly irrigated immediately prior to laying the sod.

ii. The first row of sod shall be laid in a straight line with subsequent rows placed parallel to and tightly wedged against each other. Lateral joints shall be staggers to promote more uniform growth and strength. Ensure that sod is not stretched or overlapped and that all joints are butted tight in order to prevent voids which would cause air drying of the roots.

iii. Wherever possible, sod shall be laid with the long edges parallel to the contour and with staggering joints. Sod shall be rolled and tamped, pegged or otherwise secured to prevent slippage on slopes and to ensure solid contact between sod roots and the underlying soil surface.

iv. Sod shall be watered immediately following rolling or tamping until the underside of the new sod pad and soil surface below the sod are thoroughly wet. The operations of laying, tamping and irrigating for any piece of sod shall be completed within eight hours.

C. Sod Maintenance

i. In the absence of adequate rainfall, watering shall be performed daily or as often as necessary during the first week and in sufficient quantities to maintain moist soil to a depth of 4". Watering should be done during the heat of the day to prevent wilting.

ii. After the first week, sod watering is required as necessary to maintain adequate moisture content.

iii. The first mowing of sod should not be attempted until the sod is firmly rooted. No more than 1/3 of the grass leaf shall be removed by the initial cutting or subsequent cuttings. Grass height shall be maintained between 2" and 3" unless otherwise specified.

Section IV – Turfgrass Establishment

Areas where turfgrass may be desired include lawns, parks, playgrounds, and commercial sites which will receive a medium to high level of maintenance. Areas to receive seed shall be tilled by disking or other approved methods to a depth of 2 to 4 inches, leveled and raked to prepare a proper seedbed. Stones and debris over 1 1/2 inches in diameter shall be removed. The resulting seedbed shall be in such condition that future mowing of grasses will pose no difficulty.

Note: Choose certified material. Certified material is the best guarantee to cultivar purity. The certification program of the Maryland Department of Agriculture, Turf and Seed Section, provides a reliable means of consumer protection and assures a pure genetic line.

A. Permanent Seeding

i. Kentucky Bluegrass – Full sun mixture – For use in areas that receive intensive management. Irrigation required in the areas of central Maryland and eastern shore. Recommended Certified Kentucky Bluegrass Cultivars Seeding Rate: 1.5 to 2.0 pounds/1000 square feet. A minimum of three bluegrass cultivars should be chosen ranging from a minimum of 10% to a maximum of 35% of the mixture by weight.

ii. Kentucky Bluegrass/Perennial Rye – Full sun mixture – For use in full sun areas where rapid establishment is necessary and when turf will receive medium to intensive management. Certified Perennial Ryegrass Cultivars/Certified Kentucky Bluegrass Seeding rate: 2 pounds mixture/1000 square feet. A minimum of 3 Kentucky Bluegrass Cultivars must be chosen, with each cultivar ranging from 10% to 35% of the mixture by weight.

iii. Tall Fescue/Kentucky Bluegrass – Full sun mixture – For use in drought prone areas and/or for areas receiving low to medium management in full sun to medium shade. Recommended mixture includes; certified Tall Fescue Cultivars 95–100%, certified Kentucky Bluegrass Cultivars 0 – 5%. Seeding rate: 5 to 8 lb/1000 sf. One or more cultivars may be blended.

iv. Kentucky Bluegrass/Fine Fescue – Shade Mixture – For use in areas with shade in Bluegrass lawns. For establishment in high quality, intensively managed turf area. Mixture includes; certified Kentucky Bluegrass Cultivars 30–40% and certified Fine Fescue and 60–70%. Seeding rate: 1 1/2 – 3 lbs/1000 square feet. A minimum of 3 Kentucky bluegrass cultivars must be chosen, with each cultivar ranging from a minimum of 10% to a maximum of 35% of the mixture by weight.

Note: Turfgrass varieties should be selected from those listed in the most current University of Maryland Publication, Agronomy Mimeo #77, "Turfgrass Cultivar Recommendations for Maryland".

B. Ideal times of seeding

Western MD: March 15 – June 1, August 1 – October 1 (Hardiness Zones – 5b, 6a)
Central MD: March 1 – May 15, August 15 – October 15 (Hardiness Zone – 6b)
Southern MD, Eastern Shore: March 1 – May 15, August 15 – October 15 (Hardiness Zones – 7a,7b)

C. Irrigation

If soil moisture is deficient, supply new seedings with adequate water for plant growth (23/64 " 0 1" every 3 to 4 days depending on soil texture) until they are firmly established. This is especially true when seedings are made late in the planting season, in abnormally dry or hot seasons, or on adverse sites.

D. Repairs and Maintenance

Inspect all seeded areas for failures and make necessary repairs, replacements, and reseedings within the planting season.

i. Once the vegetation is established, the site shall have 95% ground cover to be considered adequately stabilized.

ii. If the stand provides less than 40% ground coverage, reestablish following original lime, fertilizer, seedbed preparation and seeding recommendations.

iii. If the stand provides between 40% and 94% ground coverage, overseeding and fertilizing half of the rates originally applied may be necessary.

iv. Maintenance fertilizer rates for permanent seedings are shown in table 24. For lawns and other medium to high maintenance turfgrass areas, refer to the University of Maryland publication "Lawn Care n Maryland" Bulletin No. 171.

SEDIMENT CONTROL GENERAL NOTES

1. A minimum of 48 hours notice must be given to Howard County Construction Inspection Division, Sediment Control Division prior to the start of any construction. 410–313–1855.
2. All vegetative and structural practices are to be installed according to the provisions of the plan and are to be in conformance with the most current Maryland Standards and Specifications for Soil Erosion and Sediment Control and revisions thereto.
3. Following initial soil disturbance or re–disturbance, permanent or temporary stabilization shall be completed within; a) 7 calendar days for all perimeter sediment control structures, dikes, perimeter slopes and all slopes greater than 3:1, b) 14 days as to all other disturbed or graded areas on the project site.
4. All disturbed areas must be stabilized within the time period specified above in accordance with the 1994 Maryland Standards and Specifications for Soil Erosion and Sediment Control for permanent seeding (Sec. III), sod (Sec. III) temporary seeding (Sec. II) and mulching (Sec. I). Temporary stabilization with mulch alone can only be done when recommended seeding dates do not allow for proper germination and establishment of grasses.
5. All sediment control structures are to remain in place and are to be maintained in operative condition until permission for their removal has been obtained from the Howard County Sediment Control Inspector.
6. Site Analysis — Site is defined as areas involving any improvement.

Total Area of Site	9.43 Acres
Area Disturbed	9.43 Acres
Area to be paved	54 Sq. Yds.
Area to be Vegetatively Stabilized	45,600 Sq. Yds.
Total Cut	22,944 Cu. Yds.
Total Fill	22,944 Cu. Yds.
Offsite waste/borrow area location	To be determined by contractor.

7. Any sediment control practices which is disturbed by grading activity for placement of utilities must be repaired on the same day of disturbance.
8. Additional sediment control must be provided, if deemed necessary by the Howard County Sediment Control Inspector.
9. On all sites with disturbed areas in excess of 2 acres, approval of the inspection agency shall be requested upon completion of installation of perimeter erosion and sediment controls, but before proceeding with any other earth disturbance or grading. Other building or grading inspection approvals may not be authorized until this initial approval by the inspection agency is made.
10. Trenches for the construction of utilities is limited to that which shall be back–filled and stabilized by the end of each work day.
11. Spoil from trench excavation shall be place on the uphill side of the excavation.
12. Site grading will begin only after all perimeter sediment control measures have been installed and are in a functioning condition.
13. Cut and fill quantities provided under site analysis do not represent bid quantities. These quantities do not distinguish between topsoil, structural fill or embankment material, nor do they reflect consideration of undercutting or removal of unsuitable material. The contractor shall familiarize himself with site conditions which may affect the work.

AS-BUILTS
JAN 07 2013

ESC
7 OF 10

DEPARTMENT OF PUBLIC WORKS
HOWARD COUNTY, MARYLAND

DIRECTOR OF PUBLIC WORKS — DATE 6/2/10
CHIEF, BUREAU OF ENGINEERING — DATE 6/2/10
CHIEF, BUREAU OF UTILITIES — DATE 6/2/10
CHIEF, UTILITY DESIGN DIVISION — DATE 6/2/10 WD

Dewberry
Dewberry & Davis LLC
3106 LORD BALTIMORE DRIVE
SUITE 110
BALTIMORE, MD 21244-2662
410.265.8500
FAX: 410.265.8875

STATE OF MARYLAND — NICHOLAS N. DALLAS — No. 20662 — REGISTERED PROFESSIONAL ENGINEER

DES: LAL
DRN: CD
CHK: TND
DATE: 5.28.10

BY	NO.	REVISIONS	DATE

600' SCALE MAP NO. 37, 43 — BLOCK NO. 5, 23

EROSION AND SEDIMENT CONTROL NOTES & DETAILS

LITTLE PATUXENT PARALLEL INTERCEPTOR
CAPITAL PROJECT S-6175
CONTRACT NO. 20-4540

ELECTION DISTRICT NO. 5 — HOWARD COUNTY, MARYLAND

SCALE: SHOWN

SHEET 17 OF 26

Plotted by: (tlaal) on Plot Date: Jun 01, 2010 – 4:05pm
Path:->J:\Projects\S6175200-Little Patuxent Interceptor\CADD\SECTION X\1-10-0-LPM X-LSC DETAILS and NOTES SHEET17-18.dwg
Plotted by: (tlaal) on Plot Date: May 28, 2010 – 11:43am
Last Saved: May 28, 2010 – 11:43am
XREFS->J:\Projects\S6175200-Little Patuxent Interceptor\CADD\SECTION X\1-LPM X -Border.dwg

DETAIL 22 - SILT FENCE

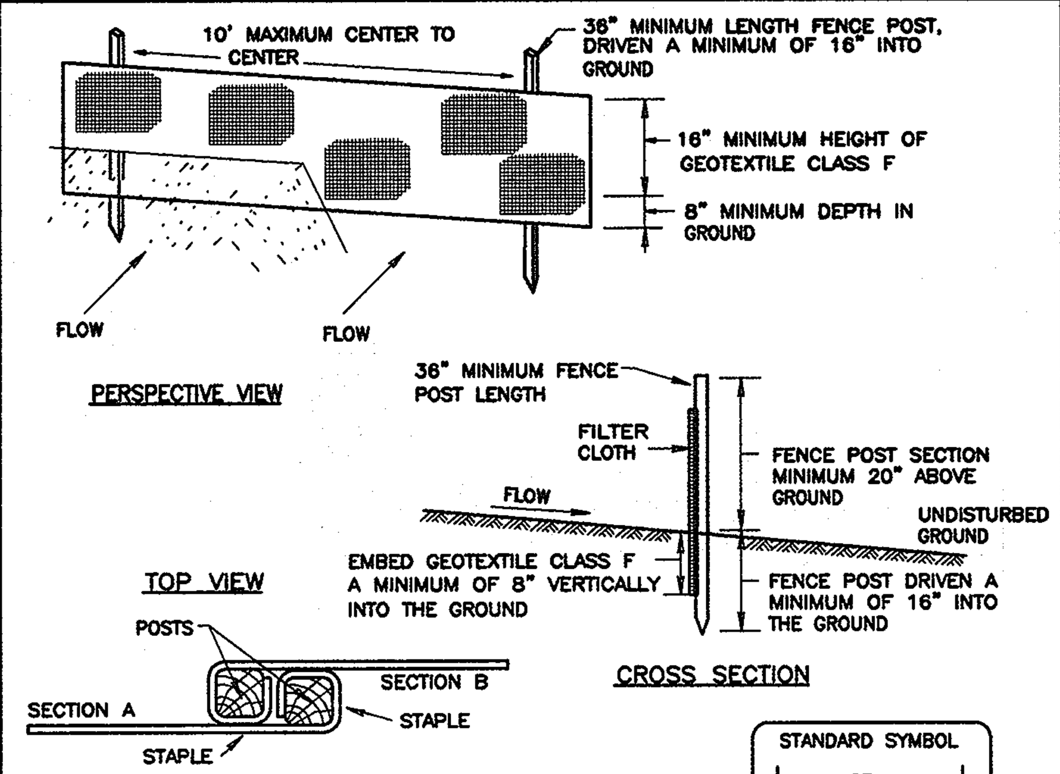

Construction Specifications

1. Fence posts shall be a minimum of 36" long driven 16" minimum into the ground. Wood posts shall be 11/2" x 11/2" square (minimum) cut, or 13/4" diameter (minimum) round and shall be of sound quality hardwood. Steel posts will be standard T or U section weighing not less than 1.00 pond per linear foot.
2. Geotextile shall be fastened securely to each fence post with wire ties or staples at top and mid-section and shall meet the following requirements for Geotextile Class F:

Tensile Strength	50 lbs/in (min.)	Test: MSMT 509
Tensile Modulus	20 lbs/in (min.)	Test: MSMT 509
Flow Rate	0.3 gal ft ²/ minute (max.)	Test: MSMT 322
Filtering Efficiency	75% (min.)	Test: MSMT 322

3. Where ends of geotextile fabric come together, they shall be overlapped, folded and stapled to prevent sediment bypass.
4. Silt Fence shall be inspected after each rainfall event and maintained when bulges occur or when sediment accumulation reached 50% of the fabric height.

U.S. DEPARTMENT OF AGRICULTURE SOIL CONSERVATION SERVICE	PAGE E - 15 - 3	MARYLAND DEPARTMENT OF ENVIRONMENT WATER MANAGEMENT ADMINISTRATION

DETAIL 33 - SUPER SILT FENCE

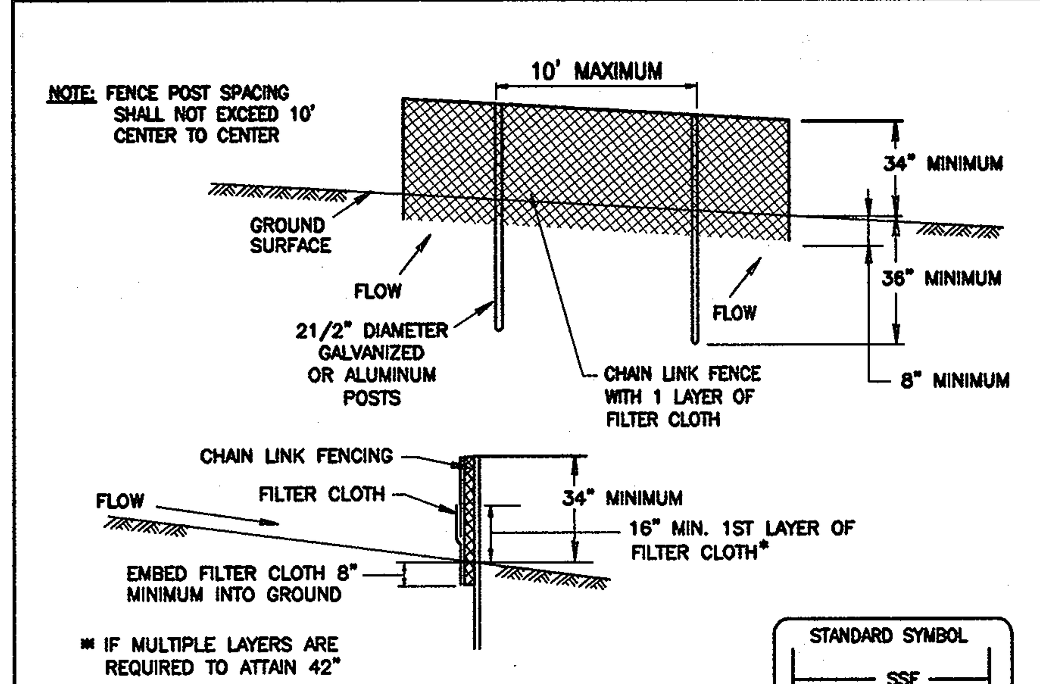

Construction Specifications

1. Fencing shall be 42" in height and constructed in accordance with the latest Maryland State Highway Details for Chain Link Fencing. The specification for a 6' fence shall be used, substituting 42" fabric and 6' length posts.
2. Chain link fence shall be fastened securely to the fence posts with wire ties. The lower tension wire, brace and truss rods, drive anchors and post caps are not required except on the ends of the fence.
3. Filter cloth shall be fastened securely to the chain link fence with ties spaced every 24" at the top and mid section.
4. Filter cloth shall be embedded a minimum of 8" into the ground.
5. When two sections of filter cloth adjoin each other, they shall be overlapped by 6" and folded.
6. Maintenance shall be performed as needed and silt buildups removed when "bulges" develop in the silt fence, or when silt reaches 50% of fence height.
7. Filter cloth shall be fastened securely to each fence post with wire ties or staples at top and mid section and shall meet the following requirements for Geotextile Class F:

Tensile Strength	50 lbs/in (min.)	Test: MSMT 509
Tensile Modulus	20 lbs/in (min.)	Test: MSMT 509
Flow Rate	0.3 gal ft ²/ minute (max.)	Test: MSMT 322
Filtering Efficiency	75% (min.)	Test: MSMT 322

U.S. DEPARTMENT OF AGRICULTURE SOIL CONSERVATION SERVICE	PAGE H - 26 - 3	MARYLAND DEPARTMENT OF ENVIRONMENT WATER MANAGEMENT ADMINISTRATION

REINFORCED SILT FENCE

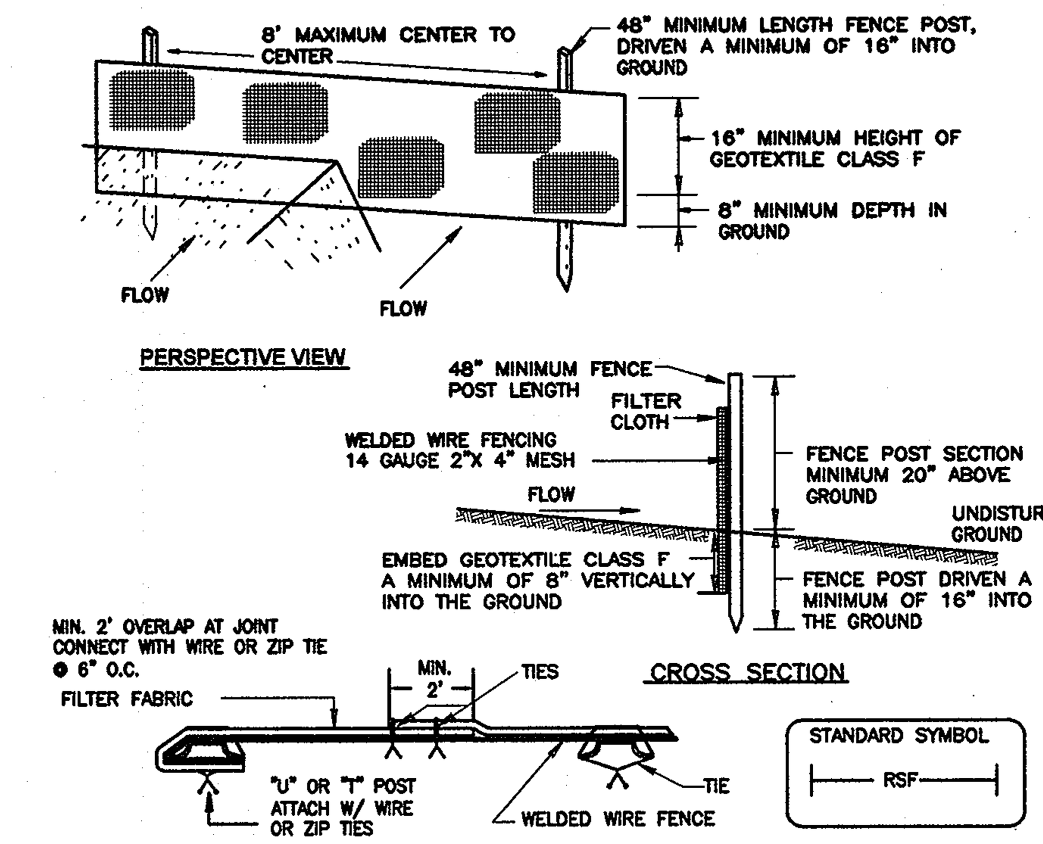

Construction Specifications

1. Metal fence post shall be a minimum of 48" long driven 16" minimum into the ground. Post shall be standard T or U section weighting not less than 1.00 pound per linear foot.
2. Geotextile shall be fastened securely to each fence post with wire ties or zip ties at top and mid section and shall meet the following requirements for geotextile Class F:

Tensile Strength	50 lbs/in (min.)	Test: MSMT 509
Tensile Modulus	20 lbs/in (min.)	Test: MSMT 509
Flow Rate	0.3 gal ft / ²minute (max.)	Test: MSMT 322
Filtering Efficiency	75% (min.)	Test: MSMT 322

3. Where ends of geotextile fabric come together, they shall be overlapped, folded and wired tied or zip tied to prevent sediment bypass.
4. Silt Fence shall be inspected after each rainfall event and maintained when bulges occur or when sediment accumulation reached 50% of the fabric height.

Silt Fence Design Criteria

Slope Steepness	(Maximum) Slope Length	(Maximum) Silt Fence Length
Flatter than 50:1	unlimited	unlimited
50:1 to 10:1	125 feet	1,000 feet
10:1 to 5:1	100 feet	750 feet
5:1 to 3:1	60 feet	500 feet
3:1 to 2:1	40 feet	250 feet
2:1 and steeper	20 feet	125 feet

Note: In areas of less than 2% slope and sandy soils (USDA general classification system, soil Class A) maximum slope length and silt fence length will be unlimited. In these areas a silt fence may be the only perimeter control required.

REINFORCED SILT FENCE

DETAIL 24 - STABILIZED CONSTRUCTION ENTRANCE

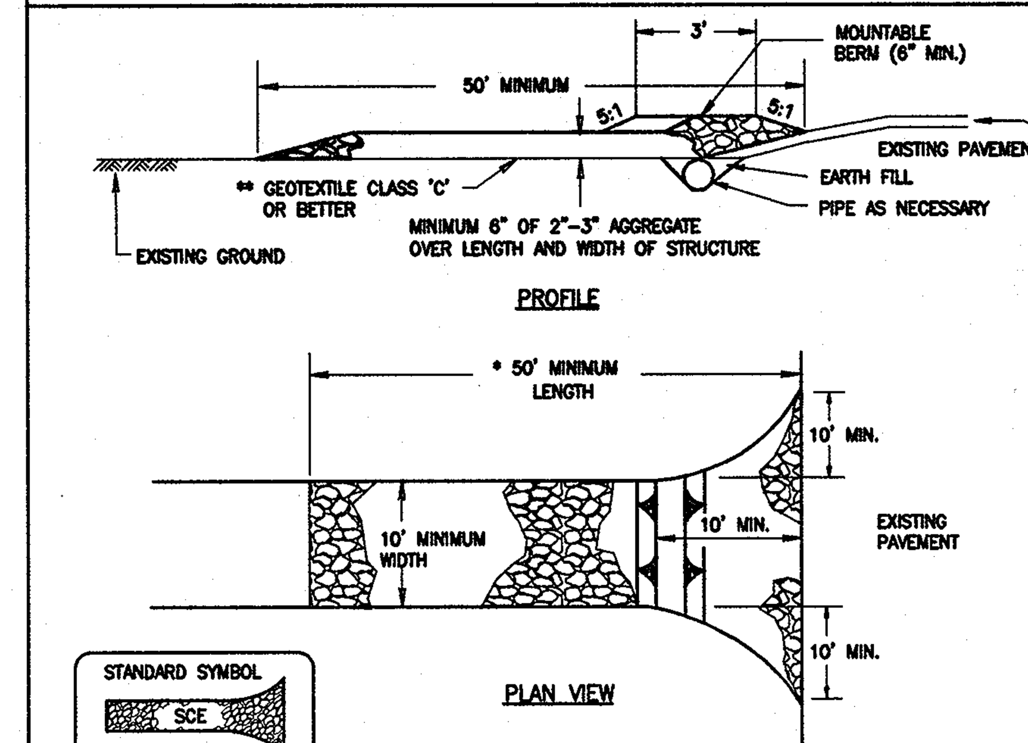

Construction Specifications

1. Length - minimum of 50' (*30' for single residence lot).
2. Width - 10' minimum, should be flared at the existing road to provide a turning radius.
3. Geotextile fabric (filter cloth) shall be placed over the existing ground prior to placing stone. **The plan approval authority may not require single family residences to use geotextile.
4. Stone - crushed aggregate (2" to 3") or reclaimed or recycled concrete equivalent shall be placed at least 6" deep over the length and width of the entrance.
5. Surface Water - all surface water flowing to or diverted toward construction entrances shall be piped through the entrance, maintaining positive drainage. Pipe installed through the stabilized construction entrance shall be protected with a mountable berm with 5:1 slopes and a minimum of 6" of stone over the pipe Pipe has to be sized according to the drainage. When the SCE located at a high spot and has no drainage to convey a pipe will not be is necessary. Pipe should be sized according to the amount of runoff to be conveyed. A 6" minimum will be required.
6. Location - A stabilized construction entrance shall be located at every point point where construction traffic enters or leaves a construction site. Vehicles leaving the site must travel over the entire length of the stabilized construction entrance.

U.S. DEPARTMENT OF AGRICULTURE SOIL CONSERVATION SERVICE	PAGE F - 17 - 3	MARYLAND DEPARTMENT OF ENVIRONMENT WATER MANAGEMENT ADMINISTRATION

SILT FENCE

Silt Fence Design Criteria

Slope Steepness	(Maximum) Slope Length	(Maximum) Silt Fence Length
Flatter than 50:1	unlimited	unlimited
50:1 to 10:1	125 feet	1,000 feet
10:1 to 5:1	100 feet	750 feet
5:1 to 3:1	60 feet	500 feet
3:1 to 2:1	40 feet	250 feet
2:1 and steeper	20 feet	125 feet

Note: In areas of less than 2% slope and sandy soils (USDA general classification system, soil Class A) maximum slope length and silt fence length will be unlimited. In these areas a silt fence may be the only perimeter control required.

U.S. DEPARTMENT OF AGRICULTURE SOIL CONSERVATION SERVICE	PAGE E - 15 - 3A	MARYLAND DEPARTMENT OF ENVIRONMENT WATER MANAGEMENT ADMINISTRATION

SUPER SILT FENCE

Design Criteria

Slope	Slope Steepness	Slope Length (maximum)	Silt Fence Length (maximum)
0 - 10%	0 - 10:1	Unlimited	Unlimited
10 - 20%	10:1 - 5:1	200 feet	1,500 feet
20 - 33%	5:1 - 3:1	100 feet	1,000 feet
33 - 50%	3:1 - 2:1	100 feet	500 feet
50% +	2:1 +	50 feet	250 feet

U.S. DEPARTMENT OF AGRICULTURE SOIL CONSERVATION SERVICE	PAGE H - 26 - 3A	MARYLAND DEPARTMENT OF ENVIRONMENT WATER MANAGEMENT ADMINISTRATION

DETAIL 23B - AT GRADE INLET PROTECTION

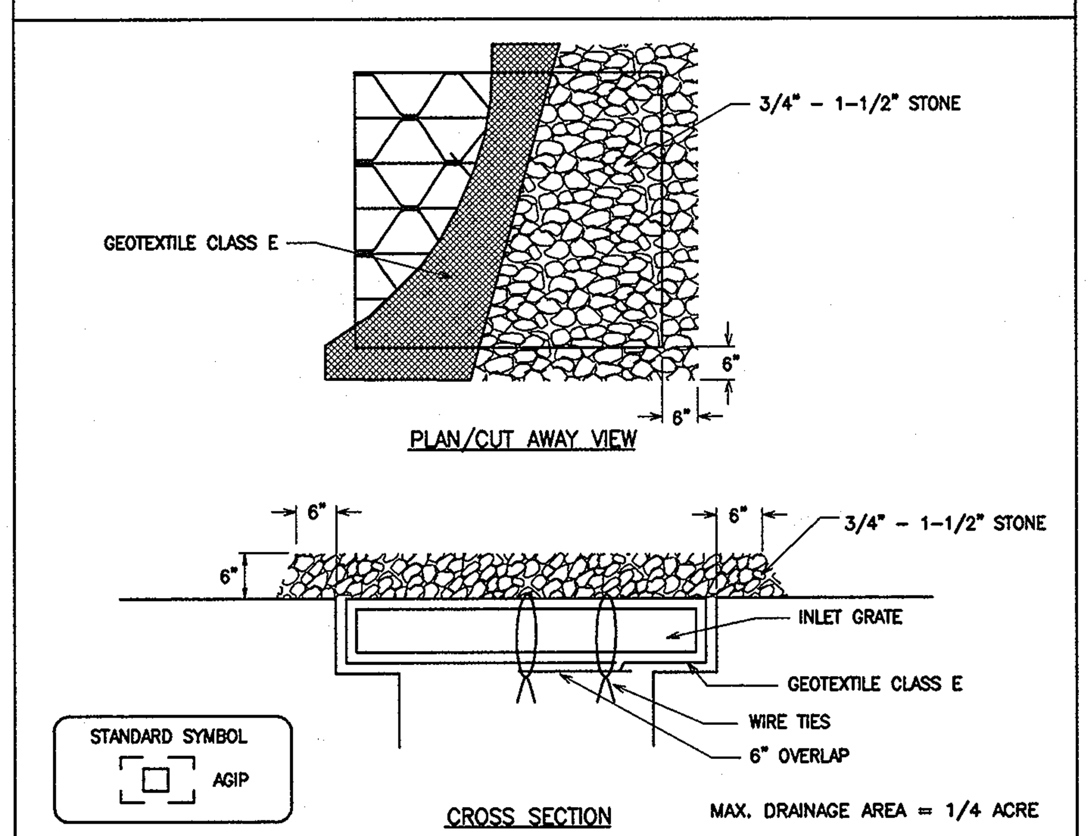

Construction Specifications

1. Lift grate and wrap with Geotextile Class E to completely cover all openings, then set grate back in place.
2. Place 3/4" to 1-1/2" stone, 4"-6" thick on the grate to secure the fabric and provide additional filtration.

U.S. DEPARTMENT OF AGRICULTURE SOIL CONSERVATION SERVICE	PAGE E - 16 - 5A	MARYLAND DEPARTMENT OF ENVIRONMENT WATER MANAGEMENT ADMINISTRATION

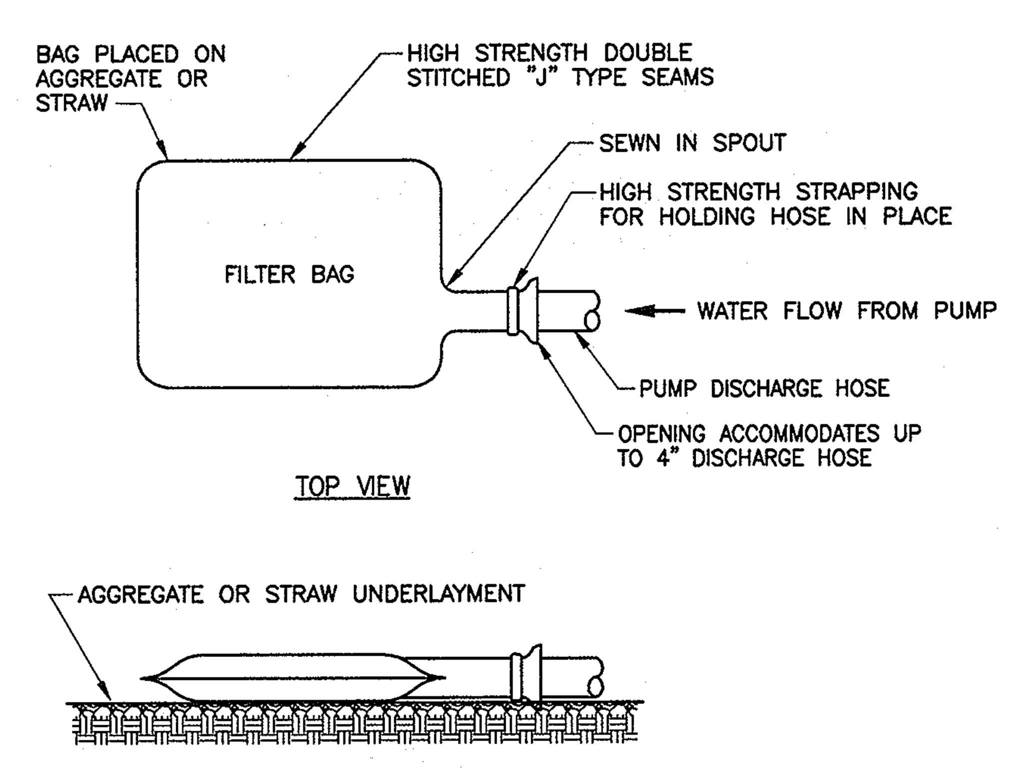

FILTER BAG

NOT TO SCALE

PROJECT SEQUENCE OF CONSTRUCTION

1. Notify Miss Utility (1-800-257-7777) at least 48 hours prior to beginning work.
2. Notify Howard County Construction Inspection Division (1-410-313-3800) at least 48 hours prior to beginning work on-site and obtain grading permit.
3. Clear and grub for sediment and erosion control measures or devices only. (7 days)
4. Install all sediment and erosion control measures or devices including stabilized construction entrance(s). (10 days)
5. Notify Howard County Construction Inspection Division upon completion of the installation work noted above. (1 day)
6. With the approval of the Howard County Construction Inspection Division, clear and grub the remainder of the site and stabilize immediately. (21 days)
7. Begin excavation and installation of utilities. Work shall be limited to that which can be backfilled and stabilized in one day per Standard Sediment Control Note No. 11. Stabilize work area at the end of each work day. (550 days)
8. Connect to existing utilities where applicable. (7 days)
9. With permission from the Sediment Control Inspector, remove stabilized construction entrance(s). (2 days)
10. Stabilize all disturbed areas. (14 days)
11. Following approval from the Howard County Construction Inspection Division Inspector, remove all remaining sediment control measures and stabilize any remaining areas. (7 days)

BEST MANAGEMENT PRACTICES FOR WORKING IN NONTIDAL WETLANDS, WETLAND BUFFERS, WATERWAYS, AND 100-YEAR FLOODPLAIN

1. No excess fill, construction material, or debris shall be stockpiled or stored in nontidal wetlands, nontidal wetlands buffers, waterways, or the 100-year floodplain.
2. Place materials in a location and manner which does not adversely impact surface or subsurface water flow into or out of nontidal wetlands, nontidal wetland buffers, waterways, or 100-year floodplain.
3. Do not use excavated material as backfill if it contains waste metal products, unsightly debris, toxic material, or any other deleterious substance. If additional backfill is required, use clean material free of waste metal products, unsightly debris, toxic material, or any other deleterious substance.
4. Place heavy equipment on mats or suitably operate the equipment to prevent damage to nontidal wetlands, nontidal wetland buffers, waterways, or the 100-year floodplain.
5. Repair and maintain any serviceable structure or fill so there is no permanent loss of nontidal wetlands, nontidal wetland buffers, waterways, or permanent modification of the 100-year floodplain in excess of that lost under the originally authorized structure or fill.
6. Rectify any nontidal wetlands, nontidal wetland buffers,waterways, or the 100-year floodplain temporarily impacted by any construction.
7. All stabilization in the nontidal wetland and nontidal wetland buffer shall consist of the following species: Annual Ryegrass (Lolium multiflorium), Millet (Setaria italica), Barley (Hordeum sp.), Oats (Uniola sp.), and/or Rye (Secale cereale). These species will allow for stabilization of the site while also allowing for the voluntary revegetation of natural wetland species. Other non-persistent vegetation may be acceptable, but must be approved by the Nontidal Wetlands and Waterways Division. Kentucky 31 fescue shall not be utilized in wetland or buffer areas. The area should be seeded and mulched to reduce erosion after construction activities have been completed.
8. After installation has been completed, make post-construction grades and elevations the same as the original grades and elevations in temporarily impacted areas.
9. To protect aquatic species, in-stream work is prohibited as determined by classification of the stream:
   Use 1 waters: in-stream work shall not be conducted during the period of March 1 through June 15, inclusive, during any year.
10. Stormwater runoff from impervious surfaces shall be controlled to prevent the washing of debris into the waterway.
11. Culverts shall be constructed and any riprap placed so as not to obstruct the movement of the aquatic species, unless the purpose of the activity is to impound water.

AS-BUILTS
JAN 17 [illegible]

ESC 8 OF 10

Plotted by: (rlane) on Plot Date: Jun 01, 2010 - 4:04pm
Path--> R:\Projects\58125000-Little Patuxent Interceptor\CADD\SECTION X\17-18-0-LPPI X-ESC DETAILS and NOTES SHEET17-18.dwg
Tab-Layout Name: ESC DETAILS
Last Saved: May 28, 2010 - 11:43am
XREFS-->R:\Projects\58125000-Little Patuxent Interceptor\CADD\SECTION X\1-LPPI X -Border.dwg

DEPARTMENT OF PUBLIC WORKS
HOWARD COUNTY, MARYLAND

DIRECTOR OF PUBLIC WORKS	6/3/10 DATE	CHIEF, BUREAU OF ENGINEERING	6/2/10 DATE
CHIEF, BUREAU OF UTILITIES	6/2/10 DATE	CHIEF, UTILITY DESIGN DIVISION	6/2/10 DATE WD

Dewberry
Dewberry & Davis LLC
3106 LORD BALTIMORE DRIVE
SUITE 110
BALTIMORE, MD 21244-2662
410.265.9500
FAX: 410.265.8875

STATE OF MARYLAND — THOMAS N. DALLALLU — No. 10966 — REGISTERED PROFESSIONAL ENGINEER

DES: LAL
DRN: CD
CHK: TND
DATE: 5.28.10

BY	NO.	REVISIONS	DATE

EROSION AND SEDIMENT CONTROL NOTES & DETAILS

600' SCALE MAP NO. 37, 43 BLOCK NO. 5, 23

LITTLE PATUXENT PARALLEL INTERCEPTOR

CAPITAL PROJECT S-6175
CONTRACT NO. 20-4540

ELECTION DISTRICT NO. 5 HOWARD COUNTY, MARYLAND

SCALE: SHOWN

SHEET 18 OF 26

MGWC 1.2: PUMP-AROUND PRACTICE

Temporary measure for dewatering in-channel construction sites

DESCRIPTION

The work should consist of installing a temporary pump around and supporting measures to divert flow around in-stream construction sites.

IMPLEMENTATION SEQUENCE

Sediment control measures, pump-around practices, and associated channel and bank construction should be completed in the following sequence (refer to Detail 1.2):

1. Construction activities including the installation of erosion and sediment control measures should not begin until all necessary easements and/or right-of-ways have been acquired. All existing utilities should be marked in the field prior to construction. The contractor is responsible for any damage to existing utilities that may result from construction and should repair the damage at his/her own expense to the county's or utility company's satisfaction.

2. The contractor should notify the Maryland Department of the Environment or WMA sediment control inspector at least 5 days before beginning construction. Additionally, the contractor should inform the local environmental protection and resource management inspection and enforcement division and the provider of local utilities a minimum of 48 hours before starting construction.

3. The contractor should conduct a pre-construction meeting on site with the WMA sediment control inspector, the county project manager, and the engineer to review limits of disturbance, erosion and sediment control requirements, and the sequence of construction. The contractor should stake out all limits of disturbance prior to the pre-construction meeting so they may be reviewed. The participants will also designate the contractor's staging areas and flag all trees within the limit of disturbance which will be removed for construction access. Trees should not be removed within the limit of disturbance without approval from the WMA or local authority.

4. Construction should not begin until all sediment and erosion control measures have been installed and approved by the engineer and the sediment control inspector. The contractor should stay within the limits of the disturbance as shown on the plans and minimize disturbance within the work area whenever possible.

5. Upon installation of all sediment control measures and approval by the sediment control inspector and the local environmental protection and resource management inspection and enforcement division, the contractor should begin work at the upstream section and proceed downstream beginning with the establishment of stabilized construction entrances. In some cases, work may begin downstream if appropriate. The sequence of construction must be followed unless the contractor gets written approval for deviations from the WMA or local authority. The contractor should only begin work in an area which can be completed by the end of the day including grading adjacent to the channel. At the end of each work day, the work area must be stabilized and the pump around removed from the channel. Work should not be conducted in the channel during rain events.

6. Sandbag dikes should be situated at the upstream and downstream ends of the work area as shown on the plans, and stream flow should be pumped around the work area. The pump should discharge onto a stable velocity dissipater made of riprap or sandbags.

MGWC 1.2: PUMP-AROUND PRACTICE

7. Water from the work area should be pumped to a sediment filtering measure such as a dewatering basin, sediment bag, or other approved source. The measure should be located such that the water drains back into the channel below the downstream sandbag dike.

8. Traversing a channel reach with equipment within the work area where no work is proposed should be avoided. If equipment has to traverse such a reach for access to another area, then timber mats or similar measures should be used to minimize disturbance to the channel. Temporary stream crossings should be used only when necessary and only where noted on the plans or specified. (*See Section 4, Stream Crossings, Maryland Guidelines to Waterway Construction*).

9. All stream restoration measures should be installed as indicated by the plans and all banks graded in accordance with the grading plans and typical cross- sections. All grading must be stabilized at the end of each day with seed and mulch or seed and matting as specified on the plans.

10. After an area is completed and stabilized, the clean water dike should be removed. After the first sediment flush, a new clean water dike should be established upstream from the old sediment dike. Finally, upon establishment of a new sediment dike below the old one, the old sediment dike should be removed.

11. A pump around must be installed on any tributary or storm drain outfall which contributes baseflow to the work area. This should be accomplished by locating a sandbag dike at the downstream end of the tributary or storm drain outfall and pumping the stream flow around the work area. This water should discharge onto the same velocity dissipater used for the main stem pump around.

12. If a tributary is to be restored, construction should take place on the tributary before work on the main stem reaches the tributary confluence. Construction in the tributary, including pump around practices, should follow the same sequence as for the main stem of the river or stream. When construction on the tributary is completed, work on the main stem should resume. Water from the tributary should continue to be pumped around the work area in the main stem.

13. The contractor is responsible for providing access to and maintaining all erosion and sediment control devices until the sediment control inspector approves their removal.

14. After construction, all disturbed areas should be regraded and revegetated as per the planting plan.

Maryland's Guidelines To Waterway Construction
DETAIL 1.2: PUMP-AROUND PRACTICE

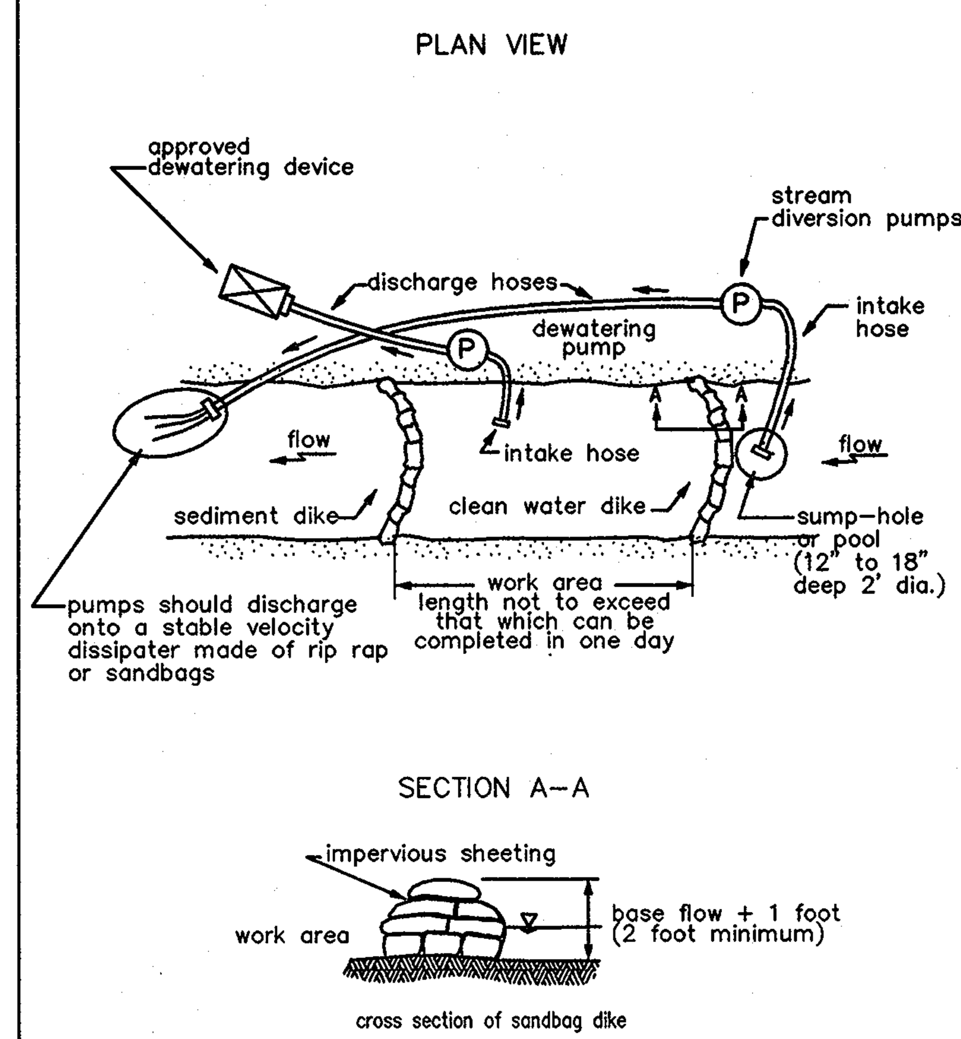

TEMPORARY INSTREAM CONSTRUCTION MEASURES	REVISED NOVEMBER 2000 PAGE 1.2 – 3	MARYLAND DEPARTMENT OF THE ENVIRONMENT WATER MANAGEMENT ADMINISTRATION

MGWC 1.1: DEWATERING BASINS

Temporary measure for filtering sediment-laden water

DESCRIPTION

The work should consist of installing dewatering basins jointly with channel diversion measures to filter sediment-laden water from in-stream construction sites before the water re-enters the downstream reach.

EFFECTIVE USES & LIMITATIONS

Undersized dewatering basins will not adequately filter sediment-laden water from the construction site.

MATERIAL SPECIFICATIONS

Materials for dewatering basins should meet the following requirements:

- *Riprap*: Riprap should be washed and have a diameter ranging from 4 to 6 inches (10 to 15 centimeters).
- *Filter Cloth*: Filter cloth should be a woven or non-woven fabric consisting only of continuous chain polymeric filaments or yarns of polyester. The fabric should be inert to commonly encountered chemicals, hydro-carbons, ultraviolet light, and mildew and should be rot resistant.
- *Straw Bales/Silt Fence*: Straw bales should meet the criteria as specified in the *1994 Maryland Standards and Specifications for Soil Erosion and Sediment Control.*

INSTALLATION GUIDELINES

Due to the danger of overtopping by events greater than the design flow, dewatering basins require a vegetative buffer strip to filter sediment-laden overflow. A 50-foot (15-meter) minimum grass-covered buffer width is required for slopes less than 20 degrees (1:2.7) when right-of-way is not limited. For slopes greater than 20 degrees, basins should have a 100-foot (30-meter) minimum buffer width when practical.

All erosion and sediment control devices should be installed as the first order of business according to a plan approved by the Water Management Administration (WMA) or local authority. Dewatering basins should be constructed as follows (refer to Detail 1.1):

1. Excavated subsoil and topsoil should be stored separately and replaced in their natural order. Additionally, the excavated sediments should be prevented from entering the waterway by using sediment perimeter controls or other measures.

2. The dewatering basin should have a minimum depth of 3 feet (1 meter) where basin depth is measured from the top of the straw bales to the bottom of the excavation.

3. Once the dewatering basin becomes filled to one-half of the excavated depth, accumulated sediment should be removed and disposed of in an approved area outside the 100-year floodplain unless otherwise authorized by the WMA.

4. Sediment control devices should remain in place until all disturbed areas are stabilized and the inspecting authority approves their removal. All disturbed ground contours should be returned to their original condition unless otherwise approved by the WMA or local authority.

Maryland's Guidelines To Waterway Construction
DETAIL 1.1: DEWATERING BASINS

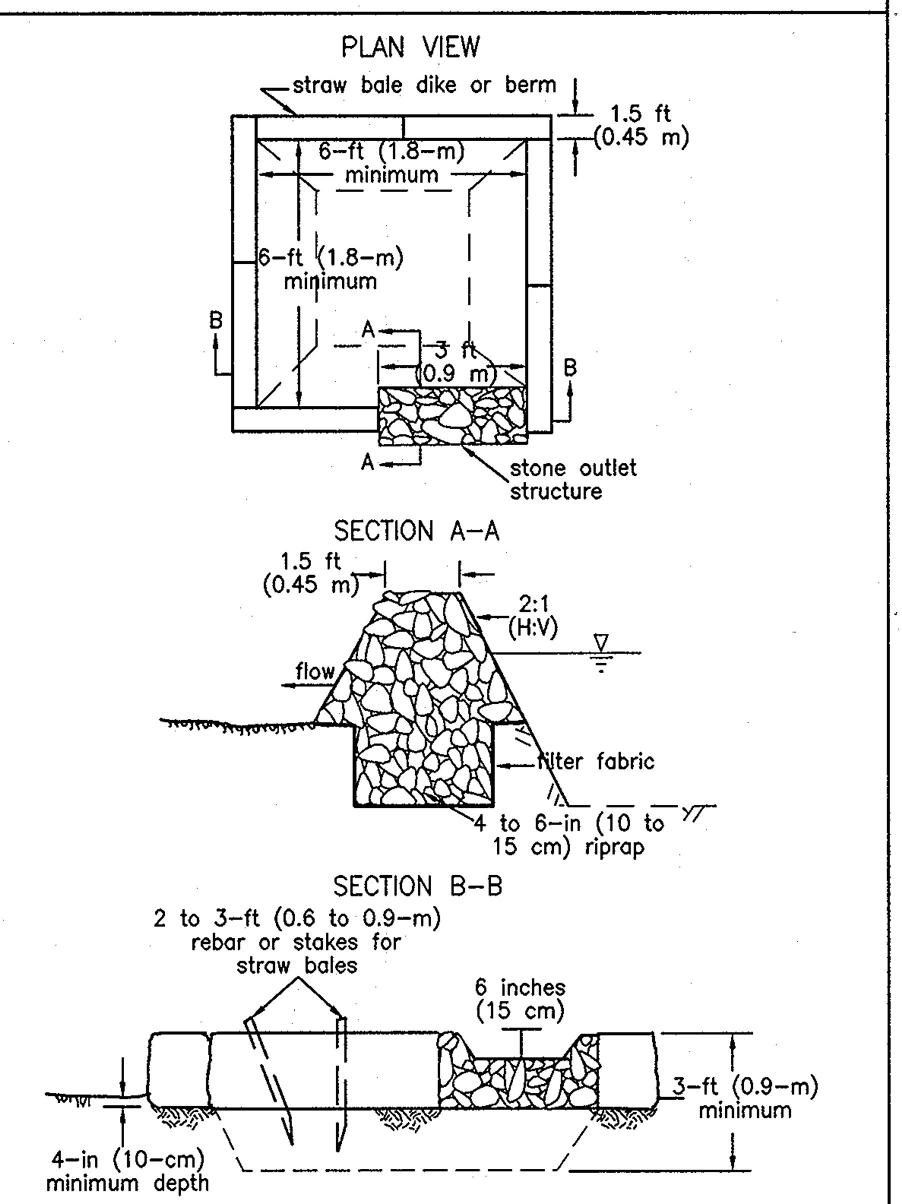

TEMPORARY INSTREAM CONSTRUCTION MEASURES	REVISED NOVEMBER 2000 PAGE 1.1 – 2	MARYLAND DEPARTMENT OF THE ENVIRONMENT WATER MANAGEMENT ADMINISTRATION

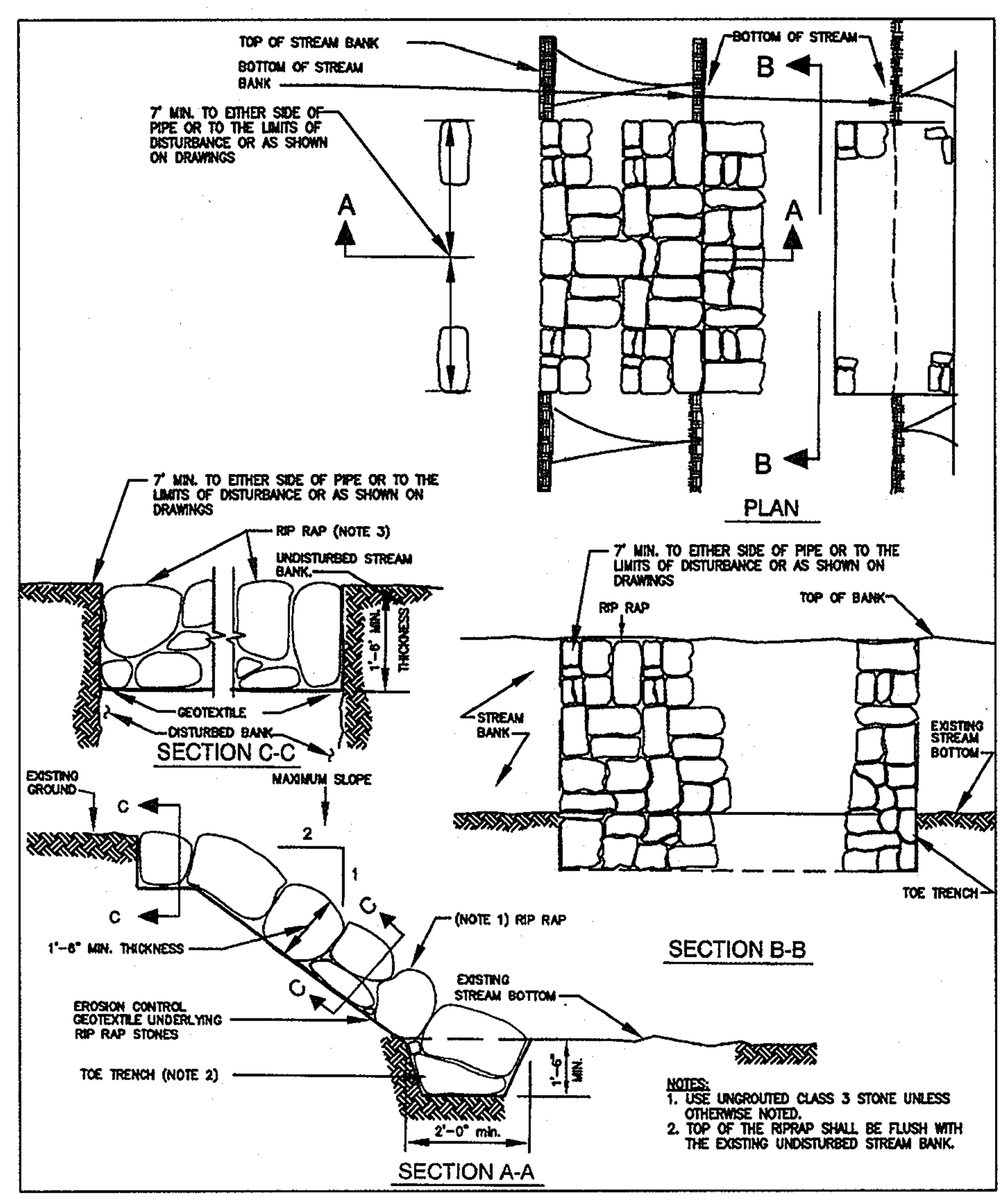

NOTES:
1. USE UNGROUTED CLASS 3 STONE UNLESS OTHERWISE NOTED.
2. TOP OF THE RIPRAP SHALL BE FLUSH WITH THE EXISTING UNDISTURBED STREAM BANK.

STREAM BANK PROTECTION
NO SCALE

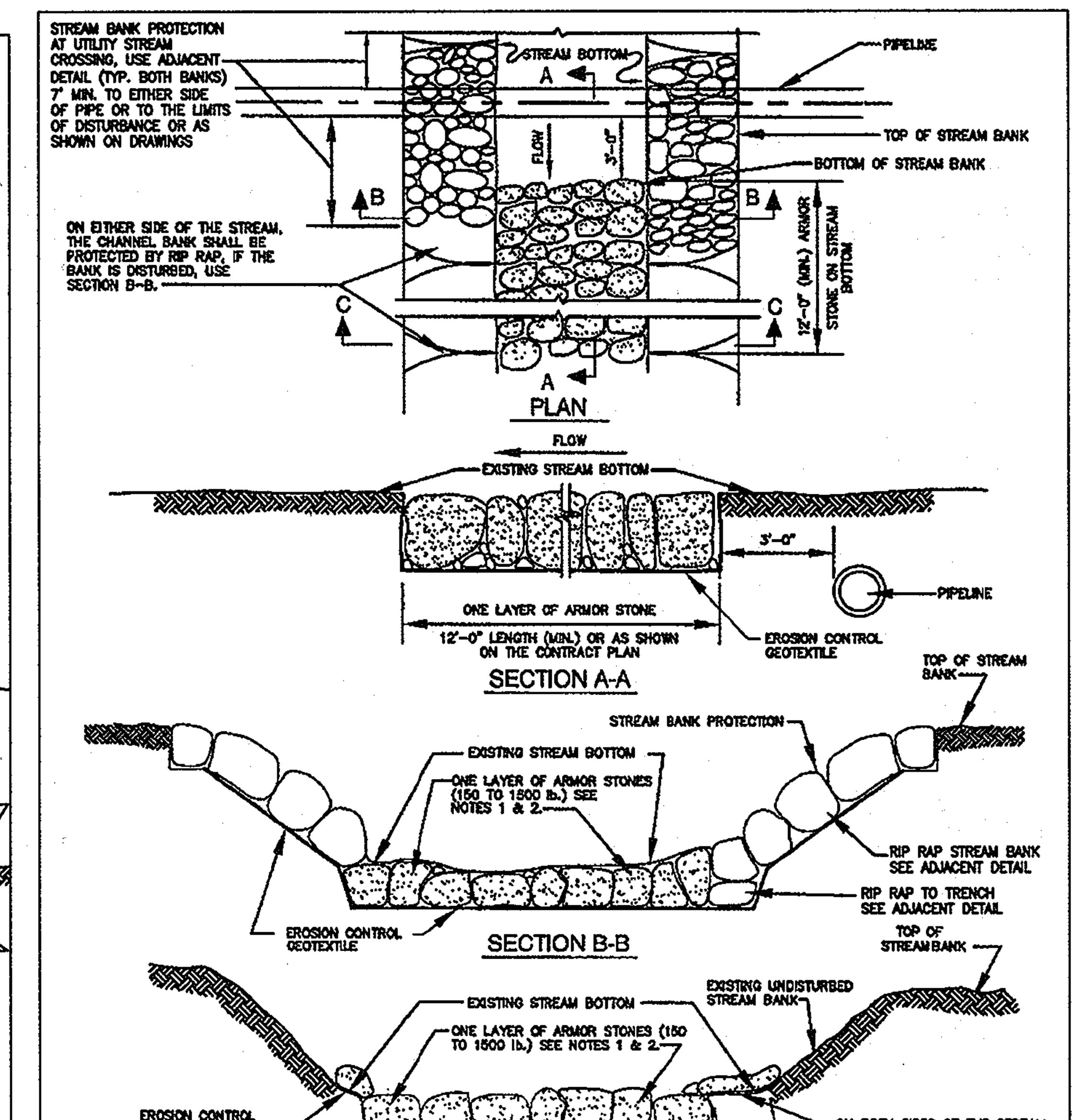

NOTES:
1. ARMOR STONES SHALL BE PLACED IN A MANNER TO PROVIDE A RELATIVELY EVEN STREAM BOTTOM WITH THE TOP OF STONE AT OR BELOW THE ORIGINAL STREAM BOTTOM.
2. ARMOR STONE SHALL BE REASONABLY WELL-GRADED FROM THE SMALLEST TO THE LARGEST SIZE SPECIFIED.

STREAM INVERT PROTECTION
NO SCALE

DETAIL: STREAM BANK/ INVERT PROTECTION

AS-BUILTS
JAN 17 20[illegible]

ESC 9 OF 10

DEPARTMENT OF PUBLIC WORKS
HOWARD COUNTY, MARYLAND

DIRECTOR OF PUBLIC WORKS — DATE 6/3/10
CHIEF, BUREAU OF ENGINEERING — DATE 6/2/10
CHIEF, BUREAU OF UTILITIES — DATE 6/2/10
CHIEF/UTILITY DESIGN DIVISION — DATE 6/2/10 WD

Dewberry
Dewberry & Davis LLC
3106 LORD BALTIMORE DRIVE
SUITE 110
BALTIMORE, MD 21244-2662
410.265.9500
FAX: 410.265.8875

STATE OF MARYLAND — THOMAS N. DALLAS — No. 10966 — REGISTERED PROFESSIONAL ENGINEER

DES: LAL				
DRN: CD				
CHK: TND				
DATE: 5.28.10	BY	NO.	REVISIONS	DATE

EROSION AND SEDIMENT CONTROL NOTES & DETAILS

600' SCALE MAP NO. 37, 43 — BLOCK NO. 5, 23

LITTLE PATUXENT PARALLEL INTERCEPTOR

CAPITAL PROJECT S-6175
CONTRACT NO. 20-4540

ELECTION DISTRICT NO. 5 — **HOWARD COUNTY, MARYLAND**

SCALE: SHOWN

SHEET 19 OF 26

Plotted by: (cdallatezza) on Plot Date: Jun 02, 2010 - 7:20am
Path--> R:\Projects\58125000-Little Patuxent Interceptor\CADD\SECTION X\19-20-0-LPPI X-ESC DETAILS and NOTES SHEET 19-20.dwg
Tab-Layout Name: ESC DETAILS 19
Last Saved: Jun 01, 2010 - 10:38am
XREFS-->R:\Projects\58125000-Little Patuxent Interceptor\CADD\SECTION X\1-LPPI X -Border.dwg

MGWC 1.5: Sandbag/Stone Channel Diversion

Temporary measure for dewatering in-channel construction sites

Description

The work should consist of installing sandbag or stone flow diversions for the purpose of erosion control when construction activities occur within the stream channel.

Effective Uses & Limitations

Diversions are used to isolate work areas from flow during the construction of in-stream projects. Diversions which have an insufficient flow capacity can fail and severely erode the disturbed channel section under construction. Therefore, in-channel construction activities should occur only during periods of low rainfall. This temporary measure may not be practical in large channels.

Material Specifications

Materials for sandbag and stone stream diversions should meet the following requirements:

- *Riprap*: Riprap should be washed and have a minimum diameter of 6 inches (0.15 meters).
- *Sandbags*: Sandbags should consist of materials which are resistant to ultra-violet radiation, tearing, and puncture and should be woven tightly enough to prevent leakage of the fill material (i.e., sand, fine gravel, etc.).
- *Sheeting*: Sheeting should consist of polyethylene or other materials which are impervious and resistant to puncture and tearing.

Installation Guidelines

All erosion and sediment control devices, including dewatering basins, should be implemented as the first order of business according to a plan approved by the WMA or local authority. Installation should proceed from upstream to downstream during periods of low flow. If necessary, silt fence or straw bales should be installed around the perimeter of the work area.

Sandbag/stone diversions can be used independently or as components of other stream diversion techniques. Installation of this measure should proceed as follows (refer to Detail 1.5):

1. The diversion structure should be installed from upstream to downstream.
2. The height of the sandbag/stone diversion should be a function of the duration of the project in the stream reach. For projects with a duration less than 2 weeks, the height of the diversion should be one half the streambank height, measured from the channel bed, plus 1 foot (0.3 meters) or bankfull height, whichever is greater. For projects of longer duration, the top of the sandbag or stone diversion should correspond to bankfull height. For diversion structures utilizing sandbags, the stream bed should be hand prepared prior to placement of the base layer of sandbags in order to ensure a water tight fit. Additionally, it may be necessary to prepare the bank in a similar fashion.
3. All excavated material should be deposited and stabilized in an approved area outside the 100-year floodplain unless otherwise authorized by the WMA.
4. Sediment-laden water from the construction area should be pumped to a dewatering basin.

TEMPORARY INSTREAM CONSTRUCTION MEASURES — *MARYLAND DEPARTMENT OF THE ENVIRONMENT WATERWAY CONSTRUCTION GUIDELINES REVISED NOVEMBER 2000*

PAGE 1.5 - 1

MGWC 1.5: Sandbag/Stone Channel Diversion

5. Sheeting on the diversion should be positioned such that the upstream portion covers the downstream portion with at least a 18-inch (0.45 meters) overlap.
6. Sandbag or stone diversions should not obstruct more than 45% of the stream width. Additionally, bank stabilization measures should be placed in the constricted section if accelerated erosion and bank scour are observed during the construction time or if project time is expected to last more than 2 weeks.
7. Prior to removal of these temporary structures, any accumulated sediment should be removed, deposited and stabilized in an approved area outside the 100-year floodplain unless authorized by the WMA.
8. Sediment control devices are to remain in place until all disturbed areas are stabilized in accordance with an approved sediment and erosion control plan and the inspecting authority approves their removal.

TEMPORARY INSTREAM CONSTRUCTION MEASURES — *MARYLAND DEPARTMENT OF THE ENVIRONMENT WATERWAY CONSTRUCTION GUIDELINES REVISED NOVEMBER 2000*

PAGE 1.5 - 2

Maryland's Guidelines To Waterway Construction
DETAIL 1.5: SANDBAG/STONE DIVERSION

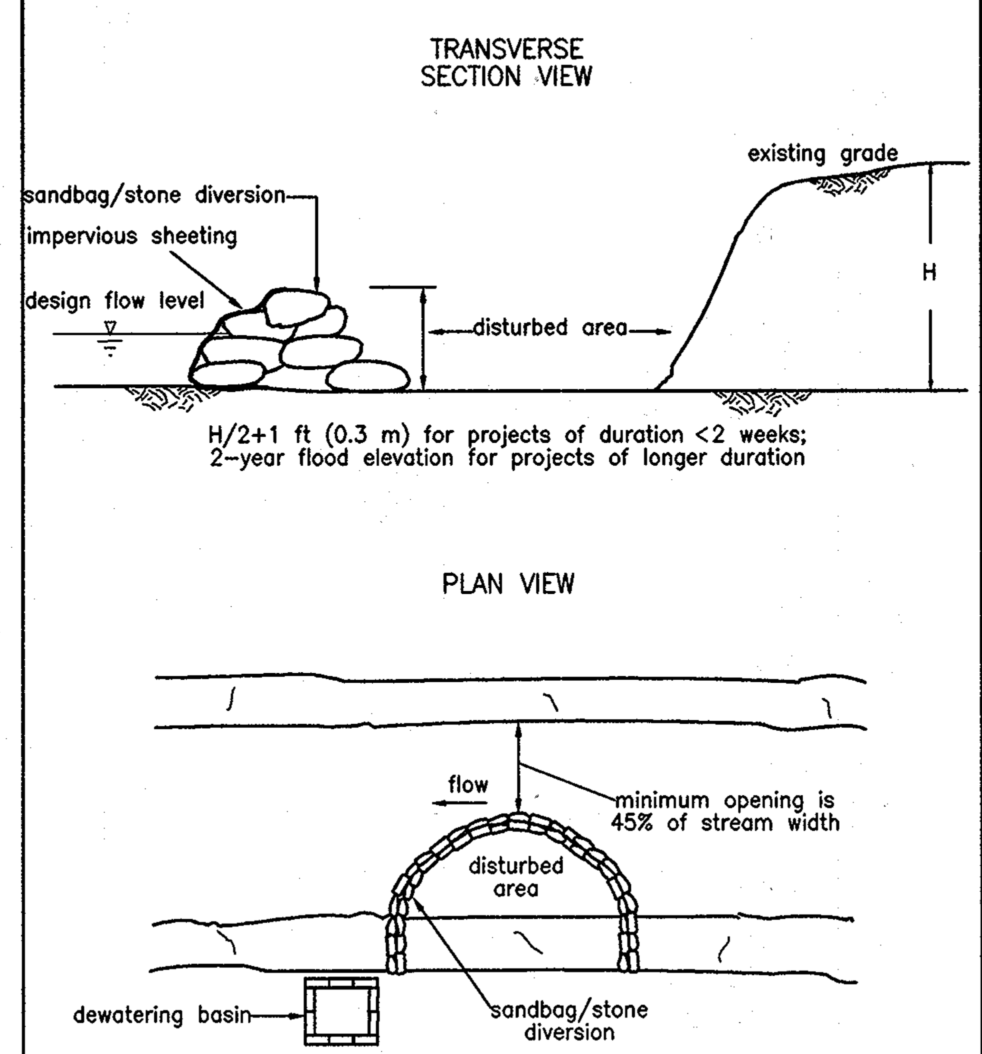

TEMPORARY INSTREAM CONSTRUCTION MEASURES	REVISED NOVEMBER 2000 PAGE 1.5 – 3	MARYLAND DEPARTMENT OF THE ENVIRONMENT WATER MANAGEMENT ADMINISTRATION

MGWC 4.8: Temporary Access Bridge

Temporary stream crossing intended for minimum corridor disturbance

Description

A temporary access bridge is a stream crossing made of wood, metal, or other materials designed to limit the amount of disturbance to the stream banks and bed.

Effective Uses & Limitations

Temporary access bridges are the preferred method of waterway crossing since they typically cause the least disturbance to the waterway bed and banks, pose the least chance for interference with fish migration, and can be quickly removed and reused.

Material Specifications

- *Stringers*: Stringers should either be logs, sawn timber, prestressed concrete beams, metal beams, or other approved materials.
- *Deck Materials*: Deck materials should be of sufficient strength to support the anticipated load.

Construction Sequence

All erosion and sediment control devices, including stream diversions, should be implemented as the first order of business according to a plan approved by the WMA or local authority. Dewatering basins should be built as needed and swales or ditches should be used to prevent surface drainage from entering the stream via the bridge crossing. (See the *1994 Maryland Standards and Specifications for Soil Erosion and Sediment Control*.) The proposed construction, maintenance, and removal sequence is as follows:

1. Abutments should be placed parallel to, and on, stable banks such that the structure is at or above bankfull depth to prevent the entrapment of floating materials and debris.
2. Temporary access bridges should be constructed to span the entire channel. If the bankfull channel width exceeds 8 feet (2.5 meters), then a footing, pier, or other bridge support may be constructed within the waterway. No support will be permitted within the channel for waterways less than 8 feet wide. One additional bridge support will be permitted for each additional 8-foot width of the channel.
3. All decking members should be placed perpendicularly to the stringers, butted tightly, and securely fastened to the stringers. Decking materials must be butted tightly to prevent any soil material tracked onto the bridge from falling into the waterway.
4. Although run planks are optional, they may be necessary to properly distribute loads. One run plank should be provided for each track of the equipment wheels and should be securely fastened to the length of the span.
5. Curbs or fenders may be installed along the outer sides of the deck to provide additional safety.
6. Bridges should be securely anchored at one end using steel cable or chain to prevent the bridge from floating downstream and possibly causing an obstruction to the flow. Anchoring at only one end will prevent channel obstruction in the event that flood waters float the bridge. Acceptable anchors are large trees, boulders, or driven steel anchors.

STREAM CROSSINGS — *MARYLAND DEPARTMENT OF THE ENVIRONMENT WATERWAY CONSTRUCTION GUIDELINES REVISED NOVEMBER 2000*

PAGE 4.8 - 1

MGWC 4.8: Temporary Access Bridge

7. All areas disturbed during installation should be stabilized within 14 calendar days in accordance with a revegetation plan approved by the WMA.
8. Periodic inspection should be performed by the user to ensure that the bridge, streambed, and stream banks are maintained and not damaged.
9. Maintenance should be performed as needed to ensure that the structure complies with all standards and specifications. This should include the removal of trapped sediment and debris which should then be disposed of and stabilized outside the floodplain.
10. When the temporary bridge is no longer needed, all structures including abutments and other bridging materials should be removed within 14 calendar days. In all cases, the bridge materials should be removed within 1 year of installation. Removal of the bridge and clean-up of the area, including protection and stabilization of disturbed stream banks, should be accomplished without the use of construction equipment in the waterway.

STREAM CROSSINGS — *MARYLAND DEPARTMENT OF THE ENVIRONMENT WATERWAY CONSTRUCTION GUIDELINES REVISED NOVEMBER 2000*

PAGE 4.8 - 2

Maryland Guidelines to Waterway Construction
DETAIL 4.8: TEMPORARY ACCESS BRIDGE

SKETCH

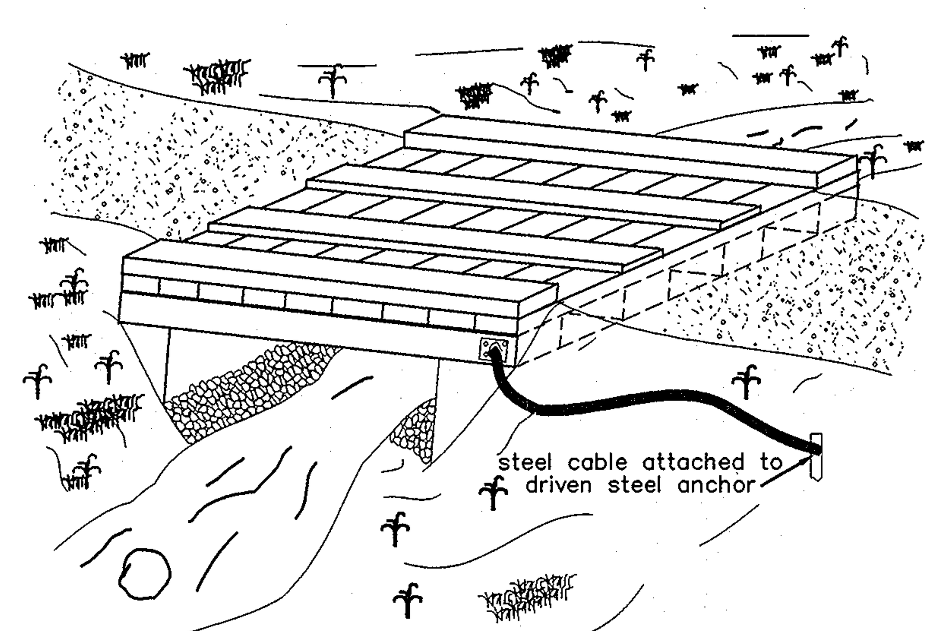

STREAM CROSSINGS	PAGE 4.8–3	MARYLAND DEPARTMENT OF THE ENVIRONMENT WATER MANAGEMENT ADMINISTRATION

DETAIL 36 - TEMPORARY ACCESS CULVERT

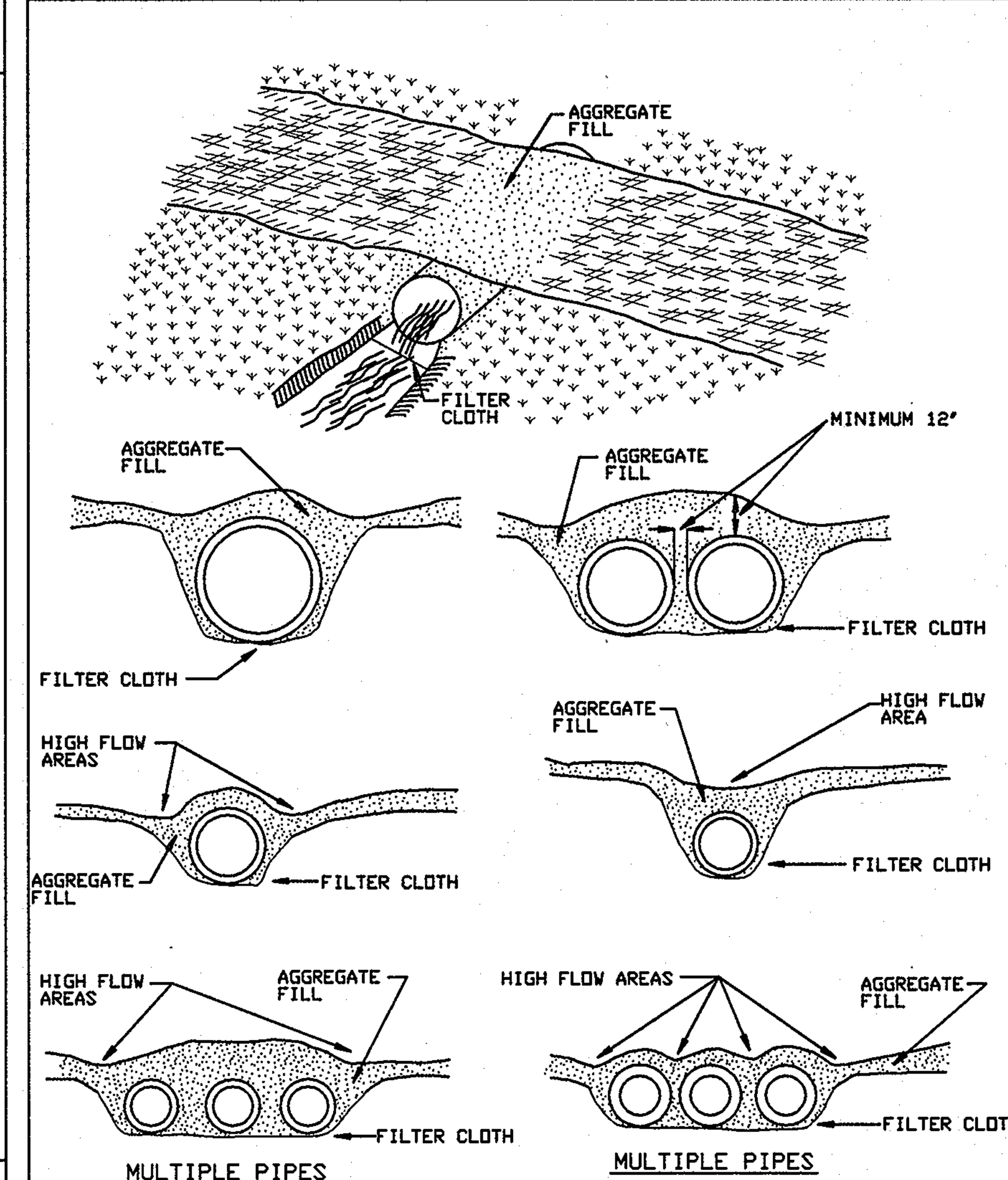

U.S. DEPARTMENT OF AGRICULTURE SOIL CONSERVATION SERVICE	PAGE H – 29 – 12	MARYLAND DEPARTMENT OF ENVIRONMENT WATER MANAGEMENT ADMINISTRATION

TEMPORARY ACCESS CULVERT

Construction Specifications

1. Restrictions - No Construction or removal of a temporary access culvert will be permitted between October 1 through April 30 for Class III and Class IV Trout Waters or between March 1 through June 15 for non-trout waterways.
2. Culvert Strength - All culverts shall be strong enough to support their cross sectional area under maximum expected loads.
3. Culvert Size - The size of the culvert pipe shall be the largest pipe diameter that will fit into the existing channel without major excavation of the waterway channel or without major approach fills. If a channel width exceeds 3 feet, additional pipes may be used until the cross sectional area of the pipes is greater than 60 percent of the cross sectional area of the existing channel. In all cases, the pipe(s) shall be large enough to convey normal stream flows. Culverts that have a duration of 2 weeks or less will have a minimum capacity to convey the stream base flow.
4. Culvert Length - The culvert(s) shall extend a minimum of one foot beyond the upstream and downstream toe to the aggregate placed around the culvert. In no case shall the culvert exceed 40 feet in length.
5. Filter Cloth - Filter cloth shall be placed on the streambed and streambanks prior to placement of the pipe culvert(s) and aggregate. The filter cloth shall cover the streambed and extend a minimum six inches and a maximum one foot beyond the end of the culvert and bedding material. Filter cloth reduces settlement and improves crossing stability.
6. Culvert Placement - The invert elevation of the culvert shall be installed on the natural streambed grade to minimize interference with fish migration (free passage of fish).
7. Culvert Protection - The culvert(s) shall be covered with a minimum of one foot of aggregate. If multiple culverts are used they shall be separated by at least 12" of compacted aggregate fill.
8. Stabilization - All areas disturbed during culvert installation shall be stabilized within 14 calendar days of the disturbance in accordance with the Standard for 'Critical Area Stabilization With Permanent Seeding.'

U.S. DEPARTMENT OF AGRICULTURE SOIL CONSERVATION SERVICE	PAGE H – 29 – 12A	MARYLAND DEPARTMENT OF ENVIRONMENT WATER MANAGEMENT ADMINISTRATION

AS-BUILTS JAN 17 2013

ESC 10 OF 10

DEPARTMENT OF PUBLIC WORKS
HOWARD COUNTY, MARYLAND

DIRECTOR OF PUBLIC WORKS — DATE 6/3/10
CHIEF, BUREAU OF ENGINEERING — DATE 6/2/10
CHIEF, BUREAU OF UTILITIES — DATE 6/2/10
CHIEF, UTILITY DESIGN DIVISION — DATE 6/2/10 WD

Dewberry
Dewberry & Davis LLC
3106 LORD BALTIMORE DRIVE
SUITE 110
BALTIMORE, MD 21244-2662
410.265.9500
FAX: 410.265.8875

STATE OF MARYLAND — THOMAS N. DALLAPALU — No. 10966 — REGISTERED PROFESSIONAL ENGINEER

DES: LAL
DRN: CD
CHK: TND
DATE: 5.28.10

BY	NO.	REVISIONS	DATE

EROSION AND SEDIMENT CONTROL NOTES & DETAILS

600' SCALE MAP NO. 37, 43 — BLOCK NO. 5, 23

LITTLE PATUXENT PARALLEL INTERCEPTOR

CAPITAL PROJECT S-6175
CONTRACT NO. 20-4540

ELECTION DISTRICT NO. 5 — HOWARD COUNTY, MARYLAND

SCALE: SHOWN

SHEET 20 OF 26

Plotted by: (cdallatezzo) on Plot Date: Jun 02, 2010 - 7:24am
Path--> R:\Projects\58125000-Little Patuxent Interceptor\CADD\SECTION X\19-20-0-LPPI X-ESC DETAILS and NOTES SHEET 19-20.dwg
Tab-Layout Name: ESC DETAILS 20
Last Saved: Jun 01, 2010 - 10:38am
XREFS-->R:\Projects\58125000-Little Patuxent Interceptor\CADD\SECTION X\1-LPPI X -Border.dwg

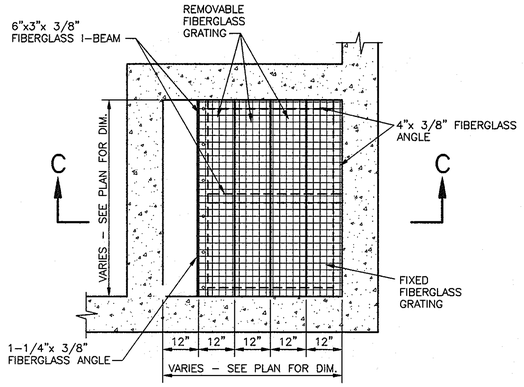

FIBERGLASS GRATING & SUPPORT DETAIL

SCALE : 1/2" = 1'-0"

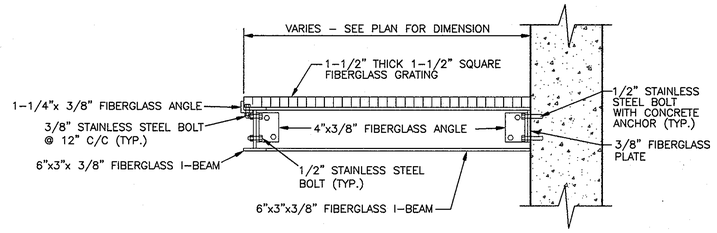

SECTION C–C

SCALE : 1" = 1'-0"

NOTES:

1. SLUICE GATES SHALL BE FONTAINE SERIES 20 MODEL 202–WALL MOUNTED (COMPLETE WITH WALL THIMBLE) AND NON–RISING STEM (NRI) OR APPROVED EQUAL.
2. A–LOK SINGLE CLAMP WATER STOPS SHALL BE USED AT PIPE ENTRY/EXIT POINTS OF THE DIVERSION STRUCTURE, AS INDICATED ON DRAWINGS.
3. GROUND LEVEL POSITION INDICATOR SHALL BE A SEALED UNIT WITH A STAINLESS STEEL SEALED FLOOR BOX. KEY NUT OPERATOR AND POSITION INDICATOR SHALL BE GPI–S SERIES AS MANUFACTURED BY DYNATORQUE, INC. OR APPROVED EQUAL.
4. SEWAGE SHALL NOT, UNDER ANY CIRCUMSTANCES, BE DISCHARGED TO THE NEW SEWER UNTIL WRITTEN PERMISSION IS PROVIDED BY THE COUNTY.
5. POINTS S–1 AND S–2 SHALL BE CENTERED ON THE EXISTING 30 INCH DIAMETER SEWER. THE EXISTING SEWER LOCATION AND INVERTS SHALL BE VERIFIED BY THE CONTRACTOR PRIOR TO SEWER CONSTRUCTION. THE CONTRACTOR SHALL TEST PIT BOTH LOCATIONS AND VERIFY THE TOP & BOTTOM OF PIPE ELEVATIONS AND SHALL ALSO SURVEY THE INCOMING SEWER INVERT AT EX. MANHOLE 1418 & THE OUTGOING SEWER INVERT AT EX. MANHOLE 1419. THE CONTRACTOR SHALL IMMEDIATELY PROVIDE THIS INFORMATION TO THE ENGINEER AND NOTE ANY DISCREPANCIES. ALL INVERT ELEVATIONS ON THIS SHEET ARE SUBJECT TO THIS VERIFICATION BY TEST PIT.
6. THE JUNCTION CHAMBER REQUIRES AN INTERIOR LINER & EXTERIOR WATERPROOFING IN ACCORDANCE WITH THE SPECIFICATIONS.
7. ALL ALUMINUM SURFACES IN CONTACT WITH CONCRETE SHALL BE COATED WITH A BITUMINOUS/ASPHALTIC COMPOUND, MINIMUM 10 MIL. THICK.
8. FOR STRUCTURAL DETAILS SEE SHEET 24.
9. △2 THE 6" DIAMETER OPENING WITH SEALED KEY NUT OPERATOR AND FLOOR BOX IN TOP SLAB IS OFFSET 6 INCHES FROM THE CENTERLINE OF THE 36" & 42" SLUICE GATES BELOW TO ALLOW FOR INSTALLATION OF THE GEARED LIFT.

CURVE STAKEOUT DATA

POINT NO.	NORTH	EAST
PC–1	562,944.80	1,353,643.65
PI–1	562,946.89	1,353,644.55
PT–1	562,949.11	1,353,645.07
PC–2	562,933.60	1,353,652.73
PI–2	562,936.08	1,353,653.79
PT–2	562,938.58	1,353,652.79
PC–3	562,952.26	1,353,647.31
PI–3	562,954.61	1,353,646.37
PT–3	562,957.07	1,353,646.96

CURVE DATA

CURVE NO.	RADIUS	TANGENT	LENGTH	△
1	26.29'	2.28'	4.54'	09°54'16"
2	6.50'	2.69'	5.10'	45°00'00"
3	8.00'	2.53'	4.90'	35°05'44"

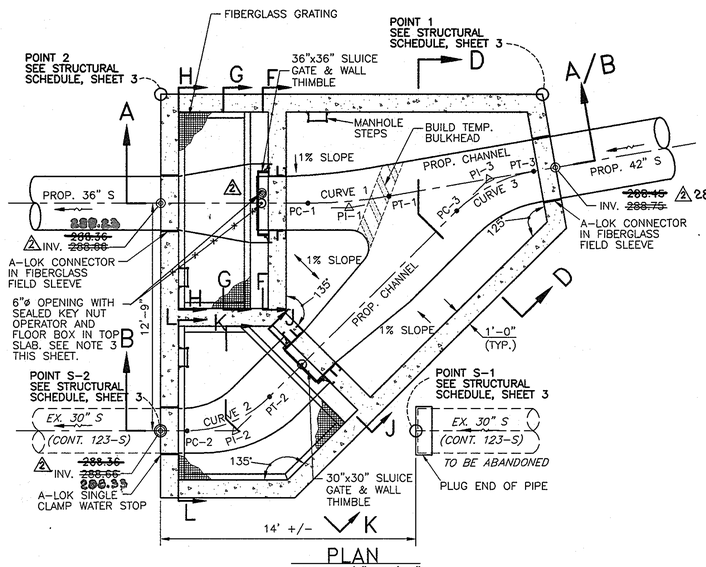

PLAN

SCALE : 1/4" = 1'-0"

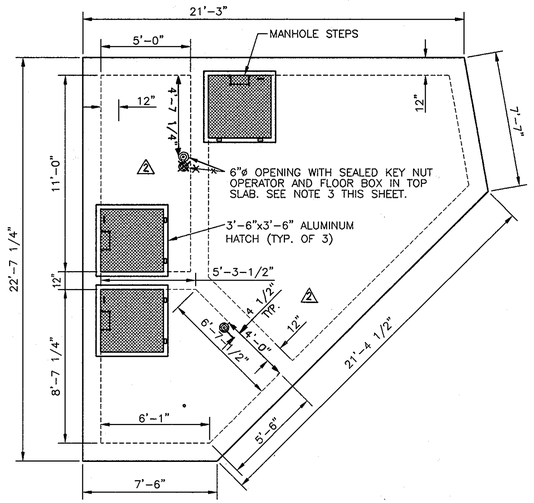

TOP SLAB PLAN

SCALE : 1/4" = 1'-0"

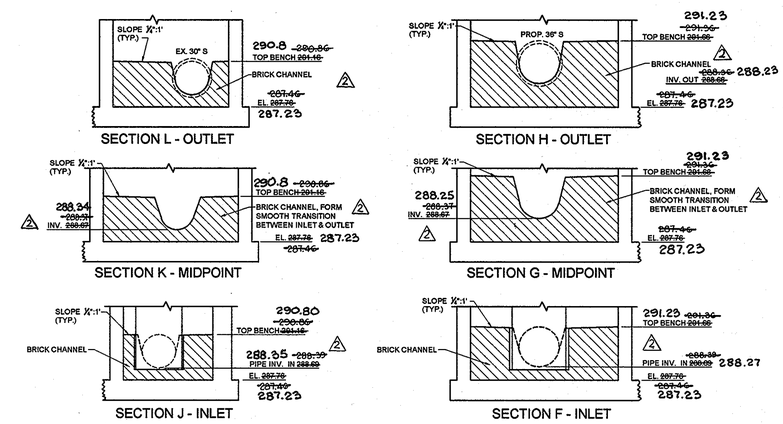

CROSS SECTIONS

SCALE: 3/16" = 1'-0"

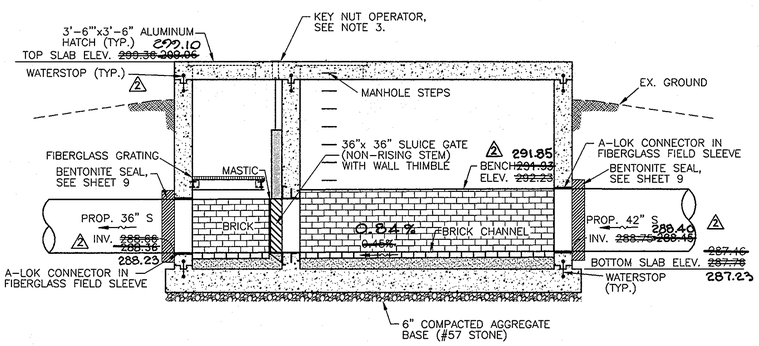

SECTION A – A

SCALE : 1/4" = 1'-0"

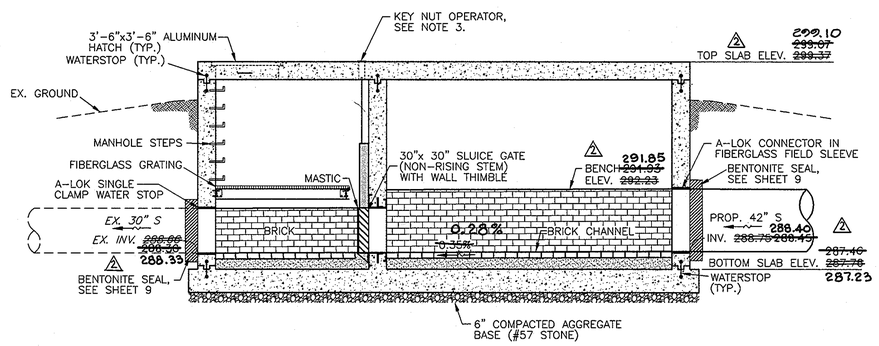

SECTION B – B

SCALE : 1/4" = 1'-0"

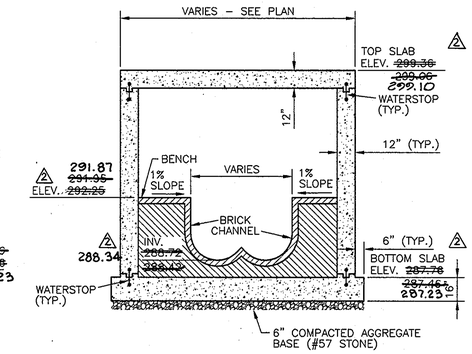

SECTION D – D

SCALE : 1/4" = 1'-0"

AS-BUILTS
JAN 17 2012

DEPARTMENT OF PUBLIC WORKS
HOWARD COUNTY, MARYLAND

DIRECTOR OF PUBLIC WORKS — DATE 6/3/10
CHIEF, BUREAU OF ENGINEERING — DATE 6/2/10
CHIEF, BUREAU OF UTILITIES — DATE 6/2/10
CHIEF, UTILITY DESIGN DIVISION — DATE 6/2/10 WD

Dewberry
Dewberry & Davis LLC
3106 LORD BALTIMORE DRIVE
SUITE 110
BALTIMORE, MD 21244-2662
410.265.9500
FAX: 410.265.8875

STATE OF MARYLAND — THOMAS N. DALLAVALLE — No. 19968 — REGISTERED PROFESSIONAL ENGINEER

DES: LAL				
DRN: RLI				
CHK: TND	LAL	2	REVISED ELEVATIONS AND ADDED DIMENSIONS FOR SLUICE GATE OPERATIONS	07/11
DATE: 5.28.10	BY	NO.	REVISIONS	DATE

JUNCTION CHAMBER 1001
PLANS, SECTIONS, & DETAILS

600' SCALE MAP NO. 37, 43 — BLOCK NO. 5, 23

LITTLE PATUXENT PARALLEL INTERCEPTOR
CAPITAL PROJECT S-6175
CONTRACT NO. 20-4540

ELECTION DISTRICT NO. 5 — HOWARD COUNTY, MARYLAND

SCALE: SHOWN

SHEET 21 OF 26

Plotted by: (dana) on Plot Date: Jun 01, 2010 – 4:08pm
Path—>X:\Projects\S012500-Little Patuxent Interceptor\CADD\SECTION X\21-25-0-LPPI X-JUNCTION CHAMBER PLANS.dwg
Plot Scale: 1 inch = 1 inch, Plot Device: PDF-Adobe
Last Saved: Jun 01, 2010 – 11:02am
XREFS—>X:\Projects\S012500-Little Patuxent Interceptor\CADD\SECTION X\1-LPPI X –Border.dwg

NOTES:

1. SLUICE GATES SHALL BE FONTAINE SERIES 20 MODEL 202-WALL MOUNTED (COMPLETE WITH WALL THIMBLE) AND NON-RISING STEM (NRI) OR APPROVED EQUAL.
2. A-LOK SINGLE CLAMP WATER STOPS SHALL BE USED AT PIPE ENTRY/EXIT POINTS OF THE DIVERSION STRUCTURE, AS INDICATED ON DRAWINGS.
3. GROUND LEVEL POSITION INDICATOR SHALL BE A SEALED UNIT WITH A STAINLESS STEEL SEALED FLOOR BOX. KEY NUT OPERATOR AND POSITION INDICATOR SHALL BE GPI-S SERIES AS MANUFACTURED BY DYNATORQUE, INC. OR APPROVED EQUAL.
4. SEWAGE SHALL NOT, UNDER ANY CIRCUMSTANCES, BE DISCHARGED TO THE NEW SEWER UNTIL WRITTEN PERMISSION IS PROVIDED BY THE COUNTY.
5. THE JUNCTION CHAMBER REQUIRES AN INTERIOR LINER & EXTERIOR WATERPROOFING IN ACCORDANCE WITH THE SPECIFICATIONS.
6. ALL ALUMINUM SURFACES IN CONTACT WITH CONCRETE SHALL BE COATED WITH A BITUMINOUS/ASPHALTIC COMPOUND, MINIMUM 10 MIL. THICK.
7. FOR STRUCTURAL DETAILS SEE SHEET 24.
8. THE 6" DIAMETER OPENING WITH SEALED KEY NUT OPERATOR AND BOX IN TOP SLAB IS OFFSET 6 INCHES FROM THE CENTERLINE OF THE 36" & 42" SLUICE GATES BELOW TO ALLOW FOR INSTALLATION OF THE GEARED LIFT. (2)

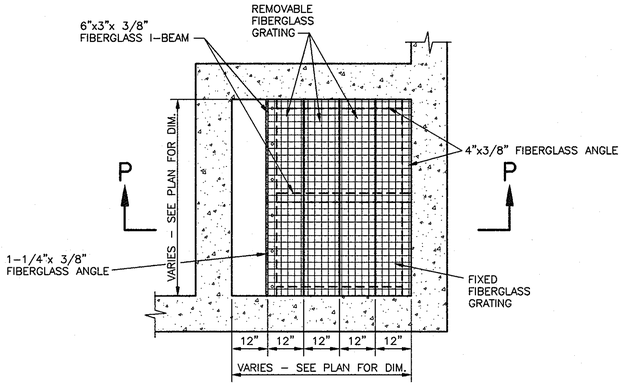

FIBERGLASS GRATING DETAIL

SCALE : 1/2" = 1'-0"

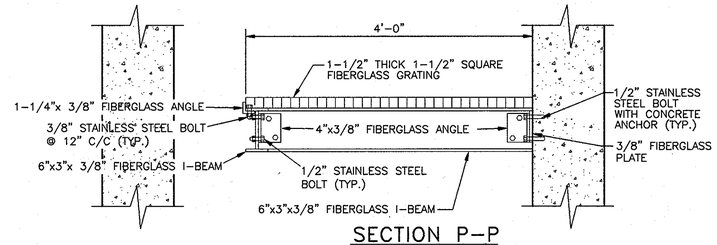

SECTION P-P

SCALE : 1" = 1'-0"

CURVE DATA				
CURVE NO.	RADIUS	TANGENT	LENGTH	Δ
1	6.50'	6.56'	10.27'	90°31'50"
2	6.50'	6.56'	10.27'	90°31'50"

CURVE STAKEOUT DATA		
POINT NO.	NORTH	EAST
PC-1	564,733.33	1,354,222.06
PI-1	564,739.89	1,354,221.96
PT-1	564,739.93	1,354,228.52
PC-2	564,726.83	1,354,222.16
PI-2	564,733.39	1,354,222.06
PT-2	564,733.43	1,354,228.62

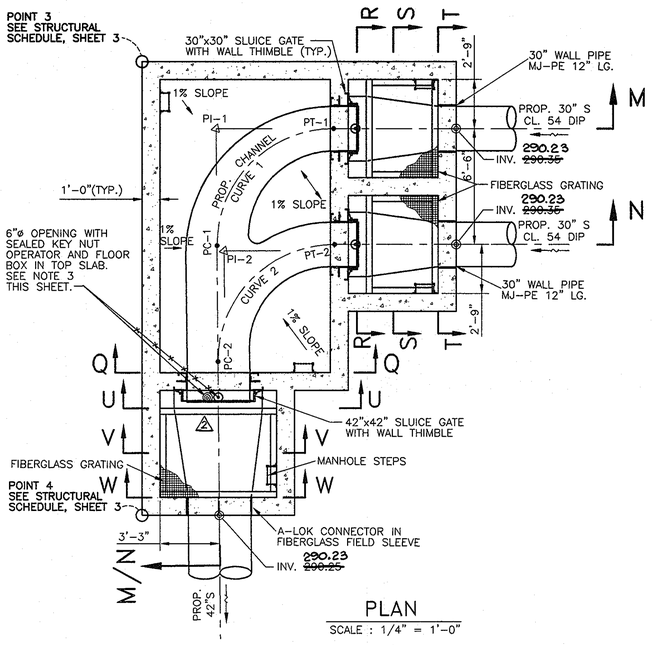

PLAN

SCALE : 1/4" = 1'-0"

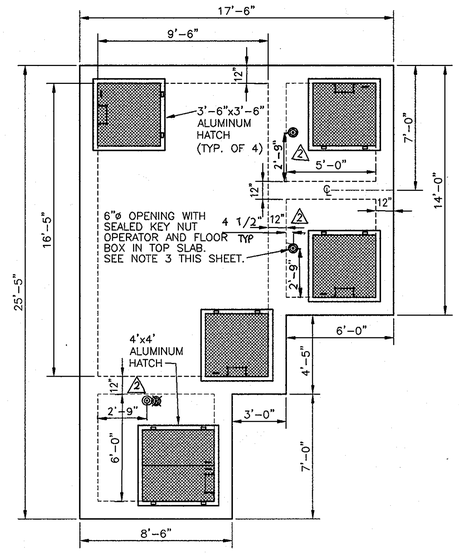

TOP SLAB PLAN

SCALE : 1/4" = 1'-0"

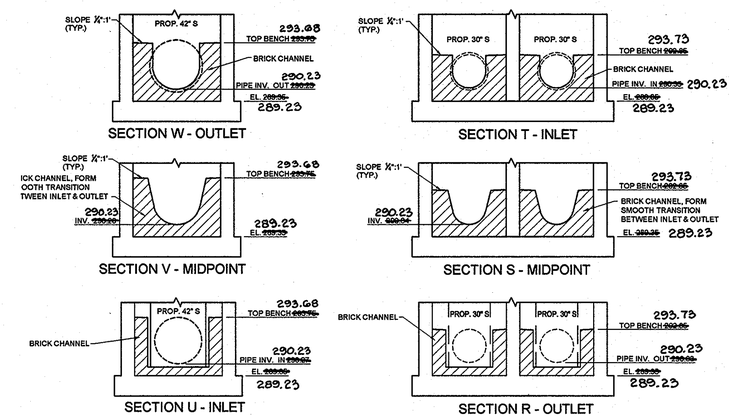

CROSS SECTIONS

SCALE: 3/16" = 1'-0"

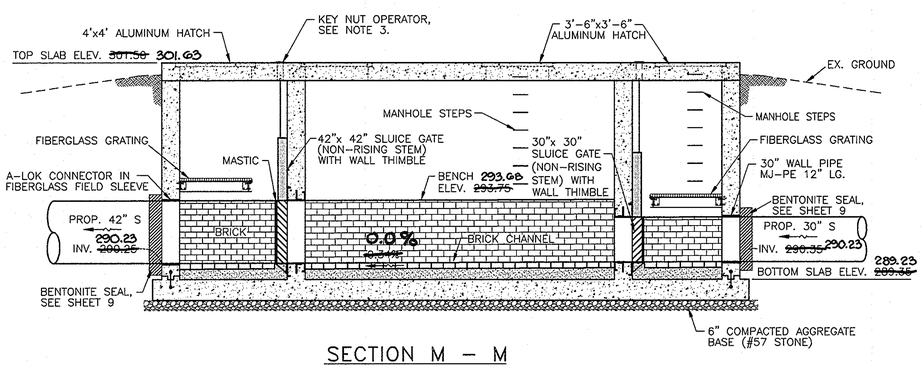

SECTION M - M

SCALE : 1/4" = 1'-0"

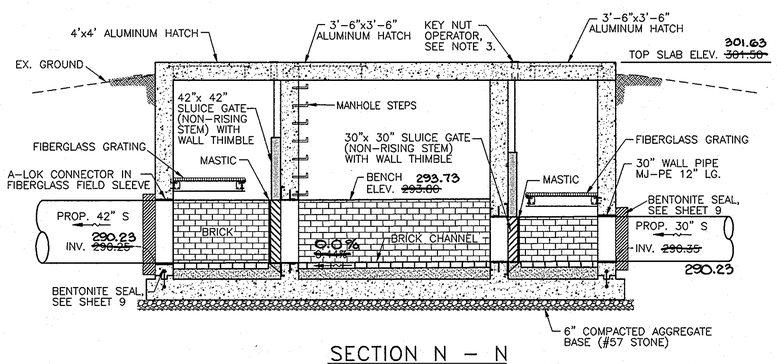

SECTION N - N

SCALE : 1/4" = 1'-0"

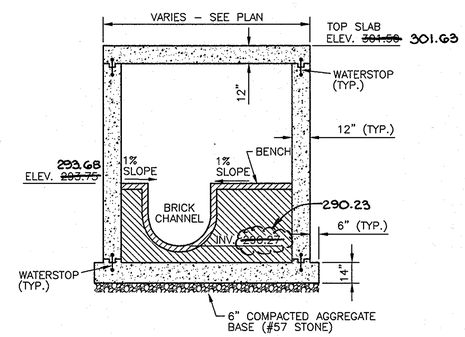

SECTION Q - Q

SCALE : 1/4" = 1'-0"

AS-BUILTS JUN 17 2013

DEPARTMENT OF PUBLIC WORKS
HOWARD COUNTY, MARYLAND

DIRECTOR OF PUBLIC WORKS — DATE 6/3/10
CHIEF, BUREAU OF ENGINEERING — DATE 6/2/10
CHIEF, BUREAU OF UTILITIES — DATE 6/2/10
CHIEF, UTILITY DESIGN DIVISION — DATE 6/2/10 WD

Dewberry
Dewberry & Davis LLC
3108 LORD BALTIMORE DRIVE
SUITE 110
BALTIMORE, MD 21244-2662
410.265.9500
FAX: 410.265.8675

STATE OF MARYLAND — THOMAS N. DALY, JR. — No. 19031 — REGISTERED PROFESSIONAL ENGINEER

DES: LAL
DRN: RLI
CHK: TND
DATE: 5.28.10

BY	NO.	REVISIONS	DATE
LAL	2	ADDED DIMENSIONS FOR SLUICE GATE OPERATIONS	07/11

JUNCTION CHAMBER 1002
PLANS, SECTIONS, & DETAILS

600' SCALE MAP NO. 37, 43 — BLOCK NO. 5, 23

LITTLE PATUXENT PARALLEL INTERCEPTOR
CAPITAL PROJECT S-6175
CONTRACT NO. 20-4540

ELECTION DISTRICT NO. 5 — HOWARD COUNTY, MARYLAND

SCALE: SHOWN

SHEET 22 OF 26

Plotted by: (tond) on Plot Date: Jun 01, 2010 – 4:16pm
Plot Scale: 1:1 Units: Inches Rotation: 0.00d
Tab: Layout Name: JC-1002 PLAN
Last Saved: (tond) on Jun 01, 2010 – 1:06pm
WSP: Sheet: (Project\Contracts\S6200-Little Patuxent Interceptor\CADD\SECTION X\01-25-Jc-PPI X-JUNCTION CHAMBER PLANS.dwg
WSP: Sheet: (Project\Contracts\S6200-Little Patuxent Interceptor\CADD\SECTION X\1-UPPI X -Border.dwg

NOTES:

1. SLUICE GATES SHALL BE FONTAINE SERIES 20 MODEL 202-WALL MOUNTED (COMPLETE WITH WALL THIMBLE) AND NON-RISING STEM (NRI) OR APPROVED EQUAL.
2. A-LOK SINGLE CLAMP WATER STOPS SHALL BE USED AT PIPE ENTRY/EXIT POINTS OF THE DIVERSION STRUCTURE, AS INDICATED ON DRAWINGS.
3. GROUND LEVEL POSITION INDICATOR SHALL BE A SEALED UNIT WITH A STAINLESS STEEL SEALED FLOOR BOX. KEY NUT OPERATOR AND POSITION INDICATOR SHALL BE GPI-S SERIES AS MANUFACTURED BY DYNATORQUE, INC. OR APPROVED EQUAL.
4. SEWAGE SHALL NOT, UNDER ANY CIRCUMSTANCES, BE DISCHARGED TO THE NEW SEWER UNTIL WRITTEN PERMISSION IS PROVIDED BY THE COUNTY.
5. POINTS S-1 AND S-2 SHALL BE CENTERED ON THE EXISTING 30 INCH DIAMETER SEWER. THE EXISTING SEWER LOCATION AND INVERTS SHALL BE VERIFIED BY THE CONTRACTOR PRIOR TO SEWER CONSTRUCTION. THE CONTRACTOR SHALL TEST PIT BOTH LOCATIONS AND VERIFY THE TOP & BOTTOM OF PIPE ELEVATIONS AND SHALL ALSO SURVEY THE INCOMING SEWER INVERT AT EX. MANHOLE 1422 & THE OUTGOING SEWER INVERT AT EX. MANHOLE 1423. THE CONTRACTOR SHALL IMMEDIATELY PROVIDE THIS INFORMATION TO THE ENGINEER AND NOTE ANY DISCREPANCIES. ALL INVERT ELEVATIONS ON THIS SHEET ARE SUBJECT TO THIS VERIFICATION BY TEST PIT.
6. THE JUNCTION CHAMBER REQUIRES AN INTERIOR LINER & EXTERIOR WATERPROOFING IN ACCORDANCE WITH THE SPECIFICATIONS.
7. ALL ALUMINUM SURFACES IN CONTACT WITH CONCRETE SHALL BE COATED WITH A BITUMINOUS/ASPHALTIC COMPOUND, MINIMUM 10 MIL. THICK.
8. FOR STRUCTURAL DETAILS SEE SHEET 24.
9. THE 6" DIAMETER OPENING WITH SEALED KEY NUT OPERATOR AND FLOOR BOX IN TOP SLAB IS OFFSET 6INCHES FROM THE CENTERLINE OF THE 36" & 42" SLUICE GATES BELOW TO ALLOW FOR INSTALLATION OF THE GEARED LIFT.

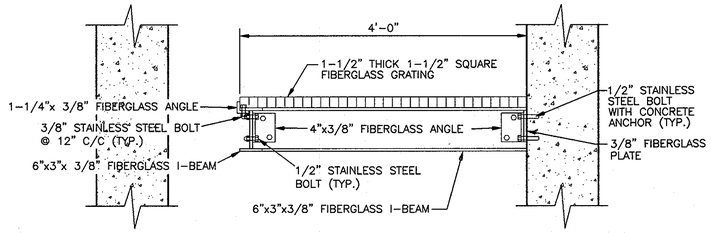

SECTION Z – Z

SCALE : 1" = 1'-0"

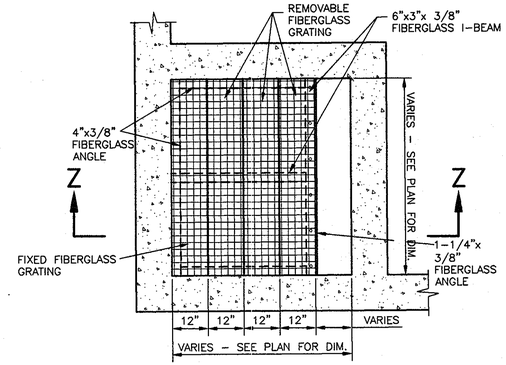

FIBERGLASS GRATING DETAIL

SCALE : 1/2" = 1'-0"

CURVE STAKEOUT DATA		
POINT NO.	NORTH	EAST
PC-1	564,740.49	1,354,320.90
PI-1	564,740.52	1,354,327.40
PT-1	564,747.02	1,354,327.37
PC-2	564,733.99	1,354,320.94
PI-2	564,734.01	1,354,324.79
PT-2	564,737.39	1,354,326.62
PC-3	564,737.39	1,354,326.62
PI-3	564,742.58	1,354,329.43
PT-3	564,746.78	1,354,333.58

CURVE DATA				
CURVE NO.	RADIUS	TANGENT	LENGTH	Δ
1	6.50'	6.50'	10.21'	90°00'00"
2	6.50'	3.84'	6.94'	61°11'28"
2	41.50'	5.90'	11.73'	16°11'28"

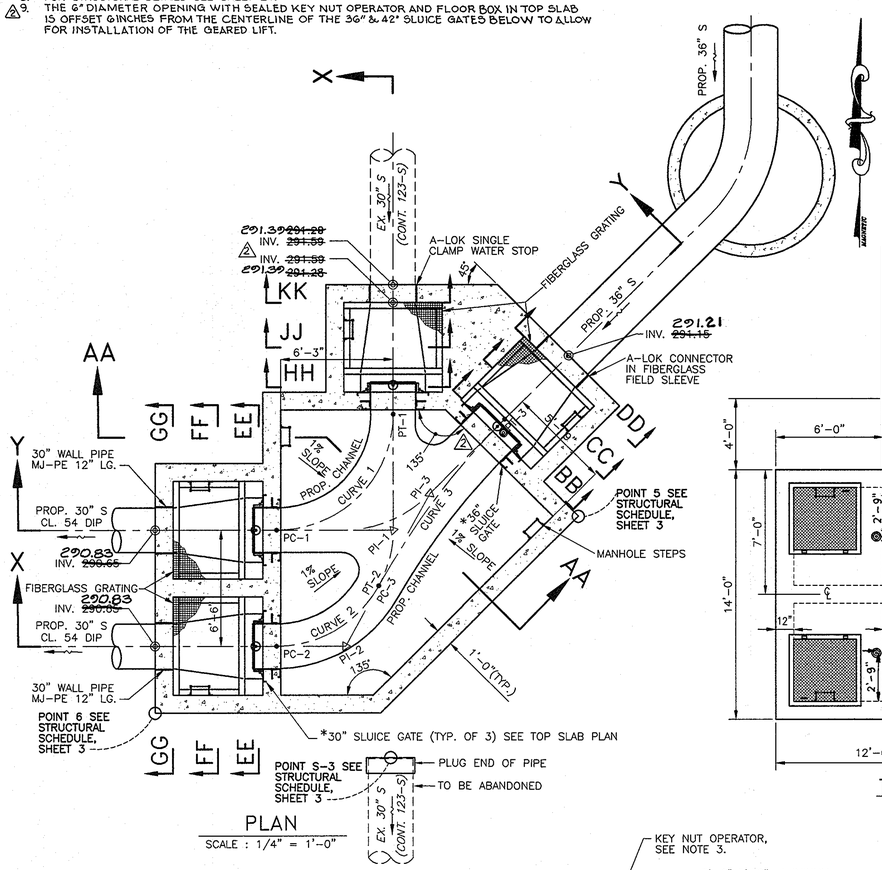

PLAN

SCALE : 1/4" = 1'-0"

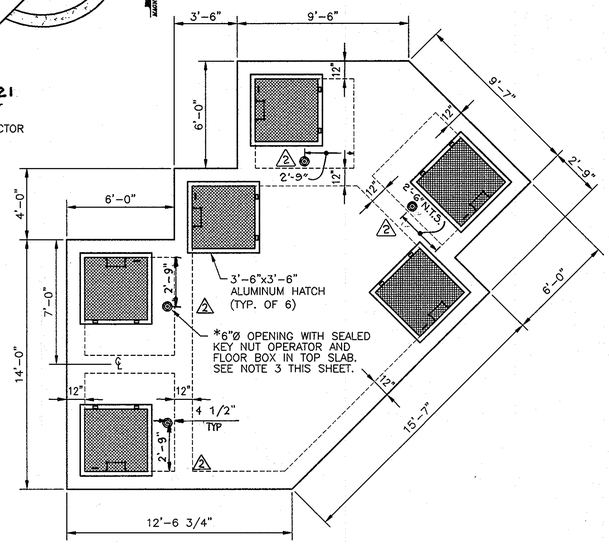

TOP SLAB PLAN

SCALE : 1/4" = 1'-0"

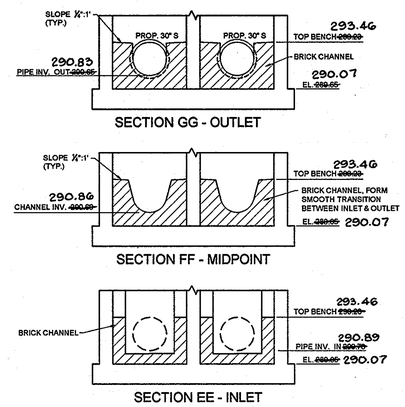

CROSS SECTIONS

SCALE: 3/16" = 1'-0"

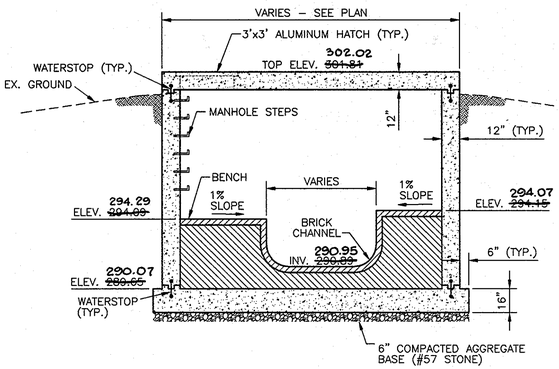

SECTION AA – AA

SCALE : 1/4" = 1'-0"

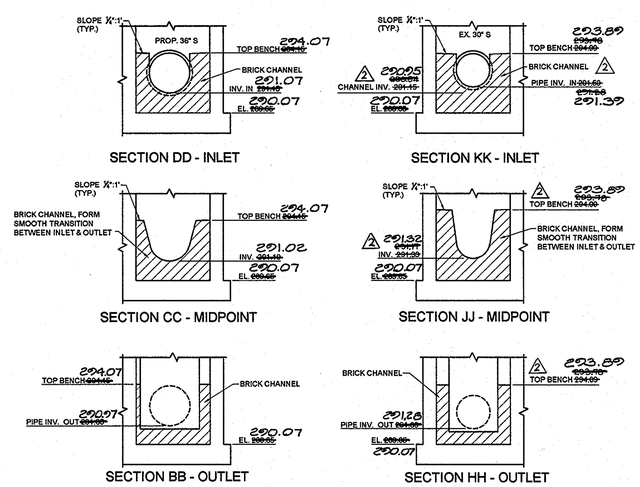

CROSS SECTIONS

SCALE: 3/16" = 1'-0"

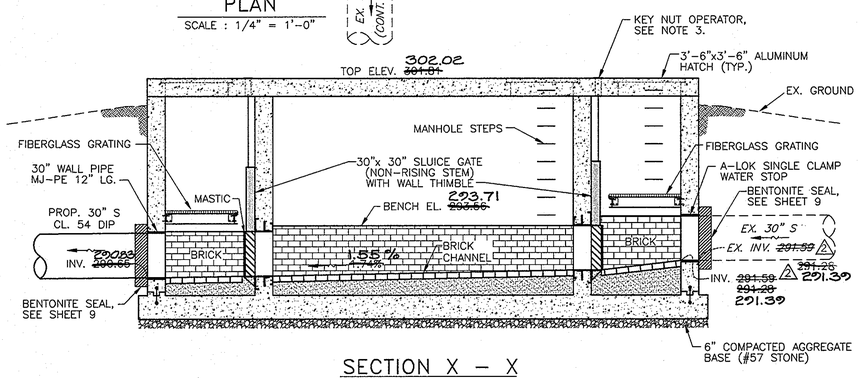

SECTION X – X

SCALE : 1/4" = 1'-0"

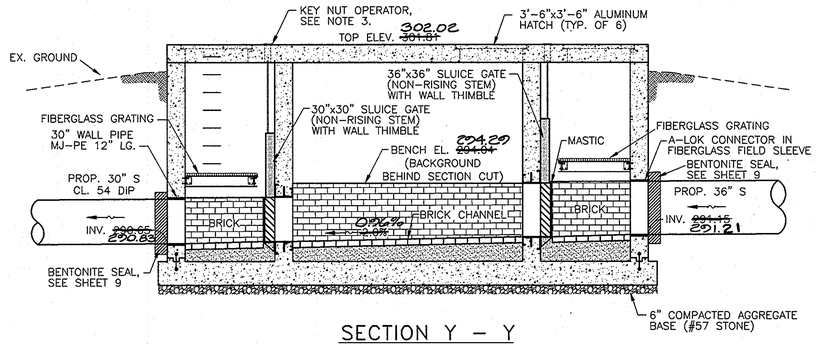

SECTION Y – Y

SCALE : 1/4" = 1'-0"

AS-BUILTS

JAN 1 7 2013

DEPARTMENT OF PUBLIC WORKS
HOWARD COUNTY, MARYLAND

DIRECTOR OF PUBLIC WORKS — DATE 6/8/10
CHIEF, BUREAU OF ENGINEERING — DATE 6/2/10
CHIEF, BUREAU OF UTILITIES — DATE 6/2/10
CHIEF, UTILITY DESIGN DIVISION — DATE 6/8/10 WD

Dewberry
Dewberry & Davis LLC
3106 LORD BALTIMORE DRIVE
SUITE 110
BALTIMORE, MD 21244-2662
410.265.9900
FAX: 410.265.8875

STATE OF MARYLAND — THOMAS N. DALLAVALLE — No. 19968 — REGISTERED PROFESSIONAL ENGINEER

DES: LAL
DRN: RLI
CHK: TND
DATE: 5.28.10

BY	NO.	REVISIONS	DATE
LAL	2	REVISED ELEVATIONS AND ADDED DIMENSIONS FOR SLUICE GATE OPERATIONS	07/11

JUNCTION CHAMBER 1003
PLANS, SECTIONS, & DETAILS

600' SCALE MAP NO. 37, 43 — BLOCK NO. 5, 23

LITTLE PATUXENT PARALLEL INTERCEPTOR
CAPITAL PROJECT S-6175
CONTRACT NO. 20-4540

ELECTION DISTRICT NO. 5 — HOWARD COUNTY, MARYLAND

SCALE: SHOWN

SHEET 23 OF 26

Plotted by: (gaithersj) on Plot Date: Jun 01, 2010 – 4:17pm
Drawing Name: J:\1003 Little Patuxent Interceptor\CADD\SECTION X\21-25-0-LPPI X-JUNCTION CHAMBER PLANS.dwg
Tab-Layout Name: JC-1003 PLAN
Last Saved: Jun 01, 2010 – 3:51pm
XREFS-ACAD\Projects\01250003-Little Patuxent Interceptor\CADD\SECTION X\1-LPPI X -Border.dwg

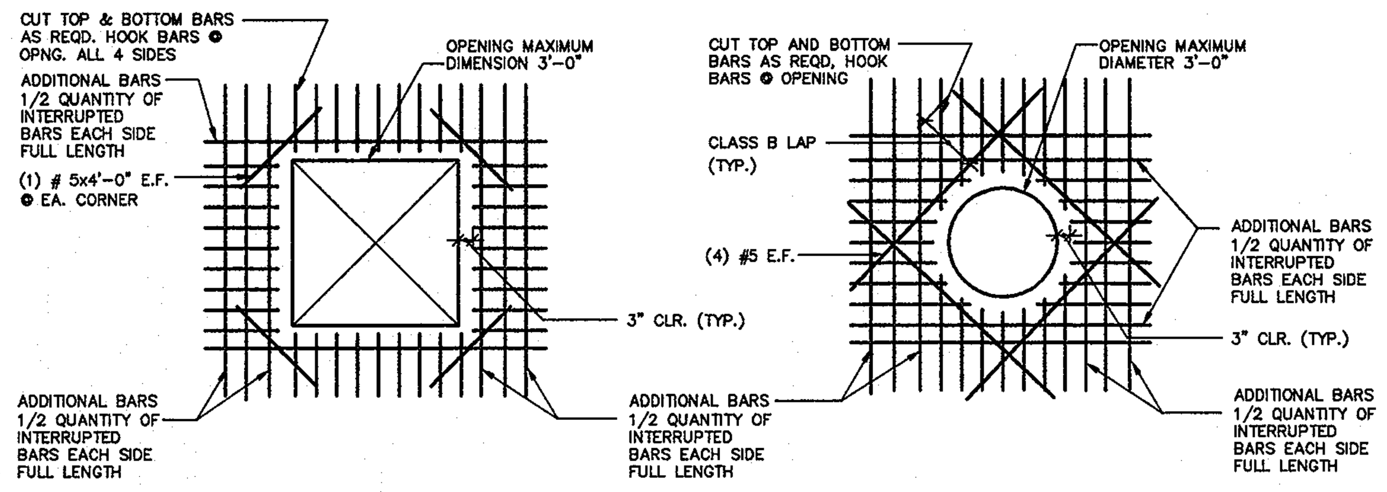

TYPICAL WALL OR SLAB OPENING DETAILS
SCALE : NTS

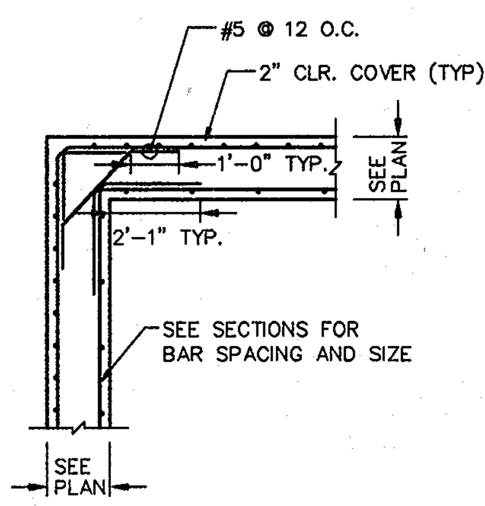

PLAN VIEW
TYPICAL CORNER DETAIL
SCALE : NTS

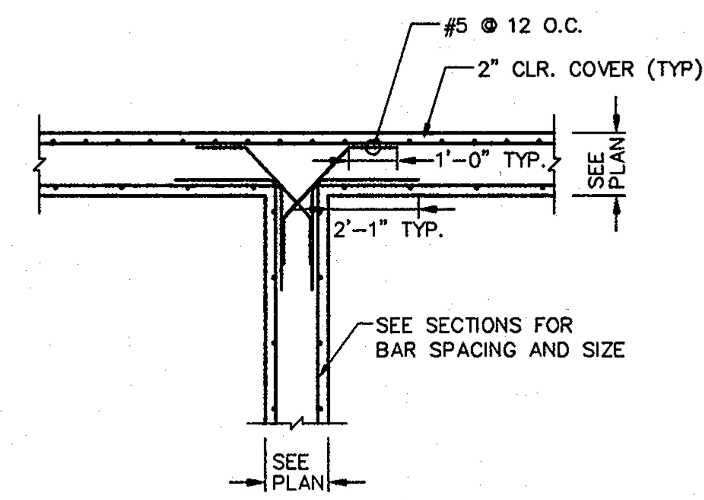

PLAN VIEW
TYPICAL INTERSECTION DETAIL
SCALE : NTS

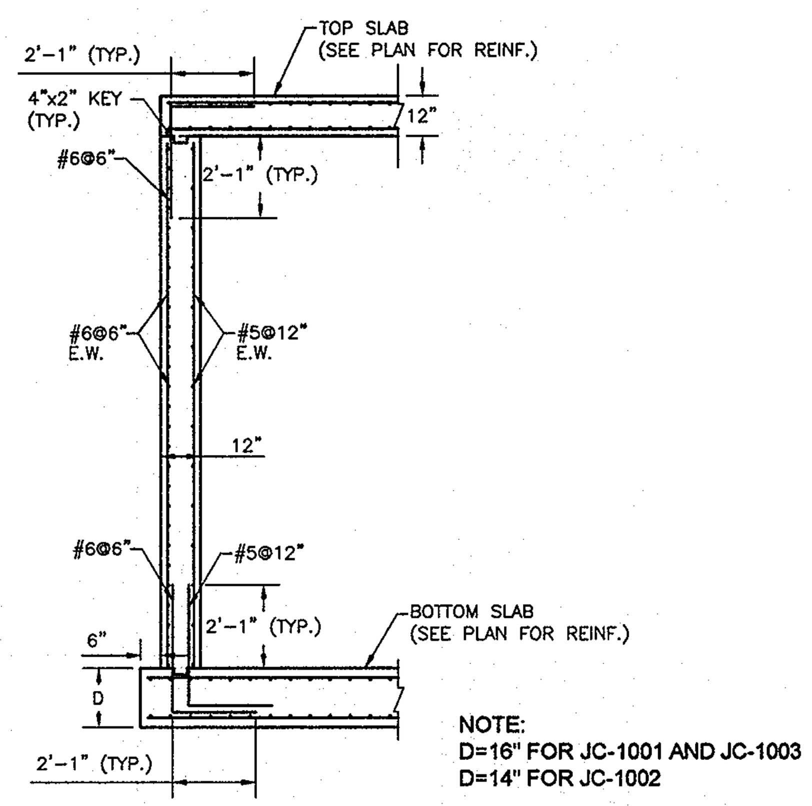

NOTE:
D=16" FOR JC-1001 AND JC-1003
D=14" FOR JC-1002

ELEVATION OUTER WALL
TYPICAL SECTION
SCALE : NTS

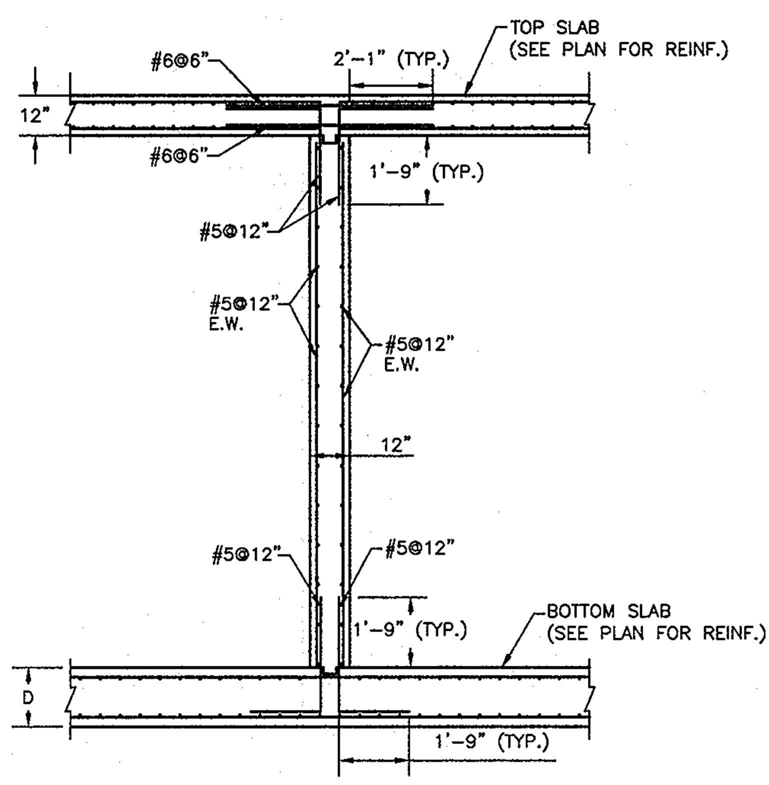

ELEVATION INNER WALL
TYPICAL SECTION
SCALE : NTS

DESIGN LOADS *		
DEAD LOADS STRUCTURE	—	ACTUAL WEIGHT OF
WEIGHT OF SOIL P.C.F. DEAD LOAD	—	100 P.C.F. TO RESIST UPLIFT 120
LIVE LOAD	—	IN AREAS NOT OCCUPIED BY EQUIPMENT OR SUBJECT TO TRUCK LOADING FLOOR 100 P.S.F. EQUIPMENT - ACTUAL WEIGHT - 150 P.S.F. MINIMUM TRUCK - H20-44 AASHTO LOADING WALKWAYS - 100 P.S.F. STAIRWAY - 100 P.S.F. ROOF - 30 P.S.F.
SNOW LOAD	—	GROUND SNOW LOAD - 20 P.S.F.
WIND LOAD (EXPOSURE C)	—	BASIC WIND SPEED - 90 MPH
SEISMIC LOAD	—	DESIGN CATEGORY B
EARTH PRESSURES	—	LATERAL EARTH PRESSURES ARE BASED ON A FRICTION ANGLE OF 30'. BACKFILL MATERIAL SHALL NOT BE PLACED AGAINST FOUNDATION WALLS UNTIL THE UPPER BRACING COMPONENTS ARE IN PLACE FOR AT LEAST 7 DAYS.

CAST IN PLACE CONCRETE NOTES

ALL DIMENSIONS, LOCATIONS AND ELEVATIONS OF EXISTING STRUCTURES SHOWN ON THE CONTRACT DRAWINGS, SHALL BE VERIFIED IN THE FIELD BY THE CONTRACTOR. ALL DISCREPANCIES SHALL BE BROUGHT TO THE ATTENTION OF THE ENGINEER BEFORE PROCEEDING WITH THE WORK.

THE SIZES AND LOCATIONS OF EQUIPMENT PADS AND PEDESTALS, AS WELL AS EQUIPMENT RELATED FLOOR AND. SLAB OPENINGS, ARE DEPENDENT UPON THE ACTUAL EQUIPMENT FURNISHED. IT SHALL BE THE CONTRACTOR'S RESPONSIBILITY TO VERIFY AND COORDINATE ALL SUCH ITEMS. NO DIMENSIONS INDICATED ON THESE DRAWINGS SHALL BE ALTERED WITHOUT THE ENGINEER'S APPROVAL. ALL EQUIPMENT PADS AND OTHER EQUIPMENT SUPPORTS REQUIRED MAY NOT HAVE BEEN SHOWN ON THE STRUCTURAL DRAWINGS. REFER TO CIVIL, ARCHITECTURAL, MECHANICAL AND ELECTRICAL DRAWINGS FOR SIZES AND LOCATIONS OF SUCH PADS AND SUPPORTS.

FOR NOTES PERTAINING TO INDIVIDUAL STRUCTURES, SEE DRAWINGS FOR THOSE STRUCTURES.

CODES

"INTERNATIONAL BUILDING CODE," 2006, INTERNATIONAL CODE COUNCIL

AMERICAN INSTITUTE OF STEEL CONSTRUCTION, (AISC) "SPECIFICATION FOR STRUCTURAL STEEL BUILDINGS - ALLOWABLE STRESS DESIGN AND PLASTIC DESIGN" 1989

AMERICAN CONCRETE INSTITUTE, (ACI-318-95) "BUILDING CODE REQUIREMENTS FOR REINFORCED CONCRETE

AMERICAN CONCRETE INSTITUTE, (ACI-350-01) "CODE REQUIREMENTS, FOR ENVIRONMENTAL ENGINEERING CONCRETE STRUCTURES"

CONCRETE *

ALL CONCRETE SHALL HAVE A MINIMUM COMPRESSIVE STRENGTH OF 4000 PSI AT 28 DAYS.

REINFORCED CONCRETE SHALL BE DETAILED AND CONSTRUCTED IN ACCORDANCE WITH THE AMERICAN CONCRETE INSTITUTE. (ACI 301-99) "SPECIFICAATIONS FOR STRUCTURAL CONCRETE"

ALL REINFORCEMENT SHALL CONFORM TO ASTM SPECIFICATION A615, DEFORMED, GRADE 60.

WELDED WIRE FABRIC SHALL CONFORM TO ASTM SPECIFICATION A185.

UNLESS OTHERWISE NOTED ON THE DRAWINGS, CONCRETE COVER FOR REINFORCEMENT SHALL BE AS FOLLOWS:

A. UNIFORMED CONCRETE BOTTOM BARS IN FOOTINGS AND SLABS ON EARTH OR GRAVEL - 3"
B. BEAMS, SLABS, COLUMNS AND WALLS, EXPOSED TO GROUND, WEATHER OR PROCESS LIQUID AFTER THE REMOVAL OF FORMS - 2"
C. BEAMS, COLUMNS AND PIERS NOT EXPOSED TO WEATHER OR PROCESS LIQUID - 1 ½"
D. STRUCTURAL SLABS NOT EXPOSED TO GROUND, WEATHER, PROCESS LIQUID OR TRUCK TRAFFIC - 1"
E. STRUCTURAL SLAB NOT EXPOSED TO GROUND, WEATHER OR PROCESS LIQUID, BUT SUBJECT TO TRUCK TRAFFIC:
   TOP OF SLAB - 1 ½"
   BOTTOM OF SLAB - 1"

ALL EXPOSED CONCRETE EDGES SHALL BE CHAMFERED ¾" UNLESS OTHERWISE NOTED.

THE CONTRACTOR SHALL SUBMIT SHOP DETAILS OF REINFORCING STEEL BEFORE PROCEEDING WITH FABRICATION.

REINFORCING STEEL SHALL BE DETAILED IN ACCORDANCE WITH THE AMERICAN CONCRETE INSTITUTE, (ACI 315) "DETAILS AND DETAILING OF CONCRETE REINFORCEMENT" AND (ACI SP-66) "ACI DETAILING MANUAL 1994".

ALL SPLICES FOR REINFORCING BARS NOT DIMENSIONED ON THE DRAWINGS SHALL BE DETAILED AS TABULATED ON THIS DRAWING.

CONCRETE SLAB AND WALLS SHALL BE POURED BETWEEN INDICATED JOINTS, ALLOWING A MINIMUM PERIOD OF 3 DAYS TO ELAPSE BETWEEN ADJACENT POURS.

CONSTRUCTION JOINTS SHALL BE AS DETAILED ON THE DRAWINGS AND NO ADDITIONAL JOINTS SHALL BE USED, NOR ANY OMITTED, EXCEPT BY WRITTEN AUTHORIZATION OF THE ENGINEER. ADDITIONAL ENGINEER APPROVED CONSTRUCTION JOINTS SHALL NOT RESULT IN ADDITIONAL EXPENSE TO THE OWNER.

WATERSTOPS SHALL BE 3/8" THICK x 6" WIDE, PAUL MURPHY, FLAT DUMBBELL TYPE, AS NOTED ON THE DRAWINGS. SEE SPECIFICATIONS FOR OTHER REQUIREMENTS.

ANCHOR BOLTS AND EQUIPMENT PEDESTALS SHALL BE SIZED AND LOCATED AS REQUIRED TO SUIT EQUIPMENT FURNISHED.

SEE ARCHITECTURAL, CIVIL, MECHANICAL AND ELECTRICAL DRAWINGS FOR ALL EMBEDDED ITEMS SUCH AS SLEEVES, ANCHORS, ELECTRICAL CONDUITS, AND OPENINGS, WHICH MAY INTERFERE WITH CONCRETE CONSTRUCTION. ALL PIPING AND OTHER EMBEDDED ITEMS ARE NOT SHOWN ON STRUCTURAL DRAWINGS.

WHERE A BEAM FRAMES INTO A WALL, IF A CONSTRUCTION JOINT IS NOT INDICATED AT THE BOTTOM OF THE BEAM, A POCKET SHALL BE PROVIDED IN THE WALL FOR BEAM BEARING. THE DEPTH OF THE POCKET SHALL BE FULL THE THICKNESS OF THE WALL.

FOUNDATION

ALL FOUNDATIONS SHALL BE FOUNDED ON SOIL HAVING BEARING CAPACITY OF 3000 PSF (AS DETERMINED BY THE GEOTECHNICAL ENGINEER, EBA ENGINEERING, INC., MAY 2008) AT THE ELEVATIONS SHOWN ON THE STRUCTURAL DRAWINGS. WHERE FOUNDATIONS ARE FOUND ON FILL THE GEOTECHNICAL ENGINEER SHALL VERIFY ITS CAPACITY.

FOR MECHANICAL AND ELECTRICAL WORK TO BE INCORPORATED IN FOUNDATION WORK, SEE MECHANICAL AND ELECTRICAL DRAWINGS.

ALL EXCAVATIONS SHALL BE KEPT DRY. STANDING WATER SHALL NOT BE ALLOWED IN EXCAVATIONS.

BEFORE PLACING ANY CONCRETE ON SUBGRADE, THE CONTRACTOR SHALL NOTIFY THE GEOTECHNICAL ENGINEER.

A STRUCTURAL SLAB SHALL BE USED WHEN UNCOMPACTED FILL EXCEEDS 8".

THE CONTRACTOR SHALL VERIFY THE BEARING CAPACITY OF THE BEARING SOILS IN THE FOOTING EXCAVATION PRIOR TO CASTING ANY FOOTINGS. WRITTEN VERIFICATION SHALL BE SUBMITTED TO THE ARCHITECT AND ENGINEER.

REFER TO THE SPECIFICATIONS AND SOILS REPORT (IF AVAILABLE) FOR THE SITE PREPARATION REQUIREMENTS.

SHOP DRAWINGS

THE GENERAL CONTRACTOR SHALL SUBMIT SHOP DRAWINGS FOR ALL STRUCTURAL ELEMENTS SHOWN ON THE CONTRACT DOCUMENTS FOR APPROVAL. THE STRUCTURAL ENGINEER WILL NOT BE RESPONSIBLE FOR THE STRUCTURAL CERTIFICATION AND DESIGN OF THE PROJECT IF THE GENERAL CONTRACTOR FAILS TO OBTAIN APPROVAL OF THE SHOP DRAWINGS. THE GENERAL CONTRACTOR SHALL INFORM THE STRUCTURAL ENGINEER IN WRITING CONCERNING DEVIATIONS AND/OR OMISSIONS FROM THE CONTRACT DOCUMENTS AT THE TIME OF SHOP DRAWING SUBMISSION. THE GENERAL CONTRACTOR SHALL STATE ON THE SHOP DRAWINGS THAT CONTRACT DOCUMENT REQUIREMENTS HAVE BEEN MET AND THAT ALL DIMENSIONS, CONDITIONS AND QUANTITIES HAVE BEEN REVIEWED AND VERIFIED AS SHOWN AND/OR CORRECTED ON THE SHOP DRAWINGS.

MISCELLANEOUS ITEMS

STRUCTURAL DRAWINGS SHALL BE USED IN CONJUNCTION WITH ARCHITECTURAL, MECHANICAL, ELECTRICAL AND PLUMBING DRAWINGS AND DRAWINGS OF OTHER TRADES. THE CONTRACTOR SHALL BE RESPONSIBLE FOR COORDINATING THE WORK OF ALL TRADES FOR THE STRUCTURAL WORK.

THE CONTRACTOR SHALL BE RESPONSIBLE FOR DESIGNING, FURNISHING, ERECTING, AND REMOVING ANY SHORING AND BRACING REQUIRED DURING CONSTRUCTION.

THE CONTRACTOR IS SOLELY RESPONSIBLE FOR ALL SAFETY REGULATIONS, PROGRAMS AND PRECAUTIONS RELATED TO ALL WORK ON THIS PROJECT.

THE CONTRACTOR IS SOLELY RESPONSIBLE FOR THE PROTECTION OF PERSONS AND PROPERTY EITHER ON OR ADJACENT TO THE PROJECT AND SHALL PROTECT SAME AGAINST INJURY, DAMAGE OR LOSS.

NO OPENINGS OR CHANGES IN SIZE, DIMENSION OR LOCATION SHALL BE MADE IN ANY STRUCTURAL ELEMENTS WITHOUT WRITTEN APPROVAL OF THE STRUCTURAL ENGINEER.

THE CONTRACTOR IS RESPONSIBLE FOR LIMITING THE AMOUNT OF CONSTRUCTION LOAD IMPOSED ON THE STRUCTURE. SUCH LOADS SHALL NOT EXCEED THE CAPACITY OF THE STRUCTURE AT ANY TIME.

THE STRUCTURE IS DESIGNED TO FUNCTION AS A UNIT UPON COMPLETION, AND ANY TEMPORARY BRACING OR SUPPORT REQUIRED TO ACCOMMODATE THE CONTRACTOR'S MEANS AND METHODS ARE THE RESPONSIBILITY OF THE CONTRACTOR.

CONTRACTOR SHALL VERIFY ALL EXISTING CONDITIONS PRIOR TO ORDERING MATERIALS OR PROCEEDING WITH NEW WORK IN AREAS AFFECTED BY EXISTING CONDITIONS. THE STRUCTURAL ENGINEER SHALL BE INFORMED IN WRITING OF CONFLICTS BETWEEN EXISTING AND PROPOSED NEW CONSTRUCTION.

CONTRACTOR IS RESPONSIBLE FOR COORDINATING ALL DIMENSIONS SHOWN ON THE CONTRACT DOCUMENTS. INCONSISTENCIES ON THE STRUCTURAL DRAWINGS OR BETWEEN THE STRUCTURAL DRAWINGS AND ANY OTHER CONTRACT, SHOP, FABRICATION, OR OTHER DRAWINGS OR INFORMATION SHALL BE BROUGHT TO THE ATTENTION OF THE STRUCTURAL ENGINEER PRIOR TO PROCEEDING WITH AFFECTED WORK.

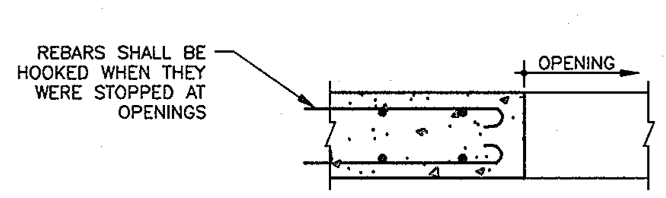

SECTION LL-LL
SCALE : NTS

AS-BUILTS

DEPARTMENT OF PUBLIC WORKS
HOWARD COUNTY, MARYLAND

DIRECTOR OF PUBLIC WORKS	6/3/10 DATE	CHIEF, BUREAU OF ENGINEERING	6/2/10 DATE
CHIEF, BUREAU OF UTILITIES	6/2/10 DATE	CHIEF, UTILITY DESIGN DIVISION	6/2/10 DATE

Dewberry
Dewberry & Davis LLC
3106 LORD BALTIMORE DRIVE
SUITE 110
BALTIMORE, MD 21244-2662
410.265.9500
FAX: 410.265.8875

DES: LAL				
DRN: RLI				
CHK: TND				
DATE: 5.28.10	BY	NO.	REVISIONS	DATE

JUNCTION CHAMBERS 1001-1003
MISCELLANEOUS &
REINFORCEMENT DETAILS &
CAST IN PLACE CONCRETE NOTES

600' SCALE MAP NO. 37, 43 BLOCK NO. 5, 23

LITTLE PATUXENT PARALLEL INTERCEPTOR
CAPITAL PROJECT S-6175
CONTRACT NO. 20-4540

ELECTION DISTRICT NO. 5 HOWARD COUNTY, MARYLAND

SCALE: SHOWN

SHEET 25 OF 26

Plotted by: (cdallatezza) on Plot Date: Jun 01, 2010 - 4:16pm
Path--> R:\Projects\58125000-Little Patuxent Interceptor\CADD\SECTION X\21-25-0-LPPI X-JUNCTION CHAMBER PLANS.dwg
Tab-Layout Name: JC DETAILS 2
Last Saved: Jun 01, 2010 - 11:02am
XREFS-->R:\Projects\58125000-Little Patuxent Interceptor\CADD\SECTION X\1-LPPI X -Border.dwg

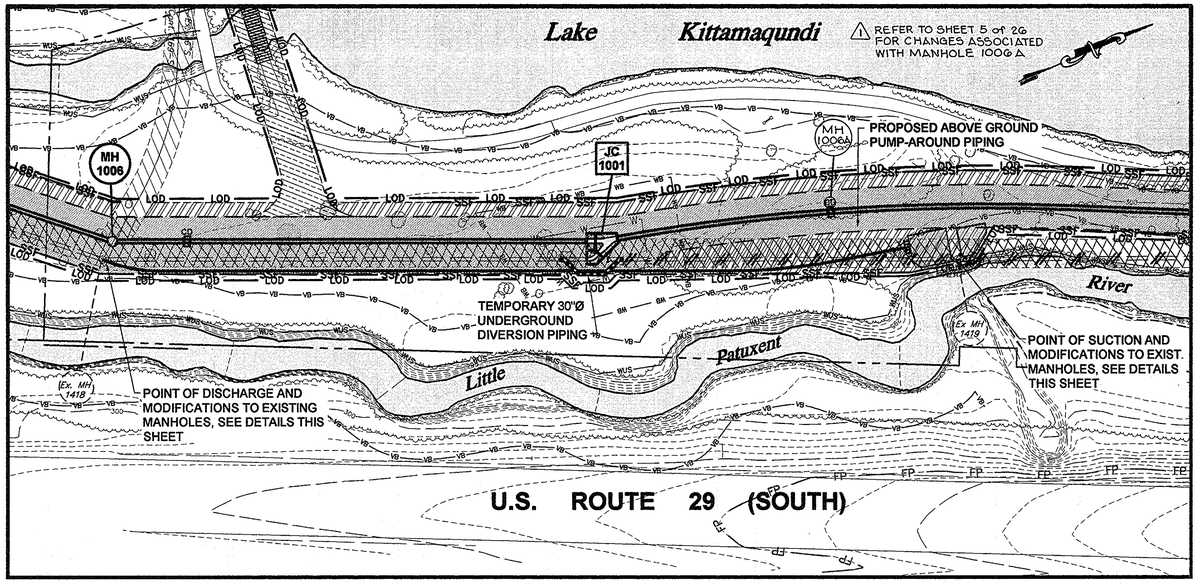

BY-PASS PLAN AND CONSTRUCTION OF TEMPORARY UNDERGROUND DIVERSION

SCALE: 1" =50'

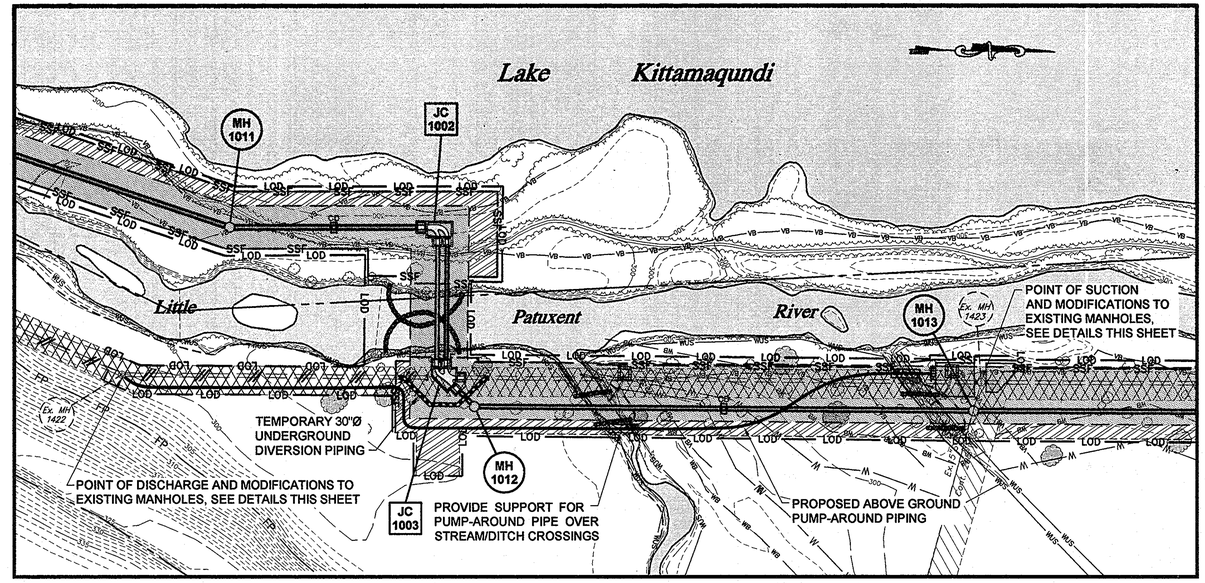

BY-PASS PLAN AND CONSTRUCTION OF TEMPORARY UNDERGROUND DIVERSION

SCALE: 1" =50'

SUGGESTED SEQUENCE OF CONSTRUCTION*

1. SEWAGE FLOWS MUST BE MAINTAINED @ ALL TIMES WITHOUT EXCEPTION.
2. BUILD SEWER FROM MH 913 ± 5' to MH 1006 ± 325'.
3. INITIATE ABOVE GROUND BY-PASS PUMPING FOR CONSTRUCTION OF JUNCTION CHAMBER (JC) 1001 & CONSTRUCT TEMPORARY UNDERGROUND DIVERSION (TUD).** DIVERT SEWAGE TO TUD. SUSPEND ABOVEGROUND BY-PASS OPERATIONS.
4. BUILD JC 1001 & PROVIDE TEMPORARY BULKHEAD IN SW EXIT CHAMBER TO PREVENT SEWAGE FROM ENTERING NEW LINES.
5. BUILD SEWER FROM JC 1001 TO JC 1002, THE TWIN 30-INCH RIVER CROSSING & THE 12" SEWER FROM MH 1007 TO MH 1018.
6. INITIATE ABOVE GROUND BY-PASS PUMPING FOR CONSTRUCTION OF JUNCTION CHAMBER 1003 & CONSTRUCT TEMPORARY UNDERGROUND DIVERSION (TUD).** DIVERT SEWAGE TO TUD. SUSPEND ABOVE GROUND BY-PASS OPERATIONS.
7. BUILD JC 1003. PERFORM TESTING & IN-SERVICE INSPECTION OF THE COMPLETE NEW SYSTEM FROM JC 1001 TO JC 1003.
8. INITIATE ABOVE GROUND BY-PASS PUMPING AT JC 1001 & JC 1003. WITH ABOVEGROUND BY-PASSES IN OPERATION:
   a. CONSTRUCT CONNECTION BETWEEN JC 1001 & EXISTING DOWNSTREAM 30-INCH PIPE.
   b. CONSTRUCT CONNECTION BETWEEN JC 1003 & EXISTING UPSTREAM 30-INCH PIPE & ALLOW SEWAGE TO PASS THROUGH THE NEW SEWER SYSTEM FROM JC 1003 TO JC 1001, EXITING VIA THE SE DISCHARGE CHAMBER. SUSPEND ABOVE GROUND BY-PASS PUMPING AROUND JC 1003 ONLY.
   c. BEGIN OPERATION OF ADDITIONAL ABOVE GROUND BY-PASS TO DIVERT 12" SEWAGE FROM MH 4685 AROUND MH 4684 TO MH 1007. REMOVE & DISPOSE OF MH 4684, EXTEND 12" SEWER & CONNECT TO MH 1018. SUSPEND REMAINDER OF ABOVE GROUND BY-PASS PUMPING.
9. BUILD SEWER FROM JC 1003 TO MH 1012 ± 3+43 TO INCLUDE FINAL TESTING & IN-SERVICE INSPECTION. BUILD MH 1013, MAKE CONNECTION AND ALLOW SEWAGE FROM LATERAL TO ENTER & PASS DOWNSTREAM INTO NEW 36-INCH SEWER.
10. BUILD SEWER FROM MH 1013 TO MH 1014 ± 4+13 TO INCLUDE FINAL TESTING & IN-SERVICE INSPECTION. BUILD MH 1015, MAKE CONNECTION & ALLOW SEWAGE FROM LATERAL TO ENTER & PASS DOWNSTREAM INTO NEW 36-INCH SEWER.
11. ABANDON EXISTING 30" SEWER AS PER THE CONTRACT DRAWINGS.

*CONTRACTOR MAY SUBMIT REQUEST FOR ALTERNATIVE SEQUENCE OF CONSTRUCTION FOR APPROVAL IN ACCORDANCE WITH THE CONTRACT DOCUMENTS.

**TEMPORARY UNDERGROUND DIVERSIONS MAY BE CONSTRUCTED IN ADVANCE OF ALL PIPE LAYING OPERATIONS WITHOUT REQUEST FOR ALTERNATIVE SEQUENCE OF CONSTRUCTION.

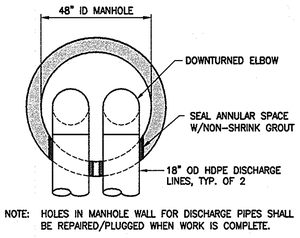

NOTE: HOLES IN MANHOLE WALL FOR DISCHARGE PIPES SHALL BE REPAIRED/PLUGGED WHEN WORK IS COMPLETE.

POINT OF DISCHARGE

NOT TO SCALE

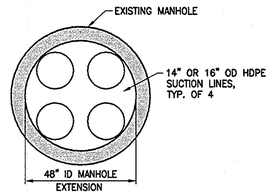

POINT OF SUCTION

NOT TO SCALE

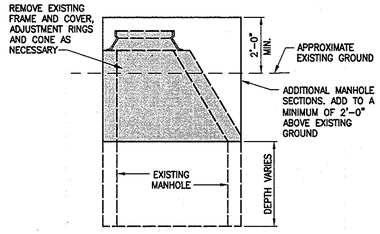

MODIFICATIONS TO EXISTING MANHOLES 1418, 1419, 1422 & 1423

NOT TO SCALE

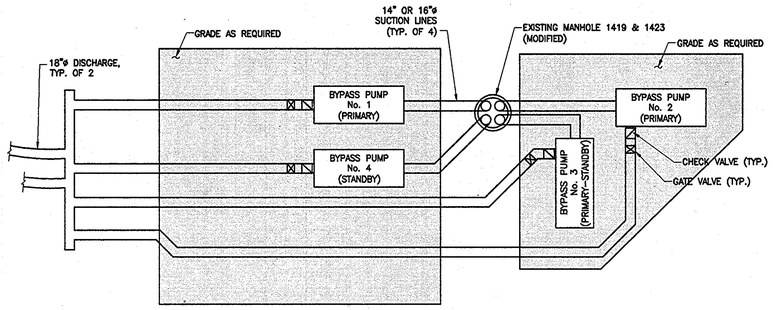

BY-PASS PUMP SCHEMATIC LAYOUT

NOT TO SCALE

BY-PASS PUMP NOTES:

1. THE CONTRACTOR SHALL BE RESPONSIBLE FOR DESIGNING, FURNISHING, INSTALLING, OPERATING, AND MAINTAINING THE BYPASS SYSTEM, AS PER THE SPECIFICATIONS.
2. THE CONTRACTOR SHALL SUBMIT SHOP DRAWINGS AND CALCULATIONS TO VERIFY DESIGN AND SIZING OF THE BYPASS SYSTEM.
3. THE CONTRACTOR SHALL BE RESPONSIBLE, INCLUDING PAYMENT OF PENALTIES, FOR ANY VIOLATIONS AND SPILLAGE OF SEWAGE.
4. EACH PUMP SHALL BE FITTED WITH AN INDIVIDUAL SUCTION PIPE. MANIFOLD SUCTION SHALL NOT BE ALLOWED.
5. NO STORMWATER SHALL BE ALLOWED TO ENTER POINT OF SUCTION MANHOLE.
6. STANDBY PUMP(S) SHALL BE CONNECTED AT ALL TIMES.
7. PUMPS SHALL BE GODWIN DRI-PRIME MODEL DPC 300 (OR APPROVED EQUAL).
8. PROTECTION FENCE SHALL BE INSTALLED ALONG NORTH SIDE OF PUMPS, SUCTION LINES AND DISCHARGE LINES AS A VISUAL BARRIER TO CONSTRUCTION TRAFFIC.

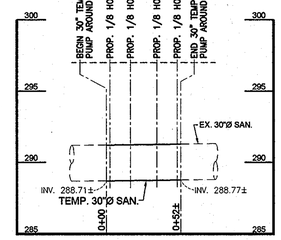

JUNCTION CHAMBER 1001

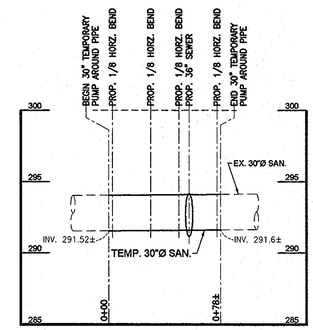

JUNCTION CHAMBER 1003

TEMPORARY DIVERSION PIPE PROFILES

SCALE: 1"= 50' H.
1"= 5' V.

TEMPORARY UNDERGROUND DIVERSIONS NOTES:

1. TEST PIT EXISTING SEWER TO VERIFY INVERT ELEVATIONS PRIOR TO SUBMISSION OF WORKING DRAWINGS.
2. PROVIDE WORKING DRAWINGS OF DIVERSIONS FOR REVIEW IN ACCORDANCE WITH ARTICLE 21 OF SPECIAL PROVISIONS.
3. REMOVE TEMPORARY PIPE DIVERSION FOR CONSTRUCTION OF JC-1003 AFTER EXISTING SEWER IS PUT IN SERVICE.

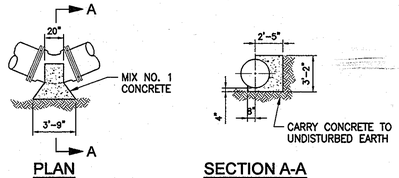

PLAN

SECTION A-A

BUTTRESS DETAIL FOR TEMPORARY 30" HORIZONTAL 1/8 BENDS

NOT TO SCALE

AS-BUILTS

DEPARTMENT OF PUBLIC WORKS
HOWARD COUNTY, MARYLAND

DIRECTOR OF PUBLIC WORKS — DATE
CHIEF, BUREAU OF ENGINEERING — DATE 6/2/10
CHIEF, BUREAU OF UTILITIES — DATE 6/2/10
CHIEF, UTILITY DESIGN DIVISION — DATE 6/2/10 WD

Dewberry
Dewberry & Davis LLC
3108 LORD BALTIMORE DRIVE
SUITE 110
BALTIMORE, MD 21244-2662
410.265.9500
FAX: 410.265.8875

STATE OF MARYLAND — THOMAS N. DALTON — No. 19905 — REGISTERED PROFESSIONAL ENGINEER

DES: LAL
DRN: CD
CHK: TND
DATE: 5.28.10

BY	NO.	REVISIONS	DATE
LAL	1	ADD MH 1006A	5-31-11

BY-PASS PLAN AND DETAILS

600' SCALE MAP NO. 37, 43 — BLOCK NO. 5, 23

LITTLE PATUXENT PARALLEL INTERCEPTOR
CAPITAL PROJECT S-6175
CONTRACT NO. 20-4540

ELECTION DISTRICT NO. 5 — HOWARD COUNTY, MARYLAND

SCALE: SHOWN

SHEET 26 OF 26