PEDDICORD SHARED SEPTIC SYSTEM
HOWARD COUNTY, MARYLAND

INDEX OF DRAWINGS

SHEET NO:	DESCRIPTION	SHEET NO:	DESCRIPTION
1	TITLE SHEET	E-0	COVER SHEET
2	GENERAL SITE PLAN 1:100	E-1	SITE PLAN ELECTRICAL SERVICE
3	SEWER PLAN VIEW 1:50	E-2	CONTROL BUILDING LIGHT AND POWER
4	SEWER PLAN VIEW 1:50	E-3	CROMAGLASS & SLUDGE TANK ELECTRICAL
4A	DRAINFIELDS		
5	LOW PRESSURE PROFILE	E-4	DOSING PUMP STATION
6	LOW PRESSURE PROFILE	E-5	DOSING PUMP CONTROL PANEL & MISSION 800 - RTU
7	GRAVITY PROFILES	E-6	PANEL SCHEDULE, SINGLE LINE AND WALL PANEL LAYOUT
8	DRAINFIELD PROFILES		
9	DRAINFIELD PROFILES		
10	SEDIMENT CONTROL / DESIGN NOTES		
11	HYDRAULIC PROFILE / DESIGN NOTES CONT'D		
12	PUMP STATION AND DETAILS		
13	DETAILS		
14	CROMAGLASS TREATMENT UNIT		
15	CROMAGLASS TREATMENT UNIT AND DETAILS		
16	E-ONE GRINDER PUMPS DETAILS		
17	DETAILS		
18	DETAILS		

DEVELOPER'S CERTIFICATION

"I / WE CERTIFY THAT ALL DEVELOPMENT AND CONSTRUCTION WILL BE DONE ACCORDING TO THIS PLAN, AND THAT ANY RESPONSIBLE PERSONNEL INVOLVED IN THE CONSTRUCTION PROJECT WILL HAVE A CERTIFICATE OF ATTENDANCE AT A DEPARTMENT OF THE ENVIRONMENT APPROVED TRAINING PROGRAM FOR THE CONTROL OF SEDIMENT AND EROSION BEFORE BEGINNING THE PROJECT. I ALSO AUTHORIZE PERIODIC ON-SITE INSPECTION BY THE HOWARD SOIL CONSERVATION DISTRICT."

V.P. WILLIAMSBURG GROUP LLC 1-10-07 DATE

SIGNATURE OF DEVELOPER: BOB CORBETT

ENGINEER'S CERTIFICATION

"I CERTIFY THAT THIS PLAN FOR EROSION AND SEDIMENT CONTROL REPRESENTS A PRACTICAL AND WORKABLE PLAN BASED ON MY PERSONAL KNOWLEDGE OF THE SITE CONDITIONS AND THAT IT WAS PREPARED IN ACCORDANCE WITH THE REQUIREMENTS OF THE HOWARD COUNTY SOIL CONSERVATION DISTRICT."

12/28/06 DATE

McCRONE, INC.
20 RIDGELY AVENUE
ANNAPOLIS, MARYLAND
21401 (410) 267-8621

REVIEWED FOR HOWARD COUNTY S.C.D. MEETS TECHNICAL REQUIREMENTS

U.S. SOIL CONSERVATION SERVICE DATE

THIS DEVELOPMENT PLAN IS APPROVED FOR THE SOIL EROSION AND SEDIMENT CONTROL BY HOWARD SOIL CONSERVATION DISTRICT.

APPROVED DATE
HOWARD S.C.D.

APPROVED: FOR PRIVATE SHARED SEWERAGE SYSTEM FOR LOTS 1, 2, 3, 4, 5, 6, 15, 16, 17, 18, AND 19.
HOWARD COUNTY HEALTH DEPARTMENT

for Robert J. Weber 1/19/07
HOWARD COUNTY HEALTH OFFICER DATE

HOWARD SOIL CONSERVATIONS DISTRICT:
REVEWED FOR HOWARD COUNTY SOIL CONSERVATION DISTRICT AND MEETS TECHNICAL REQUIREMENTS.

Jim Myers 2/6/07
USDA NATURAL RESOURCES CONSERVATION SERVICE DATE

THIS PLAN IS APPROVED FOR SOIL EROSION AND SEDIMENT CONTROL BY THE HOWARD SOIL CONSERVATION DISTRICT.

2/6/07
HOWARD SOIL CONSERVATION DISTRICT DATE

SEDIMENT CONTROL MEASURES FOR THIS CONTRACT WILL BE IMPLEMENTED IN ACCORDANCE WITH SECTION 219 OF THE HOWARD COUNTY STANDARDS AND SPECIFICATIONS AND AS PER ROAD CONSTRUCTION PLANS PER F-06-99

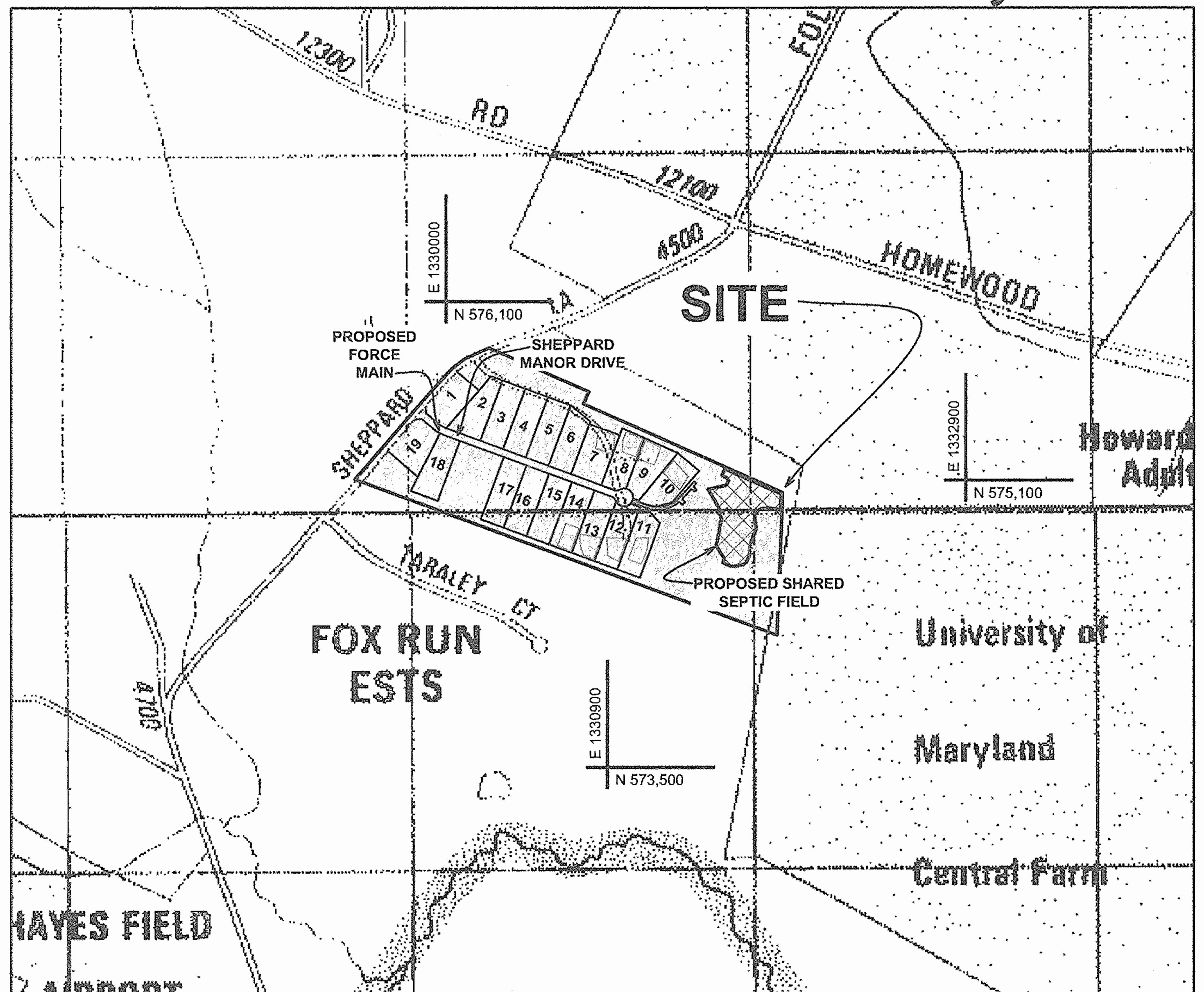

TYPE OF BUILDING: RESIDENTIAL
NUMBER OF PARCELS: 1
WATER HOUSE CONNECTIONS: 0
SEWER HOUSE CONNECTIONS: 11

VICINITY MAP
SCALE:1 = 600'

WATER CODE N/A
SEWER CODE N/A
TEST GRADIENT N/A

QUANTITIES

ITEMS	QUANTITIES ESTIMATED	AS-BUILT QUANTITIES	AS-BUILT TYPE	AS-BUILT MANUF./SUPPLIER
DUPLEX GRINDER PUMPS	4 E.A.			
SIMPLEX GRINDER PUMPS	3 E.A.			
$1\frac{1}{2}$" HOUSE CONNECTION	428 L.F.			
2" FORCE MAIN	1,217 L.F.			
TERMINAL FLUSHING CONNECTION	1 E.A.			
TRANSITION MH	1 E.A.			
2" PVC DRAINFIELD LATERAL	3,480 L.F.			
8" PVC SCH 40 GRAVITY PIPE	152 L.F.			
6" FORCE MAIN	1,158 L.F.			
FLOWMETER VAULT	1 E.A.			
VALVE VAULT	1 E.A.			
TREATMENT UNIT	1 E.A.			
SLUDGE PROCESSING TANK	1 E.A.			
DOSING PUMPING STATION	1 E.A.			
MANHOLE	1 E.A.			
EMERGENCY OVERFLOW TANK	1 E.A.			
8" DI GRAVITY PIPE	120 L.F.			
BAR SCREEN	1 E.A.			
CONTROL BUILDING / LAB	1 E.A.			
CHECK VALVE VAULT	4 E.A.			
BLOW-OFF VAULT	3 E.A.			

GENERAL NOTES

PART I

1. APPROXIMATE LOCATION OF EXISTING MAINS ARE SHOWN. THE CONTRACTOR SHALL TAKE ALL NECESSARY PRECAUTIONS TO PROTECT EXISTING MAINS AND SERVICES AND MAINTAIN UNINTERRUPTED SERVICE. ANY DAMAGE INCURRED SHALL BE REPAIRED IMMEDIATELY TO THE SATISFACTION OF THE ENGINEER AT THE CONTRACTOR'S EXPENSE.

2. ALL HORIZONTAL CONTROLS ARE BASED ON MARYLAND STATE COORDINATES, NAD 83/91.

3. ALL VERTICAL CONTROLS ARE BASED ON NAVD 88.

4. ALL PIPE ELEVATIONS SHOWN ARE INVERT ELEVATIONS.

5. CLEAR ALL UTILITIES BY A MINIMUM OF 12". CLEAR ALL POLES BY 5'-0" MINIMUM OR TUNNEL AS REQUIRED. THE OWNER HAS CONTACTED THE UTILITY COMPANIES AND HAS MADE ARRANGEMENTS FOR BRACING OF POLES AS SHOWN ON THE DRAWINGS. IN THE EVENT THE CONTRACTOR'S WORK REQUIRES THE BRACING OF ADDITIONAL POLES, ANY COST INCURRED BY THE OWNER FOR THE BRACING OF ADDITIONAL POLES OR DAMAGES SHALL BE DEDUCTED FROM MONEY OWED THE CONTRACTOR. THE CONTRACTOR SHALL COORDINATE WITH THE UTILITY COMPANIES TO SCHEDULE THE BRACING OF THE POLES.

6. FOR DETAILS NOT SHOWN ON THE DRAWINGS, AND FOR MATERIALS AND CONSTRUCTION METHODS, USE HOWARD COUNTY DESIGN MANUAL, VOLUME IV, STANDARD SPECIFICATIONS AND DETAILS FOR CONSTRUCTION (LATEST EDITION). THE CONTRACTOR SHALL HAVE A COPY OF VOLUME IV ON THE JOB.

7. WHERE TEST PITS HAVE BEEN MADE ON EXISTING UTILITIES, THEY ARE NOTED BY THE SYMBOL AT THE LOCATION OF THE TEST PIT. A NOTE OR NOTES CONTAINING THE RESULTS OF THE TEST PIT OR PITS IS INCLUDED ON THE DRAWINGS. EXISTING UTILITIES IN THE VICINITY OF THE PROPOSED WORK FOR WHICH TEST PITS HAVE NOT BEEN DUG SHALL BE LOCATED BY THE CONTRACTOR TWO WEEKS IN ADVANCE OF CONSTRUCTION OPERATIONS AT HIS OWN EXPENSE.

8. CONTRACTOR SHALL NOTIFY THE FOLLOWING UTILITY COMPANIES OR AGENCIES AT LEAST FIVE WORKING DAYS BEFORE STARTING WORK SHOWN ON THESE PLANS:

AT&T....................1-800-252-1133
BGE (CONTRACTOR SERVICES)....................410-850-4620
BGE (UNDERGROUND DAMAGE CONTROL)....................410-787-9068
BUREAU OF UTILITIES....................410-313-4900
COLONIAL PIPELINE CO....................410-795-1390
MISS UTILITY....................1-800-257-7777
STATE HIGHWAY ADMINISTRATION....................410-531-5533
VERIZON....................1-800-743-0033 / 410-224-9210

9. TREES AND SHRUBS ARE TO BE PROTECTED FROM DAMAGE TO THE MAXIMUM EXTENT. TREES AND SHRUBS LOCATED WITHIN THE CONSTRUCTION STRIP ARE NOT TO BE REMOVED OR DAMAGED BY THE CONTRACTOR.

10. CONTRACTOR SHALL REMOVE TREES, STUMPS AND ROOTS ALONG LINE OF EXCAVATION. PAYMENT FOR SUCH REMOVAL SHALL BE INCLUDED IN THE UNIT PRICE BID FOR CONSTRUCTION OF THE MAIN.

11. THE CONTRACTOR SHALL NOTIFY THE BUREAU OF HIGHWAYS, HOWARD COUNTY, AT (410) 313-7450 AT LEAST FIVE WORKING DAYS BEFORE ANY OPEN CUT OF ANY COUNTY ROAD OR BORING/JACKING OF ANY COUNTY ROAD FOR LAYING WATER/SEWER MAINS OR HOUSE CONNECTIONS. THE APPROVAL OF THESE DRAWINGS WILL CONSTITUTE COMPLIANCE WITH DPW REQUIREMENTS PER SECTION 18.114(A) OF THE HOWARD COUNTY CODE.

PART II - WATER - NOT USED

PART III - SEWER

1. ALL SEWER MAINS SHALL BE HDPE SDR 11, D.I.P. OR P.V.C. AS SHOWN ON CONTRACT DRAWINGS UNLESS OTHERWISE NOTED.

2. THE CONTRACTOR SHALL PROVIDE A JOINT IN ALL SEWER MAINS WITHIN 2'-0" OF EXTERIOR MANHOLE WALL.

3. ALL MANHOLES SHALL BE 4'-0" INSIDE DIAMETER UNLESS OTHERWISE NOTED.

4. PVC FORCE MAINS SHALL MEET THE REQUIREMENTS OF ASTM D-2241, SDR-21.
HIGH DENSITY POLYETHYLENE (HDPE) FORCE MAIN AND FITTINGS FOR LOW PRESSURE SEWER SYSTEMS SHALL MEET ASTM D-1248 REQUIREMENTS FOR TYPE III, CLASS C, CATEGORY 5, GRADE P54 MATERIAL AND MEET ASTM D-3350 CELL CLASSIFICATION OF 345434C.

5. MANHOLES SHOWN WITH 12" AND 16" WALLS ARE FOR BRICK MANHOLES ONLY.

6. MANHOLES DESIGNATED W.T. IN PLAN AND PROFILE SHALL HAVE WATERTIGHT FRAME AND COVERS, STANDARD DETAIL 65.52 WHERE WATERTIGHT MANHOLE FRAME AND COVER IS USED, SET TOP OF FRAME 1"-6" ABOVE FINISHED GRADE UNLESS OTHERWISE NOTED ON THE DRAWINGS.

7. HOUSE(S) WITH THE SYMBOL "C.N.S." INDICATES THAT CELLAR CANNOT BE SERVICED BY GRAVITY.

TRENCH REQUIREMENTS:
THE FOLLOWING 11 LOTS ARE TO BE SERVED BY THE SHARED SYSTEM: LOTS 1, 2, 3, 4, 5, 6, 15, 16, 17, 18, AND 19.
*USE 5 BEDROOM PER HOUSE.
750 GPD PER HOUSE
750 GPD/HOUSE x 11 HOUSES = 8,250 GPD
8,250 GPD / 1.2 GPD/SQ.FT = 6,875 SQ. FT. EFFECTIVE AREA
SEE SHEET 11 OF 18 FOR REQUIRED AND PROVIDED TRENCH LENGTH IN DRAINFIELD SUMMARY

OWNER:
DAVID C. PEDDICORD
4485 SHEPARD LANE
ELLICOTT CITY, MD 21042

DEVELOPER:
WILLIAMSBURG GROUP, LLC
5485 HARPERS FARM ROAD, SUITE 200
COLUMBIA, MD 21044
410-997-8800

DEPARTMENT OF PUBLIC WORKS
HOWARD COUNTY, MARYLAND

1-25-07
CHIEF, BUREAU OF UTILITIES DATE

DEPARTMENT OF PUBLIC WORKS
HOWARD COUNTY, MARYLAND

2/27/07
CHIEF, DEVELOPMENT ENGINEERING DIVISION DATE

McCRONE
Engineering • Environmental Sciences
Construction Services • Land Planning & Surveying
ANNAPOLIS • CENTREVILLE • DOVER • ELKTON • SALISBURY
20 RIDGELY AVENUE
ANNAPOLIS, MARYLAND 21401
PHONE (410) 267-8621 * FAX (410) 267-8932
www.mccrone-inc.com

Copyright © 2004

STATE OF MARYLAND ... PROFESSIONAL ENGINEER No. 30720
12/28/06

DES: B.T.D., N.V.S.				
DRN: B.T.D., N.V.S.				
CHK: R.J.R.				
DATE: DEC., 2006	BY	No.	REVISION	DATE

TITLE SHEET

JOB No. C1040062

PEDDICORD SHARED SEPTIC SYSTEM
LOTS 1 - 19
CONTRACT # 50-4357D
TAX MAP NO. 29 - GRID NO. 1 - PARCEL 268
ELECTION DISTRICT No. 5
HOWARD COUNTY, MARYLAND

SCALE AS SHOWN

SHEET 1 OF 18

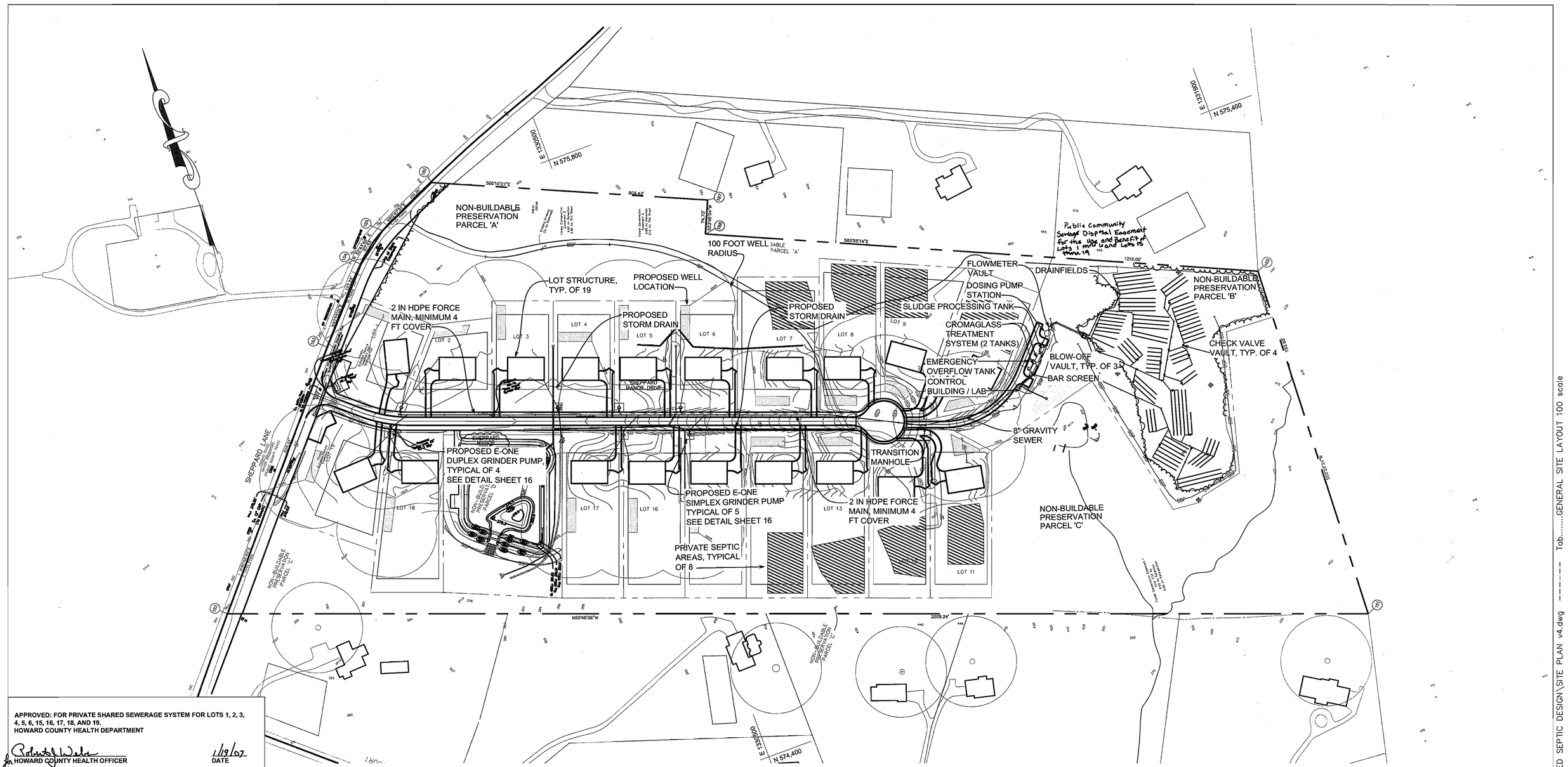

APPROVED: FOR PRIVATE SHARED SEWERAGE SYSTEM FOR LOTS 1, 2, 3, 4, 5, 6, 15, 16, 17, 18, AND 19.
HOWARD COUNTY HEALTH DEPARTMENT

for HOWARD COUNTY HEALTH OFFICER — DATE 1/19/07

HOWARD SOIL CONSERVATIONS DISTRICT:
REVEWED FOR HOWARD COUNTY SOIL CONSERVATION DISTRICT AND MEETS TECHNICAL REQUIREMENTS.

USDA NATURAL RESOURCES CONSERVATION SERVICE — DATE 2/6/07

THIS PLAN IS APPROVED FOR SOIL EROSION AND SEDIMENT CONTROL BY THE HOWARD SOIL CONSERVATION DISTRICT.

HOWARD SOIL CONSERVATION DISTRICT — DATE 2/6/07

SEDIMENT CONTROL MEASURES FOR THIS CONTRACT WILL BE IMPLEMENTED IN ACCORDANCE WITH SECTION 219 OF THE HOWARD COUNTY STANDARDS AND SPECIFICATIONS AND AS PER ROAD CONSTRUCTION PLANS PER F-06-99.

GRAPHIC SCALE
100 0 50 100 200
1 inch = 100 ft.

GENERAL NOTES:

1) TEST STATIONS FOR LOW PRESSURE FORCE MAIN TO BE PLACED AT 200' INTERVALS. SEE DETAIL SHEET 13.
2) TRACER WIRE CONNECTIONS OFF OF THE MAIN MUST BE OVERLAPPING, INSULATED #6, FIRMLY CONNECTED AND ENCAPSULATED.
3) 5 FT CLEARANCE MUST BE PROVIDED AROUND ELECTRICAL PANELS AND BGE METERS.
4) CONTRACTOR TO INSTALL 6-INCH SERVICE GRAVITY PIPE FROM LOTS 4 AND 19 AT 1% SLOPE. CONTRACTOR TO INSTALL REDUCER ON 6-INCH PIPE TO CONNECT TO GRINDER PUMPS.
5) CONTRACTOR TO INSTALL MANIFOLDS AND ISOLATION VALVES FOR PROPOSED AND FUTURE FIELDS.
6) CONTRACTOR TO INSTALL 200% OF DRAINFIELDS INITIALLY. ONLY 150% OF INSTALLED 200% SHALL BE OPERATED INITIALLY. 100% OF DRAINFIELDS SHALL BE INSTALLED WHEN REQUIRED.

LEGEND

Existing Woods
Existing Utility Pole
Existing Pavement
Existing Centerline of Road
Existing 10 Foot Contour — 360
Existing 2 Foot Contour — 362
Existing Soil Boundary
Proposed Sewer by Others
Existing 15-25% Slopes
Existing 25% & Greater Slopes
Proposed Silt Fence — S.F.
Proposed Super Silt Fence — S.S.F.
Proposed Stabilized Construction Entrance
Proposed Building
Proposed Sewer
Proposed Water
Proposed Fence
Proposed Pavement
Proposed Gravel
Proposed 10 Foot Contour — 360
Proposed 2 Foot Contour — 358
Proposed Treeline
Proposed Limit of Disturbance — L.O.D.

DEPARTMENT OF PUBLIC WORKS
HOWARD COUNTY, MARYLAND
CHIEF, BUREAU OF UTILITIES — DATE 1-25-07

DEPARTMENT OF PUBLIC WORKS
HOWARD COUNTY, MARYLAND
CHIEF, DEVELOPMENT ENGINEERING DIVISION — DATE 2/6/07

McCRONE
• Engineering • Environmental Sciences
• Construction Services • Land Planning & Surveying
ANNAPOLIS • CENTREVILLE • DOVER • ELKTON • SALISBURY
20 RIDGELY AVENUE
ANNAPOLIS, MARYLAND 21401
PHONE (410) 267-8601 * FAX (410) 267-8032
www.mccrone-inc.com
Copyright © 2004

STATE OF MARYLAND — REGISTERED PROFESSIONAL ENGINEER — No. 30712 — 12/20/06

DES: B.T.D., N.V.S.					
DRN: B.T.D., N.V.S.					
CHK: R.J.R.					
DATE: DEC., 2006	BY	No.	REVISION	DATE	

GENERAL SITE LAYOUT

JOB No. C1040062

PEDDICORD SHARED SEPTIC SYSTEM

LOTS 1 - 19
CONTRACT # 50-4557 D
TAX MAP NO. 29 - GRID NO. 1 - PARCEL 268
ELECTION DISTRICT No. 5
HOWARD COUNTY, MARYLAND

SCALE AS SHOWN

SHEET 2 OF 18

CADD FILE: G:\1040062 – Peddicord Property\Drawings\SHARED SEPTIC DESIGN\SITE PLAN v4.dwg ------- Tab.....GENERAL SITE LAYOUT 100 scale

PLOTTED: Dec 28 , 2006 – 9:49am

LEGEND

- Existing Woods
- Existing Utility Pole
- Existing Pavement
- Existing Centerline of Road
- Existing 10 Foot Contour — 360
- Existing 2 Foot Contour — 362
- Existing Soil Boundary
- Existing 15-25% Slopes
- Existing 25% & Greater Slopes
- Proposed Silt Fence — S.F.
- Proposed Super Silt Fence — S.S.F.
- Proposed Stabilized Construction Entrance — SCE
- Proposed Building
- Proposed Sewer
- Proposed Sewer by Others
- Proposed Water
- Proposed Fence
- Proposed Pavement
- Proposed Gravel
- Proposed 10 Foot Contour — 360
- Proposed 2 Foot Contour — 358
- Proposed Treeline
- Proposed Limit of Disturbance — L.O.D.

GENERAL NOTES:

1) TEST STATIONS FOR LOW PRESSURE FORCE MAIN TO BE PLACED AT 200' INTERVALS. SEE DETAIL SHEET 13.
2) TRACER WIRE CONNECTIONS OFF OF THE MAIN MUST BE OVERLAPPING, INSULATED #6, FIRMLY CONNECTED AND ENCAPSULATED
3) 5 FT CLEARANCE MUST BE PROVIDED AROUND ELECTRICAL PANELS AND BGE METERS
4) CONTRACTOR TO INSTALL 6-INCH SERVICE GRAVITY PIPE FROM LOTS 4 AND 19 AT 1% SLOPE. CONTRACTOR TO INSTALL REDUCER ON 6-INCH PIPE TO CONNECT TO GRINDER PUMPS.
5) CONTRACTOR TO INSTALL MANIFOLDS AND ISOLATION VALVES FOR PROPOSED AND FUTURE FIELDS.
6) CONTRACTOR TO INSTALL 200% OF DRAINFIELDS INITIALLY. ONLY 150% OF INSTALLED 200% SHALL BE OPERATED INITIALLY. 100% OF DRAINFIELDS SHALL BE INSTALLED WHEN REQUIRED.

APPROVED: FOR PRIVATE SHARED SEWERAGE SYSTEM FOR LOTS 1, 2, 3, 4, 5, 6, 15, 16, 17, 18, AND 19.
HOWARD COUNTY HEALTH DEPARTMENT

HOWARD COUNTY HEALTH OFFICER — DATE 1/19/07

HOWARD SOIL CONSERVATIONS DISTRICT:
REVEWED FOR HOWARD COUNTY SOIL CONSERVATION DISTRICT AND MEETS TECHNICAL REQUIREMENTS.

USDA NATURAL RESOURCES CONSERVATION SERVICE — DATE 2/6/07

THIS PLAN IS APPROVED FOR SOIL EROSION AND SEDIMENT CONTROL BY THE HOWARD SOIL CONSERVATION DISTRICT.

HOWARD SOIL CONSERVATION DISTRICT — DATE 2/6/07

SEDIMENT CONTROL MEASURES FOR THIS CONTRACT WILL BE IMPLEMENTED IN ACCORDANCE WITH SECTION 219 OF THE HOWARD COUNTY STANDARDS AND SPECIFICATIONS AND AS PER ROAD CONSTRUCTION PLANS PER F-06-99.

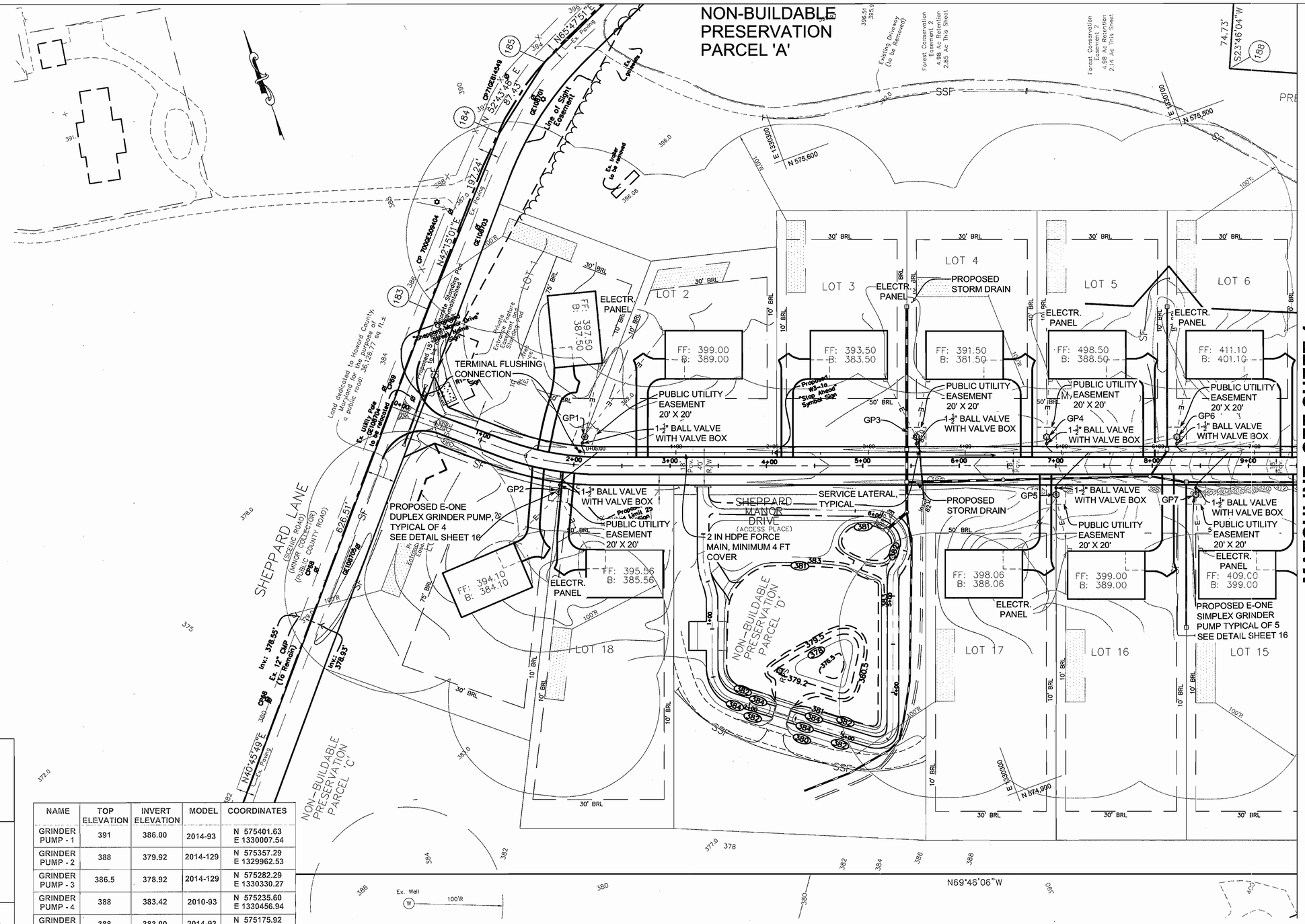

NAME	TOP ELEVATION	INVERT ELEVATION	MODEL	COORDINATES
GRINDER PUMP - 1	391	386.00	2014-93	N 575401.63 E 1330007.54
GRINDER PUMP - 2	388	379.92	2014-129	N 575357.29 E 1329962.53
GRINDER PUMP - 3	386.5	378.92	2014-129	N 575282.29 E 1330330.27
GRINDER PUMP - 4	388	383.42	2010-93	N 575235.60 E 1330456.94
GRINDER PUMP - 5	388	383.00	2014-93	N 575175.92 E 1330445.37
GRINDER PUMP - 6	398	395.00	2010-74	N 575188.91 E 1330583.61
GRINDER PUMP - 7	400	392.83	2010-124	N 575125.77 E 1330581.42

DEPARTMENT OF PUBLIC WORKS
HOWARD COUNTY, MARYLAND
CHIEF, BUREAU OF UTILITIES — DATE 1-25-07

DEPARTMENT OF PUBLIC WORKS
HOWARD COUNTY, MARYLAND
CHIEF, DEVELOPMENT ENGINEERING DIVISION — DATE 1/17/07

McCRONE
Engineering • Environmental Sciences • Construction Services • Land Planning & Surveying
ANNAPOLIS • CENTREVILLE • DOVER • ELKTON • SALISBURY
20 RIDGELY AVENUE ANNAPOLIS, MARYLAND 21401
PHONE (410) 267-8821 * FAX (410) 267-0932
www.mccrone-inc.com
Copyright © 2004

STATE OF MARYLAND — WILLIAM R. JOHNSON — No. 20748 — PROFESSIONAL ENGINEER — 12/28/06

DES: B.T.D., N.V.S.				
DRN: B.T.D., N.V.S.				
CHK: R.J.R.				
DATE: DEC., 2006	BY	No.	REVISION	DATE

SEWER PLAN VIEW

JOB No. C1040062

PEDDICORD SHARED SEPTIC SYSTEM

LOTS 1 - 19
CONTRACT # 50-4357D
TAX MAP NO. 29 - GRID NO. 1 - PARCEL 268
ELECTION DISTRICT No. 5
HOWARD COUNTY, MARYLAND

SCALE AS SHOWN

SHEET 3 OF 18

CADD FILE: G:\1040062 – Peddicord Property\Drawings\SHARED SEPTIC DESIGN\SITE PLAN v4.dwg ------ Tab.....SEWER LAYOUT 50 scale

PLOTTED: Dec 28 , 2006 – 9:55am

SPLIT RAIL FENCE NOTES:

1. FENCE SHALL BE 3-RAIL TYPE.
2. SPLIT RAIL FENCE SHALL BE 4' IN HEIGHT ABOVE GROUND.
3. POSTS SHALL BE 3" x 6" AND PLACED EVERY 8 FEET. POSTS SHALL BE BURIED A MINIMUM OF 2 FEET INTO THE GROUND WITH A MINIMUM 18" x 18" x 24" CONCRETE BLOCK AROUND THE POST.
4. SPLIT RAIL FENCE SHALL BE CONSTRUCTED OF PRESSURE TREATEED LUMBER.

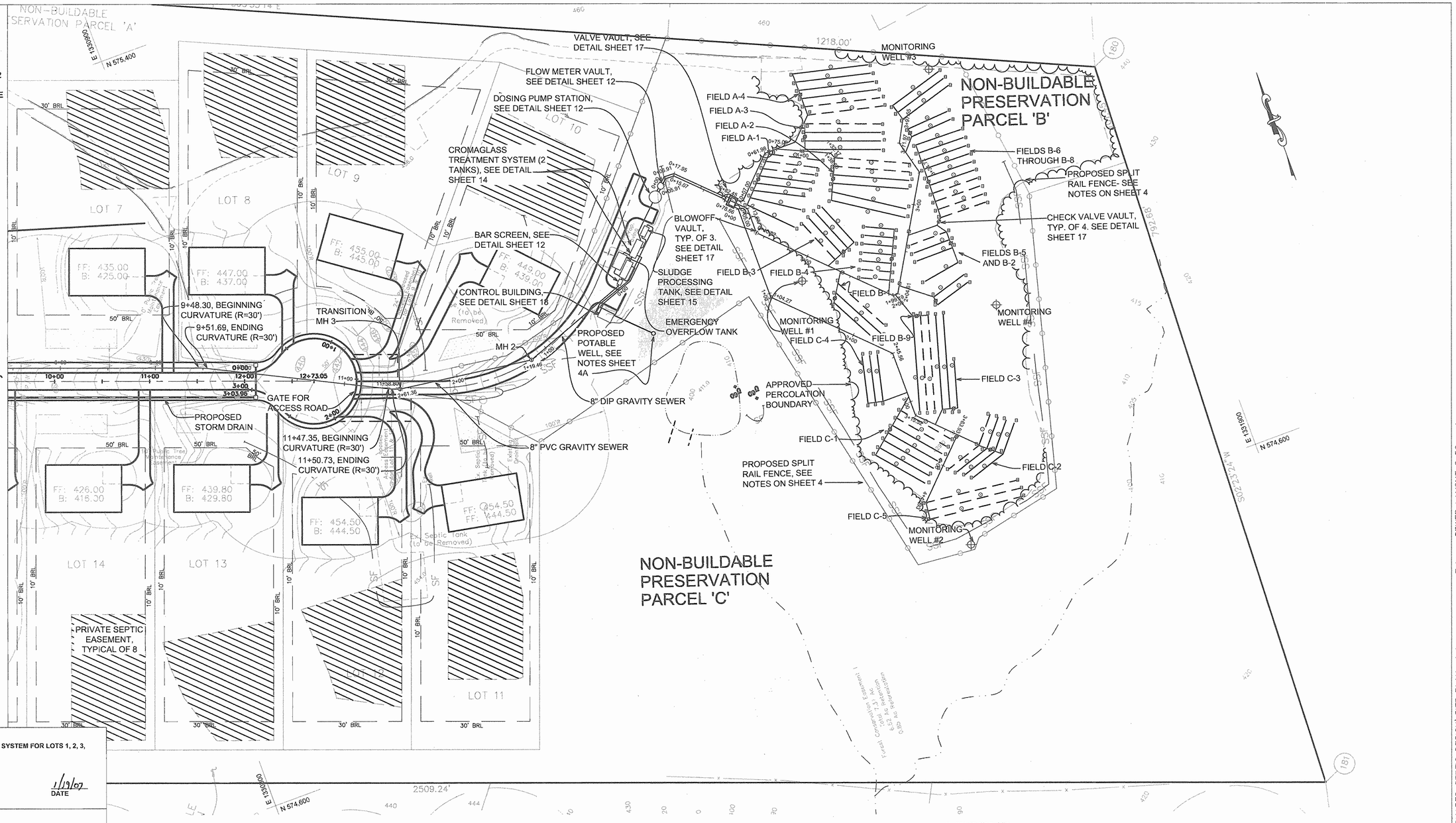

APPROVED: FOR PRIVATE SHARED SEWERAGE SYSTEM FOR LOTS 1, 2, 3, 4, 5, 6, 15, 16, 17, 18, AND 19.
HOWARD COUNTY HEALTH DEPARTMENT

HOWARD COUNTY HEALTH OFFICER — DATE 1/19/07

HOWARD SOIL CONSERVATIONS DISTRICT:
REVEWED FOR HOWARD COUNTY SOIL CONSERVATION DISTRICT AND MEETS TECHNICAL REQUIREMENTS.

USDA NATURAL RESOURCES CONSERVATION SERVICE — DATE 2/6/07

THIS PLAN IS APPROVED FOR SOIL EROSION AND SEDIMENT CONTROL BY THE HOWARD SOIL CONSERVATION DISTRICT.

HOWARD SOIL CONSERVATION DISTRICT — DATE 2/4/07

SEDIMENT CONTROL MEASURES FOR THIS CONTRACT WILL BE IMPLEMENTED IN ACCORDANCE WITH SECTION 219 OF THE HOWARD COUNTY STANDARDS AND SPECIFICATIONS AND AS PER ROAD CONSTRUCTION PLANS PER F-06-99.

GRAPHIC SCALE

50 0 25 50 100

1 inch = 50 ft.

GENERAL NOTES:

1) TEST STATIONS FOR LOW PRESSURE FORCE MAIN TO BE PLACED AT 200' INTERVALS. SEE DETAIL SHEET 13.
2) TRACER WIRE CONNECTIONS OFF OF THE MAIN MUST BE OVERLAPPING, INSULATED #6, FIRMLY CONNECTED AND ENCAPSULATED
3) 5 FT CLEARANCE MUST BE PROVIDED AROUND ELECTRICAL PANELS AND BGE METERS
4) CONTRACTOR TO INSTALL 6-INCH SERVICE GRAVITY PIPE FROM LOTS 4 AND 19 AT 1% SLOPE. CONTRACTOR TO INSTALL REDUCER ON 6-INCH PIPE TO CONNECT TO GRINDER PUMPS.
5) CONTRACTOR TO INSTALL MANIFOLDS AND ISOLATION VALVES FOR PROPOSED AND FUTURE FIELDS.
6) CONTRACTOR TO INSTALL 200% OF DRAINFIELDS INITIALLY. ONLY 150% OF INSTALLED 200% SHALL BE OPERATED INITIALLY. 100% OF DRAINFIELDS SHALL BE INSTALLED WHEN REQUIRED.

LEGEND

Existing Woods	Existing 15-25% Slopes	Proposed Water
Existing Utility Pole	Existing 25% & Greater Slopes	Proposed Fence
Existing Pavement	Proposed Silt Fence	Proposed Pavement
Existing Centerline of Road	Proposed Super Silt Fence	Proposed Gravel
Existing 10 Foot Contour	Proposed Stabilized Construction Entrance	Proposed 10 Foot Contour
Existing 2 Foot Contour	Proposed Building	Proposed 2 Foot Contour
Existing Soil Boundary	Proposed Sewer	Proposed Treeline
Proposed Sewer by Others		Proposed Limit of Disturbance

DEPARTMENT OF PUBLIC WORKS
HOWARD COUNTY, MARYLAND

CHIEF, BUREAU OF UTILITIES — DATE 1-25-07

DEPARTMENT OF PUBLIC WORKS
HOWARD COUNTY, MARYLAND

CHIEF, DEVELOPMENT ENGINEERING DIVISION — DATE 2/7/07

McCRONE
Engineering • Environmental Sciences • Construction Services • Land Planning & Surveying
ANNAPOLIS • CENTREVILLE • DOVER • ELKTON • SALISBURY
30 RIDGELY AVENUE ANNAPOLIS, MARYLAND 21401
PHONE (410) 267-5621 * FAX (410) 267-0032
www.mccroneinc.com

Copyright © 2004

STATE OF MARYLAND — REGISTERED PROFESSIONAL ENGINEER — No. 22778 — 12/20/06

DES: B.T.D., N.V.S.
DRN: B.T.D., N.V.S.
CHK: R.J.R.
DATE: DEC., 2006

BY	No.	REVISION	DATE

SEWER PLAN VIEW

JOB No. C1040062

PEDDICORD SHARED SEPTIC SYSTEM

LOTS 1 - 19
CONTRACT # 50-4867D
TAX MAP NO. 29 - GRID NO. 1 - PARCEL 268
ELECTION DISTRICT No. 5
HOWARD COUNTY, MARYLAND

SCALE AS SHOWN

SHEET 4 OF 18

CADD FILE: G:\1040062 - Peddicord Property\Drawings\SHARED SEPTIC DESIGN\SITE PLAN v4.dwg ------- Tab.....SEWER LAYOUT 2 50 scale

PLOTTED: Dec 28 , 2006 - 10:00am

POTABLE WELL NOTES:

1. CONTRACTOR SHALL PROVIDE ALL MATERIALS, TOOLS, AND LABOR TO CONSTRUCT A RESIDENTIAL TYPE POTABLE WATER WELL MEETING ALL LOCAL AND STATE REQUIREMENTS.
2. THE WELL SHALL BE CAPABLE OF PRODUCING 5 GALLONS PER MINUTE.
3. THE WELL SHALL BE 4 INCHES IN DIAMETER.
4. CONTRACTOR SHALL BE RESPONSIBLE FOR SECURING ALL CONSTRUCTION RELATED PERMITS.
5. WELL SHALL BE DISINFECTED PER LOCAL AND STATE REQUIREMENTS. SAMPLES SHALL BE SAMPLED AND ANALYZED BY A STATE CERTIFIED LAB. WELL SHALL BE BACETERIA FREE PER STATE AND LOCAL REQUIREMENTS PRIOR TO PLACEMENT INTO SERVICE.
6. CASING MATERIAL SHALL BE STEEL.
7. CONTRACTOR SHALL PROVIDE A 2-INCH PVC WATER SUPPLY PIPE FROM THE WELL TO THE CONTROL BUILDING AS SHOWN ON THIS SHEET.
8. CONTRACTOR SHALL PROVIDE A PITLESS ADAPTER FOR THE WELL.
9. WELL PUMP SHALL BE A GOULDS SUBMERSIBLE TURBINE PUMP OR SIMILAR.
10. LOCATION OF THE WELL IS APPROXIMATE. CONTRACTOR SHALL LOCATE THE WELL WITHIN THE SHADED AREA PROVIDED OR SEEK APPROVAL FROM THE ENGINEER AND LOCAL HEALTH DEPARTMENT FOR AN ALTERNATE LOCATION.
11. UNSUCCESSFUL PILOT HOLES SHALL BE ABANDONED PER COMAR REQUIREMENTS.

DRAINFIELDS TRENCHES LEGEND

- ISOLATION VALVE
- BLOWOFF VALVE VAULT
- TRENCH NUMBER
- TRENCH END NUMBER
- FUTURE TRENCH (100%)
- INITIALLY INSTALLED TRENCH (200%)
- CHECK VALVE VAULT

GRAPHIC SCALE

30 0 15 30 60

1 inch = 30 ft.

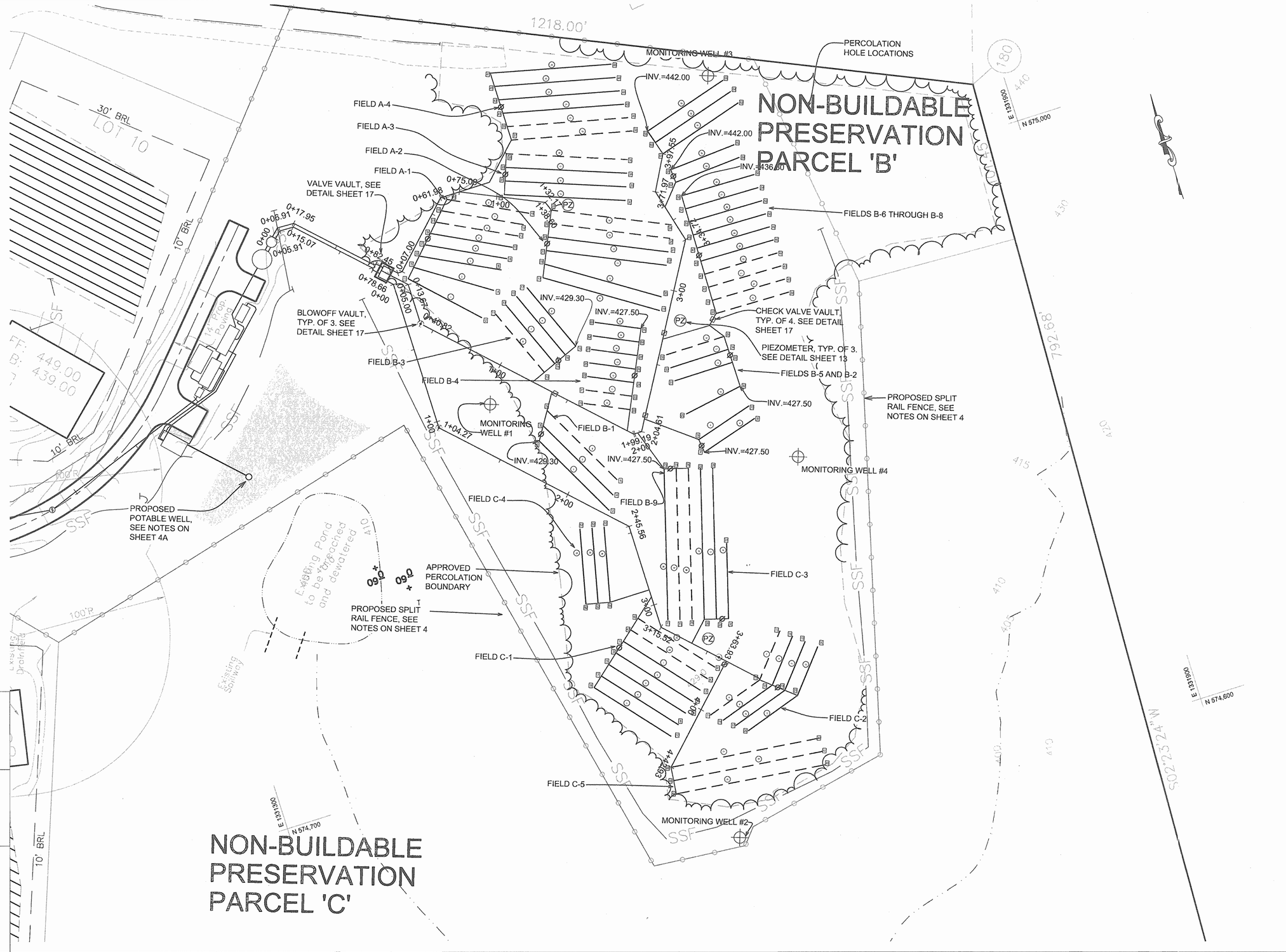

APPROVED: FOR PRIVATE SHARED SEWERAGE SYSTEM FOR LOTS 1, 2, 3, 4, 5, 6, 15, 16, 17, 18, AND 19.
HOWARD COUNTY HEALTH DEPARTMENT

HOWARD COUNTY HEALTH OFFICER — DATE 1/18/07

HOWARD SOIL CONSERVATIONS DISTRICT:
REVEWED FOR HOWARD COUNTY SOIL CONSERVATION DISTRICT AND MEETS TECHNICAL REQUIREMENTS.

USDA NATURAL RESOURCES CONSERVATION SERVICE — DATE 2/6/07

THIS PLAN IS APPROVED FOR SOIL EROSION AND SEDIMENT CONTROL BY THE HOWARD SOIL CONSERVATION DISTRICT.

HOWARD SOIL CONSERVATION DISTRICT — DATE 2/6/07

SEDIMENT CONTROL MEASURES FOR THIS CONTRACT WILL BE IMPLEMENTED IN ACCORDANCE WITH SECTION 219 OF THE HOWARD COUNTY STANDARDS AND SPECIFICATIONS AND AS PER ROAD CONSTRUCTION PLANS PER F-06-90.

DEPARTMENT OF PUBLIC WORKS
HOWARD COUNTY, MARYLAND

CHIEF, BUREAU OF UTILITIES — DATE 1-25-07

DEPARTMENT OF PUBLIC WORKS
HOWARD COUNTY, MARYLAND

CHIEF, DEVELOPMENT ENGINEERING DIVISION — DATE 1/25/07

McCRONE
Engineering • Environmental Sciences • Construction Services • Land Planning & Surveying
ANNAPOLIS • CENTREVILLE • DOVER • ELKTON • SALISBURY
20 RIDGELY AVENUE
ANNAPOLIS, MARYLAND 21401
PHONE (410) 267-6821 * FAX (410) 267-0032
www.mccrone-inc.com

Copyright © 2004

STATE OF MARYLAND — RICHARD J. ROSNER — No. 30761 — PROFESSIONAL ENGINEER — 12/28/06

DES: B.T.D., N.V.S.					
DRN: B.T.D., N.V.S.					
CHK: R.J.R.					
DATE: DEC., 2006	BY	No.	REVISION	DATE	

DRAINFIELDS

JOB No. C1040062

PEDDICORD SHARED SEPTIC SYSTEM

LOTS 1 - 19
CONTRACT # 50-4857D
TAX MAP NO. 29 - GRID NO. 1 - PARCEL 268
ELECTION DISTRICT No. 5
HOWARD COUNTY, MARYLAND

SCALE AS SHOWN

SHEET 4A OF 18

CADD FILE: G:\1040062 -- Peddicord Property\Drawings\SHARED SEPTIC DESIGN\SITE PLAN v4.dwg ---------- Tab.....DRAINFIELDS

PLOTTED: Dec 28 , 2006 - 10:04am

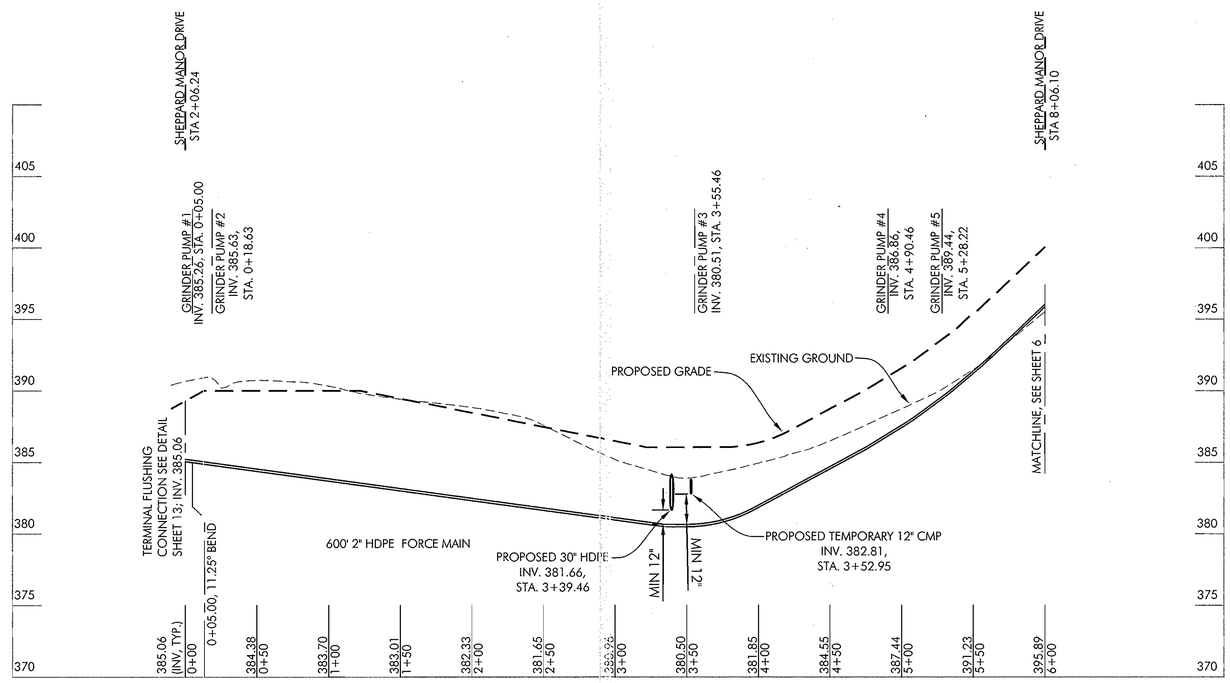

2" FM PROFILE FROM TERMINAL FLUSHING CONNECTION

SCALE

1" = 50' HORIZONTAL;
1" = 5' VERTICAL

APPROVED: FOR PRIVATE SHARED SEWERAGE SYSTEM FOR LOTS 1, 2, 3, 4, 5, 6, 15, 16, 17, 18, AND 19.
HOWARD COUNTY HEALTH DEPARTMENT

for Robert J. Weber — 1/19/07
HOWARD COUNTY HEALTH OFFICER — DATE

HOWARD SOIL CONSERVATIONS DISTRICT:
REVEWED FOR HOWARD COUNTY SOIL CONSERVATION DISTRICT AND MEETS TECHNICAL REQUIREMENTS.

Jim Myers — 2/6/07
USDA NATURAL RESOURCES CONSERVATION SERVICE — DATE

THIS PLAN IS APPROVED FOR SOIL EROSION AND SEDIMENT CONTROL BY THE HOWARD SOIL CONSERVATION DISTRICT.

John V. Robertson — 2/6/07
HOWARD SOIL CONSERVATION DISTRICT — DATE

SEDIMENT CONTROL MEASURES FOR THIS CONTRACT WILL BE IMPLEMENTED IN ACCORDANCE WITH SECTION 219 OF THE HOWARD COUNTY STANDARDS AND SPECIFICATIONS AND AS PER ROAD CONSTRUCTION PLANS PER F-06-99.

DEPARTMENT OF PUBLIC WORKS HOWARD COUNTY, MARYLAND	DEPARTMENT OF PUBLIC WORKS HOWARD COUNTY, MARYLAND	McCRONE							
Robert Bu — 1-25-07	2/07/07	● Engineering ● Environmental Sciences ● Construction Services ● Land Planning & Surveying ANNAPOLIS ● CENTREVILLE ● DOVER ● ELKTON ● SALISBURY 20 RIDGELY AVENUE ANNAPOLIS, MARYLAND 21401 PHONE (410) 267-8821 * FAX (410) 267-9932 www.mccrone-inc.com Copyright © 2004	STATE OF MARYLAND REGISTERED PROFESSIONAL ENGINEER No. 20725 12/28/06	DES: B.T.D., N.V.S.				LOW PRESSURE PROFILES	PEDDICORD SHARED SEPTIC SYSTEM LOTS 1 - 19 CONTRACT # 50-4367D TAX MAP NO. 29 - GRID NO. 1 - PARCEL 268 ELECTION DISTRICT No. 5 HOWARD COUNTY, MARYLAND	SCALE AS SHOWN
CHIEF, BUREAU OF UTILITIES — DATE	CHIEF, DEVELOPMENT ENGINEERING DIVISION — DATE			DRN: B.T.D., N.V.S					
				CHK: R.J.R.					
				DATE: DEC., 2006	BY	No.	REVISION	DATE	JOB No. C1040062	SHEET 5 OF 18

PLOTTED: Dec 28, 2006 - 10:29am

CADD FILE: G:\1040062 - Peddicord Property\Drawings\SHARED SEPTIC DESIGN\FM PROFILE.dwg ------ Tab.....Layout1

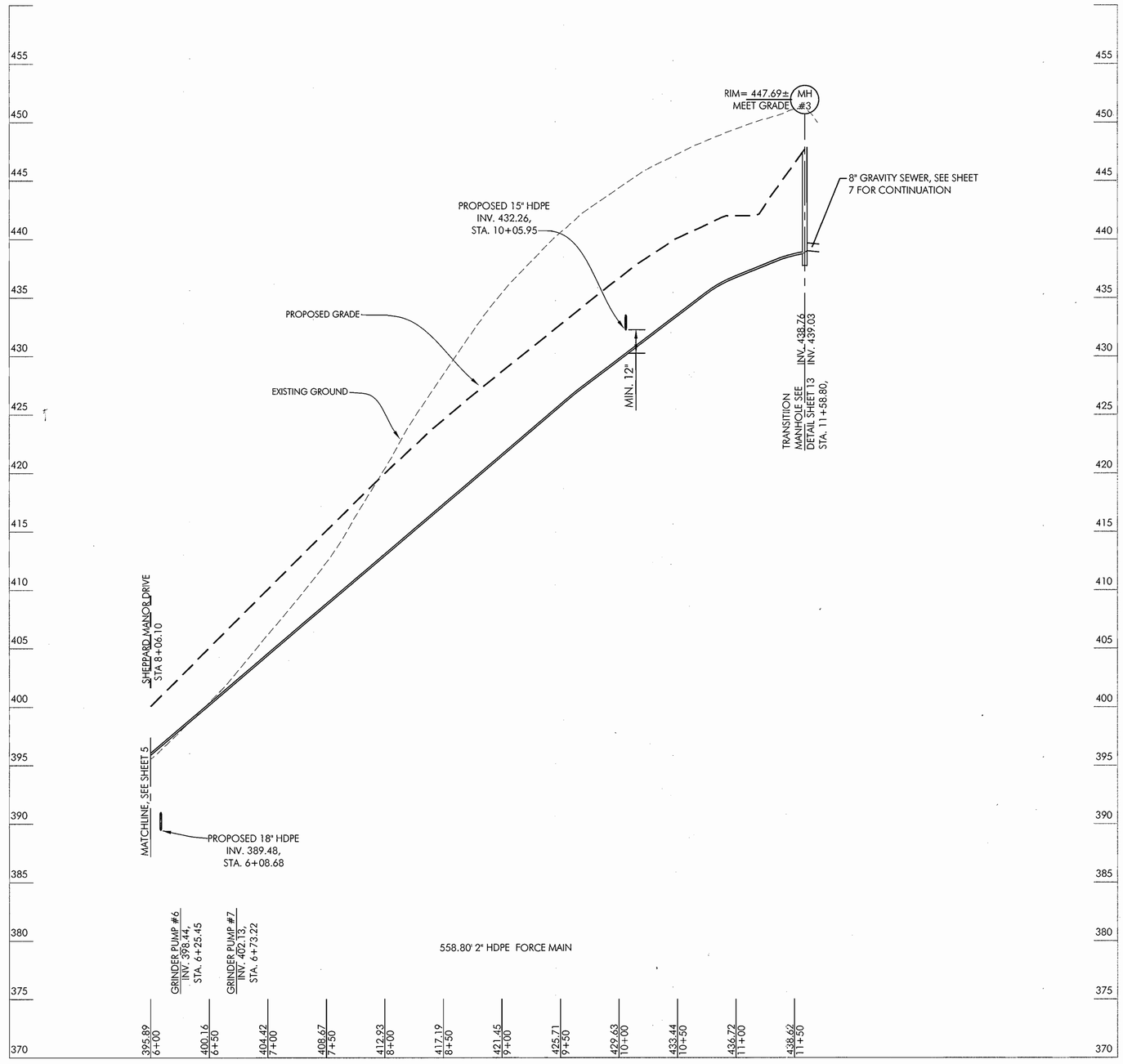

2" FM PROFILE TO TRANSITION MH

SCALE

1" = 50' HORIZONTAL;
1" = 5' VERTICAL

APPROVED: FOR PRIVATE SHARED SEWERAGE SYSTEM FOR LOTS 1, 2, 3, 4, 5, 6, 15, 16, 17, 18, AND 19.
HOWARD COUNTY HEALTH DEPARTMENT

for Robert H. Weber — 1/19/07
HOWARD COUNTY HEALTH OFFICER — DATE

HOWARD SOIL CONSERVATIONS DISTRICT:
REVEWED FOR HOWARD COUNTY SOIL CONSERVATION DISTRICT AND MEETS TECHNICAL REQUIREMENTS.

USDA NATURAL RESOURCES CONSERVATION SERVICE — DATE

THIS PLAN IS APPROVED FOR SOIL EROSION AND SEDIMENT CONTROL BY THE HOWARD SOIL CONSERVATION DISTRICT.

HOWARD SOIL CONSERVATION DISTRICT — DATE

SEDIMENT CONTROL MEASURES FOR THIS CONTRACT WILL BE IMPLEMENTED IN ACCORDANCE WITH SECTION 219 OF THE HOWARD COUNTY STANDARDS AND SPECIFICATIONS AND AS PER ROAD CONSTRUCTION PLANS PER F-~~06-99~~.

DEPARTMENT OF PUBLIC WORKS
HOWARD COUNTY, MARYLAND

1-25-07
CHIEF, BUREAU OF UTILITIES — DATE

DEPARTMENT OF PUBLIC WORKS
HOWARD COUNTY, MARYLAND

2/27/07
CHIEF, DEVELOPMENT ENGINEERING DIVISION — DATE

McCRONE
● Engineering ● Environmental Sciences
● Construction Services ● Land Planning & Surveying
ANNAPOLIS ● CENTREVILLE ● DOVER ● ELKTON ● SALISBURY
20 RIDGELY AVENUE
ANNAPOLIS, MARYLAND 21401
PHONE (410) 267-5821 * FAX (410) 267-0932
www.mccrone-inc.com
Copyright © 2004

STATE OF MARYLAND — REGISTERED PROFESSIONAL ENGINEER — No. 27778
12/28/06

DES: B.T.D., N.V.S.			
DRN: B.T.D., N.V.S.			
CHK: R.J.R.			
DATE: DEC., 2006	BY	No.	REVISION

DATE

LOW PRESSURE PROFILES

JOB No. C1040062

PEDDICORD SHARED SEPTIC SYSTEM

LOTS 1 - 19
CONTRACT # ~~F-03-070~~ 50-4357D
TAX MAP NO. 29 - GRID NO. 1 - PARCEL 268
ELECTION DISTRICT No. 5
HOWARD COUNTY, MARYLAND

SCALE AS SHOWN

SHEET 6 OF 18

CADD FILE: G:\1040062 - Peddicord Property\Drawings\SHARED SEPTIC DESIGN\FM PROFILE.dwg ------ Tab.....Layout2

PLOTTED: Dec 28 , 2006 - 10:29am

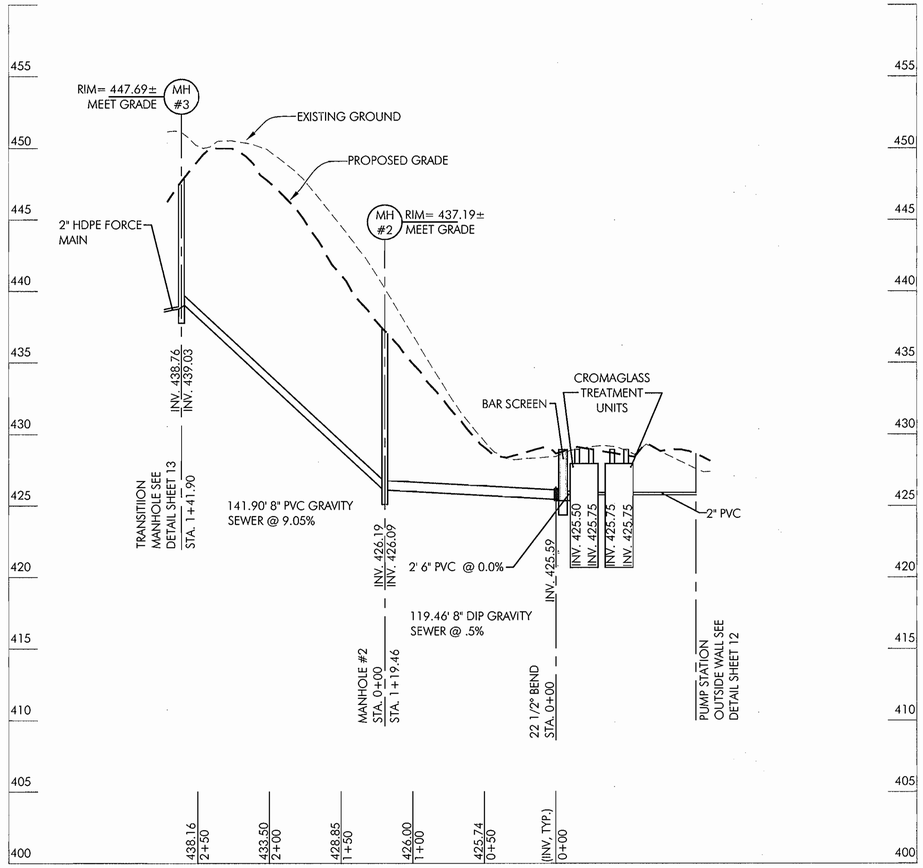

8" GRAVITY PROFILE FROM TRANSITION MH TO PUMP STATION

SCALE

1" = 50' HORIZONTAL;
1" = 5' VERTICAL

APPROVED: FOR PRIVATE SHARED SEWERAGE SYSTEM FOR LOTS 1, 2, 3, 4, 5, 6, 15, 16, 17, 18, AND 19.
HOWARD COUNTY HEALTH DEPARTMENT

for Robert J. Weber — 1/19/07
HOWARD COUNTY HEALTH OFFICER — DATE

HOWARD SOIL CONSERVATIONS DISTRICT:
REVEWED FOR HOWARD COUNTY SOIL CONSERVATION DISTRICT AND MEETS TECHNICAL REQUIREMENTS.

USDA NATURAL RESOURCES CONSERVATION SERVICE — DATE

THIS PLAN IS APPROVED FOR SOIL EROSION AND SEDIMENT CONTROL BY THE HOWARD SOIL CONSERVATION DISTRICT.

HOWARD SOIL CONSERVATION DISTRICT — DATE

SEDIMENT CONTROL MEASURES FOR THIS CONTRACT WILL BE IMPLEMENTED IN ACCORDANCE WITH SECTION 219 OF THE HOWARD COUNTY STANDARDS AND SPECIFICATIONS AND AS PER ROAD CONSTRUCTION PLANS PER F-06-99.

DEPARTMENT OF PUBLIC WORKS HOWARD COUNTY, MARYLAND	DEPARTMENT OF PUBLIC WORKS HOWARD COUNTY, MARYLAND	McCRONE							
1-25-07	2/07/07	● Engineering ● Environmental Sciences ● Construction Services ● Land Planning & Surveying ANNAPOLIS ● CENTREVILLE ● DOVER ● ELKTON ● SALISBURY 20 RIDGELY AVENUE ANNAPOLIS, MARYLAND 21401 PHONE (410) 267-6621 * FAX (410) 267-0932 www.mccrone-inc.com Copyright © 2004	STATE OF MARYLAND PROFESSIONAL ENGINEER No. 30728 12/28/06	DES: B.T.D., N.V.S. DRN: B.T.D., N.V.S. CHK: R.J.R. DATE: DEC., 2006	BY	No.	REVISION	DATE	GRAVITY PROFILES JOB No. C1040062
CHIEF, BUREAU OF UTILITIES DATE	CHIEF, DEVELOPMENT ENGINEERING DIVISION DATE								

PEDDICORD SHARED SEPTIC SYSTEM

LOTS 1 - 19
CONTRACT ~~#R-3376~~ 50-4357D
TAX MAP NO. 29 - GRID NO. 1 - PARCEL 268
ELECTION DISTRICT No. 5
HOWARD COUNTY, MARYLAND

SCALE AS SHOWN

SHEET 7 OF 18

CADD FILE: G:\1040062 - Peddicord Property\Drawings\SHARED SEPTIC DESIGN\GRAVITY PROFILE.dwg ------ Tab.....Layout1

PLOTTED: Dec 28, 2006 - 10:30am

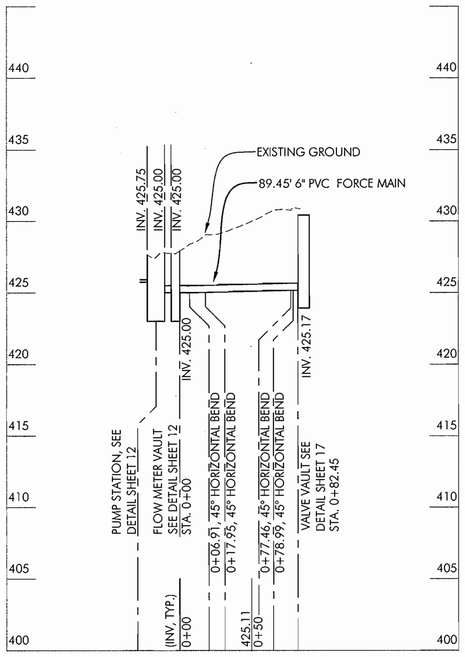

6" FM PROFILE FROM FLOW METER TO VALVE VAULT FIELDS A & B

SCALE
1" = 50' HORIZONTAL;
1" = 5' VERTICAL

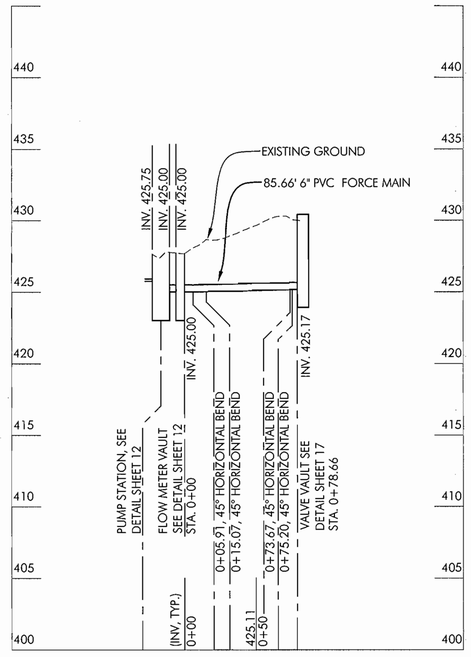

6" FM PROFILE FROM FLOW METER TO VALVE VAULT FIELDS B & C

SCALE
1" = 50' HORIZONTAL;
1" = 5' VERTICAL

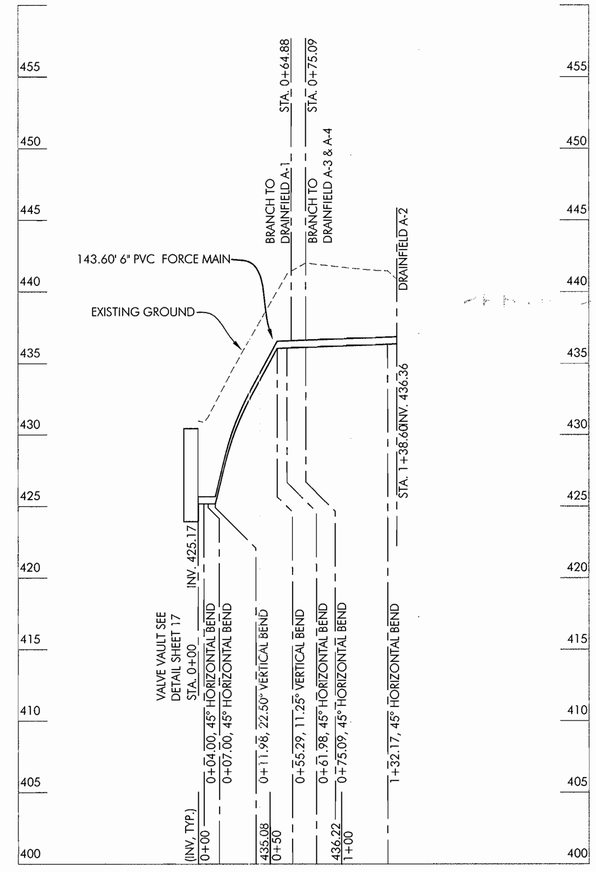

6" FM PROFILE FROM VALVE VAULT TO DRAINFIELD A

SCALE
1" = 50' HORIZONTAL;
1" = 5' VERTICAL

APPROVED: FOR PRIVATE SHARED SEWERAGE SYSTEM FOR LOTS 1, 2, 3, 4, 5, 6, 15, 16, 17, 18, AND 19.
HOWARD COUNTY HEALTH DEPARTMENT

for HOWARD COUNTY HEALTH OFFICER — DATE 1/19/07

HOWARD SOIL CONSERVATIONS DISTRICT:
REVEWED FOR HOWARD COUNTY SOIL CONSERVATION DISTRICT AND MEETS TECHNICAL REQUIREMENTS.

USDA NATURAL RESOURCES CONSERVATION SERVICE — DATE

THIS PLAN IS APPROVED FOR SOIL EROSION AND SEDIMENT CONTROL BY THE HOWARD SOIL CONSERVATION DISTRICT.

HOWARD SOIL CONSERVATION DISTRICT — DATE

SEDIMENT CONTROL MEASURES FOR THIS CONTRACT WILL BE IMPLEMENTED IN ACCORDANCE WITH SECTION 219 OF THE HOWARD COUNTY STANDARDS AND SPECIFICATIONS AND AS PER ROAD CONSTRUCTION PLANS PER F-~~06-99~~.

DEPARTMENT OF PUBLIC WORKS
HOWARD COUNTY, MARYLAND
CHIEF, BUREAU OF UTILITIES — DATE 1-25-07

DEPARTMENT OF PUBLIC WORKS
HOWARD COUNTY, MARYLAND
CHIEF, DEVELOPMENT ENGINEERING DIVISION — DATE 2/9/07

McCRONE
● Engineering ● Environmental Sciences
● Construction Services ● Land Planning & Surveying
ANNAPOLIS ● CENTREVILLE ● DOVER ● ELKTON ● SALISBURY
20 RIDGELY AVENUE
ANNAPOLIS, MARYLAND 21401
PHONE (410) 267-6621 * FAX (410) 267-9932
www.mccrone-inc.com

Copyright © 2004

STATE OF MARYLAND — REGISTERED PROFESSIONAL ENGINEER — No. 24818 — 12/18/06

DES: B.T.D., N.V.S.					
DRN: B.T.D., N.V.S.					
CHK: R.J.R.					
DATE: DEC., 2006	BY	No.	REVISION	DATE	

DRAINFIELD PROFILES

JOB No. C1040062

PEDDICORD SHARED SEPTIC SYSTEM

LOTS 1 - 19
CONTRACT # ~~F-3376~~ 50 - 4367 D
TAX MAP NO. 29 - GRID NO. 1 - PARCEL 268
ELECTION DISTRICT No. 5
HOWARD COUNTY, MARYLAND

SCALE AS SHOWN

SHEET 8 OF 18

CADD FILE: G:\1040062 - Peddicord Property\Drawings\SHARED SEPTIC DESIGN\Drainfield Profiles_rev01.dwg ------ Tab.....Layout1

PLOTTED: Dec 28, 2006 - 10:31am

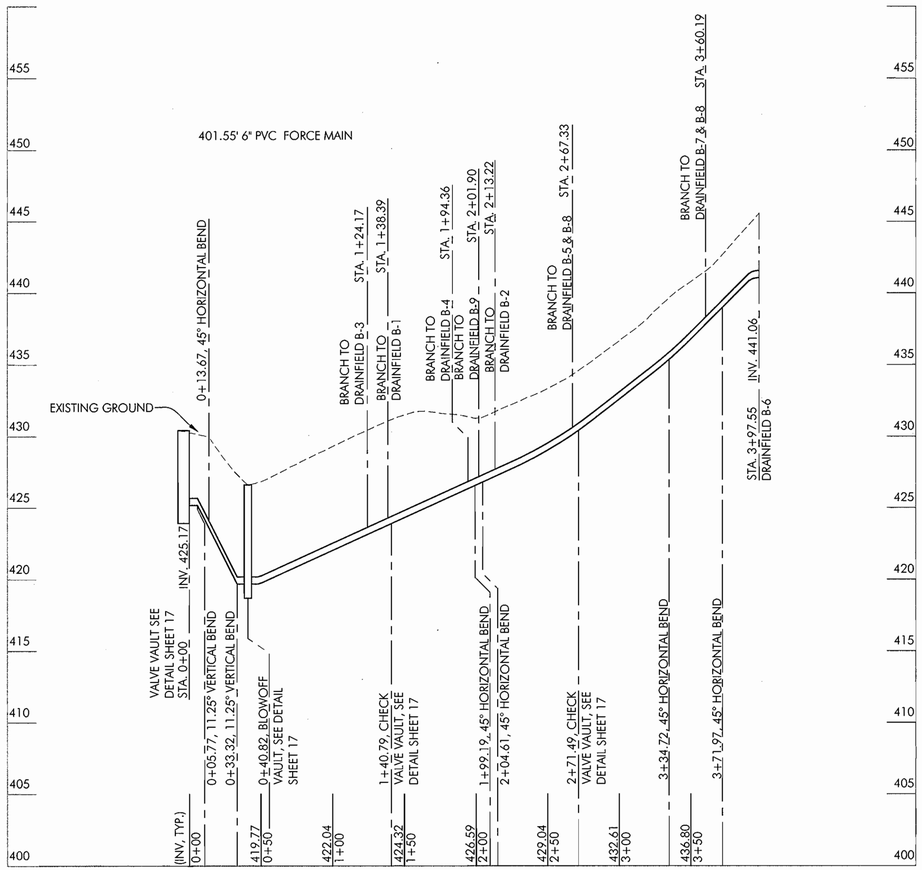

6" FM PROFILE FROM VALVE VAULT TO DRAINFIELD B

SCALE
1" = 50' HORIZONTAL;
1" = 5' VERTICAL

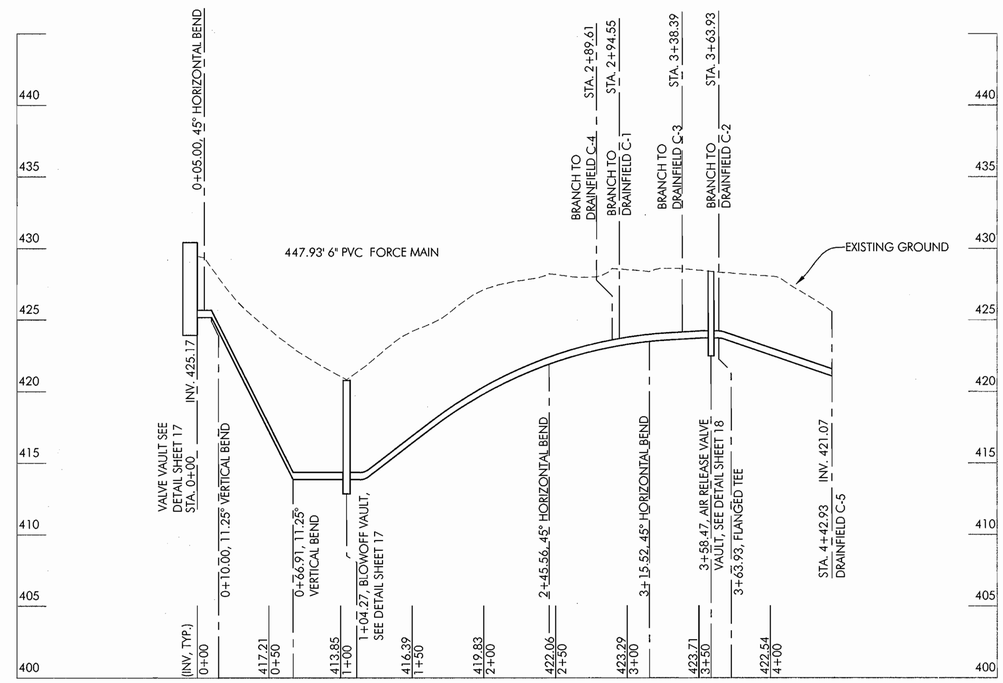

6" FM PROFILE FROM VALVE VAULT TO DRAINFIELD C

SCALE
1" = 50' HORIZONTAL;
1" = 5' VERTICAL

APPROVED: FOR PRIVATE SHARED SEWERAGE SYSTEM FOR LOTS 1, 2, 3, 4, 5, 6, 15, 16, 17, 18, AND 19.
HOWARD COUNTY HEALTH DEPARTMENT

HOWARD COUNTY HEALTH OFFICER — DATE 1/19/07

HOWARD SOIL CONSERVATIONS DISTRICT:
REVEWED FOR HOWARD COUNTY SOIL CONSERVATION DISTRICT AND MEETS TECHNICAL REQUIREMENTS.

USDA NATURAL RESOURCES CONSERVATION SERVICE — DATE

THIS PLAN IS APPROVED FOR SOIL EROSION AND SEDIMENT CONTROL BY THE HOWARD SOIL CONSERVATION DISTRICT.

HOWARD SOIL CONSERVATION DISTRICT — DATE

SEDIMENT CONTROL MEASURES FOR THIS CONTRACT WILL BE IMPLEMENTED IN ACCORDANCE WITH SECTION 219 OF THE HOWARD COUNTY STANDARDS AND SPECIFICATIONS AND AS PER ROAD CONSTRUCTION PLANS PER F-06-89.

DEPARTMENT OF PUBLIC WORKS
HOWARD COUNTY, MARYLAND
CHIEF, BUREAU OF UTILITIES — DATE 1-25-07

DEPARTMENT OF PUBLIC WORKS
HOWARD COUNTY, MARYLAND
CHIEF, DEVELOPMENT ENGINEERING DIVISION — DATE 2/20/07

McCRONE
• Engineering • Environmental Sciences
• Construction Services • Land Planning & Surveying
ANNAPOLIS • CENTREVILLE • DOVER • ELKTON • SALISBURY
20 RIDGELY AVENUE
ANNAPOLIS, MARYLAND 21401
PHONE (410) 267-0021 * FAX (410) 267-0932
www.mccrone-inc.com

Copyright © 2004

STATE OF MARYLAND — RICHARD J. MUZZANICA — No. 11851 — PROFESSIONAL ENGINEER — 12/22/06

DES: B.T.D., N.V.S.
DRN: B.T.D., N.V.S.
CHK: R.J.R.
DATE: DEC., 2006

BY	No.	REVISION	DATE

DRAINFIELD PROFILES

JOB No. C1040062

PEDDICORD SHARED SEPTIC SYSTEM

LOTS 1 - 19
CONTRACT # ~~R-9376~~ 60-4357D
TAX MAP NO. 29 - GRID NO. 1 - PARCEL 268
ELECTION DISTRICT No. 5
HOWARD COUNTY, MARYLAND

SCALE AS SHOWN

SHEET 9 OF 18

CADD FILE: G:\10400062 - Peddicord Property\Drawings\SHARED SEPTIC DESIGN\Drainfield Profiles_rev01.dwg ------ Tab.....Layout2

PLOTTED: Dec 28, 2006 - 10:31am

OPERATION AND MAINTENANCE SCHEDULE FOR BIORETENTION AREAS (F6)

1. Annual maintenance of plant material, mulch layer and soil is required. Maintenance of mulch and soil is limited to correcting areas of erosion or wash out.
   Any mulch replacement shall be done in the spring. Plant material shall be checked for disease and insect infestation and maintenance will address dead material and pruning.

2. Schedule of plant inspection will be twice a year in spring and fall. This inspection will include removal of dead and diseased vegetation considered beyond treatment, treatment of all diseased trees and shrubs and replacement of all deficient stakes and wires.

3. Mulch shall be inspected each spring. Remove previous mulch layer before applying new layer once every 2 to 3 events.

4. Soil erosion to be addressed on an as needed basis, with a minimum of once per month and after heavy storm events.

TEMPORARY SEEDING NOTES

Seedbed preparation: Loosen upper three inches of soil by raking, discing or other acceptable means before seeding, if not previously loosened.

Soil amendments: Apply 600 lbs. per acre 10-10-10 fertilizer (14 lbs./1000 sq.ft).

Seeding: For periods march 1 through April 30 and from august 15 through November 15, seed with 2 1/2 bushel per acre of annual rye (3.2 lbs./1000 sq.ft.) for the period may 1 through august 14, seed with 3 lbs. per acre of weeping lovegrass (.07 lbs./1000 sq.ft.). For the period November 1 through February 28, protect site by applying 2 tons per acre of well anchored straw mulch and seed as soon as possible in the spring, or use sod.

Mulching: Apply 1 1/2 to 2 tons per acre (70 to 90 lbs./1000 sq.ft.) of unrotted small grain straw immediately after seeding. Anchor mulch immediately after application using mulch anchoring tool or 218 gallons per acre (5 gal/1000 sq.ft.) of emulsified asphalt on flat areas. On slopes 8 feet or higher, use 348 gallons per acre (8 gal/1000 sq.ft.) for anchoring. Refer to the 1994 Maryland standards and specifications for soil erosion and sediment control for rate and methods not covered.

21.0 STANDARDS AND SPECIFICATIONS FOR TOPSOIL

Definition

Placement of topsoil over a prepared subsoil prior to establishment of permanent vegetation.

Purpose

To provide a suitable soil medium for vegetable growth. Soils of concern have low moisture content, low nutrient levels, low pH materials toxic to plants, and/or unacceptable soil gradation.

Conditions Where Practice Applies

i. This practice is limited to areas having 2:1 or flatter slopes where:
   a. the texture of the exposed subsoil/parent material is not adequate to produce vegetative growth.

   b. The soil material is so shallow that the rooting zone is not deep enough to support plants or furnish continuing supplies of moisture and plant nutrients.

   c. The original soil to be vegetated contains material toxic to plant growth.

   d. The soil is so acidic that treatment with limestone is not feasible.

ii. For the purpose of these standards and specifications, areas having slopes steeper than 2:1 require special consideration and design for adequate stabilization. Areas having slopes steeper than 2:1 shall have the appropriate stabilization shown on the plans.

UTILITY STORAGE BUILDING SPECIFICATIONS

Contractor to provide 15'-2" x 11' (I.D.) vinyl sided storage building, high wall barn style with 6 foot side walls and no windows, one double door on end of building. Contractor to meet the following specifications:
1. No windows
2. 10' ridge vent
3. 4' x 4' pressure treated skids
4. 2' x 4' floor joist 16" on center
5. 5/8" plywood floor sheathing
6. 2' x 4' studs 16" on center
7. All walls to be plated at bottom and double plated at the top
8. 1/2" roof sheathing
9. 240 pund asphalt 20 years shingles
10. Doors and frame to be reinforced
11. Door hingers must be "t" type or strap type, three hinges per door side. Piano hinges are not acceptable
12.Locks are to be keyed alike with bauer ch 751 lock
13. Vinyl siding and trim color - almond, shingle color - brown

PERMANENT SEEDING NOTES

Apply to graded or cleared areas not subject to immediate further disturbance where a permanent long-lived vegetative cover is needed.

Seedbed preparation: Loosen upper three inches of soil by raking, discing or other acceptable means before seeding, if not previously loosened.

Soil amendments: In lieu of soil test recommendations, use one of the following schedules:
1) Preferred-apply 2 tons per acre dolomite limestone (92 lbs/ 100 sq.ft.) and 600 lbs per acre 10-10-10 fertilizer (14 lbs./ 1000 sq.ft.) before seeding. Harrow or disc into upper three inches of soil. at the time of seeding, apply 400 lbs. per acre 30-0-0 ureaform fertilizer (9 lbs/1000 sq.ft.)

2) Acceptable-apply 2 tons per acre dolomite limestone (92 lbs/ 1000 sq.ft.) and apply 1000 lbs. per acre 10-10-10- fertilizer (23 lbs./1000 sq.ft.) before seeding. Harrow or disc into upper three inches of soil.

Seeding: for the periods march 1 through April 30, and august 1 through October 15, seed with 60 lbs. per acre (1.4 lbs/1000 sq.ft.) of kentucky 31 tall fescue. For the period may 1 through July 31, seed with 60 lbs. kentucky 31 tall fescue per acre and 2 lbs. per acre (.05 lbs./1000 sq.ft.) of weeping lovegrass. During the period of October 16 through February 28, protect site by: Option (1) 2 tons per acre well anchored straw mulch and seed as soon as possible in the spring. option (2) use sod. option (3) seed with 60 lbs/acre kentucky 31 tall fescue and mulch with 2 tons/acre well anchored

Mulching: Apply 1 1/2 to 2 tons per acre (70 to 90 lbs/1000 sq. ft.) of unrotted small grain straw immediately after seeding. Anchor mulch immediately after application using mulch anchoring tool or 218 gallons per acre (5 gal/1000 sq.ft.) of emulsified asphalt on flat areas. on slopes 8 feet or higher, use 348 gallons per acre (8 gal/1000 sq.ft.) for anchoring.

Maintenance: Inspect all seeded areas and make needed repairs, replacements and reseedings.

SEDIMENT CONTROL NOTES

1. A minimum of 48 hours notice must be given to the Howard County Department of Inspection, License and Permits Sediment Control Division prior to the start of any construction (313-1855).

2. All vegetation and structural practices are to be installed according to the provisions of this plan and are to be in conformance with the 1994 MARYLAND STANDARDS AND SPECIFICATIONS FOR SOIL EROSION AND SEDIMENT CONTROL. and revisions thereto.

3. Following initial soil disturbance or redisturbance, permanent or temporary stabilization shall be completed within: (a) 7 calendar days for all perimeter sediment control structures, dikes, perimeter slopes, and all slopes greater than 3:1, (b) 14 days as to all other disturbed or graded areas on the project site.

4. All sediment traps/basins shown must be fenced and warning signs posted around their perimeter in accordance with Vol. 1, Chapter 7, HOWARD COUNTY DESIGN MANUAL, Storm Drainage.

5. All disturbed areas must be stabilized within the time period specified above in accordance with the 1994 MARYLAND STANDARDS AND SPECIFICATIONS FOR SOIL EROSION AND SEDIMENT CONTROL for permanent seeding, sod, temporary seeding, and mulching (Sec. G). Temporary stabilization with mulch alone shall be done when recommended seeding dates do not allow for proper germination and establishment of grasses.

6. All sediment control structures are to remain in place and are to be maintained in operative condition until permission for their removal has been obtained from the Howard County Sediment Control Inspector.

7. Site Analysis :
   Area Disturbed
   Area to be roofed or paved
   Area to be vegetatively stabilized
   Offsite waste/borrow area location

8. Any sediment control practice which is disturbed by grading activity for placement of utilities must be repaired on the same day of disturbance.

9. Additional sediment controls must be provided, if deemed necessary by the Howard County Sediment Control Inspector.

10. On all sites with disturbed areas in excess of 2 acres, approval of the inspection

TUBE GATE SPECIFICATIONS

1. Contractor to provide one double leaf gate, see detail sheet 13
   a. 16 gauge steel construction
   b. Painted red by manufacture if option is available
   c. Mounting hardware is typically included with gate

2. Each tube gate will be 8 foot in length

3. Gates are to be mounted to 6" x 6" pressure treated posts

4. Posts are to be capped

5. Posts are to be buried a minimum of 36 inches below grade

6. Gates are to be secured to pressure treated posts with either screw hooks or bolt hooks

7. Fastening hardware will not be permitted to extrude beyond the outside of the post

8. Screw or bolt hooks are to face each other; this will prevent the gates from being lifted off of the hooks by tresspassers

9. The bottom tube of the gate shall be mounted to provide a minimum of 4" clearance above the access roadway

10. Gates are to be secured by 3/8-inch shackle padlock, which will be supplied by Howard County Bureau of Utilities. The contractor will supply a suitable length of chain (approximately 1 foot) or short choker cable to complete securing the gates in the closed position.

11. Contractor to provide reflectors on posts and reflective tape on crossbars

CONSTRUCTION AND MATERIAL SPECIFICATIONS

i. Topsoil salvaged from the existing site may be used provided that it meets the standards as set forth in these specifications. Typically, the depth of topsoil to be salvaged for a given soil type can be found in the representative soil profile section in the soil survey published by USDA in cooperation with Maryland agricultural experimental station.

ii. Topsoil specifications - soil to be used meet the following:
   i. Topsoil shall be a loam, sandy loam, clay loam, silt loam, sandy clay loam, loamy sand. Other soils may be used if recommended by an agronomist or a soil scientist and approved by the appropriate approval authority. Regardless, topsoil shall not be a mixture of contrasting textured subsoils and shall contain less than 5% by volume of cinders, stones, slag, coarse fragments, gravel, sticks, roots, trash, or other materials larger that 1 and 1/2" in diameter.

   ii. Topsoil must be free of plants or plant parts such as bermuda grass, quackgrass, johnsongrass, nutsedge, poison ivy, thistle, or others as specified.

   iii. Where the subsoil is either highly acidic or composed of heavy clays, ground limestone shall be spread at the rate of 4-8 tons/acre (200-400 pounds per 1,000 square feet) prior to the placement of topsoil. Lime shall be distributed uniformly over designated areas and worked into the soil in conjunction with tillage operations as described in the following procedures.

iii. For sites having disturbed areas under 5 acres:
   i. Place topsoil (if required) and apply soil amendments as specified in 20.0 vegetative stabilization - elapsed (14 days min.) to permit dissipation of Section I - vegetative stabilization methods and materials. Phyto-toxic materials.

iv. For sites having disturbed areas over 5 acres:
   i. On soil meeting topsoil specifications, obtain test results dictating fertilizer and lime amendments required to bring the soil into compliance with the following:
      a. pH for topsoil shall be between 6.0 and 7.5. if the tested soil demonstrates a pH of less than 3. Place topsoil (if required) and apply soil amendments 6.0, sufficient
   lime shall be prescribed to raise specified in 20.0 vegetative stabilization-section I-Vegetative the pH to 6.5 or higher. Stabilization methods and materials.
      b. Organic content of topsoil shall be not less than 1.5 percent by weight.
      c. Topsoil having soluble salt content greater than 500 parts per million shall not be used.
      d. No sod or seed shall be placed on soil soil which sediment control practices such as diversions, grade has been treated with soil sterilants or chemicals stabilization structures, earth dikes, slope silt fence and used for weed control until sufficient time has sediment traps and basins.

Note: Topsoil substitutes or amendments, as recommended results dictating fertilizer and lime amendments required by a qualified agronomist or soil scientist and approved by to bring the soil into compliance with the following: the appropriate approval authority, may be used in lieu of natural topsoil.

v. Topsoil application
   i. When topsoiling, maintain needed erosion and

   ii. Grades on the areas to be topsoiled, which have been previously established, shall be maintained, albeit 4"- 8" higher in elevation.

   iii. Topsoil shall be uniformly distributed in a 4" - 8" layer and lightly compacted to a minimum thickness of 4". Spreading shall be performed in such a manner that sodding or seeding can proceed with a minimum of additional soil preparation and tillage. Any irregularities in the surface resulting from topsoiling or other operations shall be corrected in order to prevent the formation of depressions or water pockets.

   iv. Topsoil shall not be place while the topsoil or subsoil is in a frozen or muddy condition, when the subsoil is excessively wet or in a condition that may otherwise be detrimental to proper grading and seedbed preparation.

DETAIL 22 - SILT FENCE

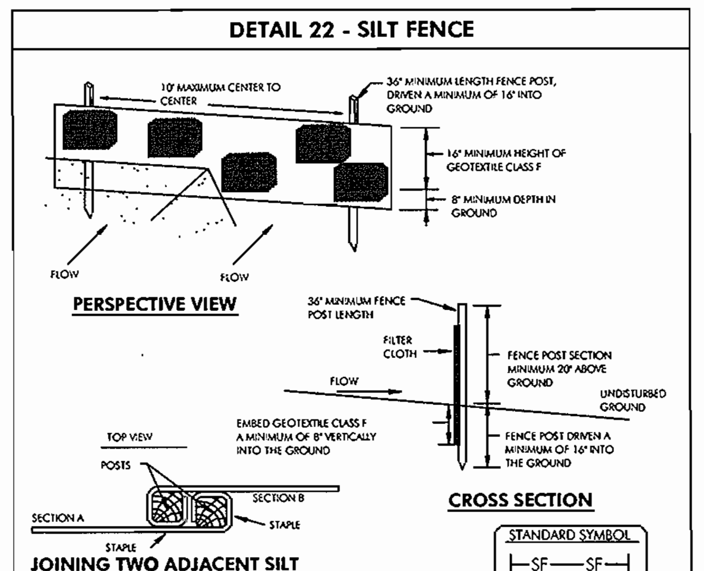

CONSTRUCTION SPECIFICATIONS

1. Fence posts shall be a minimum of 36" long driven 16" minimum into the ground. Wood posts shall be 11/2" x 11/2" square (minimum) cut, or 13/4" diameter (minimum) round and shall be of sound quality hardwood. Steel posts will be standard T or U section weighting not less than 1.00 pond per linear foot.

2. Geotextile shall be fastened securely to each fence post with wire ties or staples at top and mid-section and shall meet the following requirements for Geotextile Class F:

Tensile Strength	50 lbs/in (min.)	Test: MSMT 509
Tensile Modulus	20 lbs/in (min.)	Test: MSMT 509
Flow Rate	0.3 gal ft ²/ minute (max.)	Test: MSMT 322
Filtering Efficiency	75% (min.)	Test: MSMT 322

3. Where ends of geotextile fabric come together, they shall be overlapped, folded and stapled to prevent sediment bypass.

4. Silt Fence shall be inspected after each rainfall event and maintained when bulges occur or when sediment accumulation reached 50% of the fabric height.

U.S. DEPARTMENT OF AGRICULTURE SOIL CONSERVATION SERVICE	PAGE E - 15 - 3	MARYLAND DEPARTMENT OF ENVIRONMENT WATER MANAGEMENT ADMINISTRATION

DETAIL 33 - SUPER SILT FENCE

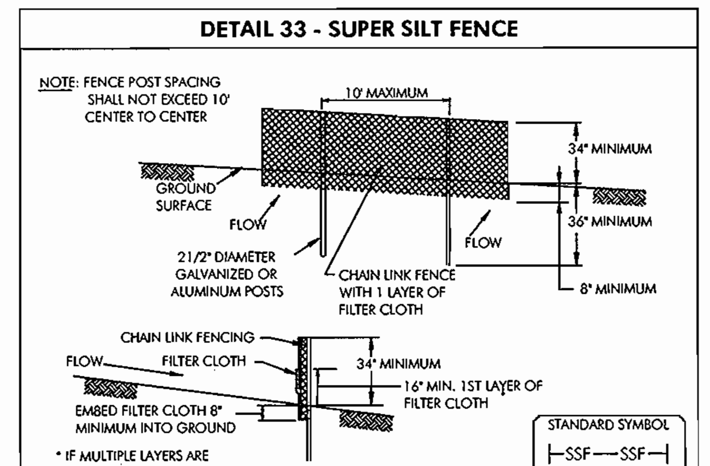

CONSTRUCTION SPECIFICATIONS

1. Fencing shall be 42" in height and constructed in accordance with the latest Maryland State Highway Details for Chain Link Fencing. The specification for a 6' fence shall be used, substituting 42" fabric and 6' length posts.

2. Chain link fence shall be fastened securely to the fence posts with wire ties. The lower tension wire, brace and truss rods, drive anchors and post caps are not required except on the ends of the fence.

3. Filter cloth shall be fastened securely to the chain link fence with ties spaced every 24" at the top and mid section.

4. Filter cloth shall be embedded a minimum of 8" into the ground.

5. When two sections of filter cloth adjoin each other, they shall be overlapped by 6" and folded.

6. Maintenance shall be performed as needed and silt buildups removed when "bulges" develop in the silt fence, or when silt reaches 50% of fence height

7. Filter cloth shall be fastened securely to each fence post with wire ties or staples at top and mid section and shall meet the following requirements for Geotextile Class F:

Tensile Strength	50 lbs/in (min.)	Test: MSMT 509
Tensile Modulus	20 lbs/in (min.)	Test: MSMT 509
Flow Rate	0.3 gal/ft /minute (max.)	Test: MSMT 322
Filtering Efficiency	75% (min.)	Test: MSMT 322

U.S. DEPARTMENT OF AGRICULTURE SOIL CONSERVATION SERVICE	PAGE H - 26 - 3	MARYLAND DEPARTMENT OF ENVIRONMENT WATER MANAGEMENT ADMINISTRATION

DETAIL 23B - AT GRADE INLET PROTECTION

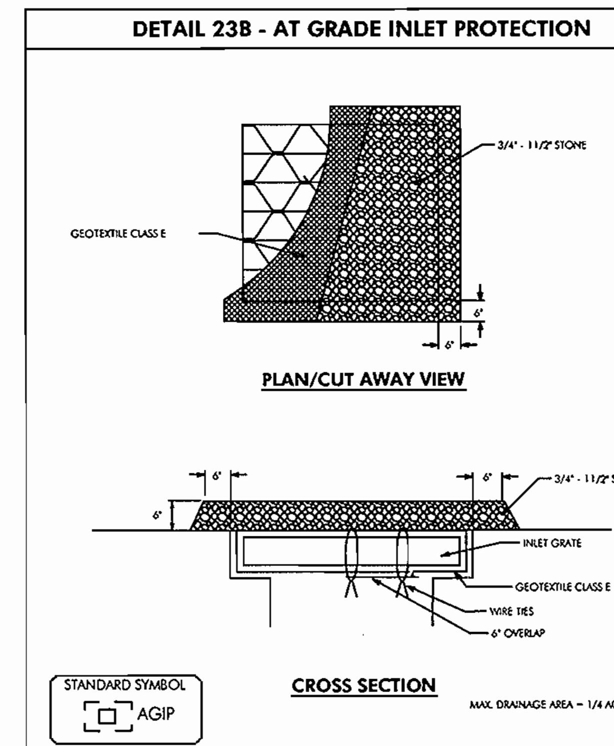

CONSTRUCTION SPECIFICATIONS

1. Lift grate and wrap with geotextile class E to completely cover all openings, then set grate back in place.

2. Place 3/4" to 11/2" stone, 4-6" thick on the grate to secure the fabric and provide additional filtration.

U.S. DEPARTMENT OF AGRICULTURE SOIL CONSERVATION SERVICE	PAGE E - 16 - 5A	MARYLAND DEPARTMENT OF ENVIRONMENT WATER MANAGEMENT ADMINISTRATION

DETAIL 24 - STABILIZED CONSTRUCTION ENTRANCE

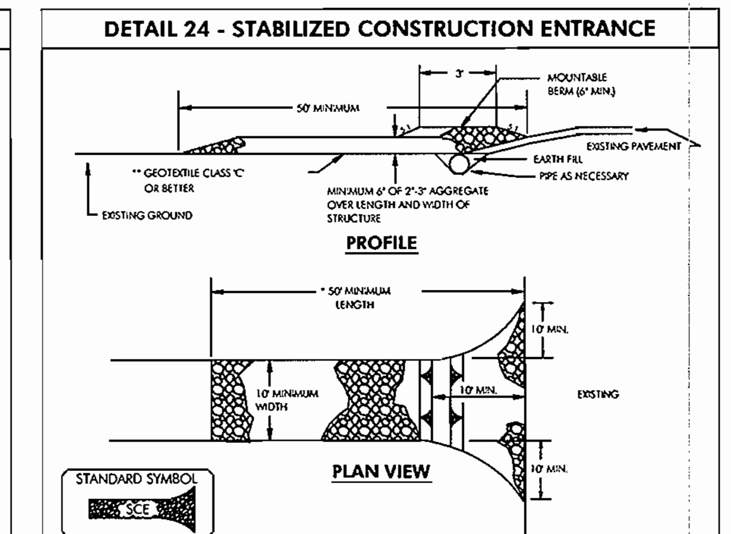

CONSTRUCTION SPECIFICATIONS

1. Length - minimum of 50' (*30' for single residence lot).

2. Width - 10' minimum, should be flared at the existing road to provide a turning radius.

3. Geotextile fabric (filter cloth) shall be placed over the existing ground prior to placing stone. **The plan approval authority may not require single family residences to use geotextile.

4. Stone - crushed aggregate (2" to 3") or reclaimed or recycled concrete equivalent shall be placed at least 6" deep over the length and width of the entrance.

5. Surface Water - all surface water flowing to or diverted toward construction entrances shall be piped through the entrance, maintaining positive drainage. Pipe installed through the stabilized construction entrance shall be protected with a mountable berm with 5:1 slopes and a minimum of 6" of stone over the pipe. Pipe has to be sized according to the drainage. When the SCE is located at a high spot and has no drainage to convey a pipe will not be necessary. Pipe should be sized according to the amount of runoff to be conveyed. A 6" minimum will be required.

6. Location - A stabilized construction entrance shall be located at every point where construction traffic enters or leaves a construction site. Vehicles leaving the site must travel over the entire length of the stabilized construction entrance.

U.S. DEPARTMENT OF AGRICULTURE SOIL CONSERVATION SERVICE	PAGE F - 17 - 3	MARYLAND DEPARTMENT OF ENVIRONMENT WATER MANAGEMENT ADMINISTRATION

APPROVED: FOR PRIVATE SHARED SEWERAGE SYSTEM FOR LOTS 1, 2, 3, 4, 5, 6, 15, 16, 17, 18, AND 19.
HOWARD COUNTY HEALTH DEPARTMENT

for Robert J. Weber — 1/19/07
HOWARD COUNTY HEALTH OFFICER — DATE

HOWARD SOIL CONSERVATIONS DISTRICT:
REVEWED FOR HOWARD COUNTY SOIL CONSERVATION DISTRICT AND MEETS TECHNICAL REQUIREMENTS.

Jim Meyer — 2/6/07
USDA NATURAL RESOURCES CONSERVATION SERVICE — DATE

THIS PLAN IS APPROVED FOR SOIL EROSION AND SEDIMENT CONTROL BY THE HOWARD SOIL CONSERVATION DISTRICT.

2/6/07
HOWARD SOIL CONSERVATION DISTRICT — DATE

SEDIMENT CONTROL MEASURES FOR THIS CONTRACT WILL BE IMPLEMENTED IN ACCORDANCE WITH SECTION 219 OF THE HOWARD COUNTY STANDARDS AND SPECIFICATIONS AND AS PER ROAD CONSTRUCTION PLANS PER F-06-99.

DEPARTMENT OF PUBLIC WORKS HOWARD COUNTY, MARYLAND	DEPARTMENT OF PUBLIC WORKS HOWARD COUNTY, MARYLAND
1-25-07 CHIEF, BUREAU OF UTILITIES — DATE	2/1/07 CHIEF, DEVELOPMENT ENGINEERING DIVISION — DATE

McCRONE
● Engineering ● Environmental Sciences
● Construction Services ● Land Planning & Surveying
ANNAPOLIS ● CENTREVILLE ● DOVER ● ELKTON ● SALISBURY
20 RIDGELY AVENUE
ANNAPOLIS, MARYLAND 21401
PHONE (410) 267-8621 * FAX (410) 267-8932
www.mccrone-inc.com
Copyright © 2004

12/28/06

DES: B.T.D., N.V.S.			
DRN: B.T.D., N.V.S.			
CHK: R.J.R.			
DATE: DEC., 2006	BY	No.	REVISION	DATE

SEDIMENT CONTROL /DESIGN NOTES

JOB No. C1040062

PEDDICORD SHARED SEPTIC SYSTEM

LOTS 1 - 19
CONTRACT ~~# R-3376~~ 50-4357D
TAX MAP NO. 29 - GRID NO. 1 - PARCEL 268
ELECTION DISTRICT No. 5
HOWARD COUNTY, MARYLAND

SCALE AS SHOWN

SHEET 10 OF 18

PLOTTED: Dec 28, 2006 - 10:41am

CADD FILE: G:\1040062 - Peddicord Property\Drawings\SHARED SEPTIC DESIGN\DETAILS_REV03.dwg ------ Tab.......10 OF 18

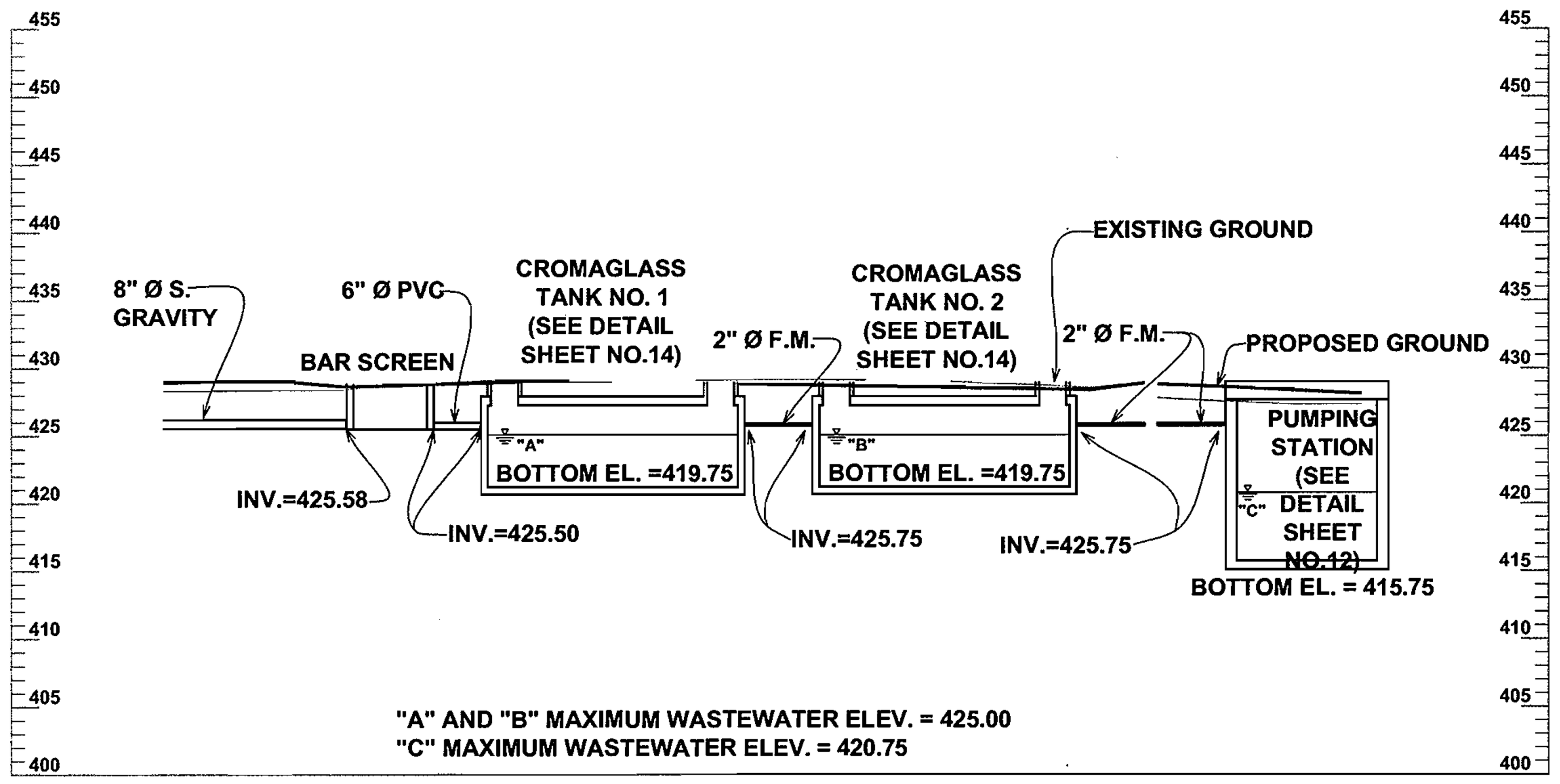

HYDRAULIC PROFILE

NOT TO SCALE

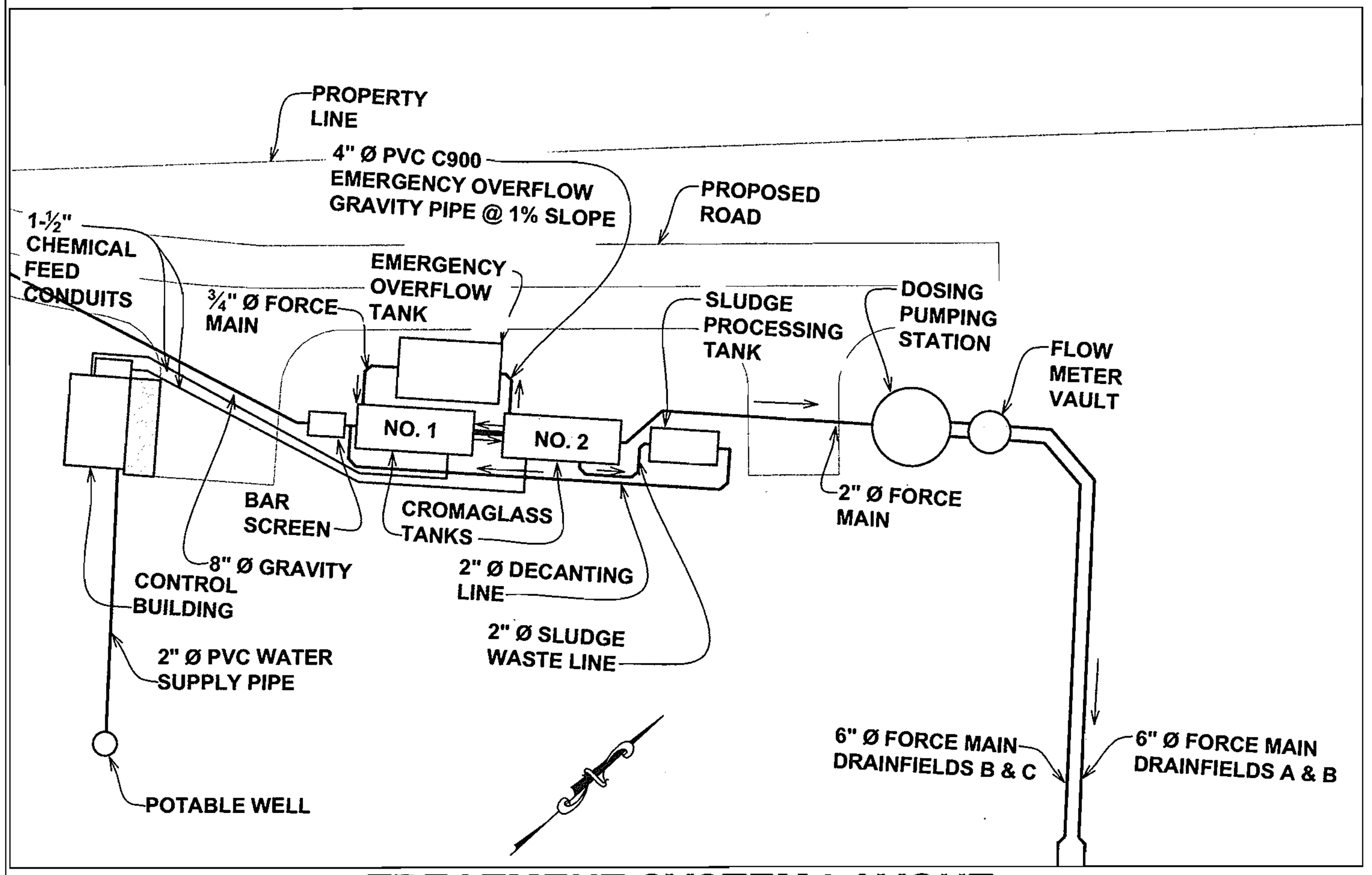

TREATMENT SYSTEM LAYOUT

SCALE: 1" = 20'

DESIGN NOTES

DESIGN FLOW

Design Flow = 750 GPD x 11 Homes (lots 1, 2, 3, 4, 5, 6, 15, 16, 17, 18, and 19)
Design Flow = 8,250 GPD

PRECAST CONCRETE SPECIFICATIONS

Each Precast concrete septic tank shall be certified by a Professional Engineer to support earth load as presented on plans and to prevent buoyancy with ground water at finished grade.

TRENCH SPECIFICATIONS

Perforated pipe within trench shall be 2" PVC (Schedule 40) as shown on the plans with holes diameter and hole spacing shown in the drain field summary on this Sheet. Install Orenco Orifice Shields, model code OS150, on each lateral orifice. Last lateral hole shall be placed on top of pipe.

Trench filter fabric shall be non-woven polyester fabric, needle pinched, 6 oz. per square yard minimum placed within trench as shown on the details.

Trench gravel shall meet the requirements of SHA #57 stone placed within trench as shown on the details.

PIPING SPECIFICATIONS

All sanitary piping shall be PVC Schedule 40. All material shall conform to Howard County Design Manual Standard Specifications and Details for Construction.

GATE VALVES

4" and 6" gate valves shall be Resilient seat "Baltimore Standard, open right" furnished with a non-rising stem and roadway box. For all 6" valves, roadway box cover shall cast with letters A, A-B, B-C, C, E, E-F, F-D, or D, correlating with the cell letter(s) that each gate valve controls, as shown on the Contract Drawings. One Tee-handled operating wrench shall be provided by the gate valve manufacturer to operate the gate valves from finished grade (with adequate length to operate from finished grade).

MILESTONES OF CONSTRUCTION

The following Milestones of Construction must be approved by Michael Davis MDE (410-537-1771) and the Howard County Department of Health (410-313-1771). The Engineer shall be contacted during the following phases of construction for system stakeout by registered surveyor.

a. Initial system stakeout by registered surveyor;
b. Open trench inspection;
c. Cromaglass SBR, sludge processing and emergency overflow tanks installation;
d. All tanks must be watertight to the satisfaction of Howard County Department of Health. Contractor shall supply test water and provide forty-eight (48) hours notice to Health Department for water tightness testing.

Prior to installation, a preconstruction meeting must be scheduled to review the installation. The on-site sewage disposal system must be professionally staked for the meeting. The meeting shall include:

a. Michael Davis
Howard County Department of Health
(410) 313-1771
a. Barry Glotfelty
Maryland Department of the Environment
(410) 537-4156
b. Beccy Kugel (Public Works Managed System)
Department of Public Works
Bureau of Utilities
(410) 313-2723
c. On-site Disposal System Installation Contractor
d. General Contractor for the Project
e. Engineer that designed the system (McCrone, Inc. (410) 267-6947)

Note: a minimum of five days notice may be required to schedule the meeting.

Any changes to the approved plan must be presented to the Department of Health, Maryland Department of the Environment, and the Department of Public Works (Public Works Managed System) by the Engineer (McCrone, Inc. (410) 267-6947).

Prior to installation of any component of the system, proper permits must be obtained from:

a. Department of Health, Septic System Installation Permit
b. MDE, State Construction Permit

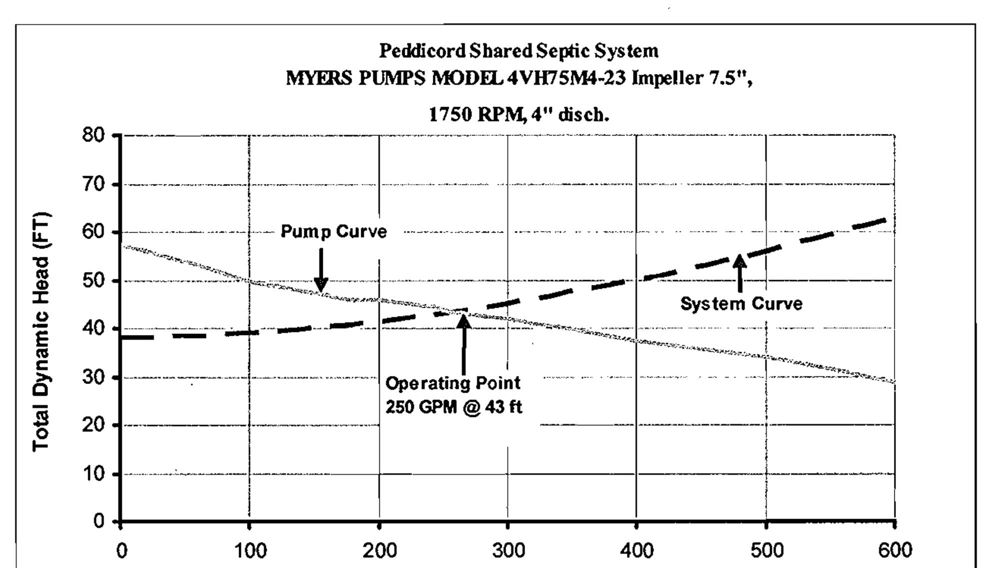

PUMP CURVE, C=130

DESIGN PARAMETERS

MAXIMUM DAILY FLOW = 8,250 GPD = 750 GPD/HOUSE * 11 HOUSES
AVERAGE DAILY FLOW = 4,125 GPD = 8,250 GPD / 2 PEAKING FACTOR
INFLUENT BOD_5 = 200 mg/L — EFFLUENT BOD_5 = 30 mg/L
INFLUENT TSS = 200 mg/L — EFFLUENT TSS = 30 mg/L
INFLUENT TN = 60 mg/L — EFFLUENT TN = 10 mg/L

CROMAGLASS TREATMENT CAPACITY

INFLUENT BOD_5 = 100 - 270 mg/L — EFFLUENT $BOD_5 \leq 25$ mg/L
INFLUENT TSS = 100 - 270 mg/L — EFFLUENT TSS ≤ 30 mg/L
INFLUENT TN = 35 - 65 mg/L — EFFLUENT TN ≤ 10 mg/L
NOTE: ASSUMING RATIO OF BOD:TN = 5:1 AND ALK:TN = 7:1

CROMAGLASS TREATMENT CYCLES (OPERATOR ADJUSTABLE)

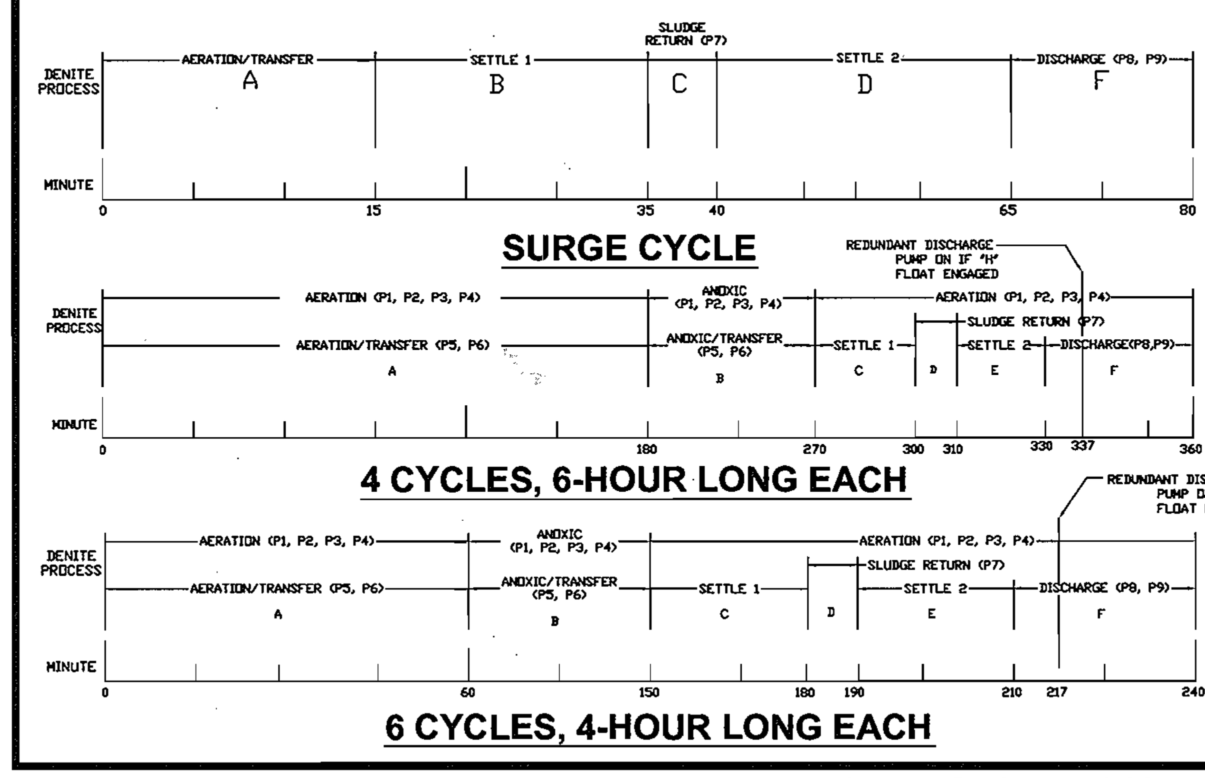

INITIALLY INSTALLED TRENCHES (200%)

FIELD	TRENCH NUMBER	LATERAL LENGTH, ft	INVERT ELEVATION, ft	HOLE DIAMETER, in	NUMBER OF HOLES	HOLE SPACING, ft	TRENCH BOTTOM, ft	FLOW RATE PER LATERAL, gpm	DISCHARGE HEAD PER LATERAL, ft
A-1	1	55	429.00	0.25	6	9.17	423.00	22.31	25.40
	2	55	429.00	0.25	6	9.17	424.90	22.31	25.40
	3	55	432.50	0.25	6	9.17	426.80	20.72	21.90
	4	55	432.50	0.25	6	9.17	428.20	20.72	21.90
	5	55	435.30	0.25	6	9.17	429.30	19.35	19.10
A-2	9	80	433.70	0.25	8	10.00	428.70	26.91	20.70
	10	80	433.70	0.25	8	10.00	429.70	26.91	20.70
	11	80	435.90	0.25	8	10.00	431.00	25.44	18.50
	12	80	435.90	0.25	8	10.00	432.00	25.44	18.50
A-3	15	80	440.50	0.25	8	10.00	437.00	22.05	13.90
	16	80	440.50	0.25	8	10.00	438.50	22.05	13.90
	17	80	443.40	0.25	8	10.00	439.90	20.15	11.60
A-4	22	80	449.20	0.25	8	10.00	445.40	13.49	5.20
	23	80	449.20	0.25	8	10.00	446.60	13.49	5.20
	24	80	452.40	0.25	12	6.67	447.40	12.61	2.00
	21	80	449.20	0.25	8	10.00	439.90	13.49	5.20
B-1	1	65	426.50	0.25	7	9.29	421.50	23.52	20.70
	2	65	426.50	0.25	7	9.29	422.20	23.52	20.70
B-2	4	40	428.00	0.25	4	10.00	424.50	12.92	19.20
	5	40	427.00	0.25	4	10.00	425.00	7.45	20.20
B-3	8	50	429.80	0.25	5	10.00	424.60	15.38	17.40
	9	50	432.40	0.25	5	10.00	425.40	14.19	14.80
	7	50	429.80	0.25	5	10.00	423.70	8.65	17.40
B-4	13	30	430.50	0.25	3	10.00	425.50	9.04	16.70
	14	30	430.50	0.25	3	10.00	426.00	9.04	16.70
	34	30	430.50	0.25	3	10.00	427.70	9.04	16.70
	35	30	430.50	0.25	3	10.00	427.50	9.04	16.70
	12	30	430.50	0.25	3	10.00	425.00	9.08	16.70
B-5	15	40	429.50	0.25	4	10.00	424.50	12.41	17.70
	16	40	429.50	0.25	4	10.00	425.80	12.41	17.70
	17	40	429.50	0.25	4	10.00	426.50	12.41	17.70
B-6	24	50	436.80	0.25	5	10.00	433.10	11.89	10.40
	25	50	436.80	0.25	5	10.00	433.90	11.89	10.40
	26	50	436.80	0.25	5	10.00	434.60	11.89	10.40
	27	50	439.80	0.25	6	8.33	435.30	12.04	7.40
	28	50	439.80	0.25	6	8.33	435.90	12.04	7.40
	23	50	436.80	0.25	5	10.00	432.30	11.89	10.40
B-7	30	45	442.50	0.25	5	9.00	438.00	7.99	4.70
	29	45	439.80	0.25	5	9.00	437.00	10.03	7.40
B-8	31	60	444.10	0.25	6	10.00	439.60	7.80	3.10
	32	60	445.20	0.25	7	8.57	440.70	7.31	2.00
	33	60	445.20	0.25	7	8.57	441.80	7.31	2.00
B-9	36	100	430.75	0.25	10	10.00	424.25	30.08	16.45
C-1	2	60	425.30	0.31	7	8.57	421.40	12.81	2.50
	3	60	425.30	0.31	7	8.57	420.90	12.81	2.50
	4	60	425.30	0.31	7	8.57	420.30	12.81	2.50
	5	60	425.30	0.31	7	8.57	419.80	12.81	2.50
	1	60	425.30	0.375	7	8.57	421.80	8.17	2.50
	24	60	425.30	0.375	7	8.57	421.70	8.17	2.50
C-2	10	35	424.30	0.31	5	7.00	420.20	10.79	3.50
	11	35	424.30	0.31	5	7.00	419.90	10.79	3.50
	12	35	424.30	0.31	5	7.00	419.80	10.79	3.50
	13	35	424.30	0.31	5	7.00	419.40	10.79	3.50
	14	35	424.30	0.31	5	7.00	419.40	10.79	3.50
	15	35	424.30	0.31	5	7.00	418.80	10.79	3.50
	8	35	424.30	0.4375	5	7.00	420.60	21.22	3.50
	9	35	424.30	0.4375	5	7.00	420.50	21.22	3.50
C-3	18	100	425.80	0.31	10	10.00	423.80	16.56	2.00
	19	100	425.80	0.31	10	10.00	423.70	16.56	2.00
	20	50	425.80	0.31	5	10.00	423.20	8.16	2.00
	21	50	425.80	0.31	5	10.00	422.80	8.16	2.00
	22	50	425.50	0.31	5	10.00	422.90	8.75	2.30
C-4	28	50	424.60	0.50	8	6.25	420.10	39.95	2.70
	29	50	424.60	0.50	8	6.25	420.80	39.95	2.70

NOTE: CONTRACTOR TO INSTALL 200% OF DISPOSAL FIELDS PER HOWARD COUNTY REQUIREMENT. TRENCHES 5 (A-1), 12 (A-2), 17 (A-3), 21 (A-4), 2 (B-1), 5 (B-2), 7 (B-3), 12 (B-4), 17 (B-5), 23 (B-6), 29 (B-7), 1 (C-1), 24 (C-1), 8 (C-2), 9 (C-2), 29 (C-4) SHALL BE INSTALLED PER THIS REQUIREMENT BUT NOT OPERATED INITIALLY.

PUMP STATION DESIGN NOTES

Peddicord pump station design
Design for influx

S No	Specification	Values	Units
I.	**AVERAGE DAILY FLOWS (ADD)**		
a	Total Flow	8,250	GPD
b	Unit Conversion	5.73	GPM
II.	**PEAK HOURLY FLOW**		
	Multiply average flow by peak factor of 4 if Avg. Flow less than 0.25MGPD (according to state design regulations)		
a	Number of times pump will come into opertation everyday	4.00	times
b	Pump cycle time (duration of time pump will be in operation)	8.30	mins
c	Pump Flow rate (IIc=Ia/(IIaxIIb))	248	GPM
	USE	250	GPM
III.	**SIZE WET WELL**		
a	Pump Cycle time (IIIa = IIb)	8.30	Min
b	Wet well capacity (IIIb = Ia / IIa)	2062.5	Gal
c	Unit Conversion (Gal to CuFt)	276	CuFt
d	Picking a wet well diameter	12	ft
e	Volume per foot depth of wet well (IIIe = Pi() x IIId^2/4 x 1 ft depth)	113	CuFt/VF
f	Unit Conversion (CuFt/Ft to Gal/Ft)	846	GAL/VF
g	Thus the operating depth required is (IIIg = IIIe / IIIc)	2.44	VF
i	Including safety factor and rounding up the Operating depth	2.5	VF
j	Unit Conversion (Feet to Inches)	30.00	IN
IV.	**FLOAT SETTINGS**		
a	Invert of incoming gravity sewer at pump station	425.75	FT
b	Alarm on control float elevation	420.75	FT
c	Lag pump on control float elevation	420.25	FT
d	Lead pump on control float elevation	419.75	FT
e	Lead pump shut off float elevation	417.25	FT
f	Bottom elevation of the wet well	415.75	FT
VI.	**DETERMINE MANHOLE DEPTH**		
a	Ground Elevation	427.00	FT
b	Bottom elevation of Wet well (Vb = Vg)	415.8	FT
c	Station Depth (Vc = Va - Vb)	11.3	FT
VII.	**SIZE FORCE MAIN**		
	State regulations states that the flow inside the force main should be higher than 2 cubic feet per second to avoid solid deposion inside the pipe.		
	Flow rate is designed to be less than 7 cubic feet per second to refrain pipe from scouring, friction loss etc.		
a	Picking a diameter size for force main	6	Inch
b	Designed pump flow rate (VIIb = IId)	250	GPM
c	Unit Conversion (GPM to CFPS)	0.56	CFPS
d	Crosssectional area of the pipe (VIId = Pi x (VIIa/2)^2)	28.27	Sq Inch
e	Unit Conversion (Sq Inch to Sq Ft)	0.20	Sq Ft
f	Wasterwater throughput rate inside the pipe (VIIf = VIIc/VIIe)	2.84	FPS
g	Check => Wastewater throughput rate inside the pipe is less than 7 cubic feet per second	OK	
h	Check => Wastewater throughput rate inside the pipe is greater than 2 cubic feet per second	OK	

FUTURE TRENCHES (100%)

FIELD	TRENCH NUMBER	LATERAL LENGTH, ft	INVERT ELEVATION, ft	HOLE DIAMETER, in	NUMBER OF HOLES	HOLE SPACING, ft	TRENCH BOTTOM, ft	FLOW RATE PER LATERAL, gpm	DISCHARGE HEAD PER LATERAL, ft
A-1	1	55	429.00	0.25	6	9.17	423.00	22.31	25.40
	2	55	429.00	0.25	6	9.17	424.90	22.31	25.40
	3	55	432.50	0.25	6	9.17	426.80	20.72	21.90
	4	55	432.50	0.25	6	9.17	428.20	20.72	21.90
	5	55	435.30	0.25					
A-2	9	80	433.70	0.25	8	10.00	428.70	26.91	20.70
	10	80	433.70	0.25	8	10.00	429.70	26.91	20.70
	11	80	435.90	0.25	8	10.00	431.00	25.44	18.50
	12	80	435.90	0.25					
A-3	15	80	440.50	0.25	8	10.00	437.00	22.05	13.90
	16	80	440.50	0.25	8	10.00	438.50	22.05	13.90
A-4	22	80	449.20	0.25	8	10.00	445.40	13.49	5.20
	23	80	449.20	0.25	8	10.00	446.60	13.49	5.20
	24	80	452.40	0.25	12	6.67	447.40	12.61	2.00
B-1	1	65	426.50	0.25	7	9.29	421.50	23.52	20.70
B-2	4	40	428.00	0.25	4	10.00	424.50	12.92	19.20
B-3	8	50	429.80	0.25	5	10.00	424.60	15.38	17.40
	9	50	432.40	0.25	5	10.00	425.40	14.19	14.80
B-4	13	30	430.50	0.25	3	10.00	425.50	9.04	16.70
	14	30	430.50	0.25	3	10.00	426.00	9.04	16.70
	34	30	430.50	0.25	3	10.00	427.70	9.04	16.70
	35	30	430.50	0.25	3	10.00	427.50	9.04	16.70
B-5	15	40	429.50	0.25	4	10.00	424.50	12.41	17.70
	16	40	429.50	0.25	4	10.00	425.80	12.41	17.70
B-6	24	50	436.80	0.25	5	10.00	433.10	11.89	10.40
	25	50	436.80	0.25	5	10.00	433.90	11.89	10.40
	26	50	436.80	0.25	5	10.00	434.60	11.89	10.40
	27	50	439.80	0.25	6	8.33	435.30	12.04	7.40
	28	50	439.80	0.25	6	8.33	435.90	12.04	7.40
B-7	30	45	442.50	0.25	5	9.00	438.00	7.99	4.70
B-8	31	60	444.10	0.25	6	10.00	439.60	7.80	3.10
	32	60	445.20	0.25	7	8.57	440.70	7.31	2.00
	33	60	445.20	0.25	7	8.57	441.80	7.31	2.00
B-9	36	100	430.75	0.25	10	10.00	424.25	30.08	16.45
C-1	2	60	425.30	0.31	7	8.57	421.40	12.81	2.50
	3	60	425.30	0.31	7	8.57	420.90	12.81	2.50
	4	60	425.30	0.31	7	8.57	420.30	12.81	2.50
	5	60	425.30	0.31	7	8.57	419.80	12.81	2.50
C-2	10	35	424.30	0.31	5	7.00	420.20	10.79	3.50
	11	35	424.30	0.31	5	7.00	419.90	10.79	3.50
	12	35	424.30	0.31	5	7.00	419.80	10.79	3.50
	13	35	424.30	0.31	5	7.00	419.40	10.79	3.50
	14	35	424.30	0.31	5	7.00	419.40	10.79	3.50
	15	35	424.30	0.31	5	7.00	418.80	10.79	3.50
C-3	18	100	425.80	0.31	10	10.00	423.80	16.56	2.00
	19	100	425.80	0.31	10	10.00	423.70	16.56	2.00
	20	50	425.80	0.31	5	10.00	423.20	8.16	2.00
	21	50	425.80	0.31	5	10.00	422.80	8.16	2.00
	22	50	425.50	0.31	5	10.00	422.90	8.75	2.30
C-4	28	50	424.60	0.31	8	6.25	420.10	15.22	2.70

DRAIN FIELD SUMMARY

SUB FIELD	NO. OF TRENCHES	NO. OF TRENCHES PROVIDED INITIALLY	PERCENT PROVIDED INITIALLY	TOTAL PERCENT PROVIDED INITIALLY	PERCENT REMAINING	LENGTH (FT)	EFFECTIVE DEPTH (FT)	LENGTH NEEDED FOR 100% (FT)	LENGTH PROVIDED BY SUBFIELD (FT)	PERCENT PROVIDED BY SUBFIELD	TOTAL FOR FIELD
A-1	8	5	14.4	14.4		55	1	1909.72	440	23.0	23.0
A-2	6	4	19.5	33.9		80	1.5	1636.9	480	29.3	52.4
A-3	4	3	14.7	48.6		80	1.5	1636.9	320	19.5	71.9
A-4	6	4	19.5	**68.2**	33.1	80	1.5	1636.9	480	29.3	**101.2**
B-1	3	2	7.9	7.9		65	1.5	1636.9	195	11.9	11.9
B-2	2	2	4.9	12.8		40	1.5	1636.9	80	4.9	16.8
B-3	4	3	9.2	22.0		50	1.5	1636.9	200	12.2	29.0
B-4	7	5	9.2	31.2		30	1.5	1636.9	210	12.8	41.8
B-5	4	3	7.3	38.5		40	1.5	1636.9	160	9.8	51.6
B-6	10	6	13.1	51.6		50	0	2291.7	500	21.8	73.4
B-7	2	2	3.9	55.5		45	0	2291.7	90	3.9	77.4
B-8	3	3	7.9	63.4		60	0	2291.7	180	7.9	85.2
B-9	3	1	5.8	**69.2**	33.5	95	1.5	1636.9	285	17.4	**102.6**
C-1	7	6	22.0	22.0		60	1.5	1636.9	420	25.7	25.7
C-2	10	8	17.1	39.1		35	1.5	1636.9	350	21.4	47.0
C-3	11	7	18.3	57.4		50	1	1909.72	550	28.8	75.8
C-4	3	2	5.2	62.7		50	1	1909.72	150	7.9	83.7
C-5	3	0	0.0	**62.7**	39.4	100	1.5	1636.9	300	18.3	**102.0**

Note: All trenches have a 3 foot width.

APPROVED: FOR PRIVATE SHARED SEWERAGE SYSTEM FOR LOTS 1, 2, 3, 4, 5, 6, 15, 16, 17, 18, AND 19.
HOWARD COUNTY HEALTH DEPARTMENT

for Robert J. Walsh — 1/19/07
HOWARD COUNTY HEALTH OFFICER — DATE

HOWARD SOIL CONSERVATIONS DISTRICT:
REVEWED FOR HOWARD COUNTY SOIL CONSERVATION DISTRICT AND MEETS TECHNICAL REQUIREMENTS.

USDA NATURAL RESOURCES CONSERVATION SERVICE — DATE

THIS PLAN IS APPROVED FOR SOIL EROSION AND SEDIMENT CONTROL BY THE HOWARD SOIL CONSERVATION DISTRICT.

HOWARD SOIL CONSERVATION DISTRICT — DATE

SEDIMENT CONTROL MEASURES FOR THIS CONTRACT WILL BE IMPLEMENTED IN ACCORDANCE WITH SECTION 219 OF THE HOWARD COUNTY STANDARDS AND SPECIFICATIONS AND AS PER ROAD CONSTRUCTION PLANS PER F-06-39.

DEPARTMENT OF PUBLIC WORKS
HOWARD COUNTY, MARYLAND

1-25-07
CHIEF, BUREAU OF UTILITIES — DATE

DEPARTMENT OF PUBLIC WORKS
HOWARD COUNTY, MARYLAND

2/21/07
CHIEF, DEVELOPMENT ENGINEERING DIVISION — DATE

McCRONE
● Engineering ● Environmental Sciences
● Construction Services ● Land Planning & Surveying
ANNAPOLIS ● CENTREVILLE ● DOVER ● ELKTON ● SALISBURY
20 RIDGELY AVENUE
ANNAPOLIS, MARYLAND 21401
PHONE (410) 267-8621 * FAX (410) 267-8932
www.mccrone-inc.com
Copyright © 2004

STATE OF MARYLAND — PROFESSIONAL ENGINEER — 12/28/06

DES: B.T.D., N.V.S.	BY	No.	REVISION	DATE
DRN: B.T.D., N.V.S.				
CHK: R.J.R.				
DATE: DEC., 2006				

HYDRAULIC PROFILE/ DESIGN NOTES CONT'D

JOB No. C1040062

PEDDICORD SHARED SEPTIC SYSTEM

LOTS 1 - 19
CONTRACT # 50-4857 D
TAX MAP NO. 29 - GRID NO. 1 - PARCEL 268
ELECTION DISTRICT No. 5
HOWARD COUNTY, MARYLAND

SCALE AS SHOWN

PLOTTED: Dec 28, 2006 - 10:32am
CADD FILE: G:\1040062 - Peddicord Property\Drawings\SHARED SEPTIC DESIGN\DETAILS_REV03.dwg ------ Tab.......11 of 18

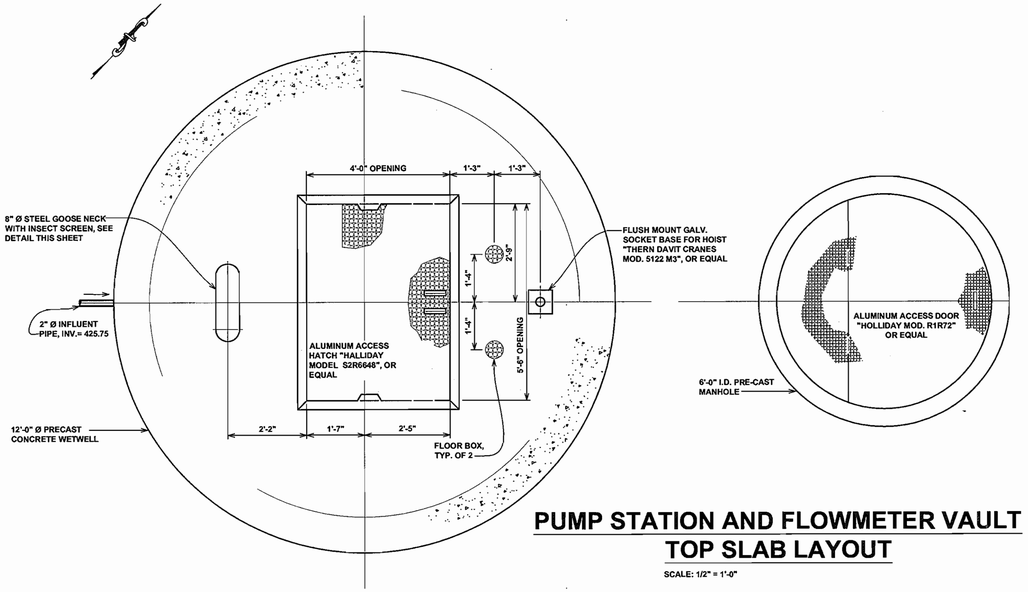

PUMP STATION AND FLOWMETER VAULT TOP SLAB LAYOUT

SCALE: 1/2" = 1'-0"

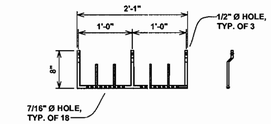

CABLE HOLDER DETAIL

SCALE: 3/4" = 1'-0"

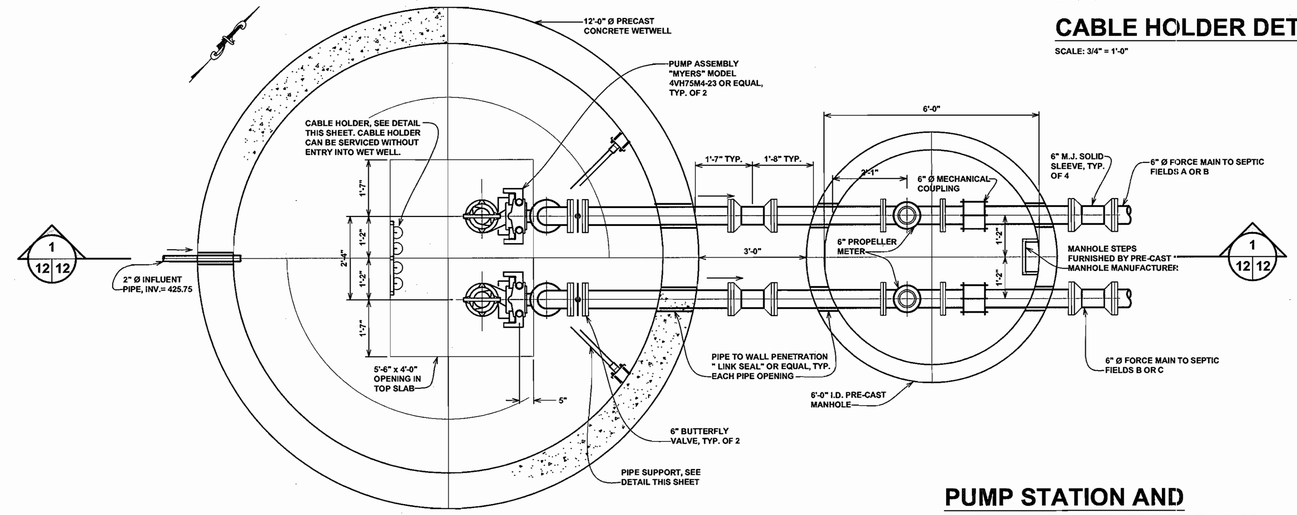

PUMP STATION AND FLOWMETER VAULT PLAN

SCALE: 1/2" = 1'-0"

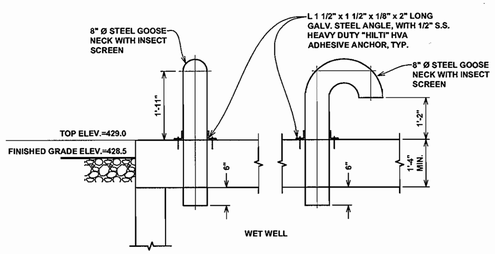

AIR INTAKE DETAIL

NOT TO SCALE

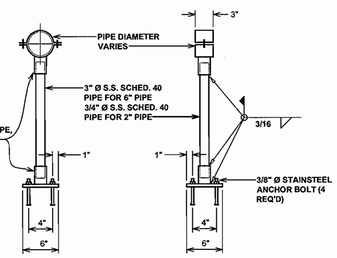

PIPE SUPPORT DETAIL

SCALE: 1" = 1'-0"

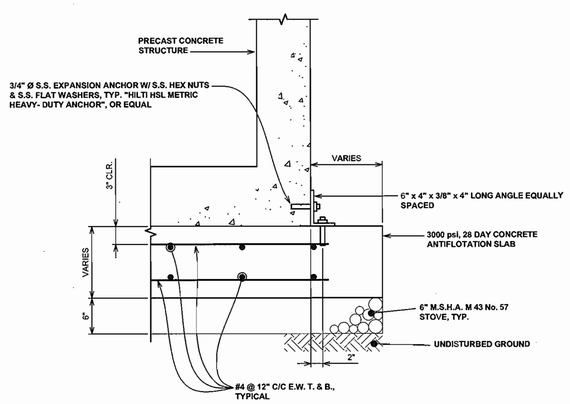

ANTIFLOATATION COLLAR DETAIL

SCALE: 1" = 1'-0"

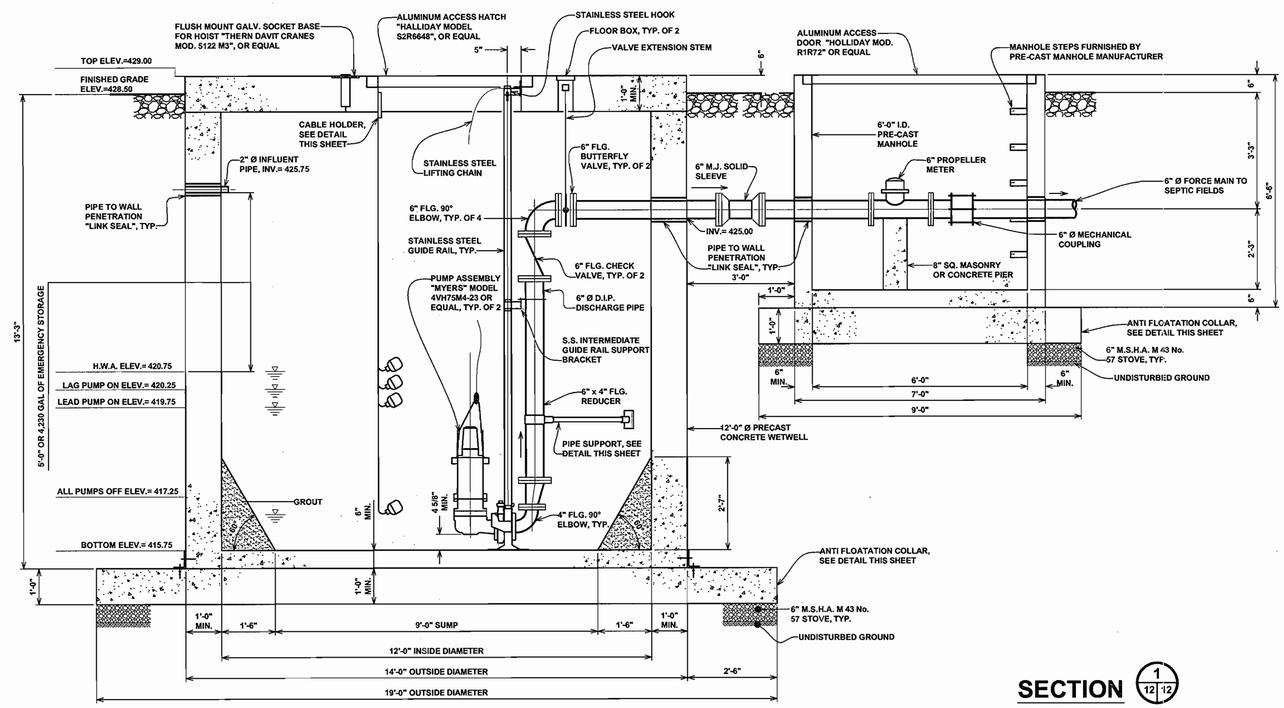

SECTION 1/12 12

SCALE: 1/2" = 1'-0"

APPROVED: FOR PRIVATE SHARED SEWERAGE SYSTEM FOR LOTS 1, 2, 3, 4, 5, 6, 15, 16, 17, 18, AND 19.
HOWARD COUNTY HEALTH DEPARTMENT

for Robert A. Weber — 1/19/07
HOWARD COUNTY HEALTH OFFICER — DATE

HOWARD SOIL CONSERVATIONS DISTRICT:
REVEWED FOR HOWARD COUNTY SOIL CONSERVATION DISTRICT AND MEETS TECHNICAL REQUIREMENTS.

USDA NATURAL RESOURCES CONSERVATION SERVICE — DATE

THIS PLAN IS APPROVED FOR SOIL EROSION AND SEDIMENT CONTROL BY THE HOWARD SOIL CONSERVATION DISTRICT.

HOWARD SOIL CONSERVATION DISTRICT — DATE

SEDIMENT CONTROL MEASURES FOR THIS CONTRACT WILL BE IMPLEMENTED IN ACCORDANCE WITH SECTION 219 OF THE HOWARD COUNTY STANDARDS AND SPECIFICATIONS AND AS PER ROAD CONSTRUCTION PLANS PER F-~~06-99~~.

DEPARTMENT OF PUBLIC WORKS
HOWARD COUNTY, MARYLAND

1-25-07
CHIEF, BUREAU OF UTILITIES — DATE

DEPARTMENT OF PUBLIC WORKS
HOWARD COUNTY, MARYLAND

2/20/07
CHIEF, DEVELOPMENT ENGINEERING DIVISION — DATE

McCRONE
Engineering • Environmental Sciences
Construction Services • Land Planning & Surveying
ANNAPOLIS • CENTREVILLE • DOVER • ELKTON • SALISBURY
20 RIDGELY AVENUE
ANNAPOLIS, MARYLAND 21401
PHONE (410) 267-8821 * FAX (410) 267-9932
www.mccrone-inc.com
Copyright © 2004

STATE OF MARYLAND — REGISTERED PROFESSIONAL ENGINEER — R. J. RIGGS — No. 28360

12/20/06

DES: B.T.D., N.V.S.
DRN: B.T.D., N.V.S.
CHK: R.J.R.
DATE: DEC., 2006

BY	No.	REVISION	DATE

PUMP STATION AND DETAILS

JOB No. C1040062

PEDDICORD SHARED SEPTIC SYSTEM

LOTS 1 - 19
CONTRACT # ~~50-~~ 4367-D
TAX MAP NO. 29 - GRID NO. 1 - PARCEL 268
ELECTION DISTRICT No. 5
HOWARD COUNTY, MARYLAND

SCALE AS SHOWN

SHEET 12 OF 18

PLOTTED: Dec 28 , 2006 – 10:36am

CADD FILE: G:\1040062 – Peddicord Property\Drawings\SHARED SEPTIC DESIGN\DETAILS_REV03.dwg ------- Tab.....12 of 18

SPECIFICATIONS:
1. CAST IRON-SLIDING TYPE MIN. T.S. 30,000 PSI
2. TOP SECTION- 16" BOTTOM SECTION 18"
3. BOXES ADJUSTABLE 34" TO 46"
4. TOP SECTION- 16" BOTTOM SECTION 30" MIN. WT. PER BOX- 100 LBS

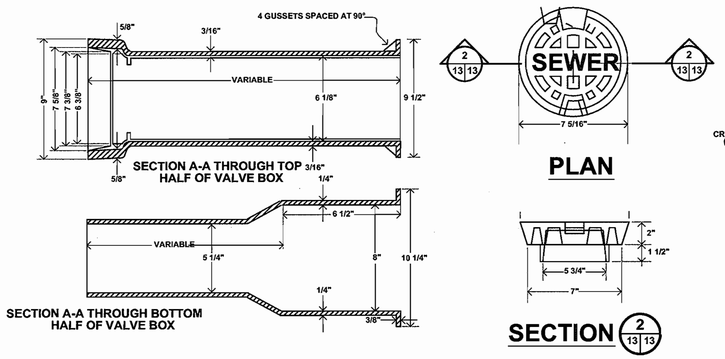

PLAN

SECTION 2/13

ADJUSTABLE VALVE BOX ROUND HEAD SLIDING TYPE

NOT TO SCALE

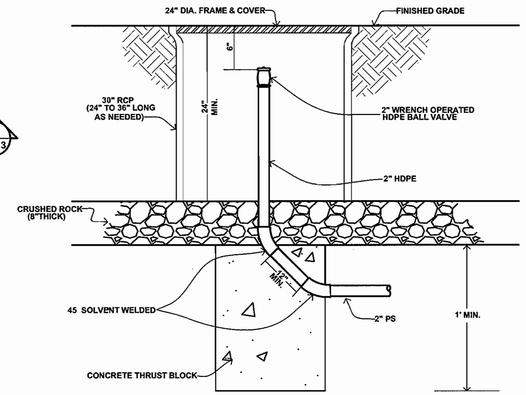

TERMINAL FLUSHING CONNECTION

NOT TO SCALE

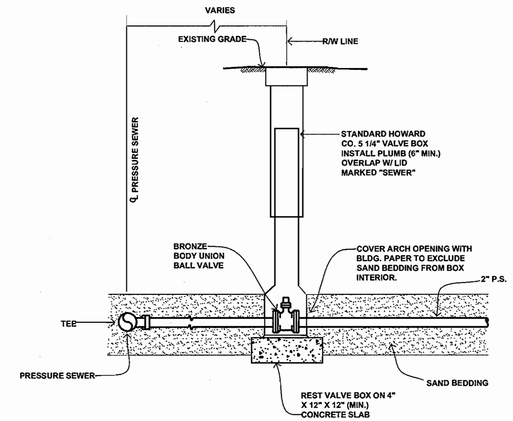

NOTES:
1. MAINTAIN 4' MIN. COVER OVER PRESSURE SEWER.
2. CONCRETE SLAB ON UNDISTURBED EARTH OR FIRM SUBGRADE.

UNION BALL VALVE ASSEMBLY

NOT TO SCALE

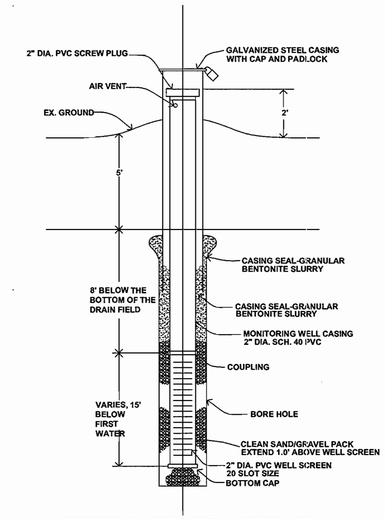

PIEZOMETER DETAIL

NOT TO SCALE

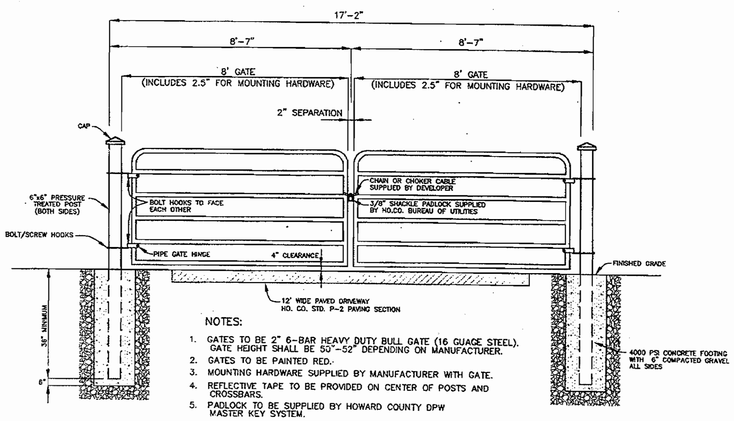

NOTES:
1. GATES TO BE 2" 6-BAR HEAVY DUTY BULL GATE (16 GUAGE STEEL). GATE HEIGHT SHALL BE 50"-52" DEPENDING ON MANUFACTURER.
2. GATES TO BE PAINTED RED.
3. MOUNTING HARDWARE SUPPLIED BY MANUFACTURER WITH GATE.
4. REFLECTIVE TAPE TO BE PROVIDED ON CENTER OF POSTS AND CROSSBARS.
5. PADLOCK TO BE SUPPLIED BY HOWARD COUNTY DPW MASTER KEY SYSTEM.

GATE DETAIL

NOT TO SCALE

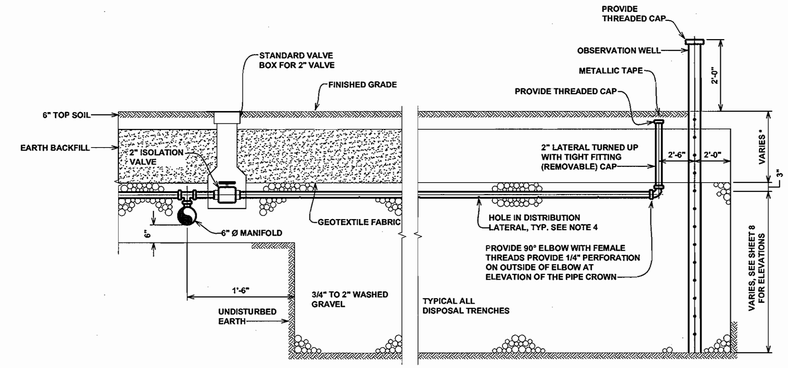

* SOIL COVER VARIES FOR EACH LATERAL WITH A MINIMUM COVER OF 2.0 FEET. THE CONTRACTOR SHALL EXCAVATE TRENCHES AS SPECIFIED IN LATERAL SIZING SUMMARY ON SHEET 8. HOWEVER THE CONTRACTOR MAY BE DIRECTED TO CHANGE THE DEPTH OF TRENCH DUE TO CAVITY MATERIALS AND INTERMITTENT RESTRICTIVE LAYERS.

TYPICAL LATERAL SECTION

SCALE: 1/2" = 1'

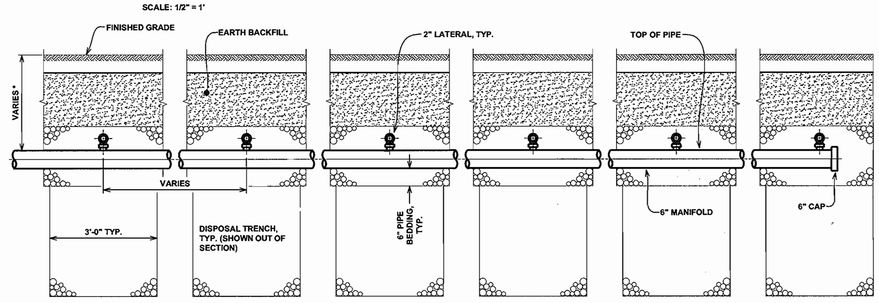

* SOIL COVER VARIES FOR EACH MANIFOLD WITH A MINIMUM COVER OF 3.0 FEET.

NOTES:

1. PROVIDE 2" THREADED CAPS AT ENDS OF ALL DISTRIBUTION LATERALS.
2. MANIFOLD PIPE AND DISTRIBUTION LATERALS TO BE INSTALLED ON LEVEL GRADE, ELEVATIONS PER LATERAL SIZING SUMMARY ON SHEET 11.
3. BOTTOM OF TRENCH TO BE EXCAVATED ON LEVEL GRADE.
4. CONTRACTOR TO DRILL HOLES IN DISTRIBUTION LATERALS DOWNWARD AS SPECIFIED IN LATERAL SIZING SUMMARY ON SHEET 11 EXCEPT FOR LAST HOLE AS NOTED ON TYPICAL LATERAL SECTION.
5. FOR TESTING THE CONTRACTOR TO PROVIDE FOUR THREADED CAP FITTINGS WITH A PRESSURE GAGE WHICH READS BETWEEN 0 AND 60 FEET.
6. THE CONTRACTOR TO INSTALL ISOLATION VALVE ON EACH LATERAL.

TYPICAL MANIFOLD SECTION

SCALE: 1/2" = 1'

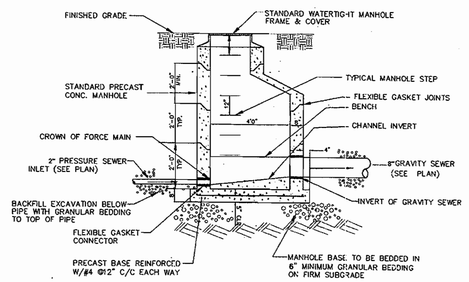

NOTES:
1. ELEVATION OF GRAVITY SEWER INVERT SHALL BE MINIMUM 0.1' ABOVE ELEVATION OF PRESSURE SEWER CROWN.
2. PROVIDE SMOOTH UPWARD SLOPING CHANNEL FROM FORCE MAIN TO GRAVITY SEWER.

TRANSITION MANHOLE: PRESSURE SEWER TO GRAVITY SEWER

NOT TO SCALE

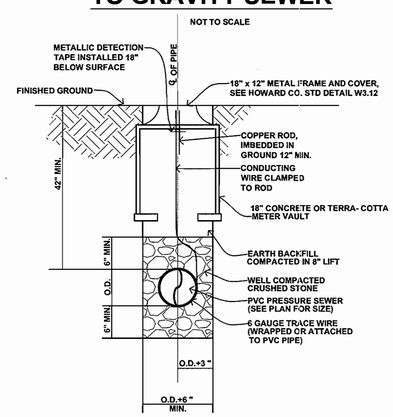

PRESSURE SEWER TRENCH, BEDDING & CONDUCTING ROD CABLE BOX LOCATION DETAIL

NOT TO SCALE

APPROVED: FOR PRIVATE SHARED SEWERAGE SYSTEM FOR LOTS 1, 2, 3, 4, 5, 6, 15, 16, 17, 18, AND 19.
HOWARD COUNTY HEALTH DEPARTMENT

for Robert J. Weber — 1/19/07
HOWARD COUNTY HEALTH OFFICER — DATE

HOWARD SOIL CONSERVATIONS DISTRICT:
REVEWED FOR HOWARD COUNTY SOIL CONSERVATION DISTRICT AND MEETS TECHNICAL REQUIREMENTS.

USDA NATURAL RESOURCES CONSERVATION SERVICE — DATE

THIS PLAN IS APPROVED FOR SOIL EROSION AND SEDIMENT CONTROL BY THE HOWARD SOIL CONSERVATION DISTRICT.

HOWARD SOIL CONSERVATION DISTRICT — DATE

SEDIMENT CONTROL MEASURES FOR THIS CONTRACT WILL BE IMPLEMENTED IN ACCORDANCE WITH SECTION 219 OF THE HOWARD COUNTY STANDARDS AND SPECIFICATIONS AND AS PER ROAD CONSTRUCTION PLANS PER F-06-95.

DEPARTMENT OF PUBLIC WORKS HOWARD COUNTY, MARYLAND	DEPARTMENT OF PUBLIC WORKS HOWARD COUNTY, MARYLAND	McCRONE		DES: B.T.D., N.V.S.					DETAILS	PEDDICORD SHARED SEPTIC SYSTEM	SCALE AS SHOWN
Robert W. Bain 1-25-07	2/6/07	Engineering · Environmental Sciences · Construction Services · Land Planning & Surveying · ANNAPOLIS • CENTREVILLE • DOVER • ELKTON • SALISBURY	STATE OF MARYLAND ROBERT J. BAUER No. 32313 PROFESSIONAL ENGINEER	DRN: B.T.D., N.V.S.						LOTS 1 - 19 CONTRACT # 60-6857 D TAX MAP NO. 29 - GRID NO. 1 - PARCEL 268 ELECTION DISTRICT No. 5 HOWARD COUNTY, MARYLAND	SHEET 13 OF 18
CHIEF, BUREAU OF UTILITIES — DATE	CHIEF, DEVELOPMENT ENGINEERING DIVISION — DATE	20 RIDGELY AVENUE ANNAPOLIS, MARYLAND 21401 PHONE (410) 267-0021 • FAX (410) 267-0932 www.mccrone-inc.com Copyright © 2004	12/28/06	CHK: R.J.R.							
				DATE: DEC., 2006	BY	No.	REVISION	DATE	JOB No. C1040062		

PLOTTED: Dec 28, 2006 — 11:12am

CADD FILE: G:\1040062 — Peddicord Property\Drawings\SHARED SEPTIC DESIGN\DETAILS_REV03.dwg

Tab.....13 of 18

NOTES:

SOLIDS RETENTION COMPARTMENT:
LENGTH = 4'-8",
WIDTH = 6'-8"

AERATION COMPARTMENT:
LENGTH = 23'-9",
WIDTH = 6'-8"

CLARIFIER COMPARTMENT:
LENGTH = 8'-11"
WIDTH = 6'-8"

TOTAL VOLUME IN SOLIDS RETENTION AND AERATION COMPARTMENTS = 7,000 GALLONS

VOLUME IN CLARIFIER COMPARTMENT = 2,186 GALLONS

AVERAGE FLOW = 4,125 GPD

SOLIDS RETENTION AND AERATION COMPARTMENTS DETENTION TIME:

$= \frac{7{,}000 \text{ GALLONS} \times 24 \text{ HRS}}{4{,}125 \text{ GPD}}$

= 40.7 HRS

CLARIFIER COMPARTMENT DETENTION TIME:

$= \frac{2{,}186 \text{ GALLONS} \times 24 \text{ HRS}}{4{,}125 \text{ GPD}}$

= 12.7 HRS

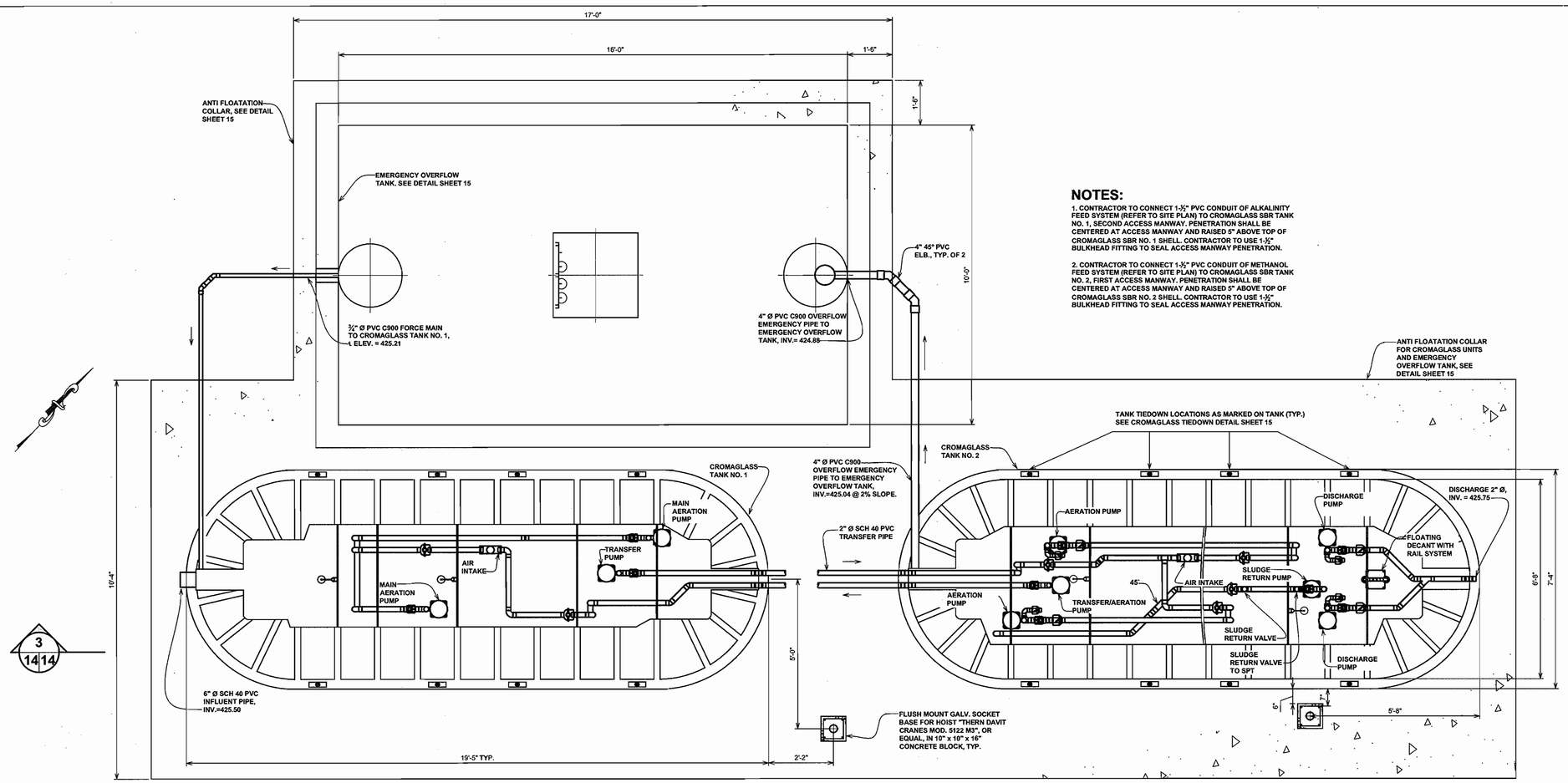

NOTES:

1. CONTRACTOR TO CONNECT 1-½" PVC CONDUIT OF ALKALINITY FEED SYSTEM (REFER TO SITE PLAN) TO CROMAGLASS SBR TANK NO. 1, SECOND ACCESS MANWAY. PENETRATION SHALL BE CENTERED AT ACCESS MANWAY AND RAISED 5" ABOVE TOP OF CROMAGLASS SBR NO. 1 SHELL. CONTRACTOR TO USE 1-½" BULKHEAD FITTING TO SEAL ACCESS MANWAY PENETRATION.

2. CONTRACTOR TO CONNECT 1-½" PVC CONDUIT OF METHANOL FEED SYSTEM (REFER TO SITE PLAN) TO CROMAGLASS SBR TANK NO. 2, FIRST ACCESS MANWAY. PENETRATION SHALL BE CENTERED AT ACCESS MANWAY AND RAISED 5" ABOVE TOP OF CROMAGLASS SBR NO. 2 SHELL. CONTRACTOR TO USE 1-½" BULKHEAD FITTING TO SEAL ACCESS MANWAY PENETRATION.

CROMAGLASS TANK NUMBER 1 AND 2 MODEL CA-100D PLAN

NOT TO SCALE

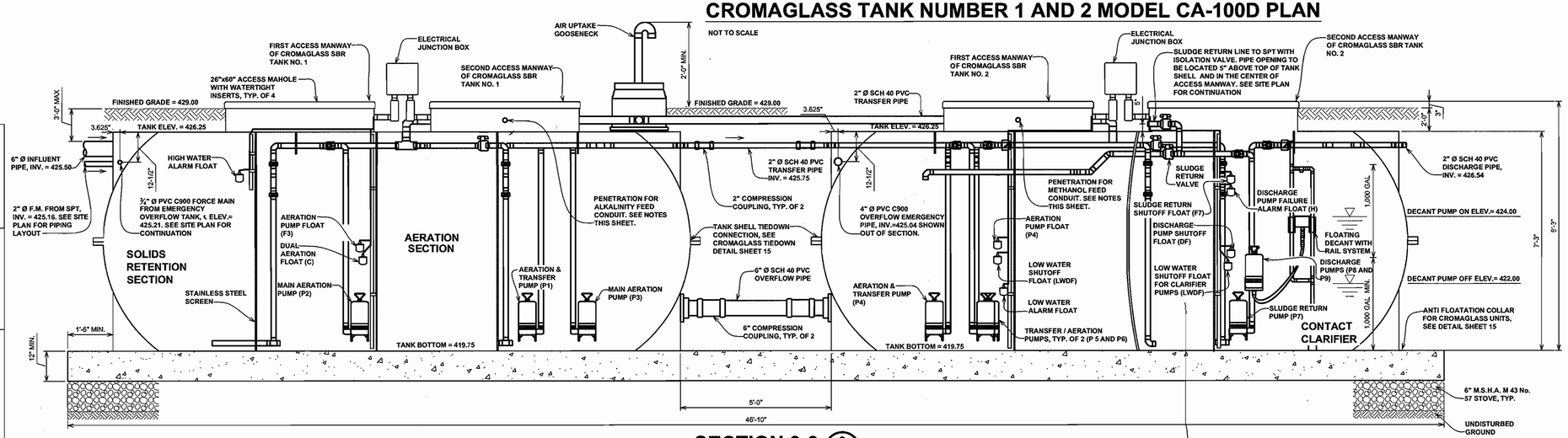

SECTION 3-3 (3 / 14 14)

NOT TO SCALE

APPROVED: FOR PRIVATE SHARED SEWERAGE SYSTEM FOR LOTS 1, 2, 3, 4, 5, 6, 15, 16, 17, 18, AND 19.
HOWARD COUNTY HEALTH DEPARTMENT

HOWARD COUNTY HEALTH OFFICER — DATE 1/9/07

HOWARD SOIL CONSERVATIONS DISTRICT:
REVIEWED FOR HOWARD COUNTY SOIL CONSERVATION DISTRICT AND MEETS TECHNICAL REQUIREMENTS.

USDA NATURAL RESOURCES CONSERVATION SERVICE — DATE

THIS PLAN IS APPROVED FOR SOIL EROSION AND SEDIMENT CONTROL BY THE HOWARD SOIL CONSERVATION DISTRICT.

HOWARD SOIL CONSERVATION DISTRICT — DATE

SEDIMENT CONTROL MEASURES FOR THIS CONTRACT WILL BE IMPLEMENTED IN ACCORDANCE WITH SECTION 219 OF THE HOWARD COUNTY STANDARDS AND SPECIFICATIONS AND AS PER ROAD CONSTRUCTION PLANS PER F-06-99.

DEPARTMENT OF PUBLIC WORKS
HOWARD COUNTY, MARYLAND
CHIEF, BUREAU OF UTILITIES — DATE 1-25-07

DEPARTMENT OF PUBLIC WORKS
HOWARD COUNTY, MARYLAND
CHIEF, DEVELOPMENT ENGINEERING DIVISION — DATE 2/07/07

McCRONE
Engineering • Environmental Sciences
Construction Services • Land Planning & Surveying
ANNAPOLIS • CENTREVILLE • DOVER • ELKTON • SALISBURY
20 RIDGELY AVENUE
ANNAPOLIS, MARYLAND 21401
PHONE (410) 267-0021 * FAX (410) 267-0032
www.mccrone-inc.com

Copyright © 2004

STATE OF MARYLAND — REGISTERED PROFESSIONAL ENGINEER — No. 23818 — 12/28/06

DES: B.T.D., N.V.S.			
DRN: B.T.D., N.V.S.			
CHK: R.J.R.			
DATE: DEC., 2006	BY	No.	REVISION

DATE

CROMAGLASS TREATMENT UNIT

JOB No. C1040062

PEDDICORD SHARED SEPTIC SYSTEM

LOTS 1 - 19
CONTRACT # 150-4357-D
TAX MAP NO. 29 - GRID NO. 1 - PARCEL 268
ELECTION DISTRICT No. 5
HOWARD COUNTY, MARYLAND

SCALE AS SHOWN

SHEET 14 OF 18

CADD FILE: G:\1040062 – Peddicord Property\Drawings\SHARED SEPTIC DESIGN\DETAILS_REV03.dwg

PLOTTED: Dec 28, 2006 – 11:14am

Tab.....14 of 18

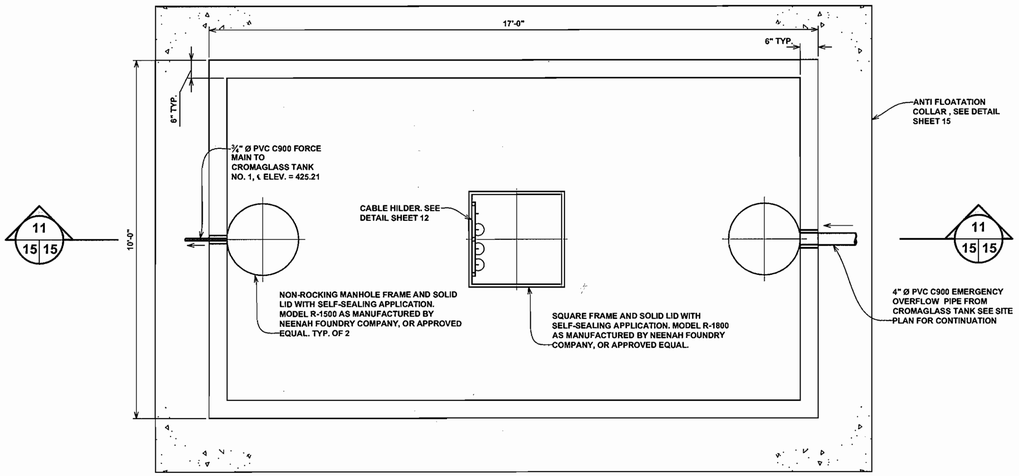

EMERGENCY OVERFLOW TANK (EOT) PLAN

SCALE: 1/2" = 1'-0"

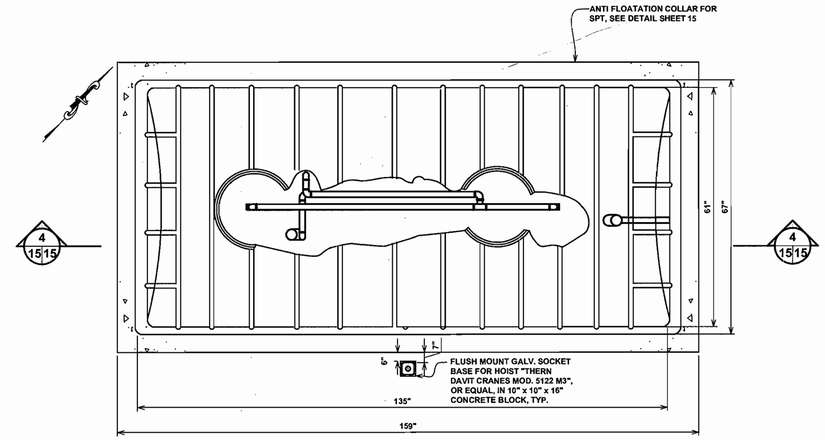

1,300 GALLON SLUDGE PROCESSING TANK PLAN

NOT TO SCALE

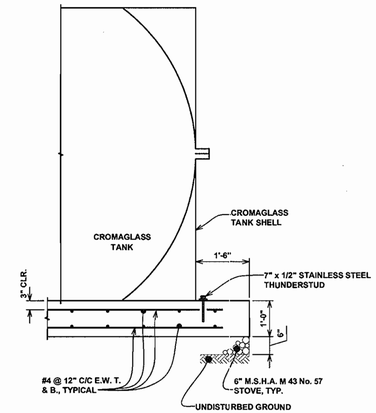

NOTE:
1. SLAB SHALL BE LEVEL TO WITHIN ±¼" FROM SIDE AND END TO END;
2. SLAB SHALL BE FINISHED WITH BULLFLOAT HAVING NO SIGNIFICANT RIDGES OR DEPRESSIONS;
3. SLAB SHALL BE CONSTRUCTED OF MINIMUM 3,000 PSI TEST CONCRETE;
4. CURE TIME SHALL BE MINIMUM 7 DAYS PRIOR TO INSTALLATION OF THE CROMAGLASS TANKS;
5. SLAB SHALL BE SEWPT CLEAN OF ALL DEBRIS IMMEDIATELY PRIOR TO TANK PLACEMENT.

CROMAGLASS ANTI FLOATATION COLLAR

NOT TO SCALE

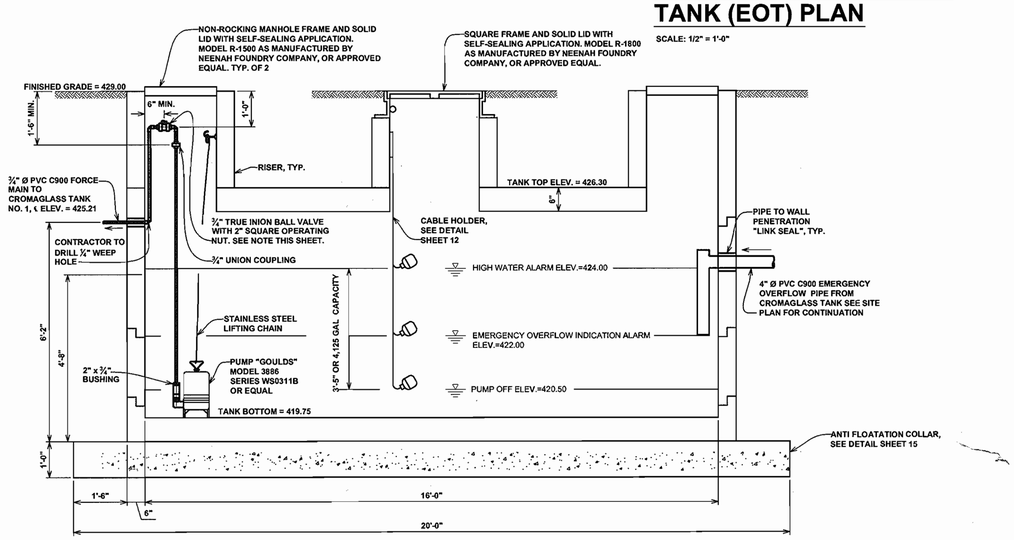

SECTION 11 / 15 15

SCALE: 1/2" = 1'-0"

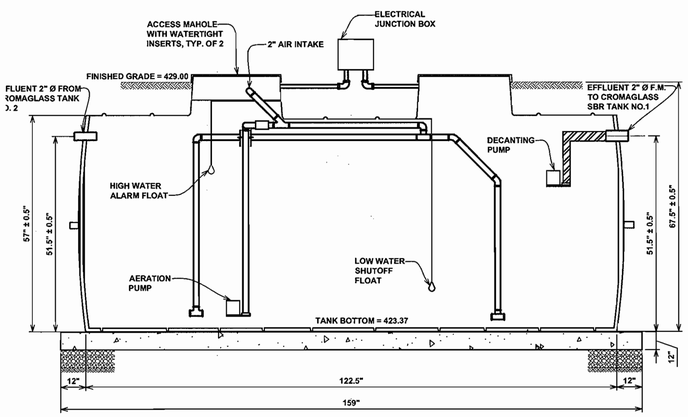

SECTION 4 / 15 15

NOT TO SCALE

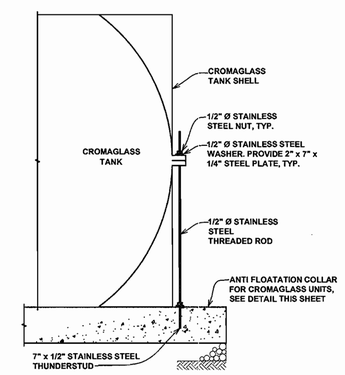

CROMAGLASS TIEDOWN DETAIL

NOT TO SCALE

APPROVED: FOR PRIVATE SHARED SEWERAGE SYSTEM FOR LOTS 1, 2, 3, 4, 5, 6, 15, 16, 17, 18, AND 19.
HOWARD COUNTY HEALTH DEPARTMENT

for HOWARD COUNTY HEALTH OFFICER — DATE 1/19/07

HOWARD SOIL CONSERVATIONS DISTRICT:
REVEWED FOR HOWARD COUNTY SOIL CONSERVATION DISTRICT AND MEETS TECHNICAL REQUIREMENTS.

USDA NATURAL RESOURCES CONSERVATION SERVICE — DATE

THIS PLAN IS APPROVED FOR SOIL EROSION AND SEDIMENT CONTROL BY THE HOWARD SOIL CONSERVATION DISTRICT.

HOWARD SOIL CONSERVATION DISTRICT — DATE

SEDIMENT CONTROL MEASURES FOR THIS CONTRACT WILL BE IMPLEMENTED IN ACCORDANCE WITH SECTION 219 OF THE HOWARD COUNTY STANDARDS AND SPECIFICATIONS AND AS PER ROAD CONSTRUCTION PLANS PER F-06-38.

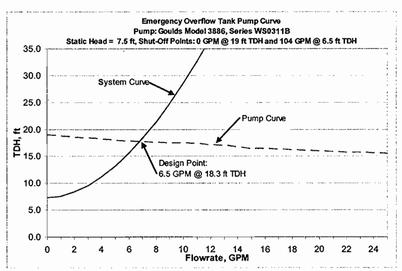

EOT PUMP CURVE, C=130

DEPARTMENT OF PUBLIC WORKS
HOWARD COUNTY, MARYLAND
CHIEF, BUREAU OF UTILITIES — DATE 1-25-07

DEPARTMENT OF PUBLIC WORKS
HOWARD COUNTY, MARYLAND
CHIEF, DEVELOPMENT ENGINEERING DIVISION — DATE 2/20/07

McCRONE
Engineering • Environmental Sciences • Construction Services • Land Planning & Surveying
ANNAPOLIS • CENTREVILLE • DOVER • ELKTON • SALISBURY
20 RIDGELY AVENUE ANNAPOLIS, MARYLAND 21401
PHONE (410) 267-8021 * FAX (410) 267-0032
www.mccrone-inc.com
Copyright © 2004

STATE OF MARYLAND — PROFESSIONAL ENGINEER — 12/28/06

DES: B.T.D., N.V.S.				
DRN: B.T.D., N.V.S.				
CHK: R.J.R.				
DATE: DEC., 2006	BY	No.	REVISION	DATE

CROMAGLASS TREATMENT UNIT AND DETAILS

JOB No. C1040062

PEDDICORD SHARED SEPTIC SYSTEM

LOTS 1 - 19
CONTRACT # 50-4367D
TAX MAP NO. 29 - GRID NO. 1 - PARCEL 268
ELECTION DISTRICT No. 5
HOWARD COUNTY, MARYLAND

SCALE AS SHOWN

SHEET 15 OF 18

CADD FILE: G:\1040062 – Peddicord Property\Drawings\SHARED SEPTIC DESIGN\DETAILS_REV03.dwg ------- Tab.....15 of 18

PLOTTED: Dec 28 , 2006 – 11:34am

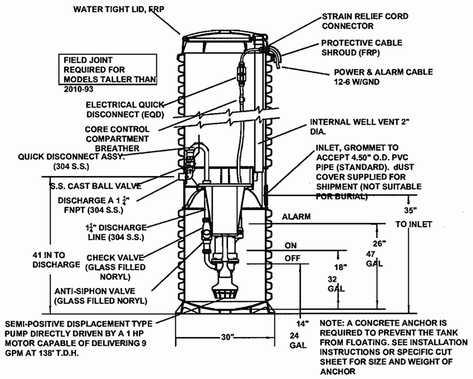

SIMPLEX ENVIRONMENT ONE GRINDER PUMP

NOT TO SCALE

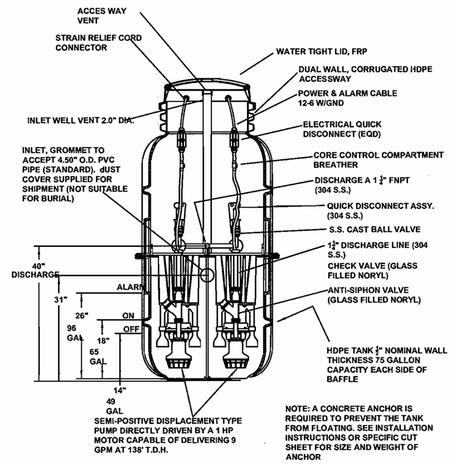

DUPLEX ENVIRONMENT ONE GRINDER PUMP

NOT TO SCALE

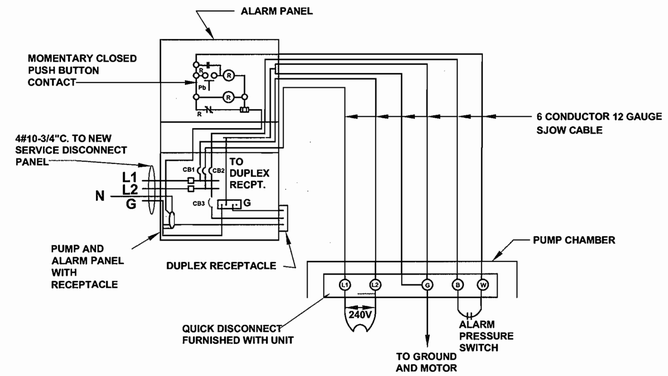

SEWAGE GRINDER PUMP WIRING DIAGRAM (240 v) TYPICAL EACH PUMP UNIT

NOT TO SCALE

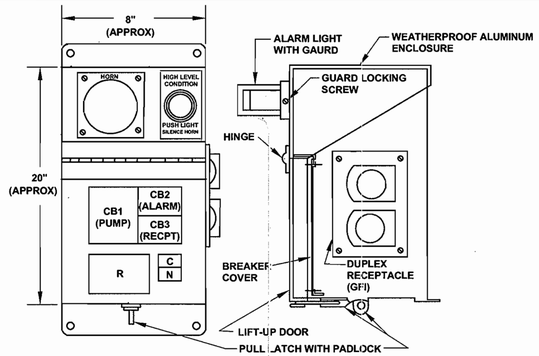

GRINDER PUMP CONTROL & ALARM PANEL

NOT TO SCALE

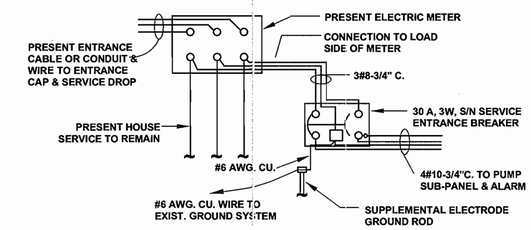

NOTE:
30A BREAKER TO BE EQUIPPED WITH A NON-CASE HARDENED PADLOCK THAT CAN BE CUT WITH "BOLT CUTTERS".

NEW SERVICE ENTRANCE WIRING DIAGRAM

NOT TO SCALE

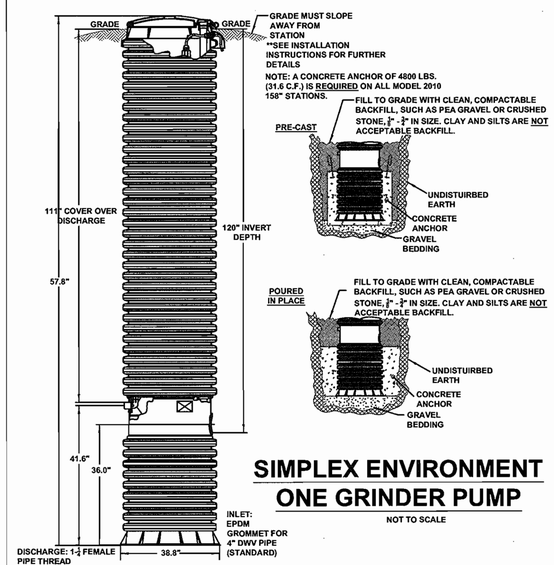

SIMPLEX ENVIRONMENT ONE GRINDER PUMP

NOT TO SCALE

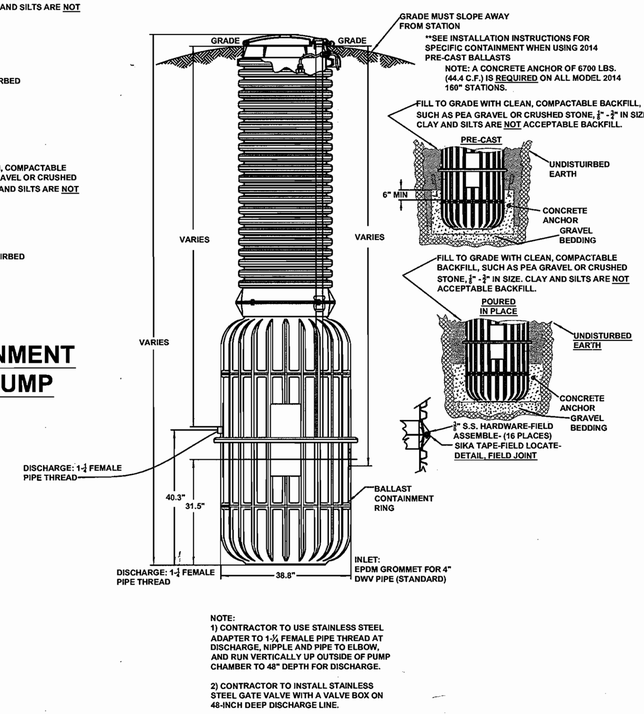

NOTE:
1) CONTRACTOR TO USE STAINLESS STEEL ADAPTER TO 1-1/4 FEMALE PIPE THREAD AT DISCHARGE, NIPPLE AND PIPE TO ELBOW, AND RUN VERTICALLY UP OUTSIDE OF PUMP CHAMBER TO 48" DEPTH FOR DISCHARGE.

2) CONTRACTOR TO INSTALL STAINLESS STEEL GATE VALVE WITH A VALVE BOX ON 48-INCH DEEP DISCHARGE LINE.

DUPLEX ENVIRONMENT ONE GRINDER PUMP

NOT TO SCALE

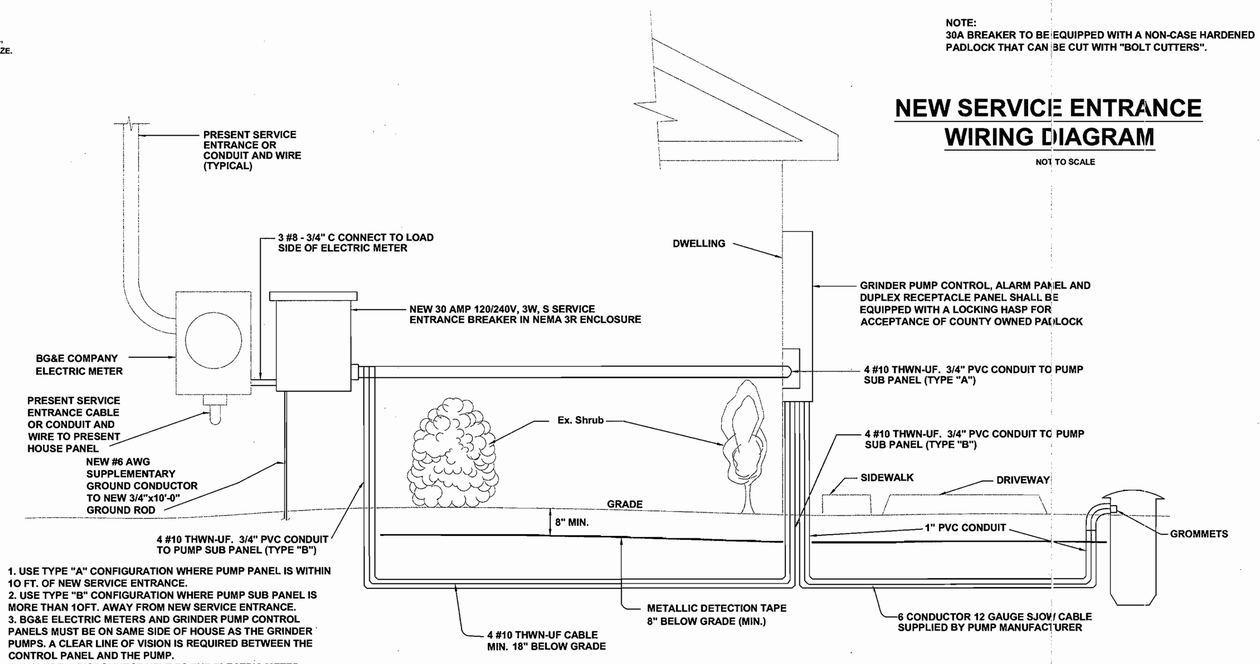

1. USE TYPE "A" CONFIGURATION WHERE PUMP PANEL IS WITHIN 10 FT. OF NEW SERVICE ENTRANCE.
2. USE TYPE "B" CONFIGURATION WHERE PUMP SUB PANEL IS MORE THAN 10FT. AWAY FROM NEW SERVICE ENTRANCE.
3. BG&E ELECTRIC METERS AND GRINDER PUMP CONTROL PANELS MUST BE ON SAME SIDE OF HOUSE AS THE GRINDER PUMPS. A CLEAR LINE OF VISION IS REQUIRED BETWEEN THE CONTROL PANEL AND THE PUMP.
4. INCLUDE A DISCONNECT NEXT TO THE ELECTRIC METER, BETWEEN THE METER AND CONTROL PANEL.
5. CONNECTIONS TO ELECTRIC METER SHALL BE COORDINATED WITH POWER COMPANY.
6. PROVIDE LOCKING HASP ON SERVICE BREAKER FOR ACCEPTANCE OF COUNTY OWNED LOCK.
7. CONTROL PANEL MUST BE DIRECT WIRED FROM ELECTRCIAL SERVICE BOX (BGE's).
8. PROVIDE SEALING BOX 6" BELOW CONTROL PANEL ON HOUSE IN LINE WITH CONDUIT; SEAL WITH CHICO WATERTIGHT SEALANT TO CREATE VAPOR LOCK.

TYPICAL GRINDER PUMP ELECTRIC POWER

NOT TO SCALE

APPROVED: FOR PRIVATE SHARED SEWERAGE SYSTEM FOR LOTS 1, 2, 3, 4, 5, 6, 15, 16, 17, 18, AND 19.
HOWARD COUNTY HEALTH DEPARTMENT

for HOWARD COUNTY HEALTH OFFICER — DATE 1/19/07

HOWARD SOIL CONSERVATIONS DISTRICT:
REVEWED FOR HOWARD COUNTY SOIL CONSERVATION DISTRICT AND MEETS TECHNICAL REQUIREMENTS.

USDA NATURAL RESOURCES CONSERVATION SERVICE — DATE

THIS PLAN IS APPROVED FOR SOIL EROSION AND SEDIMENT CONTROL BY THE HOWARD SOIL CONSERVATION DISTRICT.

HOWARD SOIL CONSERVATION DISTRICT — DATE

SEDIMENT CONTROL MEASURES FOR THIS CONTRACT WILL BE IMPLEMENTED IN ACCORDANCE WITH SECTION 219 OF THE HOWARD COUNTY STANDARDS AND SPECIFICATIONS AND AS PER ROAD CONSTRUCTION PLANS PER F-06-98.

DEPARTMENT OF PUBLIC WORKS
HOWARD COUNTY, MARYLAND

CHIEF, BUREAU OF UTILITIES — DATE 1-25-07

DEPARTMENT OF PUBLIC WORKS
HOWARD COUNTY, MARYLAND

CHIEF, DEVELOPMENT ENGINEERING DIVISION — DATE 1/19/07

McCRONE
Engineering • Environmental Sciences • Construction Services • Land Planning & Surveying
ANNAPOLIS • CENTREVILLE • DOVER • ELKTON • SALISBURY
20 ROGELY AVENUE ANNAPOLIS, MARYLAND 21401
PHONE (410) 267-8821 • FAX (410) 267-9932
www.mccrone-inc.com
Copyright © 2004

STATE OF MARYLAND — RICHARD J. WALTER — No. 10728 — PROFESSIONAL ENGINEER — 12/28/06

DES: B.T.D., N.V.S.
DRN: B.T.D., N.V.S.
CHK: R.J.R.
DATE: DEC., 2006

BY	No.	REVISION	DATE

E-ONE GRINDER PUMPS DETAIL

JOB No. C1040062

PEDDICORD SHARED SEPTIC SYSTEM

LOTS 1 - 19
CONTRACT # 15-4-3527D
TAX MAP NO. 29 - GRID NO. 1 - PARCEL 268
ELECTION DISTRICT No. 5
HOWARD COUNTY, MARYLAND

SCALE AS SHOWN

SHEET 16 OF 18

CADD FILE: G:\1040062 – Peddicord Property\Drawings\SHARED SEPTIC DESIGN\DETAILS_REV03.dwg ------- Tab.....16 of 18

PLOTTED: Dec 28 , 2006 – 11:23am

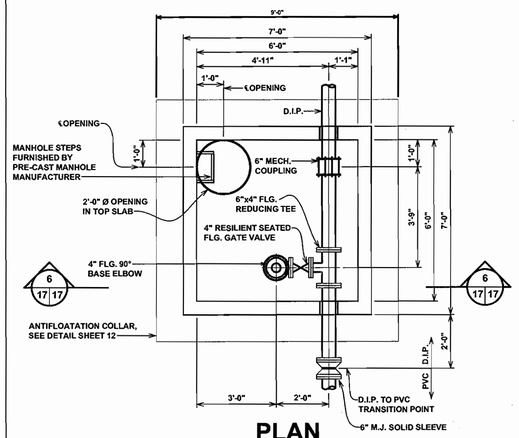

PLAN

SCALE: 3/8" = 1'-0"

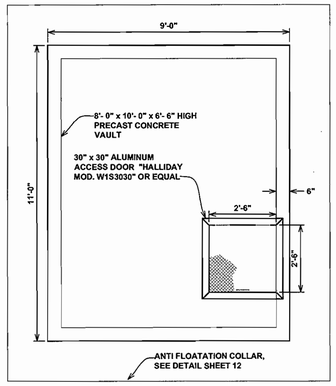

VALVE VAULT TOP SLAB

SCALE: 3/8" = 1'-0"

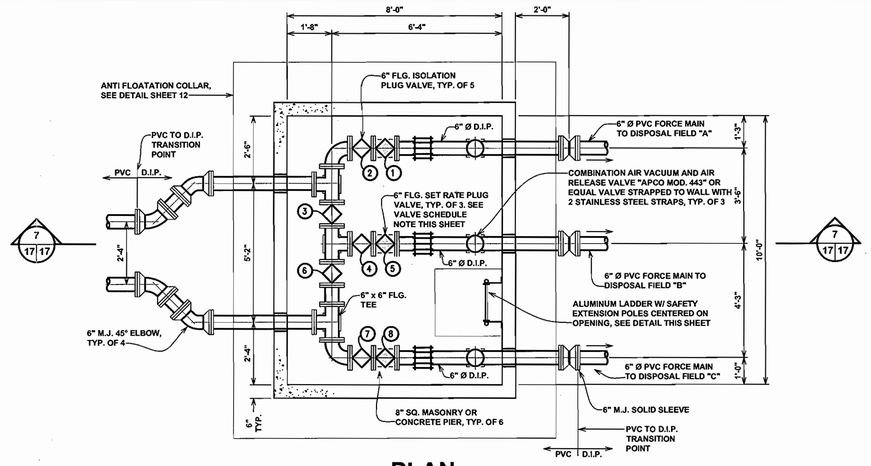

PLAN

SCALE: 3/8" = 1'-0"

TEES AND WYES

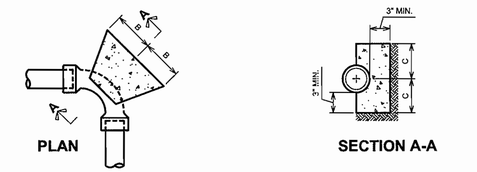

90° HORIZONTAL BENDS

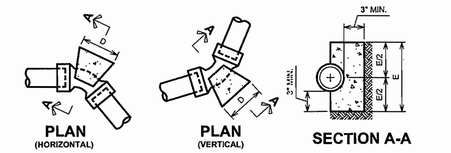

90° HORIZONTAL BENDS

BUTTRESS DIMENSIONS						
PIPE SIZE	B	C	D	E	F	G
1 1/2" OR 2"	4 1/2"	4 1/2"	5"	9"	4 1/2"	4"
2"	5"	5"	7"	7"	5"	5"
2 1/2"	5"	5"	7"	7"	5"	5"
3"	6"	6"	9"	9"	6"	6"

NOTES:
1. FC=3000 P.S.I. @ 28 DAYS
2. CARRY ALL BEARING SURFACES TO UNDISTURBED GROUND OR FIRM SUBGRADE.
3. BUTTRESS SIZED FOR 160 P.S.I. AND SOIL WITH C = 2000 P.S.I.

11 1/4°, 22 1/2°, 45° HORIZONTAL AND LOWER VERTICAL BENDS

NOT TO SCALE

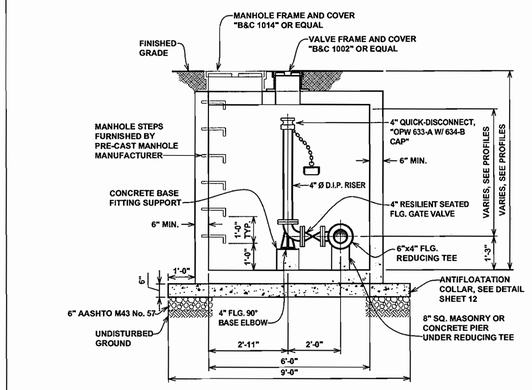

BLOW-OFF VAULT SECTION (6 / 17 17)

SCALE: 3/8" = 1'-0"

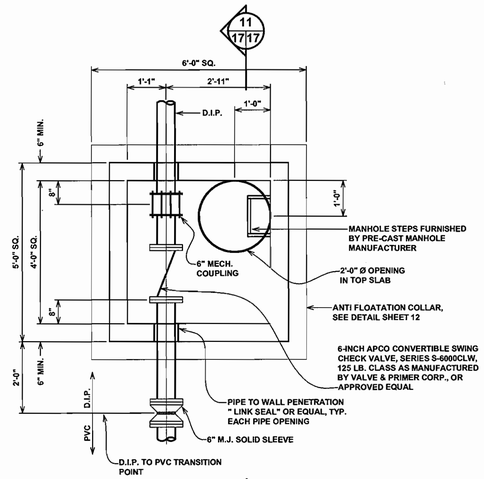

CHECK VALVE VAULT PLAN

(11 / 17 17)

SCALE: 1/2" = 1'-0"

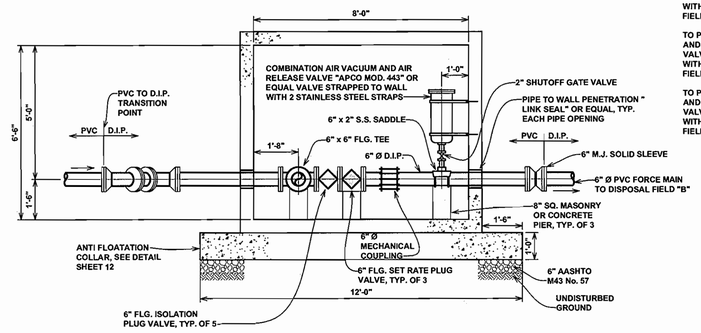

VALVE VAULT SECTION (7 / 17 17)

SCALE: 3/8" = 1'-0"

VALVE SCHEDULE NOTE:

TO PUMP TREATED WASTEWATER TO FIELDS "A" AND "B" OPEN VALVES 2, 4 AND 6, AND CLOSE VALVES 3 AND 7. ADJUST FLOW TO FIELD "A" WITH SET RATE PLUG VALVE 1, AND FLOW TO FIELD "B" WITH VALVE 5.

TO PUMP TREATED WASTEWATER TO FIELDS "B" AND "C" OPEN VALVES 3, 4 AND 7, AND CLOSE VALVES 2 AND 6. ADJUST FLOW TO FIELD "B" WITH SET RATE PLUG VALVE 5, AND FLOW TO FIELD "C" WITH VALVE 8.

TO PUMP TREATED WASTEWATER TO FIELDS "A" AND "C" OPEN VALVES 2 AND 7, AND CLOSE VALVES 3, 4 AND 6. ADJUST FLOW TO FIELD "A" WITH SET RATE PLUG VALVE 1, AND FLOW TO FIELD "C" WITH VALVE 8.

NOTES:

1. THE CONTRACTOR TO INSTALL TOPS OF DISTRIBUTION BOX, VALVE BOX AND TURF BOX ALL AT GRADE TO MINIMIZE PROTRUSIONS ABOVE GRADE.
2. THE CONTRACTOR TO FRAME AND GRAVEL THE AREA IMMEDIATELY SURROUNDING THE DISTRIBUTION BOX; ENCOMPASS THE CLEANOUT STANDPIPES TO ASSIST WITH GROUNDS MAINTENANCE.

APPROVED: FOR PRIVATE SHARED SEWERAGE SYSTEM FOR LOTS 1, 2, 3, 4, 5, 6, 15, 16, 17, 18, AND 19.
HOWARD COUNTY HEALTH DEPARTMENT

for Robert Weber — 1/19/07
HOWARD COUNTY HEALTH OFFICER — DATE

HOWARD SOIL CONSERVATIONS DISTRICT:
REVEWED FOR HOWARD COUNTY SOIL CONSERVATION DISTRICT AND MEETS TECHNICAL REQUIREMENTS.

USDA NATURAL RESOURCES CONSERVATION SERVICE — DATE

THIS PLAN IS APPROVED FOR SOIL EROSION AND SEDIMENT CONTROL BY THE HOWARD SOIL CONSERVATION DISTRICT.

HOWARD SOIL CONSERVATION DISTRICT — DATE

SEDIMENT CONTROL MEASURES FOR THIS CONTRACT WILL BE IMPLEMENTED IN ACCORDANCE WITH SECTION 219 OF THE HOWARD COUNTY STANDARDS AND SPECIFICATIONS AND AS PER ROAD CONSTRUCTION PLANS PER F-06-99.

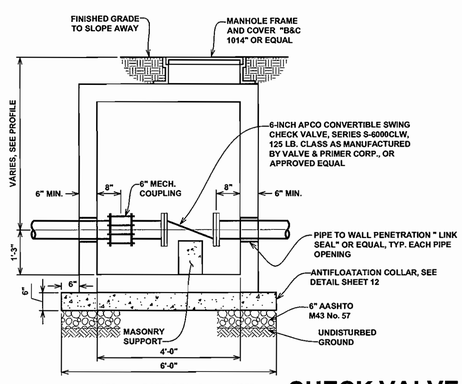

NOTE: CONTRACTOR TO PROVIDE RISER RINGS FOR MANHOLE AS NEEDED

CHECK VALVE VAULT SECTION (11 / 17 17)

SCALE: 1/2" = 1'-0"

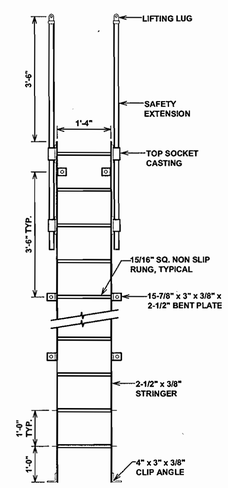

LADDER DETAIL

NOT TO SCALE

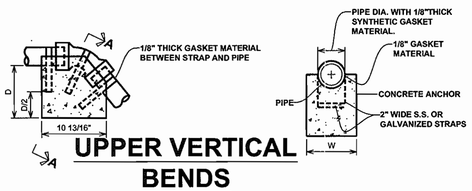

UPPER VERTICAL BENDS

NOT TO SCALE

BEND		SIZE IN INCHES		
		1 1/4", 1 1/2"	2", 2-1/2"	3"
11 1/4°	L	12	15	18
	W	10	12	15
	D	10	15	15
22 1/2°	L	15	20	20
	W	15	20	20
	D	12	12	18
45°	L	20	24	24
	W	20	20	24
	D	12	20	24

DEPARTMENT OF PUBLIC WORKS
HOWARD COUNTY, MARYLAND
CHIEF, BUREAU OF UTILITIES — DATE 1-25-07

DEPARTMENT OF PUBLIC WORKS
HOWARD COUNTY, MARYLAND
CHIEF, DEVELOPMENT ENGINEERING DIVISION — DATE 1/10/07

McCRONE
Engineering • Environmental Sciences
Construction Services • Land Planning & Surveying
ANNAPOLIS • CENTREVILLE • DOVER • ELKTON • SALISBURY
20 RIDGELY AVENUE
ANNAPOLIS, MARYLAND 21401
PHONE (410) 267-8821 • FAX (410) 267-0932
www.mccrone-inc.com

Copyright © 2004

STATE OF MARYLAND — PAUL T. BOR — No. 30772 — PROFESSIONAL ENGINEER — 12/28/06

DES: B.T.D., N.V.S.
DRN: B.T.D., N.V.S.
CHK: R.J.R.
DATE: DEC., 2006

BY	No.	REVISION	DATE

DETAILS

JOB No. C1040062

PEDDICORD SHARED SEPTIC SYSTEM

LOTS 1 - 19
CONTRACT #: 50-4357 D
TAX MAP NO. 29 - GRID NO. 1 - PARCEL 268
ELECTION DISTRICT No. 5
HOWARD COUNTY, MARYLAND

SCALE AS SHOWN

SHEET 17 OF 18

CADD FILE: G:\1040062 – Peddicord Property\Drawings\SHARED SEPTIC DESIGN\DETAILS_REV03.dwg — Tab.....17 of 18

PLOTTED: Dec 28 , 2006 – 11:25am

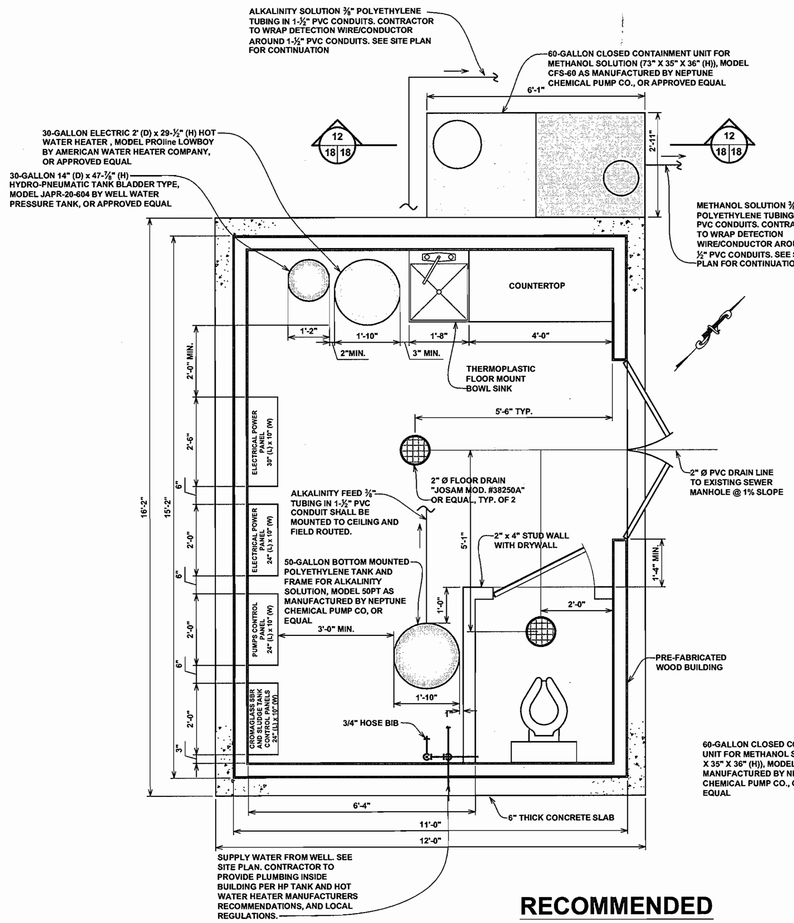

CONTROL BUILDING LAYOUT PLAN

SCALE: 1/2" = 1'-0"

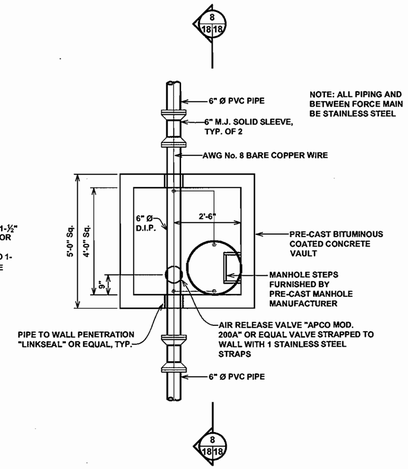

AIR RELEASE VALVE VAULT PLAN

SCALE: 3/8" = 1'-0"

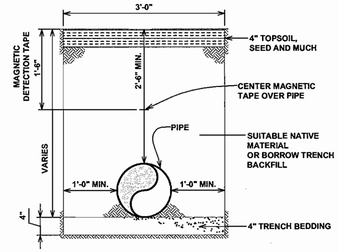

TRENCH DETAIL

NOT TO SCALE

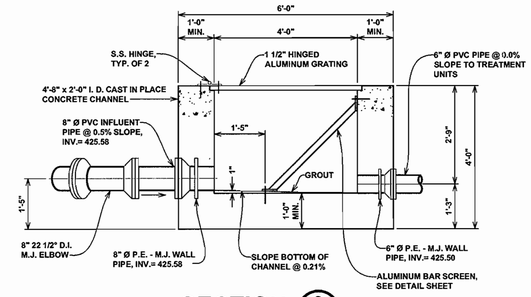

SECTION 9 (18/18)

SCALE: 1/2" = 1'-0"

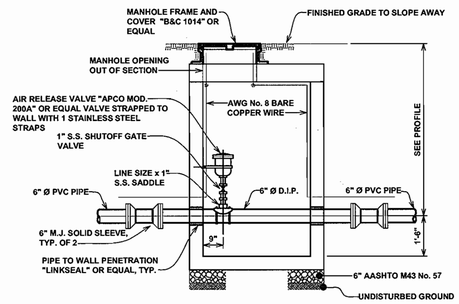

SECTION 8 (18/18)

SCALE: 3/8" = 1'-0"

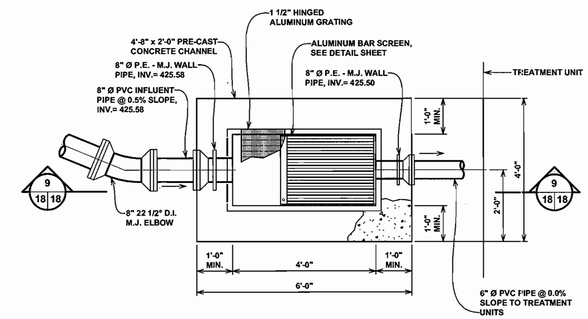

PLAN

BAR SCREEN CHANNEL DETAIL

SCALE: 1/2" = 1'-0"

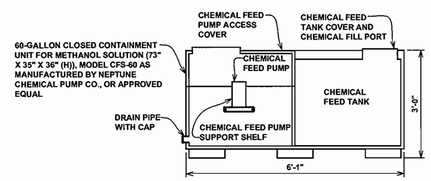

SECTION 12 (18/18)

NOT TO SCALE

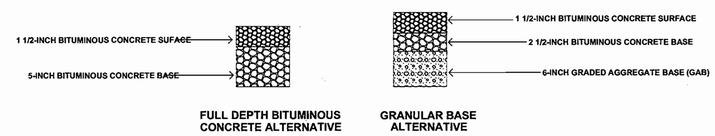

PAVING SECTION DETAIL

NOT TO SCALE

RECOMMENDED CHEMICAL FEED RATE AND TIME

ALKALINITY		METHANOL	
Chemical Feed Rate, ml/min	Recommended Chemical Feed Time, min	Chemical Feed Rate, ml/min	Recommended Chemical Feed Time, min
1.17	270	0.82	90
2	158	2	37
3	105	3	25
4	79	4	19
5	63	5	15
6	53	6	12
7	45	7	11
8	40	8	9
9	35	9	8
10	32	10	7
11	29	11	7
12	26	12	6
13	24	13	6
14	23	14	5
15	21	15	5
16	20	16	5
17	19	17	4
18	18	18	4
19	17	19	4
20	16	20	4
21	15	21	4
22	14	22	3
23	14	23	3
24	13	24	3
25	13	25	3
26	12	26	3
27	12	27	3
28	11	28	3

NOTE:
1) METHANOL ADDITION IS RECOMMENDED DURING ANOXIC PHASE OF TREATMENT CYCLE (REFER TO SHEET 11 OF 18);

2) ALKALINITY SOLUTION ADDITION IS RECOMMEDED DURING AEROBIC PHASE OF TREATMENT CYCLE (REFER TO SHEET 11 OF 18);

3) MAXIMUM RECOMMENDED FEED TIME OF ALAKALINITY SOLUTION IS 270 MIN AT RECOMMEDED FEED RATE (270 MIN EQUAL TO ANOXIC PHASE PERIOD PER CROMAGLASS TREATMENT CYCLE DIAGRAM, REFER TO SHEET 11 OF 18);

4) MAXIMUM RECOMMENDED FEED TIME FOR METHANOL IS 90 MIN AT RECOMMEDED FEED RATE (90 MIN EQUAL TO AEROBIC PHASE PERIOD PER CROMAGLASS TREATMENT CYCLE DIAGRAM, REFER TO SHEET 11 OF 18).

APPROVED: FOR PRIVATE SHARED SEWERAGE SYSTEM FOR LOTS 1, 2, 3, 4, 5, 6, 15, 16, 17, 18, AND 19.
HOWARD COUNTY HEALTH DEPARTMENT

for HOWARD COUNTY HEALTH OFFICER — DATE 1/19/07

HOWARD SOIL CONSERVATIONS DISTRICT:
REVEWED FOR HOWARD COUNTY SOIL CONSERVATION DISTRICT AND MEETS TECHNICAL REQUIREMENTS.

USDA NATURAL RESOURCES CONSERVATION SERVICE — DATE

THIS PLAN IS APPROVED FOR SOIL EROSION AND SEDIMENT CONTROL BY THE HOWARD SOIL CONSERVATION DISTRICT.

HOWARD SOIL CONSERVATION DISTRICT — DATE

SEDIMENT CONTROL MEASURES FOR THIS CONTRACT WILL BE IMPLEMENTED IN ACCORDANCE WITH SECTION 219 OF THE HOWARD COUNTY STANDARDS AND SPECIFICATIONS AND AS PER ROAD CONSTRUCTION PLANS PER F-06-89.

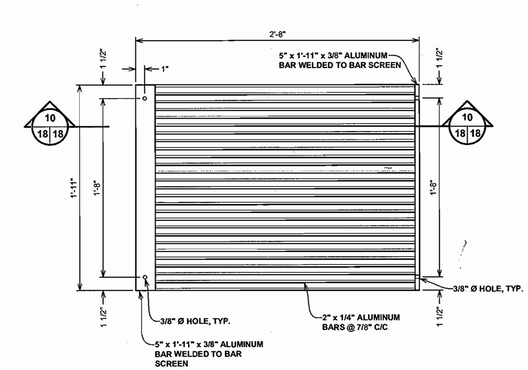

PLAN

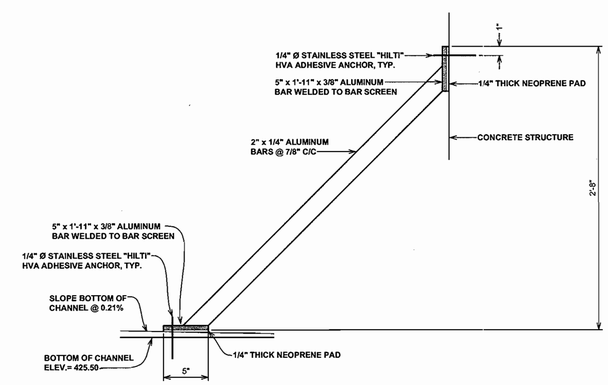

SECTION 10 (18/18)

SCALE: 3/8" = 1'-0"

BAR SCREEN DETAIL

SCALE: 1 1/2" = 1'-0"

DEPARTMENT OF PUBLIC WORKS HOWARD COUNTY, MARYLAND	DEPARTMENT OF PUBLIC WORKS HOWARD COUNTY, MARYLAND	McCRONE
CHIEF, BUREAU OF UTILITIES — DATE 1-25-07	CHIEF, DEVELOPMENT ENGINEERING DIVISION — DATE 2/27/07	Engineering · Environmental Sciences · Construction Services · Land Planning & Surveying · ANNAPOLIS • CENTREVILLE • DOVER • ELKTON • SALISBURY · 20 RIDGELY AVENUE ANNAPOLIS, MARYLAND 21401 · PHONE (410) 267-8821 · FAX (410) 267-9932 · www.mccrone-inc.com · Copyright © 2004

STATE OF MARYLAND — RICHARD J. LAMPTON — No. 30728 — PROFESSIONAL ENGINEER — 12/28/06

DES: B.T.D., N.V.S.					
DRN: B.T.D., N.V.S.					
CHK: R.J.R.					
DATE: DEC., 2006	BY	No.	REVISION	DATE	JOB No. C1040062

DETAILS

PEDDICORD SHARED SEPTIC SYSTEM

LOTS 1 - 19
CONTRACT # 30-4367 D
TAX MAP NO. 29 - GRID NO. 1 - PARCEL 268
ELECTION DISTRICT No. 5
HOWARD COUNTY, MARYLAND

SCALE AS SHOWN

SHEET 18 OF 18

CADD FILE: G:\1040062 – Peddicord Property\Drawings\SHARED SEPTIC DESIGN\DETAILS_REV03.dwg

PLOTTED: Dec 28 , 2006 – 11:26am

Tab.....18 of 18

LEGEND

- 125V, 20a GROUNDING TYPE DUPLEX RECEPTACLE - NEMA 5-20R
- 125V, 20A GROUND FAULT CIRCUIT INTERRUPTER OUTLET
- SWITCH 20A 1 POLE COMMERCIAL GRADE
- PANEL (TYPE CALLED OUT ON PANEL)
- MOTOR DISCONNECT SEE DRAWINGS FOR DETAIL
- EF — MOTORIZED EQUIPMENT I.E. EXHAUST FAN, WATER PUMP.
- CIRCUIT WIRING
- CB# — HOMERUN CIRCUIT DESIGNATION TO CB CALLED OUT
- LIGHT FIXTURES TYPE AS INDICATED ON LIGHTING SCHEDULE
- PHONE JACK - RJ45 PROVIDE TWO JACKS AT LOCATION
- PS — PRESSURE SWITCH
- TC — THERMOSTAT CONTROL
- M — METER FOR ELECTRIC SERVICE

LIGHTING FIXTURE SCHEDULE

FIXTURE	LAMP TYPE	MANUFACTURER & #	DESCRIPTION
JJ	32 W CFL 4100K	LUMA PRO #3RB20	JELLY JAR TYPE FIXTURE
I	FC12T9CW 4100K	LUMA PRO #2U268	INTERIOR ROUND FLOURESCENT
LP	175 W MV	LITHONIA # TDD175MV120PERLPIM2	OUTDOOR LIGHT POLE FIXTURE W/PHOTOCELL & BULB SUPPLIED

SHEET SCHEDULE

E-0	COVER SHEET
E-1	SITE PLAN ELECTRICAL SERVICE
E-2	CONTROL BUILDING LIGHT AND POWER
E-3	CROMAGLASS & SLUDGE TANK ELECTRICAL
E-4	DOSING PUMP STATION
E-5	DOSING PUMP CONTROL PANEL & MISSION 800 RTU
E-6	PANEL SCHEDULE, SINGLE LINE AND WALL PANEL LAYOUT

NOTES

1. COORDINATE LOCATIONS OF ELECTRICAL EQUIPMENT WITH ALL OTHER TRADES
2. UNLESS NOTED ON DRAWINGS OR CONDUIT SCHEDULE, WIRE SHOWN SHALL BE THHN/THWN 75 DEG. CENTIGRADE, 600 VOLT INSULATION, COPPER UNLESS NOTED.
3. UNLESS NOTED ON DRAWINGS THE PUMP CONTROL PANELS AND STARTERS SHALL BE OBTAINED FROM THE TANK AND PUMP MANUFACTURES. PROVIDE ALL WIRING, RACEWAY AND TERMINATIONS TO AND FROM THE EQUPMENT MENTIONED WITH THE EXCEPTION OF MANUFACTURES PRE-WIRED CIRCUITS. LABEL ALL SIGNAL AND PUMP WIRE THAT SHARES CONDUIT WITH OTHER CIRCUITS. LABEL ALL SIGNAL AND PUMP WIRE THAT SHARES CONDUIT WITH OTHER CIRCUITS AS SHOWN ON TERMINAL BLOCKS. BRADY LABELS ARE ACCEPTABLE.
4. SERVICE AND PANELS SHALL BE INSTALLED AS SHOWN UNLESS LOCAL AUTHORITY HAVING JURISDICTION INDICATES OTHERWISE.
5. INSTALL ELECTRICAL SERVICE TO SITE. THIS IS TO INCLUDE XFMR PAD PURCHASE BGE PAD OR POUR IN PLACE PAD THAT IS ACCEPTABLE TO BG&E, PRIMARY 25KV UNDERGROUND CABLE ENCLOSED IN 4 INCH PVC IF REQUIRED AND SECONDARY FEED FROM A BG&E SUPPLIED 45 KVA 3 PHASE 208V TRANSFORMER. METER SOCKET AND A SQ'D #QO342MQ200 42 CB PANEL ARE TO BE PROVIDED AND THE PANEL SUPPLIED WITH CBs AS SHOWN ON E-6. PROVIDE TVS SQ'R D MODEL #SDSA 3650 AS SHOWN.
6. INSTALL LIGHTING AND POWER TO EQUIPMENT AS SHOWN.
7. INSTALL BASE BOARD HEATERS WHERE SHOWN, OF MAKE QMARK, MODELS #2542-6NW (2) AND #2544NW (1) AND CONTROL WITH A SINGLE THERMOSTAT, MODEL #MD26
8. WIRE IN WATER HEATER, PRESSURE SWITCH AND WATER PUMP.
9. WIRE PANELS AND ALSO RUN THE WIRE AND CONDUIT OUT TO THE PUMP LOCATIONS, FURNISH TWO 60 A NF DISCONNECTS. WIRE / CONNECT UP ALL PUMPS AND TERMINAL / JUNCTION BOXES.
10. WIRE IN THE CROMAGLASS SBR, SLUDGE TANK, AND OVERFLOW TANK CONTROL PANELS. PROVIDE THE WIRE AND CONDUIT TO THE JUNCTION BOXES LOCATED ON THESE TANKS AS WELL.
11. FABRICATE/INSTALL PUMPS & CONTROLS FOR DOSING STATION. USE MYERS CGNC-75-23DW PUMP CONTROL PANEL
12. INSTALL CONTROLS & EQUIPMENTS FOR OVERFLOW TANK TO CONSIST OF 12 HR TIMER IN SERIES WITH PUMP OFF FLOAT TO POWER PUMP. 12 HOUR TIMER TO BE AN INTERMATIC FF12H
13. INSTALL AND CONFIGURE A MISSION MONITOR MODEL M-800 SERIES SYSTEM WITH THE PULSE OPTION FOR FLOW MONITORING. SYSTEM SHALL OPERATE / TRANSMIT OVER A WIRELESS NETWORK SUCH AS NEXTEL OR CINGULAR .
14. INSTALL POWER TO PULSE METER & PROVIDE CONDUIT & CABLE TO PULSE METERS IN JB6 (USE CAROL BRAND #C1352 OR EQUAL)
15. INSTALL CONTROL WIRE AND CONDUIT BETWEEN CHEMICAL FEED SYSTEMS AND CROMAGLASS UNIT. INSTALL POWER WIRE AND CONDUIT BETWEEN CHEMICAL FEED SYSTEMS AND POWER PANEL.

ABBREVIATIONS

A	AMPERES
A.C.T.	ABOVE COUNTER TOP
A.F.F.	ABOVE FINISHED FLOOR
CLG	CEILING
DISC	DISCONNECT
DWG	DRAWING
E.C.	EMPTY CONDUIT
FLUOR	FLUORESCENT
GFCI	GROUND FAULT CIRCUIT INTERRUPTER
HP	HORSE POWER
KVA	KILOVOLTAMPERES
KW	KILOWATTS
NF	NON FUSED
MTD	MOUNTED
MV	MERCURY VAPOR
N.I.C.	NOT IN CONTRACT
N.T.S.	NOT TO SCALE
PNL	PANEL
PWR	POWER
RS	RIGID STEEL
TYP	TYPICAL
U.L.	UNDERWRITERS LABORATORY
WP	WEATHER PROOF
XFMR	TRANSFORMER

APPROVED: FOR PRIVATE SHARED SEWERAGE SYSTEM FOR LOTS 1, 2, 3, 4, 5, 6, 15, 16, 17, 18, AND 19.
HOWARD COUNTY HEALTH DEPARTMENT

for Robert A. Weber — HOWARD COUNTY HEALTH OFFICER — DATE 1/19/07

HOWARD SOIL CONSERVATIONS DISTRICT:
REVEWED FOR HOWARD COUNTY SOIL CONSERVATION DISTRICT AND MEETS TECHNICAL REQUIREMENTS.

USDA NATURAL RESOURCES CONSERVATION SERVICE — DATE

THIS PLAN IS APPROVED FOR SOIL EROSION AND SEDIMENT CONTROL BY THE HOWARD SOIL CONSERVATION DISTRICT.

HOWARD SOIL CONSERVATION DISTRICT — DATE

SEDIMENT CONTROL MEASURES FOR THIS CONTRACT WILL BE IMPLEMENTED IN ACCORDANCE WITH SECTION 219 OF THE HOWARD COUNTY STANDARDS AND SPECIFICATIONS AND AS PER ROAD CONSTRUCTION PLANS PER F-05-99.

ROSS ENGINEERING
Address: 471 KNIGHT ISLAND RD. EARLEVILLE, MD 21919
Email: rosseng@wildblue.net
Phone: 410-920-2800,
Fax: 410-275-1315

DEPARTMENT OF PUBLIC WORKS
HOWARD COUNTY, MARYLAND
CHIEF, BUREAU OF UTILITIES — DATE 1-25-07

DEPARTMENT OF PUBLIC WORKS
HOWARD COUNTY, MARYLAND
CHIEF, DEVELOPMENT ENGINEERING DIVISION — DATE 2/9/07

McCRONE
Engineering • Environmental Sciences • Construction Services • Land Planning & Surveying
ANNAPOLIS • CENTREVILLE • DOVER • ELKTON • SALISBURY
20 RIDGELY AVENUE ANNAPOLIS, MARYLAND 21401
www.mccrone-inc.com PHONE (410) 267-8821 * FAX (410) 267-0032

Copyright © 2004

STATE OF MARYLAND — ROBERT A. WEBER — No. 30720 — PROFESSIONAL ENGINEER — 12/28/06

DES: R.R.				
DRN: AD				
CHK: R.J.R.				
DATE: DEC., 2006	BY	No.	REVISION	DATE

COVER SHEET

JOB No. C1040062

PEDDICORD SHARED SEPTIC SYSTEM

LOTS 1 - 19
CONTRACT #.50-4857D
TAX MAP NO. 29 - GRID NO. 1 - PARCEL 268
ELECTION DISTRICT No. 5
HOWARD COUNTY, MARYLAND

SCALE AS SHOWN

SHEET E-0

PLOTTED: Dec 28, 2006 - 2:18pm

CADD FILE: G:\C1040062 - Peddicord Property\Drawings\SHARED SEPTIC DESIGN\Elect Drawings V2.dwg ------ Tab.....E0

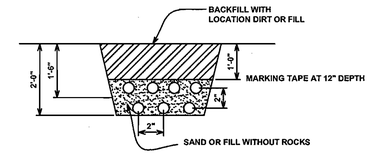

TYPICAL TRENCH DIAGRAM

NOT TO SCALE

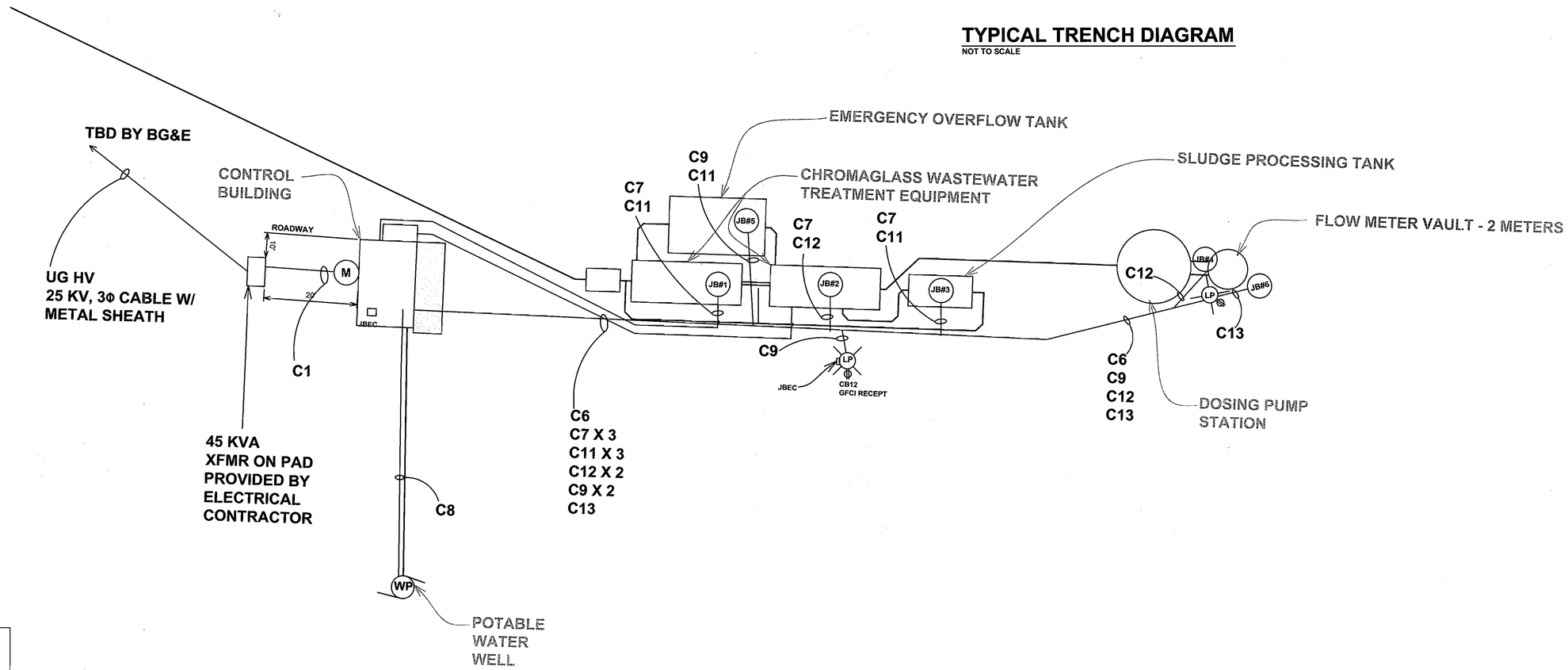

SITE LAYOUT

SCALE: 1" = 10'

NOTES:

INSTALL MULTIPLE CONDUITS IN TRENCH WITH 2 INCH SPACING AT A DEPTH OF 18-24 INCHES DEEP AND OF A WIDTH TO ACCOMMODATE 2 INCH SPACING BETWEEN CONDUITS. BACK FILL & COMPACT WITH SAND OR FILL WITH NO ROCKS TO A DEPTH OF 12 INCHES. USE MARKING TAPE DIRECTLY ABOVE EACH CONDUIT LOCATION, AND THEN BACK FILL WITH LOCATION DIRT OR FILL. JB EC IS AN EXTRA 1 INCH EMPTY PVC CONDUIT AND TWO 8X8 JUNCTION BOXES, NEMA 3R WIEGMANN # RSC080804 OR EQUALS, ONE BOX ON CONTROL BUILDING, THE OTHER ON THE FIRST LIGHT POLE. JBEC TO BE MOUTED 6" ABOVE GRADE AT LOCATION SHOWN

APPROVED: FOR PRIVATE SHARED SEWERAGE SYSTEM FOR LOTS 1, 2, 3, 4, 5, 6, 15, 16, 17, 18, AND 19.
HOWARD COUNTY HEALTH DEPARTMENT

for Robert J Weber — HOWARD COUNTY HEALTH OFFICER — 1/19/07 DATE

HOWARD SOIL CONSERVATIONS DISTRICT:
REVEWED FOR HOWARD COUNTY SOIL CONSERVATION DISTRICT AND MEETS TECHNICAL REQUIREMENTS.

USDA NATURAL RESOURCES CONSERVATION SERVICE — DATE

THIS PLAN IS APPROVED FOR SOIL EROSION AND SEDIMENT CONTROL BY THE HOWARD SOIL CONSERVATION DISTRICT.

HOWARD SOIL CONSERVATION DISTRICT — DATE

SEDIMENT CONTROL MEASURES FOR THIS CONTRACT WILL BE IMPLEMENTED IN ACCORDANCE WITH SECTION 219 OF THE HOWARD COUNTY STANDARDS AND SPECIFICATIONS AND AS PER ROAD CONSTRUCTION PLANS PER F-06-89.

ROSS ENGINEERING
Address: 471 KNIGHT ISLAND RD.
EARLEVILLE, MD 21919
Email: rosseng@wildblue.net
Phone: 410-920-2800,
Fax: 410-275-1315

DEPARTMENT OF PUBLIC WORKS
HOWARD COUNTY, MARYLAND
CHIEF, BUREAU OF UTILITIES — 1-25-07 DATE

DEPARTMENT OF PUBLIC WORKS
HOWARD COUNTY, MARYLAND
CHIEF, DEVELOPMENT ENGINEERING DIVISION — 2/27/07 DATE

McCRONE
● Engineering ● Environmental Sciences
● Construction Services ● Land Planning & Surveying
ANNAPOLIS ● CENTREVILLE ● DOVER ● ELKTON ● SALISBURY
20 RIDGELY AVENUE
ANNAPOLIS, MARYLAND 21401
PHONE (410) 267-8621 * FAX (410) 267-0932
www.mccrone-inc.com
Copyright © 2004

STATE OF MARYLAND — JULIAN K. WILLIAMS — No. 20000 — PROFESSIONAL ENGINEER — 12/28/06

DES: R.R.					
DRN: AD					
CHK: R.J.R.					
DATE: DEC., 2006	BY	No.	REVISION	DATE	

SITE PLAN ELECTRICAL SERVICE

JOB No. C1040062

PEDDICORD SHARED SEPTIC SYSTEM

LOTS 1 - 19
CONTRACT # 1.50-4357D
TAX MAP NO. 29 - GRID NO. 1 - PARCEL 268
ELECTION DISTRICT No. 5
HOWARD COUNTY, MARYLAND

SCALE AS SHOWN

SHEET E-1

PLOTTED: Dec 28, 2006 - 2:19pm

CADD FILE: G:\1040062 - Peddicord Property\Drawings\SHARED SEPTIC DESIGN\Elect Drawings V2.dwg ------ Tab.....E1

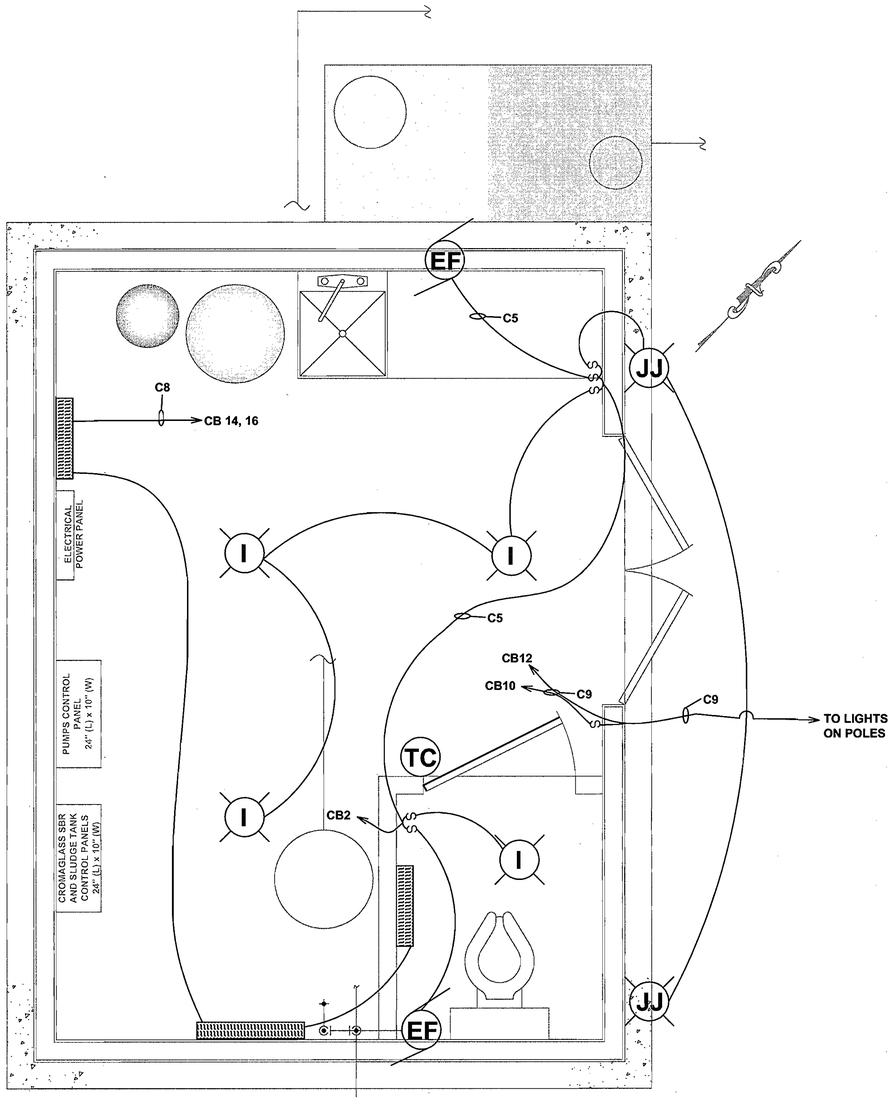

CONTROL BUILDING LIGHTING/HEATING LAYOUT PLAN

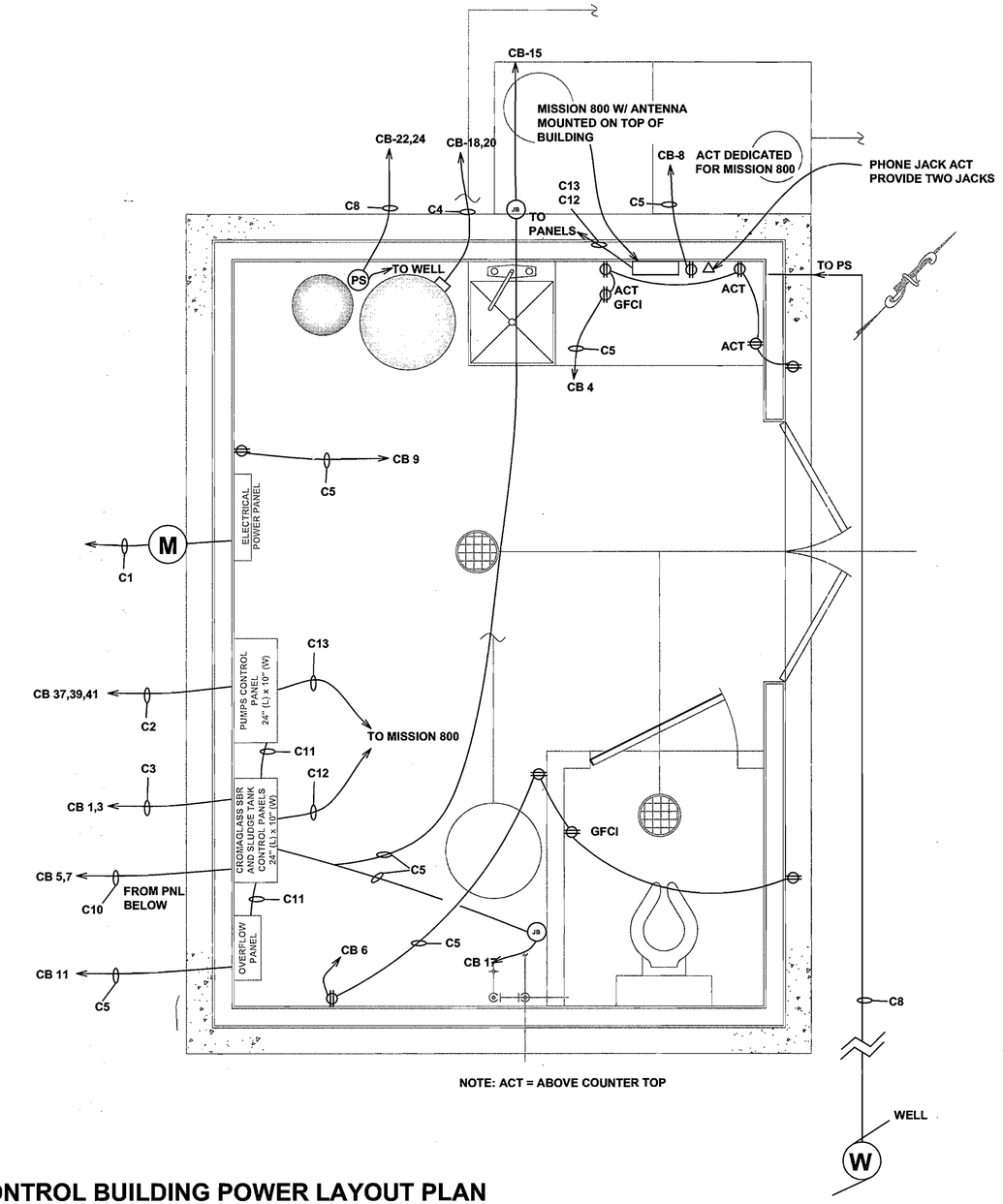

NOTE: ACT = ABOVE COUNTER TOP

CONTROL BUILDING POWER LAYOUT PLAN

SCALE: 3/4" = 1'

APPROVED: FOR PRIVATE SHARED SEWERAGE SYSTEM FOR LOTS 1, 2, 3, 4, 5, 6, 15, 16, 17, 18, AND 19.
HOWARD COUNTY HEALTH DEPARTMENT

for HOWARD COUNTY HEALTH OFFICER — DATE 1/19/07

SCALE: 3/4" = 1'

HOWARD SOIL CONSERVATIONS DISTRICT:
REVEWED FOR HOWARD COUNTY SOIL CONSERVATION DISTRICT AND MEETS TECHNICAL REQUIREMENTS.

USDA NATURAL RESOURCES CONSERVATION SERVICE — DATE

THIS PLAN IS APPROVED FOR SOIL EROSION AND SEDIMENT CONTROL BY THE HOWARD SOIL CONSERVATION DISTRICT.

HOWARD SOIL CONSERVATION DISTRICT — DATE

SEDIMENT CONTROL MEASURES FOR THIS CONTRACT WILL BE IMPLEMENTED IN ACCORDANCE WITH SECTION 219 OF THE HOWARD COUNTY STANDARDS AND SPECIFICATIONS AND AS PER ROAD CONSTRUCTION PLANS PER F-06-59.

ROSS ENGINEERING

Address: 471 KNIGHT ISLAND RD.
EARLEVILLE, MD 21919
Email: rossengr@wildblue.net
Phone: 410-920-2800,
Fax: 410-275-1315

DEPARTMENT OF PUBLIC WORKS
HOWARD COUNTY, MARYLAND
CHIEF, BUREAU OF UTILITIES — DATE 1-25-07

DEPARTMENT OF PUBLIC WORKS
HOWARD COUNTY, MARYLAND
CHIEF, DEVELOPMENT ENGINEERING DIVISION — DATE 2/23/07

McCRONE
● Engineering ● Environmental Sciences
● Construction Services ● Land Planning & Surveying
ANNAPOLIS ● CENTREVILLE ● DOVER ● ELKTON ● SALISBURY
20 RIDGELY AVENUE
ANNAPOLIS, MARYLAND 21401
PHONE (410) 267-8821 * FAX (410) 267-0932
www.mccrone-inc.com

Copyright © 2004

STATE OF MARYLAND — REGISTERED PROFESSIONAL ENGINEER — No. 20371 — 12/28/06

DES: R.R.					
DRN: AD					
CHK: R.J.R.					
DATE: DEC., 2006	BY	No.	REVISION	DATE	

CONTROL BUILDING LIGHT AND POWER

JOB No. C1040062

PEDDICORD SHARED SEPTIC SYSTEM

LOTS 1 - 19
CONTRACT # 50-4857 D
TAX MAP NO. 29 - GRID NO. 1 - PARCEL 268
ELECTION DISTRICT No. 5
HOWARD COUNTY, MARYLAND

SCALE AS SHOWN

SHEET E-2

CADD FILE: G:\1040062 - Peddicord Property\Drawings\SHARED SEPTIC DESIGN\Elect Drawings V2.dwg ------ Tab.....E2

PLOTTED: Dec 28, 2006 - 2:20pm

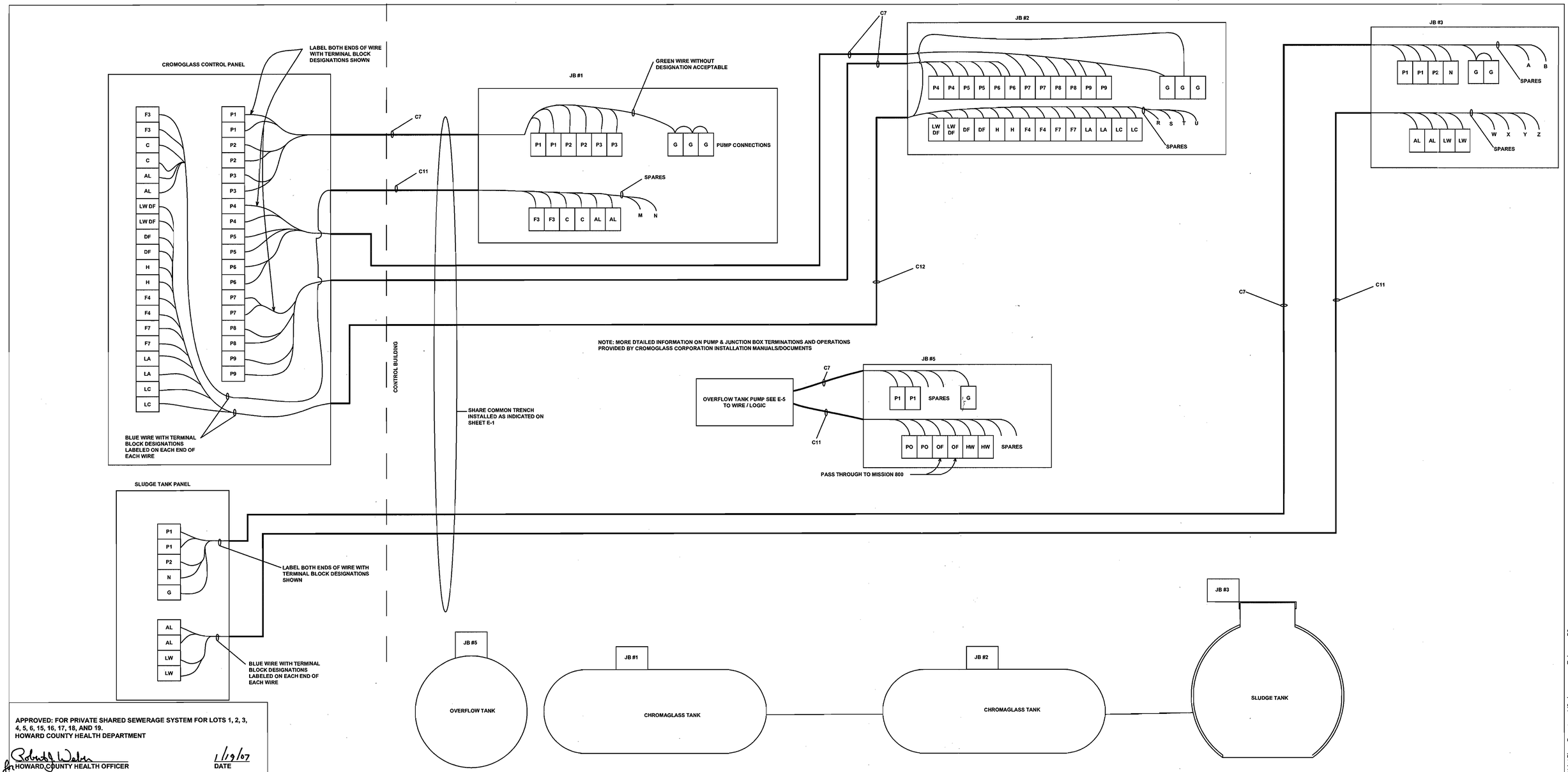

CROMAGLASS SBR & SLUDGE TANK SYSTEM

SCALE: 3/4" = 1'

APPROVED: FOR PRIVATE SHARED SEWERAGE SYSTEM FOR LOTS 1, 2, 3, 4, 5, 6, 15, 16, 17, 18, AND 19.
HOWARD COUNTY HEALTH DEPARTMENT

for Robert J. Weber 1/19/07
HOWARD COUNTY HEALTH OFFICER DATE

HOWARD SOIL CONSERVATIONS DISTRICT:
REVEWED FOR HOWARD COUNTY SOIL CONSERVATION DISTRICT AND MEETS TECHNICAL REQUIREMENTS.

USDA NATURAL RESOURCES CONSERVATION SERVICE DATE

THIS PLAN IS APPROVED FOR SOIL EROSION AND SEDIMENT CONTROL BY THE HOWARD SOIL CONSERVATION DISTRICT.

HOWARD SOIL CONSERVATION DISTRICT DATE

SEDIMENT CONTROL MEASURES FOR THIS CONTRACT WILL BE IMPLEMENTED IN ACCORDANCE WITH SECTION 219 OF THE HOWARD COUNTY STANDARDS AND SPECIFICATIONS AND AS PER ROAD CONSTRUCTION PLANS PER F-06-99.

DEPARTMENT OF PUBLIC WORKS
HOWARD COUNTY, MARYLAND

Robert J. Beuman 1-25-07
CHIEF, BUREAU OF UTILITIES DATE

DEPARTMENT OF PUBLIC WORKS
HOWARD COUNTY, MARYLAND

2/19/07
CHIEF, DEVELOPMENT ENGINEERING DIVISION DATE

ROSS ENGINEERING
Address: 471 KNIGHT ISLAND RD.
EARLEVILLE, MD 21919
Email: rosseng@wildblue.net
Phone: 410-920-2800,
Fax: 410-275-1315

McCRONE
● Engineering ● Environmental Sciences
● Construction Services ● Land Planning & Surveying
ANNAPOLIS ● CENTREVILLE ● DOVER ● ELKTON ● SALISBURY
20 RIDGELY AVENUE
ANNAPOLIS, MARYLAND 21401
PHONE (410) 267-8621 * FAX (410) 267-0932
www.mccrone-inc.com
Copyright © 2004

STATE OF MARYLAND REGISTERED PROFESSIONAL ENGINEER No. 3077
12-28-06

DES: R.R.				
DRN: AD				
CHK: R.J.R.				
DATE: DEC., 2006	BY	No.	REVISION	DATE

CROMAGLASS & SLUDGE TANK ELECTRICAL

JOB No. C1040062

PEDDICORD SHARED SEPTIC SYSTEM

LOTS 1 - 19
CONTRACT # 50-4357D
TAX MAP NO. 29 - GRID NO. 1 - PARCEL 268
ELECTION DISTRICT No. 5
HOWARD COUNTY, MARYLAND

SCALE AS SHOWN

SHEET E-3

CADD FILE: G:\1040062 - Peddicord Property\Drawings\SHARED SEPTIC DESIGN\Elect Drawings V2.dwg ------ Tab.....E3

PLOTTED: Dec 28, 2006 - 2:37pm

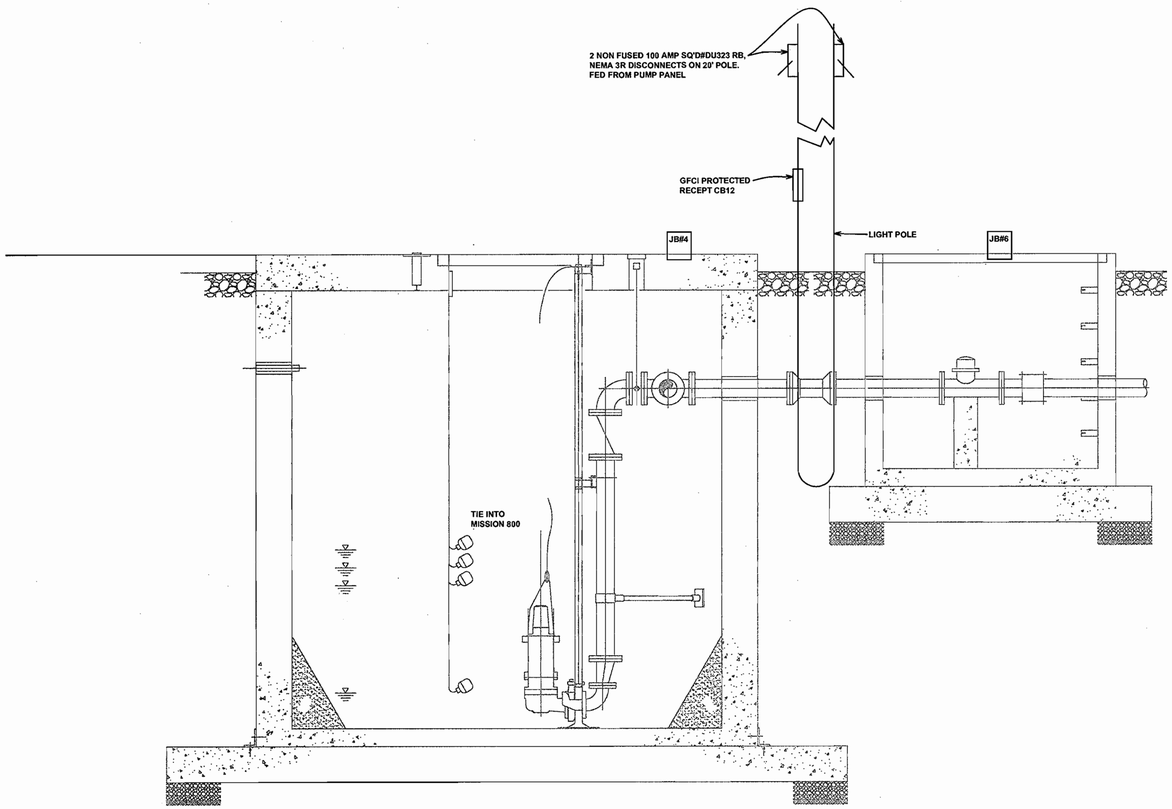

PUMP STATION POWER SECTION A-A

SCALE: 1/2" = 1'

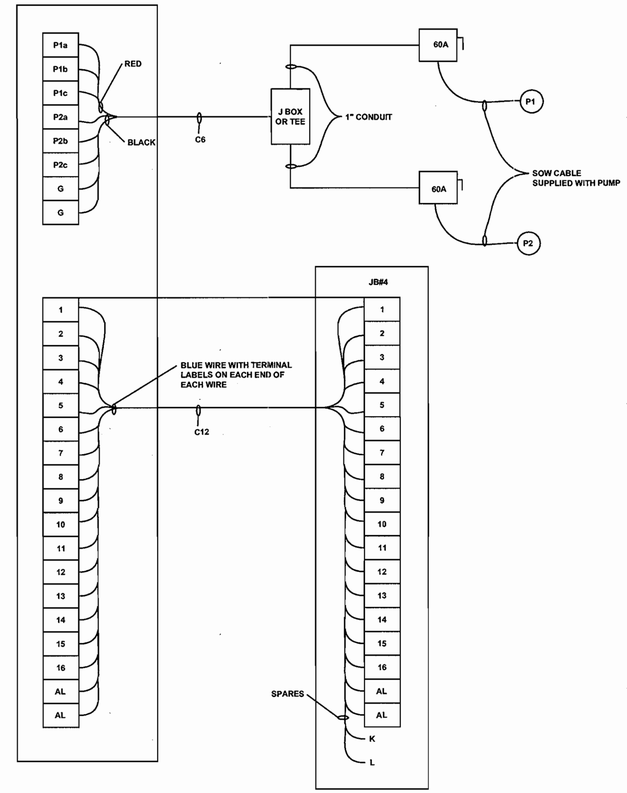

PUMP PANEL WIRE DIAGRAM

NOT TO SCALE

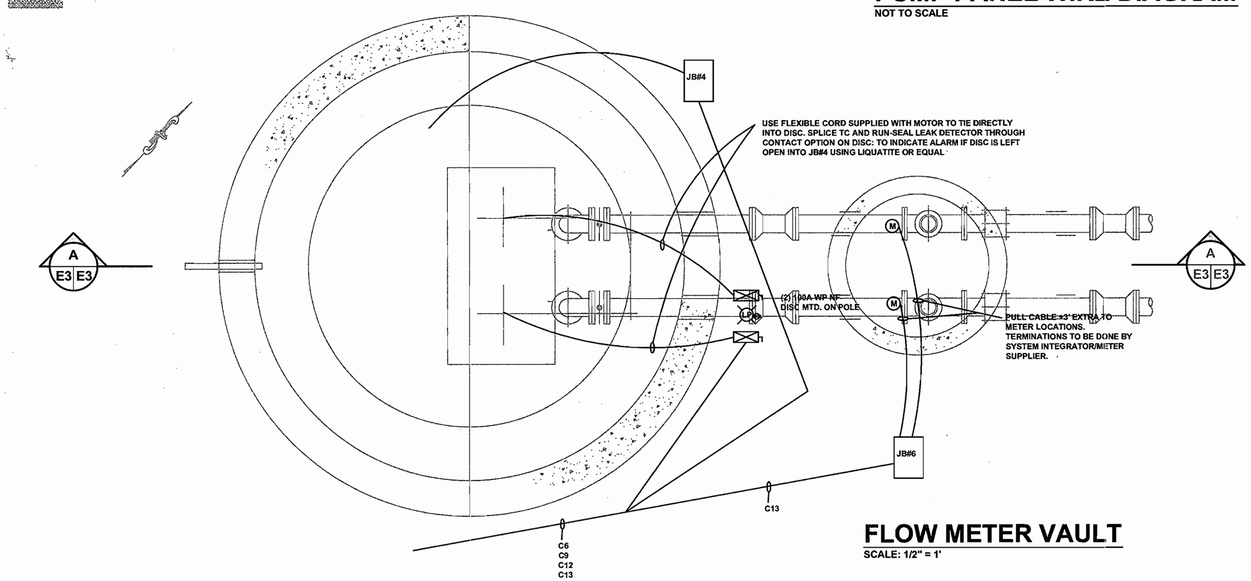

FLOW METER VAULT

SCALE: 1/2" = 1'

PUMP STATION POWER PLAN

SCALE: 1/2" = 1'

APPROVED: FOR PRIVATE SHARED SEWERAGE SYSTEM FOR LOTS 1, 2, 3, 4, 5, 6, 15, 16, 17, 18, AND 19.
HOWARD COUNTY HEALTH DEPARTMENT

for Robert J. Weber 1/19/07
HOWARD COUNTY HEALTH OFFICER DATE

HOWARD SOIL CONSERVATIONS DISTRICT:
REVEWED FOR HOWARD COUNTY SOIL CONSERVATION DISTRICT AND MEETS TECHNICAL REQUIREMENTS.

USDA NATURAL RESOURCES CONSERVATION SERVICE DATE

THIS PLAN IS APPROVED FOR SOIL EROSION AND SEDIMENT CONTROL BY THE HOWARD SOIL CONSERVATION DISTRICT.

HOWARD SOIL CONSERVATION DISTRICT DATE

SEDIMENT CONTROL MEASURES FOR THIS CONTRACT WILL BE IMPLEMENTED IN ACCORDANCE WITH SECTION 219 OF THE HOWARD COUNTY STANDARDS AND SPECIFICATIONS AND AS PER ROAD CONSTRUCTION PLANS PER F-05-93.

ROSS ENGINEERING
Address: 471 KNIGHT ISLAND RD.
EARLEVILLE, MD 21919
Email: rosseng@wildblue.net
Phone: 410-920-2800,
Fax: 410-275-1315

DEPARTMENT OF PUBLIC WORKS
HOWARD COUNTY, MARYLAND

Robert W. Brown 1-25-07
CHIEF, BUREAU OF UTILITIES DATE

DEPARTMENT OF PUBLIC WORKS
HOWARD COUNTY, MARYLAND

2/20/07
CHIEF, DEVELOPMENT ENGINEERING DIVISION DATE

McCRONE
● Engineering ● Environmental Sciences
● Construction Services ● Land Planning & Surveying
ANNAPOLIS ● CENTREVILLE ● DOVER ● ELKTON ● SALISBURY
20 RIDGELY AVENUE
ANNAPOLIS, MARYLAND 21401
www.mccrone-inc.com PHONE (410) 267-5021 * FAX (410) 267-0032

Copyright © 2004

STATE OF MARYLAND
RICHARD W. BUTAS
No. 15872
PROFESSIONAL ENGINEER
12/20/06

DES: R.R.					
DRN: AD					
CHK: R.J.R.					
DATE: DEC., 2006	BY	No.	REVISION	DATE	JOB No. C1040062

DOSING PUMP STATION

PEDDICORD SHARED SEPTIC SYSTEM

LOTS 1 - 19
CONTRACT # 38-4357D
TAX MAP NO. 29 - GRID NO. 1 - PARCEL 268
ELECTION DISTRICT No. 5
HOWARD COUNTY, MARYLAND

SCALE AS SHOWN

SHEET E-4

CADD FILE: G:\J1040062 - Peddicord Property\Drawings\SHARED SEPTIC DESIGN\Elect Drawings V2.dwg ------ Tab.....E4

PLOTTED: Dec 28, 2006 - 2:20pm

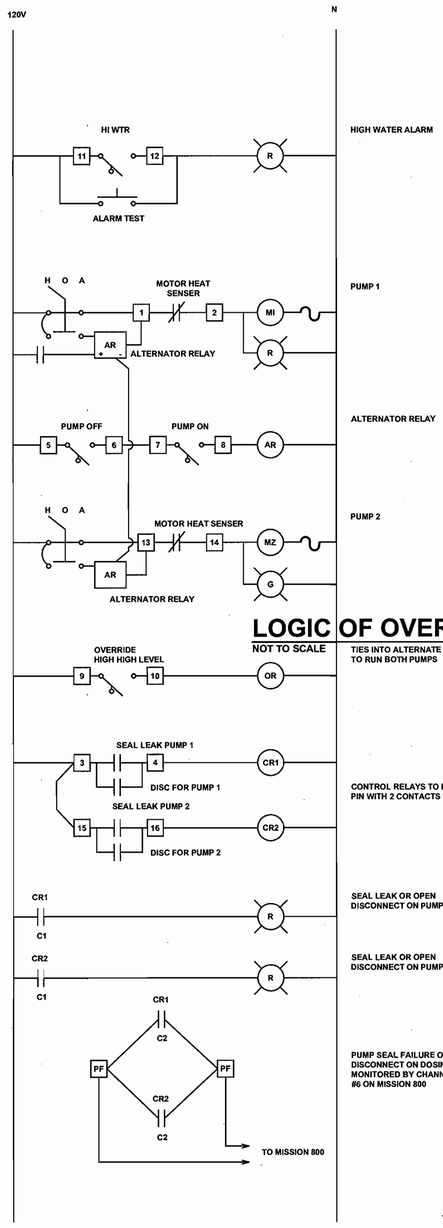

LOGIC OF OVERFLOW TANK PUMP

NOT TO SCALE

ENCLOSE IN AN 8"X8"6" PANEL OR EQUAL

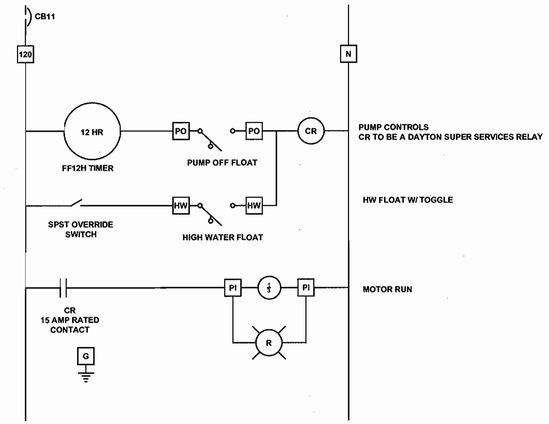

LOGIC OF DOSING PUMP PANEL

NOT TO SCALE

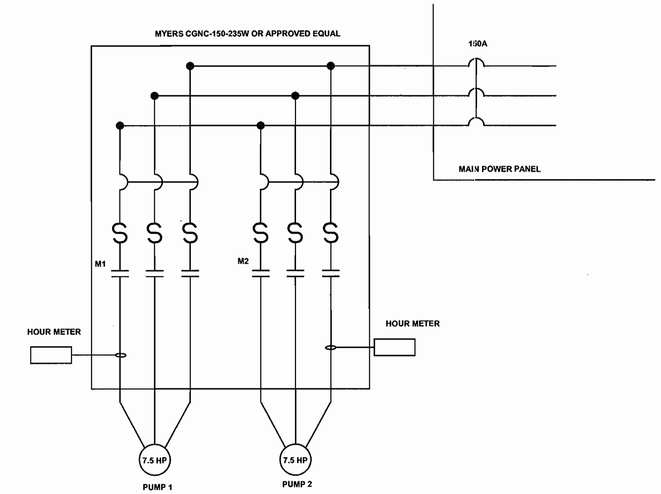

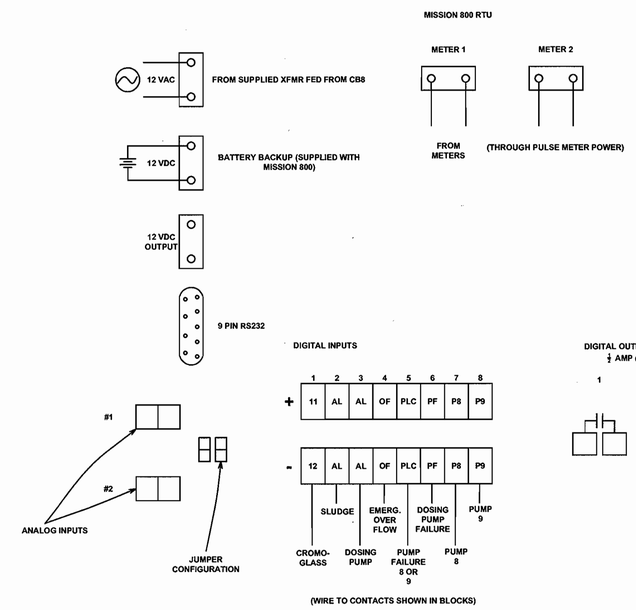

MISSION 800 RTU

NOT TO SCALE

APPROVED: FOR PRIVATE SHARED SEWERAGE SYSTEM FOR LOTS 1, 2, 3, 4, 5, 6, 15, 16, 17, 18, AND 19.
HOWARD COUNTY HEALTH DEPARTMENT

for HOWARD COUNTY HEALTH OFFICER — DATE 1/19/07

HOWARD SOIL CONSERVATIONS DISTRICT:
REVEWED FOR HOWARD COUNTY SOIL CONSERVATION DISTRICT AND MEETS TECHNICAL REQUIREMENTS.

USDA NATURAL RESOURCES CONSERVATION SERVICE — DATE

THIS PLAN IS APPROVED FOR SOIL EROSION AND SEDIMENT CONTROL BY THE HOWARD SOIL CONSERVATION DISTRICT.

HOWARD SOIL CONSERVATION DISTRICT — DATE

SEDIMENT CONTROL MEASURES FOR THIS CONTRACT WILL BE IMPLEMENTED IN ACCORDANCE WITH SECTION 219 OF THE HOWARD COUNTY STANDARDS AND SPECIFICATIONS AND AS PER ROAD CONSTRUCTION PLANS PER F-06-99.

ROSS ENGINEERING
Address: 471 KNIGHT ISLAND RD.
EARLEVILLE, MD 21919
Email: rosseng@wildblue.net
Phone: 410-920-2800,
Fax: 410-275-1315

DEPARTMENT OF PUBLIC WORKS
HOWARD COUNTY, MARYLAND
CHIEF, BUREAU OF UTILITIES — DATE 1-25-07

DEPARTMENT OF PUBLIC WORKS
HOWARD COUNTY, MARYLAND
CHIEF, DEVELOPMENT ENGINEERING DIVISION — DATE 2/27/07

McCRONE
● Engineering ● Environmental Sciences
● Construction Services ● Land Planning & Surveying
ANNAPOLIS ● CENTREVILLE ● DOVER ● ELKTON ● SALISBURY
20 RIDGELY AVENUE
ANNAPOLIS, MARYLAND 21401
PHONE (410) 267-8821 * FAX (410) 267-0932
www.mccrone-inc.com
Copyright © 2004

STATE OF MARYLAND — RICHARD J. WILZAN — No. 30000 — PROFESSIONAL ENGINEER — 12/28/06

DES: R.R.					
DRN: AD					
CHK: R.J.R.					
DATE: DEC., 2006	BY	No.	REVISION	DATE	

DOSING PUMP CONTROL PANEL & MISSION 800 RTU

JOB No. C1040062

PEDDICORD SHARED SEPTIC SYSTEM

LOTS 1 - 19
CONTRACT #: 56-5852 D
TAX MAP NO. 29 - GRID NO. 1 - PARCEL 268
ELECTION DISTRICT No. 5
HOWARD COUNTY, MARYLAND

SCALE AS SHOWN

SHEET E-5

CADD FILE: G:\1040062 - Peddicord Property\Drawings\SHARED SEPTIC DESIGN\Elect Drawings V2.dwg ------ Tab.....E5

PLOTTED: Dec 28 , 2006 - 2:20pm

PANEL: MAIN
BUS: 225 A
MAIN: 200 A

LOCATION:- Control Building

208 V, 3ø 4W

CB#	DESCRIPTION	CB SIZE	Φ A	Φ B	Φ C	CB SIZE	DESCRIPTION	CB#
1	CROMOGLASS TANK PANEL	100				20	LIGHTS IN CONTROL BLDG	2
3	-					20	RECEPT ON NORTH SIDE	4
5	SLUDGE TANK PANEL	40				20	RECEPT ON SOUTH SIDE	6
7	-					20	M-800 MONITOR	8
9	RECPT UNDER PANEL	20				20	OUTSIDE LIGHTS	10
11	OVERFLOW TANK	20				20	OUTSIDE RECPT ON POLES	12
13	PULSE METER POWER MOD.	20				20	208V HEATERS ON BLD	14
15	METHANOL PUMP	20					" "	16
17	ALKALINE PUMP	20				30	WATER HEATER	18
19	SPARE	20					" "	20
21	SPARE	20				20	15 WATER PUMP	22
23	SPARE	20					" "	24
25								26
27								28
29								30
31								32
33								34
35								36
37	PUMP CONTROL PNL	125				30	TVS SUPPRESSOR	38
39								40
41								42

* BALANCE PHASE TO PHASE LOAD AS BEST AS POSSIBLE

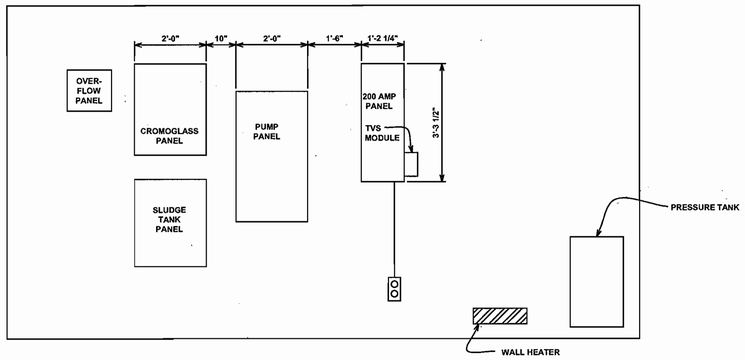

WALL DIAGRAM

NOT TO SCALE

Conduit Schedule:

Conduit Designation	Phase	Number of Conductors	Size	Nuetrals	Size	Ground	Conduit Size	Description of Feeder
C1	3	3	4/O	1	4/O	#2	4 "	Main Service feed Plus Spare 4"
C2	3	3	1	1	1	#4	1 1/2 "	Main Pump Panel
C3	1	2	#2	1	#2	#8	1"	Cromoglase Panel
C4	1	2	#10	1	#10	#12	1/2"	Or MC cable to Hot water heater
C5	1	1	#12	1	#12	#12	1/2"	Individual Circuits as shown, can be MC cable
C6	3	6	#6	-	-	(2) #8	1 1/2"	(2) 7-1/2 Hp Pump feeds
C7	1	3	#12	3	#12	#10	1"	Shared fractional Hp pump feeds for tanks
C8	1	2	#12	1	#12	#12	1/2"	Individual Circuits as shown, can be MC cable
C9	1	2	#12	2	#12	#12	1/2"	Pole light and power/Emerg. Overflow
C10	1	2	#8	1	#8	#10	3/4"	Sludge tank panel
C11	na	8	#14	-	-	#12	3/4"	Use Blue stranded wire
C12	na	20	#14	-	-	#12	3/4"	Use Blue stranded wire
C13	na	3	na	na	na	na	3"	Multipair Shielded Cable (3)
EC							1"	Empty Conduit for future use

*Note:
#10 AWG or smaller can use metal clad cable w/gnd for wiring inside of control building

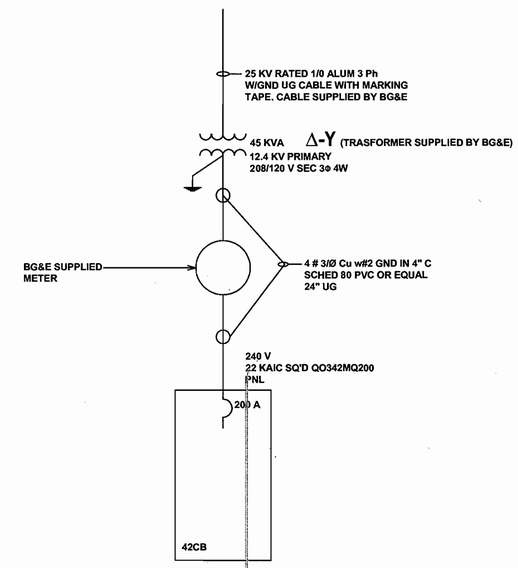

SINGLE LINE DIAGRAM

NOT TO SCALE

APPROVED: FOR PRIVATE SHARED SEWERAGE SYSTEM FOR LOTS 1, 2, 3, 4, 5, 6, 15, 16, 17, 18, AND 19.
HOWARD COUNTY HEALTH DEPARTMENT

for HOWARD COUNTY HEALTH OFFICER — DATE 1/29/07

HOWARD SOIL CONSERVATIONS DISTRICT:
REVEWED FOR HOWARD COUNTY SOIL CONSERVATION DISTRICT AND MEETS TECHNICAL REQUIREMENTS.

USDA NATURAL RESOURCES CONSERVATION SERVICE — DATE

THIS PLAN IS APPROVED FOR SOIL EROSION AND SEDIMENT CONTROL BY THE HOWARD SOIL CONSERVATION DISTRICT.

HOWARD SOIL CONSERVATION DISTRICT — DATE

SEDIMENT CONTROL MEASURES FOR THIS CONTRACT WILL BE IMPLEMENTED IN ACCORDANCE WITH SECTION 219 OF THE HOWARD COUNTY STANDARDS AND SPECIFICATIONS AND AS PER ROAD CONSTRUCTION PLANS PER F-06-59.

ROSS ENGINEERING
Address: 471 KNIGHT ISLAND RD.
EARLEVILLE, MD 21919
Email: rosseng@wildblue.net
Phone: 410-920-2800,
Fax: 410-275-1315

DEPARTMENT OF PUBLIC WORKS
HOWARD COUNTY, MARYLAND
CHIEF, BUREAU OF UTILITIES — DATE 1-25-07

DEPARTMENT OF PUBLIC WORKS
HOWARD COUNTY, MARYLAND
CHIEF, DEVELOPMENT ENGINEERING DIVISION — DATE 2/20/07

McCRONE
Engineering • Environmental Sciences
Construction Services • Land Planning & Surveying
ANNAPOLIS • CENTREVILLE • DOVER • ELKTON • SALISBURY
20 RIDGELY AVENUE
ANNAPOLIS, MARYLAND 21401
PHONE (410) 267-8821 * FAX (410) 267-0932
www.mccrone-inc.com

Copyright © 2004

STATE OF MARYLAND — PROFESSIONAL ENGINEER — 12/20/06

DES: R.R.					
DRN: AD					
CHK: R.J.R.					
DATE: DEC., 2006	BY	No.	REVISION	DATE	JOB No. C1040062

PANEL SCHEDULE, SINGLE LINE AND WALL PANEL LAYOUT

PEDDICORD SHARED SEPTIC SYSTEM

LOTS 1 - 19
CONTRACT # 50-4357 D
TAX MAP NO. 29 - GRID NO. 1 - PARCEL 268
ELECTION DISTRICT No. 5
HOWARD COUNTY, MARYLAND

SCALE AS SHOWN

SHEET E-6

CADD FILE: G:\LI\1040062 - Peddicord Property\Drawings\SHARED SEPTIC DESIGN\Elect Drawings V2.dwg ------ Tab.....E6

PLOTTED: Dec 28 , 2006 - 2:20pm

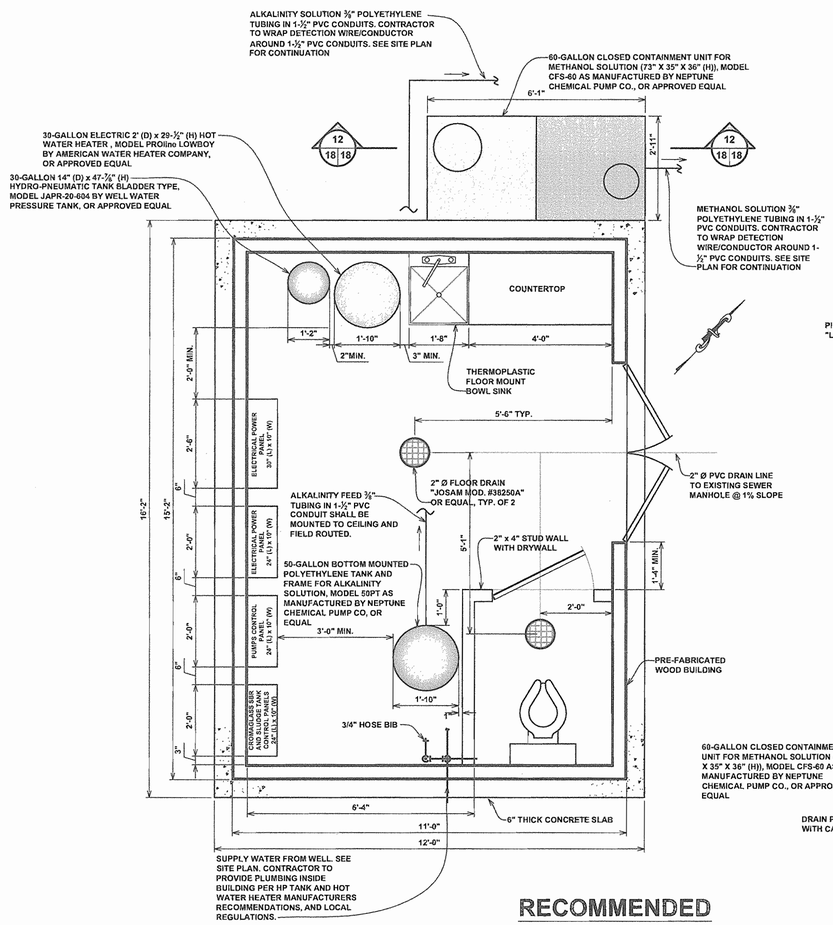

CONTROL BUILDING LAYOUT PLAN

SCALE: 1/2" = 1'-0"

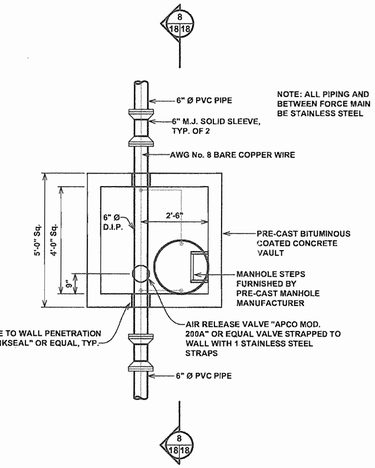

AIR RELEASE VALVE VAULT PLAN

SCALE: 3/8" = 1'-0"

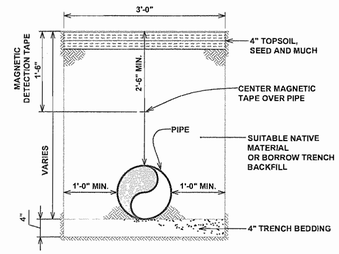

TRENCH DETAIL

NOT TO SCALE

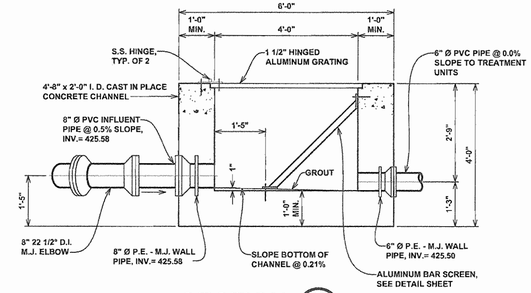

SECTION 9 (18/18)

SCALE: 1/2" = 1'-0"

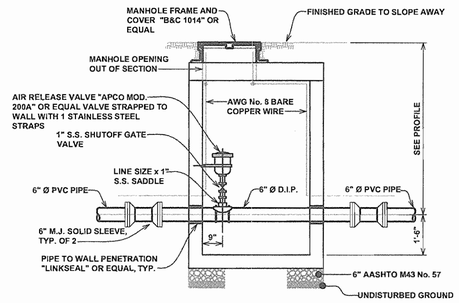

SECTION 8 (18/18)

SCALE: 3/8" = 1'-0"

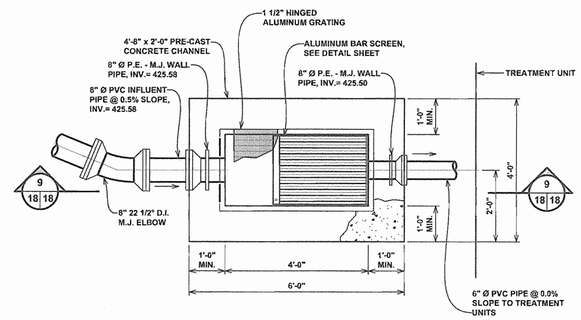

PLAN

BAR SCREEN CHANNEL DETAIL

SCALE: 1/2" = 1'-0"

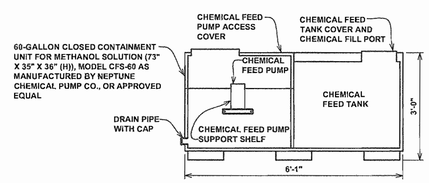

SECTION 12 (18/18)

NOT TO SCALE

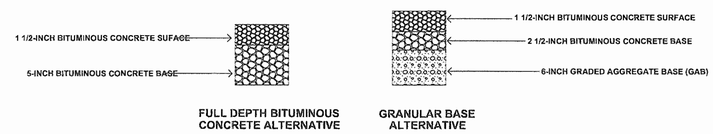

PAVING SECTION DETAIL

NOT TO SCALE

RECOMMENDED CHEMICAL FEED RATE AND TIME

ALKALINITY	
Chemical Feed Rate, ml/min	Recommended Chemical Feed Time, min
1.17	270
2	158
3	105
4	79
5	63
6	53
7	45
8	40
9	35
10	32
11	29
12	26
13	24
14	23
15	21
16	20
17	19
18	18
19	17
20	16
21	15
22	14
23	14
24	13
25	13
26	12
27	12
28	11

METHANOL	
Chemical Feed Rate, ml/min	Recommended Chemical Feed Time, min
0.82	90
2	37
3	25
4	19
5	15
6	12
7	11
8	9
9	8
10	7
11	7
12	6
13	6
14	5
15	5
16	5
17	4
18	4
19	4
20	4
21	4
22	3
23	3
24	3
25	3
26	3
27	3
28	3

NOTE:
1) METHANOL ADDITION IS RECOMMENDED DURING ANOXIC PHASE OF TREATMENT CYCLE (REFER TO SHEET 11 OF 18);

2) ALKALINITY SOLUTION ADDITION IS RECOMMEDED DURING AEROBIC PHASE OF TREATMENT CYCLE (REFER TO SHEET 11 OF 18);

3) MAXIMUM RECOMMENDED FEED TIME OF ALAKALINITY SOLUTION IS 270 MIN AT RECOMMEDED FEED RATE (270 MIN EQUAL TO ANOXIC PHASE PERIOD PER CROMAGLASS TREATMENT CYCLE DIAGRAM, REFER TO SHEET 11 OF 18);

4) MAXIMUM RECOMMENDED FEED TIME FOR METHANOL IS 90 MIN AT RECOMMEDED FEED RATE (90 MIN EQUAL TO AEROBIC PHASE PERIOD PER CROMAGLASS TREATMENT CYCLE DIAGRAM, REFER TO SHEET 11 OF 18).

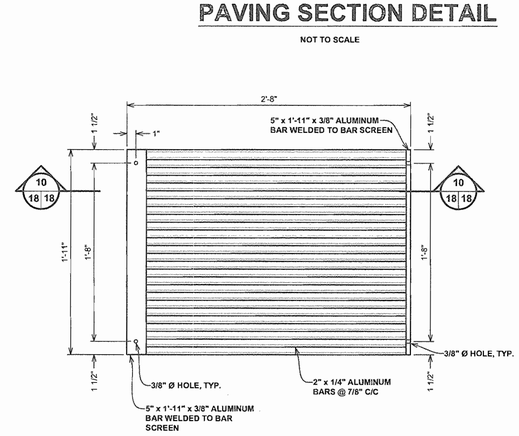

PLAN

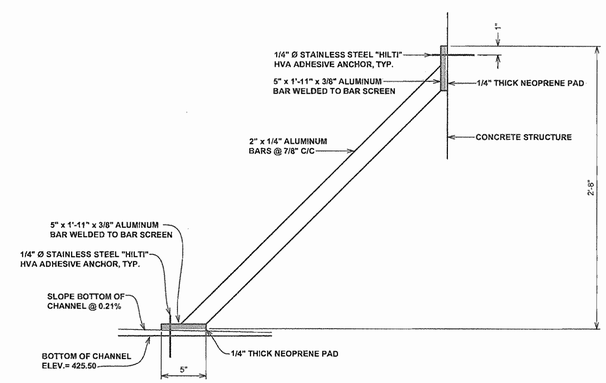

SECTION 10 (18/18)

SCALE: 3/8" = 1'-0"

BAR SCREEN DETAIL

SCALE: 1 1/2" = 1'-0"

APPROVED: FOR PRIVATE SHARED SEWERAGE SYSTEM FOR LOTS 1, 2, 3, 4, 5, 6, 15, 16, 17, 18, AND 19.
HOWARD COUNTY HEALTH DEPARTMENT

for Robert Weber — 1/19/07
HOWARD COUNTY HEALTH OFFICER — DATE

HOWARD SOIL CONSERVATIONS DISTRICT:
REVEWED FOR HOWARD COUNTY SOIL CONSERVATION DISTRICT AND MEETS TECHNICAL REQUIREMENTS.

USDA NATURAL RESOURCES CONSERVATION SERVICE — DATE

THIS PLAN IS APPROVED FOR SOIL EROSION AND SEDIMENT CONTROL BY THE HOWARD SOIL CONSERVATION DISTRICT.

HOWARD SOIL CONSERVATION DISTRICT — DATE

SEDIMENT CONTROL MEASURES FOR THIS CONTRACT WILL BE IMPLEMENTED IN ACCORDANCE WITH SECTION 219 OF THE HOWARD COUNTY STANDARDS AND SPECIFICATIONS AND AS PER ROAD CONSTRUCTION PLANS PER F-06-89.

DEPARTMENT OF PUBLIC WORKS HOWARD COUNTY, MARYLAND	DEPARTMENT OF PUBLIC WORKS HOWARD COUNTY, MARYLAND	McCRONE
1-25-07	2/27/07	Engineering • Environmental Sciences • Construction Services • Land Planning & Surveying; ANNAPOLIS • CENTREVILLE • DOVER • ELKTON • SALISBURY; 20 RIDGELY AVENUE ANNAPOLIS, MARYLAND 21401; PHONE (410) 267-8821 * FAX (410) 267-0932; www.mccrone-inc.com; Copyright © 2004
CHIEF, BUREAU OF UTILITIES — DATE	CHIEF, DEVELOPMENT ENGINEERING DIVISION — DATE	

STATE OF MARYLAND — REGISTERED PROFESSIONAL ENGINEER — No. 30728 — 12/28/06

DES: B.T.D., N.V.S.			
DRN: B.T.D., N.V.S.			
CHK: R.J.R.			
DATE: DEC., 2006	BY	No.	REVISION
	SD	1	SUBDIVISION NAME

DETAILS

JOB No. C1040062

Sheppards Manor

~~PEDDICORD~~ SHARED SEPTIC SYSTEM

LOTS 1 - 19
CONTRACT # 30-4867 D
TAX MAP NO. 29 - GRID NO. 1 - PARCEL 268
ELECTION DISTRICT No. 5
HOWARD COUNTY, MARYLAND

SCALE AS SHOWN

SHEET 18 OF 18

CADD FILE: G:\1040062 – Peddicord Property\Drawings\SHARED SEPTIC DESIGN\DETAILS_REV03.dwg

PLOTTED: Dec 28, 2006 – 11:26am

Tab.....18 of 18

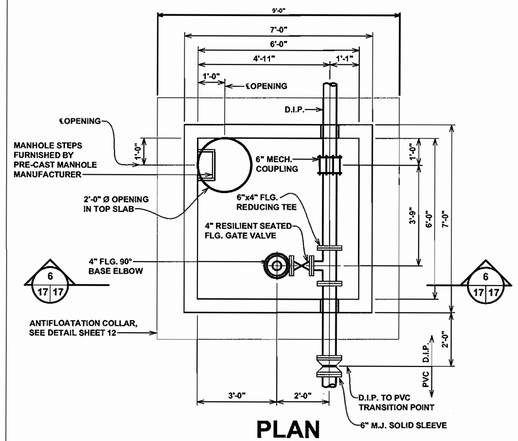

PLAN

SCALE: 3/8" = 1'-0"

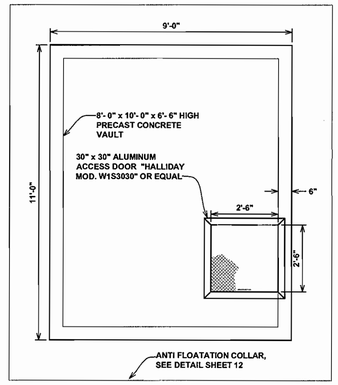

VALVE VAULT TOP SLAB

SCALE: 3/8" = 1'-0"

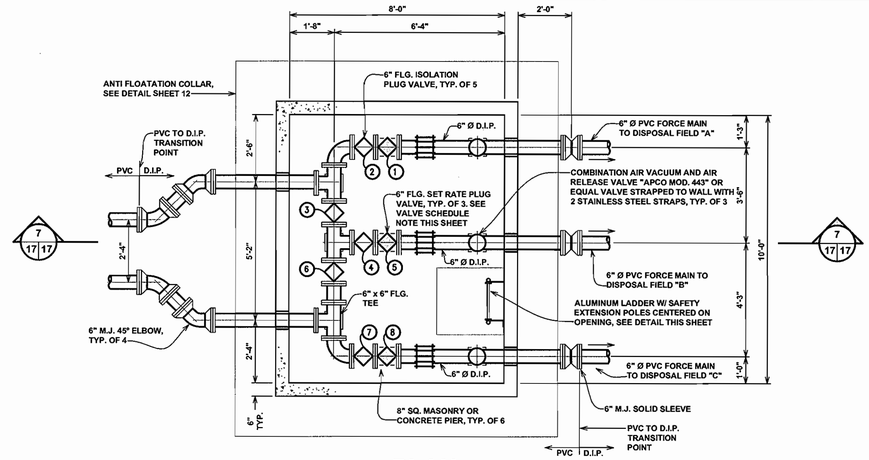

PLAN

SCALE: 3/8" = 1'-0"

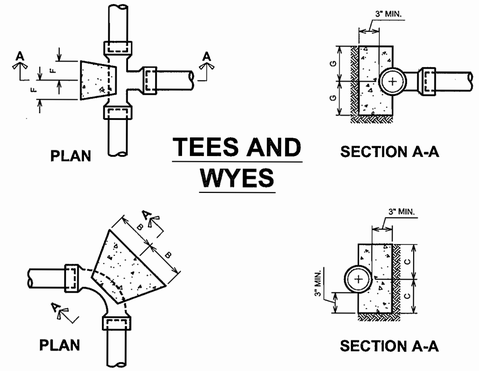

TEES AND WYES

90° HORIZONTAL BENDS

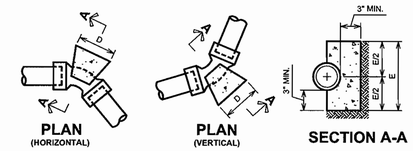

90° HORIZONTAL BENDS

BUTTRESS DIMENSIONS						
PIPE SIZE	B	C	D	E	F	G
1 1/2" OR 2"	4 1/2"	4 1/2"	5"	9"	4 1/2"	4"
2"	5"	5"	7"	7"	5"	5"
2 1/2"	5"	5"	7"	7"	5"	5"
3"	6"	6"	9"	9"	6"	6"

NOTES:
1. FC=3000 P.S.I. @ 28 DAYS
2. CARRY ALL BEARING SURFACES TO UNDISTURBED GROUND OR FIRM SUBGRADE.
3. BUTTRESS SIZED FOR 160 P.S.I. AND SOIL WITH C = 2000 P.S.I.

11 1/4°, 22 1/2°, 45° HORIZONTAL AND LOWER VERTICAL BENDS

NOT TO SCALE

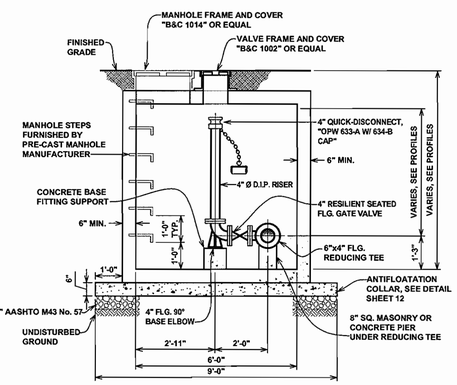

BLOW-OFF VAULT SECTION (6 / 17 17)

SCALE: 3/8" = 1'-0"

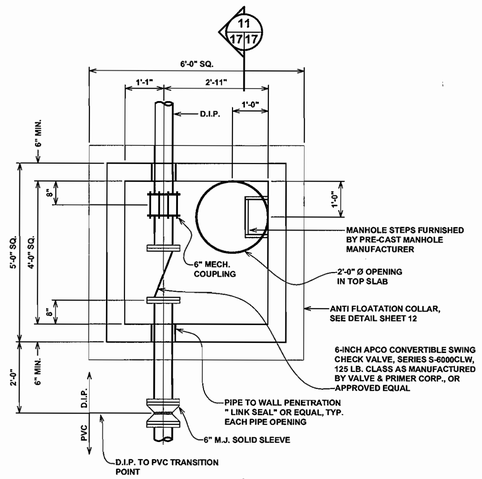

CHECK VALVE VAULT PLAN (11 / 17 17)

SCALE: 1/2" = 1'-0"

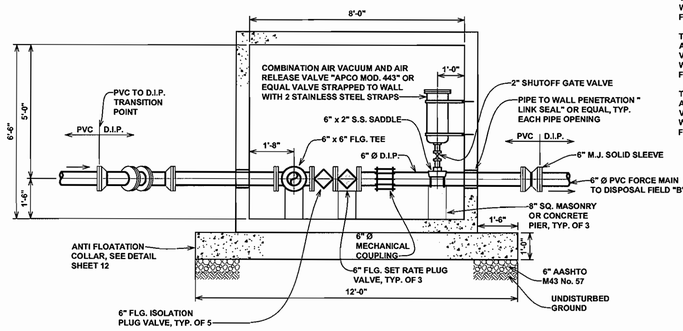

VALVE VAULT SECTION (7 / 17 17)

SCALE: 3/8" = 1'-0"

VALVE SCHEDULE NOTE:

TO PUMP TREATED WASTEWATER TO FIELDS "A" AND "B" OPEN VALVES 2, 4 AND 6, AND CLOSE VALVES 3 AND 7. ADJUST FLOW TO FIELD "A" WITH SET RATE PLUG VALVE 1, AND FLOW TO FIELD "B" WITH VALVE 5.

TO PUMP TREATED WASTEWATER TO FIELDS "B" AND "C" OPEN VALVES 3, 4 AND 7, AND CLOSE VALVES 2 AND 6. ADJUST FLOW TO FIELD "B" WITH SET RATE PLUG VALVE 5, AND FLOW TO FIELD "C" WITH VALVE 6.

TO PUMP TREATED WASTEWATER TO FIELDS "A" AND "C" OPEN VALVES 2 AND 7, AND CLOSE VALVES 3, 4 AND 6. ADJUST FLOW TO FIELD "A" WITH SET RATE PLUG VALVE 1, AND FLOW TO FIELD "C" WITH VALVE 8.

NOTES:

1. THE CONTRACTOR TO INSTALL TOPS OF DISTRIBUTION BOX, VALVE BOX AND TURF BOX ALL AT GRADE TO MINIMIZE PROTRUSIONS ABOVE GRADE.
2. THE CONTRACTOR TO FRAME AND GRAVEL THE AREA IMMEDIATELY SURROUNDING THE DISTRIBUTION BOX; ENCOMPASS THE CLEANOUT STANDPIPES TO ASSIST WITH GROUNDS MAINTENANCE.

APPROVED: FOR PRIVATE SHARED SEWERAGE SYSTEM FOR LOTS 1, 2, 3, 4, 5, 6, 15, 16, 17, 18, AND 19.
HOWARD COUNTY HEALTH DEPARTMENT

for Robert J. Weber — 1/19/07
HOWARD COUNTY HEALTH OFFICER — DATE

HOWARD SOIL CONSERVATIONS DISTRICT:
REVEWED FOR HOWARD COUNTY SOIL CONSERVATION DISTRICT AND MEETS TECHNICAL REQUIREMENTS.

USDA NATURAL RESOURCES CONSERVATION SERVICE — DATE

THIS PLAN IS APPROVED FOR SOIL EROSION AND SEDIMENT CONTROL BY THE HOWARD SOIL CONSERVATION DISTRICT.

HOWARD SOIL CONSERVATION DISTRICT — DATE

SEDIMENT CONTROL MEASURES FOR THIS CONTRACT WILL BE IMPLEMENTED IN ACCORDANCE WITH SECTION 219 OF THE HOWARD COUNTY STANDARDS AND SPECIFICATIONS AND AS PER ROAD CONSTRUCTION PLANS PER F-06-99.

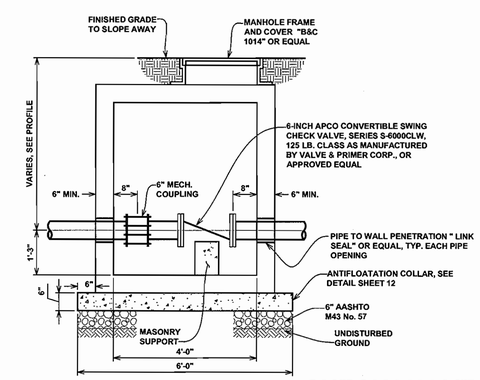

NOTE: CONTRACTOR TO PROVIDE RISER RINGS FOR MANHOLE AS NEEDED

CHECK VALVE VAULT SECTION (11 / 17 17)

SCALE: 1/2" = 1'-0"

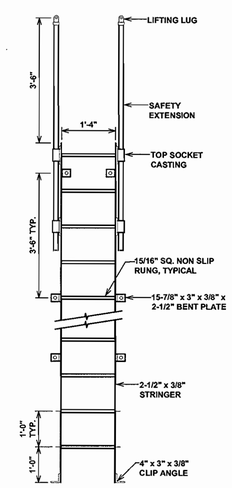

LADDER DETAIL

NOT TO SCALE

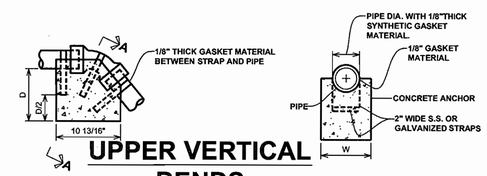

UPPER VERTICAL BENDS

NOT TO SCALE

BEND		SIZE IN INCHES		
		1 1/4", 1 1/2"	2", 2-1/2"	3"
11 1/4°	L	12	15	18
	W	10	12	15
	D	10	15	15
22 1/2°	L	15	20	20
	W	15	20	20
	D	12	12	18
45°	L	20	24	24
	W	20	20	24
	D	12	20	24

PLOTTED: Dec 28 , 2006 – 11:25am

DEPARTMENT OF PUBLIC WORKS
HOWARD COUNTY, MARYLAND
CHIEF, BUREAU OF UTILITIES — DATE 1-25-07

DEPARTMENT OF PUBLIC WORKS
HOWARD COUNTY, MARYLAND
CHIEF, DEVELOPMENT ENGINEERING DIVISION — DATE 1/19/07

McCRONE
Engineering • Environmental Sciences
Construction Services • Land Planning & Surveying
ANNAPOLIS • CENTREVILLE • DOVER • ELKTON • SALISBURY
20 RIDGELY AVENUE
ANNAPOLIS, MARYLAND 21401
PHONE (410) 267-8021 * FAX (410) 267-5932
www.mccrone-inc.com

Copyright © 2004

STATE OF MARYLAND — ROBERT J. WEBER — No. 10794 — PROFESSIONAL ENGINEER — 12/28/06

DES: B.T.D., N.V.S.
DRN: B.T.D., N.V.S.
CHK: R.J.R.
DATE: DEC., 2006

BY	No.	REVISION	DATE
SD	1	SUBDIVISION NAME	4/10/07

DETAILS

JOB No. C1040062

SHEPPARD MANOR
~~PEDDICORD~~ SHARED SEPTIC SYSTEM
LOTS 1 - 19
CONTRACT # 50-4387 D
TAX MAP NO. 29 - GRID NO. 1 - PARCEL 268
ELECTION DISTRICT No. 5
HOWARD COUNTY, MARYLAND

SCALE AS SHOWN

SHEET 17 OF 18

CADD FILE: G:\1040062 – Peddicord Property\Drawings\SHARED SEPTIC DESIGN\DETAILS_REV03.dwg ------ Tab.....17 of 18

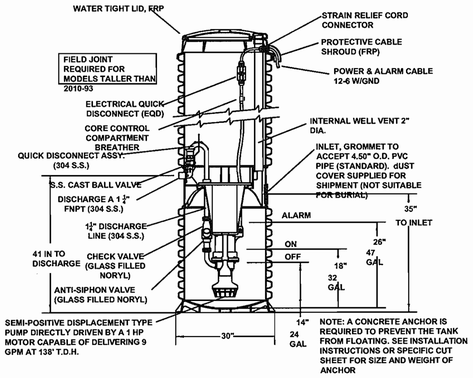

SIMPLEX ENVIRONMENT ONE GRINDER PUMP

NOT TO SCALE

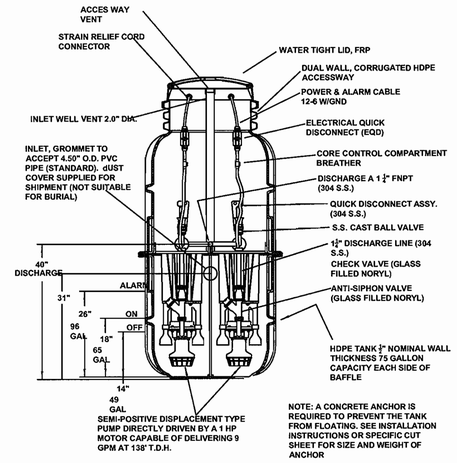

DUPLEX ENVIRONMENT ONE GRINDER PUMP

NOT TO SCALE

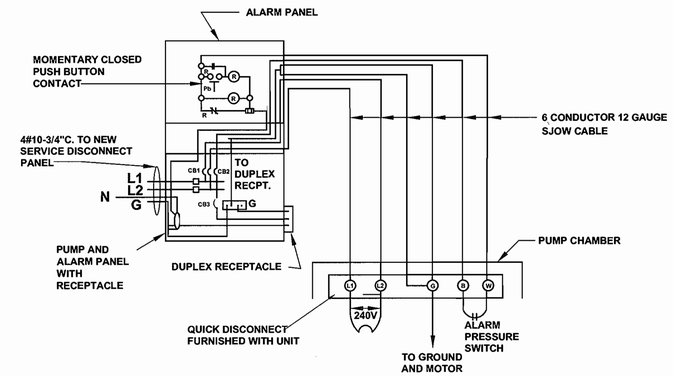

SEWAGE GRINDER PUMP WIRING DIAGRAM (240 v) TYPICAL EACH PUMP UNIT

NOT TO SCALE

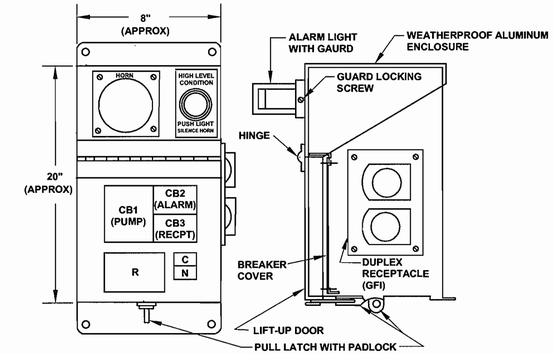

GRINDER PUMP CONTROL & ALARM PANEL

NOT TO SCALE

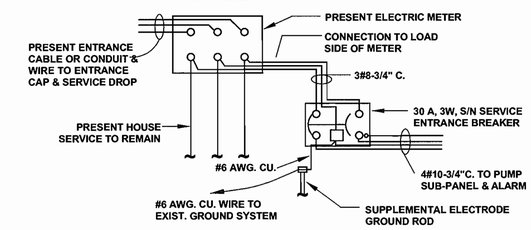

NOTE:
30A BREAKER TO BE EQUIPPED WITH A NON-CASE HARDENED PADLOCK THAT CAN BE CUT WITH "BOLT CUTTERS".

NEW SERVICE ENTRANCE WIRING DIAGRAM

NOT TO SCALE

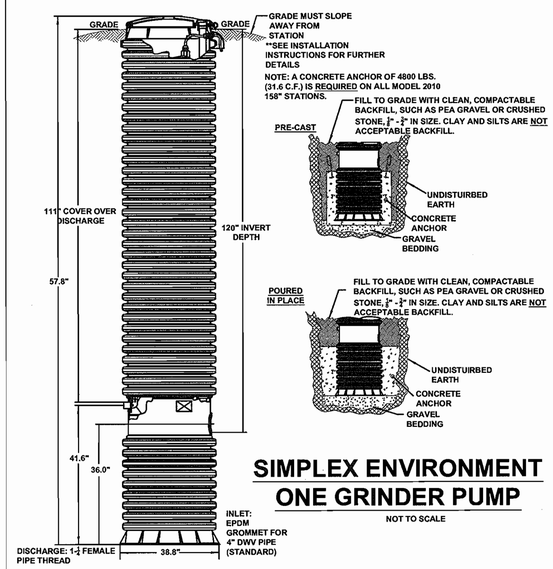

SIMPLEX ENVIRONMENT ONE GRINDER PUMP

NOT TO SCALE

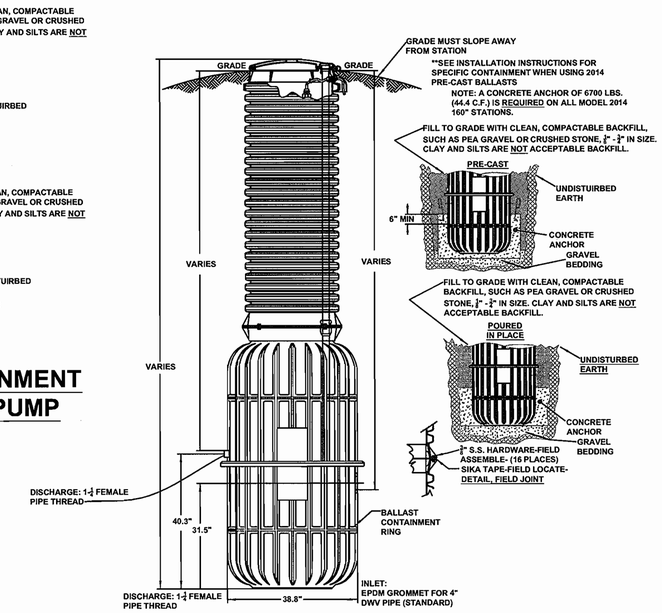

NOTE:
1) CONTRACTOR TO USE STAINLESS STEEL ADAPTER TO 1-3/4 FEMALE PIPE THREAD AT DISCHARGE, NIPPLE AND PIPE TO ELBOW, AND RUN VERTICALLY UP OUTSIDE OF PUMP CHAMBER TO 48" DEPTH FOR DISCHARGE.

2) CONTRACTOR TO INSTALL STAINLESS STEEL GATE VALVE WITH A VALVE BOX ON 48-INCH DEEP DISCHARGE LINE.

DUPLEX ENVIRONMENT ONE GRINDER PUMP

NOT TO SCALE

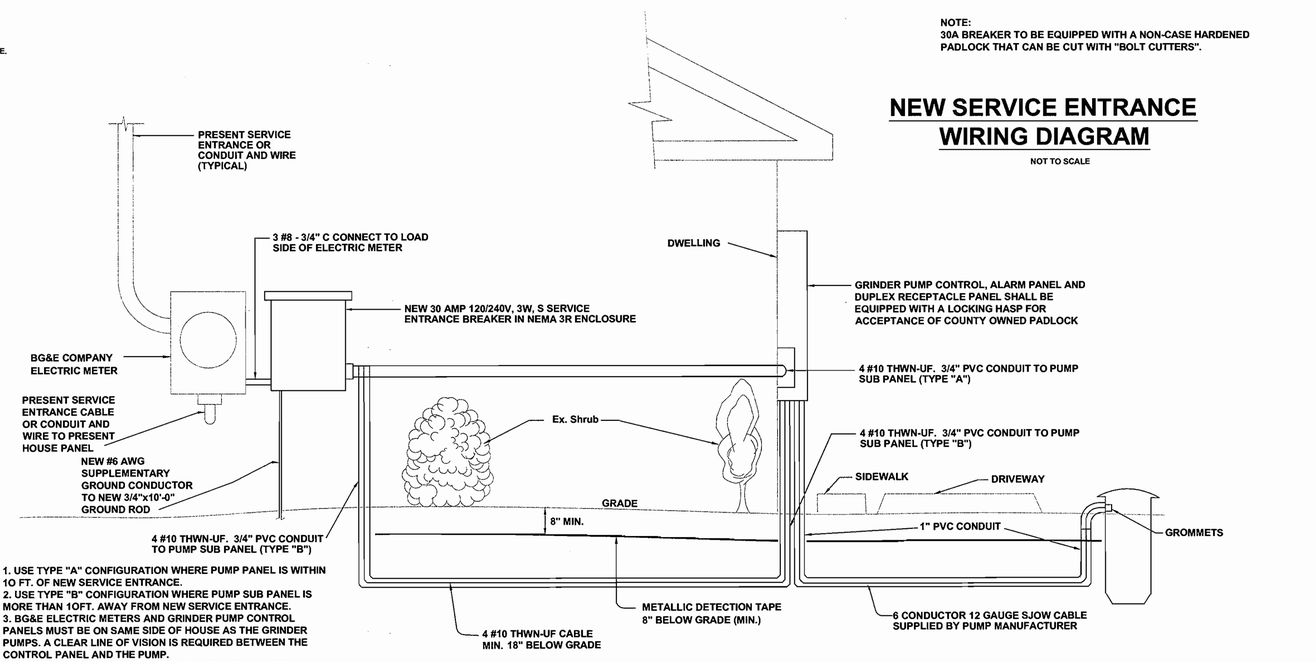

1. USE TYPE "A" CONFIGURATION WHERE PUMP PANEL IS WITHIN 10 FT. OF NEW SERVICE ENTRANCE.
2. USE TYPE "B" CONFIGURATION WHERE PUMP SUB PANEL IS MORE THAN 10FT. AWAY FROM NEW SERVICE ENTRANCE.
3. BG&E ELECTRIC METERS AND GRINDER PUMP CONTROL PANELS MUST BE ON SAME SIDE OF HOUSE AS THE GRINDER PUMPS. A CLEAR LINE OF VISION IS REQUIRED BETWEEN THE CONTROL PANEL AND THE PUMP.
4. INCLUDE A DISCONNECT NEXT TO THE ELECTRIC METER, BETWEEN THE METER AND CONTROL PANEL.
5. CONNECTIONS TO ELECTRIC METER SHALL BE COORDINATED WITH POWER COMPANY.
6. PROVIDE LOCKING HASP ON SERVICE BREAKER FOR ACCEPTANCE OF COUNTY OWNED LOCK.
7. CONTROL PANEL MUST BE DIRECT WIRED FROM ELECTRCIAL SERVICE BOX (BGE's).
8. PROVIDE SEALING BOX 6" BELOW CONTROL PANEL ON HOUSE IN LINE WITH CONDUIT; SEAL WITH CHICO WATERTIGHT SEALANT TO CREATE VAPOR LOCK.

TYPICAL GRINDER PUMP ELECTRIC POWER

NOT TO SCALE

APPROVED: FOR PRIVATE SHARED SEWERAGE SYSTEM FOR LOTS 1, 2, 3, 4, 5, 6, 15, 16, 17, 18, AND 19.
HOWARD COUNTY HEALTH DEPARTMENT

for HOWARD COUNTY HEALTH OFFICER	1/19/07 DATE
HOWARD SOIL CONSERVATIONS DISTRICT: REVEWED FOR HOWARD COUNTY SOIL CONSERVATION DISTRICT AND MEETS TECHNICAL REQUIREMENTS.	
USDA NATURAL RESOURCES CONSERVATION SERVICE	DATE
THIS PLAN IS APPROVED FOR SOIL EROSION AND SEDIMENT CONTROL BY THE HOWARD SOIL CONSERVATION DISTRICT.	
HOWARD SOIL CONSERVATION DISTRICT	DATE
SEDIMENT CONTROL MEASURES FOR THIS CONTRACT WILL BE IMPLEMENTED IN ACCORDANCE WITH SECTION 219 OF THE HOWARD COUNTY STANDARDS AND SPECIFICATIONS AND AS PER ROAD CONSTRUCTION PLANS PER F-06-99.	

DEPARTMENT OF PUBLIC WORKS HOWARD COUNTY, MARYLAND	DEPARTMENT OF PUBLIC WORKS HOWARD COUNTY, MARYLAND	McCRONE • Engineering • Environmental Sciences • Construction Services • Land Planning & Surveying ANNAPOLIS • CENTREVILLE • DOVER • ELKTON • SALISBURY 30 RIDGELY AVENUE ANNAPOLIS, MARYLAND 21401 PHONE (410) 267-8821 * FAX (410) 267-9932 www.mccrone-inc.com Copyright © 2004	STATE OF MARYLAND REGISTERED PROFESSIONAL ENGINEER 12/28/06
1-25-07 CHIEF, BUREAU OF UTILITIES DATE	1/10/07 CHIEF, DEVELOPMENT ENGINEERING DIVISION DATE	DES: B.T.D., N.V.S. / DRN: B.T.D., N.V.S. / CHK: R.J.R. / DATE: DEC., 2006	BY / No. / REVISION / DATE: SD 1 / SUBDIVISION NAME / 4/10/07

E-ONE GRINDER PUMPS DETAIL

JOB No. C1040062

Sheppard Manor
~~PEDDICORD~~ SHARED SEPTIC SYSTEM
LOTS 1 - 19
CONTRACT # 15-04357D
TAX MAP NO. 29 - GRID NO. 1 - PARCEL 268
ELECTION DISTRICT No. 5
HOWARD COUNTY, MARYLAND

SCALE AS SHOWN

SHEET 16 OF 18

CADD FILE: G:\1040062 – Peddicord Property\Drawings\SHARED SEPTIC DESIGN\DETAILS_REV03.dwg ------ Tab.....16 of 18

PLOTTED: Dec 28 , 2006 – 11:23am

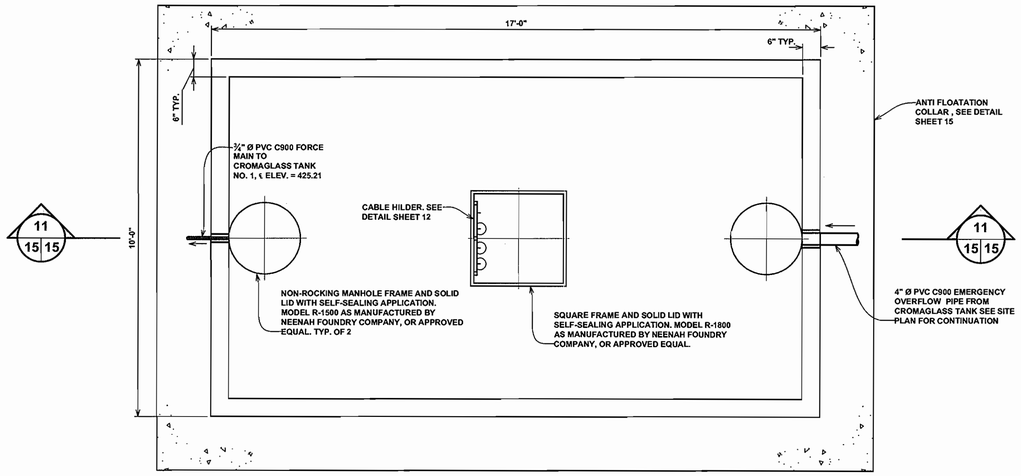

EMERGENCY OVERFLOW TANK (EOT) PLAN

SCALE: 1/2" = 1'-0"

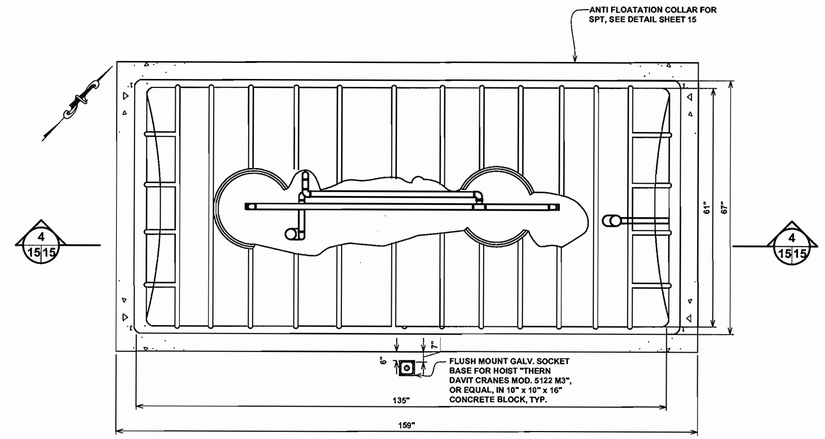

1,300 GALLON SLUDGE PROCESSING TANK PLAN

NOT TO SCALE

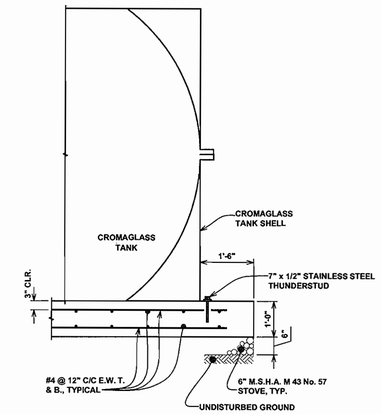

NOTE:
1. SLAB SHALL BE LEVEL TO WITHIN ±¼" FROM SIDE AND END TO END;
2. SLAB SHALL BE FINISHED WITH BULLFLOAT HAVING NO SIGNIFICANT RIDGES OR DEPRESSIONS;
3. SLAB SHALL BE CONSTRUCTED OF MINIMUM 3,000 PSI TEST CONCRETE;
4. CURE TIME SHALL BE MINIMUM 7 DAYS PRIOR TO INSTALLATION OF THE CROMAGLASS TANKS;
5. SLAB SHALL BE SEWPT CLEAN OF ALL DEBRIS IMMEDIATELY PRIOR TO TANK PLACEMENT.

CROMAGLASS ANTI FLOATATION COLLAR

NOT TO SCALE

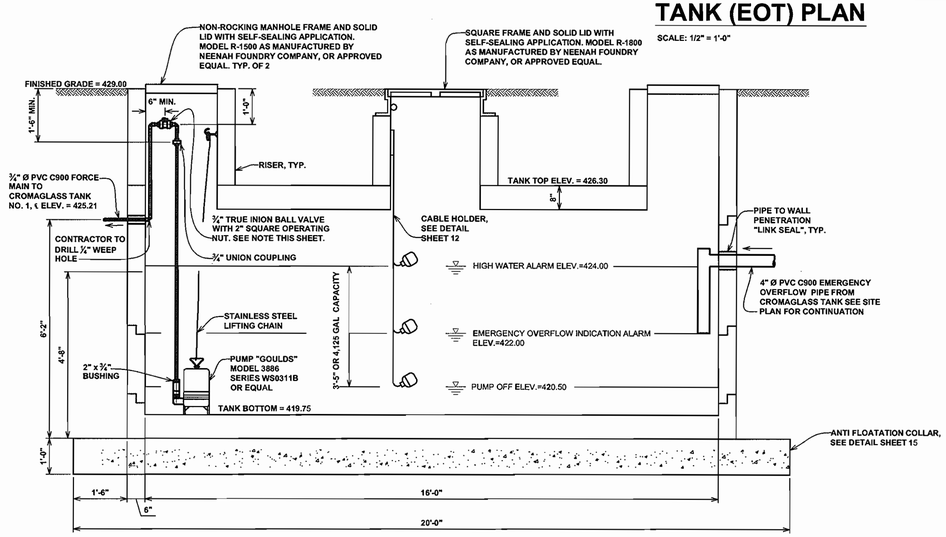

SECTION 11 / 15 15

SCALE: 1/2" = 1'-0"

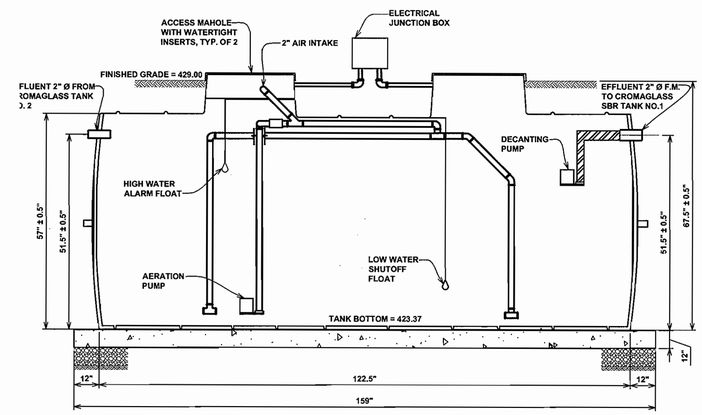

SECTION 4 / 15 15

NOT TO SCALE

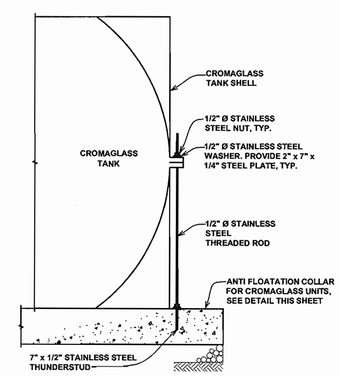

CROMAGLASS TIEDOWN DETAIL

NOT TO SCALE

APPROVED: FOR PRIVATE SHARED SEWERAGE SYSTEM FOR LOTS 1, 2, 3, 4, 5, 6, 15, 16, 17, 18, AND 19.
HOWARD COUNTY HEALTH DEPARTMENT

for HOWARD COUNTY HEALTH OFFICER	1/19/07 DATE

HOWARD SOIL CONSERVATIONS DISTRICT:
REVEWED FOR HOWARD COUNTY SOIL CONSERVATION DISTRICT AND MEETS TECHNICAL REQUIREMENTS.

USDA NATURAL RESOURCES CONSERVATION SERVICE	DATE

THIS PLAN IS APPROVED FOR SOIL EROSION AND SEDIMENT CONTROL BY THE HOWARD SOIL CONSERVATION DISTRICT.

HOWARD SOIL CONSERVATION DISTRICT	DATE

SEDIMENT CONTROL MEASURES FOR THIS CONTRACT WILL BE IMPLEMENTED IN ACCORDANCE WITH SECTION 219 OF THE HOWARD COUNTY STANDARDS AND SPECIFICATIONS AND AS PER ROAD CONSTRUCTION PLANS PER F-06-39.

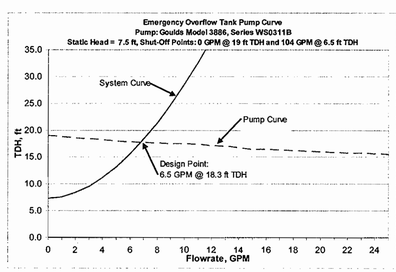

EOT PUMP CURVE, C=130

DEPARTMENT OF PUBLIC WORKS HOWARD COUNTY, MARYLAND	DEPARTMENT OF PUBLIC WORKS HOWARD COUNTY, MARYLAND	McCRONE ● Engineering ● Environmental Sciences ● Construction Services ● Land Planning & Surveying ANNAPOLIS ● CENTREVILLE ● DOVER ● ELKTON ● SALISBURY 20 RIDGELY AVENUE ANNAPOLIS, MARYLAND 21401 PHONE (410) 267-8021 * FAX (410) 267-0932 www.mccrone-inc.com Copyright © 2004	STATE OF MARYLAND REGISTERED PROFESSIONAL ENGINEER 12/28/06
CHIEF, BUREAU OF UTILITIES — DATE: 1-25-07	CHIEF, DEVELOPMENT ENGINEERING DIVISION — DATE: 2/20/07		

DES: B.T.D., N.V.S.				
DRN: B.T.D., N.V.S.				
CHK: R.J.R.				
DATE: DEC., 2006	BY: SD	No.: 1	REVISION: SUBDIVISION NAME	DATE: 4/10/07

CROMAGLASS TREATMENT UNIT AND DETAILS

JOB No. C1040062

SHEPPARDS MANOR
~~PEDDICORD~~ SHARED SEPTIC SYSTEM
LOTS 1 - 19
CONTRACT # 50-4436-7D
TAX MAP NO. 29 - GRID NO. 1 - PARCEL 268
ELECTION DISTRICT No. 5
HOWARD COUNTY, MARYLAND

SCALE AS SHOWN

SHEET 15 OF 18

CADD FILE: G:\1040062 – Peddicord Property\Drawings\SHARED SEPTIC DESIGN\DETAILS_REV03.dwg ------ Tab.....15 of 18

PLOTTED: Dec 28 , 2006 – 11:34am

NOTES:

SOLIDS RETENTION COMPARTMENT:
LENGTH = 4'-9",
WIDTH = 6'-8"

AERATION COMPARTMENT:
LENGTH = 23'-9",
WIDTH = 6'-8"

CLARIFIER COMPARTMENT:
LENGTH = 8'-11"
WIDTH = 6'-8"

TOTAL VOLUME IN SOLIDS RETENTION AND AERATION COMPARTMENTS = 7,000 GALLONS

VOLUME IN CLARIFIER COMPARTMENT = 2,186 GALLONS

AVERAGE FLOW = 4,125 GPD

SOLIDS RETENTION AND AERATION COMPARTMENTS DETENTION TIME:

$= \frac{7{,}000 \text{ GALLONS} \times 24 \text{ HRS}}{4{,}125 \text{ GPD}}$

= 40.7 HRS

CLARIFIER COMPARTMENT DETENTION TIME:

$= \frac{2{,}186 \text{ GALLONS} \times 24 \text{ HRS}}{4{,}125 \text{ GPD}}$

= 12.7 HRS

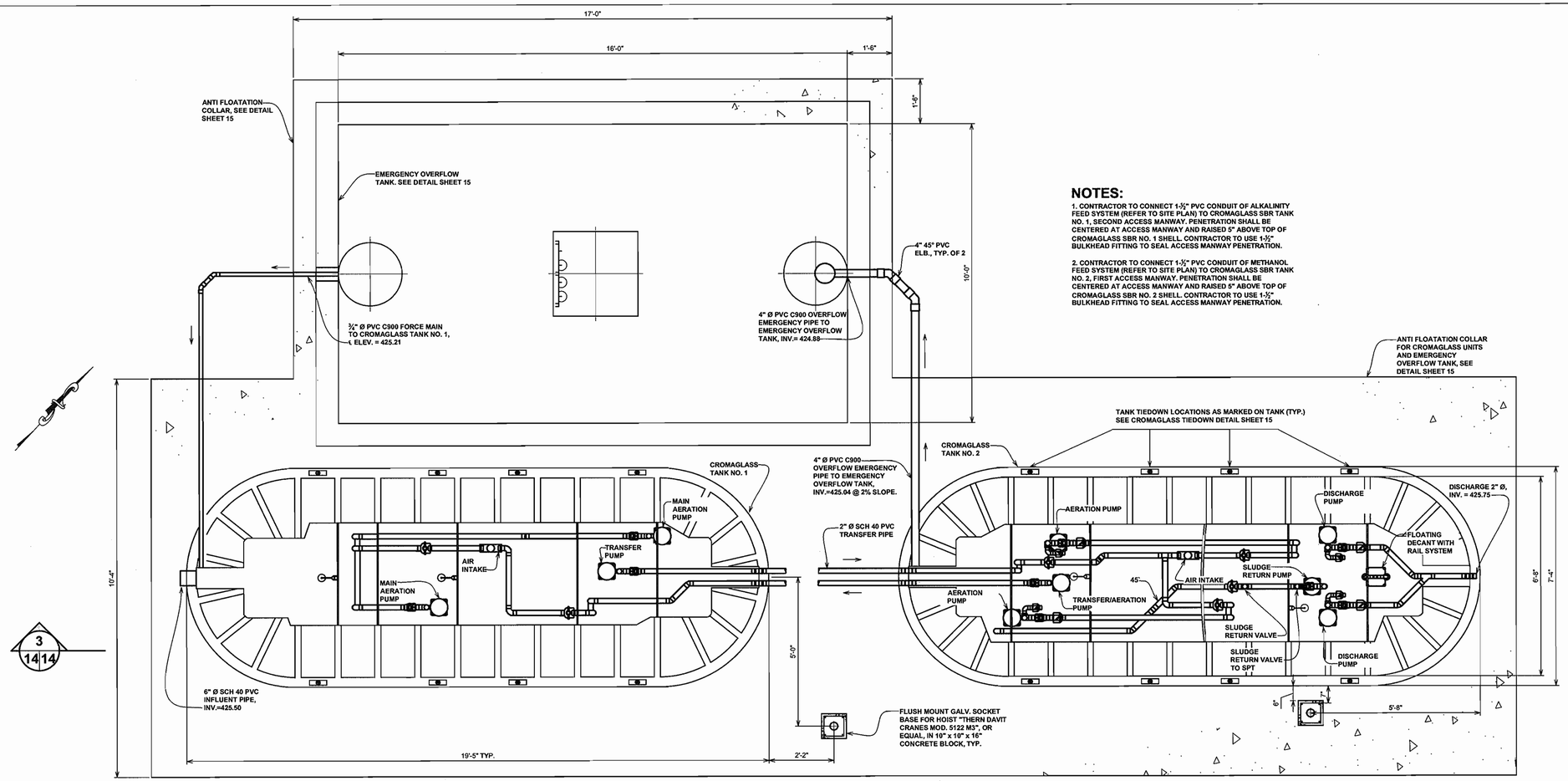

NOTES:

1. CONTRACTOR TO CONNECT 1-½" PVC CONDUIT OF ALKALINITY FEED SYSTEM (REFER TO SITE PLAN) TO CROMAGLASS SBR TANK NO. 1, SECOND ACCESS MANWAY. PENETRATION SHALL BE CENTERED AT ACCESS MANWAY AND RAISED 5" ABOVE TOP OF CROMAGLASS SBR NO. 1 SHELL. CONTRACTOR TO USE 1-½" BULKHEAD FITTING TO SEAL ACCESS MANWAY PENETRATION.

2. CONTRACTOR TO CONNECT 1-½" PVC CONDUIT OF METHANOL FEED SYSTEM (REFER TO SITE PLAN) TO CROMAGLASS SBR TANK NO. 2, FIRST ACCESS MANWAY. PENETRATION SHALL BE CENTERED AT ACCESS MANWAY AND RAISED 5" ABOVE TOP OF CROMAGLASS SBR NO. 2 SHELL. CONTRACTOR TO USE 1-½" BULKHEAD FITTING TO SEAL ACCESS MANWAY PENETRATION.

CROMAGLASS TANK NUMBER 1 AND 2 MODEL CA-100D PLAN

NOT TO SCALE

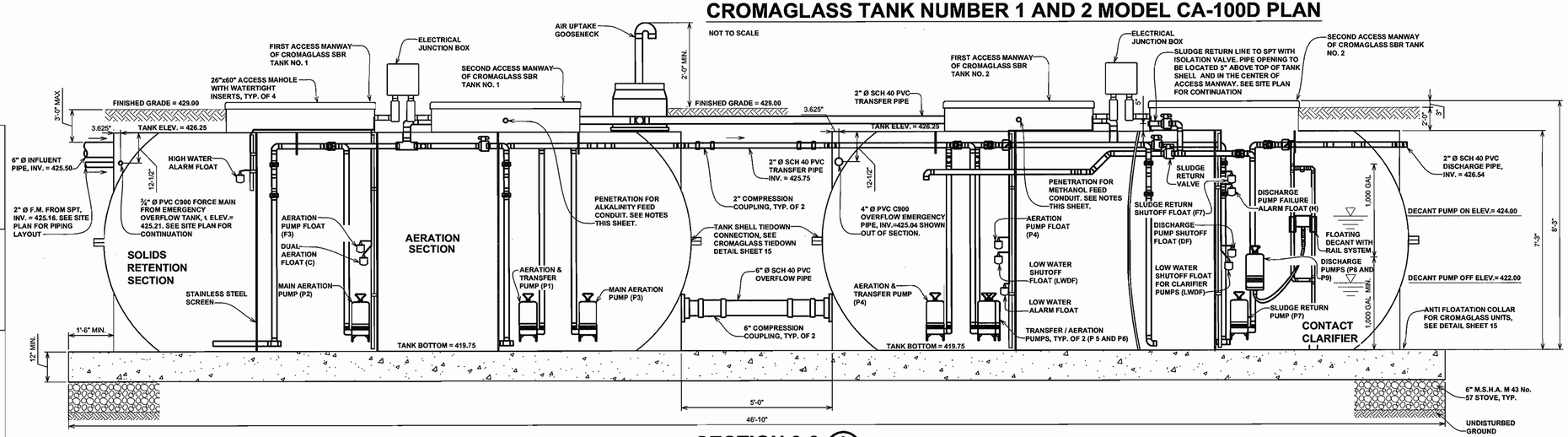

SECTION 3-3 (3 / 14 14)

NOT TO SCALE

APPROVED: FOR PRIVATE SHARED SEWERAGE SYSTEM FOR LOTS 1, 2, 3, 4, 5, 6, 15, 16, 17, 18, AND 19.
HOWARD COUNTY HEALTH DEPARTMENT

Robert J. Weber — 1/19/07
HOWARD COUNTY HEALTH OFFICER — DATE

HOWARD SOIL CONSERVATIONS DISTRICT:
REVIEWED FOR HOWARD COUNTY SOIL CONSERVATION DISTRICT AND MEETS TECHNICAL REQUIREMENTS.

USDA NATURAL RESOURCES CONSERVATION SERVICE — DATE

THIS PLAN IS APPROVED FOR SOIL EROSION AND SEDIMENT CONTROL BY THE HOWARD SOIL CONSERVATION DISTRICT.

HOWARD SOIL CONSERVATION DISTRICT — DATE

SEDIMENT CONTROL MEASURES FOR THIS CONTRACT WILL BE IMPLEMENTED IN ACCORDANCE WITH SECTION 219 OF THE HOWARD COUNTY STANDARDS AND SPECIFICATIONS AND AS PER ROAD CONSTRUCTION PLANS PER F-06-99.

DEPARTMENT OF PUBLIC WORKS
HOWARD COUNTY, MARYLAND

Ruth Rain — 1-25-07
CHIEF, BUREAU OF UTILITIES — DATE

DEPARTMENT OF PUBLIC WORKS
HOWARD COUNTY, MARYLAND

2/27/07
CHIEF, DEVELOPMENT ENGINEERING DIVISION — DATE

McCRONE
Engineering • Environmental Sciences
Construction Services • Land Planning & Surveying
ANNAPOLIS • CENTREVILLE • DOVER • ELKTON • SALISBURY
20 RIDGELY AVENUE
ANNAPOLIS, MARYLAND 21401
PHONE (410) 267-8821 * FAX (410) 267-0932
www.mccrone-inc.com

Copyright © 2004

STATE OF MARYLAND — REGISTERED PROFESSIONAL ENGINEER — 12/28/06

DES: B.T.D., N.V.S.
DRN: B.T.D., N.V.S.
CHK: R.J.R.
DATE: DEC., 2006

BY	No.	REVISION	DATE
SD	1	SUBDIVISION NAME	4/10/07

CROMAGLASS TREATMENT UNIT

JOB No. C1040062

SHEPPARDS MANOR

~~PEDDICORD~~ SHARED SEPTIC SYSTEM

LOTS 1 - 19
CONTRACT # 15-07-0357 D
TAX MAP NO. 29 - GRID NO. 1 - PARCEL 268
ELECTION DISTRICT No. 5
HOWARD COUNTY, MARYLAND

SCALE AS SHOWN

SHEET 14 OF 18

CADD FILE: G:\1040062 – Peddicord Property\Drawings\SHARED SEPTIC DESIGN\DETAILS_REV03.dwg

PLOTTED: Dec 28, 2006 – 11:14am

Tab.....14 of 18

SPECIFICATIONS:
1. CAST IRON-SLIDING TYPE MIN. T.S. 30,000 PSI
2. TOP SECTION- 16" BOTTOM SECTION 18"
3. BOXES ADJUSTABLE 34" TO 46"
4. TOP SECTION- 16" BOTTOM SECTION 30" MIN. WT. PER BOX- 100 LBS

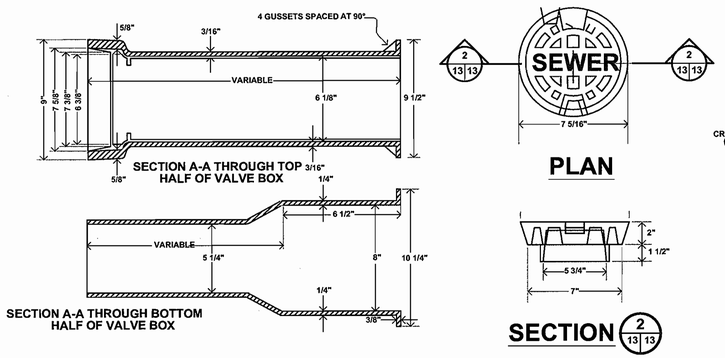

ADJUSTABLE VALVE BOX ROUND HEAD SLIDING TYPE

NOT TO SCALE

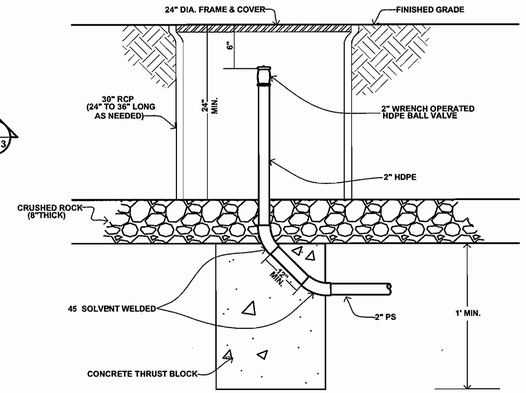

TERMINAL FLUSHING CONNECTION

NOT TO SCALE

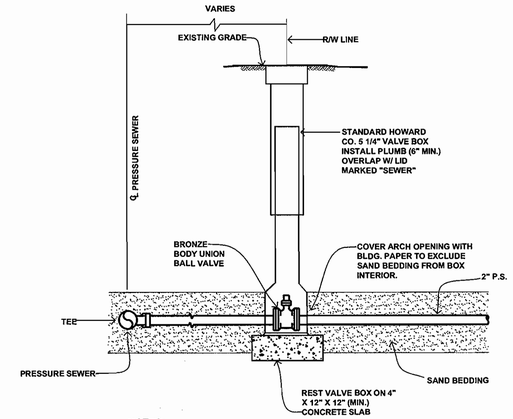

NOTES:
1. MAINTAIN 4' MIN. COVER OVER PRESSURE SEWER.
2. CONCRETE SLAB ON UNDISTURBED EARTH OR FIRM SUBGRADE.

UNION BALL VALVE ASSEMBLY

NOT TO SCALE

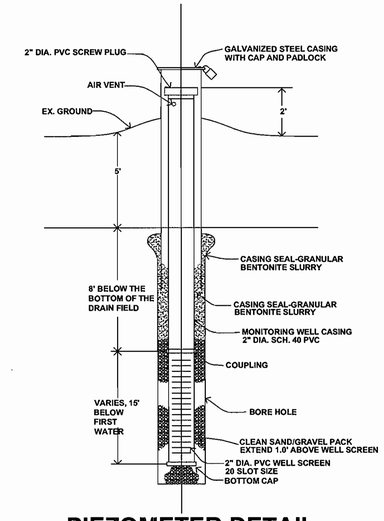

PIEZOMETER DETAIL

NOT TO SCALE

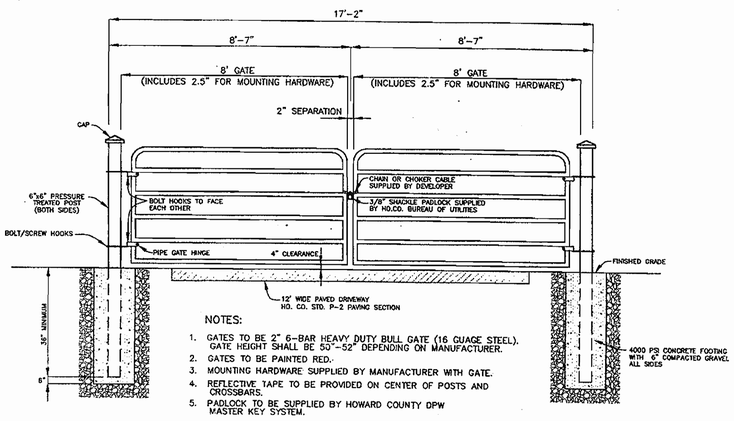

NOTES:
1. GATES TO BE 2" 6-BAR HEAVY DUTY BULL GATE (16 GUAGE STEEL). GATE HEIGHT SHALL BE 50"-52" DEPENDING ON MANUFACTURER.
2. GATES TO BE PAINTED RED.
3. MOUNTING HARDWARE SUPPLIED BY MANUFACTURER WITH GATE.
4. REFLECTIVE TAPE TO BE PROVIDED ON CENTER OF POSTS AND CROSSBARS.
5. PADLOCK TO BE SUPPLIED BY HOWARD COUNTY DPW MASTER KEY SYSTEM.

GATE DETAIL

NOT TO SCALE

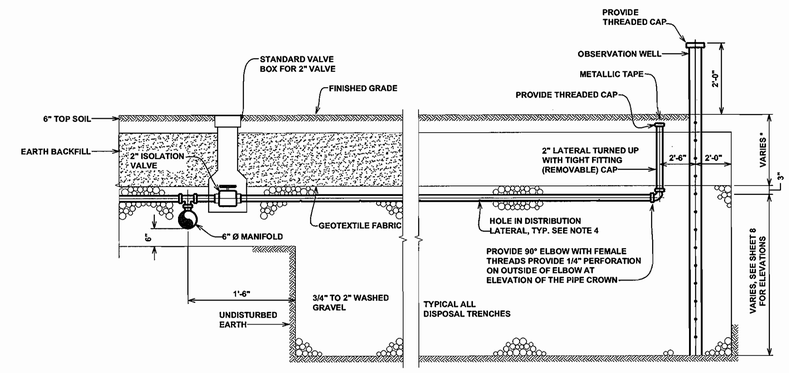

* SOIL COVER VARIES FOR EACH LATERAL WITH A MINIMUM COVER OF 2.0 FEET. THE CONTRACTOR SHALL EXCAVATE TRENCHES AS SPECIFIED IN LATERAL SIZING SUMMARY ON SHEET 8. HOWEVER THE CONTRACTOR MAY BE DIRECTED TO CHANGE THE DEPTH OF TRENCH DUE TO CAVITY MATERIALS AND INTERMITTENT RESTRICTIVE LAYERS.

TYPICAL LATERAL SECTION

SCALE: 1/2" = 1'

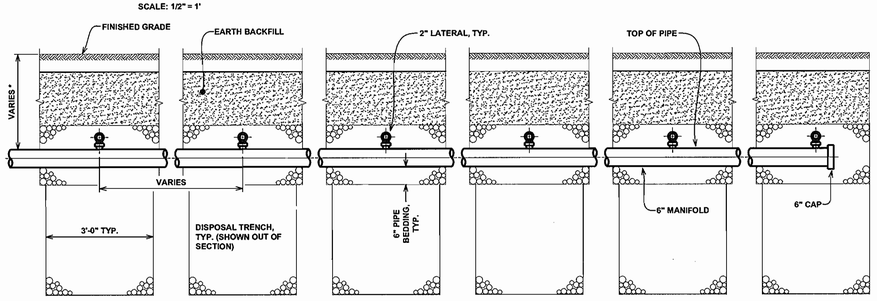

* SOIL COVER VARIES FOR EACH MANIFOLD WITH A MINIMUM COVER OF 3.0 FEET.

NOTES:

1. PROVIDE 2" THREADED CAPS AT ENDS OF ALL DISTRIBUTION LATERALS.
2. MANIFOLD PIPE AND DISTRIBUTION LATERALS TO BE INSTALLED ON LEVEL GRADE, ELEVATIONS PER LATERAL SIZING SUMMARY ON SHEET 11.
3. BOTTOM OF TRENCH TO BE EXCAVATED ON LEVEL GRADE.
4. CONTRACTOR TO DRILL HOLES IN DISTRIBUTION LATERALS DOWNWARD AS SPECIFIED IN LATERAL SIZING SUMMARY ON SHEET 11 EXCEPT FOR LAST HOLE AS NOTED ON TYPICAL LATERAL SECTION.
5. FOR TESTING THE CONTRACTOR TO PROVIDE FOUR THREADED CAP FITTINGS WITH A PRESSURE GAGE WHICH READS BETWEEN 0 AND 60 FEET.
6. THE CONTRACTOR TO INSTALL ISOLATION VALVE ON EACH LATERAL.

TYPICAL MANIFOLD SECTION

SCALE: 1/2" = 1'

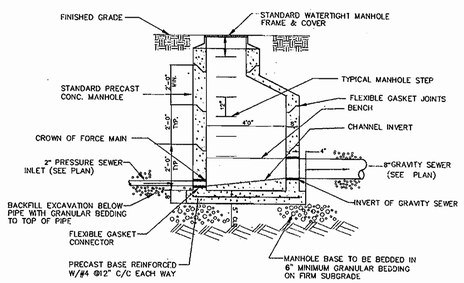

NOTES:
1. ELEVATION OF GRAVITY SEWER INVERT SHALL BE MINIMUM 0.1' ABOVE ELEVATION OF PRESSURE SEWER CROWN.
2. PROVIDE SMOOTH UPWARD SLOPING CHANNEL FROM FORCE MAIN TO GRAVITY SEWER.

TRANSITION MANHOLE: PRESSURE SEWER TO GRAVITY SEWER

NOT TO SCALE

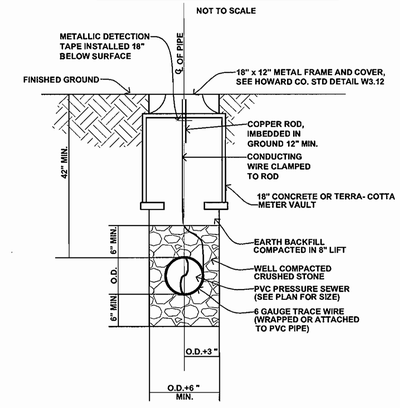

PRESSURE SEWER TRENCH, BEDDING & CONDUCTING ROD CABLE BOX LOCATION DETAIL

NOT TO SCALE

APPROVED: FOR PRIVATE SHARED SEWERAGE SYSTEM FOR LOTS 1, 2, 3, 4, 5, 6, 15, 16, 17, 18, AND 19.
HOWARD COUNTY HEALTH DEPARTMENT

for Robert J. Weber — 1/19/07
HOWARD COUNTY HEALTH OFFICER — DATE

HOWARD SOIL CONSERVATIONS DISTRICT:
REVEWED FOR HOWARD COUNTY SOIL CONSERVATION DISTRICT AND MEETS TECHNICAL REQUIREMENTS.

USDA NATURAL RESOURCES CONSERVATION SERVICE — DATE

THIS PLAN IS APPROVED FOR SOIL EROSION AND SEDIMENT CONTROL BY THE HOWARD SOIL CONSERVATION DISTRICT.

HOWARD SOIL CONSERVATION DISTRICT — DATE

SEDIMENT CONTROL MEASURES FOR THIS CONTRACT WILL BE IMPLEMENTED IN ACCORDANCE WITH SECTION 219 OF THE HOWARD COUNTY STANDARDS AND SPECIFICATIONS AND AS PER ROAD CONSTRUCTION PLANS PER F-06-99.

DEPARTMENT OF PUBLIC WORKS HOWARD COUNTY, MARYLAND	DEPARTMENT OF PUBLIC WORKS HOWARD COUNTY, MARYLAND	McCRONE		DES: B.T.D., N.V.S.				DETAILS	~~PEDDICORD~~ SHARED SEPTIC SYSTEM	SCALE AS SHOWN
		Engineering · Environmental Sciences · Construction Services · Land Planning & Surveying · ANNAPOLIS • CENTREVILLE • DOVER • ELKTON • SALISBURY · 20 RIDGELY AVENUE ANNAPOLIS, MARYLAND 21401 · PHONE (410) 267-8825 • FAX (410) 267-8932 · www.mccrone-inc.com · Copyright © 2004	STATE OF MARYLAND PROFESSIONAL ENGINEER 12/28/06	DRN: B.T.D., N.V.S.					LOTS 1 - 19 CONTRACT # 60-4-0867 D TAX MAP NO. 29 - GRID NO. 1 - PARCEL 268 ELECTION DISTRICT No. 5 HOWARD COUNTY, MARYLAND	SHEET 13 OF 18
Robert Brian 1-25-07	2/07/07			CHK: R.J.R.						
CHIEF, BUREAU OF UTILITIES — DATE	CHIEF, DEVELOPMENT ENGINEERING DIVISION — DATE			DATE: DEC., 2006	BY	No.	REVISION	DATE	JOB No. C1040062	
					SD	1	SUBDIVISION NAME	4/10/07		

Sheppards Manor

CADD FILE: G:\1040062 – Peddicord Property\Drawings\SHARED SEPTIC DESIGN\DETAILS_REV03.dwg — Tab.....13 of 18

PLOTTED: Dec 28 , 2006 – 11:12am

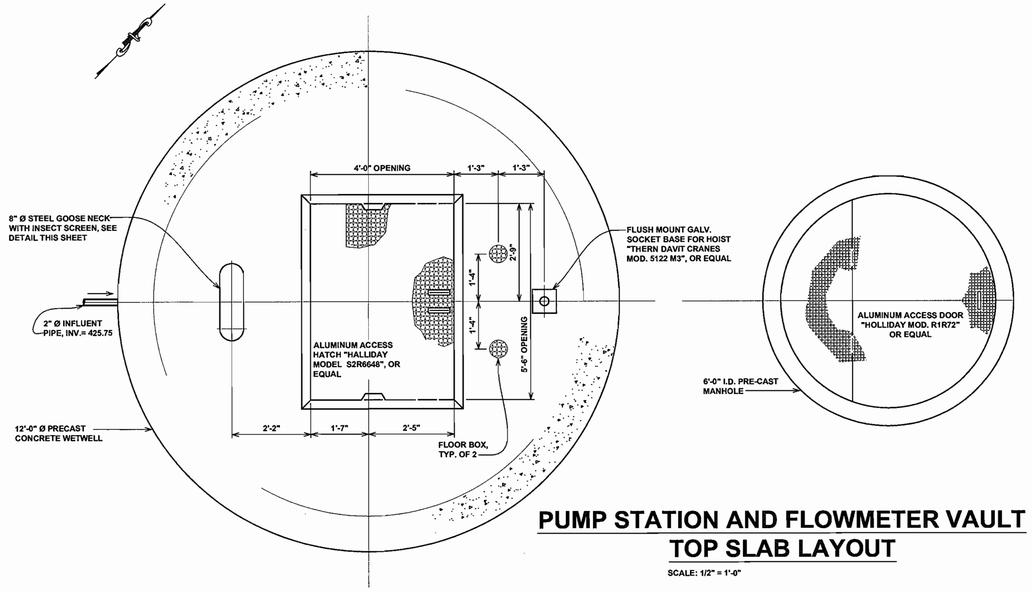

PUMP STATION AND FLOWMETER VAULT TOP SLAB LAYOUT

SCALE: 1/2" = 1'-0"

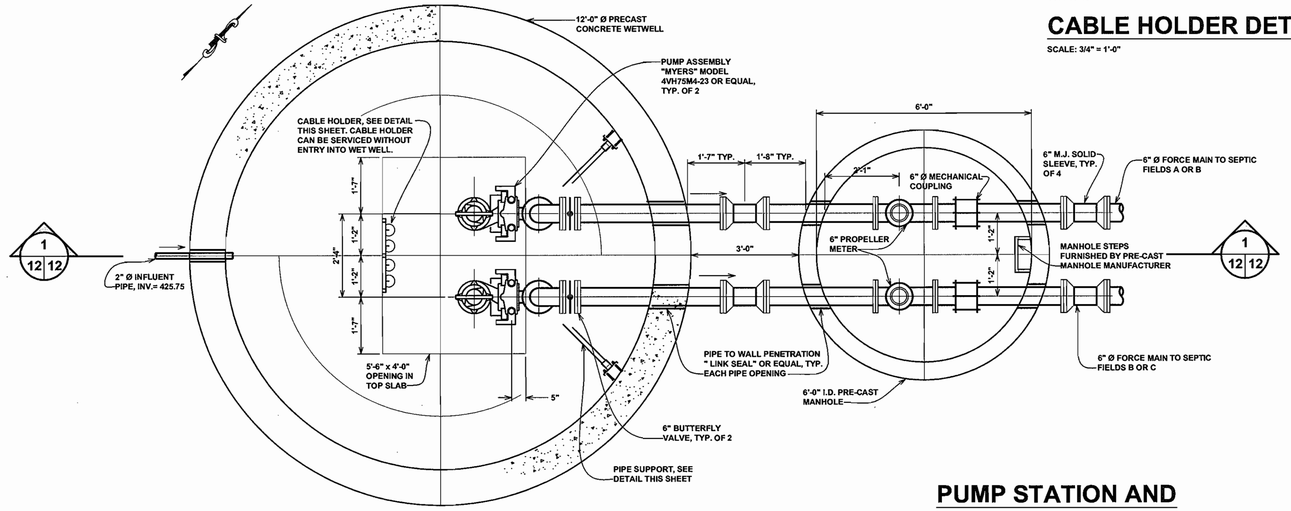

PUMP STATION AND FLOWMETER VAULT PLAN

SCALE: 1/2" = 1'-0"

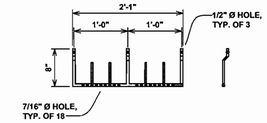

CABLE HOLDER DETAIL

SCALE: 3/4" = 1'-0"

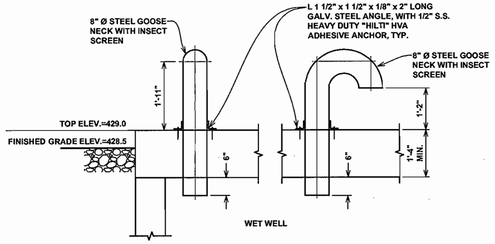

AIR INTAKE DETAIL

NOT TO SCALE

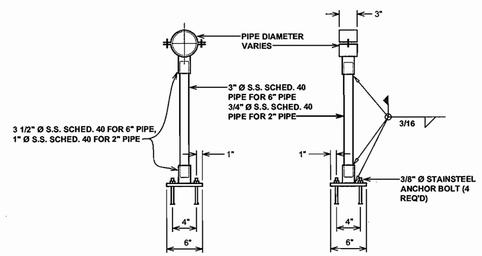

PIPE SUPPORT DETAIL

SCALE: 1" = 1'-0"

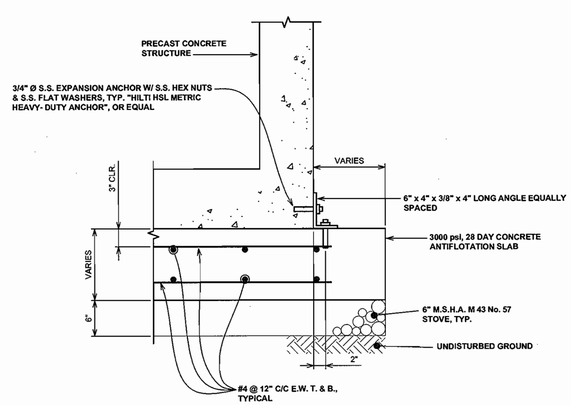

ANTIFLOATATION COLLAR DETAIL

SCALE: 1" = 1'-0"

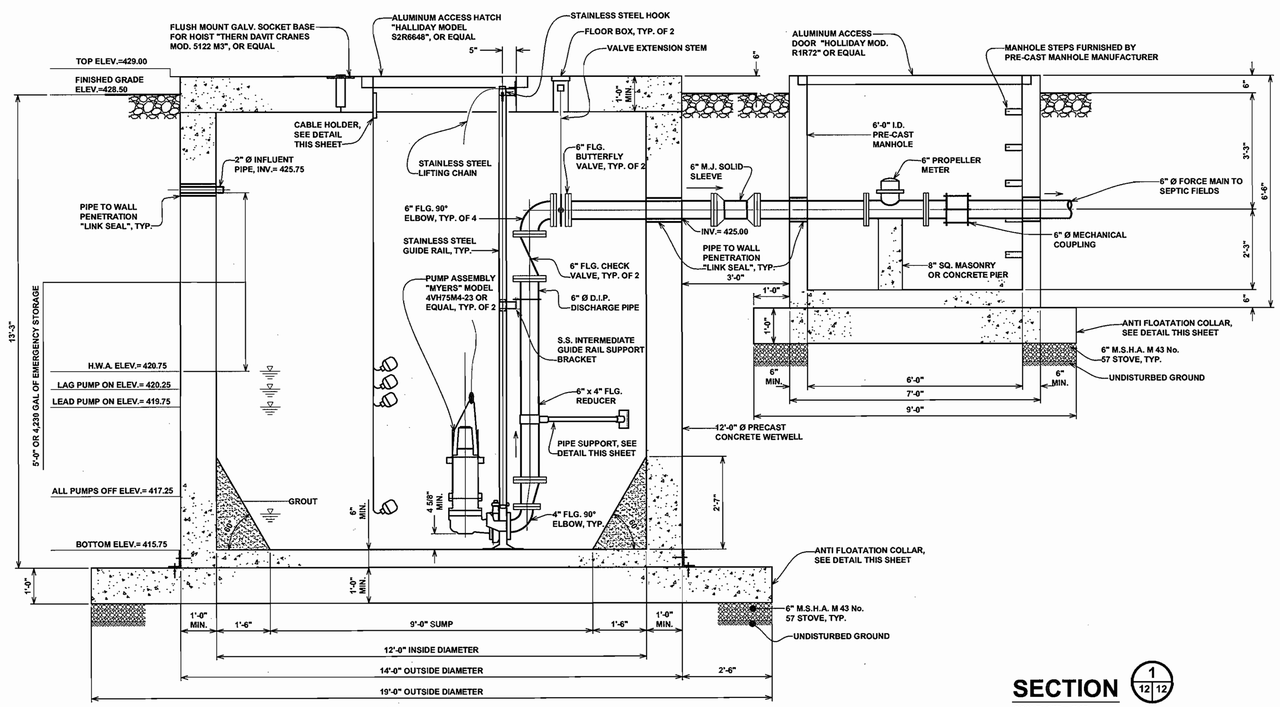

SECTION 1 / 12 12

SCALE: 1/2" = 1'-0"

APPROVED: FOR PRIVATE SHARED SEWERAGE SYSTEM FOR LOTS 1, 2, 3, 4, 5, 6, 15, 16, 17, 18, AND 19.
HOWARD COUNTY HEALTH DEPARTMENT

HOWARD COUNTY HEALTH OFFICER	DATE 1/19/07

HOWARD SOIL CONSERVATIONS DISTRICT:
REVEWED FOR HOWARD COUNTY SOIL CONSERVATION DISTRICT AND MEETS TECHNICAL REQUIREMENTS.

USDA NATURAL RESOURCES CONSERVATION SERVICE	DATE

THIS PLAN IS APPROVED FOR SOIL EROSION AND SEDIMENT CONTROL BY THE HOWARD SOIL CONSERVATION DISTRICT.

HOWARD SOIL CONSERVATION DISTRICT	DATE

SEDIMENT CONTROL MEASURES FOR THIS CONTRACT WILL BE IMPLEMENTED IN ACCORDANCE WITH SECTION 219 OF THE HOWARD COUNTY STANDARDS AND SPECIFICATIONS AND AS PER ROAD CONSTRUCTION PLANS PER F-06-33.

DEPARTMENT OF PUBLIC WORKS HOWARD COUNTY, MARYLAND	DEPARTMENT OF PUBLIC WORKS HOWARD COUNTY, MARYLAND
CHIEF, BUREAU OF UTILITIES — DATE 1-25-07	CHIEF, DEVELOPMENT ENGINEERING DIVISION — DATE 2/5/07

McCRONE
Engineering • Environmental Sciences • Construction Services • Land Planning & Surveying
ANNAPOLIS • CENTREVILLE • DOVER • ELKTON • SALISBURY
20 RIDGELY AVENUE ANNAPOLIS, MARYLAND 21401
PHONE (410) 267-9021 * FAX (410) 267-0532
www.mccrone-inc.com
Copyright © 2004

STATE OF MARYLAND — PROFESSIONAL ENGINEER — 12/20/06

DES: B.T.D., N.V.S.
DRN: B.T.D., N.V.S.
CHK: R.J.R.
DATE: DEC., 2006

BY	No.	REVISION	DATE
SD	1	SUBDIVISION NAME	4/10/07

PUMP STATION AND DETAILS

JOB No. C1040062

SHEPPARDS MANOR
~~PEDDICORD~~ SHARED SEPTIC SYSTEM
LOTS 1 - 19
CONTRACT # ~~5D-4357D~~
TAX MAP NO. 29 - GRID NO. 1 - PARCEL 268
ELECTION DISTRICT No. 5
HOWARD COUNTY, MARYLAND

SCALE AS SHOWN

SHEET 12 OF 18

CADD FILE: G:\1040062 – Peddicord Property\Drawings\SHARED SEPTIC DESIGN\DETAILS_REV03.dwg ------ Tab.....12 of 18

PLOTTED: Dec 28 , 2006 – 10:36am

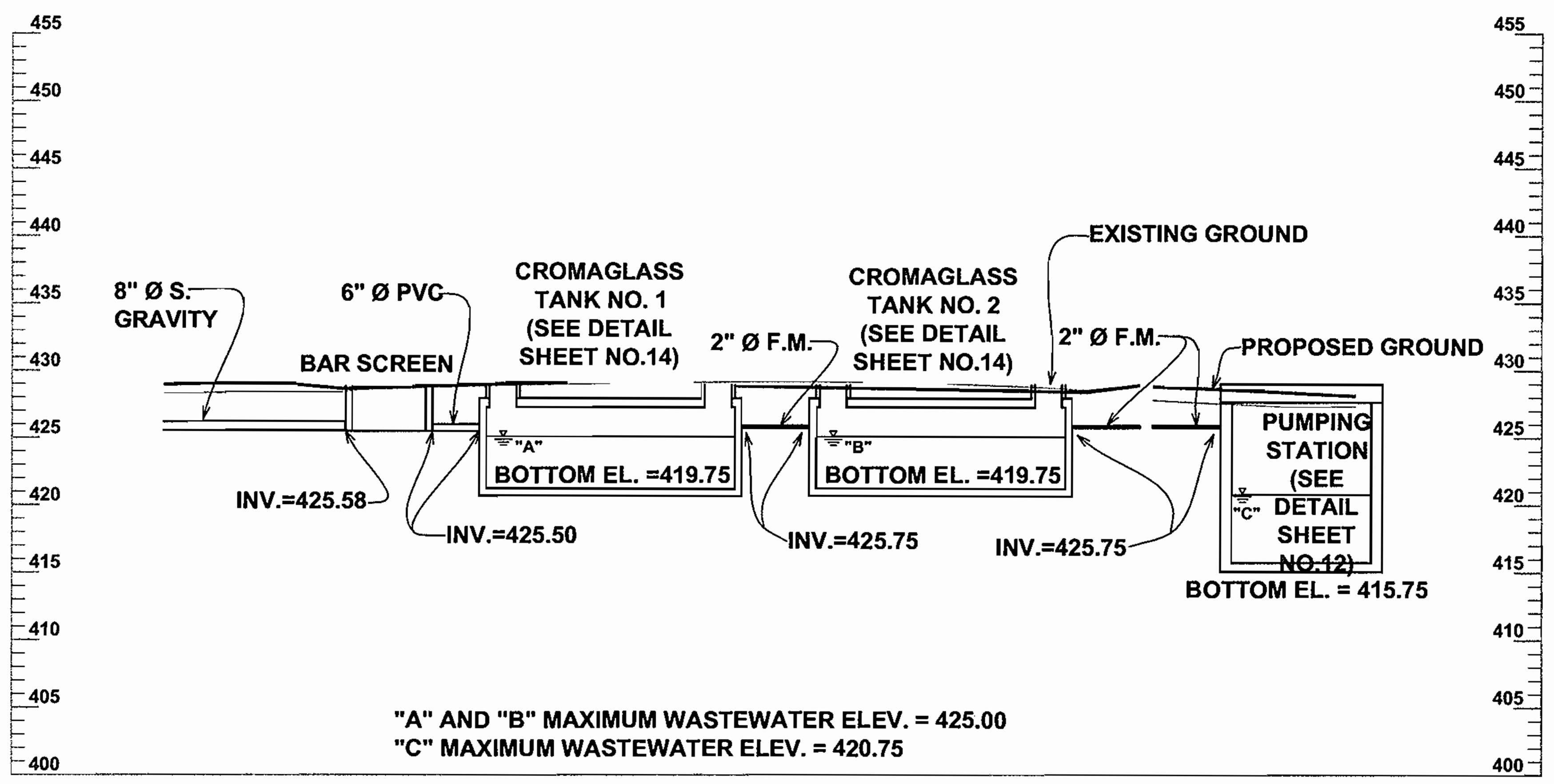

HYDRAULIC PROFILE

NOT TO SCALE

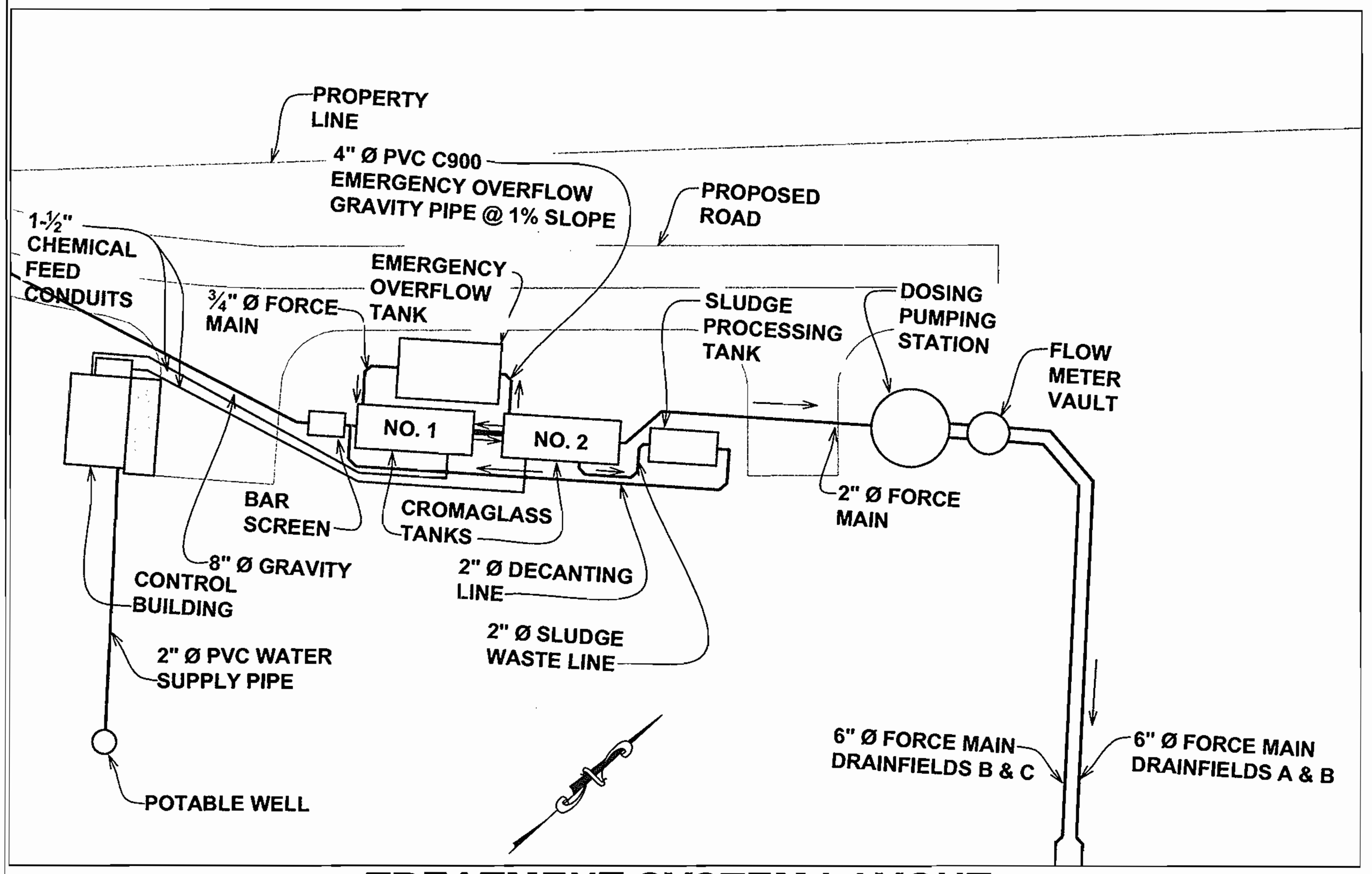

TREATMENT SYSTEM LAYOUT

SCALE: 1" = 20'

APPROVED: FOR PRIVATE SHARED SEWERAGE SYSTEM FOR LOTS 1, 2, 3, 4, 5, 6, 15, 16, 17, 18, AND 19.
HOWARD COUNTY HEALTH DEPARTMENT

for HOWARD COUNTY HEALTH OFFICER — 1/19/07 DATE

HOWARD SOIL CONSERVATIONS DISTRICT:
REVEWED FOR HOWARD COUNTY SOIL CONSERVATION DISTRICT AND MEETS TECHNICAL REQUIREMENTS.

USDA NATURAL RESOURCES CONSERVATION SERVICE — DATE

THIS PLAN IS APPROVED FOR SOIL EROSION AND SEDIMENT CONTROL BY THE HOWARD SOIL CONSERVATION DISTRICT.

HOWARD SOIL CONSERVATION DISTRICT — DATE

SEDIMENT CONTROL MEASURES FOR THIS CONTRACT WILL BE IMPLEMENTED IN ACCORDANCE WITH SECTION 219 OF THE HOWARD COUNTY STANDARDS AND SPECIFICATIONS AND AS PER ROAD CONSTRUCTION PLANS PER F-06-39.

DESIGN NOTES

DESIGN FLOW
Design Flow = 750 GPD x 11 Homes (lots 1, 2, 3, 4, 5, 6, 15, 16, 17, 18, and 19)
Design Flow = 8,250 GPD

PRECAST CONCRETE SPECIFICATIONS
Each Precast concrete septic tank shall be certified by a Professional Engineer to support earth load as presented on plans and to prevent buoyancy with ground water at finished grade.

TRENCH SPECIFICATIONS
Perforated pipe within trench shall be 2" PVC (Schedule 40) as shown on the plans with holes diameter and hole spacing shown in the drain field summary on this Sheet. Install Orenco Orifice Shields, model code OS150, on each lateral orifice. Last lateral hole shall be placed on top of pipe.

Trench filter fabric shall be non-woven polyester fabric, needle pinched, 6 oz. per square yard minimum placed within trench as shown on the details.

Trench gravel shall meet the requirements of SHA #57 stone placed within trench as shown on the details.

PIPING SPECIFICATIONS
All sanitary piping shall be PVC Schedule 40. All material shall conform to Howard County Design Manual Standard Specifications and Details for Construction.

GATE VALVES
4" and 6" gate valves shall be Resilient seat "Baltimore Standard, open right" furnished with a non-rising stem and roadway box. For all 6" valves, roadway box cover shall cast with letters A, A-B, B-C, C, E, E-F, F-D, or D, correlating with the cell letter(s) that each gate valve controls, as shown on the Contract Drawings. One Tee-handled operating wrench shall be provided by the gate valve manufacturer to operate the gate valves from finished grade (with adequate length to operate from finished grade).

MILESTONES OF CONSTRUCTION
The following Milestones of Construction must be approved by Michael Davis MDE (410-537-1771) and the Howard County Department of Health (410-313-1771). The Engineer shall be contacted during the following phases of construction for system stakeout by registered surveyor.

a. Initial system stakeout by registered surveyor;
b. Open trench inspection;
c. Cromaglass SBR, sludge processing and emergency overflow tanks installation;
d. All tanks must be watertight to the satisfaction of Howard County Department of Health. Contractor shall supply test water and provide forty-eight (48) hours notice to Health Department for water tightness testing.

Prior to installation, a preconstruction meeting must be scheduled to review the installation. The on-site sewage disposal system must be professionally staked for the meeting. The meeting shall include:

a. Michael Davis
Howard County Department of Health
(410) 313-1771
a. Barry Glotfelty
Maryland Department of the Environment
(410) 537-4156
b. Beccy Kugel (Public Works Managed System)
Department of Public Works
Bureau of Utilities
(410) 313-2723
c. On-site Disposal System Installation Contractor
d. General Contractor for the Project
e. Engineer that designed the system (McCrone, Inc. (410) 267-6947)

Note: a minimum of five days notice may be required to schedule the meeting.

Any changes to the approved plan must be presented to the Department of Health, Maryland Department of the Environment, and the Department of Public Works (Public Works Managed System) by the Engineer (McCrone, Inc. (410) 267-6947).

Prior to installation of any component of the system, proper permits must be obtained from:

a. Department of Health, Septic System Installation Permit
b. MDE, State Construction Permit

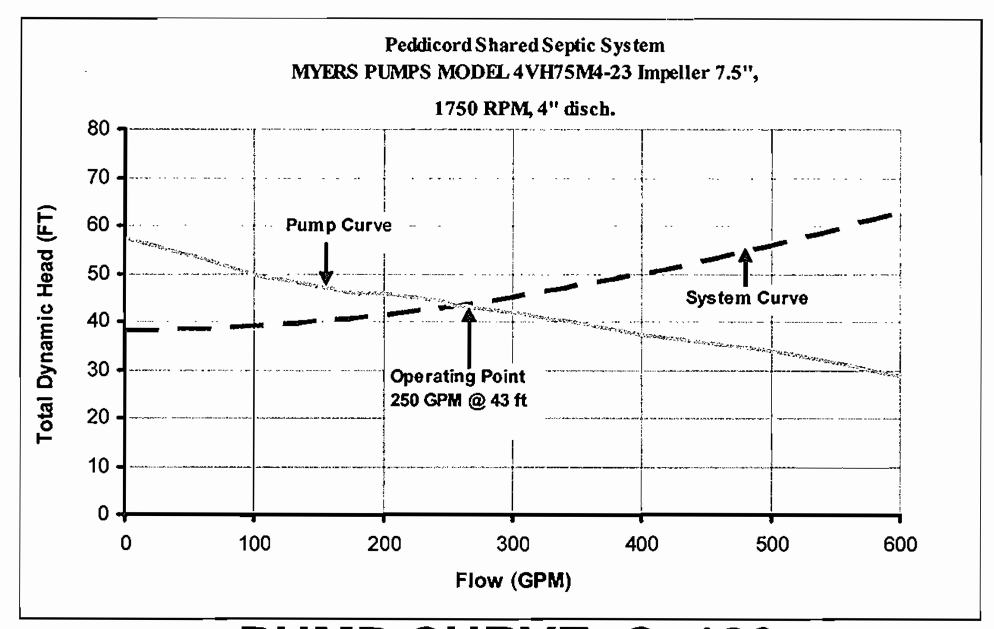

PUMP CURVE, C=130

DRAIN FIELD SUMMARY

SUB FIELD	NO. OF TRENCHES	NO. OF TRENCHES PROVIDED INITIALLY	PERCENT PROVIDED INITIALLY	TOTAL PERCENT PROVIDED INITIALLY	PERCENT REMAINING	LENGTH (FT)	EFFECTIVE DEPTH (FT)	LENGTH NEEDED FOR 100% (FT)	LENGTH PROVIDED BY SUBFIELD (FT)	PERCENT PROVIDED BY SUBFIELD	TOTAL FOR FIELD
A-1	8	5	14.4	14.4		55	1	1909.72	440	23.0	23.0
A-2	6	4	19.5	33.9		80	1.5	1636.9	480	29.3	52.4
A-3	4	3	14.7	48.6		80	1.5	1636.9	320	19.5	71.9
A-4	6	4	19.5	**68.2**	33.1	80	1.5	1636.9	480	29.3	**101.2**
B-1	3	2	7.9	7.9		65	1.5	1636.9	195	11.9	11.9
B-2	2	2	4.9	12.8		40	1.5	1636.9	80	4.9	16.8
B-3	4	3	9.2	22.0		50	1.5	1636.9	200	12.2	29.0
B-4	7	5	9.2	31.2		30	1.5	1636.9	210	12.8	41.8
B-5	4	3	7.3	38.5		40	1.5	1636.9	160	9.8	51.6
B-6	10	6	13.1	51.6		50	0	2291.7	500	21.8	73.4
B-7	2	2	3.9	55.5		45	0	2291.7	90	3.9	77.4
B-8	3	3	7.9	63.4		60	0	2291.7	180	7.9	85.2
B-9	3	1	5.8	**69.2**	33.5	95	1.5	1636.9	285	17.4	**102.6**
C-1	7	6	22.0	22.0		60	1.5	1636.9	420	25.7	25.7
C-2	10	8	17.1	39.1		35	1.5	1636.9	350	21.4	47.0
C-3	11	7	18.3	57.4		50	1	1909.72	550	28.8	75.8
C-4	3	2	5.2	62.7		50	1	1909.72	150	7.9	83.7
C-5	3	0	0.0	**62.7**	39.4	100	1.5	1636.9	300	18.3	**102.0**

Note: All trenches have a 3 foot width.

DESIGN PARAMETERS

MAXIMUM DAILY FLOW = 8,250 GPD = 750 GPD/HOUSE * 11 HOUSES
AVERAGE DAILY FLOW = 4,125 GPD = 8,250 GPD / 2 PEAKING FACTOR
INFLUENT BOD_5 = 200 mg/L — EFFLUENT BOD_5 = 30 mg/L
INFLUENT TSS = 200 mg/L — EFFLUENT TSS = 30 mg/L
INFLUENT TN = 60 mg/L — EFFLUENT TN = 10 mg/L

CROMAGLASS TREATMENT CAPACITY

INFLUENT BOD_5 = 100 - 270 mg/L — EFFLUENT $BOD_5 \leq 25$ mg/L
INFLUENT TSS = 100 - 270 mg/L — EFFLUENT TSS ≤ 30 mg/L
INFLUENT TN = 35 - 65 mg/L — EFFLUENT TN ≤ 10 mg/L
NOTE: ASSUMING RATIO OF BOD:TN = 5:1 AND ALK:TN = 7:1

CROMAGLASS TREATMENT CYCLES (OPERATOR ADJUSTABLE)

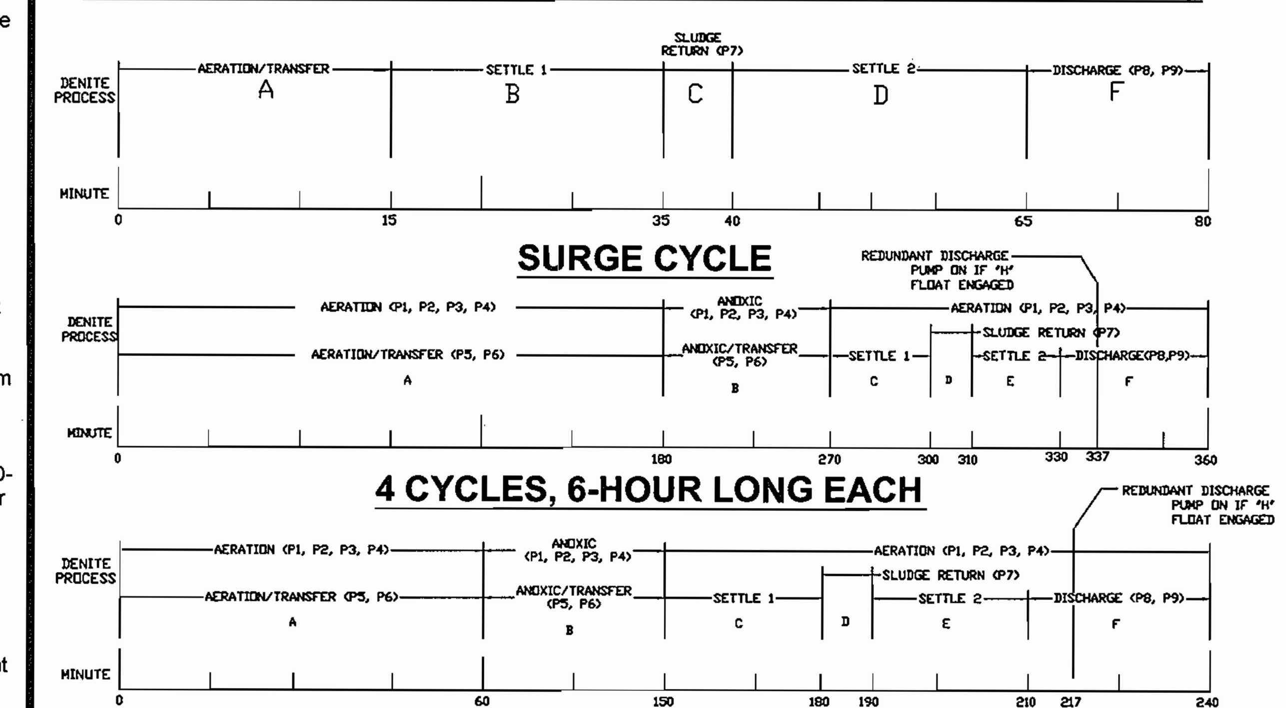

INITIALLY INSTALLED TRENCHES (200%)

FIELD	TRENCH NUMBER	LATERAL LENGTH, ft	INVERT ELEVATION, ft	HOLE DIAMETER, in	NUMBER OF HOLES	HOLE SPACING, ft	TRENCH BOTTOM, ft	FLOW RATE PER LATERAL, gpm	DISCHARGE HEAD PER LATERAL, ft
A-1	1	55	429.00	0.25	6	9.17	423.00	22.31	25.40
	2	55	429.00	0.25	6	9.17	424.90	22.31	25.40
	3	55	432.50	0.25	6	9.17	426.80	20.72	21.90
	4	55	432.50	0.25	6	9.17	428.20	20.72	21.90
	5	55	435.30	0.25	6	9.17	429.30	19.35	19.10
A-2	9	80	433.70	0.25	8	10.00	428.70	26.91	20.70
	10	80	433.70	0.25	8	10.00	429.70	26.91	20.70
	11	80	435.90	0.25	8	10.00	431.00	25.44	18.50
	12	80	435.90	0.25	8	10.00	432.00	25.44	18.50
A-3	15	80	440.50	0.25	8	10.00	437.00	22.05	13.90
	16	80	440.50	0.25	8	10.00	438.50	22.05	13.90
	17	80	443.40	0.25	8	10.00	439.90	20.15	11.60
A-4	22	80	449.20	0.25	8	10.00	445.40	13.49	5.20
	23	80	449.20	0.25	8	10.00	446.60	13.49	5.20
	24	80	452.40	0.25	12	6.67	447.40	12.61	2.00
	21	80	449.20	0.25	8	10.00	439.90	13.49	5.20
B-1	1	65	426.50	0.25	7	9.29	421.50	23.52	20.70
	2	65	426.50	0.25	7	9.29	422.20	23.52	20.70
B-2	4	40	428.00	0.25	4	10.00	424.50	12.92	19.20
	5	40	427.00	0.25	4	10.00	425.00	7.45	20.20
B-3	8	50	429.80	0.25	5	10.00	424.60	15.38	17.40
	9	50	432.40	0.25	5	10.00	425.40	14.19	14.80
	7	50	429.80	0.25	5	10.00	423.70	8.65	17.40
B-4	13	30	430.50	0.25	3	10.00	425.50	9.04	16.70
	14	30	430.50	0.25	3	10.00	426.00	9.04	16.70
	34	30	430.50	0.25	3	10.00	427.70	9.04	16.70
	35	30	430.50	0.25	3	10.00	427.50	9.04	16.70
	12	30	430.50	0.25	3	10.00	425.00	9.08	16.70
B-5	15	40	429.50	0.25	4	10.00	424.50	12.41	17.70
	16	40	429.50	0.25	4	10.00	425.80	12.41	17.70
	17	40	429.50	0.25	4	10.00	426.50	12.41	17.70
B-6	24	50	436.80	0.25	5	10.00	433.10	11.89	10.40
	25	50	436.80	0.25	5	10.00	433.90	11.89	10.40
	26	50	436.80	0.25	5	10.00	434.60	11.89	10.40
	27	50	439.80	0.25	6	8.33	435.30	12.04	7.40
	28	50	439.80	0.25	6	8.33	435.90	12.04	7.40
	23	50	436.80	0.25	5	10.00	432.30	11.89	10.40
B-7	30	45	442.50	0.25	5	9.00	438.00	7.99	4.70
	29	45	439.80	0.25	5	9.00	437.00	10.03	7.40
B-8	31	60	444.10	0.25	6	10.00	439.60	7.80	3.10
	32	60	445.20	0.25	7	8.57	440.70	7.31	2.00
	33	60	445.20	0.25	7	8.57	441.80	7.31	2.00
B-9	36	100	430.75	0.25	10	10.00	424.25	30.08	16.45
C-1	2	60	425.30	0.31	7	8.57	421.40	12.81	2.50
	3	60	425.30	0.31	7	8.57	420.90	12.81	2.50
	4	60	425.30	0.31	7	8.57	420.30	12.81	2.50
	5	60	425.30	0.31	7	8.57	419.80	12.81	2.50
	1	60	425.30	0.375	7	8.57	421.80	8.17	2.50
	24	60	425.30	0.375	7	8.57	421.70	8.17	2.50
C-2	10	35	424.30	0.31	5	7.00	420.20	10.79	3.50
	11	35	424.30	0.31	5	7.00	419.90	10.79	3.50
	12	35	424.30	0.31	5	7.00	419.80	10.79	3.50
	13	35	424.30	0.31	5	7.00	419.40	10.79	3.50
	14	35	424.30	0.31	5	7.00	419.40	10.79	3.50
	15	35	424.30	0.31	5	7.00	418.80	10.79	3.50
	8	35	424.30	0.4375	5	7.00	420.60	21.22	3.50
	9	35	424.30	0.4375	5	7.00	420.50	21.22	3.50
C-3	18	100	425.80	0.31	10	10.00	423.80	16.56	2.00
	19	100	425.80	0.31	10	10.00	423.70	16.56	2.00
	20	50	425.80	0.31	5	10.00	423.20	8.16	2.00
	21	50	425.80	0.31	5	10.00	422.80	8.16	2.00
	22	50	425.50	0.31	5	10.00	422.90	8.75	2.30
C-4	28	50	424.60	0.50	8	6.25	420.10	39.95	2.70
	29	50	424.60	0.50	8	6.25	420.80	39.95	2.70

NOTE: CONTRACTOR TO INSTALL 200% OF DISPOSAL FIELDS PER HOWARD COUNTY REQUIREMENT. TRENCHES 5 (A-1), 12 (A-2), 17 (A-3), 21 (A-4), 2 (B-1), 5 (B-2), 7 (B-3), 12 (B-4), 17 (B-5), 23 (B-6), 29 (B-7), 1 (C-1), 24 (C-1), 8 (C-2), 9 (C-2), 29 (C-4) SHALL BE INSTALLED PER THIS REQUIREMENT BUT NOT OPERATED INITIALLY.

PUMP STATION DESIGN NOTES

Peddicord pump station design
Design for influx

S No	Specification	Values	Units
I.	AVERAGE DAILY FLOWS (ADD)		
a	Total Flow	8,250	GPD
b	Unit Conversion	5.73	GPM
II.	PEAK HOURLY FLOW		
	Multiply average flow by peak factor of 4 if Avg. Flow less than 0.25MGPD (according to state design regulations)		
a	Number of times pump will come into opertation everyday	4.00	times
b	Pump cycle time (duration of time pump will be in operation)	8.30	mins
c	Pump Flow rate (IIc=Ia/(IIaxIIb))	248	GPM
	USE	250	GPM
III.	SIZE WET WELL		
a	Pump Cycle time (IIIa = IIb)	8.30	Min
b	Wet well capacity (IIIb = Ia / IIa)	2062.5	Gal
c	Unit Conversion (Gal to CuFt)	276	CuFt
d	Picking a wet well diameter	12	ft
e	Volume per foot depth of wet well (IIIe = Pi() x IIId^2/4 x 1 ft depth)	113	CuFt/VF
f	Unit Conversion (CuFt/Ft to Gal/Ft)	846	GAL/VF
g	Thus the operating depth required is (IIIg = IIIe / IIIc)	2.44	VF
I	Including safety factor and rounding up the Operating depth	2.5	VF
j	Unit Conversion (Feet to Inches)	30.00	IN
IV.	FLOAT SETTINGS		
a	Invert of incoming gravity sewer at pump station	425.75	FT
b	Alarm on control float elevation	420.75	FT
c	Lag pump on control float elevation	420.25	FT
d	Lead pump on control float elevation	419.75	FT
e	Lead pump shut off float elevation	417.25	FT
f	Bottom elevation of the wet well	415.75	FT
VI.	DETERMINE MANHOLE DEPTH		
a	Ground Elevation	427.00	FT
b	Bottom elevation of Wet well (VIb = Vg)	415.8	FT
c	Station Depth (VIc = VIa - VIb)	11.3	FT
VII.	SIZE FORCE MAIN		
	State regulations states that the flow inside the force main should be higher than 2 cubic feet per second to avoid solid deposion inside the pipe.		
	Flow rate is designed to be less than 7 cubic feet per second to refrain pipe from scouring, friction loss etc.		
a	Picking a diameter size for force main	6	Inch
b	Designed pump flow rate (VIIb = IId)	250	GPM
c	Unit Conversion (GPM to CFPS)	0.56	CFPS
d	Crosssectional area of the pipe (VIId = Pi x (VIIa/2)^2)	28.27	Sq Inch
e	Unit Conversion (Sq Inch to Sq Ft)	0.20	Sq Ft
f	Wasterwater throughput rate inside the pipe (VIIf = VIIc/VIIe)	2.84	FPS
g	Check => Wastewater throughput rate inside the pipe is less than 7 cubic feet per second	OK	
h	Check => Wastewater throughput rate inside the pipe is greater than 2 cubic feet per second	OK	

FUTURE TRENCHES (100%)

FIELD	TRENCH NUMBER	LATERAL LENGTH, ft	INVERT ELEVATION, ft	HOLE DIAMETER, in	NUMBER OF HOLES	HOLE SPACING, ft	TRENCH BOTTOM, ft	FLOW RATE PER LATERAL, gpm	DISCHARGE HEAD PER LATERAL, ft
A-1	1	55	429.00	0.25	6	9.17	423.00	22.31	25.40
	2	55	429.00	0.25	6	9.17	424.90	22.31	25.40
	3	55	432.50	0.25	6	9.17	426.80	20.72	21.90
	4	55	432.50	0.25	6	9.17	428.20	20.72	21.90
	5	55	435.30	0.25					
A-2	9	80	433.70	0.25	8	10.00	428.70	26.91	20.70
	10	80	433.70	0.25	8	10.00	429.70	26.91	20.70
	11	80	435.90	0.25	8	10.00	431.00	25.44	18.50
	12	80	435.90	0.25					
A-3	15	80	440.50	0.25	8	10.00	437.00	22.05	13.90
	16	80	440.50	0.25	8	10.00	438.50	22.05	13.90
A-4	22	80	449.20	0.25	8	10.00	445.40	13.49	5.20
	23	80	449.20	0.25	8	10.00	446.60	13.49	5.20
	24	80	452.40	0.25	12	6.67	447.40	12.61	2.00
B-1	1	65	426.50	0.25	7	9.29	421.50	23.52	20.70
B-2	4	40	428.00	0.25	4	10.00	424.50	12.92	19.20
B-3	8	50	429.80	0.25	5	10.00	424.60	15.38	17.40
	9	50	432.40	0.25	5	10.00	425.40	14.19	14.80
B-4	13	30	430.50	0.25	3	10.00	425.50	9.04	16.70
	14	30	430.50	0.25	3	10.00	426.00	9.04	16.70
	34	30	430.50	0.25	3	10.00	427.70	9.04	16.70
	35	30	430.50	0.25	3	10.00	427.50	9.04	16.70
B-5	15	40	429.50	0.25	4	10.00	424.50	12.41	17.70
	16	40	429.50	0.25	4	10.00	425.80	12.41	17.70
B-6	24	50	436.80	0.25	5	10.00	433.10	11.89	10.40
	25	50	436.80	0.25	5	10.00	433.90	11.89	10.40
	26	50	436.80	0.25	5	10.00	434.60	11.89	10.40
	27	50	439.80	0.25	6	8.33	435.30	12.04	7.40
	28	50	439.80	0.25	6	8.33	435.90	12.04	7.40
B-7	30	45	442.50	0.25	5	9.00	438.00	7.99	4.70
B-8	31	60	444.10	0.25	6	10.00	439.60	7.80	3.10
	32	60	445.20	0.25	7	8.57	440.70	7.31	2.00
	33	60	445.20	0.25	7	8.57	441.80	7.31	2.00
B-9	36	100	430.75	0.25	10	10.00	424.25	30.08	16.45
C-1	2	60	425.30	0.31	7	8.57	421.40	12.81	2.50
	3	60	425.30	0.31	7	8.57	420.90	12.81	2.50
	4	60	425.30	0.31	7	8.57	420.30	12.81	2.50
	5	60	425.30	0.31	7	8.57	419.80	12.81	2.50
C-2	10	35	424.30	0.31	5	7.00	420.20	10.79	3.50
	11	35	424.30	0.31	5	7.00	419.90	10.79	3.50
	12	35	424.30	0.31	5	7.00	419.80	10.79	3.50
	13	35	424.30	0.31	5	7.00	419.40	10.79	3.50
	14	35	424.30	0.31	5	7.00	419.40	10.79	3.50
	15	35	424.30	0.31	5	7.00	418.80	10.79	3.50
C-3	18	100	425.80	0.31	10	10.00	423.80	16.56	2.00
	19	100	425.80	0.31	10	10.00	423.70	16.56	2.00
	20	50	425.80	0.31	5	10.00	423.20	8.16	2.00
	21	50	425.80	0.31	5	10.00	422.80	8.16	2.00
	22	50	425.50	0.31	5	10.00	422.90	8.75	2.30
C-4	28	50	424.60	0.31	8	6.25	420.10	15.22	2.70

DEPARTMENT OF PUBLIC WORKS
HOWARD COUNTY, MARYLAND
CHIEF, BUREAU OF UTILITIES — 1-25-07 DATE

DEPARTMENT OF PUBLIC WORKS
HOWARD COUNTY, MARYLAND
CHIEF, DEVELOPMENT ENGINEERING DIVISION — 2/21/07 DATE

McCRONE
• Engineering • Environmental Sciences
• Construction Services • Land Planning & Surveying
ANNAPOLIS • CENTREVILLE • DOVER • ELKTON • SALISBURY
20 RIDGELY AVENUE
ANNAPOLIS, MARYLAND 21401
PHONE (410) 267-6621 * FAX (410) 267-9932
www.mccrone-inc.com

Copyright © 2004

12/28/06

DES: B.T.D., N.V.S.				
DRN: B.T.D., N.V.S.				
CHK: R.J.R.	SD	1	SUBDIVISION NAME	4/10/07
DATE: DEC., 2006	BY	No.	REVISION	DATE

HYDRAULIC PROFILE/
DESIGN NOTES CONT'D

JOB No. C1040062

SHEPPARD MANOR ~~PEDDICORD~~ SHARED
SEPTIC SYSTEM
LOTS 1 - 19
CONTRACT # 60-4857 D
TAX MAP NO. 29 - GRID NO. 1 - PARCEL 268
ELECTION DISTRICT No. 5
HOWARD COUNTY, MARYLAND

SCALE AS SHOWN

SHEET 11 OF 18

PLOTTED: Dec 28, 2006 - 10:32am
CADD FILE: G:\1040062 - Peddicord Property\Drawings\SHARED SEPTIC DESIGN\DETAILS_REV03.dwg ------ Tab.......11 of 18

OPERATION AND MAINTENANCE SCHEDULE FOR BIORETENTION AREAS (F6)

1. Annual maintenance of plant material, mulch layer and soil is required. Maintenance of mulch and soil is limited to correcting areas of erosion or wash out.
   Any mulch replacement shall be done in the spring. Plant material shall be checked for disease and insect infestation and maintenance will address dead material and pruning.

2. Schedule of plant inspection will be twice a year in spring and fall. This inspection will include removal of dead and diseased vegetation considered beyond treatment, treatment of all diseased trees and shrubs and replacement of all deficient stakes and wires.

3. Mulch shall be inspected each spring. Remove previous mulch layer before applying new layer once every 2 to 3 events.

4. Soil erosion to be addressed on an as needed basis, with a minimum of once per month and after heavy storm events.

TEMPORARY SEEDING NOTES

Seedbed preparation: Loosen upper three inches of soil by raking, discing or other acceptable means before seeding, if not previously loosened.

Soil amendments: Apply 600 lbs. per acre 10-10-10 fertilizer (14 lbs./1000 sq.ft).

Seeding: For periods march 1 through April 30 and from august 15 through November 15, seed with 2 1/2 bushel per acre of annual rye (3.2 lbs./1000 sq.ft.) for the period may 1 through august 14, seed with 3 lbs. per acre of weeping lovegrass (.07 lbs./1000 sq.ft.). For the period November 1 through February 28, protect site by applying 2 tons per acre of well anchored straw mulch and seed as soon as possible in the spring, or use sod.

Mulching: Apply 1 1/2 to 2 tons per acre (70 to 90 lbs./1000 sq.ft.) of unrotted small grain straw immediately after seeding. Anchor mulch immediately after application using mulch anchoring tool or 218 gallons per acre (5 gal/1000 sq.ft.) of emulsified asphalt on flat areas. On slopes 8 feet or higher, use 348 gallons per acre (8 gal/1000 sq.ft.) for anchoring. Refer to the 1994 Maryland standards and specifications for soil erosion and sediment control for rate and methods not covered.

21.0 STANDARDS AND SPECIFICATIONS FOR TOPSOIL

Definition

Placement of topsoil over a prepared subsoil prior to establishment of permanent vegetation.

Purpose

To provide a suitable soil medium for vegetable growth. Soils of concern have low moisture content, low nutrient levels, low pH materials toxic to plants, and/or unacceptable soil gradation.

Conditions Where Practice Applies

i. This practice is limited to areas having 2:1 or flatter slopes where:
   a. the texture of the exposed subsoil/parent material is not adequate to produce vegetative growth.

   b. The soil material is so shallow that the rooting zone is not deep enough to support plants or furnish continuing supplies of moisture and plant nutrients.

   c. The original soil to be vegetated contains material toxic to plant growth.

   d. The soil is so acidic that treatment with limestone is not feasible.

ii. For the purpose of these standards and specifications, areas having slopes steeper than 2:1 require special consideration and design for adequate stabilization. Areas having slopes steeper than 2:1 shall have the appropriate stabilization shown on the plans.

UTILITY STORAGE BUILDING SPECIFICATIONS

Contractor to provide 15'-2" x 11' (I.D.) vinyl sided storage building, high wall barn style with 6 foot side walls and no windows, one double door on end of building. Contractor to meet the following specifications:
1. No windows
2. 10' ridge vent
3. 4' x 4' pressure treated skids
4. 2' x 4' floor joist 16" on center
5. 5/8" plywood floor sheathing
6. 2' x 4' studs 16" on center
7. All walls to be plated at bottom and double plated at the top
8. 1/2" roof sheathing
9. 240 pund asphalt 20 years shingles
10. Doors and frame to be reinforced
11. Door hingers must be "t" type or strap type, three hinges per door side. Piano hinges are not acceptable
12.Locks are to be keyed alike with bauer ch 751 lock
13. Vinyl siding and trim color - almond, shingle color - brown

PERMANENT SEEDING NOTES

Apply to graded or cleared areas not subject to immediate further disturbance where a permanent long-lived vegetative cover is needed.

Seedbed preparation: Loosen upper three inches of soil by raking, discing or other acceptable means before seeding, if not previously loosened.

Soil amendments: In lieu of soil test recommendations, use one of the following schedules:
1) Preferred-apply 2 tons per acre dolomite limestone (92 lbs/ 100 sq.ft.) and 600 lbs per acre 10-10-10 fertilizer (14 lbs./ 1000 sq.ft.) before seeding. Harrow or disc into upper three inches of soil. at the time of seeding, apply 400 lbs. per acre 30-0-0 ureaform fertilizer (9 lbs/1000 sq.ft.)

2) Acceptable-apply 2 tons per acre dolomite limestone (92 lbs/ 1000 sq.ft.) and apply 1000 lbs. per acre 10-10-10- fertilizer (23 lbs./1000 sq.ft.) before seeding. Harrow or disc into upper three inches of soil.

Seeding: for the periods march 1 through April 30, and august 1 through October 15, seed with 60 lbs. per acre (1.4 lbs/1000 sq.ft.) of kentucky 31 tall fescue. For the period may 1 through July 31, seed with 60 lbs. kentucky 31 tall fescue per acre and 2 lbs. per acre (.05 lbs./1000 sq.ft.) of weeping lovegrass. During the period of October 16 through February 28, protect site by: Option (1) 2 tons per acre well anchored straw mulch and seed as soon as possible in the spring. option (2) use sod. option (3) seed with 60 lbs/acre kentucky 31 tall fescue and mulch with 2 tons/acre well anchored

Mulching: Apply 1 1/2 to 2 tons per acre (70 to 90 lbs/1000 sq. ft.) of unrotted small grain straw immediately after seeding. Anchor mulch immediately after application using mulch anchoring tool or 218 gallons per acre (5 gal/1000 sq.ft.) of emulsified asphalt on flat areas. on slopes 8 feet or higher, use 348 gallons per acre (8 gal/1000 sq.ft.) for anchoring.

Maintenance: Inspect all seeded areas and make needed repairs, replacements and reseedings.

SEDIMENT CONTROL NOTES

1. A minimum of 48 hours notice must be given to the Howard County Department of Inspection, License and Permits Sediment Control Division prior to the start of any construction (313-1855).

2. All vegetation and structural practices are to be installed according to the provisions of this plan and are to be in conformance with the 1994 MARYLAND STANDARDS AND SPECIFICATIONS FOR SOIL EROSION AND SEDIMENT CONTROL. and revisions thereto.

3. Following initial soil disturbance or redisturbance, permanent or temporary stabilization shall be completed within: (a) 7 calendar days for all perimeter sediment control structures, dikes, perimeter slopes, and all slopes greater than 3:1, (b) 14 days as to all other disturbed or graded areas on the project site.

4. All sediment traps/basins shown must be fenced and warning signs posted around their perimeter in accordance with Vol. 1, Chapter 7, HOWARD COUNTY DESIGN MANUAL, Storm Drainage.

5. All disturbed areas must be stabilized within the time period specified above in accordance with the 1994 MARYLAND STANDARDS AND SPECIFICATIONS FOR SOIL EROSION AND SEDIMENT CONTROL for permanent seeding, sod, temporary seeding, and mulching (Sec. G). Temporary stabilization with mulch alone shall be done when recommended seeding dates do not allow for proper germination and establishment of grasses.

6. All sediment control structures are to remain in place and are to be maintained in operative condition until permission for their removal has been obtained from the Howard County Sediment Control Inspector.

7. Site Analysis :
   Area Disturbed
   Area to be roofed or paved
   Area to be vegetatively stabilized
   Offsite waste/borrow area location

8. Any sediment control practice which is disturbed by grading activity for placement of utilities must be repaired on the same day of disturbance.

9. Additional sediment controls must be provided, if deemed necessary by the Howard County Sediment Control Inspector.

10. On all sites with disturbed areas in excess of 2 acres, approval of the inspection

TUBE GATE SPECIFICATIONS

1. Contractor to provide one double leaf gate, see detail sheet 13
   a. 16 gauge steel construction
   b. Painted red by manufacture if option is available
   c. Mounting hardware is typically included with gate

2. Each tube gate will be 8 foot in length

3. Gates are to be mounted to 6" x 6" pressure treated posts

4. Posts are to be capped

5. Posts are to be buried a minimum of 36 inches below grade

6. Gates are to be secured to pressure treated posts with either screw hooks or bolt hooks

7. Fastening hardware will not be permitted to extrude beyond the outside of the post

8. Screw or bolt hooks are to face each other; this will prevent the gates from being lifted off of the hooks by tresspassers

9. The bottom tube of the gate shall be mounted to provide a minimum of 4" clearance above the access roadway

10. Gates are to be secured by 3/8-inch shackle padlock, which will be supplied by Howard County Bureau of Utilities. The contractor will supply a suitable length of chain (approximately 1 foot) or short choker cable to complete securing the gates in the closed position.

11. Contractor to provide reflectors on posts and reflective tape on crossbars

CONSTRUCTION AND MATERIAL SPECIFICATIONS

i. Topsoil salvaged from the existing site may be used provided that it meets the standards as set forth in these specifications. Typically, the depth of topsoil to be salvaged for a given soil type can be found in the representative soil profile section in the soil survey published by USDA in cooperation with Maryland agricultural experimental station.

ii. Topsoil specifications - soil to be used meet the following:
   i. Topsoil shall be a loam, sandy loam, clay loam, silt loam, sandy clay loam, loamy sand. Other soils may be used if recommended by an agronomist or a soil scientist and approved by the appropriate approval authority. Regardless, topsoil shall not be a mixture of contrasting textured subsoils and shall contain less than 5% by volume of cinders, stones, slag, coarse fragments, gravel, sticks, roots, trash, or other materials larger that 1 and 1/2" in diameter.

   ii. Topsoil must be free of plants or plant parts such as bermuda grass, quackgrass, johnsongrass, nutsedge, poison ivy, thistle, or others as specified.

   iii. Where the subsoil is either highly acidic or composed of heavy clays, ground limestone shall be spread at the rate of 4-8 tons/acre (200-400 pounds per 1,000 square feet) prior to the placement of topsoil. Lime shall be distributed uniformly over designated areas and worked into the soil in conjunction with tillage operations as described in the following procedures.

iii. For sites having disturbed areas under 5 acres:
   i. Place topsoil (if required) and apply soil amendments as specified in 20.0 vegetative stabilization - elapsed (14 days min.) to permit dissipation of Section I - vegetative stabilization methods and materials. Phyto-toxic materials.

iv. For sites having disturbed areas over 5 acres:
   i. On soil meeting topsoil specifications, obtain test results dictating fertilizer and lime amendments required to bring the soil into compliance with the following:
      a. pH for topsoil shall be between 6.0 and 7.5. if the tested soil demonstrates a pH of less than 3. Place topsoil (if required) and apply soil amendments 6.0, sufficient lime shall be prescribed to raise specified in 20.0 vegetative stabilization-section I-Vegetative the pH to 6.5 or higher. Stabilization methods and materials.
      b. Organic content of topsoil shall be not less than 1.5 percent by weight.
      c. Topsoil having soluble salt content greater than 500 parts per million shall not be used.
      d. No sod or seed shall be placed on soil soil which sediment control practices such as diversions, grade has been treated with soil sterilants or chemicals stabilization structures, earth dikes, slope silt fence and used for weed control until sufficient time has sediment traps and basins.

Note: Topsoil substitutes or amendments, as recommended results dictating fertilizer and lime amendments required by a qualified agronomist or soil scientist and approved by to bring the soil into compliance with the following: the appropriate approval authority, may be used in lieu of natural topsoil.

v. Topsoil application
   i. When topsoiling, maintain needed erosion and

   ii. Grades on the areas to be topsoiled, which have been previously established, shall be maintained, albeit 4"- 8" higher in elevation.

   iii. Topsoil shall be uniformly distributed in a 4" - 8" layer and lightly compacted to a minimum thickness of 4". Spreading shall be performed in such a manner that sodding or seeding can proceed with a minimum of additional soil preparation and tillage. Any irregularities in the surface resulting from topsoiling or other operations shall be corrected in order to prevent the formation of depressions or water pockets.

   iv. Topsoil shall not be place while the topsoil or subsoil is in a frozen or muddy condition, when the subsoil is excessively wet or in a condition that may otherwise be detrimental to proper grading and seedbed preparation.

DETAIL 22 - SILT FENCE

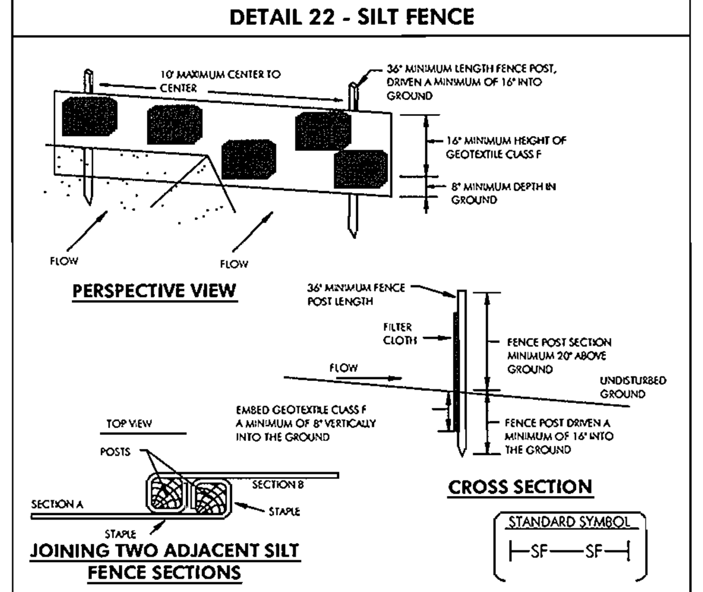

CONSTRUCTION SPECIFICATIONS

1. Fence posts shall be a minimum of 36" long driven 16" minimum into the ground. Wood posts shall be 1 1/2" x 1 1/2" square (minimum) cut, or 1 3/4" diameter (minimum) round and shall be of sound quality hardwood. Steel posts will be standard T or U section weighting not less than 1.00 pond per linear foot.

2. Geotextile shall be fastened securely to each fence post with wire ties or staples at top and mid-section and shall meet the following requirements for Geotextile Class F:

Tensile Strength	50 lbs/in (min.)	Test: MSMT 509
Tensile Modulus	20 lbs/in (min.)	Test: MSMT 509
Flow Rate	0.3 gal ft ²/ minute (max.)	Test: MSMT 322
Filtering Efficiency	75% (min.)	Test: MSMT 322

3. Where ends of geotextile fabric come together, they shall be overlapped, folded and stapled to prevent sediment bypass.

4. Silt Fence shall be inspected after each rainfall event and maintained when bulges occur or when sediment accumulation reached 50% of the fabric height.

U.S. DEPARTMENT OF AGRICULTURE SOIL CONSERVATION SERVICE	PAGE E - 15 - 3	MARYLAND DEPARTMENT OF ENVIRONMENT WATER MANAGEMENT ADMINISTRATION

DETAIL 33 - SUPER SILT FENCE

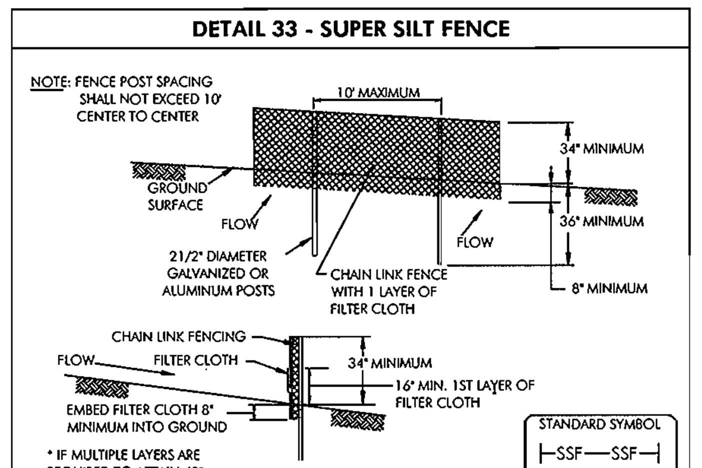

CONSTRUCTION SPECIFICATIONS

1. Fencing shall be 42" in height and constructed in accordance with the latest Maryland State Highway Details for Chain Link Fencing. The specification for a 6' fence shall be used, substituting 42" fabric and 6' length posts.

2. Chain link fence shall be fastened securely to the fence posts with wire ties. The lower tension wire, brace and truss rods, drive anchors and post caps are not required except on the ends of the fence.

3. Filter cloth shall be fastened securely to the chain link fence with ties spaced every 24" at the top and mid section.

4. Filter cloth shall be embedded a minimum of 8" into the ground.

5. When two sections of filter cloth adjoin each other, they shall be overlapped by 6" and folded.

6. Maintenance shall be performed as needed and silt buildups removed when "bulges" develop in the silt fence, or when silt reaches 50% of fence height

7. Filter cloth shall be fastened securely to each fence post with wire ties or staples at top and mid section and shall meet the following requirements for Geotextile Class F:

Tensile Strength	50 lbs/in (min.)	Test: MSMT 509
Tensile Modulus	20 lbs/in (min.)	Test: MSMT 509
Flow Rate	0.3 gal/ft /minute (max.)	Test: MSMT 322
Filtering Efficiency	75% (min.)	Test: MSMT 322

U.S. DEPARTMENT OF AGRICULTURE SOIL CONSERVATION SERVICE	PAGE H - 26 - 3	MARYLAND DEPARTMENT OF ENVIRONMENT WATER MANAGEMENT ADMINISTRATION

DETAIL 23B - AT GRADE INLET PROTECTION

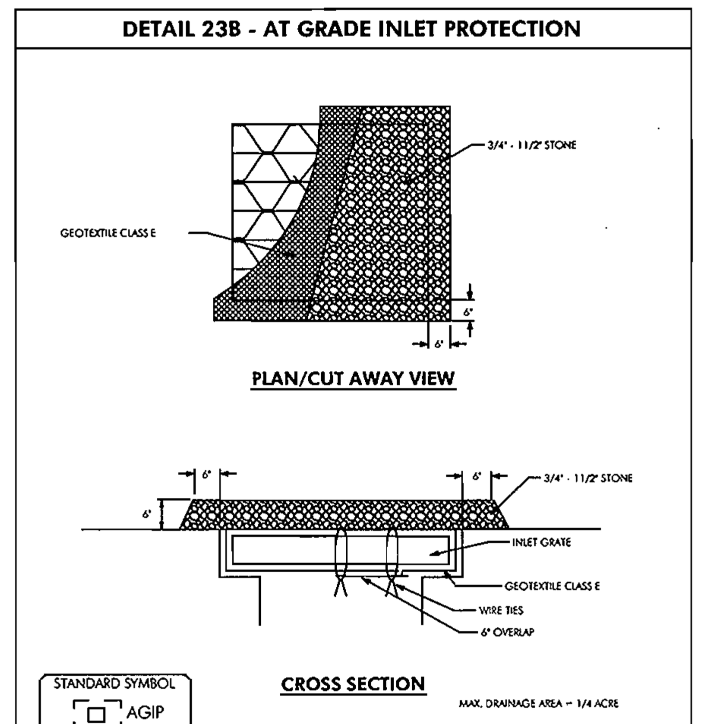

CONSTRUCTION SPECIFICATIONS

1. Lift grate and wrap with geotextile class E to completely cover all openings, then set grate back in place.

2. Place 3/4" to 1 1/2" stone, 4-6" thick on the grate to secure the fabric and provide additional filtration.

U.S. DEPARTMENT OF AGRICULTURE SOIL CONSERVATION SERVICE	PAGE E - 16 - 5A	MARYLAND DEPARTMENT OF ENVIRONMENT WATER MANAGEMENT ADMINISTRATION

DETAIL 24 - STABILIZED CONSTRUCTION ENTRANCE

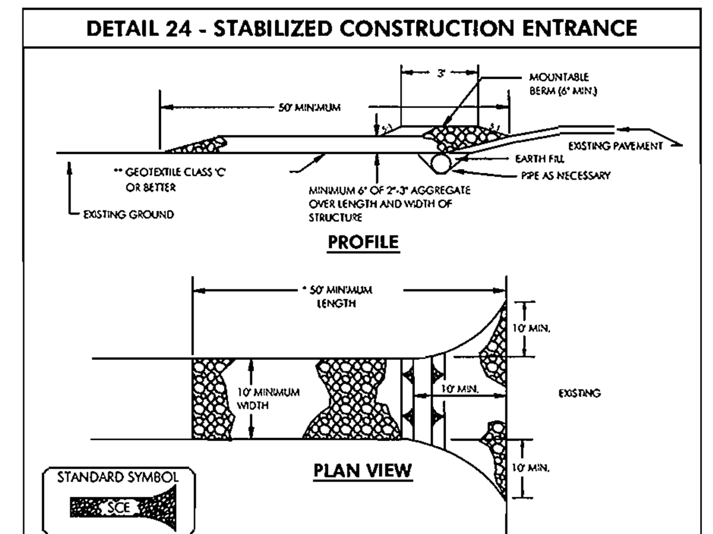

CONSTRUCTION SPECIFICATIONS

1. Length - minimum of 50' (*30' for single residence lot).

2. Width - 10' minimum, should be flared at the existing road to provide a turning radius.

3. Geotextile fabric (filter cloth) shall be placed over the existing ground prior to placing stone. **The plan approval authority may not require single family residences to use geotextile.

4. Stone - crushed aggregate (2" to 3") or reclaimed or recycled concrete equivalent shall be placed at least 6" deep over the length and width of the entrance.

5. Surface Water - all surface water flowing to or diverted toward construction entrances shall be piped through the entrance, maintaining positive drainage. Pipe installed through the stabilized construction entrance shall be protected with a mountable berm with 5:1 slopes and a minimum of 6" of stone over the pipe. Pipe has to be sized according to the drainage. When the SCE is located at a high spot and has no drainage to convey a pipe will not be necessary. Pipe should be sized according to the amount of runoff to be conveyed. A 6" minimum will be required.

6. Location - A stabilized construction entrance shall be located at every point where construction traffic enters or leaves a construction site. Vehicles leaving the site must travel over the entire length of the stabilized construction entrance.

U.S. DEPARTMENT OF AGRICULTURE SOIL CONSERVATION SERVICE	PAGE F - 17 - 3	MARYLAND DEPARTMENT OF ENVIRONMENT WATER MANAGEMENT ADMINISTRATION

APPROVED: FOR PRIVATE SHARED SEWERAGE SYSTEM FOR LOTS 1, 2, 3, 4, 5, 6, 15, 16, 17, 18, AND 19.
HOWARD COUNTY HEALTH DEPARTMENT

for Robert J. Weber (signature) — 1/19/07
HOWARD COUNTY HEALTH OFFICER — DATE

HOWARD SOIL CONSERVATIONS DISTRICT:
REVEWED FOR HOWARD COUNTY SOIL CONSERVATION DISTRICT AND MEETS TECHNICAL REQUIREMENTS.

Jim Myers (signature) — 2/6/07
USDA NATURAL RESOURCES CONSERVATION SERVICE — DATE

THIS PLAN IS APPROVED FOR SOIL EROSION AND SEDIMENT CONTROL BY THE HOWARD SOIL CONSERVATION DISTRICT.

(signature) — 2/6/07
HOWARD SOIL CONSERVATION DISTRICT — DATE

SEDIMENT CONTROL MEASURES FOR THIS CONTRACT WILL BE IMPLEMENTED IN ACCORDANCE WITH SECTION 219 OF THE HOWARD COUNTY STANDARDS AND SPECIFICATIONS AND AS PER ROAD CONSTRUCTION PLANS PER F-~~06~~-99.

DEPARTMENT OF PUBLIC WORKS HOWARD COUNTY, MARYLAND	DEPARTMENT OF PUBLIC WORKS HOWARD COUNTY, MARYLAND
(signature) 1-25-07 CHIEF, BUREAU OF UTILITIES DATE	(signature) 2/16/07 CHIEF, DEVELOPMENT ENGINEERING DIVISION DATE

McCRONE
● Engineering ● Environmental Sciences
● Construction Services ● Land Planning & Surveying
ANNAPOLIS ● CENTREVILLE ● DOVER ● ELKTON ● SALISBURY
20 RIDGELY AVENUE
ANNAPOLIS, MARYLAND 21401
PHONE (410) 267-8621 * FAX (410) 267-8932
www.mccrone-inc.com
Copyright © 2004

12/28/06

DES: B.T.D., N.V.S.				
DRN: B.T.D., N.V.S				
CHK: R.J.R.				
	SD	1	SUBDIVISION NAME	4/10/07
DATE: DEC., 2006	BY	No.	REVISION	DATE

SEDIMENT CONTROL /DESIGN NOTES

JOB No. C1040062

SHEPPARD MANOR
~~PEDDICORD~~ SHARED SEPTIC SYSTEM
LOTS 1 - 19
CONTRACT # ~~R-3376~~ 50-4357D
TAX MAP NO. 29 - GRID NO. 1 - PARCEL 268
ELECTION DISTRICT No. 5
HOWARD COUNTY, MARYLAND

SCALE AS SHOWN

SHEET 10 OF 18

PLOTTED: Dec 28 , 2006 - 10:41am

CADD FILE: G:\1040062 - Peddicord Property\Drawings\SHARED SEPTIC DESIGN\DETAILS_REV03.dwg ----- Tab.......10 OF 18

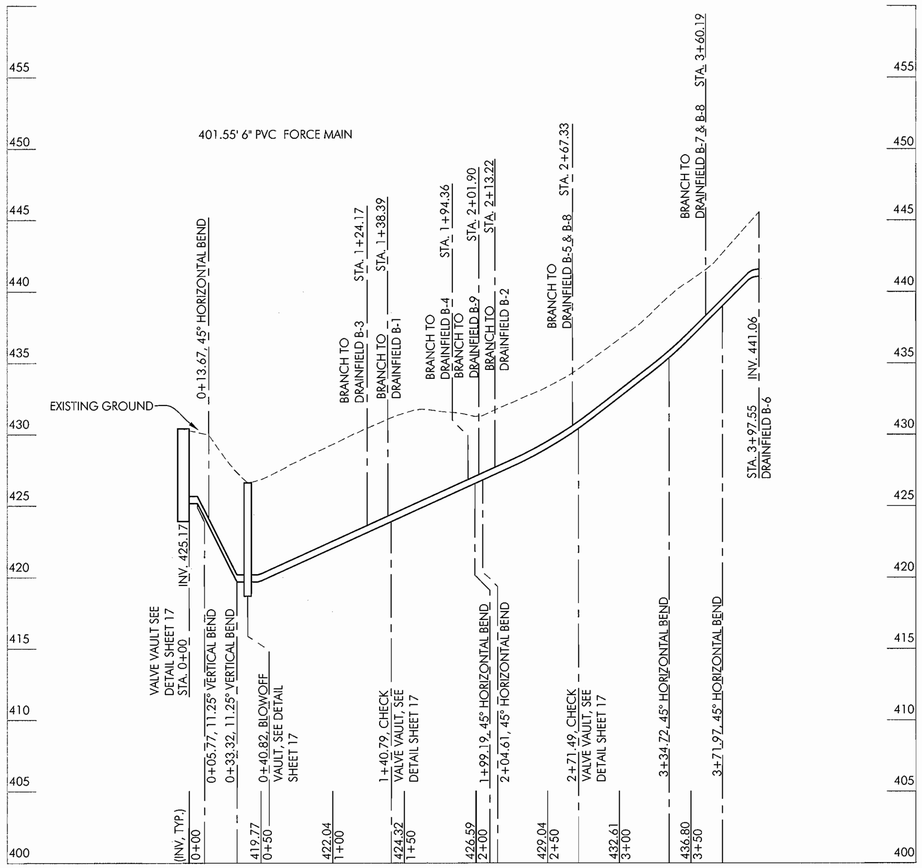

6" FM PROFILE FROM VALVE VAULT TO DRAINFIELD B

SCALE
1" = 50' HORIZONTAL;
1" = 5' VERTICAL

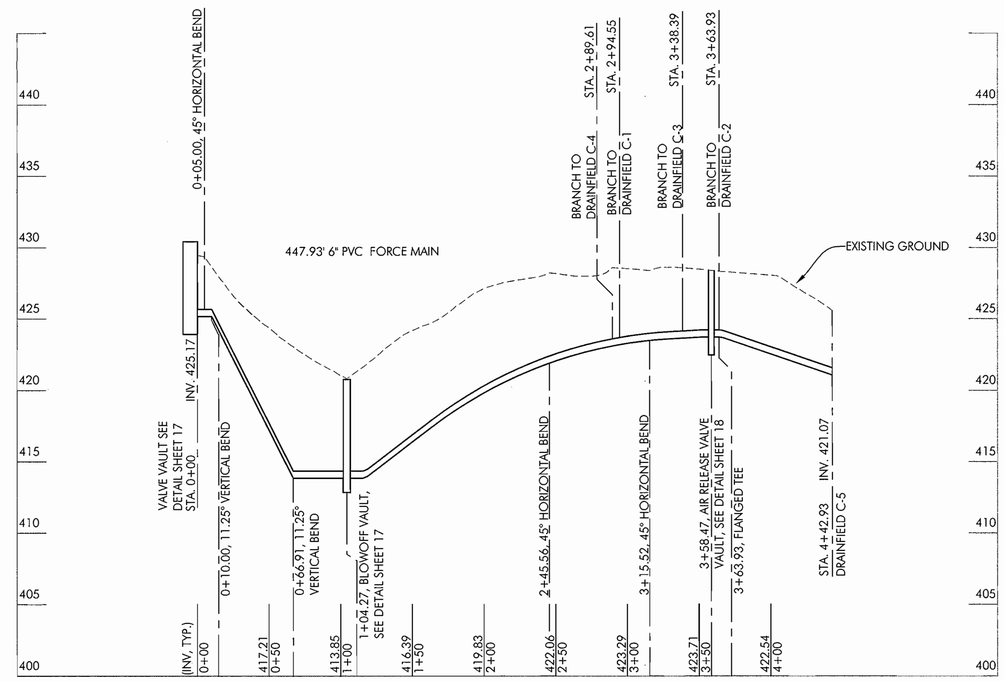

6" FM PROFILE FROM VALVE VAULT TO DRAINFIELD C

SCALE
1" = 50' HORIZONTAL;
1" = 5' VERTICAL

APPROVED: FOR PRIVATE SHARED SEWERAGE SYSTEM FOR LOTS 1, 2, 3, 4, 5, 6, 15, 16, 17, 18, AND 19.
HOWARD COUNTY HEALTH DEPARTMENT

for Robert J. Weber 1/19/07
HOWARD COUNTY HEALTH OFFICER DATE

HOWARD SOIL CONSERVATIONS DISTRICT:
REVEWED FOR HOWARD COUNTY SOIL CONSERVATION DISTRICT AND MEETS TECHNICAL REQUIREMENTS.

USDA NATURAL RESOURCES CONSERVATION SERVICE DATE

THIS PLAN IS APPROVED FOR SOIL EROSION AND SEDIMENT CONTROL BY THE HOWARD SOIL CONSERVATION DISTRICT.

HOWARD SOIL CONSERVATION DISTRICT DATE

SEDIMENT CONTROL MEASURES FOR THIS CONTRACT WILL BE IMPLEMENTED IN ACCORDANCE WITH SECTION 219 OF THE HOWARD COUNTY STANDARDS AND SPECIFICATIONS AND AS PER ROAD CONSTRUCTION PLANS PER F-~~06-89~~.

DEPARTMENT OF PUBLIC WORKS
HOWARD COUNTY, MARYLAND

1-25-07
CHIEF, BUREAU OF UTILITIES DATE

DEPARTMENT OF PUBLIC WORKS
HOWARD COUNTY, MARYLAND

2/20/07
CHIEF, DEVELOPMENT ENGINEERING DIVISION DATE

McCRONE
● Engineering ● Environmental Sciences
● Construction Services ● Land Planning & Surveying
ANNAPOLIS ● CENTREVILLE ● DOVER ● ELKTON ● SALISBURY
20 RIDGELY AVENUE
ANNAPOLIS, MARYLAND 21401
PHONE (410) 267-8851 * FAX (410) 267-0932
www.mccrone-inc.com
Copyright © 2004

STATE OF MARYLAND
RICHARD J. MULTANEN
No. 11371
PROFESSIONAL ENGINEER
12/22/06

DES: B.T.D., N.V.S.					
DRN: B.T.D., N.V.S.					
CHK: R.J.R.					
DATE: DEC., 2006	SD BY	1 No.	SUBDIVISION NAME REVISION	4/10/07 DATE	

DRAINFIELD PROFILES

JOB No. C1040062

SHEPPARD MANOR
~~PEDDICORD~~ SHARED SEPTIC SYSTEM
LOTS 1 - 19
CONTRACT ~~# 60-0376~~ 60-4357D
TAX MAP NO. 29 - GRID NO. 1 - PARCEL 268
ELECTION DISTRICT No. 5
HOWARD COUNTY, MARYLAND

SCALE AS SHOWN

SHEET 9 OF 18

CADD FILE: G:\1040062 - Peddicord Property\Drawings\SHARED SEPTIC DESIGN\Drainfield Profiles_rev01.dwg ------ Tab.....Layout2

PLOTTED: Dec 28, 2006 - 10:31am

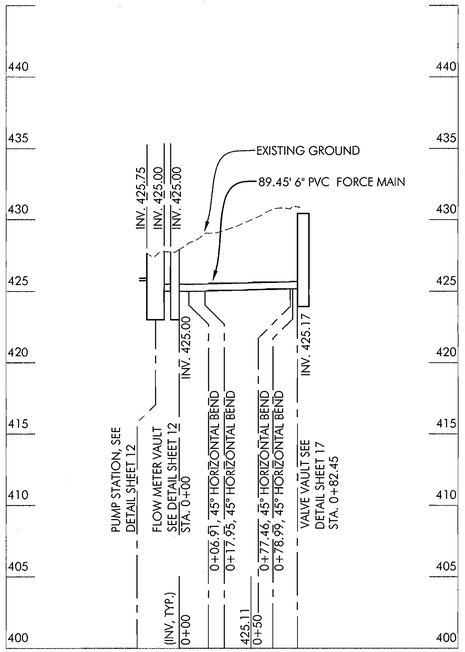

6" FM PROFILE FROM FLOW METER TO VALVE VAULT FIELDS A & B

SCALE
1" = 50' HORIZONTAL;
1" = 5' VERTICAL

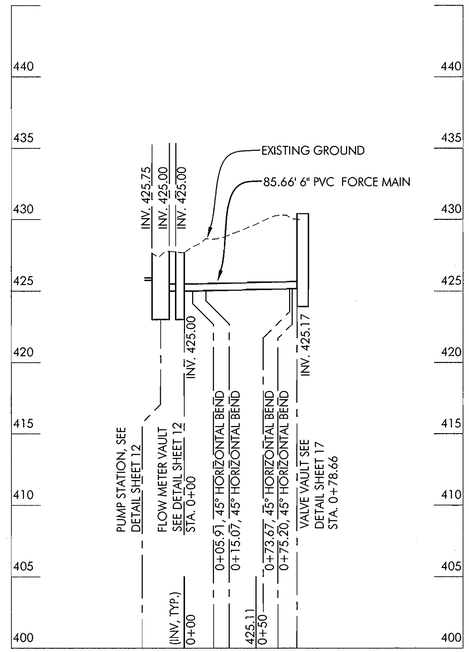

6" FM PROFILE FROM FLOW METER TO VALVE VAULT FIELDS B & C

SCALE
1" = 50' HORIZONTAL;
1" = 5' VERTICAL

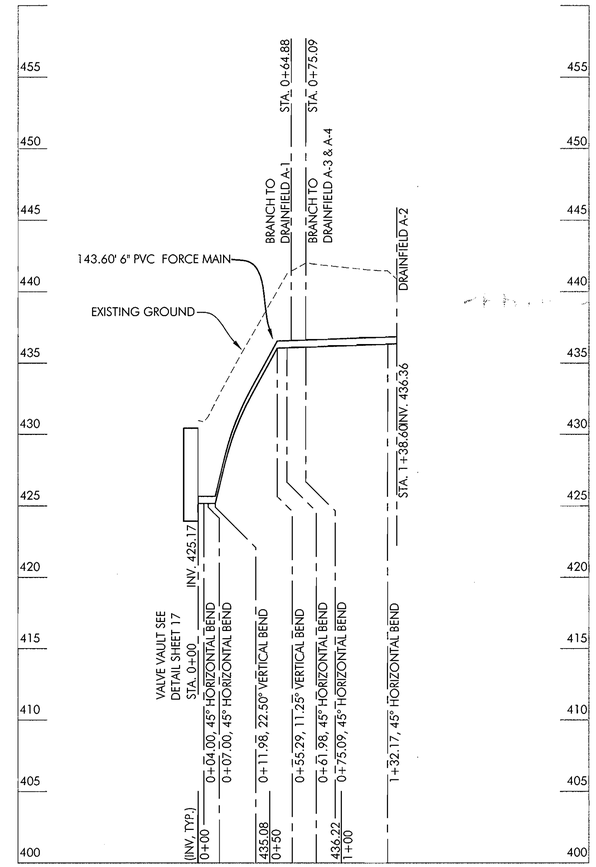

6" FM PROFILE FROM VALVE VAULT TO DRAINFIELD A

SCALE
1" = 50' HORIZONTAL;
1" = 5' VERTICAL

APPROVED: FOR PRIVATE SHARED SEWERAGE SYSTEM FOR LOTS 1, 2, 3, 4, 5, 6, 15, 16, 17, 18, AND 19.
HOWARD COUNTY HEALTH DEPARTMENT

for HOWARD COUNTY HEALTH OFFICER — DATE 1/19/07

HOWARD SOIL CONSERVATIONS DISTRICT:
REVEWED FOR HOWARD COUNTY SOIL CONSERVATION DISTRICT AND MEETS TECHNICAL REQUIREMENTS.

USDA NATURAL RESOURCES CONSERVATION SERVICE — DATE

THIS PLAN IS APPROVED FOR SOIL EROSION AND SEDIMENT CONTROL BY THE HOWARD SOIL CONSERVATION DISTRICT.

HOWARD SOIL CONSERVATION DISTRICT — DATE

SEDIMENT CONTROL MEASURES FOR THIS CONTRACT WILL BE IMPLEMENTED IN ACCORDANCE WITH SECTION 219 OF THE HOWARD COUNTY STANDARDS AND SPECIFICATIONS AND AS PER ROAD CONSTRUCTION PLANS PER F-~~06-99~~.

DEPARTMENT OF PUBLIC WORKS HOWARD COUNTY, MARYLAND	DEPARTMENT OF PUBLIC WORKS HOWARD COUNTY, MARYLAND	McCRONE							DRAINFIELD PROFILES	SHEPPARD MANOR ~~PEDDICORD~~ SHARED SEPTIC SYSTEM	SCALE AS SHOWN
CHIEF, BUREAU OF UTILITIES — DATE 1-25-07	CHIEF, DEVELOPMENT ENGINEERING DIVISION — DATE 2/07/07	Engineering • Environmental Sciences • Construction Services • Land Planning & Surveying; ANNAPOLIS • CENTREVILLE • DOVER • ELKTON • SALISBURY; 29 RIDGELY AVENUE ANNAPOLIS, MARYLAND 21401; PHONE (410) 267-8821 * FAX (410) 267-0932; www.mccrone-inc.com; Copyright © 2004	STATE OF MARYLAND PROFESSIONAL ENGINEER — 12/20/06	DES: B.T.D., N.V.S.						LOTS 1 - 19; CONTRACT # ~~R-3376~~ 50 - 4367 D; TAX MAP NO. 29 - GRID NO. 1 - PARCEL 268; ELECTION DISTRICT No. 5; HOWARD COUNTY, MARYLAND	SHEET 8 OF 18
				DRN: B.T.D., N.V.S.							
				CHK: R.J.R.							
				DATE: DEC., 2006	BY: SD	No.: 1	REVISION: SUBDIVISION NAME	DATE: 4/10/07	JOB No. C1040062		

CADD FILE: G:\1040062 - Peddicord Property\Drawings\SHARED SEPTIC DESIGN\Drainfield Profiles_rev01.dwg ------ Tab.....Layout1

PLOTTED: Dec 28 , 2006 - 10:31am

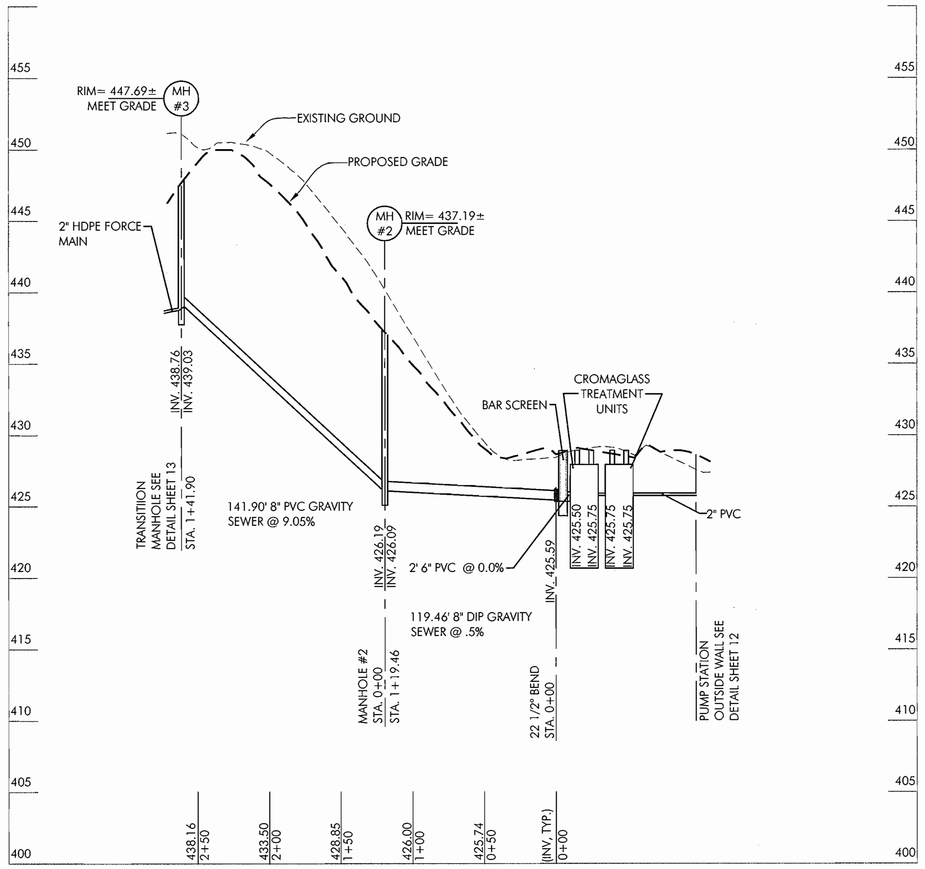

8" GRAVITY PROFILE FROM TRANSITION MH TO PUMP STATION

SCALE

1" = 50' HORIZONTAL;
1" = 5' VERTICAL

APPROVED: FOR PRIVATE SHARED SEWERAGE SYSTEM FOR LOTS 1, 2, 3, 4, 5, 6, 15, 16, 17, 18, AND 19.
HOWARD COUNTY HEALTH DEPARTMENT

for Robert J. Weber — 1/19/07
HOWARD COUNTY HEALTH OFFICER — DATE

HOWARD SOIL CONSERVATIONS DISTRICT:
REVEWED FOR HOWARD COUNTY SOIL CONSERVATION DISTRICT AND MEETS TECHNICAL REQUIREMENTS.

USDA NATURAL RESOURCES CONSERVATION SERVICE — DATE

THIS PLAN IS APPROVED FOR SOIL EROSION AND SEDIMENT CONTROL BY THE HOWARD SOIL CONSERVATION DISTRICT.

HOWARD SOIL CONSERVATION DISTRICT — DATE

SEDIMENT CONTROL MEASURES FOR THIS CONTRACT WILL BE IMPLEMENTED IN ACCORDANCE WITH SECTION 219 OF THE HOWARD COUNTY STANDARDS AND SPECIFICATIONS AND AS PER ROAD CONSTRUCTION PLANS PER F-06-99.

DEPARTMENT OF PUBLIC WORKS
HOWARD COUNTY, MARYLAND

1-25-07
CHIEF, BUREAU OF UTILITIES — DATE

DEPARTMENT OF PUBLIC WORKS
HOWARD COUNTY, MARYLAND

2/07/07
CHIEF, DEVELOPMENT ENGINEERING DIVISION — DATE

McCRONE
● Engineering ● Environmental Sciences
● Construction Services ● Land Planning & Surveying
ANNAPOLIS ● CENTREVILLE ● DOVER ● ELKTON ● SALISBURY
20 RIDGELY AVENUE
ANNAPOLIS, MARYLAND 21401
PHONE (410) 267-9021 * FAX (410) 267-9932
www.mccrone-inc.com
Copyright © 2004

STATE OF MARYLAND — PROFESSIONAL ENGINEER — No. 30725
12/28/06

DES: B.T.D., N.V.S.				
DRN: B.T.D., N.V.S.				
CHK: R.J.R.				
DATE: DEC., 2006	SD	1	SUBDIVISION NAME	4/10/07
	BY	No.	REVISION	DATE

GRAVITY PROFILES

JOB No. C1040062

SHEPPARD MANOR
~~PEDDICORD~~ SHARED SEPTIC SYSTEM
LOTS 1 - 19
CONTRACT ~~#R-3376~~ 50-4357D
TAX MAP NO. 29 - GRID NO. 1 - PARCEL 268
ELECTION DISTRICT No. 5
HOWARD COUNTY, MARYLAND

SCALE AS SHOWN

SHEET 7 OF 18

CADD FILE: G:\1040062 - Peddicord Property\Drawings\SHARED SEPTIC DESIGN\GRAVITY PROFILE.dwg ------ Tab.....Layout1

PLOTTED: Dec 28, 2006 - 10:30am

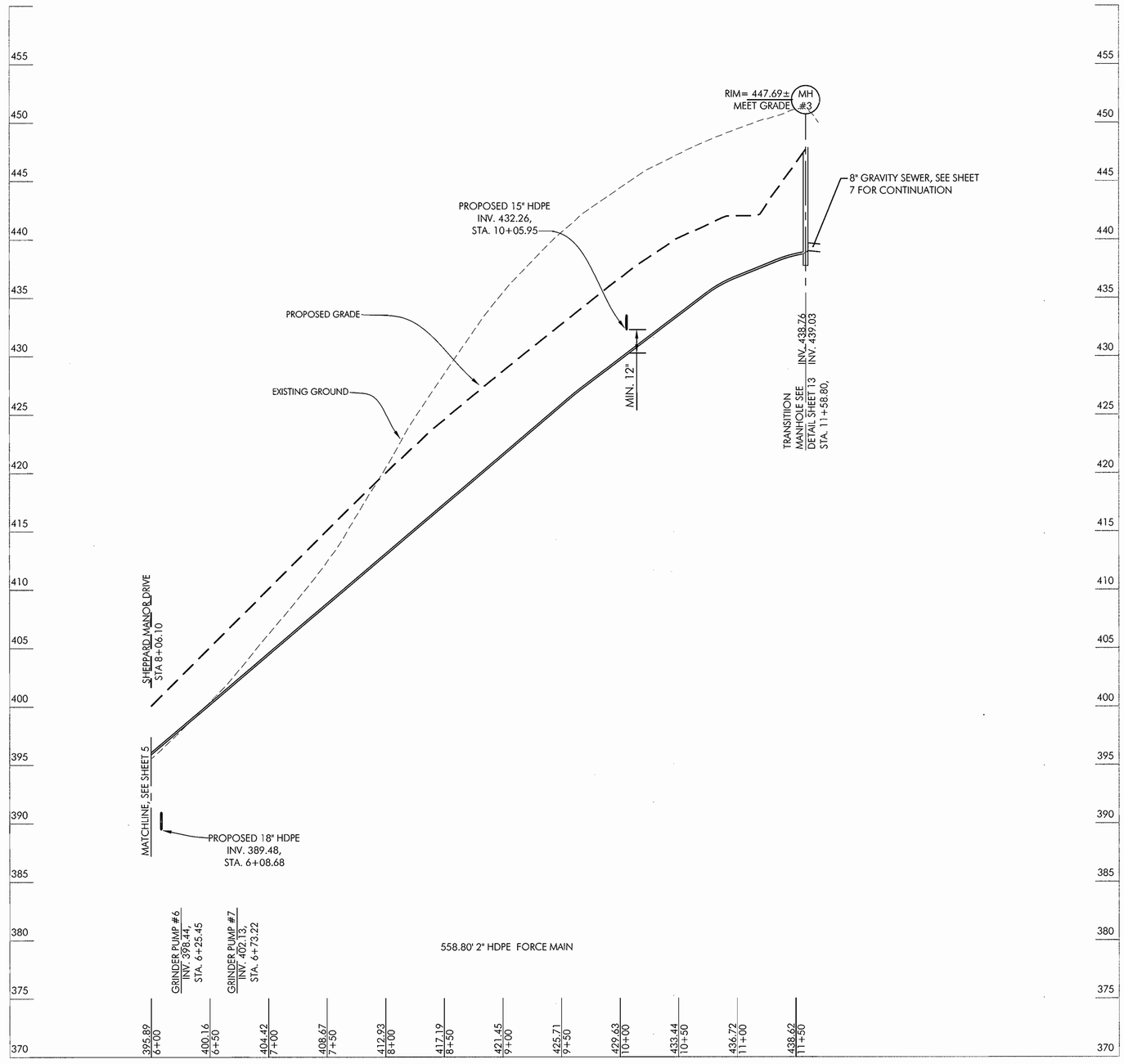

2" FM PROFILE TO TRANSITION MH

APPROVED: FOR PRIVATE SHARED SEWERAGE SYSTEM FOR LOTS 1, 2, 3, 4, 5, 6, 15, 16, 17, 18, AND 19.
HOWARD COUNTY HEALTH DEPARTMENT

for Robert J. Weber 1/19/07
HOWARD COUNTY HEALTH OFFICER DATE

HOWARD SOIL CONSERVATIONS DISTRICT:
REVEWED FOR HOWARD COUNTY SOIL CONSERVATION DISTRICT AND MEETS TECHNICAL REQUIREMENTS.

USDA NATURAL RESOURCES CONSERVATION SERVICE DATE

THIS PLAN IS APPROVED FOR SOIL EROSION AND SEDIMENT CONTROL BY THE HOWARD SOIL CONSERVATION DISTRICT.

HOWARD SOIL CONSERVATION DISTRICT DATE

SEDIMENT CONTROL MEASURES FOR THIS CONTRACT WILL BE IMPLEMENTED IN ACCORDANCE WITH SECTION 219 OF THE HOWARD COUNTY STANDARDS AND SPECIFICATIONS AND AS PER ROAD CONSTRUCTION PLANS PER F-06-99.

SCALE
1" = 50' HORIZONTAL;
1" = 5' VERTICAL

DEPARTMENT OF PUBLIC WORKS
HOWARD COUNTY, MARYLAND

1-25-07
CHIEF, BUREAU OF UTILITIES DATE

DEPARTMENT OF PUBLIC WORKS
HOWARD COUNTY, MARYLAND

2/27/07
CHIEF, DEVELOPMENT ENGINEERING DIVISION DATE

McCRONE
● Engineering ● Environmental Sciences
● Construction Services ● Land Planning & Surveying
ANNAPOLIS ● CENTREVILLE ● DOVER ● ELKTON ● SALISBURY
20 RIDGELY AVENUE
ANNAPOLIS, MARYLAND 21401
PHONE (410) 267-8621 * FAX (410) 267-9032
www.mccrone-inc.com
Copyright © 2004

STATE OF MARYLAND REGISTERED PROFESSIONAL ENGINEER
12/28/06

DES: B.T.D., N.V.S.				
DRN: B.T.D., N.V.S				
CHK: R.J.R.	SD	1	SUBDIVISION NAME	4/10/07
DATE: DEC., 2006	BY	No.	REVISION	DATE

LOW PRESSURE PROFILES

JOB No. C1040062

SHEPPARD MANOR
~~PEDDICORD~~ SHARED SEPTIC SYSTEM
LOTS 1 - 19
CONTRACT # ~~R-3370~~ 50-4367D
TAX MAP NO. 29 - GRID NO. 1 - PARCEL 268
ELECTION DISTRICT No. 5
HOWARD COUNTY, MARYLAND

SCALE AS SHOWN

SHEET 6 OF 18

CADD FILE: G:\1040062 - Peddicord Property\Drawings\SHARED SEPTIC DESIGN\FM PROFILE.dwg ------ Tab.....Layout2

PLOTTED: Dec 28, 2006 - 10:29am

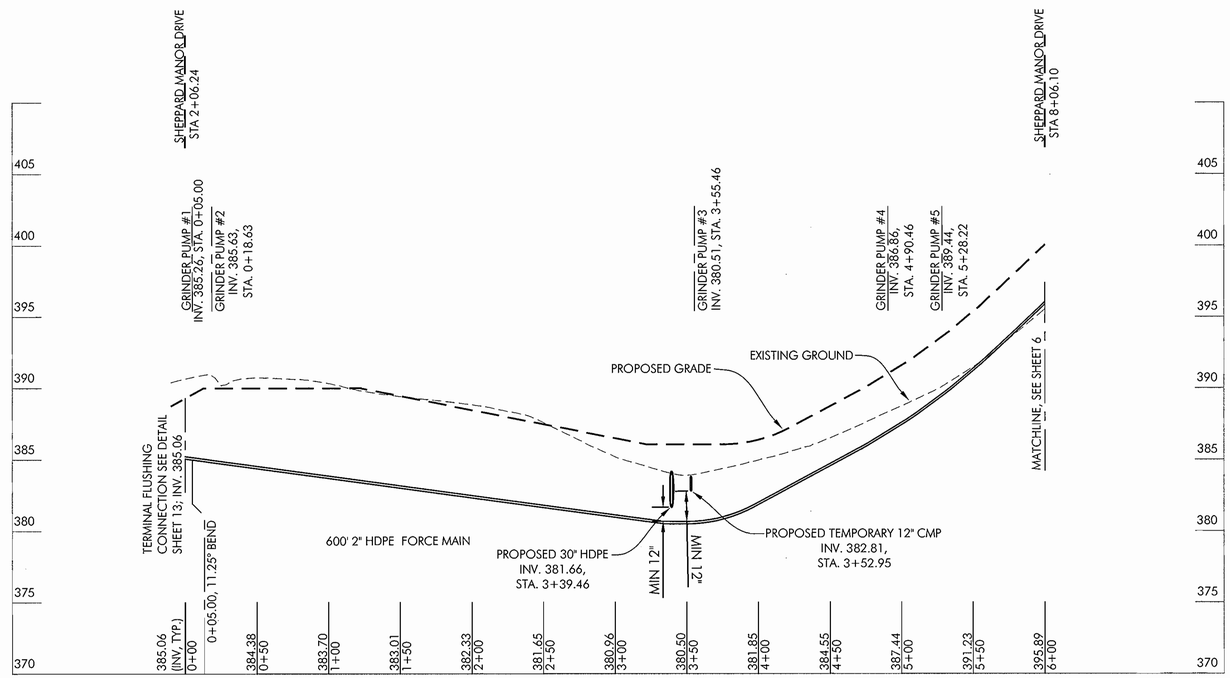

2" FM PROFILE FROM TERMINAL FLUSHING CONNECTION

SCALE

1" = 50' HORIZONTAL;
1" = 5' VERTICAL

APPROVED: FOR PRIVATE SHARED SEWERAGE SYSTEM FOR LOTS 1, 2, 3, 4, 5, 6, 15, 16, 17, 18, AND 19.
HOWARD COUNTY HEALTH DEPARTMENT

for Robert J. Weber — 1/19/07
HOWARD COUNTY HEALTH OFFICER — DATE

HOWARD SOIL CONSERVATIONS DISTRICT:
REVEWED FOR HOWARD COUNTY SOIL CONSERVATION DISTRICT AND MEETS TECHNICAL REQUIREMENTS.

Jim Myers — 2/6/07
USDA NATURAL RESOURCES CONSERVATION SERVICE — DATE

THIS PLAN IS APPROVED FOR SOIL EROSION AND SEDIMENT CONTROL BY THE HOWARD SOIL CONSERVATION DISTRICT.

John V. Robertson — 2/6/07
HOWARD SOIL CONSERVATION DISTRICT — DATE

SEDIMENT CONTROL MEASURES FOR THIS CONTRACT WILL BE IMPLEMENTED IN ACCORDANCE WITH SECTION 219 OF THE HOWARD COUNTY STANDARDS AND SPECIFICATIONS AND AS PER ROAD CONSTRUCTION PLANS PER F-06-59.

DEPARTMENT OF PUBLIC WORKS HOWARD COUNTY, MARYLAND	DEPARTMENT OF PUBLIC WORKS HOWARD COUNTY, MARYLAND
Robert Bu — 1-25-07	2/6/07
CHIEF, BUREAU OF UTILITIES — DATE	CHIEF, DEVELOPMENT ENGINEERING DIVISION — DATE

McCRONE
● Engineering ● Environmental Sciences
● Construction Services ● Land Planning & Surveying
ANNAPOLIS ● CENTREVILLE ● DOVER ● ELKTON ● SALISBURY
20 RIDGELY AVENUE
ANNAPOLIS, MARYLAND 21401
PHONE (410) 267-8621 * FAX (410) 267-9932
www.mccrone-inc.com
Copyright © 2004

STATE OF MARYLAND — PROFESSIONAL ENGINEER — No. 30778 — 12/28/06

	BY	No.	REVISION	DATE
DES: B.T.D., N.V.S.				
DRN: B.T.D., N.V.S				
CHK: R.J.R.	SD	1	SUBDIVISION NAME	4/10/07
DATE: DEC., 2006				

LOW PRESSURE PROFILES

JOB No. C1040062

SHEPPARD MANOR
~~PEDDICORD~~ SHARED SEPTIC SYSTEM
LOTS 1 - 19
CONTRACT # 50-4367D
TAX MAP NO. 29 - GRID NO. 1 - PARCEL 268
ELECTION DISTRICT No. 5
HOWARD COUNTY, MARYLAND

SCALE AS SHOWN

SHEET 5 OF 18

PLOTTED: Dec 28, 2006 - 10:29am

CADD FILE: G:\1040062 - Peddicord Property\Drawings\SHARED SEPTIC DESIGN\FM PROFILE.dwg ------ Tab.....Layout1

POTABLE WELL NOTES:

1. CONTRACTOR SHALL PROVIDE ALL MATERIALS, TOOLS, AND LABOR TO CONSTRUCT A RESIDENTIAL TYPE POTABLE WATER WELL MEETING ALL LOCAL AND STATE REQUIREMENTS.
2. THE WELL SHALL BE CAPABLE OF PRODUCING 5 GALLONS PER MINUTE.
3. THE WELL SHALL BE 4 INCHES IN DIAMETER.
4. CONTRACTOR SHALL BE RESPONSIBLE FOR SECURING ALL CONSTRUCTION RELATED PERMITS.
5. WELL SHALL BE DISINFECTED PER LOCAL AND STATE REQUIREMENTS. SAMPLES SHALL BE SAMPLED AND ANALYZED BY A STATE CERTIFIED LAB. WELL SHALL BE BACETERIA FREE PER STATE AND LOCAL REQUIREMENTS PRIOR TO PLACEMENT INTO SERVICE.
6. CASING MATERIAL SHALL BE STEEL.
7. CONTRACTOR SHALL PROVIDE A 2-INCH PVC WATER SUPPLY PIPE FROM THE WELL TO THE CONTROL BUILDING AS SHOWN ON THIS SHEET.
8. CONTRACTOR SHALL PROVIDE A PITLESS ADAPTER FOR THE WELL.
9. WELL PUMP SHALL BE A GOULDS SUBMERSIBLE TURBINE PUMP OR SIMILAR.
10. LOCATION OF THE WELL IS APPROXIMATE. CONTRACTOR SHALL LOCATE THE WELL WITHIN THE SHADED AREA PROVIDED OR SEEK APPROVAL FROM THE ENGINEER AND LOCAL HEALTH DEPARTMENT FOR AN ALTERNATE LOCATION.
11. UNSUCCESSFUL PILOT HOLES SHALL BE ABANDONED PER COMAR REQUIREMENTS.

DRAINFIELDS TRENCHES LEGEND

- ISOLATION VALVE
- BLOWOFF VALVE VAULT
- TRENCH NUMBER
- TRENCH END NUMBER
- FUTURE TRENCH (100%)
- INITIALLY INSTALLED TRENCH (200%)
- CHECK VALVE VAULT

GRAPHIC SCALE

30 0 15 30 60

1 inch = 30 ft.

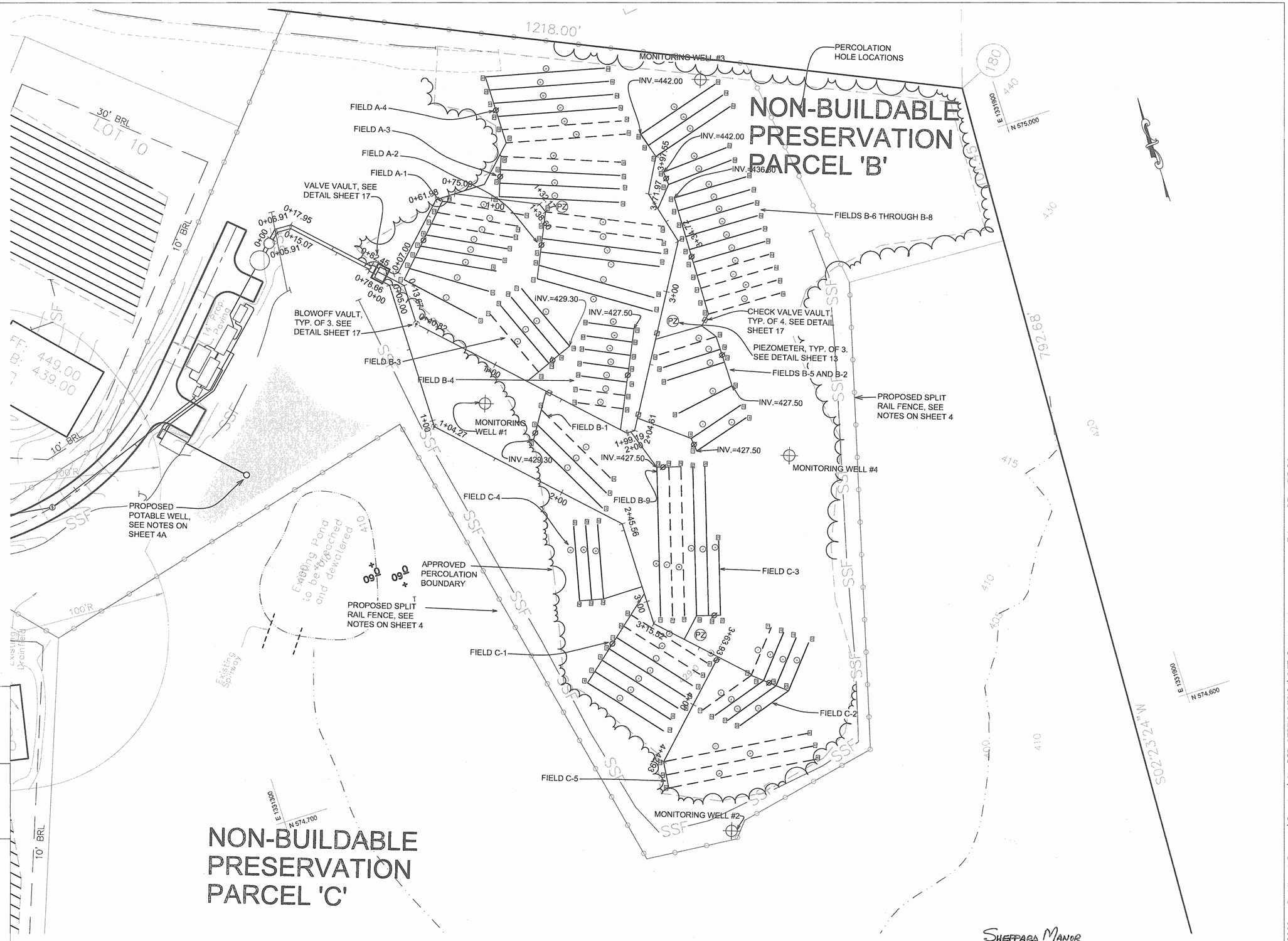

APPROVED: FOR PRIVATE SHARED SEWERAGE SYSTEM FOR LOTS 1, 2, 3, 4, 5, 6, 15, 16, 17, 18, AND 19.
HOWARD COUNTY HEALTH DEPARTMENT

HOWARD COUNTY HEALTH OFFICER — DATE 1/19/07

HOWARD SOIL CONSERVATIONS DISTRICT:
REVEWED FOR HOWARD COUNTY SOIL CONSERVATION DISTRICT AND MEETS TECHNICAL REQUIREMENTS.

USDA NATURAL RESOURCES CONSERVATION SERVICE — DATE 2/8/07

THIS PLAN IS APPROVED FOR SOIL EROSION AND SEDIMENT CONTROL BY THE HOWARD SOIL CONSERVATION DISTRICT.

HOWARD SOIL CONSERVATION DISTRICT — DATE 2/8/07

SEDIMENT CONTROL MEASURES FOR THIS CONTRACT WILL BE IMPLEMENTED IN ACCORDANCE WITH SECTION 219 OF THE HOWARD COUNTY STANDARDS AND SPECIFICATIONS AND AS PER ROAD CONSTRUCTION PLANS PER F-06-93.

DEPARTMENT OF PUBLIC WORKS
HOWARD COUNTY, MARYLAND

CHIEF, BUREAU OF UTILITIES — DATE 1-25-07

DEPARTMENT OF PUBLIC WORKS
HOWARD COUNTY, MARYLAND

CHIEF, DEVELOPMENT ENGINEERING DIVISION — DATE 1/10/07

McCRONE
Engineering • Environmental Sciences • Construction Services • Land Planning & Surveying
ANNAPOLIS • CENTREVILLE • DOVER • ELKTON • SALISBURY
29 RIDGELY AVENUE, ANNAPOLIS, MARYLAND 21401
PHONE (410) 267-8021 • FAX (410) 267-9532
www.mccrone-inc.com
Copyright © 2004

STATE OF MARYLAND — RICHARD J. WEBER — No. 30778 — PROFESSIONAL ENGINEER — 12/28/06

DES: B.T.D., N.V.S.			
DRN: B.T.D., N.V.S.			
CHK: R.J.R.			
DATE: DEC., 2006	BY	No.	REVISION
	SD	1	SUBDIVISION NAME

DATE: 4/10/07

DRAINFIELDS

JOB No. C1040062

SHEPPARD MANOR

~~PEDDICORD~~ SHARED SEPTIC SYSTEM

LOTS 1 - 19
CONTRACT # 50-4867D
TAX MAP NO. 29 - GRID NO. 1 - PARCEL 268
ELECTION DISTRICT No. 5
HOWARD COUNTY, MARYLAND

SCALE AS SHOWN

SHEET 4A OF 18

CADD FILE: G:\1040062 – Peddicord Property\Drawings\SHARED SEPTIC DESIGN\SITE PLAN v4.dwg ---------- Tab.....DRAINFIELDS

PLOTTED: Dec 28 , 2006 – 10:04am

SPLIT RAIL FENCE NOTES:

1. FENCE SHALL BE 3-RAIL TYPE.
2. SPLIT RAIL FENCE SHALL BE 4' IN HEIGHT ABOVE GROUND.
3. POSTS SHALL BE 3" x 6" AND PLACED EVERY 8 FEET. POSTS SHALL BE BURIED A MINIMUM OF 2 FEET INTO THE GROUND WITH A MINIMUM 18" x 18" x 24" CONCRETE BLOCK AROUND THE POST.
4. SPLIT RAIL FENCE SHALL BE CONSTRUCTED OF PRESSURE TREATEED LUMBER.

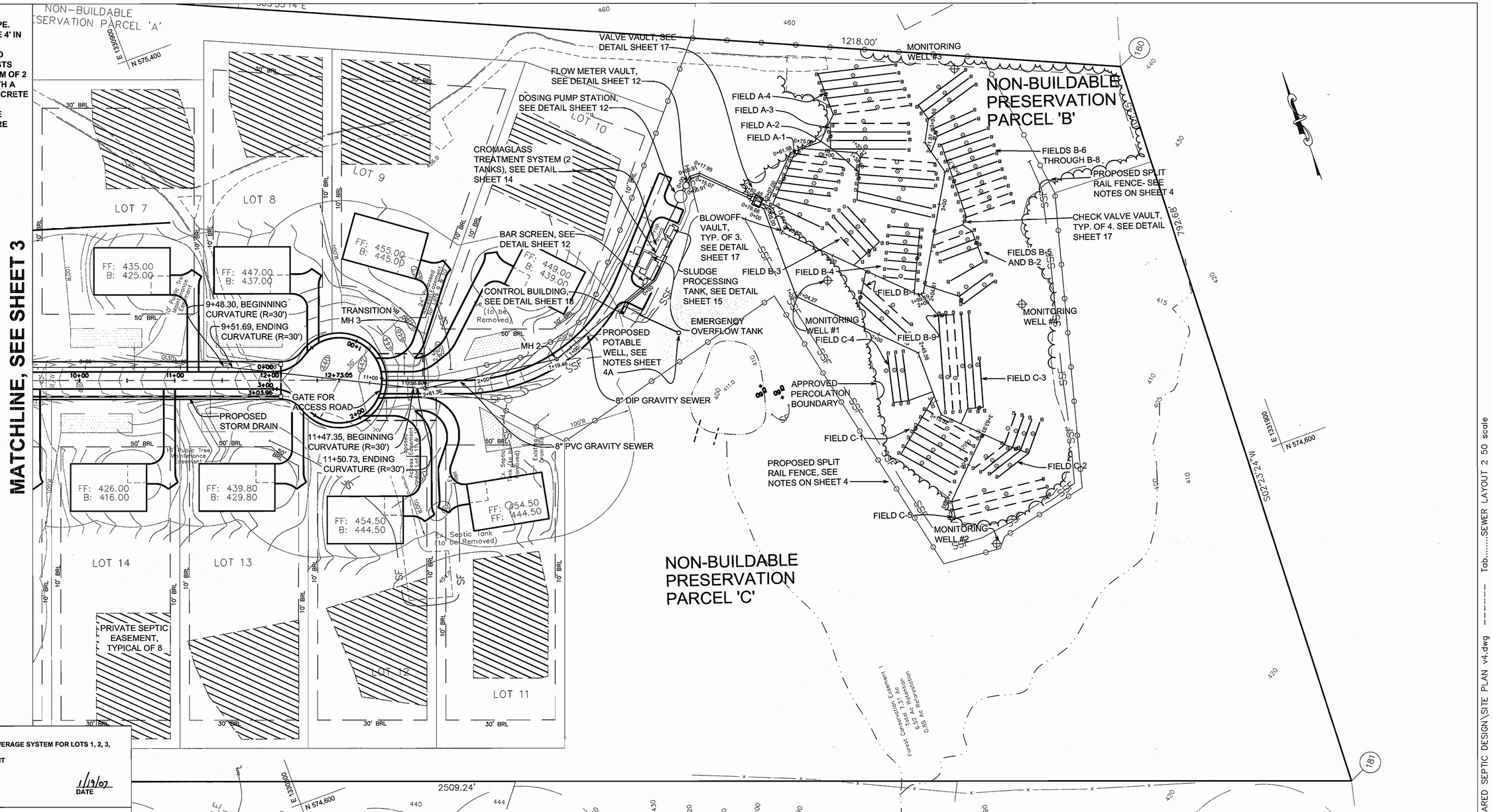

APPROVED: FOR PRIVATE SHARED SEWERAGE SYSTEM FOR LOTS 1, 2, 3, 4, 5, 6, 15, 16, 17, 18, AND 19.
HOWARD COUNTY HEALTH DEPARTMENT

Robert J. Weber — 1/19/07
HOWARD COUNTY HEALTH OFFICER — DATE

HOWARD SOIL CONSERVATIONS DISTRICT:
REVEWED FOR HOWARD COUNTY SOIL CONSERVATION DISTRICT AND MEETS TECHNICAL REQUIREMENTS.

Jim Myers — 2/6/07
USDA NATURAL RESOURCES CONSERVATION SERVICE — DATE

THIS PLAN IS APPROVED FOR SOIL EROSION AND SEDIMENT CONTROL BY THE HOWARD SOIL CONSERVATION DISTRICT.

2/6/07
HOWARD SOIL CONSERVATION DISTRICT — DATE

SEDIMENT CONTROL MEASURES FOR THIS CONTRACT WILL BE IMPLEMENTED IN ACCORDANCE WITH SECTION 219 OF THE HOWARD COUNTY STANDARDS AND SPECIFICATIONS AND AS PER ROAD CONSTRUCTION PLANS PER F-06-99.

GRAPHIC SCALE
50 0 25 50 100
1 inch = 50 ft.

GENERAL NOTES:

1) TEST STATIONS FOR LOW PRESSURE FORCE MAIN TO BE PLACED AT 200' INTERVALS. SEE DETAIL SHEET 13.
2) TRACER WIRE CONNECTIONS OFF OF THE MAIN MUST BE OVERLAPPING, INSULATED #6, FIRMLY CONNECTED AND ENCAPSULATED
3) 5 FT CLEARANCE MUST BE PROVIDED AROUND ELECTRICAL PANELS AND BGE METERS
4) CONTRACTOR TO INSTALL 6-INCH SERVICE GRAVITY PIPE FROM LOTS 4 AND 19 AT 1% SLOPE. CONTRACTOR TO INSTALL REDUCER ON 6-INCH PIPE TO CONNECT TO GRINDER PUMPS.
5) CONTRACTOR TO INSTALL MANIFOLDS AND ISOLATION VALVES FOR PROPOSED AND FUTURE FIELDS.
6) CONTRACTOR TO INSTALL 200% OF DRAINFIELDS INITIALLY. ONLY 150% OF INSTALLED 200% SHALL BE OPERATED INITIALLY. 100% OF DRAINFIELDS SHALL BE INSTALLED WHEN REQUIRED.

LEGEND

Existing Woods	Existing 15-25% Slopes	Proposed Water
Existing Utility Pole	Existing 25% & Greater Slopes	Proposed Fence
Existing Pavement	Proposed Silt Fence	Proposed Pavement
Existing Centerline of Road	Proposed Super Silt Fence	Proposed Gravel
Existing 10 Foot Contour	Proposed Stabilized Construction Entrance	Proposed 10 Foot Contour
Existing 2 Foot Contour	Proposed Building	Proposed 2 Foot Contour
Existing Soil Boundary	Proposed Sewer	Proposed Treeline
Proposed Sewer by Others		Proposed Limit of Disturbance

DEPARTMENT OF PUBLIC WORKS
HOWARD COUNTY, MARYLAND

R.J.R. — 1-25-07
CHIEF, BUREAU OF UTILITIES — DATE

DEPARTMENT OF PUBLIC WORKS
HOWARD COUNTY, MARYLAND

2/27/07
CHIEF, DEVELOPMENT ENGINEERING DIVISION — DATE

McCRONE
Engineering • Environmental Sciences
Construction Services • Land Planning & Surveying
ANNAPOLIS • CENTREVILLE • DOVER • ELKTON • SALISBURY
20 RIDGELY AVENUE
ANNAPOLIS, MARYLAND 21401
PHONE (410) 267-8821 • FAX (410) 267-0032
www.mccrone-inc.com

Copyright © 2004

STATE OF MARYLAND — REGISTERED PROFESSIONAL ENGINEER — 12/20/06

DES: B.T.D., N.V.S.			
DRN: B.T.D., N.V.S.			
CHK: R.J.R.			
DATE: DEC., 2006	BY	No.	REVISION
	SD	1	SUBDIVISION NAME

DATE: 4/10/07

SEWER PLAN VIEW

JOB No. C1040062

~~PEDDICORD~~ SHARED SEPTIC SYSTEM

LOTS 1 - 19
CONTRACT # 50-4857D
TAX MAP NO. 29 - GRID NO. 1 - PARCEL 268
ELECTION DISTRICT No. 5
HOWARD COUNTY, MARYLAND

SHEPPARD MANOR

SCALE AS SHOWN

SHEET 4 OF 18

PLOTTED: Dec 28, 2006 – 10:00am

CADD FILE: G:\1040062 – Peddicord Property\Drawings\SHARED SEPTIC DESIGN\SITE PLAN v4.dwg ------ Tab.....SEWER LAYOUT 2 50 scale

LEGEND

- Existing Woods
- Existing Utility Pole
- Existing Pavement
- Existing Centerline of Road
- Existing 10 Foot Contour — 360
- Existing 2 Foot Contour — 362
- Existing Soil Boundary
- Existing 15-25% Slopes
- Existing 25% & Greater Slopes
- Proposed Silt Fence — S.F.
- Proposed Super Silt Fence — S.S.F.
- Proposed Stabilized Construction Entrance — SCE
- Proposed Building
- Proposed Sewer
- Proposed Sewer by Others
- Proposed Water
- Proposed Fence
- Proposed Pavement
- Proposed Gravel
- Proposed 10 Foot Contour — 360
- Proposed 2 Foot Contour — 358
- Proposed Treeline
- Proposed Limit of Disturbance — L.O.D.

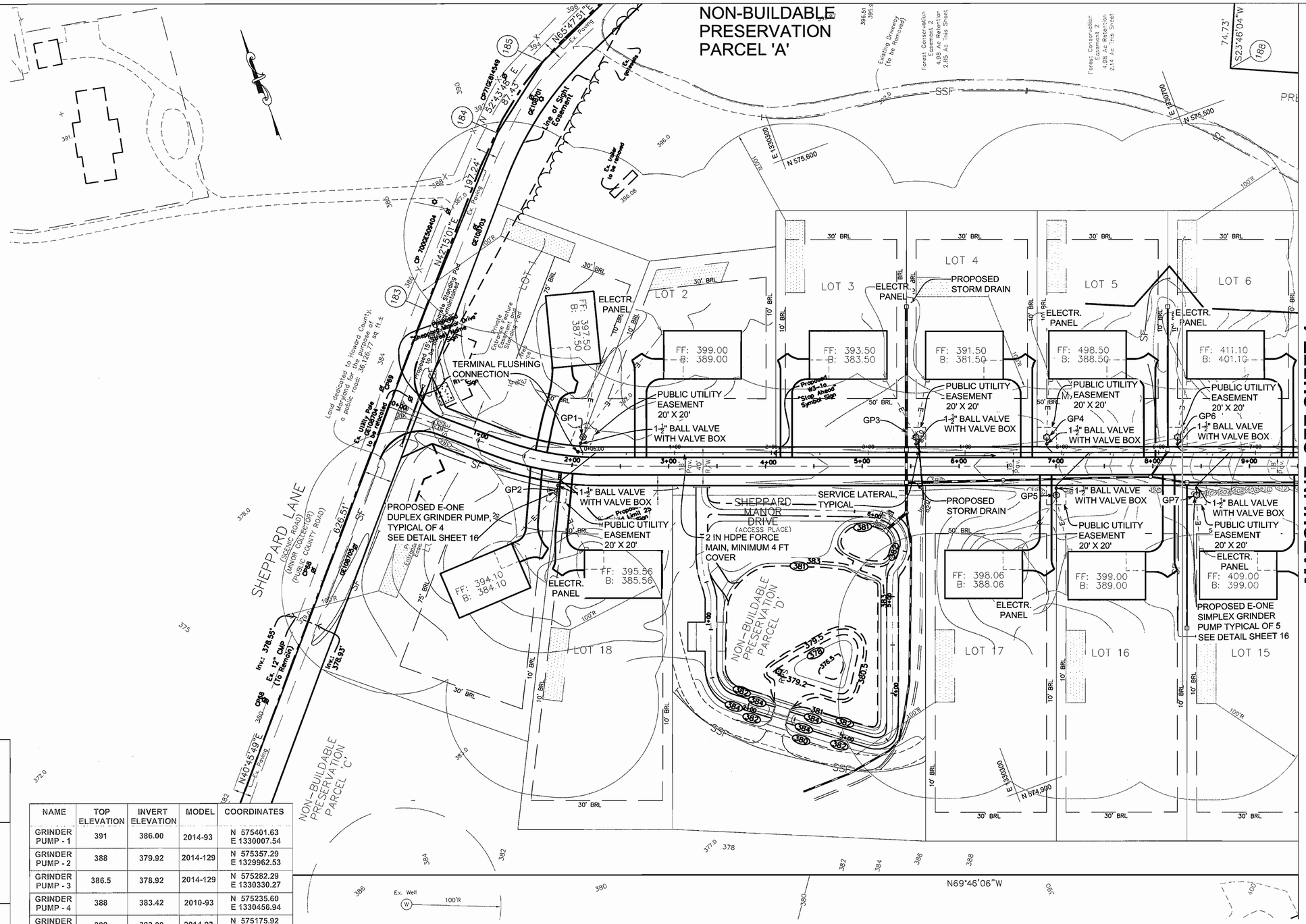

GENERAL NOTES:

1) TEST STATIONS FOR LOW PRESSURE FORCE MAIN TO BE PLACED AT 200' INTERVALS. SEE DETAIL SHEET 13.
2) TRACER WIRE CONNECTIONS OFF OF THE MAIN MUST BE OVERLAPPING, INSULATED #6, FIRMLY CONNECTED AND ENCAPSULATED
3) 5 FT CLEARANCE MUST BE PROVIDED AROUND ELECTRICAL PANELS AND BGE METERS
4) CONTRACTOR TO INSTALL 6-INCH SERVICE GRAVITY PIPE FROM LOTS 4 AND 19 AT 1% SLOPE. CONTRACTOR TO INSTALL REDUCER ON 6-INCH PIPE TO CONNECT TO GRINDER PUMPS.
5) CONTRACTOR TO INSTALL MANIFOLDS AND ISOLATION VALVES FOR PROPOSED AND FUTURE FIELDS.
6) CONTRACTOR TO INSTALL 200% OF DRAINFIELDS INITIALLY. ONLY 150% OF INSTALLED 200% SHALL BE OPERATED INITIALLY. 100% OF DRAINFIELDS SHALL BE INSTALLED WHEN REQUIRED.

APPROVED: FOR PRIVATE SHARED SEWERAGE SYSTEM FOR LOTS 1, 2, 3, 4, 5, 6, 15, 16, 17, 18, AND 19.
HOWARD COUNTY HEALTH DEPARTMENT

HOWARD COUNTY HEALTH OFFICER — DATE 1/9/07

HOWARD SOIL CONSERVATIONS DISTRICT:
REVEWED FOR HOWARD COUNTY SOIL CONSERVATION DISTRICT AND MEETS TECHNICAL REQUIREMENTS.

USDA NATURAL RESOURCES CONSERVATION SERVICE — DATE 2/6/07

THIS PLAN IS APPROVED FOR SOIL EROSION AND SEDIMENT CONTROL BY THE HOWARD SOIL CONSERVATION DISTRICT.

HOWARD SOIL CONSERVATION DISTRICT — DATE 2/6/07

SEDIMENT CONTROL MEASURES FOR THIS CONTRACT WILL BE IMPLEMENTED IN ACCORDANCE WITH SECTION 219 OF THE HOWARD COUNTY STANDARDS AND SPECIFICATIONS AND AS PER ROAD CONSTRUCTION PLANS PER F-05-49.

NAME	TOP ELEVATION	INVERT ELEVATION	MODEL	COORDINATES
GRINDER PUMP - 1	391	386.00	2014-93	N 575401.63 E 1330007.54
GRINDER PUMP - 2	388	379.92	2014-129	N 575357.29 E 1329962.53
GRINDER PUMP - 3	386.5	378.92	2014-129	N 575282.29 E 1330330.27
GRINDER PUMP - 4	388	383.42	2010-93	N 575235.60 E 1330456.94
GRINDER PUMP - 5	388	383.00	2014-93	N 575175.92 E 1330445.37
GRINDER PUMP - 6	398	395.00	2010-74	N 575188.91 E 1330583.61
GRINDER PUMP - 7	400	392.83	2010-124	N 575125.77 E 1330581.42

DEPARTMENT OF PUBLIC WORKS
HOWARD COUNTY, MARYLAND
CHIEF, BUREAU OF UTILITIES — DATE 1-25-07

DEPARTMENT OF PUBLIC WORKS
HOWARD COUNTY, MARYLAND
CHIEF, DEVELOPMENT ENGINEERING DIVISION — DATE 4/9/07

McCRONE
Engineering • Environmental Sciences • Construction Services • Land Planning & Surveying
ANNAPOLIS • CENTREVILLE • DOVER • ELKTON • SALISBURY
39 RIDGELY AVENUE ANNAPOLIS, MARYLAND 21401
PHONE (410) 267-8821 * FAX (410) 267-0932
www.mccrone-inc.com
Copyright © 2004

STATE OF MARYLAND — REGISTERED PROFESSIONAL ENGINEER — No. 22728 — 12/20/06

DES: B.T.D., N.V.S.			
DRN: B.T.D., N.V.S.			
CHK: R.J.R.			
DATE: DEC., 2006	BY	No.	REVISION
	SD	1	SUBDIVISION NAME

DATE: 4/10/07

SEWER PLAN VIEW

JOB No. C1040062

SHEPPARD MANOR
~~PEDDICORD~~ SHARED SEPTIC SYSTEM
LOTS 1 - 19
CONTRACT # 50-4857D
TAX MAP NO. 29 - GRID NO. 1 - PARCEL 268
ELECTION DISTRICT No. 5
HOWARD COUNTY, MARYLAND

SCALE AS SHOWN

SHEET 3 OF 18

CADD FILE: G:\1040062 – Peddicord Property\Drawings\SHARED SEPTIC DESIGN\SITE PLAN v4.dwg ------ Tab.....SEWER LAYOUT 50 scale

PLOTTED: Dec 28 , 2006 – 9:55am

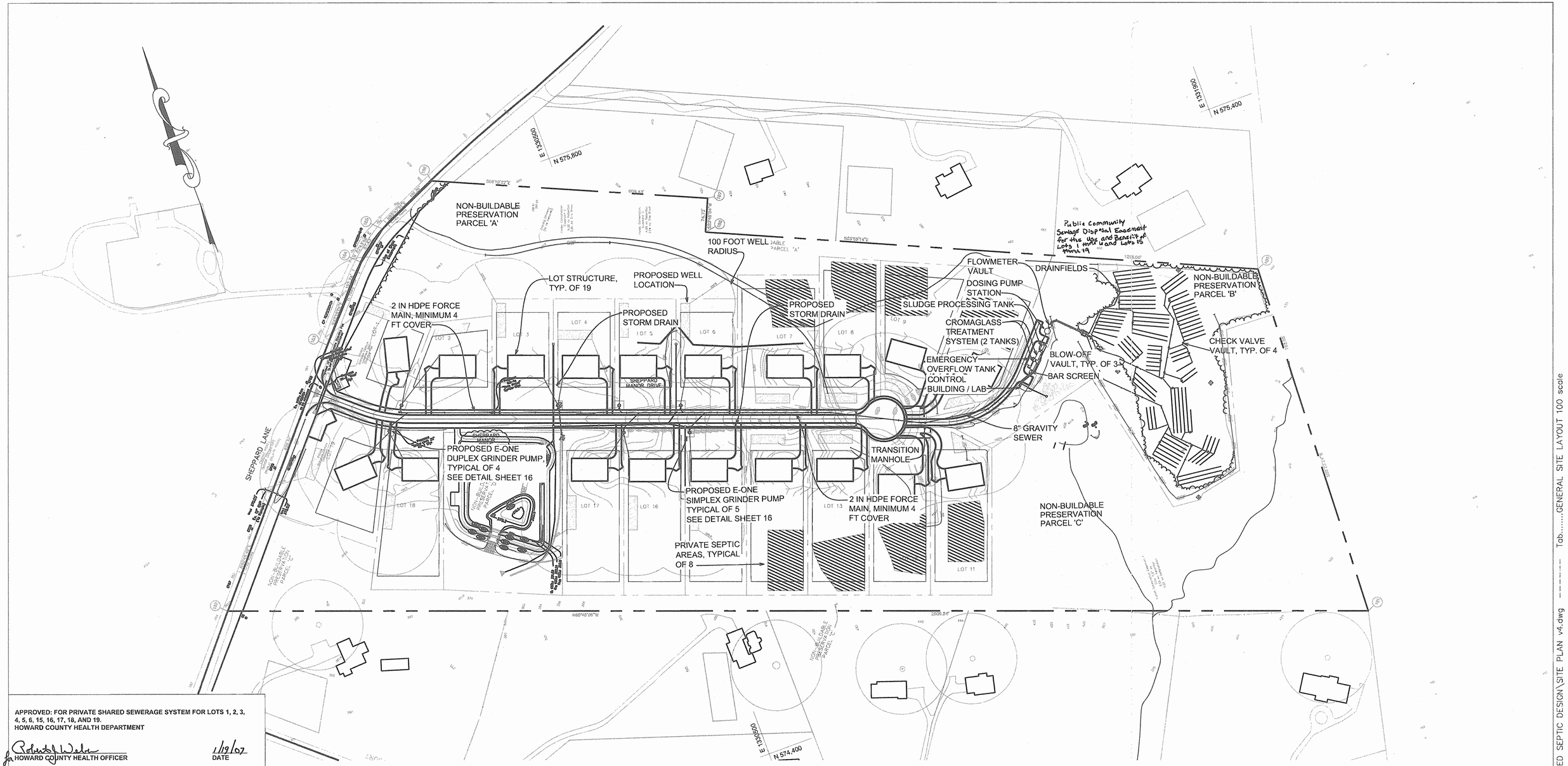

APPROVED: FOR PRIVATE SHARED SEWERAGE SYSTEM FOR LOTS 1, 2, 3, 4, 5, 6, 15, 16, 17, 18, AND 19.
HOWARD COUNTY HEALTH DEPARTMENT

for HOWARD COUNTY HEALTH OFFICER — DATE 1/19/07

HOWARD SOIL CONSERVATIONS DISTRICT:
REVEWED FOR HOWARD COUNTY SOIL CONSERVATION DISTRICT AND MEETS TECHNICAL REQUIREMENTS.

USDA NATURAL RESOURCES CONSERVATION SERVICE — DATE 2/6/07

THIS PLAN IS APPROVED FOR SOIL EROSION AND SEDIMENT CONTROL BY THE HOWARD SOIL CONSERVATION DISTRICT.

HOWARD SOIL CONSERVATION DISTRICT — DATE 2/6/07

SEDIMENT CONTROL MEASURES FOR THIS CONTRACT WILL BE IMPLEMENTED IN ACCORDANCE WITH SECTION 219 OF THE HOWARD COUNTY STANDARDS AND SPECIFICATIONS AND AS PER ROAD CONSTRUCTION PLANS PER F-05-89.

GRAPHIC SCALE
100 0 50 100 200
1 inch = 100 ft.

GENERAL NOTES:

1) TEST STATIONS FOR LOW PRESSURE FORCE MAIN TO BE PLACED AT 200' INTERVALS. SEE DETAIL SHEET 13.
2) TRACER WIRE CONNECTIONS OFF OF THE MAIN MUST BE OVERLAPPING, INSULATED #6, FIRMLY CONNECTED AND ENCAPSULATED.
3) 5 FT CLEARANCE MUST BE PROVIDED AROUND ELECTRICAL PANELS AND BGE METERS.
4) CONTRACTOR TO INSTALL 6-INCH SERVICE GRAVITY PIPE FROM LOTS 4 AND 19 AT 1% SLOPE. CONTRACTOR TO INSTALL REDUCER ON 6-INCH PIPE TO CONNECT TO GRINDER PUMPS.
5) CONTRACTOR TO INSTALL MANIFOLDS AND ISOLATION VALVES FOR PROPOSED AND FUTURE FIELDS.
6) CONTRACTOR TO INSTALL 200% OF DRAINFIELDS INITIALLY. ONLY 150% OF INSTALLED 200% SHALL BE OPERATED INITIALLY. 100% OF DRAINFIELDS SHALL BE INSTALLED WHEN REQUIRED.

LEGEND

Existing Woods
Existing Utility Pole
Existing Pavement
Existing Centerline of Road
Existing 10 Foot Contour — 360
Existing 2 Foot Contour — 362
Existing Soil Boundary
Proposed Sewer by Others
Existing 15-25% Slopes
Existing 25% & Greater Slopes
Proposed Silt Fence — S.F.
Proposed Super Silt Fence — S.S.F.
Proposed Stabilized Construction Entrance — SCE
Proposed Building
Proposed Sewer
Proposed Water
Proposed Fence
Proposed Pavement
Proposed Gravel
Proposed 10 Foot Contour — 360
Proposed 2 Foot Contour — 358
Proposed Treeline
Proposed Limit of Disturbance — L.O.D.

DEPARTMENT OF PUBLIC WORKS
HOWARD COUNTY, MARYLAND
CHIEF, BUREAU OF UTILITIES — DATE 1-25-07

DEPARTMENT OF PUBLIC WORKS
HOWARD COUNTY, MARYLAND
CHIEF, DEVELOPMENT ENGINEERING DIVISION — DATE 2/21/07

McCRONE
Engineering • Environmental Sciences • Construction Services • Land Planning & Surveying
ANNAPOLIS • CENTREVILLE • DOVER • ELKTON • SALISBURY
10 RIDGELY AVENUE ANNAPOLIS, MARYLAND 21401
PHONE (410) 267-0021 • FAX (410) 267-0052
www.mccrone-inc.com
Copyright © 2004

STATE OF MARYLAND — REGISTERED PROFESSIONAL ENGINEER — No. 20772 — 12/20/06

DES: B.T.D., N.V.S.					
DRN: B.T.D., N.V.S.					
CHK: R.J.R.					
DATE: DEC., 2006	SD	1	SUBDIVISION NAME	4/10/07	
	BY	No.	REVISION	DATE	

GENERAL SITE LAYOUT

JOB No. C1040062

~~PEDDICORD~~ SHAREDD SEPTIC SYSTEM
SHEPPARD MANOR
LOTS 1 - 19
CONTRACT # 50-4557D
TAX MAP NO. 29 - GRID NO. 1 - PARCEL 268
ELECTION DISTRICT No. 5
HOWARD COUNTY, MARYLAND

SCALE AS SHOWN

SHEET 2 OF 18

CADD FILE: G:\1040062 – Peddicord Property\Drawings\SHARED SEPTIC DESIGN\SITE PLAN v4.dwg ------ Tab.....GENERAL SITE LAYOUT 100 scale

PLOTTED: Dec. 28 , 2006 – 9:49am

Sheppard Manor

~~PEDDICORD~~ SHARED SEPTIC SYSTEM
HOWARD COUNTY, MARYLAND

INDEX OF DRAWINGS

SHEET NO:	DESCRIPTION	SHEET NO:	DESCRIPTION
1	TITLE SHEET	E-0	COVER SHEET
2	GENERAL SITE PLAN 1:100	E-1	SITE PLAN ELECTRICAL SERVICE
3	SEWER PLAN VIEW 1:50	E-2	CONTROL BUILDING LIGHT AND POWER
4	SEWER PLAN VIEW 1:50	E-3	CROMAGLASS & SLUDGE TANK ELECTRICAL
4A	DRAINFIELDS		
5	LOW PRESSURE PROFILE	E-4	DOSING PUMP STATION
6	LOW PRESSURE PROFILE	E-5	DOSING PUMP CONTROL PANEL & MISSION 800 - RTU
7	GRAVITY PROFILES	E-6	PANEL SCHEDULE, SINGLE LINE AND WALL PANEL LAYOUT
8	DRAINFIELD PROFILES		
9	DRAINFIELD PROFILES		
10	SEDIMENT CONTROL / DESIGN NOTES		
11	HYDRAULIC PROFILE / DESIGN NOTES CONT'D		
12	PUMP STATION AND DETAILS		
13	DETAILS		
14	CROMAGLASS TREATMENT UNIT		
15	CROMAGLASS TREATMENT UNIT AND DETAILS		
16	E-ONE GRINDER PUMPS DETAILS		
17	DETAILS		
18	DETAILS		

DEVELOPER'S CERTIFICATION

"I / WE CERTIFY THAT ALL DEVELOPMENT AND CONSTRUCTION WILL BE DONE ACCORDING TO THIS PLAN, AND THAT ANY RESPONSIBLE PERSONNEL INVOLVED IN THE CONSTRUCTION PROJECT WILL HAVE A CERTIFICATE OF ATTENDANCE AT A DEPARTMENT OF THE ENVIRONMENT APPROVED TRAINING PROGRAM FOR THE CONTROL OF SEDIMENT AND EROSION BEFORE BEGINNING THE PROJECT. I ALSO AUTHORIZE PERIODIC ON-SITE INSPECTION BY THE HOWARD SOIL CONSERVATION DISTRICT."

V.P. Williamsburg Group LLC 1-10-07 DATE
SIGNATURE OF DEVELOPER: BOB CORBETT

ENGINEER'S CERTIFICATION

"I CERTIFY THAT THIS PLAN FOR EROSION AND SEDIMENT CONTROL REPRESENTS A PRACTICAL AND WORKABLE PLAN BASED ON MY PERSONAL KNOWLEDGE OF THE SITE CONDITIONS AND THAT IT WAS PREPARED IN ACCORDANCE WITH THE REQUIREMENTS OF THE HOWARD COUNTY SOIL CONSERVATION DISTRICT."

12/28/06 DATE
McCRONE, INC.
20 RIDGELY AVENUE
ANNAPOLIS, MARYLAND
21401 (410) 267-8621

REVIEWED FOR HOWARD COUNTY S.C.D. MEETS TECHNICAL REQUIREMENTS

U.S. SOIL CONSERVATION SERVICE DATE

THIS DEVELOPMENT PLAN IS APPROVED FOR THE SOIL EROSION AND SEDIMENT CONTROL BY HOWARD SOIL CONSERVATION DISTRICT.

APPROVED DATE
HOWARD S.C.D.

APPROVED: FOR PRIVATE SHARED SEWERAGE SYSTEM FOR LOTS 1, 2, 3, 4, 5, 6, 15, 16, 17, 18, AND 19.
HOWARD COUNTY HEALTH DEPARTMENT

for Robert J. Weber 1/19/07
HOWARD COUNTY HEALTH OFFICER DATE

HOWARD SOIL CONSERVATIONS DISTRICT:
REVEWED FOR HOWARD COUNTY SOIL CONSERVATION DISTRICT AND MEETS TECHNICAL REQUIREMENTS.

Jim Myers 2/6/07
USDA NATURAL RESOURCES CONSERVATION SERVICE DATE

THIS PLAN IS APPROVED FOR SOIL EROSION AND SEDIMENT CONTROL BY THE HOWARD SOIL CONSERVATION DISTRICT.

2/6/07
HOWARD SOIL CONSERVATION DISTRICT DATE

SEDIMENT CONTROL MEASURES FOR THIS CONTRACT WILL BE IMPLEMENTED IN ACCORDANCE WITH SECTION 219 OF THE HOWARD COUNTY STANDARDS AND SPECIFICATIONS AND AS PER ROAD CONSTRUCTION PLANS PER F-08-99

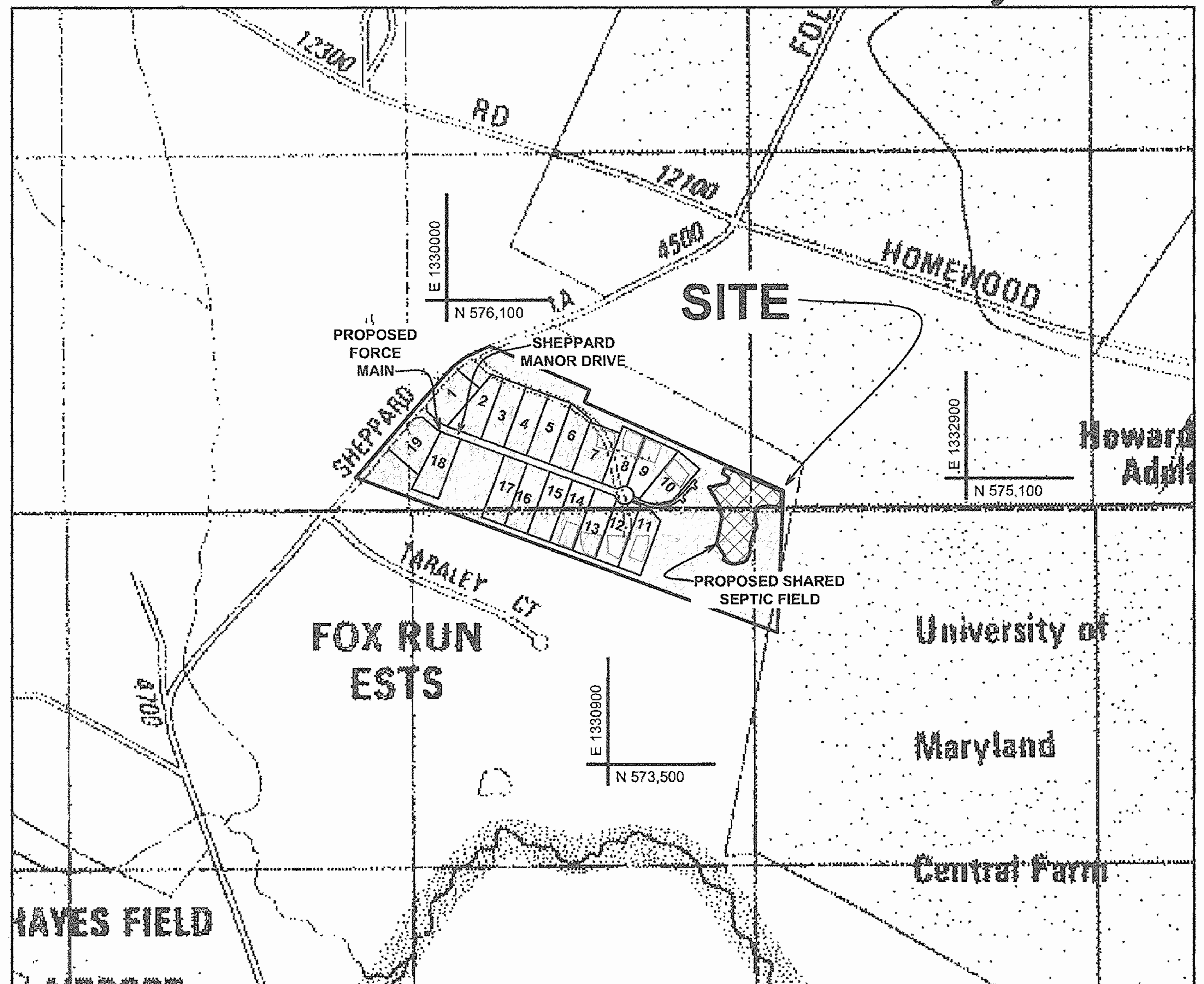

TYPE OF BUILDING: RESIDENTIAL
NUMBER OF PARCELS: 1
WATER HOUSE CONNECTIONS: 0
SEWER HOUSE CONNECTIONS: 11

VICINITY MAP
SCALE:1 = 600'

WATER CODE N/A
SEWER CODE N/A
TEST GRADIENT N/A

QUANTITIES

ITEMS	QUANTITIES ESTIMATED	AS-BUILT QUANTITIES	AS-BUILT TYPE	AS-BUILT MANUF./SUPPLIER
DUPLEX GRINDER PUMPS	4 E.A.			
SIMPLEX GRINDER PUMPS	3 E.A.			
$1\frac{1}{2}$" HOUSE CONNECTION	428 L.F.			
2" FORCE MAIN	1,217 L.F.			
TERMINAL FLUSHING CONNECTION	1 E.A.			
TRANSITION MH	1 E.A.			
2" PVC DRAINFIELD LATERAL	3,480 L.F.			
8" PVC SCH 40 GRAVITY PIPE	152 L.F.			
6" FORCE MAIN	1,158 L.F.			
FLOWMETER VAULT	1 E.A.			
VALVE VAULT	1 E.A.			
TREATMENT UNIT	1 E.A.			
SLUDGE PROCESSING TANK	1 E.A.			
DOSING PUMPING STATION	1 E.A.			
MANHOLE	1 E.A.			
EMERGENCY OVERFLOW TANK	1 E.A.			
8" DI GRAVITY PIPE	120 L.F.			
BAR SCREEN	1 E.A.			
CONTROL BUILDING / LAB	1 E.A.			
CHECK VALVE VAULT	4 E.A.			
BLOW-OFF VAULT	3 E.A.			

GENERAL NOTES

PART I

1. APPROXIMATE LOCATION OF EXISTING MAINS ARE SHOWN. THE CONTRACTOR SHALL TAKE ALL NECESSARY PRECAUTIONS TO PROTECT EXISTING MAINS AND SERVICES AND MAINTAIN UNINTERRUPTED SERVICE. ANY DAMAGE INCURRED SHALL BE REPAIRED IMMEDIATELY TO THE SATISFACTION OF THE ENGINEER AT THE CONTRACTOR'S EXPENSE.

2. ALL HORIZONTAL CONTROLS ARE BASED ON MARYLAND STATE COORDINATES, NAD 83/91.

3. ALL VERTICAL CONTROLS ARE BASED ON NAVD 88.

4. ALL PIPE ELEVATIONS SHOWN ARE INVERT ELEVATIONS.

5. CLEAR ALL UTILITIES BY A MINIMUM OF 12". CLEAR ALL POLES BY 5'-0" MINIMUM OR TUNNEL AS REQUIRED. THE OWNER HAS CONTACTED THE UTILITY COMPANIES AND HAS MADE ARRANGEMENTS FOR BRACING OF POLES AS SHOWN ON THE DRAWINGS. IN THE EVENT THE CONTRACTOR'S WORK REQUIRES THE BRACING OF ADDITIONAL POLES, ANY COST INCURRED BY THE OWNER FOR THE BRACING OF ADDITIONAL POLES OR DAMAGES SHALL BE DEDUCTED FROM MONEY OWED THE CONTRACTOR. THE CONTRACTOR SHALL COORDINATE WITH THE UTILITY COMPANIES TO SCHEDULE THE BRACING OF THE POLES.

6. FOR DETAILS NOT SHOWN ON THE DRAWINGS, AND FOR MATERIALS AND CONSTRUCTION METHODS, USE HOWARD COUNTY DESIGN MANUAL, VOLUME IV, STANDARD SPECIFICATIONS AND DETAILS FOR CONSTRUCTION (LATEST EDITION). THE CONTRACTOR SHALL HAVE A COPY OF VOLUME IV ON THE JOB.

7. WHERE TEST PITS HAVE BEEN MADE ON EXISTING UTILITIES, THEY ARE NOTED BY THE SYMBOL ▨ AT THE LOCATION OF THE TEST PIT. A NOTE OR NOTES CONTAINING THE RESULTS OF THE TEST PIT OR PITS IS INCLUDED ON THE DRAWINGS. EXISTING UTILITIES IN THE VICINITY OF THE PROPOSED WORK FOR WHICH TEST PITS HAVE NOT BEEN DUG SHALL BE LOCATED BY THE CONTRACTOR TWO WEEKS IN ADVANCE OF CONSTRUCTION OPERATIONS AT HIS OWN EXPENSE.

8. CONTRACTOR SHALL NOTIFY THE FOLLOWING UTILITY COMPANIES OR AGENCIES AT LEAST FIVE WORKING DAYS BEFORE STARTING WORK SHOWN ON THESE PLANS:

AT&T....1-800-252-1133
BGE (CONTRACTOR SERVICES)....410-850-4620
BGE (UNDERGROUND DAMAGE CONTROL)....410-787-9068
BUREAU OF UTILITIES....410-313-4900
COLONIAL PIPELINE CO....410-795-1390
MISS UTILITY....1-800-257-7777
STATE HIGHWAY ADMINISTRATION....410-531-5533
VERIZON....1-800-743-0033 / 410-224-9210

9. TREES AND SHRUBS ARE TO BE PROTECTED FROM DAMAGE TO THE MAXIMUM EXTENT. TREES AND SHRUBS LOCATED WITHIN THE CONSTRUCTION STRIP ARE NOT TO BE REMOVED OR DAMAGED BY THE CONTRACTOR.

10. CONTRACTOR SHALL REMOVE TREES, STUMPS AND ROOTS ALONG LINE OF EXCAVATION. PAYMENT FOR SUCH REMOVAL SHALL BE INCLUDED IN THE UNIT PRICE BID FOR CONSTRUCTION OF THE MAIN.

11. THE CONTRACTOR SHALL NOTIFY THE BUREAU OF HIGHWAYS, HOWARD COUNTY, AT (410) 313-7450 AT LEAST FIVE WORKING DAYS BEFORE ANY OPEN CUT OF ANY COUNTY ROAD OR BORING/JACKING OF ANY COUNTY ROAD FOR LAYING WATER/SEWER MAINS OR HOUSE CONNECTIONS. THE APPROVAL OF THESE DRAWINGS WILL CONSTITUTE COMPLIANCE WITH DPW REQUIREMENTS PER SECTION 18.114(A) OF THE HOWARD COUNTY CODE.

PART II - WATER - NOT USED

PART III - SEWER

1. ALL SEWER MAINS SHALL BE HDPE SDR 11, D.I.P. OR P.V.C. AS SHOWN ON CONTRACT DRAWINGS UNLESS OTHERWISE NOTED.

2. THE CONTRACTOR SHALL PROVIDE A JOINT IN ALL SEWER MAINS WITHIN 2'-0" OF EXTERIOR MANHOLE WALL.

3. ALL MANHOLES SHALL BE 4'-0" INSIDE DIAMETER UNLESS OTHERWISE NOTED.

4. PVC FORCE MAINS SHALL MEET THE REQUIREMENTS OF ASTM D-2241, SDR-21.
HIGH DENSITY POLYETHYLENE (HDPE) FORCE MAIN AND FITTINGS FOR LOW PRESSURE SEWER SYSTEMS SHALL MEET ASTM D-1248 REQUIREMENTS FOR TYPE III, CLASS C, CATEGORY 5, GRADE P54 MATERIAL AND MEET ASTM D-3350 CELL CLASSIFICATION OF 345434C.

5. MANHOLES SHOWN WITH 12" AND 16" WALLS ARE FOR BRICK MANHOLES ONLY.

6. MANHOLES DESIGNATED W.T. IN PLAN AND PROFILE SHALL HAVE WATERTIGHT FRAME AND COVERS, STANDARD DETAIL 65.52 WHERE WATERTIGHT MANHOLE FRAME AND COVER IS USED, SET TOP OF FRAME 1"-6" ABOVE FINISHED GRADE UNLESS OTHERWISE NOTED ON THE DRAWINGS.

7. HOUSE(S) WITH THE SYMBOL "C.N.S." INDICATES THAT CELLAR CANNOT BE SERVICED BY GRAVITY.

TRENCH REQUIREMENTS:
THE FOLLOWING 11 LOTS ARE TO BE SERVED BY THE SHARED SYSTEM: LOTS 1, 2, 3, 4, 5, 6, 15, 16, 17, 18, AND 19.
*USE 5 BEDROOM PER HOUSE.
750 GPD PER HOUSE
750 GPD/HOUSE x 11 HOUSES = 8,250 GPD
8,250 GPD / 1.2 GPD/SQ.FT = 6,875 SQ. FT. EFFECTIVE AREA
SEE SHEET 11 OF 18 FOR REQUIRED AND PROVIDED TRENCH LENGTH IN DRAINFIELD SUMMARY

OWNER:
DAVID C. PEDDICORD
4485 SHEPARD LANE
ELLICOTT CITY, MD 21042

DEVELOPER:
WILLIAMSBURG GROUP, LLC
5485 HARPERS FARM ROAD, SUITE 200
COLUMBIA, MD 21044
410-997-8800

DEPARTMENT OF PUBLIC WORKS
HOWARD COUNTY, MARYLAND
1-25-07
CHIEF, BUREAU OF UTILITIES DATE

DEPARTMENT OF PUBLIC WORKS
HOWARD COUNTY, MARYLAND
2/27/07
CHIEF, DEVELOPMENT ENGINEERING DIVISION DATE

McCRONE
Engineering • Environmental Sciences • Construction Services • Land Planning & Surveying
ANNAPOLIS • CENTREVILLE • DOVER • ELKTON • SALISBURY
20 RIDGELY AVENUE
ANNAPOLIS, MARYLAND 21401
PHONE (410) 267-8621 * FAX (410) 267-8932
www.mccrone-inc.com

Copyright © 2004

STATE OF MARYLAND PROFESSIONAL ENGINEER No. 30723 12/28/06

DES: B.T.D., N.V.S.				
DRN: B.T.D., N.V.S.				
CHK: R.J.R.	SA	1	Subdivision Name Change	4/10/07
DATE: DEC., 2006	BY	No.	REVISION	DATE

TITLE SHEET

JOB No. C1040062

Sheppard Manor
~~PEDDICORD~~ SHARED SEPTIC SYSTEM
LOTS 1 - 19
CONTRACT # 50-4357D
TAX MAP NO. 29 - GRID NO. 1 - PARCEL 268
ELECTION DISTRICT No. 5
HOWARD COUNTY, MARYLAND

SCALE AS SHOWN

SHEET 1 OF 18

PLOTTED: Dec 28, 2006 - 9:42am

CADD FILE: G:\1040062 — Peddicord Property\Drawings\SHARED SEPTIC DESIGN\TITLE SHEET_REV02.dwg ——— Tab.......Layout1

PANEL: MAIN
BUS: 225 A
MAIN: 200 A

LOCATION:- Control Building

208 V, 3Ø 4W

CB#	DESCRIPTION	CB SIZE	Φ A	Φ B	Φ C	CB SIZE	DESCRIPTION	CB#
1	CROMOGLASS TANK PANEL	100				20	LIGHTS IN CONTROL BLDG	2
3	-					20	RECEPT ON NORTH SIDE	4
5	SLUDGE TANK PANEL	40				20	RECEPT ON SOUTH SIDE	6
7	-					20	M-800 MONITOR	8
9	RECPT UNDER PANEL	20				20	OUTSIDE LIGHTS	10
11	OVERFLOW TANK	20				20	OUTSIDE RECPT ON POLES	12
13	PULSE METER POWER MOD.	20				20	208V HEATERS ON BLD	14
15	METHANOL PUMP	20					" "	16
17	ALKALINE PUMP	20				30	WATER HEATER	18
19	SPARE	20					" "	20
21	SPARE	20				20	15 WATER PUMP	22
23	SPARE	20					" "	24
25								26
27								28
29								30
31								32
33								34
35								36
37	PUMP CONTROL PNL	125				30	TVS SUPPRESSOR	38
39								40
41								42

* BALANCE PHASE TO PHASE LOAD AS BEST AS POSSIBLE

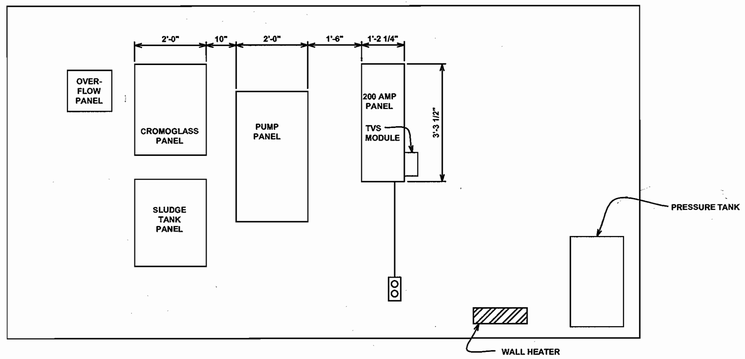

WALL DIAGRAM

NOT TO SCALE

Conduit Schedule:

Conduit Designation	Phase	Number of Conductors	Size	Nuetrals	Size	Ground	Conduit Size	Description of Feeder
C1	3	3	4/O	1	4/O	#2	4 "	Main Service feed Plus Spare 4"
C2	3	3	1	1	1	#4	1 1/2 "	Main Pump Panel
C3	1	2	#2	1	#2	#8	1"	Cromoglase Panel
C4	1	2	#10	1	#10	#12	1/2"	Or MC cable to Hot water heater
C5	1	1	#12	1	#12	#12	1/2"	Individual Circuits as shown, can be MC cable
C6	3	6	#6	-	-	(2) #8	1 1/2"	(2) 7-1/2 Hp Pump feeds
C7	1	3	#12	3	#12	#10	1"	Shared fractional Hp pump feeds for tanks
C8	1	2	#12	1	#12	#12	1/2"	Individual Circuits as shown, can be MC cable
C9	1	2	#12	2	#12	#12	1/2"	Pole light and power/Emerg. Overflow
C10	1	2	#8	1	#8	#10	3/4"	Sludge tank panel
C11	na	8	#14	-	-	#12	3/4"	Use Blue stranded wire
C12	na	20	#14	-	-	#12	3/4"	Use Blue stranded wire
C13	na	3	na	na	na	na	3"	Multipair Shielded Cable (3)
EC							1"	Empty Conduit for future use

*Note:
#10 AWG or smaller can use metal clad cable w/gnd for wiring inside of control building

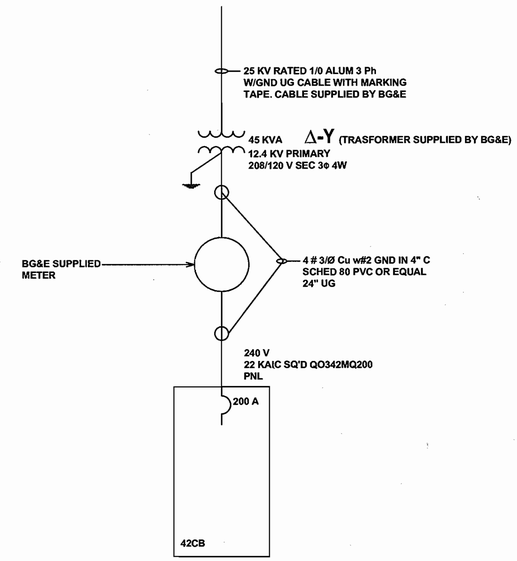

SINGLE LINE DIAGRAM

NOT TO SCALE

APPROVED: FOR PRIVATE SHARED SEWERAGE SYSTEM FOR LOTS 1, 2, 3, 4, 5, 6, 15, 16, 17, 18, AND 19.
HOWARD COUNTY HEALTH DEPARTMENT

for HOWARD COUNTY HEALTH OFFICER — DATE 1/19/07

HOWARD SOIL CONSERVATIONS DISTRICT:
REVEWED FOR HOWARD COUNTY SOIL CONSERVATION DISTRICT AND MEETS TECHNICAL REQUIREMENTS.

USDA NATURAL RESOURCES CONSERVATION SERVICE — DATE

THIS PLAN IS APPROVED FOR SOIL EROSION AND SEDIMENT CONTROL BY THE HOWARD SOIL CONSERVATION DISTRICT.

HOWARD SOIL CONSERVATION DISTRICT — DATE

SEDIMENT CONTROL MEASURES FOR THIS CONTRACT WILL BE IMPLEMENTED IN ACCORDANCE WITH SECTION 219 OF THE HOWARD COUNTY STANDARDS AND SPECIFICATIONS AND AS PER ROAD CONSTRUCTION PLANS PER F-06-99.

ROSS ENGINEERING
Address: 471 KNIGHT ISLAND RD.
EARLEVILLE, MD 21919
Email: rosseng@wildblue.net
Phone: 410-920-2800,
Fax: 410-275-1315

DEPARTMENT OF PUBLIC WORKS
HOWARD COUNTY, MARYLAND
CHIEF, BUREAU OF UTILITIES — DATE 1-25-07

DEPARTMENT OF PUBLIC WORKS
HOWARD COUNTY, MARYLAND
CHIEF, DEVELOPMENT ENGINEERING DIVISION — DATE 2/20/07

McCRONE
● Engineering ● Environmental Sciences
● Construction Services ● Land Planning & Surveying
ANNAPOLIS ● CENTREVILLE ● DOVER ● ELKTON ● SALISBURY
20 RIDGELY AVENUE
ANNAPOLIS, MARYLAND 21401
PHONE (410) 267-8821 * FAX (410) 267-0932
www.mccrone-inc.com

Copyright © 2004

STATE OF MARYLAND — ROBERT J. ROSS — No. 30728 — PROFESSIONAL ENGINEER — 12/20/06

DES: R.R.			
DRN: AD			
CHK: R.J.R.			
DATE: DEC., 2006	BY	No.	REVISION
	SD	1	SUBDIVISION NAME

DATE: 4/10/07

PANEL SCHEDULE, SINGLE LINE AND WALL PANEL LAYOUT

JOB No. C1040062

Sheppard Manor

~~PEDDICORD~~ SHARED SEPTIC SYSTEM

LOTS 1 - 19
CONTRACT # 30-4357 D
TAX MAP NO. 29 - GRID NO. 1 - PARCEL 268
ELECTION DISTRICT No. 5
HOWARD COUNTY, MARYLAND

SCALE AS SHOWN

SHEET E-6

CADD FILE: G:\J1040062 - Peddicord Property\Drawings\SHARED SEPTIC DESIGN\Elect Drawings V2.dwg ------ Tab.....E6

PLOTTED: Dec 28 , 2006 - 2:20pm

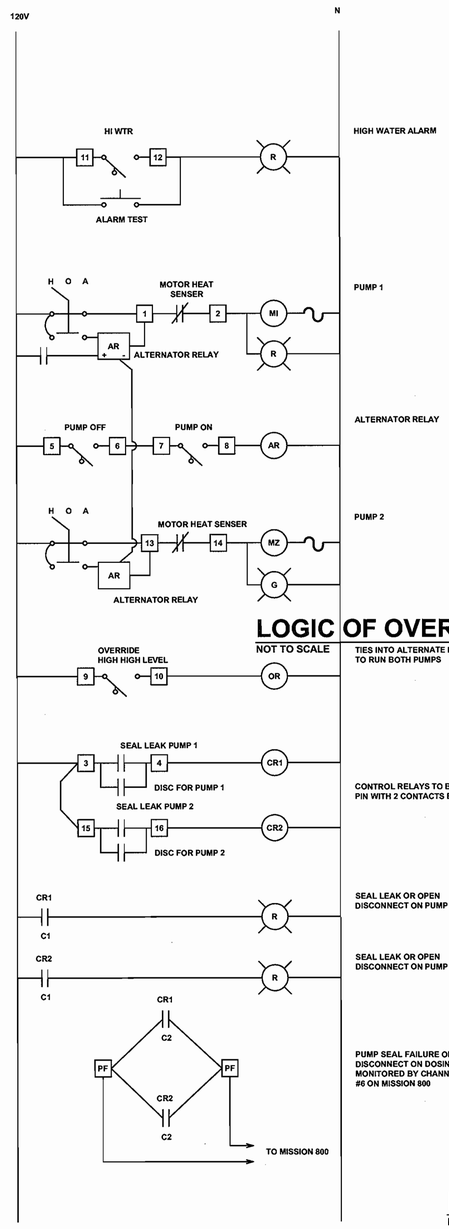

LOGIC OF OVERFLOW TANK PUMP

NOT TO SCALE

ENCLOSE IN AN 8"X8"6" PANEL OR EQUAL

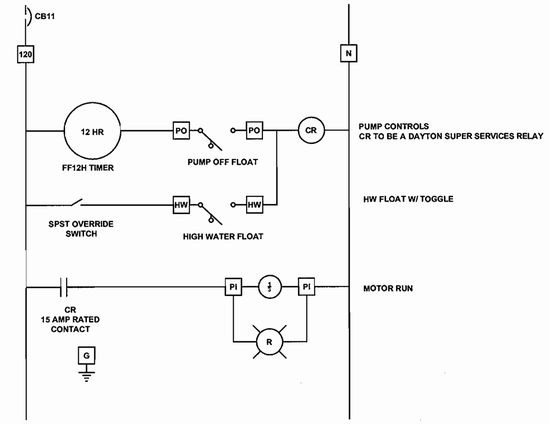

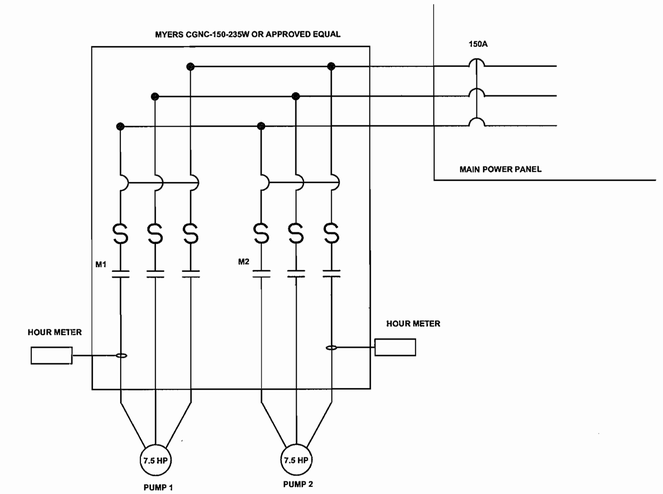

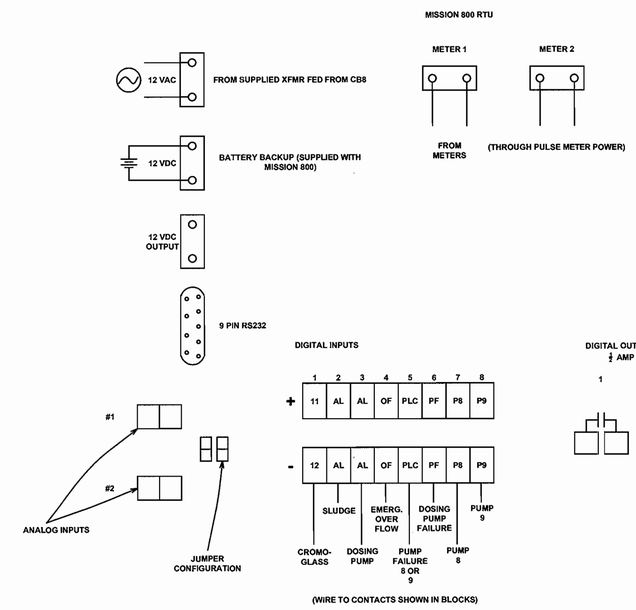

LOGIC OF DOSING PUMP PANEL

NOT TO SCALE

MISSION 800 RTU

NOT TO SCALE

APPROVED: FOR PRIVATE SHARED SEWERAGE SYSTEM FOR LOTS 1, 2, 3, 4, 5, 6, 15, 16, 17, 18, AND 19.
HOWARD COUNTY HEALTH DEPARTMENT

for HOWARD COUNTY HEALTH OFFICER — DATE 1/19/07

HOWARD SOIL CONSERVATIONS DISTRICT:
REVEWED FOR HOWARD COUNTY SOIL CONSERVATION DISTRICT AND MEETS TECHNICAL REQUIREMENTS.

USDA NATURAL RESOURCES CONSERVATION SERVICE — DATE

THIS PLAN IS APPROVED FOR SOIL EROSION AND SEDIMENT CONTROL BY THE HOWARD SOIL CONSERVATION DISTRICT.

HOWARD SOIL CONSERVATION DISTRICT — DATE

SEDIMENT CONTROL MEASURES FOR THIS CONTRACT WILL BE IMPLEMENTED IN ACCORDANCE WITH SECTION 219 OF THE HOWARD COUNTY STANDARDS AND SPECIFICATIONS AND AS PER ROAD CONSTRUCTION PLANS PER F-06-89.

ROSS ENGINEERING
Address: 471 KNIGHT ISLAND RD.
EARLEVILLE, MD 21919
Email: rosseng@wildblue.net
Phone: 410-920-2800,
Fax: 410-275-1315

DEPARTMENT OF PUBLIC WORKS
HOWARD COUNTY, MARYLAND
CHIEF, BUREAU OF UTILITIES — DATE 1-25-07

DEPARTMENT OF PUBLIC WORKS
HOWARD COUNTY, MARYLAND
CHIEF, DEVELOPMENT ENGINEERING DIVISION — DATE 2/2/07

McCRONE
● Engineering ● Environmental Sciences
● Construction Services ● Land Planning & Surveying
ANNAPOLIS ● CENTREVILLE ● DOVER ● ELKTON ● SALISBURY
20 RIDGELY AVENUE
ANNAPOLIS, MARYLAND 21401
PHONE (410) 267-6627 * FAX (410) 267-0032
www.mccrone-inc.com

Copyright © 2004

STATE OF MARYLAND — RICHARD WILLIAM ROSS — No. 31088 — PROFESSIONAL ENGINEER — 12/28/06

DES: R.R.					
DRN: AD					
CHK: R.J.R.					
DATE: DEC., 2006	SD BY	1 No.	SUBDIVISION NAME REVISION	4/10/07 DATE	

DOSING PUMP CONTROL PANEL & MISSION 800 RTU

JOB No. C1040062

SHEPPARD MANOR

~~PEDDICORD~~ SHARED SEPTIC SYSTEM

LOTS 1 - 19
CONTRACT # 56-4832 D
TAX MAP NO. 29 - GRID NO. 1 - PARCEL 268
ELECTION DISTRICT No. 5
HOWARD COUNTY, MARYLAND

SCALE AS SHOWN

SHEET E-5

CADD FILE: G:\J1040062 - Peddicord Property\Drawings\SHARED SEPTIC DESIGN\Effect Drawings V2.dwg ----- Tab.....E5

PLOTTED: Dec 28, 2006 - 2:20pm

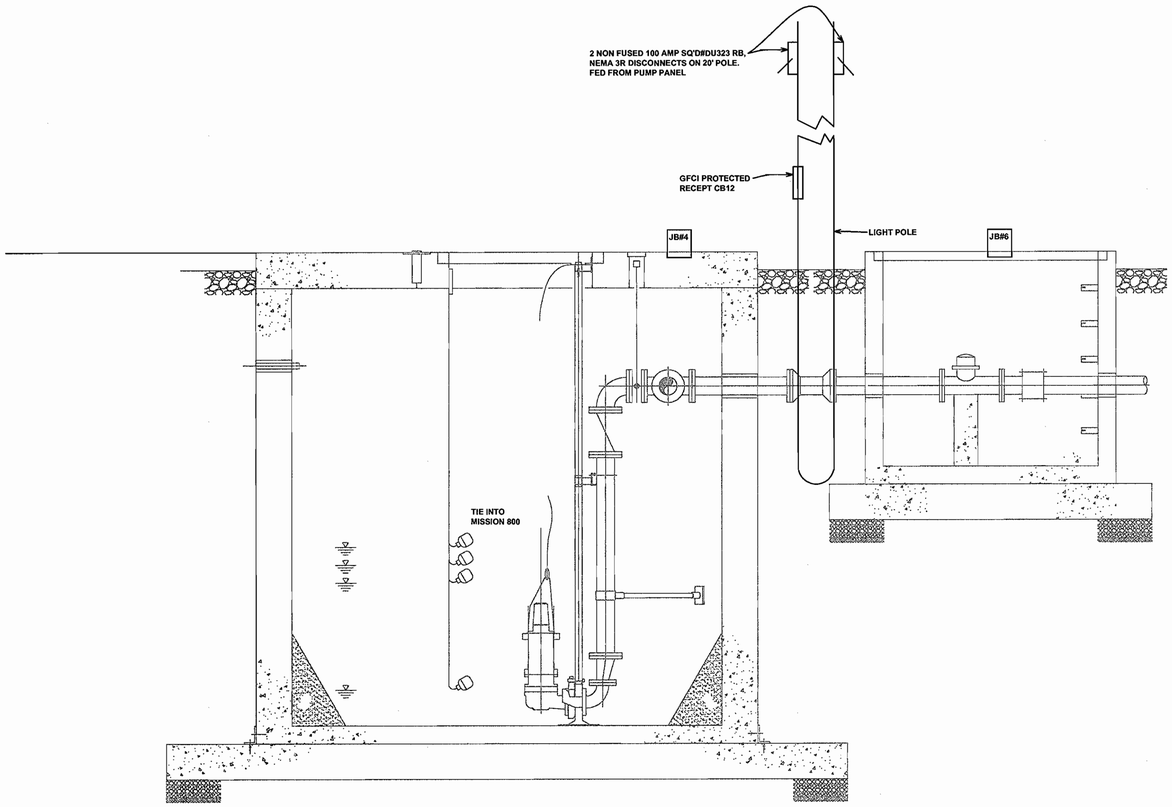

PUMP STATION POWER SECTION A-A

SCALE: 1/2" = 1'

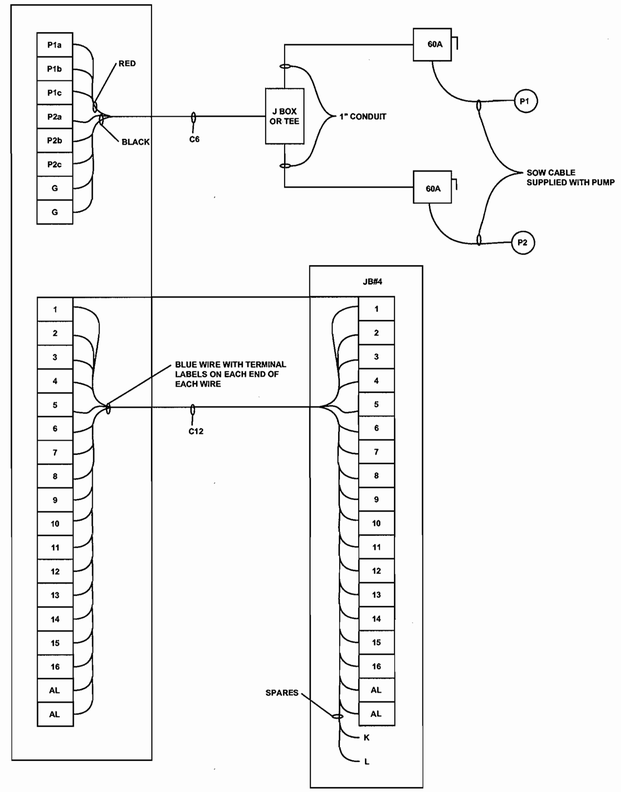

PUMP PANEL WIRE DIAGRAM

NOT TO SCALE

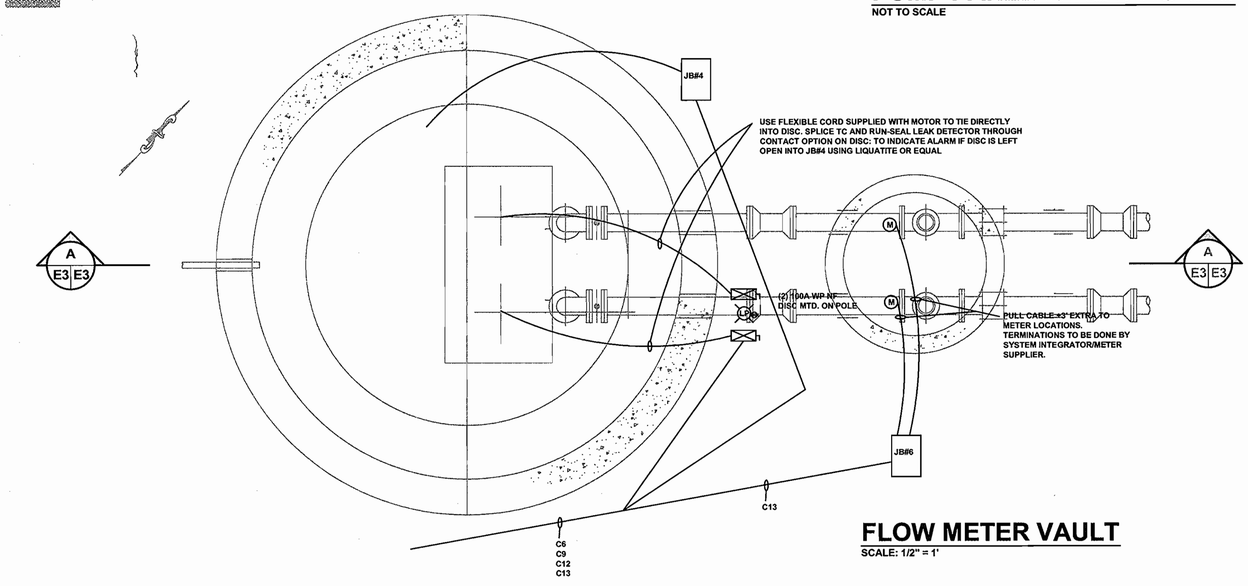

FLOW METER VAULT

SCALE: 1/2" = 1'

PUMP STATION POWER PLAN

SCALE: 1/2" = 1'

APPROVED: FOR PRIVATE SHARED SEWERAGE SYSTEM FOR LOTS 1, 2, 3, 4, 5, 6, 15, 16, 17, 18, AND 19.
HOWARD COUNTY HEALTH DEPARTMENT

for Robert J. Weber — 1/19/07
HOWARD COUNTY HEALTH OFFICER — DATE

HOWARD SOIL CONSERVATIONS DISTRICT:
REVEWED FOR HOWARD COUNTY SOIL CONSERVATION DISTRICT AND MEETS TECHNICAL REQUIREMENTS.

USDA NATURAL RESOURCES CONSERVATION SERVICE — DATE

THIS PLAN IS APPROVED FOR SOIL EROSION AND SEDIMENT CONTROL BY THE HOWARD SOIL CONSERVATION DISTRICT.

HOWARD SOIL CONSERVATION DISTRICT — DATE

SEDIMENT CONTROL MEASURES FOR THIS CONTRACT WILL BE IMPLEMENTED IN ACCORDANCE WITH SECTION 219 OF THE HOWARD COUNTY STANDARDS AND SPECIFICATIONS AND AS PER ROAD CONSTRUCTION PLANS PER F-06-99.

ROSS ENGINEERING
Address: 471 KNIGHT ISLAND RD. EARLEVILLE, MD 21919
Email: rosseng@wildblue.net
Phone: 410-920-2800,
Fax: 410-275-1315

DEPARTMENT OF PUBLIC WORKS
HOWARD COUNTY, MARYLAND

Robert L. Bonn — 1-25-07
CHIEF, BUREAU OF UTILITIES — DATE

DEPARTMENT OF PUBLIC WORKS
HOWARD COUNTY, MARYLAND

2/20/07
CHIEF, DEVELOPMENT ENGINEERING DIVISION — DATE

McCRONE
● Engineering ● Environmental Sciences
● Construction Services ● Land Planning & Surveying
ANNAPOLIS ● CENTREVILLE ● DOVER ● ELKTON ● SALISBURY
20 RIDGELY AVENUE
ANNAPOLIS, MARYLAND 21401
PHONE (410) 267-6621 * FAX (410) 267-0932
www.mccrone-inc.com

Copyright © 2004

STATE OF MARYLAND — REGISTERED PROFESSIONAL ENGINEER — No. 30728 — 12/28/06

DES: R.R.					
DRN: AD					
CHK: R.J.R.	SD	1	SUBDIVISION NAME	4/10/07	
DATE: DEC., 2006	BY	No.	REVISION	DATE	

DOSING PUMP STATION

JOB No. C1040062

SHEPPARD MANOR

~~PEDDICORD~~ SHARED SEPTIC SYSTEM

LOTS 1 - 19
CONTRACT # SR-43570
TAX MAP NO. 29 - GRID NO. 1 - PARCEL 268
ELECTION DISTRICT No. 5
HOWARD COUNTY, MARYLAND

SCALE AS SHOWN

SHEET E-4

CADD FILE: G:\1040062 - Peddicord Property\Drawings\SHARED SEPTIC DESIGN\Elect Drawings V2.dwg ------ Tab.....E4

PLOTTED: Dec 28, 2006 - 2:20pm

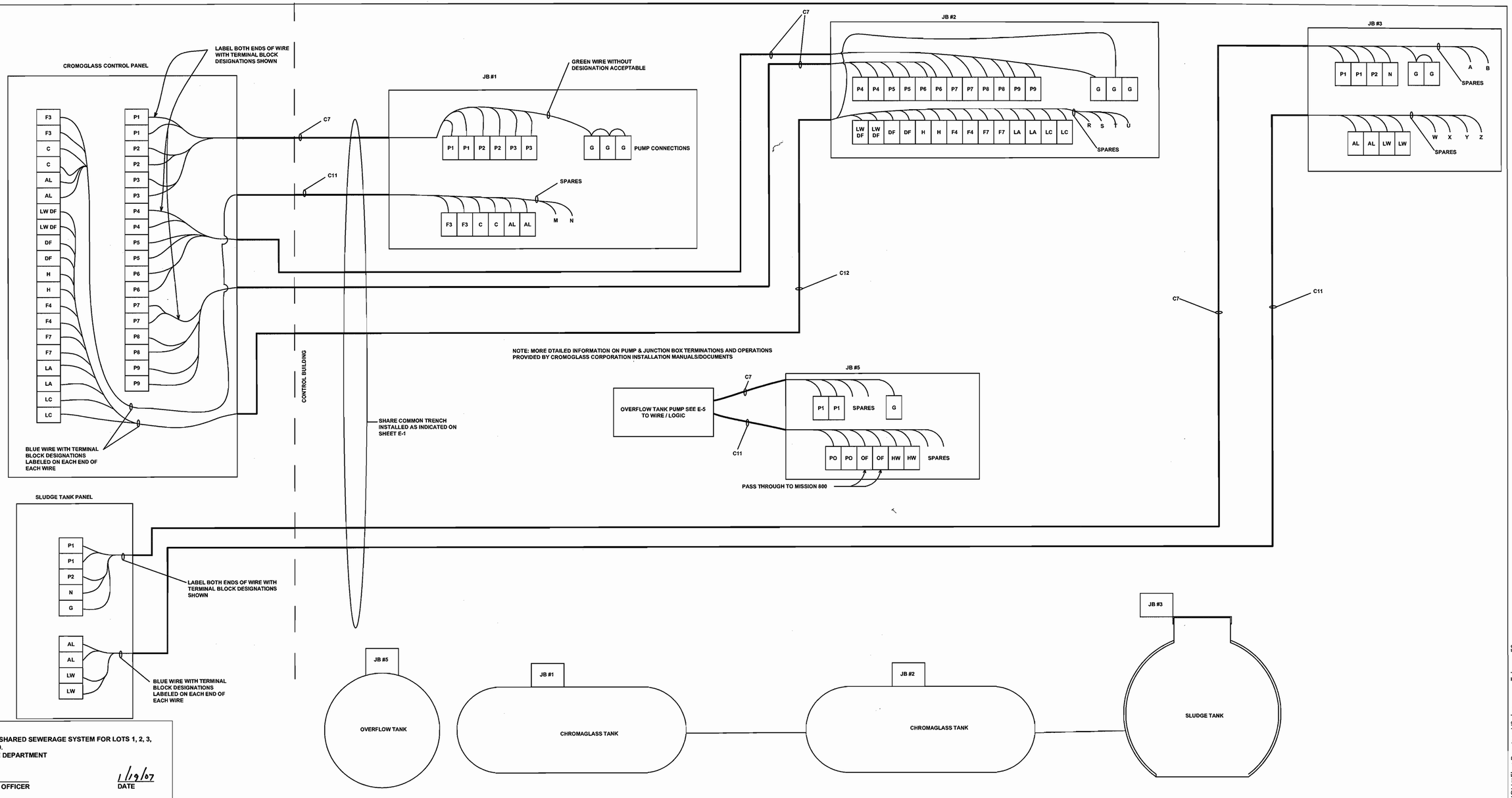

CROMAGLASS SBR & SLUDGE TANK SYSTEM

SCALE: 3/4" = 1'

APPROVED: FOR PRIVATE SHARED SEWERAGE SYSTEM FOR LOTS 1, 2, 3, 4, 5, 6, 15, 16, 17, 18, AND 19.
HOWARD COUNTY HEALTH DEPARTMENT

for Robert J. Weber — HOWARD COUNTY HEALTH OFFICER — DATE 1/19/07

HOWARD SOIL CONSERVATIONS DISTRICT:
REVEWED FOR HOWARD COUNTY SOIL CONSERVATION DISTRICT AND MEETS TECHNICAL REQUIREMENTS.

USDA NATURAL RESOURCES CONSERVATION SERVICE — DATE

THIS PLAN IS APPROVED FOR SOIL EROSION AND SEDIMENT CONTROL BY THE HOWARD SOIL CONSERVATION DISTRICT.

HOWARD SOIL CONSERVATION DISTRICT — DATE

SEDIMENT CONTROL MEASURES FOR THIS CONTRACT WILL BE IMPLEMENTED IN ACCORDANCE WITH SECTION 219 OF THE HOWARD COUNTY STANDARDS AND SPECIFICATIONS AND AS PER ROAD CONSTRUCTION PLANS PER F-06-99.

ROSS ENGINEERING
Address: 471 KNIGHT ISLAND RD.
EARLEVILLE, MD 21919
Email: rosseng@wildblue.net
Phone: 410-920-2800,
Fax: 410-275-1315

DEPARTMENT OF PUBLIC WORKS
HOWARD COUNTY, MARYLAND
Robert Bruinger 1-25-07
CHIEF, BUREAU OF UTILITIES — DATE

DEPARTMENT OF PUBLIC WORKS
HOWARD COUNTY, MARYLAND
2/17/07
CHIEF, DEVELOPMENT ENGINEERING DIVISION — DATE

McCRONE
● Engineering ● Environmental Sciences
● Construction Services ● Land Planning & Surveying
ANNAPOLIS ● CENTREVILLE ● DOVER ● ELKTON ● SALISBURY
20 RIDGELY AVENUE
ANNAPOLIS, MARYLAND 21401
PHONE (410) 267-8621 * FAX (410) 267-0932
www.mccrone-inc.com
Copyright © 2004

STATE OF MARYLAND — PROFESSIONAL ENGINEER — No. 30... — 12-28-06

DES: R.R.				
DRN: AD				
CHK: R.J.R.	SD	1	SUBDIVISION NAME	4/10/07
DATE: DEC., 2006	BY	No.	REVISION	DATE

CROMAGLASS & SLUDGE TANK ELECTRICAL

JOB No. C1040062

SHEPPARD MANOR

~~PEDDICORD~~ SHARED SEPTIC SYSTEM

LOTS 1 - 19
CONTRACT # 150-4357 D
TAX MAP NO. 29 - GRID NO. 1 - PARCEL 268
ELECTION DISTRICT No. 5
HOWARD COUNTY, MARYLAND

SCALE AS SHOWN

SHEET E-3

CADD FILE: G:\1040062 - Peddicord Property\Drawings\SHARED SEPTIC DESIGN\Elect Drawings V2.dwg ------ Tab.....E3

PLOTTED: Dec 28, 2006 - 2:37pm

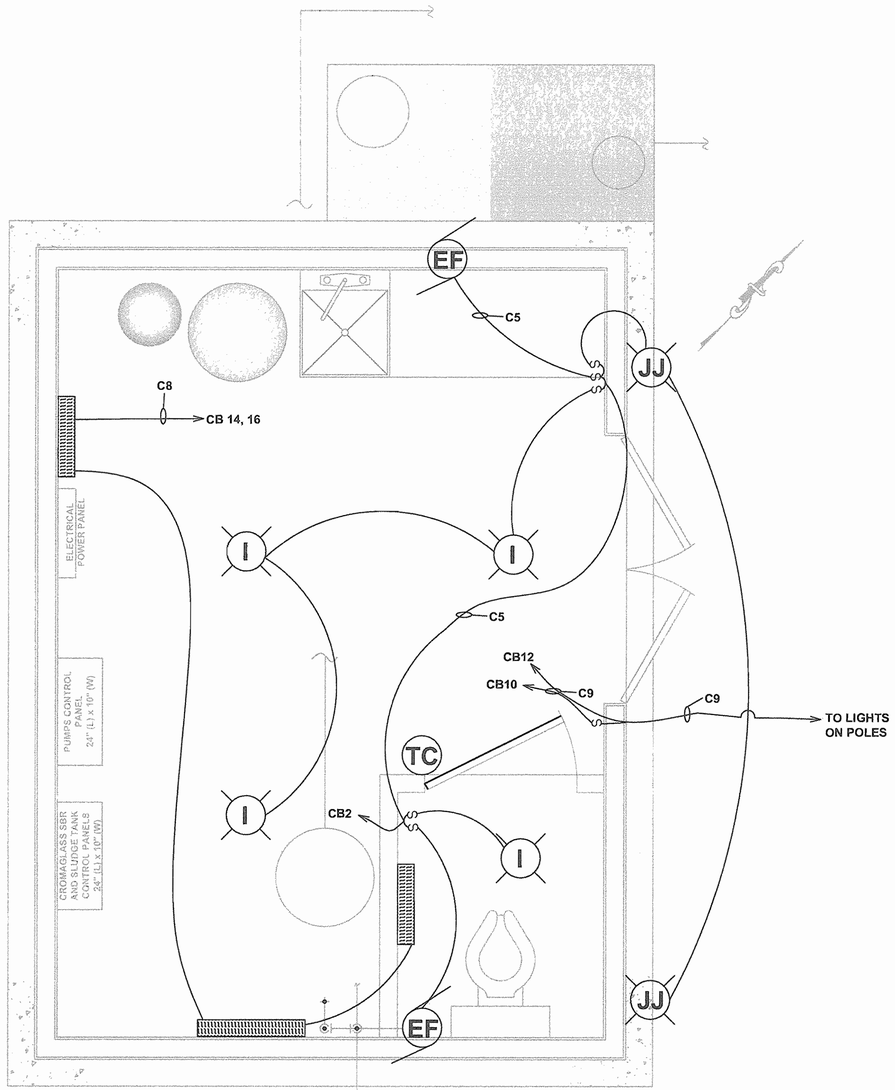

CONTROL BUILDING LIGHTING/HEATING LAYOUT PLAN

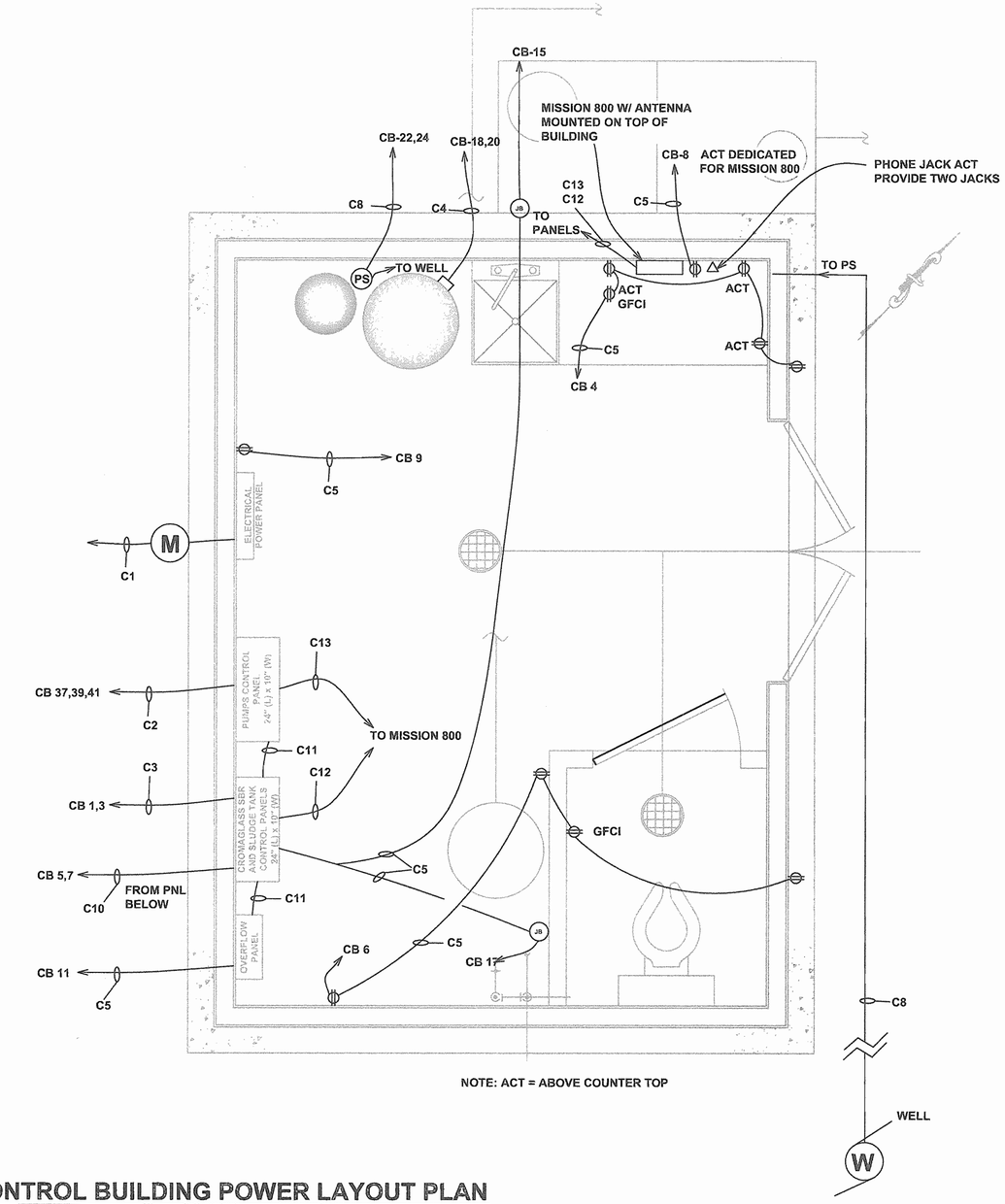

NOTE: ACT = ABOVE COUNTER TOP

CONTROL BUILDING POWER LAYOUT PLAN

SCALE: 3/4" = 1'

APPROVED: FOR PRIVATE SHARED SEWERAGE SYSTEM FOR LOTS 1, 2, 3, 4, 5, 6, 15, 16, 17, 18, AND 19.
HOWARD COUNTY HEALTH DEPARTMENT

for HOWARD COUNTY HEALTH OFFICER — DATE 1/19/07

SCALE: 3/4" = 1'

HOWARD SOIL CONSERVATIONS DISTRICT:
REVEWED FOR HOWARD COUNTY SOIL CONSERVATION DISTRICT AND MEETS TECHNICAL REQUIREMENTS.

USDA NATURAL RESOURCES CONSERVATION SERVICE — DATE

THIS PLAN IS APPROVED FOR SOIL EROSION AND SEDIMENT CONTROL BY THE HOWARD SOIL CONSERVATION DISTRICT.

HOWARD SOIL CONSERVATION DISTRICT — DATE

SEDIMENT CONTROL MEASURES FOR THIS CONTRACT WILL BE IMPLEMENTED IN ACCORDANCE WITH SECTION 219 OF THE HOWARD COUNTY STANDARDS AND SPECIFICATIONS AND AS PER ROAD CONSTRUCTION PLANS PER F-06-89.

ROSS ENGINEERING
Address: 471 KNIGHT ISLAND RD. EARLEVILLE, MD 21919
Email: rosseng@wildblue.net
Phone: 410-920-2800,
Fax: 410-275-1315

DEPARTMENT OF PUBLIC WORKS
HOWARD COUNTY, MARYLAND
CHIEF, BUREAU OF UTILITIES — DATE 1-25-07

DEPARTMENT OF PUBLIC WORKS
HOWARD COUNTY, MARYLAND
CHIEF, DEVELOPMENT ENGINEERING DIVISION — DATE 2/20/07

McCRONE
Engineering • Environmental Sciences • Construction Services • Land Planning & Surveying
ANNAPOLIS • CENTREVILLE • DOVER • ELKTON • SALISBURY
20 RIDGELY AVENUE ANNAPOLIS, MARYLAND 21401
PHONE (410) 267-0021 • FAX (410) 267-0032
www.mccrone-inc.com

Copyright © 2004

STATE OF MARYLAND — RICHARD J. ROSS — No. 30128 — PROFESSIONAL ENGINEER — 12/28/06

DES: R.R.
DRN: AD
CHK: R.J.R.
DATE: DEC., 2006

BY	No.	REVISION	DATE
SD	1	SUBDIVISION NAME	4/10/07

CONTROL BUILDING LIGHT AND POWER

JOB No. C1040062

SHEPPARD MANOR
~~PEDDICORD~~ SHARED SEPTIC SYSTEM
LOTS 1 - 19
CONTRACT # 50-4857 D
TAX MAP NO. 29 - GRID NO. 1 - PARCEL 268
ELECTION DISTRICT No. 5
HOWARD COUNTY, MARYLAND

SCALE AS SHOWN

SHEET E-2

CADD FILE: G:\1040062 - Peddicord Property\Drawings\SHARED SEPTIC DESIGN\Elect Drawings V2.dwg ----- Tab.....E2

PLOTTED: Dec 28, 2006 - 2:20pm

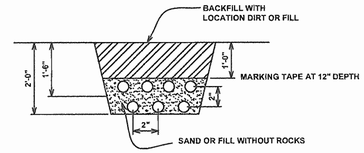

TYPICAL TRENCH DIAGRAM

NOT TO SCALE

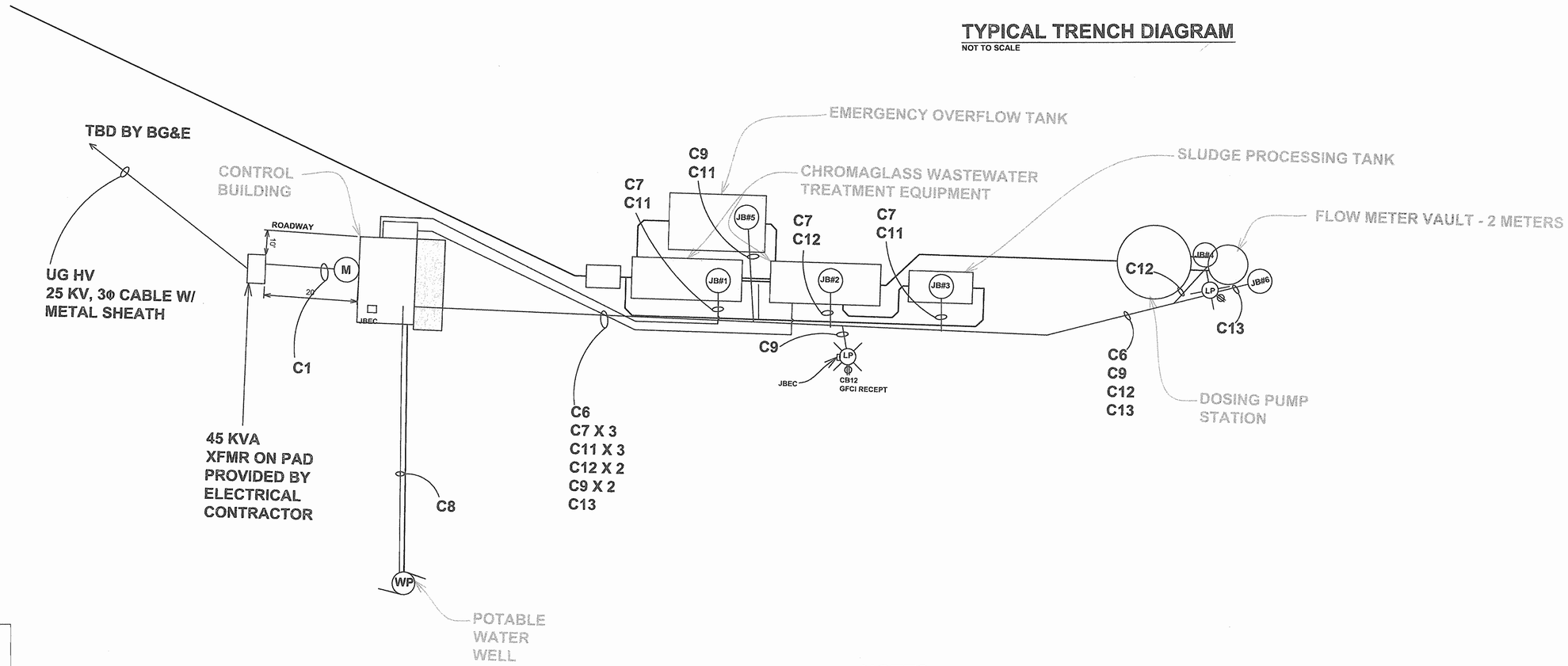

SITE LAYOUT

SCALE: 1" = 10'

NOTES:

INSTALL MULTIPLE CONDUITS IN TRENCH WITH 2 INCH SPACING AT A DEPTH OF 18-24 INCHES DEEP AND OF A WIDTH TO ACCOMMODATE 2 INCH SPACING BETWEEN CONDUITS. BACK FILL & COMPACT WITH SAND OR FILL WITH NO ROCKS TO A DEPTH OF 12 INCHES. USE MARKING TAPE DIRECTLY ABOVE EACH CONDUIT LOCATION, AND THEN BACK FILL WITH LOCATION DIRT OR FILL. JB EC IS AN EXTRA 1 INCH EMPTY PVC CONDUIT AND TWO 8X8 JUNCTION BOXES, NEMA 3R WIEGMANN # RSC080804 OR EQUALS, ONE BOX ON CONTROL BUILDING, THE OTHER ON THE FIRST LIGHT POLE. JBEC TO BE MOUTED 6" ABOVE GRADE AT LOCATION SHOWN

APPROVED: FOR PRIVATE SHARED SEWERAGE SYSTEM FOR LOTS 1, 2, 3, 4, 5, 6, 15, 16, 17, 18, AND 19.
HOWARD COUNTY HEALTH DEPARTMENT

for Robert J Weber — 1/19/07
HOWARD COUNTY HEALTH OFFICER — DATE

HOWARD SOIL CONSERVATIONS DISTRICT:
REVEWED FOR HOWARD COUNTY SOIL CONSERVATION DISTRICT AND MEETS TECHNICAL REQUIREMENTS.

USDA NATURAL RESOURCES CONSERVATION SERVICE — DATE

THIS PLAN IS APPROVED FOR SOIL EROSION AND SEDIMENT CONTROL BY THE HOWARD SOIL CONSERVATION DISTRICT.

HOWARD SOIL CONSERVATION DISTRICT — DATE

SEDIMENT CONTROL MEASURES FOR THIS CONTRACT WILL BE IMPLEMENTED IN ACCORDANCE WITH SECTION 219 OF THE HOWARD COUNTY STANDARDS AND SPECIFICATIONS AND AS PER ROAD CONSTRUCTION PLANS PER F-06-69.

ROSS ENGINEERING
Address: 471 KNIGHT ISLAND RD.
EARLEVILLE, MD 21919
Email: rosseng@wildblue.net
Phone: 410-920-2800,
Fax: 410-275-1315

DEPARTMENT OF PUBLIC WORKS
HOWARD COUNTY, MARYLAND
CHIEF, BUREAU OF UTILITIES — DATE 1-25-07

DEPARTMENT OF PUBLIC WORKS
HOWARD COUNTY, MARYLAND
CHIEF, DEVELOPMENT ENGINEERING DIVISION — DATE 2/27/07

McCRONE
Engineering · Environmental Sciences · Construction Services · Land Planning & Surveying
ANNAPOLIS • CENTREVILLE • DOVER • ELKTON • SALISBURY
20 RIDGELY AVENUE
ANNAPOLIS, MARYLAND 21401
PHONE (410) 267-8621 * FAX (410) 267-9032
www.mccrone-inc.com
Copyright © 2004

STATE OF MARYLAND — JULIAN K. WILLIAMS — No. 20798 — PROFESSIONAL ENGINEER — 12/28/07

DES: R.R.				
DRN: AD				
CHK: R.J.R.				
DATE: DEC., 2006	SD	1	SUBDIVISION NAME	4/10/07
	BY	No.	REVISION	DATE

SITE PLAN ELECTRICAL SERVICE

JOB No. C1040062

SHEPPARD MANOR

~~PEDDICORD~~ SHARED SEPTIC SYSTEM
LOTS 1 - 19
CONTRACT # 50-4357D
TAX MAP NO. 29 - GRID NO. 1 - PARCEL 268
ELECTION DISTRICT No. 5
HOWARD COUNTY, MARYLAND

SCALE AS SHOWN

SHEET E-1

CADD FILE: G:\1040062 - Peddicord Property\Drawings\SHARED SEPTIC DESIGN\Elect Drawings V2.dwg ------ Tab.....E1

PLOTTED: Dec 28, 2006 - 2:19pm

LEGEND

- 125V, 20a GROUNDING TYPE DUPLEX RECEPTACLE - NEMA 5-20R
- 125V, 20A GROUND FAULT CIRCUIT INTERRUPTER OUTLET
- SWITCH 20A 1 POLE COMMERCIAL GRADE
- PANEL (TYPE CALLED OUT ON PANEL)
- MOTOR DISCONNECT SEE DRAWINGS FOR DETAIL
- EF — MOTORIZED EQUIPMENT I.E. EXHAUST FAN, WATER PUMP.
- CIRCUIT WIRING
- CB# — HOMERUN CIRCUIT DESIGNATION TO CB CALLED OUT
- LIGHT FIXTURES TYPE AS INDICATED ON LIGHTING SCHEDULE
- PHONE JACK - RJ45 PROVIDE TWO JACKS AT LOCATION
- PS — PRESSURE SWITCH
- TC — THERMOSTAT CONTROL
- M — METER FOR ELECTRIC SERVICE

LIGHTING FIXTURE SCHEDULE

FIXTURE	LAMP TYPE	MANUFACTURER & #	DESCRIPTION
JJ	32 W CFL 4100K	LUMA PRO #3RB20	JELLY JAR TYPE FIXTURE
I	FC12T9CW 4100K	LUMA PRO #2U268	INTERIOR ROUND FLOURESCENT
LP	175 W MV	LITHONIA # TDD175MV120PERLPIM2	OUTDOOR LIGHT POLE FIXTURE W/PHOTOCELL & BULB SUPPLIED

SHEET SCHEDULE

E-0	COVER SHEET
E-1	SITE PLAN ELECTRICAL SERVICE
E-2	CONTROL BUILDING LIGHT AND POWER
E-3	CROMAGLASS & SLUDGE TANK ELECTRICAL
E-4	DOSING PUMP STATION
E-5	DOSING PUMP CONTROL PANEL & MISSION 800 RTU
E-6	PANEL SCHEDULE, SINGLE LINE AND WALL PANEL LAYOUT

ABBREVIATIONS

A	AMPERES
A.C.T.	ABOVE COUNTER TOP
A.F.F.	ABOVE FINISHED FLOOR
CLG	CEILING
DISC	DISCONNECT
DWG	DRAWING
E.C.	EMPTY CONDUIT
FLUOR	FLUORESCENT
GFCI	GROUND FAULT CIRCUIT INTERRUPTER
HP	HORSE POWER
KVA	KILOVOLTAMPERES
KW	KILOWATTS
NF	NON FUSED
MTD	MOUNTED
MV	MERCURY VAPOR
N.I.C.	NOT IN CONTRACT
N.T.S.	NOT TO SCALE
PNL	PANEL
PWR	POWER
RS	RIGID STEEL
TYP	TYPICAL
U.L.	UNDERWRITERS LABORATORY
WP	WEATHER PROOF
XFMR	TRANSFORMER

NOTES

1. COORDINATE LOCATIONS OF ELECTRICAL EQUIPMENT WITH ALL OTHER TRADES
2. UNLESS NOTED ON DRAWINGS OR CONDUIT SCHEDULE, WIRE SHOWN SHALL BE THHN/THWN 75 DEG. CENTIGRADE, 600 VOLT INSULATION, COPPER UNLESS NOTED.
3. UNLESS NOTED ON DRAWINGS THE PUMP CONTROL PANELS AND STARTERS SHALL BE OBTAINED FROM THE TANK AND PUMP MANUFACTURES. PROVIDE ALL WIRING, RACEWAY AND TERMINATIONS TO AND FROM THE EQUPMENT MENTIONED WITH THE EXCEPTION OF MANUFACTURES PRE-WIRED CIRCUITS. LABEL ALL SIGNAL AND PUMP WIRE THAT SHARES CONDUIT WITH OTHER CIRCUITS. LABEL ALL SIGNAL AND PUMP WIRE THAT SHARES CONDUIT WITH OTHER CIRCUITS AS SHOWN ON TERMINAL BLOCKS. BRADY LABELS ARE ACCEPTABLE.
4. SERVICE AND PANELS SHALL BE INSTALLED AS SHOWN UNLESS LOCAL AUTHORITY HAVING JURISDICTION INDICATES OTHERWISE.
5. INSTALL ELECTRICAL SERVICE TO SITE. THIS IS TO INCLUDE XFMR PAD PURCHASE BGE PAD OR POUR IN PLACE PAD THAT IS ACCEPTABLE TO BG&E, PRIMARY 25KV UNDERGROUND CABLE ENCLOSED IN 4 INCH PVC IF REQUIRED AND SECONDARY FEED FROM A BG&E SUPPLIED 45 KVA 3 PHASE 208V TRANSFORMER. METER SOCKET AND A SQ'D #QO342MQ200 42 CB PANEL ARE TO BE PROVIDED AND THE PANEL SUPPLIED WITH CBs AS SHOWN ON E-6. PROVIDE TVS SQ'R D MODEL #SDSA 3650 AS SHOWN.
6. INSTALL LIGHTING AND POWER TO EQUIPMENT AS SHOWN.
7. INSTALL BASE BOARD HEATERS WHERE SHOWN, OF MAKE QMARK, MODELS #2542-6NW (2) AND #2544NW (1) AND CONTROL WITH A SINGLE THERMOSTAT, MODEL #MD26
8. WIRE IN WATER HEATER, PRESSURE SWITCH AND WATER PUMP.
9. WIRE PANELS AND ALSO RUN THE WIRE AND CONDUIT OUT TO THE PUMP LOCATIONS, FURNISH TWO 60 A NF DISCONNECTS. WIRE / CONNECT UP ALL PUMPS AND TERMINAL / JUNCTION BOXES.
10. WIRE IN THE CROMAGLASS SBR, SLUDGE TANK, AND OVERFLOW TANK CONTROL PANELS. PROVIDE THE WIRE AND CONDUIT TO THE JUNCTION BOXES LOCATED ON THESE TANKS AS WELL.
11. FABRICATE/INSTALL PUMPS & CONTROLS FOR DOSING STATION. USE MYERS CGNC-75-23DW PUMP CONTROL PANEL
12. INSTALL CONTROLS & EQUIPMENTS FOR OVERFLOW TANK TO CONSIST OF 12 HR TIMER IN SERIES WITH PUMP OFF FLOAT TO POWER PUMP. 12 HOUR TIMER TO BE AN INTERMATIC FF12H
13. INSTALL AND CONFIGURE A MISSION MONITOR MODEL M-800 SERIES SYSTEM WITH THE PULSE OPTION FOR FLOW MONITORING. SYSTEM SHALL OPERATE / TRANSMIT OVER A WIRELESS NETWORK SUCH AS NEXTEL OR CINGULAR .
14. INSTALL POWER TO PULSE METER & PROVIDE CONDUIT & CABLE TO PULSE METERS IN JB6 (USE CAROL BRAND #C1352 OR EQUAL)
15. INSTALL CONTROL WIRE AND CONDUIT BETWEEN CHEMICAL FEED SYSTEMS AND CROMAGLASS UNIT. INSTALL POWER WIRE AND CONDUIT BETWEEN CHEMICAL FEED SYSTEMS AND POWER PANEL.

APPROVED: FOR PRIVATE SHARED SEWERAGE SYSTEM FOR LOTS 1, 2, 3, 4, 5, 6, 15, 16, 17, 18, AND 19.
HOWARD COUNTY HEALTH DEPARTMENT

for Robert J. Weber — HOWARD COUNTY HEALTH OFFICER — DATE 1/19/07

HOWARD SOIL CONSERVATIONS DISTRICT:
REVIEWED FOR HOWARD COUNTY SOIL CONSERVATION DISTRICT AND MEETS TECHNICAL REQUIREMENTS.

USDA NATURAL RESOURCES CONSERVATION SERVICE — DATE

THIS PLAN IS APPROVED FOR SOIL EROSION AND SEDIMENT CONTROL BY THE HOWARD SOIL CONSERVATION DISTRICT.

HOWARD SOIL CONSERVATION DISTRICT — DATE

SEDIMENT CONTROL MEASURES FOR THIS CONTRACT WILL BE IMPLEMENTED IN ACCORDANCE WITH SECTION 219 OF THE HOWARD COUNTY STANDARDS AND SPECIFICATIONS AND AS PER ROAD CONSTRUCTION PLANS PER F-05-99.

ROSS ENGINEERING
Address: 471 KNIGHT ISLAND RD. EARLEVILLE, MD 21919
Email: rosseng@wildblue.net
Phone: 410-920-2800,
Fax: 410-275-1315

DEPARTMENT OF PUBLIC WORKS
HOWARD COUNTY, MARYLAND
CHIEF, BUREAU OF UTILITIES — DATE 1-25-07

DEPARTMENT OF PUBLIC WORKS
HOWARD COUNTY, MARYLAND
CHIEF, DEVELOPMENT ENGINEERING DIVISION — DATE 2/27/07

McCRONE
● Engineering ● Environmental Sciences
● Construction Services ● Land Planning & Surveying
ANNAPOLIS ● CENTREVILLE ● DOVER ● ELKTON ● SALISBURY
20 RIDGELY AVENUE
ANNAPOLIS, MARYLAND 21401
PHONE (410) 267-8425 * FAX (410) 267-0932
www.mccrone-inc.com

Copyright © 2004

STATE OF MARYLAND — RICHARD A. BRUNING — No. 30720 — PROFESSIONAL ENGINEER — 12/28/06

DES: R.R.				
DRN: AD				
CHK: R.J.R.				
DATE: DEC., 2006	SD	1	SUBDIVISION NAME	4/10/07
	BY	No.	REVISION	DATE

COVER SHEET

JOB No. C1040062

SHEPPARD MANOR
~~PEDDICORD~~ SHARED SEPTIC SYSTEM
LOTS 1 - 19
CONTRACT #: 50-4857D
TAX MAP NO. 29 - GRID NO. 1 - PARCEL 268
ELECTION DISTRICT No. 5
HOWARD COUNTY, MARYLAND

SCALE AS SHOWN

SHEET E-0

CADD FILE: G:\1040062 - Peddicord Property\Drawings\SHARED SEPTIC DESIGN\Elect Drawings V2.dwg ------ Tab.....E0

PLOTTED: Dec 28 , 2006 - 2:18pm