US ROUTE 1 WATER MAIN REPLACEMENT
HOWARD COUNTY, MARYLAND

DEPARTMENT OF PUBLIC WORKS

CAPITAL PROJECT No. W-8205

CONTRACT NO. 44-4019

GENERAL NOTES

1. APPROXIMATE LOCATION OF EXISTING UTILITIES ARE SHOWN. THE CONTRACTOR SHALL TAKE ALL NECESSARY PRECAUTIONS TO PROTECT EXISTING UTILITIES AND SERVICES AND MAINTAIN UNINTERRUPTED SERVICE. ANY DAMAGE INCURRED SHALL BE REPAIRED IMMEDIATELY TO THE SATISFACTION OF THE ENGINEER AT THE CONTRACTOR EXPENSE.
2. TOPOGRAPHIC FIELD SURVEYS WERE PERFORMED ON OCTOBER, 2001 BY KCI TECHNOLOGIES, INC.
3. HORIZONTAL AND VERTICAL SURVEY CONTROLS:
   THE COORDINATES SHOWN ON THE DRAWINGS ARE BASED ON MARYLAND STATE REFERENCE SYSTEM NAD '83/'91 AS PROJECTED BY HOWARD COUNTY GEODETIC CONTROL STATIONS NO. 38AA AND 38BA.
   ALL VERTICAL CONTROLS ARE BASED ON NAVD88. VERTICAL CONTROLS PROVIDED ON THE DRAWINGS ARE IRON BARS.
4. ALL PIPE ELEVATIONS SHOWN ARE INVERT ELEVATIONS UNLESS OTHERWISE NOTED ON THE PLANS.
5. CLEAR ALL UTILITIES BY A MINIMUM OF 12 INCHES. CLEAR ALL POLES BY 5'-0" MINIMUM OR TUNNEL AS REQUIRED UNLESS OTHERWISE NOTED. THE OWNER HAS CONTACTED THE UTILITY COMPANIES AND HAS MADE ARRANGEMENTS FOR BRACING OF POLES AS SHOWN ON THE DRAWINGS. IN THE EVENT THE CONTRACTOR'S WORK REQUIRES THE BRACING OF ADDITIONAL POLES. ANY COST INCURRED BY THE OWNER FOR THE BRACING OF ADDITIONAL POLES OR DAMAGES SHALL BE DEDUCTED FROM MONEY OWED THE CONTRACTOR. THE CONTRACTOR SHALL COORDINATE WITH THE UTILITY COMPANIES TO SCHEDULE THE BRACING OF THE POLES.
6. FOR DETAILS NOT SHOWN ON THE DRAWINGS, AND FOR MATERIALS AND CONSTRUCTION METHODS, USE HOWARD COUNTY DESIGN MANUAL, VOLUME IV, STANDARD SPECIFICATIONS AND DETAILS FOR CONSTRUCTION (LATEST EDITION). THE CONTRACTOR SHALL HAVE A COPY OF VOLUME IV ON THE JOB.
7. WHERE TEST PITS HAVE BEEN MADE ON EXISTING UTILITIES, THEY ARE NOTED BY THE SYMBOL AT THE LOCATION OF THE TEST PITS. A NOTE OR NOTES CONTAINING THE RESULTS OF THE TEST PIT OR PITS IS INCLUDED ON THE DRAWINGS. EXISTING UTILITIES IN THE VICINITY OF THE PROPOSED WORK FOR WHICH TEST PITS HAVE NOT BEEN DUG SHALL BE LOCATED BY THE CONTRACTOR TWO WEEKS IN ADVANCE OF CONSTRUCTION OPERATIONS AT HIS OWN EXPENSE.
8. CONTRACTOR SHALL NOTIFY THE FOLLOWING UTILITY COMPANIES OR AGENCIES AT LEAST FIVE WORKING DAYS BEFORE STARTING WORK SHOWN ON THESE PLANS:
   AT&T.....1-800-252-1133
   BG&E (CONTRACTOR SERVICES).....410-850-4620
   BG&E - (EMERGENCY).....410-685-1400
   BUREAU OF UTILITIES (DPW).....410-313-4900
   VERIZON. ..... 1-800-743-0033 / 410-224-9210
   COLONIAL PIPELINE CO. 410-795-1390
   MISS UTILITY 1-800-257-7777
   STATE HIGHWAY ADMINISTRATION 410-531-5533
9. TREES AND SHRUBS ARE TO BE PROTECTED FROM DAMAGE TO THE MAXIMUM EXTENT. TREES AND SHRUBS LOCATED WITHIN THE CONSTRUCTION STRIP ARE NOT TO BE REMOVED OR DAMAGED BY THE CONTRACTOR.
10. CONTRACTOR SHALL REMOVE TREES, STUMPS AND ROOTS ALONG LINE OF EXCAVATION. PAYMENT FOR SUCH REMOVAL SHALL BE INCLUDED IN THE UNIT PRICE BID FOR CONSTRUCTION OF THE MAIN .
11. THE CONTRACTOR SHALL NOTIFY THE BUREAU OF HIGHWAYS, HOWARD COUNTY, AT (410)313-7450 AT LEAST FIVE WORKING DAYS BEFORE ANY OPEN CUT OF ANY COUNTY ROAD OR BORING/JACKING OF ANY COUNTY ROAD FOR LAYING WATER/SEWER MAINS OR HOUSE CONNECTIONS. THE APPROVAL OF THESE DRAWINGS WILL CONSTITUTE COMPLIANCE WITH DPW REQUIREMENTS PER SECTION 18.114(A) OF THE HOWARD COUNTY CODE.
12. EXCEPT AS INDICATED ON THE PLANS AND NOTED HEREIN, ALL PUBLIC WATER MAINS SHALL BE POLYVINYLCHLORIDE (PVC) PIPE MEETING THE REQUIREMENTS OF AWWA C900 DR18, PRESSURE CLASS 150 AND THE HOWARD COUNTY DESIGN MANUAL VOLUME IV- STANDARD SPECIFICATIONS AND DETAILS FOR CONSTRUCTION AND ALL SUBSEQUENT AMENDMENTS THERETO.
13. TOPS OF ALL WATER MAINS SHALL HAVE A MINIMUM OF 3'-6" OF COVER UNLESS OTHERWISE NOTED.
14. VALVES ADJACENT TO TEES SHALL BE STRAPPED TO TEES.
15. ALL FITTINGS SHALL BE BUTTRESSED OR ANCHORED WITH CONCRETE IN ACCORDANCE WITH THE STANDARD DETAILS UNLESS OTHERWISE PROVIDED FOR ON THE DRAWINGS.
16. FIRE HYDRANTS SHALL BE SET TO BURY LINE ELEVATIONS SHOWN ON THE DRAWINGS. ALL FIRE HYDRANTS SHALL BE INSTALLED IN ACCORDANCE WITH STANDARD DETAILS. THE SOIL AROUND THE FIRE HYDRANT SHALL BE COMPACTED IN ACCORDANCE WITH SECTION 1000 AND SECTION 1005 OF THE STANDARD SPECIFICATIONS.
17. ALL FIRE HYDRANT LEADS INCLUDING THE TEE SHALL BE DUCTILE IRON CLASS 54 MEETING THE REQUIREMENTS OF AND CONSTRUCTED IN ACCORDANCE WITH THE HOWARD COUNTY DESIGN MANUAL VOLUME IV- STANDARD SPECIFICATIONS AND DETAILS FOR CONSTRUCTION.
18. THE CONTRACTOR SHALL NOT OPERATE ANY WATER MAIN VALVES ON THE EXISTING WATER SYSTEM.
19. THE CONTRACTOR IS RESPONSIBLE FOR CONTACTING THE VARIOUS RESIDENTS AND COORDINATING HIS WORK ACTIVITIES SO AS NOT TO NEGATIVELY IMPACT CONNECTED CUSTOMERS. THE REHABILITATION OF WATER MAIN SHALL CAUSE A MINIMUM DISTURBANCE TO THE EXISTING RESIDENTS AND NOTIFICATION TO THE RESIDENTS OF ANY "INTERRUPTION OF SERVICE" SHALL BE THE RESPONSIBILITY OF THE CONTRACTOR. THE COUNTY REQUIRES THAT THE CONTRACTOR NOTIFY EACH RESIDENTS AFFECTED BY LETTER OR DOOR TAGS OF THE IMPENDING SERVICE INTERRUPTION AT LEAST 72 HOURS IN ADVANCE OF THE PLANNED INTERRUPTION.
20. THE CONTRACTOR SHALL NOTIFY THE BUREAU OF UTILITIES HOWARD COUNTY, 15 DAYS PRIOR TO WATER MAIN SHUT DOWNS.
21. THE CONTRACTOR SHALL RETURN ALL SALVAGED FIRE HYDRANTS, FRAMES AND COVERS, VALVES, ROADWAY BOXES TO THE BUREAU OF UTILITIES AT 8250 MONTGOMERY RD. COLUMBIA, MD 21045.
22. THE CONTRACTOR SHALL PROVIDE SURVEY CONSTRUCTION STAKEOUT FOR ALL NECESSARY LINES, GRADES AND ELEVATION OF THE PROPOSED FACILITIES.
23. ALL VALVES SHALL BE CONSTRUCTED IN ACCORDANCE WITH HOWARD COUNTY STANDARD SPECIFICATIONS. SEE STANDARD DETAILS FOR ROADWAY VALVE BOX DIMENSIONS AND VALVE KEY EXTENSIONS.
24. ALL WATER HOUSE CONNECTIONS (WHC) SHALL BE FOR OUTSIDE METER SETTINGS.
25. ALL WATER HOUSE CONNECTIONS SHALL BE COPPER MEETING THE REQUIREMENTS OF AND CONSTRUCTED IN ACCORDANCE WITH THE HOWARD COUNTY DESIGN MANUAL VOLUME IV- STANDARD SPECIFICATIONS AND DETAILS FOR CONSTRUCTION
26. ALL WATER MAINS CONSTRUCTED IN FILL AREAS SHALL BE RESTRAINED DUCTILE IRON PIPE CLASS 54 MEETING THE REQUIREMENTS OF AND CONSTRUCTED IN ACCORDANCE WITH THE HOWARD COUNTY DESIGN MANUAL VOLUME IV- STANDARD SPECIFICATIONS AND DETAILS FOR CONSTRUCTION.
27. ALL WATER MAINS WITH CASING PIPE SHALL BE RESTRAINED DUCTILE IRON PIPE CLASS 54 MEETING THE REQUIREMENTS OF AND CONSTRUCTED IN ACCORDANCE WITH THE HOWARD COUNTY DESIGN MANUAL VOLUME IV- STANDARD SPECIFICATIONS AND DETAILS FOR CONSTRUCTION.
28. THE FOLLOWING NOTE IS ADDED TO HOWARD COUNTY STANDARD DETAIL W2.22, BUTRESS AND ANCHORAGE FOR VERTICAL BENDS. "WHEN ANCHORING PVC PIPE THE STRAPPING IN CONTACT WITH THE PIPE SURFACE SHALL BE 1" WIDE BY 1/4" THICK STEEL. THE REMAINING PORTION OF THE STRAP SHALL BE REINFORCING BAR SIZED IN ACCORDANCE WITH THE PERTINENT CHART SHOWN ON THE DETAIL.

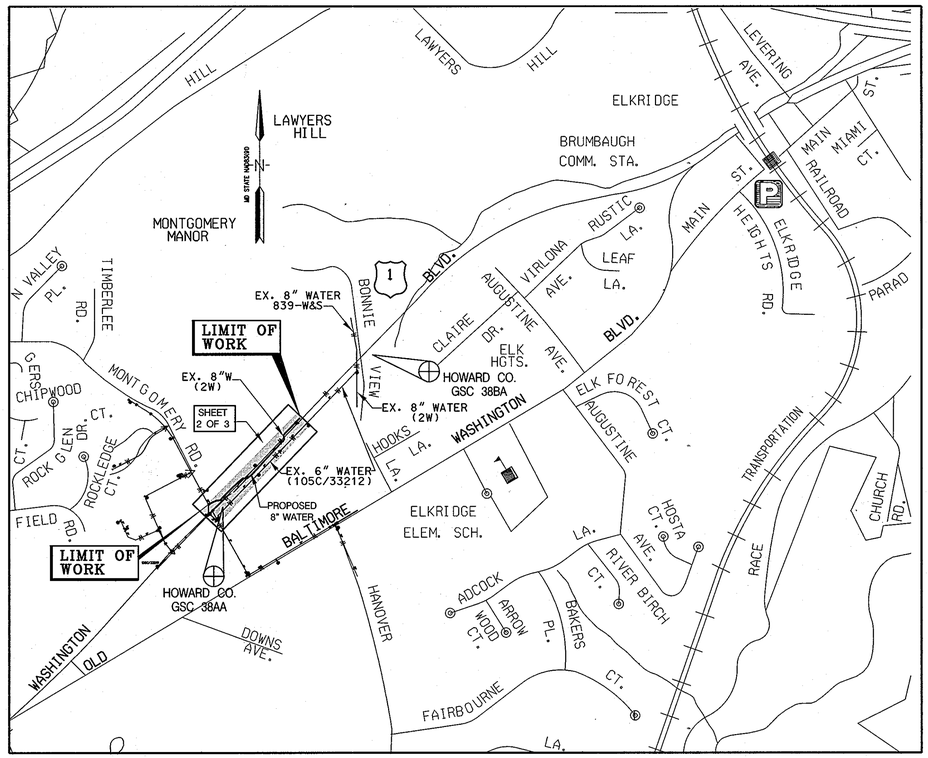

LOCATION MAP

SCALE: 1"= 600'

INDEX OF SHEETS	
SHEET No.	DESCRIPTION
1	TITLE SHEET
2	8" WATER MAIN PLAN AND PROFILE
3	EROSION & SEDIMENT CONTROL, NOTES & DETAILS

QUANTITIES

ITEM	UNIT	ESTIMATE	AS-BUILT	MATERIAL SUPPLIER
8" AWWA C900 PVC WATER	L.F.	1055	1,079	BELAIR RD. SUPPLY NATIONAL
12" AWWA C900 PVC WATER	L.F.	37	15	NATIONAL
12" GATE VALVE	EA.	3	3	MUELLER CO.
8" GATE VALVE	EA.	2	2	MUELLER CO.
6" WATER DIP	L.F.	33	32	U.S. PIPE
6" F.H.	EA.	2	2	MUELLER CO.
6" VALVE	EA.	2	2	MUELLER CO.
3/4" W.H.C COPPER	L.F.	15	4	READING
1" W.H.C COPPER	L.F.	65	43	READING
1-1/2" W.H.C COPPER	L.F.	26	5	READING
4" W.H.C DIP	L.F.	38	32	U.S. PIPE

NAME OF UTILITY CONTRACTOR: DACO CONSTRUCTION CO.

CHECKBOX

AS-BUILT DATE:

SURVEY AND DRAFTING DIVISION

TYPE OF BUILDING: COMMERCIAL

NUMBER OF PARCELS: 5

NUMBER OF WATER HOUSE CONNECTIONS: 9

DRAINAGE AREA: PATAPSCO RIVER

PRESSURE ZONE: 400

WATER CODE (FOR COUNTY USE ONLY):

HYDROSTATIC TEST GRADIENT: 550

HOWARD COUNTY GEODETIC SURVEY CONTROL

NO. 38AA
N 561158.784
E 1389726.39
ELEV. 220.028

NAD83(91) (HORIZONTAL)
NAVD88 (VERTICAL)

NO. 38BA
N 562553.278
E 1390967.927
ELEV. 166.194

AS-BUILT
DATE 9-21-07

LEGEND

- DECIDUOUS TREE
- CONIFEROUS TREE
- TRAVERSE POINT
- PROPOSED WATER MAIN
- PROPOSED FIRE HYDRANT
- PROPOSED VALVE
- PROPOSED WATER HOUSE CONNECTION
- SF — SILT FENCE
- LOD — LIMIT OF DISTURBANCE
- SOIL BORING
- CONTINUITY TEST STATION
- PAVEMENT AREA TO BE MILLED AND OVERLAYED
- EXISTING FIRE HYDRANT
- EXISTING VALVE
- EXISTING WATER MAIN
- EXISTING GAS MAIN
- EXISTING BURIED SERVICE CABLE WIRE
- EXISTING OVERHEAD SERVICE
- EXISTING SEWER
- EXISTING BURIED ELECTRIC
- EXISTING WATER MAIN (TO BE ABANDONED)

DEPARTMENT OF PUBLIC WORKS
HOWARD COUNTY, MARYLAND

DIRECTOR OF PUBLIC WORKS — DATE 1/6/06
CHIEF, BUREAU OF ENGINEERING — DATE 1/5/06
CHIEF, BUREAU OF UTILITIES — DATE 1-6-06
CHIEF, UTILITY DESIGN DIVISION — DATE 1-5-06

KCI TECHNOLOGIES
ENGINEERS PLANNERS SCIENTISTS CONSTRUCTION MANAGERS
10 NORTH PARK DRIVE, HUNT VALLEY, MD 21030
PHONE: (410) 316-7800
FAX: (410) 316-7817
www.kci.com

STATE OF MARYLAND — PROFESSIONAL ENGINEER — 1/3/06

DES: GW				
DRN: KJ				
CHK: TWW				
DATE: 12/05	LN BY	⚠ NO.	AS BUILT REVISION	9-25-07 DATE

TITLE SHEET

600' SCALE MAP NO. 38 BLOCK NO. 27-37

US ROUTE 1
WATER MAIN REPLACEMENT
CAPITAL PROJECT No. W-8205
CONTRACT No. 44-4019
ELECTION DISTRICT NO.1 HOWARD COUNTY, MARYLAND

SCALE AS SHOWN

SHEET 1 OF 3

PLOTTED: "10:51 AM on Tuesday, January 03, 2006"
BY: Kevin Jackson Division: Environmental Engineering
FILE: M:\1999\0199180.20\drawings\TITLE.dgn

FILE NAME: M:\1999\0199180.20\DRAWINGS\TITLE.DGN

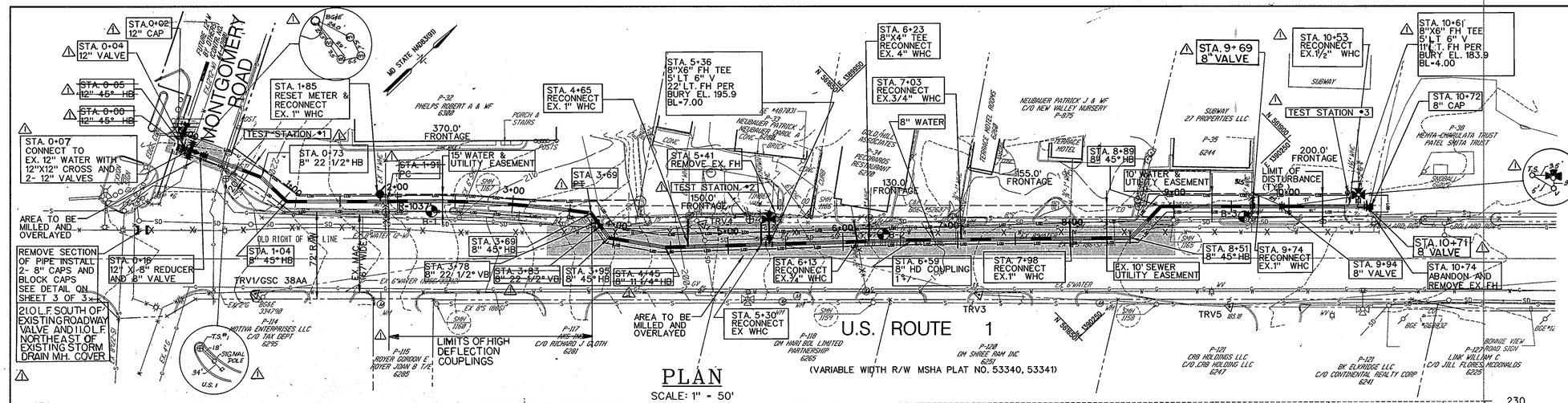

PLAN

SCALE: 1" = 50'

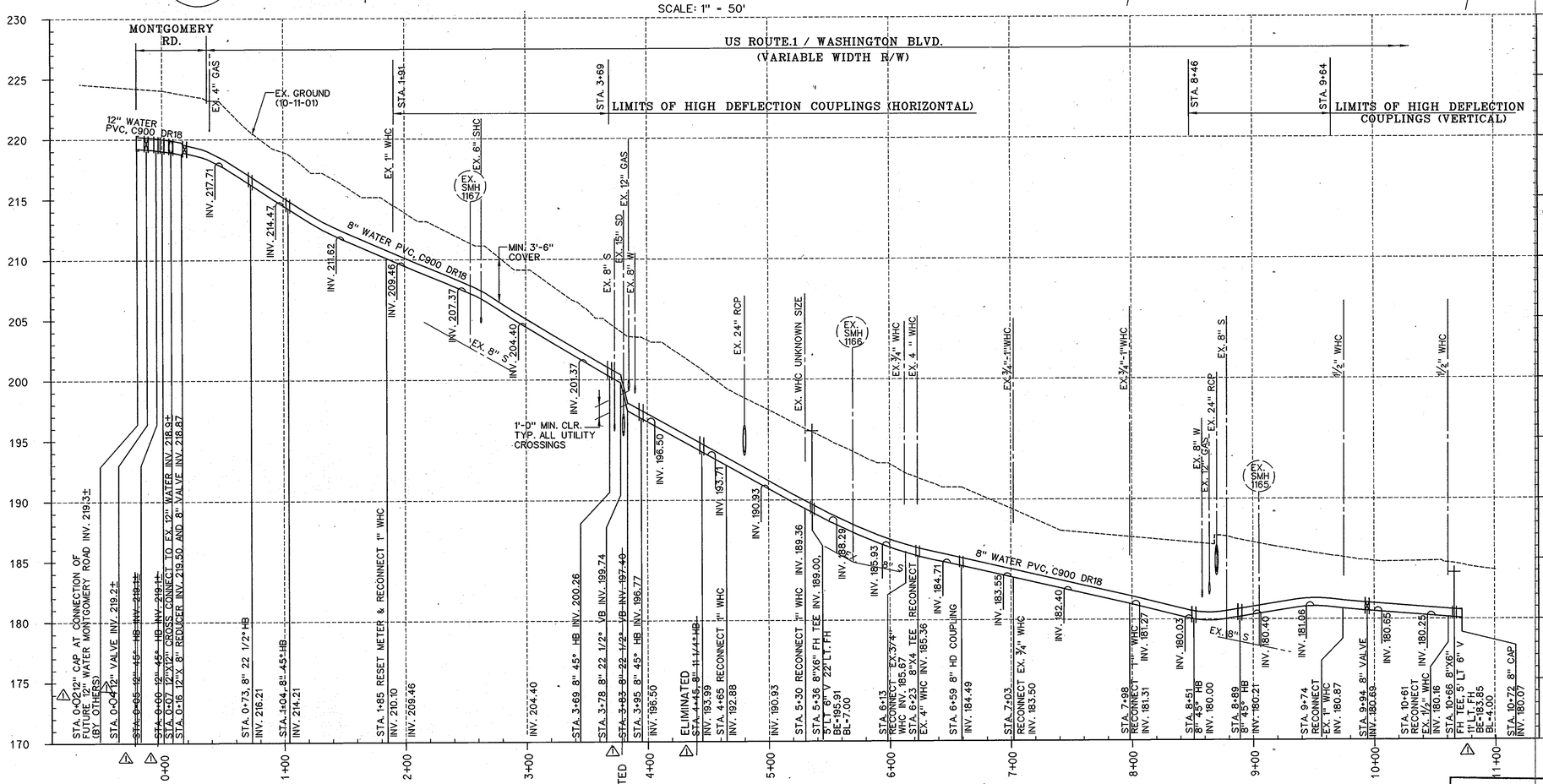

PROFILE

SCALE: HORIZONTAL 1" = 50'
VERTICAL 1" = 5'

TRAVERSE COORDINATE SCHEDULE			
LOCATION	NORTHING	EASTING	ELEVATION
TRV1/GSC 38AA	561158.78	1389726.39	220.03
TRV3	561612.83	1390162.91	189.21
TRV4	561482.029	1389951.74	199.24
TRV5	561762.96	1390321.27	185.18

WATERMAIN STAKEOUT COORDINATE SCHEDULE			
STATION	FITTING	NORTHING	EASTING
△1 0+02	12" CAP	561200.77	1389588.92
△1 0+04	12" VALVE	561199.86	1389587.14
△1 ~~0+05~~	~~12" 45° HB~~	~~561202.57~~	~~1389586.17~~
△1 ~~0+00~~	~~12" 45° HB~~	~~561201.68~~	~~1389590.70~~
0+07	12"X12" CROSS	561204.77	1389597.25
0+16	12"X8" REDUCER	561208.58	1389605.40
0+73	8" 22 1/2° HB	561232.73	1389656.76
1+04	8" 45° HB	561234.15	1389687.28
△1 ~~1+91~~	~~PC~~	~~561297.47~~	~~1389747.85~~
△1 3+69	~~PT~~/8" 45° HB	561418.33	1389877.82
3+78	8" 22 1/2° VB	561417.02	1389886.72
△1 ~~3+83~~	~~8" 22 1/2° VB~~	~~561416.32~~	~~1389891.51~~
3+95	8" 45° HB	561414.49	1389904.05
△1 ~~4+45~~	~~8" 11 1/4° HB~~	~~561444.32~~	~~1389944.12~~
5+37	8"X6" FH TEE	561511.40	1390004.70
5+37	22' LT. FH	561526.31	1389988.73
6+59	8" HD COUPLING	561602.78	1390087.21
8+51	8" 45° HB	561742.62	1390218.61
8+89	8" 45° HB	561780.41	1390216.68
9+94	8" VALVE	561856.44	1390289.53
△1 10+61	8"X6" FH TEE	561905.44	1390335.22
△1 10+61	11' LT. FH	561912.94	1390327.18
10+72	8" CAP	561912.54	1390343.23

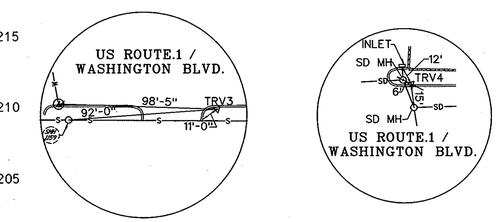

TRAVERSE 3
SCALE: NTS

TRAVERSE 4
SCALE: NTS

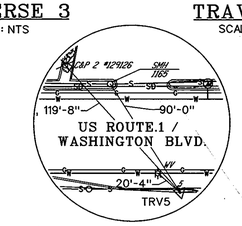

TRAVERSE 5
SCALE: NTS

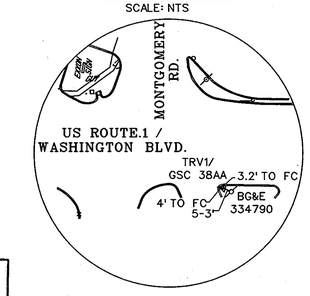

TRAVERSE 1/GSC 38AA
SCALE: NTS

AS-BUILT
DATE 9-25-07

DEPARTMENT OF PUBLIC WORKS
HOWARD COUNTY, MARYLAND

DIRECTOR OF PUBLIC WORKS — DATE 1/6/06
CHIEF, BUREAU OF ENGINEERING — DATE 1/5/06
CHIEF, BUREAU OF UTILITIES — DATE 1-6-06
CHIEF, UTILITY DESIGN DIVISION — DATE 1-5-06

KCI TECHNOLOGIES
ENGINEERS PLANNERS SCIENTISTS CONSTRUCTION MANAGERS
10 NORTH PARK DRIVE, HUNT VALLEY, MD 21030
PHONE: (410) 316-7800 FAX: (410) 316-7817
www.kci.com

STATE OF MARYLAND — THOMAS WHITE WHITE — No. 15278 — PROFESSIONAL ENGINEER — 1/3/06

DES: GW			
DRN: KJ			
CHK: TWW			
DATE: 12/05	LN BY	△1 NO.	AS-BUILT — REVISION — 9-25-07 — DATE

8" WATER MAIN
PLAN AND PROFILE
STA. 0+00 TO STA. 10+50

600' SCALE MAP NO. 38 BLOCK NO. 27-37

US ROUTE 1
WATER MAIN REPLACEMENT
CAPITAL PROJECT No. W-8205
CONTRACT No. 44-4019

ELECTION DISTRICT NO.1 HOWARD COUNTY, MARYLAND

SCALE AS SHOWN

SHEET 2 OF 3

PLOTTED: 1:09:31 AM on Tuesday, January 03, 2006
BY: Kevin Jackson Division: Environmental Engineering
FILE: M:\1999\0199180.20\drawings\New C-01.dgn

FILE NAME: M:\1999\0199180.20\DRAWINGS\NEW C-01.DGN

DETAIL 22 - SILT FENCE

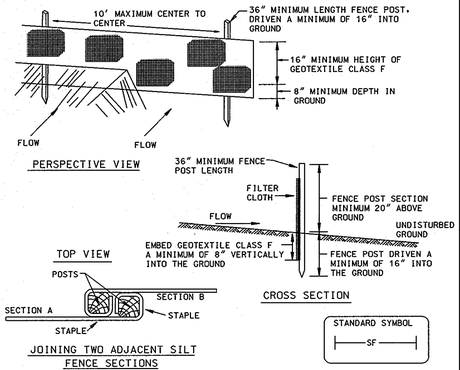

Construction Specifications

1. Fence posts shall be a minimum of 36" long driven 16" minimum into the ground. Wood posts shall be 11/2" x 11/2" square (minimum) cut, or 13/4" diameter (minimum) round and shall be of sound quality hardwood. Steel posts will be standard T or U section weighting not less than 1.00 pond per linear foot.

2. Geotextile shall be fastened securely to each fence post with wire ties or staples at top and mid-section and shall meet the following requirements for Geotextile Class F:

Tensile Strength	50 lbs/in (min.)	Test: MSMT 509
Tensile Modulus	20 lbs/in (min.)	Test: MSMT 509
Flow Rate	0.3 gal ft²/ minute (max.)	Test: MSMT 322
Filtering Efficiency	75% (min.)	Test: MSMT 322

3. Where ends of geotextile fabric come together, they shall be overlapped, folded and stapled to prevent sediment bypass.

4. Silt Fence shall be inspected after each rainfall event and maintained when bulges occur or when sediment accumulation reached 50% of the fabric height.

U.S. DEPARTMENT OF AGRICULTURE SOIL CONSERVATION SERVICE	PAGE E - 15 - 3	MARYLAND DEPARTMENT OF ENVIRONMENT WATER MANAGEMENT ADMINISTRATION

DETAIL 30 - EROSION CONTROL MATTING

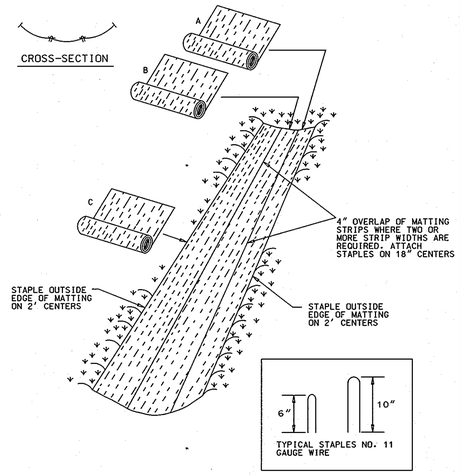

U.S. DEPARTMENT OF AGRICULTURE SOIL CONSERVATION SERVICE	PAGE G - 22 - 2	MARYLAND DEPARTMENT OF ENVIRONMENT WATER MANAGEMENT ADMINISTRATION

EROSION CONTROL MATTING

Construction Specifications

1. Key-in the matting by placing the top ends of the matting in a narrow trench, 6" in depth. Backfill the trench and tamp firmly to conform to the channel cross-section. Secure with a row of staples about 4" down slope from the trench. Spacing between staples is 6".

2. Staple the 4" overlap in the channel center using an 18" spacing between staples.

3. Before stapling the outer edges of the matting, make sure the matting is smooth and in firm contact with the soil.

4. Staples shall be placed 2' apart with 4 rows for each strip, 2 outer rows, and 2 alternating rows down the center.

5. Where one roll of matting ends and another begins, the end of the top strip shall overlap the upper end of the lower strip by 4", shiplap fashion. Reinforce the overlap with a double row of staples spaced 6" apart in a staggered pattern on either side.

6. The discharge end of the matting liner should be similarly secured with 2 double rows of staples.

Note: If flow will enter from the edge of the matting then the area effected by the flow must be keyed-in.

U.S. DEPARTMENT OF AGRICULTURE SOIL CONSERVATION SERVICE	PAGE G - 22 - 2A	MARYLAND DEPARTMENT OF ENVIRONMENT WATER MANAGEMENT ADMINISTRATION

DETAIL 24 - STABILIZED CONSTRUCTION ENTRANCE

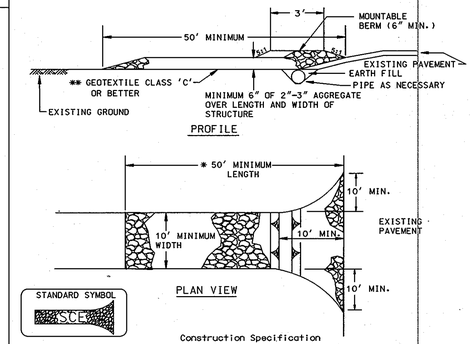

Construction Specification

1. Length - minimum of 50' (*30' for single residence lot).

2. Width - 10' minimum, should be flared at the existing road to provide a turning radius.

3. Geotextile fabric (filter cloth) shall be placed over the existing ground prior to placing stone. **The plan approval authority may not require single family residences to use geotextile.

4. Stone - crushed aggregate (2" to 3") or reclaimed or recycled concrete equivalent shall be placed at least 6" deep over the length and width of the entrance.

5. Surface Water - all surface water flowing to or diverted toward construction entrances shall be piped through the entrance, maintaining positive drainage. Pipe installed through the stabilized construction entrance shall be protected with a mountable berm with 5:1 slopes and a minimum of 6" of stone over the pipe. Pipe has to be sized according to the drainage. When the SCE is located at a high spot and has no drainage to convey a pipe will not be necessary. Pipe should be sized according to the amount of runoff to be conveyed. A 6" minimum will be required.

6. Location - A stabilized construction entrance shall be located at every point where construction traffic enters or leaves a construction site. Vehicles leaving the site must travel over the entire length of the stabilized construction entrance.

U.S. DEPARTMENT OF AGRICULTURE SOIL CONSERVATION SERVICE	PAGE F - 97 - 3	MARYLAND DEPARTMENT OF ENVIRONMENT WATER MANAGEMENT ADMINISTRATION

STANDARD SEDIMENT CONTROL NOTES

1. A MINIMUM OF 48 HOURS NOTICE MUST BE GIVEN TO THE HOWARD COUNTY DEPARTMENT OF INSPECTIONS, LICENSES AND PERMITS, SEDIMENT CONTROL DIVISION PRIOR TO THE START OF ANY CONSTRUCTION, (313-1855).

2. ALL VEGETIVE AND STRUCTURAL PRACTICES ARE TO BE INSTALLED ACCORDING TO THE PROVISIONS OF THIS PLAN AND ARE TO BE IN CONFORMANCE WITH THE MOST CURRENT "MARYLAND STANDARDS AND SPECIFICATIONS FOR SOIL EROSION AND SEDIMENT CONTROL", AND REVISIONS THERETO.

3. FOLLOWING INITIAL SOIL DISTURBANCE OR REDISTURBANCE, PERMANENT OR TEMPORARY STABILIZATION SHALL BE COPLETED WITHIN:
   A) 7 CALENDER DAYS FOR ALL PERIMETER SEDIMENT CONTROL STRUCTURES, DIKES, PERIMETER SLOPES AND ALL SLOPES GREATER THAN 3:1,
   B) 14 DAYS AS TO ALL OTHER DISTURBED OR GRADED AREAS ON THE PROJECT SITE.

4. ALL SEDIMENT TRAPS/BASINS SHOWN MUST BE FENCED AND WARNING SIGNS POSTED AROUND THEIR PERIMETER IN ACCORDANCE WITH VOL. I, CHAPTER 12, OF THE HOWARD COUNTY DESIGN MANUAL, STORM DRAINAGE.

5. ALL DISTURBED AREAS MUST BE STABILIZED WITHIN THE TIME PERIOD SPECIFIED ABOVE IN ACCORDANCE WITH THE 1994 MARYLAND STANDARDS AND SPECIFICATIONS FOR SOIL EROSION AND SEDIMENT CONTROL (SEC. 020.0) FOR PERMANENT SEEDINGS, SOD, TEMPORARY SEEDING AND MULCHING. TEMPORARY STABILIZATION WITH MULCH ALONE CAN ONLY BE DONE WHEN RECOMMENDED SEEDING DATES DO NOT ALLOW FOR PROPER GERMINATION AND ESTABLISHMENT OF GRASSES.

6. ALL SEDIMENT CONTROL STRUCTURES ARE TO REMAIN IN PLACE AND ARE TO BE MAINTAINED IN OPERATIVE CONDITION UNTIL PERMISSION FOR THEIR REMOVAL HAS BEEN OBTAINED FROM THE HOWARD COUNTY SEDIMENT CONTROL INSPECTOR.

7. SITE ANALYSIS:

TOTAL AREA OF SITE	N/A	ACRES		
AREA DISTURBED	0.38	ACRES		
AREA TO BE ROOFED OR PAVED			0.25	ACRES
AREA TO BE VEGATATIVELY STABILIZED			0.28	ACRES
TOTAL CUT	N/A	CU. YDS.		
TOTAL FILL	N/A	CU. YDS.		
OFFSITE WASTE/BORROW AREA LOCATION	N/A			

8. ANY SEDIMENT CONTROL PRACTICE WHICH IS DISTURBED BY GRADING ACTIVITY FOR PLACEMENT OF UTILITIES MUST BE REPAIRED ON THE SAME DAY OF THE DISTURBANCE.

9. ADDITIONAL SEDIMENT CONTROLS MUST BE PROVIDED, IF DEEMED NECESSARY BY THE HOWARD COUNTY SEDIMENT CONTROL INSPECTOR.

10. ON ALL SITES WITH DISTURBED AREAS IN EXCESS OF 2 ACRES, APPROVAL OF THE INSPECTION AGENCY SHALL BE REQUESTED UPON COMPLETION OF INSTALLATION OF PERIMETER EROSION AND SEDIMENT CONTROLS, BUT BEFORE PROCEEDING WITH ANY OTHER EARTH DISTURBANCE OR GRADING. OTHER BUILDING OR GRADING INSPECTION APPROVALS MAY NOT BE AUTHORIZED UNTIL THIS INITIAL APPROVAL BY THE INSPECTION AGENCY IS MADE.

11. TRENCHES FOR THE CONSTRUCTION OF UTILITIES IS LIMITED TO THREE (3) PIPE LENGTHS OR THAT WHICH CAN BE BACK FILLED AND STABILIZED WITHIN ONE WORKING DAY, WHICHEVER IS SHORTER.

12. CONTRACTOR SHALL PLACE EXCAVATED MATERIALS ON UPHILL SIDE OF TRENCH AND PLACE SILT FENCE ON DOWNHILL SIDE OF TRENCH.

PERMANENT SEEDING NOTES

APPLY TO GRADED OR CLEARED AREAS NOT SUBJECT TO IMMEDIATE FURTHER DISTURBANCE WHERE A PERMANENT LONG-LIVED VEGETATIVE COVER IS NEEDED.

SEEDBED PREPARATION: LOOSEN UPPER THREE INCHES OF SOIL BY RAKING, DISKING OR OTHER ACCEPTABLE MEANS BEFORE SEEDING, IF NOT PREVIOUSLY LOOSENED.

SOIL AMENDMENTS: IN LIEU OF SOIL TEST RECOMMENDATIONS, USE ONE OF THE FOLLOWING SCHEDULES:

1) PREFERRED - APPLY 2 TONS PER ACRES DOLOMITIC LIMESTONE (92 LBS/1000 SQ FT.) AND 600 LBS PER ACRE 10-10-10 FERTILIZER (14LBS/1000 SQ FT.) BEFORE SEEDING. HARROW OR DISK INTO UPPER THREE INCHES OF SOIL. AT TIME OF SEEDING, APPLY 400 LBS PER ACRE 30-0-0 UREAFORM FERTILIZER (9 LBS/1000 SQ FT.).

2) ACCEPTALBE - APPLY 2 TONS PER ACRE DOLOMITIC LIMESTONE (92 LBS/1000 SQ FT.) AND 1000 LBS PER ACRE 10-10-10 FERTILIZER (23 LBS/1000 SQ FT.) BEFORE SEEDING. HARROW OF DISK INTO UPPER THREE INCHES OF SOIL.

SEEDING - FOR THE PERIODS MARCH 1 THRU APRIL 30, AND AUGUST 1 THRU OCTOBER 15, SEED WITH 60 LBS PER ACRE (1.4 LBS/1000 SQ FT.) OF KENTUCKY 31 TALL FESCUE. FOR THE PERIOD MAY 1 THRU JULY 31, SEED WITH 60 LBS KENTUCKY 31 TALL FESCUE PER ACRE AND 2 LBS PER ACRE (.05 LBS/1000 SQ FT.) OF WEEPING LOVEGRASS. DURING THE PERIOD OF OCTOBER 16 THRU FEBRUARY 28, PROTECT SITE BY: OPTION (1) 2 TONS PER ACRE OF WELL ANCHORED STRAW MULCH AND SEED AS SOON AS POSSIBLE IN THE SPRING. OPTION (2) USE SOD. OPTION (3) SEED WITH 60 LBS/ACRE KENTUCKY 31 TALL FESCUE AND MULCH WITH 2 TONS/ACRE WELL ANCHORED STRAW.

MULCHING - APPLY 1-1/2 TO 2 TONS PER ACRE (70 TO 90 LBS/1000 SQ FT.) OF UNROTTED SMALL GRAIN STRAW IMMEDIATELY AFTER SEEDING. ANCHOR MULCH IMMEDIATELY AFTER APPLICATION USING MULCH ANCHORING TOOL OR 218 GALLONS PER ACRE (5 GAL/1000 SQ FT.) OF EMULSIFIED ASPHALT ON FLAT AREAS. ON SLOPES 8 FEET OR HIGHER, USE 348 GALLONS PER ACRE (8 GAL/1000 SQ FT.) FOR ANCHORING.

MAINTENANCE - INSPECT ALL SEEDED AREAS AND MAKE NEEDED REPAIRS, REPLACEMENTS AND RESEEDINGS.

TEMPORARY SEEDING NOTES

APPLY TO GRADED OR CLEARED AREAS LIKELY TO BE REDISTURBED WHERE A SHORT-TERM VEGETATIVE COVER IS NEEDED.

SEEDBED PREPARATION: LOOSEN UPPER THREE INCHES OF SOIL BY RAKING, DISKING OR OTHER ACCEPTABLE MEANS BEFORE SEEDING, IF NOT PREVIOUSLY LOOSENED.

SOIL AMENDMENTS: - APPLY 600 LBS PER ACRE 10-10-10 FERTILIZER (14 LBS/1000 SQ FT.).

SEEDING: - FOR PERIODS MARCH 1 THRU APRIL 30 AND FROM AUGUST 15 THRU OCTOBER 15, SEED WITH 2-1/2 BUSHEL PER ACRE OF ANNUAL RYE (3.2 LBS/1000 SQ FT.). FOR THE PERIOD MAY 1 THRU AUGUST 14, SEED WITH 3 LBS PER ACRE OF WEEPING LOVEGRASS (.07 LBS/1000 SQ FT.). FOR THE PERIOD NOVEMBER 16 THRU FEBRUARY 28, PROTECT SITE BY APPLYING 2 TONS PER ACRE OF WELL ANCHORED STRAW MULCH AND SEED AS SOON AS POSSIBLE IN THE SPRING, OR USE SOD.

MULCHING: - APPLY 1-1/2 TO 2 TONS PER ACRE (70 TO 90 LBS/1000 SQ FT.) OF UNROTTED SMALL GRAIN STRAW IMMEDIATELY AFTER SEEDING. ANCHOR MULCH IMMEDIATELY AFTER APPLICATION USING MULCH ANCHORING TOOL OR 210 GAL PER ACRE (5 GAL/1000 SQ FT.) OF EMULSIFIED ASPHALT ON FLAT AREAS. ON SLOPES 8 FT OR HIGHER, USE 340 GAL PER ACRE (8 GAL/1000 SQ FT.) FOR ANCHORING.

REFER TO THE 1994 MARYLAND STANDARDS AND SPECIFICATIONS FOR SOIL EROSION AND SEDIMENT CONTROL FOR RATE AND METHODS NOT COVERED.

SEQUENCE OF CONSTRUCTION

1. OBTAIN GRADING PERMIT.
2. LAYOUT ALIGNMENT AT SITE. (3 DAYS)
3. INSTALL SEDIMENT CONTROL DEVICES AS SHOWN ON PLAN.
4. EXCAVATE DITCH TO THE GRADE SPECIFIED ON THE PROFILE, INSTALL WATER MAIN AND BACKFILL TRENCH AND RESURFACE WITH BITUMINOUS PAVING (30 DAYS) TRENCHES FOR THE CONSTRUCTION OF UTILITIES IS LIMITED TO 25' OF PIPE LENGTH OR THAT WHICH CAN BE BACK FILLED AND STABILIZED WITHIN ONE WORKING DAY, WHICHEVER IS SHORTER.
5. CLEAN UP CONSTRUCTION SITE. (1 DAY)
6. REMOVE SEDIMENT CONTROL DEVICES AFTER PERMISSION IS GRANTED BY THE SEDIMENT CONTROL INSPECTOR. (1 DAY)

TRAFFIC MAINTENANCE

FOR TRAFFIC MAINTENANCE REQUIREMENTS SEE SPECIFICATION DOCUMENT D, ITEM 15.

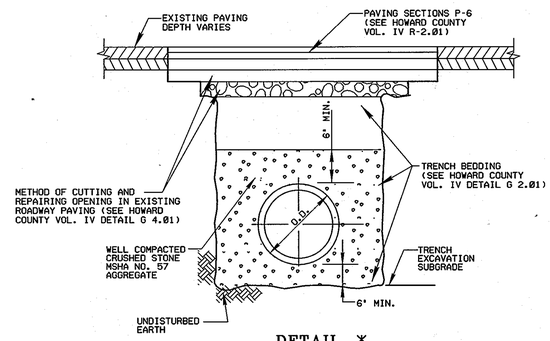

DETAIL *
TRENCH FOR PVC PIPE
AND HIGH DENSITY POLYETHYLENE PIPE
NO SCALE

* BASED ON HOWARD COUNTY STANDARD DETAIL G2.01
NOTES:
1. UTILITY CONSTRUCTION SECTION 1000
2. BACKFILLING SECTION 1000.03.19

DEVELOPER'S CERTIFICATION

"I/WE CERTIFY THAT ALL DEVELOPMENT AND CONSTRUCTION WILL BE DONE ACCORDING TO THIS PLAN, AND THAT ANY RESPONSIBLE PERSONNEL INVOLVED IN THE CONSTRUCTION PROJECT WILL HAVE A CERTIFICATE OF ATTENDANCE AT A DEPARTMENT OF THE ENVIRONMENT APPROVED TRAINING PROGRAM FOR THE CONTROL OF SEDIMENT AND EROSION BEFORE BEGINNING THE PROJECT. I ALSO AUTHORIZE PERIODING ON-SITE INSPECTION BY THE HOWARD SOIL CONSERVATION DISTRICT.

1/5/06
BUREAU OF ENGINEERING DATE
DEPARTMENT OF PUBLIC WORKS

ENGINEER'S CERTIFICATION

"I/WE CERTIFY THAT THIS PLAN FOR EROSION AND SEDIMENT CONTROL REPRESENTS A PRACTICAL AND WORKABLE PLAN BASED ON MY PERSONAL KNOWLEDGE OF THE SITE CONDITIONS AND THAT IT WAS PREPARED IN ACCORDANCE WITH THE REQUIREMENTS OF THE HOWARD SOIL CONSERVATION DISTRICT.

1/3/06
TIMOTHY W WOLFE DATE
KCI TECHNOLOGIES
10 NORTH PARK DRIVE
HUNT VALLEY, MARYLAND 21030

REVIEWED FOR HOWARD S.C.D. AND MEETS TECHNICAL REQUIREMENTS.

1/9/06
U.S. NATURAL RESOURCES CONSERVATION SERVICE DATE

THIS DEVELOPMENT PLAN IS APPROVED FOR THE SOIL EROSION & SEDIMENT CONTROL BY THE HOWARD SOIL CONSERVATION DISTRICT.

1/9/06
APPROVED DATE
HOWARD S.C.D.

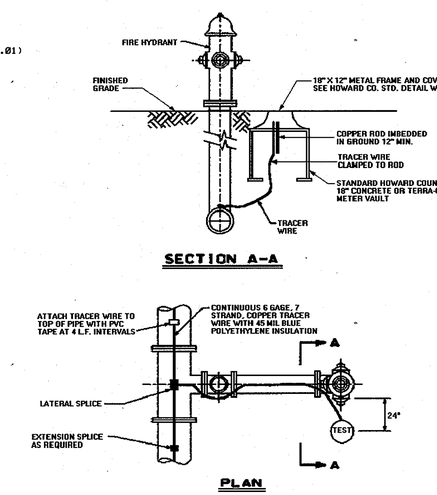

NOTES:
1. TEST STATION MUST BE PLACED TO THE RIGHT OR LEFT SIDE OF THE FIRE HYDRANT.
2. VALVE VAULT FRAME AND COVER TO BE SET FLUSH WITH FINAL GRADE.
3. BUTTRESSES AND STRAPPING NOT SHOWN FOR CLARITY

CONTINUITY TEST STATION AT FIRE HYDRANT

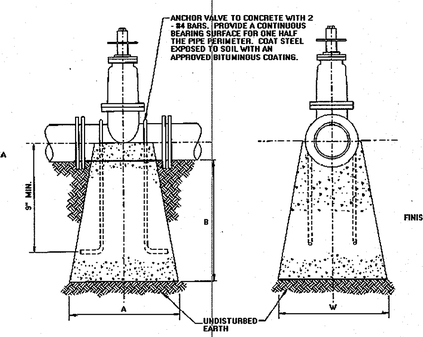

PIPE SIZE	A	B	W
4"	9"	1'-0"	1'-0"
6"	10"	1'-6"	1'-0"
8"	1'-0"	2'-0"	2'-0"
12"	1'-0"	2'-0"	3'-0"

ALL CONCRETE TO BE MIX NO. 2

ANCHORAGES FOR VALVES WITH PVC PIPE

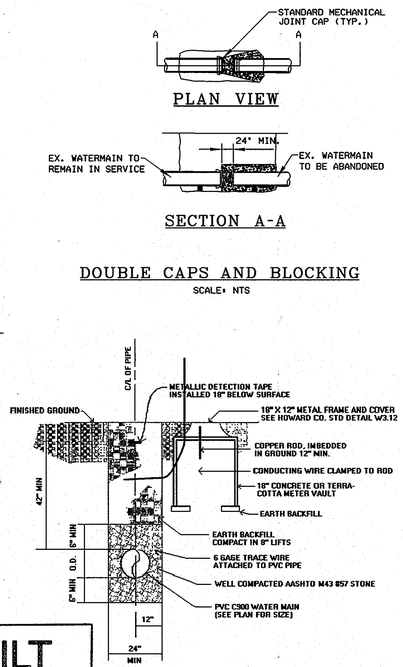

AS-BUILT
DATE 9-25-07

TRENCH FOR PVC PIPE AND CONTINUITY TEST STATION DETAIL

DEPARTMENT OF PUBLIC WORKS
HOWARD COUNTY, MARYLAND

DIRECTOR OF PUBLIC WORKS DATE	CHIEF, BUREAU OF ENGINEERING DATE 1/5/06
CHIEF, BUREAU OF UTILITIES DATE 1-6-06	CHIEF, UTILITY DESIGN DIVISION DATE 1-05-06

KCI TECHNOLOGIES
ENGINEERS PLANNERS SCIENTISTS CONSTRUCTION MANAGERS
10 NORTH PARK DRIVE
HUNT VALLEY, MD 21030
PHONE: (410) 316-7800
FAX: (410) 316-7817
www.kci.com

STATE OF MARYLAND — TIMOTHY W. WOLFE — No. 15599 — PROFESSIONAL ENGINEER
1/3/06

DES: GW			
DRN: KJ			
CHK: TWW			
DATE: 12/05	LN BY	NO.	REVISION	DATE
			AS BUILT	9-25-07

EROSION AND SEDIMENT CONTROL NOTES AND DETAILS

600' SCALE MAP NO. 38 BLOCK NO. 27-37

US ROUTE 1
WATER MAIN REPLACEMENT
CAPITAL PROJECT No. W-8205
CONTRACT No. 44-4019

ELECTION DISTRICT NO.1 HOWARD COUNTY, MARYLAND

SCALE AS SHOWN

SHEET 3 OF 3

PLOTTED: 10:40 AM on Tuesday, January 03, 2006
BY: Kevin Jackson Division: Environmental Engineering
FILE: M:\1999\0199180.20\drawings\sedi.dgn

FILE NAME: M:\1999\0199180.20\DRAWINGS\SED1.DGN