DEPARTMENT OF PUBLIC WORKS
EDGAR ROAD WATER PUMPING STATION
CONTRACT NO. 44-1917
CAPITAL PROJECT NO. W-8129

GENERAL NOTES

PART I

1. APPROXIMATE LOCATION OF EXISTING MAINS ARE SHOWN. THE CONTRACTOR SHALL TAKE ALL NECESSARY PRECAUTIONS TO PROTECT EXISTING MAINS AND SERVICES AND MAINTAIN UNINTERRUPTED SUPPLY. ANY DAMAGE INCURRED SHALL BE REPAIRED IMMEDIATELY TO THE SATISFACTION OF THE ENGINEER AT THE CONTRACTOR'S EXPENSE.
2. ALL HORIZONTAL CONTROLS ARE BASED ON MARYLAND STATE COORDINATES.
3. ALL VERTICAL CONTROLS ARE BASED ON U.S.G.S. DATA.
4. ALL PIPE ELEVATIONS SHOWN ARE INVERT ELEVATIONS.
5. CLEAR ALL UTILITIES BY A MINIMUM OF 6". CLEAR ALL POLES BY 2'-0" MINIMUM OR TUNNEL AS REQUIRED.
6. FOR DETAILS NOT SHOWN ON THE DRAWINGS, AND FOR MATERIALS AND CONSTRUCTION METHODS, USE HOWARD COUNTY DESIGN MANUAL, VOLUME IV, STANDARD SPECIFICATIONS AND DETAILS FOR CONSTRUCTION. THE CONTRACTOR SHALL HAVE A COPY OF VOLUME IV ON THE JOB.
7. WHERE TEST PITS HAVE BEEN MADE ON EXISTING UTILITIES, THEY ARE NOTED BY THE SYMBOL ■ AT THE LOCATION OF THE TEST PIT. A NOTE OR NOTES CONTAINING THE RESULTS OF THE TEST PIT OR PITS IS INCLUDED ON THE DRAWINGS AND IN THE SPECIFICATIONS (APPENDIX). EXISTING UTILITIES IN THE VICINITY OF THE PROPOSED WORK FOR WHICH TEST PITS HAVE NOT BEEN DUG SHALL BE LOCATED BY THE CONTRACTOR TWO WEEKS IN ADVANCE OF CONSTRUCTION OPERATIONS AT HIS OWN EXPENSE.
8. CONTRACTOR SHALL NOTIFY THE FOLLOWING UTILITY COMPANIES OR AGENCIES AT LEAST FIVE WORKING DAYS BEFORE STARTING WORK SHOWN ON THESE PLANS:
   STATE HIGHWAY ADMINISTRATION - 531-5533
   BALTIMORE GAS & ELECTRIC CO. - CONTRACTOR SERVICES 850-4620
   BALTIMORE GAS & ELECTRIC CO. UNDER GROUND DAMAGE CONTROL - 859-9004
   BALTIMORE GAS & ELECTRIC CO. TROUBLE SHOOTING - 298-9001
   MISS UTILITY - 1-800-257-7777
   COLONIAL PIPELINE CO. - 795-1390
   BUREAU OF UTILITIES, HOWARD COUNTY DEPARTMENT OF PUBLIC WORKS - 992-2366
9. TREES AND SHRUBS ARE TO BE PROTECTED FROM DAMAGE TO MAXIMUM EXTENT. TREES AND SHRUBS LOCATED WITHIN THE CONSTRUCTION STRIP ARE NOT TO BE REMOVED OR DAMAGED BY THE CONTRACTOR.
10. CONTRACTOR SHALL REMOVE TREES, STUMPS AND ROOTS ALONG LINE OF EXCAVATION. PAYMENT FOR SUCH REMOVAL SHALL BE INCLUDED IN PRICES BID FOR CONSTRUCTION.

NOTE: REFER TO FDP-36-A FOR SETBACKS AND OTHER REQUIREMENTS IN OAKLAND RIDGE INDUSTRIAL PARK, SECTION 3

PART II - WATER

1. ALL WATER MAINS TO BE D.I.P. CLASS 52 UNLESS OTHERWISE NOTED.
2. TOPS OF ALL WATER MAINS TO HAVE A MINIMUM OF 3-1/2' COVER UNLESS OTHERWISE NOTED.
3. VALVES ADJACENT TO TEES SHALL BE STRAPPED TO TEES.
4. ALL FITTINGS SHALL BE BUTTRESSED OR ANCHORED WITH CONCRETE IN ACCORDANCE WITH THE STANDARD DETAILS UNLESS OTHERWISE PROVIDED FOR ON THE DRAWINGS.
5. THE CONTRACTOR SHALL NOT OPERATE ANY WATER MAIN VALVES ON THE EXISTING WATER SYSTEM.

INDEX OF DRAWINGS

SHEET NO.	TITLE
1	TITLE
2	STRUCTURAL NOTES
3	SITE PLAN
4	ABBREVIATIONS SYMBOLS AND STAKEOUT
5	SEDIMENT & EROSION CONTROL PLAN
6	SEDIMENT & EROSION CONTROL DETAILS
7	ARCHITECTURAL FLOOR PLAN, TYPICAL WALL SECTIONS, REFLECTED CEILING PLAN & NOTES
8	BUILDING ELEVATIONS
9	BUILDING SECTIONS, ROOF FRAMING PLAN & DETAILS
10	STRUCTURAL PLAN & DETAILS
11	PIPING PLAN & DETAILS
12	MISCELLANEOUS DETAILS
13	MISCELLANEOUS DETAILS
14	MISCELLANEOUS DETAILS
15	PLUMBING FLOOR PLAN, DETAILS, SECTION AND DIAGRAM
16	HEATING AND VENTILATING FLOOR PLAN, DETAIL, SECTION AND LEGEND
17	ELECTRICAL SITE PLAN
18	ELECTRICAL ONE-LINE DIAGRAM AND DETAIL
19	ELECTRICAL LIGHTING PLAN
20	ELECTRICAL POWER PLAN
21	WATER BOOSTER PUMP CONTROL PANEL LAYOUT
22	ELECTRICAL DETAILS

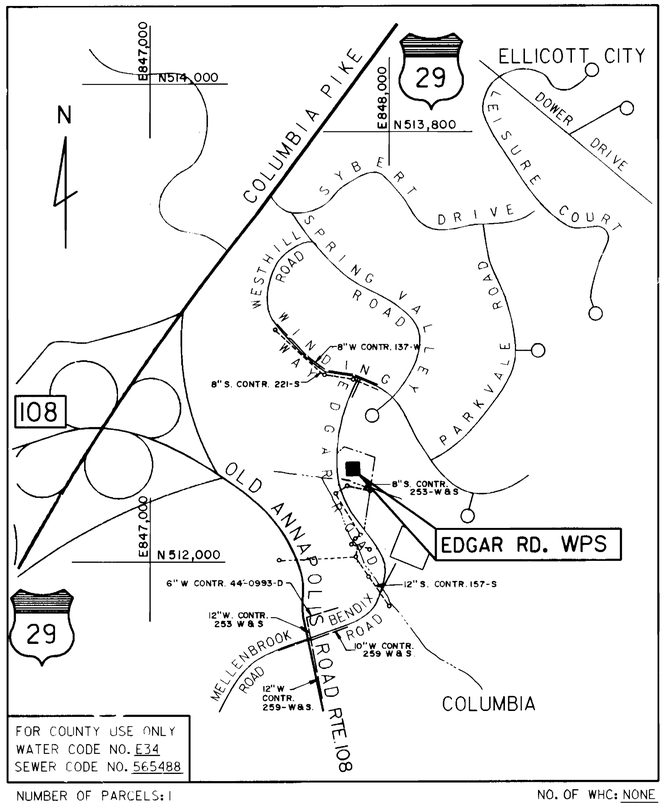

NUMBER OF PARCELS: 1
DRAINAGE AREA: PATAPSCO

NO. OF WHC: NONE
TYPE OF BUILDING: INDUSTRIAL

LOCATION MAP
SCALE: 1" = 300'

APPROVED: FOR PUBLIC WATER AND PUBLIC SEWERAGE SYSTEMS HOWARD COUNTY HEALTH DEPARTMENT
COUNTY HEALTH OFFICER — DATE 11-25-91

APPROVED: HOWARD COUNTY DEPT. OF PLANNING & ZONING
DIRECTOR — DATE 11/27/91
CHIEF DIVISION OF COMMUNITY PLANNING AND LAND DEVELOPMENT — DATE 11/27/91

APPROVED
PLANNING BOARD
of HOWARD COUNTY
DATE 8-20-91

DEPARTMENT OF PUBLIC WORKS
HOWARD COUNTY, MARYLAND
DIRECTOR OF PUBLIC WORKS — DATE 6.1.91
CHIEF, BUREAU OF ENGINEERING — DATE 6-6-91
CHIEF, BUREAU OF UTILITIES — DATE 6-7-91
CHIEF, UTILITY DESIGN DIVISION — DATE 6-6-91

BUCHART HORN, INC.
Baltimore, MD; Charleston, WV; Frederick, MD; Lancaster, PA; Lewisburg, PA; Morristown, NJ; New Orleans, LA; Williamsburg, VA; York, PA
Engineers, Architects, and Planners

DES: J. FALK
DRN: A.G.S.
CHK: J. FALK
DATE: 9/25/90

BY	NO.	REVISION	DATE

TITLE SHEET

600' SCALE MAP NO. 30 BLOCK NO. 10 & 11

EDGAR ROAD WATER PUMPING STATION
CONTRACT NO. 44-1917
CAPITAL PROJECT NO. W-8129
ELECTION DISTRICT NO. 2
HOWARD COUNTY, MARYLAND

SCALE AS SHOWN

SHEET 1 OF 22

SDP 91-48
SHEET 1-4 of 4

FILENAME: HCTITLE.DP — 6-8-90

SDP-91-48

GENERAL STRUCTURAL NOTES

FOUNDATION

1. BEFORE PLACING ANY GRAVEL OR CONCRETE ON SUBGRADE, THE CONTRACTOR SHALL NOTIFY THE ENGINEER.
2. BEARING CAPACITY OF SOIL SHALL BE 3000 PSF OR UNDERCUT, BACKFILL AND COMPACT AS SPECIFIED.
3. ALL EXTERIOR FOOTINGS SHALL EXTEND 3'-0" MINIMUM BELOW FINISHED GRADE.
4. SEE MECHANICAL AND ELECTRICAL DRAWINGS FOR WORK TO BE INCORPORATED IN FOUNDATION AND WALLS.
5. ALL EXCAVATIONS SHALL BE KEPT DRY, WATER SHALL NOT BE ALLOWED TO STAND IN EXCAVATIONS.
6. A LAYER OF 6 MIL VAPOR BARRIER SHALL BE PLACED ON 6" OF GRAVEL, UNLESS NOTED OTHERWISE, BEFORE ANY CONCRETE IS POURED.
7. ALL BACKFILLING AND COMPACTION OF SOIL SHALL BE DONE EVENLY AROUND EACH STRUCTURE.
8. THE CONTRACTOR SHALL TAKE NECCESSARY PRECAUTIONS TO PREVENT SETTLEMENT OR DAMAGE TO EXISTING FACILITIES, BY PROVIDING ADEQUATE SUPPORT OF EXCAVATION.
9. SOIL BEARING CAPICITY SHALL BE FIELD VERIFIED BY THE CONTRACTOR'S GEOTECHNICAL ENGINEER / INSPECTION AGENCY AND SUBMITTED TO THE ENGINEER.

CONCRETE

1. ALL CONCRETE SHALL HAVE A MINIMUM COMPRESSIVE STRENGTH OF 4000 PSI AT 28 DAYS, UNLESS NOTED OTHERWISE ON DRAWINGS OR SPECIFICATIONS.
2. REINFORCED CONCRETE SHALL BE DETAILED AND CONSTRUCTED IN ACCORDANCE WITH ACI 318-83 STANDARD BUILDING CODE REQUIREMENTS FOR REINFORCED CONCRETE, AND ACI 350R-83 FOR WATER CONTAINING STRUCTURES.
3. REINFORCING STEEL SHALL CONFORM TO ASTM A-615 GRADE 60.
4. UNLESS OTHERWISE NOTED ON THE DRAWINGS, CONCRETE COVER FOR REINFORCEMENT SHALL BE AS FOLLOWS:
   a. UNFORMED CONCRETE, BOTTOM BARS IN FOOTINGS AND SLABS ON EARTH, OR GRAVEL . . . . . 3"
   b. BEAMS, SLABS, COLUMNS AND WALLS EXPOSED TO GROUND, WEATHER OR PROCESS LIQUID AFTER THE REMOVAL OF FORMS . . . . . 2"
   c. BEAMS, COLUMNS AND PIERS NOT EXPOSED TO WEATHER . . . . . 1½"
   d. STRUCTURAL SLABS NOT EXPOSED TO GROUND, WEATHER OR PROCESS LIQUID BUT SUBJECT TO MINOR TRAFFIC.
      TOP OF SLAB . . . . . 1"
      BOTTOM OF SLAB . . . . . ¾"
5. ALL EXPOSED CONCRETE EDGES SHALL BE CHAMFERED ¾" UNLESS OTHERWISE NOTED.
6. REINFORCING STEEL SHALL BE DETAILED IN ACCORDANCE WITH ACI 315-80, MANUAL OF STANDARD PRACTICE FOR DETAILING REINFORCED CONCRETE STRUCTURES EXCEPT WHERE SHOWN OTHERWISE.
7. THE CONTRACTOR SHALL SUBMIT SHOP DETAILS OF REINFORCING STEEL BEFORE PROCEEDING WITH FABRICATION.
8. ALL SPLICES AND EMBEDMENTS FOR REINFORCING BARS NOT DIMENSIONED ON THE DRAWINGS SHALL BE 36 DIAMETERS.
9. CONCRETE SLAB AND WALLS SHALL BE POURED BETWEEN INDICATED JOINTS ALLOWING A MINIMUM PERIOD OF 3 DAYS TO ELAPSE BETWEEN ADJACENT POURS.
10. CONSTRUCTION JOINTS SHALL BE AS DETAILED ON THE DRAWINGS AND NO ADDITIONAL JOINTS SHALL BE USED NOR ANY OMITTED EXCEPT BY WRITTEN AUTHORIZATION OF THE ENGINEER.
11. ALL WATERSTOPS SHALL BE AS NOTED ON DRAWINGS. SEE SPECIFICATIONS FOR OTHER REQUIREMENTS.
12. ANCHOR BOLTS AND EQUIPMENT PEDESTALS SHALL BE SIZED AND LOCATED AS REQUIRED TO SUIT EQUIPMENT FURNISHED.
13. SEE ARCHITECTURAL, CIVIL, MECHANICAL AND ELECTRICAL DRAWINGS FOR ALL EMBEDDED ITEMS SUCH AS SLEEVES, ANCHORS, ELECTRICAL CONDUITS, OPENINGS, ETC., LOCATED IN CONCRETE CONSTRUCTION.
14. REINFORCING BARS AND ACCESSORIES SHALL NOT BE IN CONTACT WITH ANY PIPE FLANGE OR METAL PART EMBEDDED IN CONCRETE. NO EMBEDDED ITEM SHALL BE SUSPENDED FROM, SUPPORTED BY, NOR PLACED IN PLACE FROM THE STRUCTURAL REINFORCEMENT. A MINIMUM OF 2" CLEARANCE SHALL BE PROVIDED IN ALL CASES, UNLESS SHOWN OTHERWISE ON THE DRAWINGS.
15. PROVIDE MINIMUM ACI STEEL REINFORCING IN ALL CONCRETE WALLS, SLABS, AND FOOTINGS WHERE NONE IS SHOWN OR NOTED.

STRUCTURAL STEEL

1. ALL STRUCTURAL STEEL SHALL CONFORM TO ASTM DESIGNATION A-36 AND SHALL BE GALVANIZED.
2. ALL STRUCTURAL STEEL SHALL BE FABRICATED IN ACCORDANCE WITH THE CURRENT AISC SPECIFICATION FOR THE DESIGN, FABRICATION AND ERECTION OF STRUCTURAL STEEL FOR BUILDINGS.
3. THE CONTRACTOR SHALL SUBMIT ERECTION PLANS AND SHOP DETAILS BEFORE PROCEEDING WITH FABRICATION.

(STRUCTURAL STEEL CONTINUED)

4. ALL SHOP WELDING SHALL BE IN ACCORDANCE WITH AWS CODE. ALL FIELD CONNECTIONS SHALL BE MADE WITH A-325 HIGH STRENGTH BOLTS, EXCEPT WHERE NOTED.
5. EXCEPT WHERE OTHERWISE NOTED ON THE DRAWINGS, CONNECTIONS OF FRAMING MEMBERS SHALL BE CAPABLE OF TRANSFERRING THE FULL STRENGTH OF THE MEMBER USING ¾" DIAMETER HIGH STRENGTH BOLTS. HIGH STRENGTH BOLTED CONNECTIONS SHALL BE DESIGNED AS FRICTION TYPE CONNECTIONS.
6. MILL BOTTOM OF ALL COLUMNS AND FINISH TOP OF ALL BASE PLATES IN ACCORDANCE WITH AISC SPECIFICATIONS. BASE PLATES SHALL BE WELDED TO BOTTOM OF COLUMNS.
7. ⅜" THICK LEVELING PLATES SHALL BE USED UNDER ALL COLUMNS RESTING ON CONCRETE.
8. ALL GALVANIZED STEEL GRATING SHALL BE CAPABLE OF SUPPORTING A LIVE LOAD OF 150 PSF. ALL EDGES OF GRATING SHALL BE BANDED.

ALUMINUM

1. ALL STRUCTURAL ALUMINUM IS DESIGNED AND SHALL BE FABRICATED IN ACCORDANCE WITH THE CURRENT SPECIFICATION OF THE ALUMINUM ASSOCIATION.
2. STRUCTURAL ALUMINUM SHALL BE ALLOY 6061-T6.
3. ALUMINUM IN CONTACT WITH CONCRETE OF DISSIMILAR METAL SHALL, BEFORE ERECTION, BE HEAVILY COATED WITH BITUMINUOUS COATING.

DESIGN LOADS

DEAD LOADS - ACTUAL WEIGHT OF STRUCTURE AND EQUIPMENT.

WEIGHT OF SOIL - 120 PCF

LIVE LOADS
- FLOOR - 150 PSF IN AREAS NOT OCCUPIED BY EQUIPMENT.
- EQUIPMENT - ACTUAL WEIGHT - 150 PSF MINIMUM.
- WALKWAYS - 150 PSF
- STAIRWAY - 100 PSF
- STORAGE AREAS - 300 PSF
- HANDRAIL - 200 LBS. IN ANY DIRECTION, AT ANY POINT

EARTH PRESSURE - LATERAL EARTH PRESSURES ARE BASED ON A AN EQUIVALENT LIQUID PRESSURE OF 40 PSF.

NOTE: THE CONTRACTOR SHALL PROVIDE, PRIOR TO ISSUANCE OF OCCUPANCY APPROVAL BY THE PLAN REVIEW DIVISION, A WRITTEN INSPECTION CERTIFICATION FROM A MARYLAND STATE REGISTERED PROFESSIONAL ENGINEER OR CERTIFIED INSPECTION LABORATORY BEARING THE ORIGINAL SEAL AND ORIGINAL SIGNATURE OF A MARYLAND STATE REGISTERED PROFESSIONAL ENGINEER CERTIFYING 100% STEEL ERECTION SHALL BE SUBMITTED TO HOWARD COUNTY DEPT. OF INSPECTIONS, LICENSES & PERMITS. THIS CERTIFICATION SHALL INCLUDE, BUT SHALL NOT BE LIMITED TO, THE FOLLOWING ITEMS:
(1987 BOCA BUILDING CODE, SECTION 1306.1)
A. THE PERCENTAGE OF COLUMNS CHECKED FOR PLUMB AND METHOD OF CHECKING.
B. THE PERCENTAGE OF BOLTS CHECKED FOR TORQUE AND METHOD OF CHECKING.
C. THE PERCENTAGE OF WELDS INSPECTED AND METHOD OF TESTING.
D. VERIFICATION OF WELDERS CERTIFICATION.
E. STATEMENT VERIFYING 100% STEEL ERECTION AND CERTIFICATION.
F. REFERENCE TO BUILDING PERMIT NUMBER (S) AND/OR EXACT ADDRESS (ES).
G. ANY OTHER DATA DEVELOPED AS A RESULT OF THE INSPECTION (S).

SEWER NOTES

1. ALL SEWER MAINS SHALL BE C.S.P.X., R.C.S.P., V.C.P.X., OR P.V.C. UNLESS OTHERWISE NOTED.
2. THE CONTRACTOR SHALL PROVIDE A JOINT IN ALL SEWER MAINS WITHIN 2'-0" OF EXTERIOR MANHOLE WALL.
3. ALL MANHOLES SHALL BE 4'-0" INSIDE DIA. UNLESS OTHERWISE NOTED.
4. MANHOLES SHOWN WITH 12" AND 16" WALLS ARE FOR BRICK MANHOLES ONLY.

DEPARTMENT OF PUBLIC WORKS
HOWARD COUNTY, MARYLAND

DIRECTOR OF PUBLIC WORKS — DATE 6/6/91
CHIEF, BUREAU OF ENGINEERING — DATE 6-6-91
CHIEF, BUREAU OF UTILITIES — DATE 6-7-91
CHIEF, UTILITY DESIGN DIVISION — DATE 6-6-91

BUCHART HORN, INC.
Baltimore, MD; Charleston, WV; Frankfurt, W. Germany; Lancaster, PA; Lewisburg, PA; Memphis, TN; Mt. Laurel, NJ; New Orleans, LA; Williamsburg, VA; York, PA
Engineers, Architects, and Planners

DES: J. FALK
DRN: V. HEWES
CHK: J. FALK
DATE: 9/25/90

BY	NO.	REVISION	DATE

STRUCTURAL NOTES

600' SCALE MAP NO. 30 BLOCK NO. 10 & 11

EDGAR ROAD WATER PUMPING STATION
CONTRACT NO. 44-1917
CAPITAL PROJECT NO. W-8129
ELECTION DISTRICT NO. 2
HOWARD COUNTY, MARYLAND

SCALE AS SHOWN

SHEET 2 OF 22

FILENAME: HCNOTFLDGN. UPDATED 6-8-90

BM. 2
CHISELED "□" CUT ON THE N.E. CORNER OF A CONC. HEADWALL, LOCATED 950'± NORTH OF THE INTERSECTION OF EDGAR AND BENDIX RD. ALONG EDGAR RD. 1150'± SOUTH OF THE INTERSECTION OF EDGAR RD. AND WINDING WAY, AND ALSO 41' E. OF ℄ EDGAR RD. ALSO 2' BELOW THE LEVEL OF THE ROAD. EL. 379.36

NOTE:
WETLANDS BOUNDRY AS DELINEATED BY BUCHART-HORN DATED 5-31-90. SEE APPENDIX IN SPECIFICATIONS.

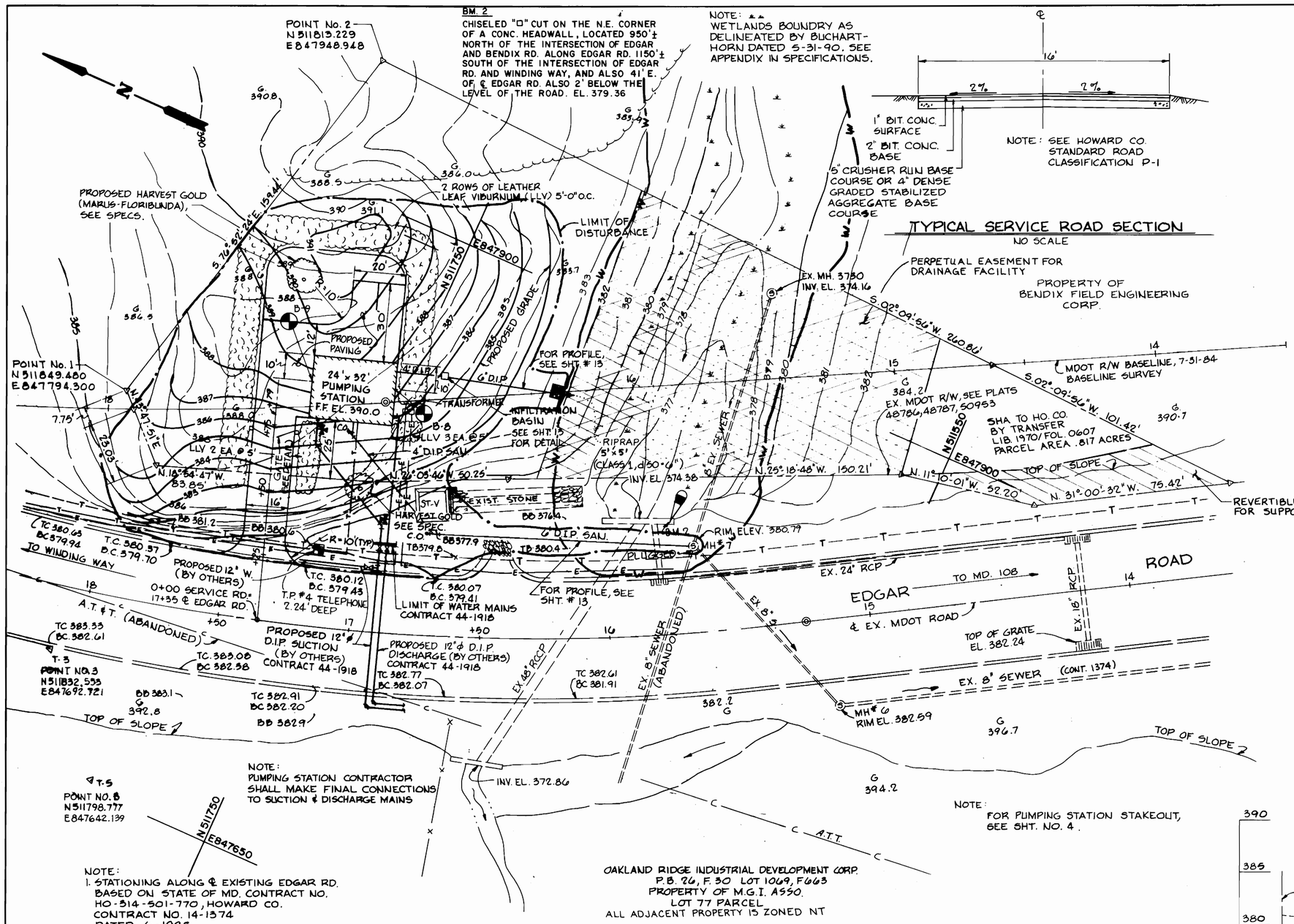

NOTE:
PUMPING STATION CONTRACTOR SHALL MAKE FINAL CONNECTIONS TO SUCTION & DISCHARGE MAINS

NOTE:
FOR PUMPING STATION STAKEOUT, SEE SHT. NO. 4.

OAKLAND RIDGE INDUSTRIAL DEVELOPMENT CORP.
P.B. 26, F. 30 LOT 1069, F 663
PROPERTY OF M.G.I. ASSO.
LOT 77 PARCEL.
ALL ADJACENT PROPERTY IS ZONED NT

NOTE:
1. STATIONING ALONG ℄ EXISTING EDGAR RD. BASED ON STATE OF MD. CONTRACT NO. HO-514-501-770, HOWARD CO. CONTRACT NO. 14-1374 DATED 6-1985
2. CONTRACTOR-SURVEYOR TO SET PROPERTY MONUMENTS AS INDICATED △. SEE DETAIL BELOW.
3. FOR PROFILE OF PRESSURE RELIEF DRAIN, SEE SHEET NO. 15

ID. CAP PER ANNOTATED CODE OF MD.

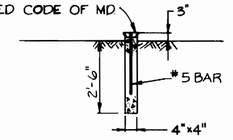

CONCRETE MONUMENT (TYP.)

TYPICAL SERVICE ROAD SECTION
NO SCALE

NOTE: SEE HOWARD CO. STANDARD ROAD CLASSIFICATION P-1

PLANTINGS

BOTANICAL NAME	COMMON NAME	QUANTITY	SIZE
VIBURNAM RHYTIDOPHYLLUM	LEATHERLEAF VIBURNAM	120	4 TO 5 FT. SPREAD
MARUS FLORIBUNDA	HARVEST GOLD	2	6 TO 8 FT. SPREAD

SEE SPECIFICATIONS SECTION 02800

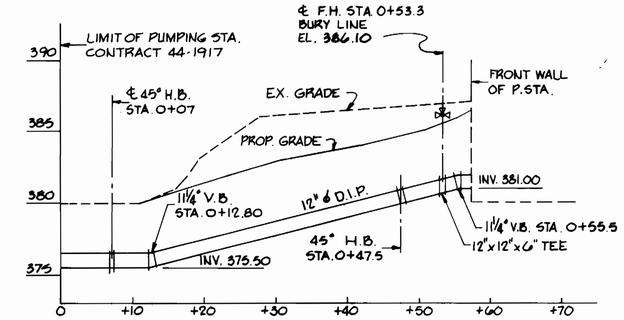

12" ø SUCTION PROFILE
SCALE: H: 1" = 10' V: 1" = 5'

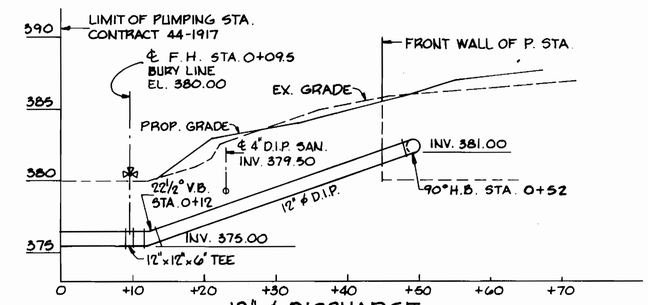

12" ø DISCHARGE PROFILE
SCALE: H: 1" = 10' V: 1" = 5'

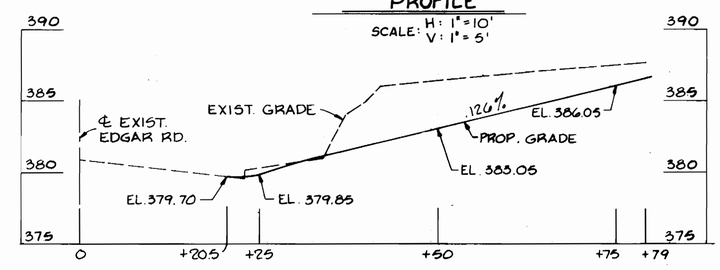

SERVICE ROAD PROFILE
SCALE: HOR. 1" = 10' VERT. 1" = 5'

APPROVED: HOWARD COUNTY DEPARTMENT OF PUBLIC WORKS

CHIEF, LAND DEVELOPMENT DIVISION	DATE 11/18/91
CHIEF, BUREAU OF HIGHWAY	DATE 12/2/91
CHIEF, BUREAU OF ENGINEERING	DATE 6-6-91

APPROVED: HOWARD COUNTY DEPT. OF PLANNING AND ZONING
CHIEF, DIVISION OF COMMUNITY PLANNING AND LAND DEVELOPMENT — DATE 11/27/91

APPROVED
HOWARD COUNTY BOARD OF APPEALS
8-20-91

SITE PLAN
SCALE: 1" = 20'

APPROVED: HOWARD COUNTY DEPT. OF PLANNING AND ZONING
DIRECTOR — DATE 11/27/91

APPROVED: FOR PUBLIC WATER AND PUBLIC SEWERAGE SYSTEMS HOWARD COUNTY HEALTH DEPARTMENT
COUNTY HEALTH OFFICER — DATE 11-21-91

NOTE:
● SOIL BORINGS
FOR BORINGS, SEE SPECIFICATIONS (APPENDIX D).

WATER CODE NUMBER E 34
SEWER CODE NUMBER 565488
CENSUS TRACK NUMBER 6023.02

SDP 91-48
SHEET 2 of 4

DEPARTMENT OF PUBLIC WORKS
HOWARD COUNTY, MARYLAND

DIRECTOR OF PUBLIC WORKS — DATE 6/10/91	CHIEF, BUREAU OF ENGINEERING — DATE 6-6-91
CHIEF, BUREAU OF UTILITIES — DATE 6-7-91	CHIEF, UTILITY DESIGN DIVISION — DATE 6-6-91

BUCHART HORN, INC.
Baltimore, MD — Memphis, TN
Charleston, WV — Mt. Laurel, NJ
Frankfurt, W. Germany — New Orleans, LA
Lancaster, PA — Williamsburg, VA
Lewisburg, PA — York, PA
Engineers, Architects and Planners

STATE OF MARYLAND — REGISTERED PROFESSIONAL ENGINEER — No. 13363

DES: J. FALK
DRN: A.G.S.
CHK: J. FALK
DATE: 9/25/90

BY	NO.	REVISION	DATE

SITE PLAN
600' SCALE MAP NO. 30 BLOCK NO. 10 & 11

EDGAR ROAD WATER PUMPING STATION
CONTRACT NO. 44-1917
CAPITAL PROJECT NO. W-8129
ELECTION DISTRICT NO. 2
HOWARD COUNTY, MARYLAND

SCALE AS SHOWN
SHEET 3 OF 22

SDP 91-48

ABBREVIATIONS LIST

AC.	ACOUSTICAL
AC-T	ACOUSTICAL TILE-LAY IN
ADAPT.	ADAPTOR
ADJ.	ADJUSTABLE
AGG.	AGGREGATE
ALT.	ALTERNATIVE
ALUM.	ALUMINUM
APPROX.	APPROXIMATELY
AVG.	AVERAGE
@	AT
ANCH.	ANCHOR
BD.	BOARD
BET.	BETWEEN
BLDG.	BUILDING
BLK.	BLOCK
BLKG.	BLOCKING
BLKH'D	BULKHEAD
BM.	BEAM
BOTT.	BOTTOM
CNTR.	CENTER
CYL.	CYLINDER
C. TO C.	CENTER TO CENTER
CEM.	CEMENT
C.F.M.	CUBIC FEET PER MINUTE
C.J.	CORNER JOINT
CL.	CLEAR
CL.	CLOSET
CLG.	CEILING
CLR.	CLEAR
CLR. OPN.	CLEAR OPENING
C.M.U.	CONCRETE MASONRY UNIT
COL.	COLUMN
CONC.	CONCRETE
CON. RED.	CONCENTRIC REDUCER
CONST.	CONSTRUCTION
CONSTR.	CONSTRUCTION
CONSTR. JT.	CONSTRUCTION JOINT
CONT.	CONTINUOUS
C.Y.	CUBIC YARDS
C.O.M.H.	CLEAN OUT MANHOLE
CU	COPPER
C.I.S.P.	CAST IRON SOIL PIPE
CONTR. JT.	CONTRACTION JOINT
DET.	DETAIL
D.I.	DRAIN INLET
DIA.Ø	DIAMETER
DIM.	DIMENSION
D.I.P.	DUCTILE IRON PIPE
DISCH.	DISCHARGE
DN.	DOWN
DO.	DITTO
DS.	DOWNSPOUT
DWG.	DRAWING
DWLS	DOWELS
DIST.	DISTRIBUTION
E.	EAST
EA.	EACH
EL.	ELEVATION
ELB.	ELBOW

ELEC.	ELECTRIC/ELECTRICAL
ELECT.	ELECTRIC/ELECTRICAL
ELEV.	ELEVATION
EQ.	EQUAL
EQUIP.	EQUIPMENT
EXIST.	EXISTING
EXP.	EXPOSED
EXP. JT.	EXPANSION JOINT
EXT.	EXTERIOR
ECC. RED.	ECCENTRIC REDUCER
F.D.	FLOOR DRAIN
F.E.	FIRE EXTINGUISHER
F.E.C.	FIRE EXTINGUISHER CABINET
F.H.	FIRE HYDRANT
FIN.	FINISH
FIN.GR. /F.G.	FINISH GRADE
FL.	FLOOR
FLEX.	FLEXIBLE
FLG.	FLANGE
FLR.	FLOOR
FLOUR.	FLOURESCENT
F.M.	FORCE MAIN
F.P.S.	FEET PER SECOND
F.S.	FULL SIZE
FT.	FEET (FOOT)
FLG'D	FLANGED
GA.	GAUGE
GALV.	GALVANIZED
G.C.	GENERAL CONTRACTOR
GL.	GLASS
G.P.D.	GALLONS PER DAY
G.P.M.	GALLONS PER MINUTE
GR.	GRADE
GYP.	GYPSUM
GYP. BD.	GYPSUM BOARD
GYP. WBD.	GYPSUM WALL BOARD
GAL. ST.	GALVANIZED STEEL PIPE
GRTG	GRATING
HORIZ.	HORIZONTAL
H.P.	HORSE POWER
HRDW.	HARDWARE
HR. (HRS.)	HOUR (HOURS)
HT.	HEIGHT
H.V. - *	HORIZ. & VERT. (SURVEY CONTROL POINT)
H.W.L.	HIGH WATER LEVEL
HM	HOLLOW METAL
HYD.	HYDRAULIC
I.D.	INSIDE DIAMETER
IN.	INCH
INF.	INFLUENT
I.P.	IRON PIPE
INV.	INVERT
JST.	JOIST
JT.	JOINT

L.	LEFT
LAV.	LAVATORY
LBS.	POUNDS
L.F.	LINEAR FEET
LG.	LENGTH
L.P.	LIGHT POLE
L.W.L.	LOW WATER LEVEL
MAX.	MAXIMUM
MECH.	MECHANICAL
MET.	METAL
M.G.	MILLION GALLONS OR MILLIGRAMS
M.G.D.	MILLION GALLONS PER DAY
M.G./L.	MILLIGRAMS PER LITER
MH	MANHOLE
MIN.	MINIMUM
MIN.	MINUTES (MINUTES)
MISC.	MISCELLANEOUS
M.O.	MASONRY OPENING
MTL.	METAL
MFR.	MANUFACTURER
N.	NORTH
NO.	NUMBER
N.P.T.	NATIONAL PIPE THREAD
N.I.C.	NOT IN CONTRACT
O.C.	ON CENTER
O.D.	OUTSIDE DIAMETER
OFF.	OFFICE
OPN.	OPENING
OPNG.	OPENING
O.S.H.A.	OCCUPATIONAL SAFETY & HEALTH ACT
OPP.	OPPOSITE
PART.	PARTITION
P.S.I.	POUNDS PER SQUARE INCH
PT.	PAINT OR POINT
PRESS.	PRESSURE
P.S.F.	POUNDS PER SQUARE FOOT
PL.	PLATE
PT.	PRESSURE TRANSDUCER
R.C.P.	REINFORCED CONCRETE PIPE
R.D.	ROOF DRAIN
RED.	REDUCER
REINF.	REINFORCE (REINFORCING, REINFORCEMENT)
REQ.	REQUIRED
REQ'D	REQUIRED
RIM	RIM OF MANHOLE
RM	ROOM
R.O.	ROUGH OPENING
RED. ELB.	REDUCING ELBOW
S.	SOUTH
S.D.	STORM DRAIN
SEC.	SEDIMENT EROSION CONTROL
SECT.	SECTION
SHT.	SHEET
SHT. MET.	SHEET METAL

SIM.	SIMILAR
SQ.	SQUARE
SQ. FT., FT^2	SQUARE FEET
S.S.	STAINLESS STEEL
STA.	STATION
STD.	STANDARD
STL.	STEEL
STOR.	STORAGE
STRUC. OR STRUCT.	STRUCTURAL
S.V.	SHEET VINYL
SYM.	SYMMETRICAL
T.	TREADS
T.G.	TOP OF GRADE
THK.	THICKNESS
TOIL.	TOILET
TYP.	TYPICAL
TYPE P.S.	TYPE PIPE SUPPORT
UN	UNLESS NOTED
V.V.	VALVE VAULT
W.	WEST
W/	WITH
W.C.	WATER CLOSET
WD.	WOOD
WP.	WATER PROOFING
W.S.	WATER SURFACE
W.V.	WATER VALVE
WL	WATER LEVEL
WT	WEIGHT

GENERAL SYMBOLS

—T——T—	TELEPHONE
—E——E—	ELECTRIC
———	PROPOSED PIPE
=======	EXISTING PIPE
—X——X—	FENCE
N00000000.00 E00000000.00	COORDINATES
	BENCH MARK
	CONTROL POINT
— —10— —	EXISTING GRADE
——10——	PROPOSED GRADE
	BORING
	UTILITY POLE
	WOODED AREA, HEDGES
—···	STREAMS
MH	MANHOLE
	INDICATES SECTION CUT
	INDICATES SHT. WHERE SECTION IS CUT
	INDICATES SHT. WHERE SECTION IS SHOWN

NOTE:
FOR STANDARD HOWARD COUNTY SYMBOLS, SEE HOWARD COUNTY DESIGN MANUAL VOL. IV DETAIL G1.01 & G1.02.

STAKEOUT CHART

ITEM	DESCRIPTION	COORDINATES NORTH	COORDINATES EAST
1	N.W. FRONT	511779.12	847813.24
	CORNER OF P.S.		
2	S.W. FRONT	511748.51	847822.58
	CORNER OF P.S.		
3	DISTRIB. BOX	511711.45	847855.33
4	PRESSURE DRAIN	511754.49	847842.19
	AT BLDG.		
5	Y CONNECTION	511718.73	847791.11
6	Y CONNECTION	511761.54	847813.90
7	FIRE HYDRANT	511734.88	847786.49
8	90° ELBOW	511747.29	847827.14
9	45° H.B.	511742.29	847788.63
10	45° H.B.	511742.29	847804.94
11	FIRE HYDRANT	511774.67	847810.68
12	STA. 17+35 ℄	511768.01	847734.03
13	℄ DRIVE	511779.12	847809.59

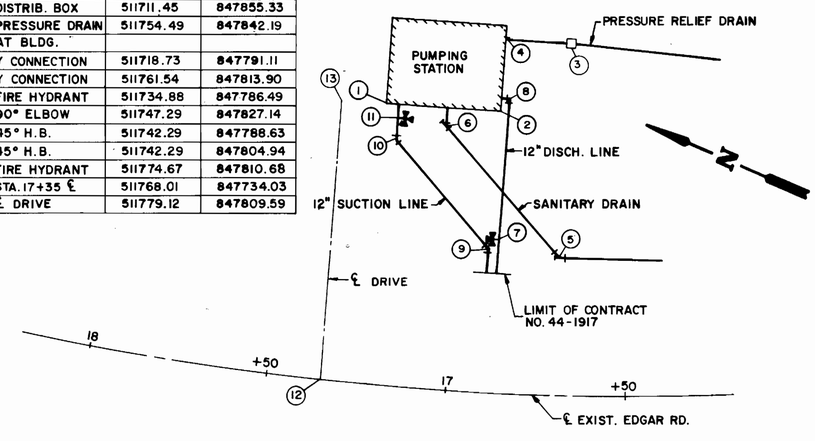

PUMPING STATION STAKEOUT

SCALE: 1"=20'

DEPARTMENT OF PUBLIC WORKS
HOWARD COUNTY, MARYLAND

DIRECTOR OF PUBLIC WORKS — DATE
CHIEF, BUREAU OF ENGINEERING — DATE 6-6-91
CHIEF, BUREAU OF UTILITIES — DATE 6-7-91
CHIEF, UTILITY DESIGN DIVISION — DATE 6-6-91

BUCHART HORN, INC. — Engineers, Architects, and Planners

DES: J. FALK
DRN: A.G.S.
CHK: J. FALK
DATE: 9/25/90

BY	NO.	REVISION	DATE

ABBREVIATIONS AND SYMBOLS

600' SCALE MAP NO. 30 BLOCK NO. 10 & 11

EDGAR ROAD WATER PUMPING STATION
CONTRACT NO. 44-1917
CAPITAL PROJECT NO. W-8129
ELECTION DISTRICT NO. 2
HOWARD COUNTY, MARYLAND

SCALE AS SHOWN

SHEET 4 OF 22

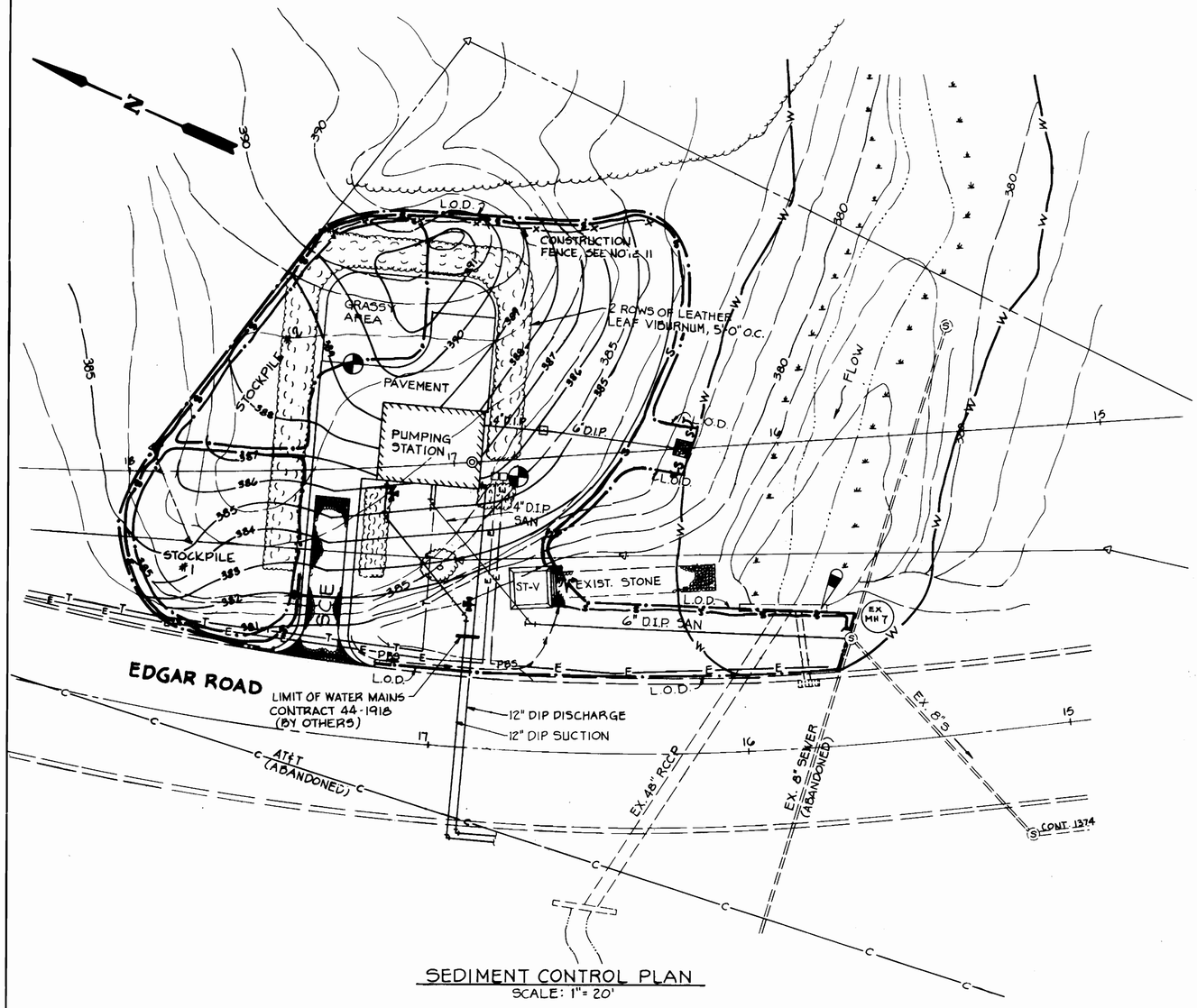

SEDIMENT CONTROL PLAN

SCALE: 1" = 20'

LEGEND

SCE	STABILIZE CONSTRUCTION ENTRANCE
L.O.D.	LIMIT OF DISTURBANCE
PDS	PERIMETER DIKE / SWALE
S	SILT FENCE
SBD	STRAW BALE DIKE
	STREAM
	SOIL BORING
	SEDIMENT TRAP W/STONE OUTLET
X	CONSTRUCTION FENCE
W	WETLAND BUFFER ZONE

SEDIMENT TRAP DATA

TYPE: STONE OUTLET SEDIMENT TRAP ST-V
DRAINAGE AREA: 0.37 ACRES
STORAGE VOLUME (1800 CF x DRAINAGE ACRES)
REQUIRED: 675 CF
PROVIDED: 675 CF
BOTTOM DIMENSIONS: 15'x15'x3'
BOTTOM GRADE ELEV.: 379'
ALL CUT SLOPES: 2:1 SLOPE
OUTLET CONDITIONS: FLOWS INTO AN UNDISTURBED GRASSED AND WOODED LOT
*OUTLET ELEVATION: EL. 383.00'
*CLEANOUT ELEVATION: EL. 380.50'
*EMBANKMENT ELEVATION: 384.00'
*OUTLET SIZE: (L = 4 x DA.) = 1.5'

NOTE: FOR SEDIMENT TRAP DETAIL, SEE SHEET 6.

APPROVED
PLANNING BOARD
8-20-91

APPROVED: FOR PUBLIC WATER AND PUBLIC SEWERAGE SYSTEMS
HOWARD COUNTY HEALTH DEPARTMENT

COUNTY HEALTH OFFICER	DATE 11-25-91

APPROVED: HOWARD COUNTY DEPT. OF PLANNING & ZONING

DIRECTOR	DATE 11/27/91
CHIEF, DIVISION OF COMMUNITY PLANNING AND LAND DEVELOPMENT	DATE 11/27/91

TEMPORARY SEEDING NOTES

APPLY TO GRADED OR CLEARED AREAS LIKELY TO BE REDISTURBED WHERE A SHORT-TERM VEGETATIVE COVER IS NEEDED.

SEEDBED PREPARATION: LOOSEN UPPER THREE-INCHES OF SOIL BY RAKING, DISCING, OR OTHER ACCEPTABLE MEANS BEFORE SEEDING. IF NOT PREVIOUSLY LOOSENED.

SOIL AMENDMENTS: APPLY 600 LBS PER ACRE 10-10-10 FERTILIZER (14 LBS/1000 SQ. FT.)

SEEDING: FOR PERIODS MARCH 1 THRU APRIL 30 AND FROM AUGUST 15 THRU NOVEMBER 15, SEED WITH 2 1/2 BUSHEL ACRE OF ANNUAL RYE (3.2 LBS/1000 SQ. FT.). FOR THE PERIOD MAY 1 THRU AUGUST 14, SEED WITH 3 LBS PER ACRE OF WEEPING LOVEGRASS (0.7 LBS/1000 SQ. FT.). FOR THE PERIOD NOVEMBER 16 THRU FEBRUARY 28, PROTECT SITE BY APPLYING 2 TONS PER ACRE OF WELL ANCHORED STRAW MULCH AND SEED AS SOON AS POSSIBLE IN THE SPRING, OR USE SOD.

MULCHING: APPLY 1 1/2 TO 2 TONS PER ACRE (70 TO 90 LBS/1000 SQ. FT.) OF UNROTTED SMALL GRAIN STRAW IMMEDIATELY AFTER SEEDING. ANCHOR MULCH IMMEDIATELY AFTER APPLICATION USING MULCH ANCHORING TOOL OR 218 GAL PER ACRE (5 GAL/1000 SQ. FT.) OF EMULSIFIED ASPHALT ON FLAT AREAS. ON SLOPES, 8 FT. OR HIGHER, USE 348 GAL PER ACRE (8 GAL/1000 SQ. FT.) FOR ANCHORING.

REFER TO THE 1988 MARYLAND STANDARDS AND SPECIFICATIONS FOR SOIL EROSION AND SEDIMENT CONTROL FOR RATE AND METHODS NOT COVERED.

PERMANENT SEEDING NOTES

APPLY TO GRADED OR CLEARED AREA NOT SUBJECT TO IMMEDIATE FURTHER DISTURBANCE WHERE A PERMANENT LONG-LIVED VEGETATIVE COVER IS NEEDED.

SEEDBED PREPARATION: LOOSEN UPPER THREE-INCHES OF SOIL BY RAKING. DISCING OR OTHER ACCEPTABLE MEANS BEFORE SEEDING. IF NOT PREVIOUSLY LOOSENED.

SOIL AMENDMENTS: IN LIEU OF SOIL TEST RECOMMENDATIONS, USE ONE OF THE FOLLOWING SCHEDULE.

1) PREFERRED - APPLY 2 TONS PER ACRE DOLOMITIC LIMESTONE (92 LBS/1000 SQUARE FT) AND 500 LBS PER ACRE 10-10-10 FERTILIZER (14 LBS/1000 SQ. FT.) BEFORE SEEDING. HARROW OR DISC INTO UPPER THREE-INCHES OF SOIL. AT TIME OF SEEDING, APPLY 400 LBS. PER ACRE 30-0-0 UREAFORM FERTILIZER (9 LBS/1000 SQ. FT.)

2) ACCEPTABLE - APPLY 2 TONS PER ACRE DOLOMITIC LIMESTONE (92 LBS/1000 SQ. FT.) AND 1000 LBS PER ACRE 10-10-10 FERTILIZER (23 LBS/1000 SQ. FT.) BEFORE SEEDING. HARROW OR DISC INTO UPPER THREE-INCHES OF SOIL.

SEEDING: FOR THE PERIODS MARCH 1 THRU APRIL 30, AND AUGUST 1 THRU OCTOBER 15, SEED WITH 60 LBS PER ACRE (1.4 LBS/1000 FT.) OF KENTUCKY 31 TALL FESCUE. FOR THE PERIOD MAY 1 THRU JULY 31, SEED WITH 60 LBS KENTUCKY 31 TALL FESCUE PER ACRE AND 2 LBS PER ACRE (0.5 LBS/1000 SQ. FT.) OF WEEPING LOVEGRASS. DURING THE PERIOD OF OCTOBER 16 THRU FEBRUARY 28, PROTECTS SITE BY: OPTION (1) 2 TONS PER ACRE OF WELL ANCHORED STRAW MULCH AND SEED AS SOON AS POSSIBLE IN THE SPRING. OPTION (2) USE SOD OPTION (3) SEED WITH 60 LBS/ACRE KENTUCKY 31 TALL FESCUE AND MULCH WITH 2 TONS/ACRE WELL ANCHORED STRAW.

MULCHING: APPLY 1 1/2 TO 2 TONS PER ACRE (70 TO 90 LBS/1000 SQ. FT.) OF UNROTTED SMALL GRAIN STRAW IMMEDIATELY AFTER SEEDING. ANCHOR MULCH IMMEDIATELY AFTER APPLICATION USING MULCH ANCHORING TOOL OR 218 GALLONS PER ACRE (5 GAL/1000 SQ. FT.) OF EMULSIFIED ASPHALT ON FLAT AREAS. ON SLOPERS 8 FEET OR HIGHER, USE 348 GALLONS PER ACRE (8 GAL/1000 SQ. FT.) FOR ANCHORING.

MAINTENANCE: INSPECT ALL SEEDED AREAS AND MAKE NEEDED REPAIRS, REPLACEMENTS AND RESEEDTNGS.

SEDIMENT CONTROL NOTES

1. A minimum of 24 hours notice must be given to the Howard County Office of Inspection and Permits prior to the start of any construction (992-2437).
2. All vegetative and structural practices are to be installed according to the provisions of this plan and are to be in conformance with the 1983 MARYLAND STANDARDS AND SPECIFICATIONS FOR SOIL EROSION AND SEDIMENT CONTROL.
3. Following initial soil disturbance or redisturbance, permanent or temporary stabilization shall be completed within: a) 7 calendar days for all perimeter sediment control structures, dikes, perimeter slopes and all slopes greater than 3:1, b) 14 days as to all other disturbed or graded areas on the project site.
4. All sediment traps/basins shown must be fenced and warning signs posted around their perimeter in accordance with Vol. 1, Chapter 12, of the HOWARD COUNTY DESIGN MANUAL, Storm Drainage.
5. All disturbed areas must be stabilized within the time period specified above in accordance with the 1983 MARYLAND STANDARDS AND SPECIFICATIONS FOR SOIL EROSION AND SEDIMENT CONTROL for permanent seedings (Sec. 51), sod (Sec. 54), temporary seeding (Sec. 50), and mulching (Sec. 52). Temporary stabilization with mulch alone can only be done when recommended seeding dates do not allow for proper germination and establishment of grasses.
6. All sediment control structures are to remain in place and are to be maintained in operative condition until permission for their removal has been obtained from the Howard County Sediment Control Inspector.
7. Site Analysis:

Total Area of Site	0.817	Acres
Area Disturbed	0.5	Acres
Area to be roofed or paved	0.07	Acres
Area to be vegetatively stabilized	0.43	Acres
Total Cut	450	Cu. yds.
Total Fill	450	Cu. yds.
Offsite waste/borrow area location	CONTRACTOR TO OBTAIN PERMIT IF NECESSARY	

8. Any sediment control practice which is disturbed by grading activity for placement of utilities must be repaired on the same day of disturbance.
9. Additional sediment controls must be provided, if deemed necessary by the Howard County DPW sediment control inspector.
10. On all sites with disturbed areas in excess of 2 acres, approval of the inspection agency shall be requested upon completion of installation of perimeter erosion and sediment controls, but before proceeding with any other earth disturbance or grading. Other building or grading inspection approvals may not be authorized until this initial approval by the inspection agency is made.
11. The contractor shall install a temporary construction fence to protect the existing trees from the clearing and grubbing phase through the finished grading and construction process.

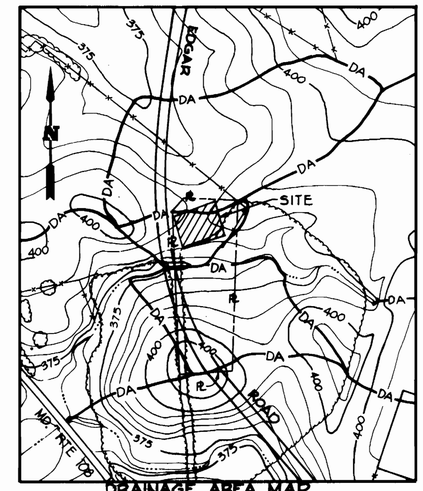

DRAINAGE AREA MAP

SCALE: 1" = 200'

SEQUENCE OF CONSTRUCTION

		TIME
1.	Upon obtaining a permit and an approved sal of the sediment control plan. Notify Howard County, Department of Inspections and Permits (992-2433) a minimum of 24 hours prior to commencing work.	Day 1
2.	Install the stabilized construction entrance where shown on the plans for temporary access to the site.	1 Day
3.	Construct the perimeter dike/swale and temporary sediment trap and install the silt fence as shown on the plans prior to any on-site disturbance.	2 Days
4.	Begin clearing and grub operations. When complete, strip the top 4" of earth within the limit of disturbance for the pumping station site and store the material in Stockpile No. 1. Proceed to stabilize, seed and mulch the stockpiled topsoil material.	1 Week
5.	Begin excavation for New Edgar Road Water Pumping Station foundation and below grade levels. Store all excavated materials at Stockpile No. 2. Proceed to stabilize, seed and mulch the excavated material.	1 Week
6.	Construct the New Edgar Road Water Pumping Station complete. As foundations and below grade construction end, begin spreading the excavated material from stockpile no. 2 on-site to within 4"-6" of final grade. Compact and stabilize site.	28 Weeks
7.	During construction, and after each rainfall, the contractor shall inspect and provide necessary maintenance on the sediment and erosion control structures.	As Needed
8.	Install paving in areas shown on the plans. Removed the stabilized construction entrance last.	3 Days
9.	After construction, pavement and grading is completed, replace topsoil from Stockpile No. 1, compact entire site, and permanently seed and mulch all areas to be vegitatively stabilized. Fertilize site as conditions require. Landscape shall be preformed any time after spreading of topsoil.	1 Week
10.	Remove all the temporary sediment control devices upon final approval of site condition from the Howard County Department of Inspections and Permits S.E.C. Inspector.	2 Days
11.	All disturbed areas due to removal of Sediment Control Measures shall be graded, compacted, and stabilized by permanent seeding requirements.	2 Days

"I/We certify that all development and construction will be done according to this plan, and that any responsible personnel involved in the construction project will have a Certificate of Attendance at a Department of the Environment Approved Training Program for the Control of Sediment and Erosion before beginning the project. I also authorize periodic on-site inspection by the Howard Soil Conservation District."

Thomas E. Butler, Project Manager
Howard County Dept. of Public Works — Date 6/6/91

"I certify that this plan for erosion and sediment control represents a practical and workable plan based on my personal knowledge of the site conditions and that it was prepared in accordance with the requirements of the Howard Soil Conservation District."

James L. Falk, P.E. — Date 7-22-91

Reviewed for HOWARD S.C.D. and meets Technical Requirements for Soil Erosion and Sediment Control.

Soil Conservation Service — Date 6/26/91

THIS DEVELOPMENT PLAN IS APPROVED FOR SOIL EROSION AND SEDIMENT CONTROL BY THE HOWARD SOIL CONSERVATION DISTRICT.

Howard A. Cr D. — Date 6/26/91

SDP 91-48
SHEET 3 of 4

DEPARTMENT OF PUBLIC WORKS
HOWARD COUNTY, MARYLAND

DIRECTOR OF PUBLIC WORKS — DATE 6/10/91	CHIEF, BUREAU OF ENGINEERING — DATE 6-6-91
CHIEF, BUREAU OF UTILITIES — DATE 6-7-91	CHIEF, UTILITY DESIGN DIVISION — DATE 6-6-91

BUCHART HORN, INC.
Engineers, Architects and Planners
Baltimore, MD; Chatham, NY; Frankfort, W. Germany; Lancaster, PA; Lansdowne, PA; Memphis, TN; Mt. Laurel, NJ; New Orleans, LA; Williamsburg, VA; York, PA

DES: D.C.
DRN: R.G.
CHK: J. FALK
DATE: 9/25/90

BY	NO.	REVISION	DATE

SEDIMENT & EROSION CONTROL PLAN

600' SCALE MAP NO. 30 BLOCK NO. 10 & 11

EDGAR ROAD WATER PUMPING STATION
CONTRACT NO. 44-1917
CAPITAL PROJECT NO. W-8129
ELECTION DISTRICT NO. 2
HOWARD COUNTY, MARYLAND

SCALE AS SHOWN

SHEET 5 OF 22

SDP-91-48

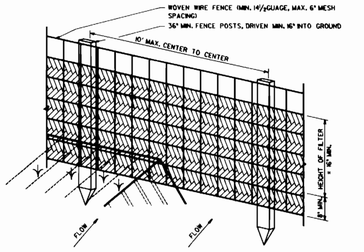

PERSPECTIVE VIEW

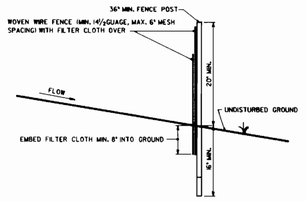

SECTION

CONSTRUCTION NOTES

1. WOVEN WIRE FENCE TO BE FASTENED SECURELY TO FENCE POSTS WITH WIRE TIES OR STAPLES.
2. FILTER CLOTH TO BE FASTENED SECURELY TO WOVEN WIRE FENCE WITH TIES SPACED EVERY 24" AT TOP AND MID-SECTION.
3. WHEN TWO SECTIONS OF FILTER CLOTH ADJOIN EACH OTHER THEY SHALL BE OVERLAPPED BY SIX INCHES AND FOLDED.
4. MAINTENANCE SHALL BE PERFORMED AS NEEDED AND MATERIAL REMOVED WHEN "BULGES" DEVELOP IN THE SILT FENCE.

CONSTRUCTION MATERIALS

POSTS: STEEL EITHER "T" OR "U" TYPE OR 2" HARDWOOD
FENCE: WOVEN WIRE, 14 GA., 6" MAX. MESH OPENING
FILTER CLOTH: FILTER "X", MIRAFI 100X, STABILINKA T140N OR APPROVED EQUAL
PREFABRICATED UNIT: GEOFAB, ENVIROFENCE, OR APPROVED EQUAL

SILT FENCE
NO SCALE

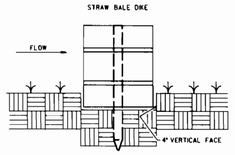

BEDDING DETAIL

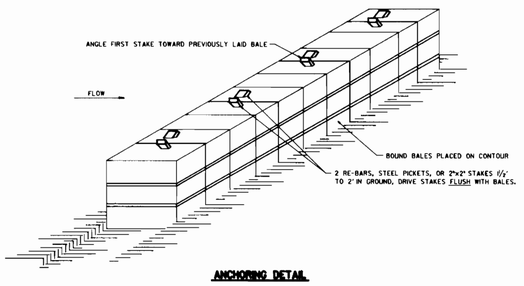

ANCHORING DETAIL

CONSTRUCTION NOTES

1. BALES SHALL BE PLACED AT THE TOE OF A SLOPE OR ON THE CONTOUR AND IN A ROW WITH ENDS TIGHTLY ABUTTING THE ADJACENT BALES.
2. EACH BALE SHALL BE EMBEDDED IN THE SOIL A MINIMUM OF FOUR (4) INCHES, AND PLACED SO THE BINDINGS ARE HORIZONTAL.
3. BALES SHALL BE SECURELY ANCHORED IN PLACE BY EITHER TWO STAKES OR RE-BARS DRIVEN THROUGH THE BALE. THE FIRST STAKE IN EACH BALE SHALL BE DRIVEN TOWARD THE PREVIOUSLY LAID BALE AT A ANGLE TO FORCE THE BALES TOGETHER. STAKES SHALL BE DRIVEN FLUSH WITH THE BALE.
4. INSPECTION SHALL BE FREQUENT AND REPAIR REPLACEMENT SHALL BE PROMPTLY AS NEEDED.
5. BALES SHALL BE REMOVED WHEN THEY HAVE SERVED THEIR USEFULNESS SO AS TO NOT BLOCK OR IMPEDE STORM FLOW OR DRAINAGE.

STRAW BALE DIKE
NO SCALE

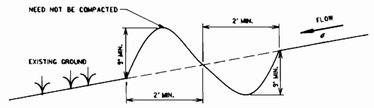

CROSS SECTION

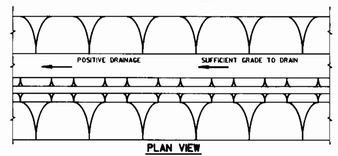

PLAN VIEW

CONSTRUCTION SPECIFICATIONS

1. ALL PERIMETER DIKE/SWALE SHALL HAVE UNINTERRUPTED POSITIVE GRADE TO AN OUTLET.
2. DIVERTED RUNOFF FROM A DISTURBED AREA SHALL BE CONVEYED TO A SEDIMENT TRAPPING DEVICE.
3. DIVERTED RUNOFF FROM AN UNDISTURBED AREA SHALL OUTLET INTO AN UNDISTURBED STABILIZED AREA AT NON-EROSIVE VELOCITY.
4. THE SWALE SHALL BE EXCAVATED OR SHAPED TO LINE, GRADE, AND CROSS SECTION AS REQUIRED TO MEET THE CRITERIA SPECIFIED IN THE STANDARD.
5. STABILIZATION OF THE AREA DISTURBED BY THE DIKE AND SWALE SHALL BE DONE IN ACCORDANCE WITH THE STANDARD AND SPECIFICATION FOR SEED AND STRAW MULCH, AND SHALL BE DONE WITHIN 7 DAYS.
6. PERIODIC INSPECTION AND REQUIRED MAINTENANCE MUST BE PROVIDED AFTER EACH RAIN EVENT.
7. THE SWALE SHALL BE STABILIZED WITH EITHER SOIL STABILIZATION MATTING OR THE APPROPRIATE CLASS OF RIPRAP.
8. MAXIMUM DRAINAGE AREA IS 2 ACRES.

PERIMETER DIKE/SWALE
NO SCALE

DETAIL 4 CEL. LIB. AC-SEC9

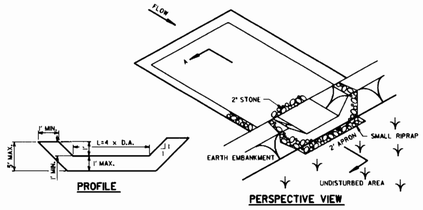

PROFILE **PERSPECTIVE VIEW**

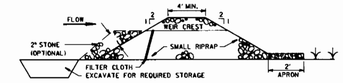

CROSS SECTION A-A

CONSTRUCTION SPECIFICATIONS

1. AREA UNDER EMBANKMENT SHALL BE CLEARED, GRUBBED AND STRIPPED OF ANY VEGETATION AND ROOT MAT. THE POOL AREA SHALL BE CLEARED.
2. THE FILL MATERIAL FOR THE EMBANKMENT SHALL BE FREE OF ROOTS AND OTHER WOODY VEGETATION AS WELL AS OVERSIZED STONES, ROCKS, ORGANIC MATERIAL OR OTHER OBJECTIONABLE MATERIAL. THE EMBANKMENT SHALL BE COMPACTED BY TRAVERSING WITH EQUIPMENT WHILE IT IS BEING CONSTRUCTED.
3. ALL CUT AND FILL SLOPES SHALL BE 2:1 OR FLATTER.
4. THE STONE USED IN THE OUTLET SHALL BE SMALL RIPRAP 4"-8" ALONG WITH A 1' THICKNESS OF 2" AGGREGATE PLACED ON THE UPGRADE SIDE ON THE SMALL RIPRAP OR EMBEDDED FILTER CLOTH IN THE RIPRAP.
5. SEDIMENT SHALL BE REMOVED AND TRAP RESTORED TO ITS ORIGINAL DIMENSIONS WHEN THE SEDIMENT HAS ACCUMULATED TO ½ THE DESIGN DEPTH OF THE TRAP.
6. THE STRUCTURE SHALL BE INSPECTED AFTER EACH RAIN AND REPAIRS MADE AS NEEDED.
7. CONSTRUCTION OPERATIONS SHALL BE CARRIED OUT IN SUCH A MANNER THAT EROSION AND WATER POLLUTION IS MINIMIZED.
8. THE STRUCTURE SHALL BE REMOVED AND THE AREA STABILIZED WHEN THE DRAINAGE AREA HAS BEEN PROPERLY STABILIZED.
9. OPTIONAL ONE (1) FOOT LAYER OF 2" STONE MAY BE PLACED ON THE UPSTREAM SIDE OF THE RIPRAP IN PLACE OF THE EMBEDDED FILTER CLOTH.
10. MAXIMUM DRAINAGE AREA IS 5 ACRES.

STONE OUTLET SEDIMENT TRAP
NO SCALE

DETAIL 4 CEL. LIB. AC-SEC7

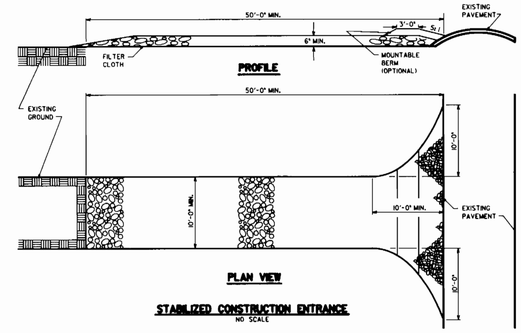

STABILIZED CONSTRUCTION ENTRANCE
NO SCALE

CONSTRUCTION NOTES

1. STONE SIZE - USE 2" STONE, OR RECLAIMED OR RECYCLED CONCRETE EQUIVALENT.
2. LENGTH - AS REQUIRED, BUT NOT LESS THAN 50 FEET (EXCEPT ON A SINGLE RESIDENCE LOT WHERE A 30 FOOT MINIMUM LENGTH WOULD APPLY).
3. THICKNESS - NOT LESS THAN 6 INCHES.
4. WIDTH - TEN (10) FOOT MINIMUM, BUT NOT LESS THAN THE FULL WIDTH AT POINTS WHERE INGRESS OR EGRESS OCCURS.
5. FILTER CLOTH - WILL BE PLACED OVER THE ENTIRE AREA PRIOR TO PLACING OF STONE. FILTER WILL NOT BE REQUIRED ON A SINGLE FAMILY RESIDENCE LOT.
6. SURFACE WATER - ALL SURFACE WATER FLOWING OR DIVERTED TOWARD CONSTRUCTION ENTRANCES SHALL BE PIPED ACROSS THE ENTRANCE. IF PIPING IS IMPRACTICAL, A MOUNTABLE BERM WITH 5:1 SLOPES WILL BE PERMITTED.
7. MAINTENANCE - THE ENTRANCE SHALL BE MAINTAINED IN A CONDITION WHICH WILL PREVENT TRACKING OR FLOWING OF SEDIMENT ONTO PUBLIC RIGHTS-OF-WAY. THIS MAY REQUIRE PERIODIC TOP DRESSING WITH ADDITIONAL STONE AS CONDITIONS DEMAND AND REPAIR AND/OR CLEANOUT OF ANY MEASURES USED TO TRAP SEDIMENT. ALL SEDIMENT SPILLED, DROPPED, WASHED, OR TRACKED ONTO PUBLIC RIGHTS-OF-WAY MUST BE REMOVED IMMEDIATELY.
8. WASHING - WHEELS SHALL BE CLEANED TO REMOVE SEDIMENT PRIOR TO ENTRANCE ONTO PUBLIC RIGHTS-OF-WAY. WHEN WASHING IS REQUIRED, IT SHALL BE DONE ON AN AREA STABILIZED WITH STONE AND WHICH DRAINS INTO AN APPROVED SEDIMENT TRAPPING DEVICE.
9. PERIODIC INSPECTION AND NEEDED MAINTENANCE SHALL BE PROVIDED AFTER EACH RAIN.

"I/We certify that all development and construction will be done according to this plan, and that any responsible personnel involved in the construction project will have a Certificate of Attendance at a Department of the Enviroment Approved Training Program for the Control of Sediment and Erosion before beginning the project. I also authorize periodic on-site inspection by the Howard Soil Conservation District."

Thomas E. Butler, Project Manager, Howard County Dept. of Public Works — Date 7-22-91

"I certify that this plan for erosion and sediment control represents a practical and workable plan based on my personal knowledge of the site conditions and that it was prepared in accordance with the requirements of the Howard Soil Conservation District."

Jerome L. Falk, P.E. — Date 7-22-91

APPROVED: FOR PUBLIC WATER AND PUBLIC SEWERAGE SYSTEMS
HOWARD COUNTY HEALTH DEPARTMENT

COUNTY HEALTH OFFICER — DATE 11-25-91

APPROVED: HOWARD COUNTY DEPT. OF PLANNING & ZONING

DIRECTOR — DATE 11/27/91

CHIEF, DIVISION OF COMMUNITY PLANNING AND LAND DEVELOPMENT — DATE 11/27/91

APPROVED
PLANNING BOARD
of HOWARD COUNTY
DATE 8-20-91

THIS DEVELOPMENT PLAN IS APPROVED FOR SOIL EROSION AND SEDIMENT CONTROL BY THE HOWARD SOIL CONSERVATION DISTRICT.

Approved — Howard S.C.D. — Date 6/26/91

Approved for Howard S.C.D. — Name — Signature — Date 6/26/91

SDP 91-48
SHEET 4 of 4

DEPARTMENT OF PUBLIC WORKS
HOWARD COUNTY, MARYLAND

DIRECTOR OF PUBLIC WORKS — DATE 7-10-91
CHIEF, BUREAU OF ENGINEERING — DATE 6-6-91
CHIEF, BUREAU OF UTILITIES — DATE 6-7-91
CHIEF, UTILITY DESIGN DIVISION — DATE 6-6-91

BUCHART HORN, INC.
Baltimore, MD; Charleston, WV; Frankfurt, W. Germany; Lancaster, PA; Lewisburg, PA; Memphis, TN; Mt. Laurel, NJ; New Orleans, LA; Williamsburg, PA; York, PA
Engineers, Architects, and Planners

DES: D.C.
DRN: B.H.
CHK: J. FALK
DATE: 9/25/90

BY	NO.	REVISION	DATE

SEDIMENT & EROSION CONTROL DETAILS

600' SCALE MAP NO. 30 BLOCK NO. 10 & 11

EDGAR ROAD WATER PUMPING STATION
CONTRACT NO. 44-1917
CAPITAL PROJECT NO. W-8129
ELECTION DISTRICT NO. 2
HOWARD COUNTY, MARYLAND

SCALE AS SHOWN

SHEET 6 of 22

SDP-91-48

FILENAME: HCSEC2.DGN 3-30-90

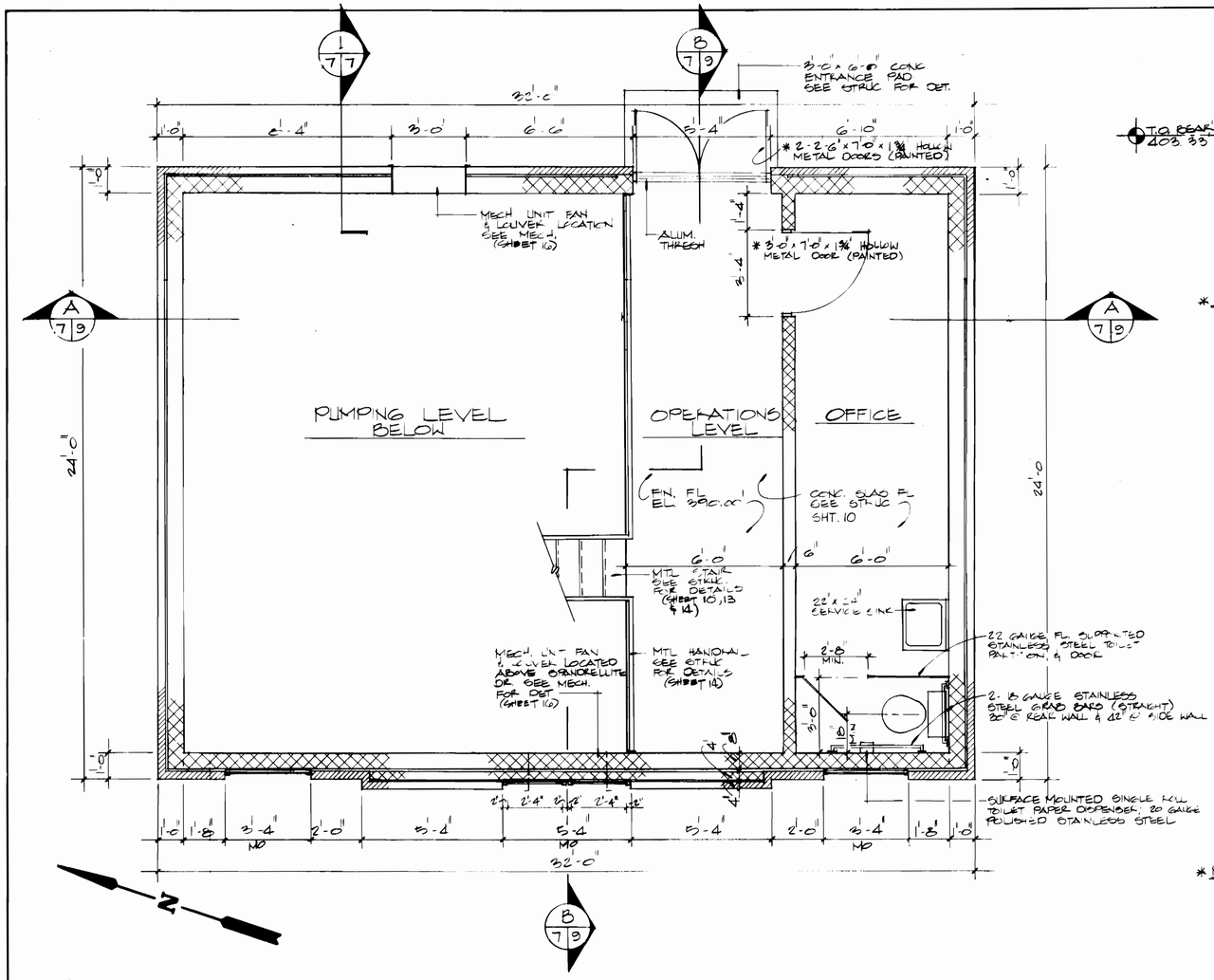

FLOOR PLAN

SCALE: 3/8" = 1'-0"

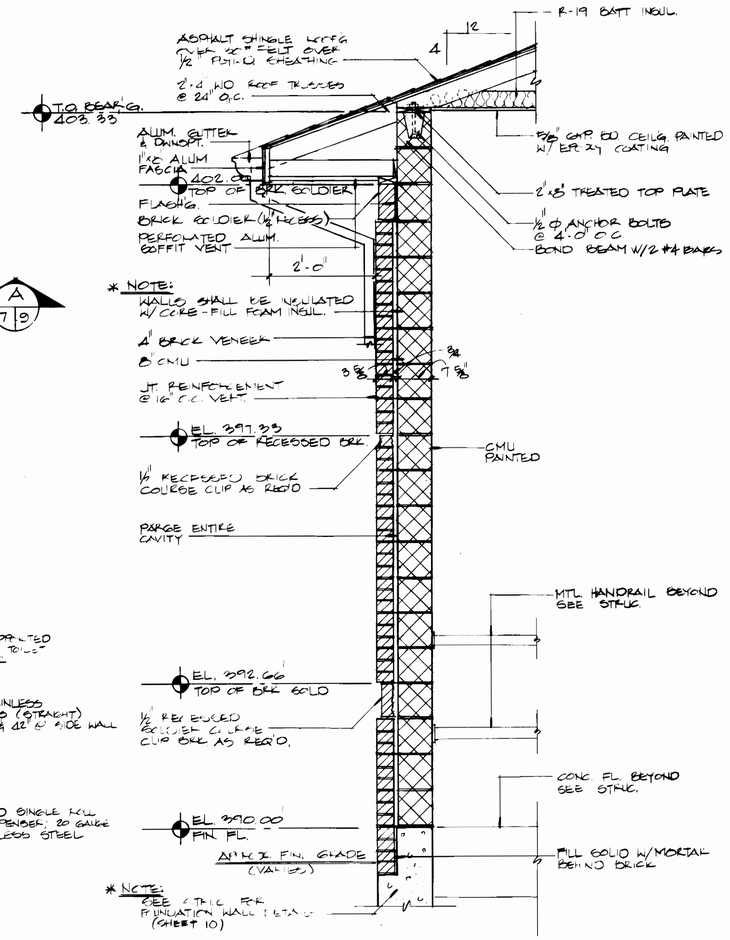

TYPICAL WALL SECTION

SCALE: 3/4" = 1'-0"

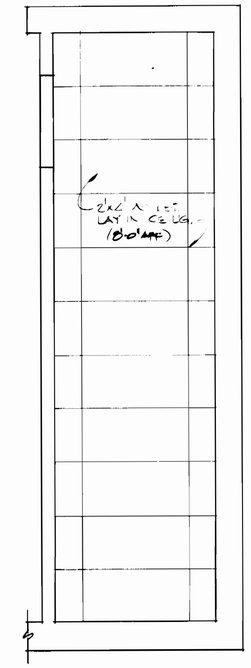

REFLECTED CEIL'G. PLAN

SCALE: 3/8" = 1'-0"

DEPARTMENT OF PUBLIC WORKS HOWARD COUNTY, MARYLAND	BUCHART HORN, INC. Engineers, Architects and Planners	DES: J. COTT. DRN: J. COTT. CHK: J. FALK DATE: 9/25/90	FLOOR PLAN TYP. WALL SECTION REFLECTED CEILING PLAN & NOTES
DIRECTOR OF PUBLIC WORKS — DATE 6-6-91 CHIEF, BUREAU OF ENGINEERING — DATE 6-6-91 CHIEF, BUREAU OF UTILITIES — DATE 6-7-91 CHIEF, UTILITY DESIGN DIVISION — DATE 6-6-91		BY / NO. / REVISION / DATE	600' SCALE MAP NO. 30 BLOCK NO. 10 & 11

EDGAR ROAD WATER PUMPING STATION
CONTRACT NO. 44-1917
CAPITAL PROJECT NO. W-8129
ELECTION DISTRICT NO. 2
HOWARD COUNTY, MARYLAND

SCALE AS SHOWN

SHEET 7 OF 22

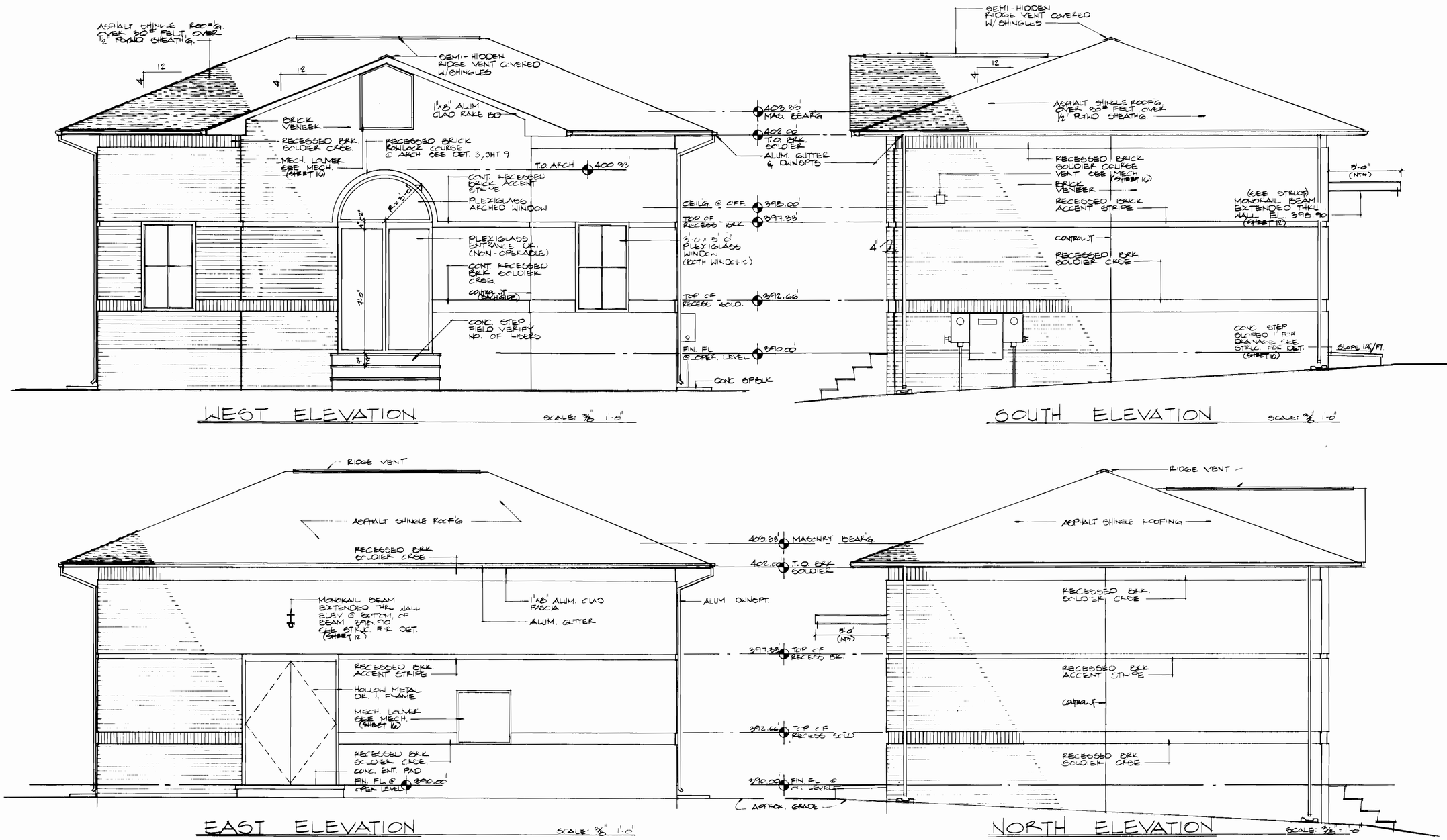

DEPARTMENT OF PUBLIC WORKS
HOWARD COUNTY, MARYLAND

DIRECTOR OF PUBLIC WORKS	DATE 6.10.91	CHIEF, BUREAU OF ENGINEERING	DATE 6-6-91
CHIEF, BUREAU OF UTILITIES	DATE 6-7-91	CHIEF, UTILITY DESIGN DIVISION	DATE 6-6-91

BUCHART HORN, INC.
Engineers, Architects and Planners

DES: J. Cott	
DRN: J. Cott	
CHK: J. FALK	
DATE: 9/25/90	

BY	NO.	REVISION	DATE

BUILDING ELEVATIONS

600' SCALE MAP NO. 30 BLOCK NO. 10 & 11

EDGAR ROAD WATER PUMPING STATION
CONTRACT NO. 44-1917
CAPITAL PROJECT NO. W-8129
ELECTION DISTRICT NO. 2
HOWARD COUNTY, MARYLAND

SCALE AS SHOWN

SHEET 8 OF 22

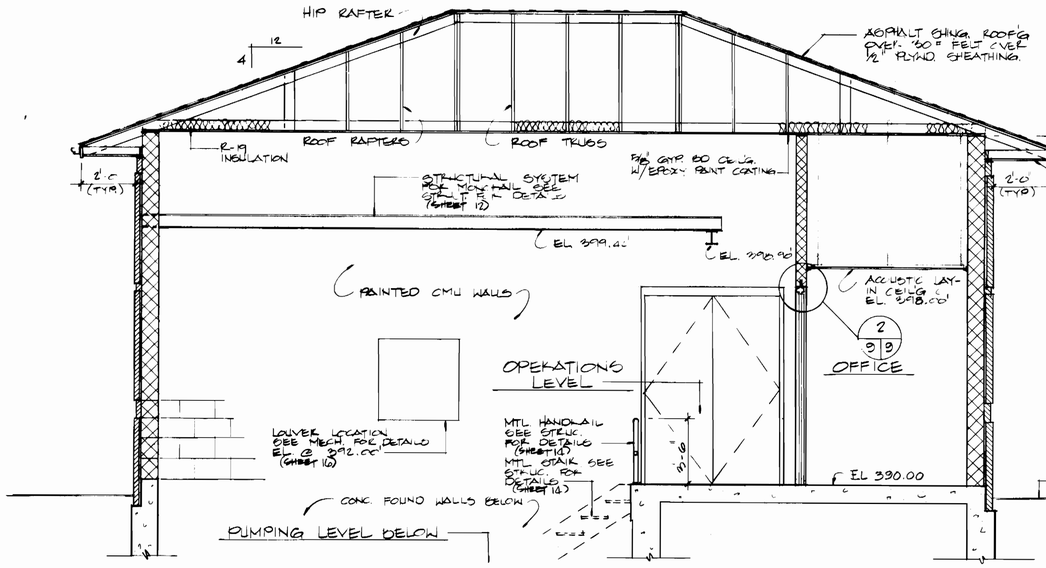

BLD'G. SECTION (A / 7|9)
SCALE: 3/16" = 1'-0"

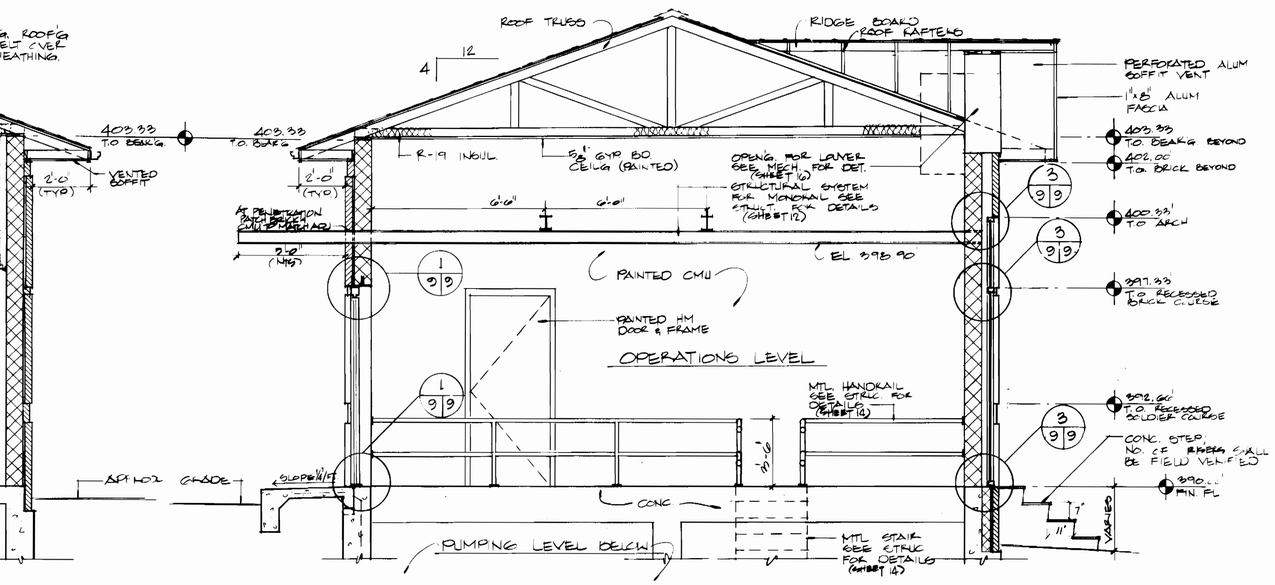

BLD'G. SECTION (B / 7|9)
SCALE: 3/16" = 1'-0"

NOTE:
ROOF TRUSS MANUFACTURE SHALL PROVIDE TRUSS DESIGN CALCULATIONS SO AS TO ASCERTAIN COMPLIANCE WITH THE 1987 BOCA CODE, SECTION 1110.2 (AMENDED). CRITERIA AS FOLLOWS:

30 PSF MINIMUM ROOF LIVE LOAD
70 MPH WIND SPEED
TRUSS CALCULATIONS TO BE SEALED BY A MARYLAND STATE REGISTERED PROFESSIONAL ENGINEER.

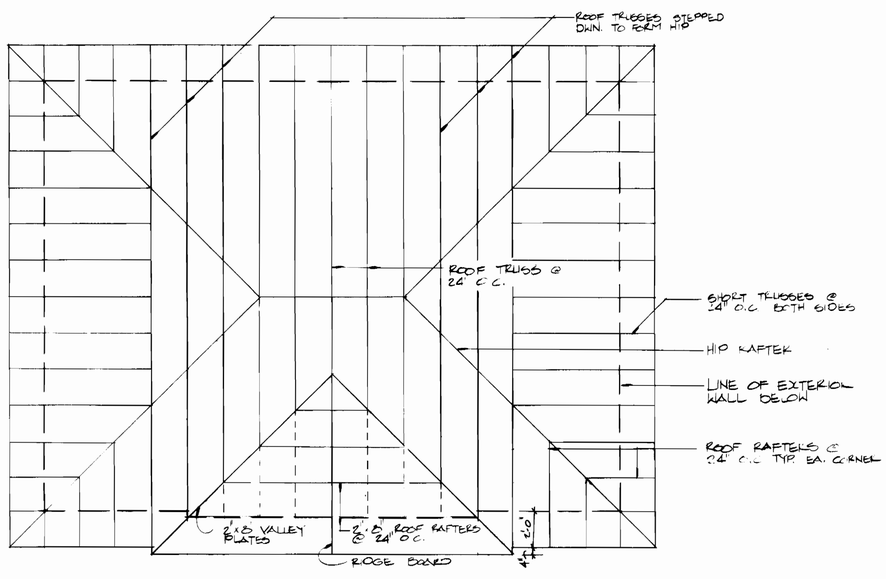

ROOF FRAMING PLAN
SCALE: 1/16" = 1'-0"

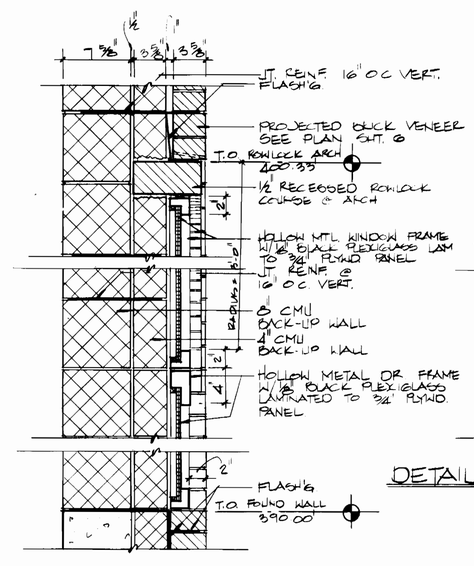

DETAIL @ SPANDREL
SCALE: 1 1/2" = 1'-0"

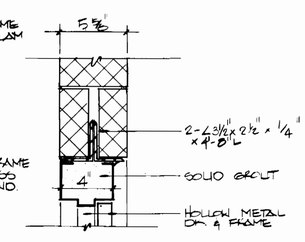

DETAIL @ DR. HD. (2 / 9|9)

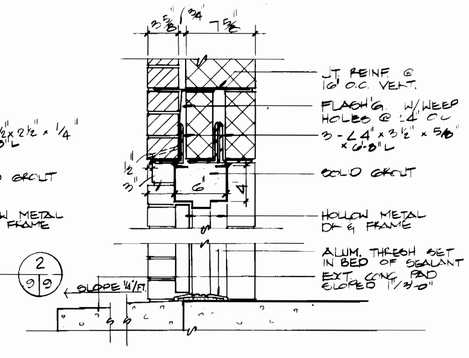

DETAIL @ DOOR HD. & SILL ENTRANCE (1 / 9|9)
SCALE 1 1/2" = 1'-0"

DEPARTMENT OF PUBLIC WORKS
HOWARD COUNTY, MARYLAND

DIRECTOR OF PUBLIC WORKS — DATE 8.10.91
CHIEF, BUREAU OF ENGINEERING — DATE 6-6-91
CHIEF, BUREAU OF UTILITIES — DATE 6-7-91
CHIEF, UTILITY DESIGN DIVISION — DATE 6-6-91

BUCHART HORN, INC.
Engineers, Architects and Planners
Baltimore, MD; Charleston, WV; Frankfurt, W. Germany; Lancaster, PA; Lewisburg, PA; Memphis, TN; Mt. Laurel, NJ; New Orleans, LA; Williamsburg, VA; York, PA

DES: J.COTT					
DRN: J.COTT					
CHK: J. FALK					
DATE: 9/25/90	BY	NO.	REVISION	DATE	

BUILDING SECTIONS/ ROOF FRAMING PLAN & DETAILS

600' SCALE MAP NO. 30 BLOCK NO. 10 & 11

EDGAR ROAD WATER PUMPING STATION
CONTRACT NO. 44-1917
CAPITAL PROJECT NO. W-8129
ELECTION DISTRICT NO. 2
HOWARD COUNTY, MARYLAND

SCALE AS SHOWN

SHEET 9 OF 22

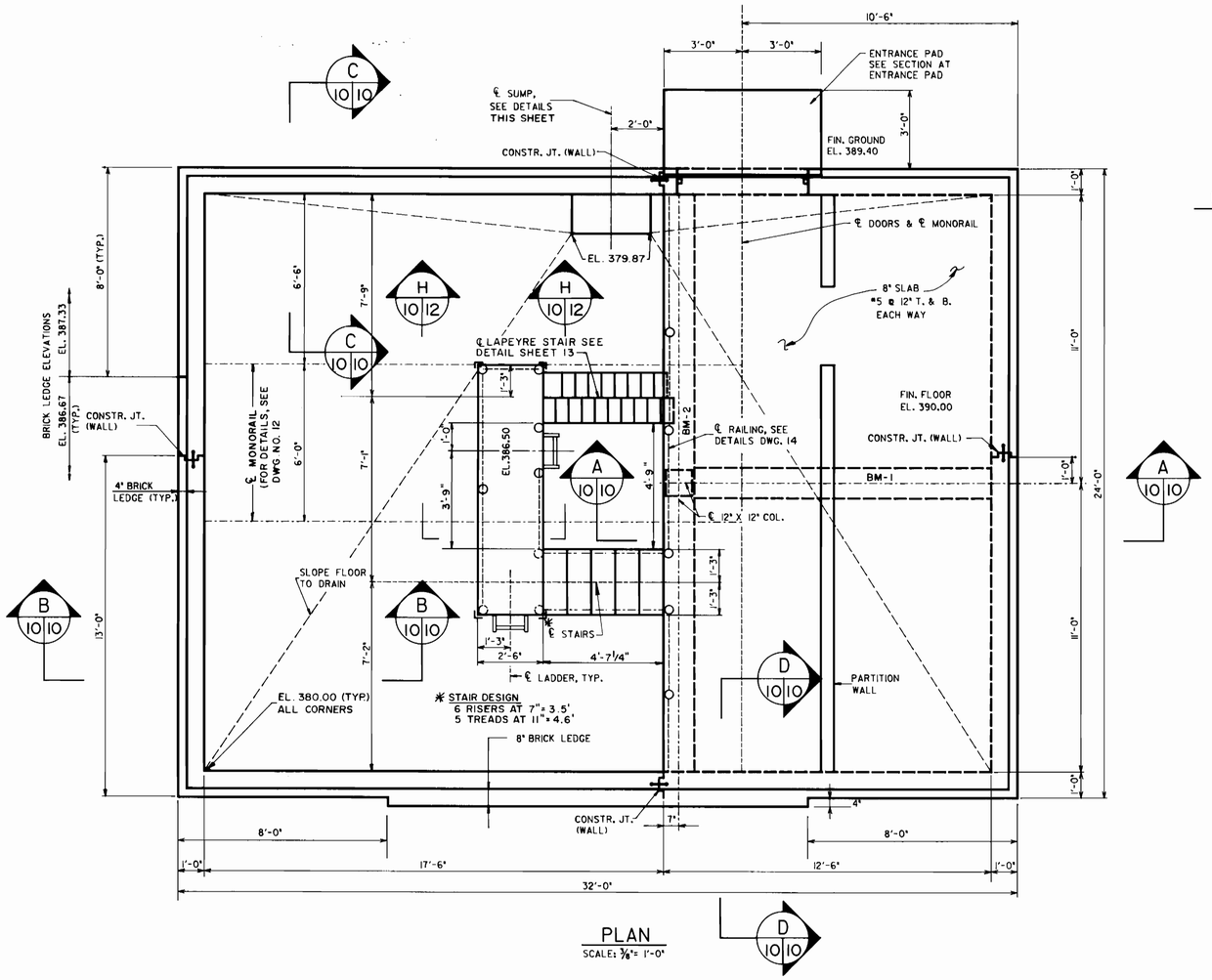

PLAN

SCALE: 3/8" = 1'-0"

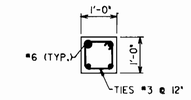

COLUMN SECTION

SCALE: 1/2" = 1'-0"

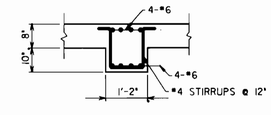

TYPICAL SECTION BEAM 1 (BM-1)

SCALE: 1/2" = 1'-0"

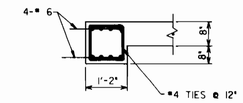

TYPICAL SECTION BEAM 2 (BM-2)

SCALE: 1/2" = 1'-0"

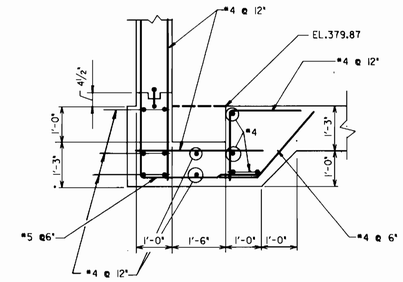

TRANSVERSE SECTION

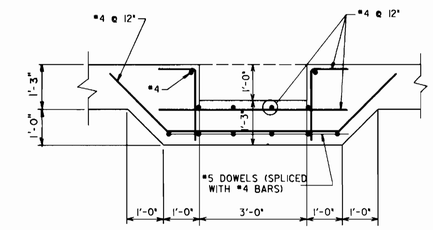

LONGITUDINAL SECTION

SUMP DETAILS

SCALE: 1/2" = 1'-0"

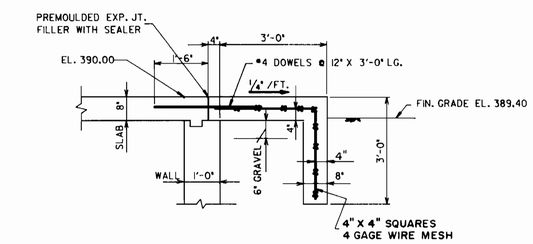

SECTION AT ENTRANCE PAD

SCALE: 1/2" = 1'-0"

NOTE: WRITTEN CERTIFICATION OF SOILS AT THE TIME OF FOOTING EXCAVATION, BY A REGISTERED PROFESSIONAL ENGINEER OR CERTIFIED INSPECTION AGENCY, SHALL BE SUBMITTED TO HOWARD CO. (DEPT. OF INSPECTIONS, LICENSES, & PERMITS) AS SOON AS POSSIBLE. THE CERTIFICATION SHALL INCLUDE THE DATES OF INSPECTION(S), THE TYPE OF SOIL ENCOUNTERED, THE METHOD OF DETERMINING THE BEARING VALVE, THE ACTUAL BEARING VALVE AVAILABLE, AND SHALL REFERENCE THE BUILDING PERMIT NUMBER AND/OR EXACT PROJECT ADDRESS. THIS CERTIFICATION SHALL BE RECEIVED PRIOR TO THE ISSUANCE OF ANY INTERIOR COMPLETION PERMITS. (1987 BOCA BUILDING CODE, SECTION 1201.1)

NOTES:

1. FOR STRUCTURAL NOTES, SEE SHT. 2
2. FOR MECHANICAL DETAILS, SEE SHT. 15 & 16
3. FOR ARCHITECTURAL PLANS AND DETAILS, SEE SHT. 7, 8 & 9
4. FOR MISCELLANOUS DETAILS, SEE SHT. 12, 13 & 14.

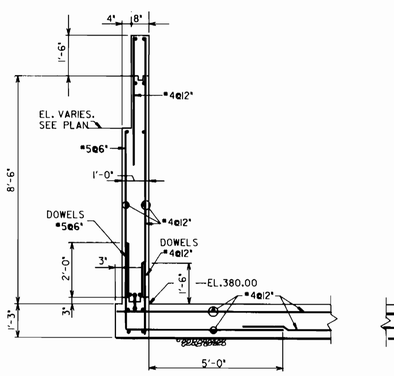

NOTE: SECTION C-C SIMILAR

SECTION B-B

SCALE: 3/8" = 1'-0"

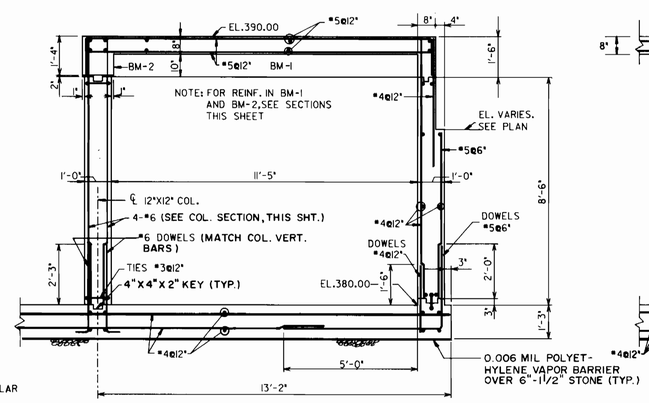

SECTION A-A

SCALE: 3/8" = 1'-0"

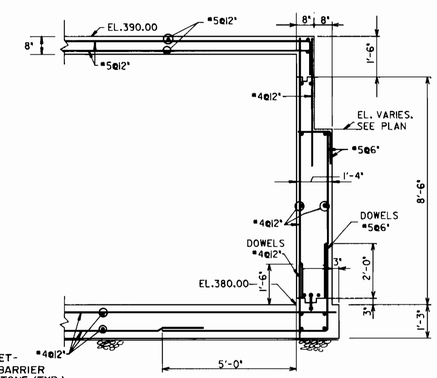

SECTION D-D

SCALE: 3/8" = 1'-0"

DEPARTMENT OF PUBLIC WORKS
HOWARD COUNTY, MARYLAND

DIRECTOR OF PUBLIC WORKS — DATE 6/10/91
CHIEF, BUREAU OF ENGINEERING — DATE 6-6-91
CHIEF, BUREAU OF UTILITIES — DATE 6-7-91
CHIEF, UTILITY DESIGN DIVISION — DATE 6-6-91

BUCHART HORN, INC.
Baltimore, MD · Memphis, TN · Charleston, WV · Mt. Laurel, NJ · Frankfurt, W. Germany · New Orleans, LA · Lancaster, PA · Williamsburg, VA · Lewisburg, PA · York, PA
Engineers, Architects, and Planners

STATE OF MARYLAND — REGISTERED PROFESSIONAL ENGINEER — 7808

DES:	K. S.
DRN:	A. G. S.
CHK:	K. S.
DATE:	9/25/90

BY	NO.	REVISION	DATE

STRUCTURAL PLAN & DETAILS

600' SCALE MAP NO. 30 BLOCK NO. 10 & 11

EDGAR ROAD WATER PUMPING STATION
CONTRACT NO. 44-1917
CAPITAL PROJECT NO. W-8129
ELECTION DISTRICT NO. 2
HOWARD COUNTY, MARYLAND

SCALE AS SHOWN

SHEET 10 OF 22

FILENAME: PSSEC.DGN 02-26-90

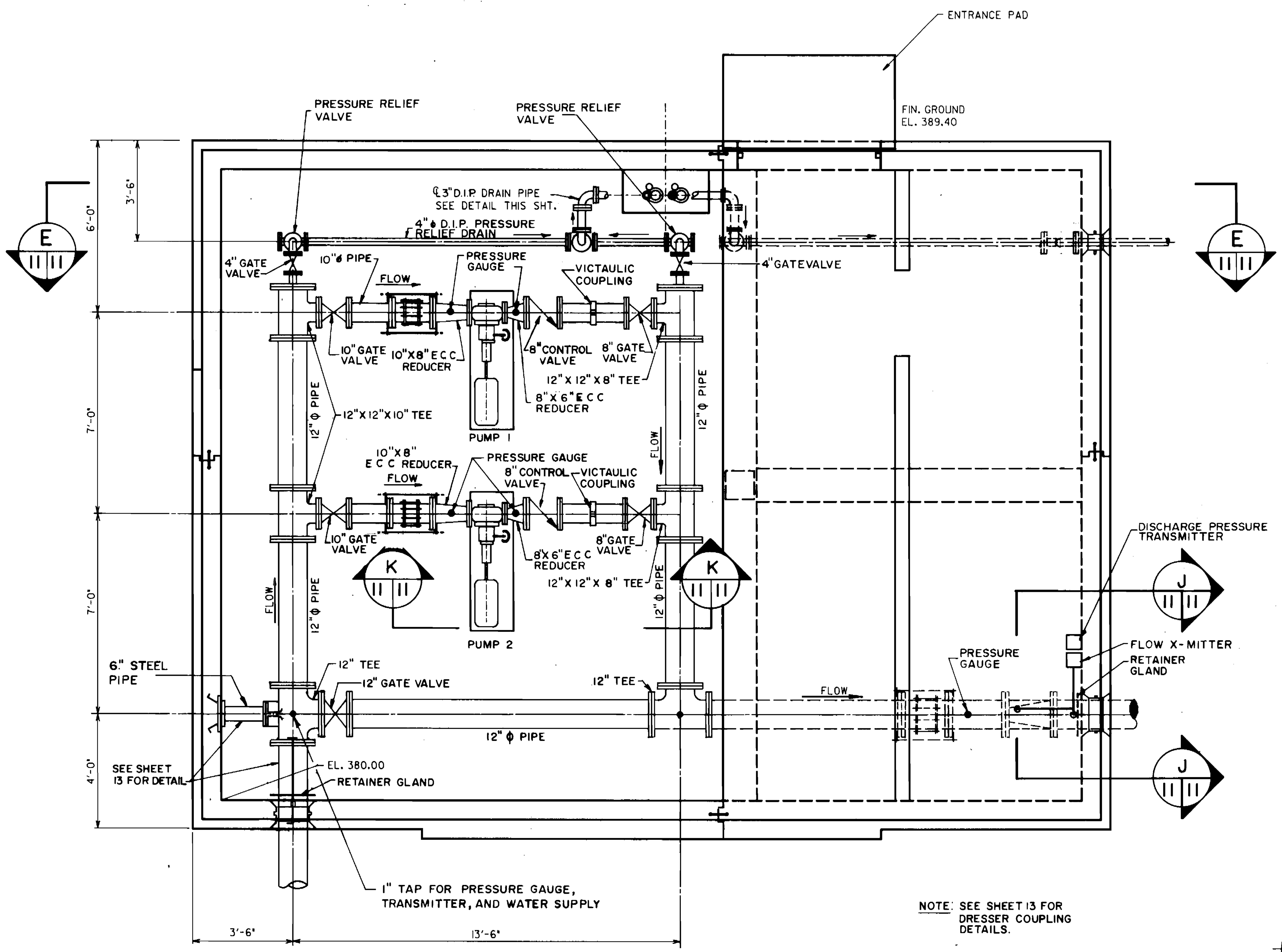

NOTE: SEE SHEET 13 FOR DRESSER COUPLING DETAILS.

PIPING PLAN

SCALE: 3/8" = 1'-0"

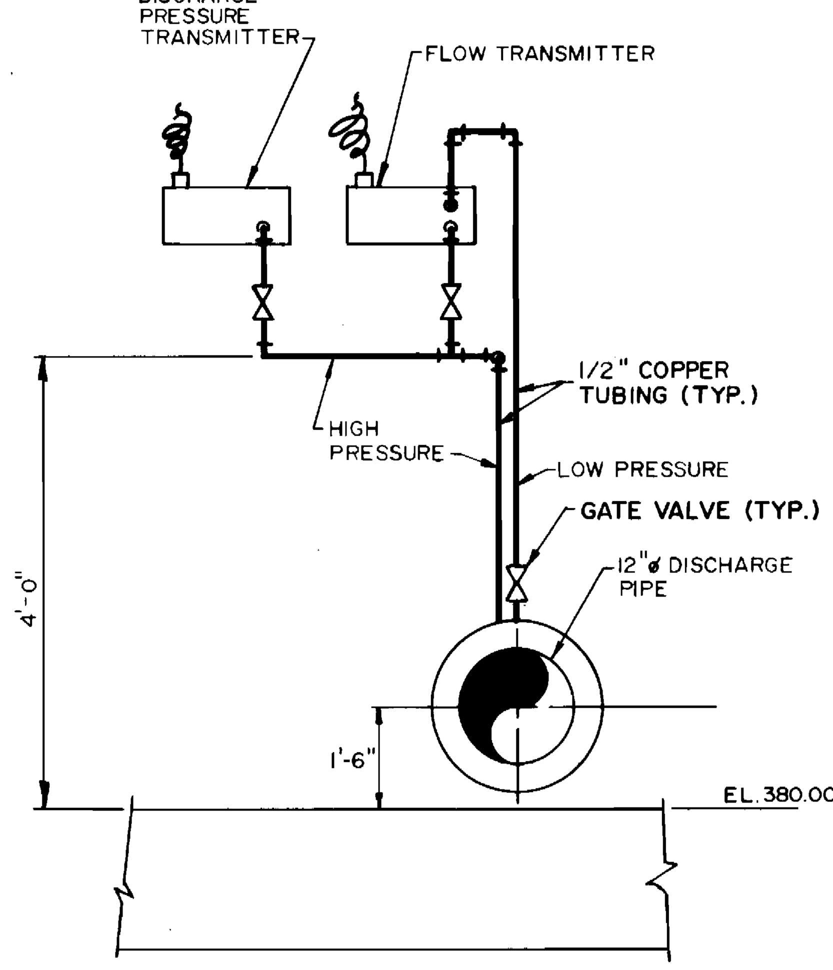

SECTION J-J

SCALE: 3/4" = 1'-0"

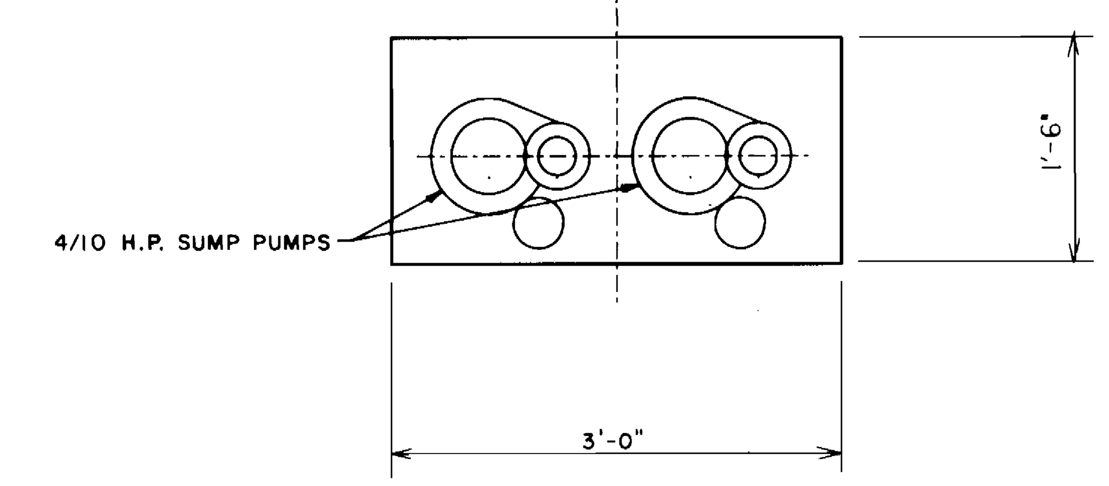

PLAN

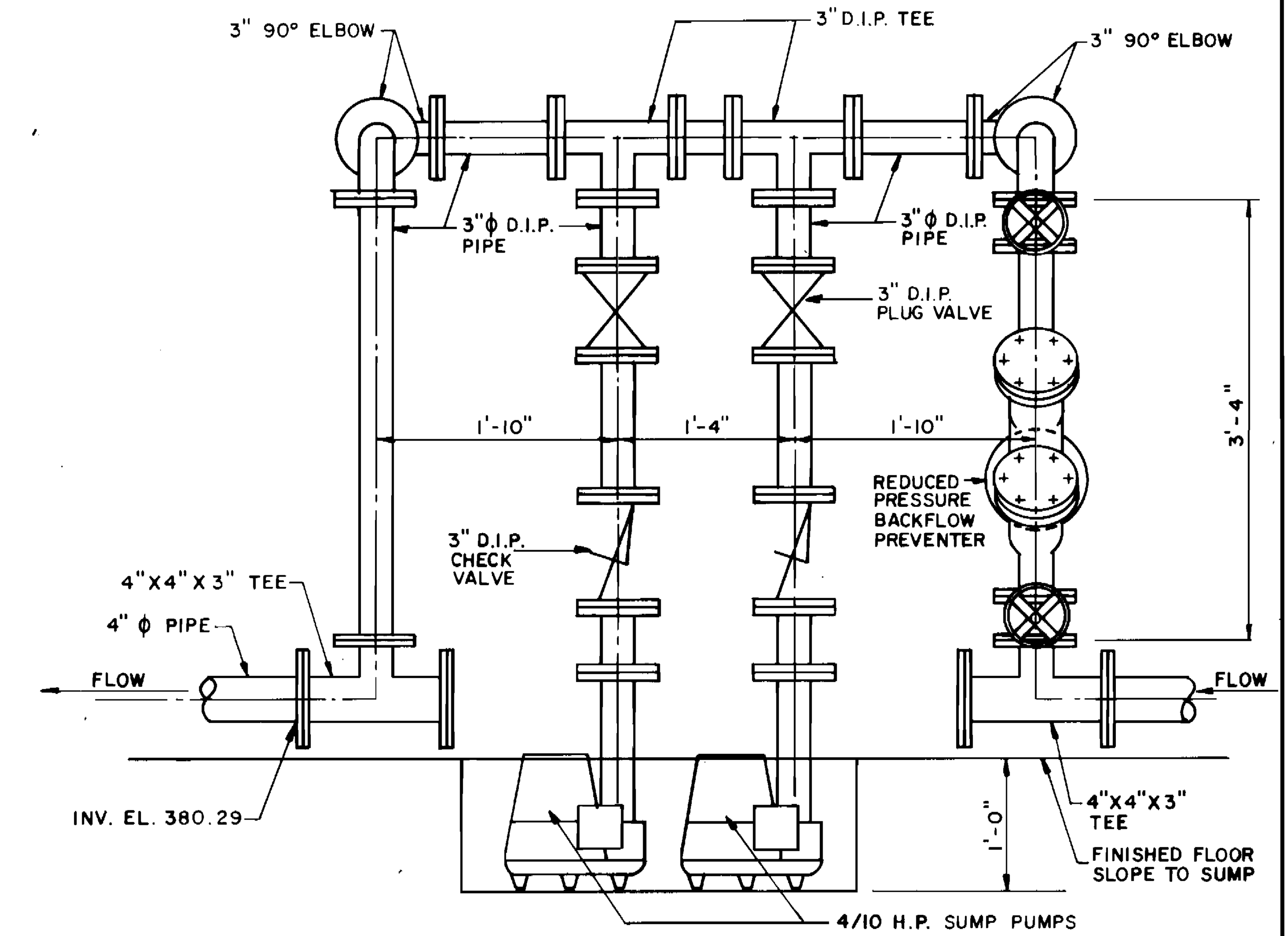

ELEVATION SUMP PUMP DETAIL

SCALE: 1" = 1'-0"

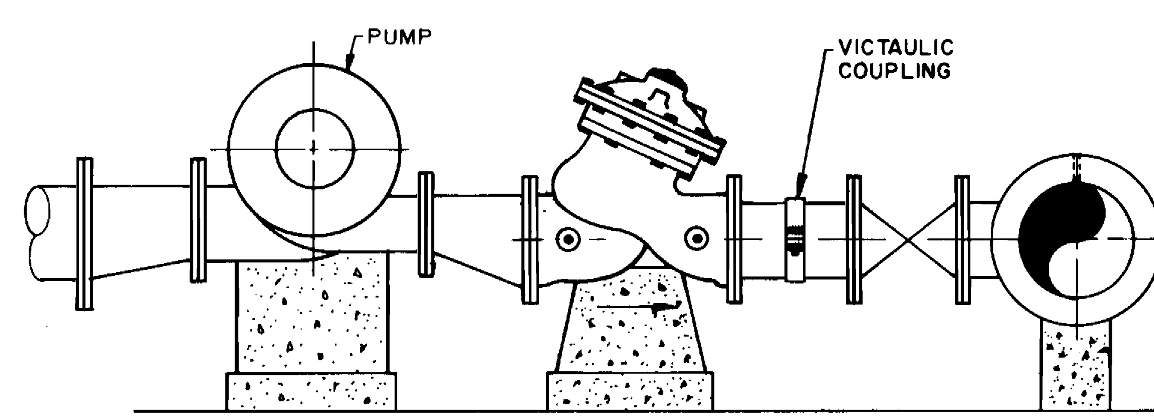

TYP. PUMP CONTROL VALVE AND PIPING DETAIL

SECTION K-K

SCALE: 3/4" = 1'-0"

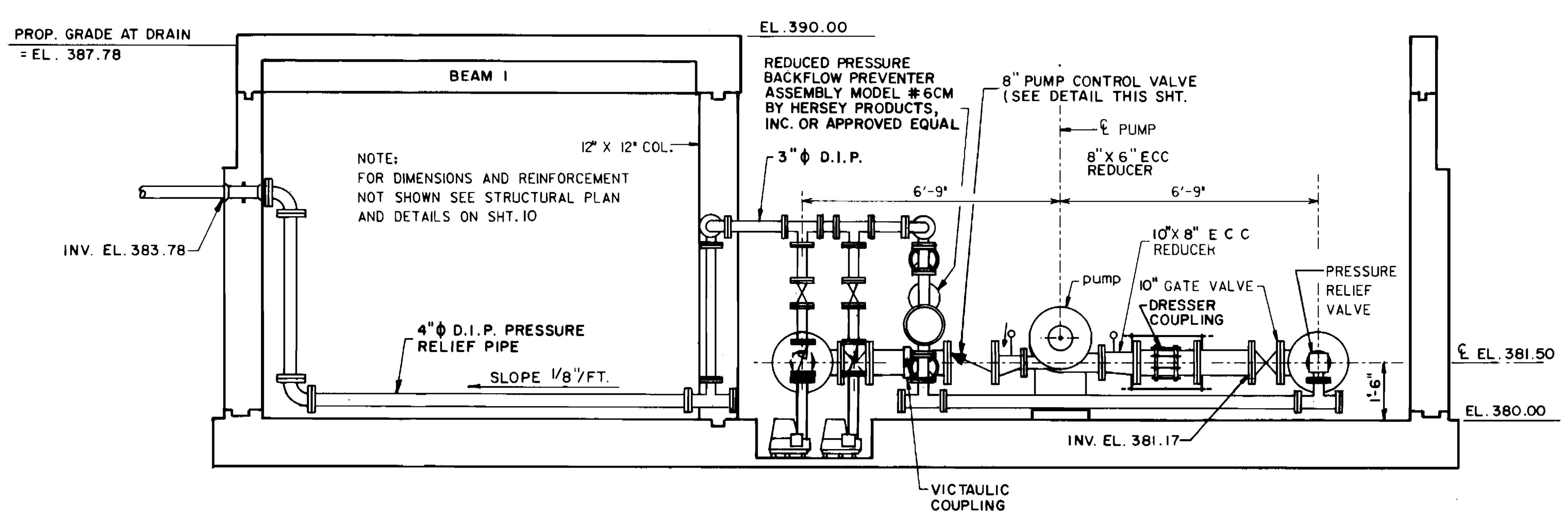

SECTION E-E

SCALE: 3/8" = 1'-0"

NOTE: ALL REDUCERS TO HAVE 1/2" NPT BOSSED TAP AT POSITION "S" FOR ECC REDUCERS AND 12"x12"x12" TEES TO HAVE 1" NPT BOSSED TAP AT POSITION "G" ACCORDING TO STANDARD BOSS TAPPED LOCATIONS FOR FLANGED FITTINGS.

E C C INDICATES ECCENTRIC

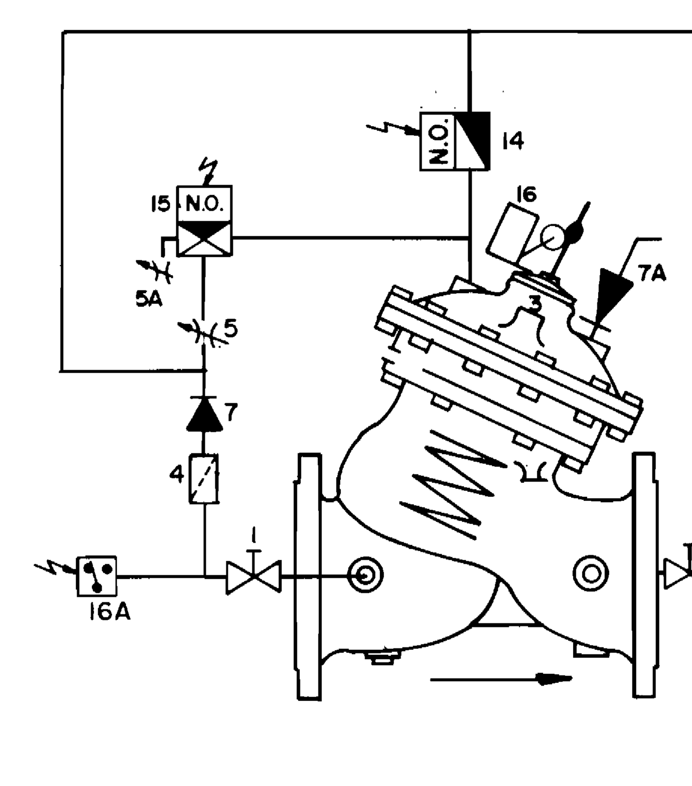

CONTROLS LIST

1. COCK VALVE
3. COVER PLUG
4. FILTER
5. NEEDLE VALVE-CLOSING SPEED
5A. NEEDLE VALVE-OPENING SPEED
7. CHECK VALVE
7A. CHECK VALVE
14. 2-WAY SOLENOID (EMERGENCY CLOSE)
15. 3-WAY SOLENOID
16. LIMIT SWITCH
16A. PRESSURE SWITCH

SCHEMATIC PIPING PUMP CONTROL VALVE

NTS

DEPARTMENT OF PUBLIC WORKS
HOWARD COUNTY, MARYLAND

DIRECTOR OF PUBLIC WORKS	DATE 6/10/91	CHIEF, BUREAU OF ENGINEERING	DATE 6-6-91
CHIEF, BUREAU OF UTILITIES	DATE 6-7-91	CHIEF, UTILITY DESIGN DIVISION	DATE 6-6-91

BUCHART HORN, INC. — Baltimore, MD; Charleston, WV; Frankfurt, W. Germany; Lancaster, PA; Lewisburg, PA; Memphis, TN; Mt. Laurel, NJ; New Orleans, LA; Williamsburg, VA; York, PA
Engineers, Architects, and Planners

STATE OF MARYLAND — PROFESSIONAL ENGINEER — REGISTERED

DES: J. FALK
DRN: A. G. S.
CHK: J. FALK
DATE: 9/25/90

BY	NO.	REVISION	DATE

PIPING PLAN & DETAILS

600' SCALE MAP NO. 30 BLOCK NO. 10 & 11

EDGAR ROAD WATER PUMPING STATION
CONTRACT NO. 44-1917
CAPITAL PROJECT NO. W-8129
ELECTION DISTRICT NO. 2
HOWARD COUNTY, MARYLAND

SCALE AS SHOWN

SHEET 11 OF 22

FILENAME: PSPIP.DGN 2-02-90

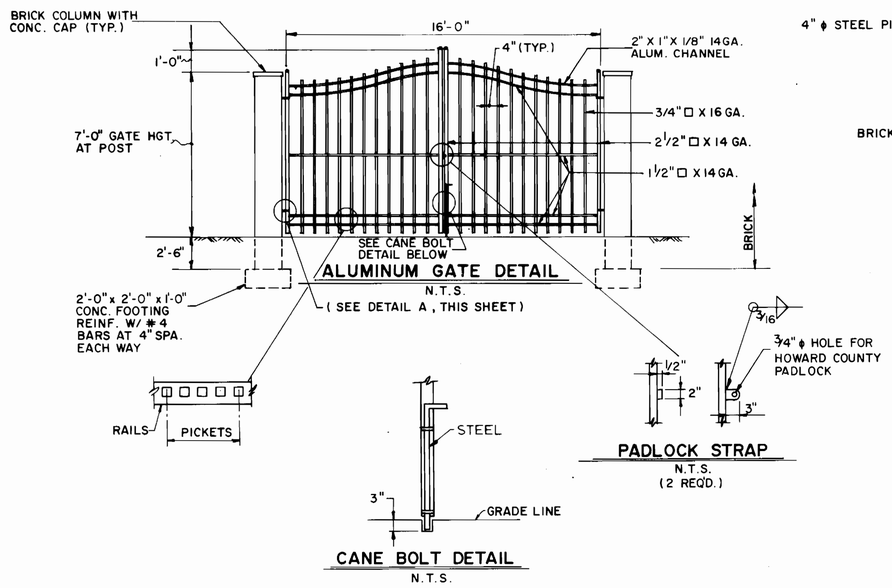

ALUMINUM GATE DETAIL
N.T.S.

PADLOCK STRAP
N.T.S.
(2 REQ'D.)

CANE BOLT DETAIL
N.T.S.

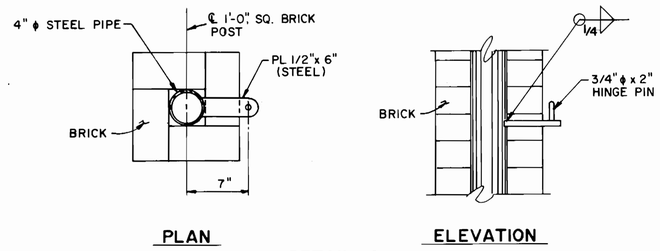

PLAN

DETAIL A
SCALE: 1 1/2" = 1'-0"

ELEVATION

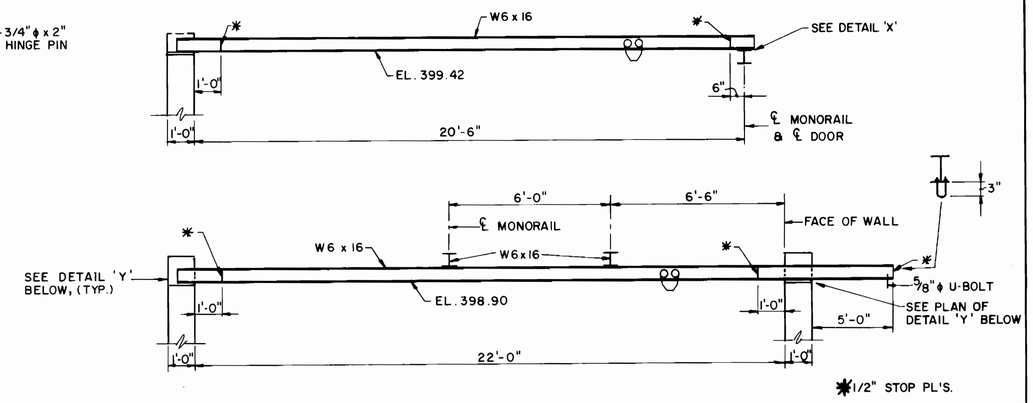

ELEVATIONS
SCALE: 3/8" = 1'-0"

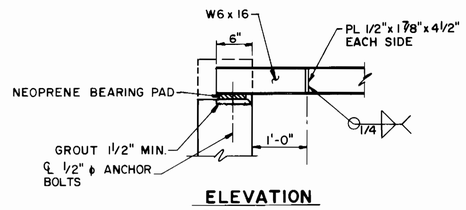

ELEVATION
DETAIL Y

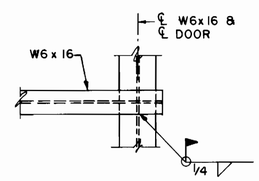

DETAIL X

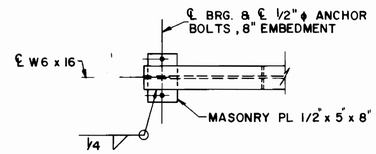

PLAN
DETAIL Y

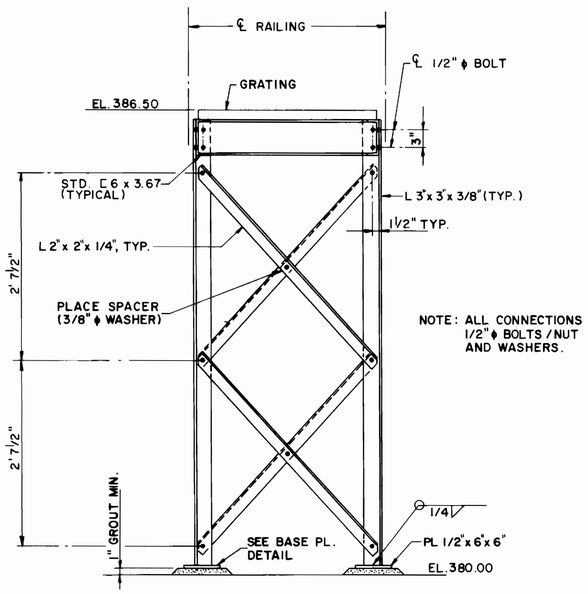

SECTION
SCALE: 1" = 1'-0"
H-H
10 | 12

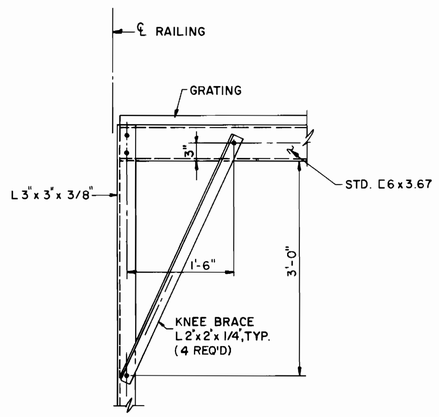

ELEVATION A-A
SCALE: 1" = 1'-0"
(SEE SHEET # 10)

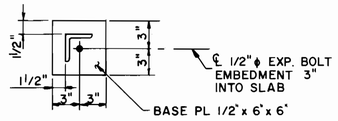

BASE PLATE DETAIL
SCALE: 1 1/2" = 1'-0"

ALUMINUM WALKWAY SUPPORT DETAILS
SCALE AS NOTED

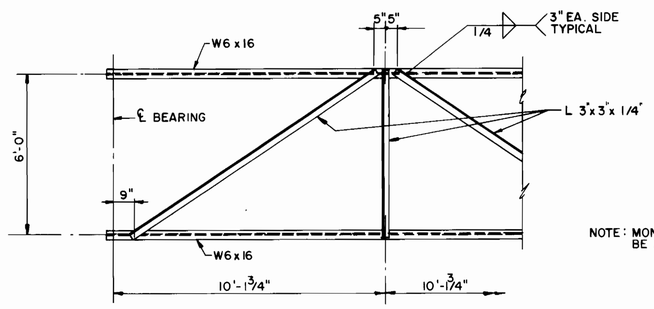

TOP BRACING
SCALE: 3/8" = 1'-0"

NOTE: MONORAIL AND BRACING SHALL BE A-36 STEEL, GALV.

MONORAIL DETAILS

NOTES: FOR STRUCTURAL NOTES, SEE SHT. NO. 2.
FOR MONORAIL PLAN, SEE SHT. NO. 10.
FOR WALKWAY PLAN, SEE SHT. NO. 10.

DEPARTMENT OF PUBLIC WORKS
HOWARD COUNTY, MARYLAND

DIRECTOR OF PUBLIC WORKS — DATE 6/10/91
CHIEF, BUREAU OF ENGINEERING — DATE 6-6-91
CHIEF, BUREAU OF UTILITIES — DATE 6-7-91
CHIEF, UTILITY DESIGN DIVISION — DATE 6-6-91

BUCHART HORN, INC.
Engineers, Architects and planners
Baltimore, MD. | Memphis, TN.
Charleston, WV. | Mt. Laurel, NJ.
Frankfort, W. Germany | New Orleans, LA.
Lancaster, PA. | Williamsburg, VA.
Lewisburg, PA. | York, PA.

STATE OF MARYLAND — JOHN F. LONGWELL — No. 4234 — PROFESSIONAL ENGINEER

DES: K.S.
DRN: A.G.S.
CHK: K.S.
DATE: 9/25/90

BY	NO.	REVISION	DATE

MISCELLANEOUS DETAILS

600' SCALE MAP NO. 30 BLOCK NO. 10 & 11

EDGAR ROAD WATER PUMPING STATION
CONTRACT NO. 44-1917
CAPITAL PROJECT NO. W-8129
ELECTION DISTRICT NO. 2
HOWARD COUNTY, MARYLAND

SCALE AS SHOWN

SHEET 12 OF 22

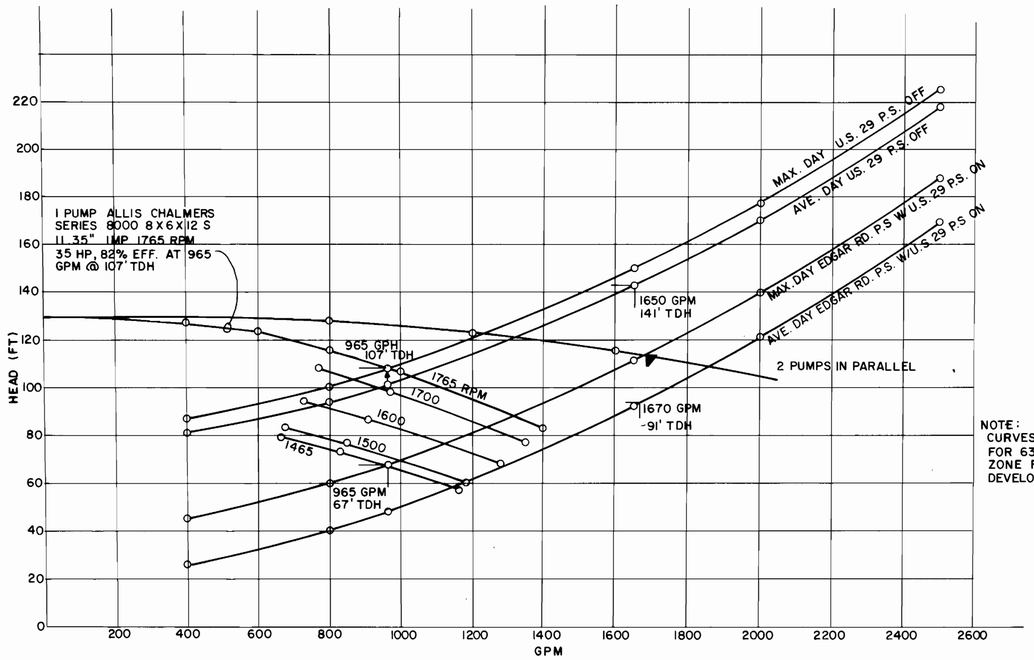

NOTE:
CURVES SHOWN ARE FOR 630 E ZONE FULL DEVELOPMENT

PUMP AND SYSTEM CURVES
N.T.S.

PIPE SIZE	TIE RODS NO.	TIE RODS DIA.	FLANGE CLAMP THICK	FLANGE CLAMP "B"	FLANGE CLAMP "C"	FLANGE CLAMP NO. OF FLG. BOLTS PER CLAMP
8"	2	5/8"	1/2"	4 5/8"	8 5/8"	2
10"	2	1"	3/4"	5"	10"	2
12"	2	1"	3/4"	5"	10"	2

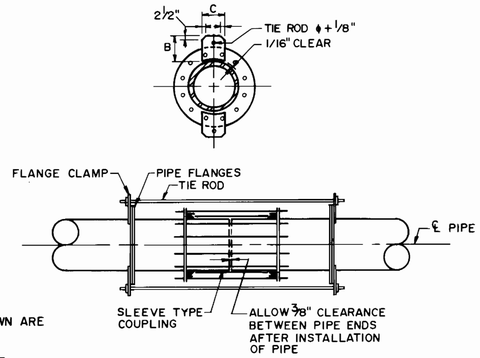

STYLE 38 DRESSER COUPLING & TIE ROD ASSEMBLY
N.T.S.

NOTE:
1. ONE TIE ROD PER FLANGE CLAMP. FLANGE CLAMPS EQUALLY SPACED AROUND PIPES.
2. ALL FLEXIBLE COUPLINGS, AND FLANGE ADAPTERS TO HAVE TIE RODS IN ACCORDANCE WITH TABLE ABOVE.

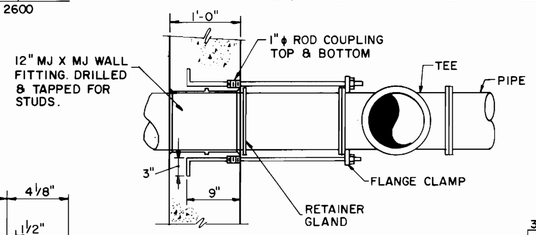

SUCTION SLEEVE DETAIL
N.T.S.

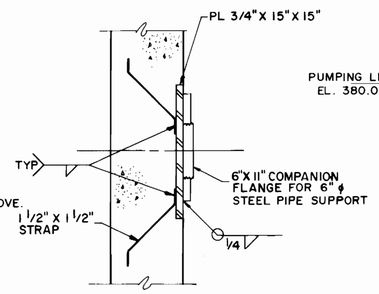

SUCTION LINE SUPPORT DETAIL
N.T.S.

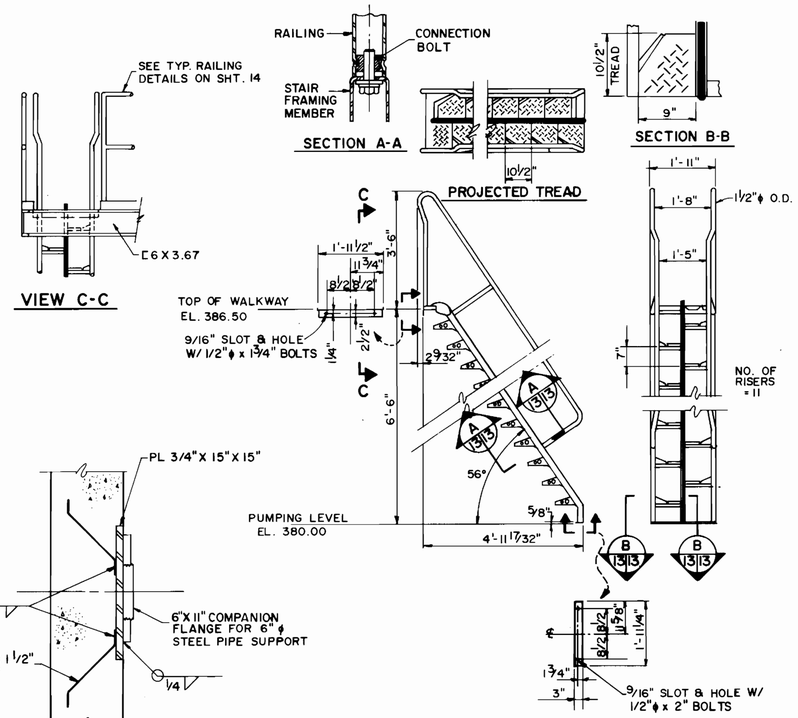

LAPEYRE STAIR DETAILS
N.T.S.
(LAPEYRE STAIR MANUFACTURED BY LAPEYRE STAIR CO. MODEL NO. 56-CST-SST OF NEW ORLEANS LA.) ALL MATERIAL TO BE HOT DIPPED GALVANIZED.

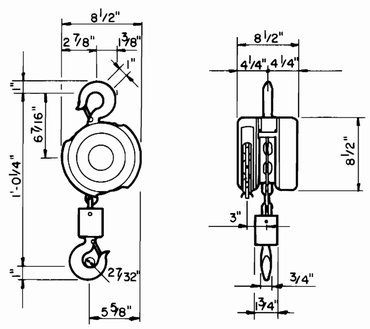

DETAIL 1 TON HAND CHAIN HOIST
N.T.S.
(2 REQUIRED)

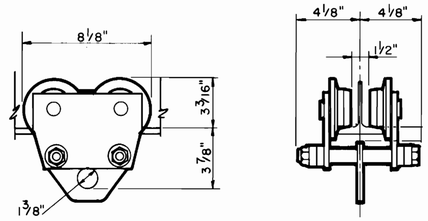

DETAIL-PLAIN TROLLEY
N.T.S.
(2 REQUIRED)

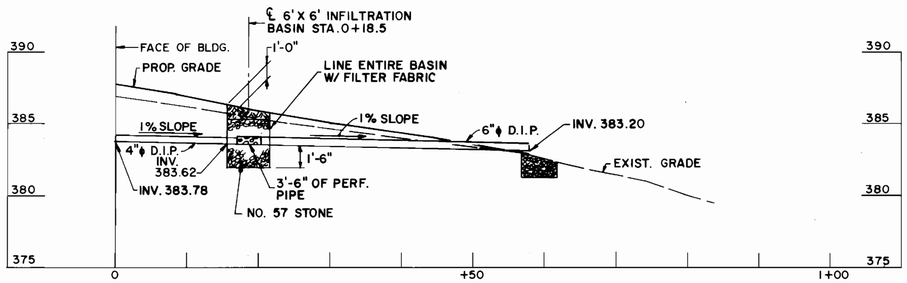

PROFILE PRESSURE RELIEF DRAIN
SCALE: HORIZ.: 1"=10' VERT. 1"=5'

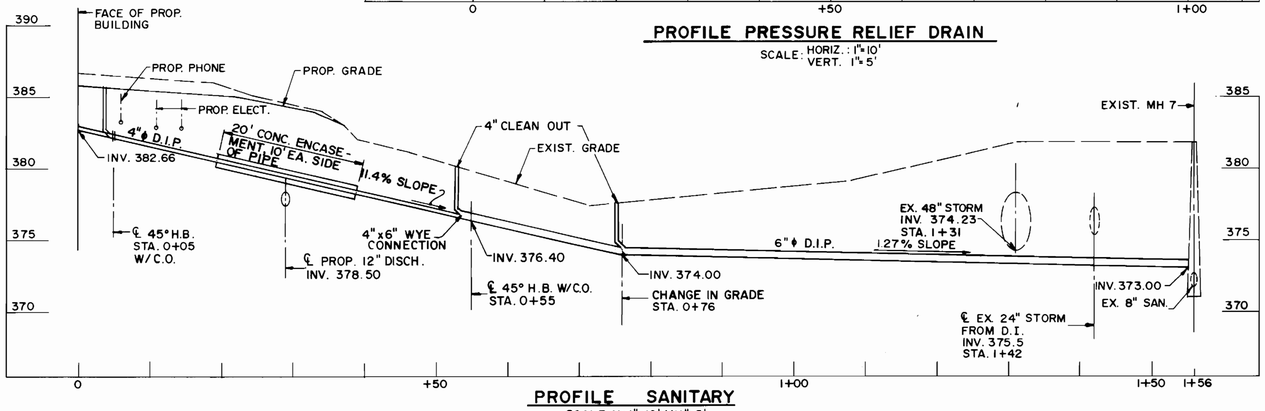

PROFILE SANITARY
SCALE H: 1"=10', V: 1"=5'

DEPARTMENT OF PUBLIC WORKS
HOWARD COUNTY, MARYLAND

DIRECTOR OF PUBLIC WORKS — DATE 6/10/91
CHIEF, BUREAU OF ENGINEERING — DATE 6-6-91
CHIEF, BUREAU OF UTILITIES — DATE 6-7-91
CHIEF, UTILITY DESIGN DIVISION — DATE 6-6-91

BUCHART HORN, INC.
Engineers, Architects, and Planners
Baltimore, MD. Charleston, W.V. Frankfurt, W. Germany Lancaster, PA Lewisburg, PA Memphis, TN. Mt. Laurel, NJ New Orleans, LA Williamsburg, VA York, PA.

STATE OF MARYLAND — JOHN E. BOWMAN — No. 13346 — PROFESSIONAL ENGINEER

DES: J.F.
DRN: A.G.S.
CHK: J. FALK
DATE: 9/25/90

BY	NO.	REVISION	DATE

MISCELLANEOUS DETAILS

600' SCALE MAP NO. 30 BLOCK NO. 10 B 11

EDGAR ROAD WATER PUMPING STATION
CONTRACT NO. 44-1917
CAPITAL PROJECT NO. W-8129
ELECTION DISTRICT NO. 2
HOWARD COUNTY, MARYLAND

SCALE AS SHOWN

SHEET 13 OF 22

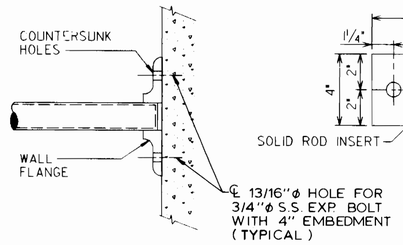

WALL FLANGE DETAIL
SCALE: 3"=1'-0"

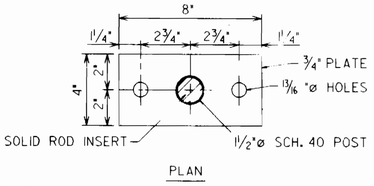

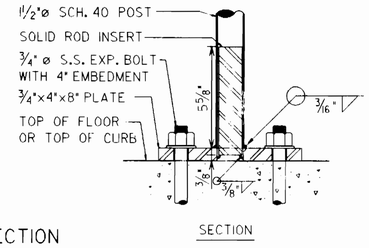

POST CONNECTION
SCALE: 3" = 1'-0"

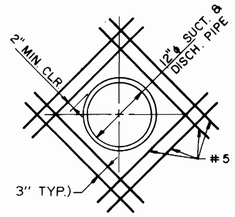

ADDITIONAL REINFORCEMENT AT WALL OPENINGS
NO SCALE

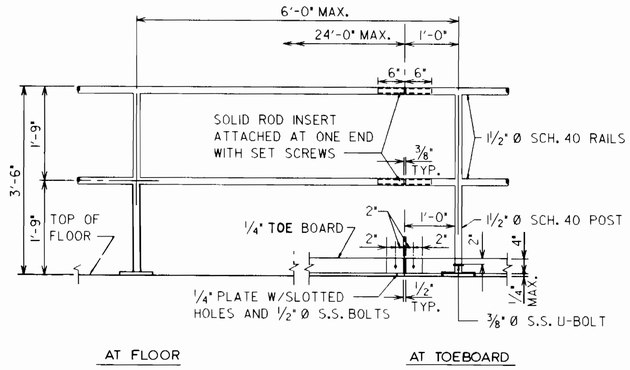

TYPICAL ELEVATION
SCALE: ¾" = 1'-0"

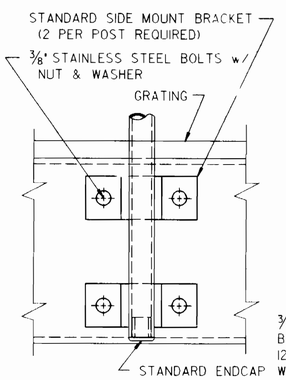

SIDE MOUNTED BRACKET
SCALE: 3" = 1'-0"

ALUMINUM RAILING DETAILS
SCALES AS SHOWN

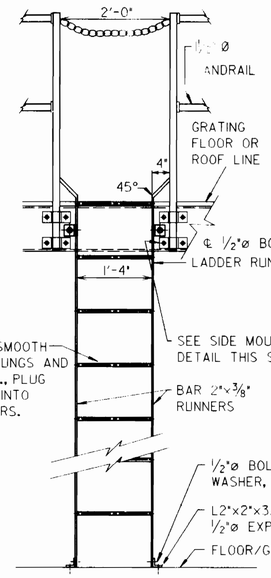

ELEVATION

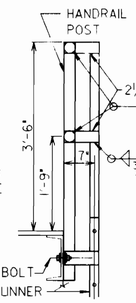

SECTION

ALUMINUM STANDARD LADDER W/ RAILING CONNECTIONS
SCALE: ¾"=1'-0"

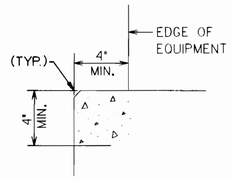

MOTOR CONTROL CENTER CONCRETE PAD
SCALE: ¾"=1'-0"
(SEE SHEET 18)

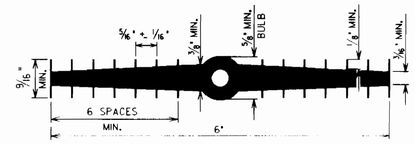

6" CENTER - BULB WATERSTOP
NO SCALE

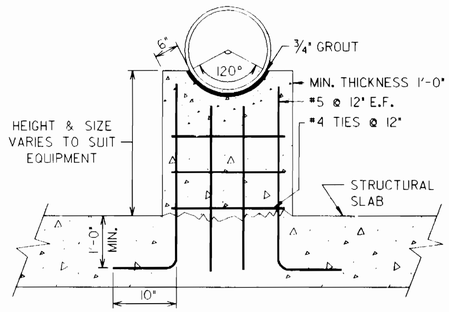

TYPICAL PIPE & VALVE SUPPORT
NO SCALE

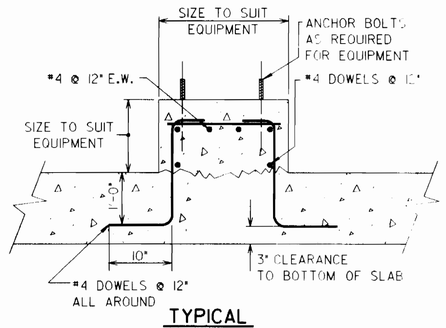

TYPICAL EQUIPMENT SUPPORT
NO SCALE

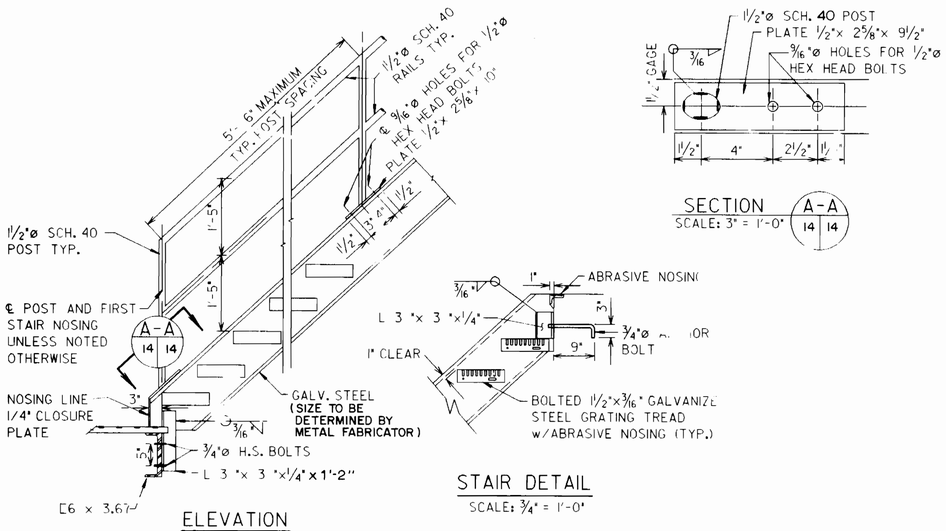

ELEVATION
SCALE: ¾" = 1'-0"

STAIR DETAIL
SCALE: ¾" = 1'-0"

SECTION A-A
SCALE: 3" = 1'-0"

STAIR / RAILING DETAILS
SCALES AS SHOWN

BAR SIZE	90° HOOKS X
#3	6"
#4	8"
#5	10"
#6	12"
#7	14"
#8	16"
#9	19"
#10	22"
#11	24"

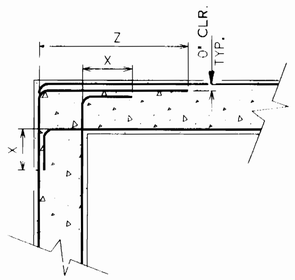

NOTE:
1. "Z" = 36 BAR DIAMETERS. FOR "X" SEE TABLE ABOVE.

HORIZONTAL REINFORCEMENT AT WALL INTERSECTIONS
SCALE: ¾"=1'-0"

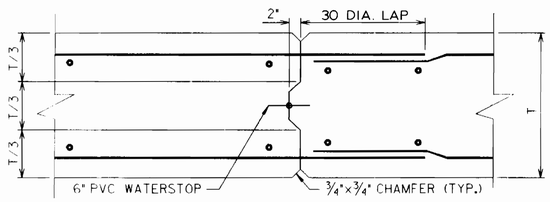

CONSTRUCTION JOINT
NO SCALE

NOTES:
1. FOR LAPEYERE STAIR DETAILS, SEE SHEEET NO. 13

DEPARTMENT OF PUBLIC WORKS
HOWARD COUNTY, MARYLAND

DIRECTOR OF PUBLIC WORKS	DATE 6/6/91	CHIEF, BUREAU OF ENGINEERING	DATE 6-6-91
CHIEF, BUREAU OF UTILITIES	DATE 6-7-91	CHIEF, UTILITY DESIGN DIVISION	DATE 6-6-91

BUCHART HORN, INC.
Baltimore, MD · Charleston, WV · Frankfurt, W. Germany · Lancaster, PA · Lewisburg, PA · Memphis, TN · Mt. Laurel, NJ · New Orleans, LA · Williamsburg, VA · York, PA
Engineers, Architects, and Planners

STATE OF MARYLAND · KEVIN SHEA KOHLER · No. 15,903 · PROFESSIONAL ENGINEER

DES: K.S.
DRN: V.D.H.
CHK: K.S.
DATE: 9/25/90

BY	NO.	REVISION	DATE

MISCELLANEOUS DETAILS

600' SCALE MAP NO. 30 BLOCK NO. 10 & 11

EDGAR ROAD WATER PUMPING STATION
CONTRACT NO. 44-1917
CAPITAL PROJECT NO. W-8129
ELECTION DISTRICT NO. 2
HOWARD COUNTY, MARYLAND

SCALE AS SHOWN

SHEET 14 OF 22

FILENAME: HCSECLDGN UPDATED 6-8-90

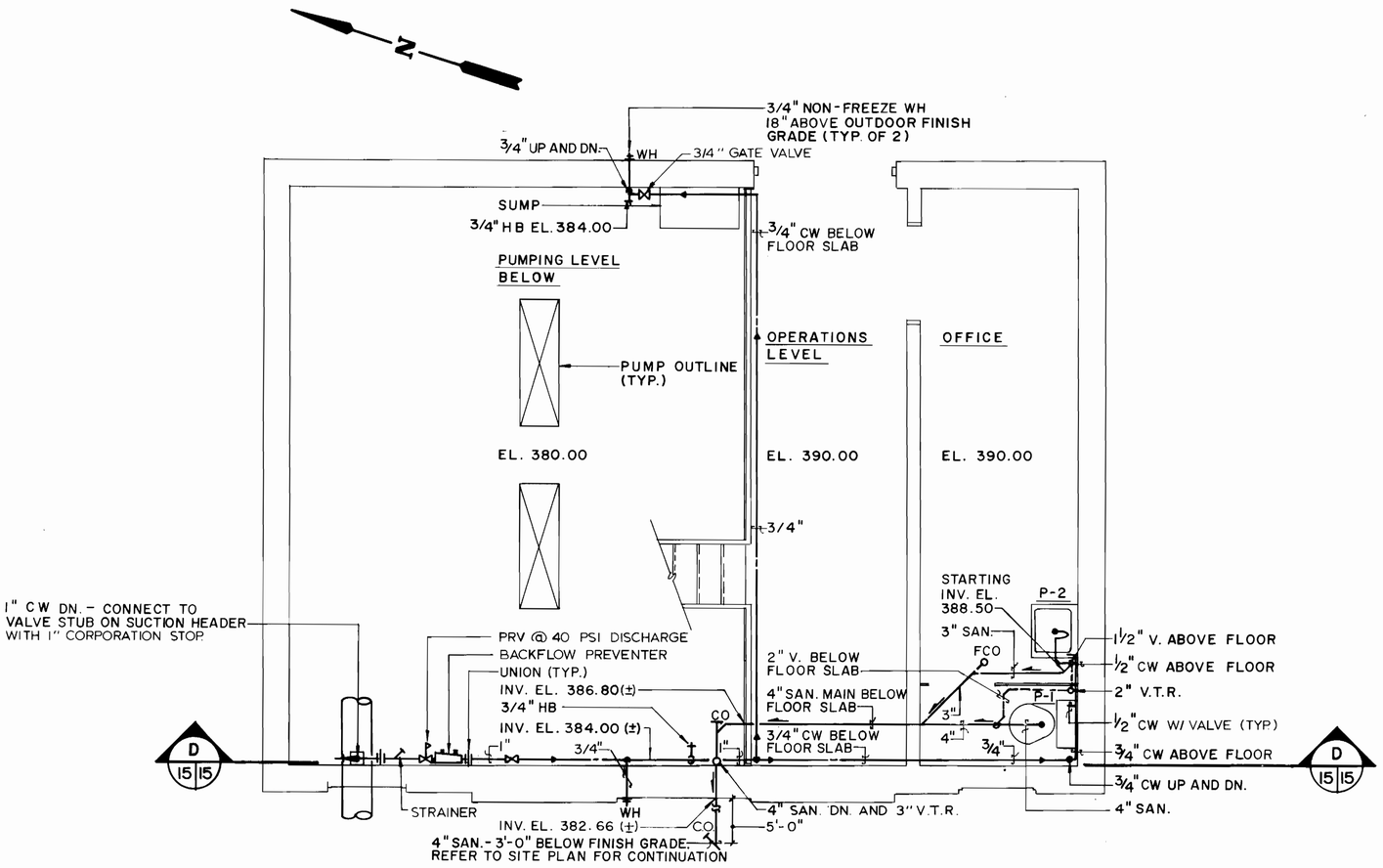

FLOOR PLAN

SCALE : 3/8" = 1'-0"

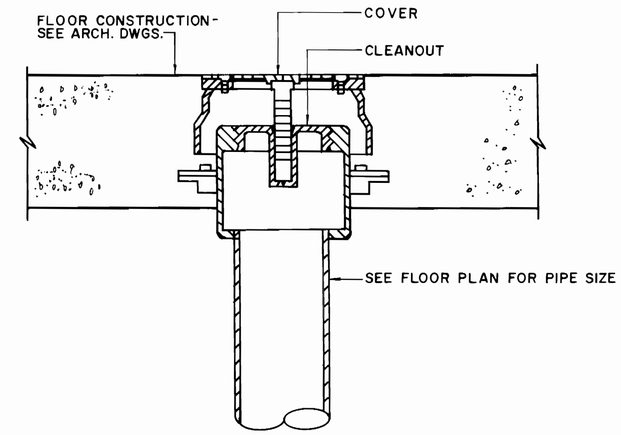

FLOOR CLEANOUT DETAIL

NO SCALE

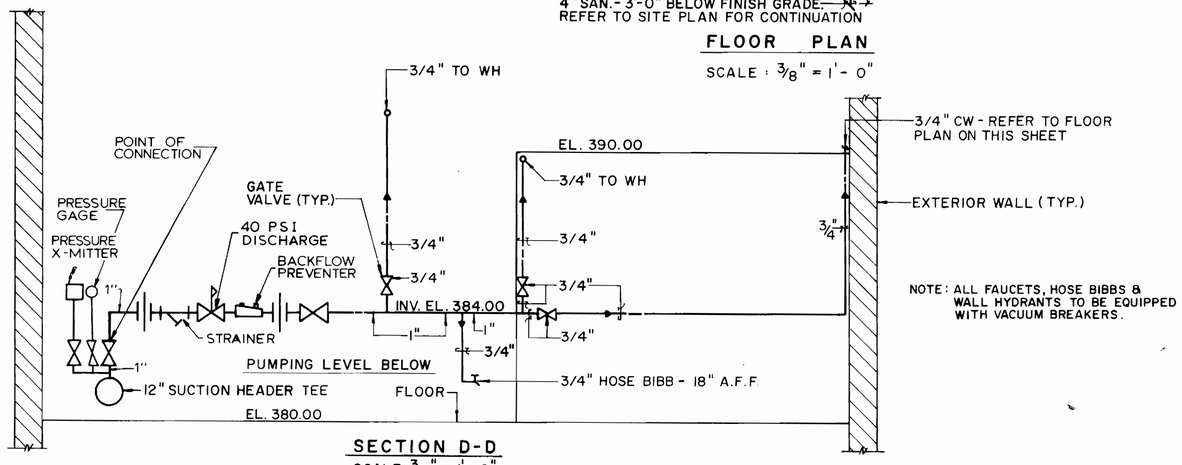

NOTE: ALL FAUCETS, HOSE BIBBS & WALL HYDRANTS TO BE EQUIPPED WITH VACUUM BREAKERS.

SECTION D-D

SCALE: 3/8" = 1'-0"

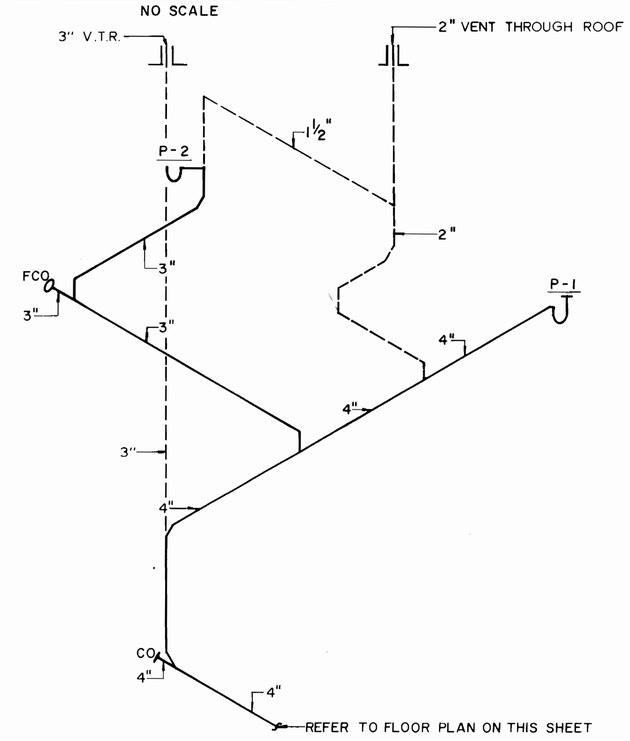

SANITARY RISER DIAGRAM

NO SCALE

DEPARTMENT OF PUBLIC WORKS HOWARD COUNTY, MARYLAND DIRECTOR OF PUBLIC WORKS DATE 6.6.91 CHIEF, BUREAU OF ENGINEERING DATE 6-6-91 CHIEF, BUREAU OF UTILITIES DATE 6-7-91 CHIEF, UTILITY DESIGN DIVISION DATE 6-6-91	BUCHART HORN, INC. Baltimore, MD · Charleston, WV · Frankfort, W. Germany · Lancaster, PA · Landsburg, PA · Memphis, TN · Mt. Laurel NJ · New Orleans, LA · Williamsburg, VA · York, PA Engineers, Architects and Planners	STATE OF MARYLAND JOHN LEONARD SCHMIDT No. 11848 PROFESSIONAL ENGINEER	DES: WPS DRN: WPS CHK: DLS DATE: 9/23/90	BY · NO. · REVISION · DATE	PLUMBING FLOOR PLAN, DETAIL, SECTION AND DIAGRAM 600' SCALE MAP NO. 30 BLOCK NO. 10 & 11	EDGAR ROAD WATER PUMPING STATION CONTRACT NO. 44-1917 CAPITAL PROJECT NO. W-8129 ELECTION DISTRICT NO. 2 HOWARD COUNTY, MARYLAND	SCALE AS SHOWN SHEET 15 OF 22

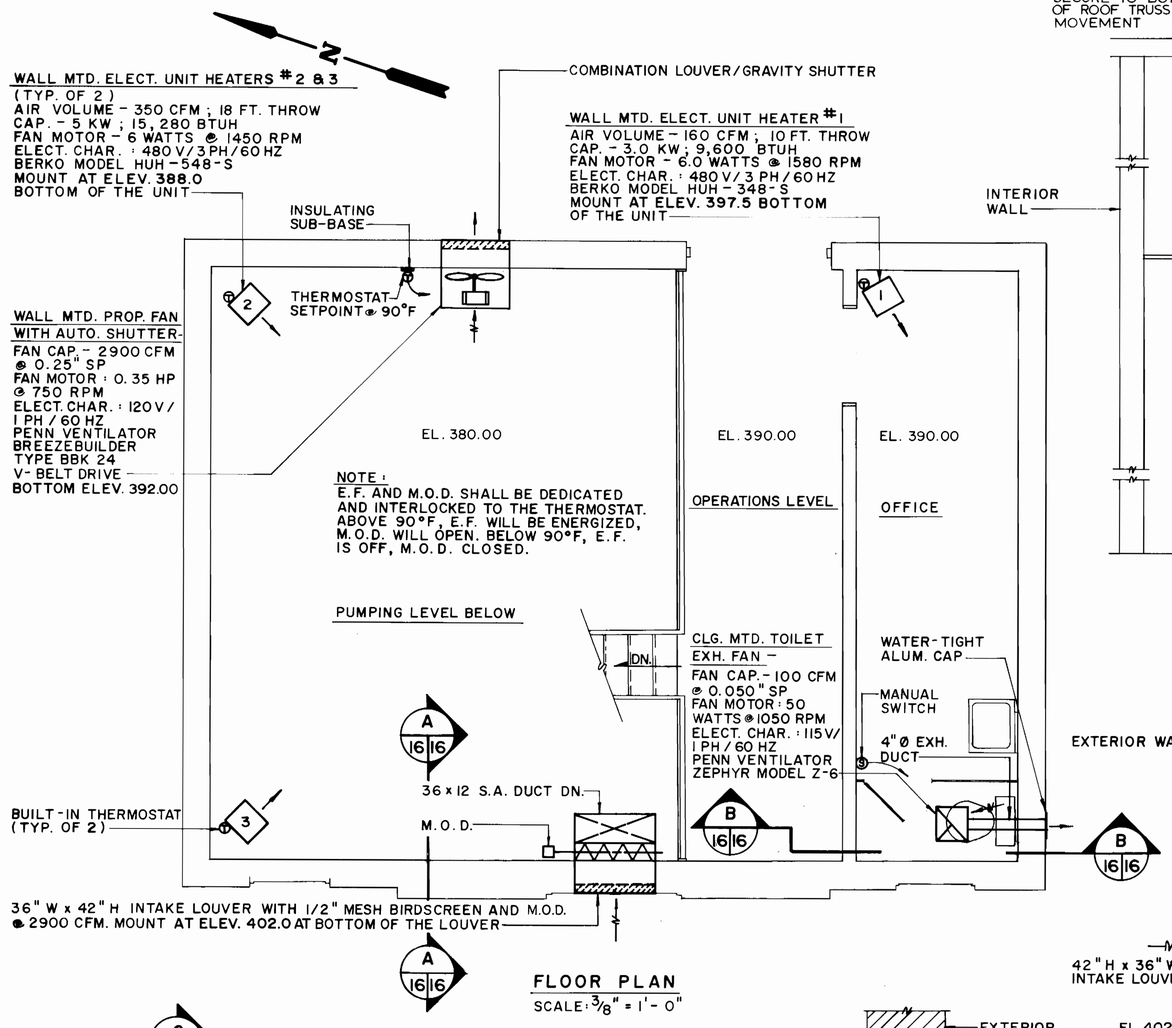

FLOOR PLAN
SCALE : 3/8" = 1'-0"

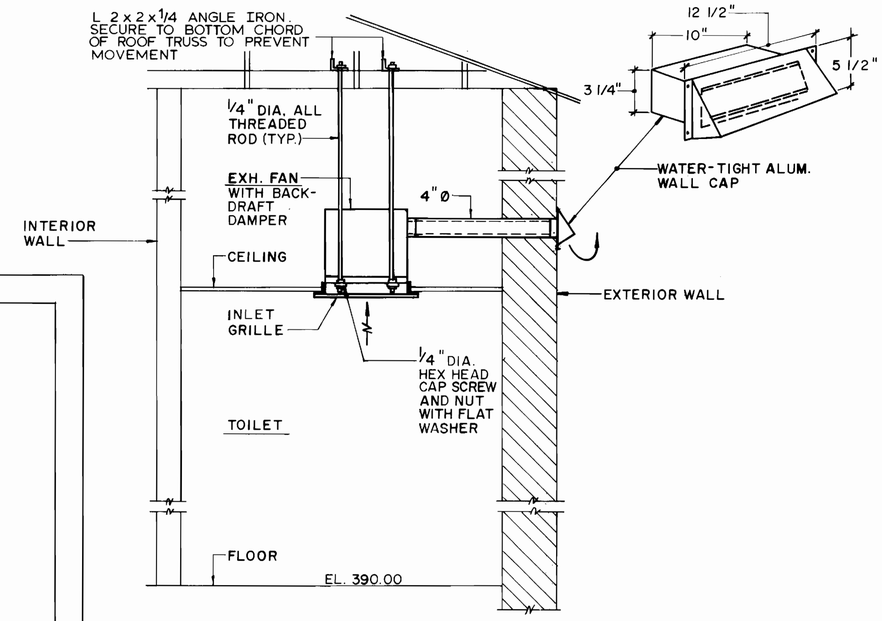

SECTION B-B
SCALE : 3/4" = 1'-0"

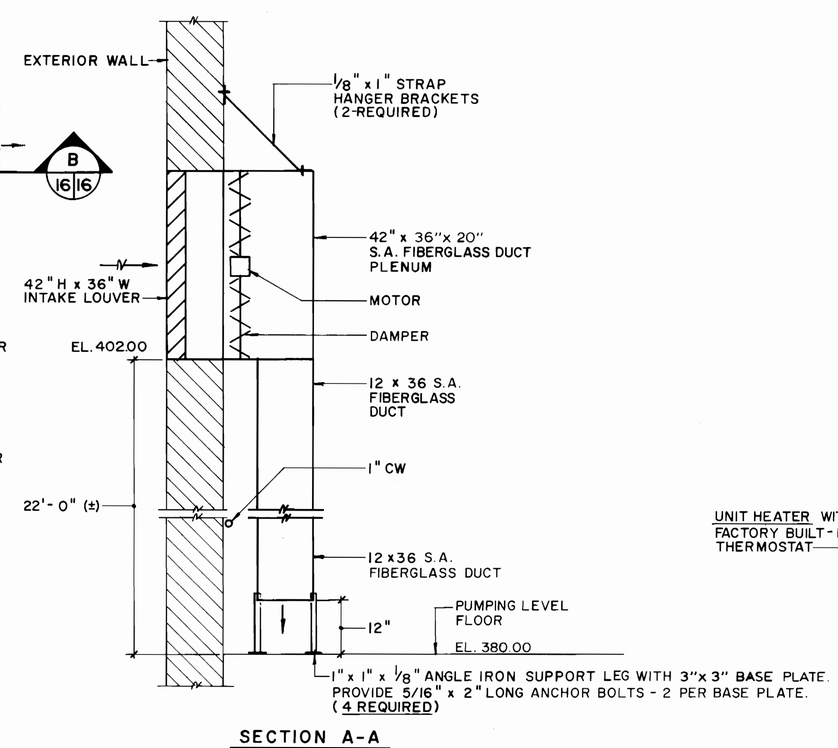

SECTION A-A
SCALE : 3/4" = 1'-0"

LEGEND		
SYMBOL	ABBREV.	DESCRIPTION
	S.A. DN.	SUPPLY AIR DUCT DOWN
	EXH.	EXHAUST AIR DUCT
	A.F.F.	ABOVE FINISHED FLOOR
	ALUM.	ALUMINUM
	AUTO.	AUTOMATIC
	BTUH	BRITISH THERMAL UNIT - HOUR
	CAP.	CAPACITY
	CHAR.	CHARACTERISTICS
	CFM	CUBIC FEET PER MINUTE
	CLG.	CEILING
	ELECT.	ELECTRIC, ELECTRICAL
	FT.	FEET
	HP	HORSEPOWER
	KW	KILOWATTS
	M.O.D.	MOTOR OPERATED DAMPER
	MTD.	MOUNTED
	PROP.	PROPELLER
	RPM	REVOLUTION PER MINUTE
	SP	STATIC PRESSURE
	V/PH/HZ	VOLTS/PHASE/HERTZ
	TYP.	TYPICAL
	W, H	WIDTH, HEIGHT
	WH	WALL HYDRANT
	SAN.	SANITARY
	CW	COLD WATER
	V	VENT
	PRV	PRESSURE REDUCING VALVE
		UNION
	PSI	POUNDS PER SQUARE INCH
		THERMOSTAT
	E.F.	EXHAUST FAN
	EL.	ELEVATION
	INV.	INVERT
	V.T.R.	VENT THRU ROOF
	F.C.O.	FLOOR CLEANOUT
	ARCH.	ARCHITECTURAL
	DWGS.	DRAWINGS
	P-1	WATER CLOSET
	P-2	SLOP SINK
Ø	DIA.	DIAMETER
		GATE VALVE
	HB	HOSE BIBB
		SWITCH
	EXH.	EXHAUST

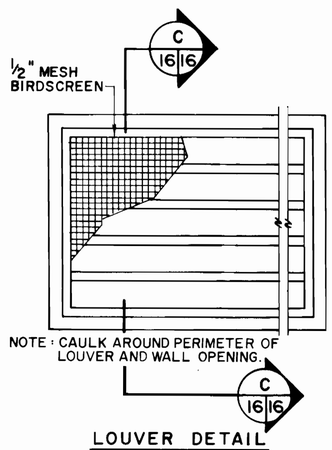

LOUVER DETAIL
NO SCALE

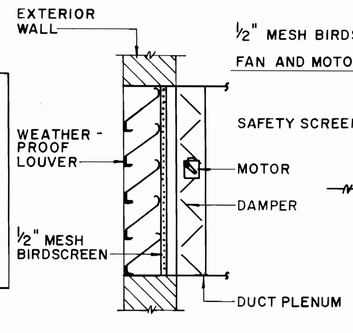

SECTION C-C
NO SCALE

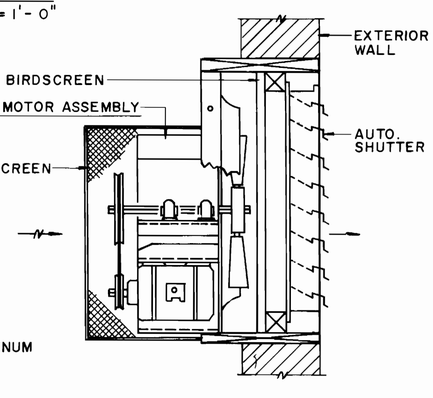

BELT DRIVE CENTRIFUGAL WALL MTD.
PROP. EXH. FAN DETAIL
NO SCALE

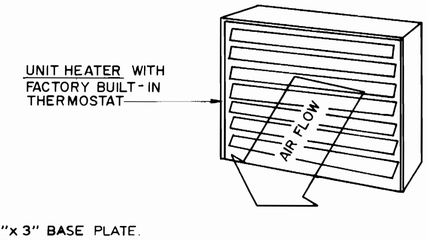

ELECTRIC UNIT HEATER DETAIL
NO SCALE

DEPARTMENT OF PUBLIC WORKS
HOWARD COUNTY, MARYLAND

DIRECTOR OF PUBLIC WORKS — DATE 6-6-91
CHIEF, BUREAU OF ENGINEERING — DATE 6-6-91
CHIEF, BUREAU OF UTILITIES — DATE 6-7-91
CHIEF, UTILITY DESIGN DIVISION — DATE 6-6-91

BUCHART HORN, INC.
Baltimore, MD — Memphis, TN
Charleston, WV — Mt. Laurel, NJ
Frankfurt, W. Germany — New Orleans, LA
Lancaster, PA — Williamsburg, VA
Lewisberg, PA — York, PA
Engineers, Architects and Planners

STATE OF MARYLAND — DONALD L. SOWERS — No. 13346 — PROFESSIONAL ENGINEER

DES: WPS
DRN: WPS
CHK: DLS
DATE: 9/25/90

BY	NO.	REVISION	DATE

HEATING AND VENTILATING
FLOOR PLAN, DETAIL,
SECTION AND LEGEND

600' SCALE MAP NO. 30 BLOCK NO. 10 & 11

EDGAR ROAD WATER PUMPING STATION
CONTRACT NO. 44-1917
CAPITAL PROJECT NO. W-8129
ELECTION DISTRICT NO. 2
HOWARD COUNTY, MARYLAND

SCALE AS SHOWN

SHEET 16 OF 22

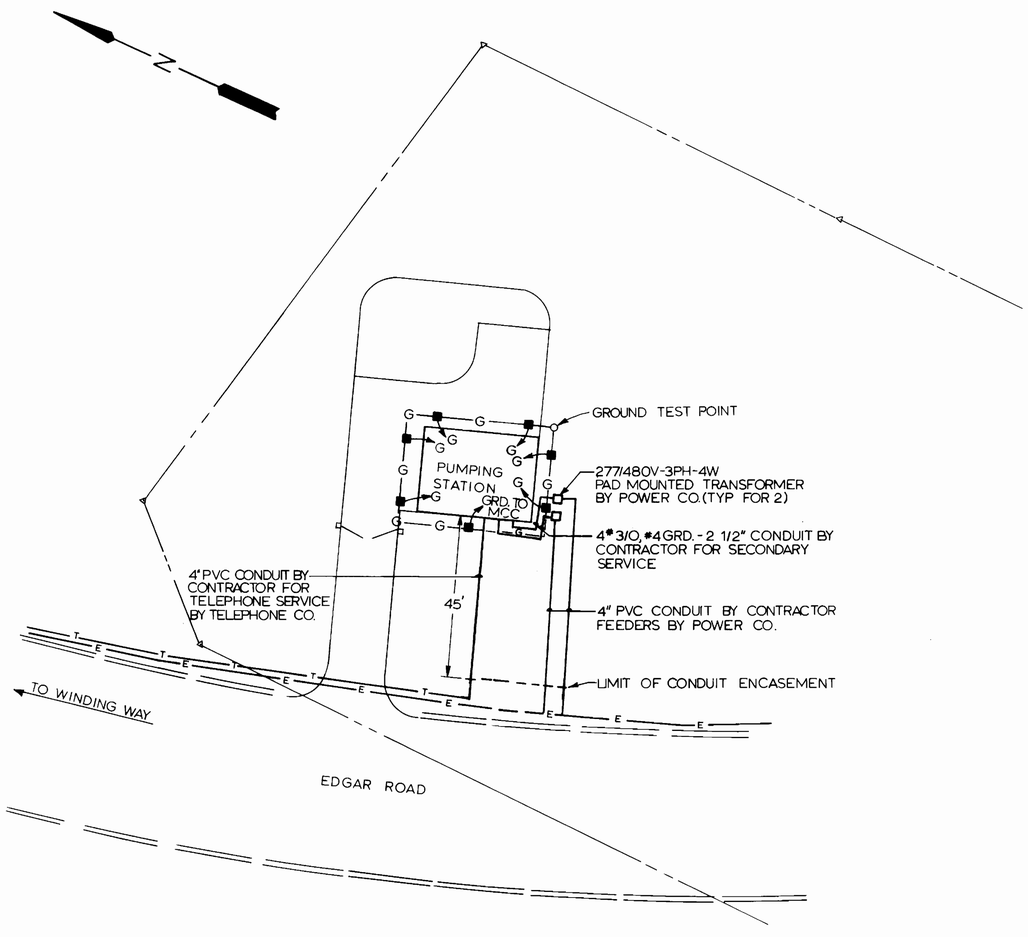

ELECTRICAL SITE PLAN

10' 0 20' 40'
1"= 20'

ELECTRICAL SYMBOL SCHEDULE

- MOTOR (SIZE AND TYPE AS NOTED)
- JUNCTION BOX (PVC COATED)
- HOME RUN TO PANEL
- TICKS INDICATE NUMBER OF WIRE
- 20A-120V-DUPLEX RECEPTACLE
- GROUND WIRE INCLUDED IN HOME RUN
- A — AMPERE
- V — VOLTS
- PH — PHASE
- DISCONNECT SWITCH - SIZE & TYPE AS NOTED
- C — CONDUIT
- KW — KILOWATT
- GRD. — GROUND
- TYP. — TYPICAL
- VFD — VARIABLE FREQUENCY DRIVE
- M.O.D. — MOTOR OPERATE DAMPER
- P.L.C. — PROGRAMMABLE LOGIC CONTROLLER
- SHLD — SHIELDED CABLE
- M.C.C. — MOTOR CONTROL CENTER
- A.F.F. — ABOVE FINISHED FLOOR
- A.F.G. — ABOVE FINISHED GRADE
- R.T.U. — REMOTE TELEMETRY UNIT
- HP — HORSE POWER
- CONTROL PANEL, PUSHBUTTON STATION AS NOTED
- INSTRUMENT AS NOTED
- S — SWITCH
- TM — THERMAL MAGNETIC
- TELEPHONE HOME RUN
- MCP — MOTOR CIRCUIT PROTECTOR
- CKT — CIRCUIT
- PHOTO ELECTRIC CELL
- ETM — ELAPSED TIME METER
- G — GROUND
- W.P. — WEATHERPROOF
- S_T — THERMAL SWITCH
- G.F.I. — GROUND FAULT INTERRUPTER
- 20A-120V-SINGLE RECEPTACLE
- EXOTHERMIC WELD

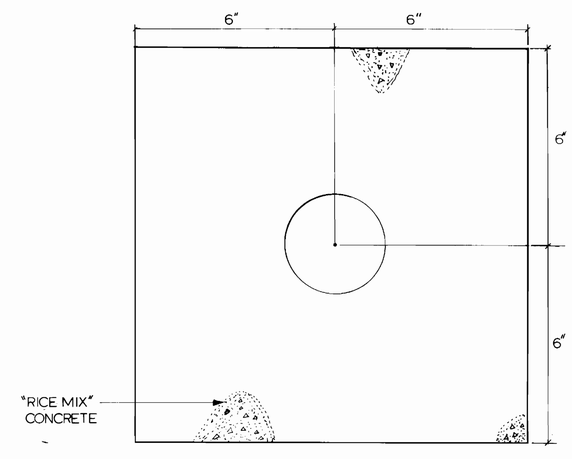

TYPICAL CONDUIT CONCRETE ENCASEMENT DETAIL

NO SCALE

NOTES:

1. 4" PVC CONDUIT FOR TELEPHONE SERVICE SHALL BE ENCASED IN A SEPARATE CONCRETE ENVELOPE FROM POWER CO. FEEDERS.
2. ALL UNDERGROUND CONDUIT SHALL BE ENCASED IN A CONCRETE ENVELOPE TO A DEPTH OF 24". SEE TYPICAL ENCASEMENT DETAIL ON THIS DRAWING.
3. CONTRACTOR SHALL COORDINATE THE EXACT LOCATION OF ALL UNDERGROUND CONDUITS AND DUCT BANKS TO AVOID INTERFERENCES WITH UNDERGROUND PIPING.

DEPARTMENT OF PUBLIC WORKS
HOWARD COUNTY, MARYLAND

DIRECTOR OF PUBLIC WORKS — DATE 6-6-91
CHIEF, BUREAU OF ENGINEERING — DATE 6-6-91
CHIEF, BUREAU OF UTILITIES — DATE 6-7-91
CHIEF, UTILITY DESIGN DIVISION — DATE 6-6-91

BUCHART HORN, INC.
Engineers, Architects and Planners
Baltimore, MD; Charleston, WV; Frankfurt, W. Germany; Lancaster, PA; Lewisburg, PA; Memphis, TN; Mt. Laurel, NJ; New Orleans, LA; Williamsburg, VA; York, PA

DES: P.F.B.
DRN: E.O.O.
CHK: J.L.S.
DATE: 6-15-90

BY	NO.	REVISION	DATE

ELECTRICAL SITE PLAN
600' SCALE MAP NO. _____ BLOCK NO. _____

EDGAR ROAD WATER PUMPING STATION
CONTRACT NO. 44-1917
CAPITAL PROJECT NO. W-8129
ELECTION DISTRICT NO. 2
HOWARD COUNTY, MARYLAND

SCALE AS SHOWN

SHEET 17 OF 22

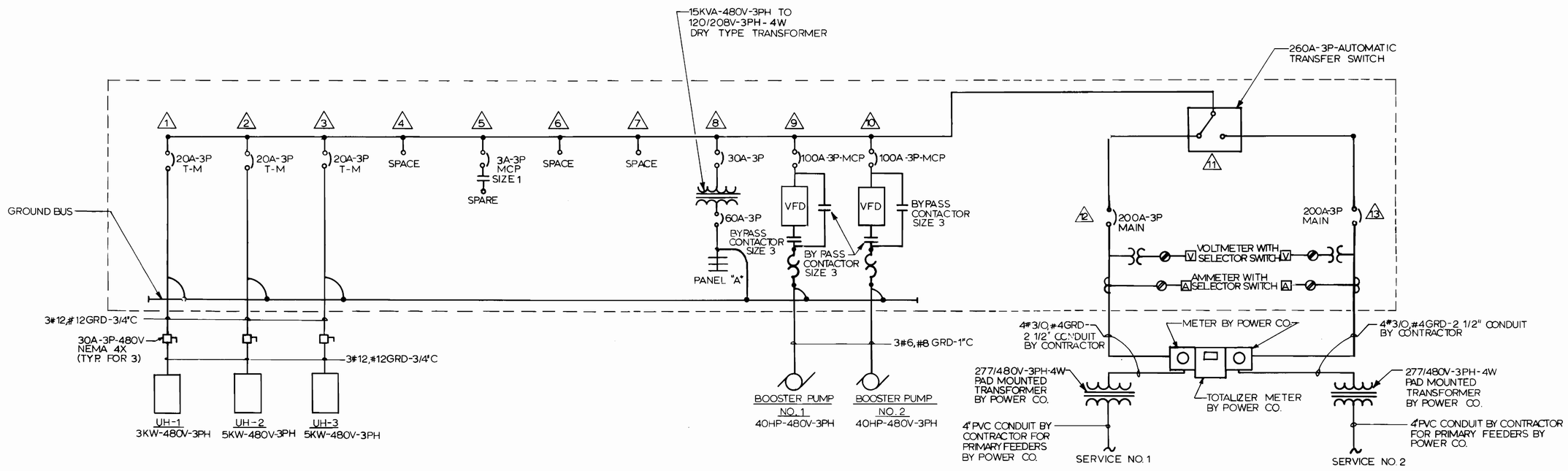

ONE LINE DIAGRAM

NO SCALE

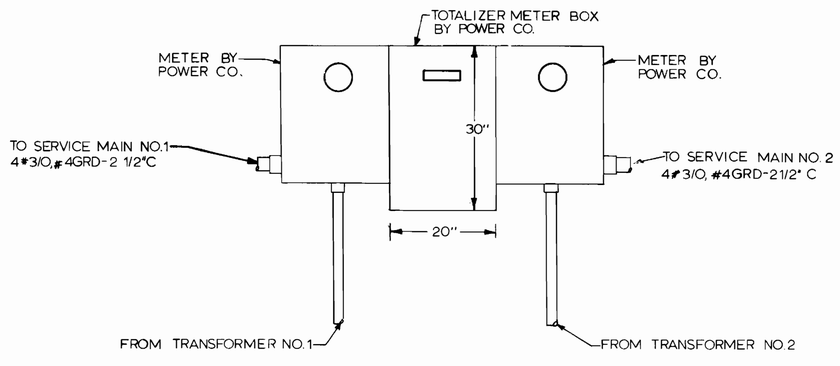

SERVICE METERING DETAIL

NO SCALE

MCC LEGEND

1. 20A-3P UH-1
2. 20A-3P UH-2
3. 20A-3P UH-3
4. SPACE
5. 3A-3P-MCP SPARE
6. SPACE
7. SPACE
8. 30A-3P PANEL "A"
9. 100A-3P-MCP VFD NO.1
10. 100A-3P-MCP VFD NO.2
11. 260A-3P A.T.S.
12. 200A-3P MAIN NO. 1
13. 200A-3P MAIN NO. 2

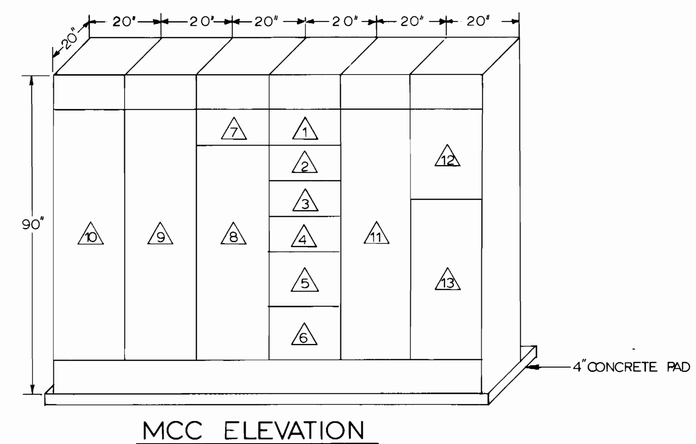

MCC ELEVATION

NO SCALE

DEPARTMENT OF PUBLIC WORKS
HOWARD COUNTY, MARYLAND

DIRECTOR OF PUBLIC WORKS — DATE
CHIEF, BUREAU OF ENGINEERING — DATE 6-6-91
CHIEF, BUREAU OF UTILITIES — DATE 6-7-91
CHIEF, UTILITY DESIGN DIVISION — DATE 6-6-91

BUCHART HORN, INC.
Engineers, Architects and Planners
Baltimore, MD · Charleston, WV · Frankfurt, W. Germany · Lancaster, PA · Lewisburg, PA · Memphis, TN · Mt. Laurel, NJ · New Orleans, LA · Williamsburg, VA · York, PA

STATE OF MARYLAND — JAMES L. SHEPHERD — No. 11391 — PROFESSIONAL ENGINEER

DES: P.E.B.
DRN: E.O.Q.
CHK: J.L.S.
DATE: 6-15-90

BY	NO.	REVISION	DATE

ELECTRICAL ONE LINE DIAGRAM AND DETAIL

600' SCALE MAP NO. _____ BLOCK NO. _____

EDGAR ROAD WATER PUMPING STATION
CONTRACT NO. 44-1917
CAPITAL PROJECT NO. W-8129
ELECTION DISTRICT NO. 2
HOWARD COUNTY, MARYLAND

SCALE AS SHOWN

SHEET 18 OF 22

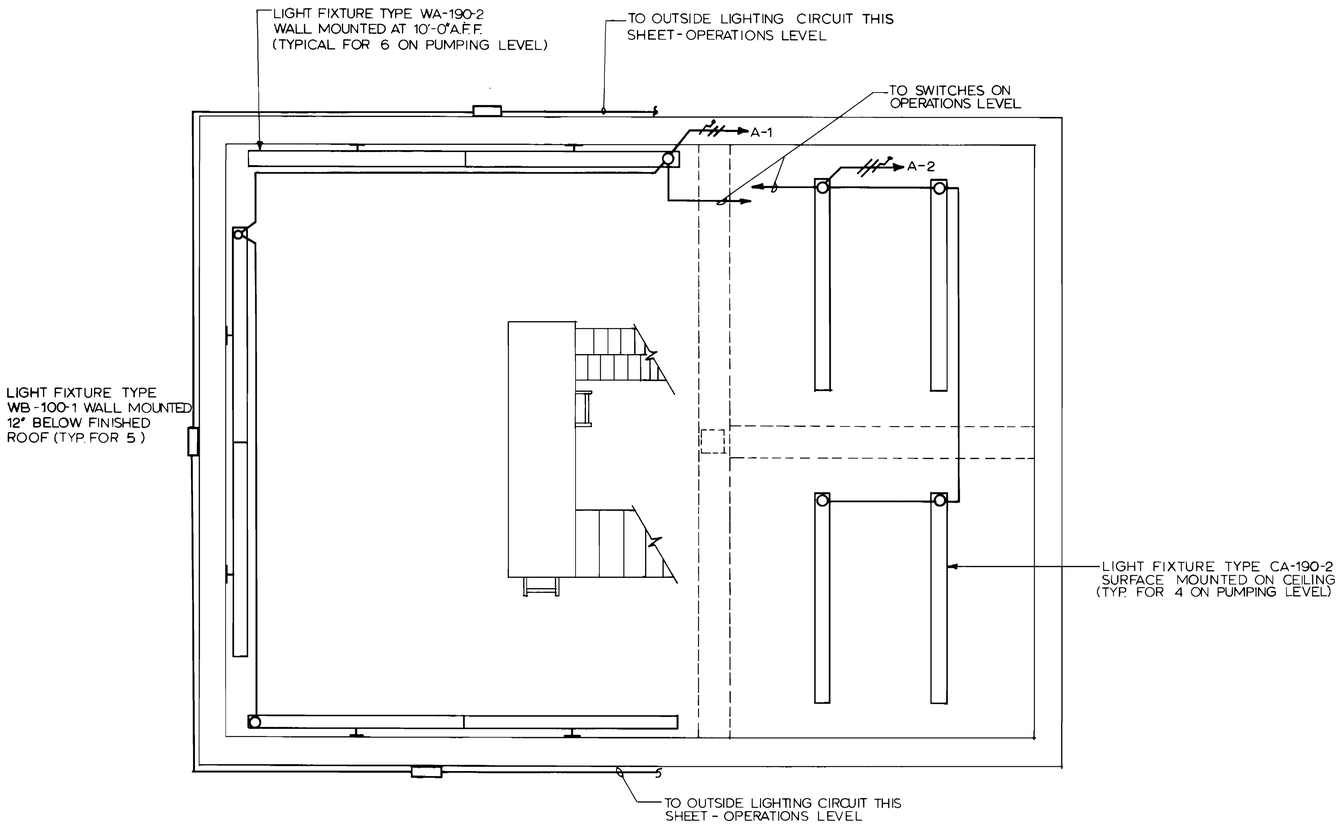

PUMPING LEVEL-LIGHTING PLAN

0 1' 2' 4' 8'
3/8"=1'-0"

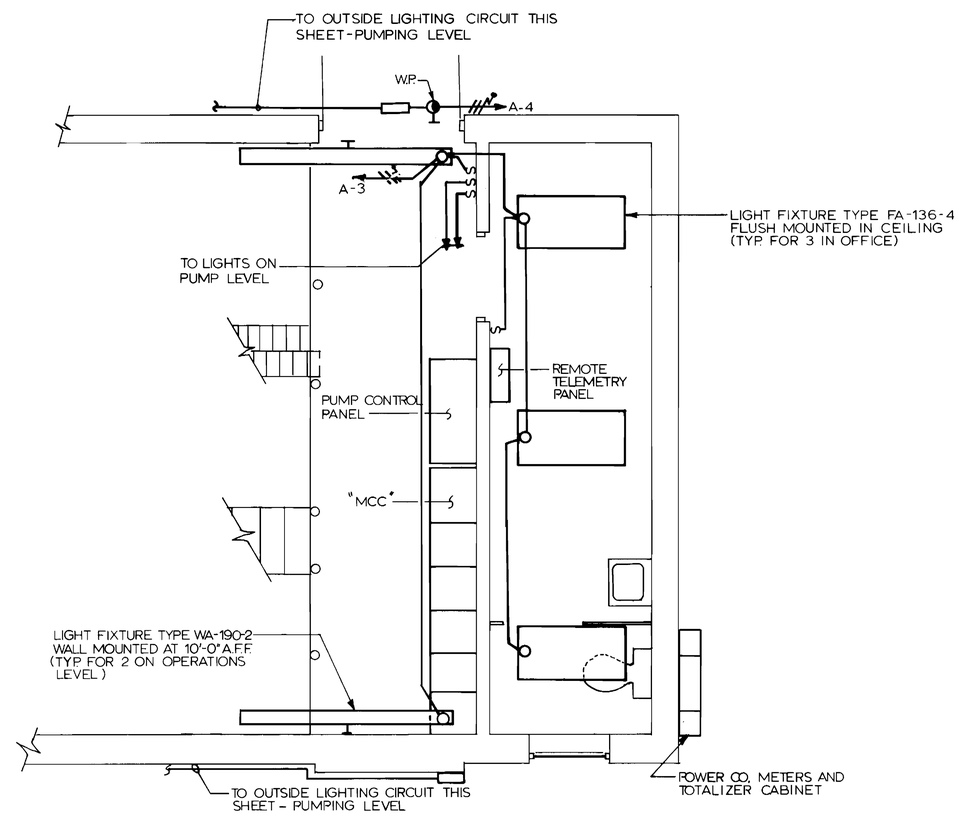

OPERATIONS LEVEL-LIGHTING PLAN

0 1' 2' 4' 8'
3/8"=1'-0"

LIGHT FIXTURE LEGEND

CA - CEILING MOUNTED
FA - FLUSH MOUNTED
WA - WALL MOUNTED
WB - OUTDOOR WALL MOUNTED

NOTE: THE NUMBER FOLLOWING FIXTURE TYPE INDICATES WATTAGE. LAST NUMBER INDICATES NUMBER OF LAMPS PER FIXTURE, I.E., CA-192-2

DEPARTMENT OF PUBLIC WORKS
HOWARD COUNTY, MARYLAND

DIRECTOR OF PUBLIC WORKS — DATE 6/10/91
CHIEF, BUREAU OF ENGINEERING — DATE 6-6-91
CHIEF, BUREAU OF UTILITIES — DATE 6-7-91
CHIEF, UTILITY DESIGN DIVISION — DATE 6-6-91

BUCHART HORN, INC.
Engineers, Architects and Planners
Baltimore, MD · Charleston, WV · Frankfurt, W. Germany · Lancaster, PA · Lewisburg, PA · Memphis, TN · Mt. Laurel, NJ · New Orleans, LA · Williamsburg, VA · York, PA

STATE OF MARYLAND — JAMES L. SEYFRIED — No. 11,828 — PROFESSIONAL ENGINEER

DES: P.E.B.					
DRN: E.O.O.					
CHK: J.L.S.					
DATE: 6-15-90	BY	NO.	REVISION	DATE	

ELECTRICAL LIGHTING PLAN

600' SCALE MAP NO. _____ BLOCK NO. _____

EDGAR ROAD WATER PUMPING STATION
CONTRACT NO. 44-1917
CAPITAL PROJECT NO. W-8129
ELECTION DISTRICT NO. 2
HOWARD COUNTY, MARYLAND

SCALE AS SHOWN

SHEET 19 OF 22

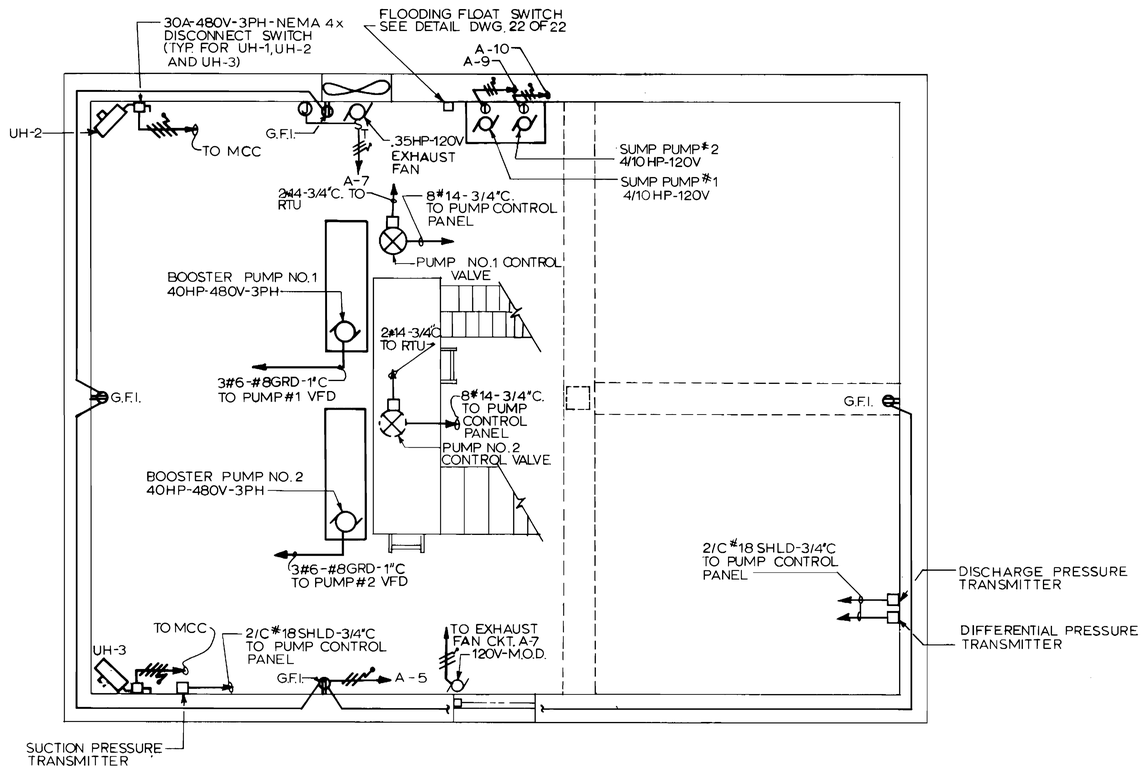

PUMPING LEVEL-POWER PLAN

0 1' 2' 4' 8'
3/8"=1'-0"

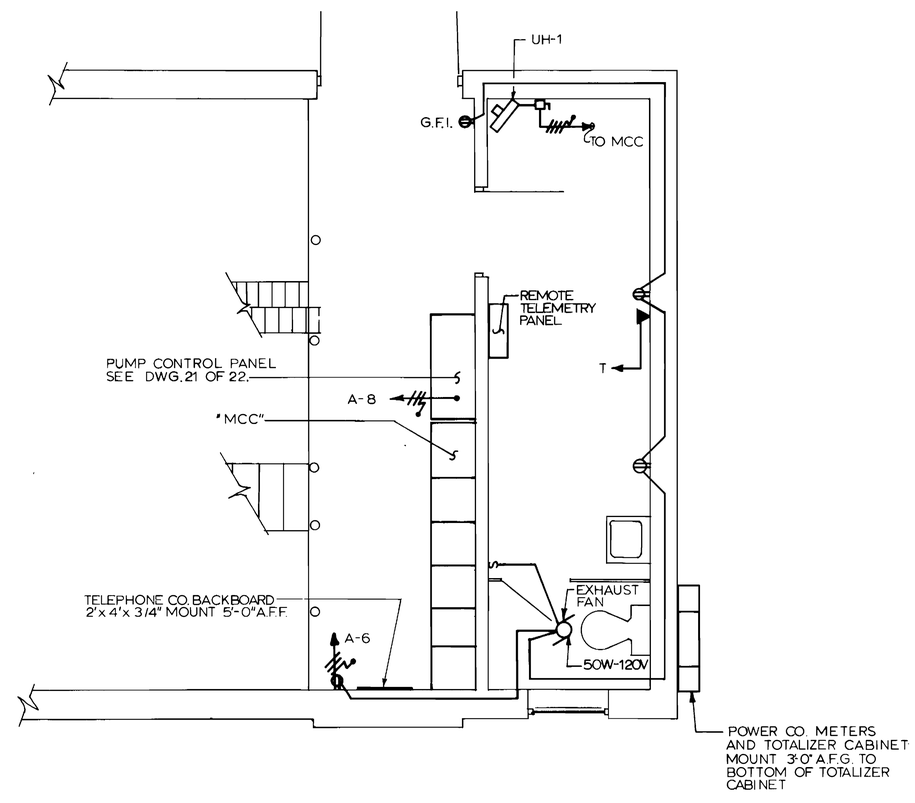

OPERATIONS LEVEL-POWER PLAN

0 1' 2' 4' 8'
3/8"=1'-0"

DEPARTMENT OF PUBLIC WORKS
HOWARD COUNTY, MARYLAND

DIRECTOR OF PUBLIC WORKS — DATE 6.6.91
CHIEF, BUREAU OF ENGINEERING — DATE 6-6-91
CHIEF, BUREAU OF UTILITIES — DATE 6-7-91
CHIEF, UTILITY DESIGN DIVISION — DATE 6-6-91

BUCHART HORN, INC.
Engineers, Architects and Planners

DES: P.E.B.
DRN: R.O.
CHK: J.L.S.
DATE: 6-15-90

BY	NO.	REVISION	DATE

ELECTRICAL POWER PLAN

600' SCALE MAP NO. _____ BLOCK NO. _____

EDGAR ROAD WATER PUMPING STATION
CONTRACT NO. 44-1917
CAPITAL PROJECT NO. W-8129
ELECTION DISTRICT NO. 2
HOWARD COUNTY, MARYLAND

SCALE AS SHOWN

SHEET 20 OF 22

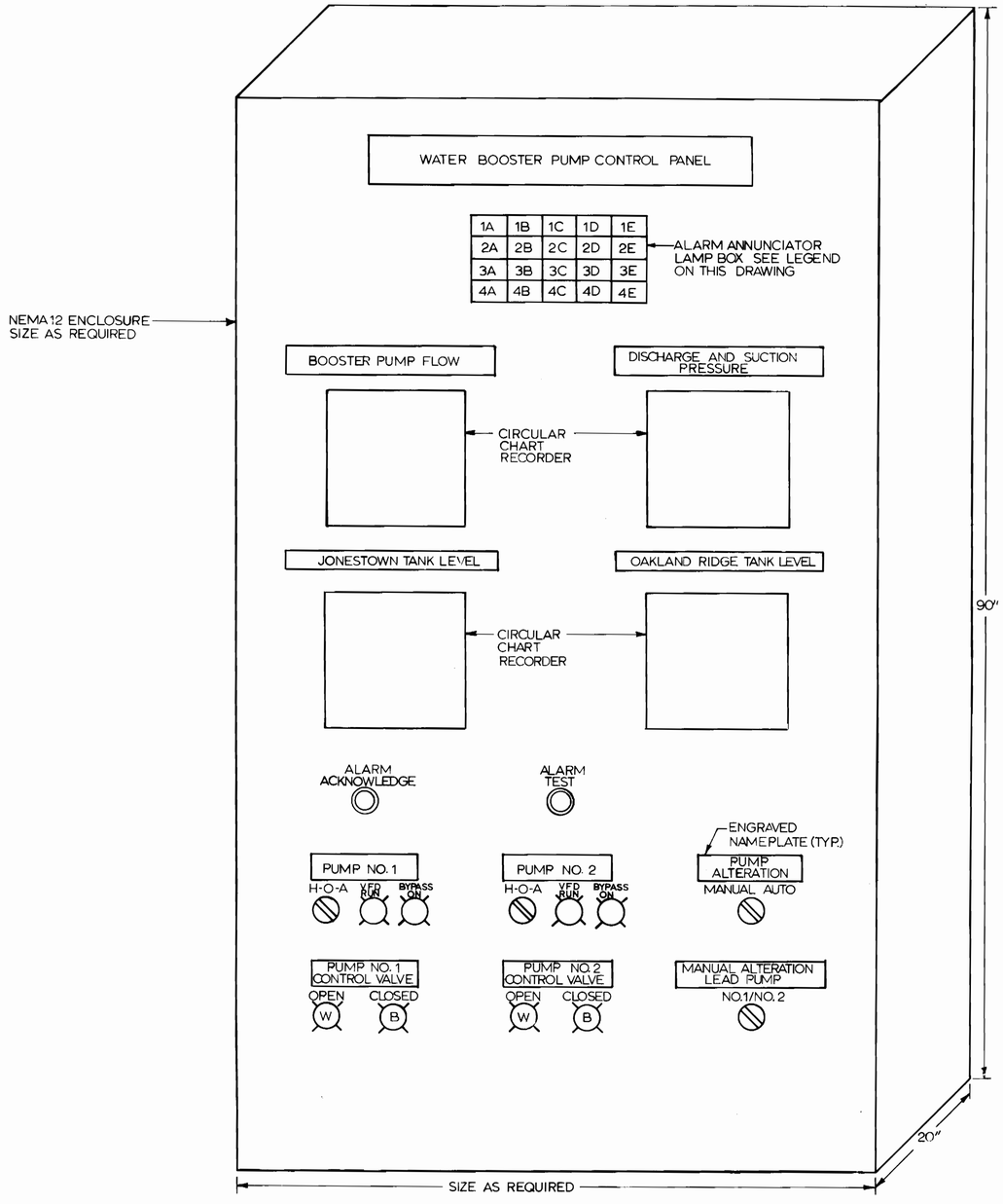

WATER BOOSTER PUMP CONTROL PANEL

PANEL LAYOUT

NO SCALE

ALARM ANNUNCIATOR LAMP BOX LEGEND

LOCATION	ENGRAVING
1A	PUMP NO.1 FAILURE
1B	PUMP NO.1 VFD FAULT
1C	PUMP NO.1 CONTROL VAVLE FAILED TO OPEN
1D	PUMP NO.1 CONTROL VALVE FAILED TO CLOSE
2A	PUMP NO.2 FAILURE
2B	PUMP NO.2 VFD FAULT
2C	PUMP NO.2 CONTROL VALVE FAILED TO OPEN
2D	PUMP NO.2 CONTROL VALVE FAILED TO CLOSE
3A	PUMP STATION FLOODING
3B	NORMAL FEEDER FAILURE
3C	EMERGENCY FEEDER FAILURE
3D	TELEMETRY FAILURE
4A	LOW SUCTION PRESSURE
4B	HIGH DISCHARGE PRESSURE
4C	JONESTOWN TANK HIGH LEVEL
4D	OAKLAND RIDGE TANK HIGH LEVEL
1E	JONESTOWN TANK LOW LEVEL
2E	OAKLAND RIDGE TANK LOW LEVEL
3E	(BLANK)
4E	(BLANK)

NOTE: CONTRACTOR IS TO PROVIDE SCHEMATICS OF REQUIRED TELEMETRY SYSTEM. COORDINATE WITH BUREAU OF UTILITIES.

DEPARTMENT OF PUBLIC WORKS
HOWARD COUNTY, MARYLAND

DIRECTOR OF PUBLIC WORKS — DATE
CHIEF, BUREAU OF ENGINEERING — DATE 6-6-91
CHIEF, BUREAU OF UTILITIES — DATE 6-7-91
CHIEF, UTILITY DESIGN DIVISION — DATE 6-6-91

BUCHART HORN, INC.
Engineers, Architects and Planners
Baltimore, MD · Memphis, TN · Chelsea, WV · Mt. Laurel, NJ · Frankfort, W. Germany · New Orleans, LA · Lancaster, PA · Williamsburg, VA · Lewisburg, PA · York, PA

STATE OF MARYLAND — JAMES L. SANDERS — REGISTERED PROFESSIONAL ENGINEER

DES: P.E.B.
DRN: E.O.O.
CHK: D.T.B.
DATE: 6-15-90

BY	NO.	REVISION	DATE

WATER BOOSTER PUMP CONTROL PANEL LAYOUT

600' SCALE MAP NO. _____ BLOCK NO. _____

EDGAR ROAD WATER PUMPING STATION
CONTRACT NO. 44-1917
CAPITAL PROJECT NO. W-8129
ELECTION DISTRICT NO. 2
HOWARD COUNTY, MARYLAND

SCALE AS SHOWN

SHEET 21 OF 22

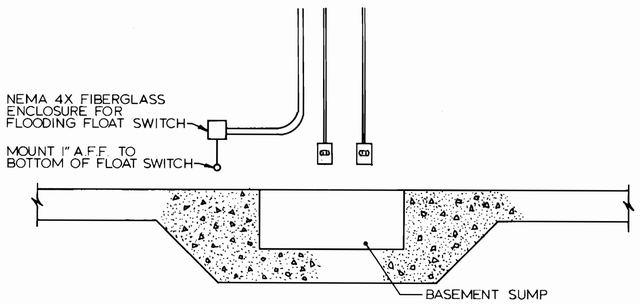

SUMP PUMP RECEPTACLE & FLOODING FLOAT SWITCH DETAIL

NO SCALE

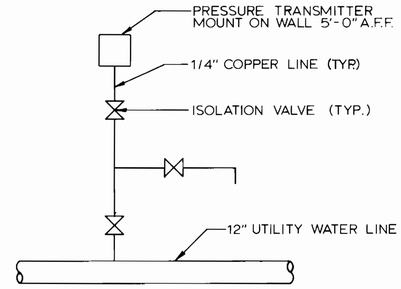

SUCTION AND DISCHARGE PRESSURE TRANSMITTER MOUNTING DETAIL

NO SCALE

PANELBOARD 'A' SCHEDULE

LOCATED: MCC PANEL

120/208 VOLT, 3 PHASE + SN, 4 WIRE, "MCC" MOUNTED, CIRCUIT-BREAKER PANELBOARD WITH 100 AMPERE MAIN BUS BARS AND LUGS. MAIN BREAKER 60A-3P

NOTES	H.P.	WATTS	LOCATION	POLE	AMP/TRIP			AMP/TRIP	POLE	LOCATION	WATTS	H.P.	NOTES
LIGHTS		1500	PUMP ROOM	1	20	1	2	20	1	PUMP ROOM	1000		LIGHTS
LIGHTS		1100	OPERATION	1	20	3	4	20	1	OUT SIDE	625		LIGHTS
RECEPTACLES		800	PUMP ROOM	1	20	5	6	20	1	OPERATION	850		RECEPTACLES/FAN
EXHAUST FAN/MOD.	.35		PUMP ROOM	1	20	7	8	20	1	OPERATION	1200		PUMP CONTROL PNL
SUMP PUMP #1	4/10		PUMP ROOM	1	20	9	10	20	1	PUMP ROOM		4/10	SUMP PUMP #2
SPARE				1	20	11	12	20	1				SPARE
SPARE				1	20	13	14	20	1				SPARE
SPARE				1	20	15	16	20	1				SPARE
SPACE						17	18						SPACE
SPACE						19	20						SPACE

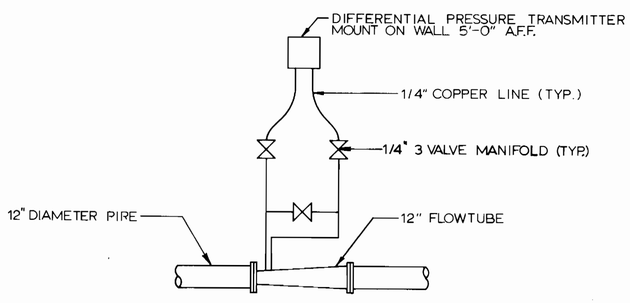

FLOW TUBE DIFFERENTIAL PRESSURE TRANSMITTER MOUNTING DETAIL

NO SCALE

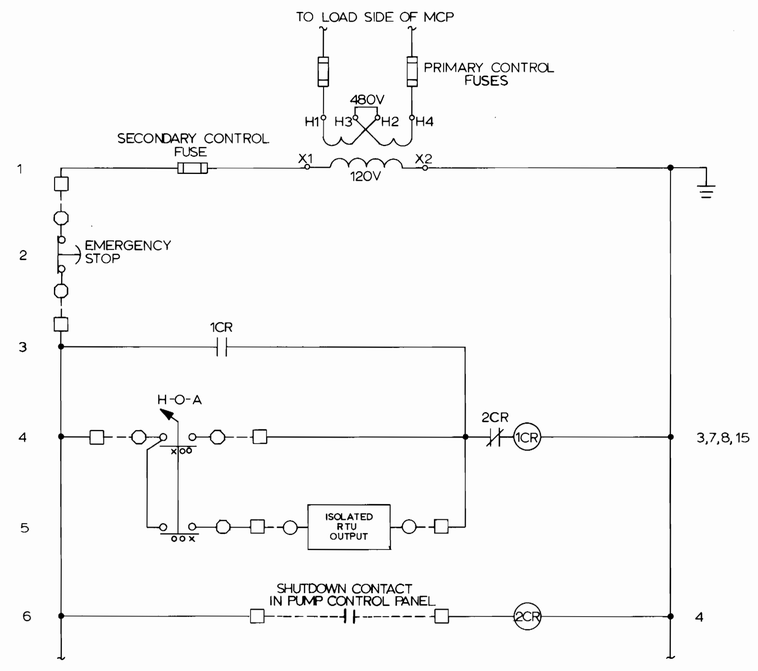

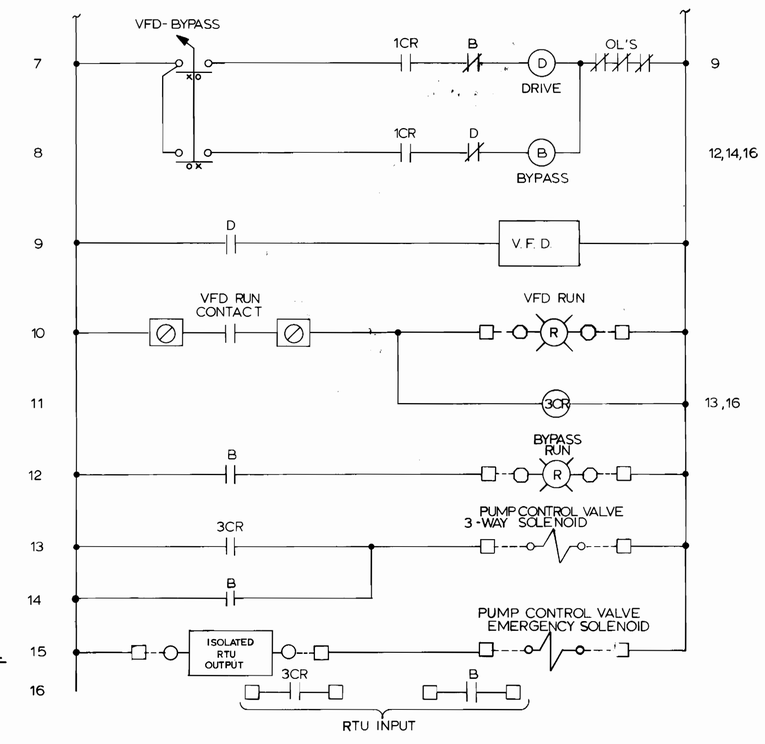

WATER BOOSTER PUMPS NO. 1 AND NO. 2 VFD AND BYPASS CONTACTOR CONTROL WIRING DIAGRAM

DEPARTMENT OF PUBLIC WORKS
HOWARD COUNTY, MARYLAND

DIRECTOR OF PUBLIC WORKS — DATE
CHIEF, BUREAU OF ENGINEERING — DATE 6-6-91
CHIEF, BUREAU OF UTILITIES — DATE 6-7-91
CHIEF, UTILITY DESIGN DIVISION — DATE 6-6-91

BUCHART HORN, INC.
Engineers, Architects and Planners
Baltimore, MD; Charleston, WV; Frankfurt, W. Germany; Lancaster, PA; Lewisburg, PA; Memphis, TN; Mt. Laurel, NJ; New Orleans, LA; Williamsburg, VA; York, PA

DES: P.E.B.
DRN: M.R.E.
CHK: J.L.S.
DATE: 6-15-90

BY	NO.	REVISION	DATE

ELECTRICAL DETAILS

600' SCALE MAP NO. _____ BLOCK NO. _____

EDGAR ROAD WATER PUMPING STATION
CONTRACT NO. 44-1917
CAPITAL PROJECT NO. W-8129
ELECTION DISTRICT NO. 2
HOWARD COUNTY, MARYLAND

SCALE AS SHOWN

SHEET 22 OF 22