K&E BALTIMORE 17 0453 PHOENIX MC 91326

HOWARD COUNTY, MARYLAND

DEPARTMENT OF PUBLIC WORKS

SAVAGE WASTEWATER TREATMENT PLANT

TREATED EFFLUENT OUTFALL

CONTRACT NO. 762-S

PROJECT NO. S-4-6044

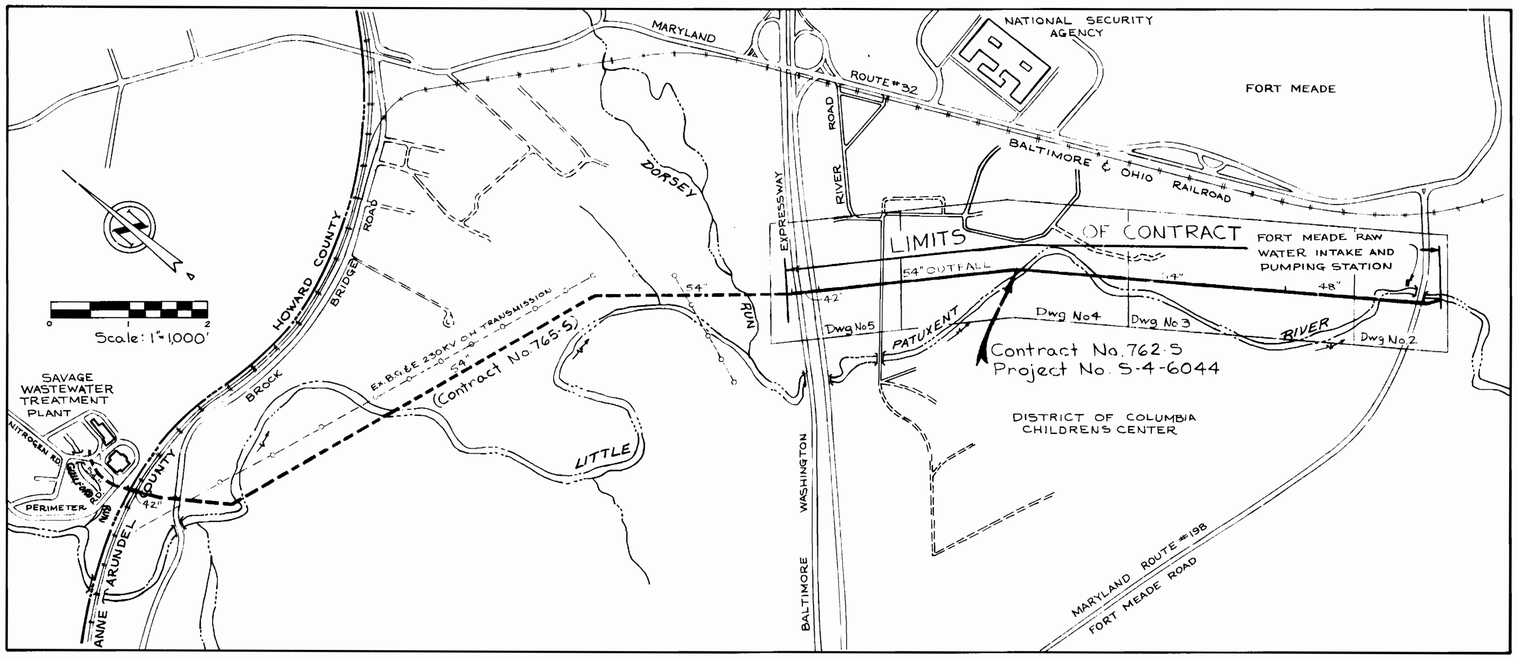

LIST OF DRAWINGS

DRAWING NUMBER	TITLE
1	TITLE AND LOCATION MAP
2-4	PLAN OF OUTFALL
5	PLAN AND PROFILE OF OUTFALL
6	PROFILE OF OUTFALL
7	DETAILS-OF OUTFALL DISCHARGE STRUCTURE
8	DETAILS - AIR RELEASE MANHOLES
9	DETAILS - LINER PLATE TUNNEL
10A-12	DETAILS SAMPLING STATION & AIR RELEASE
13	LOCATION AND DRAINAGE MAP SEDIMENT CONTROL PLAN
14-17	SEDIMENT CONTROL PLAN
18-19	DETAILS - SEDIMENT CONTROL PLAN

As Built Drawings
Stakeout - F.B.# 6500
Diary & Inspectors Daily - F.B.# 6475 & 6512
Residents Daily - F.B.# 6493 & 6512
B.W. Pkwy. Tunnel Diary - F.B.# 6512

Savage W.W.T.P. Outfall Sewer
Project No. S-4-6044
Contract No. 762-S

WHITMAN, REQUARDT & ASSOCIATES ENGINEERS 1304 ST. PAUL ST. BALTIMORE, MARYLAND	DEPARTMENT OF PUBLIC WORKS HOWARD COUNTY, MARYLAND 9-30-79 DATE George F. Nemiyer DIRECTOR	CONTRACT NO. 762-S	TITLE AND LOCATION MAP	SAVAGE WASTEWATER TREATEMENT PLANT TREATED EFFLUENT OUTFALL	DRAWING NO. 1 OF 19	SCALE AS SHOWN

W.O. 7513-2

As Built - December 1, 1981 ~~Aug 30, 1980~~

K&E BALTIMORE 17 0483 PHOENIX MC 9132*

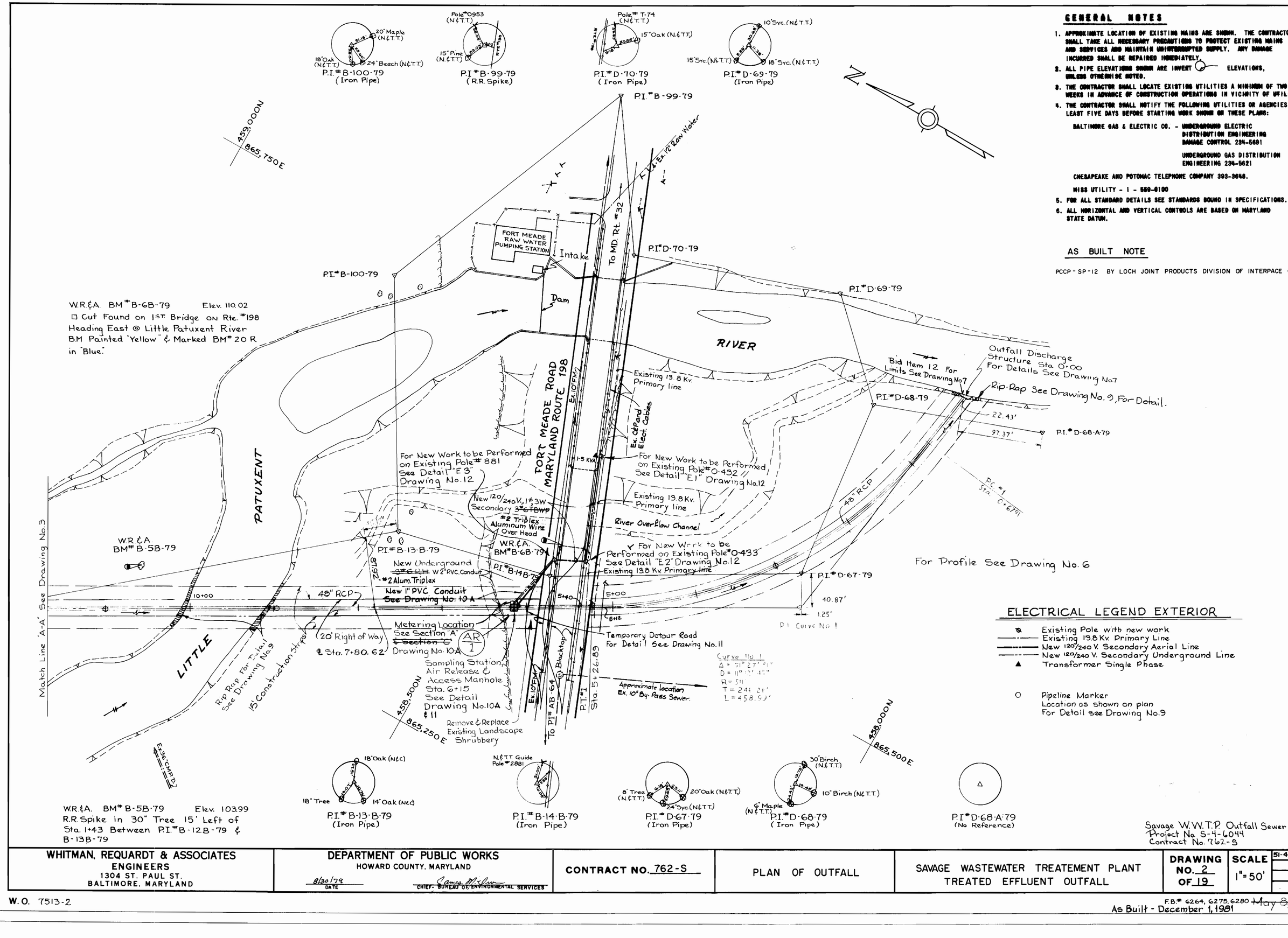

GENERAL NOTES

1. APPROXIMATE LOCATION OF EXISTING MAINS ARE SHOWN. THE CONTRACTOR SHALL TAKE ALL NECESSARY PRECAUTIONS TO PROTECT EXISTING MAINS AND SERVICES AND MAINTAIN UNINTERRUPTED SUPPLY. ANY DAMAGE INCURRED SHALL BE REPAIRED IMMEDIATELY.
2. ALL PIPE ELEVATIONS SHOWN ARE INVERT ELEVATIONS, UNLESS OTHERWISE NOTED.
3. THE CONTRACTOR SHALL LOCATE EXISTING UTILITIES A MINIMUM OF TWO WEEKS IN ADVANCE OF CONSTRUCTION OPERATIONS IN VICINITY OF UTILITIES.
4. THE CONTRACTOR SHALL NOTIFY THE FOLLOWING UTILITIES OR AGENCIES AT LEAST FIVE DAYS BEFORE STARTING WORK SHOWN ON THESE PLANS:

   BALTIMORE GAS & ELECTRIC CO. - UNDERGROUND ELECTRIC DISTRIBUTION ENGINEERING DAMAGE CONTROL 234-5691

   UNDERGROUND GAS DISTRIBUTION ENGINEERING 234-5621

   CHESAPEAKE AND POTOMAC TELEPHONE COMPANY 393-3648.

   MISS UTILITY - 1 - 559-0100
5. FOR ALL STANDARD DETAILS SEE STANDARDS BOUND IN SPECIFICATIONS.
6. ALL HORIZONTAL AND VERTICAL CONTROLS ARE BASED ON MARYLAND STATE DATUM.

AS BUILT NOTE

PCCP - SP - 12 BY LOCH JOINT PRODUCTS DIVISION OF INTERPACE CORP.

ELECTRICAL LEGEND EXTERIOR

- Existing Pole with new work
- Existing 13.8 Kv. Primary Line
- New 120/240 V. Secondary Aerial Line
- New 120/240 V. Secondary Underground Line
- Transformer Single Phase
- Pipeline Marker Location as shown on plan For Detail see Drawing No. 9

W.R.&A. BM # B-5B-79 Elev. 103.99
R.R. Spike in 30" Tree 15' Left of Sta. 1+43 Between P.I. # B-12B-79 & B-13B-79

Savage W.W.T.P. Outfall Sewer
Project No. S-4-6044
Contract No. 762-S

WHITMAN, REQUARDT & ASSOCIATES ENGINEERS 1304 ST. PAUL ST. BALTIMORE, MARYLAND	DEPARTMENT OF PUBLIC WORKS HOWARD COUNTY, MARYLAND 8/20/79 DATE — James McClure CHIEF - BUREAU OF ENVIRONMENTAL SERVICES	CONTRACT NO. 762-S	PLAN OF OUTFALL	SAVAGE WASTEWATER TREATEMENT PLANT TREATED EFFLUENT OUTFALL	DRAWING NO. 2 OF 19	SCALE 1"=50'	51-458/866

W.O. 7513-2

F.B. # 6264, 6275, 6280 ~~May 8, 1980~~
As Built - December 1, 1981

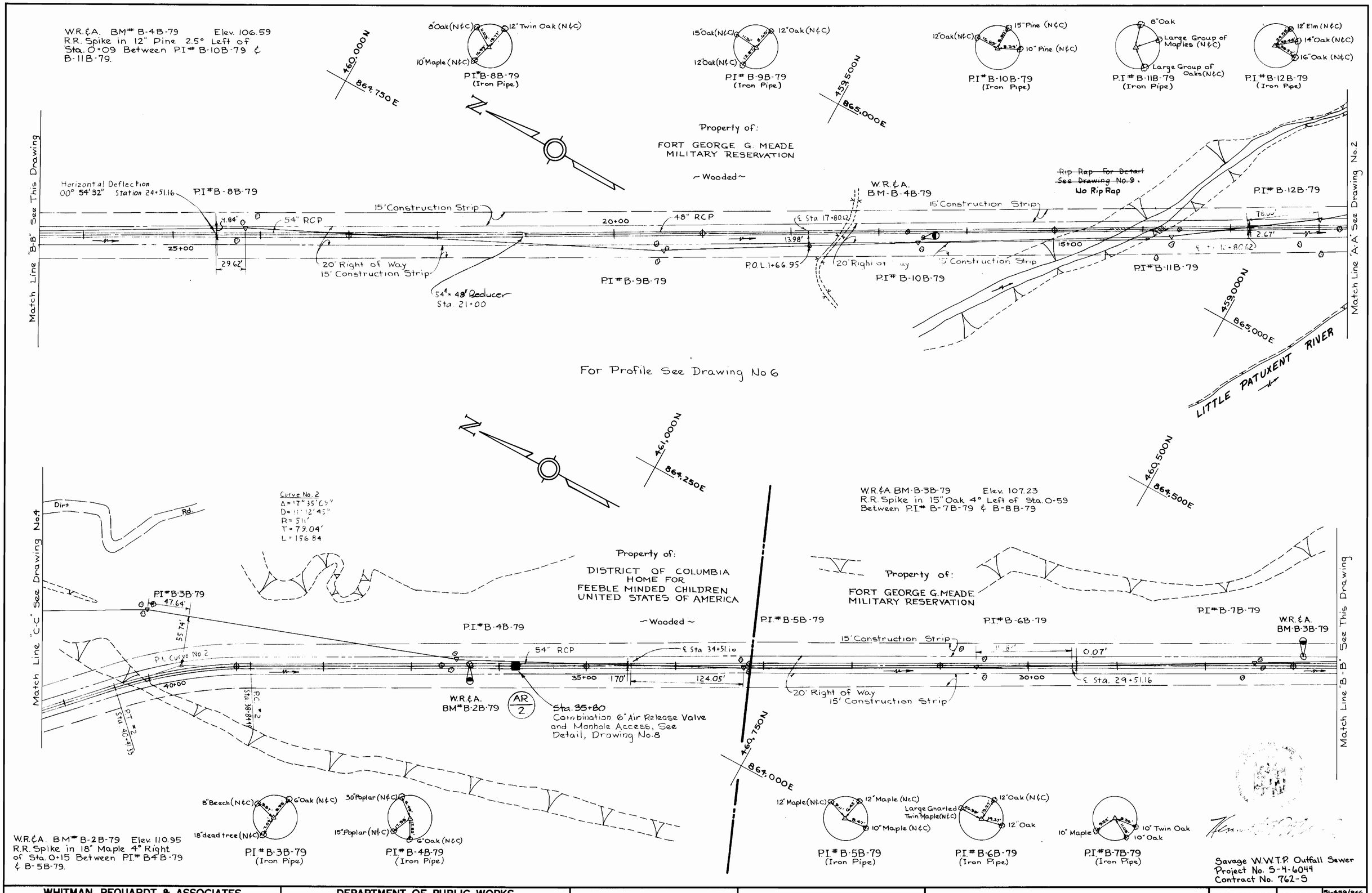

Savage W.W.T.P. Outfall Sewer
Project No. S-4-6044
Contract No. 762-S

WHITMAN, REQUARDT & ASSOCIATES ENGINEERS 1304 ST. PAUL ST. BALTIMORE, MARYLAND	DEPARTMENT OF PUBLIC WORKS HOWARD COUNTY, MARYLAND 8/30/79 DATE James McLean CHIEF - BUREAU OF ENVIRONMENTAL SERVICES	CONTRACT NO. 762-S	PLAN OF OUTFALL	SAVAGE WASTEWATER TREATEMENT PLANT TREATED EFFLUENT OUTFALL	DRAWING NO. 3 OF 19	SCALE 1"=50'	51-459/866 51-460/866 51-460/864.5 51-461/864.5

W.O. 7513-2

F.B.# 6266, 6275, 6264 ~~May 8, 1980~~
As Built - December 1, 1981

K&E BALTIMORE 17 0483 PHOENIX MC 9132

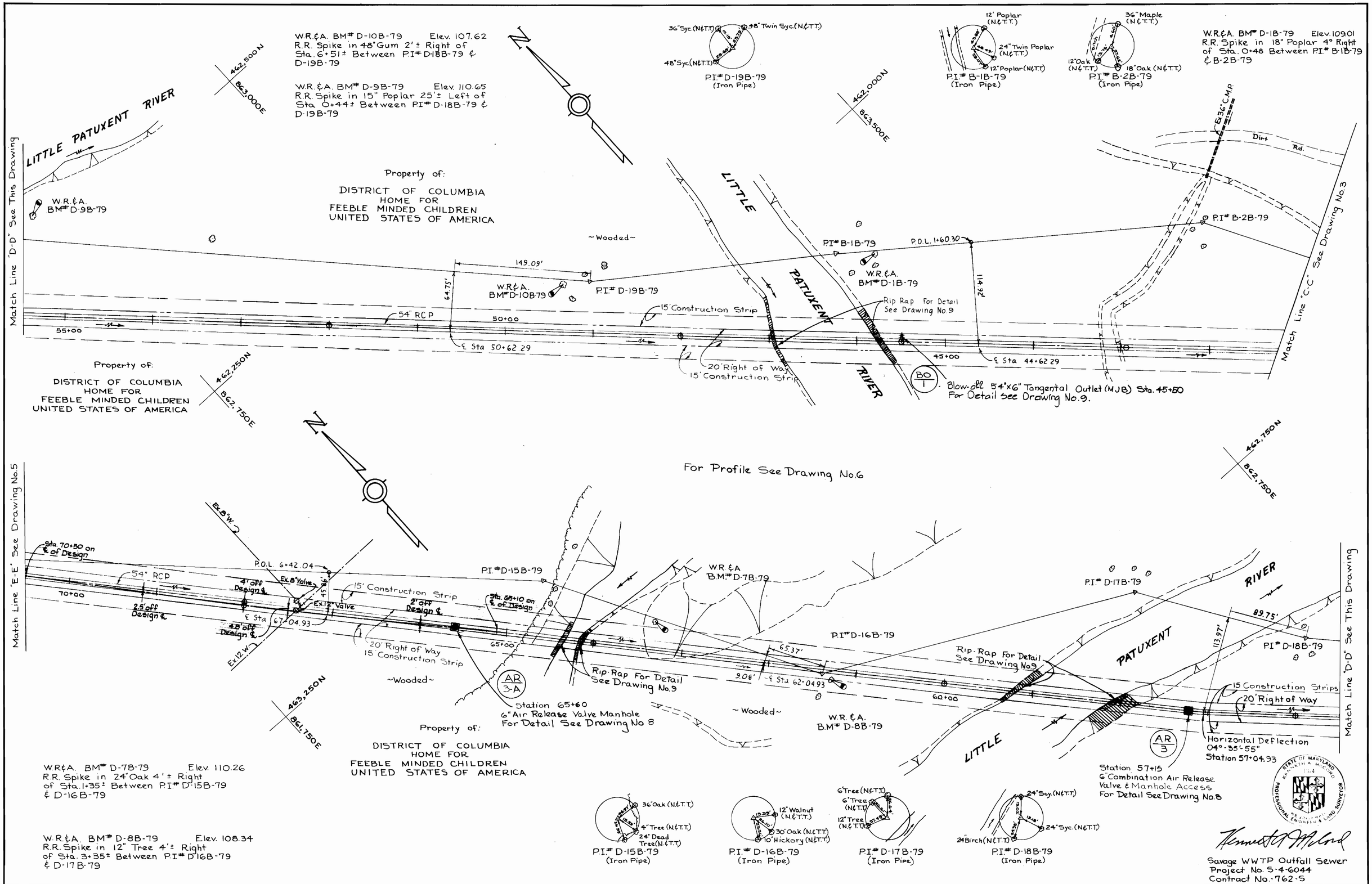

WHITMAN, REQUARDT & ASSOCIATES ENGINEERS 1304 ST. PAUL ST. BALTIMORE, MARYLAND	DEPARTMENT OF PUBLIC WORKS HOWARD COUNTY, MARYLAND 8/30/79 DATE — James M. Irwin CHIEF, BUREAU OF ENVIRONMENTAL SERVICES	CONTRACT NO. 762-S	PLAN OF OUTFALL	SAVAGE WASTEWATER TREATEMENT PLANT TREATED EFFLUENT OUTFALL	DRAWING NO. 4 OF 19	SCALE 1" = 50'	51-461/864.5 51-462/864.5 51-462/863 51-463/863

W.O. 7513-2

FB# 6266, 6275, 6264 ~~May 8, 1980~~
As Built - December 1, 1981

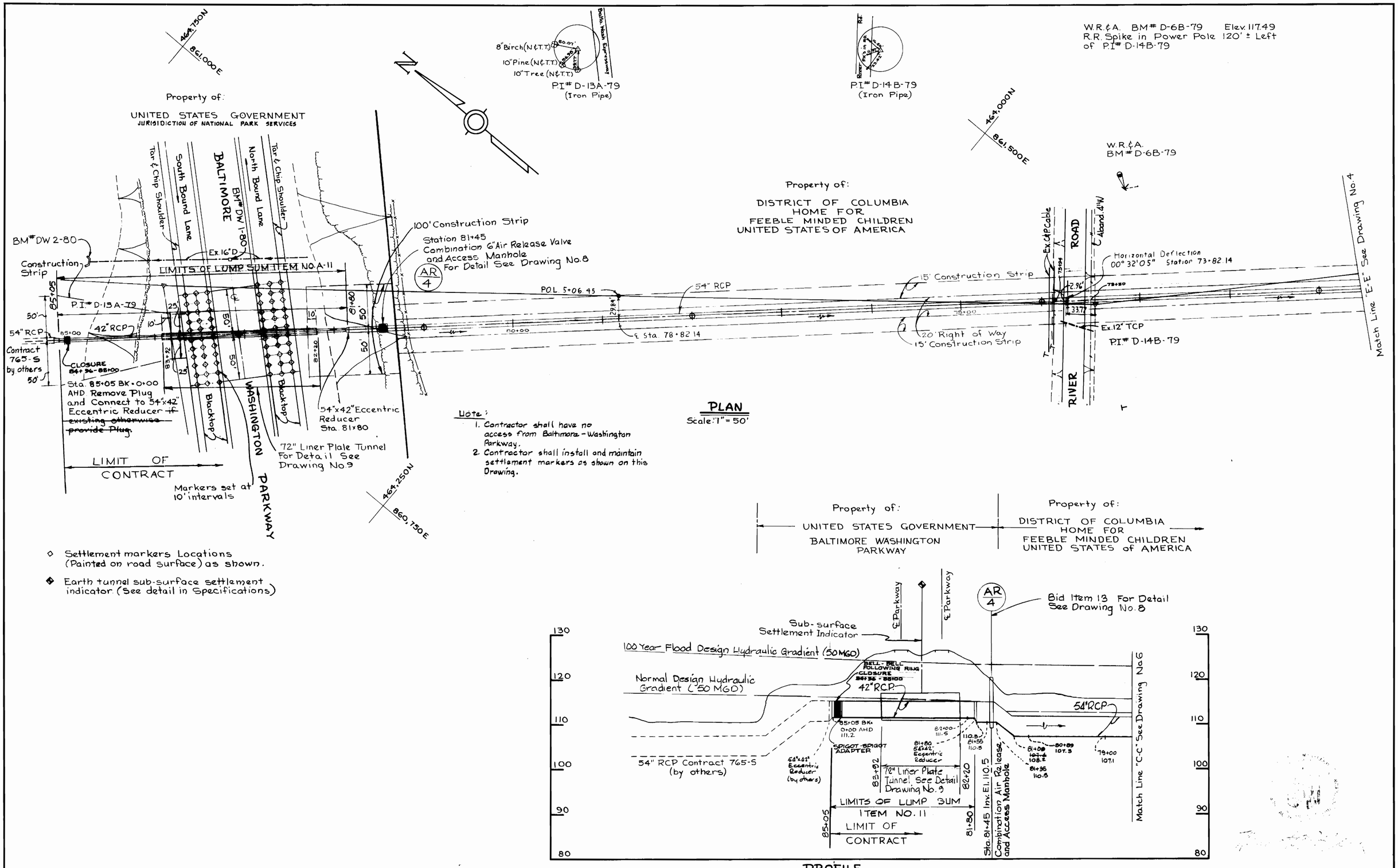

Note:
1. Contractor shall have no access from Baltimore-Washington Parkway.
2. Contractor shall install and maintain settlement markers as shown on this Drawing.

PLAN
Scale: 1" = 50'

◇ Settlement markers Locations (Painted on road surface) as shown.

◆ Earth tunnel sub-surface settlement indicator (See detail in Specifications)

PROFILE
Scale: Horizontal: 1" = 100'
Vertical: 1" = 10'

Savage W.W.T.P. Outfall Sewer
Project No. S-4-6044
Contract No. 762-S

WHITMAN, REQUARDT & ASSOCIATES ENGINEERS 1304 ST. PAUL ST. BALTIMORE, MARYLAND	DEPARTMENT OF PUBLIC WORKS HOWARD COUNTY, MARYLAND 8/20/79 DATE James M. Irvin CHIEF - BUREAU OF ENVIRONMENTAL SERVICES	CONTRACT NO. 762-S	PLAN AND PROFILE OF OUTFALL	SAVAGE WASTEWATER TREATEMENT PLANT TREATED EFFLUENT OUTFALL	DRAWING NO. 5 OF 19	SCALE AS SHOWN 51-464/861.5 51-463/861.5 51-463/863

W.O. 7513-2

F.B.# 6264, 6280 ~~May 8, 1980~~
As Built - December 1, 1981

K&E BALTIMORE 17 0483 PHOENIX MC 91328

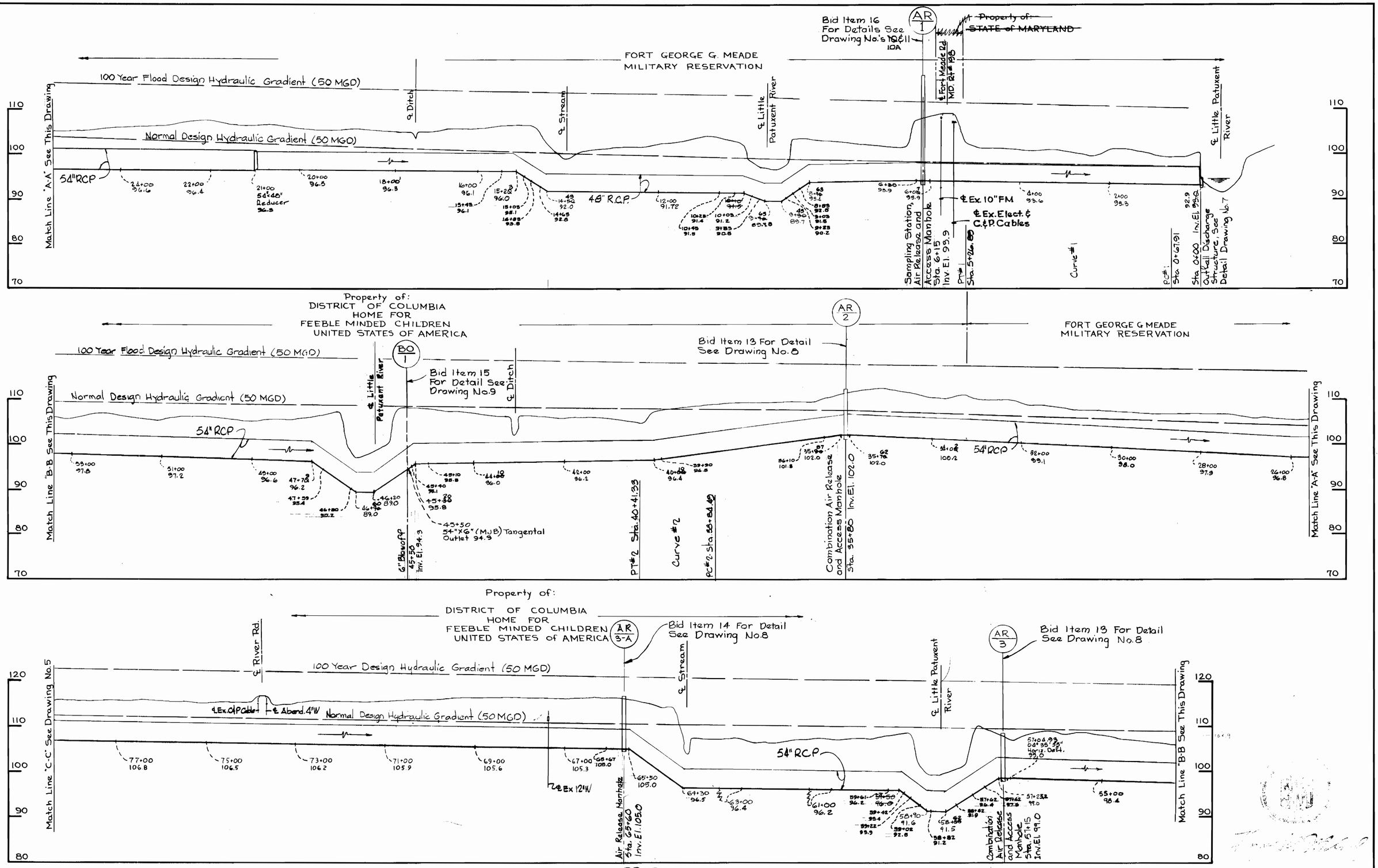

PROFILE

Scale: Horizontal: 1"=100'
Vertical: 1"=10'

Savage W.W.T.P. Outfall Sewer
Project No. 5-4-6044
Contract No. 762-S

WHITMAN, REQUARDT & ASSOCIATES ENGINEERS 1304 ST. PAUL ST. BALTIMORE, MARYLAND	DEPARTMENT OF PUBLIC WORKS HOWARD COUNTY, MARYLAND 6/25/71 DATE — CHIEF, BUREAU OF ENVIRONMENTAL SERVICES	CONTRACT NO. 762-S	PROFILE OF OUTFALL	SAVAGE WASTEWATER TREATEMENT PLANT TREATED EFFLUENT OUTFALL	DRAWING NO. 6 OF 19	SCALE AS SHOWN

W.O. 7513-2

~~May 8, 1980~~
As Built - December 1, 1981

K&E BALTIMORE 17 0483 PHOENIX MC 91326

GENERAL NOTES

1. Concrete shall be Mix #3 in accordance with Maryland State Highway Administration, $f'_c = 3500$ p.s.i.
2. Reinforcing Steel shall conform to A.S.T.M. A-615 for Grade 40.
3. Provide 2" cover to all reinforcing steel except as noted.
4. Laps shall be class "C".
5. Chamfer all exposed edges of concrete 1".

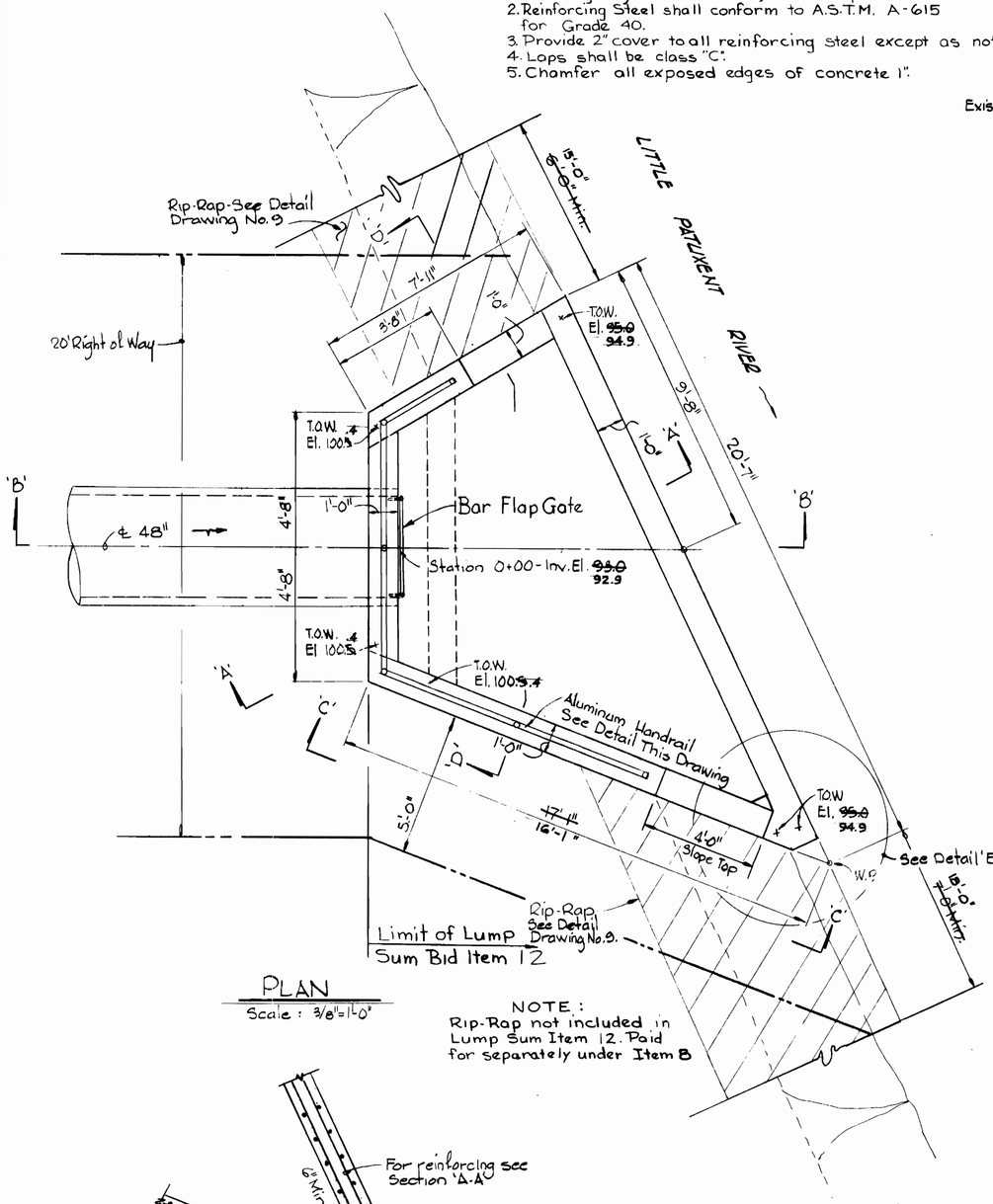

PLAN
Scale: 3/8"=1'-0"

NOTE:
Rip-Rap not included in Lump Sum Item 12. Paid for separately under Item 8

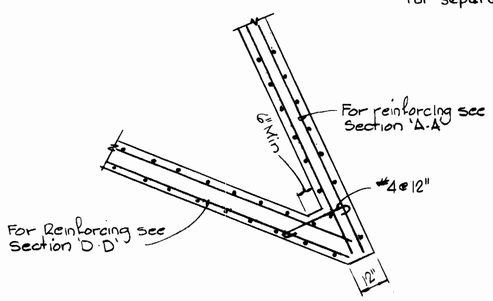

DETAIL 'E'
Scale 3/8"=1'-0"

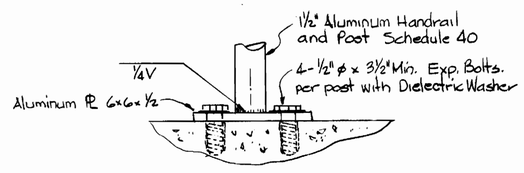

ALUMINUM HANDRAIL POST DETAIL

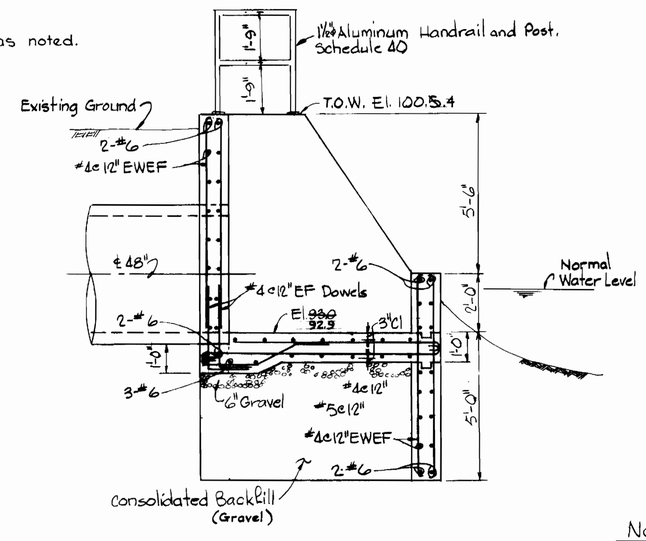

SECTION 'A-A'
Scale: 3/8"= 1'-0"

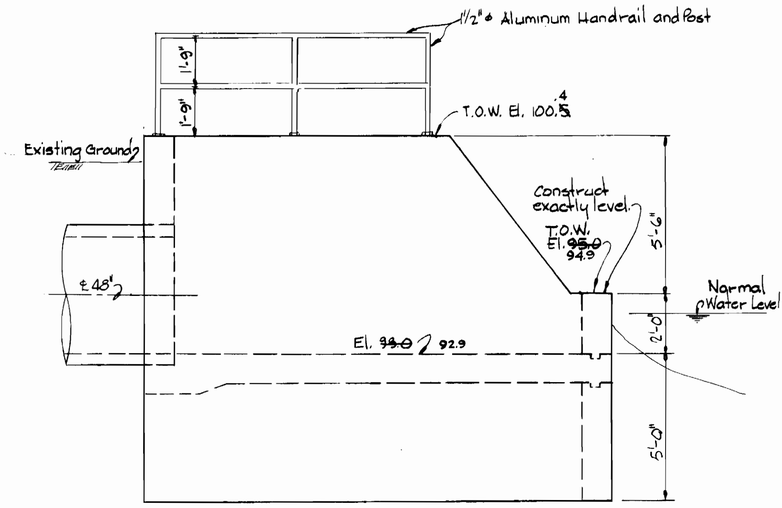

SECTION 'C-C'
Scale: 3/8"=1'-0"

NOTE

1. For bar gate use 1" square intermediate undeformed steel bars at 6'-9" on center with 3/8" fillet welds at each point of contact.
2. Gate shall be shop coat primed and two coats of bituminous paint after erection.

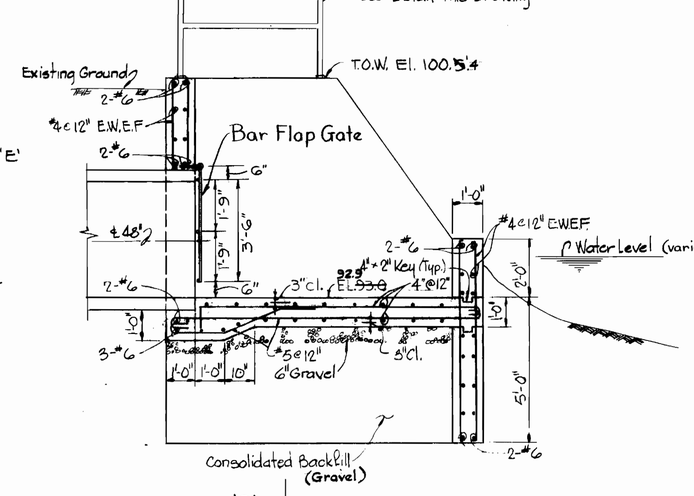

SECTION 'B-B'
Scale: 3/8"=1'-0"

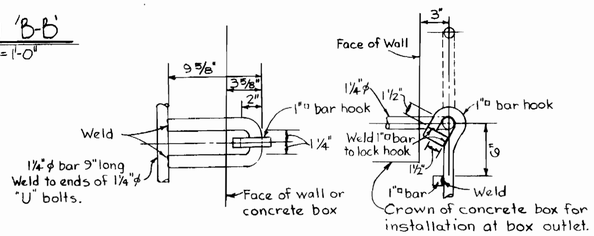

HINGE DETAIL FOR BAR FLAP GATE

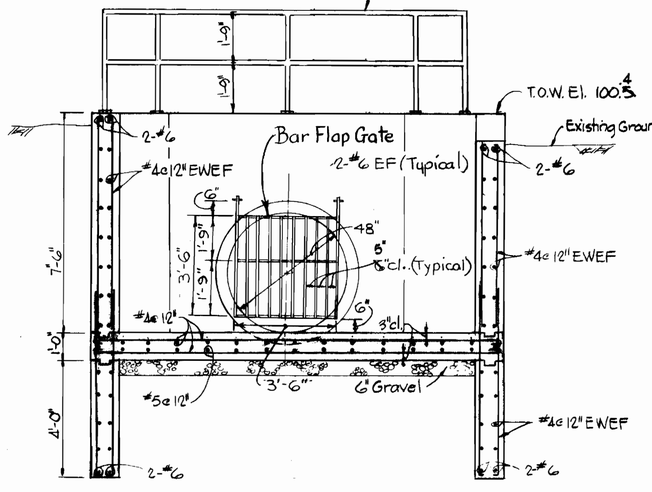

SECTION 'D-D'
Scale: 3/8"=1'-0"

Savage W.W.T.P. Outfall Sewer
Project No. S-4-6044
Contract No. 762-S

WHITMAN, REQUARDT & ASSOCIATES ENGINEERS 1304 ST. PAUL ST. BALTIMORE, MARYLAND	DEPARTMENT OF PUBLIC WORKS HOWARD COUNTY, MARYLAND 8/20/79 (DATE) James M. Irvin CHIEF - BUREAU OF ENVIRONMENTAL SERVICES	CONTRACT NO. 762-S	DETAILS OUTFALL DISCHARGE STRUCTURE	SAVAGE WASTEWATER TREATEMENT PLANT TREATED EFFLUENT OUTFALL	DRAWING NO. 7 OF 19	SCALE AS SHOWN

W.O. 7513-2

As Built - December 1, 1981

Sept. 13, 1979

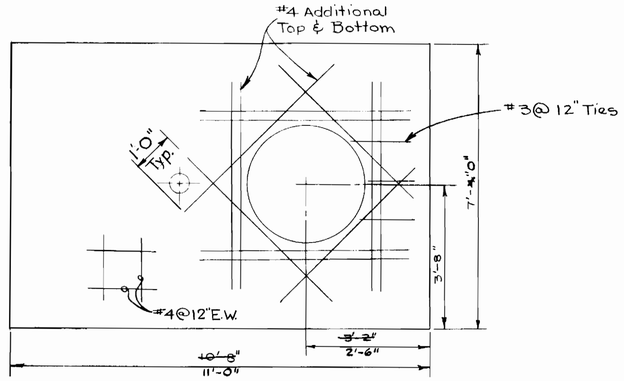

TYPICAL PLAN TOP OF SLAB

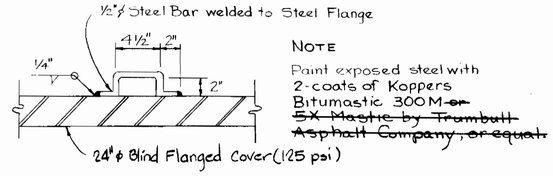

NOTE

Paint exposed steel with 2-coats of Koppers Bitumastic 300M ~~or 5X Mastic by Trumbull Asphalt Company, or equal.~~

DETAIL OF LIFTING HOOK

Scale: 1 1/2" = 1'-0"

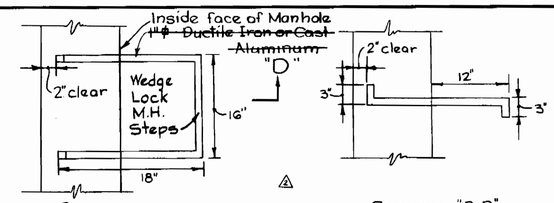

DETAIL OF MANHOLE STEP

Scale: 1" = 1'-0"

Type		C.A.R. & M.H.	C.A.R. & M.H.	C.A.R. & M.H.	C.A.R. & M.H.	A.R.
Station		6+15*	35+80	57+20	81+45	65+60
Invert Pipe			102.0	99.0	110.5	105.0
Elev. Top Slab			111.7	108.~~9~~6	~~119.4~~ 120.2	117.81
Dimension	A		9'0"	9'-3"	9'-0"	——
	B		——	——	——	11'-6"

10A

* See Drawings ~~10~~ & 11 for Detail

As Built Note:
- Precast Vaults Used
A.C. Miller Concrete Products, Inc.
Devault, Pa. 19432

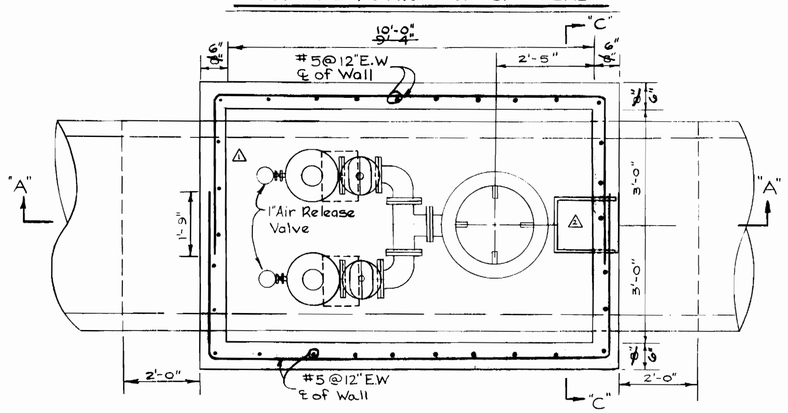

PLAN BELOW TOP OF SLAB

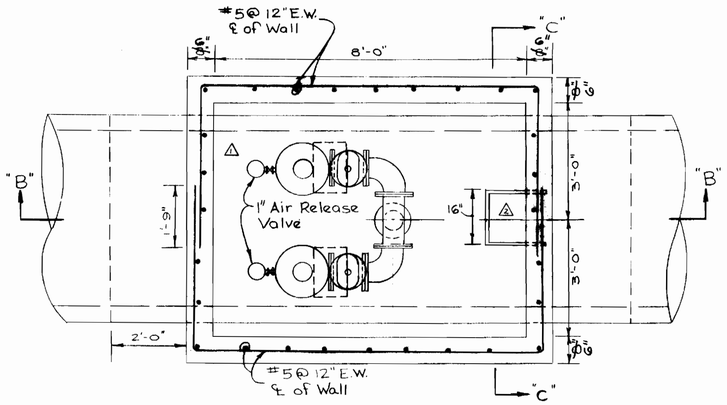

PLAN BELOW TOP OF SLAB

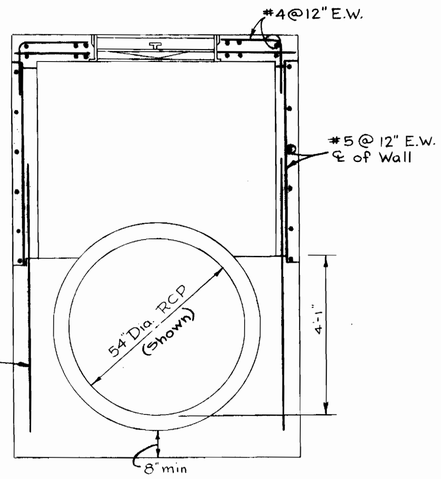

SECTION "C-C"

Scale: ½" = 1'-0"

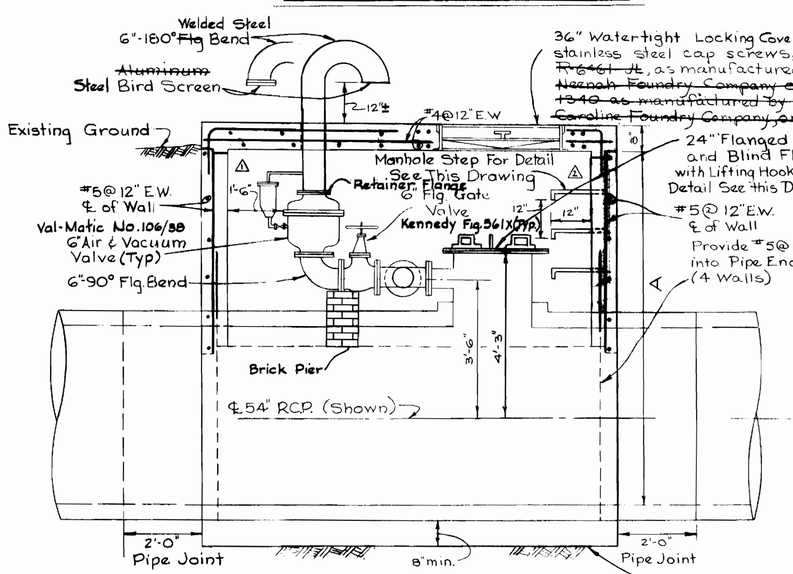

SECTION "A-A"

DETAIL OF COMBINATION 6" AIR RELEASE AND ACCESS MANHOLE - BID ITEM - 13

Scale: ½" = 1'-0"

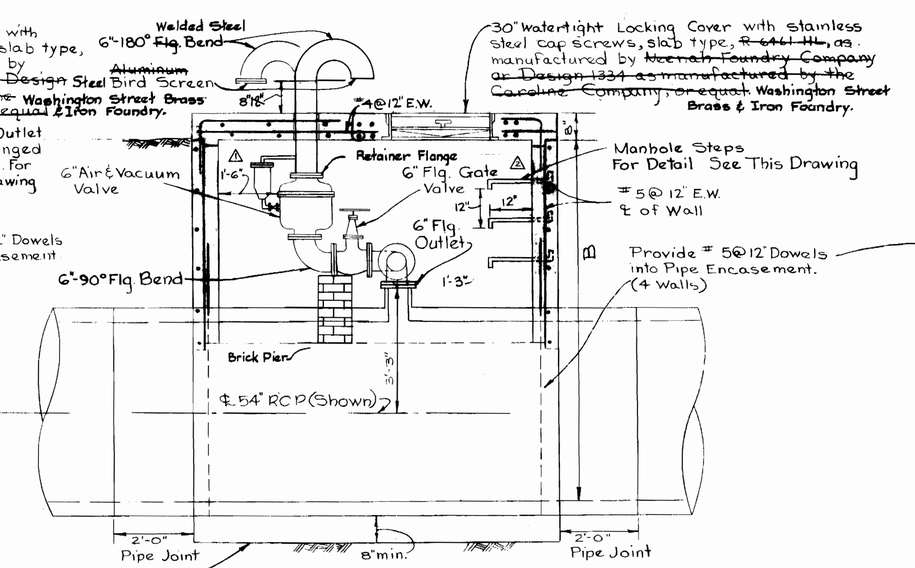

SECTION "B-B"

DETAIL OF 6" AIR RELEASE VALVE MANHOLE - BID ITEM - 14

SCALE: ½" = 1'-0"

NO.	DATE	REVISION
2	5-28-80	Revised Manhole Steps
1	5-12-80	Revised Air Release Manhole

Savage W.W.T.P. Outfall Sewer
Project No. S-4-6044
Contract No. 762-S

WHITMAN, REQUARDT & ASSOCIATES ENGINEERS 1304 ST. PAUL ST. BALTIMORE, MARYLAND	DEPARTMENT OF PUBLIC WORKS HOWARD COUNTY, MARYLAND 8/23/79 DATE — CHIEF, BUREAU OF ENVIRONMENTAL SERVICES	CONTRACT NO. 762-S	DETAILS AIR RELEASE MANHOLES	SAVAGE WASTEWATER TREATEMENT PLANT TREATED EFFLUENT OUTFALL	DRAWING NO. 8 OF 16 — SCALE AS SHOWN

W.O. 7513-2

~~ADDENDUM No. 1, 6-5-80~~ ~~April 14, 1980~~ As Built: December, 1981

K&E BALTIMORE 170483 PHOENIX MC 8138

△ NOTE:

Liner Plate to be Hot-Dip Galvanized and all galvanized surfaces are to be treated with Koppers 40 Passivator or equal. Coat both sides all exposed steel inside and out with 2 coats Kopper's Butumastic No. 300 M, or 5X Mastic by Trumbull Asphalt Company, or equal.

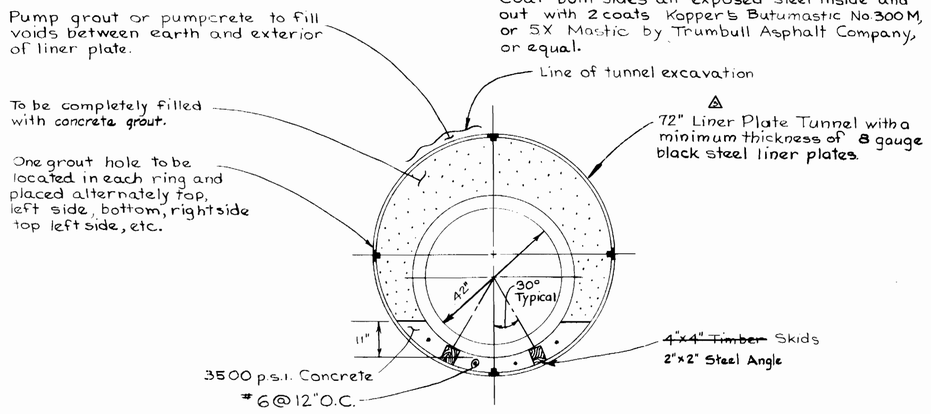

SECTION AT END OF TUNNEL

Scale: 1/2"=1'-0"

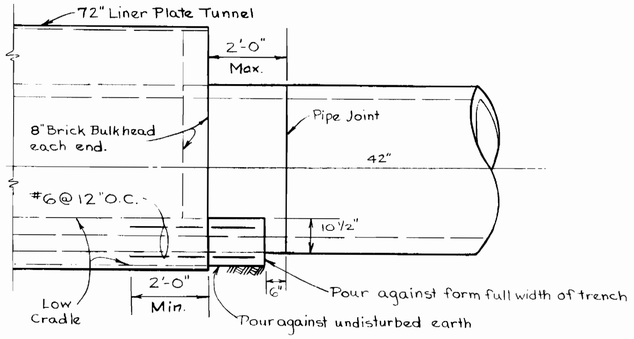

CRADLE AT TUNNEL LIMITS (BOTH ENDS)

Scale: 1/2"=1'-0"

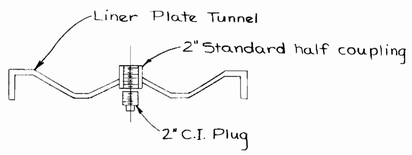

PLUG AND COUPLING

Scale: 1"=1'-0"

DETAIL OF LINER PLATE TUNNEL

Scale: As Shown

NOTE:

Erosion Control Fabric shall be Poly Filter-X as manufactured by Carthage Mills Inc., Erosion Control Division, 124 W. 66th Street Cincinnati, Ohio, ~~Laurel Erosion Control Cloth as manufactured by Laurel Plastic Inc., Madison, Maine, or equal.~~

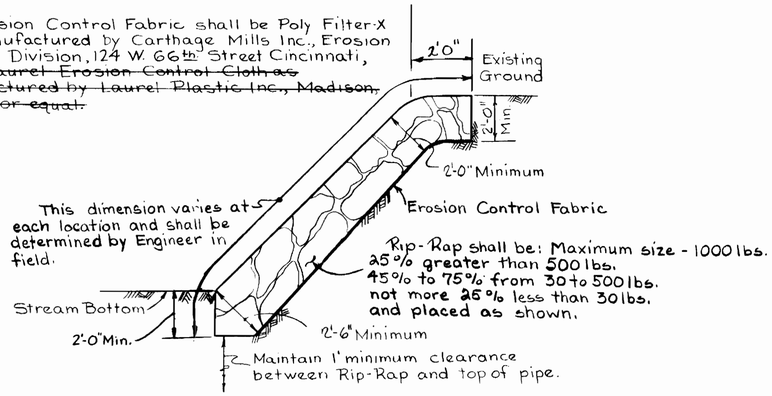

SECTION

Scale: 3/8"=1'-0"

RIP-RAP DETAIL

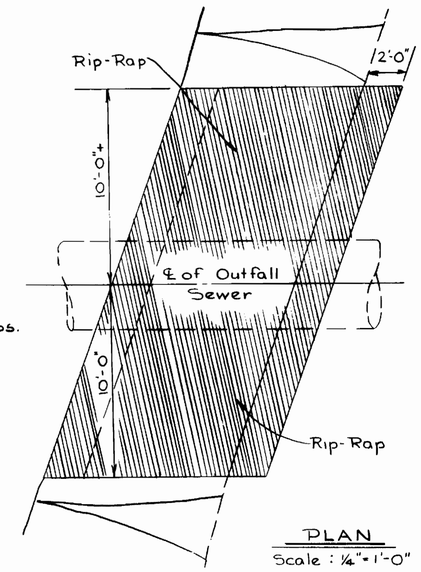

PLAN

Scale: 1/4"=1'-0"

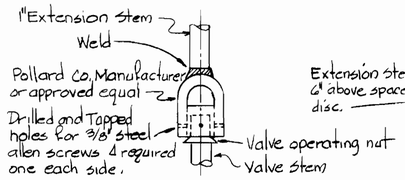

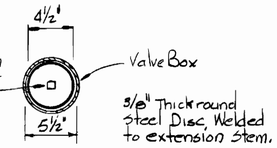

VALVE KEY

SPACER

DETAIL OF VALVE STEM EXTENSION

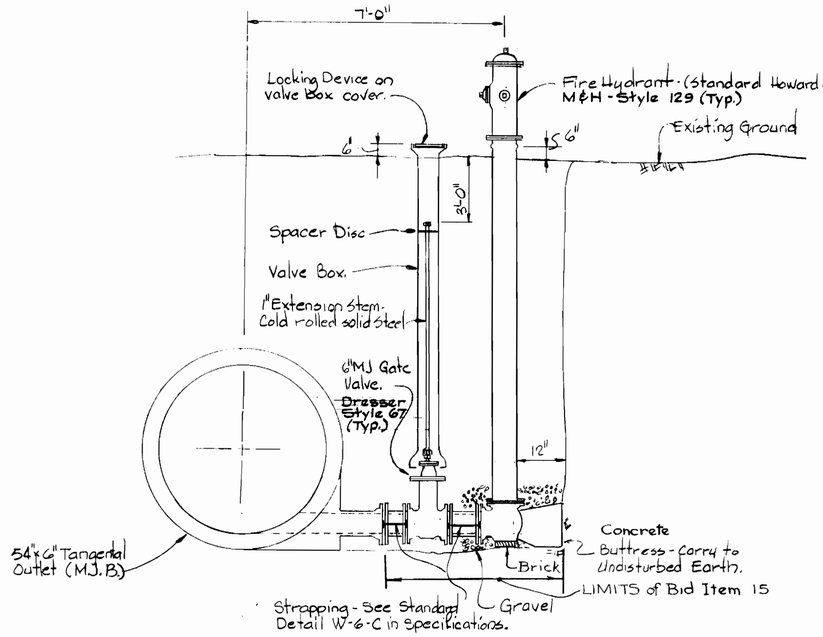

DETAIL OF 6-INCH BLOWOFF

Scale 1/2"=1'-0"

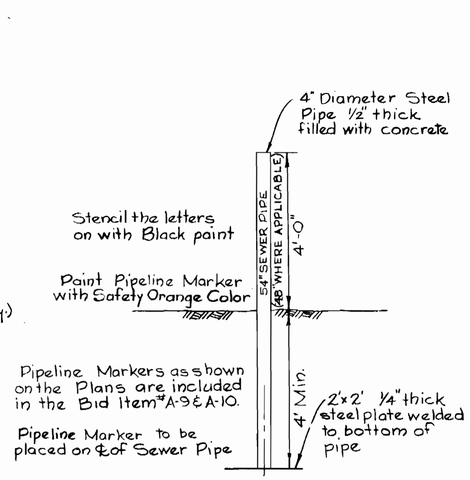

DETAIL OF PIPELINE MARKER

Scale: 1/2"=1'-0"

STATE OF MARYLAND KENNETH A. McCORD 1974

Kenneth A. McCord

NO.	DATE	REVISION
△	6-4-80	Revised Note For Liner Plate Tunnel

Savage W.W.T.P. Outfall Sewer
Project No. 5-4-6044
Contract No. 762-S

WHITMAN, REQUARDT & ASSOCIATES ENGINEERS 1304 ST. PAUL ST. BALTIMORE, MARYLAND	DEPARTMENT OF PUBLIC WORKS HOWARD COUNTY, MARYLAND 8/30/79 DATE — CHIEF, BUREAU OF ENVIRONMENTAL SERVICES	CONTRACT NO. 762-S	DETAILS - LINER PLATE TUNNEL RIP-RAP - BLOWOFF	SAVAGE WASTEWATER TREATEMENT PLANT TREATED EFFLUENT OUTFALL	DRAWING NO. 9 OF 19 — SCALE AS SHOWN

W.O. 7513-2

~~ADDENDUM No. 1 6-5-80~~ ~~May 8, 1980~~
As Built - December 1, 1981

~~Drill new holes in Floor Slab to suit Equipment~~

2" conduit to existing Pole #881, See Detail "E-3", Drawing 12 of 19

Electric Conduit

1" conduit to existing Pole #881 Extend to 2' above grade at both ends and cap.

K.W.H. Meter in vandal-proof enclosure with hinge door and hasp by contractor

Cincinnati Fan Model LM-C Blower

Gorman Rupp Sample Pump Model 1½A2-B

2"x1½" Reducer in riser

Sigma Motor Sampler Model No. 1600 See Sampling System Schematic

2"-1/8 Bend (down)

Floor Drain

Table

36" dia Manhole

2 L⁵ 5x3½x5/16 Lintel 8" min. bracing

Ex. holes filled with Mortar See Concrete Step Detail Below

PLAN SECTION "A"

For beam reinforcement see section "C-C"

#5@12" E.W. T. & B.

2 #5 Additional T. & B.

#5 Dowels @ 12" All around floor slab

PLAN OF TOP SLAB

Vertical bars #5@12"

#7@12" @ Corners

#5@12"

6"-90° Flg. Bend

6"-45° Flg. Bend

6"x6" Flg. Tee

4" Suction

1½"

2" Drain

FLOW

2'-0" Pipe Joint

Aluminum Ladder For Detail See This Drawing

PLAN SECTION "B"

9"~~8~~" Concrete Roof Deck - Paint Interior of deck bottom

Slope ½"/1'

Vent

#5@12" E.W. Bottom

#4 @ 12" E.W. Top

Elastomeric Roofing System Gacoflex

Concrete Beam W/2 #5 Bottom

ILG Heater Model No. 300 Integral Thermostat Panel "TEL" 240/120 V, 1ϕ, 3 W

Square D 100 Amp Main

4" Face Brick

4" Concrete Masonry Units Paint Interior

Joint Reinforcing @ 16" % every 2nd. course (Typ.)

6"-180° Welded Steel ~~Flg.~~ Bend

~~Aluminum~~ Steel Bird Screen

EL. 110.0

#5@12" E.W., T. & B.

Slope 2" drain @ 2%

2"-1/8 Bend (down)

EL. 108.0

36" Watertight Locking Cover with stainless steel cap screws, slab type, ~~R-6463-H~~, as manufactured ~~by Neenah Foundry Co. or Design 1340 as manufactured by the Cerstine Foundry Co, or equal.~~ By Washington Street Brass and Iron Foundry.

Retainer Flange

6"-90° Flg. Bend

Beam Reinforcement 3-#6 T.&B. #3 @ 12"

For rein. see Plan Section "B"

Aluminum Ladder For Detail See This Drawing

1" Air Release Valve Val Matic

6" Air & Vacuum Valve Val Matic No. 106-38 (Typ.)

6"-90° Flg. Bend

6" Flg. Gate Valve Kennedy Fig 561X (Typ.)

24" Flange Outlet and Blind Flange with Lifting Hooks For Detail See Drawing No. 8

1½"ϕ-90° Stainless Steel Street Elbow

#5@12" Bars "a"

#5@12" Bars "a"

℄ 45° Ell flow 2.60'

2 ℄ 24" Outlet

1½" ϕ Stainless Steel Cap

1½" Stainless Steel Cross

Inv. El. 93.9

2'-0" Pipe Joint

1'-0" Typical

12" Min

"D-D"

SECTION - "C-C"

DETAIL of SAMPLING STATION & AIR RELEASE - ACCESS MANHOLE - BID ITEM 16

STA. G+22.67

STA. G+07.34

1 #4 at each nosing

EL. 110.0

EL. 108.0

CONCRETE STEP DETAIL

NOTE: Leave concrete exposed in drip all around tovent roof deck.

GENERAL NOTES

1. Concrete shall be Mix #3 in accordance with Maryland State Highway Administration, f'_c = 3500 psi.
2. All reinforcement shall conform to A.S.T.M. A 615 - for Grade 60.
3. Reinforced concrete is designed and shall be detailed and constructed in accordance with A.C.I. - specification A 318-77.
4. Provide 2" Cover to all reinforcing steel except as noted.
5. Laps shall be class "C".
6. Chamfer all exposed edges of concrete 1".

LEGEND

- Junction Box
- Outlet - Duplex Convenience
- Outlet - Incandescent, Pendent
- S_2 Switch - Double Pole
- M HOA Starter - Manual w/Hand-Off-Auto. Sw.

Aluminum Bent PL 8"x3"x3/8" @ 5'-0" c/c w/½" ϕ Stainless Steel Expansion Bolts (Typ.)

Aluminum Flat Bar Stringer 3"x3/8"

1" ϕ Aluminum Rungs w/an Abrasive Non-Slip Surface. Weld to Stringers

PLAN

Scale: 1"=1'-0"

ELEVATION

Scale: 1"=1'-0"

LADDER DETAIL

1" Galvanized Nipple

1½" 4" Suction

2" Drain

For Connection Detail See Drawing No. 11

48" Dia.

1½" ϕ Stainless Steel

#5 @ 12"

Low Water Level EL. ~~95.0~~ 94.9

Inv. El. 93.9

Bars "a"

~~8" PVC Strainer 6" long~~

1½" Cross

1½" Cap

12" Min.

SECTION - "D-D"

NO.	DATE	REVISION
4	2-11-81	Station Orientation
3	5-28-80	Revised Ladder Detail
2	5-12-80	Revised Air Release Manhole

Savage W.W.T.P. Outfall Sewer
Project No. S-4-6044
Contract No. 762-S

WHITMAN, REQUARDT & ASSOCIATES
ENGINEERS
1304 ST. PAUL ST.
BALTIMORE, MARYLAND

DEPARTMENT OF PUBLIC WORKS
HOWARD COUNTY, MARYLAND
4/14/80 DATE
CHIEF, BUREAU OF ENVIRONMENTAL SERVICES

CONTRACT NO. 762-S

DETAILS
SAMPLING STATION
AND AIR RELEASE

SAVAGE WASTEWATER TREATEMENT PLANT
TREATED EFFLUENT OUTFALL

DRAWING NO. 10A OF 19

SCALE 1/2"=1'-0"

W.O. 7513-2

'AS-BUILT' March 10, 1982 ADDENDUM No. 1 - 6-5-80
SUPPLEMENTAL DETAILS 2-11-81

~~April 14, 1980~~

K&E BALTIMORE 170483 PHOENIX MC913-

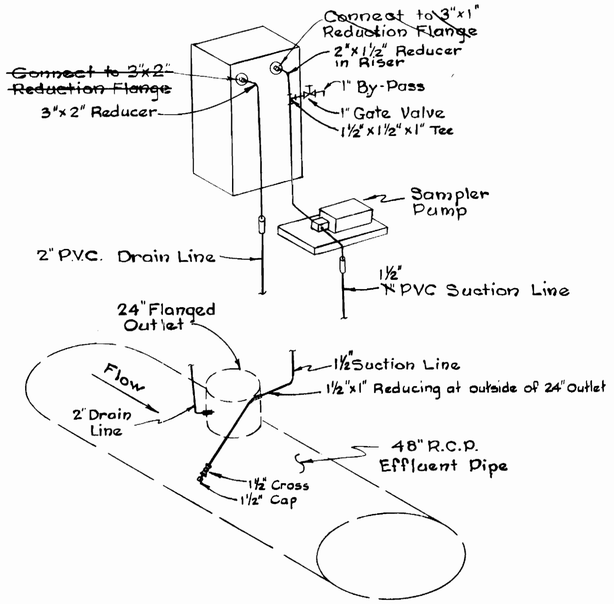

SAMPLING SYSTEM SCHEMATIC

Scale: None

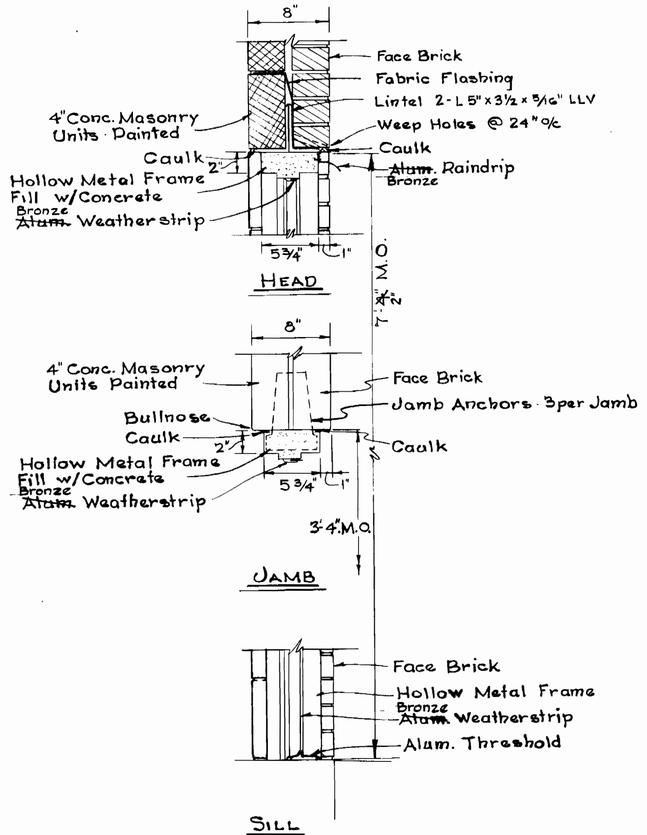

DOOR DETAIL

Scale: 1½"=1'-0"

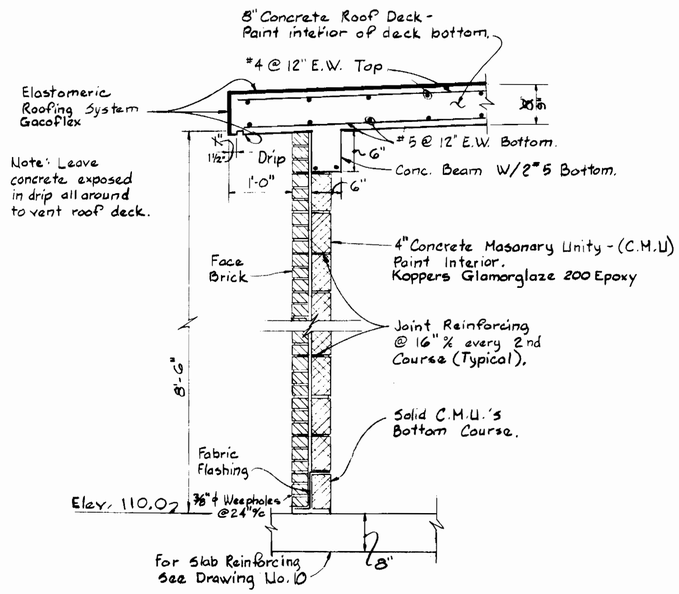

TYPICAL WALL SECTION

Scale: ¾" = 1'-0"

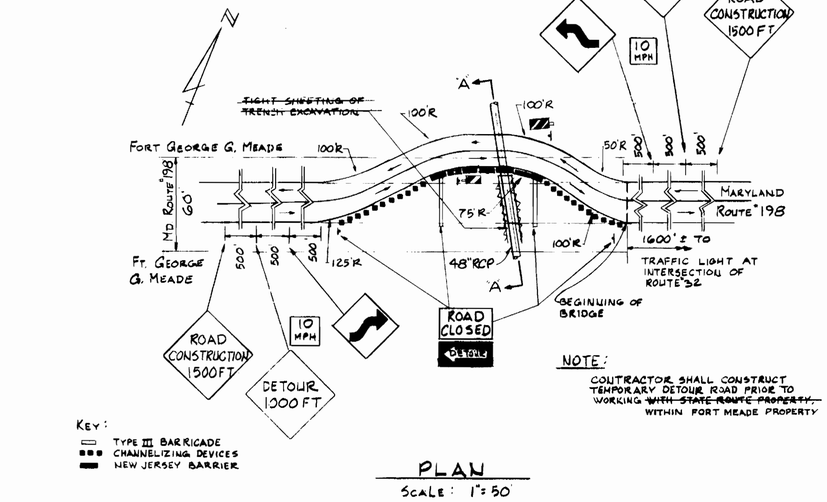

NOTE:
CONTRACTOR SHALL CONSTRUCT TEMPORARY DETOUR ROAD PRIOR TO WORKING ~~WITH STATE ROUTE PROPERTY~~ WITHIN FORT MEADE PROPERTY

PLAN

Scale: 1"=50'

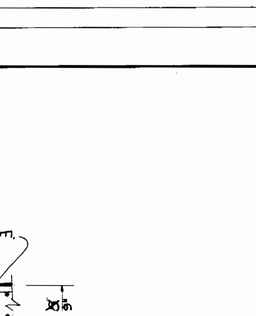

CONNECTION DETAIL

Scale: None

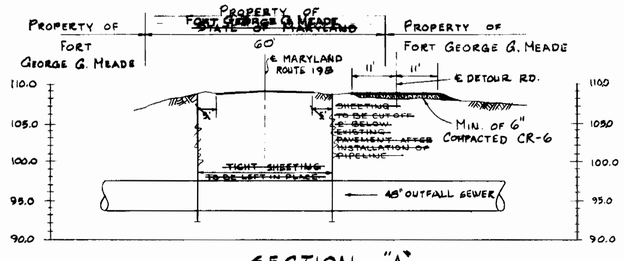

SECTION "A"

Scale:
Horizontal: 1"=20'
Vertical: 1"=10'

MARYLAND ROUTE #198 TEMPORARY DETOUR ROAD

Savage W.W.T.P. Outfall Sewer
Project No. S-4-6044
Contract No. 762-S

WHITMAN, REQUARDT & ASSOCIATES ENGINEERS 1304 ST. PAUL ST. BALTIMORE, MARYLAND	DEPARTMENT OF PUBLIC WORKS HOWARD COUNTY, MARYLAND ____ DATE ____ CHIEF-BUREAU OF ENVIROMENTAL SERVICES	CONTRACT NO. 762-S	DETAILS SAMPLING STATION AND AIR RELEASE	SAVAGE WASTEWATER TREATEMENT PLANT TREATED EFFLUENT OUTFALL	DRAWING NO. 11 OF 19	SCALE AS SHOWN

W. O. 7513-2

As Built - December 1, 1981 ~~April 14, 1980~~

BALTIMORE 17 0483 PHOENIX MC 9132*

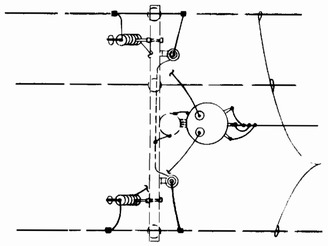

PLAN

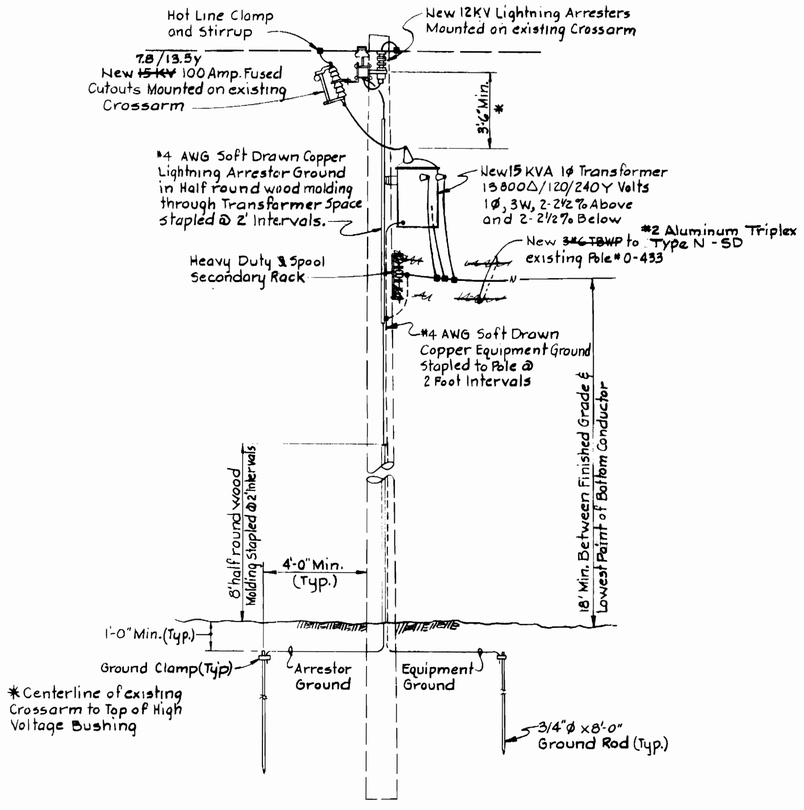

DETAIL "E1"
No Scale

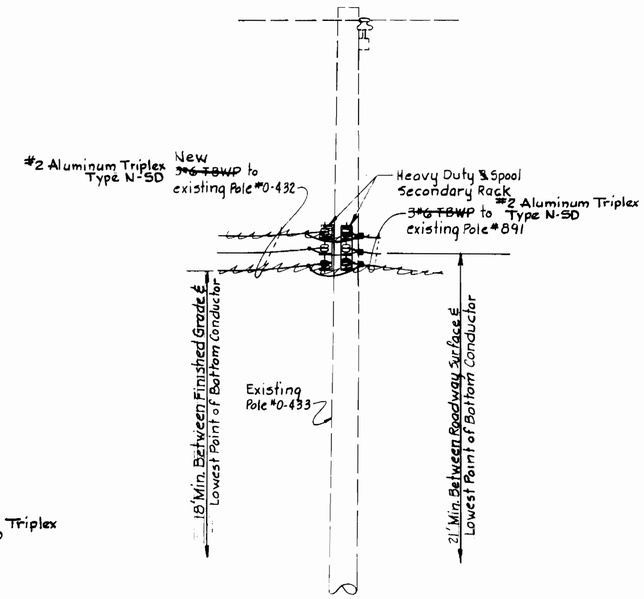

DETAIL "E2"
No Scale

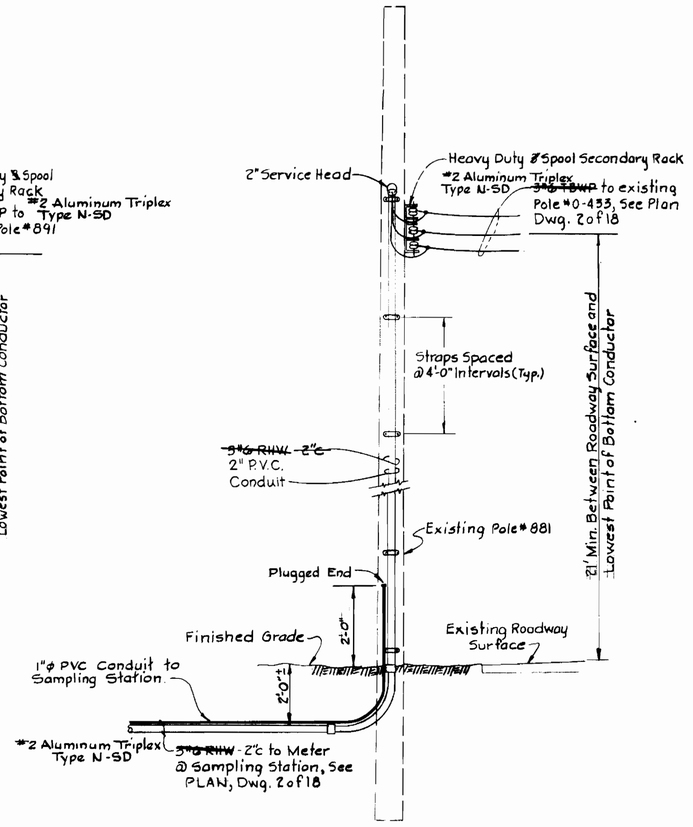

DETAIL "E3"
No Scale

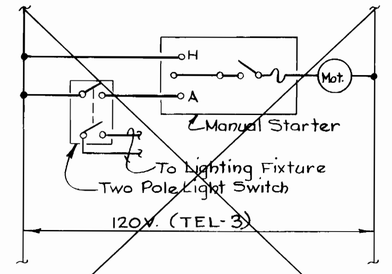

ELEMENTARY CONTROL DIAGRAM FOR VENTILATION FAN
No Scale

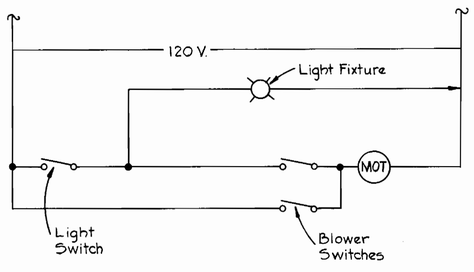

Kenneth A. McCord

Savage W.W.T.P. Outfall Sewer
Project No. S-4-6044
Contract No. 762-S

WHITMAN, REQUARDT & ASSOCIATES ENGINEERS 1304 ST. PAUL ST. BALTIMORE, MARYLAND	DEPARTMENT OF PUBLIC WORKS HOWARD COUNTY, MARYLAND 4/14/80 DATE CHIEF, BUREAU OF ENGINEERING	CONTRACT NO. 762S	SAMPLING STATION DETAILS	SAVAGE WASTEWATER TREATMENT PLANT TREATED EFFLUENT OUTFALL	DRAWING NO. 12 OF 19	SCALE NONE

W. O. 7513-2

As Built- December 1, 1981 ~~April 14, 1980~~

K&E BALTIMORE 17 0483 PHOENIX MC 9132x

HOWARD COUNTY, MARYLAND

DEPARTMENT OF PUBLIC WORKS

SAVAGE WASTEWATER TREATMENT PLANT

TREATED EFFLUENT OUTFALL

CONTRACT NO. 762-S

PROJECT NO. S-4-6044

CERTIFICATION BY THE ENGINEER

"I CERTIFY THAT THIS PLAN FOR EROSION AND SEDIMENT CONTROL REPRESENTS A PRACTICAL AND WORKABLE PLAN BASED ON MY PERSONAL KNOWLEDGE OF THE SITE CONDITIONS AND THAT IT WAS PREPARED IN ACCORDANCE WITH THE REQUIREMENTS OF THE ANNE ARUNDEL SOIL CONSERVATION DISTRICT."

KENNETH A. McCORD P.E. No. 1974 — DATE 8-30-79

Reviewed for ANNE ARUNDEL S.C.D.
Name
and meets Technical Requirements
Signature — Date 9-19-79
U.S. Soil Conservation Service

ANNE ARUNDEL SOIL CONSERVATION DISTRICT
APPROVED FOR SEDIMENT CONTROL
DISTRICT OFFICIAL
DATE 9-19-79 PLAN NO. 95-28

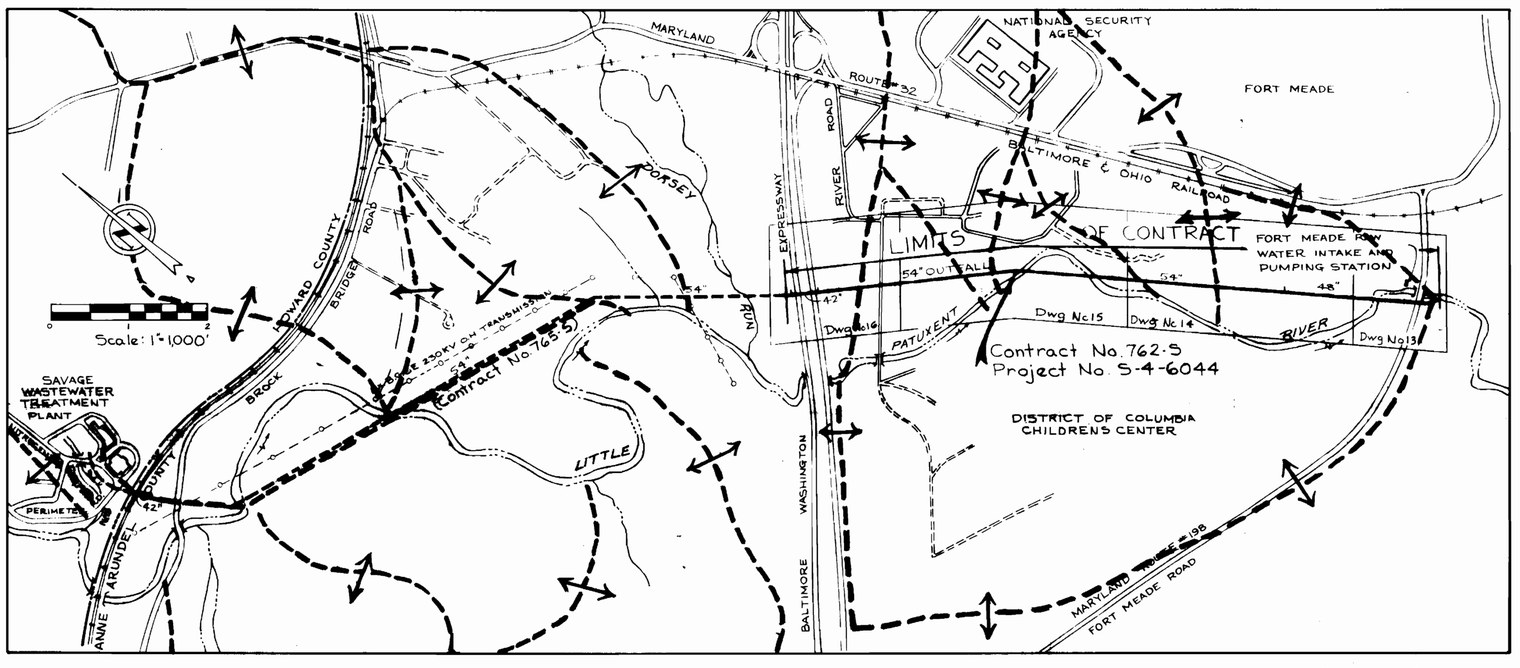

LIST OF DRAWINGS

DRAWING NUMBER	TITLE
13	LOCATION AND DRAINAGE MAP
14 - 17	PLAN OF OUTFALL
18 - 19	DETAILS - SEDIMENT CONTROL PLAN

Savage WWTP Outfall Sewer
Project No. S-4-6044
Contract No. 762-S

WHITMAN, REQUARDT & ASSOCIATES ENGINEERS 1304 ST. PAUL ST. BALTIMORE, MARYLAND	DEPARTMENT OF PUBLIC WORKS HOWARD COUNTY, MARYLAND 8/30/79 DATE CHIEF-BUREAU OF ENVIRONMENTAL SERVICES	CONTRACT NO. 762-S	LOCATION AND DRAINAGE MAP SEDIMENT CONTROL PLAN	SAVAGE WASTEWATER TREATEMENT PLANT TREATED EFFLUENT OUTFALL	DRAWING NO. 13 OF 19	SCALE AS SHOWN

W.O. 7513-2

As Built- December 1, 1981 ~~Sept 19, 1979~~
Sediment Control Only

K&E BALTIMORE 17 0459 PHOENIX MC 81320

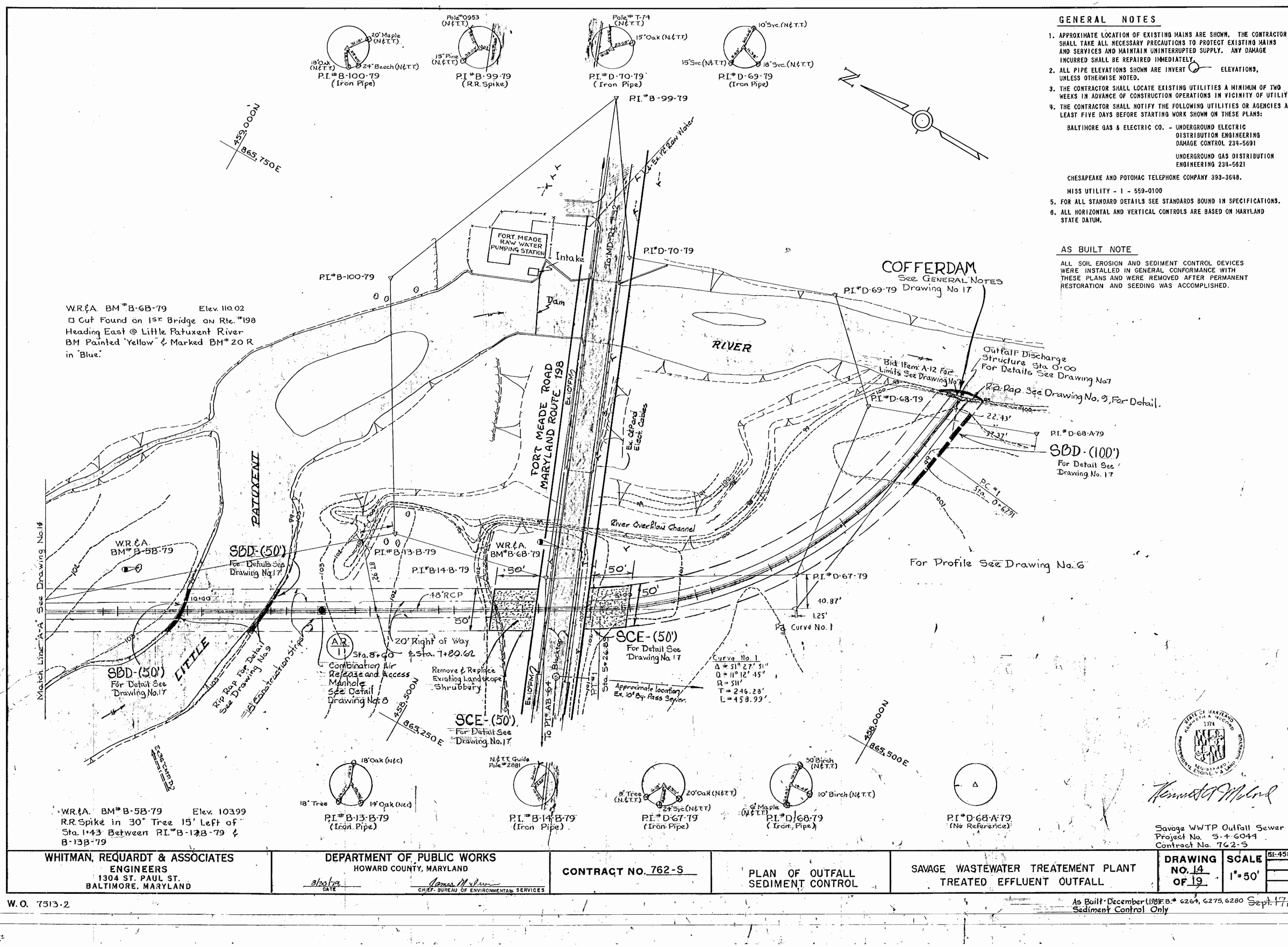

GENERAL NOTES

1. APPROXIMATE LOCATION OF EXISTING MAINS ARE SHOWN. THE CONTRACTOR SHALL TAKE ALL NECESSARY PRECAUTIONS TO PROTECT EXISTING MAINS AND SERVICES AND MAINTAIN UNINTERRUPTED SUPPLY. ANY DAMAGE INCURRED SHALL BE REPAIRED IMMEDIATELY.
2. ALL PIPE ELEVATIONS SHOWN ARE INVERT ○— ELEVATIONS, UNLESS OTHERWISE NOTED.
3. THE CONTRACTOR SHALL LOCATE EXISTING UTILITIES A MINIMUM OF TWO WEEKS IN ADVANCE OF CONSTRUCTION OPERATIONS IN VICINITY OF UTILITIES.
4. THE CONTRACTOR SHALL NOTIFY THE FOLLOWING UTILITIES OR AGENCIES AT LEAST FIVE DAYS BEFORE STARTING WORK SHOWN ON THESE PLANS:

   BALTIMORE GAS & ELECTRIC CO. - UNDERGROUND ELECTRIC DISTRIBUTION ENGINEERING DAMAGE CONTROL 234-5691

   UNDERGROUND GAS DISTRIBUTION ENGINEERING 234-5621

   CHESAPEAKE AND POTOMAC TELEPHONE COMPANY 393-3648.

   MISS UTILITY - 1 - 559-0100
5. FOR ALL STANDARD DETAILS SEE STANDARDS BOUND IN SPECIFICATIONS.
6. ALL HORIZONTAL AND VERTICAL CONTROLS ARE BASED ON MARYLAND STATE DATUM.

AS BUILT NOTE

ALL SOIL EROSION AND SEDIMENT CONTROL DEVICES WERE INSTALLED IN GENERAL CONFORMANCE WITH THESE PLANS AND WERE REMOVED AFTER PERMANENT RESTORATION AND SEEDING WAS ACCOMPLISHED.

W.R.&A. BM #B-5B-79 Elev. 103.99
R.R. Spike in 30" Tree 15' Left of Sta. 1+43 Between P.I. #B-12B-79 & B-13B-79

Savage WWTP Outfall Sewer
Project No. S-4-6044
Contract No. 762-S

WHITMAN, REQUARDT & ASSOCIATES ENGINEERS 1304 ST. PAUL ST. BALTIMORE, MARYLAND	DEPARTMENT OF PUBLIC WORKS HOWARD COUNTY, MARYLAND 3/25/74 DATE James M. Irvin CHIEF-BUREAU OF ENVIRONMENTAL SERVICES	CONTRACT NO. 762-S	PLAN OF OUTFALL SEDIMENT CONTROL	SAVAGE WASTEWATER TREATEMENT PLANT TREATED EFFLUENT OUTFALL	DRAWING NO. 14 OF 19	SCALE 1"=50'	51-458/866

W.O. 7513-2

As Built-December 1,1981 F.B.# 6264, 6275, 6280 Sept. 17, 1979
Sediment Control Only

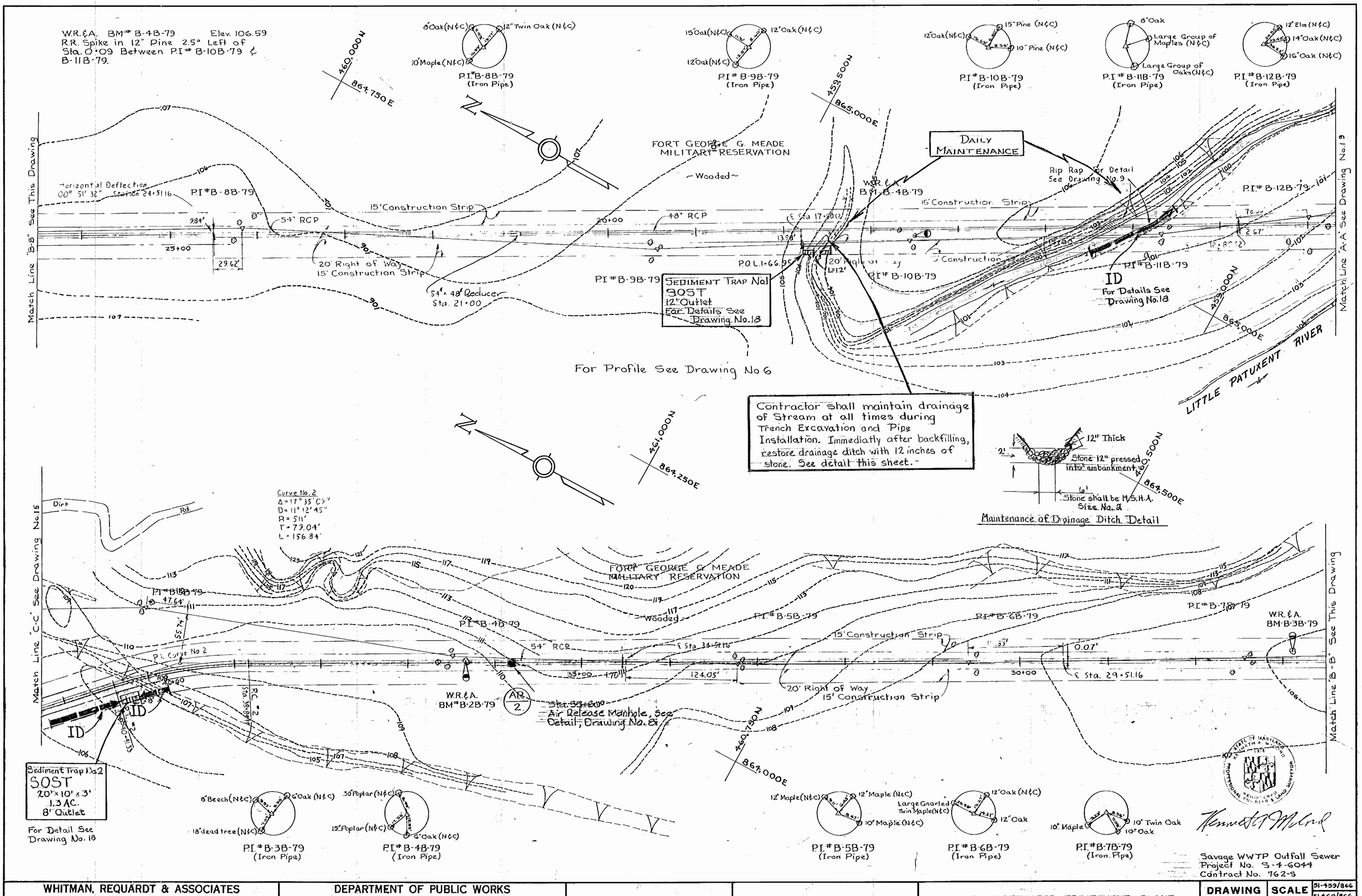

WHITMAN, REQUARDT & ASSOCIATES ENGINEERS 1304 ST. PAUL ST. BALTIMORE, MARYLAND	DEPARTMENT OF PUBLIC WORKS HOWARD COUNTY, MARYLAND 8/30/79 DATE — James M. Irvin CHIEF - BUREAU OF ENVIRONMENTAL SERVICES	CONTRACT NO. 762-S	PLAN OF OUTFALL SEDIMENT CONTROL	SAVAGE WASTEWATER TREATEMENT PLANT TREATED EFFLUENT OUTFALL	DRAWING NO. 15 OF 19	SCALE 1"=50'	51-459/866 51-460/866 51-460/864.5 51-461/864.5

W.O. 7513-2

As Built - December 1, 1981 F.B. # 6266, 6275, 6264 Sept. 17, 1979
Sediment Control Only

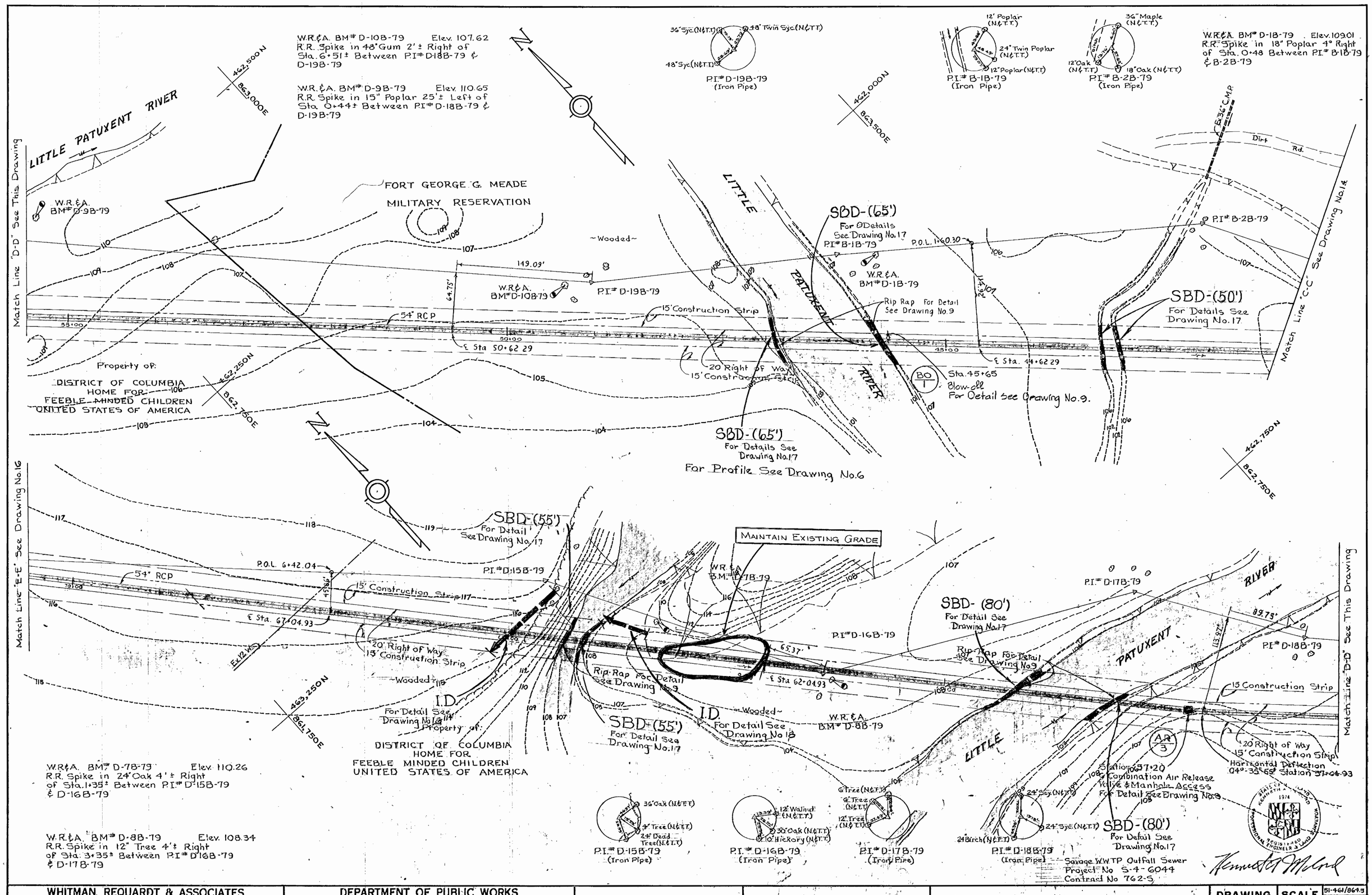

WHITMAN, REQUARDT & ASSOCIATES ENGINEERS 1304 ST. PAUL ST. BALTIMORE, MARYLAND	DEPARTMENT OF PUBLIC WORKS HOWARD COUNTY, MARYLAND 8/30/79 DATE CHIEF - BUREAU OF ENVIRONMENTAL SERVICES	CONTRACT NO. 762-S	PLAN OF OUTFALL SEDIMENT CONTROL	SAVAGE WASTEWATER TREATEMENT PLANT TREATED EFFLUENT OUTFALL	DRAWING NO. 16 OF 19	SCALE 1" = 50'	51-461/864.5 51-462/864.5 51-462/863 51-463/863

W.O. 7513-2

As Built - December 1, 1981 Sediment Control Only

FB# 6266, 6275, 6264 Sept. 17, 1979

K&E BALTIMORE 17 0459 PHOENIX MC 91328

464.750N
861.000E

8"Birch(N&T.T.)
10"Pine(N&T.T.)
12"Tree(N&T.T.)

PI# D-13A-79
(Iron Pipe)

PI# D-14B-79
(Iron Pipe)

464.000N
861.500E

W.R.&A. BM# D-6B-79 Elev. 117.49
R.R. Spike in Power Pole 120'± Left of PI# D-14B-79

W.R.&A.
BM# D-6B-79

N

Property of:
UNITED STATES GOVERNMENT
JURISDICTION OF NATIONAL PARK SERVICES

Limits of Construction area within Baltimore Washington Parkway Property.

Property of:
DISTRICT OF COLUMBIA
~~HOME FOR~~
FEEBLE MINDED CHILDREN
UNITED STATES OF AMERICA

Tar & Chip Shoulder
SOUTH Bound Lane
BALTIMORE
North Bound Lane
Tar & Chip Shoulder

S.B.D (120')
For Details See Drawing No.17

BY OTHERS
CONTRACT 765-S

Ex 16"D

Station 81+45
6" AIR Release Valve Manhole
For detail see Drawing No.8

PI# D-13A-79

LIMITS OF LUMP SUM ITEM NO. A-11

54" RCP

42" RCP

54" RCP
Contract 765-S by others

Sta. 85+05 BK + 0.00 AHD
Remove Plug and Connect to 54"x42" Eccentric Reducer If existing otherwise provide Plug.

LIMIT OF CONTRACT

Blacktop

WASHINGTON PARKWAY

54"x42" Eccentric Reducer Sta. 81+80

72" Liner Plate Tunnel For Detail See Drawing No.9

464.250N
860.750E

Temporary Spoil Area for Tunnel Excavation. See Detail Below.

PASTURE

PAL 5+06.45

23.38°

℄ Sta. 78+82.14

80+00

116

117

118

119

120

121

122

123

124

125

126

127

128

129

130

131

132

133

134

135

PASTURE

SCE - (50')
For Detail See Drawing No.17

15' Construction Strip

50'

75+90

20' Right of Way
15' Construction Strip

50'

Ex. CATV Cable

ROAD

Ex. 12" T.C.P.

SCE (50')
For Detail See Drawing No.17
Horizontal Deflection
00° 32' 05" Station 73+82.14

50'

PI# D-14B-79

50'

RIVER

Match Line "E-E" See Drawing No.16

PLAN
Scale: 1" = 50'

NOTE
Spoil Stockpile Area shall be in accordance with Federal Highway Administration Permit for Crossing of Baltimore - Washington Parkway (U.S. 295)

S.B.D. (120')
For Details See Drawing No. 17

SPOIL AREA

SBD (Around Entire Perimeter

SPOIL AREA DETAIL

Property of:
UNITED STATES GOVERNMENT
BALTIMORE WASHINGTON PARKWAY

Property of:
DISTRICT OF COLUMBIA
HOME FOR
FEEBLE MINDED CHILDREN
UNITED STATES of AMERICA

℄ Parkway
℄ Parkway

AR 4

Bid Item A-14 For Detail See Drawing No.8

130
120
110
100
90
80

100 Year Flood Design Hydraulic Gradient (50 MGD)

Normal Design Hydraulic Gradient (50 MGD)

42" RCP

54" RCP

85+08 BK
0.00 AHD
111.2

82+00
111.5

81+80
54"x42"
Eccentric
Reducer

81+55
110.9

81+09
107.4

81+38
110.9

79+00
107.1

54" RCP Contract 765-5 (by others)

54"x42" Eccentric Reducer (by others)

72" Liner Plate Tunnel See Detail Drawing No. 9

82+92

82+20

LIMITS OF LUMP SUM ITEM NO. A-11

LIMIT OF CONTRACT

85+06

81+60
Air Release Manhole

Sta. 81+45 Invert 110.5

Match Line "C-C" See Drawing No.16

PROFILE
Scale: Horizontal: 1" = 100'
Vertical: 1" = 10'

STATE OF MARYLAND
KENNETH A. McCORD
1378
PROFESSIONAL REGISTERED ENGINEER & LAND SURVEYOR

Kenneth A. McCord

Savage WWTP Outfall Sewer
Project No. S-4-6044
Contract No. 762-S

WHITMAN, REQUARDT & ASSOCIATES ENGINEERS 1304 ST. PAUL ST. BALTIMORE, MARYLAND	DEPARTMENT OF PUBLIC WORKS HOWARD COUNTY, MARYLAND 8/22/79 DATE James McGinn CHIEF - BUREAU OF ENVIRONMENTAL SERVICES	CONTRACT NO. 762-S	PLAN OF OUTFALL SEDIMENT CONTROL	SAVAGE WASTEWATER TREATEMENT PLANT TREATED EFFLUENT OUTFALL	DRAWING NO. 17 OF 19	SCALE AS SHOWN	51-464/861.5 51-463/861.5 51-463/863

W.O. 7513-2

As Built-December 1, 1981 F.B.# 6264, 6280
Sediment Control Only

~~Feb. 5, 1980~~

KAE BALTIMORE 1700459 PHOENIX MC 91324

STRAW BALE DIKE (SBD)

Scale: 1"=1'-0"

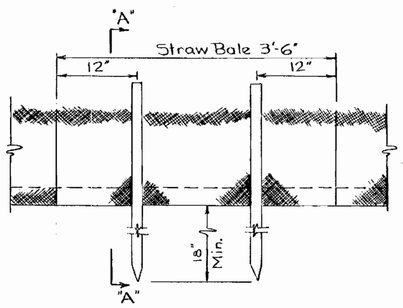

ANCHORING DETAIL

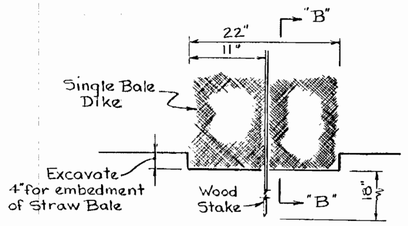

EMBEDDING DETAIL

CONSTRUCTION SPECIFICATIONS

1. Bales shall be placed in a row with ends tightly abutting the adjacent bales.
2. Each bale shall be embedded in the soil a minimum of 4".
3. Bales shall be securely anchored in place by stakes driven through the bales. The first stake in each bale shall be angled toward previously laid bale to force bales together.
4. Inspection shall be frequent and repair or replacement shall be made promptly as needed.
5. Bales shall be removed when they have served their usefulness so as not to block or impede storm flow or drainage.

SBD-1

Symbol

SEEDING

TEMPORARY

1. Ground Limestone (50 lbs/1000 S.F.)
   Fertilizer 10-10-10 (25 lb/1000 S.F.)
   Seed-Italian Rye Grass 40 lbs Acre
   Mulch with straw at the rate of 50 lbs/1000 S.F.) or one tone per acre.
   Anchor with asphalt at the rate of 200 Gallons/Acre.

PERMANENT

* Ky.31 Tall Fescue (40 lbs/ac. or .92 lbs/1000 S.F.)
** Sericea Lespedeza (20 lbs/ac. or .46 lbs/1000 S.F.)
* Certified seed only
** Inoculated hulless seed.

STONE OUTLET STRUCTURE (SOS)

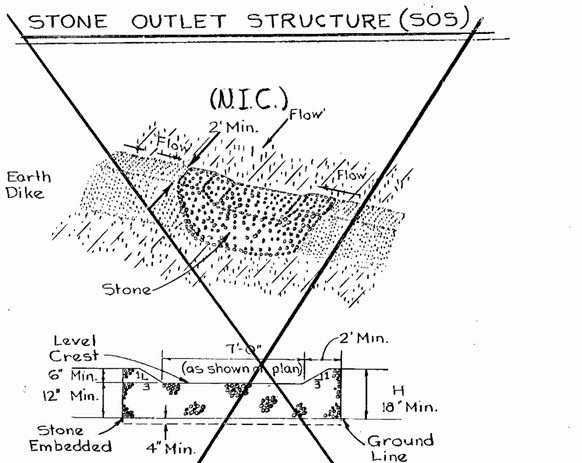

PROFILE

CONSTRUCTION SPECIFICATIONS

1. The stone shall be crushed stone. Gravel may be used if crushed stone is not available. The stone shall meet MSHA Size NO.2 or AASHTO designation M43 Size No.2 or 24.
2. The crest of the stone dike shall be at least six inches lower than the lowest elevation of the top of the earth dike and shall be level.
3. The stone outlet structure shall be embedded into the soil a minimum of four inches.
4. The minimum length, in feet, of the crest of the stone outlet structure shall be seven feet.
5. The stone outlet structure shall be inspected after each rain, and the stone shall be replaced when the structure ceases to function as intended due to silt accumulation among the stone, washout, construction traffic damage, etc.

SOS-1

Symbol L=

STABILIZED CONSTRUCTION ENTRANCE (SCE-1)

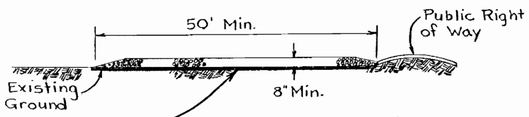

PROFILE

Poly Filter-X as manufactured by Carthage Mills Inc., Erosion Control Division, 124 W. 66TH St. Cincinnati Ohio, or Laurel Erosion Control Cloth as manufactured by Laurel Plastic Inc., Madison, Maine, or equal.

Provide appropriate transition between Stabilized Construction Entrance and Public Right-of-Way

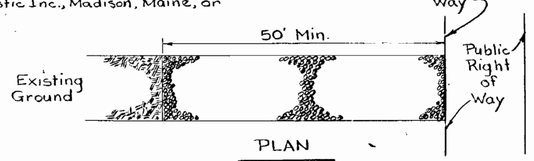

PLAN

CONSTRUCTION SPECIFICATIONS

1. Stone size - Use MSHA size No.2 (2-1/2" to 1") or AASHTO designation M43, size No.2 (2-1/2" to 1-1/2"). Use crushed stone.
2. Length - As effective, but not less than 50 feet.
3. Thickness - Not less than eight (8) inches.
4. Width - Not less than full width of all points of ingress or egress.
5. Washing - When necessary, wheels shall be cleaned to remove sediment prior to entrance onto public right-of-way. When washing is required, it shall be done on an area stabilized with crushed stone which drains into an approved sediment trap or sediment basin. All sediment shall be prevented from entering any storm drain, ditch, or watercourse through use of sand bags, gravel, boards or other approved methods.
6. Maintenance - The entrance shall be maintained in a condition which will prevent tracking or flowing of sediment onto public rights-of-way This may require periodic top dressing with additional stone as conditions demand and repair and/or cleanout of any measures used to trap sediment. All sediment spilled, dropped, washed or tracked onto public rights-of-way must be removed immediately.

SCE-1

Symbol

GENERAL NOTES:

1. The Contractor shall maintain, repair and/or replace any existing sediment control devices encountered and disturbed during the course of construction under this contract and as shown on the approved sediment control plan, included as part of the contract documents. All such disturbed devices shall be repaired or replaced before leaving the work site at the end of each working day. The costs of performing all such work, including materials will not be paid for separtely and must be included in the cost of other items bid.
2. See "Sequence of Construction".
3. Prior to starting any work the Contractor shall notify the Anne Arundel Soil Conservation District at least 24 hours in advance of notice to begin.
4. No sediment control structures shall be removed without approval of Department of Natural Resources.
5. See "Requirements of Anne Arundel Conservation District" under Special Provisions of the General Specifications.
6. Excess material from excavations and backfills shall be removed by the Contractor to an off site area as approved by A.A.S.C.D.
7. Cofferdam requirements for River Crossing shall be submitted to the Soil Conservation Service for approval. Cofferdams shall be installed prior to excavation at Dorsey Run and Little Patuxent River Crossings.

SEQUENCE OF CONSTRUCTION (30 WEEKS)

1. Prior to starting work, the Contractor shall notify the Anne Arundel Office of Licenses and Permits at least 24 hours in advance of notice to begin.
2. Construct Stabilized Construction Entrance.
3. Clear the site within the limits of proposed work in conjunction with construction of Sediment Control Structures.
4. Strip and grade; topsoil stockpiles that will be left standing for a period of 7 days or more shall be stabilized. See Temporary Seeding this sheet.
5. Excavate the trench; install pipe; backfill and grade, daily.
6. Stabilize the disturbed areas immediately after backfilling. See Permanent Seeding Specifications and this sheet.
7. Remove the sediment control structures.

STRAW BALE EMPLOYMENT ALONG TRENCH EXCAVATION

Scale: 1/4"=1'-0"

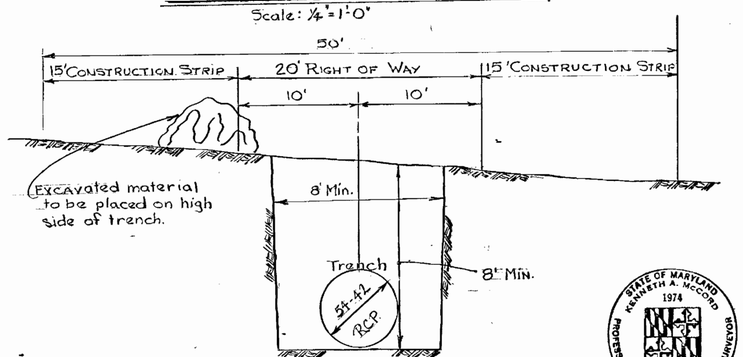

TYPICAL TRENCH SECTION

STATE OF MARYLAND KENNETH A. McCORD 1974 PROFESSIONAL REGISTERED ENGINEER & LAND SURVEYOR

Kenneth A. McCord

Savage WWTP Outfall Sewer
Project No. S-4-6044
Contract No. 762-S

WHITMAN, REQUARDT & ASSOCIATES ENGINEERS 1304 ST. PAUL ST. BALTIMORE, MARYLAND	DEPARTMENT OF PUBLIC WORKS HOWARD COUNTY, MARYLAND 2/20/79 DATE James M. Irvin CHIEF, BUREAU OF ENVIRONMENTAL SERVICES	CONTRACT NO. 762-S	DETAILS SEDIMENT CONTROL PLAN	SAVAGE WASTEWATER TREATEMENT PLANT TREATED EFFLUENT OUTFALL	DRAWING NO. 18 OF 19	SCALE AS SHOWN

W.O. 7513-2

As Built-December 1, 1981
Sediment Control Only

~~Sept. 17, 1979~~

K&E BALTIMORE 170453 PHOENIX MC 91324

INTERCEPTOR DIKE - (I.D)

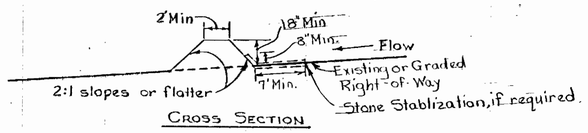

CROSS SECTION

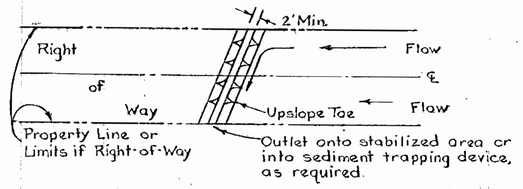

PLAN VIEW

CONSTRUCTION SPECIFICATIONS

1. All dikes shall be machine compacted.
2. All interceptor dikes shall have positive drainage to an outlet.
3. Top width may be wider and side slopes may be flatter if desired to facilitate crossing by construction traffic.
4. Field location should be adjusted as needed to utilize a stabilized safe outlet.
5. Interceptor dikes shall have an outlet that functions with a minimum of erosion. Runoff shall be conveyed to a sediment trapping device such as a sediment trap or sediment basin when either the interceptor dike channel or the drainage area above the dike are not adequately stabilized.
6. Stabilization, as specified by the plans, shall be: (1) in accordance with Standard and Specifications for Grassed Waterway, and the area to be stabilized shall be the channel (flow area); or (2) the flow area shall be lined with stone that meets MSHA size No.2 or AASHTO size No.2 or 24 which is placed in a 3 inch thick layer and pressed into the soil. The area covered by the stone shall be as shown on Standard Drawing DD-1.
7. Periodic inspection and required maintenance must be provided.

STANDARD SYMBOL — I D

STONE OUTLET SEDIMENT TRAP (SOST)

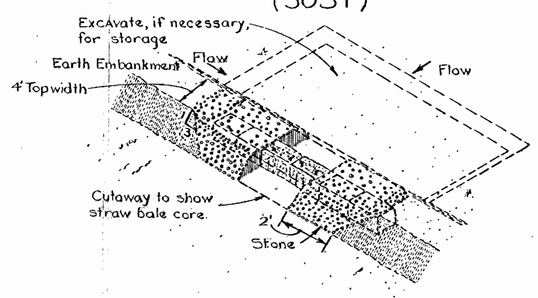

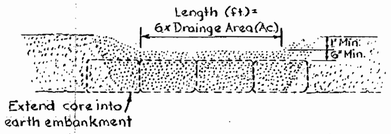

ELEVATION

NOTE - Drawings show straw bales used for core. Bales are anchored as per Standard Specifications for Straw Bale Dike. Other materials (e.g., timber or concrete block) may also be used for core. Firmly anchor all core material to ground.

CONSTRUCTION SPECIFICATIONS

1. Area under embankment shall be cleared, grubbed and stripped of any vegetation and root mat. The pool area shall be cleared.
2. The fill material for the embankment shall be free of roots or other woody vegetation as well as over sized stones, rocks, organic material or other objectionable material. The embankment shall be compacted by traversing with equipment while it is being constructed.
3. Sediment shall be removed and trap restored to its original dimensions when the sediment has accumulated to 1/2 the design depth of the trap. Removed sediment shall be deposited in a suitable area and in such a manner that it will not erode.
4. The structure shall be inspected after each rain and repairs made as needed.
5. Construction operations shall be carried out in such a manner that erosion and water pollution is minimized.
6. The structure shall be removed and the area stabilized when the drainage area has been properly stabilized.
7. All cut and fill slopes shall be 2;1 or flatter.
8. The crushed stone used in the outlet shall meet AASHTO designation M43, size No.2 or 24 or its equivalent such as MSHA No.2. Gravel, meeting the above gradation, may be used if crushed stone is not available. Crusher run is not acceptable.

EXCAVATED EARTH OUTLET SEDIMENT TRAP - (EEOST)

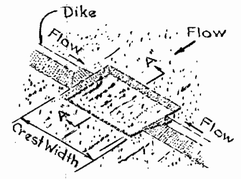

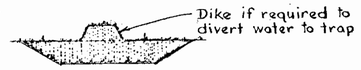

SECTION "A-A"

CONSTRUCTION SPECIFICATIONS

1. Area under embankment shall be cleared, grubbed and stripped of any vegetation and root mat. The pool area shall be cleared.
2. The fill material for the embankment shall be free of roots or other woody vegetation as well as oversized stones, rocks, organic material, or other objectionable material. The embankment shall be compacted by traversing with equipment while it is being constructed.
3. Sediment shall be removed and trap restored to its original dimensions when the sediment has accumulated to 1/2 the design depth of the trap. Removed sediment shall be deposited in a suitable area and in such a manner that it will not erode.
4. The structure shall be inspected after each rain and repairs made as needed.
5. Construction operations shall be carried out in such a manner that erosion and water pollution are minimized.
6. The structure shall be removed and rea stabilized when the drainage area has been properly stabilized.
7. All cut and fill slopes shall be 2;1 or flatter.
8. Outlet crest elevation shall be at least one foot below the top of the embankment.

STATE OF MARYLAND KENNETH A. McCORD 1974 REGISTERED PROFESSIONAL ENGINEER & LAND SURVEYOR

Kenneth A. McCord

WHITMAN, REQUARDT & ASSOCIATES ENGINEERS 1304 ST. PAUL ST. BALTIMORE, MARYLAND	DEPARTMENT OF PUBLIC WORKS HOWARD COUNTY, MARYLAND 9/20/79 DATE — James M. Irvin CHIEF, BUREAU OF ENVIRONMENTAL SERVICES	CONTRACT NO. 762-S	DETAILS SEDIMENT CONTROL PLAN	SAVAGE WASTEWATER TREATEMENT PLANT TREATED EFFLUENT OUTFALL	DRAWING NO. 19 OF 19	SCALE AS SHOWN

W.O. 7513-2

As Built - December 1, 1981 Sediment Control Only

~~Sept. 17, 1979~~