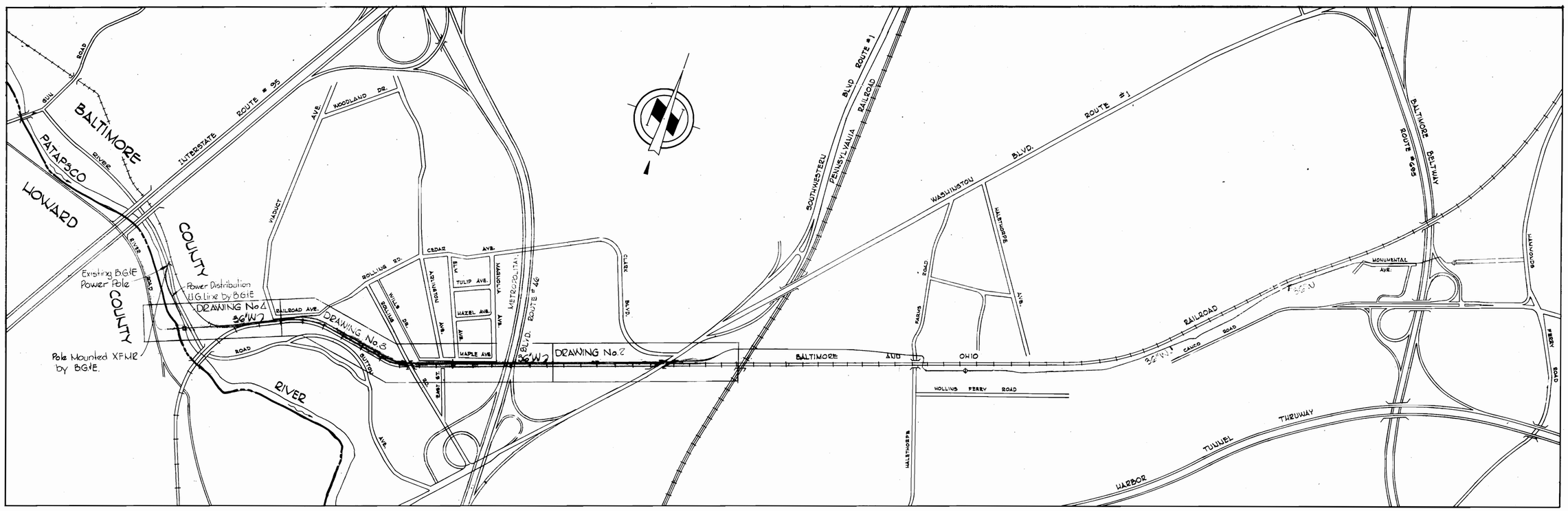

PROJECT NO. W-4-8034

SOUTHWEST TRANSMISSION MAIN

HOWARD COUNTY, MARYLAND

DEPARTMENT OF PUBLIC WORKS

QUANTITIES	
36" Water	6288.42 LF

OPERATING GRADIENT = ELEVATION 350
TEST GRADIENT = ELEVATION 525

"AS - BUILT"
Stakeout F.B.# 5841
Diary #1 F.B.# 5799
Diary #2 F.B.# 5848
Diary #3 F.B.# 5901

36" Lock Joint Pipe
Prestressed Concrete Cylinder Pipe

STATE OF MARYLAND KENNETH A. McCORD 1974 REGISTERED PROFESSIONAL ENGINEER & LAND SURVEYOR

Kenneth A. McCord

Relay to Patapsco River
Contract No. 625-W

CITY OF BALTIMORE		BALTIMORE COUNTY
9/13/74 DIRECTOR DEPT. OF PUBLIC WORKS — DATE	9/12/74 CHIEF, WATER DIV., BUREAU OF ENGINEERING — DATE	9/18/74 DIRECTOR DEPT. OF PUBLIC WORKS — DATE

C.W.O. 40786

WHITMAN, REQUARDT & ASSOCIATES ENGINEERS 1304 ST. PAUL ST. BALTIMORE, MARYLAND	HOWARD COUNTY	CONTRACT NO. 625 - W	LOCATION PLAN	SOUTHWEST TRANSMISSION MAIN	DRAWING NO. 1 OF 11	SCALE 1"=600'
	7/25/74 DIRECTOR DEPT. OF PUBLIC WORKS — DATE; 7-25-74 CHIEF BUREAU OF ENGINEERING — DATE					

W. O. 6257-2

AS BUILT
March 7, 1978

July 17, 1974
April 1, 1975

B. K. ELLIOTT CO., PGH., PA. REORDER A-11827

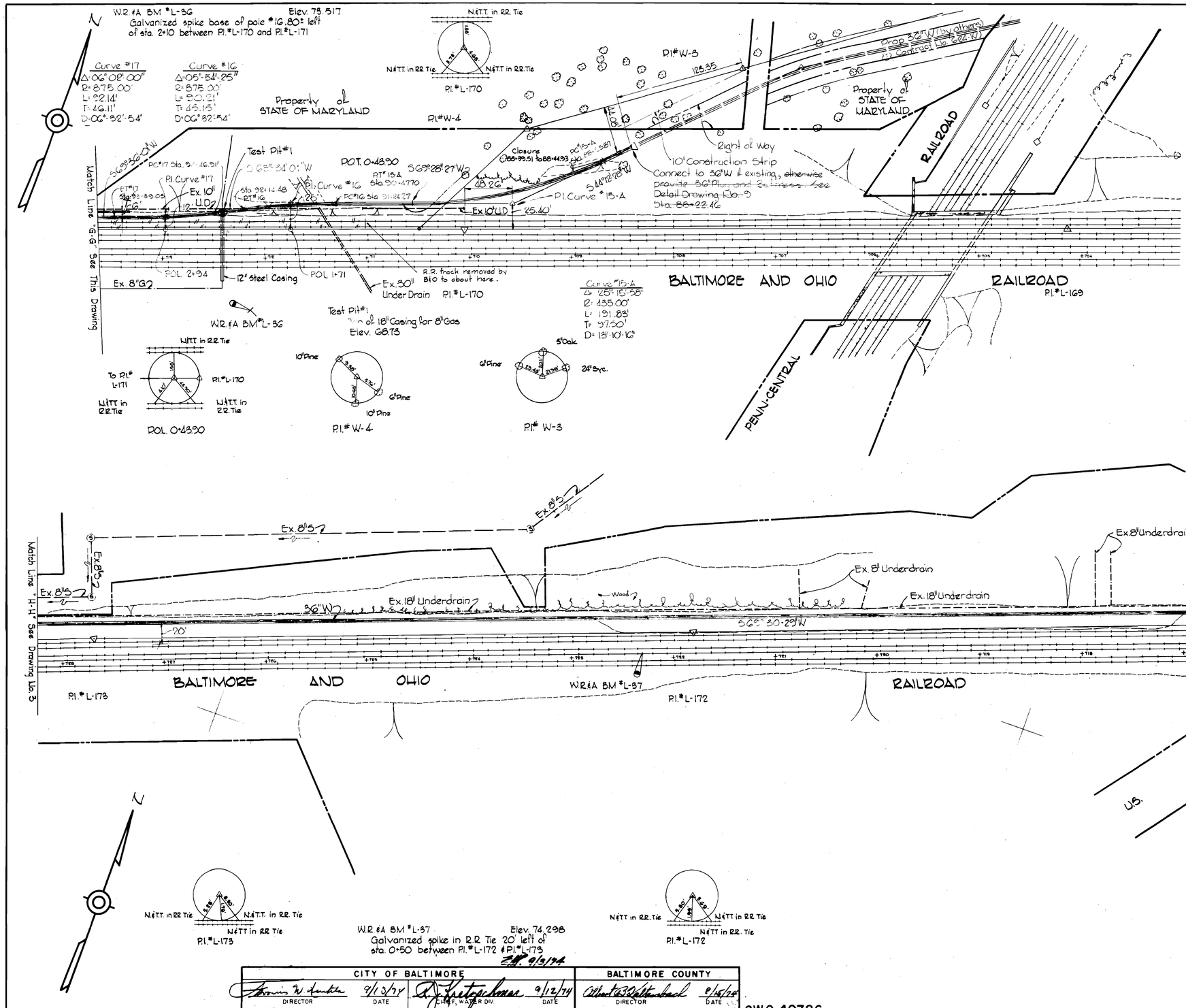

General Notes

1. Approximate location of existing mains are shown. The Contractor shall take all necessary precautions to protect existing mains and services and maintain uninterrupted supply. Any damage incurred shall be repaired immediately.
2. All pipe elevations shown are invert elevation.
3. The Contractor shall locate existing utilities a minimum of two weeks in advance of construction operations in vicinity of utilities.
4. For all standard details see standards bound in Specifications.
5. All horizontal and vertical controls are based on Maryland State Datum.
6. Existing Underdrains which are damaged shall be replaced with perforated Bituminous Coated Corrugated Metal Pipe of the same size as damaged. Payment for replacing Underdrains will be made at the appropriate unit price bid.

CONTRACTOR
NOTIFY BALTIMORE CITY · BUREAU OF UTILITY OPERATIONS · 396-0336
THREE DAYS BEFORE STARTING WORK

STATE OF MARYLAND · KENNETH A. McCORD · 1974 · REGISTERED PROFESSIONAL ENGINEER & LAND SURVEYOR

Kenneth A. McCord

Relay to Patapsco River
Contract No. 625-W

CITY OF BALTIMORE				BALTIMORE COUNTY	
Francis W. Kentula	9/13/74	R. J. Kretzschmar	9/12/74	Albert B. Baltenbach	8/15/74
DIRECTOR DEPT. OF PUBLIC WORKS	DATE	CHIEF, WATER DIV. BUREAU OF ENGINEERING	DATE	DIRECTOR DEPT. OF PUBLIC WORKS	DATE

C.W.O. 40786

WHITMAN, REQUARDT & ASSOCIATES ENGINEERS 1304 ST. PAUL ST. BALTIMORE, MARYLAND	HOWARD COUNTY		CONTRACT NO. 625-W	PLAN OF WATER MAINS	SOUTHWEST TRANSMISSION MAIN	DRAWING NO. 2 OF 11	SCALE 1" = 50'
	William A. Alton 7/25/74 DIRECTOR DEPT. OF PUBLIC WORKS	DATE	W. O. Lockhart 7-25-74 CHIEF BUREAU OF ENGINEERING	DATE			

W. O. 6257-2

AS BUILT
March 7, 1978

F.B.# 4462, 4469, 4496, 4938
July 17, 1974
April 1, 1975

WS 625-W/2

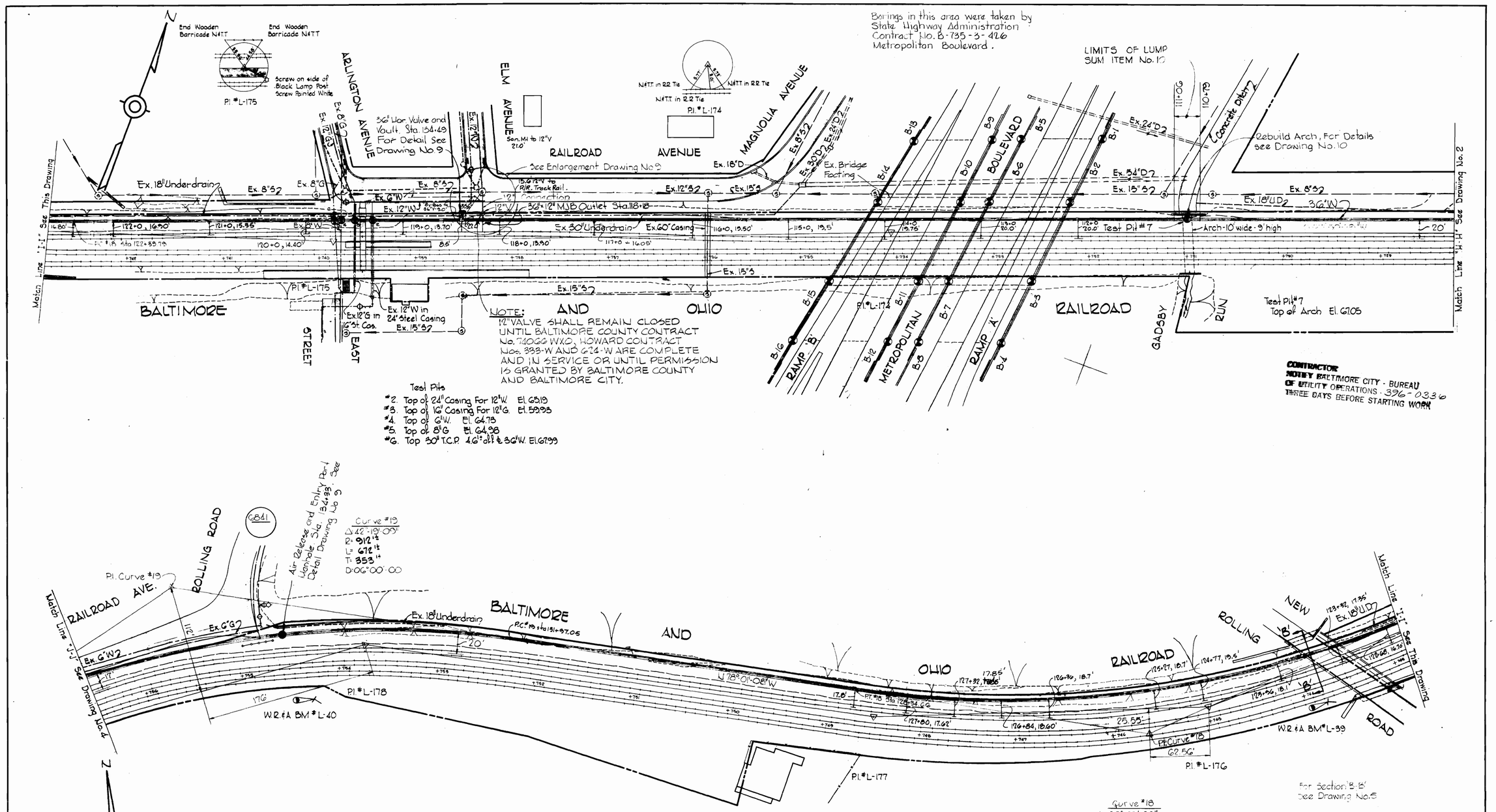

Test Pits
#2. Top of 24" Casing For 12"W. El. 65.19
#3. Top of 16" Casing For 12"G. El. 59.93
#4. Top of 6"W. El. 64.73
#5. Top of 8"G El. 64.98
#6. Top 30" T.C.P. 4.6' off & 36"W. El. 67.99

W.R.&A. BM #L-40 Elev. 66.263
Galvanized spike in base of pole (no number).
40'± left of sta 0+66 between Pl. #L-178 & L-179

W.R.&A. BM #L-39 Elev. 71.634
Galvanized spike in base of pole (no number)
Located at S.W. corner of Bridge Pl. #166
across B&O R.R. Tracks 40'± left of sta.
3+90± between Pl. #L-175 & Pl. #L-176

Relay to Patapsco River
Contract No. 625-W

CITY OF BALTIMORE				BALTIMORE COUNTY	
DIRECTOR DEPT. OF PUBLIC WORKS	9/13/74 DATE	CHIEF, WATER DIV BUREAU OF ENGINEERING	9/12/74 DATE	DIRECTOR DEPT. OF PUBLIC WORKS	9/16/74 DATE

C.W.O. 40786

HOWARD COUNTY			
DIRECTOR DEPT. OF PUBLIC WORKS	7/25/74 DATE	CHIEF BUREAU OF ENGINEERING	7-25-74 DATE

WHITMAN, REQUARDT & ASSOCIATES
ENGINEERS
1304 ST. PAUL ST.
BALTIMORE, MARYLAND

CONTRACT NO. 625-W

PLAN OF WATER MAINS

SOUTHWEST TRANSMISSION MAIN

DRAWING NO. 3 OF 11

SCALE 1"=50'

AS BUILT March 7, 1978

FB# 4462, 4469, 4496 August 29, 1974 April 1, 1975

W. O. 6257-2

WS 625-W/3

W.R.&A. BM # L-41 Elev. 70.752
Galvanized spike in base of pole (no number)
8'± left of sta 0+21 between Pl.#L-180 and Pl.#L-181

Note:
The cost of encasing the 54-inch Interceptor shall be included in the unit price bid for excavation and backfill for 36-inch Water Mains with harnessed joints.

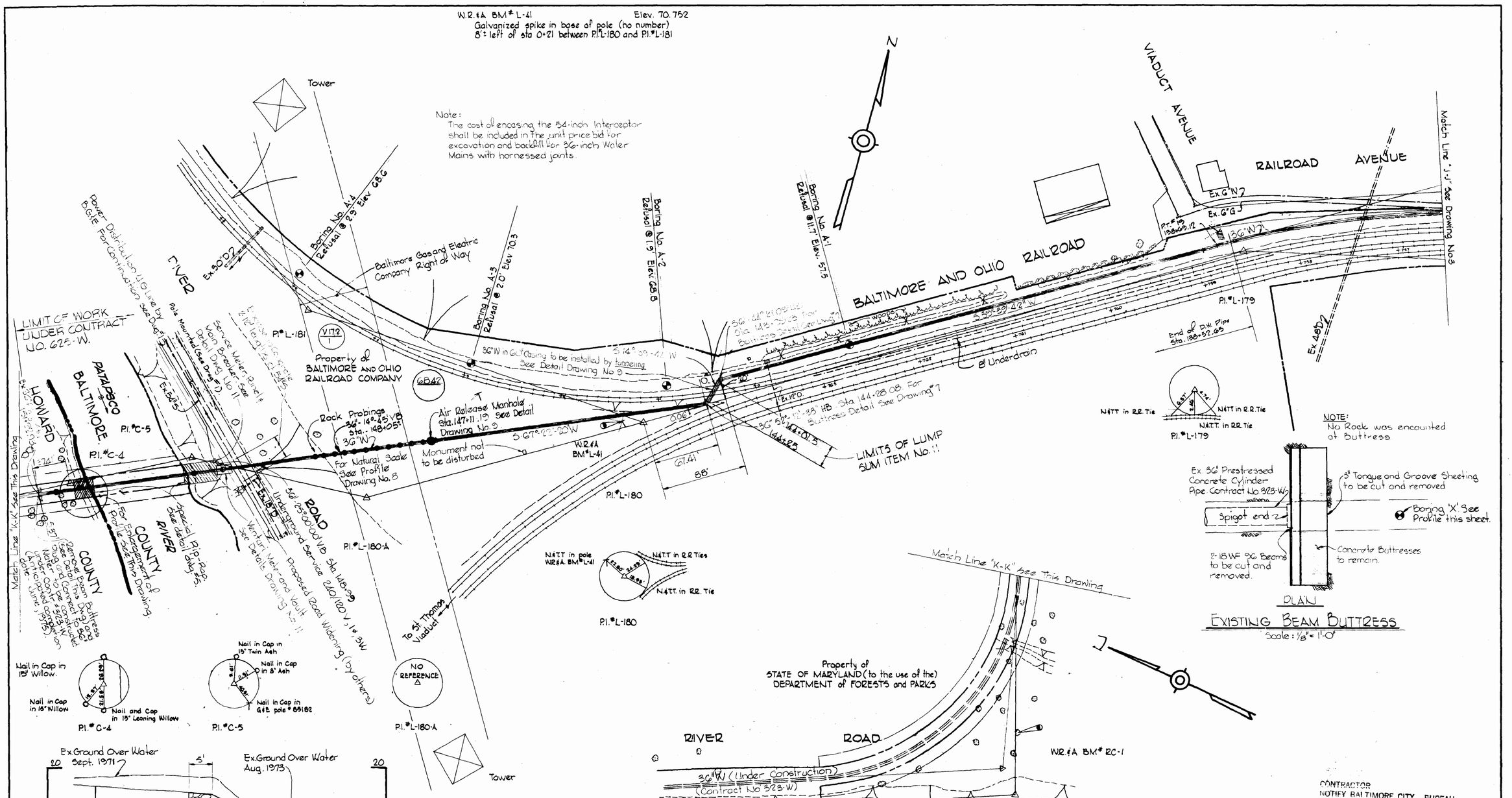

Note:
The Contractor shall notify the Baltimore Gas and Electric Company of Maryland prior to any construction activities in the vicinity of and/or Electric facilities by calling 301-234-5691 in Baltimore, Maryland.

Note:
Boring 'X' was made by contractor constructing Contract No. 323-W.

CONTRACTOR
NOTIFY BALTIMORE CITY - BUREAU OF UTILITY OPERATIONS 396-0336 THREE DAYS BEFORE STARTING WORK

WR.&A. BM # RC-1 Elev. 20.683
RR. Spike in 30" Maple 3'± right of sta 0+60 between Pl.C-3 and Pl.C-4

STATE OF MARYLAND KENNETH A. McCORD 1974 PROFESSIONAL ENGINEER & LAND SURVEYOR REGISTERED

Relay to Patapsco River Contract No. 625-W

CITY OF BALTIMORE				BALTIMORE COUNTY	
DIRECTOR DEPT. OF PUBLIC WORKS	9/12/74 DATE	CHIEF WATER DIV. BUREAU OF ENGINEERING	9/12/74 DATE	DIRECTOR DEPT. OF PUBLIC WORKS	9/13/74 DATE

C.W.O. 40786

HOWARD COUNTY			
DIRECTOR DEPT. OF PUBLIC WORKS	7/25/74 DATE	CHIEF BUREAU OF ENGINEERING	7-25-74 DATE

WHITMAN, REQUARDT & ASSOCIATES
ENGINEERS
1304 ST. PAUL ST.
BALTIMORE, MARYLAND

CONTRACT NO. 625-W

PLAN, PROFILE AND DETAIL OF WATER MAINS

SOUTHWEST TRANSMISSION MAIN

DRAWING NO. 4 OF 11

SCALE AS SHOWN

502-504
503-504

AS BUILT March 7, 1978

F.B. 4462, 4463, 4496, 4892, 4981
JANUARY 30, 1975
April 1, 1975

W. O. 6257-2

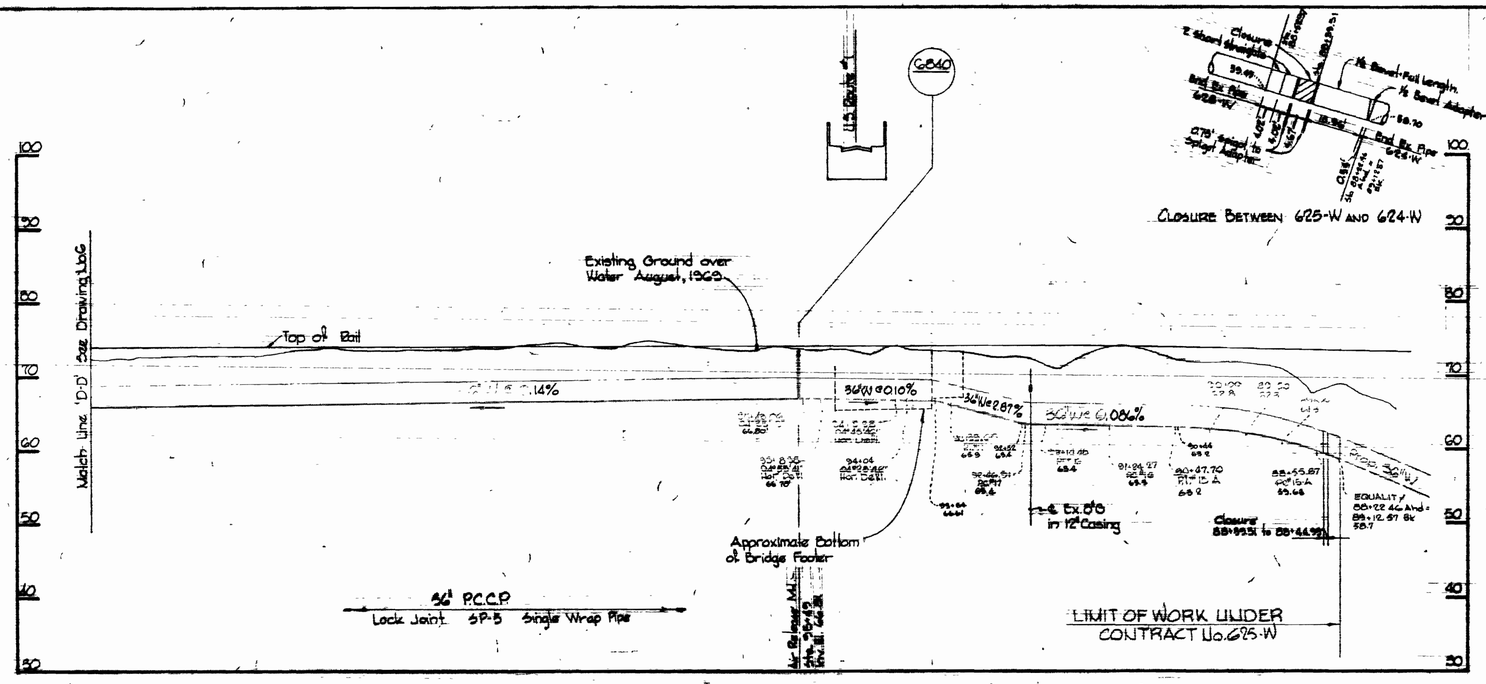

PROFILE
Scale: H: 1"=100' V: 1"=10'

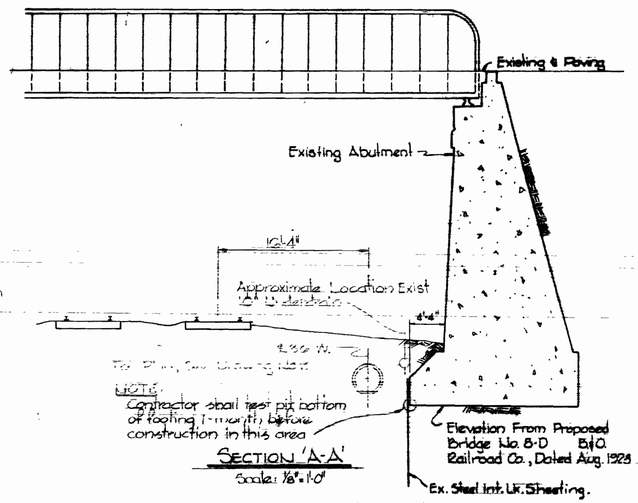

SECTION 'A-A'
Scale: 1/8"=1'-0"

BRIDGE AT U.S. ROUTE #1

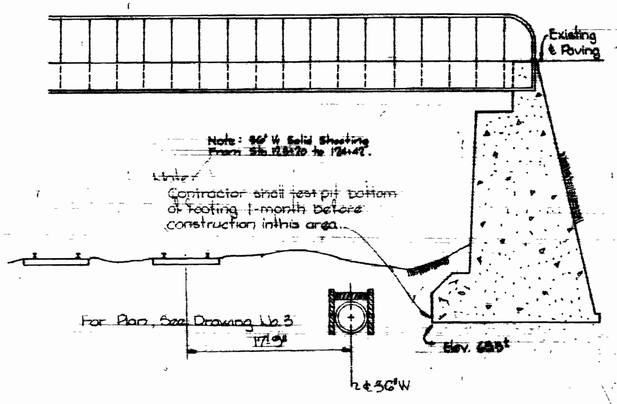

SECTION 'B-B'
Scale: 1/8"=1'-0"

BRIDGE AT ROLLING ROAD

NOTES:
1. Special Rip-Rap shall be maxium size-1000 lbs; 25% greater than 500 lbs; 45% to 75% from 50 to 500 lbs; not more than 25% less than 50 lbs, and placed as shown.
2. Erosion Control Fabric shall be Poly Filter X as manufactured by Carthage Mills Inc., Erosion Control Div., 124 W 60th Street, Cincinnati, Ohio; Laurel Erosion Control Cloth as manufactured by Laurel Plastics, Inc., Madison, Maine; or approved equal.
3. Payment for Special Rip-Rap will be made at the unit price bid.

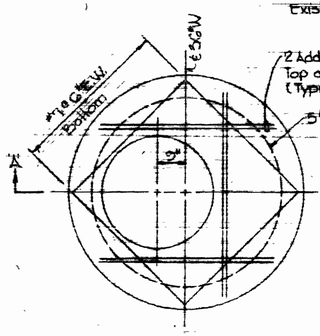

PLAN

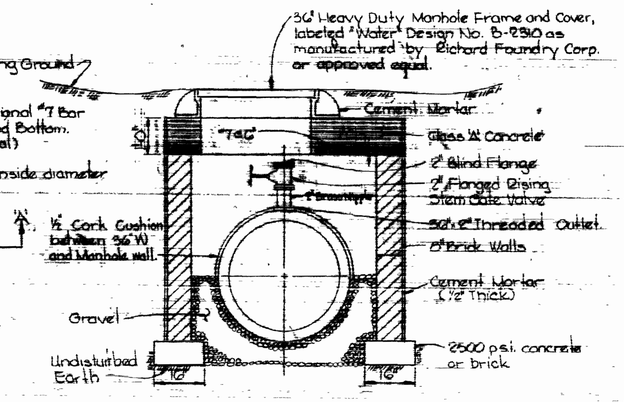

SECTION 'A-A'

DETAIL OF AIR RELEASE MANHOLE
Scale: 1/2"=1'-0"

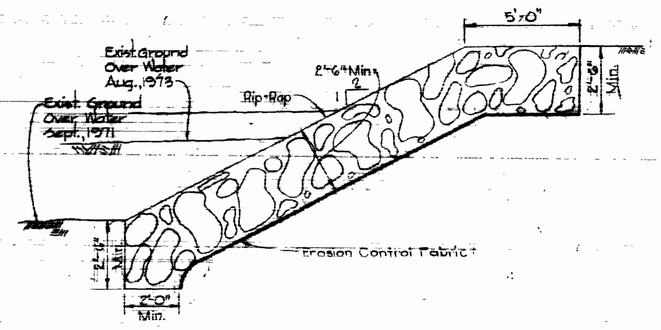

SPECIAL RIP-RAP DETAIL
Scale: 1/8"=1'-0"

CONTRACTOR
NOTIFY BALTIMORE CITY - BUREAU OF UTILITY OPERATIONS 396-0336 THREE DAYS BEFORE STARTING WORK

Kenneth A. McLord

WHITMAN, REQUARDT & ASSOCIATES ENGINEERS 1304 ST. PAUL ST. BALTIMORE, MARYLAND	BALTIMORE COUNTY: DIRECTOR, DEPT. OF PUBLIC WORKS — DATE; CHIEF, BUREAU OF ENGINEERING — DATE 2-26-74	CONTRACT NO. 625-W	PROFILE & DETAILS OF WATER MAINS	SOUTHWEST TRANSMISSION MAIN	DRAWING NO. 2 OF 11	SCALE AS SHOWN

CITY OF BALTIMORE: DIRECTOR, DEPT. OF PUBLIC WORKS — DATE 9/13/74; CHIEF, BUREAU OF ENGINEERING — DATE 9/16/74; DIRECTOR, DEPT. OF PUBLIC WORKS — DATE 9/16/74

C.W.O. 40786

Filed in Relocated Sewer Contract No. 625-W

W.O. 62512

BY DATE: March 1, 1974 — August 30, 1974 — April 1, 1975

W5 625-W/5

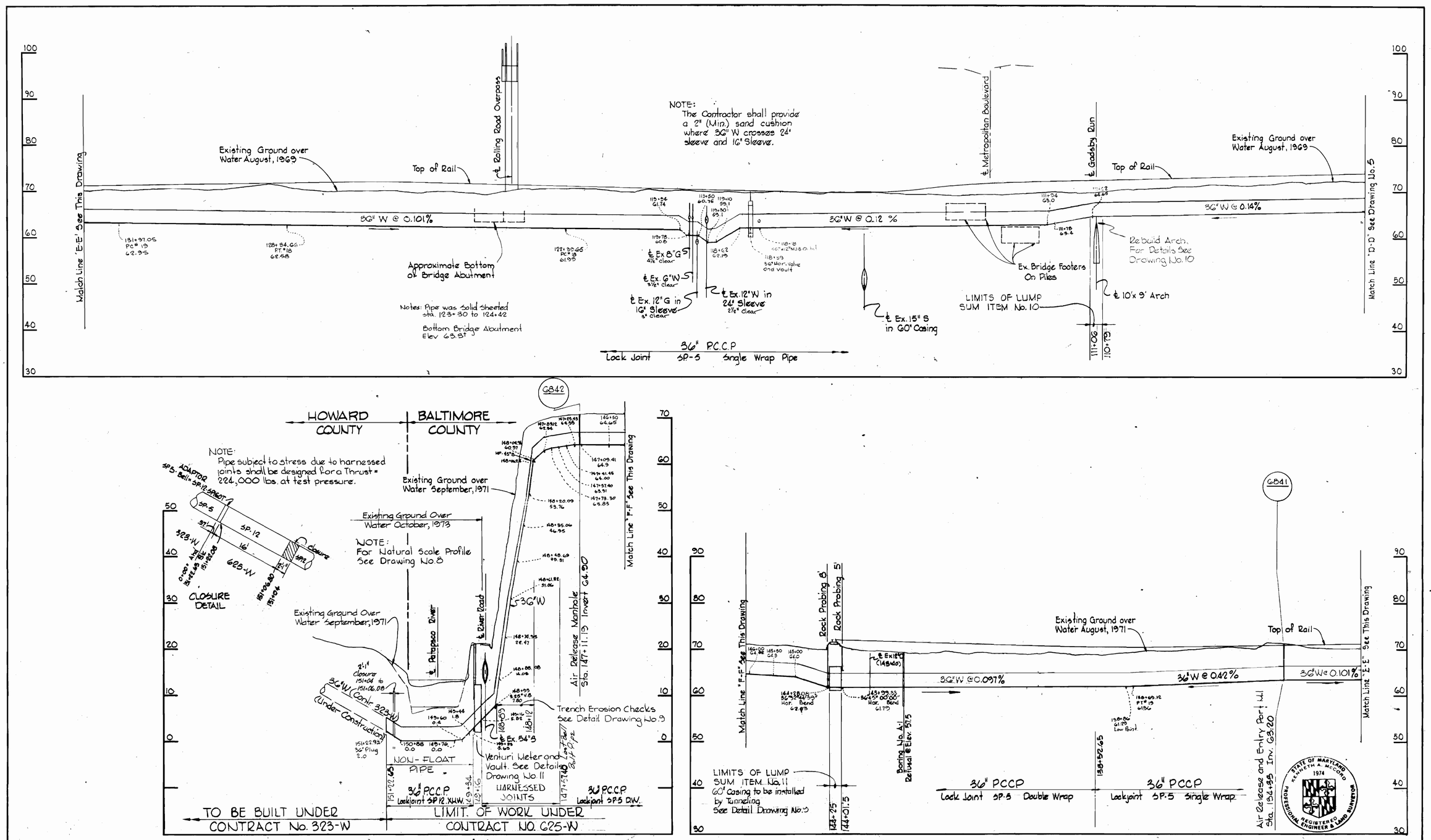

Kenneth A. McCord

CITY OF BALTIMORE		BALTIMORE COUNTY	
DIRECTOR, DEPT. OF PUBLIC WORKS	DATE 9/13/74	CHIEF, WATER DV., BUREAU OF ENGINEERING	DATE 9/12/74
DIRECTOR, DEPT. OF PUBLIC WORKS	DATE	CHIEF, BUREAU OF ENGINEERING	DATE 9/13/74

C.W.O. 40786

Relay to Patapsco River
Contract No. 625-W

WHITMAN, REQUARDT & ASSOCIATES ENGINEERS 1304 ST. PAUL ST. BALTIMORE, MARYLAND	HOWARD COUNTY				CONTRACT NO. 625-W	PROFILES OF WATER MAINS	SOUTHWEST TRANSMISSION MAIN	DRAWING NO. 6 OF 11	SCALE H: 1 1/4" = 100' V: 1 1/2" = 10'
	DIRECTOR, DEPT. OF PUBLIC WORKS	DATE 7/25/74	CHIEF, BUREAU OF ENGINEERING	DATE 7-25-74					

W. O. 6257-2

AS BUILT
March 7, 1978

August 19, 1974

April 1, 1975

WS 625-W/6

B. K. ELLIOTT CO., PGH., PA. REORDER A-7275

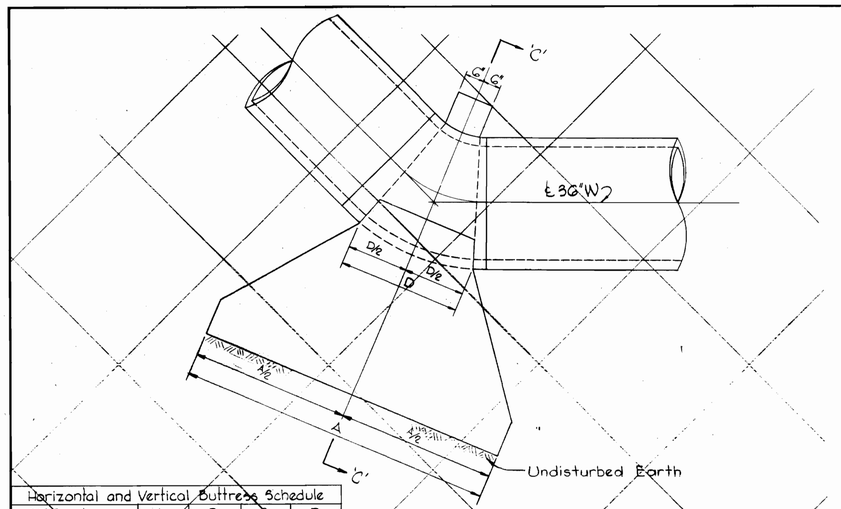

Horizontal and Vertical Buttress Schedule				
36" Bends	A	B	C	D
Horiz. 45°-00'-00" Vert. 10°-00'-00"	8'-6"	8'-6"	6'-6"	8'-2"
Horiz. 54°-34'-42" Vert. 10°-00'-00"	9'-0"	8'-6"	6'-6"	8'-6"

PLAN
Scale: 1/2"=1'-0"

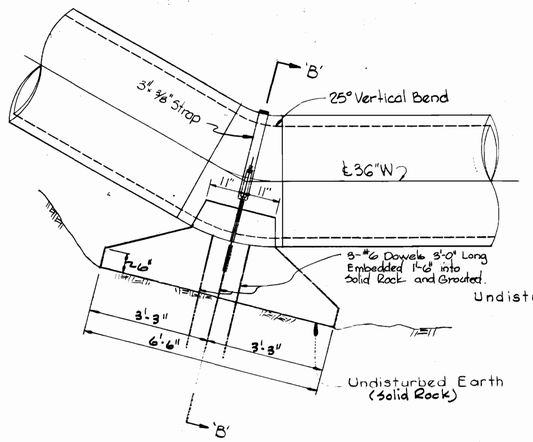

ELEVATION
Scale: 1/2"=1'-0"

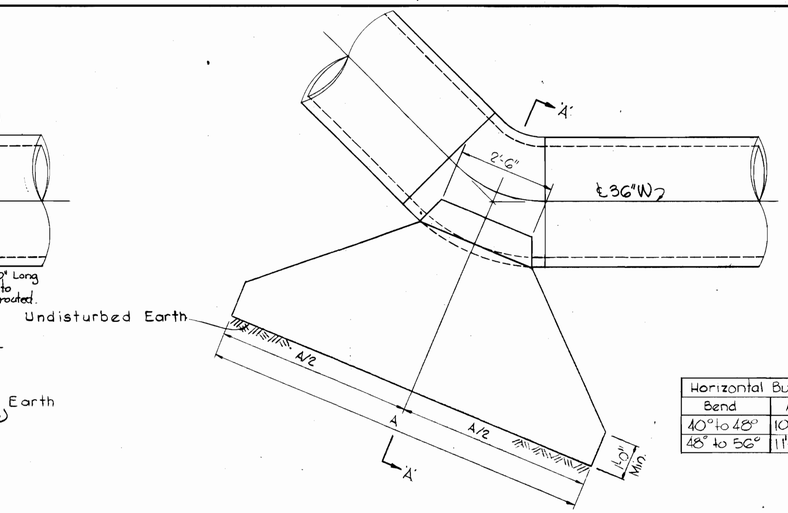

PLAN
Scale: 1/2"=1'-0"

Horizontal Buttress Schedule			
Bend	A	B	C
10° to 48°	10'-6"	5'-3"	3'-6"
48° to 56°	11'-0"	5'-9"	3'-6"

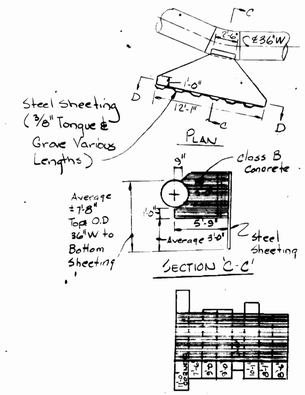

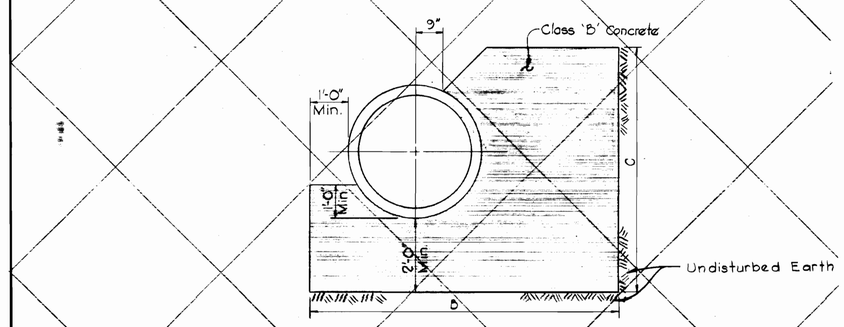

SECTION 'C-C'
Scale: 1/2"=1'-0"

DETAILS OF HORIZONTAL AND VERTICAL BUTTRESSES

NOT INCLUDED IN THIS CONTRACT

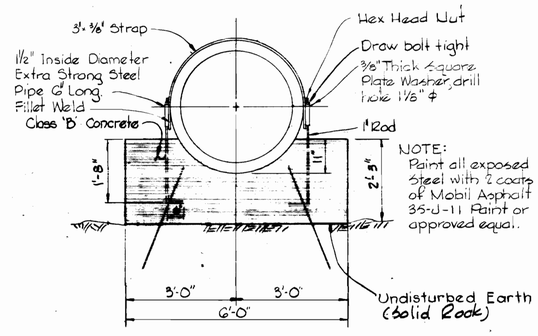

NOTE:
Paint all exposed Steel with 2 coats of Mobil Asphalt 35-J-11 Paint or approved equal.

SECTION 'B-B'
Scale: 1/2"=1'-0"

DETAILS OF VERTICAL BUTTRESS

STA. 148+99

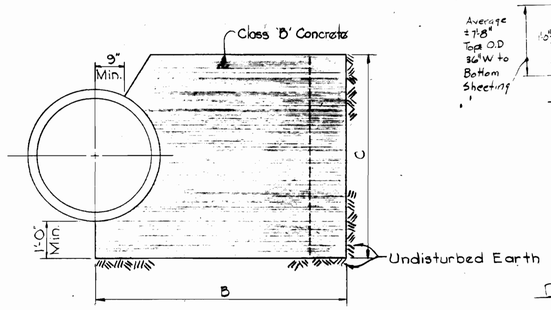

SECTION 'A-A'
Scale: 1/2"=1'-0"

DETAILS OF HORIZONTAL BUTTRESSES

DETAIL OF H.B.
Sta. 144+28.08
no scale

NOTE:
Design Soil Bearing Capacity = 3,000 psf. An increase or decrease in the size of the buttress will be made if the Soil Bearing is more or less than the design. Credit or payment will be made based on the Stipulated Item No. 22.

STATE OF MARYLAND 1974 KENNETH A. McCORD REGISTERED PROFESSIONAL ENGINEER & LAND SURVEYOR

Relay to Potapsco River
Contract No. 625-W

C.W.O. 40786

CITY OF BALTIMORE				BALTIMORE COUNTY	
DIRECTOR DEPT OF PUBLIC WORKS	9/13/74 DATE	CHIEF WATER DIV. BUREAU OF ENGINEERING	9/12/74 DATE	DIRECTOR DEPT OF PUBLIC WORKS	9/16/74 DATE

WHITMAN, REQUARDT & ASSOCIATES ENGINEERS 1304 ST. PAUL ST. BALTIMORE, MARYLAND	HOWARD COUNTY: DIRECTOR DEPT. OF PUBLIC WORKS — DATE 7/25/74	HOWARD COUNTY: CHIEF BUREAU OF ENGINEERING — DATE 7-25-74	CONTRACT NO. 625-W	DETAILS OF WATER MAINS	SOUTHWEST TRANSMISSION MAIN	DRAWING NO. 7 OF 11	SCALE AS SHOWN

W. O. 6257-2

AS BUILT
March 7, 1978

July 17, 1974
April 1, 1975

WS 625-W/7

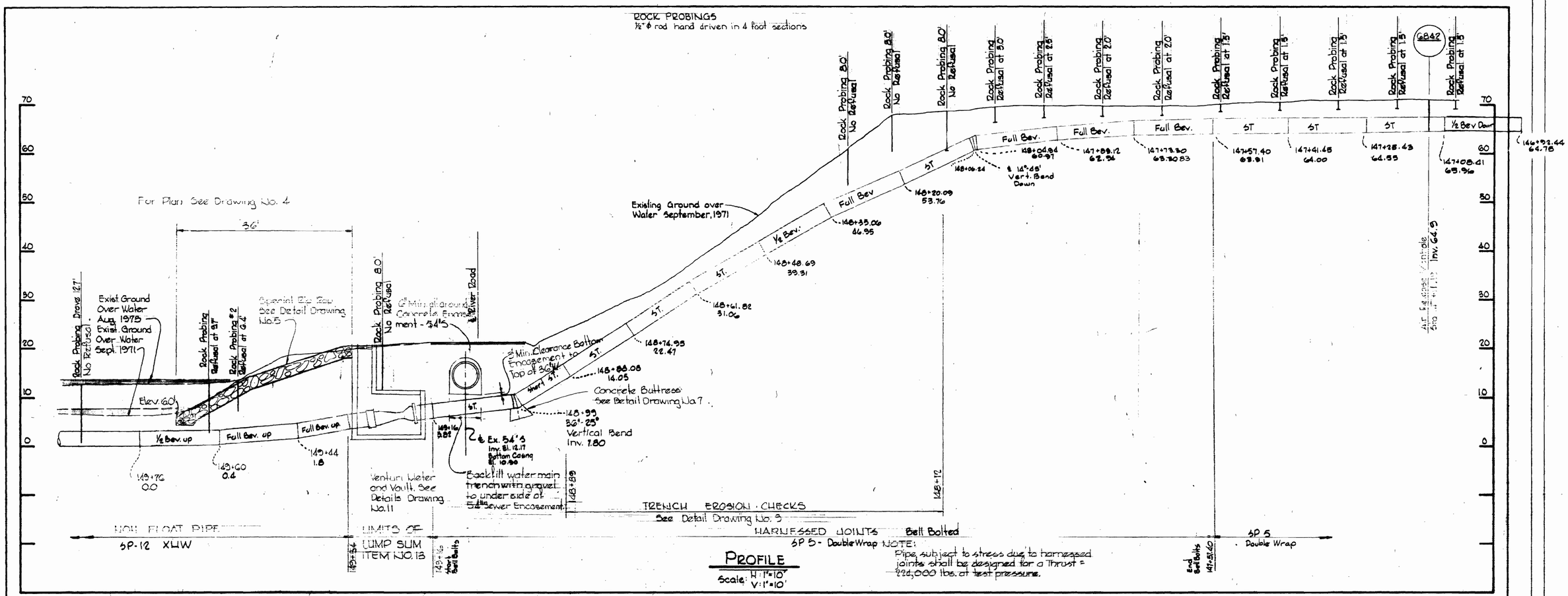

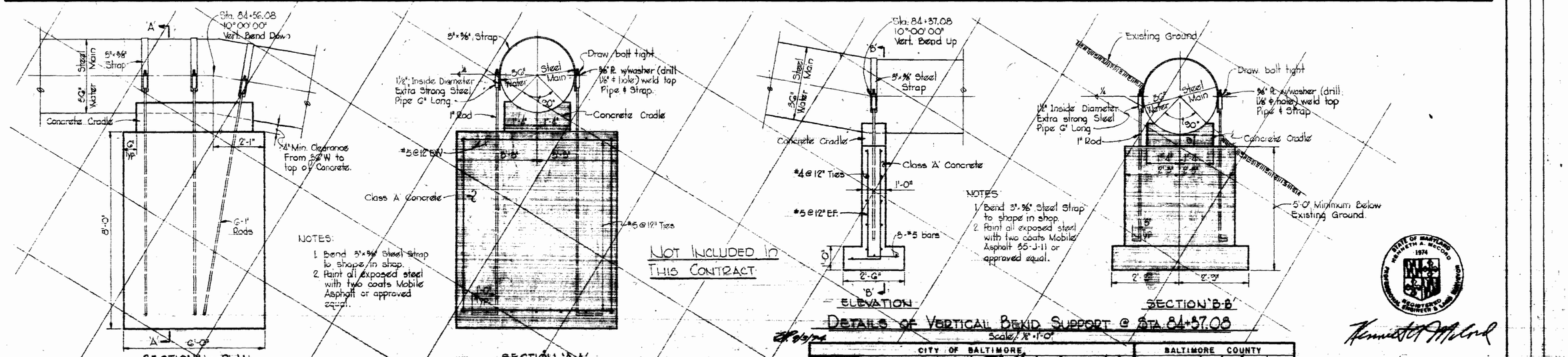

CITY OF BALTIMORE — DIRECTOR, DEPT. OF PUBLIC WORKS — DATE 9/26/74 — CHIEF, WATER DIV., BUREAU OF ENGINEERING — DATE 9/26/74

BALTIMORE COUNTY — DIRECTOR, DEPT. OF PUBLIC WORKS — DATE 9/26/74

C.W.O. 40786

Relay to Patapsco River Contract No. 625-W

WHITMAN, REQUARDT & ASSOCIATES ENGINEERS 1304 ST. PAUL ST. BALTIMORE, MARYLAND	HOWARD COUNTY — DIRECTOR, DEPT. OF PUBLIC WORKS — DATE 2/20/74 — CHIEF, BUREAU OF ENGINEERING — DATE 2-25-74	CONTRACT NO. 625-W	DETAILS OF WATER MAINS	SOUTHWEST TRANSMISSION MAIN	DRAWING NO. 8 OF 11	SCALE AS SHOWN

W.O. 6257-2

AS BUILT March 7, 1978

August 19, 1976

April 1, 1975

WS 625-W/8

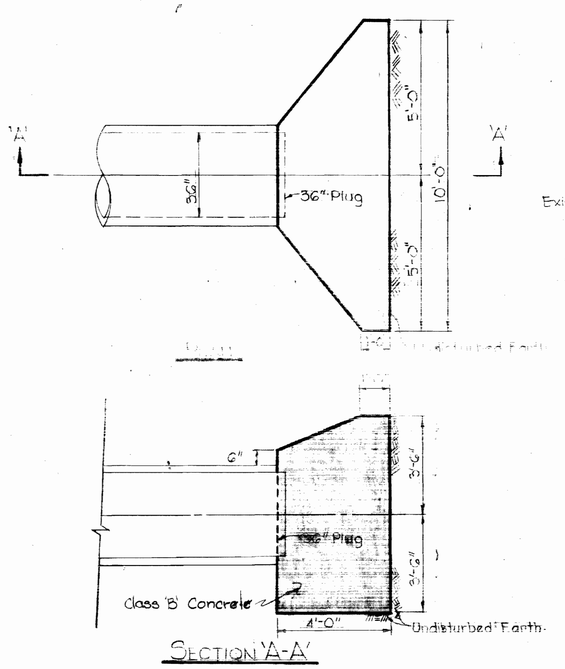

SECTION 'A-A'

BUTTRESS DETAIL FOR 36" PLUG

Scale: 3/8" = 1'-0"

Note:
Place Trench Erosion Check at center of each length of pipe with a maximum spacing of 10'-0".

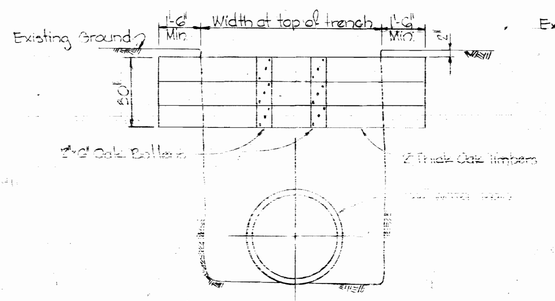

FRONT VIEW

TRENCH EROSION CHECK

Scale: 3/8" = 1'-0"

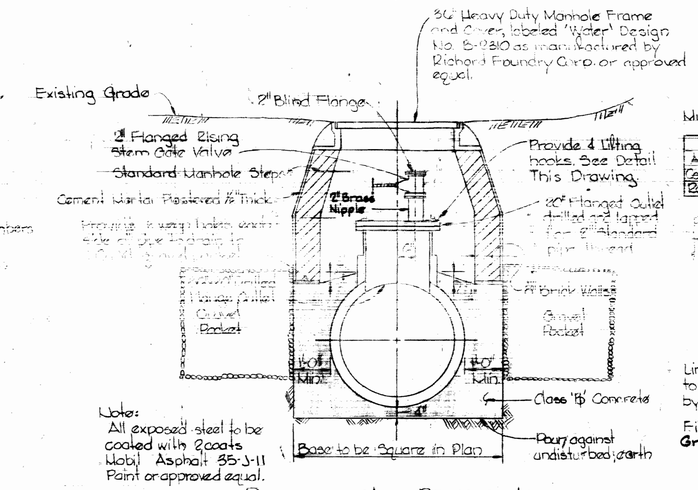

Note:
All exposed steel to be coated with 2 coats Mobil Asphalt 35-J-11 Paint or approved equal.

DETAIL OF AIR RELEASE AND ENTRY PORT MANHOLE

Scale: ½" = 1'-0"

Notes:
1. Poling plates and breast boards or shields shall be used in poor or running sand, and there shall be no unsupported faces of earth under the tracks during passage of trains.
2. Headings at ends of tunnel shall be properly sheeted and braced.
3. A joint shall be provided in the water main within 12 inches of each outside end of 60-inch Casing.

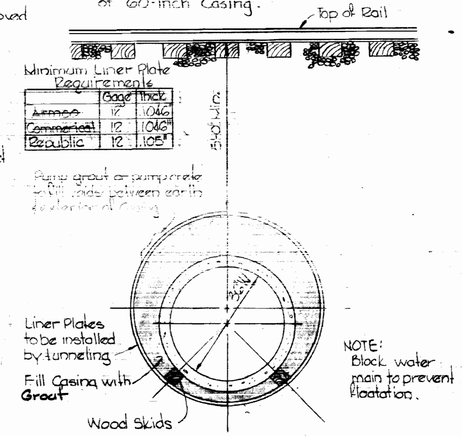

NOTE:
Block water main to prevent floatation.

DETAIL OF CASING UNDER B.&O. RAILROAD

Scale: ½" = 1'-0"

Notes:
1. All exposed steel to be coated with 2 coats of Mobil Asphalt 35-J-11 or approved equal.
2. All concrete shall be Class A
3. See Concrete Valve Drawing No. 11.

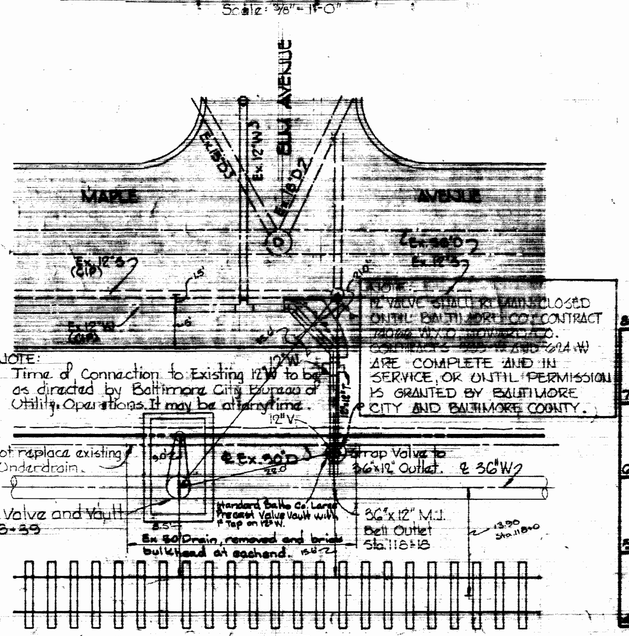

NOTE:
Time of Connection to Existing 12"W to be as directed by Baltimore City Bureau of Utility Operations. It may be at any time.

NOTE:
12" VALVE SHALL BE MAINTAINED CLOSED UNTIL BALTIMORE CITY CONTRACT [illegible] AND [illegible] 24"W ARE COMPLETE AND IN SERVICE, OR UNTIL PERMISSION IS GRANTED BY BALTIMORE CITY AND BALTIMORE COUNTY.

PLAN

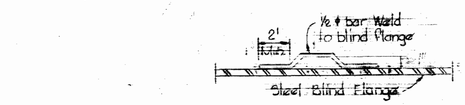

LIFTING HOOK DETAIL

Scale: 1½" = 1'-0"

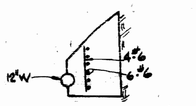

SECTION 'A-A'

no scale

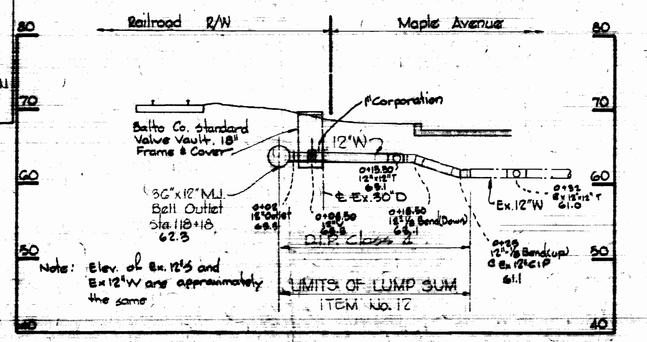

PROFILE

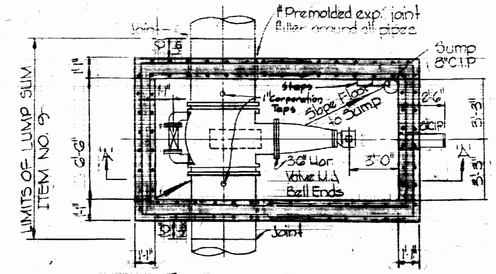

SECTIONAL PLAN

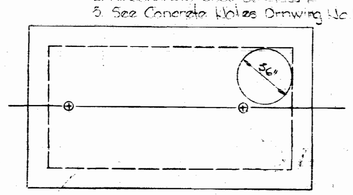

PLAN OF TOP SLAB

36" Heavy Duty Manhole Frame and Cover, labeled "Water" Design No. B-2310 as manufactured by Richard Foundry Corp. or approved equal.

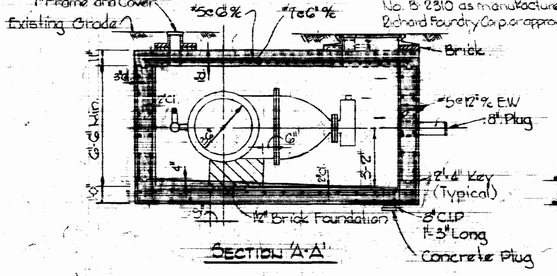

SECTION 'A-A'

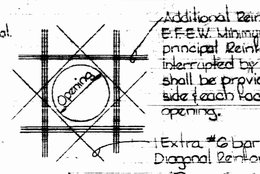

Additional Reinforcement E.F.E.W. Minimum of ½ the principal Reinforcing Bars interrupted by the opening shall be provided on each side & each face of opening.

Extra #6 bar EF Diagonal Reinforcement.

DETAIL OF ADDITIONAL REINFORCEMENT AROUND OPENINGS SLABS AND WALLS

Scale: 3/8" = 1'-0"

DETAIL OF 36" HORIZONTAL VALVE AND VAULT

Scale: ¼" = 1'-0"

12" CONNECTION AT MAPLE AVENUE

Scale: 1" = 10'-0"

C.W.O. 40786

STATE OF MARYLAND KENNETH A. McCORD 1974 REGISTERED PROFESSIONAL ENGINEER AND LAND SURVEYOR

Kenneth A. McCord

Relay to Rolands Run Contract No. 625-W

CITY OF BALTIMORE				BALTIMORE COUNTY	
DIRECTOR DEPT. OF PUBLIC WORKS	DATE	CHIEF, WATER DIV. BUREAU OF ENGINEERING	DATE	DIRECTOR DEPT. OF PUBLIC WORKS	DATE

HOWARD COUNTY	
DIRECTOR DEPT. OF PUBLIC WORKS	DATE
CHIEF BUREAU OF ENGINEERING	DATE

WHITMAN, REQUARDT & ASSOCIATES
ENGINEERS
1304 ST. PAUL ST.
BALTIMORE, MARYLAND

CONTRACT NO. 625-W

DETAILS OF WATER MAINS

SOUTHWEST TRANSMISSION MAIN

DRAWING NO. 9 OF 11

SCALE AS SHOWN

W. O. 9257-2

AS BUILT
March 7, 1978

August 29, 1974
April 1, 1975

WS 625-W/9

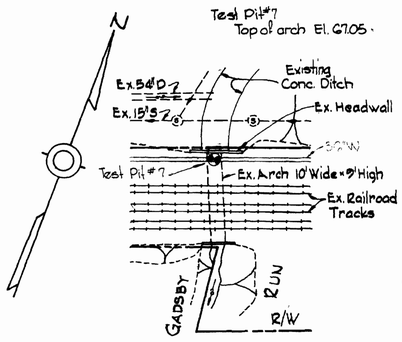

PLAN - GADSBY RUN
Scale: 1" = 50'

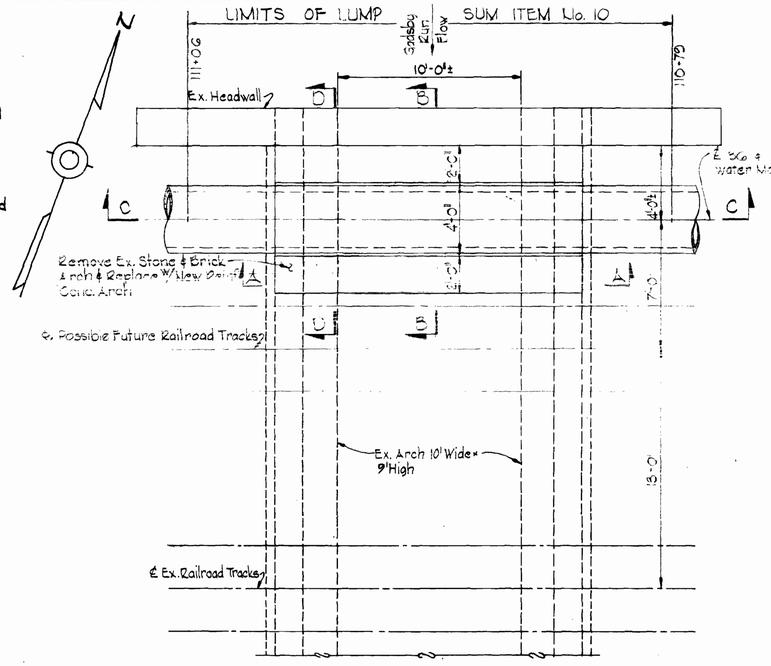

PLAN - 10' × 9' ARCH AT GADSBY RUN
Scale: 1/8" = 1'-0"

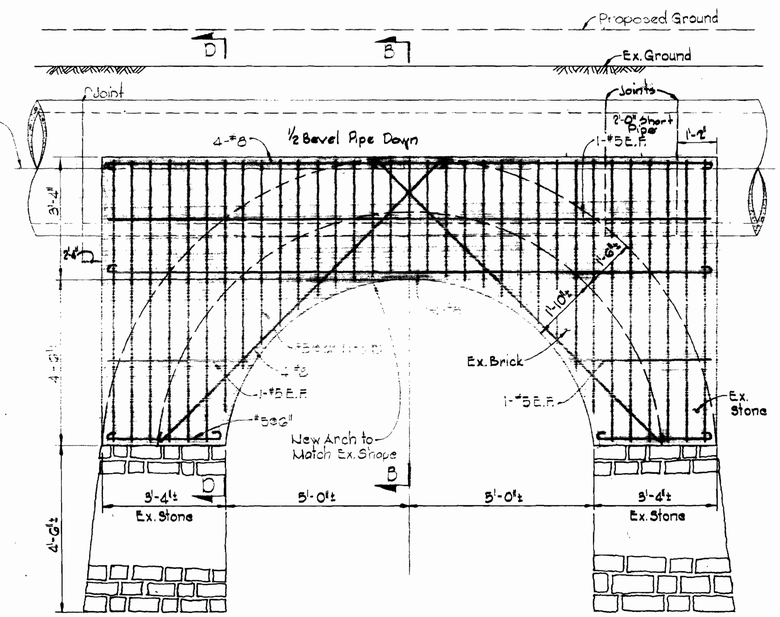

SECTION A-A
Scale: 1/2" = 1'-0"

GENERAL NOTES

1. Concrete structure has been designed in accordance with the "American Railway Engineering Association Manual For Railway Engineering - 1972".
   a. L.L. = E 72 plus 60% impact.
2. All concrete shall have a minimum 28 day compressive strength of 3,500 p.s.i.
3. All reinforcing bars to have a concrete cover of 2".
4. All reinforcing steel shall be A.S.T.M.-A615-70, Grade 40.
5. All reinforcing bar laps and all dowel projections and embedments shall be a minimum of 30 bar diameters unless otherwise noted on the drawings.
6. Epoxy Bonding Compound to be Colma Fix as manufactured by the Sika Chemical Co. of Baltimore, Md. or approved equal.

LEGEND

- New Concrete in Section
- Existing Brick in Section
- Existing Brick in Elevation
- Existing Stone in Section and Elevation
- Concrete Pipe in Section
- Existing Ground

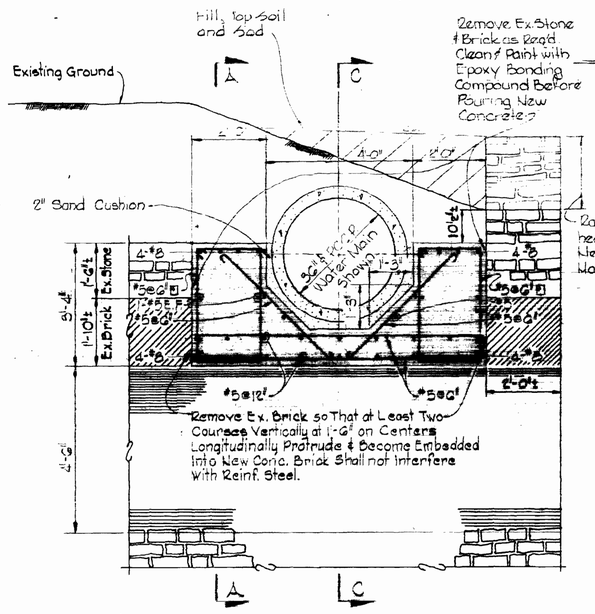

SECTION B-B
Scale: 1/2" = 1'-0"

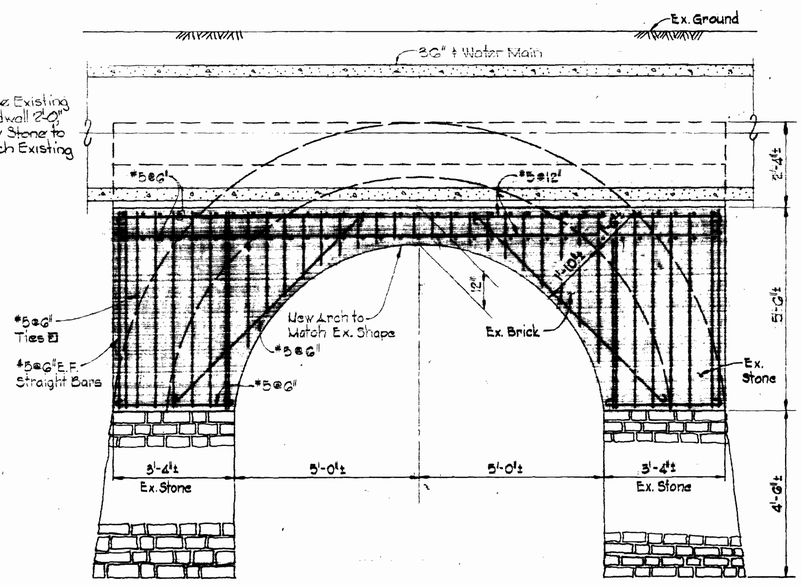

SECTION C-C
Scale: 1/2" = 1'-0"

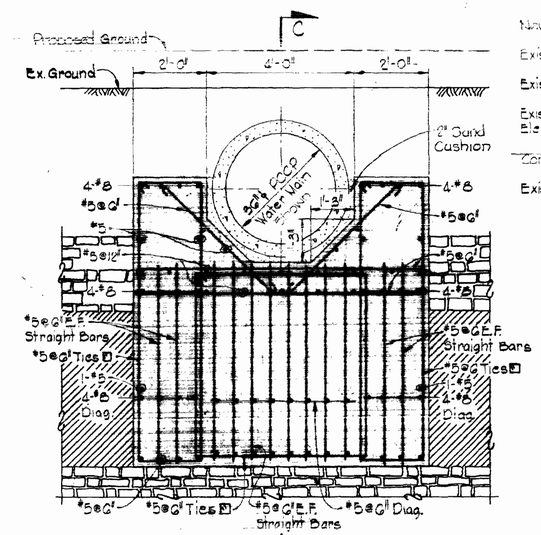

SECTION D-D
Scale: 1/2" = 1'-0"

STATE OF MARYLAND — KENNETH A. McCORD — 1974 — REGISTERED PROFESSIONAL ENGINEER & LAND SURVEYOR

Kenneth A. McCord

CITY OF BALTIMORE				BALTIMORE COUNTY	
DIRECTOR, DEPT. OF PUBLIC WORKS	DATE 9/12/74	CHIEF, WATER DIV., BUREAU OF ENGINEERING	DATE 9/12/74	DIRECTOR, DEPT. OF PUBLIC WORKS	DATE 9/12/74

Eff. 9/3/74

C.W.O. 40786

Relay to Patapsco River
Contract No. 625-W

WHITMAN, REQUARDT & ASSOCIATES ENGINEERS 1304 ST. PAUL ST. BALTIMORE, MARYLAND	HOWARD COUNTY: DIRECTOR, DEPT. OF PUBLIC WORKS — DATE 7/24/74	HOWARD COUNTY: CHIEF, BUREAU OF ENGINEERING — DATE 7-25-74	CONTRACT NO. 625-W	DETAILS OF WATER MAINS	SOUTHWEST TRANSMISSION MAIN	DRAWING NO. 10 OF 11	SCALE AS SHOWN

W. O. 625T-2

AS BUILT March 7, 1978 July 17, 1974 April 1, 1975

WS 625-W/10

BPUNING 44-510 18392

GENERAL CONCRETE NOTES

1. All Concrete shall have a minimum 28 Days Compressive Strength of 3500 psi
2. All Exposed Concrete shall be Chamfered ¾" unless otherwise noted.
3. All Reinforcing Steel shall be ASTM A615-70 Grade 40.
4. All Reinforcing bar laps, dowel projections and embedment shall be a minimum of 30 bar diameters.

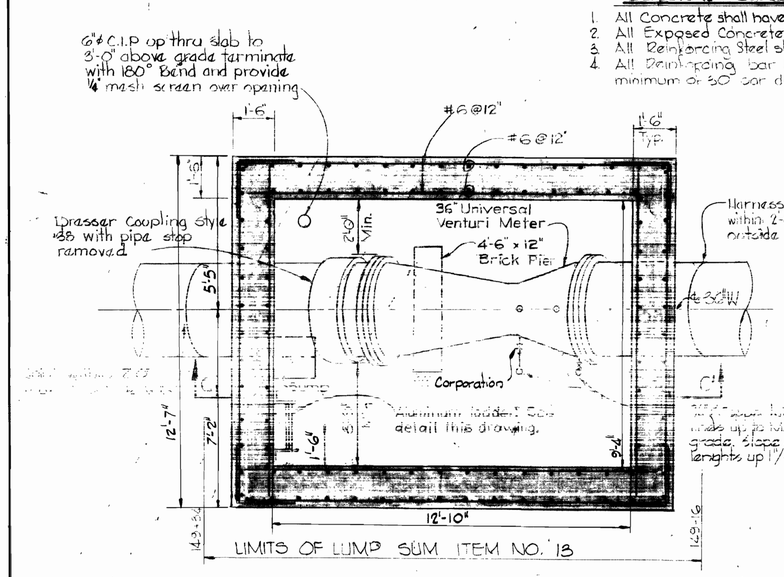

SECTIONAL PLAN
Scale: 3/8" = 1'-0"

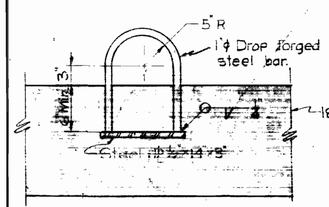

DETAIL OF LIFTING HOOK
Scale: 1" = 1'-0"

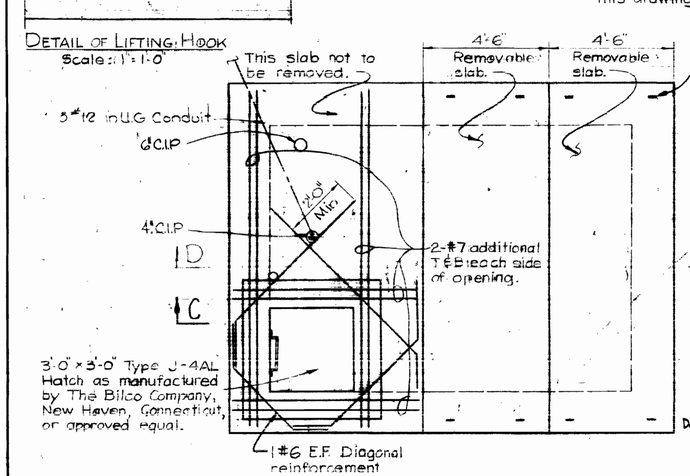

TOP SLAB PLAN
Scale: 3/8" = 1'-0"

One lifting hook at each corner. Typical for each removable slab. See detail this drawing.

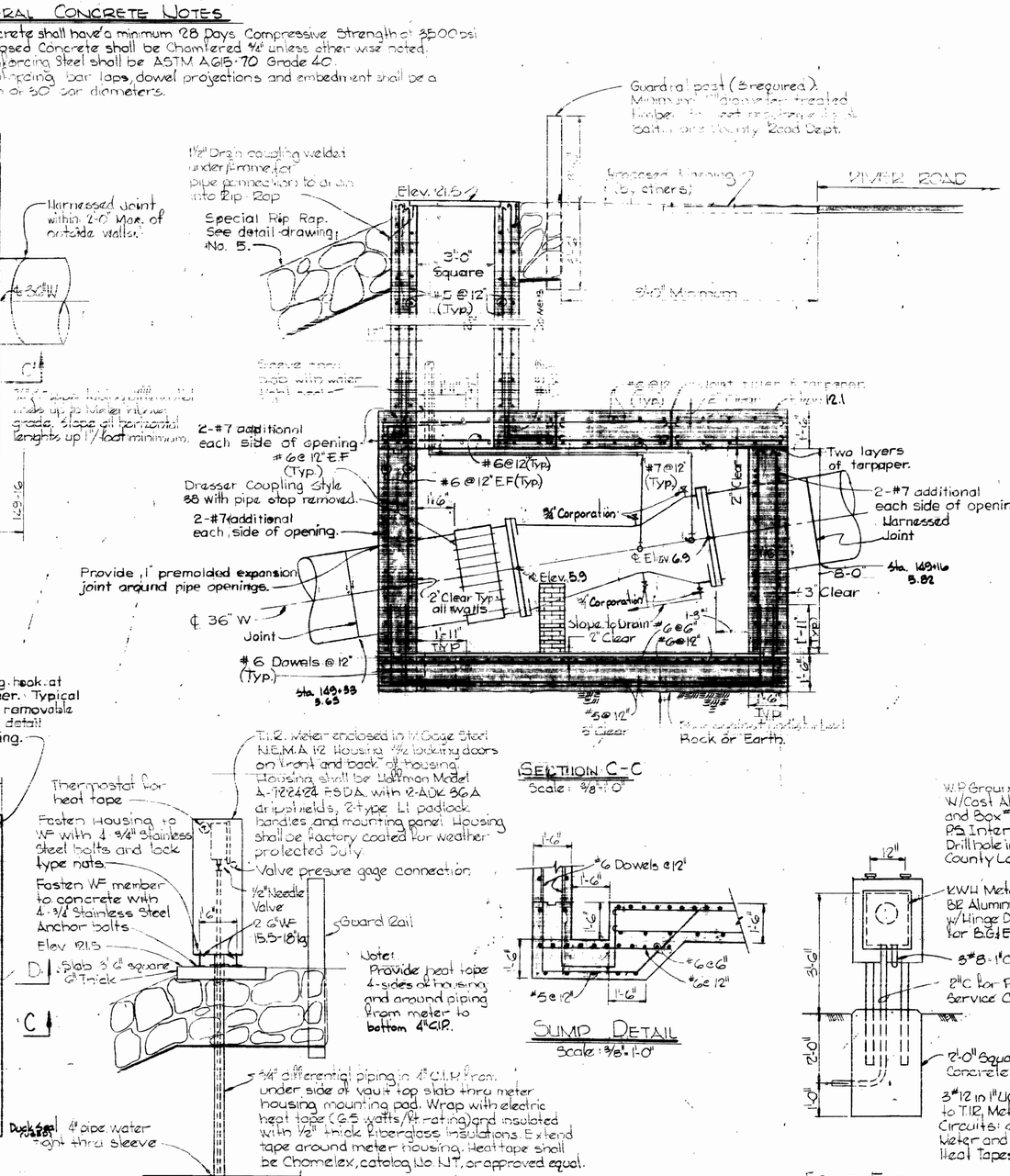

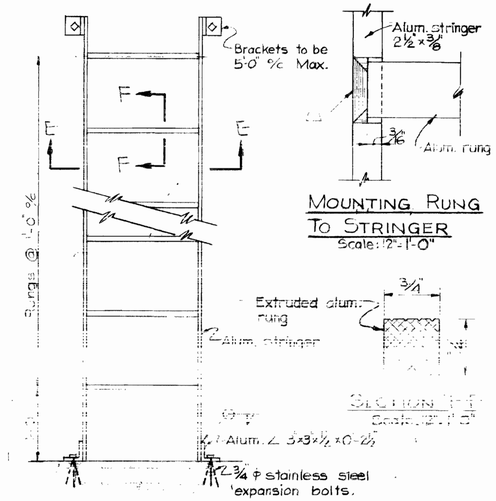

MOUNTING RUNG TO STRINGER
Scale: 12" = 1'-0"

SECTION F-F
Scale: 1" = 1'-0"

ELEVATION
Scale: 1" = 1'-0"

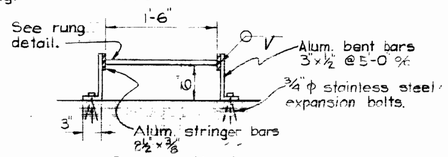

SECTION E-E
Scale: 1" = 1'-0"

DETAILS OF ALUMINUM LADDER

One lifting hook at each corner. Typical for each removable slab. See detail this drawing.

SECTION 'D-D'
Scale: 3/8" = 1'-0"

SUMP DETAIL
Scale: 3/8" = 1'-0"

SECTION C-C
Scale: 3/8" = 1'-0"

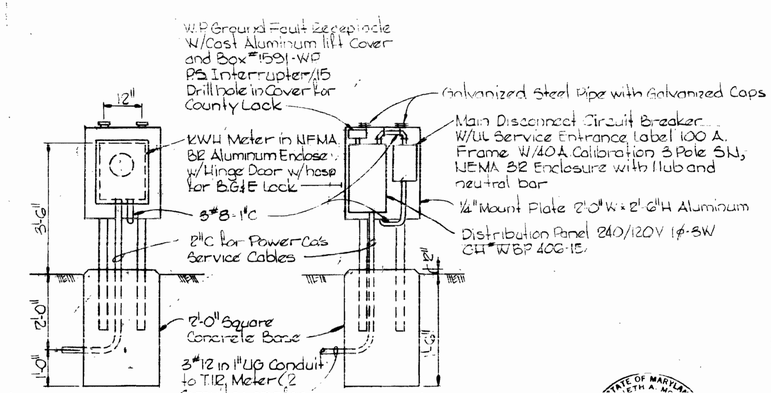

FRONT ELEVATION — BACK ELEVATION

MOUNTING DETAIL FOR PANEL, METER AND MAIN BREAKER
Scale: 1/2" = 1'-0"

ELECTRICAL NOTES

1. The Electrical System shall be provided and installed in accordance with local codes and N.E.C.
2. The Contractor shall obtain all required permits.
3. Wire outside and underground in conduit shall be copper type R.H.W./USE.
4. Under ground conduits shall be Kor-kap with 40 mil coating.
5. All conduits shall be rigid heavy wall, hot-dipped galvanized.
6. All wiring shall be run in conduit.

C.W.O. 40786

STATE OF MARYLAND KENNETH A. McCORD 1974 REGISTERED PROFESSIONAL ENGINEER & LAND SURVEYOR

Relay to Patapsco River Contract No. 625-W

CITY OF BALTIMORE				BALTIMORE COUNTY	
DIRECTOR DEPT. OF PUBLIC WORKS	9/13/74 DATE	CHIEF, WATER DIV. BUREAU OF ENGINEERING	9/12/74 DATE	DIRECTOR DEPT. OF PUBLIC WORKS	9/16/74 DATE

WHITMAN, REQUARDT & ASSOCIATES ENGINEERS 1304 ST. PAUL ST. BALTIMORE, MARYLAND	HOWARD COUNTY			CONTRACT NO. 625-W	DETAILS OF VENTURI METER AND VAULT	SOUTHWEST TRANSMISSION MAIN	DRAWING NO. 11 OF 11	SCALE AS SHOWN
	DIRECTOR DEPT. OF PUBLIC WORKS	7/15/74 DATE	CHIEF BUREAU OF ENGINEERING	7-25-74 DATE				

W. O. 6257-2

AS BUILT March 7, 1978

OCTOBER 14, 1974

April 1, 1975

WS 625-W/11