DYE TESTS

Building

Dye was inserted in plumbing and observations made in old sewer with the following results.

A, B, C, G, & H. Dye observed. Connection made to new sewer.

D, I, & J. Dye not observed in old sewer.

E & F. Dye observed in old sewer but route of house connection is unknown. Not connected to new sewer.

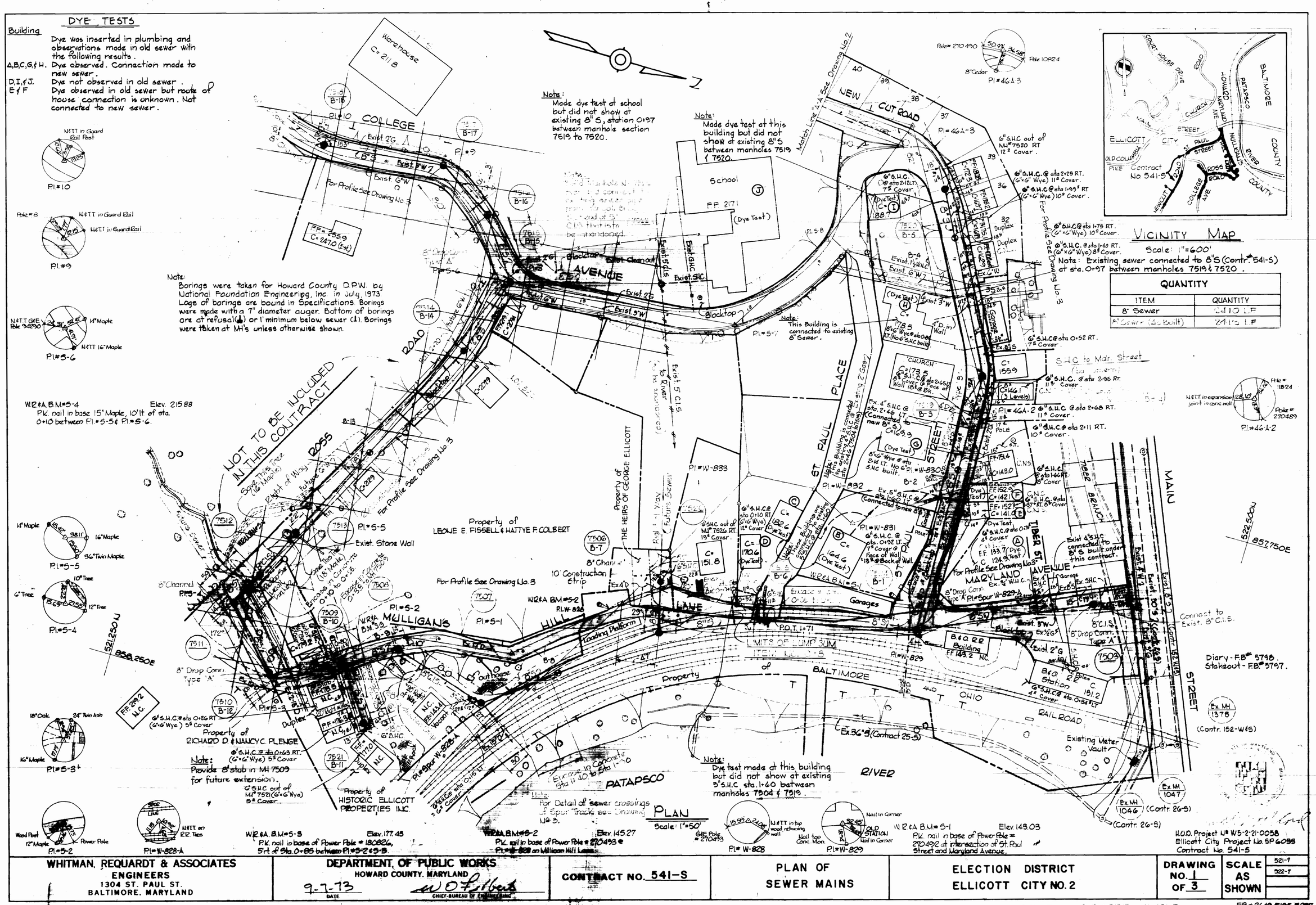

QUANTITY	
ITEM	QUANTITY
8" Sewer	2410 L.F
8" Sewer (As Built)	2411.2 L.F

WHITMAN, REQUARDT & ASSOCIATES ENGINEERS 1304 ST. PAUL ST. BALTIMORE, MARYLAND	DEPARTMENT OF PUBLIC WORKS HOWARD COUNTY, MARYLAND 9-7-73 DATE — CHIEF-BUREAU OF ENGINEERING	CONTRACT NO. 541-S	PLAN OF SEWER MAINS	ELECTION DISTRICT ELLICOTT CITY NO. 2	DRAWING NO. 1 OF 3	SCALE AS SHOWN	521-7 522-7

W. O. 66012

AS BUILT OCTOBER 31, 1975

F.B.# 2649, 5195, 5287, 5387

H.O.D. Project # W5-2-21-0058
Ellicott City Project No. SP 6098
Contract No. 541-S

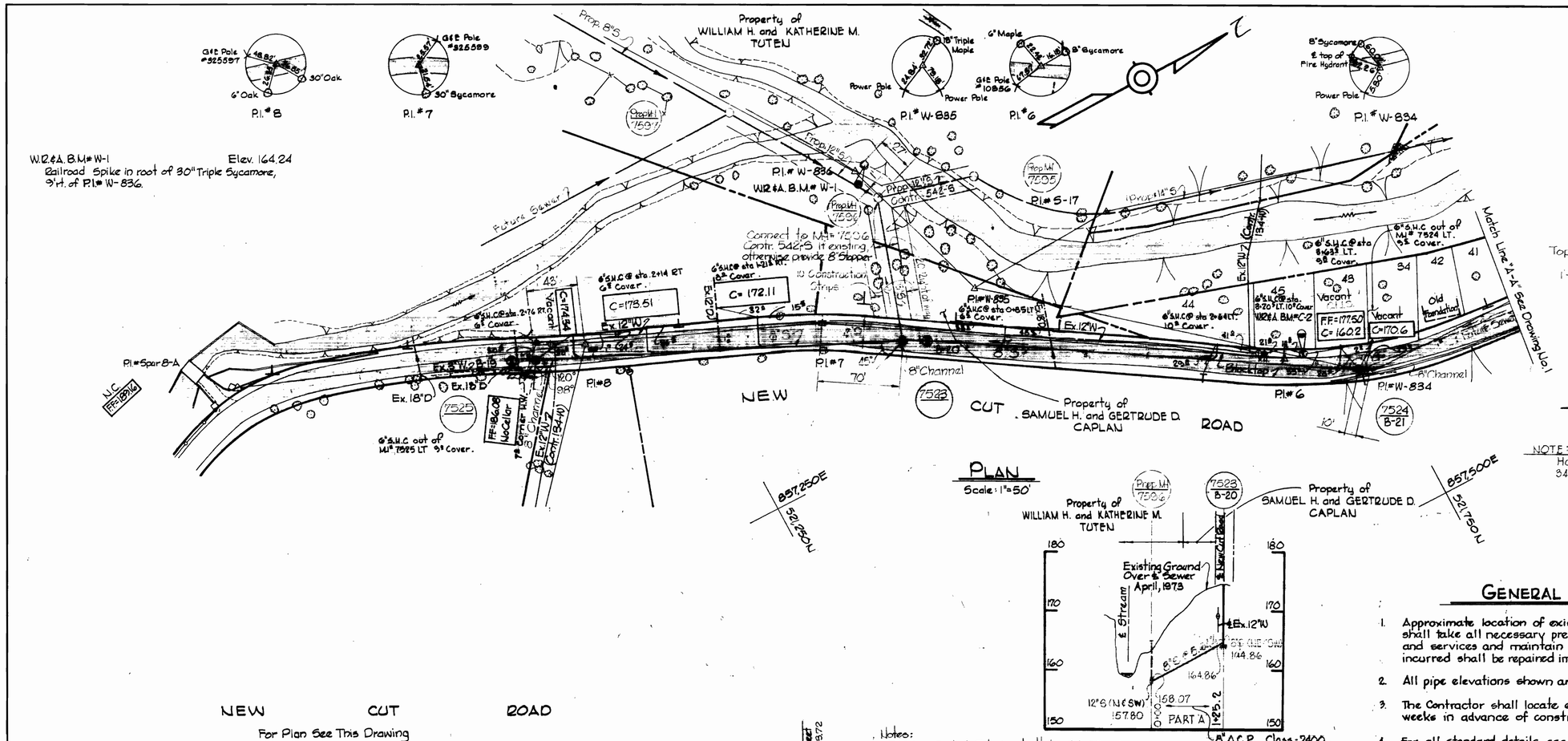

PLAN
Scale: 1"=50'

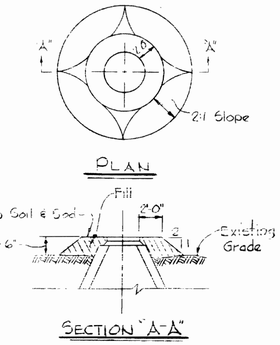

FILL AT MANHOLE 7511
Scale: 1/8"=1'-0"

NOTE:
Houses on Lots 43 and 34 have been abandoned.

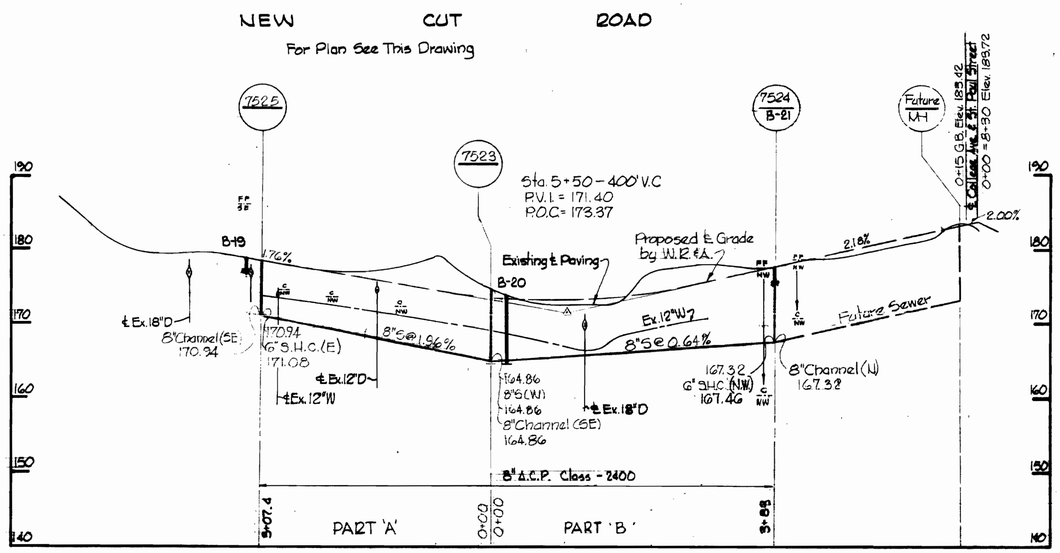

PROFILES
Scale: H: 1"=100' V: 1"=10'

Notes:
Erosion Control Fabric shall be Poly Filter-X as manufactured by Cottage Mills Inc., Erosion Control Division, 124 W. 66th Street, Cincinnati, Ohio; Laurel Erosion Control Cloth as manufactured by Laurel Plastics Inc., Madison, Minn., or approved equal.

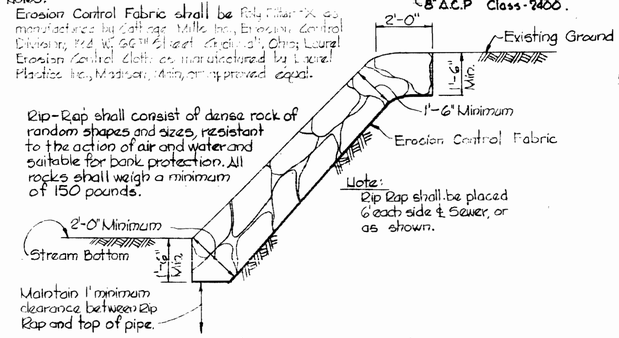

Rip-Rap shall consist of dense rock of random shapes and sizes, resistant to the action of air and water and suitable for bank protection. All rocks shall weigh a minimum of 150 pounds.

Note:
Rip Rap shall be placed 6' each side ℄ Sewer, or as shown.

Maintain 1' minimum clearance between Rip Rap and top of pipe.

RIP-RAP DETAIL
Scale: 3/8"=1'-0"

GENERAL NOTES

1. Approximate location of existing mains are shown. The Contractor shall take all necessary precautions to protect the existing mains and services and maintain uninterrupted supply. Any damage incurred shall be repaired immediately.
2. All pipe elevations shown are invert elevations.
3. The Contractor shall locate existing utilities a minimum of two weeks in advance of construction operations in vicinity of utilities.
4. For all standard details, see standards bound in Specifications.
5. Sewer pipe shall be V.C.P.X., C.S.P.X., or Asbestos Cement Class 2400 unless otherwise noted.
6. All Cast Iron sewer pipe shall be Class 22 or Ductile Iron pipe Class 2.
7. Build all manholes to existing ground or paving unless otherwise noted.
8. Clear all poles by 2.0' minimum or tunnel as required. Clear all existing utilities by 6" minimum.
9. The Contractor shall provide a joint in all sewer mains within 2'-0" of exterior manhole walls.
10. Horizontal and Vertical Controls are based upon Maryland State Datum.
11. Existing Sewers to be abandoned are labeled
12. Sewer House Connections shall be constructed only where and if directed by the Engineer in the field. Existing Sewer House Connections shall be connected to the proposed 8" Sewer. The Contractor shall maintain existing sewer service at all times.
13. Houses with symbol (C.N.S.) indicates that the cellar can not be served.
14. Payment for Rip-Rap will be included in the unit price bid for furnishing and laying of Sewer Mains.
15. Payment for Erosion Checks and Concrete Anchors will be included in the unit price bid for excavation and backfill.
16. Manholes shown with 12" Walls are for brick manholes only.
17. A single S.H.C., terminating with a 6"x6" Y-branch shall be provided for all duplex homes.

STATE OF MARYLAND KENNETH A. McCORD 1974 REGISTERED PROFESSIONAL ENGINEER & LAND SURVEYOR

Kenneth A. McCord

H.U.D. Project No. W5-2-21-0058
Ellicott City Project No. SP6033
Contract No. 541-S

WHITMAN, REQUARDT & ASSOCIATES ENGINEERS 1304 ST. PAUL ST. BALTIMORE, MARYLAND	DEPARTMENT OF PUBLIC WORKS HOWARD COUNTY, MARYLAND 9-7-73 DATE W O Filbert CHIEF-BUREAU OF ENGINEERING	CONTRACT NO. 541-S	PLAN, PROFILES & DETAILS OF SEWER MAINS	ELECTION DISTRICT ELLICOTT CITY NO. 2	DRAWING NO. 2 OF 3	SCALE AS SHOWN	521-6 520-6

W.O. 6601-2

AS BUILT OCTOBER 31, 1975

F.B. 5327, 5287, 5999

W.S. 541-S/2

RINING 44-51 18392

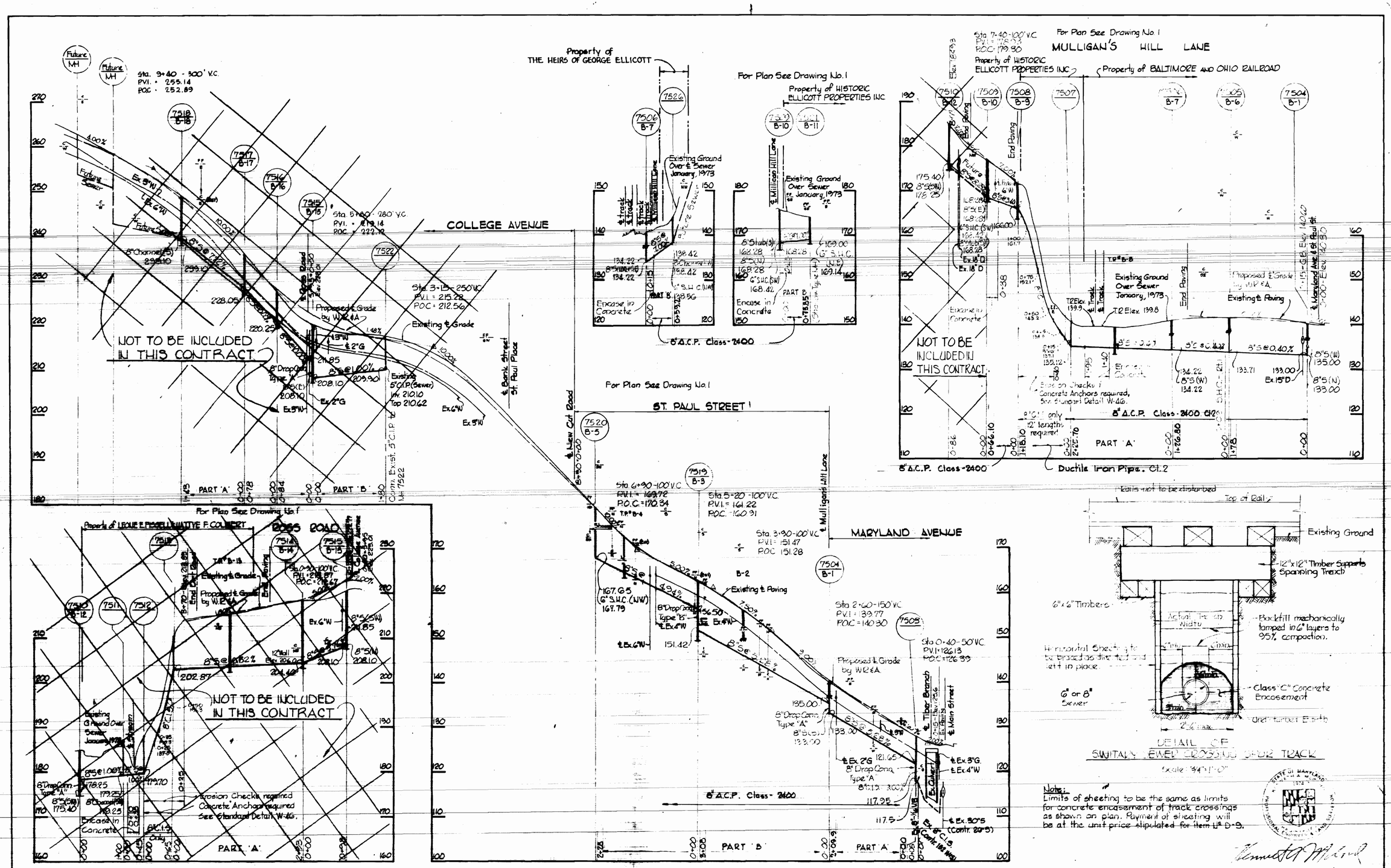

Note:
Limits of sheeting to be the same as limits for concrete encasement of track crossings as shown on plan. Payment of sheeting will be at the unit price stipulated for Item No. D-9.

H.O.D. Project No. W5-2-21-0058
Ellicott City Project No. SP6058
Contract No. 541-S

WHITMAN, REQUARDT & ASSOCIATES ENGINEERS 1304 ST. PAUL ST. BALTIMORE, MARYLAND	DEPARTMENT OF PUBLIC WORKS HOWARD COUNTY, MARYLAND 9-7-73 DATE — CHIEF-BUREAU OF ENGINEERING	CONTRACT NO. 541-S	PROFILES OF SEWER MAINS	ELECTION DISTRICT ELLICOTT CITY NO. 2	DRAWING NO. 3 OF 3	SCALE H: 1"=100' V: 1"=10'

W.O. 6601-2

AS BUILT OCTOBER 31, 1975

WS 541-S/3