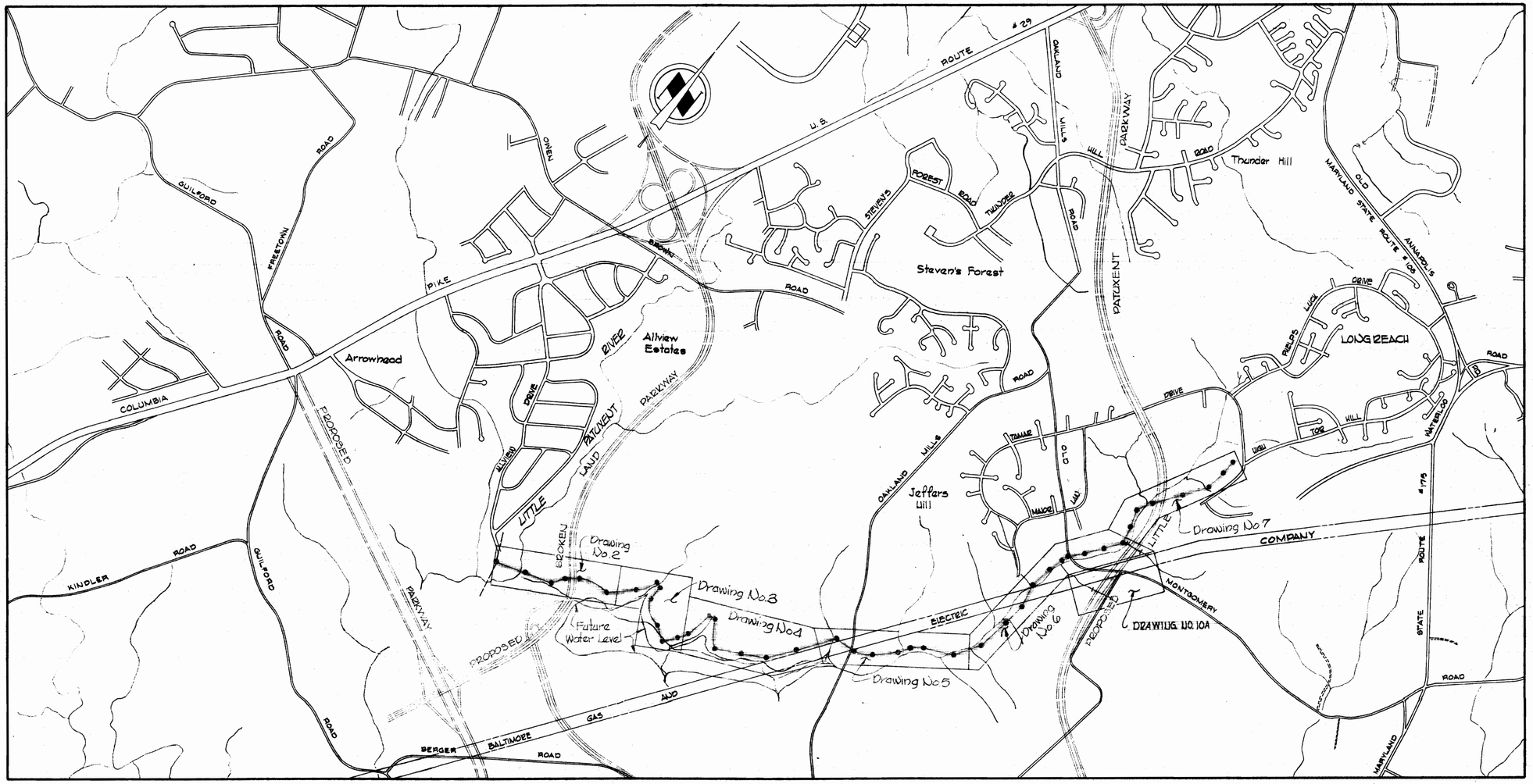

CONTRACT C-326-S

LONG REACH INTERCEPTOR

HOWARD COUNTY, MARYLAND

DEPARTMENT OF PUBLIC WORKS

CERTAIN TEED A.C.P. USED EXCEPT MH 4447-A to MH 4448
PRECAST MH'S USED
STAKEOUT: FB. #4884
DIARY: #4875, #4884, #5048

STATE OF MARYLAND
KENNETH A. McCORD
1974
PROFESSIONAL ENGINEER & LAND SURVEYOR
REGISTERED ENGINEER & LAND SURVEYOR

Kenneth A. McCord

Long Reach Interceptor
Cont. # C-326-S

WHITMAN, REQUARDT & ASSOCIATES ENGINEERS 1304 ST. PAUL ST. BALTIMORE, MARYLAND	DEPARTMENT OF PUBLIC WORKS HOWARD COUNTY, MARYLAND 9-21-70 DATE W O Gilbert CHIEF-BUREAU OF WATER AND SEWER	CONTRACT NO. C-326-S	LOCATION MAP	COLUMBIA LONG REACH INTERCEPTOR ELECTION DISTRICT GUILFORD NO. 6	DRAWING NO. 1 OF 10	SCALE 1"=1200'

W. O. 6028-2

APRIL 17, 1972 AS BUILT

suspense

suspense

WS 326-S/1

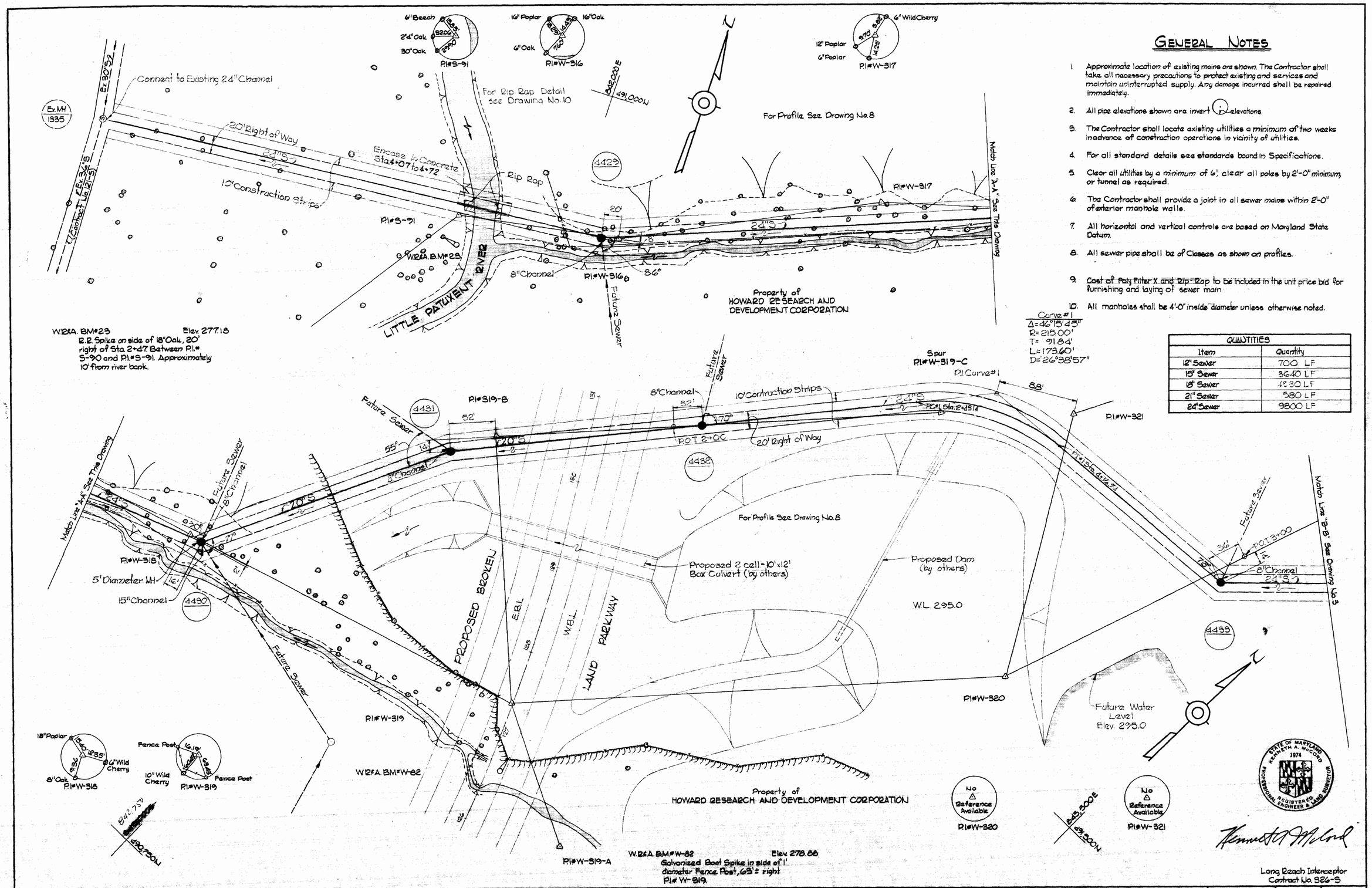

GENERAL NOTES

1. Approximate location of existing mains are shown. The Contractor shall take all necessary precautions to protect existing and services and maintain uninterrupted supply. Any damage incurred shall be repaired immediately.
2. All pipe elevations shown are invert elevations.
3. The Contractor shall locate existing utilities a minimum of two weeks in advance of construction operations in vicinity of utilities.
4. For all standard details see standards bound in Specifications.
5. Clear all utilities by a minimum of 6", clear all poles by 2'-0" minimum, or tunnel as required.
6. The Contractor shall provide a joint in all sewer mains within 2'-0" of exterior manhole walls.
7. All horizontal and vertical controls are based on Maryland State Datum.
8. All sewer pipe shall be of Classes as shown on profiles.
9. Cost of Poly Filter X and Rip-Rap to be included in the unit price bid for furnishing and laying of sewer main.
10. All manholes shall be 4'-0" inside diameter unless otherwise noted.

QUANTITIES	
Item	Quantity
12" Sewer	700 LF
15" Sewer	3640 LF
18" Sewer	4330 LF
21" Sewer	580 LF
24" Sewer	9800 LF

WHITMAN, REQUARDT & ASSOCIATES ENGINEERS 1304 ST. PAUL ST. BALTIMORE, MARYLAND	DEPARTMENT OF PUBLIC WORKS HOWARD COUNTY, MARYLAND 9-21-70 DATE W. O. Fillbach CHIEF-BUREAU OF WATER AND SEWER	CONTRACT NO. C-326-S	PLAN OF SEWER MAINS	COLUMBIA LONG REACH INTERCEPTOR ELECTION DISTRICT GUILFORD NO. 6	DRAWING NO. 2 OF 10	SCALE 1"=50'

W. O. 6023-2

APRIL 17, 1972 AS BUILT

F.B.# 4547, 4553

S. K. ELLIOTT CO., PGH., PA. REORDER A-11887

P.I.#320-A

P.I.#W-320-B

P.O.T. 1+00

64'

90'

P.I.#W-323

To P.I.#W-324

Match Line "B-B" See Drawing No. 2

24'S

4434

108'

221'

10' Construction Stripe

20' Right of Way

PC#2 Sta 1+36.25±

PT#2 Sta. 3+21.85±

4435

Future 8"S

11.71

45°

10.02

10.34

8" Channel

4436

P.O.T. 5+00

Encase in Concrete ACP

For Profile See Drawing No. 8

P.I. Curve# 2

Future Water Level (Elev. 295.0)

Curve#2
Δ=49°27'38"
R=215.00'
T= 99.03'
L=185.60'
D=26°38'57"

Property of
HOWARD RESEARCH AND DEVELOPMENT CORPORATION,
and MAURICE E. DASHER and DORA V. DASHER
(LIFE ESTATE)

W.R.&A. B.M.#W-84
Galvanized Boat Spike in side of 12" Twin Oak, 20'± right of P.I.#W-325

Elev. 307.75

W.R.&A. B.M.#W-84

P.I.#W-325

4437

38'

45'

12" Poplar
10" Oak
12" Twin Oak

P.I.#W-325

Match Line "C-C" See This Drawing

P.I.#W-329

PT#3 Sta 5+39.71

PC#3 Sta 5+02.04

24.71'S

51'

P.O.T. 3+00

4438

844,750E

491,750N

Future Water Level (Elev. 295.0)

Curve#4
Δ=37°00'40"
R=215.00'
T=143.06'
L=364.03'
D=26°38'57"

Spur P.I.#W-330-A

36'

28'

P.I. Curve # 4

For Profiles See Drawing No. 8

Property of
HOWARD RESEARCH AND DEVELOPMENT CORPORATION,
and MAURICE E. DASHER and DORA V. DASHER
(LIFE ESTATE)

Future Water Level (Elev. 295.0)

W.R.&A. B.M.#W-85

Elev. 307.28

Galvanized Boat Spike in root of 12" Poplar, 20'± west of P.I.#W-330.

P.I.#W-330

P.I.#W-331

P.I.#W-332

P.I.#W-333

P.I.#W-326

P.I.#W-328

P.I.#W-327

P.I.#W-329

4439

Future Sewer

Encase in Concrete Sta. 0+02 to 0+37

8" Channel

25'

51'

50'

61'

PT#4 Sta 4+48.04

PC#4 Sta 4+09.98

24.71'S

16.87'

Fill required, see detail, Drawing No. 10

P.I. Curve#5

PT#5 Sta. 1+80.32

Curve#5
Δ=24°18'49"
R=215.00'
T= 46.32'
L= 91.24'
D=26°38'57"

10' Construction Strips

20' Right of Way

24.71'S

54'

74'

4440

Match Line "D-D" See Drawing No. 4

Curve#3
Δ=21°38'25"
R=430.00'
T= 82.18'
L=162.41'
D=13°19'29"

Spur P.I.#W-330-B

PC#8 Sta 3+71.80

P.I. Curve#3

PT#4 Sta 4+50

45'

Match Line "C-C" See This Drawing

848,750E

492,000N

16" Maple 24.4" 12" Oak 6" Poplar 22.9" 21.7'

6" Poplar 12" Poplar 12" Poplar 25.53" 20.0'± 41.5'

12" Poplar BM#W-85 22.6" 6" Poplar 23.0" 6" Poplar

4" Oak 16.6" 6" Oak 13.10" 5.95" 8" Poplar

8" Beach 24.6" 10.50" 6" Oak 11.18" 10" Oak

10" Oak 13.90" 23.8" 16.4" 24" Beach 4" Maple

6" Dead Oak 21.9" 6" Poplar 33.0" 6" Poplar

STATE OF MARYLAND
KENNETH A. McCORD
1974
REGISTERED
PROFESSIONAL ENGINEER & LAND SURVEYOR

Kenneth A. McCord

492,000N 845,750E

Long Reach Interceptor
Contract No. 326-S

WHITMAN, REQUARDT & ASSOCIATES ENGINEERS 1304 ST. PAUL ST. BALTIMORE, MARYLAND	DEPARTMENT OF PUBLIC WORKS HOWARD COUNTY, MARYLAND 9-21-70 (DATE) W O Falbert (CHIEF–BUREAU OF WATER AND SEWER)	CONTRACT NO. C-326-S	PLAN OF SEWER MAINS	COLUMBIA LONG REACH INTERCEPTOR ELECTION DISTRICT GUILFORD NO. 6	DRAWING NO. 3 OF 10	SCALE 1"= 50'	491-483 492-483,484

W. O. 6028-2

APRIL 17, 1972 AS BUILT

F.B.# 4553, 4554, 4560, 4547

Suspense

K. ELLIOTT CO., PGH., PA. REORDER A-11627

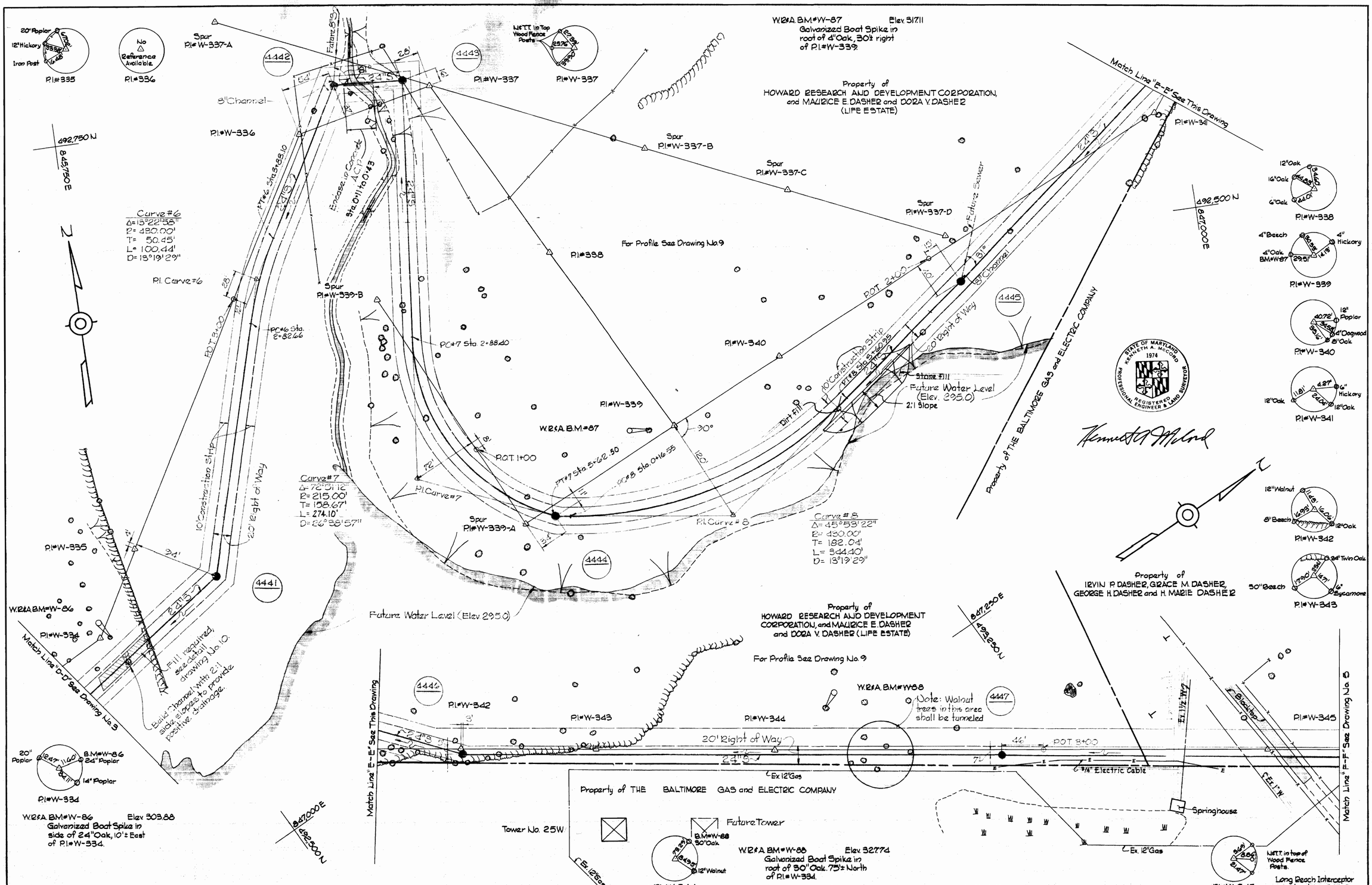

WHITMAN, REQUARDT & ASSOCIATES ENGINEERS 1304 ST. PAUL ST. BALTIMORE, MARYLAND	DEPARTMENT OF PUBLIC WORKS HOWARD COUNTY, MARYLAND 9-21-70 DATE W O Fillbert CHIEF-BUREAU OF WATER AND SEWER	CONTRACT NO. C-326-S	PLAN OF SEWER MAINS	COLUMBIA LONG REACH INTERCEPTOR ELECTION DISTRICT GUILFORD NO. 6	DRAWING NO. 4 OF 10	SCALE 1" = 50'

W. O. 6023-2

APRIL 17, 1972 AS BUILT

F.B. 4547, 4560, 4553

WS 326-S/4

Property of
HOWARD RESEARCH AND DEVELOPMENT CORPORATION,
and MAURICE E. DASHER and DORA V. DASHER
(LIFE ESTATE)

Property of
IRVIN P. DASHER, GRACE M. DASHER,
GEORGE H. DASHER and H. MARIE
DASHER

Property of
THE BALTIMORE GAS and ELECTRIC COMPANY

Property of
HOWARD RESEARCH AND DEVELOPMENT CORPORATION
and HENRY J. W. SIELING (LIFE ESTATE)

Property of
HOWARD RESEARCH AND DEVELOPMENT CORPORATION
and HENRY J. W. SIELING (LIFE ESTATE)

No △ Reference Available
Pl.#W-346

Nail set in top of Wood Fence Posts.
Pl.#W-347
Pl.#W-348

Pl.#W-346

Pl.#W-347

Pl.#W-348

Pl.#W-348-A

Pl.#W-349

Pl.#W-350

Pl.#W-348-B

Future Sewer

Heavy Wall Pipe Required (RCP) Encase in Concrete V.C.P.X & A.C.P. only

20' Right of Way

20' Construction Strip

Ex. 12" Gas

8" Channels & Future Sewer

Proposed 16"W to be built under Contract No. 383-W

Ex. G & E Underground Power Lines

BARN

Tower No. 24W

Pl.#S-18 (R&J)

Tower No. 24E

Ex. 2.6" C&P Telephone Cable &c

Ex. 30"D

Ex. 27"D

Ex. 24"D

Encase in Concrete Sta. 2+67 to 3+55

Encase in Concrete, Sta 4+98 ~~to Sta~~ 5+50

Curve # 9
Δ= 41°11'30"
D= 215.00'
T= 80.80'
L= 154.57'
D= 26°38'57"

Curve #10
Δ= 32°33'54"
D= 430.00'
T= 125.60'
L= 244.40'
D= 13°19'29"

PC #9 Sta 0+00

PT #9 Sta 1+54.57

PC #10 Sta 2+41.51

PT #10 Sta 4+85.92

P.I. Curve #9

P.I. Curve #10

POT 4+00

POT 3+00

POT 2+50

POT 2+00

POT 1+50

POT 1+00

For Profile See Drawing No. 9

Match Line "F-F" See Drawing No. 4

Match Line "G-G" See This Drawing

Match Line "H-H" See Drawing No. 6

5' Diameter Manhole See Detail Drawing No. 10

OAKLAND MILLS ROAD

W.R.&A. BM#W-89 Elev. 905.06
Galvanized Boat Spike Base of G&E Pole #326495, 80'± Right of Pl.W-347

W.R.&A. BM#W-90 Elev. 318.78
Galvinized Boat Spike in root of 18" Oak, 125'± Left of Pl.#W-349

W.R.&A. BM#W-90

4447-A
4448
4449
4450
4451
4452
4453
4454

S 47.50° E 493.50' N

S 49.00° E 494.25' N

S 45.75° E 494.75' N

Rip-Rap

5' Channel

8" Channels

Future Sewer

10' Construction Strip

Suspend

WS 326-S/S

WHITMAN, REQUARDT & ASSOCIATES ENGINEERS 1304 ST. PAUL ST. BALTIMORE, MARYLAND	DEPARTMENT OF PUBLIC WORKS HOWARD COUNTY, MARYLAND 9-21-70 DATE CHIEF-BUREAU OF WATER AND SEWER	CONTRACT NO. C-326-S	PLAN OF SEWER MAINS	COLUMBIA LONG REACH INTERCEPTOR ELECTION DISTRICT GUILFORD NO. 6	DRAWING NO. 5 OF 10 SCALE 1"=50'

W. O. 6025-2

APRIL 17, 1972 AS BUILT

F.B.# 4553, 4560

Long Reach Interceptor
Contract No. 326-S

K. ELLIOTT CO., PGH., PA. REORDER A-11627

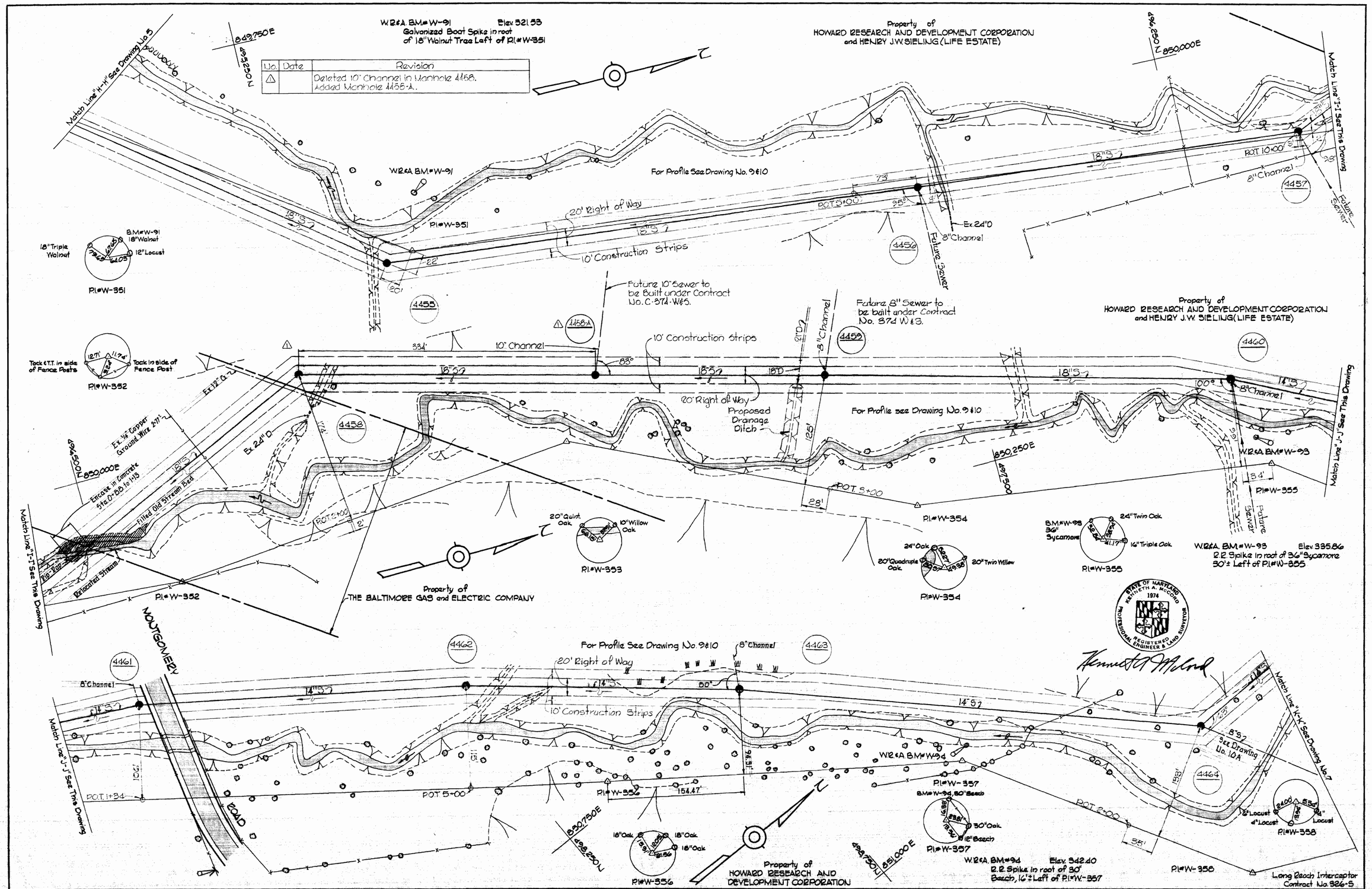

No.	Date	Revision
△		Deleted 10" Channel in Manhole 4458. Added Manhole 4458-A.

WHITMAN, REQUARDT & ASSOCIATES ENGINEERS 1304 ST. PAUL ST. BALTIMORE, MARYLAND	DEPARTMENT OF PUBLIC WORKS HOWARD COUNTY, MARYLAND 9-21-70 DATE W O Filbert CHIEF-BUREAU OF WATER AND SEWER	CONTRACT NO. C-326-S	PLAN OF SEWER MAINS	COLUMBIA LONG REACH INTERCEPTOR ELECTION DISTRICT GUILFORD NO. 6	DRAWING NO. 6 OF 10	SCALE 1" = 50'

W. O. 6023-2

APRIL 17, 1972 AS BUILT FB# 4554, 4560

WS 326-S/6

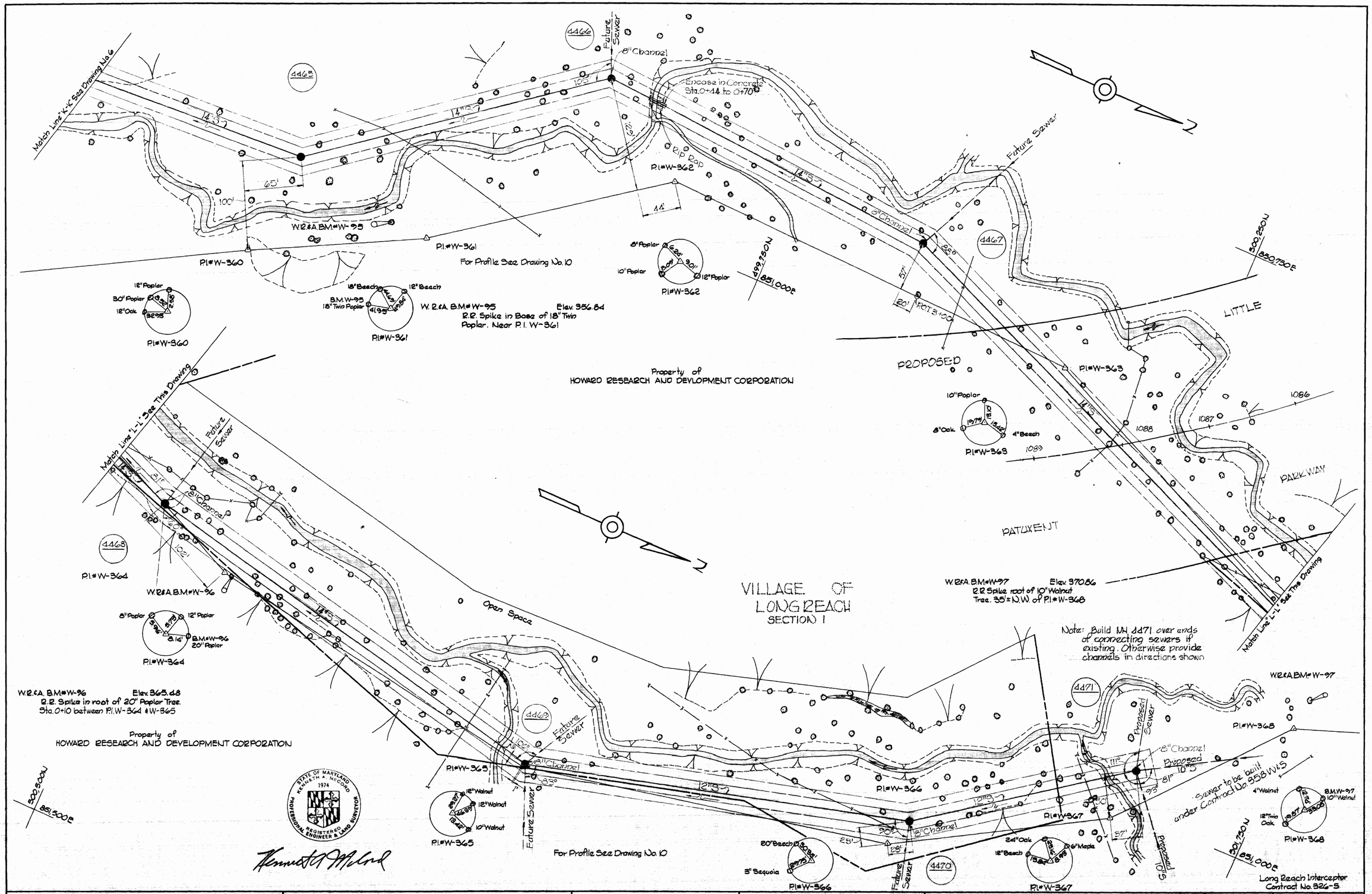

WHITMAN, REQUARDT & ASSOCIATES ENGINEERS 1304 ST. PAUL ST. BALTIMORE, MARYLAND	DEPARTMENT OF PUBLIC WORKS HOWARD COUNTY, MARYLAND 9-21-70 DATE W O Filbert CHIEF-BUREAU OF WATER AND SEWER	CONTRACT NO. C-326-S	PLAN OF SEWER MAINS	COLUMBIA LONG REACH INTERCEPTOR ELECTION DISTRICT GUILFORD NO. 6	DRAWING NO. 7 OF 10	SCALE 1"=50'	499-487 300-487 501-487

W. O. 6023-2

APRIL 17 1972 [redacted] FB#4554

WS 326-S/7

J. K. ELLIOTT CO., PGH., PA. REORDER A-11827

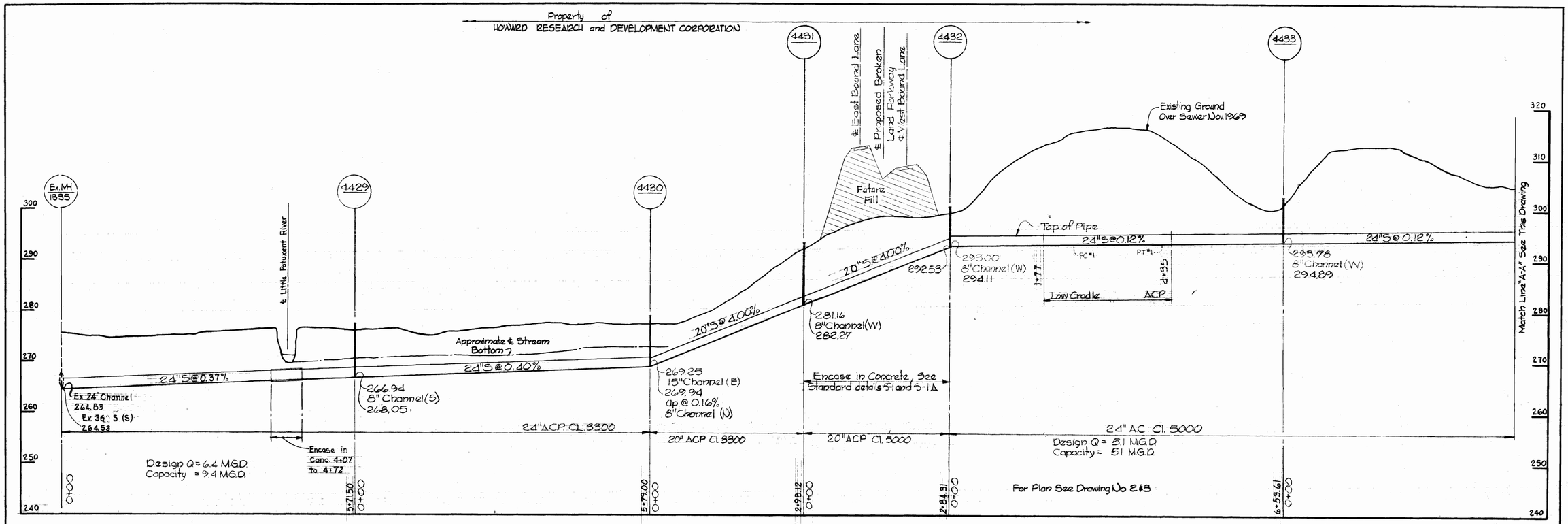

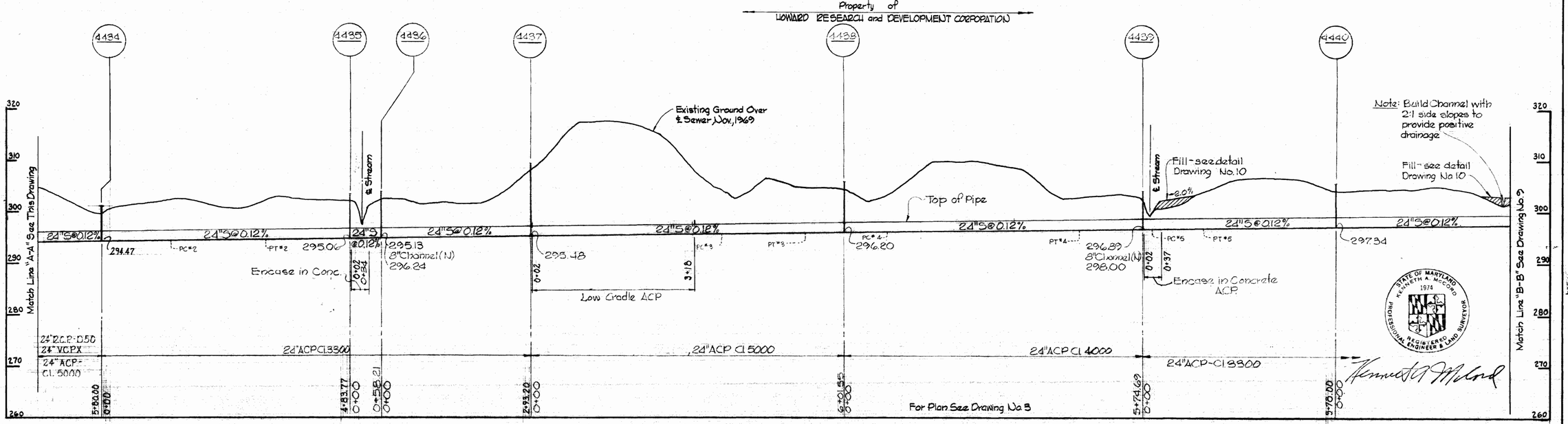

Long Reach Interceptor
Contract No 326-S

WHITMAN, REQUARDT & ASSOCIATES ENGINEERS 1304 ST. PAUL ST. BALTIMORE, MARYLAND	DEPARTMENT OF PUBLIC WORKS HOWARD COUNTY, MARYLAND 9-21-70 DATE CHIEF-BUREAU OF WATER AND SEWER	CONTRACT NO. C-326-S	PROFILES OF SEWER MAINS	COLUMBIA LONG REACH INTERCEPTOR ELECTION DISTRICT GUILFORD NO. 6	DRAWING NO. 8 OF 10 SCALE H:1"=100' V:1"= 10'

W. O. 6023-2

APRIL 17, 1972 AS BUILT

WS 326-S/8

S. K. ELLIOTT CO., PGH., PA. REORDER A-11827

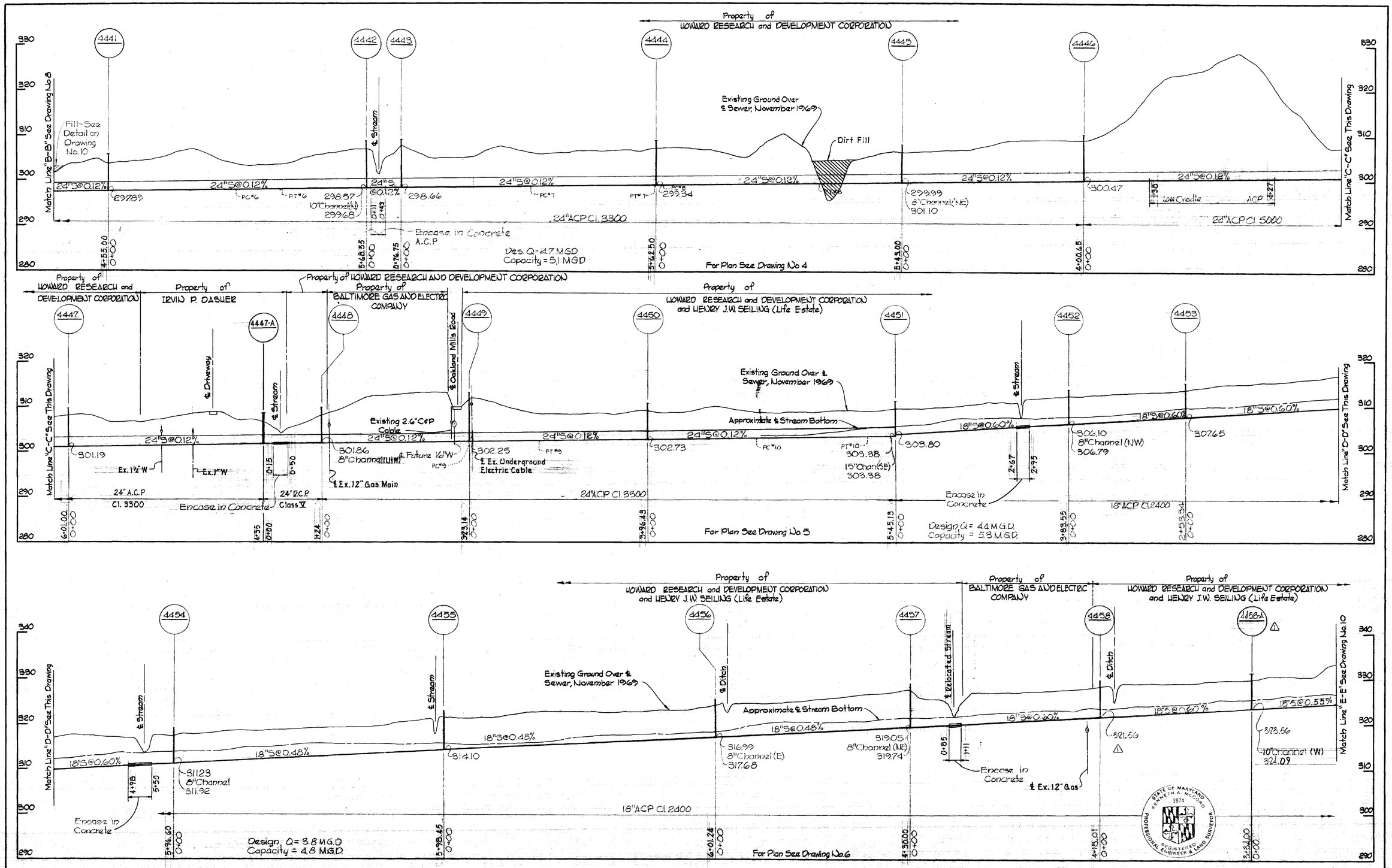

No.	Date	Revision
1		Deleted 10" Channel in Manhole 4458. Added Manhole 4458-A.

Long Reach Interceptor Contract No. 326-S

WHITMAN, REQUARDT & ASSOCIATES ENGINEERS 1304 ST. PAUL ST. BALTIMORE, MARYLAND	DEPARTMENT OF PUBLIC WORKS HOWARD COUNTY, MARYLAND 9-21-70 DATE W O Filbert CHIEF-BUREAU OF WATER AND SEWER	CONTRACT NO. C-326-S	PROFILES OF SEWER MAINS	COLUMBIA LONG REACH INTERCEPTOR ELECTION DISTRICT GUILFORD NO.6	DRAWING NO. 9 OF 10	SCALE H:1"=100' V:1"=10'

W. O. 6023-2

APRIL 17, 1972 AS BUILT

WS 326-S/9

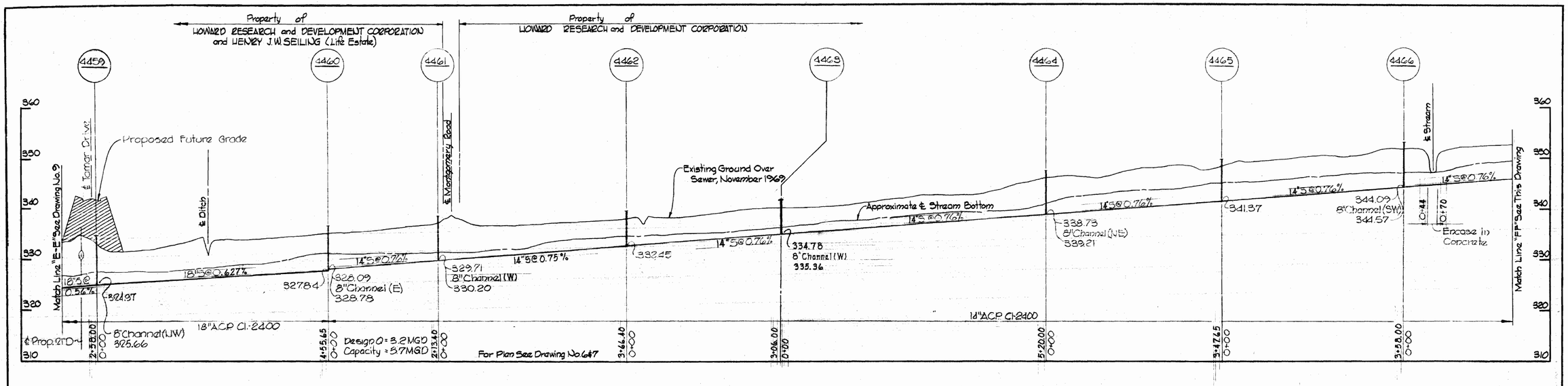

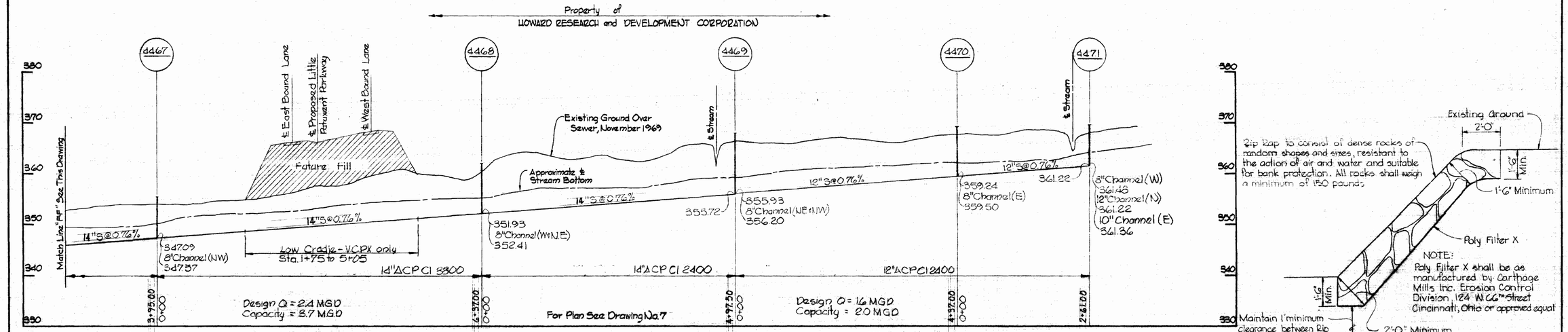

RIP-RAP DETAIL
Scale: 3/8"=1'-0"

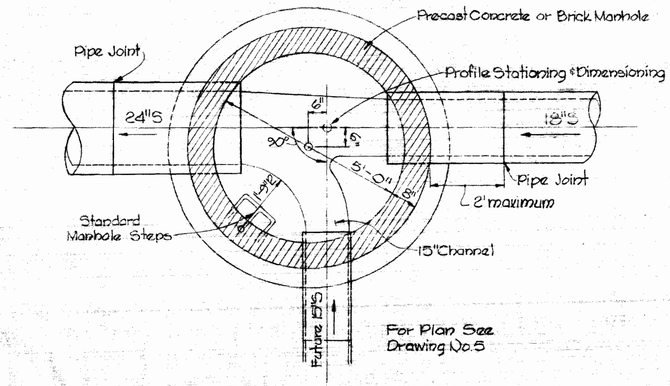

DETAIL OF MANHOLE No. 4451
Scale: 1/2"=1'-0"

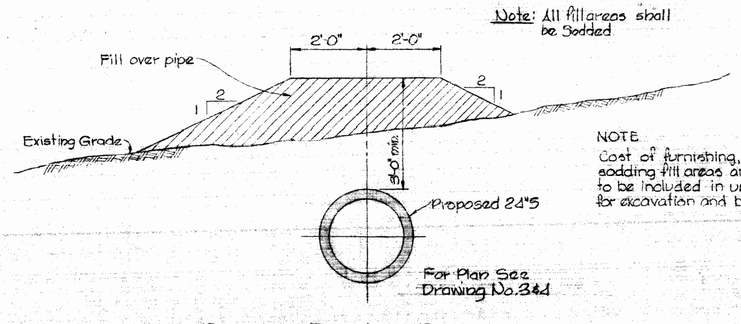

DETAIL OF FILL OVER PIPE
Scale: 1/2"=1'-0"

NOTE
Cost of furnishing, placing, and sodding fill areas and channels to be included in unit prices bid for excavation and backfill.

STATE OF MARYLAND KENNETH A. McCORD 1974 PROFESSIONAL REGISTERED ENGINEER & LAND SURVEYOR

Kenneth A. McCord

Long Reach Interceptor Contract No. 326-S

WHITMAN, REQUARDT & ASSOCIATES ENGINEERS 1304 ST. PAUL ST. BALTIMORE, MARYLAND	DEPARTMENT OF PUBLIC WORKS HOWARD COUNTY, MARYLAND 9-21-70 DATE W O Gilbert CHIEF-BUREAU OF WATER AND SEWER	CONTRACT NO. C-326-S	PROFILES OF SEWER MAINS	COLUMBIA LONG REACH INTERCEPTOR ELECTION DISTRICT GUILFORD NO. 6	DRAWING NO. 10 OF 10	SCALE H:1"=100' V:1"=10'

W. O. 6028-2

APRIL 17, 1972 AS BUILT

WS 326-S/10

suspend ext

D. K. ELLIOTT CO., Phila., Pa. REORDER A-11887

PLAN
Scale: 1"=50'

PLAN
Scale: 1"=50'

PROFILE
Scale: Horz.: 1"=100'
Vert.: 1"=10'

PROFILE
Scale: Horz.: 1"=100'
Vert.: 1"=10'

STATE OF MARYLAND
KENNETH A. McCORD
1974
REGISTERED PROFESSIONAL ENGINEER & LAND SURVEYOR

Kenneth A. McCord

WHITMAN, REQUARDT & ASSOCIATES ENGINEERS 1304 ST. PAUL ST. BALTIMORE, MARYLAND	DEPARTMENT OF PUBLIC WORKS HOWARD COUNTY, MARYLAND 1-12-71 (DATE) W O Gilbert (CHIEF–BUREAU OF WATER AND SEWER)	CONTRACT NO. C-326-S	PLAN AND PROFILES OF SEWER MAINS	COLUMBIA LONG REACH INTERCEPTOR ELECTION DISTRICT GUILFORD NO. 6	DRAWING NO. 10-A OF 10	SCALE AS SHOWN

W. O. 6023-2

APRIL 17, 1972 AS BUILT

WS 326-S/10A