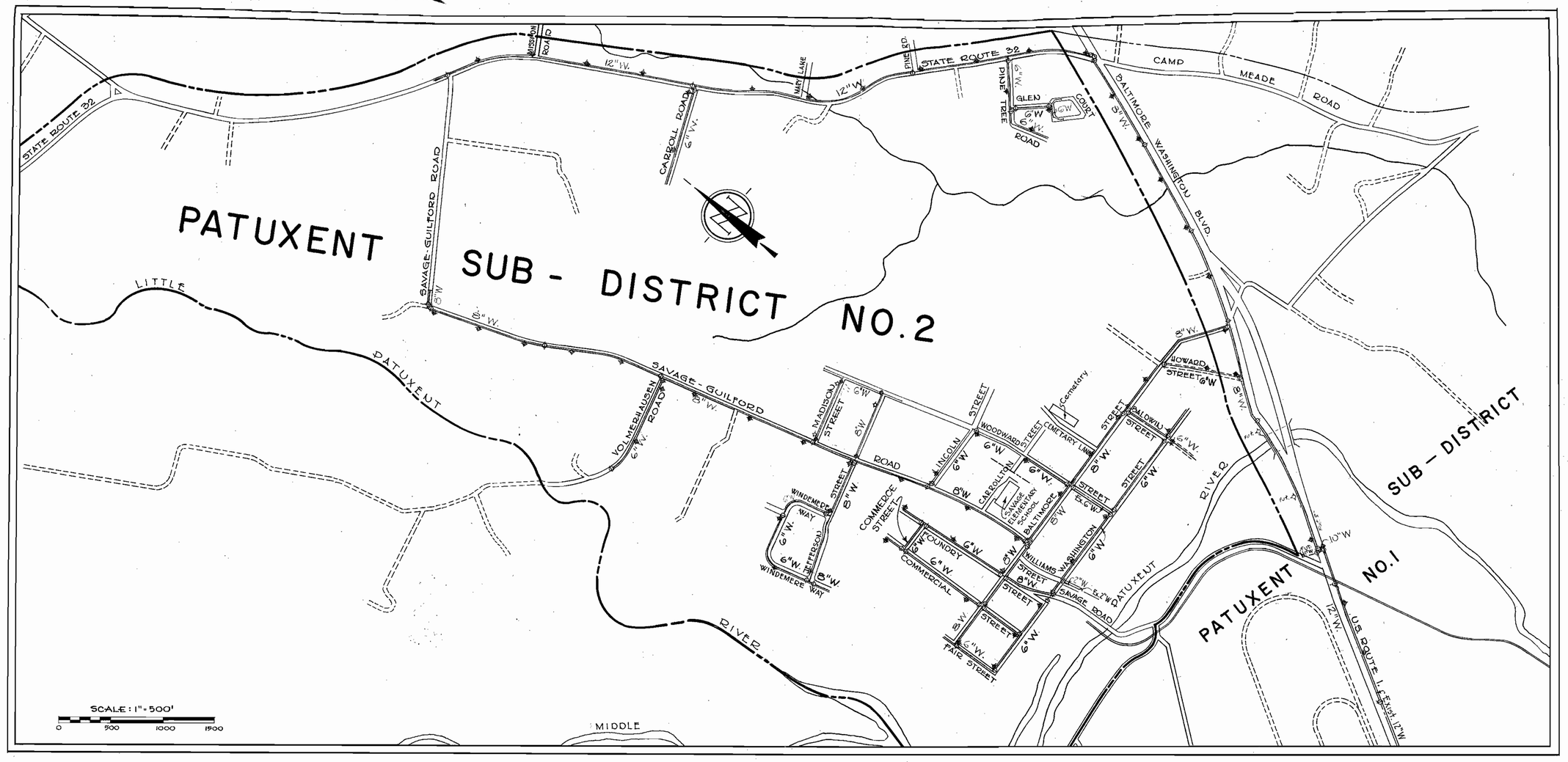

CONTRACT 3W
WATER MAIN EXTENSIONS

EXAMINED FOR	
STORM SEWERS	
R/W-REQ'D.	
OTHER UTILITIES	

HOWARD COUNTY METROPOLITAN COMMISSION
PATUXENT SUB-DISTRICT NO.2

WASHINGTON SUBURBAN SANITARY COMMISSION
APPROVED: Harry B. Shaw JULY 24, 1957
CHIEF ENGINEER DATE

WHITMAN, REQUARDT & ASSOCIATES ENGINEERS 1304 ST. PAUL ST. BALTIMORE, MARYLAND	HOWARD COUNTY METROPOLITAN COMMISSION July 26, 1957 DATE Carl W. Meyer CHAIRMAN	CONTRACT NO. 3 W	LOCATION MAP OF WATER MAIN EXTENSIONS	PATUXENT SUB-DISTRICT NO. 2	DRAWING NO. 1 OF 20	SCALE AS SHOWN	571034 Y

4521

AS BUILT

WS 3W/1

K. ELLIOTT CO. #70132 11-56 100

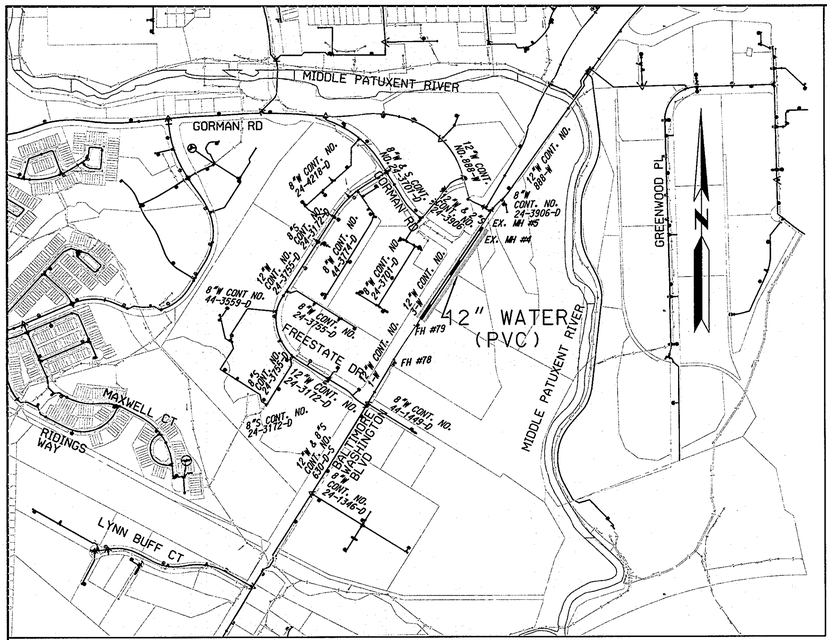

LOCATION MAP

SCALE: 1"=600'

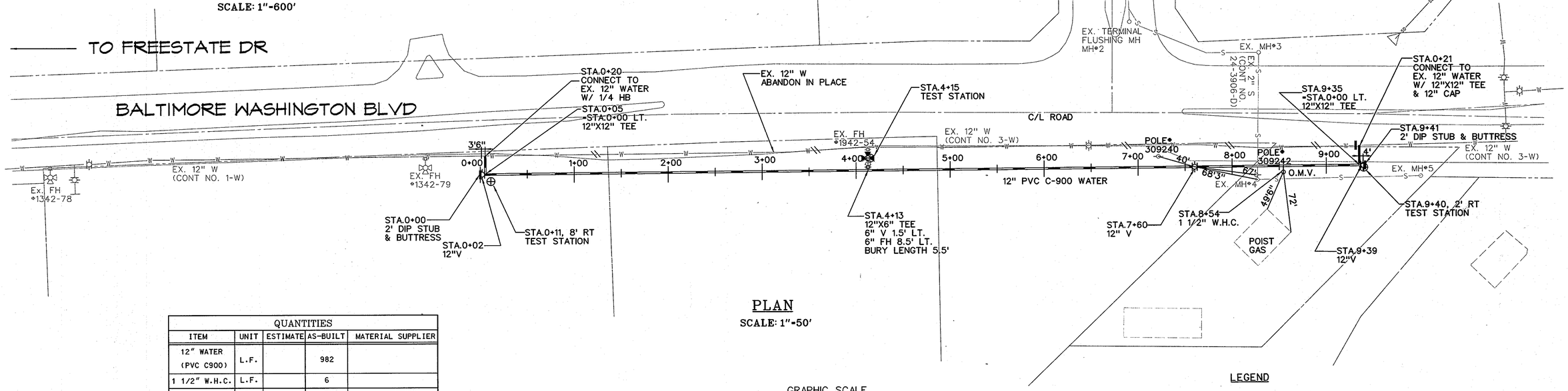

PLAN

SCALE: 1"=50'

QUANTITIES				
ITEM	UNIT	ESTIMATE	AS-BUILT	MATERIAL SUPPLIER
12" WATER (PVC C900)	L.F.		982	
1 1/2" W.H.C.	L.F.		6	
12" VALVE	EA		3	
6" VALVE	EA		1	
6" FH	EA		1	
12" CAP	EA		3	
NAME OF UTILITY CONTRACTOR:				
			AS-BUILT DATE:	MARCH 3, 2011

GRAPHIC SCALE

50 0 25 50 100

(IN FEET)
1 inch = 50ft.

LEGEND

- WATER MAIN
- FIRE HYDRANT
- VALVE
- WATER HOUSE CONNECTION
- TEST STATION
- PROPERTY LINE
- EXISTING WATER MAIN
- EXISTING FIRE HYDRANT
- EXISTING VALVE
- EXISTING SEWER MAIN
- EXISTING SEWER MANHOLE
- EXISTING STORM DRAIN
- EXISTING POLE

AS BUILT

DEPARTMENT OF PUBLIC WORKS
HOWARD COUNTY, MARYLAND

DIRECTOR OF PUBLIC WORKS — DATE 7/27/11
CHIEF, BUREAU OF ENGINEERING — DATE 7/26/10
CHIEF, BUREAU OF UTILITIES — DATE 7/26/2011
CHIEF, UTILITY DESIGN DIVISION — DATE 7/26/11

KCI TECHNOLOGIES
ENGINEERS
PLANNERS
SCIENTISTS
CONSTRUCTION MANAGERS
936 RIDGEBROOK ROAD
SPARKS, MARYLAND 21152
TELEPHONE: (410) 316-7800
FAX: (410) 316-7818
www.kci.com

DES:
DRN: SAH
CHK: GW
DATE: JUNE 2011

BY	NO.	REVISION	DATE
SAH	1	AS BUILT	6/11

WATER PLAN

600' SCALE MAP NO. 47 BLOCK NO. 1

US ROUTE 1 WATER MAIN
CONTRACT No. 3-W
ELECTION DISTRICT NO. 6 HOWARD COUNTY, MARYLAND

SCALE AS SHOWN

SHEET 1 OF 1

PLOTTED: "04:42 PM on Thursday, July 14, 2011"
BY USER: "Donald Whitehead, Jr. Whitehead & White GMA Emp
FILE: M:\2007\07\07378.31\drawings\CONT_3-W_REDLINE.dgn

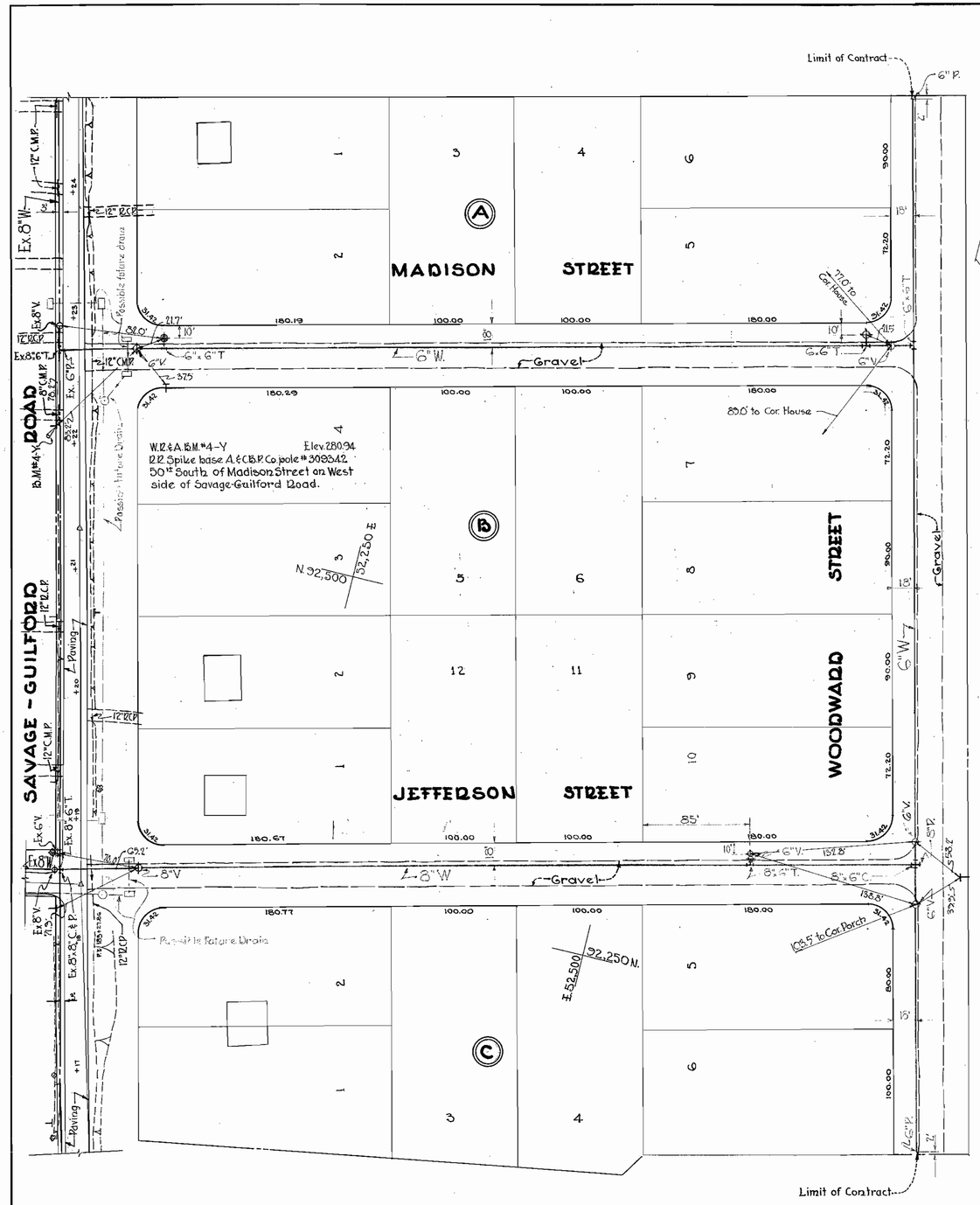

PLAN
Scale: 1"=50'

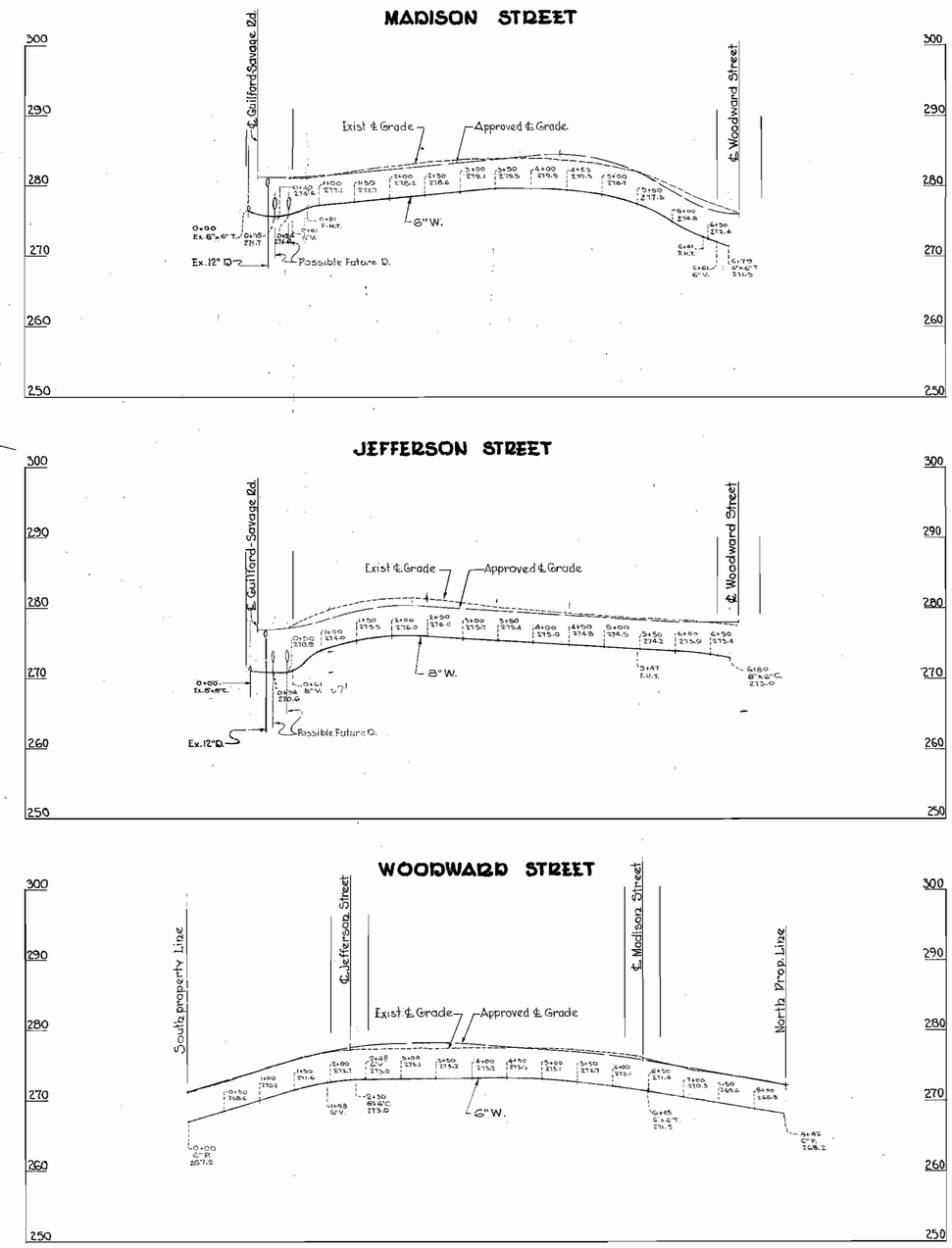

All water pipe to be C.I. Class 22.
Use wood to block all fittings. See W.S.S.C. standard detail drawings 57806-L & 57808-L.

PROFILE
Scale: Hor. 1"=100'
Vert. 1"=10'

WHITMAN, REQUARDT & ASSOCIATES ENGINEERS 1304 ST. PAUL ST. BALTIMORE, MARYLAND	HOWARD COUNTY METROPOLITAN COMMISSION February 3, 1958 DATE Chairman	CONTRACT NO. 3 W	PLAN AND PROFILE OF WATER MAIN EXTENSIONS	PATUXENT SUB-DISTRICT NO. 2.	DRAWING NO. 1A OF 20	SCALE AS SHOWN	WASHINGTON SUBURBAN SANITARY COMMISSION APPROVED: Harry B. Shaw, CHIEF ENGINEER 1/30/58 DATE: 58332 V. 47 NE 18-3,4

W.O. 4661

F.B. 2132.

WS 3W / 1-A

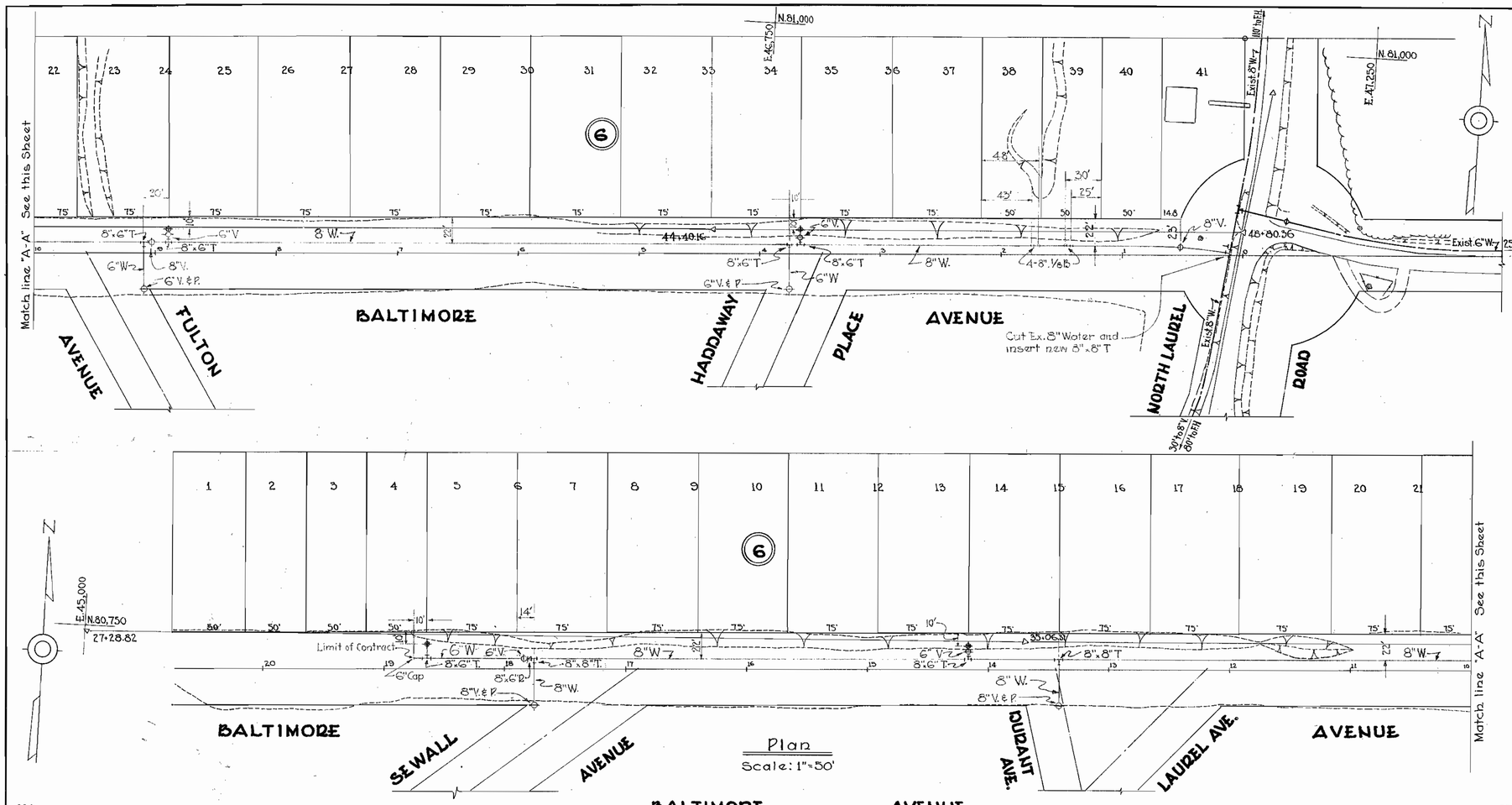

Plan
Scale: 1"=50'

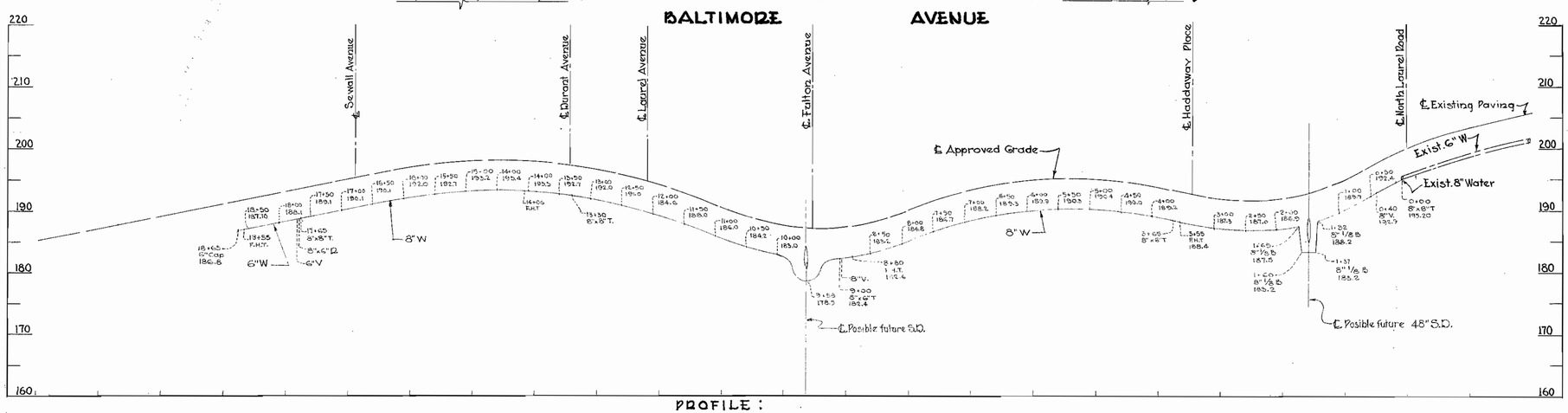

PROFILE:
Scale: Vert. 1"=10' Hor. 1"=100'

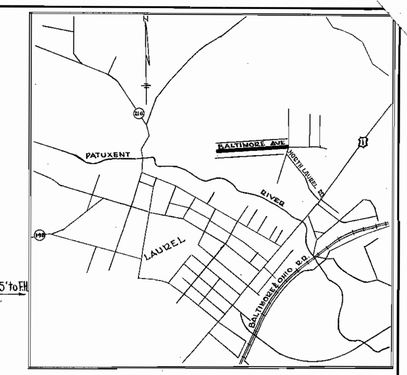

VICINITY MAP

Scale: 1 in=2,000 ft.

BENCH MARKS

W.R.&A. B.M. # 32. El.189.67. Nail & Cap in G.&E. Pole # 191331. East side of North Laurel Rd., 125'± South of Cissell Avenue.

W.R.&A. B.M. # 32-A.-El.206.42. Nail & Tin Top in C.&P. Pole # 163865 on N.E. corner Madison Avenue & Baltimore Avenue

WASHINGTON SUBURBAN SANITARY COMMISSION

APPROVED:

CHIEF ENGINEER: DATE:

WHITMAN, REQUARDT & ASSOCIATES ENGINEERS 1304 ST. PAUL ST. BALTIMORE, MARYLAND	HOWARD COUNTY METROPOLITAN COMMISSION DATE CHAIRMAN	CONTRACT NO. 3.W.	VICINITY MAP, PLAN & PROFILE OF WATER MAIN EXTENSION	PUTUXENT SUB-DISTRICT NO. 2.	DRAWING NO. 1. OF 1.	SCALE AS SHOWN 58331 Y. 41 NE 16-3,4.

AS BUILT

W.O. 466

WS 3W/1 (North Laurel)

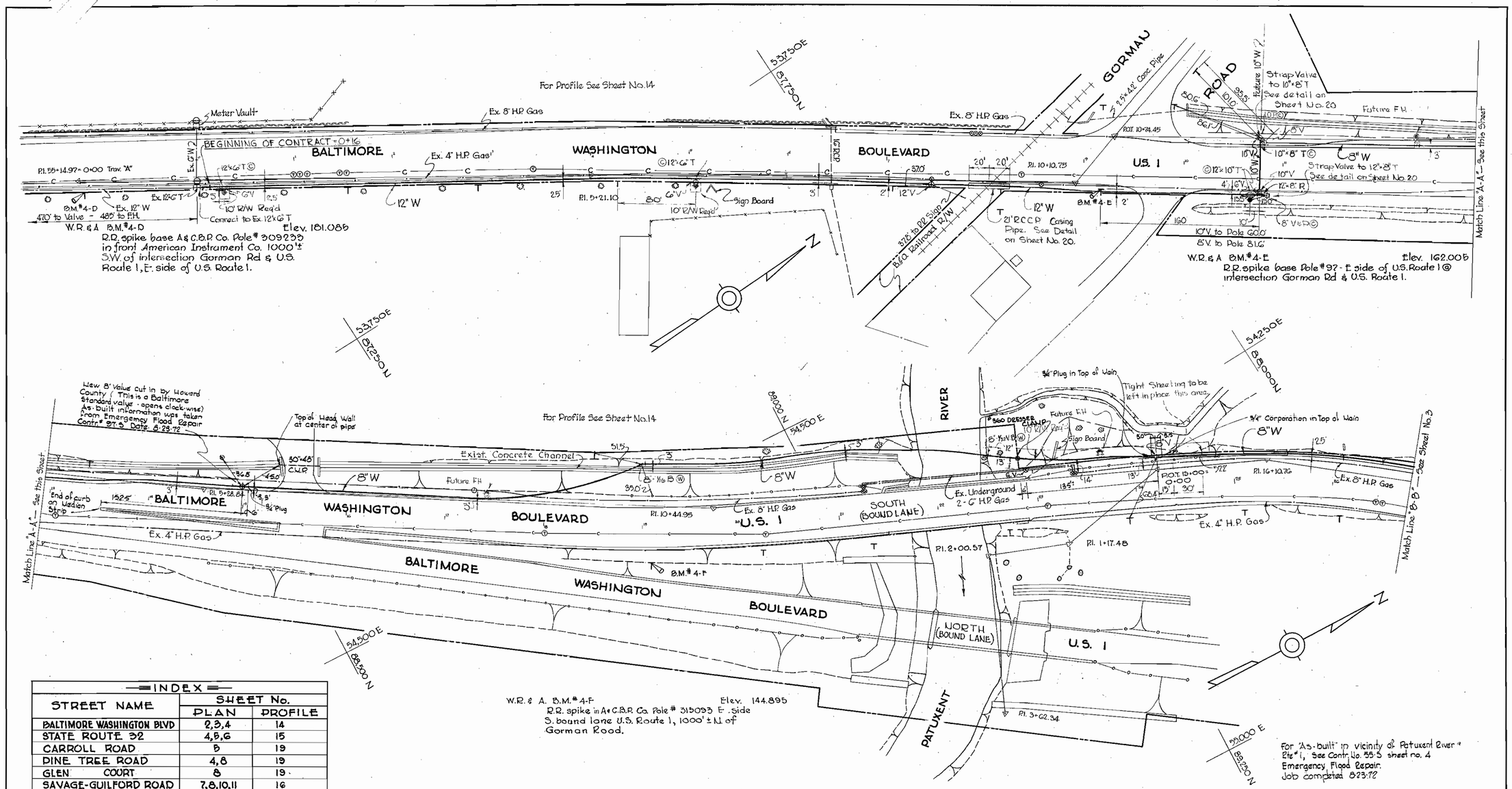

INDEX

STREET NAME	SHEET No. PLAN	SHEET No. PROFILE
BALTIMORE WASHINGTON BLVD	2,3,4	14
STATE ROUTE 32	4,5,6	15
CARROLL ROAD	5	19
PINE TREE ROAD	4,8	19
GLEN COURT	8	19
SAVAGE-GUILFORD ROAD	7,8,10,11	16
VOLMERHAUSEN ROAD	7,8	16
JEFFERSON STREET	8,9	19
WINDERMERE WAY	9	19
LINCOLN STREET	10	18
COMMERCIAL STREET	10,11	17
FOUNDRY STREET	10,11	17
COMMERCE STREET	10	17
BALTIMORE STREET	3,11,12,13	18
WASHINGTON STREET	11,12,13	17
FAIR STREET	11	17
WILLIAMS STREET	6,11	18
SAVAGE ROAD	6,11	17
WOODWARD STREET	10,12	19
BALDWIN STREET	13	18
HOWARD STREET	3,13	18

GENERAL NOTES

1. Approximate location of existing mains are shown. The Contractor shall take all necessary precautions to protect the existing mains and services and maintain uninterrupted supply. Any damage incurred shall be repaired immediately.
2. All pipe elevations shown are invert ℄ elevations.
3. The Contractor shall locate existing utilities a minimum of two weeks in advance of construction operations in vicinity of utilities.
4. Before digging, pipe pushing or doing other work near Telephone Cables call collect at any time, Lexington 9-99-00 Ext. 553, 554 or 555 Baltimore, Maryland.
5. The location of all valves, fittings etc. have been located in plan and dimensions shall be strictly adhered to unless otherwise directed by the Engineer in writing. Profile stationing may have to be adjusted to adhere to plan dimensions.
6. Clear all poles by a 2'-0" minimum.
7. All tops of Frost Casings on fire Hydrants to be set 0.25' above edge of paving or as directed by Engineer in the field.
8. All Fire Hydrants to be a min. of 1' clear of property line except where shown to be in private property, or as otherwise noted.
9. For all standard details see standards bound in specifications.
10. All 6" & 8" W. to be "Class 22". All 10" W & 12" W to be "Class 23" All 2" W to be copper Type "K"
11. Use wood to block all fittings marked Ⓦ See standard detail plan 57806-L & 57808-L.
12. Use concrete to block fittings marked Ⓒ See standard detail plan 46715-L & the following:

STREET	STATION	FITTING	TYPE	STANDARD DETAIL	CLASS
ST. RT. 32	39+64 & 39+44	12" x 6	V.B.O.	56811-L	A
" " "	39+59 & 39+49	12" x 6	V.B.L.	56812-L	A
" " "	24+82 & 25+37	12" x 6	H&V.O.	Special Detail Dwg. 20	
" " "	25+00 & 25+26	12" x 6	H.&V.L.	" " " "	
COMMERCE ST	1+22 & 1+40	6" x 6	V.B.O.	56811-L	B
" "	1+26 & 1+36	6" x 6	V.B.L.	56812-L	B

Continued On Sheet 3

WASHINGTON SUBURBAN SANITARY COMMISSION
APPROVED Harry B. Shaw JULY 24, 1957
CHIEF ENGINEER DATE

WHITMAN, REQUARDT & ASSOCIATES
ENGINEERS
1304 ST. PAUL ST.
BALTIMORE, MARYLAND

HOWARD COUNTY METROPOLITAN COMMISSION
July 26, 1957 Carl W. Meyer
DATE CHAIRMAN

CONTRACT NO. 3 W

PLAN OF WATER MAIN EXTENSIONS

PATUXENT SUB-DISTRICT NO. 2

DRAWING NO. 2 OF 20

SCALE 1"=50"

571035
Y
46NE.10-2 46NW.18-4
49NE.19-1, 3

F.B. 1905, 1952

4521

AS BUILT

WS 3W/2

K. ELLIOTT CO. #70132 11-66 100

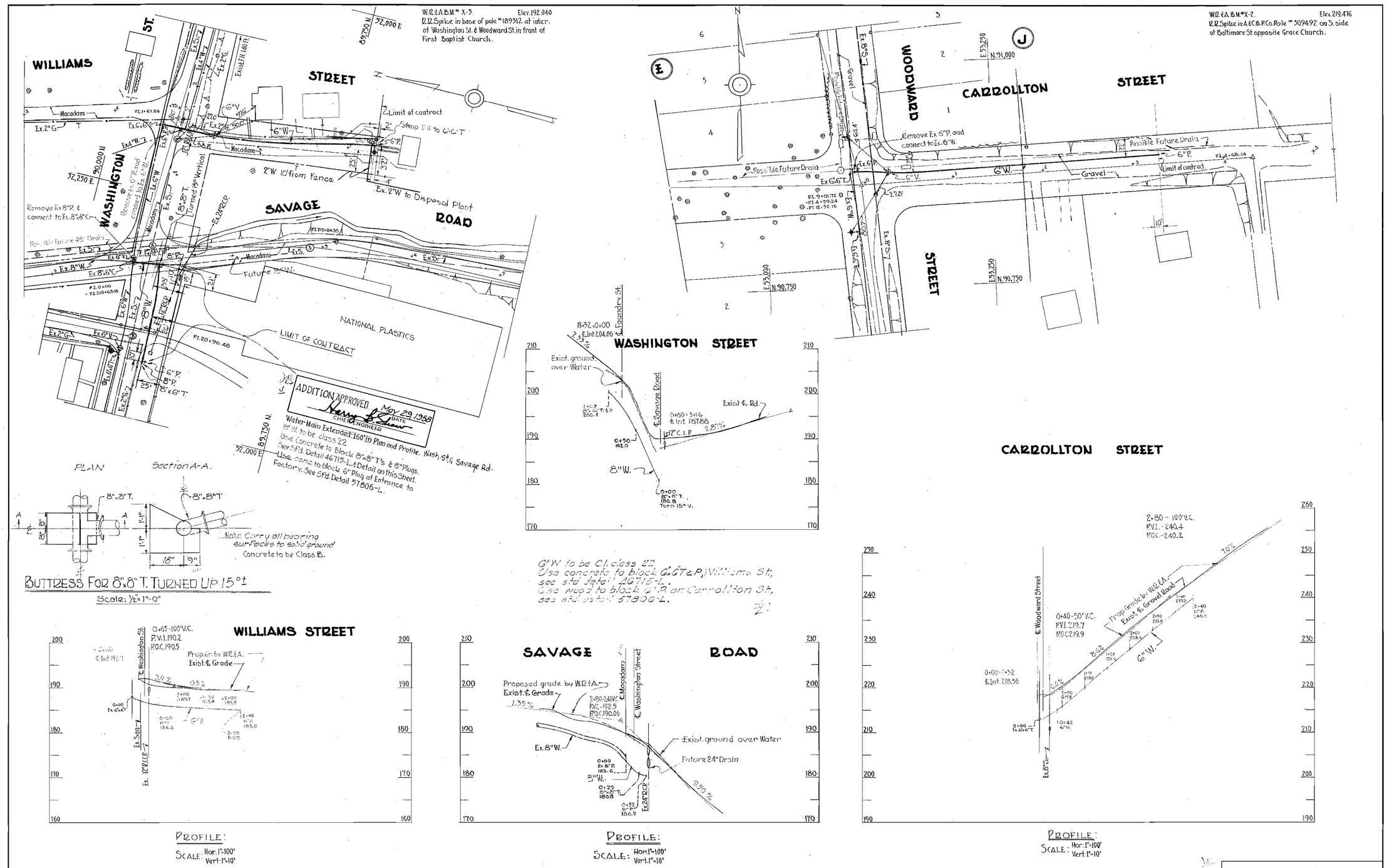

WASHINGTON SUBURBAN SANITARY COMMISSION
APPROVED: Harry L. Shaw March 13, 1958
CHIEF ENGINEER: DATE:

WHITMAN, REQUARDT & ASSOCIATES ENGINEERS 1304 ST. PAUL ST. BALTIMORE, MARYLAND	HOWARD COUNTY METROPOLITAN COMMISSION May 12, 1958 DATE CHAIRMAN	CONTRACT NO. 3 W.	PLAN AND PROFILE OF WATER MAIN EXTENSIONS	PATUXENT SUB-DISTRICT NO. 2.	DRAWING NO. 2 A. OF 20	SCALE AS SHOWN	58389 Y 45 NE 18-1 46 NE 18-4

F.B. 2132.

W.O. 4661.

WS 3W/2-A

K. ELLIOTT CO. #70132 11-56 100

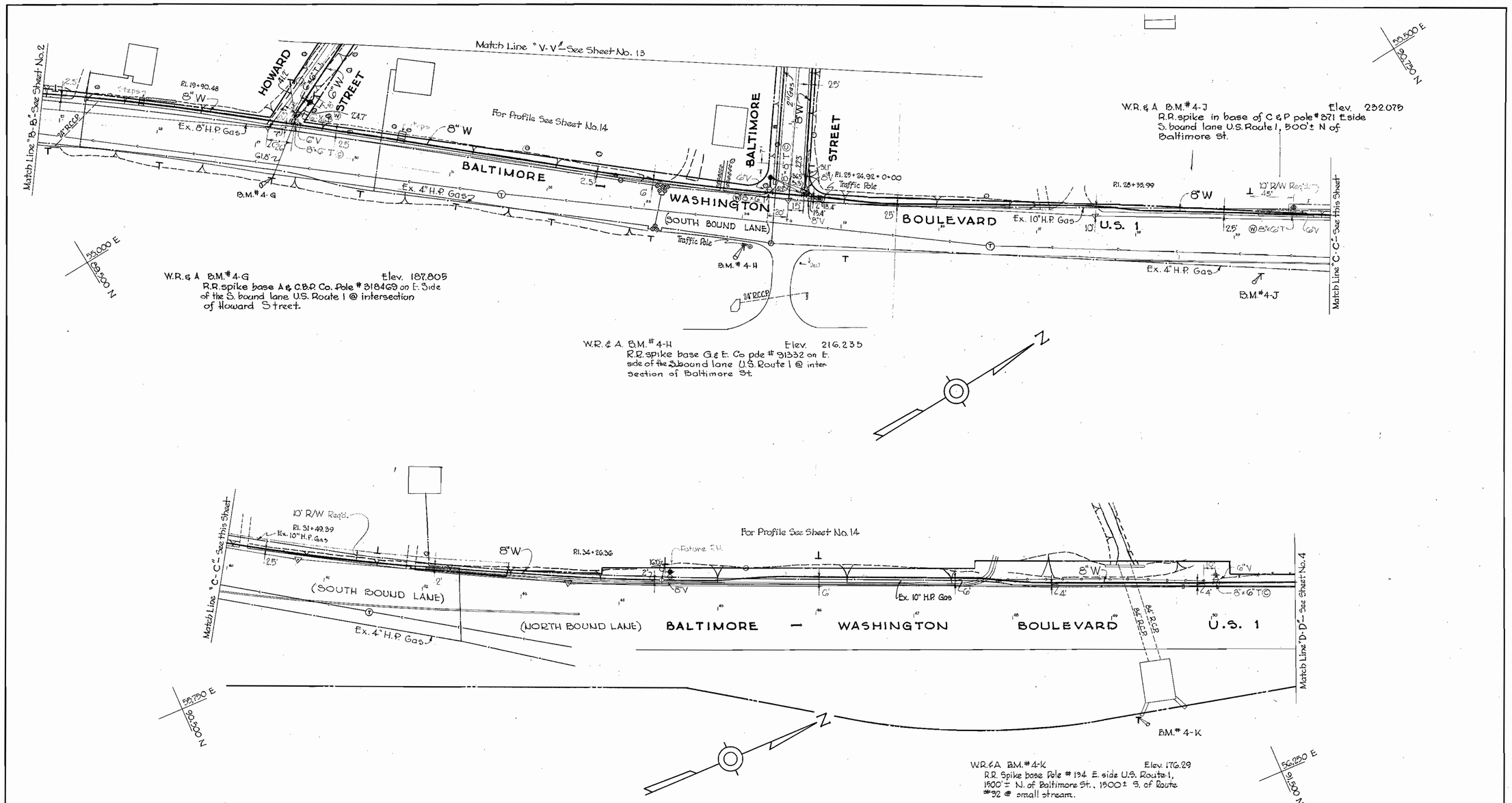

Continued From Sheet 2

STREET	STATION	FITTING	TYPE	STANDARD DETAIL	CLASS
FOUNDRY ST.	4+67	6"-1/8	V.B.U.	56811-L	B
" "	4+29	8"-1/8	V.B.U.	56811-L	B
" "	4+62	6"-1/8	V.B.U.	56812-L	B
" "	4+34	8"-1/8	V.B.L.	56812-L	B
WASH. ST.	9+81 & 9+51	6"-1/8	V.B.U.	56811-L	B
" "	1+35 & 1+05	6"-1/8	V.B.U.	56811-L	B
" "	9+76 & 9+56	6"-1/8	V.B.L.	56812-L	B
" "	1+30 & 1+10	6"-1/8	V.B.L.	56812-L	B
BALTO. ST.	25+42 & 25+02	8"-1/16	V.B.U.	57784-L	B
" "	25+32 & 25+12	8"-1/16	V.B.L.	57785-L	B
" "	10+56 & 10+37	8"-1/8	V.B.U.	56811-L	B
" "	10+51 & 10+41	8"-1/8	V.B.L.	56812-L	B

WASHINGTON SUBURBAN SANITARY COMMISSION
APPROVED Harry B. Shaw JULY 24, 1957
CHIEF ENGINEER DATE

WHITMAN, REQUARDT & ASSOCIATES ENGINEERS 1304 ST. PAUL ST. BALTIMORE, MARYLAND	HOWARD COUNTY METROPOLITAN COMMISSION July 26, 1957 DATE Carl W. Meyer CHAIRMAN	CONTRACT NO. 3W	PLAN OF WATER MAIN EXTENSIONS	PATUXENT SUB-DISTRICT NO. 2	DRAWING NO. 3 OF 20	SCALE 1"=50"	571036 Y

4521

AS BUILT

WS 3W/3

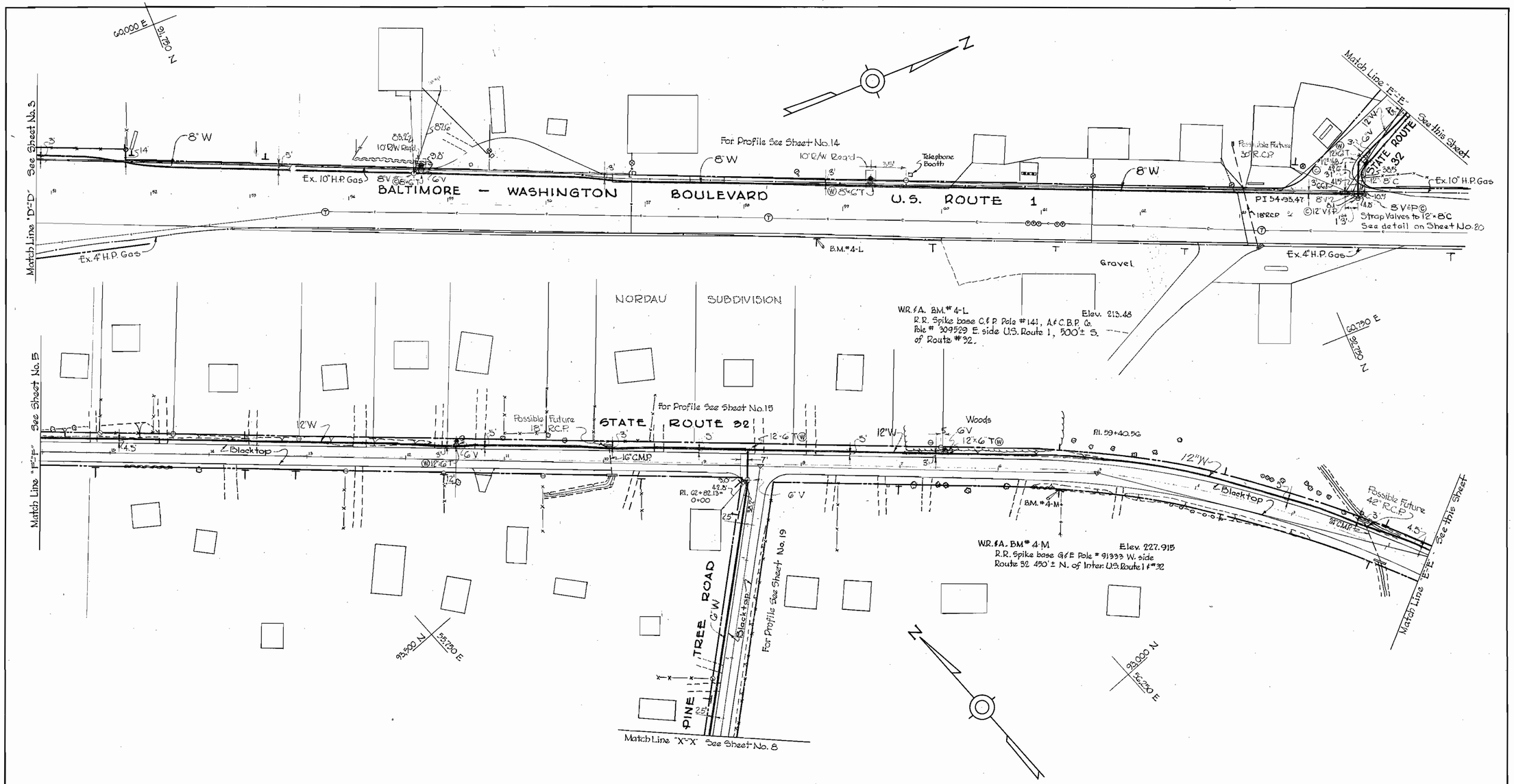

WASHINGTON SUBURBAN SANITARY COMMISSION
APPROVED
Harry B. Shaw JULY 24, 1957
CHIEF ENGINEER DATE

WHITMAN, REQUARDT & ASSOCIATES ENGINEERS 1304 ST. PAUL ST. BALTIMORE, MARYLAND	HOWARD COUNTY METROPOLITAN COMMISSION July 26, 1957 DATE — Carl W. Meyer CHAIRMAN	CONTRACT NO. 3W	PLAN OF WATER MAIN EXTENSIONS	PATUXENT SUB-DISTRICT NO. 2	DRAWING NO. 4 OF 20	SCALE 1"=50"

57/037
Y
AG NE 19-2
AT NE 19-E4
F.B. 1811, 1819

4521

AS BUILT

WS 3W/4

K. ELLIOTT CO. #70132 11-56 100

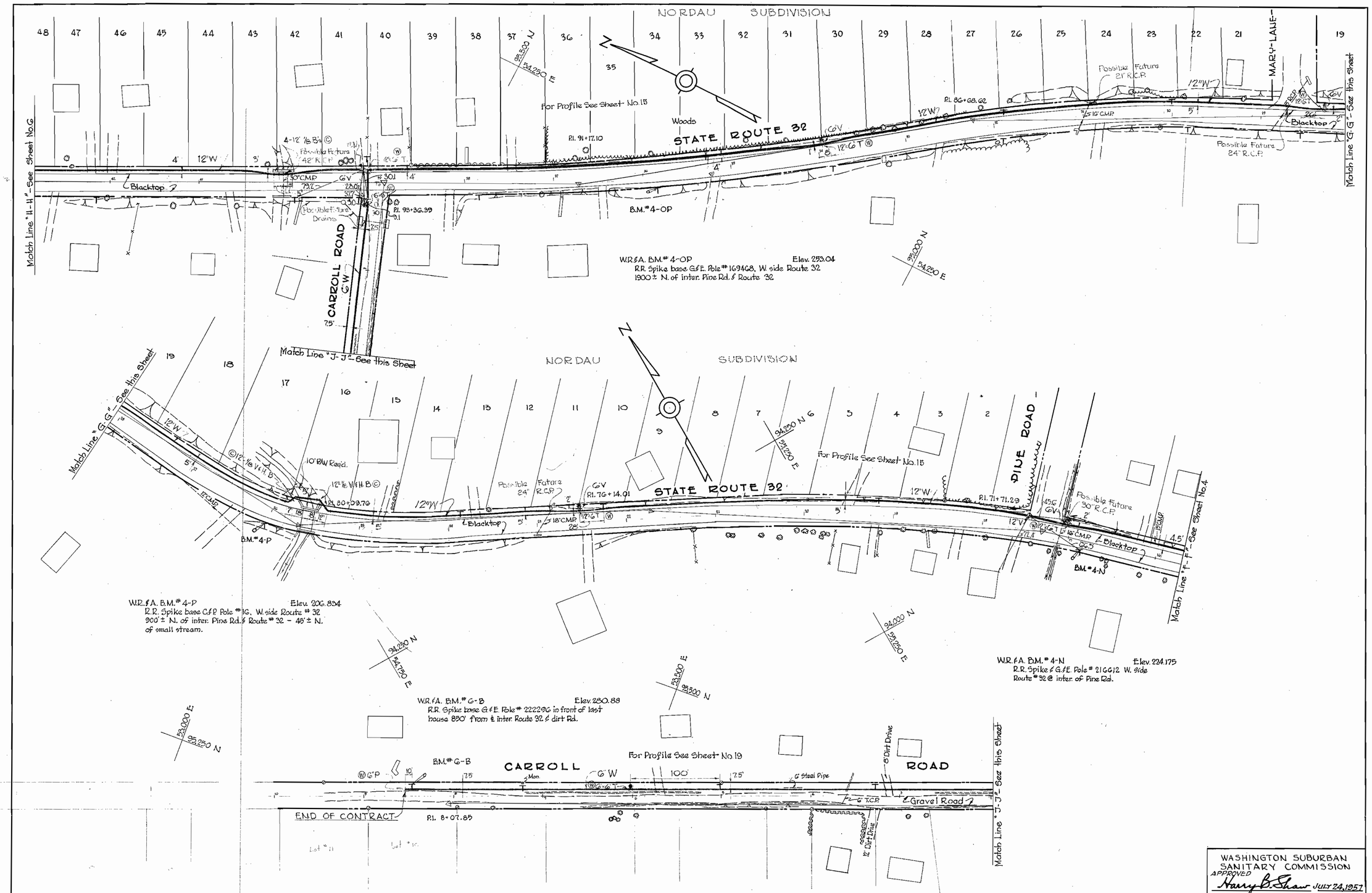

WASHINGTON SUBURBAN SANITARY COMMISSION
APPROVED
Harry B. Shaw JULY 24, 1957
CHIEF ENGINEER DATE

WHITMAN, REQUARDT & ASSOCIATES ENGINEERS 1304 ST. PAUL ST. BALTIMORE, MARYLAND	HOWARD COUNTY METROPOLITAN COMMISSION July 26, 1957 DATE — Carl W. Meyer CHAIRMAN	CONTRACT NO. 3W	PLAN OF WATER MAIN EXTENSIONS	PATUXENT SUB-DISTRICT NO. 2	DRAWING NO. 5 OF 20	SCALE 1"=50"	571038 Y 48 NE 19-3 48 NE 18-2 49 NE 19-12 F.B. 1911-1919

4521

AS BUILT

WS 3W/5

B. F. ELLIOTT CO. #70132 11-56 100

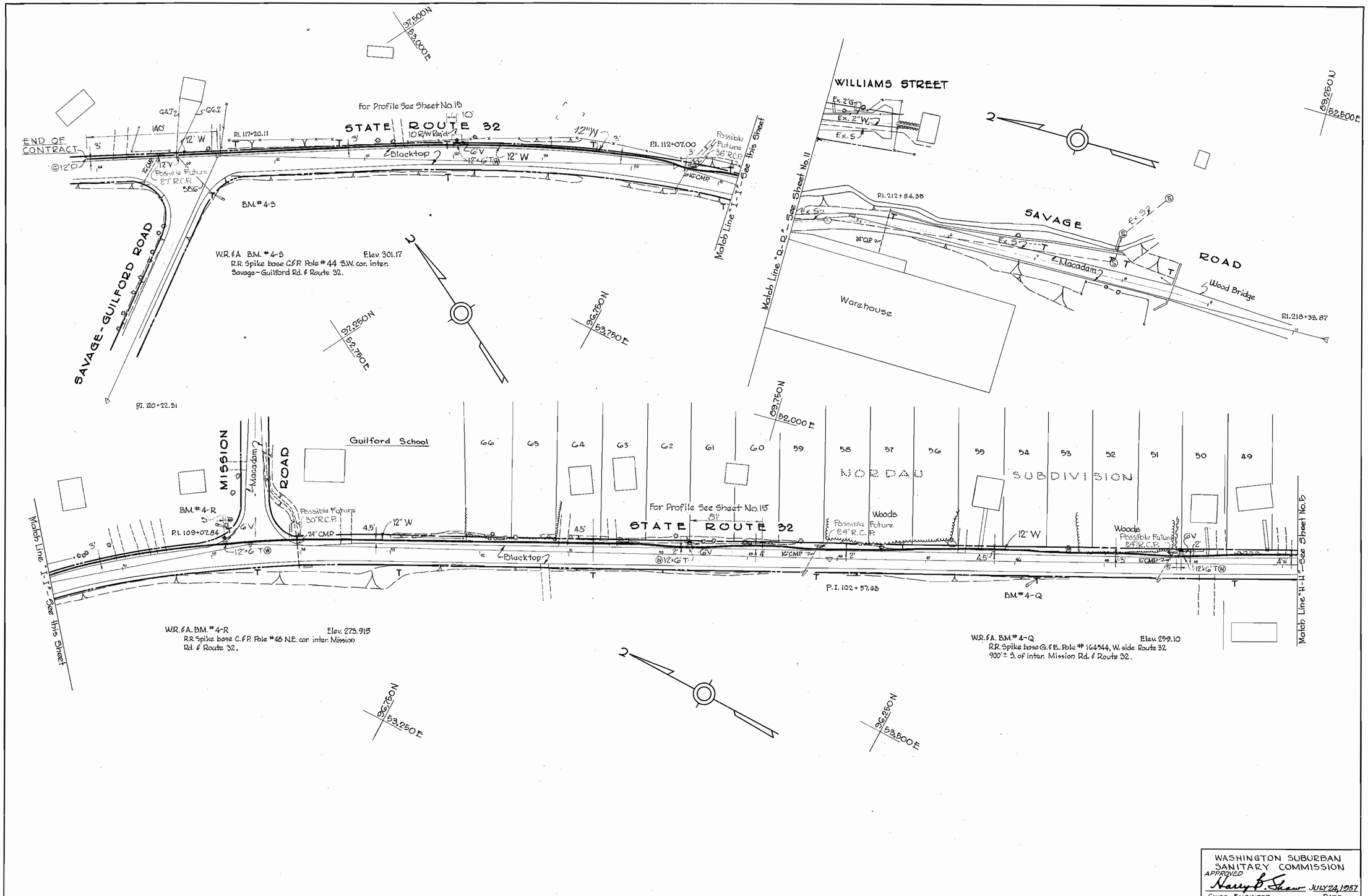

WASHINGTON SUBURBAN SANITARY COMMISSION
APPROVED Harry B. Shaw JULY 24, 1957
CHIEF ENGINEER DATE

WHITMAN, REQUARDT & ASSOCIATES ENGINEERS 1304 ST. PAUL ST. BALTIMORE, MARYLAND	HOWARD COUNTY METROPOLITAN COMMISSION July 26, 1957 DATE Carl W. Meyer CHAIRMAN	CONTRACT NO. 3W	PLAN OF WATER MAIN EXTENSIONS	PATUXENT SUB-DISTRICT NO. 2	DRAWING NO. 6 OF 20	SCALE 1"=50"	571039 Y

4521

WS 3W/6

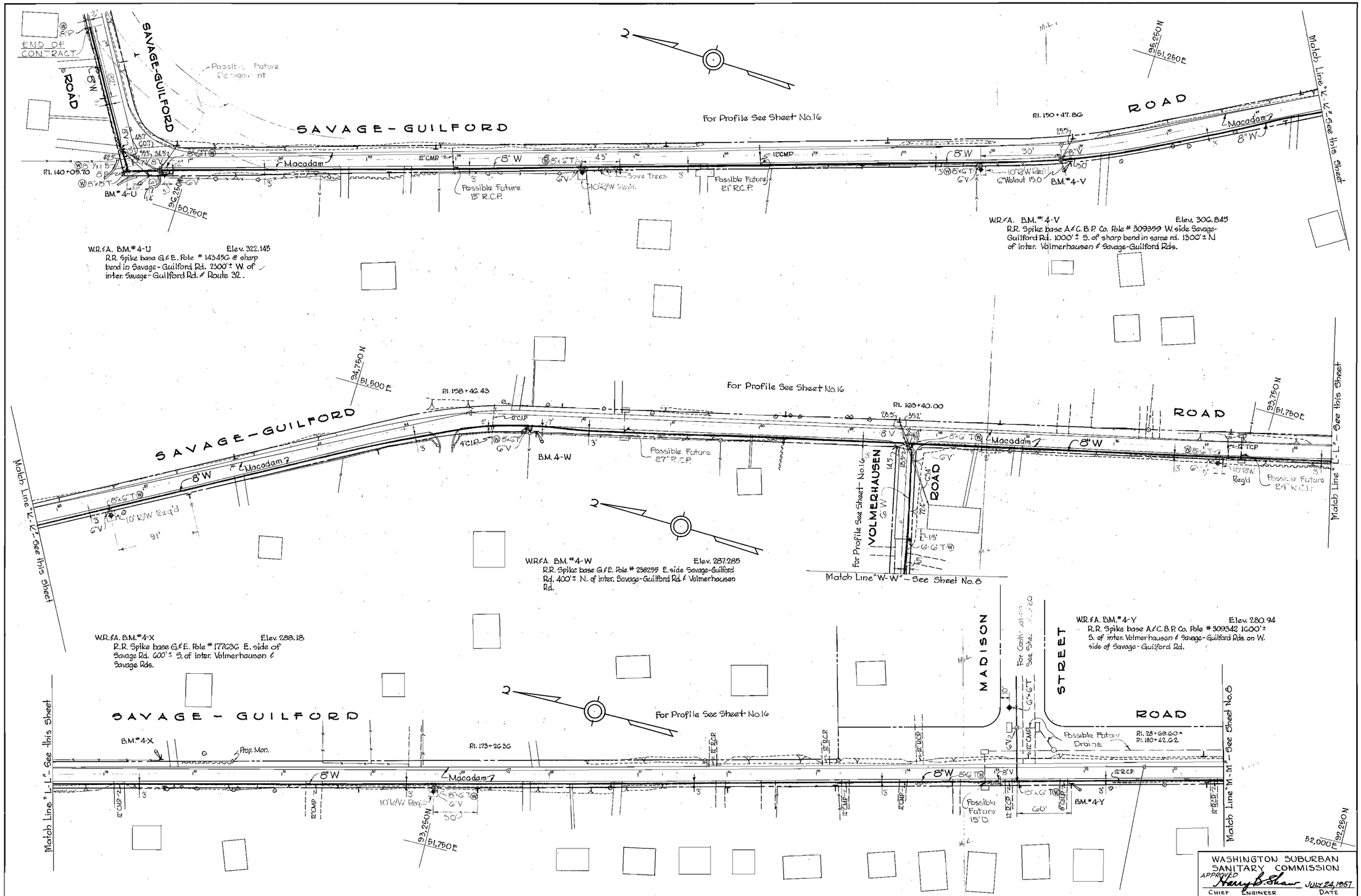

WASHINGTON SUBURBAN SANITARY COMMISSION
APPROVED Harry B. Shaw JULY 24, 1957
CHIEF ENGINEER DATE

WHITMAN, REQUARDT & ASSOCIATES ENGINEERS 1304 ST. PAUL ST. BALTIMORE, MARYLAND	HOWARD COUNTY METROPOLITAN COMMISSION July 26, 1957 DATE Carl W. Meyer CHAIRMAN	CONTRACT NO. 3W	PLAN OF WATER MAIN EXTENSIONS	PATUXENT SUB-DISTRICT NO. 2	DRAWING NO. 7 OF 20	SCALE 1"=50"	571040 Y

4521

WS 3W/7

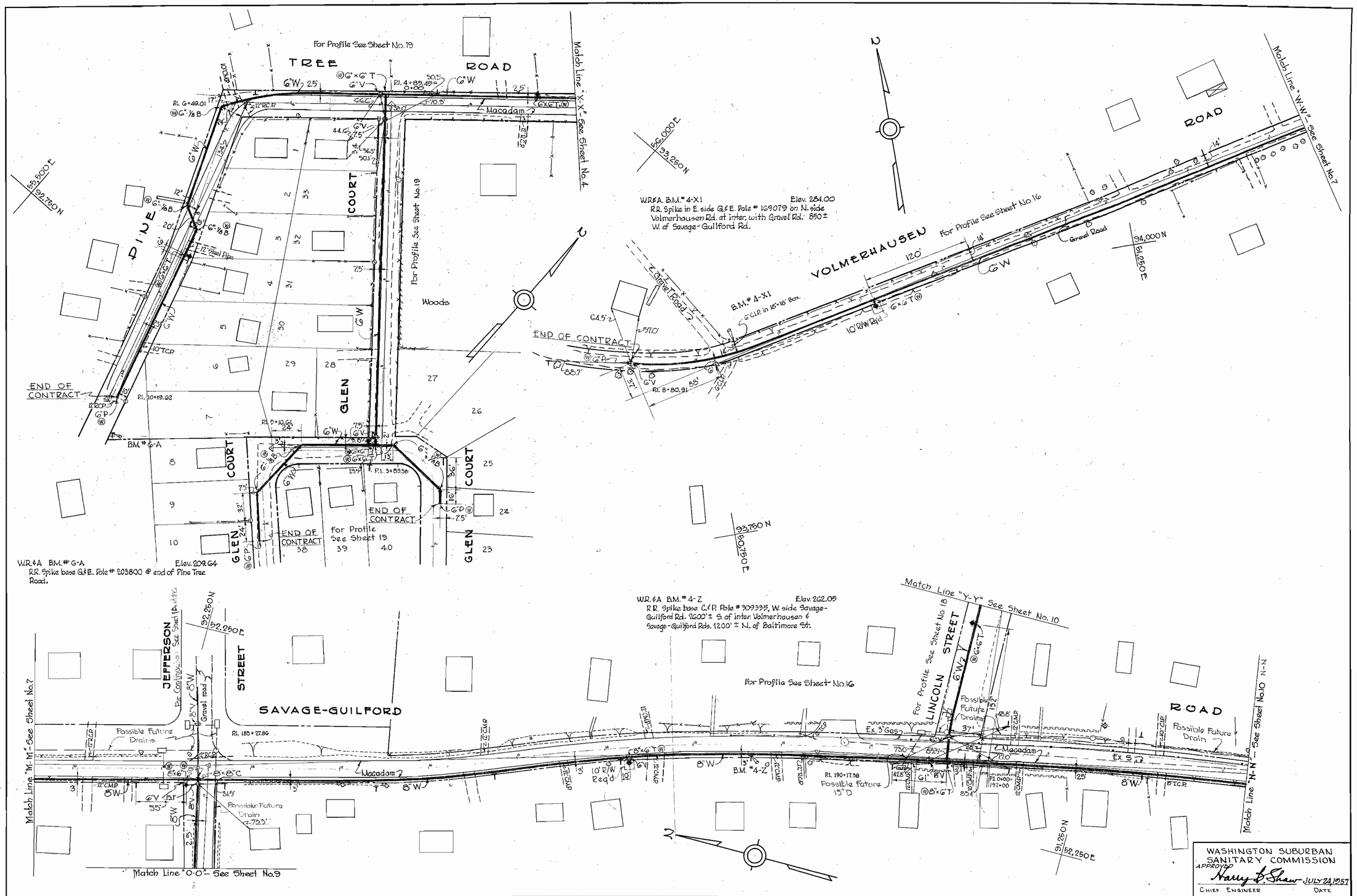

WHITMAN, REQUARDT & ASSOCIATES ENGINEERS 1304 ST. PAUL ST. BALTIMORE, MARYLAND	HOWARD COUNTY METROPOLITAN COMMISSION July 26, 1957 DATE — Carl W. Mueger CHAIRMAN	CONTRACT NO. 3W	PLAN OF WATER MAIN EXTENSIONS	PATUXENT SUB-DISTRICT NO. 2	DRAWING NO. 8 OF 20	SCALE 1"=50"	571041 Y

4521

AS BUILT

WS 3W/8

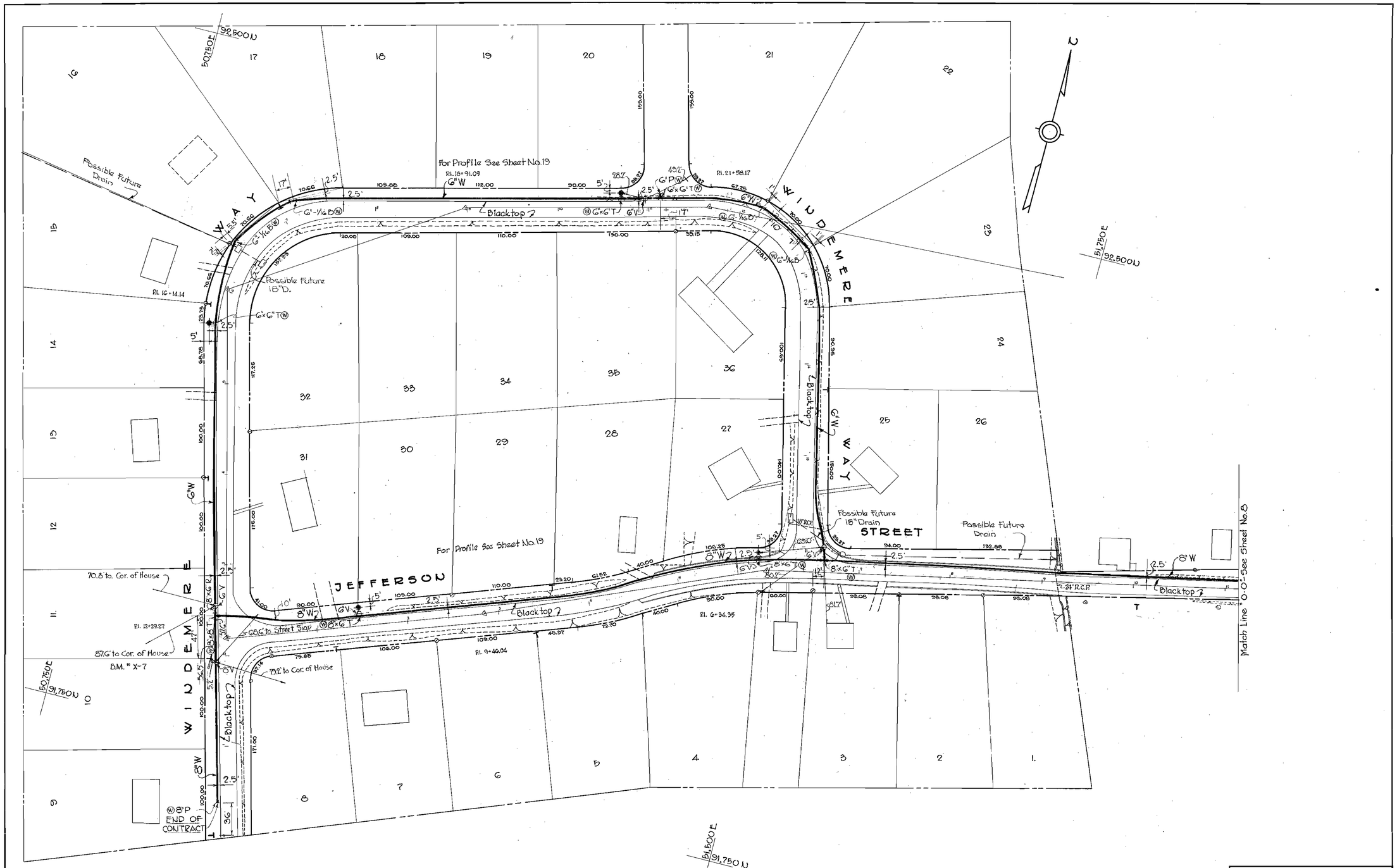

W.R.&A. B.M. # X-7 Elev. 282.772
Square-headed bolt 12" above ground in G.&E. Pole # 241G29 at inter. of Windemere Way & Jefferson St. + at southwestern most cor. of Windemere Acres.

WASHINGTON SUBURBAN SANITARY COMMISSION
APPROVED Harry B. Shaw JULY 24, 1957
CHIEF ENGINEER DATE

WHITMAN, REQUARDT & ASSOCIATES ENGINEERS 1304 ST. PAUL ST. BALTIMORE, MARYLAND	HOWARD COUNTY METROPOLITAN COMMISSION July 26, 1957 DATE — Carl W. Mayer CHAIRMAN	CONTRACT NO. 3W	PLAN OF WATER MAIN EXTENSIONS	PATUXENT SUB-DISTRICT NO. 2	DRAWING NO. 9 OF 20	SCALE 1"=50"

57/042 Y
47 NE 10-3 | 46 NE 17-2
47 NE 11-4 | 46 NE 18-1
F.B. 1919

4521

WS 3W/9

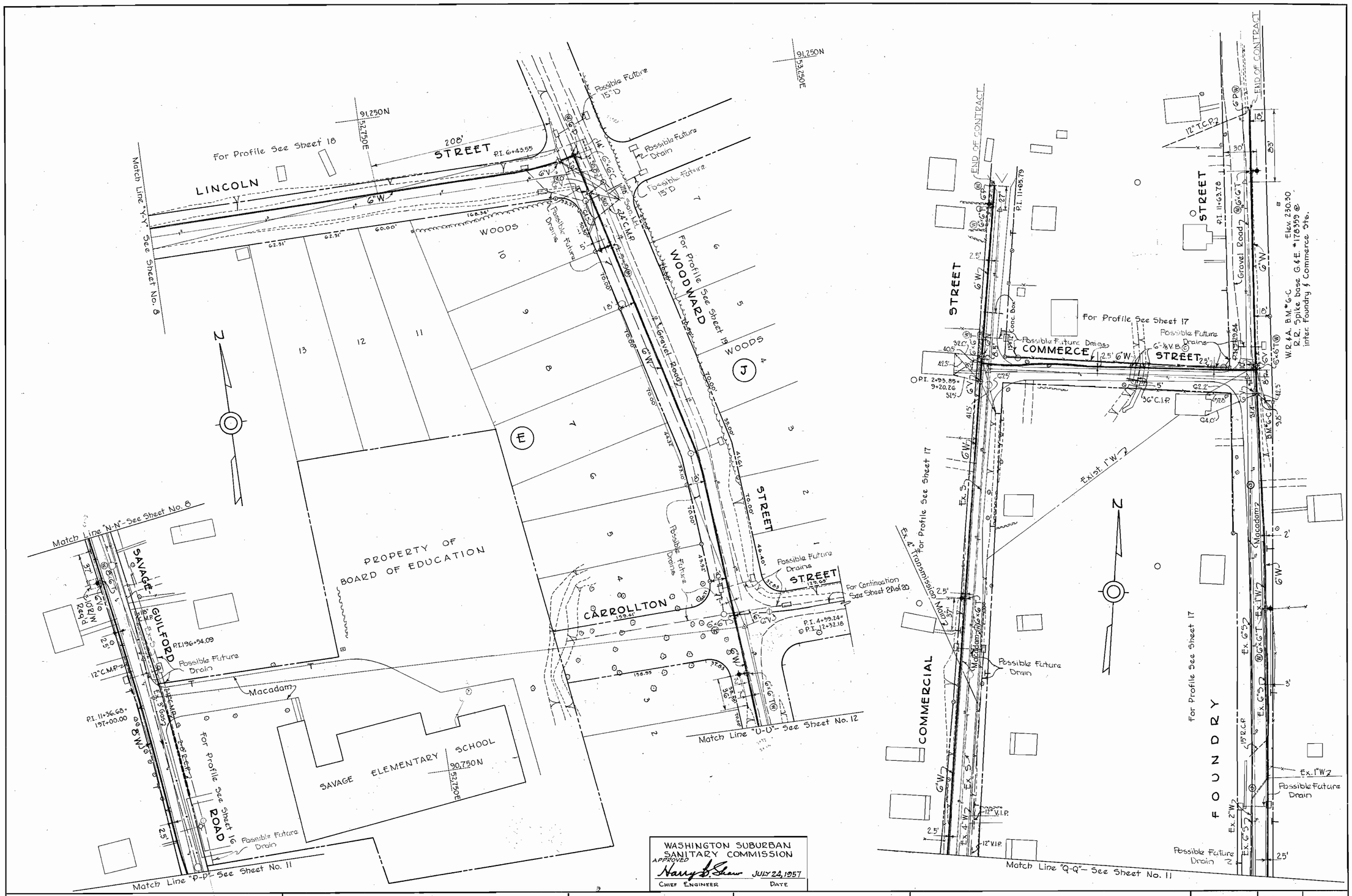

WASHINGTON SUBURBAN SANITARY COMMISSION
APPROVED
Harry B. Shaw JULY 24, 1957
CHIEF ENGINEER DATE

WHITMAN, REQUARDT & ASSOCIATES ENGINEERS 1304 ST. PAUL ST. BALTIMORE, MARYLAND	HOWARD COUNTY METROPOLITAN COMMISSION July 26, 1957 DATE Carl W. Meyer CHAIRMAN	CONTRACT NO. 3W	PLAN OF WATER MAIN EXTENSIONS	PATUXENT SUB-DISTRICT NO. 2	DRAWING NO. 10 OF 20	SCALE 1"=50'	571043 Y 46 NE 18-1,2,3,4 F.B. 1881, 1890

4521

WS 3W/10

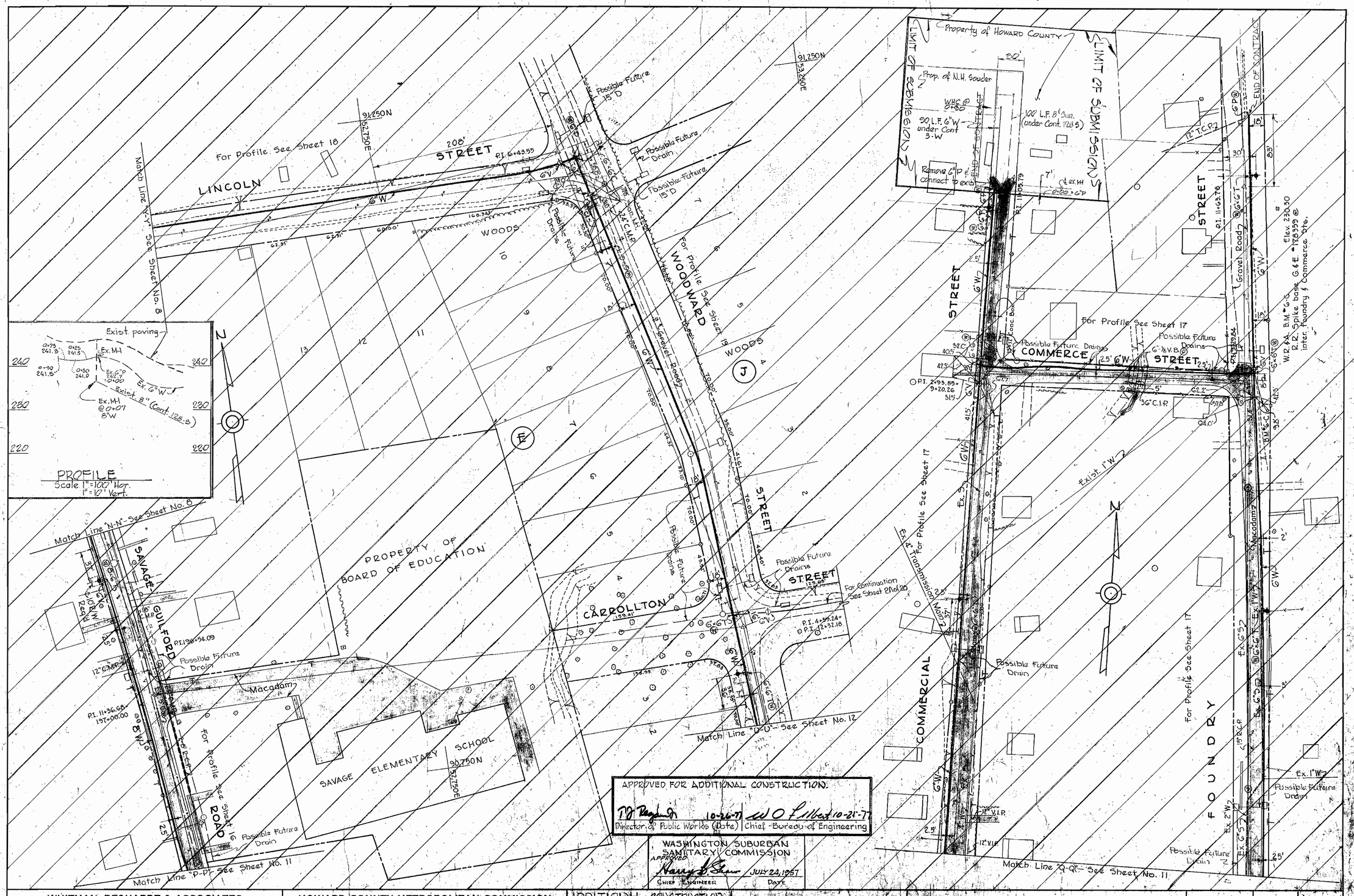

WHITMAN, REQUARDT & ASSOCIATES ENGINEERS 1304 ST. PAUL ST. BALTIMORE, MARYLAND	HOWARD COUNTY METROPOLITAN COMMISSION July 26, 1957 DATE Carl W. Meyer CHAIRMAN	ADDITIONAL CONSTRUCTION CONTRACT NO. 3W	PLAN OF WATER MAIN EXTENSIONS	PATUXENT SUB-DISTRICT NO. 2	DRAWING NO. 10-A OF 20	SCALE 1"=50' 571045

4521

AS BUILT

WS 3W/10-A

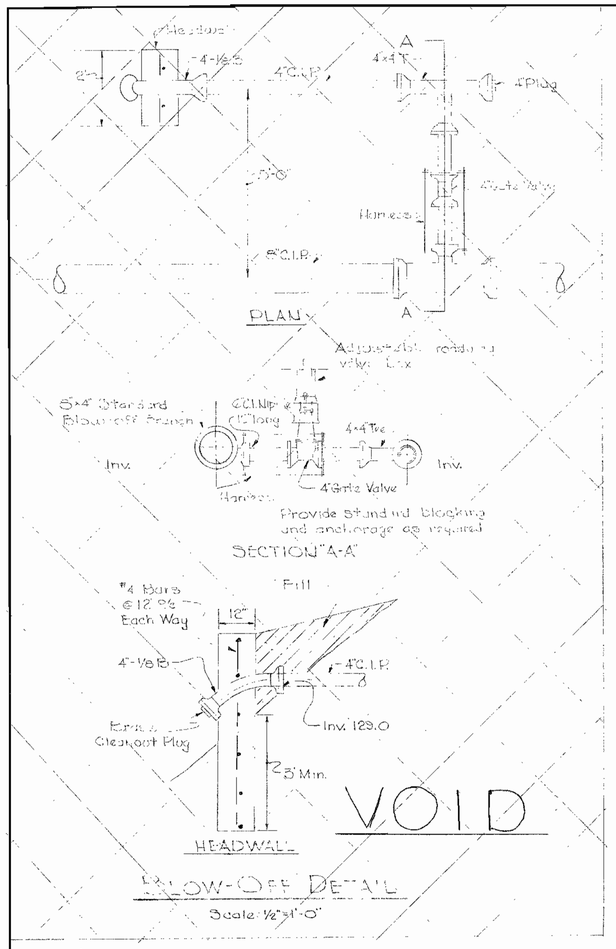

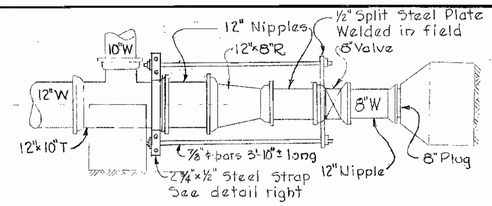

N.E. SIDE OF U.S. ROUTE 1 @ GORMAN ROAD

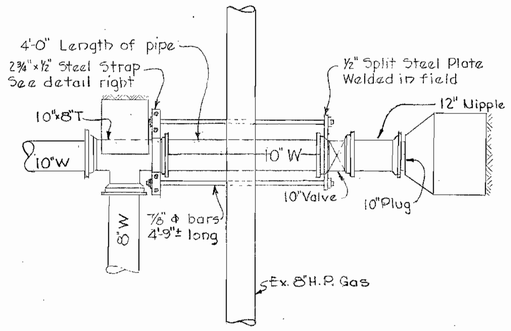

N.W. SIDE OF U.S. ROUTE 1 @ GORMAN ROAD

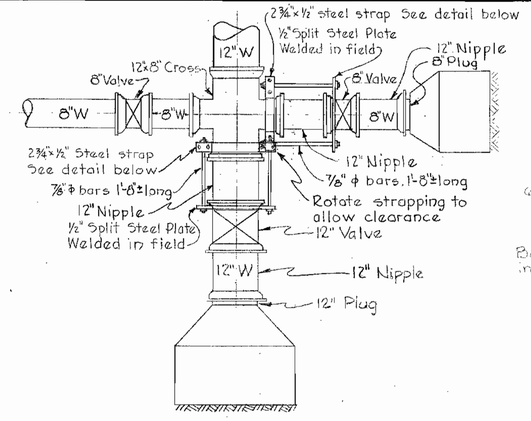

U.S. ROUTE #1 @ STATE ROUTE #32

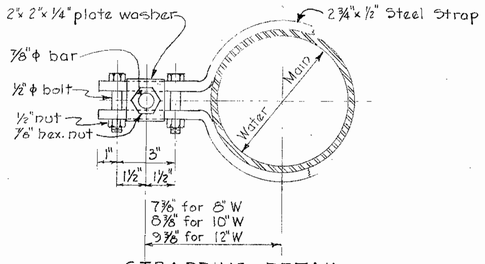

STRAPPING DETAIL
Scale 3"=1'-0"

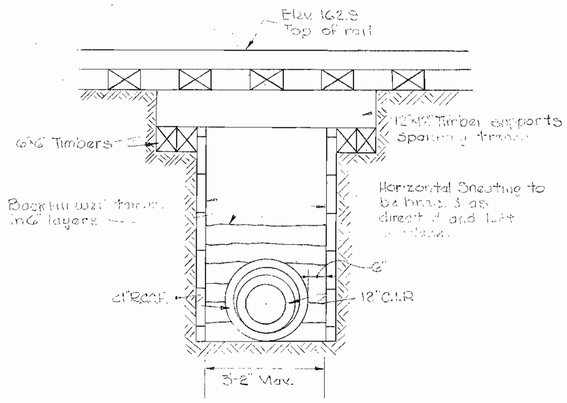

DETAIL OF TRACK CROSSING
Scale: 1/2"=1'-0"

HARNESS DETAILS
Scale 1/2"=1'-0"

Note:
Paint all exposed steel with 2 coats Valdura asphalt paint or approved equal. Carry all bearing surfaces to firm ground.

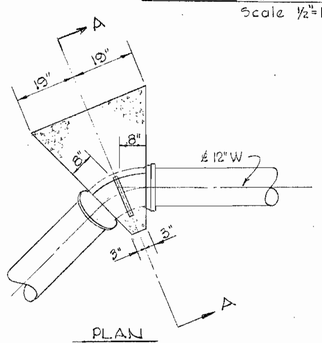

PLAN

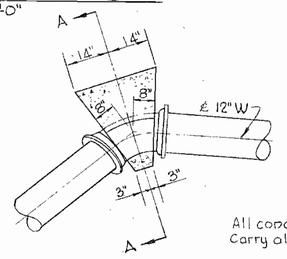

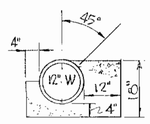

SECTION "A-A"

All concrete to be Class "B"
Carry all bearing surfaces to solid ground

DETAIL FOR BLOCKING 12"-1/8 H.&V.
LOWER BENDS @ STATIONS 25+00 & 25+26

STATE ROUTE 32
Scale 1/2"= 1'-0"

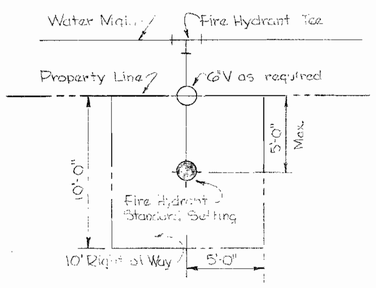

FIRE HYDRANT SETTING IN PRIVATE PROPERTY
No Scale

Note:
Concrete to be Class "B"

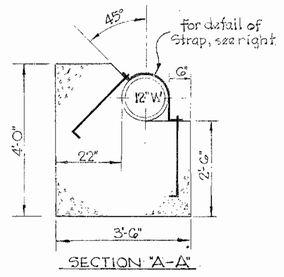

SECTION "A-A"

DETAIL FOR BLOCKING 12"-1/8 H.&V.
UPPER BENDS @ STATIONS - 24+82 & 25+37

STATE ROUTE 32
Scale 1/2"= 1'-0"

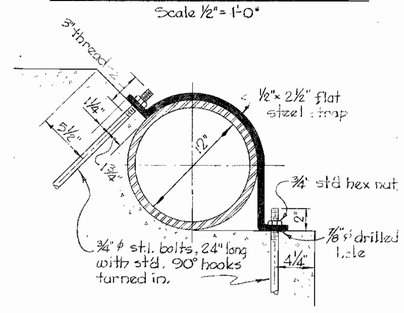

STRAPPING DETAIL
Scale: 1 1/2"=1'-0"

WASHINGTON SUBURBAN SANITARY COMMISSION
APPROVED
Harry R. Shaw JULY 24, 1957
CHIEF ENGINEER DATE

WHITMAN, REQUARDT & ASSOCIATES ENGINEERS 1304 ST. PAUL ST. BALTIMORE, MARYLAND	HOWARD COUNTY METROPOLITAN COMMISSION July 26, 1957 DATE — Carl O. Kreiger CHAIRMAN	CONTRACT NO. 3W	DETAILS	PATUXENT SUB-DISTRICT NO. 2	DRAWING NO. 20 OF 20	SCALE AS SHOWN	57/053 Y

4521

K. ELLIOTT CO. #70132 11-56 100

WS 3-W/20

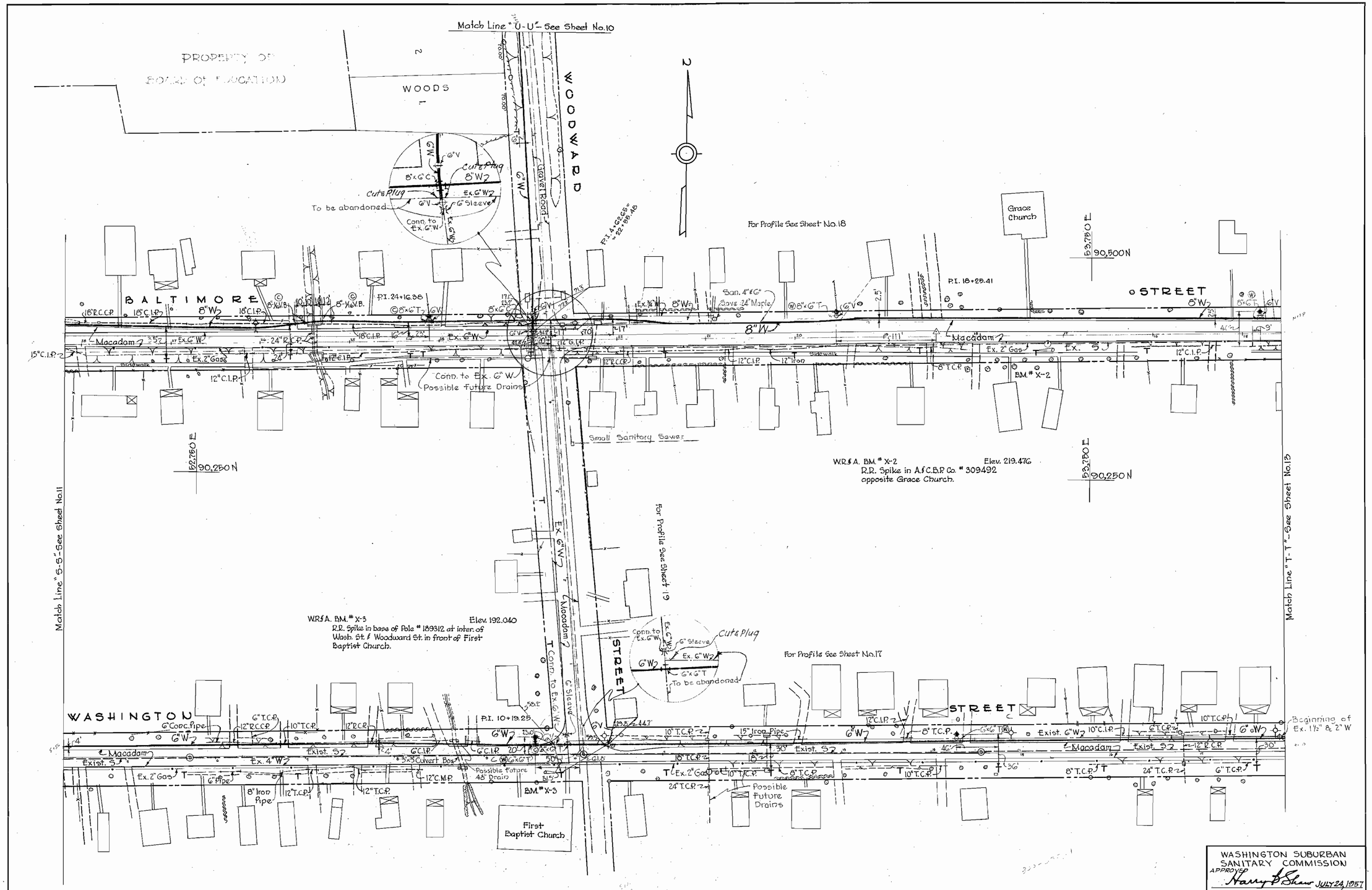

WASHINGTON SUBURBAN SANITARY COMMISSION
APPROVED Harry B. Shaw JULY 24, 1957
CHIEF ENGINEER DATE

WHITMAN, REQUARDT & ASSOCIATES ENGINEERS 1304 ST. PAUL ST. BALTIMORE, MARYLAND	HOWARD COUNTY METROPOLITAN COMMISSION July 26, 1957 DATE Carl W. Meyer CHAIRMAN	CONTRACT NO. 3W	PLAN OF WATER MAIN EXTENSIONS	PATUXENT SUB-DISTRICT NO. 2	DRAWING NO. 12 OF 20	SCALE 1"=50"

571045
Y
46 NE 18-4
49 NE 18-2
E.B. 1901, 1929, 1899

4521

WS 3W/12

WHITMAN, REQUARDT & ASSOCIATES ENGINEERS 1304 ST. PAUL ST. BALTIMORE, MARYLAND	HOWARD COUNTY METROPOLITAN COMMISSION July 26, 1957 (DATE) Carl W. Meyer (CHAIRMAN)	CONTRACT NO. 3W	PLAN OF WATER MAIN EXTENSIONS	PATUXENT SUB-DISTRICT NO. 2	DRAWING NO. 13 OF 20	SCALE 1"=50"

WASHINGTON SUBURBAN SANITARY COMMISSION
APPROVED Harry B. Shaw (CHIEF ENGINEER) July 24, 1957 (DATE)

57104G
Y
40 NE. 19-1
40 NE. 19-3
F.B. 1929, 1901

4521

WS 3W/13

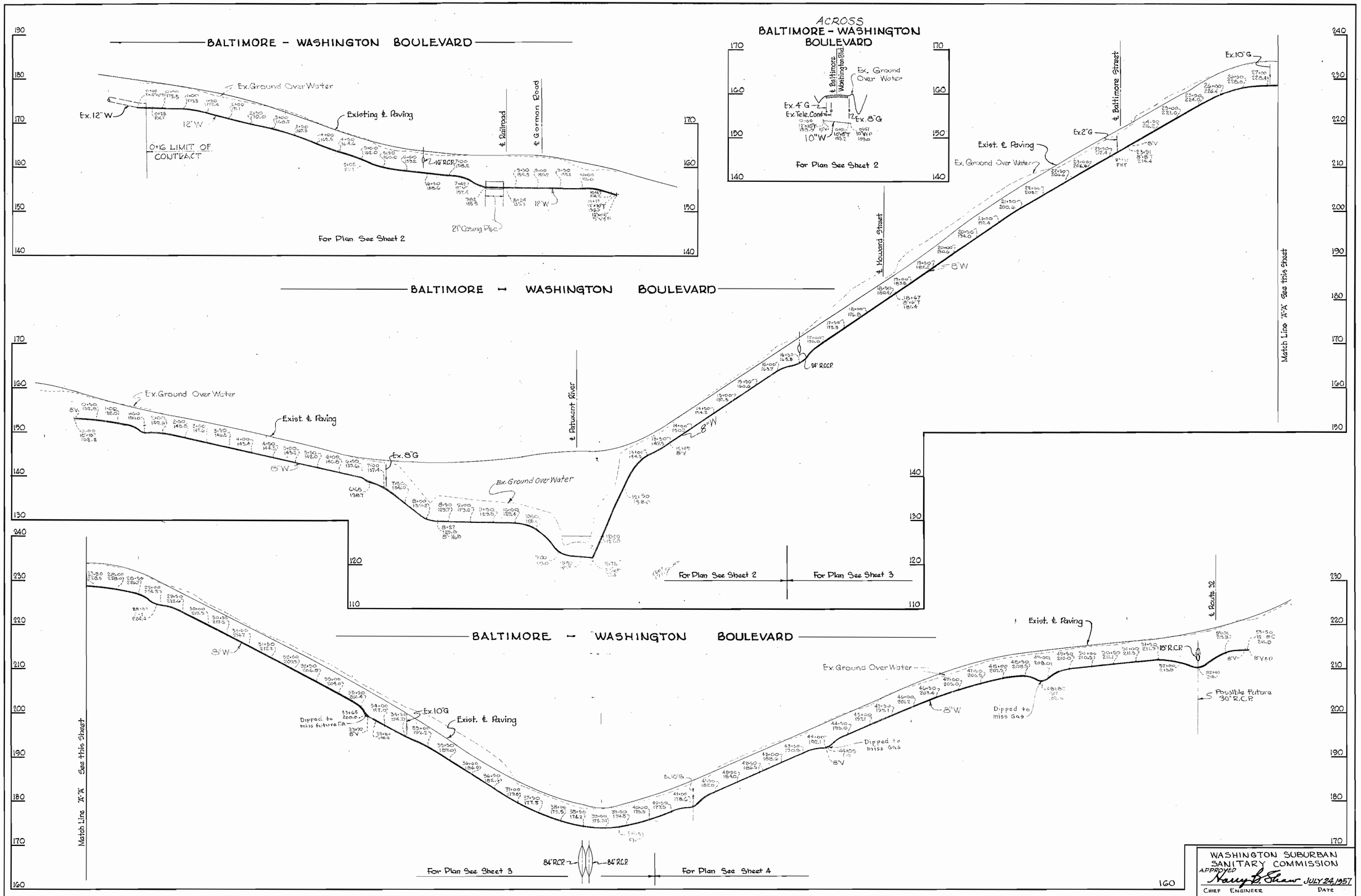

WASHINGTON SUBURBAN SANITARY COMMISSION
APPROVED Nancy B. Shaw JULY 24, 1957
CHIEF ENGINEER DATE

WHITMAN, REQUARDT & ASSOCIATES ENGINEERS 1304 ST. PAUL ST. BALTIMORE, MARYLAND	HOWARD COUNTY METROPOLITAN COMMISSION July 26, 1957 DATE — Carl W. Mezger CHAIRMAN	CONTRACT NO. 3 W	PROFILES OF WATER MAIN EXTENSIONS	PATUXENT SUB-DISTRICT NO. 2	DRAWING NO. 14 OF 20	SCALE H-1"=100' V-1"=10' 57/047 Y

4521

AS BUILT

WS 3W/14

K. ELLIOTT CO. #70132 11-56 100

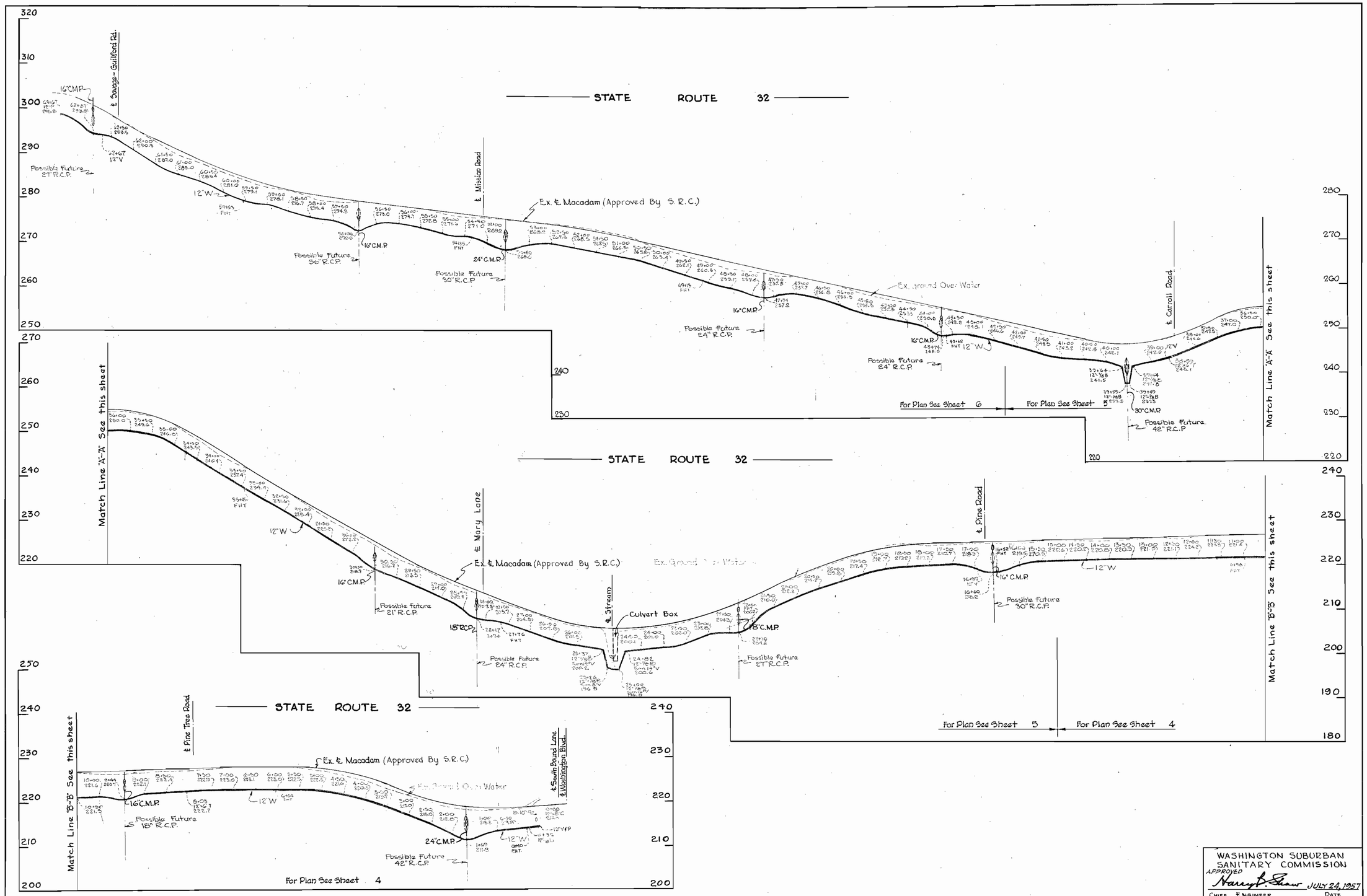

WASHINGTON SUBURBAN SANITARY COMMISSION
APPROVED
Harry B. Shaw JULY 24, 1957
CHIEF ENGINEER DATE

WHITMAN, REQUARDT & ASSOCIATES ENGINEERS 1304 ST. PAUL ST. BALTIMORE, MARYLAND	HOWARD COUNTY METROPOLITAN COMMISSION July 26, 1957 DATE — Carl W. Meyer CHAIRMAN	CONTRACT NO. 3 W	PROFILES OF WATER MAIN EXTENSIONS	PATUXENT SUB-DISTRICT NO. 2	DRAWING NO. 15 OF 20	SCALE H-1"=100' V-1"=10'

571048 Y

4521

WS 3W/15

WASHINGTON SUBURBAN SANITARY COMMISSION
APPROVED Harry B. Shaw JULY 24, 1957
CHIEF ENGINEER DATE

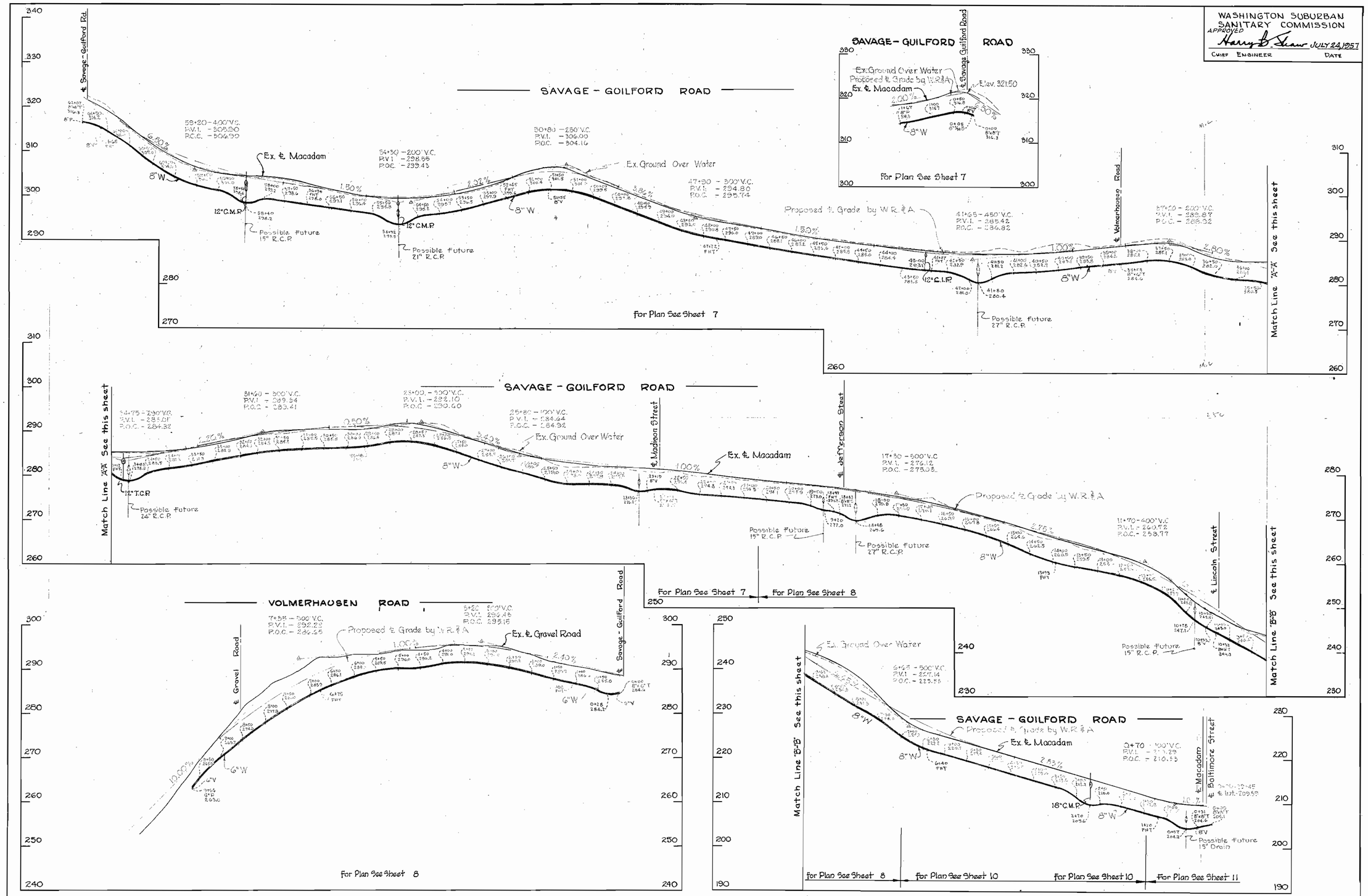

WHITMAN, REQUARDT & ASSOCIATES ENGINEERS 1304 ST. PAUL ST. BALTIMORE, MARYLAND	HOWARD COUNTY METROPOLITAN COMMISSION July 26, 1957 DATE — Carl W. Mayer CHAIRMAN	CONTRACT NO. 3 W	PROFILES OF WATER MAIN EXTENSIONS	PATUXENT SUB-DISTRICT NO. 2	DRAWING NO. 16 OF 20	SCALE H-1"=100' V-1"=10'

571049 Y

4521

WS 3W/16

K. ELLIOTT CO. #70132 11-56 100

Signature block upper right

WASHINGTON SUBURBAN SANITARY COMMISSION
APPROVED Harry B. Shaw JULY 24, 1957
CHIEF ENGINEER DATE

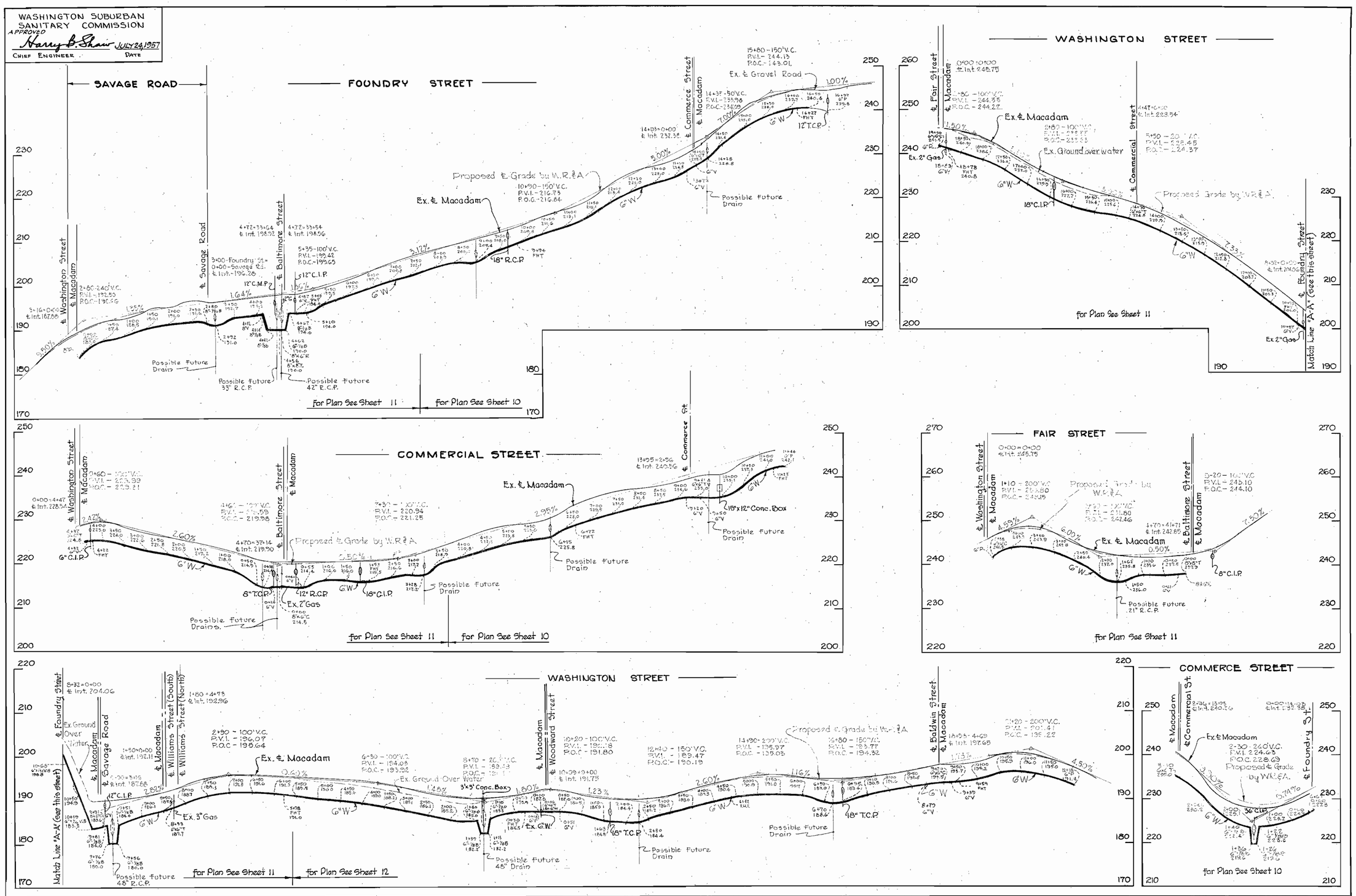

WHITMAN, REQUARDT & ASSOCIATES ENGINEERS 1304 ST. PAUL ST. BALTIMORE, MARYLAND	HOWARD COUNTY METROPOLITAN COMMISSION July 26, 1957 DATE — Carl W. Meyer CHAIRMAN	CONTRACT NO. 3 W	PROFILES OF WATER MAIN EXTENSIONS	PATUXENT SUB-DISTRICT NO. 2	DRAWING NO. 17 OF 20	SCALE H-1"=100' V-1"=10'	571050 Y

4521

K. ELLIOTT CO. #70132 11-56 100

WS 3W/17

AS BUILT

Signature block upper left

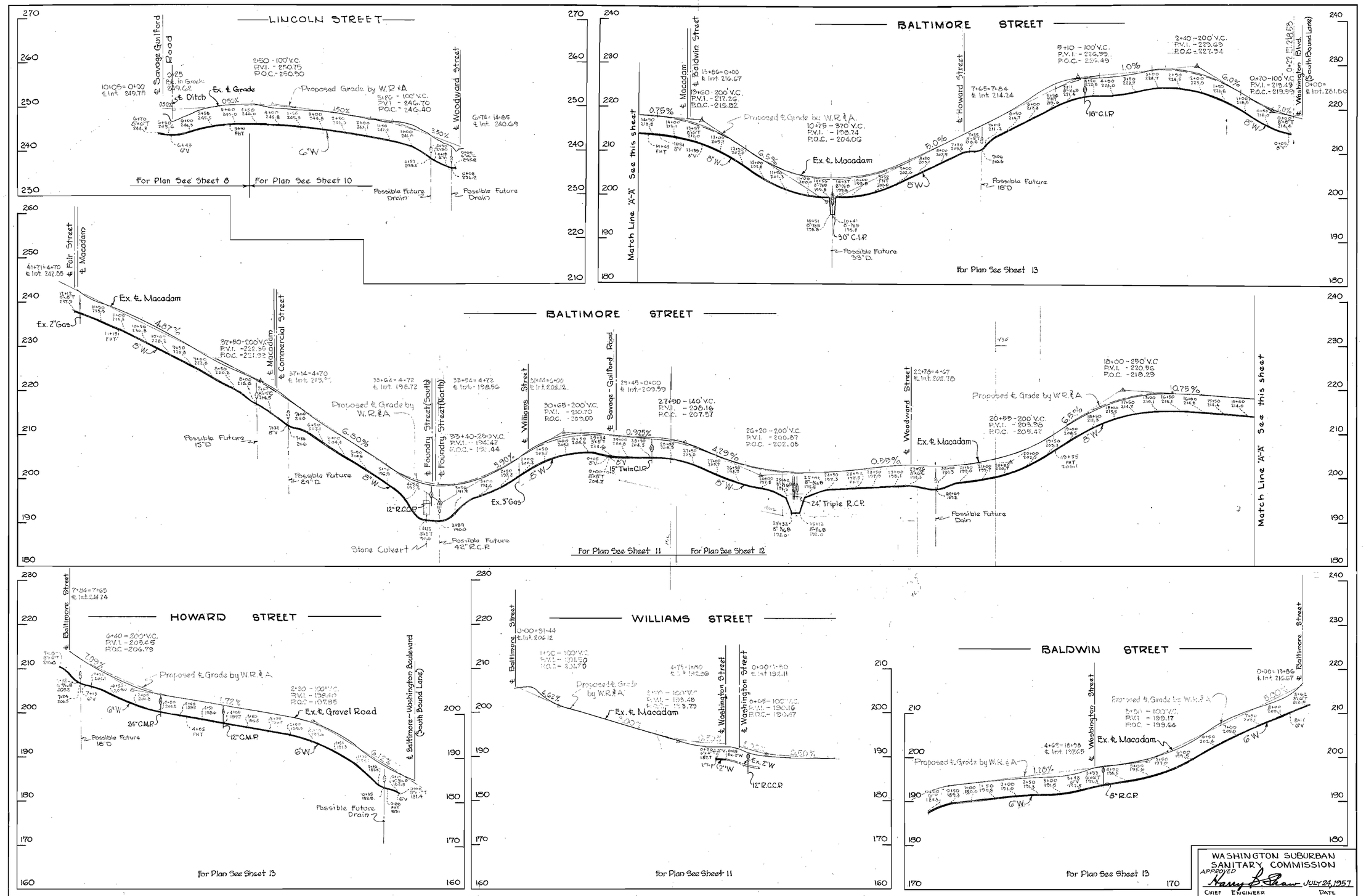

WHITMAN, REQUARDT & ASSOCIATES ENGINEERS 1304 ST. PAUL ST. BALTIMORE, MARYLAND	HOWARD COUNTY METROPOLITAN COMMISSION July 26, 1957 DATE — Paul W. Yeager CHAIRMAN	CONTRACT NO. 3 W	PROFILES OF WATER MAIN EXTENSIONS	PATUXENT SUB-DISTRICT NO. 2	DRAWING NO. 18 OF 20	SCALE H-1"=100' V-1"=10'

WASHINGTON SUBURBAN SANITARY COMMISSION
APPROVED Harry B. Shaw JULY 24, 1957
CHIEF ENGINEER DATE

571051
Y

4521

WS 3-W/18

K. ELLIOTT CO. #70132 11-56 100

WS 3-W/19

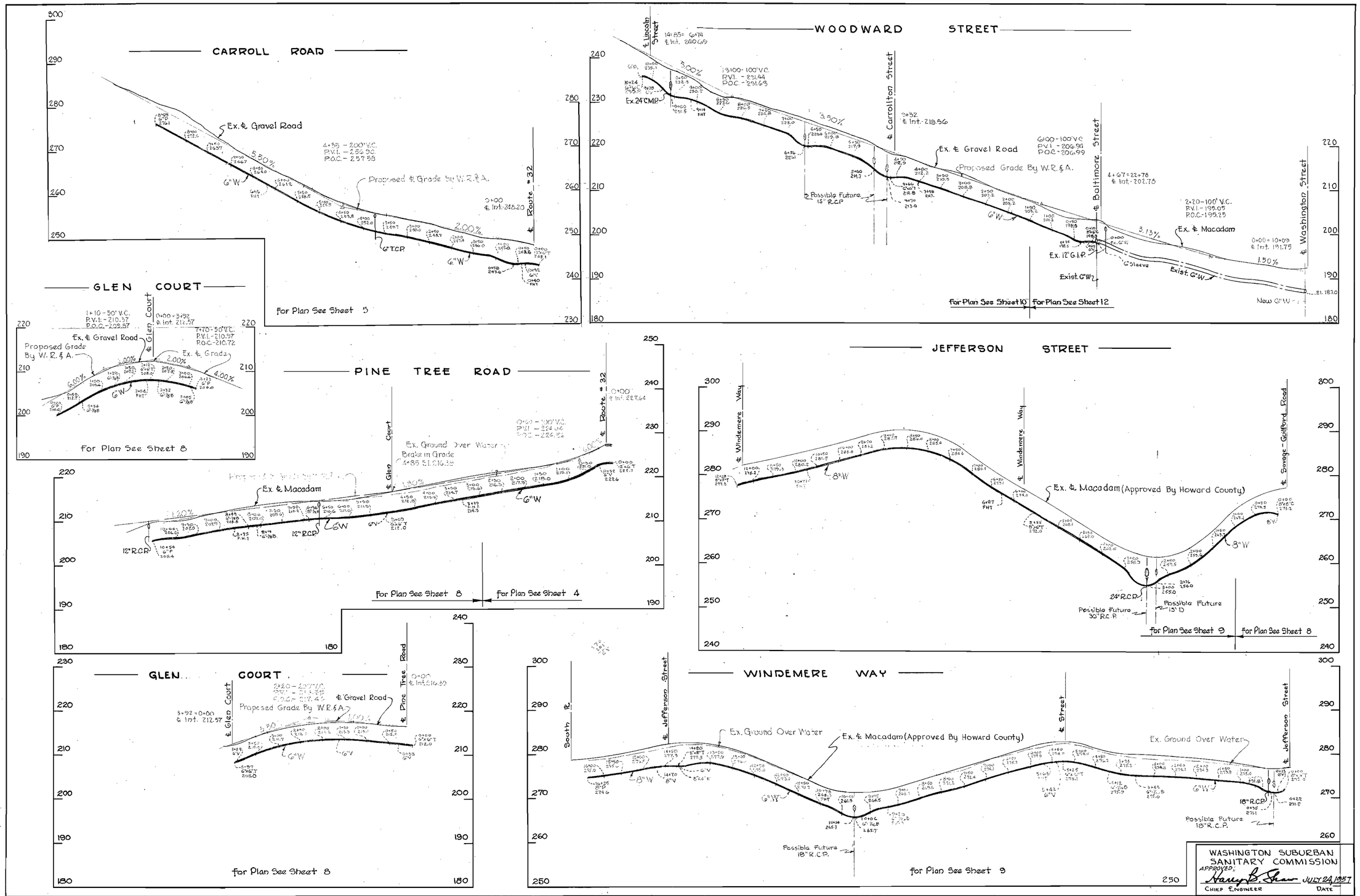

WASHINGTON SUBURBAN SANITARY COMMISSION
APPROVED: Harry B. Shaw JULY 24, 1957
CHIEF ENGINEER DATE

WHITMAN, REQUARDT & ASSOCIATES ENGINEERS 1304 ST. PAUL ST. BALTIMORE, MARYLAND	HOWARD COUNTY METROPOLITAN COMMISSION July 26, 1957 DATE — Paul W. Meyer CHAIRMAN	CONTRACT NO. 3 W	PROFILES OF WATER MAIN EXTENSIONS	PATUXENT SUB-DISTRICT NO. 2	DRAWING NO. 19 OF 20	SCALE H-1"=100' V-1"=10'

571052

4521

AS BUILT

B. K. ELLIOTT CO.

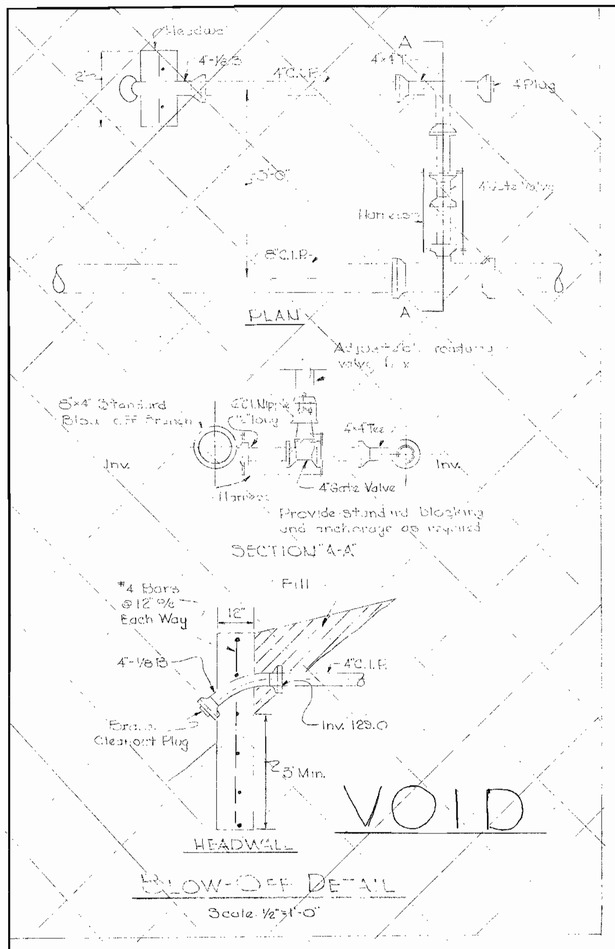

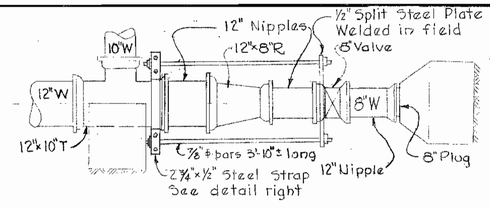

N.E. SIDE OF U.S. ROUTE 1 @ GORMAN ROAD

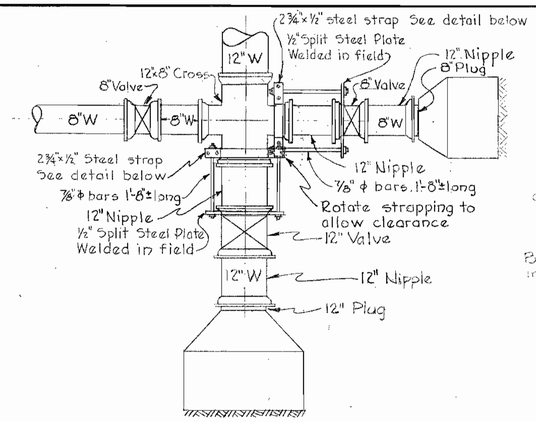

U.S. ROUTE #1 @ STATE ROUTE #32

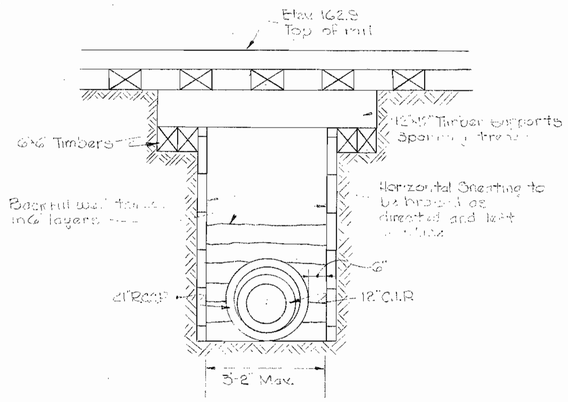

DETAIL OF TRACK CROSSING

Scale: 1/2"=1'-0"

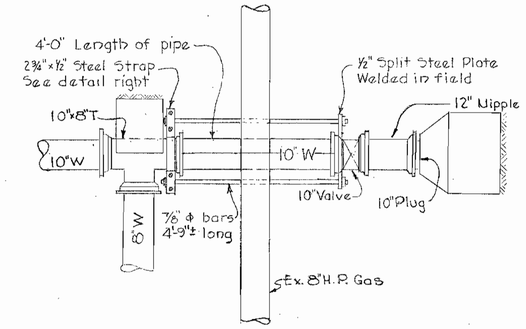

N.W. SIDE OF U.S. ROUTE 1 @ GORMAN ROAD

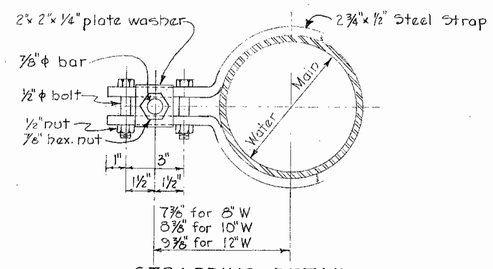

STRAPPING DETAIL

Scale 3"=1'-0"

HARNESS DETAILS

Scale 1/2"=1'-0"

Note:
Paint all exposed steel with 2 coats Valdura asphalt paint or approved equal. Carry all bearing surfaces to firm ground.

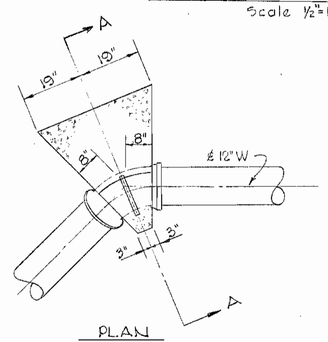

PLAN

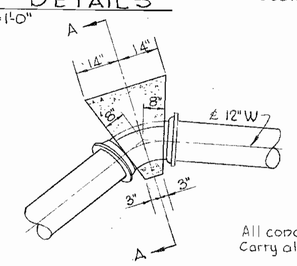

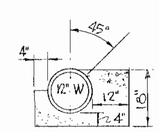

SECTION "A-A"

All concrete to be Class "B"
Carry all bearing surfaces to solid ground

DETAIL FOR BLOCKING 12"-1/8 H&V.
LOWER BENDS @ STATIONS 25+00 & 25+26

STATE ROUTE 32

Scale 1/2"=1'-0"

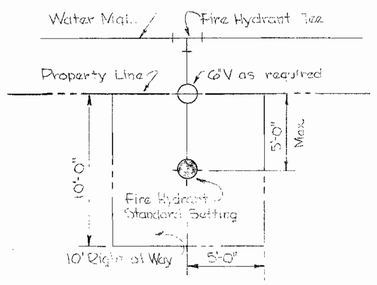

FIRE HYDRANT SETTING IN PRIVATE PROPERTY

No Scale

Note:
Concrete to be Class "B"

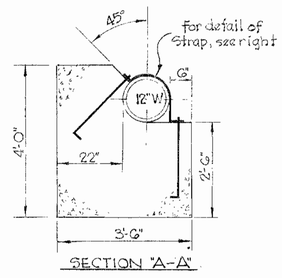

SECTION "A-A"

DETAIL FOR BLOCKING 12"-1/8 H&V
UPPER BENDS @ STATIONS - 24+82 & 25+37

STATE ROUTE 32

Scale 1/2"=1'-0"

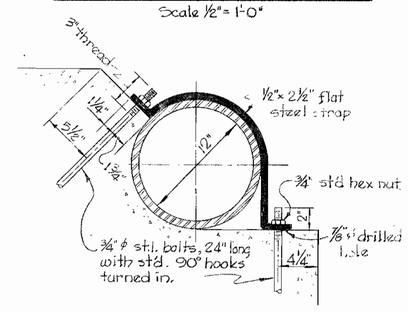

STRAPPING DETAIL

Scale: 1 1/2"=1'-0"

WASHINGTON SUBURBAN SANITARY COMMISSION
APPROVED Harry R. Shaw JULY 24, 1957
CHIEF ENGINEER DATE

WHITMAN, REQUARDT & ASSOCIATES ENGINEERS 1304 ST. PAUL ST. BALTIMORE, MARYLAND	HOWARD COUNTY METROPOLITAN COMMISSION July 26, 1957 DATE — Carl W. Mayer CHAIRMAN	CONTRACT NO. 3W	DETAILS	PATUXENT SUB-DISTRICT NO. 2	DRAWING NO. 20 OF 20	SCALE AS SHOWN	57/053 Y

4521

WS 3-W/20