General Notes

1. THE CONTRACTOR SHALL NOTIFY THE HOWARD COUNTY DEPARTMENT OF PUBLIC WORKS CONSTRUCTION INSPECTION DIVISION AT 410-313-1880 AT LEAST 24 HOURS PRIOR TO STARTING ANY OF THE WORK SHOWN HEREON.
2. ALL PLAN DIMENSIONS ARE GIVEN TO FACE OF CURB UNLESS OTHERWISE NOTED. SEE ARCHITECTURAL DRAWINGS FOR EXACT BUILDING DIMENSIONS.
3. THE CONTRACTOR SHALL NOTE THAT IN CASE OF DISCREPANCY BETWEEN ANY SCALED DIMENSIONS AND THE FIGURED DIMENSIONS SHOWN ON THESE PLANS, THE FIGURED DIMENSIONS SHALL GOVERN.
4. CONTRACTOR SHALL MEET ALL EXISTING IMPROVEMENTS SMOOTHLY FOR LINE, GRADE AND FINISH.
5. ALL WORK SHOWN ON THESE PLANS SHALL BE COMPLETED IN ACCORDANCE WITH THE LATEST STANDARDS AND SPECIFICATIONS OF THE HOWARD COUNTY DEPARTMENT OF PUBLIC WORKS AND OF THE MARYLAND STATE HIGHWAY ADMINISTRATION AND THE HOWARD COUNTY PLUMBING CODE, UNLESS OTHERWISE NOTED.
6. IT SHALL BE DISTINCTLY UNDERSTOOD THAT FAILURE TO MENTION SPECIFICALLY ANY WORK WHICH WOULD NORMALLY BE REQUIRED TO COMPLETE THIS PROJECT SHALL NOT RELIEVE THE CONTRACTOR OF THE RESPONSIBILITY TO PERFORM SUCH WORK. THE COST OF SUCH WORK SHALL BE INCLUDED IN THE BASE BID.
7. THE CONTRACTOR SHALL INSPECT THE SITE TO DETERMINE IF ANY TREES, PAVING, ETC. ARE TO BE REMOVED PRIOR TO PLACING A BID ON SUCH ITEMS.
8. THE LOCATIONS OF EXISTING UTILITIES SHOWN HEREON ARE APPROXIMATE ONLY AND ARE PROVIDED FOR THE CONVENIENCE OF THE CONTRACTOR ONLY. THE LOCATIONS ARE TAKEN FROM EXISTING RECORDS AND DO NOT REPRESENT FIELD-VERIFIED LOCATIONS. THE CONTRACTOR SHALL NOTIFY MISS UTILITY AT 1-800-257-7777 A MINIMUM OF 5 WORKING DAYS PRIOR TO DIGGING. THE CONTRACTOR SHALL CONFIRM TO HIS OWN SATISFACTION THE LOCATION OF ALL UTILITIES PRIOR TO ANY EXCAVATION OR PLACEMENT OF MATERIALS. IF ANY CONFLICT IS FOUND BETWEEN UNDERGROUND UTILITIES AND THE PROPOSED LOCATION OF ANY CONSTRUCTION, THE CONTRACTOR SHALL CONTACT G. W. STEPHENS AND THE OWNER OF THE UTILITY IMMEDIATELY. ANY DAMAGE OR DISRUPTION OF SERVICE SHALL BE AT THE EXPENSE OF THE CONTRACTOR. RELOCATION OF ANY EXISTING UTILITIES, IF NECESSARY, SHALL BE AT THE EXPENSE OF THE OWNER. THE CONTRACTOR SHALL COORDINATE RELOCATION OF THESE FACILITIES, IF NECESSARY.
9. CONTRACTOR SHALL PROTECT ALL EXISTING TREES OUTSIDE THE LIMIT OF DISTURBANCE AT ALL TIMES DURING CONSTRUCTION.
10. CONTRACTOR SHALL PROTECT ALL EXISTING IMPROVEMENTS NOT SCHEDULED FOR REMOVAL OR DEMOLITION. COST OF REPAIR TO EXISTING IMPROVEMENTS SHALL BE INCLUDED IN THE BASE BID. ALL EXISTING SITE FEATURES NOT BEING RETAINED SHALL BE REMOVED AND DISPOSED OF AT AN APPROVED LOCATION. ANY DAMAGE TO OFFSITE ROADS, RIGHTS OF WAY, OR ADJACENT PROPERTY SHALL BE REPAIRED IMMEDIATELY AT THE EXPENSE OF THE CONTRACTOR.
11. THE CONTRACTOR SHALL CLEAR THE PROJECT SITE OF ALL TREES, PAVING, STRUCTURES, ETC. WITHIN THE CONSTRUCTION AREA UNLESS OTHERWISE NOTED ON THE PLAN.
12. ONLY SUITABLE MATERIAL SHALL BE USED AS FILL AND ALL FILL SHALL BE PLACED AND COMPACTED AS SPECIFIED IN THE SOILS REPORT PREPARED FOR THIS SITE OR AS RECOMMENDED BY THE GEOTECHNICAL ENGINEER. ALL 2:1 SLOPES SHOWN HEREON, EXCEPTING THOSE ASSOCIATED WITH LANDSCAPE BERMING, ALL GRADING UNDER PROPOSED PAVING, AND ALL FILL AND COMPACTION SHALL BE APPROVED BY A GEOTECHNICAL ENGINEER.
13. CONTRACTOR SHALL PROVIDE MINIMUM 4 FOOT BENCH AT EDGE OF PAVING IN FILL AREAS. MAXIMUM SLOPE OF BENCH SHALL BE 4% (1/4 IN PER FOOT).
14. MAXIMUM SLOPE SHALL BE 2 HORIZONTALLY TO 1 VERTICALLY.
15. CONTRACTOR SHALL PLACE A WITNESS POST AT THE TERMINUS OF ALL UTILITY STUBS.
16. ALL UTILITIES INSTALLED SHALL RECEIVE FULL TRENCH COMPACTION.
17. CONTRACTOR SHALL PROVIDE A MINIMUM OF 1 FOOT OF PROTECTIVE FILL OVER STORM DRAIN PIPES DURING CONSTRUCTION.
18. CONTRACTOR SHALL PROVIDE ALL PAVEMENT MARKINGS AND SIGNAGE FOR HANDICAP PARKING SPACES INDICATED HEREON IN ACCORDANCE WITH ALL APPLICABLE CODES. ALL PAVEMENT MARKINGS TO BE TRAFFIC WHITE.
19. ALL HANDICAPPED FACILITIES TO BE CONSTRUCTED IN ACCORDANCE WITH THE "DESIGN OF BARRIER FREE FACILITIES" AND THE MARYLAND BUILDING CODE FOR THE HANDICAPPED AND AGED, LATEST EDITION.
20. ALL TRAFFIC CONTROL DEVICES, MARKINGS, AND SIGNAGE SHALL BE IN ACCORDANCE WITH THE LATEST EDITION OF THE "MANUAL OF UNIFORM TRAFFIC CONTROL DEVICES." ALL STREET AND REGULATORY SIGNS SHALL BE INSTALLED PRIOR TO INSTALLATION OF FINISHED PAVING.
21. THE CONTRACTOR SHALL REPLACE ANY EXISTING BITUMINOUS PAVING OR SUB-BASE WHICH IS DAMAGED OR REMOVED DURING CONSTRUCTION. ALL EXCAVATED AREAS SHALL BE BACKFILLED AND IN ACCORDANCE WITH THE SOILS REPORT AND/OR AS DIRECTED BY GEOTECHNICAL ENGINEER. ANY AREAS TO BE PAVED WHICH EXHIBIT UNSTABLE SUBGRADE CONDITIONS SHALL BE EXCAVATED TO BEARING SOIL, REFILLED AND COMPACTED.
22. ALL AREAS NOT BEING PAVED OR RECEIVING BUILDING COVERAGE SHALL BE STABILIZED IN ACCORDANCE WITH THE PLANS APPROVED BY THE HOWARD SOIL CONSERVATION DISTRICT.
23. PREFORMED ELASTOMERIC COMPRESSION JOINT MATERIAL SHALL BE INSTALLED AT ALL MEETINGS OF EXISTING AND PROPOSED CONCRETE PAVING AND SIDEWALKS.
24. THE EXISTING TOPOGRAPHY IS TAKEN FROM A FIELD RUN SURVEY WITH TWO FOOT CONTOUR INTERVALS PREPARED BY G.W. STEPHENS and ASSOCIATES DATED AUGUST 1998.
25. THE COORDINATES SHOWN HEREON ARE BASED UPON THE HOWARD COUNTY GEODETIC CONTROL WHICH IS BASED UPON THE MARYLAND STATE PLANE COORDINATE SYSTEM. HOWARD COUNTY MONUMENTS NO. 48GB: N532530.284, E1370623.786, EL: 228.582 NO. 48G4: N531519.248, E1371653.762, EL: 206.756 WERE USED FOR
26. WATER IS PUBLIC. CONTRACT NO. 1S 44 - 3118.
27. SEWER IS PUBLIC. CONTRACT NO. 1S 24 - 3417 STORMWATER MANAGEMENT QUALITY IS PROVIDED BY A STORM-CEPTOR AND QUANTITY MANAGEMENT IS PROVIDED BY A DETENTION POND; BOTH FACILITIES ARE PRIVATE AND SHALL BE MAINTAINED BY THE OWNER.
28. THERE IS NO FLOODPLAIN ON THIS SITE.
29. FOR HANDICAPPED DETAILS SEE SHEET 2 OF 12.
30. STORMWATER MANAGEMENT POND IS AN EXTENDED DETENTION CLASS- 'A' PRIVATE POND.
31. A WAIVER REQUEST HAS BEEN APPROVED BY THE HOWARD CO. DEPT. OF PLANNING & ZONING FOR SECTION 5.2.6.D OF THE HO. CO. DESING MANUAL, VOLUME I THAT REQUIRES A MIN. 20 FEET DISTANCE FROM TOE OF THE EMBANKMENT OR CUT SLOPE TO THE PROPERTY LINES, RIGHT-OF-WAY AND STRUCTURE.
32. ALL LIGHTING SHALL BE IN ACCORDANCE WITH SECTION 134 OF THE HOWARD COUNTY ZONING REGULATIONS.
33. THE FOREST CONSERVATION OBLIGATIONS INCURRED BT THIS DEVELOPEMENT (4.3 ACRES OF REFORESTATION) HAVE BEEN MET BY PAYMENT OF $56,192.00 TO THE HOWARD COUNTY FOREST CONSERVATION FUND.

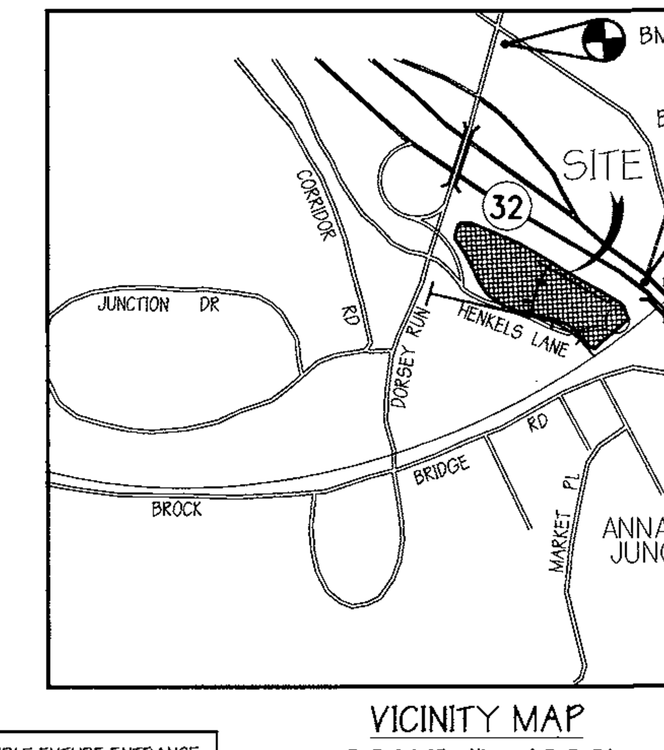

VICINITY MAP
SCALE: 1" = 1000'

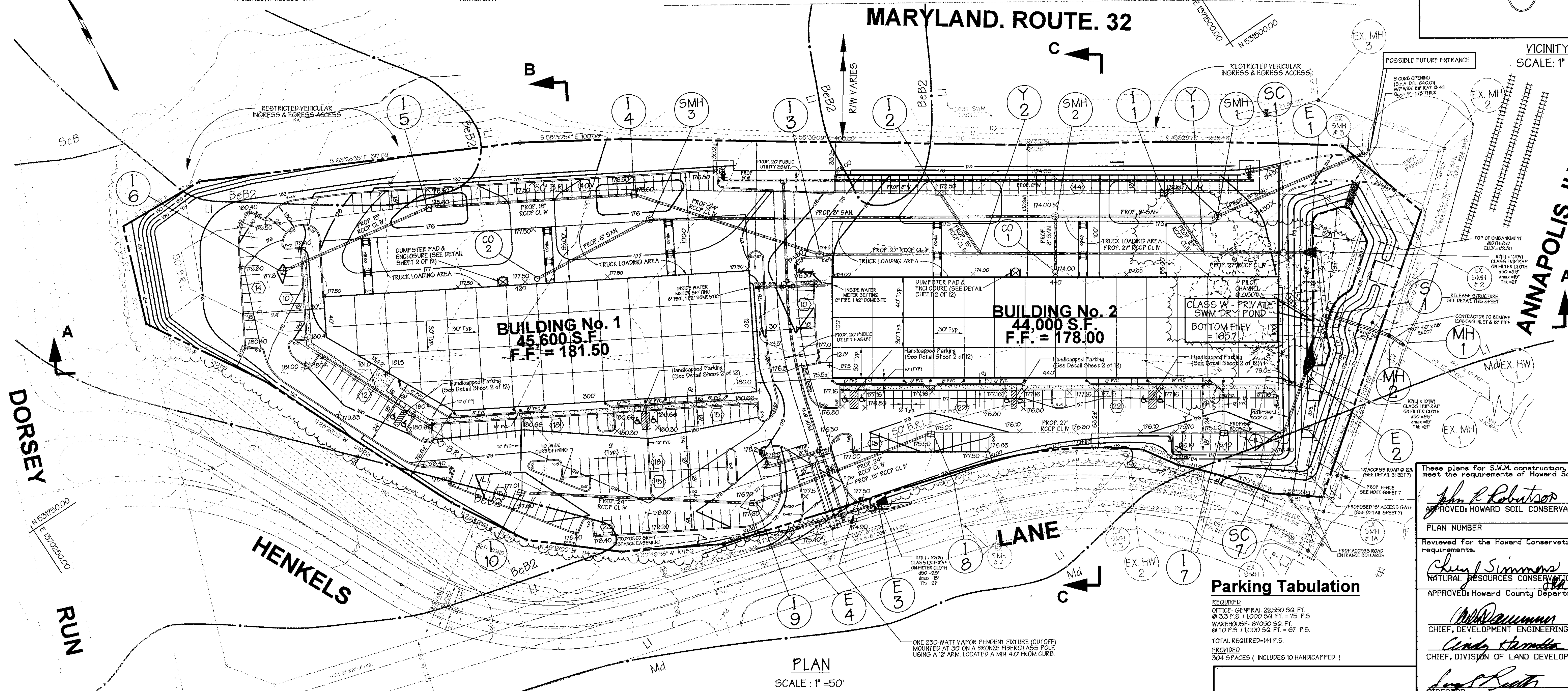

PLAN
SCALE : 1" =50'

Sheet Index

1 of 12	SITE PLAN
2 of 12	SITE DETAILS
3 of 12	STORM DRAIN PROFILES
4 of 12	STORM DRAIN DETAILS & DRAINAGE AREA MAPS
5 of 12	SEWER PROFILES
6 of 12	STORM WATER MANAGEMENT PLAN & DETAILS
7 of 12	STORM WATER MANAGEMENT NOTES & DETAILS
8 of 12	STORM WATER MANAGEMENT DRAINAGE AREA MAP
9 of 12	SEDIMENT CONTROL PLAN
10 of 12	SEDIMENT CONTROL NOTES & DETAILS
11 of 12	SEDIMENT CONTROL DRAINAGE AREA MAPS
12 of 12	LANDSCAPE PLAN

Parking Tabulation

REQUIRED
OFFICE- GENERAL 22,550 SQ. FT. @ 3.3 P.S. / 1,000 SQ. FT. = 75 P.S.
WAREHOUSE- 67050 SQ. FT. @ 1.0 P.S. / 1,000 SQ. FT. = 67 P.S.
TOTAL REQUIRED=141 P.S.
PROVIDED
304 SPACES (INCLUDES 10 HANDICAPPED)

These plans for S.W.M. construction, soil erosion and sediment control meet the requirements of Howard Soil Conservation District.

John R Robertson — APPROVED: HOWARD SOIL CONSERVATION DISTRICT — 6/7/99 DATE
PLAN NUMBER

Reviewed for the Howard Conservation District and meets technical requirements.

Cheryl Simmons — NATURAL RESOURCES CONSERVATION SERVICE — 6/7/99 DATE

APPROVED: Howard County Department of Planning and Zoning

CHIEF, DEVELOPMENT ENGINEERING DIVISION — 6/9/99 DATE
Cindy Hamilton — CHIEF, DIVISION OF LAND DEVELOPMENT TC — 6/9/99 DATE
DIRECTOR — 6/10/99 DATE

ADDRESS CHART

PARCEL NO.	STREET ADDRESS
BUILDING No. 1	8955 HENKELS LANE
BUILDING No. 2	8975 HENKELS LANE

SUBDIVISION NAME	SECTION NAME	PARCEL #
N/A	N/A	45

PLAT #	BLOCK #	ZONE	TAX /ZONE MAP	ELECT. DIST.	CENSUS TRACT
N / A	20	M-2	48	6	6069.01

WATER CODE B-02 — SEWER CODE 4020000

NOTE:
The owner shall provide a separate and independent sewer connection for each tenant or occupant of any building, shown on this site development plan who will discharge non-domestic waste to the public sewerage system If each separate and independent sewer connection shall include a standard manhole and other waste pretreatment devices as required and approved by Howard County. Waste lines on the interior of the building shall be designed, constructed or modified such that non-domestic waste will be discharged to the separate and independent sewer connection. No tenant or occupant of any building shown on this site development plan shall discharge regulated non-domestic waste to the public sewerage system prior to installation of the separate and independent sewer connection and related interior waste lines. The above statement shall apply to all initial and future occupants or tenants.

Legend

Property	— — —
Ex. 2' Contours	- - - 394 - - -
Ex. 10' Contours	— — 395 — —
Prop. 2' Contours	—— 394 ——
Prop. 10' Contours	—— 395 ——
Ex. Curb & Gutter	
Prop. Curb & Gutter	
Bldg. Restriction Line	
Ex. Sanitary	
Ex. Storm Drain	
Ex. Water	
Prop. Sanitary	
Prop. Storm Drain	
Prop Water	PROP. 8 W
Fire Hydrant	
Water Valve	
Light Duty Paving P-2	
Heavy Duty Paving P-3	

Site Data

TOTAL AREA OF SITE :	392,040 SQ. FT. OR 9.00 Ac+/-
EXISTING ZONING :	M-2
PROPERTY REFERENCE :	L. 1031 / F. 62 L. 4654 F. 497
EXISTING USE :	VACANT RESTAURANT
PROPOSED USE :	OFFICE/WAREHOUSE
BUILDING COVERAGE :	89,000 SQ. FT/2.04 AC.+/-
% BUILDING COVERAGE :	22.7%
FLOOR AREA RATIO :	0.23
AREA TO BE PAVED PLUS BUILDING AREA :	263,100 SQ. FT. /6.04AC.+/-
OPEN SPACE :	128,938 SQ. FT./2.96 AC.+/-
TOTAL AREA OF PARKING LOT :	174,240 SQ. FT./4.00 AC+/-
% PARKING LOT COVERAGE :	44.4%
AREA TO BE DISTURBED :	392,040 SQ. FT./9.00 AC+/-
AREA TO BE VEGETATIVELY STABILIZED :	128,938 SQ. FT./2.96 AC.+/-

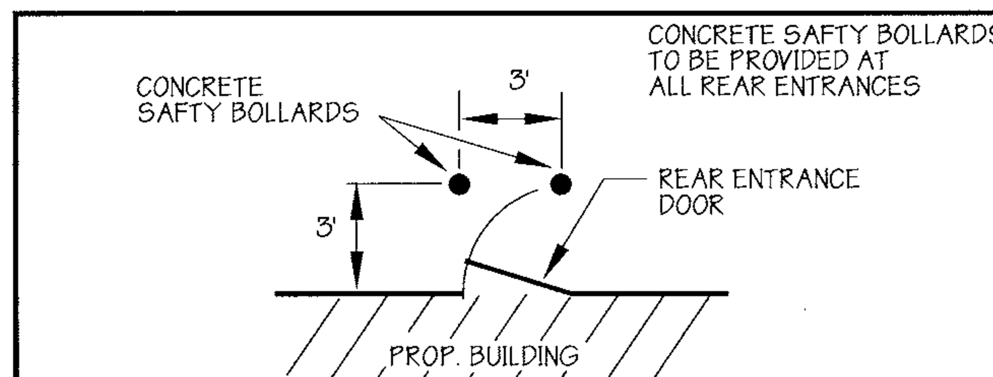

TYPICAL REAR DOOR PROTECTION

NOT TO SCALE

ROAD NAME	CLASSIFICATION
MD. RTE 32	- PRINCIPAL ARTERIAL
HENKELS LANE	- INTERNAL RIGHT-OF-WAY
ANNAP. JUNCTION RD.	- INTERNAL RIGHT-OF-WAY
DORSEY RUN ROAD	- MAJOR COLLECTOR

PREPARED BY :
GWS
GEORGE W. STEPHENS, JR. AND ASSOCIATES, INC.
Civil Engineers and land Surveyors
658 Kenilworth Drive, Suite 100
Towson, Maryland 21204
(410) 825-8120

STATE OF MARYLAND — JAMES ADRIAN MARKLE — No. 11063 — REGISTERED PROFESSIONAL ENGINEER

OWNER / DEVELOPER / CONTRACT / PURCHASER
MERRITT - HK, LLC
2066 LORD BALTIMORE DR.
BALTIMORE, MD 21207
(410) 298-2600

DESIGNED BY: H.P.P.
DRAWN BY: J.N.L.
CHECKED BY: H.P.P.
REVISIONS

SITE PLAN
THE HENKEL PROPERTY

ELECTION DISTRICT : 6
HOWARD CO., MARYLAND
SCALE : As Shown
DATE : FEB. 02, 1999
SHEET 1 OF 12

SDP 99 - 94
P/N : 8976

8976001siteplan.s01 EMT 02/17/99

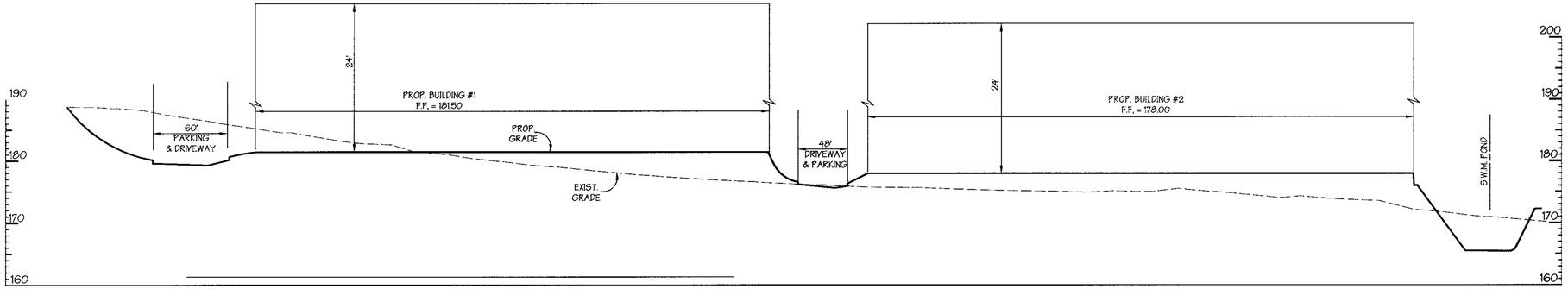

BUILDING SECTION "A-A"
SCALE: HORZ: 1" = 50'
VERT: 1" = 10'

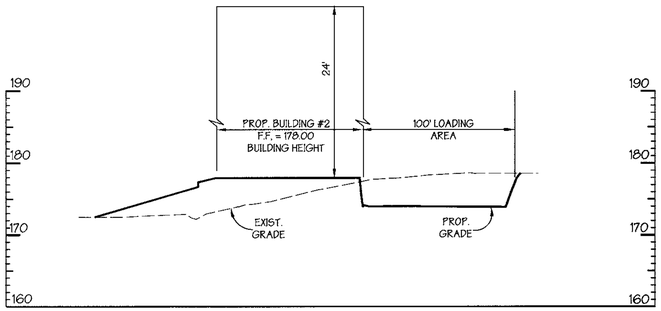

BUILDING SECTION "C-C"
SCALE: HORZ: 1" = 50'
VERT: 1" = 10'

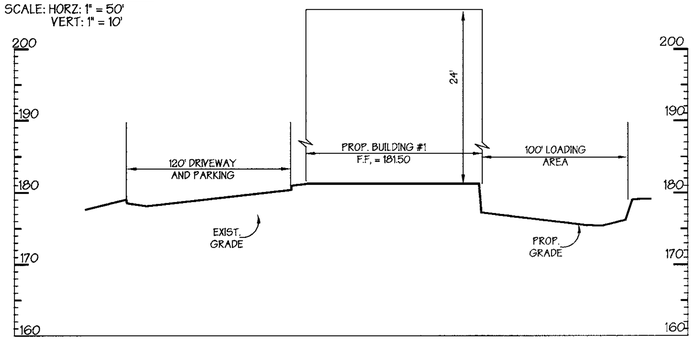

BUILDING SECTION "B-B"
SCALE: HORZ: 1" = 50'
VERT: 1" = 10'

STANDARD R7-8
RESERVED
PARKING SIGN

COLORS
GREEN - LEGEND AND BORDER
WHITE - SYMBOL ON BLUE BACKGROUND
WHITE - BACKGROUND

$98 FINE SIGN
SIGN TO UTILIZE AN ALUMINUM BLANK 6" X 12" X 0.080" THICK WITH TWO SINGLE POST MOUNTING HOLES.

THE TEXT AND BORDER SHALL BE STANDARD GREEN TO MATCH THAT ON R7-8 AND, THE BACKGROUND SHALL BE REFLECTIVE WHITE. TEXT SHALL BE IN 5" CHARACTERS

SIGN SHALL BE MOUNTED DIRECTLY BELOW THE STANDARD R7-8 RESERVED PARKING FOR HANDICAPPED SIGN. ITS BOTTOM EDGE SHALL BE NO LESS THAN 7 FEET ABOVE GROUND. IF THE SIGN IS PLACED AGAINST A BUILDING, STRUCTURE, OR OTHER LOCATION WHERE VEHICLE OR PEDESTRIAN TRAFFIC IS NOT OBSTRUCTED THE BOTTOM EDGE OF THE SIGN SHALL BE AT LEAST 6 FEET BUT NOT MORE THAN 10 FEET ABOVE GROUND

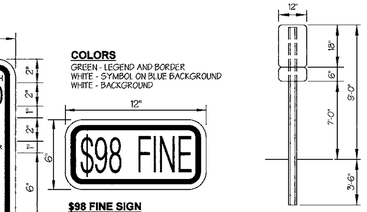

Handicapped Parking Sign Detail
NOT TO SCALE

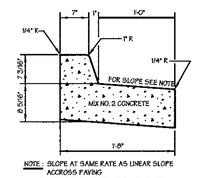

REVERSE SLOPE CURB AND GUTTER
NOT TO SCALE

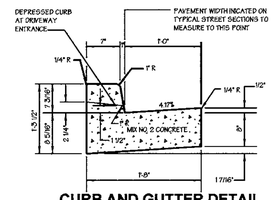

CURB AND GUTTER DETAIL
NOT TO SCALE
SEE HO. CO. STD. DTL. R-3.01

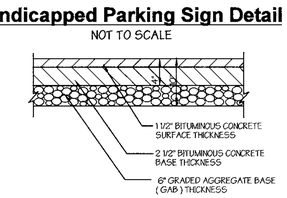

LIGHT DUTY PAVING
P-2 Pavement Section
NOT TO SCALE

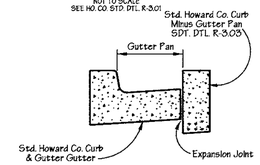

Curb Opening Detail
NOT TO SCALE

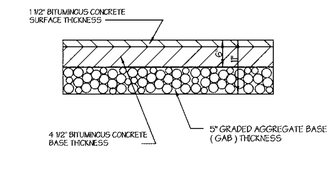

INTERMEDIATE DUTY PAVING
P-3 Pavement Section
NOT TO SCALE

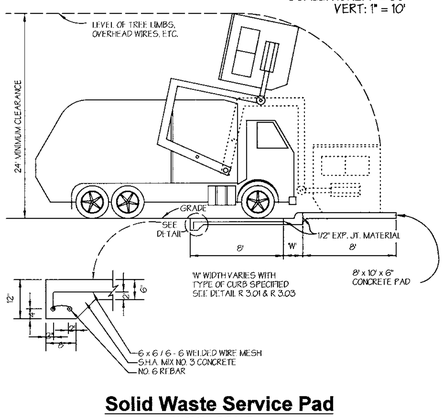

Solid Waste Service Pad
NOT TO SCALE

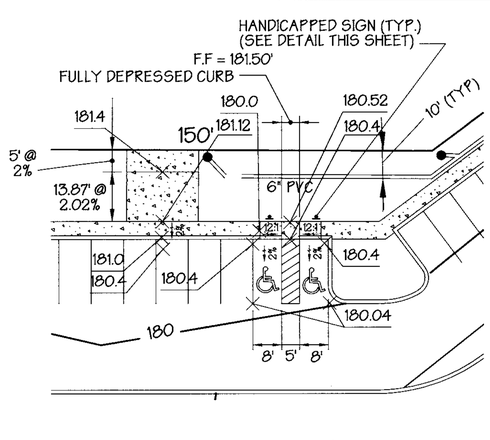

Handicapped Detail No. 1
SCALE 1" = 20'

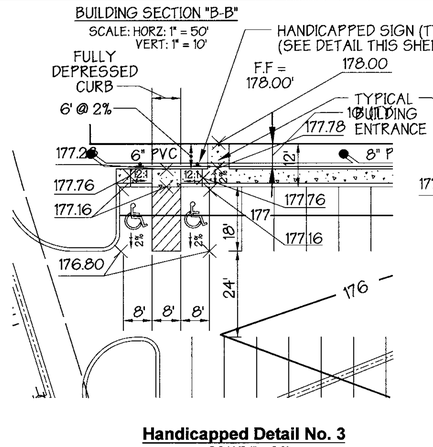

Handicapped Detail No. 3
SCALE 1" = 20'

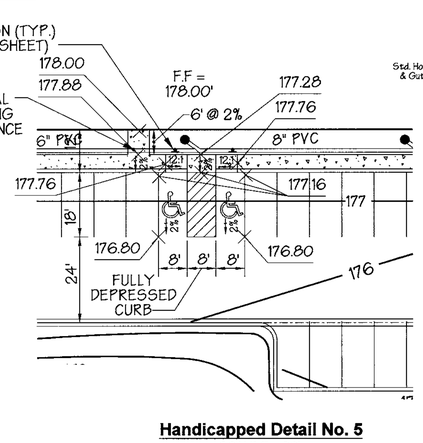

Handicapped Detail No. 5
SCALE 1" = 20'

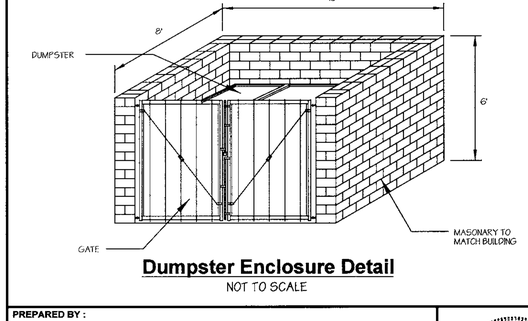

Dumpster Enclosure Detail
NOT TO SCALE

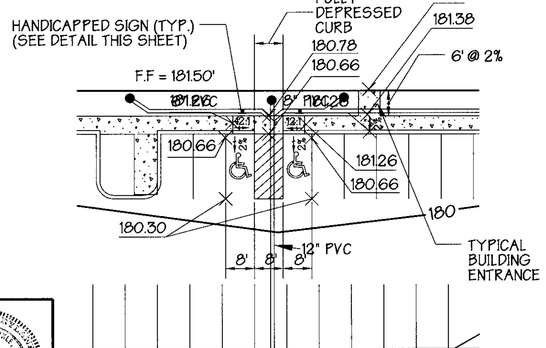

Handicapped Detail No. 2
SCALE 1" = 20'

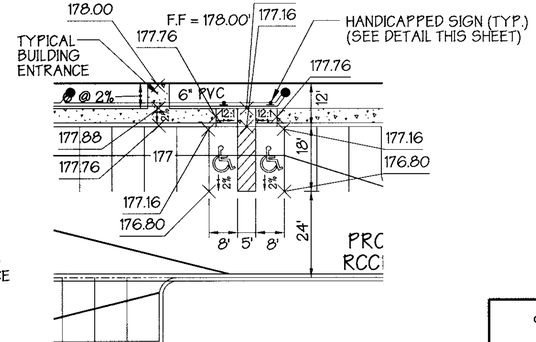

Handicapped Detail No. 4
SCALE 1" = 20'

These plans for S.W.M. construction, soil erosion and sediment control meet the requirements of Howard Soil Conservation District.

APPROVED: HOWARD SOIL CONSERVATION DISTRICT — 6/7/99 DATE
PLAN NUMBER

Reviewed for the Howard Conservation District and meets technical requirements.

NATURAL RESOURCES CONSERVATION SERVICE — 6/7/99 DATE

APPROVED: Howard County Department of Planning and Zoning

CHIEF, DEVELOPMENT ENGINEERING DIVISION — DATE 6/9/99
CHIEF, DIVISION OF LAND DEVELOPMENT — DATE 6/9/99
DIRECTOR — DATE 6/10/99

ADDRESS CHART	
PARCEL NO.	STREET ADDRESS
BUILDING No. 1	8955 HENKELS LANE
BUILDING No. 2	8975 HENKELS LANE

SUBDIVISION NAME	SECTION NAME	PARCEL #
N/A	N/A	45

PLAT #	BLOCK #	ZONE	TAX /ZONE MAP	ELECT. DIST.	CENSUS TRACT
N/A	20	M-2	48	6	6069.01

WATER CODE B-02 — SEWER CODE 4020000

PREPARED BY :
GEORGE W. STEPHENS, JR. AND ASSOCIATES, INC.
Civil Engineers and land Surveyors
658 Kenilworth Drive, Suite 100
Towson, Maryland 21204
(410) 825-8120

OWNER / DEVELOPER / CONTRACT / PURCHASER
MERRITT - HK, LLC
2066 LORD BALTIMORE DR.
BALTIMORE, MD 21207
(410) 298-2600

DESIGNED BY: H.P.P.
DRAWN BY: J.N.L.
CHECKED BY: H.P.P.
REVISIONS

SITE PLAN DETAILS
THE HENKEL PROPERTY

ELECTION DISTRICT : 6
HOWARD CO., MARYLAND

SCALE : As Shown
DATE : FEB. 02, 1999
SHEET 2 OF 12

SDP 99 - 94

P/N : 8976

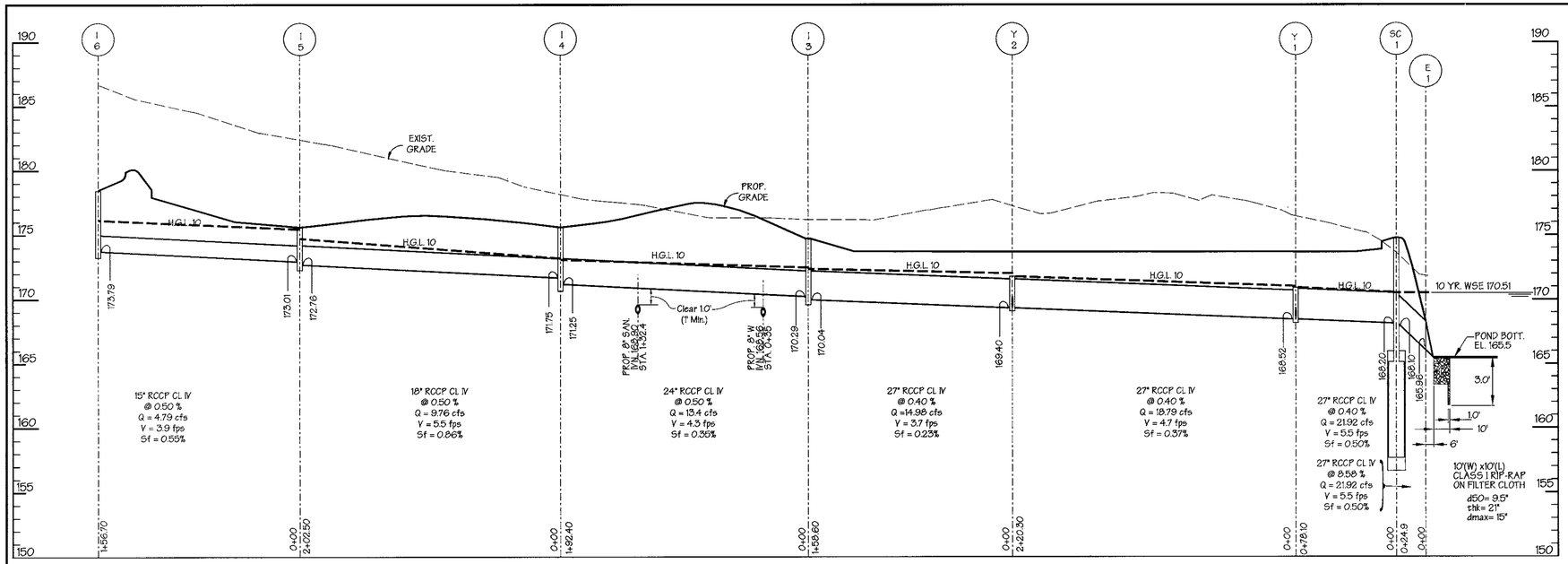

STORM DRAIN PROFILE

SCALE HORZ: 1" = 50'
VERT: 1" = 5'

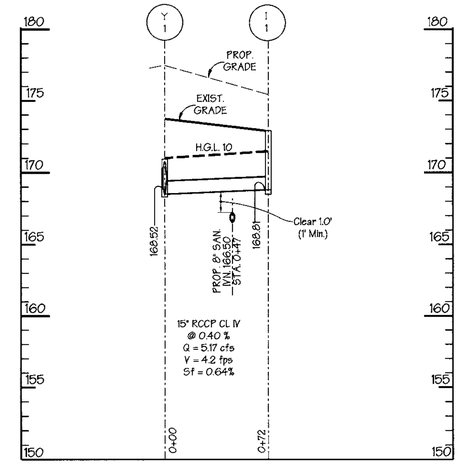

STORM DRAIN PROFILE

SCALE HORZ: 1" = 50'
VERT: 1" = 5'

STRUCTURE SCHEDULE

NO.	TYPE	SIZE	INV. OUT	TOP ELEV.	REMARKS
E-1	CONC END-SEC.	27"	165.70	—	HOW. CO. DTL. SD 5.52
E-2	CONC END-SEC.	30"	165.70	—	HOW. CO. DTL. SD 5.52
SC-1	STORMCEPTOR	4800 GAL	168.10	174.80	MODEL STC 4800
SC-2	STORMCEPTOR	6000 GAL	168.76	176.00	MODEL STC 6000
Y-1	WYE	27"	168.52	—	HOW. CO. DTL. SD 1.11
Y-2	WYE	27"	169.40	—	HOW. CO. DTL. SD 1.11
MH-1	MODIFIED*	TYPE 'A'	165.00	169.50	HOW. CO. DTL. G 5.03*
MH-2	MODIFIED*	TYPE 'A'	165.17	169.70	HOW. CO. DTL. G.503 *

* FRAME AND COVER TO BE FLUSH WITH SLAB

Stormceptor Operation and Maintenance Schedule

1. The Stormceptor water quality structure shall be periodically inspected and cleaned to maintain operation and function. The owner shall inspect the Stormceptor unit yearly at a minimum, utilizing the Stormceptor Inspection/Monitoring Form. Inspections shall be done by using a clear Plexiglass tube ("sludge judge") to extract a water column sample. When the sediment depths exceed the level specified in Table 6 of the Stormceptor Technical Manual, the unit must be cleaned.

2. The Stormceptor water quality structure shall be checked and cleaned immediately after petroleum spills. The owner shall contact the appropriate regulatory agencies.

3. The maintenance of the Stormceptor unit shall be done using a vacuum truck which will remove the water, sediment, debris, floating hydrocarbons and other materials in the unit. Proper cleaning and disposal of the removed materials and liquid must be followed by the owner.

4. The inlet and outlet pipes shall be checked for any obstructions at least once every six months. If obstructions are found the OWNER shall have them removed. Structural parts of the Stormceptor unit shall be repaired as needed.

5. The owner shall retain and make the Stormceptor Inspection/Monitoring Forms available the Howard County officials upon their request.

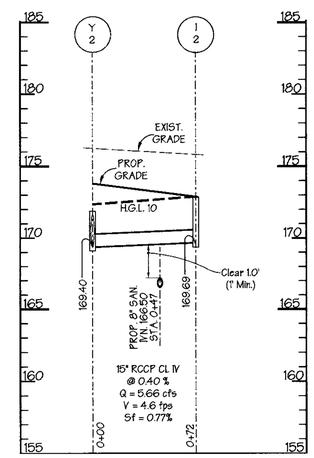

STORM DRAIN PROFILE

SCALE HORZ: 1" = 50'
VERT: 1" = 5'

INLET SCHEDULE

NO.	TYPE	INV. IN	INV. OUT	TOP ELEV.	Q=CFS	ANNE ARUNDEL DET.
I-1	DBL. 'S'	—	168.81	172.50 *	5.17	HO. CO. STD DTL. SD- 4.23
I-2	DBL. 'S'	—	169.69	172.50 *	5.66	HO. CO. STD DTL. SD- 4.23
I-3	DBL. 'S'	170.29	170.04	174.50 *	3.03	HO. CO. STD DTL. SD- 4.23
I-4	DBL. 'S'	171.75	171.25	175.60 *	4.88	HO. CO. STD DTL. SD- 4.23
I-5	DBL. 'S'	173.01	172.76	175.60 *	5.12	HO. CO. STD DTL. SD- 4.23
I-6	DBL. 'S'	—	173.79	178.85 *	4.28	HO. CO. STD DTL. SD- 4.23
I-7	DBL. 'S'	169.26	169.16	175.00 *	6.03	HO. CO. STD DTL. SD- 4.23
I-8	DBL. 'S'	170.96	170.71	175.00 *	8.08	HO. CO. STD DTL. SD- 4.23
I-9	DBL. 'S'	172.10	171.90	176.70 *	8.18	HO. CO. STD DTL. SD- 4.23
I-10	DBL. 'S'	—	173.02	177.01 *	10.45	HO. CO. STD DTL. SD- 4.23

* TOP GRATE

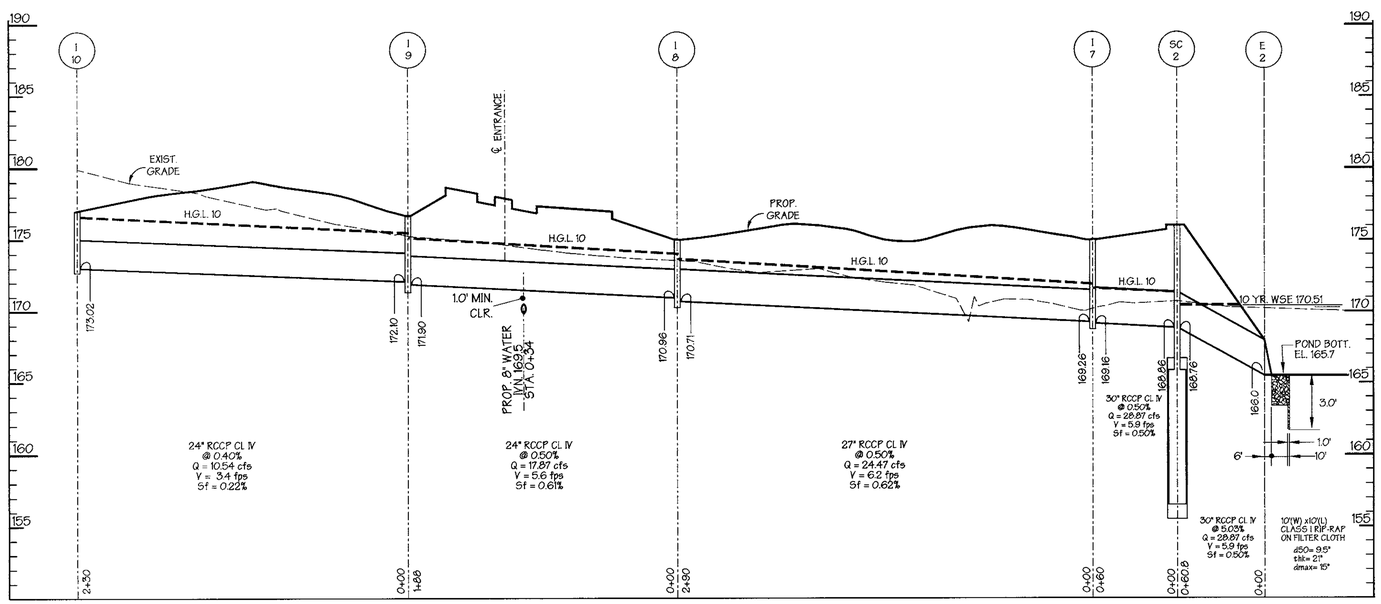

STORM DRAIN PROFILE

SCALE HORZ: 1" = 50'
VERT: 1" = 5'

These plans for S.W.M. construction, soil erosion and sediment control meet the requirements of Howard Soil Conservation District.

APPROVED: HOWARD SOIL CONSERVATION DISTRICT — DATE 6/7/99

PLAN NUMBER

Reviewed for the Howard Conservation District and meets technical requirements.

NATURAL RESOURCES CONSERVATION SERVICE — DATE 6/7/99

APPROVED: Howard County Department of Planning and Zoning

CHIEF, DEVELOPMENT ENGINEERING DIVISION — DATE 6/9/99

CHIEF, DIVISION OF LAND DEVELOPMENT — DATE 6/9/99

DIRECTOR — DATE 6/10/99

ADDRESS CHART

PARCEL NO.	STREET ADDRESS
BUILDING No. 1	8955 HENKELS LANE
BUILDING No. 2	8975 HENKELS LANE

SUBDIVISION NAME	SECTION NAME	PARCEL #
N/A	N/A	45

PLAT #	BLOCK #	ZONE	TAX /ZONE MAP	ELECT. DIST.	CENSUS TRACT
N/A	20	M-2	48	6	6069.01

WATER CODE B-02 SEWER CODE 4020000

PREPARED BY :

GEORGE W. STEPHENS, JR. AND ASSOCIATES, INC.
Civil Engineers and land Surveyors
658 Kenilworth Drive, Suite 100
Towson, Maryland 21204
(410) 825-8120

OWNER / DEVELOPER / CONTRACT / PURCHASER

MERRITT - HK, LLC
2066 LORD BALTIMORE DR.
BALTIMORE, MD 21207
(410) 298-2600

DESIGNED BY: H.P.P.
DRAWN BY: J.N.L.
CHECKED BY: H.P.P.
REVISIONS

STORM DRAIN PROFILES

THE HENKEL PROPERTY

ELECTION DISTRICT : 6
HOWARD CO., MARYLAND

SCALE : As Shown
DATE : FEB. 02, 1999
SHEET 3 OF 12

SDP 99 - 94

P/N : 8976

8976dmprof1.s01 EMT 02/18/99

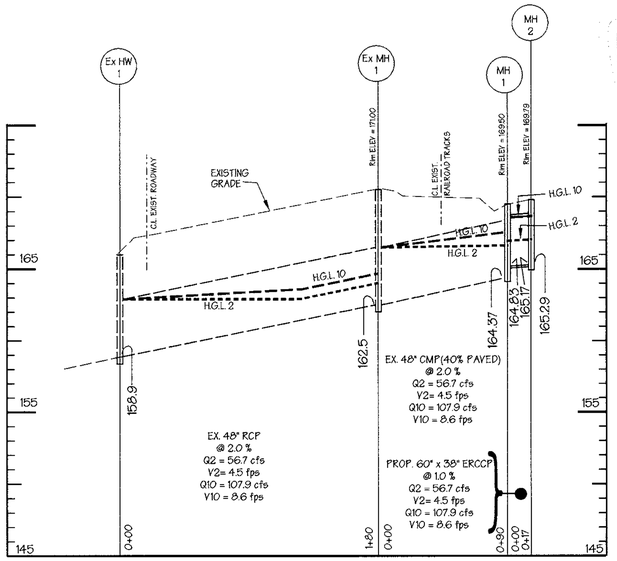

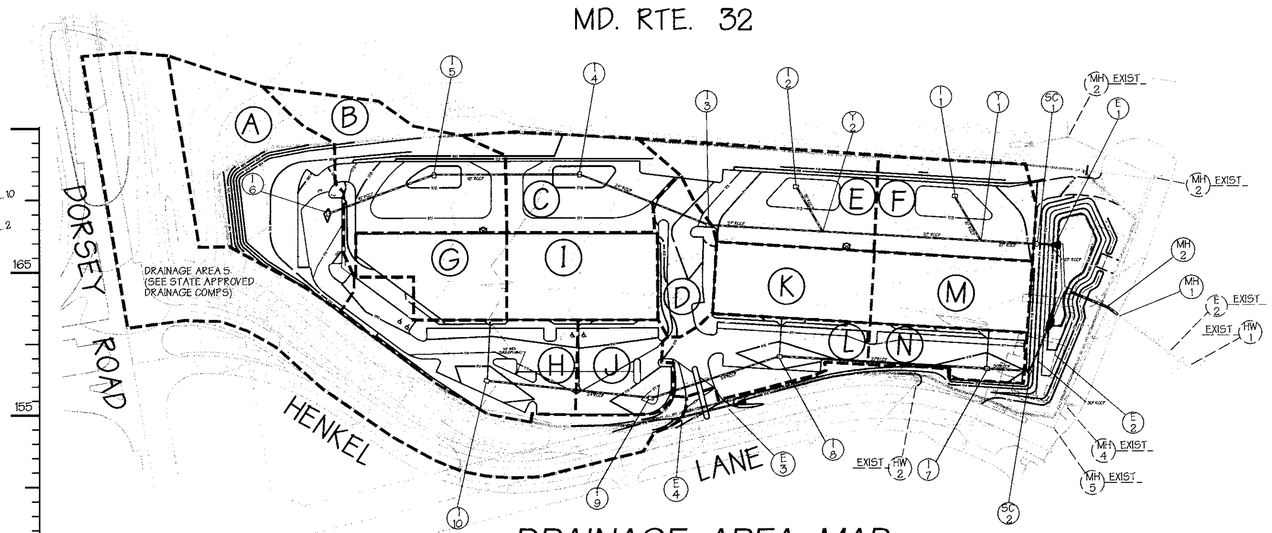

DRAINAGE AREA MAP

SCALE: 1" = 100'

DRAINAGE AREAS		
AREA	ACRES	"C"
A	1.24	0.46
B	0.94	0.66
C	0.67	0.74
D	0.36	0.75
E	0.79	0.73
F	0.66	0.80
G	0.48	0.96
H	0.81	0.84
I	0.59	0.96
J	0.39	0.92
K	0.50	0.96
L	0.53	0.78
M	0.50	0.96
N	0.21	0.95

NOTE: FOR STORMCEPTOR MAINTENANCE SCHEDULE SEE SHEET 3.

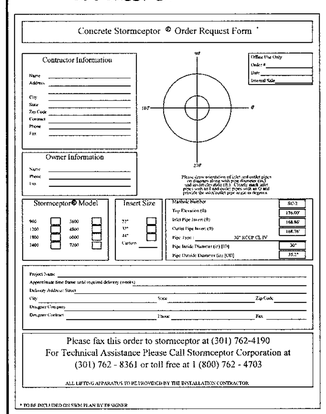

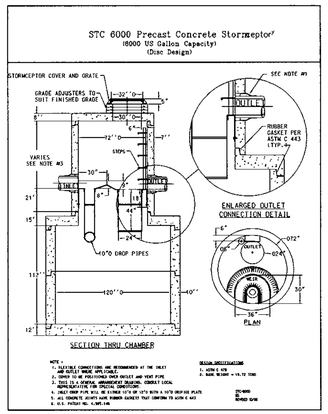

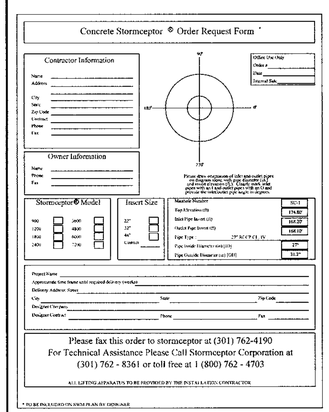

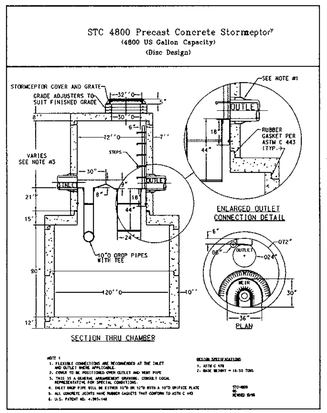

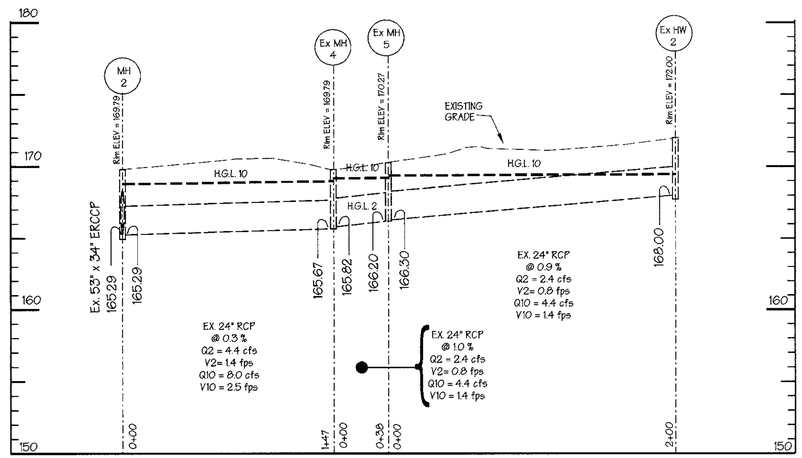

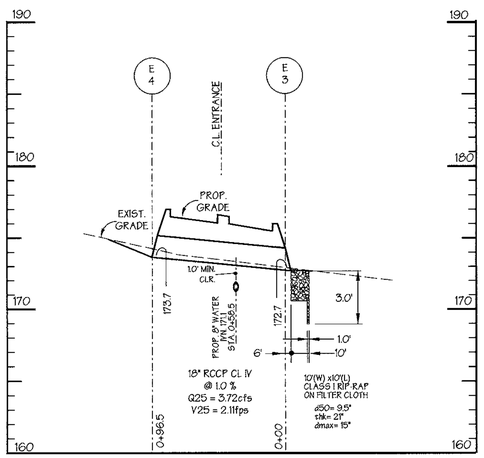

STORM DRAIN PROFILE
SCALE HORZ: 1" = 50'
VERT: 1" = 5'

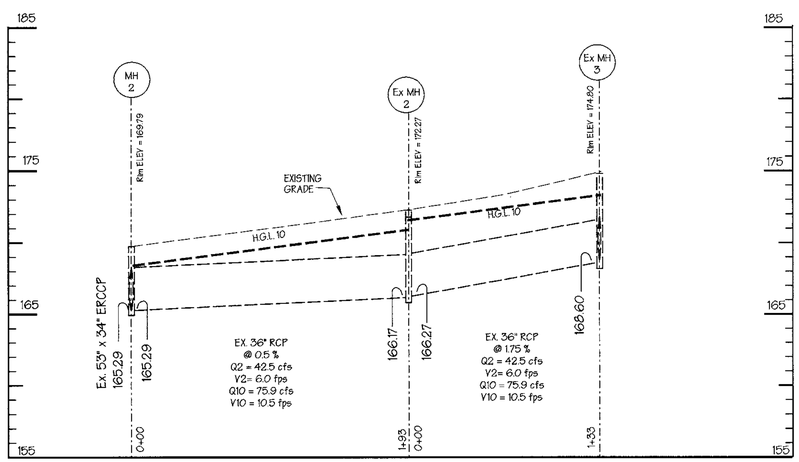

These plans for S.W.M. construction, soil erosion and sediment control meet the requirements of Howard Soil Conservation District.

APPROVED: HOWARD SOIL CONSERVATION DISTRICT — DATE 6/7/99

PLAN NUMBER

Reviewed for the Howard Conservation District and meets technical requirements.

NATURAL RESOURCES CONSERVATION SERVICE — DATE 6/7/99

APPROVED: Howard County Department of Planning and Zoning

CHIEF, DEVELOPMENT ENGINEERING DIVISION — DATE 6/9/99

CHIEF, DIVISION OF LAND DEVELOPMENT — DATE 6/9/99

DIRECTOR — DATE 6/10/99

ADDRESS CHART	
PARCEL NO.	STREET ADDRESS
BUILDING No. 1	8955 HENKELS LANE
BUILDING No. 2	8975 HENKELS LANE

SUBDIVISION NAME	SECTION NAME	PARCEL #
N/A	N/A	45

PLAT #	BLOCK #	ZONE	TAX/ZONE MAP	ELECT. DIST.	CENSUS TRACT
N/A	20	M-2	46	6	6069.01

WATER CODE B-02 — SEWER CODE 4020000

PREPARED BY:

GEORGE W. STEPHENS, JR. AND ASSOCIATES, INC.
Civil Engineers and land Surveyors
658 Kenilworth Drive, Suite 100
Towson, Maryland 21204
(410) 825-8120

OWNER / DEVELOPER / CONTRACT / PURCHASER
MERRITT - HK, LLC
2066 LORD BALTIMORE DR.
BALTIMORE, MD 21207
(410) 298-2600

DESIGNED BY: H.P.P.
DRAWN BY: J.N.L.
CHECKED BY: H.P.P.
REVISIONS

STORMDRAIN DRAINAGE AREA MAP and DETAILS

THE HENKEL PROPERTY

ELECTION DISTRICT : 6
HOWARD CO., MARYLAND

SCALE : As Shown
DATE : FEB. 02, 1999
SHEET 4 OF 12

SDP 99 - 94

F/N : 8976

8976dmprof2.s01 EMT 02/18/99

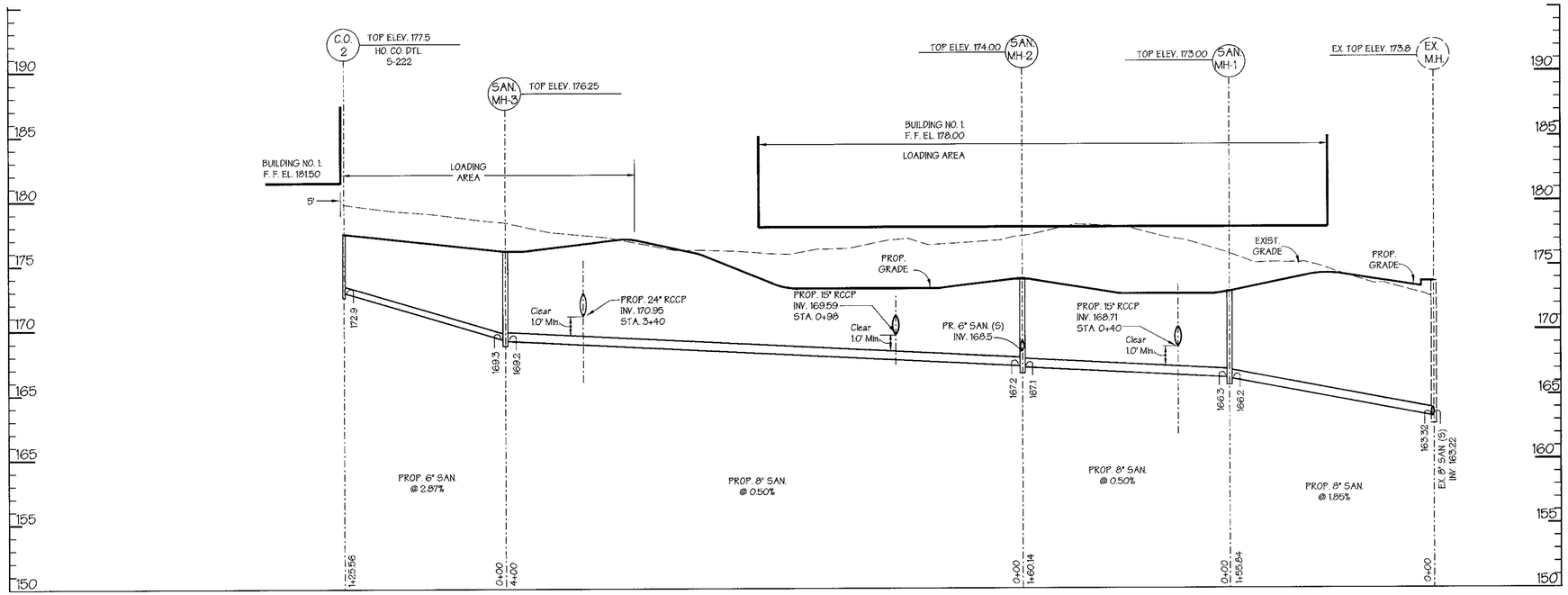

PROP. SANITARY SEWER

SCALE : HORZ; 1" = 50'
VERT; 1" = 5'

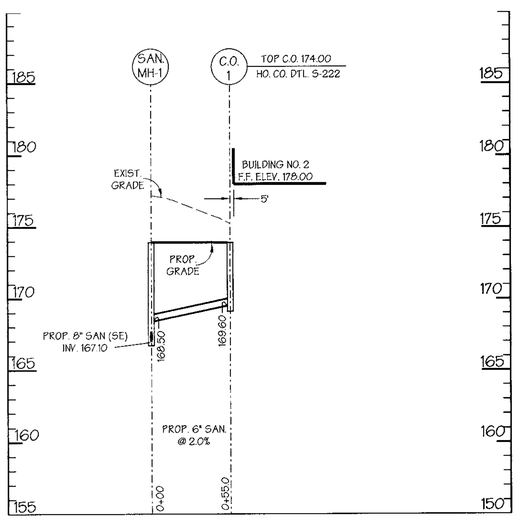

PROP. SANITARY SEWER

SCALE : HORZ; 1" = 50'
VERT; 1" = 5'

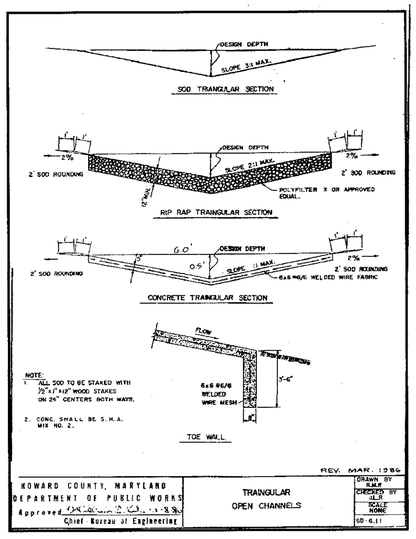

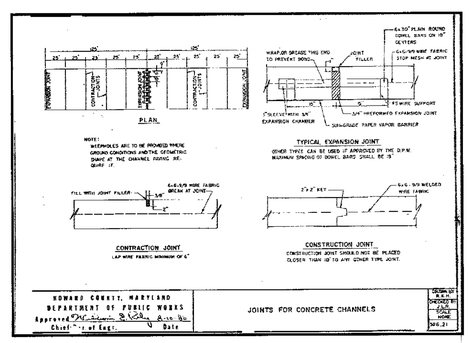

These plans for S.W.M. construction, soil erosion and sediment control meet the requirements of Howard Soil Conservation District.

APPROVED: HOWARD SOIL CONSERVATION DISTRICT — DATE 6/7/99

PLAN NUMBER

Reviewed for the Howard Conservation District and meets technical requirements.

NATURAL RESOURCES CONSERVATION SERVICE — DATE 6/7/99

APPROVED: Howard County Department of Planning and Zoning

CHIEF, DEVELOPMENT ENGINEERING DIVISION — DATE 6/9/99 AG

CHIEF, DIVISION OF LAND DEVELOPMENT — DATE 6/9/99 TC

DIRECTOR — DATE 6/10/99

ADDRESS CHART	
PARCEL NO.	STREET ADDRESS
BUILDING No. 1	8955 HENKELS LANE
BUILDING No. 2	8975 HENKELS LANE

SUBDIVISION NAME	SECTION NAME	PARCEL #
N/A	N/A	45

PLAT #	BLOCK #	ZONE	TAX MAP /ZONE	ELECT. DIST.	CENSUS TRACT
N/A	20	M-2	48	6	6069.01

WATER CODE B-02 — SEWER CODE 4020000

PREPARED BY :

GEORGE W. STEPHENS, JR. AND ASSOCIATES, INC.
Civil Engineers and land Surveyors
658 Kenilworth Drive, Suite 100
Towson, Maryland 21204
(410) 825-8120

OWNER / DEVELOPER / CONTRACT / PURCHASER
MERRITT - HK, LLC
2066 LORD BALTIMORE DR.
BALTIMORE, MD 21207
(410) 298-2600

DESIGNED BY: H.P.P.
DRAWN BY: J.N.L.
CHECKED BY: H.P.P.
REVISIONS

SEWER PROFILES

THE HENKEL PROPERTY

ELECTION DISTRICT : 6
HOWARD CO., MARYLAND

SCALE : As Shown
DATE : FEB. 02, 1999
SHEET 5 OF 12

SDP 99 - 94

P/N : 8976

8976sewprof.s01 EMT 02/18/99

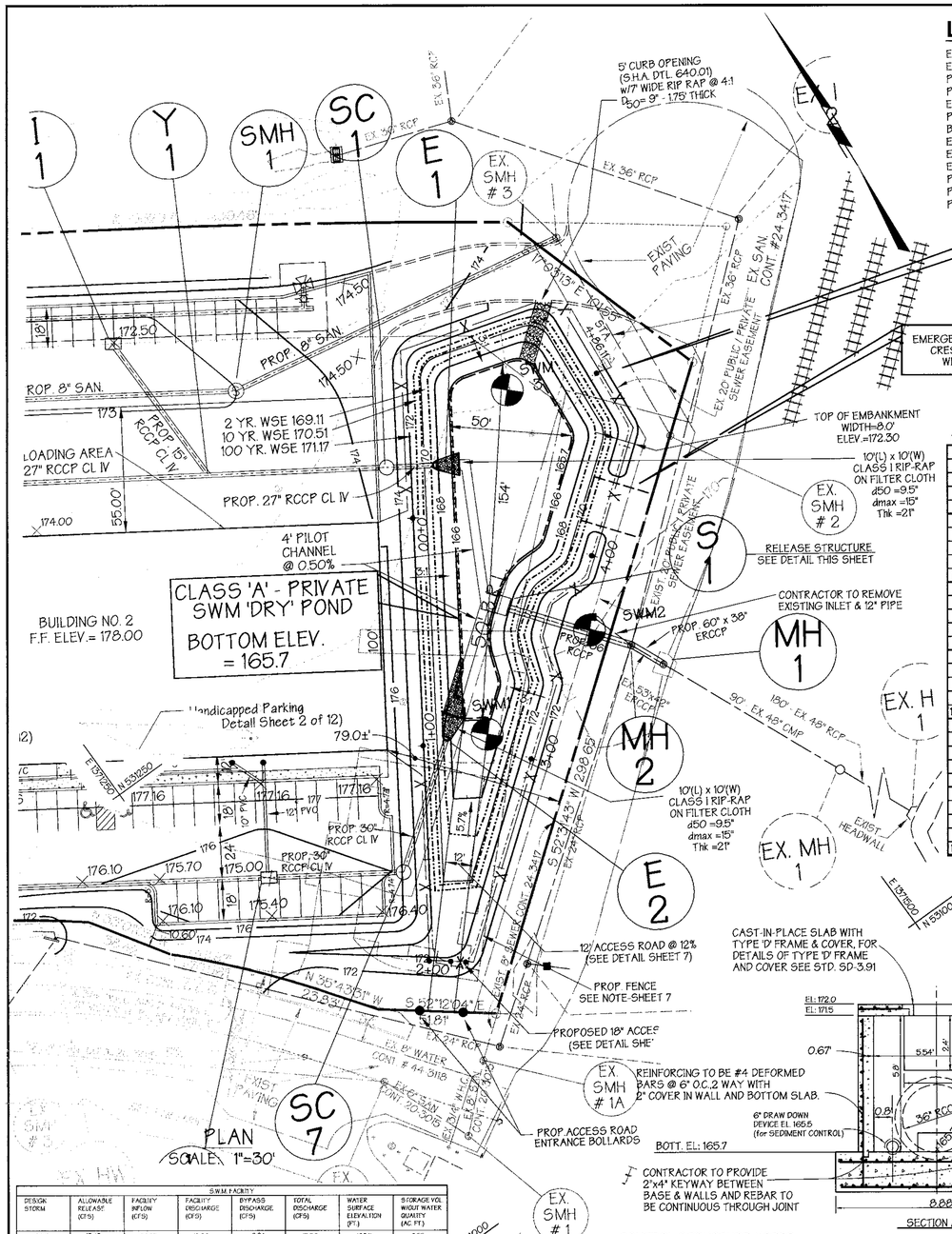

Legend

Ex. 2' Contours	394
Ex. 10' Contours	395
Prop. 2' Contours	394
Prop. 10' Contours	395
Ex. Curb & Gutter	
Prop. Curb & Gutter	
Bldg. Restriction Line	
Ex. Sanitary	
Ex. Storm Drain	
Ex. Water	
Prop. Sanitary	
Prop. Storm Drain	PROP. 8"W
Prop Water	

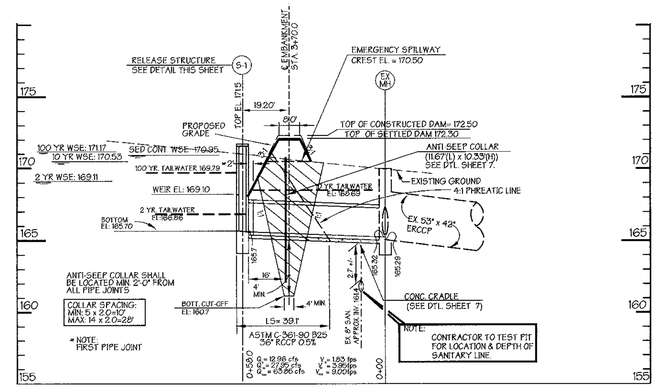

PROFILE PRINCIPAL SPILLWAY

SCALE: HORZ: 1"=30'
VERT: 1"=5'

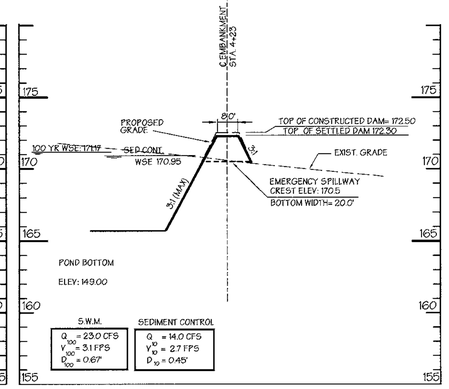

PROFILE - EMERGENCY SPILLWAY

SCALE: HORZ: 1"=30'
VERT: 1"=5'

NOTE: MATERIAL FOR IMPERVIOUS CORE AND CUT-OFF TRENCH SHALL CONFORM TO UNIFIED CLASS SC, GC, CL, OR CH. (GC & SC MATERIALS MAYBE USED PROVIDED THAT AT LEAST 30% OF THE MATERIAL PASSES THE #200 SIEVE.

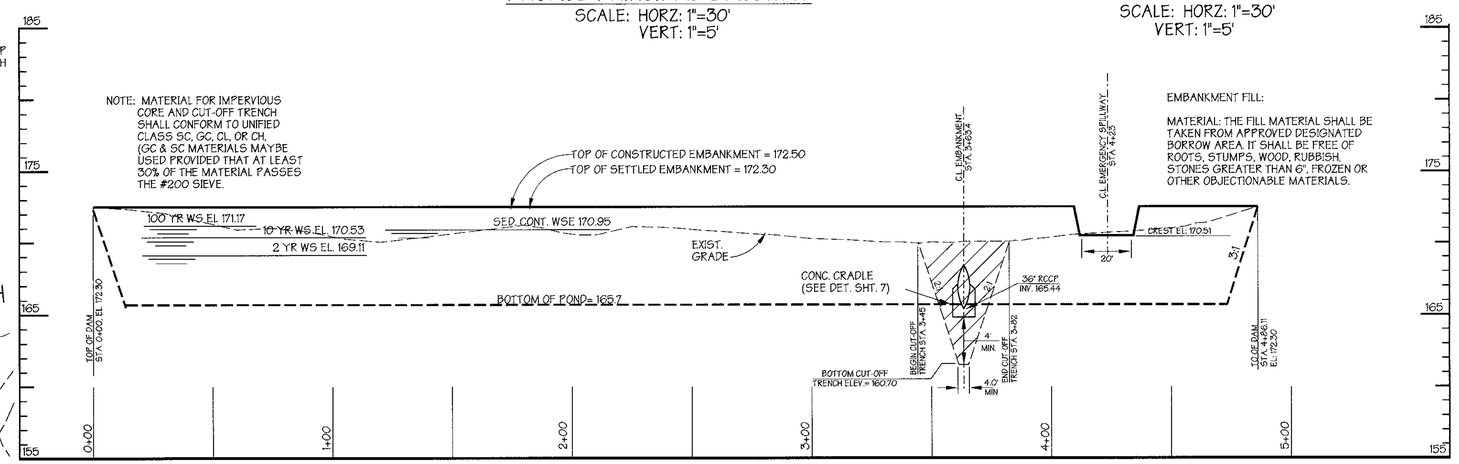

EMBANKMENT FILL:

MATERIAL: THE FILL MATERIAL SHALL BE TAKEN FROM APPROVED DESIGNATED BORROW AREA. IT SHALL BE FREE OF ROOTS, STUMPS, WOOD, RUBBISH, STONES GREATER THAN 6", FROZEN OR OTHER OBJECTIONABLE MATERIALS.

PROFILE ALONG ℄ OF EMBANKMENT

SCALE: HORZ: 1"=30'
VERT: 1"= 5'

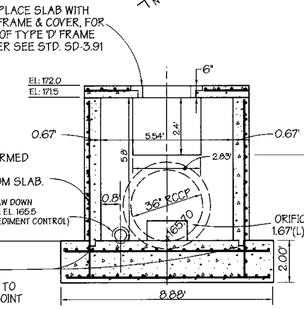

SECTION A-A

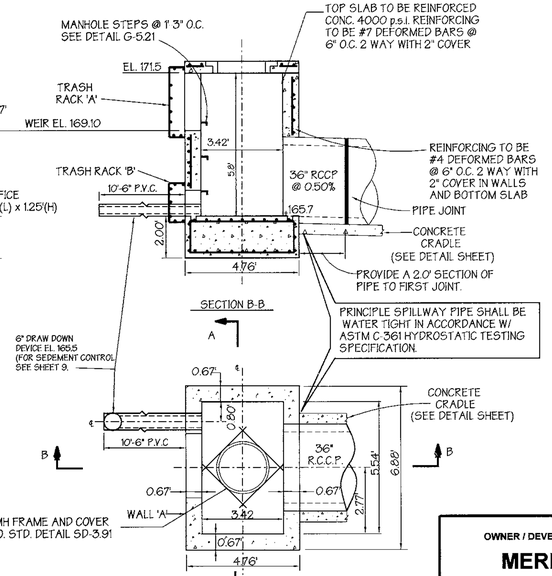

SECTION B-B

CONTROL STRUCTURE NOTES

1. STRUCTURE SHALL BE CAST-IN-PLACE REINFORCED CONCRETE WITH 3,500 P.S.I. (MIN) STRENGTH @ 28 DAYS.
2. ALL REINFORCING TO BE CONTINUOUS THROUGHOUT STRUCTURE.
3. ALL REINFORCING TO HAVE 1'-6" MIN. OVERLAPS.
4. PROVIDE ADDITIONAL #4 REBARS ALONG THE PERIMETER OF ALL OPENINGS WITH THE AREA OF STEEL EQUAL TO OR GREATER THAN AREA OF STEEL 'REMOVED' DUE TO OPENINGS.
5. THREE (3) INCH COVER MINIMUM FOR ALL REBARS.
6. UNLESS OTHERWISE NOTED STRUCTURE SHALL BE BUILT IN ACCORDANCE WITH HOWARD COUNTY STANDARD PLATE SD-4.32. STRUCTURE SHALL NOT BE BRICK.

RELEASE STRUCTURE OPENING S-1
WALL 'A'
ORIFICE: 1.67' (L)x1.25' (H)
CREST: 165.7
WEIR: 2.83' (L)
CREST: 169.1

STRUCTURE S-1

SCALE: 1" = 3'

PROVIDE MH FRAME AND COVER SEE HO. CO. STD. DETAIL SD-3.91

S.W.M. FACILITY								
DESIGN STORM	ALLOWABLE RELEASE (CFS)	FACILITY INFLOW (CFS)	FACILITY DISCHARGE (CFS)	BYPASS DISCHARGE (CFS)	TOTAL DISCHARGE (CFS)	WATER SURFACE ELEVATION (FT.)	STORAGE VOL W/OUT WATER QUALITY (AC. FT.)
2 YR	13.43	30.73	12.86	0.84	13.56	169.11	0.55
10 YR	30.02	51.64	27.95	1.75	29.77	170.53	0.91
100 YR	49.64	74.36	63.85	2.62	66.08	171.17	1.09

POND SPECIFICATION		
DESCRIPTION		DATA
STRUCTURE CLASSIFICATION		A
STORAGE X HEIGHT PRODUCT		(1.09 AC FT)(6.67) = 3.96 AC FT
WATERSHED AREA TO THE POND		8.65 AC. (AREA DEVELOPED)(0.80 AC OFF SITE
HEIGHT TO EMERGENCY SPILLWAY		4.80'
NORMAL SURFACE AREA		0.17 AC.
PRINCIPLE SPILLWAY CAPACITY		35.42 C.F.S.
EMERGENCY SPILLWAY CAPACITY		23.12 C.F.S.
POND TYPE		DRY POND
FREEBOARD	REQUIRED/ PROVIDED	1.00'/1.13'
IMPERVIOUS AREA (AREA SERVED)		6.04 AC
WATER QUALITY STORAGE REQUIRED		N/A
WATER QUALITY STORAGE PROVIDED		N/A
WATER QUALITY PROVIDED BY		STORMCEPTOR
TOP OF EMBANKMENT		172.30
WATERSHED		DORSEY RUN

These plans for S.W.M. construction, soil erosion and sediment control meet the requirements of Howard Soil Conservation District.

APPROVED: HOWARD SOIL CONSERVATION DISTRICT — DATE 6/7/99

PLAN NUMBER

Reviewed for the Howard Conservation District and meets technical requirements

NATURAL RESOURCES CONSERVATION SERVICE — DATE 6/7/99

APPROVED: Howard County Department of Planning and Zoning

CHIEF, DEVELOPMENT ENGINEERING DIVISION — DATE 6/9/99

CHIEF, DIVISION OF LAND DEVELOPMENT — DATE 6/9/99

DIRECTOR — DATE 6/10/99

ADDRESS CHART	
PARCEL NO.	STREET ADDRESS
BUILDING No. 1	8955 HENKELS LANE
BUILDING No. 2	8975 HENKELS LANE

SUBDIVISION NAME	SECTION NAME	PARCEL #
N/A	N/A	45

PLAT #	BLOCK #	ZONE	TAX /ZONE MAP	ELECT. DIST.	CENSUS TRACT
N/A	20	M-2	48	6	6069.01

WATER CODE B-02 — SEWER CODE 4020000

PREPARED BY :

GEORGE W. STEPHENS, JR. AND ASSOCIATES, INC.
Civil Engineers and land Surveyors
658 Kenilworth Drive, Suite 100
Towson, Maryland 21204
(410) 825-8120

HAZZARD CLASSIFICATION:
THE PROPOSED S.W.M. POND IS AN ECAVATED FACILITY IN WHICH THE 100 W.S.E. IS 171.17. ANNAPOLIS JUNCTION ROAD AND CXS RAILROAD TRACKS SERVE AS THE EMBANKMENT. THE EXIST ELEVATION AT THE SWM POND IS 170.0. THERE IS NO POSSIBILITY OF FAILURE BELOW THIS ELEVATION(170.00). FAILURE AT THE 100 YEAR W.S.E. 171.17 PRODUCES A DISCHARGE OF Q(MAX) = 4.8 C.F.S. THE FLOW WOULD DISCHARGE ACROSS ANNAPOLIS JUNCTION ROAD TO THE DITCH BETWEEN THE CXS RAILROAD TRACKS AND A.J.R. AND WOULD BE CARRIED EASTWARD ALONG THE TRACKS. THEREFORE, THE SWM POND IS CLASSIFIED AS "HAZZARD CLASS "A" AND WOULD NOT PRESENT A HAZZARD TO DOWNSTREAM LIFE OR PROPERTY.

OWNER / DEVELOPER / CONTRACT / PURCHASER
MERRITT - HK, LLC
2066 LORD BALTIMORE DR.
BALTIMORE, MD 21207
(410) 298-2600

DESIGNED BY: H.P.P.
DRAWN BY: J.N.L.
CHECKED BY: H.P.P.
REVISIONS

SWM PLAN & DETAILS

THE HENKEL PROPERTY

ELECTION DISTRICT : 6
HOWARD CO., MARYLAND

SCALE : As Shown
DATE : FEB. 02, 1999
SHEET 6 OF 12

SDP 99 - 94

F/N : 8976

8976swmpln.s01 EMT 02/18/99

POND CONSTRUCTION SPECIFICATIONS

These specifications are appropriate to all ponds within the scope of the Standard practice MD-378. All references to ASTM and AASHTO specifications apply to the most recent version.

SITE PREPARATION

Areas designated for borrow areas, embankment, and structural works shall be cleared, grubbed, and stripped of topsoil. All trees, vegetation, roots and other objectionable material shall be removed. Channel banks and sharp breaks shall be sloped to no steeper than 1:1.

Areas to be covered by the reservoir will be cleared of all trees, brush, logs, fences rubbish, and other objectionable material unless otherwise designated on the plans. Trees, brush, and stumps shall be cut approximately level with the ground surface. For dry stormwater management ponds, a minimum of a 50 foot radius around the inlet structure shall be cleared.

All cleared and grubbed material shall be disposed of outside and below the limits of the dam and reservoir as directed by the owner or his representative. When specified, a sufficient quantity of topsoil will be stockpiled in a suitable location for use on the embankment and other designated areas.

EARTH FILL

MATERIAL - The fill material shall be taken from approved designated borrow areas. It shall be free of roots, stumps, wood, rubbish, stones greater than 6", frozen or other objectionable materials. Fill material for the center of the embankment and cut off trench shall conform to United Soil Classification GC, SC, CH, or CL. Consideration may be given to the use of other materials in the embankment if design and construction are supervised by a geotechnical engineer.

PLACEMENT - Areas on which fill is to be placed shall be scarified prior to placement of fill. Fill materials shall be placed in a maximum 8" thick (before compaction) layers which are to be continuous over the entire length of the fill. The most permeable borrow material shall be placed in the downstream portions of the embankment. The principal spillway must be installed concurrently with fill placement and not excavated into the embankment.

COMPACTION - The movement of the hauling and spreading equipment over the fill shall be controlled so that the entire surface of each lift shall be traversed by not less than one tread track of the equipment or compaction shall be achieved by a minimum of four complete passes of a sheepsfoot, rubber tired or vibratory roller. Fill material shall contain sufficient moisture such that the required degree of compaction will be obtained with the equipment used. The fill material shall contain sufficient moisture so that if formed into a ball it will not crumble yet not be so wet that the water can be squeezed out.

Minimum required density shall not be less than 95% of maximum dry density with a moisture content within +/- 2% of the optimum. Each layer of fill shall be compacted as necessary to obtain that density, and is to be certified by the Engineer at the time of construction. All compaction is to be determined by AASHTO Method T-99.

Note: See additional compaction requirements per geotechnical engineer. (Sheet 10 of 13)

STRUCTURE BACKFILL

Backfill adjacent to pipes or structures shall be of the type and quality conforming to that specified for the adjoining fill material. The fill shall be placed in horizontal layers not to exceed four inches in thickness and compacted by hand tampers or other manually directed compaction equipment. The material needs to fill completely all spaces under and adjacent to the pipe. At no time during the backfilling operation shall driven equipment be allowed to operate closer than four feet, measured horizontally, to any part of a structure. Under no circumstances shall equipment be driven over any part of a concrete structure or pipe, unless there is a compacted fill of 24" or greater over the structure

PIPE CONDUITS All pipes shall be circular in cross section.

REINFORCED CONCRETE PIPE - All pipe to be circular in cross section

All the following criteria shall apply for reinforced concrete pipe :

1. Materials - Reinforced concrete pipe shall have bell and spigot joints with rubber gaskets and shall equal or exceed ASTM Designation C-361.

2. Bedding - All reinforced concrete pipe conduits shall be laid in a concrete bedding for their entire length. This bedding shall consist of high slump concrete placed under the pipe and up the sides of the pipe at least 10% of its outside diameter with a minimum thickness of 3 inches, or as shown on the

3. Laying Pipe - Bell and spigot pipe shall be placed with the bell end upstream. Joints shall be made in accordance with recommendations of the manufacturer of the material. After the joints are sealed for the entire line, the bedding shall be placed so that all spaces under the pipe are filled. Care shall be exercised to prevent any deviation from the original line and grade of the pipe. The first joint must be located within 2 feet from the riser.

4. Backfilling shall conform to "Structure Backfill."

5. Other details (anti-seep collars, valves, etc.) shall be as shown on the drawings.

PERFORATED PIPE

Bituminous coated corrugated metal pipe (BCCMP) shall conform to the requirements of AASHTO M36 (pipe should be specified to be fully bituminous coated in accordance with AASHTO M190). Perforated pipe is TYPE III. Pipe shall have CLASS 2 perforations 3/8" in diameter.

CONCRETE

Concrete shall meet the requirements of Maryland Department of Transportation, State Highway Administration Standard Specifications for Construction and Materials, Section 918 (Portland Cement Concrete Mixture), Mix No. 3

REINFORCING STEEL IN CONCRETE STRUCTURES

Reinforcing steel shall be ASTM A 615, Grade 60. Steel angles and anchor bars shall be ASTM 1-36.

ROCK RIP RAP

Rock riprap shall meet the requirements of Maryland Department of Transportation, State Highway Administration Standard Specifications for Construction and Materials, Section 905.

The riprap shall be placed to the required thickness in one operation. The rock shall be delivered and placed in a manner that will insure the riprap is place shall be reasonably homogeneous with the larger rocks uniformly distributed and firmly in contact one to another with the smaller rocks filling the voids between the larger rocks. Filter cloth shall be placed under all riprap and shall meet the requirements of Maryland Department of Transportation, State Highway Administration Standard Specifications for Construction and Materials, Section 919.12.

CARE OF WATER DURING CONSTRUCTION

All work on permanent structures shall be carried out in areas free from water. The contractor shall construct and maintain all temporary dikes, levees, cofferdams, drainage channels, and stream diversions necessary to protect the areas to be occupied by the permanent works. The contractor shall also furnish, install, operate, and maintain all necessary pumping and other equipment required for removal of water from the various parts of the work and for maintaining the excavations, foundation, and other parts of the work free from water as required or directed by the engineer for constructing each part of the work. After having served their purpose, all temporary protective works shall be removed or leveled and graded to the extent required to prevent obstruction in any degree whatsoever of the flow of water to the spillway or outlet works and so as not to interfere in any way with the operation or maintenance of the structure. Stream diversions shall be maintained until the full flow can be passed through the permanent works. The removal of water from the required excavation and the foundation shall be accomplished in a manner and to the extent that will maintain stability of the excavated slopes and bottom of required excavations and will allow satisfactory performance of all construction operations. During the placing and compacting of material in required excavations, the water level at the locations being refilled shall be maintained below the bottom of the excavation at such locations which may require draining the water to sumps from which water shall be pumped.

STABILIZATION

All borrow areas shall be graded to provide proper drainage and left in a slightly condition. All exposed surfaces of the embankment, spillway, spoil and borrow areas, and berms shall be stabilized by seeding, liming, fertilizing and mulching in accordance with the Maryland Soil Conservation Service Standards and Specifications for Critical Area Planting (MD-342) or as shown on the accompanying drawings.

Stormwater management facility will be stabilized with permanent slope seeding as follows:

1. Seedbed Preparation - loosen upper 3 inches of soil by raking, discing or other acceptable means before seeding.
2. Soil Amendments - apply 2 tons per acre Dolomitic Limestone (92 lbs./1000sq. ft.), 600 lbs. per acre 10-10-10 fertilizer (14 lbs./1000 sq. ft.), and 400 lbs. per acre of 30-0-0 Ureaform Fertilizer (9.2 lbs./1000 sq. ft.). Harrow or disc lime and fertilizer into upper 3 inches of soil. At time of seeding, apply 400 lbs. (9.2 lbs./1000 sq. ft.) of 30-0-0 Ureaform Fertilizer and 500 lbs. per acre (11.5 lbs./1000 sq. ft.), of 10-0-0 fertilizer.
3. Seeding - for the period March 1 through April 30 seed with 40 lbs. per acre Kentucky 31 Tall Fescue, and 15 lbs. per acre Inoculated Crown Vetch. For the period May 1 through July 31 seed with 60 lbs. per acre Kentucky 31 Tall Fescue and 2 lbs. per acre Inoculated Weeping Lovegrass. For the period August 1 through October 15 seed with 40 lbs. per acre Kentucky 31 Tall Fesue, and 20 lbs. per acre Inoculated Interstate Serica Lespedeza. For the period October 16 through February 28 protect the site by Option (1); 2 tons per acre of well anchored straw. For the period May 1 through February 28 Inoculated Crown Vetch shall be applied during the subsequent period of March 1 through April 30 at the rate of 15 lbs. per acre.
4. Mulching - apply 1.5 to 2 tons per acre of un-rotted small grain straw immediately after seeding. Anchor mush immediately after application using 218 gallons per acre of emulsified asphalt. On flat areas of slope 8 feet or higher, use 348 gallons per acre of anchoring.
5. Maintenance - Inspect all needed areas and make needed repairs, replacements and re-seeding.

EROSION AND SEDIMENT CONTROL

Construction operations will be carried out in such a manner that erosion will be controlled and water and air pollution minimized. State and local laws concerning pollution abatement will be followed. Construction plans shall detail erosion and sediment control measures to be employed during the construction process.

PERMANENT SLOPE SEEDING

After spreading 4" topsoil, seed with a mixture of 30% inoculated Crown Vetch and 70% Kentucky 31 Tall Fescue applied at a rate of 60 lbs./ acre; 10-20-20 fertilizer shall be applied at a rate of 25 lbs./1000 sq. ft.; lime at a rate of 92 lbs / 1000 s.f.; mulch area with unweathered small grain straw at a rate of 1.5 Tons/acre; anchor with a rapid curing asphalt (RC-70, R-250 or RC-800 as a rate of 0.1 gal./S.Y.

FILTER CLOTH

Filter cloth shall meet or exceed the requirements in Section 20.25-5 of the Howard County Standard Specifications and Details for Construction. Durable filter fabrics for drainage purposes are not limited to Mirafi 1405, DuPonts TYPAC No. 3341 or 3401.
Filter cloth shall be protected from punching or tearing. Any damage other than an occasional small hole shall be repaired by placing another small piece of filter cloth over the damaged area or by replacing the cloth section. All overlaps shall be a minimum of one foot.

GABIONS

Gabions shall meet the requirements of Maryland Department of Transportation, State Highway Administration Standard Specifications for Construction and Materials, Section 312 and must be Cl. IV, PVC coated.

OUTFALL PROTECTION

Subgrade for riprap or gabion outfalls shall be prepared to the required line and grades. Any fill required in the subgrade shall be compacted to a density of approximately that of the surrounding undisturbed material. All rock or gravel shall conform to the specified grading limits when installed in the riprap or gabion. All stone shall be delivered and placed in a manner that will insure the stone in place shall be reasonably homgeneous with the larger rocks uniformly distributed and firmly in contact one to another, with the smaller rocks filling the voids between the larger rocks. Stone for outfalls may be placed by equipment. Riprap or gabion outlets shall be constructed to full course thickness in one operation and in such a manner as to avoid any displacement of underying materials. The contractor shall avoid damage to the filter blanket or cloth during placement of riprap. Hand placement shall be required as needed to prevents damage to the permanent works. Filter cloth shall be placed under all riprap and gabions.

FENCE

CONSTRUCT FENCING IN ACCORDANCE WITH THE STATE HIGHWAY ADMINISTRATION STANDARD DETAILS 690.01 AND 690.02. USE SPECIFICATIONS FOR A 6' FENCE, SUBSTITUTING 42" FABRIC AND 6'-8" LINE POSTS. CONSTRUCT THE GATE IN ACCORDANCE WITH THE S.H.A. STANDARD DETAIL 690.01 WITH 42" FABRIC. THE FABRIC USED FOR THE FENCE AND GATE MUST CONFORM TO AASHTO DESIGNATION M-181-74. DARK VINYL COATING IS REQUIRED FOR THE FENCE POSTS AND WIRE FABRIC IN ACCORDANCE WITH THE LANDSCAPE MANUAL ADOPTED BY RESOLUTION 56-90, OCTOBER 1, 1990.
* 3 SPLIT RAIL (WOOD) FENCE IS OPTIONAL

CUT-OFF TRENCH - THE CUT-OFF TRENCH SHALL BE EXCAVATED INTO IMPERVIOUS MATERIAL ALONG OR PARALLEL TO THE CENTERLINE OF THE EMBANKMENT AS SHOWN ON THE PLANS. THE BOTTOM WIDTH OF THE TRENCH SHALL BE GOVERNED BY THE EQUIPMENT USED FOR EXCAVATION. WITH THE MINIMUM WIDTH BEING FOUR FEET. THE DEPTH SHALL BE AT LEAST FOUR FEET BELOW EXISTING GRADE OR AS SHOWN ON THE PLANS. THE SIDE SLOPES OF THE TRENCH SHALL BE 1:1 OR FLATTER. THE BACKFILL SHALL BE COMPACTED WITH CONSTRUCTION EQUIPMENT, ROLLERS, OR HAND TAMPERS TO ASSUER MAXIMUM DENSITY AND MINIMUM PERMEABILITY.

ANTI-SEEP COLLAR NOTES

1. LOCATE COLLARS A MINIMUM OF 2' FROM ALL PIPE JOINTS
2. THE SEAL BETWEEN THE PIPE AND COLLAR SHALL BE WATER TIGHT.
3. COLLAR SHALL PROJECT A MINIMUM OF TWO FEET FROM THE EXTERIOR OF THE CONCRETE CRADLE AND THE PIPE ON ALL FOUR SIDES.
4. COLLAR SHALL BE CAST-IN-PLACE REINFORCED CONCRETE WITH 3,500 PSI (MIN.) STRENGTH @ 28 DAYS.
5. ALL REINFORCING TO BE CONTINUOUS THROUGHTOUT COLLAR.
6. ALL REINFORCING TO HAVE 1'-6" MIN. OVERLAP.
7. PROVIDE ADDITIONAL #4 REBARS ALONG THE PERIMETER OF ALL OPENINGS WITH THE AREA OF STEEL EQUAL TO OR GREATER THAN AREA OF STEEL REMOVED DUE TO OPENINGS.
8. TWO (2) INCH COVER MINIMUM FOR ALL REBARS.
9. UNLESS OTHERWISE NOTED COLLAR SHALL BE BUILT IN ACCORDANCE WITH HOWARD COUNTY CONSTRUCTION MATERIAL SPECIFICATIONS. COLLAR SHALL NOT BE BRICK.
10. WATER TIGHT SEAL TO BE SIKADUR 32, HI-MOL, CONFORMING TO ASTM C-881, TYPE I & II GRADE 2; CLASS B & C. EPOXY BONDING/GROUTING ADHESIVE.

CONTROL STRUCTURE NOTES

1. STRUCTURE SHALL BE CAST-IN-PLACE REINFORCED CONCRETE WITH 3,500 PSI (MIN.) STRENGTH @ 28 DAYS.
2. ALL REINFORCING TO BE CONTINUOUS THROUGHOUT STRUCTURE.
3. ALL REINFORCING TO HAVE 1'-6" MIN. OVERLAPS.
4. PROVIDE ADDITIONAL #4 REBARS ALONG THE PERIMETER OF ALL OPENINGS WITH THE AREA OF STEEL EQUAL TO OR GREATER THAN AREA OF STEEL REMOVED DUE TO OPENINGS.
5. THREE (3) INCH COVER MINIMUM FOR ALL REBARS.
6. UNLESS OTHERWISE NOTED STRUCTURE SHALL BE BUILT IN ACCORDANCE WITH HOWARD COUNTY CONSTRUCTION MATERIAL SPECIFICATIONS AND HOWARD COUNTY STANDARD PLATE SD-4.23. STRUCTURE SHALL NOT BE BRICK.
7. STRUCTURE TO CONFORM TO THE STRUCTURAL DETAILS REFERRED TO IN HOWARD COUNTY PLATE SD-4.23.

POND NOTES

1. NO TREES, SHRUBS OR OTHER WOODY VEGETATION WILL BE ALLOWED WITHIN 50' OF THE INLET STRUCTURE IN THE POOL AREA, AND NOT ALLOWED WITHIN 15' OF THE TOE OF THE EMBANKMENT.
2. IF REQUIRED BY THE SEDIMENT CONTROL INSPECTOR FENCING SHALL BE INSTALLED TO PREVENT ACCESS TO THE BASIN BY CHILDREN.
3. THIS STORMWATER MANAGEMENT FACILITY IS DESIGNED TO MEET OR EXCEED ALL APPLICABLE REQUIREMENTS OF THE HOWARD COUNTY DEPARTMENT OF PUBLIC WORKS AND THE SOIL CONSERVATION DISTRICT. MAINTENANCE OF THIS PRIVATE FACILITY WILL BE THE RESPONSIBILITY OF OWNER.
4. IF UNSUITABLE (PERVIOUS) MATERIAL IS ENCOUNTERED AT TIME OF CUT-OFF TRENCH INSTALLATION DEEPER THAN 4', IT WILL BE NECESSARY TO EXTEND THE CUT - OFF TRENCH DOWN UNTIL SUITABLE MATERIAL IS ENCOUNTERED AS DETERMINED BY A GEOTECHNICAL ENGINEER. AT TIME OF CONSTRUCTION, EXISTING SOIL ADJACENT TO CUT-OFF TRENCH SHALL BE EVALUATED FOR SEEPAGE BY A GEOTECHNICAL ENGINEER AND ADDRESSED PER RECOMMENDATIONS OF THE GEOTECHNICAL ENGINEER.
5. SOILS TO BE USED FOR CUT-OFF TRENCH SHALL CONFORM TO UNIFIED CLASSES CL, SC, CH OR GC.

GENERAL NOTES

UNLESS OTHERWISE NOTED, ALL CONSTRUCTION AND WORKMANSHIP SHALL BE IN ACCORDANCE WITH:

1. HOWARD COUNTY DEPARTMENT OF PUBLIC WORKS STANDARD SPECIFICATIONS AND DETAILS FOR CONSTRUCTION, 1976, ERRATA AND APPENDA.
2. SOIL CONSERVATION SERVICE MARYLAND STANDARDS AND SPECIFICATIONS POND CODE 378, NOVEMBER, 1982.
3. MARYLAND DEPARTMENT OF TRANSPORTATION STATE HIGHWAY ADMINISTRATION, JANUARLY, 1982, STANDARD SPECIFICATIONS FOR CONSTRUCTION AND MATERIAL.
4. STORMWATER MANAGEMENT APPROVED UNDER BILL 105-84.

AS-BUILT NOTES

1. AS-BUILT PLANS AND CERTIFICATION ARE REQUIRED FOR THIS STORMWATER MANAGEMENT FACILITY. THESE MUST BE PREPARED AND SEALED BY A REGISTERED PROFESSIONAL ENGINEER. HOWARD COUNTY WILL NOT PERFORM THE INSPECTION OR PREPARE THE AS-BUILT PLANS OR CERTIFICATION. THE STORMWATER MANAGEMENT PERMIT SECURITY WILL NOT BE RELEASED UNTIL THE AS-BUILT PLANS AND CERTIFICATION ARE APPROVED BY HOWARD COUNTY.
2. IN ORDER TO PREPARE THE REQUIRED AS-BUILT PLANS AND CERTIFICATION, THIS STORMWATER MANAGEMENT FACILITY MUST BE INSPECTED BY THE ENGINEER AT THE SPECIFIC STAGES DURING CONSTRUCTION AS REQUIRED BY THE CURRENT HOWARD COUNTY STORMWATER MANAGEMENT POLICY AND DESIGN MANUAL. THE CONTRACTOR SHALL NOTIFY THE ENGINEER AT LEAST FIVE (5) WORKING DAYS PRIOR TO STARTING ANY WORK SHOWN ON THESE PLANS.

STOCKPILE/SPOIL AREA NOTES

ANY AREA NEEDED FOR TEMPORARY STOCKPILE AND SEDIMENT BASIN SPOIL WILL BE LOCATED WITHIN THE LIMIT OF DISTURBANCE AND UPSTREAM FROM A SEDIMENT CONTROL MEASURE, BUT LOCATED SUCH AS NOT TO IMPEDED UPON THE MEASURE.

OPERATION AND MAINTENANCE SCHEDULE OF PRIVATELY OWNED AND MAINTAINED STORMWATER MANAGEMENT FACILITY DETENTION POND

ROUTINE MAINTENANCE

1. FACILITY SHALL BE INSPECTED ANNUALLY AND AFTER MAJOR STORMS. INSPECTIONS SHOULD BE PERFORMED DURING WET WEATHER TO DETERMINE IF THE POND IS FUNCTIONING PROPERLY.
2. TOP AND SIDE SLOPES OF THE EMBANKMENT SHALL BE MOWED A MINIMUM OF TWO (2) TIMES A YEAR, ONCE IN JUNE AND ONCE IN SEPTEMBER. OTHER SIDE SLOPES AND MAINTENANCE ACCESS SHOULD BE MOWED AS NEEDED.
3. DEBRIS AND LITTER NEXT TO THE OUTLET STRUCTURE SHALL BE REMOVED DURING REGULAR MOWING OPERATIONS AND AS NEEDED.
4. VISIBLE SIGNS OF EROSION IN THE POND AS WELL AS RIP-RAP OUTLET SHALL BE REPAIRED AS SOON AS IT IS NOTICED. NON-ROUTINE MAINTENANCE
1. STRUCTURAL COMPONENTS OF THE POND SUCH AS THE DAM, THE RISER, AND THE PIPES SHALL BE REPAIRED UPON THE DETECTION OF ANY DAMAGE. THE COMPONENTS SHOULD BE INSPECTED DURING ROUTINE MAINTENANCE OPERATIONS.
2. SEDIMENT SHOULD BE REMOVED WHEN ITS ACCUMULATION SIGNIFICANTLY REDUCES THE DESIGN STORAGE, INTERFERE WITH THE FUNCTION OF THE RISER, WHEN DEEMED NECESSARY FOR AESTHETIC REASONS, OR WHEN DEEMED NECESSARY BY THE HOWARD COUNTY DEPARTMENT OF PUBLIC WORKS.

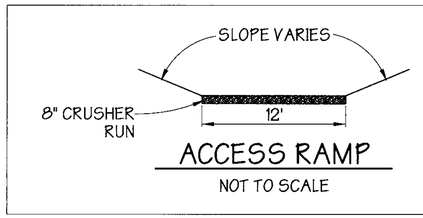

ACCESS RAMP

NOT TO SCALE

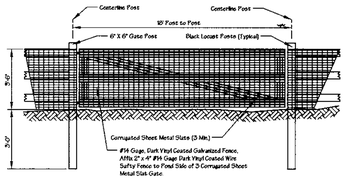

*UNLESS NOTED ABOVE FENCE SHALL CONFORM TO SHA STANDARD SPECIFICATIONS FOR CONSTRUCTION AND MATERIALS, DFC 192.05 & 192.06. GATE SHALL BE CORRUGATED SHEET METAL POST AND SLAT GALVANIZED AND VINYL COATED GATE. ALL PARTS SHALL BE VINYL COATED EXCEPT MOVING PARTS WHICH WILL BE SPRAY PAINTED. PAINT SHALL MATCH COATING FOR FENCE AND GATE.

Corrugated Sheet Metal Gate With Safety Wire Fence

NOT TO SCALE

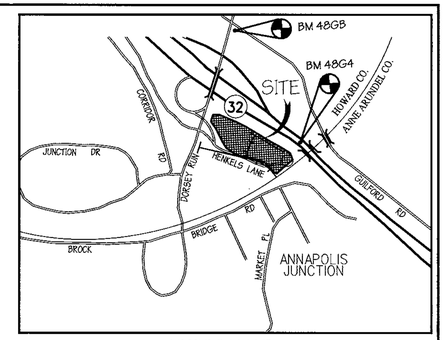

VICINITY MAP

SCALE: 1" = 1000'

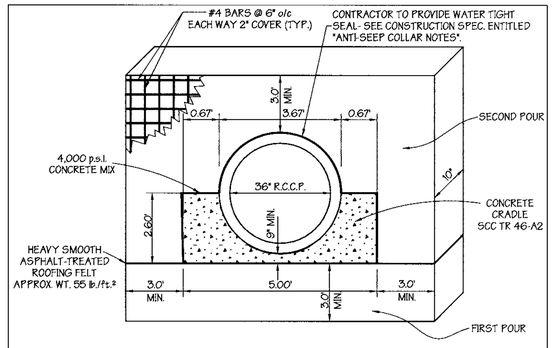

CONCRETE ANTI-SEEP COLLAR & CONCRETE CRADLE

N.T.S.

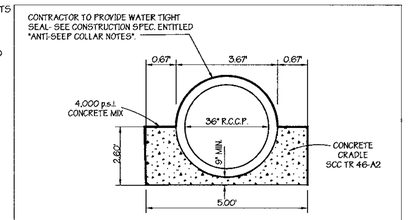

A-2 CONCRETE CRADLE DETAIL - TR-66

N.T.S.

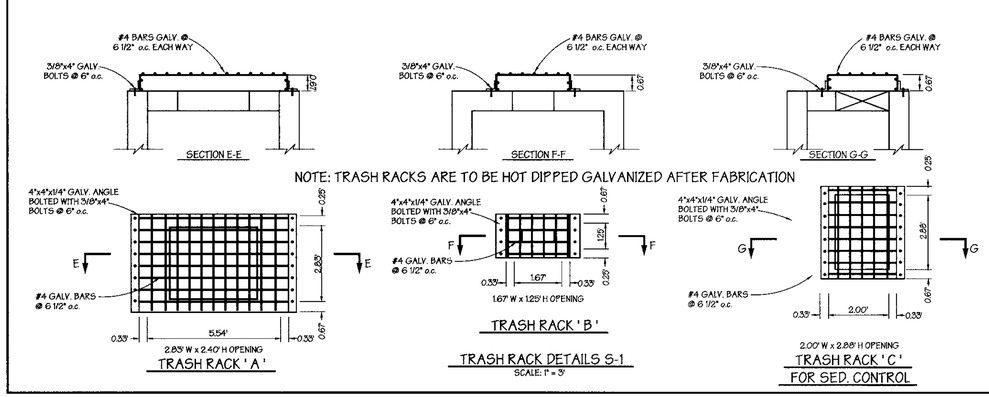

AS-BUILT CERTIFICATION:

I hereby certify that the facility shown on this plan was constructed as shown on the "as-built" plans and meet the approved plans and specifications.

Signature — P.E. # — Date:

Certify means to state or declare a professional opinion based upon on-site inspections and material tests which are conducted during construction. The on-site inspections and material tests are those inspections and tests deemed sufficient and appropriate by commonly accepted engineering standards. Certify does not mean or imply a guarantee by the engineer nor does an engineer's certification relieve any other party from meeting requirements imposed by contract, employment, or other means, including meeting commonly accepted industry practices.

CONSULTANT'S HAZARD CLASS CERTIFICATION:

I certify that this pond meets all requirements for hazard class (A) B or C. (Requirements as stated in the Soil Conservation Service - Maryland Standards and Specifications for Pond, Code 378, November 1982). All necessary investigations and computations have been performed to verify this finding. A copy of said information has been supplied to Howard County Soil Conservation District.

Signature — Date 5/27/99
Name James A. Marks Jr. — P.E. # 11005

These plans for S.W.M. construction, soil erosion and sediment control meet the requirements of Howard Soil Conservation District.

APPROVED: HOWARD SOIL CONSERVATION DISTRICT — DATE 6/7/99
PLAN NUMBER

Reviewed for the Howard Conservation District and meets technical requirements.

NATURAL RESOURCES CONSERVATION SERVICE — DATE 6/7/99

APPROVED: Howard County Department of Planning and Zoning

CHIEF, DEVELOPMENT ENGINEERING DIVISION — DATE 6/9/99
CHIEF, DIVISION OF LAND DEVELOPMENT — DATE 6/9/99
DIRECTOR — DATE 6/10/99

ADDRESS CHART

PARCEL NO.	STREET ADDRESS
BUILDING No. 1	8955 HENKELS LANE
BUILDING No. 2	8975 HENKELS LANE

SUBDIVISION NAME	SECTION NAME	PARCEL #
N/A	N/A	45

PLAT #	BLOCK #	ZONE	TAX MAP / ZONE	ELECT. DIST.	CENSUS TRACT
N/A	20	M-2	48	6	6069.01

WATER CODE 3-02 — SEWER CODE 4020000

PREPARED BY :

GEORGE W. STEPHENS, JR. AND ASSOCIATES, INC.
Civil Engineers and land Surveyors
658 Kenilworth Drive, Suite 100
Towson, Maryland 21204
(410) 825-8120

ENGINEER CERTIFICATION:

"I certify that this plan for pond construction, erosion and sediment control represents a practical and workable plan based on my personal knowledge of the site conditions and that it was prepared in accordance with the requirements of the Howard Soil Conservation District. I have notified the developer that he/she must engage a registered professional engineer to supervise pond construction and provide the Howard Soil Conservation District with an "as-built" plan of the pond within 30 days of completion."

Engineer — Date 5/27/99
Name James A. Marks Jr. — P.E. # 11005

DEVELOPER CERTIFICATION:

"I/We certify that all development and construction will be done according to this plan, and that any responsible personnel involved in the construction project will have a Certificate of Attendance at a Department of Environment Approved Training Program for the Control of Sediment and Erosion before beginning the project. I shall engage a registered professional engineer to supervise pond construction and provide the Howard Soil Conservation District with an "as-built" plan of the pond within 30 days of completion. I also authorize periodic on-site inspection by the howard soil conservation district."

Developer — Date 5/25/99
Name Gena L. Scaggs

OWNER / DEVELOPER / CONTRACT / PURCHASER

MERRITT - HK, LLC
2066 LORD BALTIMORE DR.
BALTIMORE, MD 21207
(410) 298-2600

DESIGNED BY: H.P.P.
DRAWN BY: J.N.L.
CHECKED BY: H.P.P.
REVISIONS

SWM NOTES & DETAILS

THE HENKEL PROPERTY

ELECTION DISTRICT : 6
HOWARD CO., MARYLAND

SCALE : As Shown
DATE : FEB. 02, 1999
SHEET 7 OF 12

SDP 99 - 94

P/N : 8976

8976011swmdet.s01 EMT 02/19/99

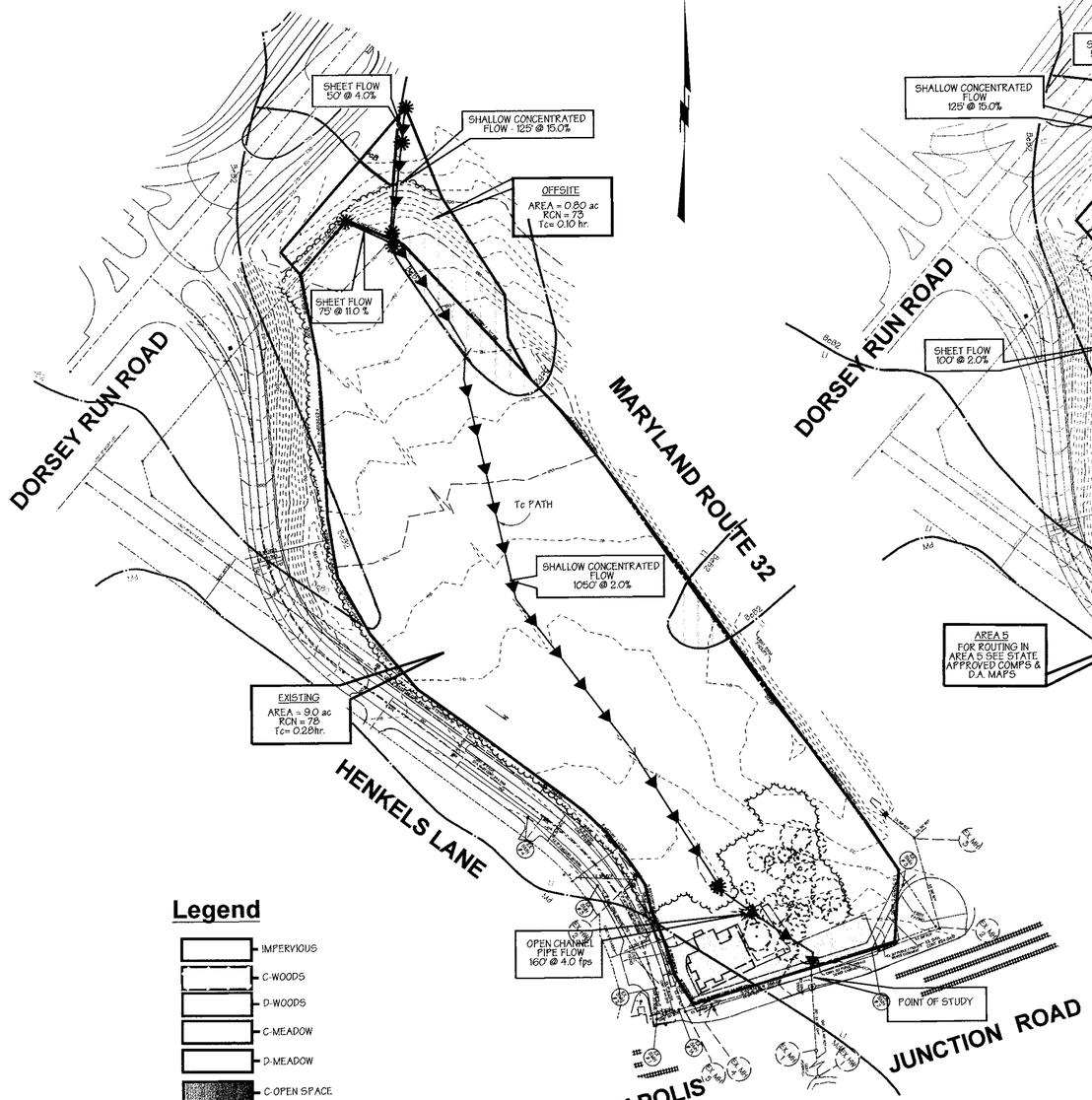

EXISTING DRAINAGE AREA

SCALE: 1"=100'

DORSEY RUN WATERSHED
PROPSED LAND USE: COMMERCIAL
(OFFICE WAREHOUSE)

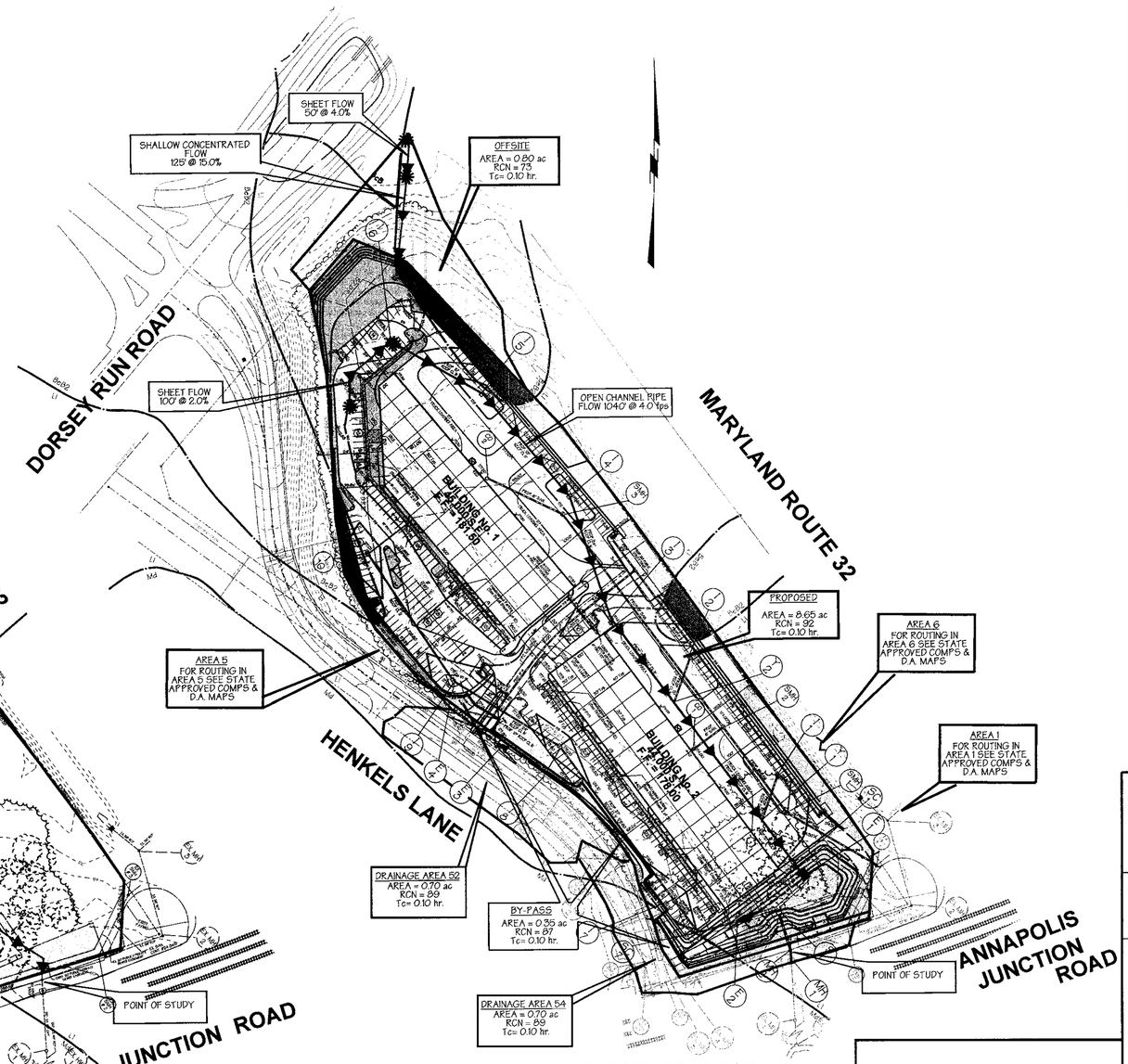

PROPOSED DRAINAGE AREA

SCALE: 1"=100'

DORSEY RUN WATERSHED
PROPSED LAND USE: COMMERCIAL
(OFFICE WAREHOUSE)

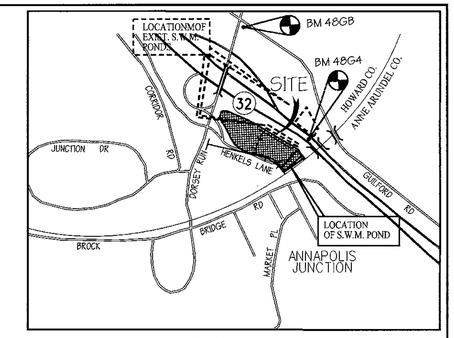

VICINITY MAP
SCALE: 1" = 1000'

Legend

- IMPERVIOUS
- C-WOODS
- D-WOODS
- C-MEADOW
- D-MEADOW
- C-OPEN SPACE
- D-OPEN SPACE

Ex. Contours — 394
Prop. Contours — 394
Ex. Curb & Gutter
Prop. Curb & Gutter
Ex. Sanitary
Ex. Storm Drain
Ex. Water
EX. R/W
DRAINAGE AREA

SOIL TYPES	HYDROLIC SOIL GROUPS
C	BcB2
D	LI
D	Md
C	ScB

These plans for S.W.M. construction, soil erosion and sediment control meet the requirements of Howard Soil Conservation District.

APPROVED: HOWARD SOIL CONSERVATION DISTRICT — DATE 6/7/99
PLAN NUMBER

Reviewed for the Howard Conservation District and meets technical requirements.

NATURAL RESOURCES CONSERVATION SERVICE — DATE 6/7/99

APPROVED: Howard County Department of Planning and Zoning

CHIEF, DEVELOPMENT ENGINEERING DIVISION — DATE 6/9/99
CHIEF, DIVISION OF LAND DEVELOPMENT — DATE 6/9/99
DIRECTOR — DATE 6/10/99

ADDRESS CHART	
PARCEL NO.	STREET ADDRESS
BUILDING No. 1	8955 HENKELS LANE
BUILDING No. 2	8975 HENKELS LANE

SUBDIVISION NAME	SECTION NAME	PARCEL #
N/A	N/A	45

PLAT #	BLOCK #	ZONE	TAX/ZONE MAP	ELECT. DIST.	CENSUS TRACT
N/A	20	M-2	48	6	6069.01

WATER CODE B-02 — SEWER CODE 4020000

PREPARED BY :

GEORGE W. STEPHENS, JR. AND ASSOCIATES, INC.
Civil Engineers and land Surveyors
658 Kenilworth Drive, Suite 100
Towson, Maryland 21204
(410) 825-8120

OWNER / DEVELOPER / CONTRACT / PURCHASER
MERRITT - HK, LLC
2066 LORD BALTIMORE DR.
BALTIMORE, MD 21207
(410) 298-2600

DESIGNED BY: H.P.P.
DRAWN BY: J.N.L.
CHECKED BY: H.P.P.
REVISIONS

STORM WATER MANAGEMENT DRAINAGE AREA MAPS

THE HENKEL PROPERTY

ELECTION DISTRICT : 6
HOWARD CO., MARYLAND

SCALE : As Shown
DATE : FEB. 02, 1999
SHEET 8 OF 12

SDP 99 - 94

P/N : 8976

8976005damap.s01 EMT 02/18/99

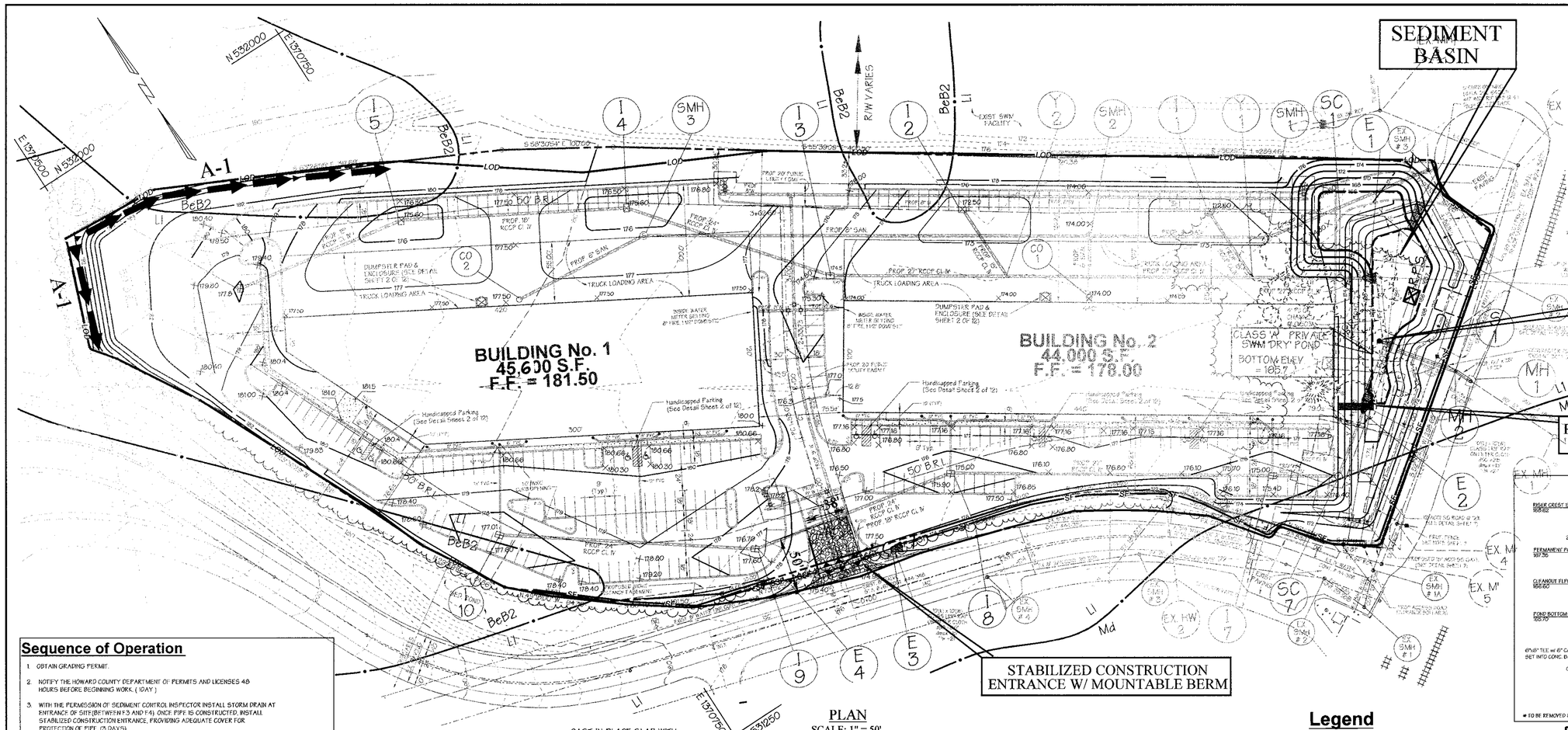

PLAN
SCALE: 1" = 50'

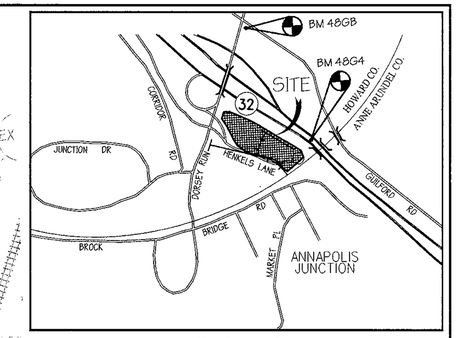

VICINITY MAP
SCALE: 1" = 1000'

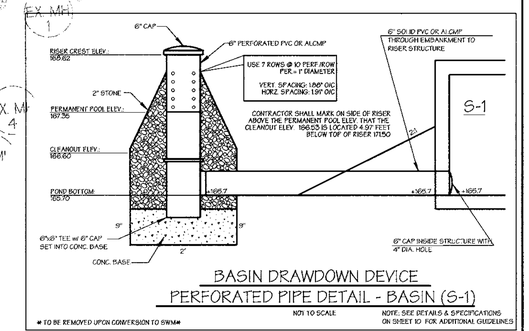

BASIN DRAWDOWN DEVICE
PERFORATED PIPE DETAIL - BASIN (S-1)
NOT TO SCALE
NOTE: SEE DETAILS & SPECIFICATIONS ON SHEET 10 FOR ADDITIONAL GUIDELINES
TO BE REMOVED UPON CONVERSION TO SWM#

Sequence of Operation

1. OBTAIN GRADING PERMIT.
2. NOTIFY THE HOWARD COUNTY DEPARTMENT OF PERMITS AND LICENSES 48 HOURS BEFORE BEGINNING WORK. (1DAY)
3. WITH THE PERMISSION OF SEDIMENT CONTROL INSPECTOR INSTALL STORM DRAIN AT ENTRANCE OF SITE(BETWEEN F3 AND F4). ONCE PIPE IS CONSTRUCTED, INSTALL STABILIZED CONSTRUCTION ENTRANCE, PROVIDING ADEQUATE COVER FOR PROTECTION OF PIPE. (5 DAYS)
4. CLEAR AND GRUB FOR SEDIMENT AND EROSION CONTROL MEASURES OR DEVICES ONLY. INSTALL SILT FENCE, AND EARTH DIKES. (5 DAYS)
5. INSTALL SEDIMENT BASIN. CONTRACTOR TO REMOVE EXIST. INLET AND 15" RCP (AS SHOWN ON SEDIMENT CONTROL PLAN). INSTALL MH 1 AND MH 2 AND 60" X 48" ERCCP TO REPLACE THE EXISTING MH5 AND EXISTING 53" X 34" ERCCP (SEE STORM DRAIN PLAN AND PROFILES). INSTALL RISER, BARREL & DEWATERING DEVICE.
   (DRY STORAGE: EL. 168.81; PERMANENT POOL EL: 167.38; CLEANOUT EL. 166.53) (10 DAYS)

   THE SEDIMENT BASIN IS TO BE CONVERTED TO A STORM WATER MANAGEMENT POND AFTER THE SITE IS STABILIZED AND APPROVED BY THE INSPECTOR, AND SHALL BE CONSTRUCTED TO MD 378 SPECIFICATIONS. CONSTRUCTION OF THE BASIN SHALL BE INSPECTED BY A GEOTECHNICAL ENGINEER WHO SHALL BE RESPONSIBLE FOR PROVIDING THE DEVELOPER A COMPLETE REPORT TO INCLUDE THE FOLLOWING:
   1) VERIFICATION OF CUTOFF TRENCH MATERIAL AND COMPACTION.
   2) PRINCIPAL SPILLWAY ,ANTI SEEP COLLAR AND RISER INSTALLATION

   G.W. STEPHENS, JR. & ASSOCIATES, INC. SHALL BE KEPT INFORMED AT ALL STAGES OF CONSTRUCTION SO KEY ASPECTS OF THE BASIN CONSTRUCTION MAY BE OBSERVED AND DOCUMENTED.

   A REMOVABLE PUMPING STATION SHALL BE USED TO DEWATER BASINS. THE LOCATION OF SPOILS AREA DURING CONSTRUCTION AND FOR FINAL BASIN DREDGE IS TO BE WITHIN THE LIMIT OF DISTURBANCE AND UP STREAM FROM A SEDIMENT CONTROL MEASURE OR HAULED TO A SITE WITH AN APPROVED SEDIMENT CONTROL PLAN, AND AN OPEN GRADING PERMIT.
6. BEGIN GRADING OPERATIONS, AND INSTALL UTILITIES. (30 DAYS)
   SANITARY SEWER BETWEEN EXISTING SMH AND PROP. SMH 1 TO BE CONSTRUCTED AFTER SEDIMENT BASIN HAS BEEN CONVERTED TO SWM POND WITH THE APPROVAL FROM THE SEDIMENT CONTROL INSPECTOR.
   ANY AREA NEEDED FOR A TEMPORARY STOCKPILE WILL BE LOCATED WITHIN THE LIMITS OF DISTURBANCE AND UPSTREAM FROM A SEDIMENT CONTROL MEASURE, BUT NOT LOCATED SO AS TO IMPEDE THAT MEASURE. CONTRACTOR TO MAINTAIN POSITIVE DRAINAGE TO SEDIMENT BASIN DURING ALL PHASES OF CONSTRUCTION. REPAIR ANY SEDIMENT CONTROL DEVICE DAMAGED BY UTILITY CONSTRUCTION AT THE END OF EACH DAY.
7. BEGIN BUILDING CONSTRUCTION.
8. INSTALLED CURB & GUTTER AND PAVEMENT SUB BASE. FINE GRADE AND SEED LAWN AREAS (14 DAYS)
9. COMPLETE PAVING OPERATIONS.
10. FINE GRADE AND STABILIZE ANY REMAINING AREAS. FLUSH STORM DRAINS. WITH THE APPROVAL OF THE SEDIMENT CONTROL INSPECTOR REMOVE THE REMAINING SEDIMENT CONTROL MEASURES AND STABILIZE. CONVERT THE SEDIMENT BASINS ACCORDING TO THE APPROVED STORM WATER MANAGEMENT PLANS AND FILE AS BUILTS WHEN COMPLETED.

* ALL WORK IN EXISTING PAVED AREAS IS TO BE STABILIZED WITH STONE AT THE END OF EACH WORK DAY.

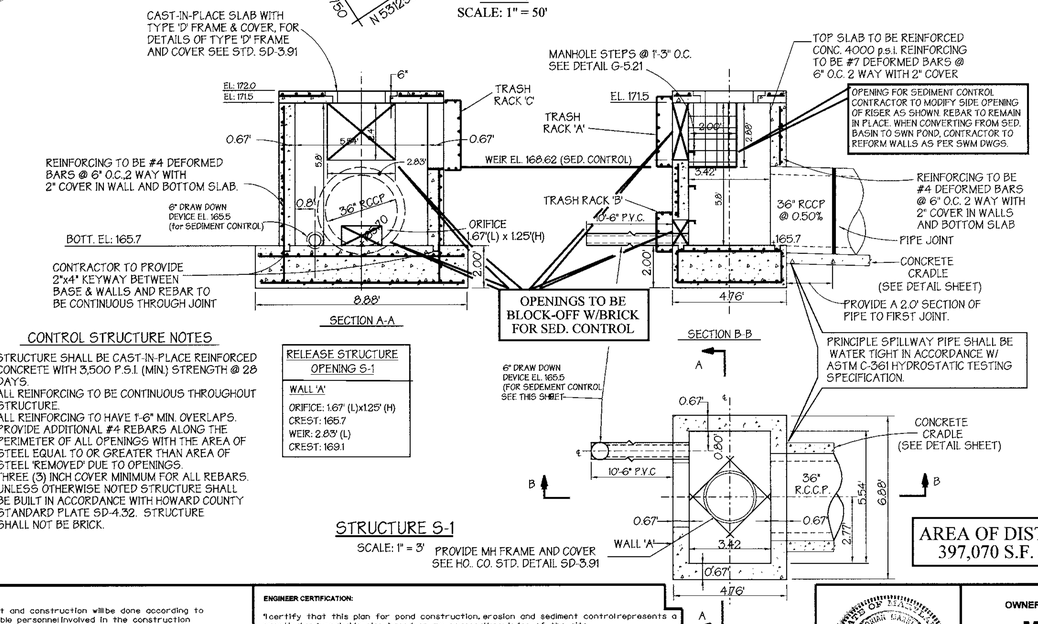

CONTROL STRUCTURE NOTES

1. STRUCTURE SHALL BE CAST-IN-PLACE REINFORCED CONCRETE WITH 3,500 P.S.I. (MIN.) STRENGTH @ 28 DAYS.
2. ALL REINFORCING TO BE CONTINUOUS THROUGHOUT STRUCTURE.
3. ALL REINFORCING TO HAVE 1'-6" MIN. OVERLAPS.
4. PROVIDE ADDITIONAL #4 REBARS ALONG THE PERIMETER OF ALL OPENINGS WITH THE AREA OF STEEL EQUAL TO OR GREATER THAN AREA OF STEEL 'REMOVED' DUE TO OPENINGS.
5. THREE (3) INCH COVER MINIMUM FOR ALL REBARS.
6. UNLESS OTHERWISE NOTED STRUCTURE SHALL BE BUILT IN ACCORDANCE WITH HOWARD COUNTY STANDARD PLATE SD-4.32. STRUCTURE SHALL NOT BE BRICK.

RELEASE STRUCTURE OPENING S-1
WALL 'A'
ORIFICE: 1.67' (L) x 1.25' (H)
CREST: 165.7
WEIR: 2.83' (L)
CREST: 168.1

STRUCTURE S-1
SCALE: 1" = 3'

Legend

Ex. 2' Contours	394
Ex. 10' Contours	395
Prop. 2' Contours	394
Prop. 10' Contours	395
Ex. Curb & Gutter	
Prop. Curb & Gutter	
Bldg. Restriction Line	
Ex. Sanitary	
Ex. Storm Drain	
Ex. Water	
Prop. Sanitary	
Prop. Storm Drain	PROP. B/W
Prop Water	
LOD	LIMIT OF DISTURBANCE
SF	SILT FENCE
	EARTH DIKE
R.P.S.	REMOVABLE PUMPING STATION

AREA OF DISTURBANCE
397,070 S.F. / 9.12 AC.

These plans for S.W.M. construction, soil erosion and sediment control meet the requirements of Howard Soil Conservation District.

APPROVED: HOWARD SOIL CONSERVATION DISTRICT — DATE 6/7/99
PLAN NUMBER

Reviewed for the Howard Conservation District and meets technical requirements.

NATURAL RESOURCES CONSERVATION SERVICE — DATE 6/7/99

APPROVED: Howard County Department of Planning and Zoning

CHIEF, DEVELOPMENT ENGINEERING DIVISION — DATE 6/9/99
CHIEF, DIVISION OF LAND DEVELOPMENT — DATE 6/9/99
DIRECTOR — DATE 6/10/99

ADDRESS CHART	
PARCEL NO.	STREET ADDRESS
BUILDING No. 1	8955 HENKELS LANE
BUILDING No. 2	8975 HENKELS LANE

SUBDIVISION NAME	SECTION NAME	PARCEL #
N/A	N/A	45

PLAT #	BLOCK #	ZONE	TAX MAP / ZONE MAP	ELECT. DIST.	CENSUS TRACT
N/A	20	M-2	48	6	6069.01

WATER CODE B-02 — SEWER CODE 4020000

PREPARED BY :

GEORGE W. STEPHENS, JR. AND ASSOCIATES, INC.
Civil Engineers and land Surveyors
658 Kenilworth Drive, Suite 100
Towson, Maryland 21204
(410) 825-8120

DEVELOPER CERTIFICATION:
"I/We certify that all development and construction will be done according to this plan, and that any responsible personnel involved in the construction project will have a Certificate of Attendance at a Department of the Environment Approved Training Program for the Control of Sediment and Erosion before beginning the project. I shall engage a registered professional engineer to supervise pond construction and provide the howard soil conservation district with an "as-built" plan of the pond within 30 days of completion. I also authorize periodic on-site inspection by the howard soil conservation district."
Developer — Date 5/26/99
Name — Gena L. Scaggs

ENGINEER CERTIFICATION:
"I certify that this plan for pond construction, erosion and sediment control represents a practical and workable plan based on my personal knowledge of the site conditions and that it was prepared in accordance with the requirements of the Howard Soil Conservation District. I have notified the developer that he/she must engage a registered professional engineer to supervise pond construction and provide the howard soil conservation district with an "as-built" plan of the pond within 30 days of completion."
Engineer — Date 5/27/99
Name — JAMES A. MARKUS JR. — PE # 11005

OWNER / DEVELOPER / CONTRACT / PURCHASER
MERRITT - HK, LLC
2066 LORD BALTIMORE DR.
BALTIMORE, MD 21207
(410) 298-2600

DESIGNED BY: H.P.P.
DRAWN BY: J.N.L.
CHECKED BY: H.P.P.
REVISIONS

SEDIMENT CONTROL PLAN AND DETAILS
THE HENKEL PROPERTY

ELECTION DISTRICT : 6
HOWARD CO., MARYLAND

SCALE : As Shown
DATE : FEB. 02, 1999
SHEET 9 OF 12

SDP 99 - 94

P/N : 8976

8976006sedctrl.s01 EMT 02/18/99

Stabilization Specifications

Section I - Vegetative Stabilization Methods and Materials

A. Site Preparation

i. Install erosion and sediment control structures (either temporary or permanent) such as diversions, grade stabilization structures, berms, waterways, or sediment control basins.

ii. Perform all grading operations at right angles to the slope. Final grading and shaping is not usually necessary for temporary seeding.

iii. Schedule required soil tests to determine soil amendment composition and application rates for sites having disturbed area over 5 acres.

B. Soil Amendments (Fertilizer and Lime Specifications)

i. Soil tests must be performed to determine the exact ratios and application rates for both lime and fertilizer on sites having disturbed areas over 5 acres. Soil analysis may be performed by the University of Maryland or a recognized commercial laboratory. Soil samples may be taken for engineering purposes may also be used for chemical analysis.

ii. Fertilizers shall be uniform in composition, free flowing and suitable for accurate application by approved equipment. Manure may be substituted for fertilizer with prior approval from the appropriate approval authority. Fertilizers shall all be delivered to the site fully labeled according to the applicable state fertilizer laws and shall bear the name, trade name or trademark and warrantee of the producer.

iii. Lime materials shall be ground limestone (hydrated or burnt lime may be substituted) which contain at least 50% total neutralizing potential (when calcium oxide plus magnesium oxide). Limestone shall be ground to such fineness that at least 50% will pass through a #100 mesh sieve and 98 - 100% will pass through a #20 mesh sieve.

iv. Incorporate lime and fertilizer into the top 3 - 5" of soil by disking or other suitable means.

v. Soil Amendments - Use only one of the following schedules

1. Preferred - Apply 2 tons per acre dolomitic limestone (92 lbs / 1000 s.f.) and 600 lbs. per acre 10-10-10 fertilizer (14 lbs / 1000 s.f.). Before seeding, harrow or disc into upper three inches of soil. At time of seeding, apply 400 lbs. per acre 20-20-0 uniform fertilizer (9 lbs / 1000 s.f.).

2. Acceptable - Apply 2 tons per acre dolomitic limestone (92lbs / 1000 s.f.) and 1000 lbs. per acre 10-10-10 fertilizer (23 lbs. / 1000 s.f.) before seeding, harrow or disc upper three inches of soil.

C. Seedbed Preparation

i. Temporary Seeding

a. Seedbed preparation shall consist of loosening soil to a depth of suitable agricultural or construction equipment, such as disc harrows or chisel plows or rippers mounted on construction equipment. After the soil is loosened it should not be rolled or dragged smooth but left in the roughened condition. Sloped areas (greater than 3:1) should not be tracked leaving the surface in an irregular condition with ridges running parallel to the contour of the slope.

b. Apply fertilizer and lime as prescribed on the plan.

c. Incorporate lime and fertilizer into the top 3 - 5" of soil by disking or other suitable means.

ii. Permanent Seeding

a. Minimum soil conditions required for permanent vegetative establishment:

1. Soil pH shall be between 6.0 and 7.0.
2. Soluble salts shall be less than 500 parts per million (ppm).
3. The soil shall contain less than 40% clay but enough fine grained material (> 30% silt plus clay) to provide the capacity to hold a moderate amount of moisture. An exception is if lovegrass or serecia lespedeza is to be planted, then a sandy soil (<70% silt plus clay) would be acceptable.
4. Soil shall contain 1.5% minimum organic matter by weight.
5. Soil must contain sufficient pore space to permit adequate root penetration.
6. If these conditions cannot be met by soils on site, adding topsoil is required in accordance with Section 21 Standard and Specification for Topsoil.

b. Areas previously graded in conformance with the drawings shall be maintained in a true and even grade, then scarified or otherwise loosened to a depth of 3 - 5" to permit bonding of the topsoil to the surface area and to create horizontal crenelation check slots to prevent topsoil from sliding down a slope.

c. Apply soil amendments as per soil test or as included on the plans.

d. Mix soil amendments into the top 3 - 5" of topsoil by disking or other suitable means. Lawn areas should be raked to remove the surface stones or large objects like stones and branches, and ready the area for seed application. Where site conditions will not permit normal seedbed preparation, loosen surface soil by dragging with a heavy chain or other equipment to roughen the surface. Steep slopes (steeper than 3:1) should be tracked by a dozer leaving the soil in an irregular condition with ridges running parallel to the contour of the slope. The top 1 - 3" of soil should be loose and friable. Seedbed loosening may not be necessary on newly disturbed areas.

D. Seed Specifications

i. All seed must meet the requirements of the Maryland State Seed Law. All seed shall be subject to re-testing by a recognized seed laboratory. All seed used shall have been tested within the 6 months immediately preceding the date of sowing each material in this job.

ii. Inoculant - The inoculant for treating legume seed in the seed mixture shall be a pure culture of nitrogen-fixing bacteria prepared specifically for the species. Inoculants shall not be used later than the date indicated on the container. Add fresh inoculant as directed on package. Use four times the recommended rate when hydroseeding. NOTE: It is very important to keep inoculant as cool as possible until used. Temperatures above 75 - 80 degrees F. can weaken bacteria and make inoculant less effective.

NOTE: SEED TAGS SHALL BE MADE AVAILABLE TO THE INSPECTOR TO VERIFY TYPE AND RATE OF SEED USED.

E. Methods of Seeding

i. Hydroseeding. Apply seed uniformly with hydroseeder (slurry includes seed and fertilizer), broadcast or drop seeder, or a cultipacker seeder.

a. If fertilizer is being applied at the time of seeding, the application rates amounts will not exceed the following: nitrogen; maximum of 100 lbs. per acre total soluble nitrogen; P205 (phosphorus): 200 lbs./ac; K20 (potassium): 200 lbs./ac.

b. Lime - use only ground agricultural limestone, (Up to 3 tons per acre may be applied by hydroseeding). Normally, not more than 2 tons are applied by hydroseeding at any one time. Do not use burnt or hydrated lime when hydroseeding.

c. Seed and fertilizer shall be mixed on site and seeding shall be done immediately and without interruption.

ii. Dry Seeding: This includes use of conventional drop or broadcast spreaders.

a. Seed spread dry shall be incorporated into the subsoil at the rates prescribed on the Temporary or Permanent Seeding Summaries or Tables 25 or 26. The seeded area shall then be rolled with a weighted roller to provide good seed to soil contact.

b. Where practical, seed should be applied in two directions perpendicular to each other. Apply half the seeding rate in each direction.

iii. Drill or Cultipacker Seeding: Mechanized seeders that apply and cover seed with soil.

a. Cultipacking seeders are required to bury the seed in such a fashion as to provide at least 1/4 inch of soil covering. Seedbed must be firm after planting.

b. Where practical, seed should be applied in two directions perpendicular to each other. Apply half the seeding rate in each direction.

F. Mulch Specifications (In order of preference)

i. Straw shall consist of thoroughly threshed wheat, rye or oat straw, reasonably bright in color, and shall not be musty, moldy, caked, decayed, or excessively dusty and shall be free of noxious weed seeds as specified in the Maryland Seed Law.

ii. Wood Cellulose Fiber Mulch (WCFM)

a. WCFM shall consist of specially prepared wood cellulose processed into a uniform fibrous physical state.

b. WCFM shall be dyed green or contain a green dye in the package that will provide an appropriate color to facilitate visual inspection of the uniformly spread slurry.

c. WCFM, including dye, shall contain no germination or growth inhibiting factors.

d. WCFM materials shall be manufactured and processed in such a manner that the wood cellulose fiber mulch will remain in uniform suspension in water under agitation and will blend with seed, fertilizer and other additives to form a homogeneous slurry. The mulch material shall form a blotter-like ground cover, on application, having moisture absorption and percolation properties and shall cover and hold grass seed in contact with the soil without inhibiting the growth of the grass seedlings.

e. WCFM material shall contain no elements or compounds at concentration levels that will be phyto-toxic.

f. WCFM must conform to the following physical requirements: fiber length to approximately 10 mm., diameter approximately 1 mm., pH range of 4.0 to 8.5, ash content of 1.6% maximum and water holding capacity of 90% minimum.

NOTE: ONLY STERILE STRAW MULCH SHOULD BE USED IN AREAS WHERE ONE SPECIES OF GRASS IS DESIRED.

G. Mulching Seeded Areas - Mulch shall be applied to all seeded areas immediately after seeding.

i. If grading is completed outside of the seeding season, mulch alone shall be applied as prescribed in this section and maintained until the seeding season returns and seeding can be performed in accordance with these specifications.

ii. When straw mulch is used, it shall be spread over all seeded areas at the rate of 2 tons/acre. Mulch shall be applied to a uniform loose depth of between 1" and 2". Mulch applied shall achieve a uniform distribution and depth so that the soil surface is not exposed. If a mulch anchoring tool is to be used, the rate should be increased to 2.5 tons/acre.

iii. Wood cellulose fiber used as a mulch shall be applied at a net dry weight of 1,500 lbs. per acre. The wood cellulose fiber shall be mixed with water, and the mixture shall contain a maximum of 50 lbs. of wood cellulose fiber per 100 gallons of water.

H. Securing Straw Mulch (Mulch Anchoring): Mulch anchoring shall be performed immediately following mulch.

i. A mulch anchoring tool in a tractor drawn implement designed to punch and anchor mulch into the soil surface a minimum of two (2) inches. This practice is most effective on large areas, but is limited to flatter slopes where equipment can operate safely. If used on sloping land, this practice should be used on the contour if possible.

ii. Wood cellulose fiber may be used for anchoring straw. The fiber binder shall be applied at a net dry weight of 750 pounds/acre. The wood cellulose fiber shall be mixed with water and the mixture shall contain a maximum of 50 pounds of wood cellulose fiber per 100 gallons of water.

iii. Application of liquid binders should be heavier at the edges where wind catches mulch, such as in valleys and on the crests of knolls. The remainder of area should appear uniform after binder application. Synthetic binders - such as Acrylic DLR (Aergo-Tack), DCA-70, Petroset, Terra Tax II, Terra Tack AR or other approved equal may be used at rates recommended by the manufacturer to anchor mulch.

iv. Lightweight plastic netting may be stapled over the mulch according to manufacturer's recommendations. Netting is usually available in rolls 4' to 15' feet wide and 300 to 3000 feet long.

Section II - Temporary Seeding

Vegetation - annual grass or grain used to provide cover on disturbed areas for up to 12 months. For longer duration of vegetative cover, Permanent Seeding is required.

A. Seed Mixtures - Permanent Seeding

i. select one or more off the species or mixtures listed in Table 25 for the appropriate Plant Hardiness Zone (from figure 5) and enter them in Permanent Seeding Summary below, along with application rates and seeding dates. Seeding depths can be estimated using Table 26. If this Summary is not put on the construction plans and completed, then Table 25 must be put on the plans. Additional planting specifications for exceptional sites such as shorelines, streambanks, dunes or for special purposes such as wildlife or aesthetic treatment may be found in USDA-SCS Technical Field Office Guide, Section 342 - Critical Area Planting. For special lawn maintenance areas, see Sections IV Sod and V Turfgrass.

ii. For sites having disturbed areas over 5 acres, the rates shown on this table shall be deleted and the rates recommended by the seeding agency shall be written in.

iii. For areas receiving low maintenance, apply ureaform fertilizer (46-0-0) at 5-1/2 lbs/1000 sq. ft. (250 lbs/ac). In addition to the above soil amendments shown in the table below, to be performed as the time of seeding

Section III - Permanent Seeding

Seeding grass and legumes to establish ground cover for a minimum period of one year on disturbed areas generally receiving low maintenance.

A. Seed Mixtures - Permanent Seeding

i. select one or more off the species or mixtures listed in Table 25 for the appropriate Plant Hardiness Zone (from figure 5) and enter them in Permanent Seeding Summary below, along with application rates and seeding dates. Seeding depths can be estimated using Table 26. If this Summary is not put on the construction plans and completed, then Table 25 must be put on the plans. Additional planting specifications for exceptional sites such as shorelines, streambanks, dunes or for special purposes such as wildlife or aesthetic treatment may be found in USDA-SCS Technical Field Office Guide, Section 342 - Critical Area Planting. For special lawn maintenance areas, see Sections IV Sod and V Turfgrass.

ii. For sites having disturbed areas over 5 acres, the rates shown on this table shall be deleted and the rates recommended by the seeding agency shall be written in.

iii. For areas receiving low maintenance, apply ureaform fertilizer (46-0-0) at 5-1/2 lbs/1000 sq. ft. (250 lbs/ac). In addition to the above soil amendments shown in the table below, to be performed as the time of seeding

Section IV - Sod: To provide quick cover on disturbed areas (2:1 grade or steeper).

A. General specifications

i. Class of turfgrass sod shall be Maryland or Virginia State Certified or Approval. Sod labels shall be made available to the job foreman and inspector.

ii. Sod shall be machine cut at a uniform soil thickness of 3/4", plus or minus 1/4", as the time of cutting. Measurement for thickness shall exclude top growth and thatch. Individual pieces of sod shall be cut to the suppliers width and length. Maximum allowable deviation from standard widths and lengths shall be 5 percent. Broken pads and torn or uneven ends will not be acceptable.

iii. Standard size sections of sod shall be strong enough to support their own weight and retain their size and shape when suspended vertically with a firm grasp on the upper 10 percent of the section.

iv. Sod shall not be harvested or transplanted when moisture content (excessively dry or wet) may adversely affect its survival.

v. Sod shall be harvested, delivered, and installed within a period of 36 hours. Sod not transplanted within this period shall be approved by an agronomist or soil scientist prior to its installation.

vi. Site Preparation : Fertilizer and Lime application rates will be determined by soil test. Under unusual circumstances where there is insufficient time for a complete soil test, fertilizer and lime may be applied in amounts shown under vii b, below.

a. Prior to sodding, the surface will be cleared of all trash, debris, and of all roots/brush, wire, grade stakes and other objects that would interfere with planting, fertilizing, or maintenance operations.

b. Where soil is acid or composed of heavy clays, ground limestone will be spread at the rate of 2 tons per acre(92 lbs / 1000 s.f.). In all soils 1000 lbs per acre (23 lbs. / 1000 s.f.) of 10-10-10 fertilizer or equivalent will be uniformly applied and mixed into the top three inches of soil with the required time.

c. All areas recieving sod will be uniformly fine graded. Hard packed earth will be scarified prior to placement of sod.

24.0 MATERIALS SPECIFICATIONS
Table 27 Geotextile Fabric

CLASS	APPARENT OPENING SIZE MM. MAX.	GRAB TENSILE STRENGTH LB. MIN.	BURST STRENGTH PSI. MIN.
A	0.30 **	250	500
B	0.60	200	320
C	0.30	200	320
D	0.60	90	145
E	0.30	90	145
F (SILT FENCE)	0.40-0.80*	90	190

* US Std. Sieve CW-02215 ** 0.50 MM. MAX. FOR SUPER SILT FENCE

The properties shall be determined in accordance with the following procedures:

- Apparent opening size	MSMT 323
-Grab tensile strength	ASTM D 1682: 4 x 8" specimen, 1x2" clamps, 12" /min. strain rate in both principal directions of geotextile fabric.
-Burst strength	ASTM D 3786

The fabric shall be inert to commonly encountered chemicals and hydrocarbons, and will be rot and mildew resistant. It shall be manufactured from fibers consisting of long chain synthetic polymers, and composed of a minimum of 85% by weight of polyolephins, polyesters, or polymides. The geotextile fabric shall resist deterioration from ultraviolet exposure.

In addition, Classes A through E shall have a 0.01 cm/sec. minimum permeability when tested in accordance with MSMT 507, and an apparent minimum elongation of 20 percent (20%) when tested in accordance with the grab tensile strength requirements listed above.

Silt Fence

Class F geotextile fabric for silt fence have a 50 lb/in. minimum tensile strength and a 20 lb/in. minimum tensile modulus when tested in accordance with MSMT 509. The material shall also have a 0.3 gal/ft²/min. flow rate and seventy-five percent (75%) minimum filtering efficiency when tested in accordance with MSMT 322.

Geotextile fabrics used in the construction of silt fence shall resist deterioration from ultraviolet exposure. The fabric shall contain sufficient amounts of ultraviolet ray inhibitors and stabilizers to provide a minimum of 12 months of expected usable construction life at a temperature range of 0 to 120 degrees F.

Sediment Control Notes

1. A MINIMUM OF 48 HOURS NOTICE MUST BE GIVEN TO THE HOWARD COUNTY DEPARTMENT OF INSPECTIONS, LICENSES AND PERMITS, SEDIMENT CONTROL DIVISION PRIOR TO THE START OF ANY CONSTRUCTION (313-1855).
2. ALL VEGETATIVE AND STRUCTURAL PRACTICES ARE TO BE INSTALLED ACCORDING TO THE PROVISIONS OF THIS PLAN AND ARE TO BE IN CONFORMANCE WITH THE 1994 MARYLAND STANDARDS AND SPECIFICATIONS FOR SOIL EROSION AND SEDIMENT CONTROL" AND REVISIONS THERETO.
3. FOLLOWING INITIAL SOIL DISTURBANCE OR RE-DISTURBANCE, PERMANENT OR TEMPORARY STABILIZATION SHALL BE COMPLETED WITHIN:
   A) 7 CALENDAR DAYS FOR ALL PERIMETER SEDIMENT CONTROL STRUCTURES, DIKES, PERIMETER SLOPES AND ALL SLOPES GREATER THAN 3:1,
   B) 14 DAYS FOR ALL OTHER DISTURBED OR GRADED AREAS ON THE PROJECT SITE.
4. IF REQUIRED BY SEDIMENT CONTROL INSPECTOR SEDIMENT TRAPS/BASINS SHOWN MUST BE FENCED AND WARNING SIGNS POSTED AROUND THEIR PERIMETER IN ACCORDANCE WITH VOL. 1, CHAPTER 7, OF THE HOWARD COUNTY DESIGN MANUAL, STORM DRAINAGE.
5. ALL DISTURBED AREAS MUST BE STABILIZED WITHIN THE TIME PERIOD SPECIFIED ABOVE IN ACCORDANCE WITH THE 1994 MARYLAND STANDARDS AND SPECIFICATIONS FOR SOIL EROSION AND SEDIMENT CONTROL FOR PERMANENT SEEDING, SOD, TEMPORARY SEEDING AND MULCHING (SEE G). TEMPORARY STABILIZATION WITH MULCH ALONE SHALL ONLY BE DONE WHEN RECOMMENDED SEEDING DATES DO NOT ALLOW FOR PROPER GERMINATION AND ESTABLISHMENT OF GRASSES.
6. ALL SEDIMENT CONTROL STRUCTURES ARE TO REMAIN IN PLACE AND ARE TO BE MAINTAINED IN OPERATIVE CONDITION UNTIL PERMISSION FOR THEIR REMOVAL HAS BEEN OBTAINED FROM THE HOWARD COUNTY SEDIMENT CONTROL INSPECTOR.
7. SITE ANALYSIS:
   TOTAL AREA OF SITE 9.88 ACRES
   AREA DISTURBED 9.12 ACRES
   AREA TO BE ROOFED OR PAVED 6.84 ACRES
   AREA TO BE VEGETATIVELY STABILIZED 2.96 ACRES
   TOTAL CUT 17,858 C.Y.
   TOTAL FILL 17,858 C.Y. (INCLUDES 15% COMPACTION)
   OFFSITE WASTE/BORROW AREA LOCATION : EXCESS CUT SHALL BE TAKEN TO A SITE WITH AN OPEN GRADING PERMIT.
8. ANY SEDIMENT CONTROL PRACTICE WHICH IS DISTURBED BY GRADING ACTIVITY FOR PLACEMENT OF UTILITIES MUST BE REPAIRED ON THE SAME DAY OF DISTURBANCE.
9. ADDITIONAL SEDIMENT CONTROLS MUST BE PROVIDED, IF DEEMED NECESSARY BY THE HOWARD COUNTY DEPARTMENT OF PUBLIC WORKS SEDIMENT CONTROL INSPECTOR.
10. ON ALL SITES WITH DISTURBED AREAS IN EXCESS OF 2 ACRES, APPROVAL OF THE INSPECTION AGENCY SHALL BE REQUESTED UPON COMPLETION OF INSTALLATION OF PERIMETER EROSION AND SEDIMENT CONTROLS, BUT BEFORE PROCEEDING WITH ANY OTHER EARTH DISTURBANCE OR GRADING. OTHER BUILDING OR GRADING INSPECTION APPROVALS MAY NOT BE AUTHORIZED UNTIL THIS INITIAL APPROVAL BY THE INSPECTION AGENCY IS MADE.
11. TRENCHES FOR THE CONSTRUCTION OF UTILITIES IS LIMITED TO THREE PIPE LENGTHS OR THAT WHICH SHALL BE BACK-FILLED AND STABILIZED WITHIN ONE WORKING DAY, WHICHEVER IS SHORTER.

Table 26 - Temporary Seeding Rates, Depths, and Dates HARDINESS ZONE

SPECIES	MINIMUM SEEDING RATES LBS./AC	MINIMUM SEEDING RATES LBS./1000 SQ.FT.	PLANTING DEPTH (INCHES)	HARDINESS ZONES AND SEEDING DATES 5a	5b	6a	6b	7a	7b
	PER ACRE	PER 1000 SQ.FT.		4/21 - 5/20	4/16 - 5/20	4/12 - 5/20	4/1 - 5/20	3/15 - 5/20	3/15 - 5/20
SMOOTH BROME GRASS	50 lbs	1.15	1 - 2	X	X	X	X	X	X
BARLEY	93 lbs	2.14	1 - 2	X	-	X	X	X	X
OATS	3 bu.	2.06	1 - 2	X	-	X	X	X	X
RYE	2.5 bu.	2.90	1 - 2	X	-	X	X	X	X
ANNUAL RYEGRASS	30 lbs	0.69	1	X	X	X	X	X	X
PERENNIAL RYEGRASS	30 lbs	0.69	1	X	X	X	X	X	X
FOXTAIL MILLET									
WEEPING LOVEGRASS	4 lbs.	.09	1/4 - 1/2	-	X		X	-	-
ANNUAL RYEGRASS	50 lbs.	1.15	1/4 - 1/2	X	-	1/15	X	-	1/15
MILLET	50 lbs.	1.15	1/2	-	X	-	-	X	X

TEMPORARY SEEDING RATES

FERTILIZER RATE (10-10-10) N	P205	K20	LIME RATE
100LBS/AC (2.3 LBS/1000 S.F.)	175 LBS/AC (4.0 LBS/1000 S.F.)	175 LBS/AC (4.0 LBS/1000 S.F.)	2 TONS/AC (100 LBS/1000 S.F.)

NOTE:
FOR SITES HAVING DISTURBED AREAS OVER 5 ACRES THE RATES SHOWN ABOVE FOR PERMANENT SEEDING SHALL BE DELETED AND THE RATES RECOMMENDED BY THE SOIL TESTING AGENCY SHALL BE USED. SOIL TESTING SHALL BE PERFORMED AT THE TIME OF FINE GRADING AND THE RESULTS SHALL BE FURNISHED TO THE SEDIMENT CONTROL INSPECTOR.

Table 25 - Permanent Seeding for Low Maintenance Areas HARDINESS ZONE

MIX #	SEED MIX (USE CERTIFIED MATERIAL IF AVAILABLE)	PLANTING RATE LBS./AC	PLANTING RATE LBS./1000 SQ.FT.	SITE CONDITIONS	USDA HARDINESS ZONES	RECOMMENDED PLANTING DATES 3/1 - 5/15	5/16 - 8/14	8/15 - 10/15	8/1 - 10/15	3/15 - 5/15	8/15 - 10/15	SOIL TYPES
1	TALL FESCUE (95%) CANADA BLUEGRASS (5%) KENTUCKY BLUEGRASS (5%) FESCUE (95%)	150	3.4	MOIST TO DRY	5a	X		X				A
					5b	X		X				
					6a	X		X		X	X	
					6b	X	X			X		
					7a	X				X	X	
2	KENTUCKY BLUEGRASS (50%) CREEPING RED FESCUE OR A HARD FESCUE (50%) FESCUE (10%)	150	3.4	MOIST TO MODERATELY DRY	5a		X		X			B
					5b		X		X			
					6a		X		X			
					6b	X	X		X	X		
3	TALL FESCUE (80%) PERENNIAL RYEGRASS (10%) KENTUCKY BLUEGRASS (10%)	120 10 10	2.8 .23 .23	MOIST TO DRY	5a		X		X			C
					5b		X		X			
					6A		X		X			
					6B	X	X			X		
					7A	X					X	
					7B	X					X	
4	RED FESCUE OR CHEWINGS FESCUE (60%) PERENNIAL RYEGRASS (20%)	60 20 16	.92 .46 .34	MOIST TO DRY	5a	X		X			X	D
					5b	X		X		X		
					6a	X		X				
					6b	X	X			X		
5	TALL FESCUE (45%) OR PERENNIAL RYEGRASS (50%) PLUS CROWN VETCH OR FLATPEA	20 20 20	46 46 46	MOIST TO DRY	5a	X		X			X	E
					5b	X		X				
					6a	X		X		X		
					7a	X					X	
6	WEEPING LOVEGRASS (75%) SERICEA LESPEDEZA (25%)	4 20	.09 .46	DRY TO VERY DRY	6a	X		X				F
					7a	X		X				
7	TALL FESCUE (65%) WEEPING LOVEGRASS (25%) PLUS SERICEA LESPEDEZA (25%)	90 5 20	2.5 .07 .46	DRY TO VERY DRY	5b	X		X	X			G
					6a	X		X	X			
					6b	X	X			X		
					7a	X	X				X	
					7b	X	X				X	
8	RED CANARYGRASS (75%) FESCUE (15) PLUS MEADOW FESCUE (10%)	40 3 10	.92 .07 .23	MOIST TO MODERATELY DRY	5a			X		X		H
					6a			X		X		
					6b	X		X			X	
					7a	X					X	
					7b	X					X	
9	TALL FESCUE (60%) FOX TROT (7%) MEADOW FESCUE (7%)	125 10 10	2.8 .23 .23	WET TO MODERATELY DRY	5a		X		X			I
					6a		X		X			
					6b		X		X			
10	TALL FESCUE (80%) WEEPING FESCUE (20%)	120 30	3.4 .69	WET TO DRY	5a		X		X			J
					5b		X		X			
					6a		X		X	X		
					6b	X	X			X		
					7a		X		X		X	
					7b	X	X				X	
11	WEEPING FESCUE (100%)	75	1.7	MOIST TO DRY	5a	X		X				K
					5b	X		X				
					6a	X		X		X		
					6b	X				X		
					7a	X				X		
					7b	X				X		

NOTES:
A. SEED BY MAY 15 SHA ON SLOPED AREAS. ADD A LEGUME FOR SLOPES > THAN 3:1
B. USED IN MESIC AREAS BY SHA. SHADE TOLERANT.
C. POPULAR MIX - PROVIDES PERMANENT GROUNDCOVER QUICKLY. RHIZOMATOUS THICKENS STAND.
D. BEST USE ON SANDY SLOPES NOT ON POORLY DRAINED CLAYS.
E. USE ON DRY, INFERTILE SITES. ATTRACTS WILDLIFE. USE TALL FESCUE IN DRAUGHTY CONDITIONS. CROWN VETCH BEST FOR 5b, 6a, 6b
F. BEST SUITED FOR SITES IN MID-SUMMER.
G. WEEPING LOVEGRASS MAY BE SEEDED WITH TALL FESCUE IN MID-SUMMER. SERICEA LESPEDEZA IS BEST SUITED FOR ZONES 7a AND 7b
H. USE ON POORLY DRAINED SOILS - STICKER OR WATERWAYS. BROMEGRASS TREFOILS BEST FOR ZONES 5b, 6a, ABOVE 2,000 FEET.
I. USE IN AREAS OF MORE SHADE. FOX TROT GRAS THRIVES IN WET SHADY AREAS.
J. TALL FESCUE MAY BE SEEDED ALONE. THE MIXED FESCUE PROVIDES BETTER SHADE TOLERANCE AND PRODUCES A BETTER STAND
K. LOW FERTILITY GRASS. REQUIRES INFREQUENT MOWING. GOOD COMPANION FOR WILDFLOWERS.

PERMANENT SEEDING RATES

FERTILIZER RATE (10-20-20) N	P205	K20	LIME RATE
100LBS/AC (2.3 LBS/1000 S.F.)	175 LBS/AC (4.0 LBS/1000 S.F.)	175 LBS/AC (4.0 LBS/1000 S.F.)	2 TONS/AC (100 LBS/1000 S.F.)

NOTE:
FOR SITES HAVING DISTURBED AREAS OVER 5 ACRES THE RATES SHOWN ABOVE FOR PERMANENT SEEDING SHALL BE DELETED AND THE RATES RECOMMENDED BY THE SOIL TESTING AGENCY SHALL BE USED. SOIL TESTING SHALL BE PERFORMED AT THE TIME OF FINE GRADING AND THE RESULTS SHALL BE FURNISHED TO THE SEDIMENT CONTROL INSPECTOR.

DETAIL 5 - RIP-RAP INFLOW PROTECTION

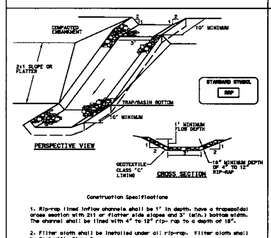

Construction Specifications

1. Rip-rap lined inflow channels shall be 1' in depth, have a trapezoidal cross section with 2:1 or flatter side slopes and 3' (min.) bottom width. The channel shall be lined with 6" to 18" rip-rap to a depth of 18".
2. Filter cloth shall be installed under all rip-rap. Filter cloth shall be Geotextile Class C.
3. Entrance and exit sections shall be installed as shown on the detail section.
4. Rip-rap used for the lining may be recycled for permanent outlet protection if the basin is to be converted to a stormwater management facility.
5. Gabion Inflow Protection may be used in lieu of Rip-rap Inflow Protection.
6. Rip-rap should blend into existing ground.
7. Rip-rap Inflow Protection shall have the slope is between 4% and 10%; for slopes flatter than 10:1 use Earth Dike or Temporary Swale lining criteria.

U.S. DEPARTMENT OF AGRICULTURE SOIL CONSERVATION SERVICE | PAGE D - 6 - 8 | MARYLAND DEPARTMENT OF ENVIRONMENT WATER MANAGEMENT ADMINISTRATION

DETAIL 20A - REMOVABLE PUMPING STATION

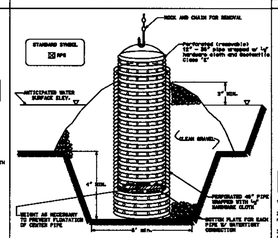

Construction Specifications

1. The outer pipe should be 48" dia. or wide i.e. 36 wide x 48 deep or larger to provide a minimum of 1 cubic yard of stone per 1 cfs of flow. Place the pipe in the lowest point of the site.
2. Other installing the outer pipe: backfill around outer pipe with 3" aggregate or larger to a depth of 6" of area over the pipe. Place enough stone around the pipe to allow at least 6" of area over the pipe. Place the top of the pipe at least 6" below the top of the stone. The perforations must be above the sediment storage area so sediment will not be washed into the pipe. Place a 1" thick piece of plywood cut to fit the inside of the pipe to close off the end.
3. Location of a stabilized construction entrance shall be located at each point where construction traffic enters or leaves a construction site. Vehicles leaving the site must travel over the entire length of the stabilized construction entrance.

DETAIL 24 - STABILIZED CONSTRUCTION ENTRANCE

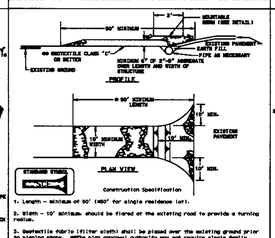

Construction Specification

1. Length - minimum of 50' (*30' for single residence lot).
2. Width - 10' minimum, should be flared at the entering road to provide a turning radius.
3. Geotextile fabric (filter cloth) shall be placed over the entering ground prior placing stone. Define plan approval authority may not require single family residences to use geotextile.
4. Stone - crushed aggregate (2" to 3") or reclaimed or recycled concrete equivalent shall be placed at least 6" deep over the length and width of the entrance.
5. Surface Water - all surface water flowing to or diverted toward construction entrances shall be piped through the entrance, maintaining positive drainage. Pipe installed through the stabilized construction entrance shall be protected with a mountable berm with 5:1 slopes and a minimum of 6" of stone over the pipe. Pipe to be sized according to the drainage. When the SCE is located at a high spot and has no drainage to convey a pipe will not be necessary. Pipe should be sized according to the amount of runoff to be conveyed. A 6" minimum will be required.
6. Location - a stabilized construction entrance shall be located at every point where construction traffic enters or leaves a construction site. Vehicles leaving the site must travel over the entire length of the stabilized construction entrance.

DETAIL 33 - SUPER SILT FENCE

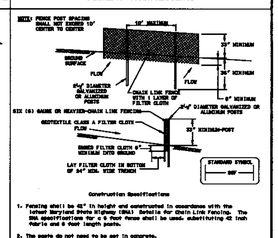

Construction Specifications

1. Fencing shall be 36" in height and constructed in accordance with the latest Maryland State Highway (SHA) Details for Chain Link Fencing. The SHA specifications for a 6 foot fence shall be used, substituting 42 inch fabric and 8 foot length posts.
2. The posts do not need to be set in concrete.
3. Chain link fence shall be fastened securely to the fence posts with wire ties or staples. The lower tension wire, brace and truss rods, drive anchors and post caps are not required except on the ends of the fence. The chain link fence shall be six (6) gauge or heavier.
4. Filter cloth shall be fastened securely to the chain link fence with ties spaced every 24" at the top and mid section.
5. Filter cloth shall be embedded a minimum of 8" into the ground.
6. When two sections of geotextile fabric adjoin each other, they shall be overlapped by 6" and folded.
7. Maintenance shall be performed as needed and silt buildups removed when "bulges" develop in the silt fence, or when silt reaches 50% of the fence height.

U.S. DEPARTMENT OF AGRICULTURE SOIL CONSERVATION SERVICE | STANDARD SYMBOL SSF

DETAIL 1 - EARTH DIKE

1. Seed and cover with straw mulch.
2. Seed and cover with Erosion Control Matting or like with seed.
3. 4" - 7" stone or recycled concrete

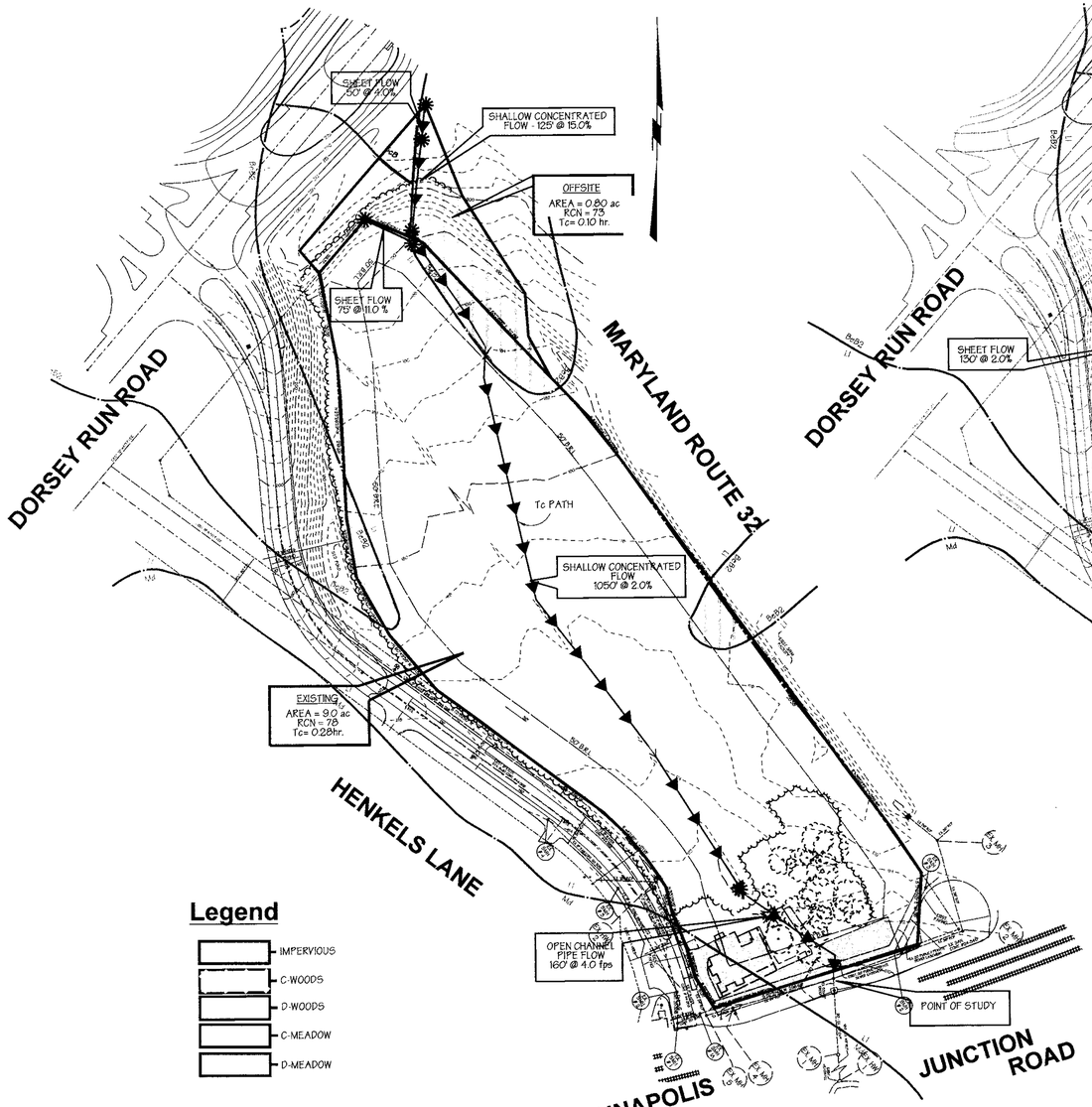

EXISTING DRAINAGE AREA

SCALE: 1"=100'

DORSEY RUN WATERSHED
PROPSED LAND USE: COMMERCIAL
(OFFICE WAREHOUSE)

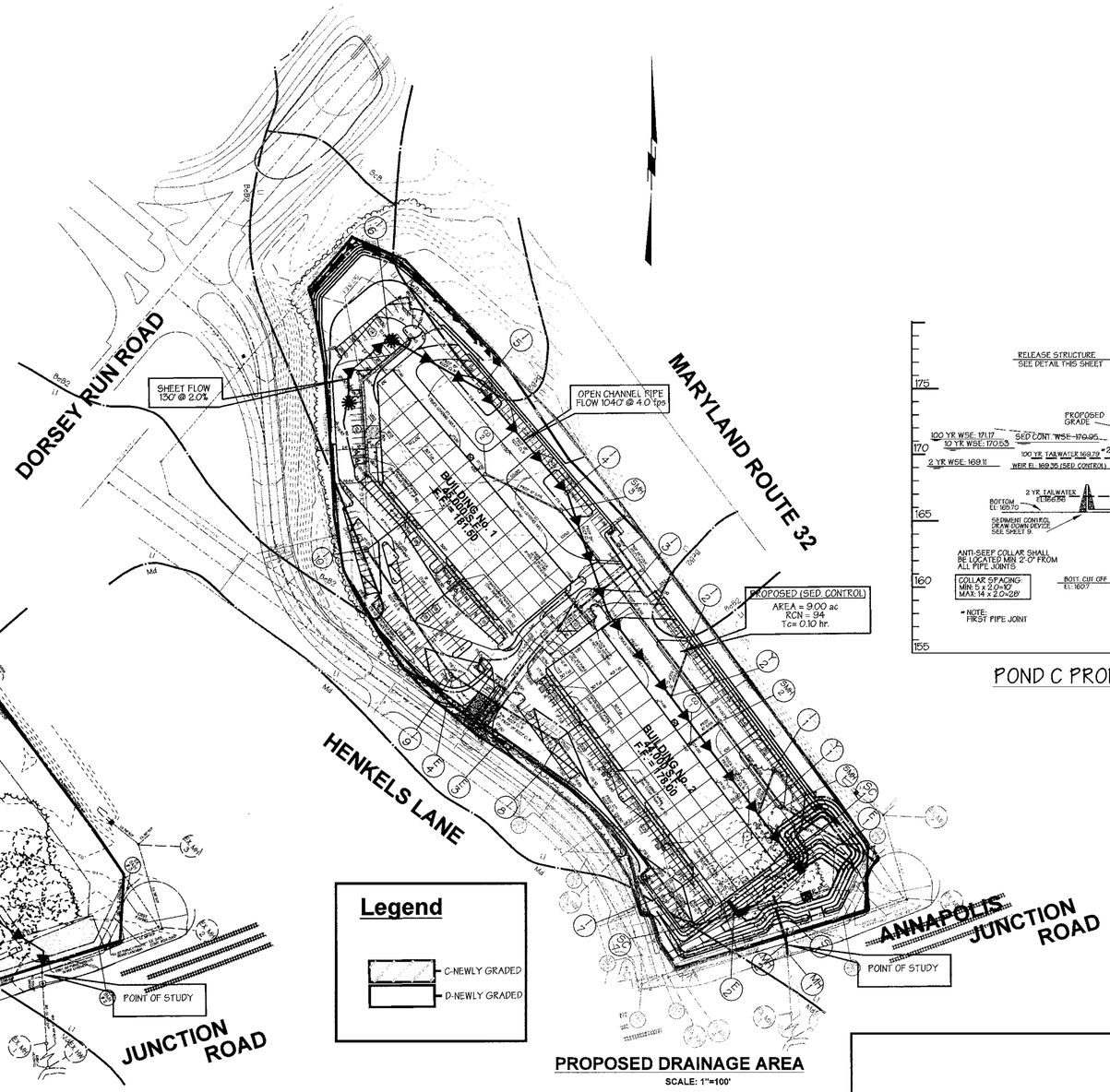

PROPOSED DRAINAGE AREA

SCALE: 1"=100'

DORSEY RUN WATERSHED
PROPSED LAND USE: COMMERCIAL
(OFFICE WAREHOUSE)

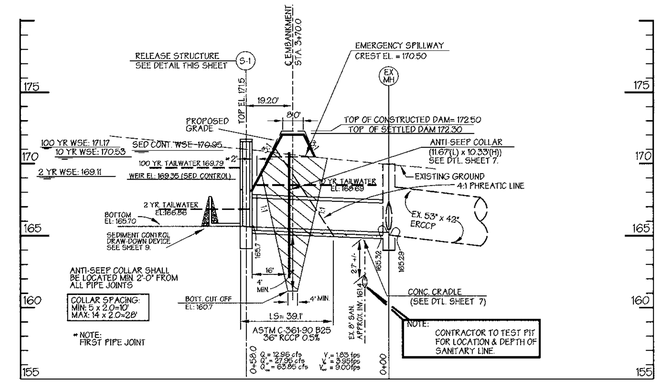

POND C PROFILE ALONG ℄ OF EMBANKMENT

SCALE: HORZ: 1"=30'
VERT: 1"=5'

These plans for S.W.M. construction, soil erosion and sediment control meet the requirements of Howard Soil Conservation District.

APPROVED: HOWARD SOIL CONSERVATION DISTRICT — DATE 6/7/99

PLAN NUMBER

Reviewed for the Howard Conservation District and meets technical requirements.

NATURAL RESOURCES CONSERVATION SERVICE — DATE 6/7/99

APPROVED: Howard County Department of Planning and Zoning

CHIEF, DEVELOPMENT ENGINEERING DIVISION — DATE 6/9/99 AK

CHIEF, DIVISION OF LAND DEVELOPMENT — DATE 6/9/99 TC

DIRECTOR — DATE 6/10/99

ADDRESS CHART

PARCEL NO.	STREET ADDRESS
BUILDING No. 1	8955 HENKELS LANE
BUILDING No. 2	8975 HENKELS LANE

SUBDIVISION NAME	SECTION NAME	PARCEL #
N/A	N/A	45

PLAT #	BLOCK #	ZONE	TAX MAP /ZONE	ELECT. DIST.	CENSUS TRACT
N/A	20	M-2	48	6	6069.01

WATER CODE B-02 — SEWER CODE 4020000

Legend

- IMPERVIOUS
- C-WOODS
- D-WOODS
- C-MEADOW
- D-MEADOW

Legend

- C-NEWLY GRADED
- D-NEWLY GRADED

Ex. Contours — 394
Prop. Contours — 394
Ex. Curb & Gutter
Prop. Curb & Gutter
Ex. Sanitary
Ex. Storm Drain
Ex. Water
EX. R/W
DRAINAGE AREA

SOIL TYPES	HYDROLIC SOIL GROUPS
C	BeB2
D	LI
D	Md
C	ScB

PREPARED BY :

GEORGE W. STEPHENS, JR. AND ASSOCIATES, INC.
Civil Engineers and land Surveyors
658 Kenilworth Drive, Suite 100
Towson, Maryland 21204
(410) 825-8120

STATE OF MARYLAND — MARK ADRIAN LAGALY — No. 17268 — REGISTERED PROFESSIONAL ENGINEER

OWNER / DEVELOPER / CONTRACT / PURCHASER

MERRITT - HK, LLC
2066 LORD BALTIMORE DR.
BALTIMORE, MD 21207
(410) 298-2600

DESIGNED BY: H.P.P.
DRAWN BY: J.N.L.
CHECKED BY: H.P.P.
REVISIONS

SEDIMENT CONTROL DRAINAGE AREA MAPS & DETAILS

THE HENKEL PROPERTY

ELECTION DISTRICT : 6
HOWARD CO., MARYLAND

SCALE : As Shown
DATE : FEB. 02, 1999
SHEET 11 OF 12

SDP 99 - 94

F/N : 8976

8976sddamaps01 EMT 02/18/99

PLANT SCHEDULE

KEY	QUANT.	BOTANICAL NAME / COMMON NAME	SIZE / COND.	SPACING	REMARKS
TREES					
AS	21	*Acer saccharum 'Green Mountain' / Green Mountain Sugar Maple*	2-2 1/2" cal. / B&B	25' o.c. as shown	fullcrown
AR	19	*Acer rubrum 'October Glory' / October Glory Red Maple*	2-2 1/2" cal. / B&B	25' o.c. as shown	full crown
FP	26	*Fraxinus pennsylvanica 'Patmore' / Patmore Green Ash*	2-2 1/2" cal. / B&B	25' o.c. as shown	full crown
SJ	4	*Sophora japonica Regent / Regent Scholartree*	2-2 1/2" cal. / B&B	25' o.c. as shown	full crown
LS	9	*Liquidambar styraciflua / Sweetgum*	2-2 1/2" cal. / B&B	25' o.c. as shown	full crown
LT	3	*Liriodendron tulipifera / Tuliptree*	2-2 1/2" cal. / B&B	25' o.c. as shown	full crown
KP	8	*Koelreuteria paniculata / Golden Rain Tree*	1 1/2 -2" cal. / B&B	15' o.c. as shown	matched
PK	3	*Prunus serrulata 'Kwanzan' / Kwanzan Cherry*	1 1/2 -2" cal. / B&B	15' o.c. as shown	matched
AL	7	*Amelanchier x grandiflora 'Lamarkii' / Lamarkii Serviceberry*	8-10 ht.' / B&B	15' o.c. as shown	multi-stem
WP	20	*Pinus strobus / Eastern White Pine*	5-6 ht.' / B&B	10' o.c. as shown	sheared
NS	28	*Picea abies / Norway Spruce*	5-6 ht.' / B&B	10' o.c. as shown	full to base
CL	82	*x Cupressocyparis leiandii / Leyland Cypress*	5-6 ht.' / B&B	9' o.c. as shown	full to base
CH	4	*Tsuga canadensis*	5-6 ht.' / B&B	10' o.c. as shown	full to base
SHRUBS					
AJ	12	*Juniperus chinensis 'Plumosa' / Andorra Juniper*	24-30" spr. / cont.	3' o.c.	
EK	124	*Euonymus kiautschovica 'Manhattan' / Manhattan Euonymus*	2 1/2-3' ht. / B&B	4' o.c.	
EA	66	*Euonymus alata 'Compacta' / Dwarf Winged Euonymus*	2 1/2-3' ht. / cont.	4' o.c.	
BX	16	*Berberis x gladwynensis 'Wm. Penn' / William Penn Barberry*	24-30" spr. / cont.	3.5' o.c.	
VS	35	*Viburnum plicatum tomentosum 'Shasta'* / Shasta Doublefile Viburnum	2 ½-3' ht. / B&B	4' o.c.	

SCHEDULE A
PERIMETER LANDSCAPE EDGE

CATAGORY	ADJACENT TO ROADWAYS			ADJACENT TO PERIMETER PROPERTIES
Landscape Type	B	D	E	A
Linear Feet of Roadway Frontage Perimeter	104'	950'	1540'	395'
Credit for existing Vegetation,Yes,No (Linear Feet)	NO	NO	NO	NO
Credit for Wall, Fence,or Berm (Yes, No,Linear Feet)	NO	NO	NO	NO
Number of Plants Required:				
Shade Trees	2	15.8	38.5	6.5
Evergreen Trees	2.6	95		
Shrubs			385	
Number of Plants Provided:				
Shade Trees	3	16	39	7
Evergreen Trees	3	95	17	
Other Trees (2x sub.)			16	
Shrubs (10x sub.)			253	

Comments:

SCHEDULE B
PARKING LOT INTERNAL LANDSCAPING

Number of Parking Spaces	218
Number of Trees Required	10.9
Number of Trees Provided	
Shade Trees	11
Other Trees (2x sub.)	

Number of landscaped islands req.
Number of landscaped islands provided

SCHEDULE D
STORMWATER MANAGEMENT AREA LANDSCAPING

LINEAR FEET OF PERIMETER	500
Number of Trees Required	
Shade Trees	10
Evergreen	12.5
Credit for Existing Vegetation (No,Yes and %)	NO
Credit for Other Landscaping (No,Yes and %)	NO
Number of Trees Provided	
Shade Trees	9
Evergreen	13
Other Trees (2x sub.)	7

KEY

- PROPOSED SHADE TREE
- PROPOSED MINOR SHADE OR FLOWERING TREE
- PROPOSED EVERGREEN TREE
- PROPOSED SHRUBS

Site Data

TOTAL AREA OF SITE :	392,040 SQ. FT. OR 9.00 Ac.+/-
EXISTING ZONING :	M-2
PROPERTY REFERENCE	****
EXISTING USE :	VACANT
PROPOSED USE :	OFFICE/WAREHOUSE
BUILDING COVERAGE :	89,000 SQ. FT/2.04 AC +/-
% BUILDING COVERAGE :	22.7%
FLOOR AREA RATIO :	0.25
AREA TO BE PAVED PLUS BUILDING AREA :	263,100 SQ. FT. /6.04 AC +/-
OPEN SPACE :	128,936 SQ. FT./2.96 AC +/-
TOTAL AREA OF PARKING LOT :	174,240 SQ. FT./4.00 AC+/-
% PARKING LOT COVERAGE :	44.4%
AREA TO BE DISTURBED :	392,040 SQ. FT./9.00 AC+/-
AREA TO BE VEGETATIVELY STABILIZED :	128,936 SQ. FT./2.96 AC +/-
PREVIOUS SKETCH NO :	
PRELIMINARY NO :	
FINAL PLAT NO. :	

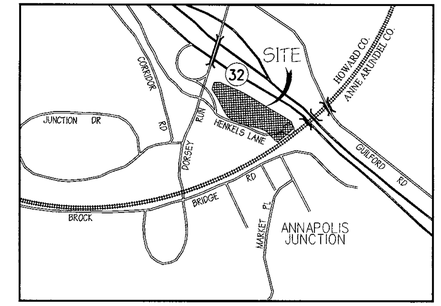

VICINITY MAP
SCALE: 1" = 1000'

ALL TREES PLANTED WITHIN THE SIGHT LINE EASEMENT SHALL BE LIMBED UP TO A MINIMUM HEIGHT OF 7 FEET FROM GROUND LEVEL.

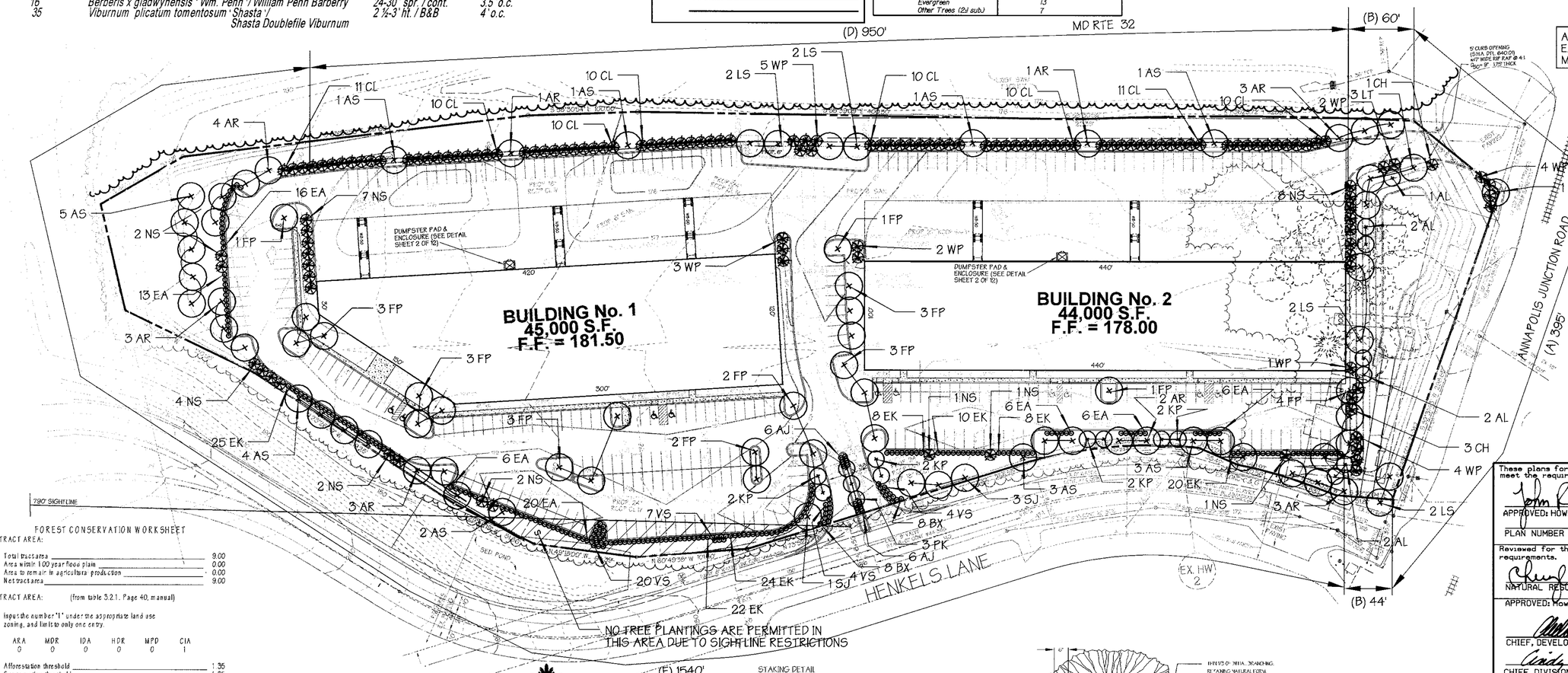

PLANTING NOTES

PLANT LOCATIONS SHALL BE FIELD ADJUSTED TO AVOID UTILITIES. CONTRACTOR IS RESPONSIBLE FOR LOCATING UTILITIES PRIOR TO START OF WORK. ALL TREES AND SHRUBS SHALL BE MULCHED TO A MINIMUM OF 18" BEYOND THE EDGE OF THE ROOT BALL. SHRUBS MASSES SHALL BE PLANTED IN CONTINUOUS MULCH BEDS. ALL WIRE, PLASTIC AND TWINE TIES SHALL BE REMOVED FROM OF OF THE ROOT BALL.

PLANT STANDARDS

ALL NURSERY STOCK SHALL BE TOP QUALITY AND IN ACCORDANCE WITH THE AMERICAN ASSOCIATION OF NURSERYMEN, INC., AMERICAN STANDARDS FOR NURSERY STOCK, LATEST EDITION. INFERIOR NURSERY STOCK WILL BE SUBJECT TO REJECTION BY THE LANDSCAPE ARCHITECT. BARE-ROOT SHALL NOT BE ALLOWED FOR ANY TREE DEFINED AS MAJOR DECIDUOUS, MINOR DECIDUOUS OR EVERGREEN

CHANGES MAY IMPACT REQUIRED CERTIFICATION

PLANT TYPES (DECIDUOUS TREES, EVERGREEN, ETC.), QUANTITIES, SPACING, LOCATION, AND SPECIES SHOWN ON THE APPROVED LANDSCAPE PLAN ARE BASED ON REQUIREMENTS STATED IN THE LATEST HOWARD COUNTY LANDSCAPE MANUAL. ANY CHANGE IN THESE ITEMS MAY AFFECT THE REQUIRED APPROVAL AND CERTIFICATION OF THE INSTALLED PLANTING. OWNER IS REQUIRED TO ARRANGE AND PAY FOR CERTIFICATION BY LANDSCAPE ARCHITECT.

LANDSCAPE SPECIFICATIONS

LANDSCAPE SPECIFICATION SHALL CONFORM TO LCA LANDSCAPE SPECIFICATION GUIDELINES FOR BALTIMORE-WASHINGTON METROPOLITAN AREA, INCLUDING PLANTING PROCEDURES AND SOIL PREPARATION FOR SHRUBS AND PERENNIAL BEDS. A ONE-YEAR WARRANTY PERIOD SHALL BE REQUIRED. MAINTENANCE REQUIRED TO HONOR THE ONE-YEAR WARRANTY SHALL BE PERFORMED AS PART OF THIS CONTRACT.

SPECIAL PROVISIONS TO LCA STANDARD SPECIFICATIONS

CONTRACTOR IS ENCOURAGED TO PERFORM SOIL TESTING. TEST RESULTS SHALL BE SUBMITTED 30 DAYS BEFORE PLANTING. FAILURE TO PERFORM TESTING WILL NOT VOID GUARANTEE PROVISIONS.

CONTRACTOR SHALL REVIEW AND TEST SUBSOIL DRAINAGE CHARACTERISTICS 30 DAYS PRIOR TO PLANTING AND NOTIFY OWNER UNACCEPTABLE CONDITIONS.

NO EXCEPTIONS TO THE GUARANTEE PROVISIONS ARE ALLOWED UNLESS AGREED TO IN WRITING PRIOR TO PLANTING.

1) THIS PLAN HAS BEEN PREPARED IN ACCORDANCE WITH SECTION 16.124 OF THE HOWARD COUNTY CODE AND THE LANDSCAPE MANUAL.
2) BONDING, SURETY FOR THE REQUIRED 487 LANDSCAPE TREES, IN THE AMOUNT OF $54,990.00, IS PART OF THE DEVELOPER'S AGREEMENT.
3) ALTERNATIVE COMPLIANCE - BASED ON TOPOGRAPHY - GRANTED FOR SWM BUFFER TO ANNAPOLIS JUNCTION ROAD.

These plans for S.W.M. construction, soil erosion and sediment control meet the requirements of Howard Soil Conservation District.

APPROVED: HOWARD SOIL CONSERVATION DISTRICT — DATE 6/7/99
PLAN NUMBER

Reviewed for the Howard Conservation District and meets technical requirements.

NATURAL RESOURCES CONSERVATION SERVICE — DATE 6/7/99

APPROVED: Howard County Department of Planning and Zoning

CHIEF, DEVELOPMENT ENGINEERING DIVISION — DATE 6/9/99

CHIEF, DIVISION OF LAND DEVELOPMENT — DATE 6/9/99

DIRECTOR — DATE 6/10/99

ADDRESS CHART	
PARCEL NO.	STREET ADDRESS
BUILDING No. 1	8955 HENKELS LANE
BUILDING No. 2	8975 HENKELS LANE

SUBDIVISION NAME	SECTION NAME	PARCEL #
N/A	N/A	45

PLAT #	BLOCK #	ZONE	TAX /ZONE MAP	ELECT. DIST.	CENSUS TRACT
N/A	20	M-2	48	6	6069.01

WATER CODE B-02 — SEWER CODE 4020000

FOREST CONSERVATION WORKSHEET

NET TRACT AREA:

A.	Total tract area	9.00
B.	Area within 100 year flood plain	0.00
C.	Area to remain in agricultural production	0.00
D.	Net tract area	9.00

NET TRACT AREA: (from table 3.2.1., Page 40, manual)

Input the number "1" under the appropriate land use zoning, and limit to only one entry.

ARA	MDR	IDA	HDR	MPD	CIA
0	0	0	0	0	1

E.	Afforestation threshold	1.35
F.	Conservation threshold	1.35

EXISTING FOREST COVER:

G.	Existing forest cover (excluding floodplain)	7.97
H.	Area of forest above afforestation threshold	6.56
I.	Area of forest above conservation threshold	6.56

BREAK EVEN POINT:

J.	Forest retention above threshold with no mitigation	2.66
K.	Clearing permitted without mitigation	5.25

PROPOSED FOREST CLEARING:

L.	Total area of forest to be cleared	7.91	CANNOT EXCEED EX15T
M.	Total area of forest to be retained	0.00	

PLANTING REQUIREMENTS:

N.	Reforestation for clearing above conservation threshold	1.64	
P.	Reforestation for clearing below conservation threshold	2.70	1.00 0.00
Q	Credit for retention above conservation threshold	0.00	
R.	Total reforestation required	4.34	1.00 1.00
S.	Total afforestation required	0.00	
T.	Total reforestation and afforestation required	4.34	ACREA

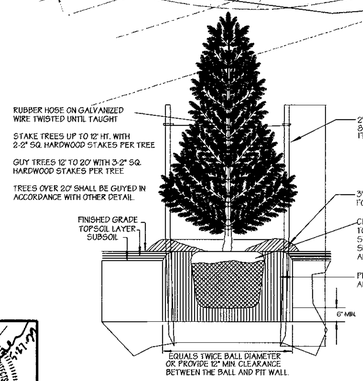

Evergreen Planting Detail
NOT TO SCALE

STAKING DETAIL

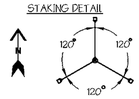

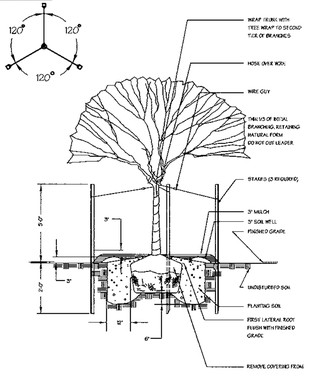

Tree Planting Detail
NOT TO SCALE

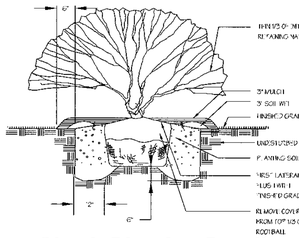

Shrub Planting Detail
NOT TO SCALE

PREPARED BY :

GEORGE W. STEPHENS, JR. AND ASSOCIATES, INC.
Civil Engineers and land Surveyors
658 Kenilworth Drive, Suite 100
Towson, Maryland 21204
(410) 825-8120

OWNER / DEVELOPER / CONTRACT / PURCHASER
MERRITT - HK, LLC
2066 LORD BALTIMORE DR.
BALTIMORE, MD 21207
(410) 298-2600

DESIGNED BY: H.P.P. / BCP
DRAWN BY: J.N.L.
CHECKED BY: H.P.P. / BCP
REVISIONS

LANDSCAPE and FOREST CONSERVATION PLAN
THE HENKEL PROPERTY

ELECTION DISTRICT : 6
HOWARD CO., MARYLAND

SCALE : As Shown
DATE : FEB. 02, 1999
SHEET 12 OF 12

8976001_scapeplan.s01 EMT 02/18/99

SDP 99 - 94

F/N : 8976