Site Analysis Data Chart

TOTAL AREA OF SITE : .... 778,417 SQ. FT. OR 17.87 Ac.+/-
EXISTING ZONING : M-2
PROPERTY REFERENCE : ... LIBER 693, FOLIO 667;LIBER 618 FOLIO 14
EXISTING USE : .... WAREHOUSE
PROPOSED USE : .... WAREHOUSE
AREA TO BE DISTURBED : .... 121,968 S.F. (2.8 Ac.±)

AREA TO BE VEGETATIVELY STABILIZED : ....16,117 S.F. (0.37 Ac.±)

PARKING REQUIREMENTS △
348,690 S.F. PARCELS A,F & G
31,000 S.F. MANUFACTURING @ 31 EMPLOYEES = 31 SPACES
259,390 S.F. WAREHOUSE/DIST @.5 SP/1000 SF = 130 SPACES
TOTAL WEEKDAY REQUIREMENT = 161 SPACES
WEEKEND REQUIREMENT
58,300 S.F. FLEA MARKET @ 150 SPACES *
+10% x 161 = 17 SPACES (SECT 133(E))
TOTAL WEEKEND REQUIREMENT = 167 SPACES
TOTAL PROVIDED : 176 SPACES + 108 TEMP. SPACES
* HOURS OF OPERATION : 8 AM TO 4 PM SAT & SUN

BENCH MARK
+CUT AT STA. 11+75.61, 22.25'RIGHT
AMBERTON ROAD ELEV. = 171.69

USC & GS BM 121 LOCATED AT DORSEY ROAD, HOWARD COUNTY ON THE BALTIMORE & OHIO RAILROAD, 100 FEET NORTHEAST OF THE STATION, AT THE CROSSING OF THE OLD ANNAPOLIS ROAD (THE DORSEY-GLEN BURNIE ROAD), 50 FEET EAST OF THE EAST RAIL OF THE NORTH BOUND TRACK, 35 FEET SOUTH OF THE ROAD AT DORSEY.

Legend

Ex. 2' Contours
Prop. 2' Contours
Prop. 10' Contours
Ex. Curb & Gutter
Prop. Curb & Gutter
Ex. Storm Drain
Ex. Sanitary
Ex. Water
Prop. Sanitary
Prop. Storm Drain (PROP. 30"D)
Prop Water (PROP. 8"W)
Truck Paving

2" Bit Conc. Surf
6" Concrete

TRUCK PAVING SECTION
Not to Scale

SHEET INDEX

SHEET 1 - SITE & STORMWATER MANAGEMENT PLAN
SHEET 2 - DRAINAGE AREA MAP & SWM PROFILES
SHEET 3 - SWM DETAILS
SHEET 4 - SWM DRAINAGE AREA MAP & NOTES
SHEET 5 - SEDIMENT CONTROL PLAN
SHEET 6 - SEDIMENT CONTROL DETAILS
SHEET 7 - SEDIMENT CONTROL NOTES
SHEET 8 - SEDIMENT CONTROL DRAINAGE AREA MAP & PROFILES
SHEET 9 - SWM AND SITE DETAILS

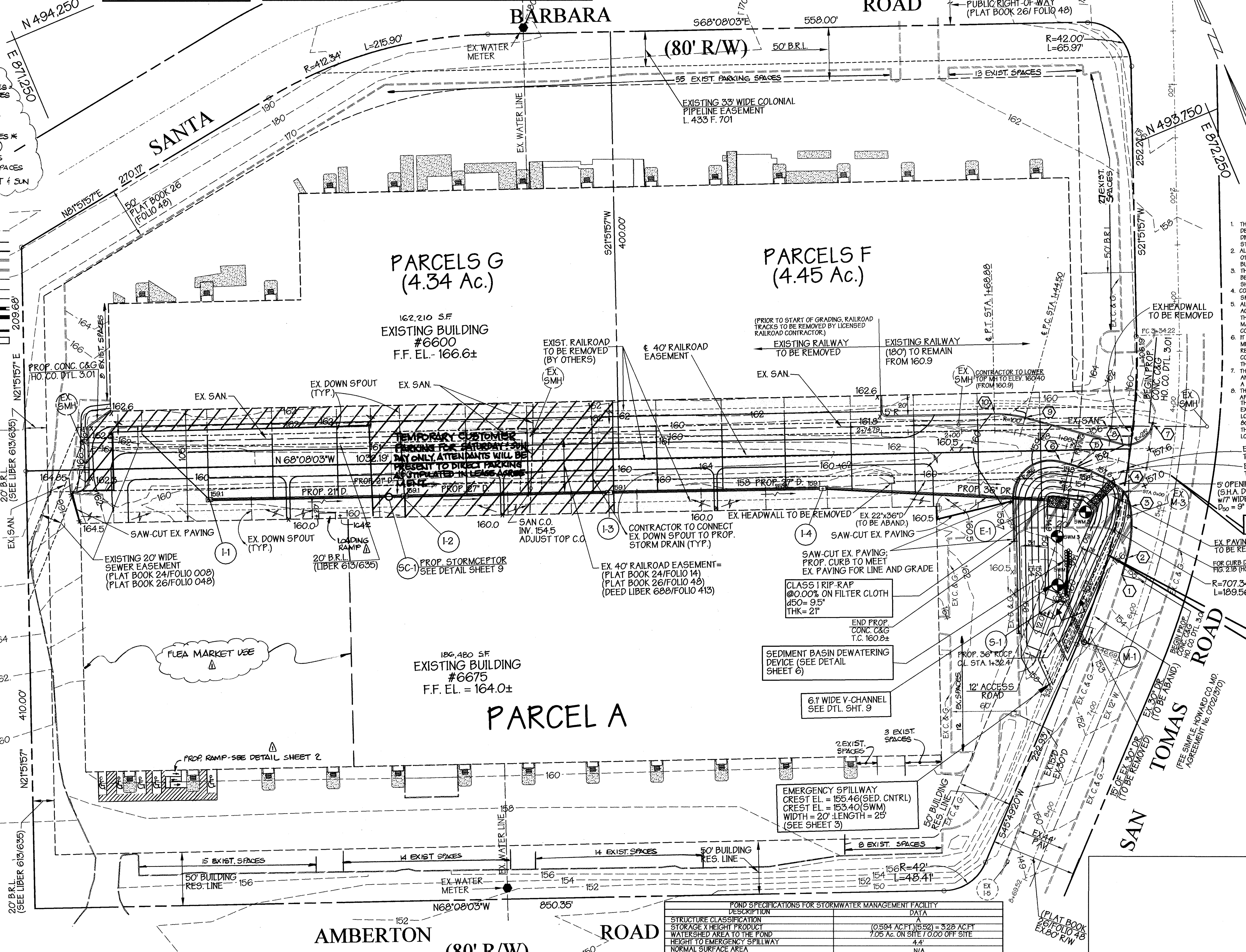

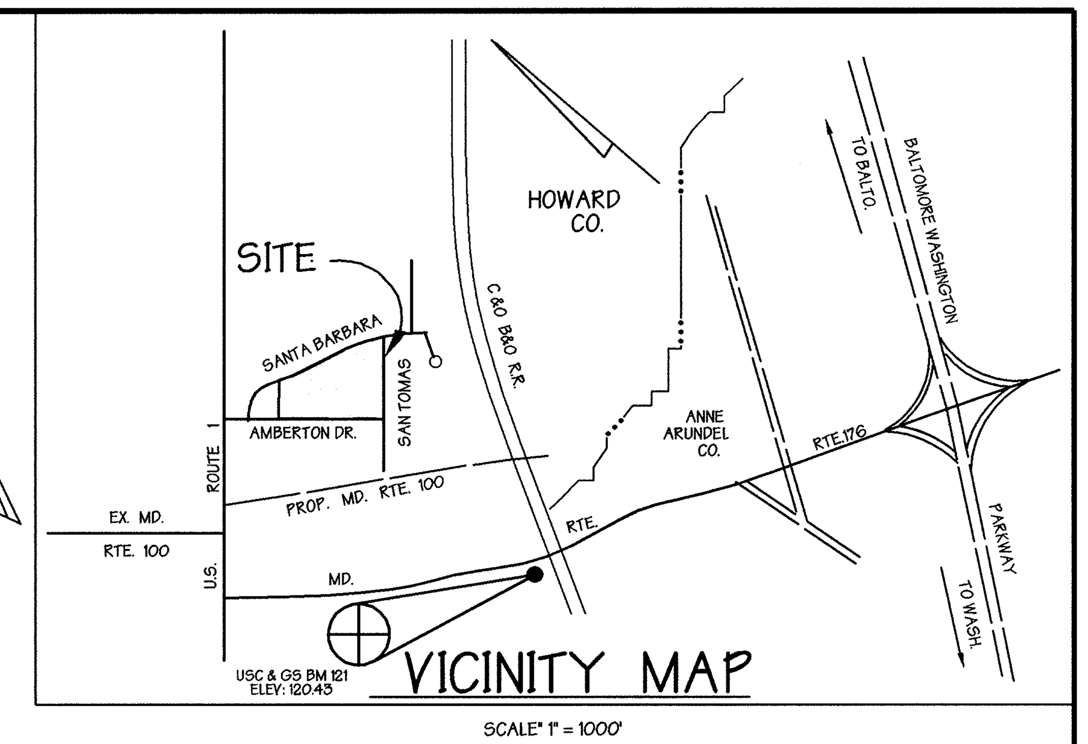

SCALE" 1" = 1000'

CONSTRUCTION NOTES

1. THE CONTRACTOR SHALL NOTIFY THE HOWARD COUNTY DEPARTMENT OF PUBLIC WORKS CONSTRUCTION INSPECTION DIVISION AT 410-313-1880 AT LEAST 24 HOURS PRIOR TO STARTING ANY OF THE WORK SHOWN HEREON.
2. ALL PLAN DIMENSIONS ARE GIVEN TO FACE OF CURB UNLESS OTHERWISE NOTED. SEE ARCHITECTURAL DRAWINGS FOR EXACT BUILDING DIMENSIONS.
3. THE CONTRACTOR SHALL NOTE THAT IN CASE OF DISCREPANCY BETWEEN ANY SCALED DIMENSIONS AND THE FIGURED DIMENSIONS SHOWN ON THESE PLANS, THE FIGURED DIMENSIONS SHALL GOVERN.
4. CONTRACTOR SHALL MEET ALL EXISTING IMPROVEMENTS SMOOTHLY FOR LINE, GRADE AND FINISH.
5. ALL WORK SHOWN ON THESE PLANS SHALL BE COMPLETED IN ACCORDANCE WITH THE LATEST STANDARDS AND SPECIFICATIONS OF THE HOWARD COUNTY DEPARTMENT OF PUBLIC WORKS AND OF THE MARYLAND STATE HIGHWAY ADMINISTRATION AND THE HOWARD COUNTY PLUMBING CODE, UNLESS OTHERWISE NOTED.
6. IT SHALL BE DISTINCTLY UNDERSTOOD THAT FAILURE TO MENTION SPECIFICALLY ANY WORK WHICH WOULD NORMALLY BE REQUIRED TO COMPLETE THIS PROJECT SHALL NOT RELIEVE THE CONTRACTOR OF THE RESPONSIBILITY TO PERFORM SUCH WORK. THE COST OF SUCH WORK SHALL BE INCLUDED IN THE BASE BID.
7. THE CONTRACTOR SHALL INSPECT THE SITE TO DETERMINE IF ANY TREES, PAVING, ETC. ARE TO BE REMOVED PRIOR TO PLACING A BID ON SUCH ITEMS.
8. THE LOCATIONS OF EXISTING UTILITIES SHOWN HEREON ARE APPROXIMATE ONLY AND ARE PROVIDED FOR THE CONVENIENCE OF THE CONTRACTOR ONLY. THE LOCATIONS ARE TAKEN FROM EXISTING RECORDS AND DO NOT REPRESENT FIELD-VERIFIED LOCATIONS. THE CONTRACTOR SHALL NOTIFY MISS UTILITY AT 1-800-257-7777 A MINIMUM OF 5 WORKING DAYS PRIOR TO DIGGING. THE CONTRACTOR SHALL CONFIRM TO HIS OWN SATISFACTION THE LOCATION OF ALL UTILITIES PRIOR TO ANY EXCAVATION OR PLACEMENT OF MATERIALS. IF ANY CONFLICT IS FOUND BETWEEN UNDERGROUND UTILITIES AND THE PROPOSED LOCATION OF ANY CONSTRUCTION, THE CONTRACTOR SHALL CONTACT G. W. STEPHENS AND THE OWNER OF THE UTILITY IMMEDIATELY. ANY DAMAGE OR DISRUPTION OF SERVICE SHALL BE AT THE EXPENSE OF THE CONTRACTOR. RELOCATION OF ANY EXISTING UTILITIES, IF NECESSARY, SHALL BE AT THE EXPENSE OF THE OWNER. THE CONTRACTOR SHALL COORDINATE RELOCATION OF THESE FACILITIES, IF NECESSARY.
9. THE EXISTING TOPOGRAPHY IS TAKEN FROM A FIELD RUN SURVEY WITH TWO FOOT CONTOUR INTERVALS PREPARED BY LEO W. RADER DATED AUGUST 1998.
10. THE COORDINATES SHOWN HEREON ARE BASED UPON THE HOWARD COUNTY GEODETIC CONTROL WHICH IS BASED UPON THE MARYLAND STATE PLANE COORDINATE SYSTEM. HOWARD COUNTY MONUMENT NO. USC & GS BM121, EL: 120.43 USED FOR THIS PROJECT.
11. WATER IS PUBLIC. CONTRACT NO. IS S32-D-W&S
12. SEWER IS PUBLIC. CONTRACT NO. IS S06-D-W&S
13. STORMWATER MANAGEMENT QUALITY IS PROVIDED BY A STORMCEPTOR AND QUANTITY MANAGEMENT IS PROVIDED BY A DETENTION POND; BOTH FACILITIES ARE PRIVATE AND SHALL BE MAINTAINED BY THE OWNER.
14. THERE IS NO FLOODPLAIN ON THIS SITE.
15. THERE ARE NO WETLANDS ON THIS SITE.
16. NO TRAFFIC STUDY IS REQUIRED FOR THIS PROJECT.
17. MAXIMUM SLOPE SHALL BE 2 HORIZONTALLY TO 1 VERTICALLY.
18. CONTRACTOR SHALL PROVIDE A ~~MINIMUM OF 1 FOOT~~ OF PROTECTIVE FILL OVER STORM DRAIN PIPES DURING CONSTRUCTION.
19. ALL TRAFFIC CONTROL DEVICES, MARKINGS, AND SIGNAGE SHALL BE IN ACCORDANCE WITH THE LATEST EDITION OF THE "MANUAL OF UNIFORM TRAFFIC CONTROL DEVICES." ALL STREET AND REGULATORY SIGNS SHALL BE INSTALLED PRIOR TO INSTALLATION OF FINISHED PAVING.
20. THE CONTRACTOR SHALL REPLACE ANY EXISTING BITUMINOUS PAVING OR SUB-BASE WHICH IS DAMAGED OR REMOVED DURING CONSTRUCTION. ALL EXCAVATED AREAS SHALL BE BACKFILLED AND IN ACCORDANCE WITH THE SOILS REPORT AND/OR AS DIRECTED BY GEOTECHNICAL ENGINEER. ANY AREAS TO BE PAVED WHICH EXHIBIT UNSTABLE SUBGRADE CONDITIONS SHALL BE EXCAVATED TO BEARING SOIL, REFILLED AND COMPACTED.
21. ALL AREAS NOT BEING PAVED OR RECEIVING BUILDING COVERAGE SHALL BE STABILIZED IN ACCORDANCE WITH THE PLANS APPROVED BY THE HOWARD SOIL CONSERVATION DISTRICT.
22. PREFORMED ELASTOMERIC COMPRESSION JOINT MATERIAL SHALL BE INSTALLED AT ALL MEETINGS OF EXISTING AND PROPOSED CONCRETE PAVING AND SIDEWALKS.

WATER & SEWER CONTRACT Nos.
S32-D-W&S, S32-D-W&S

CURB DATA (FOR CURB SEE HOWARD COUNTY DETAIL R-3.01)			
①	Sta 5+68.8	22' Rt (S.T.R.)	T.C. 155.4 *
②	Sta 5+51.1	22' Rt (S.T.R.)	T.C. 156.0 *
③	Sta 5+03.2	1' Rt (S.T.R.)	T.C. 157.6
④	Sta 0+43.7	23'.0 Lt (ENTR.)	T.C. 158.0
⑤	Sta 0+86.8	15.0' Lt (ENTR.)	T.C. 158.5
⑥	Sta 1+02.2	15.0' Lt(ENTR.)	T.C. 159.0
⑦	Sta 4+18.0	21.1' Rt (S.T.R.)	T.C.158.5 *
⑧	Sta 0+52.4	15.0' Rt(ENTR.)	T.C. 158.5
⑨	Sta 1+44.5	15.0' Rt(ENTR.)	T.C. 159.9
⑩	Sta 1+68.9	15.0 Rt(ENTR.)	T.C. 160.5

* CONTRACTOR TO MATCH EXISTING PAVEMENT GRADE

N 493,500
E 870,750

CONSULTANT'S HAZARD CLASS CERTIFICATION:

I certify that this pond meets all requirements for hazard class (A) B or C. (Requirements as stated in the Soil Conservation Service - Maryland Standards and Specifications for Pond, Code 378, November 1992). All necessary investigations and computations have been performed to verify this finding. A copy of said information has been supplied to Howard County Soil Conservation District.

Signature ____________ P.E. # ____________
Name ____________ Date: ____________

STORMWATER MANAGEMENT					
DESIGN STORM	ALLOWABLE RELEASE RATE	FACILITY INFLOW	FACILITY DISCHARGE	W.S. ELEV.	STORAGE VOLUME
2	35.40 CFS	24.60 CFS	17.55 CFS	152.03	0.234 Ac.Ft.
10	61.44 CFS	40.10 CFS	29.45 CFS	153.4	0.408 Ac.Ft.
100	89.89 CFS	57.08 CFS	55.71 CFS	154.52	0.594 Ac.Ft.

PLAN
SCALE : 1" =50'

POND SPECIFICATIONS FOR STORMWATER MANAGEMENT FACILITY	
DESCRIPTION	DATA
STRUCTURE CLASSIFICATION	A
STORAGE X HEIGHT PRODUCT	(0.594 AC.FT.)(5.52) = 3.28 AC.FT
WATERSHED AREA TO THE POND	7.05 Ac. ON SITE / 0.00 OFF SITE
HEIGHT TO EMERGENCY SPILLWAY	4.4'
NORMAL SURFACE AREA	N/A
PRINCIPLE SPILLWAY CAPACITY	55.71
EMERGENCY SPILLWAY CAPACITY	55.71
POND TYPE	DRY
FREEBOARD REQUIRED/ PROVIDED	2.00' / 2.94'
IMPERVIOUS AREA (AREA SERVED)	1.90 AC.+/-
WATER QUALITY STORAGE REQUIRED	N/A
WATER QUALITY STORAGE PROVIDED	N/A
WATER QUALITY	PROVIDED BY STORMCEPTOR
TOP OF EMBANKMENT	157.00
WATER SHED	SHADOW RUN
LEVEL OF MANAGEMENT	2 & 10
RCN (TO POND)	96.2
TOTAL SITE AREA	17.87 AC.

STATE OF MARYLAND — NICHOLAS JOSEPH BRADER III — REGISTERED PROFESSIONAL ENGINEER
FOR REV. 1

REV. 1 10/6/99 ADD RAMPS & ADD CURRENT PARKING DATA -BY MATIS WARFIELD, INC.

These plans for S.W.M. construction, soil erosion and sediment control meet the requirements of Howard Soil Conservation District.

APPROVED: HOWARD SOIL CONSERVATION DISTRICT — DATE 1/11/99
PLAN NUMBER

Reviewed for the Howard Conservation District and meets technical requirements
NATURAL RESOURCES CONSERVATION SERVICE — DATE 1/11/99

APPROVED: Howard County Department of Planning and Zoning
CHIEF, DEVELOPMENT ENGINEERING DIVISION — DATE 1/13/99
CHIEF, DIVISION OF LAND DEVELOPMENT — DATE 1/21/99
DIRECTOR — DATE 1/22/99

ADDRESS CHART	
PARCEL NO.	STREET ADDRESS
F & G	6600 SANTA BARBARA ROAD
A	6675 AMBERTON RD.

SUBDIVISION NAME			SECTION NAME		PARCEL #
ROUTE 100 BUSINESS PARK			1		A, F &G
PLAT # 26 FOLIO 48, 24 FOLIO 14	BLOCK # A	ZONE M-2	TAX ZONE MAP 37	ELECT. DIST. 1	CENSUS TRACT 6012
WATER CODE			SEWER CODE		

GEORGE WILLIAM STEPHENS, JR. AND ASSOCIATES, INC.
CIVIL ENGINEERS & LAND SURVEYORS
658 KENILWORTH DRIVE, SUITE 100
TOWSON, MARYLAND 21204
(410) 825-8120

ENGINEER CERTIFICATION:
I certify that this plan for erosion and sediment control represents a practical and workable plan based on my personal knowledge of the site conditions and that it was prepared in accordance with the requirements of the Howard Soil Conservation District.

Engineer ____________ Date 10/13/98
Name Nicholas J. Brader, III PE# 18558

OWNER/DEVELOPER
MIE PROPERTIES CO.
5720 Executive Drive
Baltimore, Maryland 21228-1789
(410) 788-0100

DEVELOPER CERTIFICATION:
I/We certify that all development and construction will be done according to this plan, and that any responsible personnel involved in the construction project will have a Certification of Attendance at a Department of the Environment Approved Training Program for the Contol of Sediment and Erosion before beginning the project. I also authorize periodic on-site inspection by the Howard Soil Conservation District.

Developer ____________ Date 10/13/98
Name Jeffrey A. Gish, V.P.

DESIGNED BY: H.P.P.
DRAWN BY: P.L.T.
CHECKED BY: N.B.
REVISIONS

Site & Stormwater Management Plan
ROUTE ONE HUNDRED BUSINESS PARK
BLOCK "A"
Previous File Nos. SDP 72-27, SDP 74-80, F #81

Election District #1
Parcels A, F & G
Scale: 1"=50'

Howard County, Maryland
October 13, 1998
Sheet 1 of 10

\cad\micro\8885siteplan.s01 Nov. 25, 1998 11:19:43

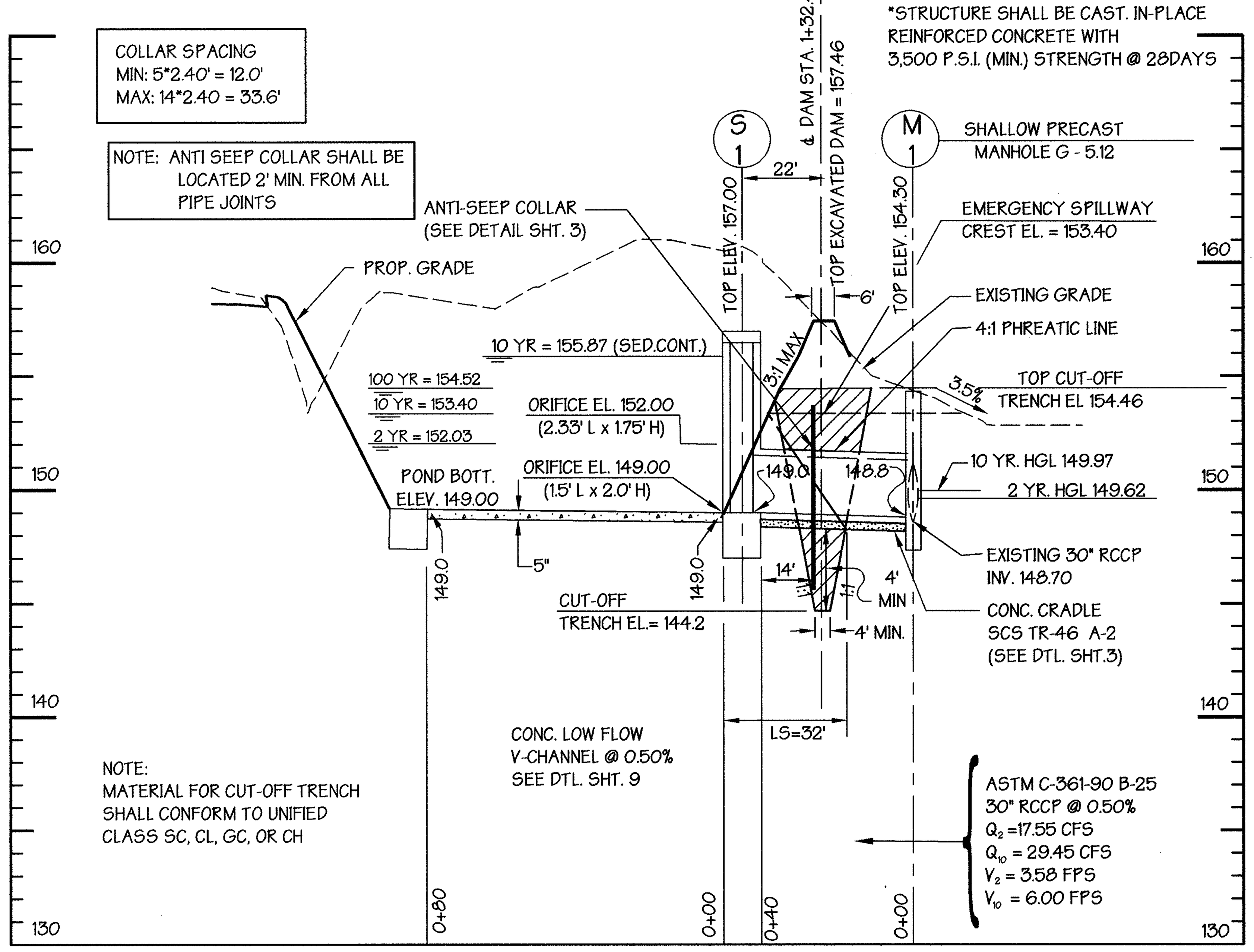

PROFILE - PRINCIPAL SPILLWAY

SCALE: VERT: 1"=5'
HORIZ: 1"=30'

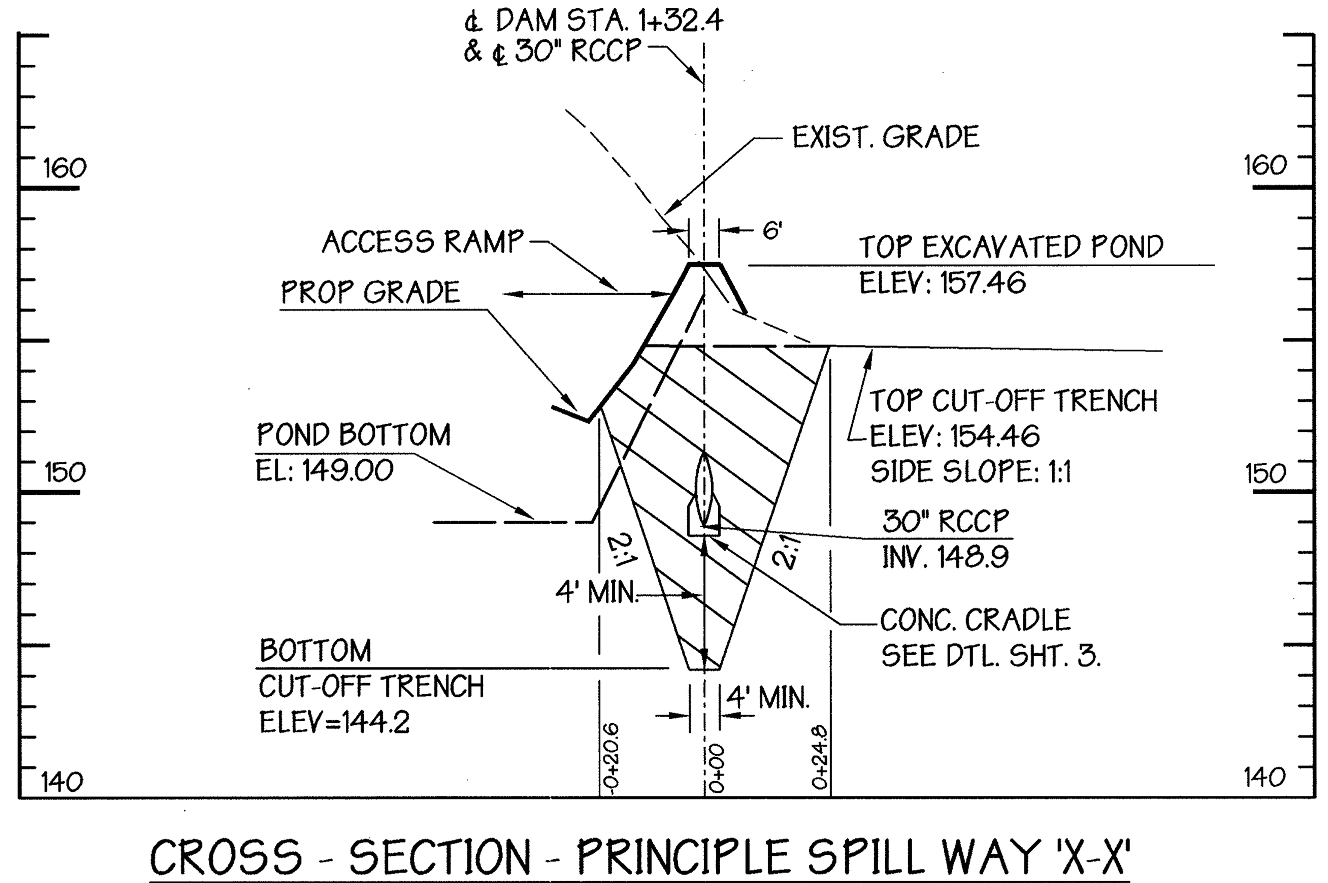

CROSS - SECTION - PRINCIPLE SPILL WAY 'X-X'

SCALE: VERT: 1"=5'
HORIZ: 1"=30'

INLET STRUCTURES SCHEDULE

NO#	TYPE	INV OUT	GRATE ELEV.	Q CFS	DETAIL
I-1	DOUBLE 'S'	154.82	159.1	13.72	SD. 4.23
I-2	DOUBLE 'S'	151.43	159.1	13.54	SD. 4.23
I-3	DOUBLE 'S'	150.77	159.1	13.54	SD. 4.23
I-4	DOUBLE 'S'	150.08	159.1	13.63	SD. 4.23

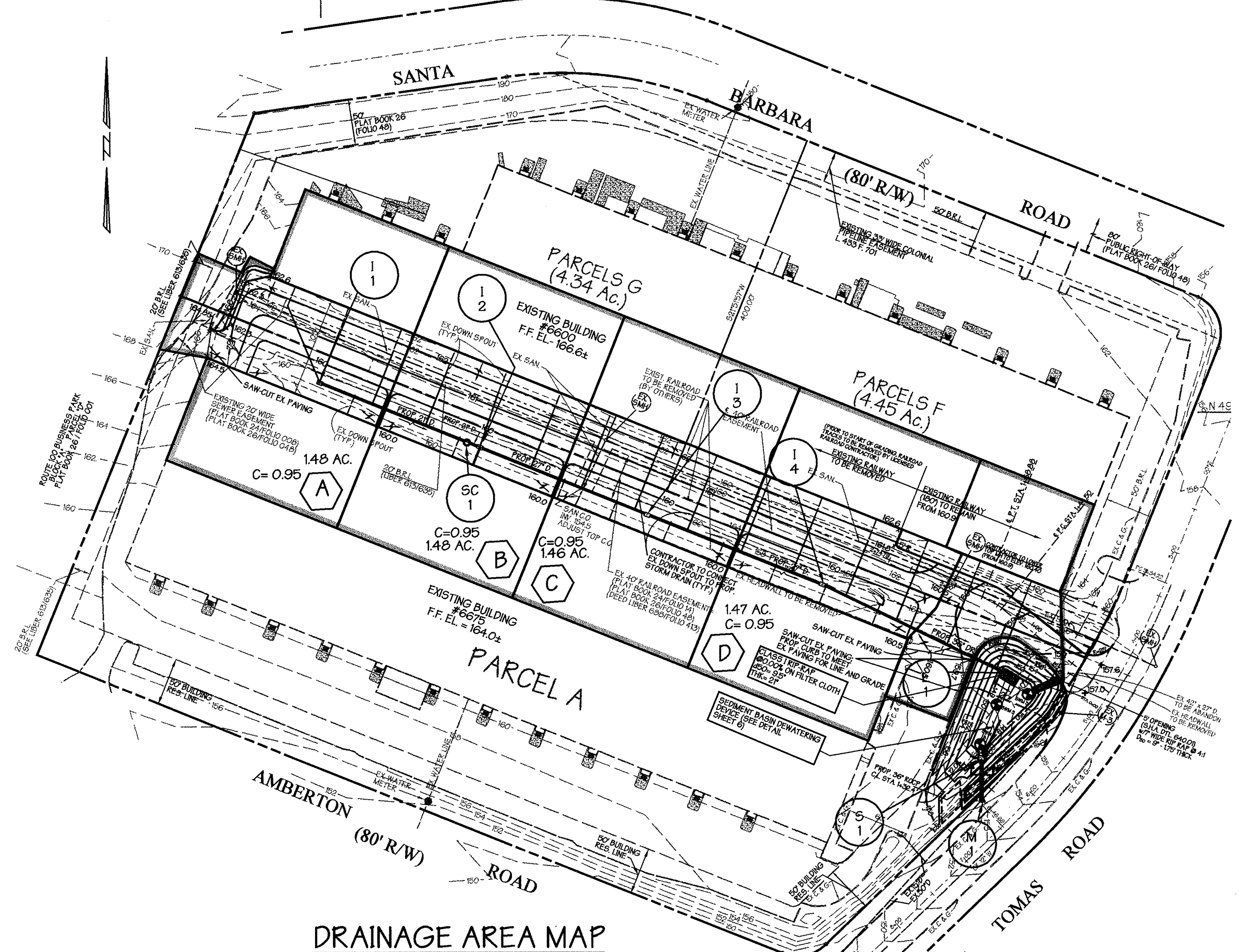

DRAINAGE AREA MAP

SCALE: 1" = 100'

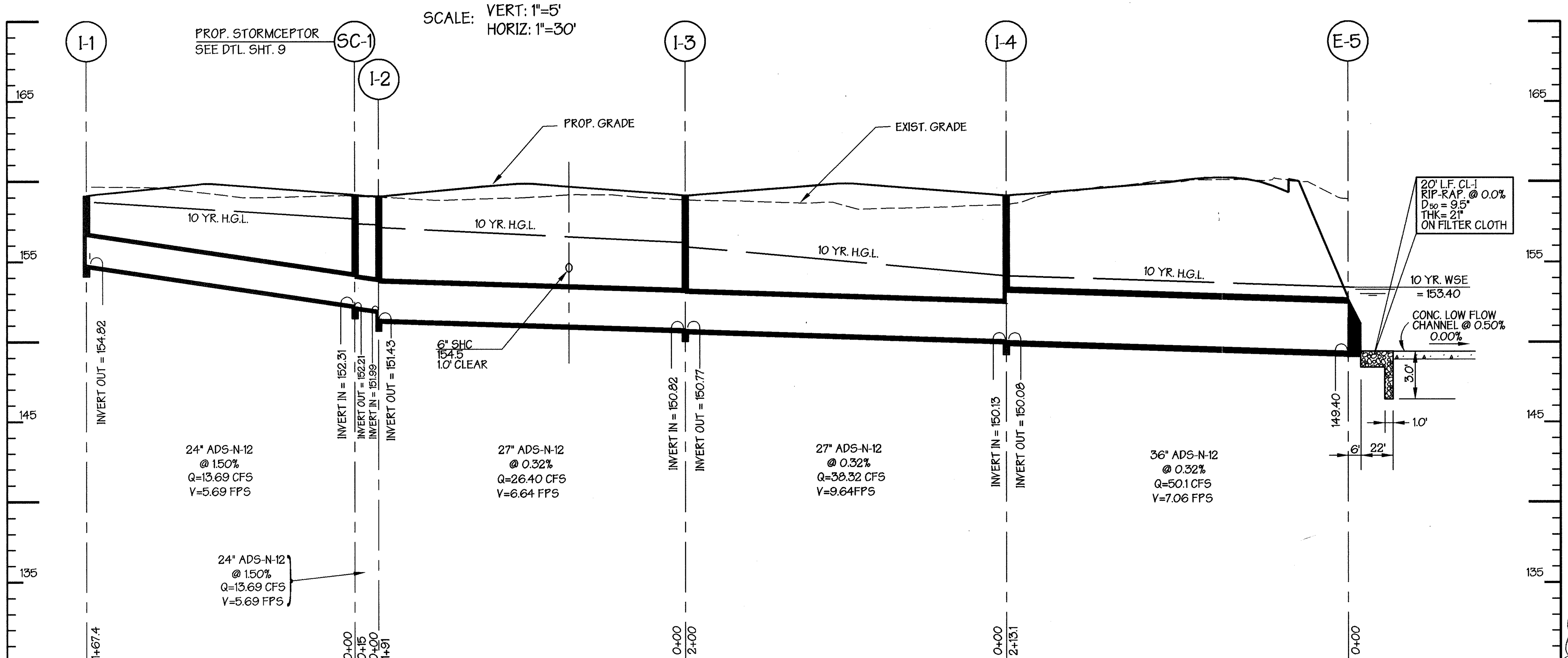

STORM DRAIN PROFILES

SCALE: VERT: 1"=5'
HORIZ: 1"=50'

LOCATION FROM	TO	AREA	AREA SUB	AREA TOTAL	COEFF "C"	CA	CA	TIME CONC. - MIN. INLET	DRAIN	TOTAL	INTENSITY "I"	Q=CIA C.F.S.	PIPE n= 0.01 PIPE	SLOPE	VEL.	LGTH.	REMARKS
	I-1	A	1.48		0.95	1.41 1.61		5.00		5.0	9.8 8.50	13.72					25 YR
I-1	SC-1	A		1.48			1.61	5.00		5.0	8.50	13.69	24	0.44%	5.69	167.4	
SC-1	I-2	A		1.48			1.61	5.00	0.49	5.5	8.50	13.69	24	0.44%	5.69	15.0	
	I-2	B	1.46		0.95	1.39 1.59		5.00		5.0	9.8 8.50	13.54					25
I-2	I-3	A,B		2.94			3.20	5.50	0.04	5.5	8.25	26.40	27	0.43%	6.64	191.00	
	I-3	C	1.46		0.95	1.39 1.59		5.00		5.0	9.8 8.50	13.54					25
I-3	I-4	A-C		4.40			4.79	5.50	0.48	6.0	8.00	38.32	27	0.91%	9.64	200.00	
	I-4	D	1.47		0.95	1.40 1.60		5.00		5.0	9.8 8.50	13.63					25
I-4	E-5	A-D		5.87			6.39	6.00	0.35	6.4	7.84	50.10	36	0.33%	7.09	213.10	

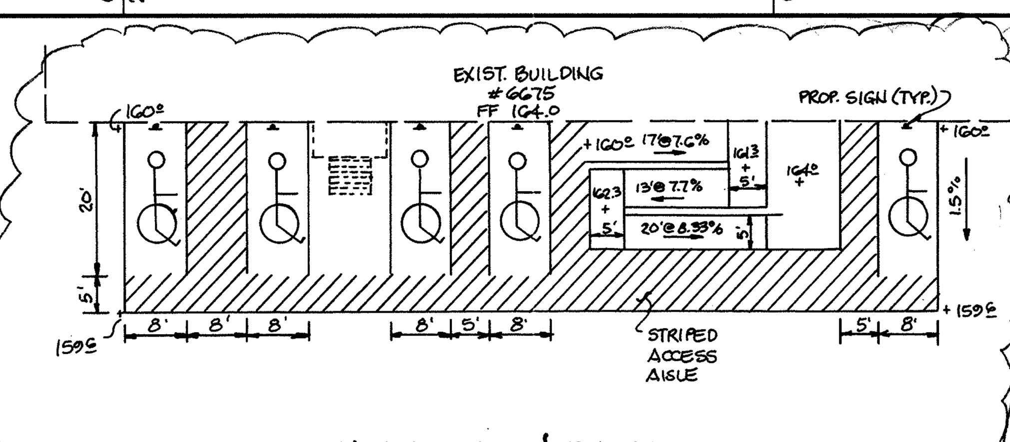

HANDICAP & RAMP DETAIL

SCALE: 1"= 10'

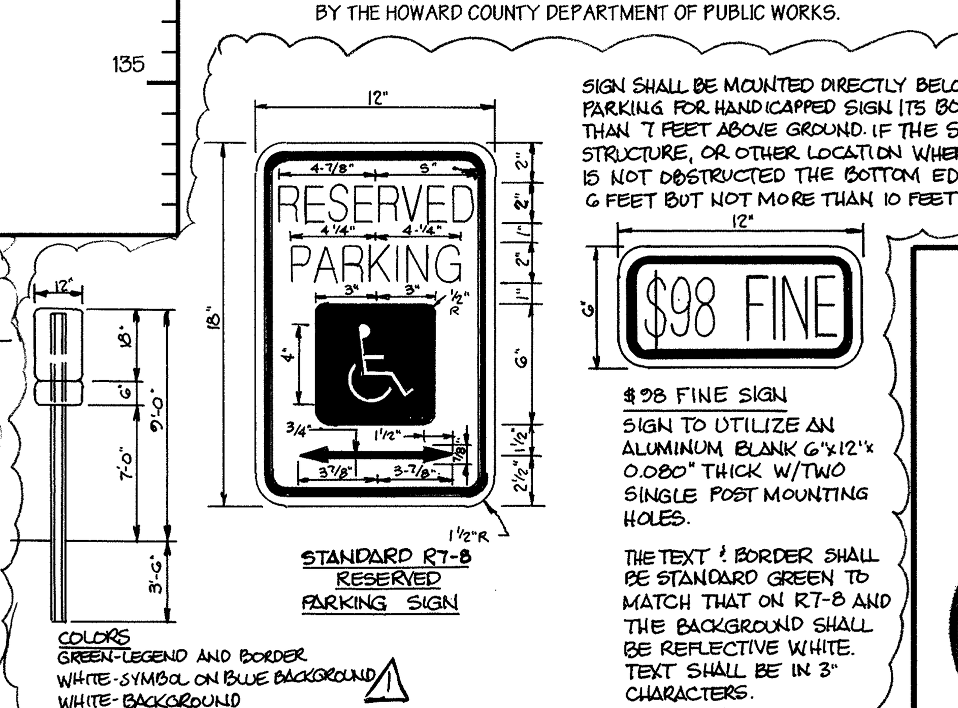

HANDICAPPED PARKING SIGN DETAIL

NOT TO SCALE

REV. 1 10/6/99 ADD RAMP DETAIL

OPERATION AND MAINTENANCE SCHEDULE OF PRIVATELY OWNED AND MAINTAINED STORMWATER MANAGEMENT FACILITY DETENTION POND

ROUTINE MAINTENANCE

1. FACILITY SHALL BE INSPECTED ANNUALLY AND AFTER MAJOR STORMS. INSPECTIONS SHOULD BE PERFORMED DURING WET WEATHER TO DETERMINE IF THE POND IS FUNCTIONING PROPERLY.
2. TOP AND SIDE SLOPES OF THE EMBANKMENT SHALL BE MOWED A MINIMUM OF TWO (2) TIMES A YEAR, ONCE IN JUNE AND ONCE IN SEPTEMBER. OTHER SIDE SLOPES AND MAINTENANCE ACCESS SHOULD BE MOWED AS NEEDED.
3. DEBRIS AND LITTER NEXT TO THE OUTLET STRUCTURE SHALL BE REMOVED DURING REGULAR MOWING OPERATIONS AND AS NEEDED.
4. VISIBLE SIGNS OF EROSION IN THE POND AS WELL AS RIP-RAP OUTLET SHALL BE REPAIRED AS SOON AS IT IS NOTICED.

NON-ROUTINE MAINTENANCE

1. STRUCTURAL COMPONENTS OF THE POND SUCH AS THE DAM, THE RISER, AND THE PIPES SHALL BE REPAIRED UPON THE DETECTION OF ANY DAMAGE. THE COMPONENTS SHOULD BE INSPECTED DURING ROUTINE MAINTENANCE OPERATIONS.
2. SEDIMENT SHOULD BE REMOVED WHEN ITS ACCUMULATION SIGNIFICANTLY REDUCES THE DESIGN STORAGE, INTERFERE WITH THE FUNCTION OF THE RISER, WHEN DEEMED NECESSARY FOR AESTHETIC REASONS, OR WHEN DEEMED NECESSARY BY THE HOWARD COUNTY DEPARTMENT OF PUBLIC WORKS.

These plans for S.W.M. construction, soil erosion and sediment control meet the requirements of Howard Soil Conservation District.

APPROVED: HOWARD SOIL CONSERVATION DISTRICT — DATE 1/11/99

PLAN NUMBER

Reviewed for the Howard Conservation District and meets technical requirements.

NATURAL RESOURCES CONSERVATION SERVICE — DATE 1/11/99

APPROVED: Howard County Department of Planning and Zoning

CHIEF, DEVELOPMENT ENGINEERING DIVISION — DATE 1/13/99

CHIEF, DIVISION OF LAND DEVELOPMENT — DATE 1/21/99

DIRECTOR — DATE 1/22/99

ADDRESS CHART

PARCEL NO.	STREET ADDRESS
F & G	6600 SANTA BARBARA ROAD
A	6675 AMBERTON RD.

SUBDIVISION NAME	SECTION NAME	PARCEL #
ROUTE 100 BUSINESS PARK	1	A, F & G

PLAT #	BLOCK #	ZONE	TAX ZONE MAP	ELECT. DIST.	CENSUS TRACT
26 FOLIO 48 / 24 FOLIO 14	A	M-2	37	1	6012

WATER CODE — SEWER CODE

GEORGE WILLIAM STEPHENS, JR. AND ASSOCIATES, INC.
CIVIL ENGINEERS & LAND SURVEYORS
658 KENILWORTH DRIVE, SUITE 100
TOWSON, MARYLAND 21204
(410) 825-8120

ENGINEER CERTIFICATION:
I certify that this plan for erosion and sediment control represents a practical and workable plan based on my personal knowledge of the site conditions and that it was prepared in accordance with the requirements of the Howard Soil Conservation District.

Engineer — Date 10/13/98
Name Nicholas J. Brader, III — PE # 18558

OWNER/DEVELOPER
MIE PROPERTIES CO.
5720 Executive Drive
Baltimore, Maryland 21228-1789
(410) 788-0100

DEVELOPER CERTIFICATION:
I/We certify that all development and construction will be done according to this plan, and that any responsible personnel involved in the construction project will have a Certification of Attendance at a Department of the Environment Approved Training Program for the Contol of Sediment and Erosion before beginning the project. I also authorize periodic on-site inspection by the Howard Soil Conservation District.

Developer — Date 10/13/98
Name Jeffrey A. Gish, V.P.

DESIGNED BY: H.P.P.
DRAWN BY: P.L.T.
CHECKED BY: N.B.
REVISIONS

Drainage Area Map & S.W.M. Profiles
ROUTE ONE HUNDRED BUSINESS PARK

BLOCK "A"
Previous File Nos. SDP 72-27, SDP 74-80, F #81

Election District #1
Parcels A, F & G
Scale: As Shown

Howard County, Maryland
October 13, 1998
Sheet 2 of 10

SDP -99-35

FILENAME: 8885profiles.s02

PN: 8885

..\cad\micro\8885profiles.s01 Nov. 25, 1998 14:54:11

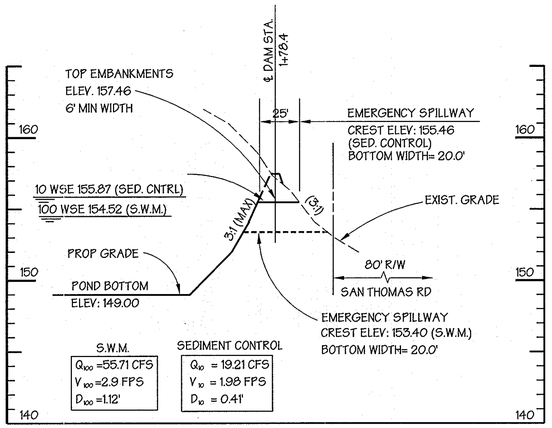

EMERGENCY SPILLWAY

SCALE: HORZ: 1" = 50'
VERT: 1" = 5'

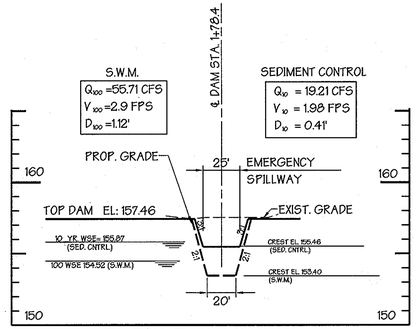

EMERGENCY SPILLWAY

SCALE: HORZ: 1" = 50'
VERT: 1" = 5'

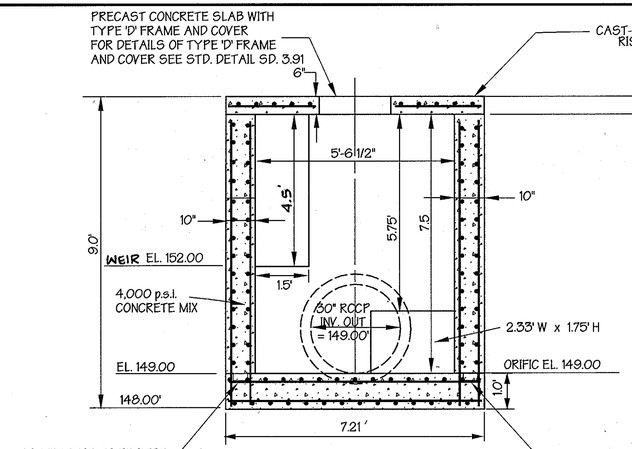

SECTION A-A

* Reinforcement is required on outside as well as inside of walls.

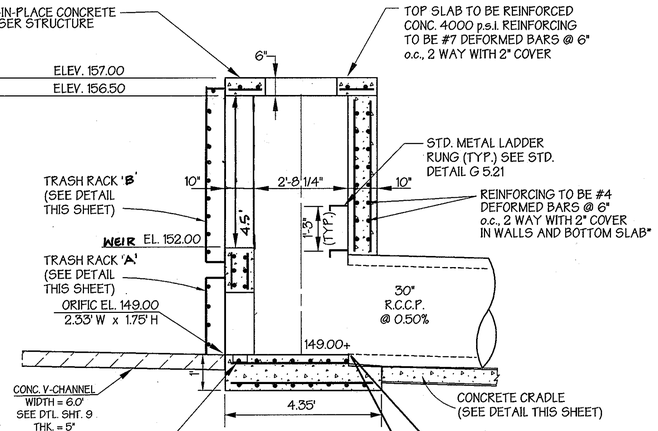

SECTION B-B

PRINCIPLE SPILLWAY PIPE SHALL BE WATERTIGHT IN ACCORDANCE W/ASTM C-361 HYDROSTATIC TESTING SPECIFICATIONS.

L_G=30'
P= (30)(0.15)/2=2.25'
MIN SPACING= 5*2.25' =11.25
MAX SPACING= 14*2.25'= 31.5'

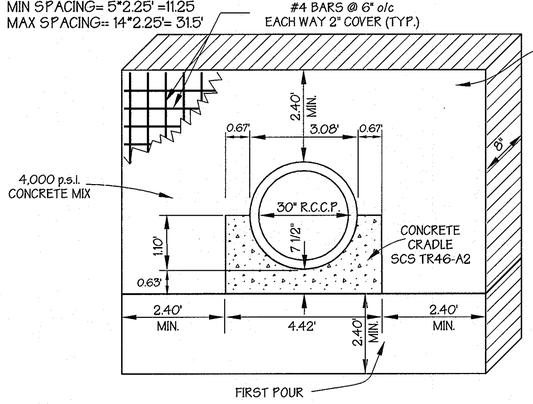

NOTE:
1. ANTI-SEEP COLLARS SHALL BE PLACE 2' MIN. FROM ALL PIPE JOINTS.
2. ALL MATERIALS TO BE IN ACCORDANCE WITH CONSTRUCTION AND CONSTRUCTION MATERIALS SPECIFICATIONS.
3. THE SEAL BETWEEN THE PIPE AND COLLAR SHALL BE WATER TIGHT.
4. COLLAR SHALL PROJECT A MIN. OF 2.25' FROM THE EXTERIOR OF THE CONCRETE CRADLE AND THE PIPE ON ALL FOUR SIDES.
5. THERE SHALL BE PREFORMED ASPHALT JOINT FILLER MATERIAL BETWEEN ALL CONCRETE SURFACES EXCEPT BETWEEN THE PIPE AND THE CRADLE.

NOTES

1. UNLESS OTHERWISE NOTED, CAST-IN-PLACE STRUCTURE SHALL BE BUILT IN ACCORDANCE WITH HOWARD CO. STD. DETAIL, (PLATE SD. 4.23).
2. STRUCTURE TO BE CAST-IN-PLACE REINFORCED CONCRETE WITH 3500 P.S.I. (MIN.) COMPRESSIVE STRENGTH @ 28 DAYS.
3. ALL REINFORCING TO BE CONTINUOUS THROUGHOUT STRUCTURE.
4. ALL REINFORCING TO HAVE 1'-6" MIN. OVERLAPS.
5. TWO (2) INCH COVER MINIMUM FOR ALL REBARS IN WALLS AND THREE (3) INCHES FOR THE BASE.
6. PROVIDE ADDITIONAL #4 REBARS ALONG THE PERIMETER OF ALL OPENINGS WITH THE AREA OF STEEL EQUAL TO OR GREATER THAN THE AREA OF STEEL "REMOVED" DUE TO OPENING.
7. ALL EXPOSED CORNERS OF CONCRETE SHALL BE CHAMFERED WITH 3/4" X 3/4" MILLED CHAMFER STRIPS.

CONCRETE ANTI-SEEP COLLAR

SCALE: 1" = 2'

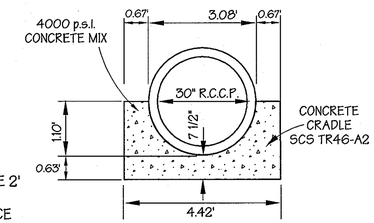

CONCRETE CRADLE

SCALE: 1" = 2'

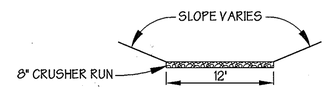

ACCESS RAMP

NOT TO SCALE

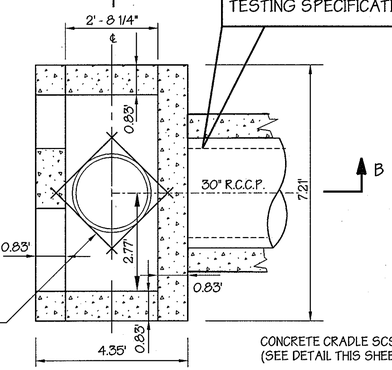

STRUCTURE S-1
MODIFIED DOUBLE 'S'

(HOWARD. CO. DETAIL SD-4.23)
SCALE: 1" = 2'

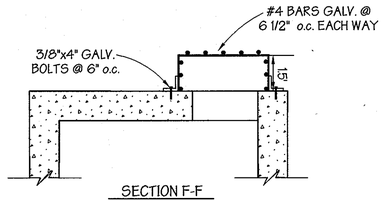

SECTION F-F

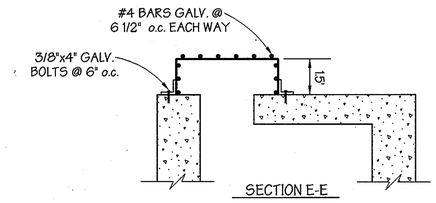

SECTION E-E

NOTE: TRASH RACKS ARE TO BE HOT DIPPED GALVANIZED AFTER FABRICATION

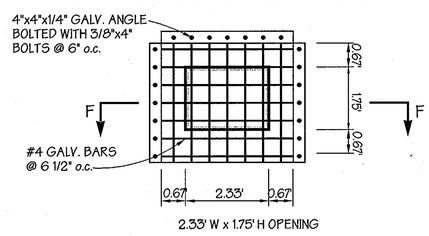

TRASH RACK DETAIL 'A'

SCALE: 1" = 2'

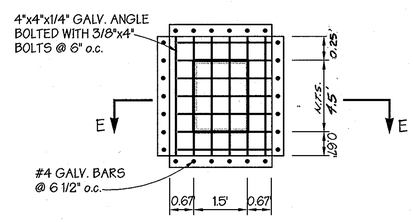

TRASH RACK DETAIL 'B'

SCALE: 1" = 2'

These plans for S.W.M. construction, soil erosion and sediment control meet the requirements of Howard Soil Conservation District.

APPROVED: HOWARD SOIL CONSERVATION DISTRICT — DATE 1/11/99

PLAN NUMBER

Reviewed for the Howard Conservation District and meets technical requirements

NATURAL RESOURCES CONSERVATION SERVICE — DATE 1/11/99

APPROVED: Howard County Department of Planning and Zoning

CHIEF, DEVELOPMENT ENGINEERING DIVISION — DATE 1/13/99

CHIEF, DIVISION OF LAND DEVELOPMENT — DATE 1/21/99

DIRECTOR — DATE 1/22/99

ADDRESS CHART	
PARCEL NO.	STREET ADDRESS
F & G	6600 SANTA BARBARA ROAD
A	6675 AMBERTON ROAD

SUBDIVISION NAME	SECTION NAME	PARCEL #
ROUTE 100 BUSINESS PARK		A, F & G

PLAT #	BLOCK #	ZONE	TAX ZONE MAP	ELECT. DIST.	CENSUS TRACT
26 LIBER 48 24 FOLIO 14	A	M-2	37	1	6012

WATER CODE — SEWER CODE

GEORGE WILLIAM STEPHENS, JR. AND ASSOCIATES, INC.
CIVIL ENGINEERS & LAND SURVEYORS
658 KENILWORTH DRIVE, SUITE 100
TOWSON, MARYLAND 21204
(410) 825-8120

ENGINEER CERTIFICATION:
I certify that this plan for erosion and sediment control represents a practical and workable plan based on my personal knowledge of the site conditions and that it was prepared in accordance that it was prepared in accordance with the requirements of the Howard Soil Conservation District.

Engineer — Date 10/13/98
Name Nicholas J. Brader, III — PE# 18558

OWNER/DEVELOPER
MIE PROPERTIES CO.
5720 Executive Drive
Baltimore, Maryland 21228-1789
(410) 788-0100

DEVELOPER CERTIFICATION:
I/We certify that all development and construction will be done according to this plan, and that any responsible personnel involved in the construction project will have a Certification of Attendance at a Department of the Environment Approved Training Program for the Control of Sediment and Erosion before beginning the project. I also authorize periodic on-site inspection by the Howard Soil Conservation District.

Developer — Date 10/13/98
Name Jeffrey A. Gish

DESIGNED BY: H.P.P.
DRAWN BY: P.L.T.
CHECKED BY: N.B.
REVISIONS

Stormwater Management Details
ROUTE ONE HUNDRED BUSINESS PARK
BLOCK "A"
Previous File Nos. SDP 72-27, SDP 74-80, F #81

Election District #1
Parcels A, F & G
Scale: As Shown

Howard County, Maryland
October 13, 1998
Sheet 3 of 10

SDP -99-35

P.N. 8885

FILENAME: 8885swmdetails.s03

POND CONSTRUCTION SPECIFICATIONS

These specifications are appropriate to all ponds within the scope of the Standard practice MD-378. All references to ASTM and AASHTO specifications apply to the most recent version.

SITE PREPARATION

Areas designated for borrow areas, embankment, and structural works shall be cleared, grubbed, and stripped of topsoil. All trees, vegetation, roots and other objectionable material shall be removed. Channel banks and sharp breaks shall be sloped to no steeper than 1:1.

Areas to be covered by the reservoir will be cleared of all trees, brush, logs, fences rubbish, and other objectionable material unless otherwise designated on the plans. Trees, brush, and stumps shall be cut approximately level with the ground surface. For dry stormwater management ponds, a minimum of a 50 foot radius around the inlet structure shall be cleared.

All cleared and grubbed material shall be disposed of outside and below the limits of the dam and reservoir as directed by the owner or his representative. When specified, a sufficient quantity of topsoil will be stockpiled in a suitable location for use on the embankment and other designated areas.

EARTH FILL

MATERIAL - The fill material shall be taken from approved designated borrow areas. It shall be free of roots, stumps, wood, rubbish, stones greater than 6", frozen or other objectionable materials. Fill material for the center of the embankment and cut off trench shall conform to United Soil Classification GC, SC, CH, or CL. Consideration may be given to the use of other materials in the embankment if design and construction are supervised by a geotechnical engineer.

PLACEMENT - Areas on which fill is to be placed shall be scarified prior to placement of fill. Fill materials shall be placed in a maximum 6" thick (before compaction) layers which are to be continuous over the entire length of the fill. The most permeable borrow material shall be placed in the downstream portions of the embankment. The principal spillway must be installed concurrently with fill placement and not excavated into the embankment.

COMPACTION - The movement of the hauling and spreading equipment over the fill shall be controlled so that the entire surface of each lift shall be traversed by not less than one tread track of the equipment or compaction shall be achieved by a minimum of four complete passes of a sheepsfoot, rubber tired or vibratory roller. Fill material shall contain sufficient moisture such that the required degree of compaction will be obtained with the equipment used. The fill material shall contain sufficient moisture so that if formed into a ball it will not crumble yet not be so wet that the water can be squeezed out.

Minimum required density shall not be less than 95% of maximum dry density with a moisture content within +/- 2% of the optimum. Each layer of fill shall be compacted as necessary to obtain that density, and is to be certified by the Engineer at the time of construction. All compaction is to be determined by AASHTO Method T-99.

Note: See additional compaction requirements per geotechnical engineer. (Sheet 10 of 13)

STRUCTURE BACKFILL

Backfill adjacent to pipes or structures shall be of the type and quality conforming to that specified for the adjoining fill material. The fill shall be placed in horizontal layers not to exceed four inches in thickness and compacted by hand tampers or other manually directed compaction equipment. The material needs to fill completely all spaces under and adjacent to the pipe. At no time during the backfilling operation shall driven equipment be allowed to operate closer than four feet, measured horizontally, to any part of a structure. Under no circumstances shall equipment be driven over any part of a concrete structure or pipe, unless there is a compacted fill of 24" or greater over the structure

PIPE CONDUITS All pipes shall be circular in cross section.

REINFORCED CONCRETE PIPE - All pipe to be circular in cross section

All the following criteria shall apply for reinforced concrete pipe :

1. Materials - Reinforced concrete pipe shall have bell and spigot joints with rubber gaskets and shall equal or exceed ASTM Designation C-361.

2. Bedding - All reinforced concrete pipe conduits shall be laid in a concrete bedding for their entire length. This bedding shall consist of high slump concrete placed under the pipe and up the sides of the pipe at least 10% of its outside diameter with a minimum thickness of 3 inches, or as shown on the

3. Laying Pipe - Bell and spigot pipe shall be placed with the bell end upstream. Joints shall be made in accordance with recommendations of the manufacturer of the material. After the joints are sealed for the entire line, the bedding shall be placed so that all spaces under the pipe are filled. Care shall be exercised to prevent any deviation from the original line and grade of the pipe. The first joint must be located within 2 feet from the riser.

4. Backfilling shall conform to "Structure Backfill"

5. Other details (anti-seep collars, valves, etc.) shall be as shown on the drawings.

PERFORATED PIPE

Bituminous coated corrugated metal pipe (BCCMP) shall conform to the requirements of AASHTO M36 (pipe should be specified to be fully bituminous coated in accordance with AASHTO M190). Perforated pipe is TYPE III. Pipe shall have CLASS 2 perforations 3/8" in diameter.

CONCRETE

Concrete shall meet the requirements of Maryland Department of Transportation, State Highway Administration Standard Specifications for Construction and

CARE OF WATER DURING CONSTRUCTION

All work on permanent structures shall be carried out in areas free from water. The contractor shall construct and maintain all temporary dikes, levees, cofferdams, drainage channels, and stream diversions necessary to protect the areas to be occupied by the permanent works. The contractor shall also furnish, install, operate, and maintain all necessary pumping and other equipment required for removal of water from the various parts of the work and for maintaining the excavations, foundation, and other parts of the work free from water as required or directed by the engineer for constructing each part of the work. After having served their purpose, all temporary protective works shall be removed or leveled and graded to the extent required to prevent obstruction in any degree whatsoever of the flow of water to the spillway or outlet works and so as not to interfere in any way with the operation or maintenance of the structure. Stream diversions shall be maintained until the full flow can be passed through the permanent works. The removal of water from the required excavation and the foundation shall be accomplished in a manner and to the extent that will maintain stability of the excavated slopes and bottom of required excavations and will allow satisfactory performance of all construction operations. During the placing and compacting of material in required excavations, the water level at the locations being refilled shall be maintained below the bottom of the excavation at such locations which may require draining the water to sumps from which water shall be pumped.

STABILIZATION

All borrow areas shall be graded to provide proper drainage and left in a slightly condition. All exposed surfaces of the embankment, spillway, spoil and borrow areas, and berms shall be stabilized by seeding, lining, fertilizing and mulching in accordance with the Maryland Soil Conservation Service Standards and Specifications for Critical Area Planting (MD-342) or as shown on the accompanying drawings.

Stormwater management facility will be stabilized with permanent slope seeding as follows:

1. Seedbed Preparation - loosen upper 3 inches of soil by raking, discing or other acceptable means before seeding.
2. Soil Amendments - apply 2 tons per acre Dolomitic Limestone (92 lbs./1000sq. ft.), 600 lbs. per acre 10-10-10 fertilizer (14 lbs./1000 sq. ft.), and 400 lbs. per acre of 30-0-0 Ureaform Fertilizer (9.2 lbs./1000 sq. ft.). Harrow or disc lime and fertilizer into upper 3 inches of soil. At time of seeding, apply 400 lbs. (9.2 lbs./1000 sq. ft.) of 30-0-0 Ureaform Fertilizer and 500 lbs. per acre (11.5 lbs./1000 sq. ft.), of 10-0-0 fertilizer.
3. Seeding - for the period March 1 through April 30 seed with 40 lbs. per acre Kentucky 31 Tall Fescue, and 15 lbs. per acre Inoculated Crown Vetch. For the period May 1 through July 31 seed with 60 lbs. per acre Kentucky 31 Tall Fescue and 2 lbs. per acre Inoculated Weeping Lovegrass. For the period August 1 through October 15 seed with 40 lbs. per acre Kentucky 31 Tall Fesue, and 20 lbs. per acre Inoculated Interstate Serica Lespedeza. For the period October 16 through February 28 protect the site by Option (1): 2 tons per acre of well anchored straw. For the period May 1 through February 28 Inoculated Crown Vetch shall be applied during the subsequent period of March 1 through April 30 as the rate of 15 lbs. per acre.
4. Mulching - apply 1.5 to 2 tons per acre of un-rotted small grain straw immediately after seeding. Anchor mulch immediately after application using 218 gallons per acre of emulsified asphalt. On flat areas of slope 8 feet or higher, use 348 gallons per acre of anchoring.
5. Maintenance - Inspect all seeded areas and make needed repairs, replacements and re-seeding.

EROSION AND SEDIMENT CONTROL

Construction operations will be carried out in such a manner that erosion will be controlled and water and air pollution minimized. State and local laws concerning pollution abatement will be followed. Construction plans shall detail erosion and sediment control measures to be employed during the construction process.

PERMANENT SLOPE SEEDING

After spreading 4" topsoil, seed with a mixture of 30% Inoculated Crown Vetch and 70% Kentucky 31 Tall Fescue applied at a rate of 60 lbs./ acre; 10-20-20 fertilizer shall be applied at a rate of 25 lbs./1000 sq. ft.; lime at a rate of 92 lbs / 1000 s.f.; mulch area with unweathered small grain straw at a rate of 1.5 Tons/acre; anchor with a rapid curing asphalt (RC-70, R-250 or RC-800 at a rate of 0.1 gal/S.Y.

FILTER CLOTH

Filter cloth shall meet or exceed the requirements in Section 20.25-5 of the Baltimore County Standard Specifications and Details for Construction. Durable filter fabrics for drainage purposes are not limited to Mirafi 140S, DuPont TYPAC No. 3341 or 3401.
Filter cloth shall be protected from punching or tearing. Any damage other than an occasional small hole shall be repaired by placing another small piece of filter cloth over the damaged area or by replacing the cloth section. All overlaps shall be a minimum of one foot.

GABIONS

Gabions shall meet the requirements of Maryland Department of Transportation, State Highway Administration Standard Specifications for Construction and Materials, Section 312 and must be Cl. IV, PVC coated.

OUTFALL PROTECTION

Subgrade for riprap or gabion outfalls shall be prepared to the required line and grades. Any fill required in the subgrade shall be compacted to a density of approximately that of the surrounding undisturbed material. All rock or gravel shall conform to the specified grading limits when installed in the riprap or gabion. All stone shall be delivered and placed in a manner that will insure the stone in place shall be reasonably homogeneous with the larger rocks uniformly distributed and firmly

CUT-OFF TRENCH - THE CUT-OFF TRENCH SHALL BE EXCAVATED INTO IMPERVIOUS MATERIAL ALONG OR PARALLEL TO THE CENTERLINE OF THE EMBANKMENT AS SHOWN ON THE PLANS. THE BOTTOM WIDTH OF THE TRENCH SHALL BE GOVERNED BY THE EQUIPMENT USED FOR EXCAVATION. WITH THE MINIMUM WIDTH BEING FOUR FEET. THE DEPTH SHALL BE AT LEAST FOUR FEET BELOW EXISTING GRADE OR AS SHOWN ON THE PLANS. THE SIDE SLOPES OF THE TRENCH SHALL BE 1:1 OR FLATTER. THE BACKFILL SHALL BE COMPACTED WITH CONSTRUCTION EQUIPMENT, ROLLERS, OR HAND TAMPERS TO ASSURE MAXIMUM DENSITY AND MINIMUM PERMEABILITY.

ANTI-SEEP COLLAR NOTES

1. LOCATE COLLARS A MINIMUM OF 2' FROM ALL PIPE JOINTS
2. THE SEAL BETWEEN THE PIPE AND COLLAR SHALL BE WATER TIGHT.
3. COLLAR SHALL PROJECT A MINIMUM OF TWO FEET FROM THE EXTERIOR OF THE CONCRETE CRADLE AND THE PIPE ON ALL FOUR SIDES.
4. COLLAR SHALL BE CAST-IN-PLACE REINFORCED CONCRETE WITH 3,500 PSI (MIN.) STRENGTH @ 28 DAYS.
5. ALL REINFORCING TO BE CONTINUOUS THROUGHTOUT COLLAR.
6. ALL REINFORCING TO HAVE 1'-6" MIN. OVERLAP.
7. PROVIDE ADDITIONAL #4 REBARS ALONG THE PERIMETER OF ALL OPENINGS WITH THE AREA OF STEEL EQUAL TO OR GREATER THAN AREA OF STEEL REMOVED DUE TO OPENINGS.
8. TWO (2) INCH COVER MINIMUM FOR ALL REBARS.
9. UNLESS OTHERWISE NOTED COLLAR SHALL BE BUILT IN ACCORDANCE WITH BALTIMORE COUNTY CONSTRUCTION MATERIAL SPECIFICATIONS. COLLAR SHALL NOT BE BRICK.
10. WATER TIGHT SEAL TO BE SIKADUR 32, HI-MOL, CONFORMING TO ASTM C-881, TYPE I & II, GRADE 2, CLASS B & C. EPOXY BONDING/GROUTING ADHESIVE.

CONTROL STRUCTURE NOTES

1. STRUCTURE SHALL BE CAST-IN- PLACE REINFORCED CONCRETE WITH 3,500 PSI (MIN.) STRENGTH @ 28 DAYS.
2. ALL REINFORCING TO BE CONTINUOUS THROUGHOUT STRUCTURE.
3. ALL REINFORCING TO HAVE 1'-6" MIN. OVERLAPS.
4. PROVIDE ADDITIONAL #4 REBARS ALONG THE PERIMETER OF ALL OPENINGS WITH THE AREA OF STEEL EQUAL TO OR GREATER THAN AREA OF STEEL REMOVED DUE TO OPENINGS.
5. THREE (3) INCH COVER MINIMUM FOR ALL REBARS.
6. UNLESS OTHERWISE NOTED STRUCTURE SHALL BE BUILT IN ACCORDANCE WITH BALTIMORE COUNTY CONSTRUCTION MATERIAL SPECIFICATIONS AND BALTIMORE COUNTY STANDARD PLATE D-2.32. STRUCTURE SHALL NOT BE BRICK.
7. STRUCTURE TO CONFORM TO THE STRUCTURAL DETAILS REFERRED TO IN BALTIMORE COUNTY PLATE D-2.32.

POND NOTES

1. NO TREES, SHRUBS OR OTHER WOODY VEGETATION WILL BE ALLOWED WITHIN 50' OF THE INLET STRUCTURE IN THE POOL AREA, AND NOT ALLOWED WITHIN 15' OF THE TOE OF THE EMBANKMENT.
2. IF REQUIRED BY THE SEDIMENT CONTROL INSPECTOR FENCING SHALL BE INSTALLED TO PREVENT ACCESS TO THE BASIN BY CHILDREN.
3. THIS STORMWATER MANAGEMENT FACILITY IS DESIGNED TO MEET OR EXCEED ALL APPLICABLE REQUIREMENTS OF THE BALTIMORE COUNTY DEPARTMENT OF PUBLIC WORKS AND THE SOIL CONSERVATION DISTRICT. MAINTENANCE OF THIS PUBLIC FACILITY WILL BE THE RESPONSIBILITY OF BALTIMORE COUNTY.
4. IF UNSUITABLE (PERVIOUS) MATERIAL IS ENCOUNTERED AT TIME OF CUT-OFF TRENCH INSTALLATION DEEPER THAN 4', IT WILL BE NECESSARY TO EXTEND THE CUT - OFF TRENCH DOWN UNTIL SUITABLE MATERIAL IS ENCOUNTERED AS DETERMINED BY A GEOTECHNICAL ENGINEER. AT TIME OF CONSTRUCTION, EXISTING SOIL ADJACENT TO CUT-OFF TRENCH SHALL BE EVALUATED FOR SEEPAGE BY A GEOTECHNICAL ENGINEER AND ADDRESSED PER RECOMMENDATIONS OF THE GEOTECHNICAL ENGINEER.
5. SOILS TO BE USED FOR CUT-OFF TRENCH SHALL CONFORM TO UNIFIED CLASSES CL, SC, CH OR GC.

GENERAL NOTES

UNLESS OTHERWISE NOTED, ALL CONSTRUCTION AND WORKMANSHIP SHALL BE IN ACCORDANCE WITH:

1. HOWARD COUNTY DEPARTMENT OF PUBLIC WORKS STANDARD SPECIFICATIONS AND DETAILS FOR CONSTRUCTION, 1976, ERRATA AND ADDENDA.
2. SOIL CONSERVATION SERVICE MARYLAND STANDARDS AND SPECIFICATIONS POND CODE 378, NOVEMBER, 1982.
3. MARYLAND DEPARTMENT OF TRANSPORTATION STATE HIGHWAY ADMINISTRATION, JANUARLY, 1982, STANDARD SPECIFICATIONS FOR CONSTRUCTION AND MATERIAL.
4. STORMWATER MANAGEMENT APPROVED UNDER BILL 105-84.

AS-BUILT NOTES

1. AS-BUILT PLANS AND CERTIFICATION ARE REQUIRED FOR THIS STORMWATER MANAGEMENT FACILITY. THESE MUST BE PREPARED AND SEALED BY A REGISTERED PROFESSIONAL ENGINEER. HOWARD COUNTY WILL NOT PERFORM THE INSPECTION OR PREPARE THE AS-BUILT PLANS OR CERTIFICATION. THE STORMWATER MANAGEMENT PERMIT SECURITY WILL NOT BE RELEASED UNTIL THE AS-BUILT PLANS AND CERTIFICATION ARE APPROVED BY BALTIMORE COUNTY.
2. IN ORDER TO PREPARE THE REQUIRED AS-BUILT PLANS AND CERTIFICATION, THIS STORMWATER MANAGEMENT FACILITY MUST BE INSPECTED BY THE ENGINEER AT THE SPECIFIC STAGES DURING CONSTRUCTION AS REQUIRED BY THE CURRENT HOWARD COUNTY STORMWATER MANAGEMENT POLICY AND DESIGN MANUAL. THE CONTRACTOR SHALL NOTIFY THE ENGINEER AT LEAST FIVE (5) WORKING DAYS PRIOR TO STARTING ANY WORK SHOWN ON THESE PLANS.

STOCKPILE/SPOIL AREA NOTES

ANY AREA NEEDED FOR TEMPORARY STOCKPILE AND SEDIMENT BASIN SPOIL WILL BE LOCATED WITHIN THE LIMIT OF DISTURBANCE,AND UPSTREAM FROM A SEDIMENT CONTROL MEASURE, BUT LOCATED SUCH AS NOT TO IMPEDED UPON THE MEASURE.

DRAINAGE AREA TO POND

BY-PASS DRAINAGE AREA

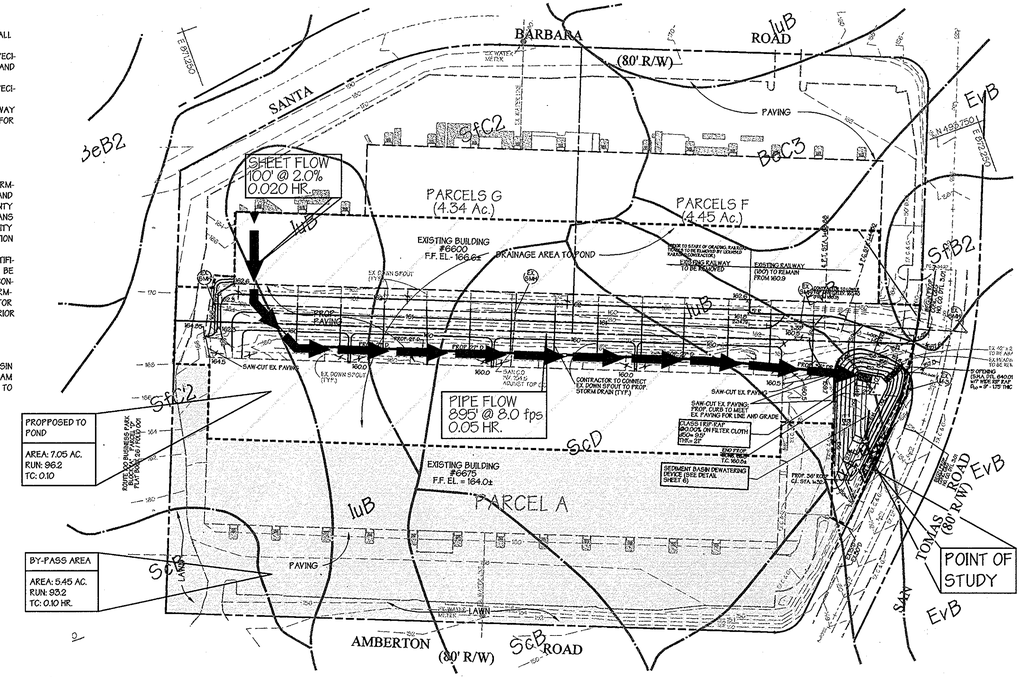

PROPOSED DRAINIAGE AREA MAP

SCALE : 1" = 100'
SHALLOW RUN (DEAN RUN) WATERSHED
PROPSED LAND USE: COMMERCIAL
(OFFICE WAREHOUSE)

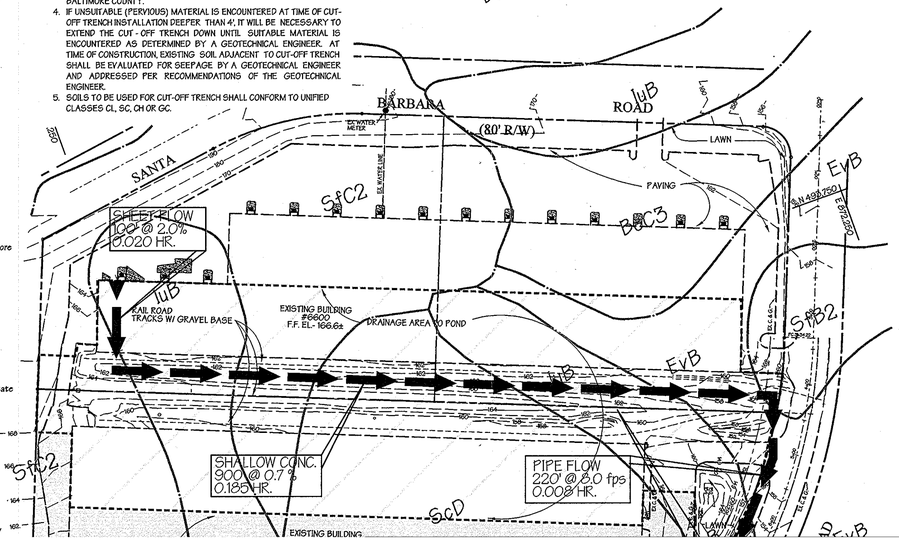

Legend

Ex. Contours	394
Prop. Contours	394
Ex. Curb & Gutter	
Prop. Curb & Gutter	
Ex. Sanitary	
Ex. Storm Drain	
Ex. Water	
EX. R/W	
DRAINAGE AREA	

SOIL TYPES	HYDROLIC SOIL GROUPS
C	luB
C	ScB
C	ScD
* B	SfC2, SfB2
* A	EvC

These plans for small pond construction, soil erosion and sediment control meet the requirements of Howard Soil Conservation District.

APPROVED: HOWARD SOIL CONSERVATION DISTRICT — DATE 1/4/99

PLAN NUMBER

These plans have been reviewed for the Howard Soil Conservation District and meets the technical requirements for small pond construction, soil erosion and sediment control.

USDA-NATURAL RESOURCES CONSERVATION SERVICE — DATE 1/4/99

APPROVED: Howard County Department of Planning and Zoning

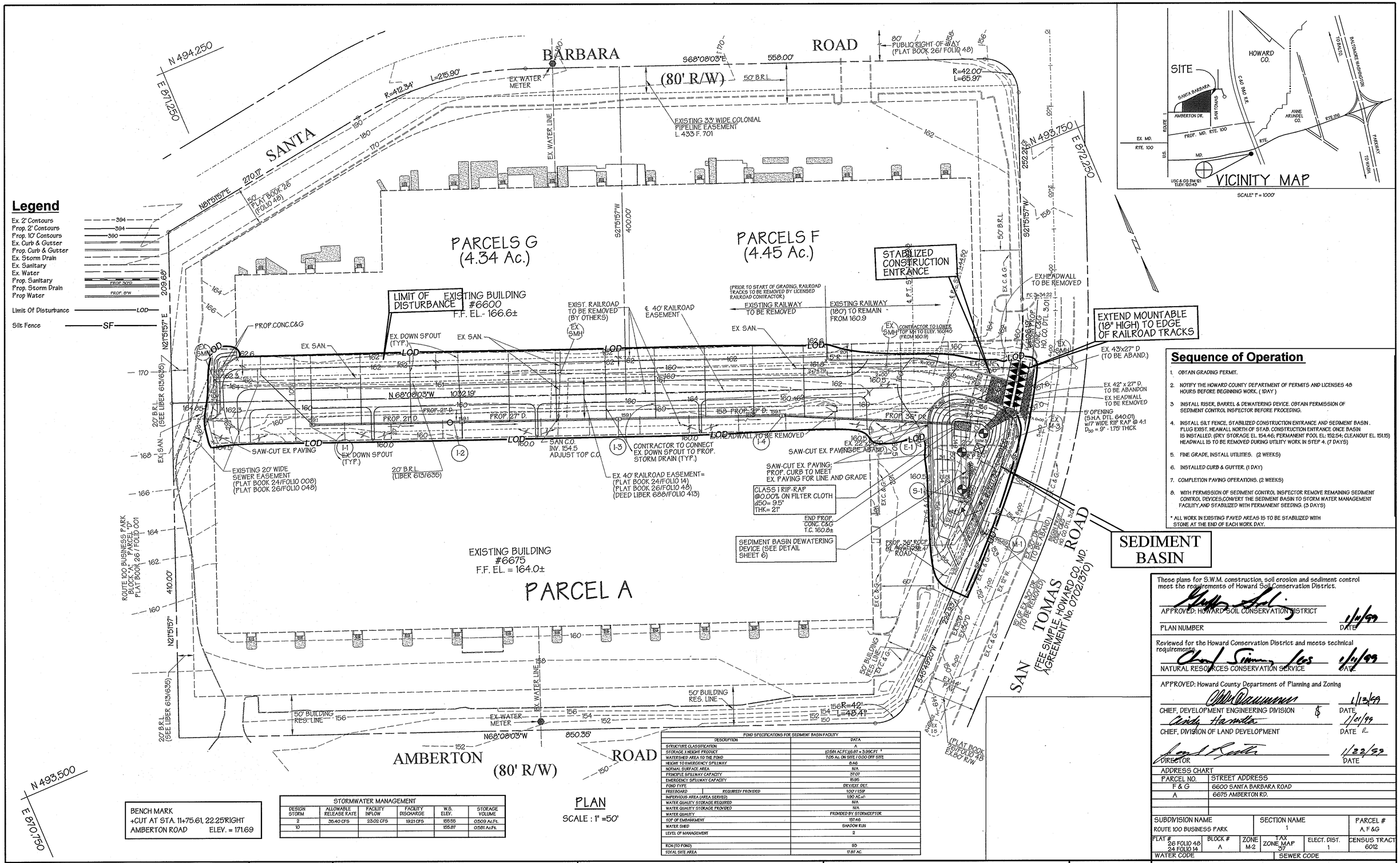

Legend

- Ex. 2' Contours
- Prop. 2' Contours
- Prop. 10' Contours
- Ex. Curb & Gutter
- Prop. Curb & Gutter
- Ex. Storm Drain
- Ex. Sanitary
- Ex. Water
- Prop. Sanitary
- Prop. Storm Drain
- Prop Water
- Limit Of Disturbance — LOD
- Silt Fence — SF

Sequence of Operation

1. OBTAIN GRADING PERMIT.
2. NOTIFY THE HOWARD COUNTY DEPARTMENT OF PERMITS AND LICENSES 48 HOURS BEFORE BEGINNING WORK. (1DAY)
3. INSTALL RISER, BARREL & DEWATERING DEVICE. OBTAIN PERMISSION OF SEDIMENT CONTROL INSPECTOR BEFORE PROCEDING.
4. INSTALL SILT FENCE, STABILIZED CONSTRUCTION ENTRANCE AND SEDIMENT BASIN. PLUG EXIST. HEAWALL NORTH OF STAB. CONSTRUCTION ENTRANCE ONCE BASIN IS INSTALLED. (DRY STORAGE EL. 154.46; PERMANENT POOL EL: 152.54; CLEANOUT EL. 151.15) HEADWALL IS TO BE REMOVED DURING UTILITY WORK IN STEP 4. (7 DAYS)
5. FINE GRADE, INSTALL UTILITIES. (2 WEEKS)
6. INSTALLED CURB & GUTTER. (1 DAY)
7. COMPLETION PAVING OPERATIONS. (2 WEEKS)
8. WITH PERMISSION OF SEDIMENT CONTROL INSPECTOR REMOVE REMAINING SEDIMENT CONTROL DEVICES,CONVERT THE SEDIMENT BASIN TO STORM WATER MANAGEMENT FACILITY,AND STABILIZED WITH PERMANENT SEEDING. (3 DAYS)

* ALL WORK IN EXISTING PAVED AREAS IS TO BE STABILIZED WITH STONE AT THE END OF EACH WORK DAY.

BENCH MARK
+CUT AT STA. 11+75.61, 22.25'RIGHT
AMBERTON ROAD ELEV. = 171.69

STORMWATER MANAGEMENT					
DESIGN STORM	ALLOWABLE RELEASE RATE	FACILITY INFLOW	FACILITY DISCHARGE	W.S. ELEV.	STORAGE VOLUME
2	35.40 CFS	23.02 CFS	19.21 CFS	155.55	0.509 Ac.Ft.
10				155.87	0.581 Ac.Ft.

POND SPECIFICATIONS FOR SEDIMENT BASIN FACILITY	
DESCRIPTION	DATA
STRUCTURE CLASSIFICATION	A
STORAGE X HEIGHT PRODUCT	(0.581 AC.FT.)(6.87 = 3.99C.FT. *
WATERSHED AREA TO THE POND	7.05 Ac. ON SITE / 0.00 OFF SITE
HEIGHT TO EMERGENCY S'PILLWAY	8.46
NORMAL SURFACE AREA	N/A
PERINCIPLE S'PILLWAY CAPACITY	37.07
EMERGENCY S'PILLWAY CAPACITY	15.95
POND TYPE	DRY/EXT. DET.
FREEBOARD REQUIRED/ PROVIDED	1.00 / 1.15S'
INFERVIOUS AREA (AREA SERVED)	1.90 AC.=/-
WATER QUALITY STORAGE REQUIRED	N/A
WATER QUALITY STORAGE PROVIDED	N/A
WATER QUALITY	PROVIDED BY STORMCEPTOR.
TOP OF EMBANKMENT	157.46
WATER SHED	SHADOW RUN
LEVEL OF MANAGEMENT	2
RCN (TO POND)	93
TOTAL SITE AREA	17.87 AC.

These plans for S.W.M. construction, soil erosion and sediment control meet the requirements of Howard Soil Conservation District.

APPROVED: HOWARD SOIL CONSERVATION DISTRICT — DATE 1/12/99

PLAN NUMBER

Reviewed for the Howard Conservation District and meets technical requirements

NATURAL RESOURCES CONSERVATION SERVICE — DATE 1/12/99

APPROVED: Howard County Department of Planning and Zoning

CHIEF, DEVELOPMENT ENGINEERING DIVISION — DATE 1/12/99

CHIEF, DIVISION OF LAND DEVELOPMENT — DATE 1/21/99

DIRECTOR — DATE 1/22/99

ADDRESS CHART	
PARCEL NO.	STREET ADDRESS
F & G	6600 SANTA BARBARA ROAD
A	6675 AMBERTON RD.

SUBDIVISION NAME		SECTION NAME		PARCEL #
ROUTE 100 BUSINESS PARK		1		A, F &G
PLAT # 26 FOLIO 48 24 FOLIO 14	BLOCK # A	ZONE M-2	TAX ZONE MAP 37	ELECT. DIST. 1	CENSUS TRACT 6012
WATER CODE		SEWER CODE		

GEORGE WILLIAM STEPHENS, JR. AND ASSOCIATES, INC.
CIVIL ENGINEERS & LAND SURVEYORS
658 KENILWORTH DRIVE, SUITE 100
TOWSON, MARYLAND 21204
(410) 825-8120

ENGINEER CERTIFICATION:
I certify that this plan for erosion and sediment control represents a practical and workable plan based on my personal knowledge of the site conditions and that it was prepared in accordance with the requirements of the Howard Soil Conservation District.

Engineer — Date 10/13/98
Name Nicholas J. Brader, III — PE# 18558

OWNER/DEVELOPER
MIE PROPERTIES CO.
5720 Executive Drive
Baltimore, Maryland 21228-1789
(410) 788-0100

DEVELOPER CERTIFICATION:
I/We certify that all development and construction will be done according to this plan, and that any responsible personnel involved in the construction project will have a Certification of Attendance at a Department of the Environment Approved Training Program for the Control of Sediment and Erosion before beginning the project. I also authorize periodic on-site inspection by the Howard Soil Conservation District.

Developer — Date 10/13/98
Name Jeffrey A. Gish, V.P.

DESIGNED BY:	H.P.P.
DRAWN BY:	P.L.T.
CHECKED BY:	N.B.
REVISIONS	

Sediment Control Plan
ROUTE ONE HUNDRED BUSINESS PARK
BLOCK "A"
Previous File Nos. SDP 72-27, SDP 74-80, F #81

Election District #1
Parcels A, F & G
Scale: 1"=50'

Howard County, Maryland
October 13, 1998
Sheet 5 of 10

SDP -99-35 P.N. 8885

FILENAME: 8885sedcontrolplan.s05

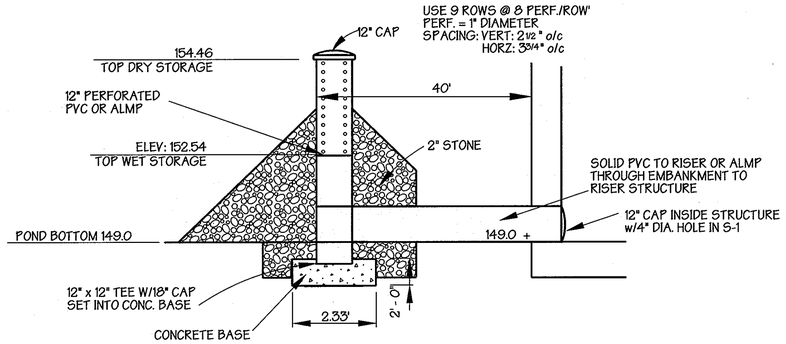

BASIN DRAWDOWN DEVICE
PERFORATED PIPE DETAIL - BASIN #1

NO SCALE

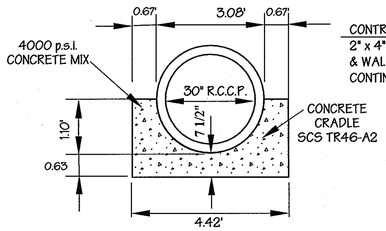

CONCRETE CRADLE

SCALE: 1" = 2'

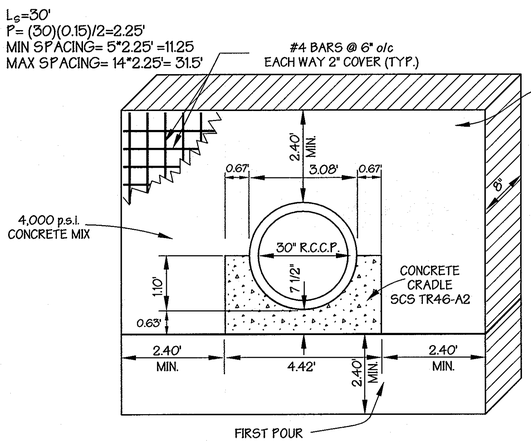

NOTE:
1. ANTI-SEEP COLLARS SHALL BE PLACE 2' MIN. FROM ALL PIPE JOINTS.
2. ALL MATERIALS TO BE IN ACCORDANCE WITH CONSTRUCTION AND CONSTRUCTION MATERIALS SPECIFICATIONS.
3. THE SEAL BETWEEN THE PIPE AND COLLAR SHALL BE WATER TIGHT.
4. COLLAR SHALL PROJECT A MIN. OF 2.25' FROM THE EXTERIOR OF THE CONCRETE CRADLE AND THE PIPE ON ALL FOUR SIDES.
5. THERE SHALL BE PREFORMED ASPHALT JOINT FILLER MATERIAL BETWEEN ALL CONCRETE SURFACES EXCEPT BETWEEN THE PIPE AND THE CRADLE.

NOTES

1. UNLESS OTHERWISE NOTED, CAST-IN-PLACE STRUCTURE SHALL BE BUILT IN ACCORDANCE WITH HOWARD CO. STD. DETAIL, (PLATE SD. 4.23).
2. STRUCTURE TO BE CAST-IN-PLACE REINFORCED CONCRETE WITH 3500 P.S.I. (MIN.) COMPRESSIVE STRENGTH @ 28 DAYS.
3. ALL REINFORCING TO BE CONTINUOUS THROUGHOUT STRUCTURE.
4. ALL REINFORCING TO HAVE 1'-6" MIN. OVERLAPS.
5. TWO (2) INCH COVER MINIMUM FOR ALL REBARS IN WALLS AND THREE (3) INCHES FOR THE BASE.
6. PROVIDE ADDITIONAL #4 REBARS ALONG THE PERIMETER OF ALL OPENINGS WITH THE AREA OF STEEL EQUAL TO OR GREATER THAN THE AREA OF STEEL "REMOVED" DUE TO OPENING.
7. ALL EXPOSED CORNERS OF CONCRETE SHALL BE CHAMFERED WITH 3/4" X 3/4" MILLED CHAMFER STRIPS.

CONCRETE ANTI-SEEP COLLAR

SCALE: 1" = 2'

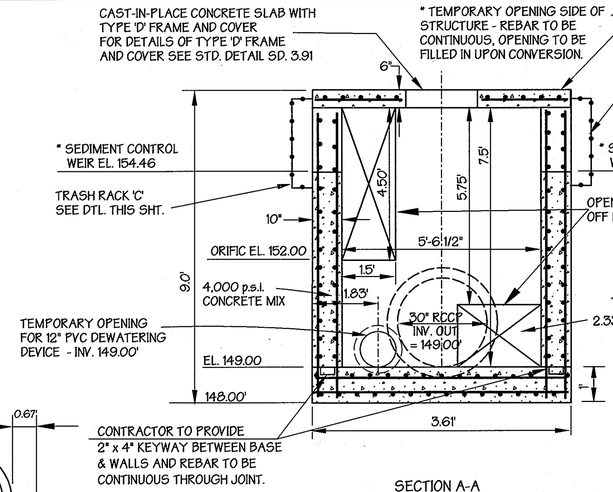

SECTION A-A

* Reinforcement is required on outside as well as inside of walls.

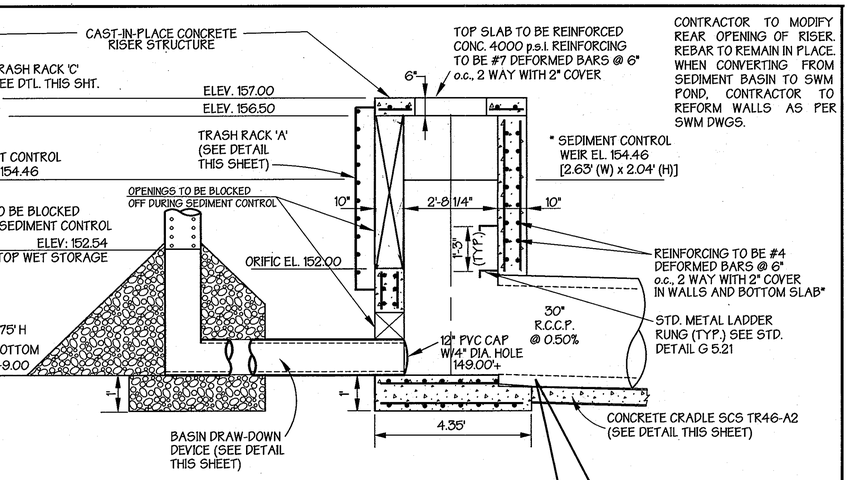

SECTION B-B

PRINCIPLE SPILLWAY PIPE SHALL BE WATERTIGHT IN ACCORDANCE W/ASTM C-361 HYDROSTATIC TESTING SPECIFICATIONS.

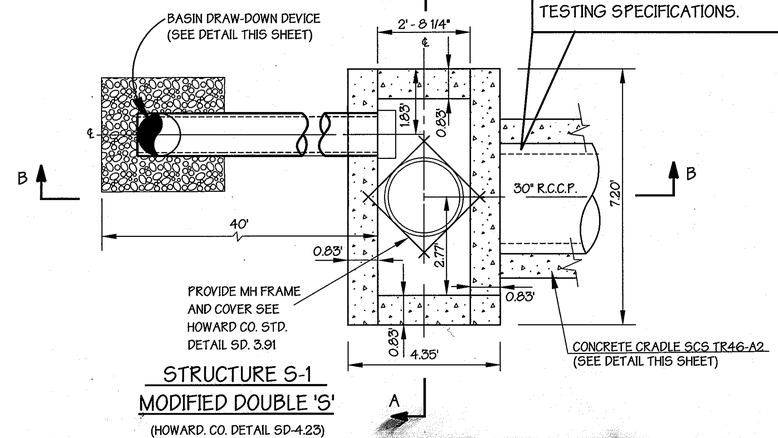

STRUCTURE S-1
MODIFIED DOUBLE 'S'

(HOWARD. CO. DETAIL SD-4.23)
SCALE: 1" = 2'

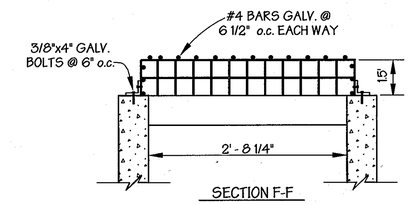

SECTION F-F

NOTE: TRASH RACKS ARE TO BE HOT DIPPED GALVANIZED AFTER FABRICATION

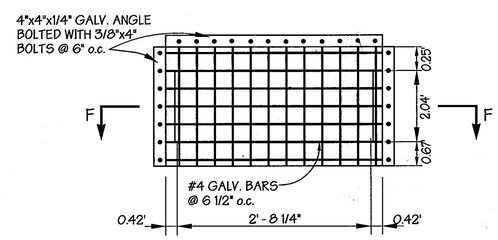

TRASH RACK DETAILS 'C'

NO SCALE

These plans for S.W.M. construction, soil erosion and sediment control meet the requirements of Howard Soil Conservation District.

APPROVED: HOWARD SOIL CONSERVATION DISTRICT — DATE 1/11/99

PLAN NUMBER

Reviewed for the Howard Conservation District and meets technical requirements

NATURAL RESOURCES CONSERVATION SERVICE — DATE 1/11/99

APPROVED: Howard County Department of Planning and Zoning

CHIEF, DEVELOPMENT ENGINEERING DIVISION — DATE 1/13/99

CHIEF, DIVISION OF LAND DEVELOPMENT — DATE 1/21/99

DIRECTOR — DATE 1/22/99

ADDRESS CHART

PARCEL NO.	STREET ADDRESS
F & G	6600 SANTA BARBARA ROAD
A	6675 AMBERTON ROAD

SUBDIVISION NAME	SECTION NAME	PARCEL #
ROUTE100 BUSINESS PARK		A, F & G

PLAT #	BLOCK #	ZONE	TAX ZONE MAP	ELECT. DIST.	CENSUS TRACT
26 LIBER 48 24 FOLIO 14	A	M-2	37	1	6012

WATER CODE — SEWER CODE

GEORGE WILLIAM STEPHENS, JR. AND ASSOCIATES, INC.
CIVIL ENGINEERS & LAND SURVEYORS
658 KENILWORTH DRIVE, SUITE 100
TOWSON, MARYLAND 21204
(410) 825-8120

ENGINEER CERTIFICATION:
I certify that this plan for erosion and sediment control represents a practical and workable plan based on my personal knowledge of the site conditions and that it was prepared in accordance with the requirements of the Howard Soil Conservation District.

Engineer — Date 10/13/98
Name Nicholas J. Brader, III — PE # 19558

OWNER/DEVELOPER
MIE PROPERTIES CO.
5720 Executive Drive
Baltimore, Maryland 21228-1789
(410) 788-0100

DEVELOPER CERTIFICATION:
I/We certify that all development and construction will be done according to this plan, and that any responsible personnel involved in the construction project will have a Certification of Attendance at a Department of the Environment Approved Training Program for the Control of Sediment and Erosion before beginning the project. I also authorize periodic on-site inspection by the Howard Soil Conservation District.

Developer — Date 10/13/98
Name Jeffrey A. Gish, V.P.

DESIGNED BY: H.P.P.
DRAWN BY: P.L.T.
CHECKED BY: N.B.
REVISIONS

Sediment Control Details
ROUTE ONE HUNDRED BUSINESS PARK
BLOCK "A"

Previous File Nos. SDP 72-27, SDP 74-80, F #81

Election District #1
Parcels A, F & G
Scale: As Shown

Howard County, Maryland
October 13, 1998
Sheet 6 of 10

FILENAME: 8885seddetails.s06

SDP -99-35

P.N. 8885

GENERAL NOTES

1. Refer to "1994 Maryland Standards and Specifications for Soil Erosion and Sediment Control" for standard details and detailed specifications of each practice specified herein.
2. With the approval of the sediment control inspector, minor field adjustments can and will be made to ensure the control of any sediment. Changes to sediment control practices require prior approval of the sediment control inspector and the Baltimore County Soil Conservation District.
3. As the end of each working day, all sediment control practices will be inspected and left in operational condition.
4. Following initial soil disturbance or redisturbance, permanent or temporary stabilization shall be completed within: (a) seven calendar days as to the surface of all perimeter controls, dikes, swales, ditches, perimeter slopes, and all slopes greater than three horizontal to one vertical (3:1), and (b) fourteen days as to all other disturbed or graded areas on the project site which will remain idle over fourteen days.
5. Any change to the grading proposed on this plan requires re-submission to Baltimore County Soil Conservation District for approval.
6. Dust control will be provided for all disturbed areas. Refer to "1994 Maryland Standards and Specifications for Soil Erosion and Sediment Control", page 3-31-34, for acceptable methods and specifications for dust control.
7. Any variations from the sequence of operations stated on this plan requires the approval of the sediment control inspector and the Baltimore County Soil Conservation District prior to the initiation of the change.
8. Excess cut or borrow material shall go to, or come from, respectively, a site with an open grading permit.
9. The following item may be used as applicable: Refer to "Maryland's Guidelines to Waterway Construction" by the Water Resources Administration (WRA), dated January, 1990, for standard details and detailed specifications of each practice specified herein for waterway construction.

Section I - Vegetative Stabilization Methods and Materials

A. Site Preparation

I. Install erosion and sediment control structures (either temporary or permanent) such as diversions, grade stabilization structures, berms, watercourses, or sediment control basins.

II. Perform all grading operations on light and/or to the slope. Final grading and shaping is not usually necessary for temporary seeding.

III. Schedule required soil tests to determine soil amendment composition and application rates for those areas disturbed area over 5 acres.

B. Soil Amendments (Fertilizer and Lime Specifications)

I. Soil tests must be performed to determine the exact ratios and application rates for both lime and fertilizer on areas having disturbed areas over 5 acres. Soil analysis may be performed by the University of Maryland or a recognized commercial laboratory. Soil samples may be taken for engineering purposes may also be used for chemical analysis.

II. Fertilizers shall be uniform in composition, free flowing and suitable for accurate application by approved equipment. Manure may be substituted for fertilizer with prior approval from the appropriate approval authority. Fertilizers shall all be delivered to the site fully labeled according to the applicable state fertilizer laws and shall bear the name, trade name or trademark and warrantee of the producer.

III. Lime materials shall be ground limestone (hydrated or burnt lime may be substituted) which contains at least 50% total oxides (calcium oxide plus magnesium oxide). Limestone shall be ground to such fineness that at least 50% will pass through a #100 mesh sieve and 98 - 100% will pass through a #20 mesh sieve.

IV. Incorporate lime and fertilizer into the top 3 - 5" of soil by disking or other suitable means.

C. Seedbed Preparation

I. Temporary Seeding

a. Seedbed preparation shall consist of loosening soil to a depth of suitable agricultural or construction equipment, such as disc harrows or chisel plows or rippers mounted on construction equipment. After the soil is loosened it should not be rolled or dragged smooth but left in the roughened condition. Slopes steeper (greater than 3:1) should not be tracked leaving the surface in an irregular condition with ridges running parallel to the contour of the slope.

b. Apply fertilizer and lime as prescribed on the plans.

c. Incorporate lime and fertilizer into the top 3 - 5" of soil by disking or other suitable means.

II. Permanent Seeding

a. Minimum soil conditions required for permanent vegetative establishment:

1. Soil pH shall be between 6.0 and 7.0.
2. Soluble salts shall be less than 500 parts per million (ppm).
3. The soil shall contain less than 40% clay but enough clay (+30% silt plus clay) to provide the capacity to hold a moderate amount of moisture. An exception is if ryegrass or sericia lespedeza is to be planted, then a sandy soil (<30% silt plus clay) would be acceptable.
4. Soil shall contain 1.5% minimum organic material by weight.
5. Soil must contain sufficient pore space to permit root penetration.

b. If stockpiled topsoil is used, it should be tested for pH, and adding topsoil is required in accordance with Section 20 Standard and Specification for Topsoil.

c. Apply soil amendments as per soil tests or as included on the plans.

d. Mix soil amendments into the top 3 - 5" of topsoil by disking or other suitable means. Lawn areas should be raked to smooth the surface, remove large objects like stones and branches, and ready the area for seed application. Where site conditions will not permit normal seedbed preparation, loosen surface soil by dragging with a heavy chain or other equipment to roughen the surface. Steep slopes (steeper than 3:1) should be tracked by a dozer leaving the soil in an irregular condition with ridges running parallel to the contour of the slope. The top 1 - 2" of soil should be loose and friable. Seedbed loosening may not be necessary on newly disturbed areas.

D. Seed Specifications

I. All seed must meet the requirements of the Maryland State Seed Law. All seed shall be subject to re-testing by a recognized seed laboratory. All seed used shall have been tested within the 6 months immediately preceding the date of sowing such material in this job.

NOTE: SEED TAGS SHALL BE MADE AVAILABLE TO THE INSPECTOR TO VERIFY TYPE AND RATE OF SEED USED.

II. Inoculant - The inoculant for treating legume seed in the seed mixture shall be a pure culture of nitrogen-fixing bacteria prepared specifically for the species. Inoculants shall not be used later than the date indicated on the container. Add fresh inoculant as directed on package. Use four times the recommended rate when hydroseeding. NOTE: It is very important to keep inoculant as cool as possible and unused. Temperatures above 75 - 80 degrees F. can weaken bacteria and make inoculant less effective.

E. Methods of Seeding

I. Hydroseeding: Apply seed uniformly with hydroseeder (slurry inclusion seed and fertilizer), broadcast or drop seeder, or a cultipacker seeder.

a. If fertilizer is being applied at the time of seeding, the application rates amounts will not exceed the following: nitrogen: maximum of 100 lbs. per acre total soluble nitrogen; P205 (phosphorus): 200 lbs./ac; K20 (potassium): 200 lbs./ac.

b. Lime - use only ground agricultural limestone, (1/2 to 3 tons per acre may be applied by hydroseeding). Normally, not more than 2 tons are applied by hydroseeding at any one time. Do not use burnt or hydrated lime when hydroseeding.

c. Seed and fertilizer shall be mixed on site and seeding shall be done immediately and without interruption.

II. Dry Seeding: This includes use of conventional drop or broadcast spreaders.

a. Seed spread dry shall be incorporated into the subsoil at the rates prescribed on the Temporary or or Permanent Seeding Summaries or Tables 20 or 26. The seeded area shall then be rolled with a weighted roller to provide good seed to soil contact.

b. Where practical, seed should be applied in two directions perpendicular to each other. Apply half the seeding rate in each direction.

III. Drill or Cultipacker Seeding: Mechanized seeders that apply and cover seed with soil.

a. Cultipacking seeders are required to bury the seed in such a fashion as to provide at leaes 1/4 inch of soil covering. Seedbed must be firm after planting.

b. Where practical, seed should be applied in two directions perpendicular to each other. Apply half the seeding rate in each direction.

F. Mulch Specifications (in order of preference)

I. Straw shall consist of thoroughly threshed wheat, rye or oat straw, reasonably bright in color, and shall not be musty, moldy, caked, decayed, or excessively dusty and shall be free of noxious weed seeds as specified in the Maryland Seed Law.

II. Wood Cellulose Fiber Mulch (WCFM)

a. WCFM shall consist of specially prepared wood cellulose processed into a uniform fibrous physical state.

b. WCFM shall be dyed green or contain a green dye in the package that will provide an appropriate color to facilitate visual inspection of the uniformly spread slurry.

c. WCFM, including dye, shall contain no germination or growth inhibiting factors.

d. WCFM materials shall be manufactured and processed in such a manner that the wood cellulose fiber mulch will remain in uniform suspension in water under agitation and will blend with seed, fertilizer and other additives to form a homogeneous slurry. The mulch material shall form a Mortar-like ground cover, on application, having moisture absorption and percolation properties and shall cover and hold grass seed in contact with the soil without inhibiting the growth of the grass seedlings.

e. WCFM material shall contain no elements or compounds at concentration levels that will be phyto-toxic.

f. WCFM must conform to the following physical requirements: fiber length to approximately 10 mm., diameter approximately 1 mm., pH range of 4.0 to 8.5, ash content of 1.6% maximum and water holding capacity of 90% minimum.

NOTE: ONLY STERILE STRAW MULCH SHOULD BE USED IN AREAS WHERE ONE SPECIES OF GRASS IS DESIRED.

G. Mulching Seeded Areas - Mulch shall be applied to all seeded areas immediately after seeding.

I. If grading is completed outside of the seeding season, mulch alone shall be applied as prescribed in this section and maintained until the seeding season returns and seeding can be performed in accordance with these specifications.

II. When straw mulch is used, it shall be spread over all seeded areas at the rate of 2 tons/acre. Mulch shall be applied to a uniform loose depth of between 1" and 2". Mulch applied shall achieve a uniform distribution and depth so that the soil surface is not exposed. If a mulch anchoring tool is to be used, the rate should be increased to 2.5 tons/acre.

III. Wood cellulose fiber used as a mulch shall be applied at a not dry weight of 1500 lbs. per acre. The wood cellulose fiber shall be mixed with water, and the mixture shall contain a maximum of 50 lbs. of wood cellulose fiber per 100 gallons of water.

H. Securing Straw Mulch (Mulch Anchoring): Mulch anchoring shall be performed immediately following mulch application to minimize loss by wind or water. This may be done by one of the following methods(listed by preference), depending upon size of area and erosion hazard:

I. A mulch anchoring tool in a tractor drawn implement designed to punch and anchor mulch into the soil surface a minimum of two (2) inches. This practice is most effective on large areas, but is limited to flatter slopes where equipment can operate safely. If used on sloping land, this practice should be used on the contour if possible.

II. Wood cellulose fiber may be used for anchoring straw. The fiber binder shall be applied at a not dry weight of 750 pounds/acre. The wood cellulose fiber shall be mixed with water and the mixture shall contain a maximum of 50 pounds of wood cellulose fiber per 100 gallons of water.

III. Application of liquid binders should be heavier at the edges where wind catches mulch, such as in valleys and on the crests of banks. The remainder of area should appear uniform after binder application. Synthetic binders - such as Acrylic DLR (Aegis-Tack), DCA-70, Petroset, Terra Tax & Terra Tack AR or other approved equal may be used at rates recommended by the manufacturer to anchor mulch.

Section II - Temporary Seeding

Vegetation - annual grass or grain used to provide cover on disturbed areas for up to 12 months. For longer duration of vegetative cover, Permanent Seeding is required.

Section III - Permanent Seeding

Seeding grass and legumes to establish ground cover for a minimum period of one year on disturbed areas generally receiving low maintenance.

Section IV - Sod: To provide quick cover on disturbed areas (2:1 grade or flatter).

A. General specifications

I. Class of turfgrass sod shall be Maryland or Virginia State Certified or Approval. Sod labels shall be made available to the job foreman and inspector.

II. Sod shall be machine cut at a uniform soil thickness of 3/4", plus or minus 1/4", at the time of cutting. Measurement for thickness shall exclude top growth and thatch. Individual pieces of sod shall be cut to the suppliers width and length. Maximum allowable deviation from standard widths and lengths shall be 5 percent. Broken pads and torn or uneven ends will not be acceptable.

III. Standard size sections of sod shall be strong enough to support their own weight and retain their size and shape when suspended vertically with a firm grasp on the upper 10 percent of the section.

IV. Sod shall not be harvested or transplanted when moisture content (excessively dry or wet) may adversely affect its survival.

V. Sod shall be harvested, delivered, and installed within a period of 36 hours. Sod not transplanted within this period shall be approved by an agronomist or soil scientist prior to its installation.

B. Sod Installation

I. During periods of excessively high temperature or in areas having dry subsoil, the subsoil shall be lightly irrigated immediately prior to laying the sod.

II. The first row of sod shall be laid in a straight line with subsequent rows placed parallel to and tightly wedged against each other. Lateral joints shall be staggered to promote more uniform growth and strength. Ensure that sod is not stretched or overlapped and that all joints are butted tight in order to prevent voids which would cause drying of the roots.

III. Wherever possible, sod shall be laid with the long edges parallel to the contour and with staggering joints. Sod shall be rolled and tamped, pegged or otherwise secured to prevent slippage on slopes and to ensure solid contact between sod roots and the underlying soil surface.

IV. Sod shall be watered immediately following rolling or tamping until the underside of the new sod pad and soil surface below the sod are thoroughly wet. The operations of laying, tamping and irrigating for any piece of sod shall be completed within eight hours.

C. Sod Maintenance

I. In the absence of adequate rainfall, watering shall be performed daily or as often as necessary during the first week and in sufficient quantities to maintain moist soil to a depth of 4". Watering should be done during the heat of the day to prevent wilting.

II. After the first week, sod watering is required as necessary to maintain adequate moisture content.

III. The first mowing of sod should not be attempted until the sod is firmly rooted. No more than 1/3 of the grass leaf shall be removed by the initial cutting or subsequent cuttings. Grass height shall be maintained between 2" and 3" unless otherwise specified.

Section IV - Turfgrass Establishment

Areas where turfgrass may be desired include lawns, parks, playgrounds, and commercial sites which will receive a medium to high level of maintenance. Areas to receive sod shall be tilled by disking or other approved methods to a depth of 2 to 4 inches, leveled and raked to prepare a proper seedbed. Stones and debris over 1 1/2 inches in diameter shall be removed. The resulting seedbed shall be in such condition that future mowing of grasses will pose no difficulty.

NOTE: Choose certified material. Certified material is the best guarantee of cultivar purity. The certification program of the Maryland Department of Agriculture, Turf and Seed Section, provides a reliable means of consumer protection and assures a pure genetic line.

A. Turfgrass Mixtures

I. Kentucky Bluegrass - Full sun mixture - For use in areas that receive intensive management. Irrigation required in the areas of central Maryland and eastern shore. Recommended Certified Kentucky Bluegrass Cultivars: Seeding Rate: 65 to 90 pounds/1000 square feet. A minimum of three bluegrass cultivars should be chosen ranging from a minimum of 10% to a maximum of 35% of the mixture by weight.

II. Kentucky Bluegrass/Perennial Rye - Full sun mixture - For use in full sun areas where rapid establishment is necessary and where turf will receive moderate to intensive management. Certified Perennial Ryegrass Cultivars/ Certified Kentucky Bluegrass Seeding rate: 2 pounds mixture/1000 square feet. A minimum of 3 Kentucky Bluegrass Cultivars must be chosen, with each cultivar ranging from 10% to 35% of the mixture by weight.

III. Tall Fescue/Kentucky Bluegrass - Full sun mixture - For use in drought prone areas and for areas receiving low to medium management in full sun to medium shade. Recommended mixture includes: certified Tall Fescue Cultivars 95 - 100%, certified Kentucky Bluegrass Cultivars 0 - 5%. Seeding rate 5 to 8 lb/1000 square feet. One or more cultivars may be blended.

IV. Kentucky Bluegrass/Fine Fescue - Shade Mixture - For use in areas with shade in Bluegrass lawns. For establishment in high quality, intensively managed turf area. Mixture includes: certified Kentucky Bluegrass Cultivars 30 - 40% and certified Fine Fescue and 60 - 70%. Seeding rate: 1 1/2 - 3 lb./1000 square feet. A minimum of 3 Kentucky Bluegrass cultivars must be chosen, with each cultivar ranging from a minimum of 10% to a maximum of 35% of the mixture by weight.

NOTE: Turfgrass varieties should be selected from those listed in the most current University of Maryland Publication, Agronomy Mimeo #77, "Turfgrass Cultivar Recommendations for Maryland".

B. Ideal times of seeding

Western MD: March 15-June 1, August 1-October 1 (Hardiness Zones - 5b, 6a)

Central MD: March 1-May 15, August 15-October 15 (Hardiness Zones - 6b)

Southern MD, Eastern Shore: March 1-May 15, August 15-October 15 (Hardiness Zones - 7a, 7b)

C. Irrigation

If soil moisture is deficient, supply new seedings with adequate water for plant growth (1/2" - 1" every 3 to 4 days depending on soil texture) until they are firmly established. This is especially true when seedings are made late in the planting season, in abnormally dry or hot seasons, or on adverse sites.

D. Repairs and Maintenance

Inspect all seeded areas for failures and make necessary repairs, replacements, and reseedings within the planting season.

I. Once the vegetation is established, the site shall have 95% groundcover to be considered adequately stabilized.

II. If the stand provides less than 40% ground coverage, reestablish following original lime, fertilizer, seedbed preparation and seeding recommendations.

III. If the stand provides between 40% and 94% ground coverage, overseeding and fertilizing using half of the rates originally applied may be necessary.

IV. Maintenance fertilizer rates for permanent seedings are shown in Table 24. For lawns and other medium to high maintenance turfgrass areas, refer to the University of Maryland publication "Lawn Care in Maryland" Bulletin No. 171.

21.0 STANDARD AND SPECIFICATIONS FOR TOPSOIL

Definition

Placement of topsoil over a prepared subsoil prior to establishment of permanent vegetation.

Purpose

To provide a suitable soil medium for vegetative growth. Soils of concern have low moisture content, low nutrient levels, low pH, materials toxic to plants, and/or unacceptable soil gradation.

Conditions Where Practice Applies

I. This practice is limited to areas having 2:1 or flatter slopes where:

a. The texture of the exposed subsoil/parent material is not adequate to produce vegetative growth.

b. The soil material is so shallow that the rooting zone is not deep enough to support plants or furnish continuing supplies of moisture and plant nutrients.

c. The original soil to be vegetated contains material toxic to plant growth.

d. The soil is so acidic that treatment with limestone is not feasible.

II. For the purposed of these Standards and Specifications, areas having slopes steeper than 2:1 require special consideration and design for adequate stabilization. Areas having slopes steeper that 2:1 shall have the appropriate stabilization shown on the plans.

Construction and Material Specifications

I. Topsoil salvaged from the existing site may be used provided that it meets the standards as set forth in these specifications. Typically, the depth of topsoil to be salvaged for a given soil type can be found in the representative soil profile section in the Soil Survey published by USDA-SCS in cooperation with Maryland Agricultural Experimental Station.

II. Topsoil Specifications - Soil to be used as topsoil must meet the following:

i. Topsoil shall be a loam, sandy loam, clay loam, silt loam, sandy clay loam, loamy sand. Other soils may be used if recommended by an agronomist or soil scientist and approved by the appropriate approval authority. Regardless, topsoil shall not be a mixture of contrasting textured subsoils and shall contain less than 5% by volume of cinders, stones, slag, coarse fragments, gravel, sticks, roots, trash, or other material larger than 1½" in diameter.

ii. Topsoil must be free of plants or plant parts such a bermuda grass, quackgrass, Johnsongrass, nutsedge, poison ivy, thistle, or others as specified.

iii. Where the subsoil is either highly acidic or composed of heavy clays, ground limestone shall be spread at the rate of 4-8 tons/acre (200-400 pounds per 1,000 square feet) prior to the placement of topsoil. Lime shall be distributed uniformly over designated areas and worked into the soil in conjunction with tillage operations as described in the following procedures.

II. For sites having disturbed areas under 5 acres:

i. Place topsoil (if required) and apply soil amendments as specified in 20.0 Vegetative Stabilization - Section I - Vegetative Stabilization Methods and Materials.

III. For sites having disturbed areas over 5 acres:

i. On soil meeting Topsoil specifications, obtain test results dictating fertilizer and lime amendments required to bring the soil into compliance with the following:

a. pH for topsoil shall be between 6.0 and 7.5. If the tested soil demonstrates a pH of less than 6.0, sufficient lime shall be prescribed to raise the pH to 6.5 or higher.

b. Organic content of topsoil shall be not less than 1.5 percent by weight.

c. Topsoil having soluble salt content greater than 500 parts per million shall not be used.

d. No sod or seed shall be placed on soil which has been treated with soil sterilants or chemicals used for weed control until sufficient time has elapsed (14 days min.) to permit dissipation of phyto-toxic materials.

Note: Topsoil substitutes or amendments, as recommended by a qualified agronomist or soil scientist and approved by the appropriate approval authority, may be used in lieu of natural topsoil.

ii. Place topsoil (if required) and apply soil amendments as specified in 20.0 Vegetative Stabilization - Section I - Vegetative Stabilization Methods and Materials.

IV. Topsoil Application

i. When topsoiling, maintain needed erosion and sediment control practices such as diversion, Grade Stabilization Structures, Earth Dikes, Slope Silt Fence and Sediment Traps and Basins.

ii. Grades on the areas to be topsoiled, which have been previously established, shall be maintained, albeit 4" - 8" higher in elevation.

iii. Topsoil shall be uniformly distributed in a 4" + 8" layer and lightly compacted to a minimum thickness of 4". Spreading shall be performed in such a manner that sodding or seeding can proceed with a minimum of additional soil preparation and tillage. Any irregularies in the surface resulting form topsoiling or other operations shall be corrected in order to prevent the formation of depressions or water pockets.

iv. Topsoil shall not be placed while the topsoil or subsoil is in a frozen or muddy condition, when the subsoil is excessively wet or in a condition that may otherwised be detrimental to proper grading and seedbed preparation.

VI. Alternative for Permanent Seeding - Instead of applying the full amounts of lime and commercial fertilizer, composted sludge and amendments may be applied as specified, below:

i. Composted sludge Material for use as a soil conditioner for sites having disturbed areas over 5 acres shall be tested to prescribe amendments and for sites having disturbed areas under 5 acres shall conform to the following requirements:

a. Composted sludge shall be supplied by, or originated from, a person or persons that are permitted (at the time of acquisition of the compost) by the Maryland Department of the Environment under COMAR 26.04.06.

b. Composted sludge shall contain at least 1 percent nitrogen, 1.5 percent phosphorus, and 0.2 percent potassium and have a Ph of 7.0 to 8.0. If compost does not meet these requirements, the appropriate constituents must be added to meet the requirements prior to use.

c. Composted sludge shall be applied at a rate of 1 ton/1,000 square feet.

iv. Composted sludge shall be amended with a potassium fertilizer applied at the rate of 4 lb/1,000 square feet, and 1/3 the normall lime application rate.

References: Guideline Specifications, Soil Preparation and Sodding. MD-VA. Pub. #1. Cooperative Extension Service, University of Maryland and Virginia Polytechnic Institutes. Revised 1972.

Table 25 - Permanent Seeding for Low Maintenance Areas

HARDINESS ZONE

MIX	SEED MIX (USE CERTIFIED MATERIAL IF AVAILABLE)	PLANTING RATE LBS./AC	PLANTING RATE LBS./1000 SQ.FT.	SITE CONDITIONS	USDA HARDINESS ZONES	RECOMMENDED PLANTING DATES 3/1 - 5/15	3/15 - 6/1	5/16 - 8/14	6/2 - 7/31	8/1 - 10/1	8/15 - 10/15	9/15 - 11/15	NOTES
1	TALL FESCUE (75%) CANADA BLUEGRASS (10%) KENTUCKY BLUEGRASS (10%) REDTOP (5%)	150	3.4	MOIST TO DRY	5b		X			X			A
					6a		X			X			
					6b	X					X		
					7a	X					X		
					7b	X					X		
2	KENTUCE BLUEGRASS (50%) CREEPING RED FESCUE OR A HARD FESCUE (40%) REDTOP (10%)	150	3.4	MOIST TO MODERATELY DRY TO DRY	5b					X			B
					6a		X			X			
					6b	X					X		
3	TALL FESCUE (85%) PERENNIAL RYEGRASS (10%) KENTUCKY BLUEGRASS (5%)	125 15 10	2.9 .34 .23	MOIST TO DRY	5B					X			C
					6A		X			X			
					6B	X					X		
					7A	X					X		
					7B	X					X		
4	RED FESCUE OR CHEWINGS FESCUE (80%) PERENNIAL RYEGRASS (20%)	60 60 15	.92 .92 .34	MOIST TO DRY	5b		X			X			D
					6a		X			X			
					6b	X					X		
5	TALL FESCUE (85%) OR PERENNIAL RYEGRASS (50%) PLUS CROWNVETCH OR FLATPEA	110 20 20 20	2.5 .46 .46 .46	MOIST TO DRY	5b		X			X			E
					6a		X			X			
					6b	X					X		
					7a	X					X		
					7b	X					X		
6	WEEPING LOVEGRASS (7%) SERICIA LESPEDEZA (93%)	4 20	.09 .46	DRY TO VERY DRY	6a	X		X					F
					7a	X		X					
					7b	X		X					
7	TALL FESCUE (80%) WEEPING LOVEGRASS (7%) PLUS SERICIA LESPEDEZA (13%)	110 3 20	2.5 .07 .46	DRY TO VERY DRY	5b		X		X	X			G
					6a		X		X	X			
					6b	X		X			X		
					7a	X		X			X		
					7b	X		X			X		
8	REED CANARYGRASS (75%) REDTOP (6%) PLUS BIRDSFOOT TREFOIL (19%)	40 3 7	.92 .07 .23	WET TO MODERATELY DRY	5b		X			X			H
					6a		X			X			
					6b	X					X		
					7a	X					X		
					7b	X					X		
9	TALL FESCUE (80%) FOX TROT/AD (7%) BIRDSFOOT TREFOIL (7%)	125 10 10	2.9 .23 .23	WET TO MODERATELY DRY	5b		X			X			I
					6a		X			X			
					6b	X					X		
10	TALL FESCUE (80%) HARD FESCUE (20%)	120 30	3.4 .69	WET TO DRY	5b		X			X			J
					6a		X			X			
					6b	X					X		
					7a	X					X		
					7b	X					X		
11	HARD FESCUE (100%)	75	1.7	MOIST TO DRY	5b		X			X			K
					6a		X			X			
					6b	X					X		
					7a	X					X		

NOTES:
A. USED BY SHA ON SLOPED AREAS. ADD A LEGUME FOR SLOPES > THAN 3:1.
B. USED IN MEDIAN AREAS BY SHA. SHADE TOLERANT.
C. FOXTAIL MIX - PRODUCES PERMANENT GROUNDCOVER QUICKLY. BLUEGRASS THICKENS STAND.
D. BEST USE ON SHADY SLOPES NOT ON POORLY DRAINED CLAYS.
E. USE ON LOW MAINTENANCE, STEEP SLOPES. USE TALL FESCUE IN DROUGHTY CONDITIONS. CROWN VETCH BEST FOR 5b, 6a, 6b
F. SUITABLE FOR SEEDING IN MID-SUMMER.
G. WEEPING LOVEGRASS MAY BE SEEDED WITH TALL FESCUE IN MID-SUMMER. SERICIA LESPEDEZA IS BEST SUITED FOR ZONES 7a AND 7b.
H. USE ON POORLY DRAINED SOILS - ERODES ON WATERWAYS. BIRDSFOOT TREFOIL BEST FOR ZONES 5b, 6a, ABOVE 2,000 FEET.
I. USE IN AREAS OF MOIST SHADE. FOX TERRIAIS TRIFOLES IN WET SHADY AREAS.
J. TALL FESCUE MAY BE SEEDED ALONE. THE HARD FESCUE PROVIDES BETTER SHADE TOLERANCE AND PRODUCES A BETTER STAND.
K. LOW FERTILITY GRASS. REQUIRES INFREQUENT MOWING. GOOD COMPANION FOR WILDFLOWERS.

Table 26 - Temporary Seeding Rates, Depths, and Dates

HARDINESS ZONE

SPECIES	MINIMUM SEEDING RATES PER ACRE	MINIMUM SEEDING RATES LBS./1000 SQ.FT.	PLANTING DEPTH INCHES	7a and 7b 3/1 - 4/30	7a and 7b 5/1 - 8/14	7a and 7b 8/15 - 11/30	6a and 6b 3/1 - 4/30	6a and 6b 5/1 - 8/14	6a and 6b 8/15 - 11/15	5a and 5b 3/1 - 4/30	5a and 5b 5/1 - 7/31	5a and 5b 8/1 - 10/20
CHOOSE ONE:						BY:			BY:			BY:
BARLEY OATS RYE	2.5 BU. (122 lbs.) 3 BU. (96 lbs.) 2.5 BU. (140 lbs.)	2.80 2.21 3.22	1-2 1-2 1-2	X X X	- - -	10/15 X X	X - -	- - X	10/15 X X	X - X	- - X	10/1 X X
BARLEY OR RYE PLUS FOXTAIL MILLET	150 lbs.	3.45	1	X X	X X	10/15 X	X X	X X	10/15 X	X X	X X	10/1 X
WEEPING LOVEGRASS	4 lbs.	.09	1/4 - 1/2	-	X	-	-	X	-	-	X	-
ANNUAL RYEGRASS	50 lbs.	1.15	1/4 - 1/2	X	-	11/1	X	-	11/1	X	-	8/15
MILLET	50 lbs.	1.15	1/2	-	X	-	-	X	-	-	X	-

TEMPORARY SEEDING RATES

FERTILIZER RATE	LIME RATE
(10-10-10) 600 LBS/AC (13.8 LBS/1000 S.F.)	2 TONS/AC (100LBS/1000 S.F.)

PERMANENT SEEDING RATES

FERTILIZER RATE			LIME RATE
(10-20-20) N	P205	K20	
90LBS/AC (2.0 LBS/1000 S.F.)	175 LBS/AC (4.0 LBS/1000 S.F.)	175 LBS/AC (4.0 LBS/1000 S.F.)	2 TONS/AC (100 LBS/1000 S.F.)

NOTE:
FOR SITES HAVING DISTURBED AREAS OVER 5 ACRES THE RATES SHOWN ABOVE FOR PERMANENT SEEDING SHALL BE DELETED AND THE RATES RECOMMENDED BY THE SOIL TESTING AGENCY SHALL BE USED. SOIL TESTING SHALL BE PERFORMED AT THE TIME OF FINE GRADING AND THE RESULTS SHALL BE FURNISHED TO THE SEDIMENT CONTROL INSPECTOR.

24.0 MATERIALS SPECIFICATIONS

Table 27 Geotextile Fabrics.

CLASS	APPARENT OPENING SIZE MM. MAX.	GRAB TENSILE STRENGTH LB. MIN.	BURST STRENGTH PSI. MIN.
A	0.30 **	250	500
B	0.60	200	320
C	0.30	200	320
D	0.60	90	145
E	0.30	90	145
F (SILT FENCE)	0.40-0.80*	90	190

* US Std. Sieve CW-02215 ** 0.50 MM. MAX. FOR SUPER SILT FENCE

The properties shall be determined in accordance with the following procedures:

- Apparent opening size — MSMT 323
- Grab tensile strength — ASTM D 1682; 4 x 8" specimen, 1x2" clamps, 12" /min. strain rate in both principal directions of geotextile fabric.
- Burst strength — ASTM D 3786

The fabric shall be inert to commonly encountered chemicals and hydrocarbons, and will be rot and mildew resistant. It shall be manufactured from fibers consisting of long chain synthetic polymers, and composed of a minimum of 85% by weight of polyolefins, polyesters, or polymides. The geotextile fabric shall resist deterioration from ultraviolet exposure.

In addition, Classes A through E shall have a 0.01 cm/sec. minimum permeability when tested in accordance with MSMT 507, and an apparent minimum elongation of 20 percent (20%) when tested in accordance with the grab tensile strength requirements listed above.

Silt Fence.
Class F geotextile fabrics for silt fence have a 50 lb/in. minimum tensile strength and a 20 lb/in. minimum tensile modules when tested in accordance with MSMT 509. The material shall also have a 0.3 gal/ft²/min. flow rate and seventy-five percent (75%) minimum filtering efficiency when tested in accordance with MSMT 322.

Geotextile fabrics used in the construction of silt fence shall resist deterioration from ultraviolet exposure. The fabric shall contain sufficient amounts of ultraviolet ray inhibitors and stabilizers to provide a minimum of 12 months of expected usable construction life at a temperature range of 0 to 120 degrees F.

Sediment Control Notes

1. A MINIMUM OF 48 HOURS NOTICE MUST BE GIVEN TO THE HOWARD COUNTY DEPARTMENT OF INSPECTIONS, LICENSES AND PERMITS, SEDIMENT CONTROL DIVISION PRIOR TO THE START OF ANY CONSTRUCTION (313-1855).
2. ALL VEGETATIVE AND STRUCTURAL PRACTICES ARE TO BE INSTALLED ACCORDING TO THE PROVISIONS OF THIS PLAN AND ARE TO BE IN CONFORMANCE WITH THE "1994 MARYLAND STANDARDS AND SPECIFICATIONS FOR SOIL EROSION AND SEDIMENT CONTROL" AND REVISIONS THERETO.
3. FOLLOWING INITIAL SOIL DISTURBANCE OR RE-DISTURBANCE, PERMANENT OR TEMPORARY STABILIZATION SHALL BE COMPLETED WITHIN:
   A) 7 CALENDAR DAYS FOR ALL PERIMETER SEDIMENT CONTROL STRUCTURES, DIKES, PERIMETER SLOPES AND ALL SLOPES GREATER THAN 3:1.
   B) 14 DAYS FOR ALL OTHER DISTURBED OR GRADED AREAS ON THE PROJECT SITE.
4. ALL SEDIMENT TRAPS/BASINS SHOWN MUST BE FENCED AND WARNING SIGNS POSTED AROUND THEIR PERIMETER IN ACCORDANCE WITH VOL. 1, CHAPTER 7, OF THE "HOWARD COUNTY DESIGN MANUAL, STORM DRAINAGE".
5. ALL DISTURBED AREAS MUST BE STABILIZED WITHIN THE TIME PERIOD SPECIFIED ABOVE IN ACCORDANCE WITH THE "1994 MARYLAND STANDARDS AND SPECIFICATIONS FOR SOIL EROSION AND SEDIMENT CONTROL" FOR PERMANENT SEEDING, SOD, TEMPORARY SEEDING AND MULCHING (SEC G). TEMPORARY STABILIZATION WITH MULCH ALONE SHALL ONLY BE DONE WHEN RECOMMENDED SEEDING DATES DO NOT ALLOW FOR PROPER GERMINATION AND ESTABLISHMENT OF GRASSES.
6. ALL SEDIMENT CONTROL STRUCTURES ARE TO REMAIN IN PLACE AND ARE TO BE MAINTAINED IN OPERATIVE CONDITION UNTIL PERMISSION FOR THEIR REMOVAL HAS BEEN OBTAINED FROM THE HOWARD COUNTY SEDIMENT CONTROL INSPECTOR.
7. SITE ANALYSIS:
   TOTAL AREA OF SITE: 17.87 ACRES
   AREA DISTURBED: 2.80 ACRES
   AREA TO BE ROOFED OR PAVED: 2.43 ACRES - 105,861S.F.
   AREA TO BE VEGETATIVELY STABILIZED: 0.37 ACRES - 16,117 S.F.
   TOTAL CUT: 5795 C.Y. TOTAL FILL: 300 C.Y.
   OFFSITE WASTE/BORROW AREA LOCATION: EXCESS CUT SHALL BE TAKEN TO A SITE WITH AN APPROVED SEDIMENT CONTROL PLAN.
8. ANY SEDIMENT CONTROL PRACTICE WHICH IS DISTURBED BY GRADING ACTIVITY FOR PLACEMENT OF UTILITIES MUST BE REPAIRED ON THE SAME DAY OF DISTURBANCE.
9. ADDITIONAL SEDIMENT CONTROLS MUST BE PROVIDED, IF DEEMED NECESSARY BY THE HOWARD COUNTY SEDIMENT CONTROL INSPECTOR.
10. ON ALL SITES WITH DISTURBED AREAS IN EXCESS OF 2 ACRES, APPROVAL OF THE INSPECTION AGENCY SHALL BE REQUESTED UPON COMPLETION OF INSTALLATION OF PERIMETER EROSION AND SEDIMENT CONTROLS, BUT BEFORE PROCEEDING WITH ANY OTHER EARTH DISTURBANCE OR GRADING. OTHER BUILDING OR GRADING INSPECTION APPROVALS MAY NOT BE AUTHORIZED UNTIL THIS INITIAL APPROVAL BY THE INSPECTION AGENCY IS MADE.
11. TRENCHES FOR THE CONSTRUCTION OF UTILITIES IS LIMITED TO THREE PIPE LENGTHS OR THAT WHICH SHALL BE BACK-FILLED AND STABILIZED WITHIN ONE WORKING DAY, WHICHEVER IS SHORTER.

DETAIL 20A - REMOVABLE PUMPING STATION

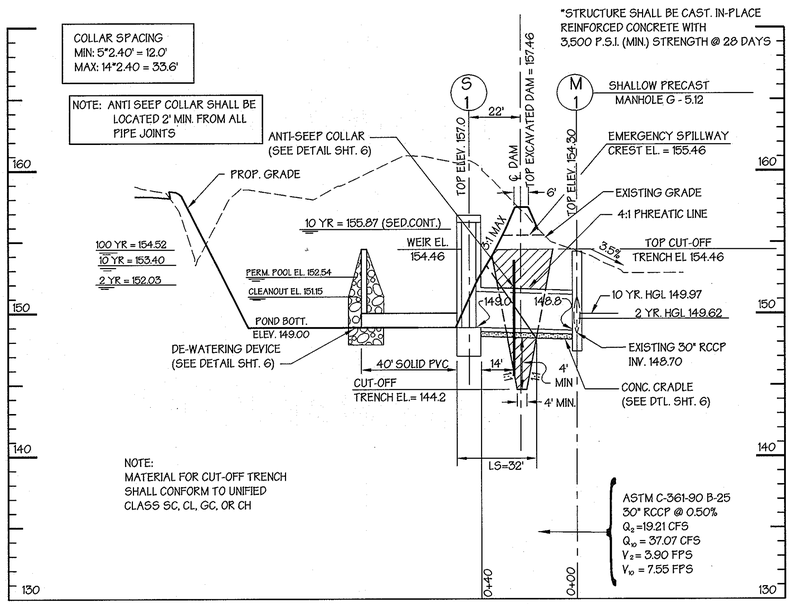

PROFILE - PRINCIPAL SPILLWAY - SEDIMENT CONTROL

SCALE: VERT: 1"=5'
HORIZ: 1"=30'

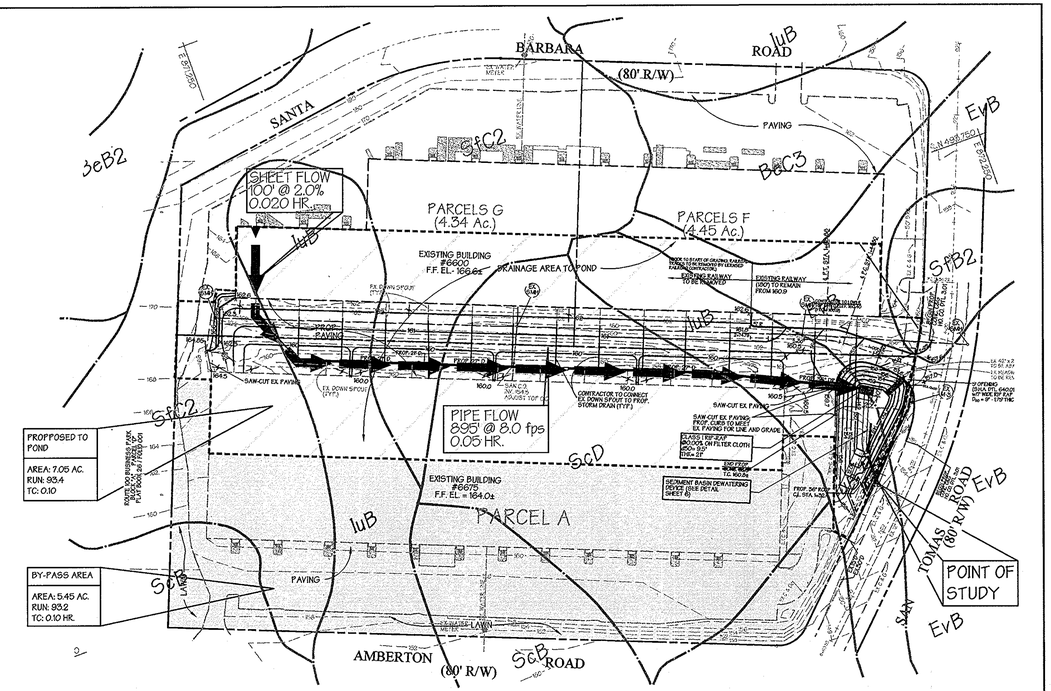

PROPOSED DRAINIAGE AREA MAP

SCALE : 1" = 100'
SHALLOW RUN (DEAN RUN) WATERSHED
PROPSED LAND USE: COMMERCIAL
(OFFICE WAREHOUSE)

DRAINAGE AREA TO POND

BY-PASS DRAINAGE AREA

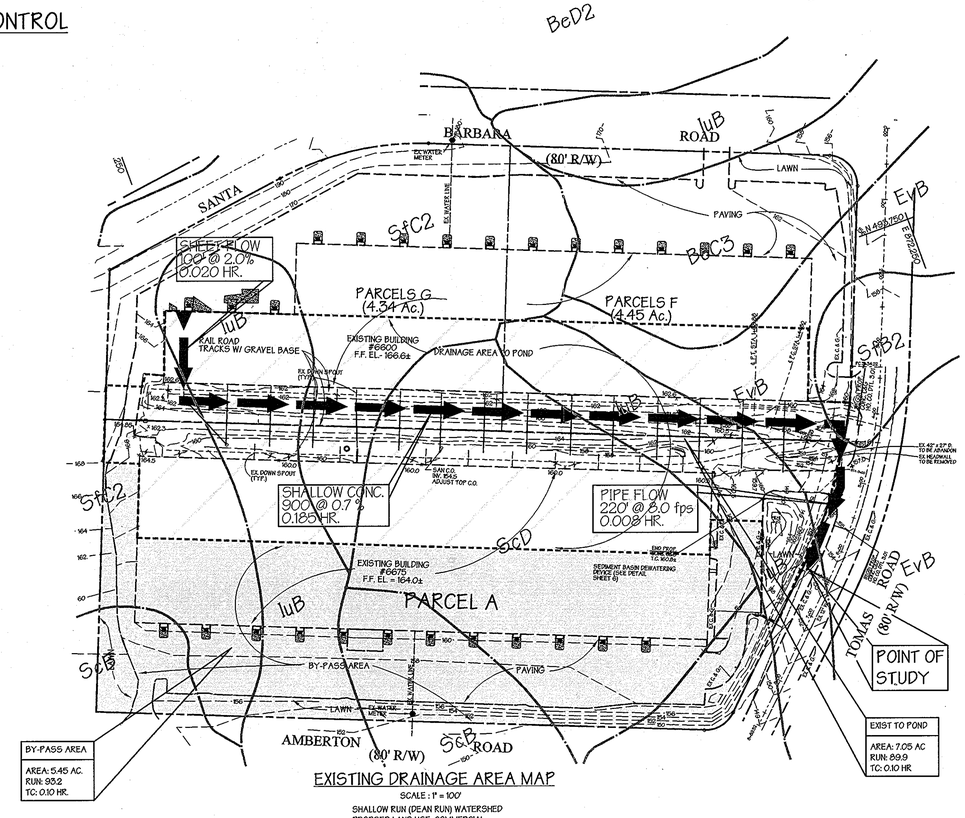

EXISTING DRAINAGE AREA MAP

SCALE : 1" = 100'
SHALLOW RUN (DEAN RUN) WATERSHED
PROPSED LAND USE: COMMERCIAL
(OFFICE WAREHOUSE)

Legend

Ex. Contours	394
Prop. Contours	394
Ex. Curb & Gutter	
Prop. Curb & Gutter	
Ex. Sanitary	
Ex. Storm Drain	
Ex. Water	
EX. R/W	
DRAINAGE AREA	

SOIL TYPES	HYDROLIC SOIL GROUPS
C	luB
C	ScB
C	ScD
* B	SfC2, SfB2
* A	EvC
C	BeCE

* DUE TO EXISTING DEVELOPMENT "A" & "B" SOILS HAVE BEEN DOWN GRADED TO "D" & "C" RESPECTIVELY.

MIE PROPERTIES CO.
5720 Executive Drive
Baltimore, Maryland 21228-1789
(410) 788-0100

These plans for small pond construction, soil erosion and sediment control meet the requirements of Howard Soil Conservation District.

APPROVED: HOWARD SOIL CONSERVATION DISTRICT — DATE 1/11/99

PLAN NUMBER

These plans have been reviewed for the Howard Soil Conservation District and meets the technical requirements for small pond construction, soil erosion and sediment control.

USDA-NATURAL RESOURCES CONSERVATION SERVICE — DATE 1/11/99

APPROVED: Howard County Department of Planning and Zoning

CHIEF, DEVELOPMENT ENGINEERING DIVISION — DATE 1/13/99

CHIEF, DIVISION OF LAND DEVELOPMENT — DATE 1/21/99

DIRECTOR — DATE 1/22/99

ADDRESS CHART

PARCEL NO.	STREET ADDRESS
S-20	6600 SANTA BARBRA ROAD
A	6675 SANTA BARBRA ROAD

SUBDIVISION NAME	SECTION NAME	PARCEL #
ROUTE 100 BUSINESS PARK		A, F & G

PLAT #	BLOCK #	ZONE	TAX ZONE MAP	ELECT. DIST.	CENSUS TRACT
26 LIBER 48 24 FOLIO 14	A	M-2	37	1	6012

WATER CODE — SEWER CODE

GEORGE WILLIAM STEPHENS, JR. AND ASSOCIATES, INC.
CIVIL ENGINEERS & LAND SURVEYORS
658 KENILWORTH DRIVE, SUITE 100
TOWSON, MARYLAND 21204
(410) 825-8120

ENGINEER CERTIFICATION:

"I certify that this plan for pond construction, erosion and sediment control represents a practical and workable plan based on my personal knowledge of the site conditions and that it was prepared in accordance with the requirements of the Howard Soil Conservation District. I have notified the developer that he/she must engage a registered professional engineer to supervise pond construction and provide the Howard Soil Conservation District with an "as-built" plan of the pond within 30 days of completion."

Engineer — Date 10/13/98
Name Nicholas J. Brader, III — PE # 18558

DEVELOPER CERTIFICATION:

"I/We certify that all development and construction will be done according to this plan, and that any responsible personnel involved in the construction project will have a Certificate of Attendance at a Department of Environment Approved Training Program for the Control of Sediment and Erosion before beginning the project. I shall engage a registered professional engineer to supervise pond construction and provide the Howard Soil Conservation District with an "as-built" plan of the pond within 30 days of completion. I also authorize periodic on-site inspection by the howard soil conservation district."

Developer — Date 10/13/98
Name Jeffrey A. Gish, V.P.

CONSULTANT'S HAZARD CLASS CERTIFICATION:

I certify that this pond meets all requirements for hazard class A, B or C. (Requirements as stated in the Soil Conservation Service - Maryland Standards and Specifications for Pond, Code 378, November 1992). All necessary investigations and computations have been performed to verify this finding. A copy of said information has been supplied to Howard County Soil Conservation District.

Signature — Date 10/13/98
Name Nicholas J. Brader, III — PE # 18558

Sediment Control Drainage Area Map & Profiles
ROUTE ONE HUNDRED BUSINESS PARK
BLOCK "A"

Previous File Nos. SDP 72-27, SDP 74-80, F #81

Election District #1
Parcels A, F & G
Scale: 1"=50'

Howard County, Maryland
October 13, 1998
Sheet 8 of 10

SDP -99-35

P.N. 8885

FILENAME: 8885seddamap.s08

OPERATION AND MAINTENANCE SCHEDULE FOR STORMCEPTOR WATER QUALITY DEVICE

1. The Stormceptor water quality structure shall be periodically inspected and cleaned to maintain operation and function. The owner shall inspect the Stormceptor unit yearly at a minimum, utilizing the Stormceptor Inspection Monitoring Form. Inspections shall be done by using a clear Plexiglass tube ("sludge judge") to extract a water column sample. When the sediment depths exceed the level specified in Table 6 of the Stormceptor Technical Musual, the unit must be cleaned.
2. The Stormceptor water quality structure shall be checked and cleaned immediately after petrolum spills. The owner shall contract the appropriate regulatory agencies.
3. The maintenance of the Stormceptor unit shall be done using a vacuum truck which will remove the water, sediment, debris, floating hydrocarbons and other materials in the unit. Proper cleaning and disposal of the removed materials and liquid must be followed by the owner.
4. The inlet and outlet pipes shall be checked for any obstructions at least once every six months. If obstructions are found the owner shall have them removed. Structural parts of the Stormceptor unit shall be repaired as needed.
5. The owner shall retain and make the Stormceptor Inspection/ Monitoring Forms available to the Howard County Officials upon their request.

STC 2400 Precast Concrete Stormceptor
(2400 US Gallon Capacity)

(Disc Design)

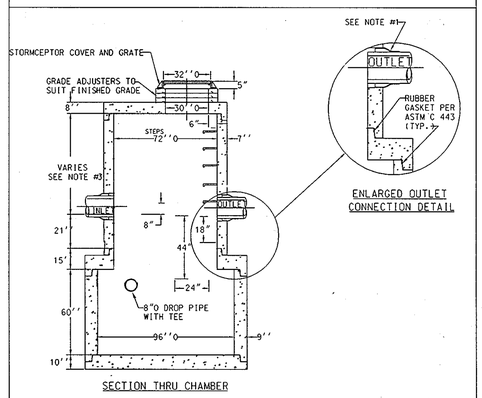

SECTION THRU CHAMBER

NOTE :
1. FLEXIBLE CONNECTIONS ARE RECOMMENDED AT THE INLET AND OUTLET WHERE APPLICABLE.
2. COVER TO BE POSITIONED OVER OUTLET AND VENT PIPE
3. THIS IS A GENERAL ARRANGEMENT DRAWING. CONSULT LOCAL REPRESENTATIVE FOR SPECIAL CONDITIONS.
4. INLET DROP PIPE WILL BE EITHER 8"O OR 12"O WITH A 8"O ORIFICE PLATE
5. ALL CONCRETE JOINTS HAVE RUBBER GASKETS THAT CONFORM TO ASTM C 443
6. U.S. PATENT NO. 4,985,148

DESIGN SPECIFICATIONS
1. ASTM C 478.
2. BASE WEIGHT = 12.82TONS

STC-2400
SS
REVISED 10/96

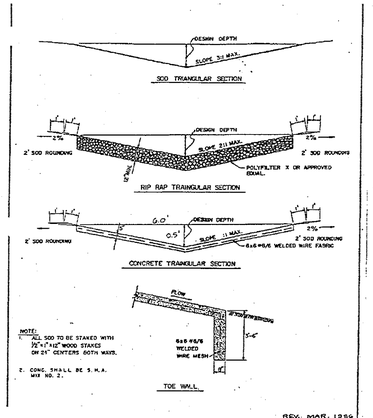

REV. MAR. 1996

HOWARD COUNTY, MARYLAND DEPARTMENT OF PUBLIC WORKS Approved Chief, Bureau of Engineering	TRAINGULAR OPEN CHANNELS	DRAWN BY R.W.H. CHECKED BY J.L.H. DATE 88 SCALE NONE SD-6.11

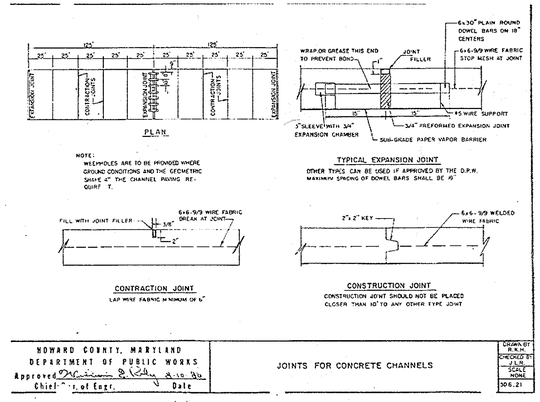

HOWARD COUNTY, MARYLAND DEPARTMENT OF PUBLIC WORKS Approved Chief, Div. of Engr. Date	JOINTS FOR CONCRETE CHANNELS	DRAWN BY R.W.H. CHECKED BY J.L.H. SCALE NONE SD-6.21

Concrete Stormceptor ® Order Request Form *

Contractor Information

Name
Address
City
State
Zip Code
Contract
Phone
Fax

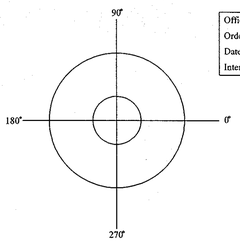

Office Use Only
Order #
Date
Internal Sale

Please draw orientation of inlet and outlet pipes on diagram along with pipe diameter (in.) and invert elevation (ft.). Clearly mark inlet pipes with an I and outlet pipes with an O and provide the inlet/outlet pipe angle in degrees.

Owner Information

MIE PROPERTIES
Name 5720 Exec. Dr. Balt. MD. 21228
Phone 410-788-0100
Fax

Stormceptor® Model

900	☐	3600	☐
1200	☐	4800	☐
1800	☐	6000	☐
2400	☒	7200	☐

Insert Size

22"	☐
32"	☐
44"	☐
Custom	

Manhole Number	SC-1
Top Elevation (ft)	159.2
Inlet Pipe Invert (ft)	152.31
Outlet Pipe Invert (ft)	152.21
Pipe Type :	
Pipe Inside Diameter (in) [ID]	24"
Pipe Outside Diameter (in) [OD]	

Project Name
Approximate time frame until required delivery (weeks)
Delivery Address: Street
City State Zip Code
Designer Company
Designer Contract Phone Fax

Please fax this order to stormceptor at (301) 762-4190
For Technical Assistance Please Call Stormceptor Corporation at
(301) 762 - 8361 or toll free at 1 (800) 762 - 4703

ALL LIFTING APPARATUS TO BE PROVIDED BY THE INSTALLATION CONTRACTOR

* TO BE INCLUDED ON SWM PLAN BY DESIGNER

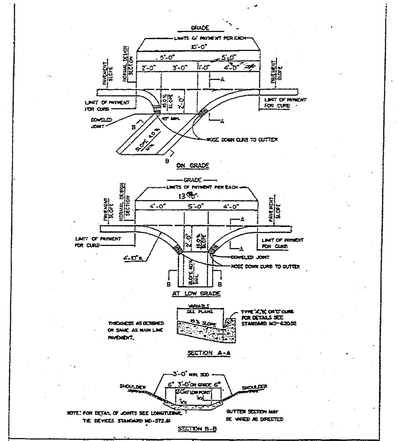

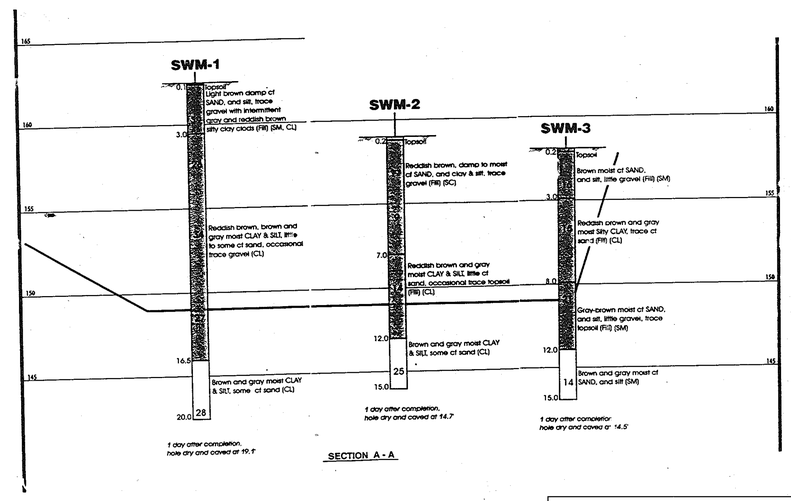

These plans for S.W.M. construction, soil erosion and sediment control meet the requirements of Howard Soil Conservation District.

APPROVED: HOWARD SOIL CONSERVATION DISTRICT — DATE 1/11/99

PLAN NUMBER

Reviewed for the Howard Conservation District and meets technical requirements

NATURAL RESOURCES CONSERVATION SERVICE — DATE 1/11/99

APPROVED: Howard County Department of Planning and Zoning

CHIEF, DEVELOPMENT ENGINEERING DIVISION — DATE 1/12/99

CHIEF, DIVISION OF LAND DEVELOPMENT — DATE 1/21/99

DIRECTOR — DATE 1/22/99

ADDRESS CHART

PARCEL NO.	STREET ADDRESS
F & G	6600 SANTA BARBARA ROAD
A	6675 AMBERTON ROAD

SUBDIVISION NAME	SECTION NAME	PARCEL #
ROUTE 100 BUSINESS PARK		A, F & G

PLAT #	BLOCK #	ZONE	TAX ZONE MAP	ELECT. DIST.	CENSUS TRACT
26 LIBER 4A 24 FOLIO 14	A	M-2	37	1	6012

WATER CODE SEWER CODE

GEORGE WILLIAM STEPHENS, JR. AND ASSOCIATES, INC.
CIVIL ENGINEERS & LAND SURVEYORS
658 KENILWORTH DRIVE, SUITE 100
TOWSON, MARYLAND 21204
(410) 825-8120

ENGINEER CERTIFICATION:
I certify that this plan for erosion and sediment control represents a practical and workable plan based on my personal knowledge of the site conditions and that it was prepared in accordance that it was prepared in accordance with the requirements of the Howard Soil Conservation District.

Engineer — Date 10/13/98
Name Nicholas J. Brader, III — PE# 18558

OWNER/DEVELOPER
MIE PROPERTIES CO.
5720 Executive Drive
Baltimore, Maryland 21228-1789
(410) 788-0100

DEVELOPER CERTIFICATION:
I/We certify that all development and construction will be done according to this plan, and that any responsible personnel involved in the construction project will have a Certification of Attendance at a Department of the Environment Approved Training Program for the Contol of Sediment and Erosion before beginning the project. I also authorize periodic on-site inspection by the Howard Soil Conservation District.

Developer — Date 10/13/98
Name Jeffrey A. Gish

DESIGNED BY:	H.P.P.
DRAWN BY:	P.L.T.
CHECKED BY:	N.B.
REVISIONS	

Stormwater Management Details

ROUTE ONE HUNDRED BUSINESS PARK
BLOCK "A"

Previous File Nos. SDP 72-27, SDP 74-80, F #81

Election District #1
Parcels A, F & G
Scale: As Shown

Howard County, Maryland
October 13, 1998
Sheet 9 of 10

FILENAME: 8885swmdetails.s03

SDP -99-35

P.N. 8885

Site Analysis Data Chart

TOTAL AREA OF SITE : ..... 778,417 SQ. FT. OR 17.87 Ac.+/-
EXISTING ZONING : M-2
PROPERTY REFERENCE : .... LIBER 693, FOLIO 667/LIBER 613 FOLIO 14
EXISTING USE : ..... WAREHOUSE
PROPOSED USE : ..... WAREHOUSE
AREA TO BE DISTURBED : ..... 121,968 S.F. (2.8 Ac.±)

AREA TO BE VEGETATIVELY STABILIZED : ..... 16,117 S.F. (0.37 Ac.±)

Cost Estimate:

TREES PROVIDED	NEW	PRICE	TOTAL
SHADE TREES	11	$300.00	= $3,300.00
EVERGREEN TREES	12	$150.00	= $1800.00
ORNAMENTAL TREES	3	$150.00	= $450.00

TOTAL SHADE TREES PROVIDED = $5,550.00

Legend

Ex. 2' Contours — 394
Prop. 2' Contours — 394
Prop. 10' Contours — 390
Ex. Curb & Gutter
Prop. Curb & Gutter
Ex. Storm Drain
Ex. Sanitary
Ex. Water
Prop. Sanitary — PROP. SDRD
Prop. Storm Drain
Prop Water — PROP. BRW
Truck Paving

Schedule D Stormwater Management Area Landscaping

Linear Feet of Perimeter	540' TYPE B
Number of Trees Required Shade Trees 1:50' Evergreen Trees 1:40'	10.8 13.5
Credit for Existing Vegetation (No, Yes and %)	NO
Credit for Other Landscaping (No, Yes and %)	NO
Number of Trees Provided Shade Trees Evergreen Trees Other Trees (2:1 substitution)	11 12 3

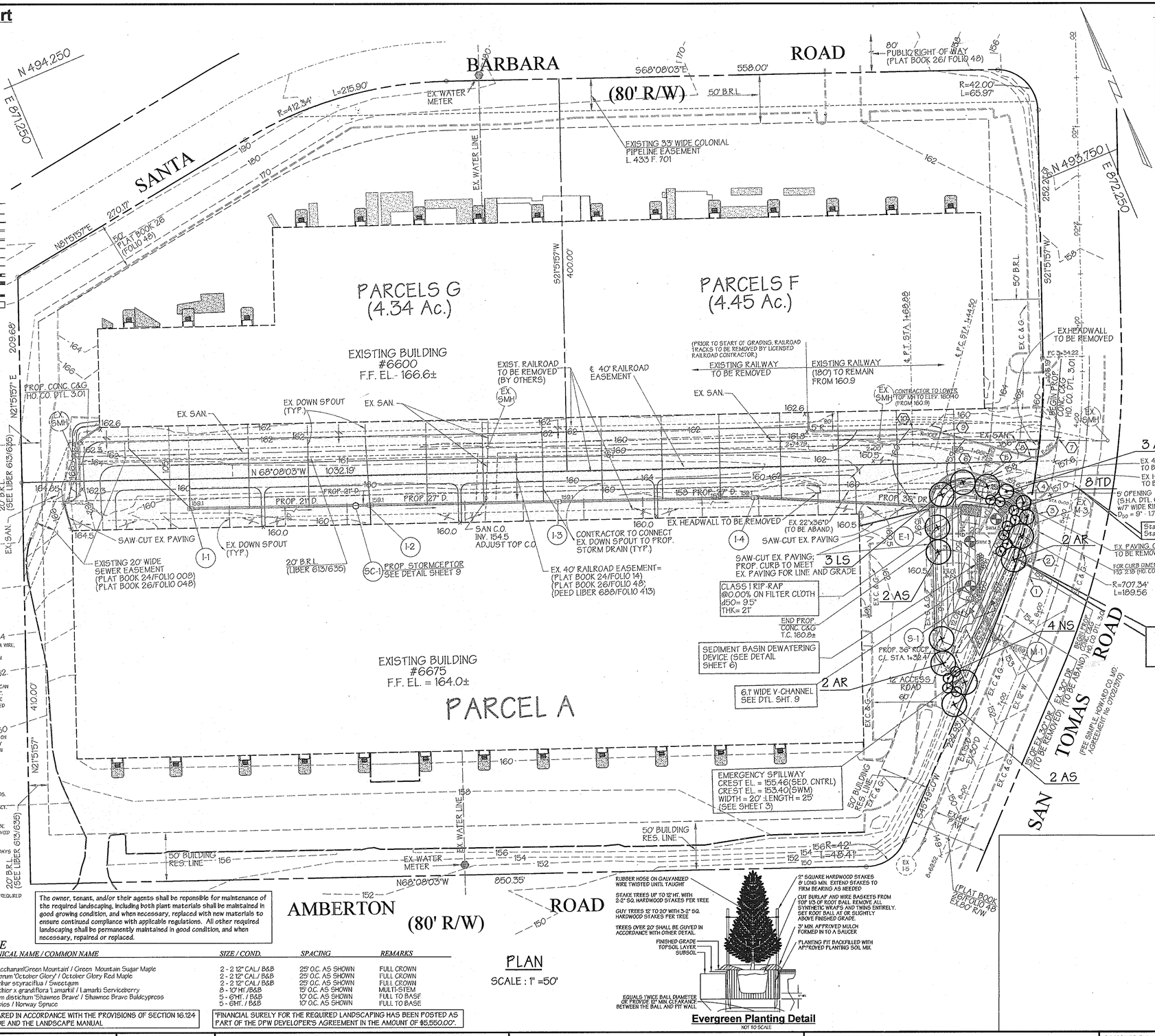

PLAN
SCALE : 1" =50'

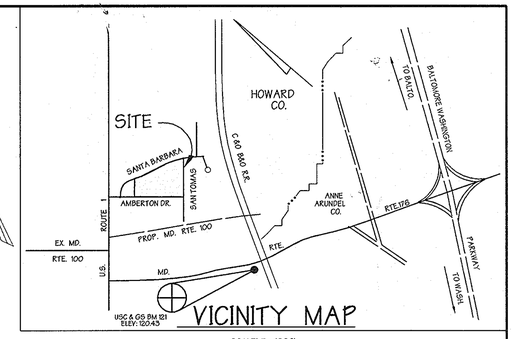

VICINITY MAP
SCALE" 1" = 1000'

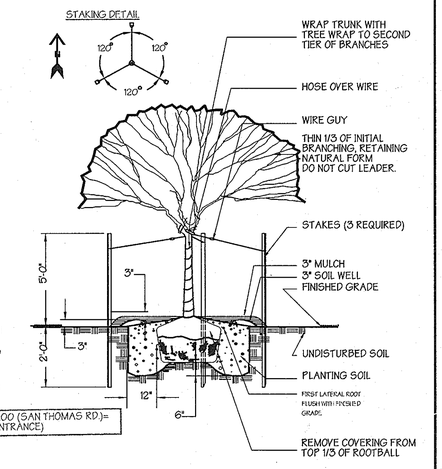

Tree Planting Detail
NOT TO SCALE

PLANTING NOTES

PLANT LOCATIONS SHALL BE FIELD ADJUSTED TO AVOID UTILITIES. CONTRACTOR IS RESPONSIBLE FOR LOCATING UTILITIES PRIOR TO START OF WORK. ALL TREES AND SHRUBS SHALL BE MULCHED TO A MINIMUM OF 18" BEYOND THE EDGE OF THE ROOT BALL. SHRUBS MASSES SHALL BE PLANTED IN CONTINUOUS MULCH BEDS. ALL WIRE, PLASTIC AND TWINE TIES SHALL BE REMOVED FROM TOP OF THE ROOT BALL. ALL TREES PLANTED WITHIN THE SIGHT LINE EASEMENT SHALL BE LIMBED UP A MINIMUM HEIGHT OF 7 FEET FROM GROUND LEVEL.

PLANT STANDARDS

ALL NURSERY STOCK SHALL BE TOP QUALITY AND IN ACCORDANCE WITH THE AMERICAN ASSOCIATION OF NURSERYMEN, INC. "AMERICAN STANDARDS FOR NURSERY STOCK", LATEST EDITION. INFERIOR NURSERY STOCK WILL BE SUBJECT TO REJECTION BY THE LANDSCAPE ARCHITECT. BARE-ROOT SHALL NOT BE ALLOWED FOR ANY TREE DEFINED AS MAJOR DECIDUOUS, MINOR DECIDUOUS OR EVERGREEN

CHANGES MAY IMPACT REQUIRED CERTIFICATION

PLANT TYPES (DECIDUOUS TREES, EVERGREEN, ETC.), QUANTITIES, SPACING, LOCATION, AND SPECIES SHOWN ON THE APPROVED LANDSCAPE PLAN ARE BASED ON REQUIREMENTS STATED IN THE LATEST HOWARD COUNTY LANDSCAPE MANUAL. ANY CHANGE IN THESE ITEMS MAY AFFECT THE REQUIRED APPROVAL AND CERTIFICATION OF THE INSTALLED PLANTING. OWNER IS REQUIRED TO ARRANGE AND PAY FOR CERTIFICATION BY LANDSCAPE ARCHITECT.

LANDSCAPE SPECIFICATIONS

LANDSCAPE SPECIFICATION SHALL CONFORM TO LCA LANDSCAPE SPECIFICATION GUIDELINES FOR BALTIMORE-WASHINGTON METROPOLITAN AREA, INCLUDING PLANTING PROCEDURES AND SOIL PREPARATION FOR SHRUBS AND PERENNIAL BEDS. A ONE-YEAR WARRANTY PERIOD SHALL BE REQUIRED. MAINTENANCE REQUIRED TO HONOR THE ONE YEAR WARRANTY SHALL BE PERFORMED AS PART OF THIS CONTRACT.

SPECIAL PROVISIONS TO LCA STANDARD SPECIFICATIONS

CONTRACTOR IS ENCOURAGED TO PERFORM SOIL TESTING. TEST RESULTS SHALL BE SUBMITTED 30 DAYS BEFORE PLANTING. FAILURE TO PERFORM TESTING WILL NOT VOID GUARANTEE PROVISIONS.

CONTRACTOR SHALL REVIEW AND TEST SUBSOIL DRAINAGE CHARACTERISTICS 30 DAYS PRIOR TO PLANTING AND NOTIFY OWNER UNACCEPTABLE CONDITIONS.

NO EXCEPTIONS TO THE GUARANTEE PROVISIONS ARE ALLOWED UNLESS AGREED TO IN WRITING PRIOR TO PLANTING.

THIS PLAN HAS BEEN PREPARED IN ACCORDANCE WITH SECTION 16.124 OF THE HOWARD COUNTY CODE AND THE LANDSCAPE MANUAL. FINANCIAL SURETY FOR THE REQUIRED LANDSCAPE TRELLIS, IN THE AMOUNT OF $5,550.00, IS PART OF THE "DEVELOPER'S AGREEMENT".

The owner, tenant, and/or their agents shall be reponsible for maintenance of the required landscaping, including both plant materials shall be maintained in good growing condition, and when necessary, replaced with new materials to ensure continued compliance with applicable regulations. All other required landscaping shall be permanently maintained in good condition, and when necessary, repaired or replaced.

PLANT SCHEDULE

KEY	QUANT.	BOTANICAL NAME / COMMON NAME	SIZE / COND.	SPACING	REMARKS
AS	4	Acer saccharum/Green Mountain / Green Mountain Sugar Maple	2 - 2 1/2" CAL/ B&B	25' O.C. AS SHOWN	FULL CROWN
AR	4	Acer rubrum 'October Glory' / October Glory Red Maple	2 - 2 1/2" CAL/ B&B	25' O.C. AS SHOWN	FULL CROWN
LS	3	Liquidambar styraciflua / Sweetgum	2 - 2 1/2" CAL/ B&B	25' O.C. AS SHOWN	FULL CROWN
AL	3	Amelanchier x grandiflora 'Lamarkii' / Lamarki Serviceberry	8 - 10' HT./B&B	15' O.C. AS SHOWN	MULTI-STEM
TD	8	Taxodium distichum 'Shawnee Brave' / Shawnee Brave Baldcypress	5 - 6'HT. / B&B	10' O.C. AS SHOWN	FULL TO BASE
NS	4	Picea abies / Norway Spruce	5 - 6HT. / B&B	10' O.C. AS SHOWN	FULL TO BASE

*THIS PLAN HAS BEEN PREPARED IN ACCORDANCE WITH THE PROVISIONS OF SECTION 16.124 OF THE HOWARD COUNTY CODE AND THE LANDSCAPE MANUAL

FINANCIAL SURELY FOR THE REQUIRED LANDSCAPING HAS BEEN POSTED AS PART OF THE DPW DEVELOPER'S AGREEMENT IN THE AMOUNT OF $5,550.00.

Evergreen Planting Detail
NOT TO SCALE

These plans for S.W.M. construction, soil erosion and sediment control meet the requirements of Howard Soil Conservation District.

APPROVED: HOWARD SOIL CONSERVATION DISTRICT

PLAN NUMBER — DATE

Reviewed for the Howard Conservation District and meets technical requirements.

NATURAL RESOURCES CONSERVATION SERVICE — DATE

APPROVED: Howard County Department of Planning and Zoning

CHIEF, DEVELOPMENT ENGINEERING DIVISION — DATE 1/13/99

CHIEF, DIVISION OF LAND DEVELOPMENT — DATE 1/21/99

DIRECTOR — DATE 1/22/99

ADDRESS CHART	
PARCEL NO.	STREET ADDRESS
F & G	6600 SANTA BARBARA ROAD
A	6675 AMBERTON RD.

SUBDIVISION NAME	SECTION NAME	PARCEL #
ROUTE 100 BUSINESS PARK	1	A, F &G

PLAT #	BLOCK #	ZONE	TAX ZONE MAP	ELECT. DIST.	CENSUS TRACT
26 FOLIO 48 24 FOLIO 14	A	M-2	37	1	6012

WATER CODE — SEWER CODE

GEORGE WILLIAM STEPHENS, JR. AND ASSOCIATES, INC.
CIVIL ENGINEERS & LAND SURVEYORS
658 KENILWORTH DRIVE, SUITE 100
TOWSON, MARYLAND 21204
(410) 825-8120

ENGINEER CERTIFICATION:
I certify that this plan for erosion and sediment control represents a practical and workable plan based on my personal knowledge of the site conditions and that it was prepared in accordance with the requirements of the Howard Soil Conservation District.

Engineer — Date 11/24/98
Name Nicholas J. Prader, III — PE# 18658

OWNER/DEVELOPER
MIE PROPERTIES CO.
5720 Executive Drive
Baltimore, Maryland 21228-1789
(410) 788-0100

DEVELOPER'S/BUILDER'S CERTIFICATION:
I/We certify that the landscaping shown on this plan will be done according to the plan, Section 16.124 of the Howard County Code and the Howard County Landscape Manual. I/We further certify that upon completion a Certification of Landscape Installation, accompanied by an executed one year guarantee of plant material, will be submitted to the Department of Planning and Zoning.

Developer — Date 12/3/98
Name Jeffrey A. Gish, V.P.

DESIGNED BY: H.P.P.
DRAWN BY: P.L.T.
CHECKED BY: N.B.
REVISIONS

Landscape Plan
ROUTE ONE HUNDRED BUSINESS PARK
BLOCK "A"
Previous File Nos. SDP 72-27, SDP 74-80, F #81

Election District #1
Parcels A, F & G
Scale: 1"=50'

Howard County, Maryland
October 13, 1998
Sheet 1 of 1

SDP -99-35

P.N. 8885

FILENAME: 8885siteplan.s01