SHEET INDEX

SHEET	DESCRIPTION
1	COVER SHEET
2	SITE DEVELOPMENT PLAN
3	SITE DEVELOPMENT PLAN
4	SITE DEVELOPMENT PLAN
5	SITE DEVELOPMENT PLAN
6	SITE DETAILS
7	SITE DETAILS
8	PAVING LEGEND & SITE DETAILS
9	STORM DRAINAGE PROFILES
10	STORM DRAINAGE PROFILES
11	STORMWATER MANAGEMENT PROFILES
12	STORM DRAINAGE & SEWER PROFILES
13	PRIVATE WATER MAIN PLAN
14	PRIVATE WATER MAIN PLAN
15	SOIL BORINGS PLAN
16	STORMWATER MANAGEMENT DETAILS
17	STORMCEPTOR DETAILS
18	STORMWATER MANAGEMENT DRAINAGE AREA MAP
19	STORMWATER MANAGEMENT DRAINAGE AREA MAP
20	STORM DRAINAGE AREA MAP & SOILS MAP
21	STORM DRAINAGE AREA MAP & SOILS MAP
22	EROSION AND SEDIMENT CONTROL PLAN
23	EROSION AND SEDIMENT CONTROL PLAN
24	EROSION AND SEDIMENT CONTROL PLAN
25	EROSION AND SEDIMENT CONTROL PLAN
26	EROSION AND SEDIMENT CONTROL PLAN
27	EROSION AND SEDIMENT CONTROL PLAN
28	EROSION AND SEDIMENT CONTROL PLAN
29	EROSION AND SEDIMENT CONTROL DETAILS
30	EROSION AND SEDIMENT CONTROL DETAILS
31	EROSION AND SEDIMENT CONTROL DETAILS
32	EROSION AND SEDIMENT CONTROL DETAILS
33	LANDSCAPE / LIGHTING PLAN
34	LANDSCAPE / LIGHTING PLAN
35	LANDSCAPE / LIGHTING DETAILS

ADDRESS CHART

LOT/ PARCEL	STREET ADDRESS
N/A	10300 LITTLE PATUXENT PARKWAY

TRAFFIC CONTROL NOTES

Traffic Sequencing

1. The existing mall Ring Road from Governor Warfield Parkway to Brokenland Parkway will be left in place and functioning until the relocated Ring Road is constructed and temporarily connected to the existing Ring Road South of Brokenland Parkway extended.

2. The existing mall connection off Brokenland Parkway will be left in place and functioning until Brokenland Parkway Extended and Twin Rivers Road has been constructed. At that time, the existing mall connection will be temporarily closed until construction of the new Ring Road and utilities is completed.

3. The existing mall access opposite Sterrett Place will remain open during reconstruction of the Mall Ring Road and the existing access road; however, traffic will have to be directed into the current outbound lanes and be one lane each direction.

4. Right turn only off Little Patuxent Parkway shall remain open; however, it may be temporarily closed during construction of the relocated storm drainage.

5. The reconstructed entrance opposite Sterrett Place and Ring Road and parking north of Hechts shall be operational prior to relocation of the storm drain from ex M-C to M-100 to provide access to existing parking lot in front of Hechts from Little Patuxent Parkway.

6. Vehicular access to all parking areas, stores, and delivery areas will be maintained during hours when mall is open.

⚠5 Note:
A Portion of this plan has been updated as a part of the revitalization of Downtown Columbia-Warfield Neighborhood, Blocks W-1, W-2 and W-5. These Blocks are adjacent to the western limits of this SDP and the required infrastructure improvements overlap with the Columbia Mall Circle (Mall Ring Road) Roadbed For details of these improvements, see F 13-015.

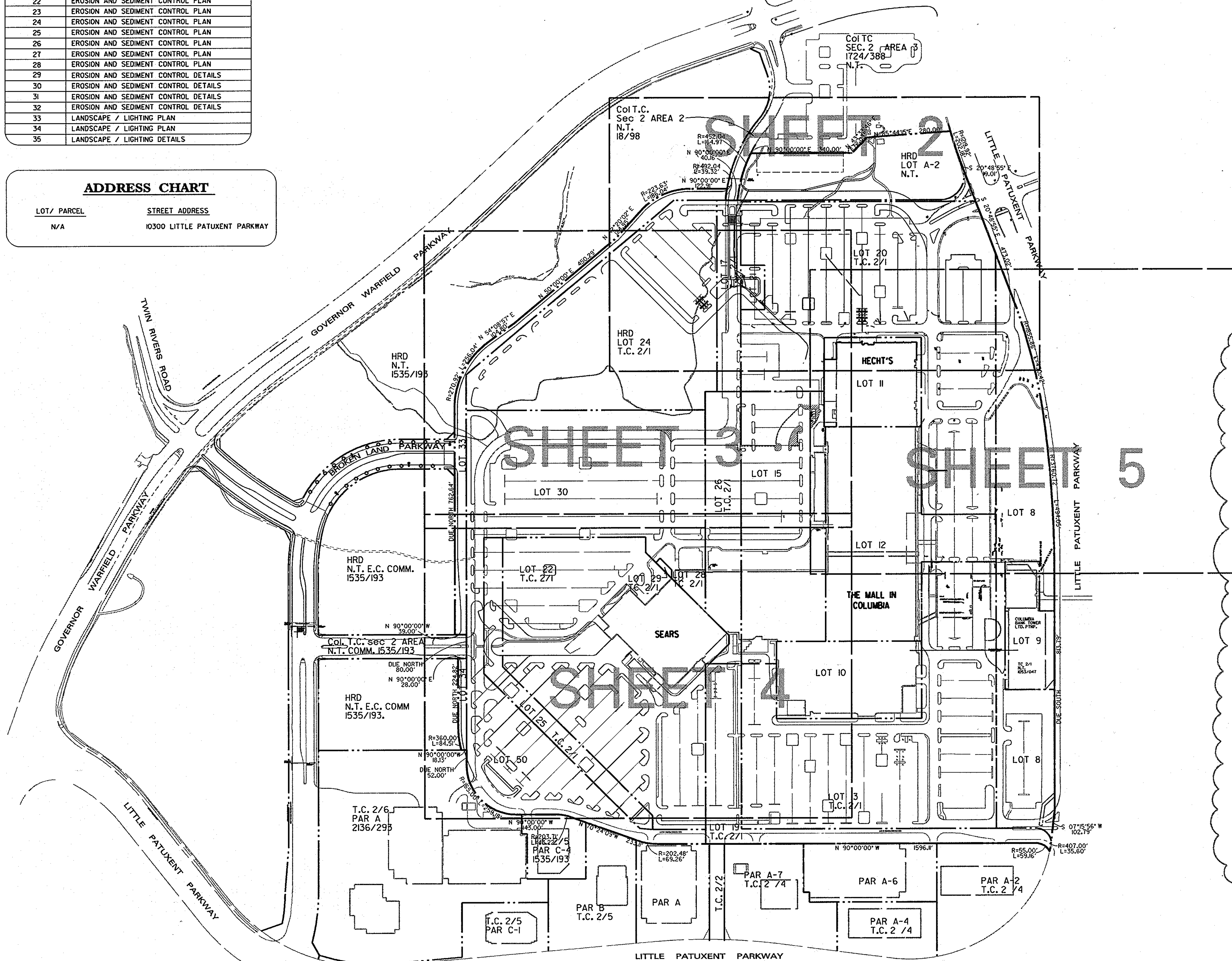

VICINITY MAP
1" = 200'

GENERAL NOTES

1. All construction shall be in accordance with the latest standards and specifications of Howard County plus MSHA standards and specifications, if applicable.
2. The contractor shall notify the Bureau of Engineering/Construction Inspection Division at (410) 313-1880 at least five (5) working days prior to the start of work.
3. The contractor shall notify 'Miss Utility' at 1-800-257-7777 at least 48 hours prior to any excavation work.
4. Traffic control devices, markings, and signing shall be in accordance with the latest edition of the Manual on Uniform Traffic Control Devices (MUTCD). All street and regulatory signs shall be in place prior to the placement of any asphalt.
5. All plan dimensions are to the face of curb unless otherwise noted.
6. Topography was field run surveyed by Daft-McCune-Walker, Inc. in July 1995, and Fisher, Collins & Carter in 1994.
7. Coordinates and bearings shown hereon are referred to the Maryland Coordinate system (NAD 27) as projected from the following 'Whitman, Requardt & Assoc.' traverse stations:
   TR 101 N 503690.8580 E 839102.2760
   TR 102 N 503690.7010 E 838314.2860
8. Stormwater management is provided on-site by an underground detention facility for quantity. Quality control is provided by stormceptors.
9. Stormwater management facilities are privately maintained.
10. No wetlands exist within the limits of disturbance.
11. The existing utilities were located by actual field survey and by a survey prepared by Daft-McCune-Walker, Inc. The contractor must dig test pits, by hand, at all utility crossings and connection points at least 5 days prior to starting work to verify exact location.
12. The Soils analysis was prepared by R. Balter Group.
13. Handicap parking details shall be in accordance with the 'Maryland Building Code for the Handicapped', Section 5.01-7.05.
14. Any damage to County owned right-of-way to be corrected at the contractor's expense.
15. All sidewalks shall be cross sloped at 1/4 inch per foot.
16. Trench bedding for storm drainage structures shall be in accordance with Howard County Standard G2.01.
17. Department of Planning and Zoning reference file numbers:
   FDP ph.47-A-VI, FDP Ph. 101A, FDP Phase 224A, SDP 80-01, F-97-19, F-97-153, F-97-155, F-97-159, S-96-09
18. All inlets shall be constructed in accordance with Howard County standards or MSHA Standards as specified on the structure schedule.
19. All materials and construction is to be in accordance with the Howard County Design Manual Volume IV.
20. The building setback restrictions from the property lines and right-of-way lines of any public road shall be in accordance with FDP Phase 47-A-VI.
21. All on-site driveways and parking areas to be privately maintained.
22. All curb radii are five foot radius unless otherwise labeled.
23. All equipment and tools shall be placed as not to interfere with vehicular or pedestrian movement unless specified.
24. The contractor shall be responsible for any damage to existing property which may occur as a result of his negligence in the execution of the work.
25. All paving areas indicated are private.
26. All proposed handicap ramps shall be in accordance with the current A.D.A. Standards.
27. Existing lights in Phase IA to be relocated as necessary. See sheets 33 - 35 for proposed lights.
28. There is no floodplain on this site.
29. No traffic study is required for this site.
30. Public Water and Sewer is utilized for this site.

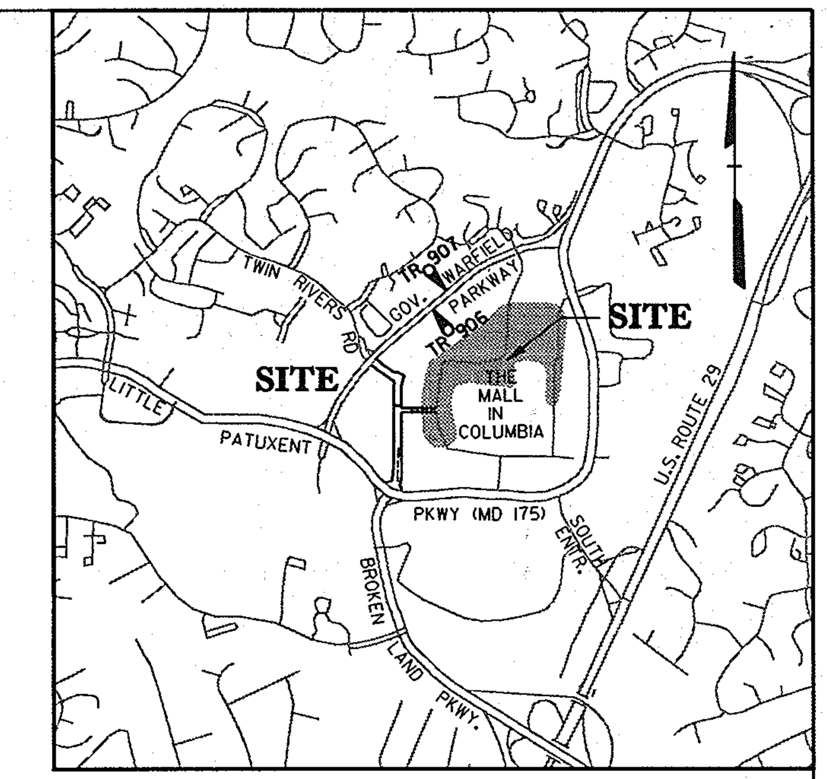

LOCATION MAP
SCALE: 1" = 2000'

ELEVATIONS SHOWN HEREON ARE BASED ON THE FOLLOWING TRAVERSE STATIONS ESTABLISHED BY "FISHER, COLLINS AND CARTER, INC." (NGVD 29 VERTICAL DATUM)

TR 906	N 504280.1630	E 838550.3680	ELEV. 381.500
TR 907	N 504400.6701	E 838647.7701	ELEV. 394.150

SITE ANALYSIS

1. Zoning: New Town - Commercial (Per FDP Ph. 47-A-VI)
2. Phase I Expansion Area/Limit of Disturbance = 27.0 Ac.
3. Proposed Use: Relocated Ring Road and Additional Parking
4. Parking Tabulation

	Proposed (a) Phase I Expansion	Existing Mall Parking	Total Proposed	
Parking Spaces	1216	5671-812(b) = 4859	6,075	⚠2
Handicap Spaces	11(4VAN)	75-4(b) = 71(7 VAN)	82 (11 VAN)	⚠4
Total	1227	5746-816 (b) = 4930	6157 (c)	

(a) Required parking does not increase due to the fact that there is no proposed building square footage proposed with Phase I.
(b) Parking spaces to be removed = 812 Sp. (4 HC)
(c) Parking spaces to be added = 368 Sp. (7 HC)

5. Area Tabulation
   a. Phase I Expansion Area/Limit of Disturbance 27.0 Ac.
   b. Proposed building area N/A
   c. Impervious area 9.8 Ac.
   d. Temporary green area in Phase I 17.2 Ac.

6. Lot Tabulation

Lot	Owner	Area	Plat Reference
3	Howard Research & Develop. Corp.	0.656 AC.	12803
8	Howard Research & Develop. Corp.	5.794 AC.	18/39
10	J.C. Penney	2.906 AC.	18/39
11	Columbia Mall, Inc. (Hecht. Co.)	2.244 AC	18/39
12	Columbia Mall, Inc.	6.244 AC	18/39
13	Columbia Mall, Inc.	10.793 AC.	18/39
15	Columbia Mall, Inc.	5.661 AC.	18/39
17	Columbia Mall, Inc.	1.343 AC.	21/19
19	Columbia Mall, Inc.	2.858 AC.	21/19
20	Columbia Mall, Inc.	13.157 AC.	3634
21	Columbia Mall, Inc. (Hecht Co.)	0.275 AC.	3634
22	Sears Roebuck and Company	11.433 AC.	4448
24	Howard Research & Develop. Corp.	8.81 AC.	4448
25	Columbia Mall, Inc.	1.662 AC.	4448
26	Columbia Mall, Inc.	2.328 AC.	4448
28	Columbia Mall, Inc.	0.233 AC.	4859
29	Sears Roebuck and Company	0.033 AC.	4859
30	Columbia Mall, Inc.	12.479 AC.	4859
33	Columbia Mall, Inc.	1.58 AC.	12810
34	Columbia Mall, Inc.	0.267 AC.	12810

APPROVED
PLANNING BOARD
of HOWARD COUNTY
DATE April 23, 1997
RB

APPROVED: HOWARD COUNTY DEPT. OF PLANNING & ZONING

CHIEF, DEVELOPMENT ENGINEERING DIVISION MK — DATE 1/14/98
CHIEF, DIVISION OF LAND DEVELOPMENT — DATE 1/21/98
DIRECTOR — DATE 1/21/98

Date	No.	Revision Description
4-3-98	4	REVISE PARKING TABULATION
1-5-98	2	REVISE TABULATION
1/7/2013	5	Add note reference F 13-015 (By GLW)

THE MALL IN COLUMBIA
PHASE I EXPANSION
TOWN CENTER
SECTION 2 AREA 1
LOTS 8, 10–13, 15, 17, 19–22, 24–26, 28–30, 33, 34

OWNER /DEVELOPER:
THE HOWARD RESEARCH & DEVELOPMENT CORP.
COLUMBIA MALL, INC.
10275 LITTLE PATUXENT PARKWAY
COLUMBIA, MARYLAND 21044

DMW
Daft·McCune·Walker, Inc.
200 East Pennsylvania Avenue
Towson, Maryland 21286
(410) 296-3333
Fax 296-4705

A Team of Land Planners, Landscape Architects, Engineers, Surveyors & Environmental Professionals

1/6/98
Date

STATE OF MARYLAND
JOHN W. RANOCCHIA, SR.
No. 10551
REGISTERED
PROFESSIONAL ENGINEER

Professional Engr. No. 10551

SUBDIVISION NAME	SECTION/AREA	LOT/PARCEL #
COLUMBIA TOWN CTR.	2/1	SEE SITE ANALYSIS #6

PLAT # OR L/F	BLOCK #	ZONE	TAX/ZONE MAP	ELECT. DISTRICT	CENSUS TRACT
3054A-442		N.T.	30,36	5TH	6054

WATER CODE | SEWER CODE

TITLE
PHASE 1A
REVISED SITE DEVELOPMENT PLAN
COVER SHEET

Des By	MJP	Scale	AS SHOWN	Proj. No.	95019B
Dm By	CLZ	Date	5/22/97	1 OF 35	
Chk By	JWR	Approved			

SDP-97-107

Tue Jan 6 09:22:17 1998 d:\95019b\95019b.tsl

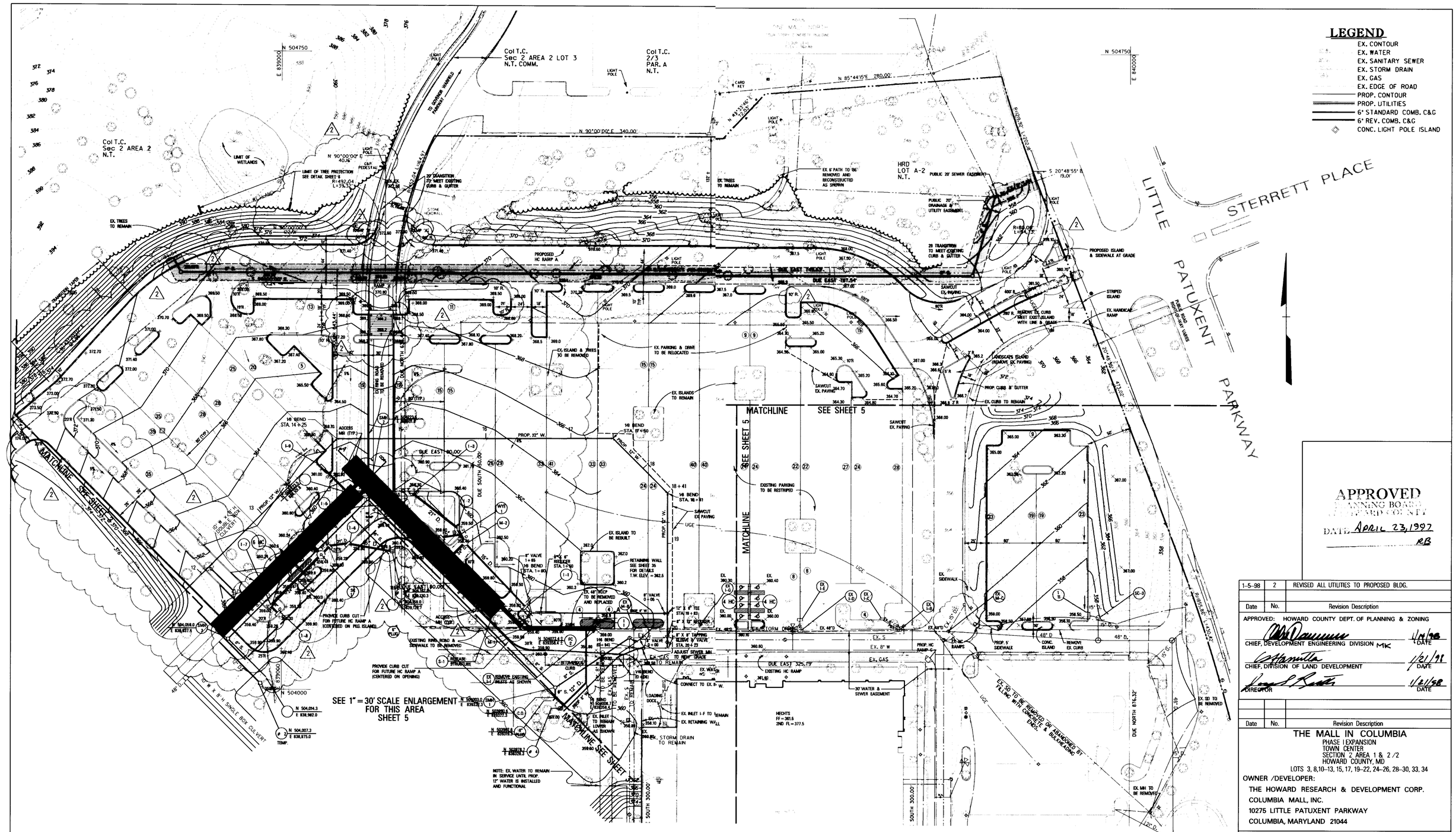

APPROVED
PLANNING BOARD
HOWARD COUNTY
DATE APRIL 23, 1997
RB

Date	No.	Revision Description
1-5-98	2	REVISED ALL UTILITIES TO PROPOSED BLDG.

APPROVED: HOWARD COUNTY DEPT. OF PLANNING & ZONING

CHIEF, DEVELOPMENT ENGINEERING DIVISION MK — DATE 1/14/98

CHIEF, DIVISION OF LAND DEVELOPMENT — DATE 1/21/98

DIRECTOR — DATE 1/21/98

Date	No.	Revision Description

THE MALL IN COLUMBIA
PHASE I EXPANSION
TOWN CENTER
SECTION 2 AREA 1 & 2/2
HOWARD COUNTY, MD
LOTS 3, 8, 10-13, 15, 17, 19-22, 24-26, 28-30, 33, 34

OWNER /DEVELOPER:
THE HOWARD RESEARCH & DEVELOPMENT CORP.
COLUMBIA MALL, INC.
10275 LITTLE PATUXENT PARKWAY
COLUMBIA, MARYLAND 21044

DMW
Daft-McCune-Walker, Inc.
200 East Pennsylvania Avenue
Towson, Maryland 21286
(410) 296-3333
Fax 296-4705

A Team of Land Planners, Landscape Architects, Engineers, Surveyors & Environmental Professionals

1-6-98
Date

STATE OF MARYLAND — JOHN W. RANOCCHIA — REGISTERED PROFESSIONAL ENGINEER

Professional Engr. No. 10551

COLUMBIA TOWN CTR.	SECTION/AREA 2/1 & 2/2		LOT/PARCEL # SEE GEN. NOTE # 6
TOP 3054A – 442	BLOCK #	ZONE NT	TAX/ZONE MAP 30, 36	ELECT. DISTRICT 5 TH	CENSUS TRACT 6054
WATER CODE			SEWER CODE

TITLE
PHASE 1A
REVISED SITE DEVELOPMENT PLAN

Des By	MJP	Scale	1" = 50'	Proj. No.	95019B
Drn By	CLZ	Date	5/22/97	2 OF 35	
Chk By	JWR	Approved			

SDP-97-107

Tue Jan 6 09:07:43 1998 d:\95019b\95019b.pse

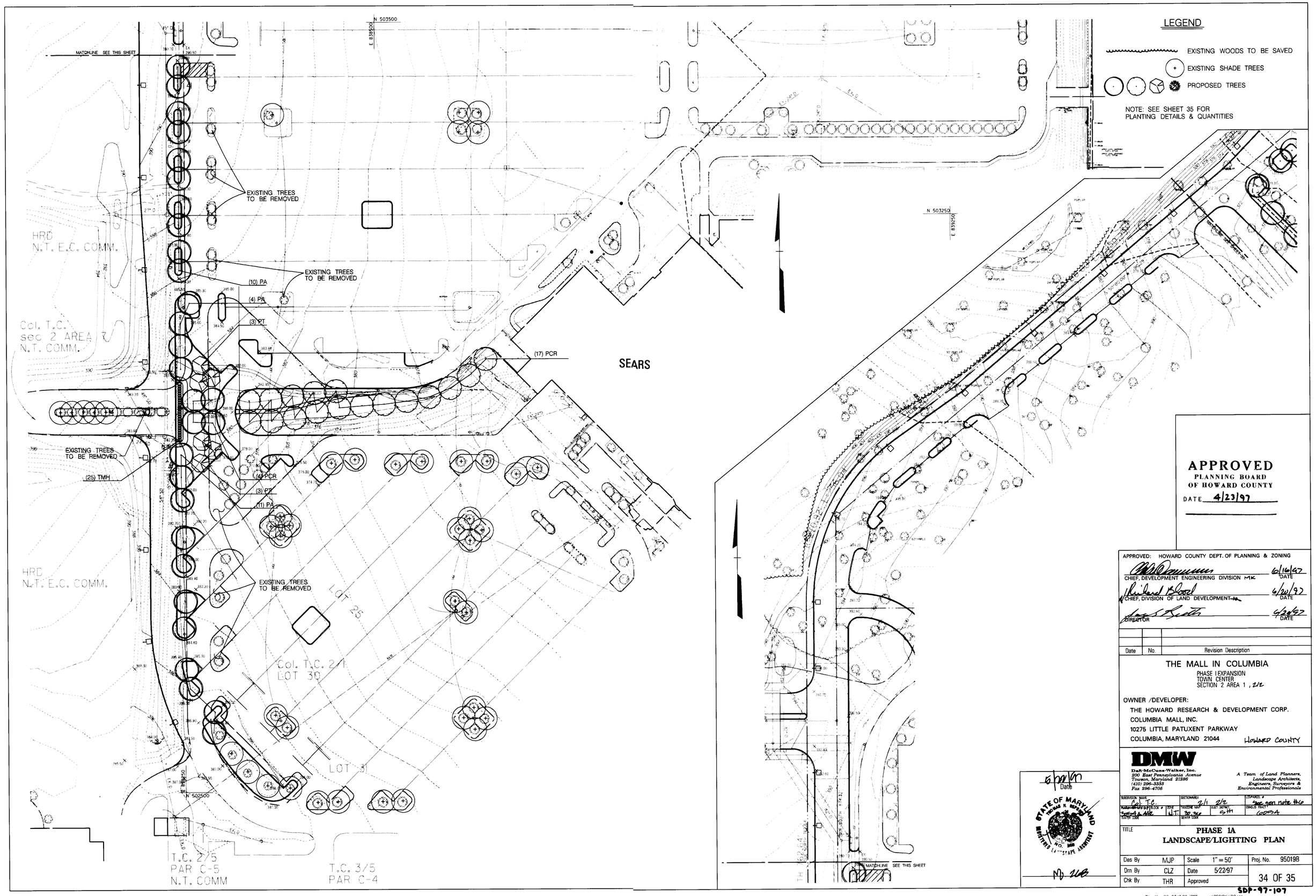

APPROVED
PLANNING BOARD
OF HOWARD COUNTY
DATE 4/23/97

APPROVED: HOWARD COUNTY DEPT. OF PLANNING & ZONING

CHIEF, DEVELOPMENT ENGINEERING DIVISION MK	6/16/97 DATE
CHIEF, DIVISION OF LAND DEVELOPMENT	6/20/97 DATE
DIRECTOR	6/20/97 DATE

Date	No.	Revision Description

THE MALL IN COLUMBIA
PHASE I EXPANSION
TOWN CENTER
SECTION 2 AREA 1, 2/2

OWNER /DEVELOPER:
THE HOWARD RESEARCH & DEVELOPMENT CORP.
COLUMBIA MALL, INC.
10275 LITTLE PATUXENT PARKWAY
COLUMBIA, MARYLAND 21044 HOWARD COUNTY

DMW
Daft·McCune·Walker, Inc.
200 East Pennsylvania Avenue
Towson, Maryland 21286
(410) 296-3333
Fax 296-4705

A Team of Land Planners, Landscape Architects, Engineers, Surveyors & Environmental Professionals

SUBDIVISION NAME	SECTION/AREA	LOT/PARCEL #
Col. T.C.	2/1 2/2	See gen note #6
PLAN NO.	BLOCK #	TAX/ZONE MAP	ELEC. DISTRICT	CENSUS TRACT
30SA4 A 442	N.T.	30 36	5th	6094
WATER CODE		SEWER CODE		

TITLE
PHASE 1A
LANDSCAPE/LIGHTING PLAN

Des By	MJP	Scale	1" = 50'	Proj. No.	95019B
Drn By	CLZ	Date	5/22/97	34 OF 35	
Chk By	THR	Approved			

5/22/97 Date

STATE OF MARYLAND THOMAS H. ROBERTS REGISTERED LANDSCAPE ARCHITECT NO. 3608

SDP-97-107

Thu May 22 23:18:20 1997 c:\95019b\LP2.shp

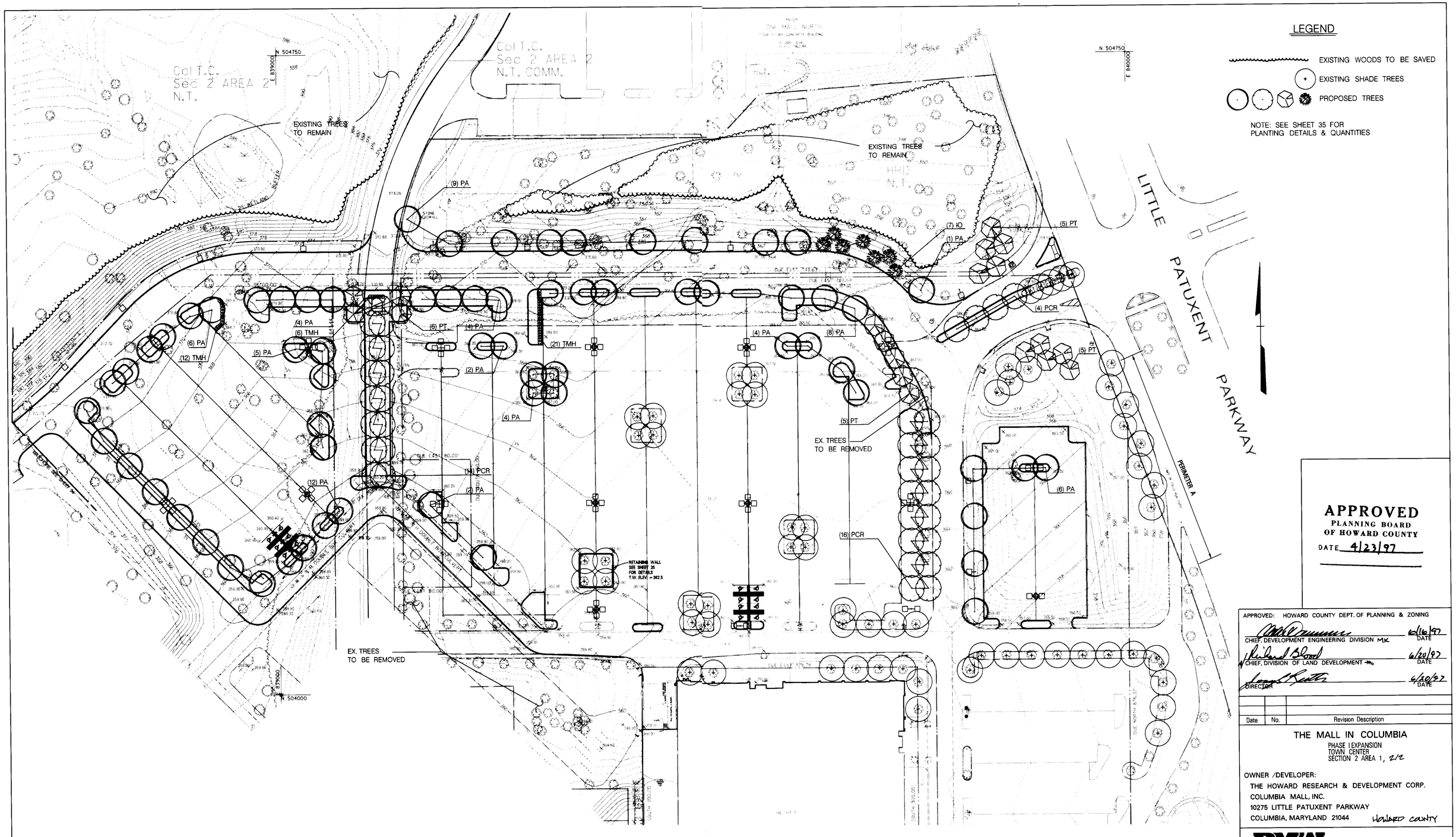

LEGEND

- EXISTING WOODS TO BE SAVED
- EXISTING SHADE TREES
- PROPOSED TREES

NOTE: SEE SHEET 35 FOR PLANTING DETAILS & QUANTITIES

APPROVED
PLANNING BOARD
OF HOWARD COUNTY
DATE 4/23/97

APPROVED: HOWARD COUNTY DEPT. OF PLANNING & ZONING

CHIEF, DEVELOPMENT ENGINEERING DIVISION MK — DATE 6/16/97

CHIEF, DIVISION OF LAND DEVELOPMENT — DATE 6/20/97

DIRECTOR — DATE 6/20/97

Date	No.	Revision Description

THE MALL IN COLUMBIA

PHASE I EXPANSION
TOWN CENTER
SECTION 2 AREA 1, 2/2

OWNER /DEVELOPER:
THE HOWARD RESEARCH & DEVELOPMENT CORP.
COLUMBIA MALL, INC.
10275 LITTLE PATUXENT PARKWAY
COLUMBIA, MARYLAND 21044

HOWARD COUNTY

DMW
Daft·McCune·Walker, Inc.
200 East Pennsylvania Avenue
Towson, Maryland 21286
(410) 296-3333
Fax 296-4705

A Team of Land Planners, Landscape Architects, Engineers, Surveyors & Environmental Professionals

SUBDIVISION NAME	SECTION/AREA	EMPLOYEE #
M.I.C.	2/1 2/2	CAD system node #6
PLAT # 3,954 A, 4,042	BLOCK # LOT	ZONING	PARCEL #	GRID #	PLAT(S) DATE
WATER CODE	SEWER CODE	

5.21.97
Date

STATE OF MARYLAND — No. 208 — REGISTERED LANDSCAPE ARCHITECT

MD. 208

TITLE
PHASE 1A
LANDSCAPE/LIGHTING PLAN

Des By	MP	Scale	1" = 50'	Proj. No.	95019B
Drn By	CLZ	Date	5/22/97		
Chk By	THR	Approved			33 OF 35

SDP-97-107

Thu, May 22 16:21:51 1997 c:\95019b\95019bu.pl

Table 28 Stone Size

	SIZE RANGE	D_{50}	D_{100}	AASHTO	WEIGHT
NUMBER 57•	3/8" - 1 1/2"	1/2"	1 1/2"	M-43	N/A
NUMBER 1	2" - 3"	2 1/2"	3"	M-43	N/A
RIP-RAP••	4" - 7"	5 1/2"	7"	N/A	N/A
CLASS I	N/A	9.5"	15"	N/A	150lb max.
CLASS II	N/A	16"	24"	N/A	700lb max.
CLASS III	N/A	23"	34"	N/A	2000lb max.

• This classification is to be used on the inside face of stone outlets and check dams.
•• This classification is to be used when ever small rip-rap is required. The State Highway Administration designation for this stome is Stone For Gabions (905.01.04)

Stone For Gabion Baskets

BASKET THICKNESS		SIZE OF INDIVIDUAL STONES	
INCHES	MM	INCHES	MM
6	150	3 - 5	75 - 125
9	225	4 - 7	100 - 175
12	300	4 - 7	100 - 175
18	460	4 - 7	100 - 175
36	910	4 - 12	100 - 300

NOTE: Recycled concrete equivalent may be substituted for all stone classifications. Recycled concrete equivalent shall be concrete broken into the sizes meeting the appropriate classification, shall contain no steel reinforcement, and shall have a density of 150 pounds per cubic foot.

MATERIALS SPECIFICATIONS

Table 27 Geotextile Fabrics

CLASS	APPARENT OPENING SIZE MM. MAX.	GRAB TENSILE STRENGTH LB. MIN.	BURST STRENGTH PSI. MIN.
A	0.30••	250	500
B	0.60	200	320
C	0.30	200	320
D	0.60	90	145
E	0.30	90	145
F (SILT FENCE)	0.40-0.80•	90	190

• US Std. Sieve CW-02215 •• .50 mm max. for Super Silt Fence

The properties shall be determined in accordance with the following procedures:
- Apparent opening size MSMT 323
- Grab tensile strength ASTMD 1682; 4x8" specimen, 1x2" clamps, 12"/min. strain rate in both principal directions of geotextile fabric.
- Burst strength ASTMD D 3786

The fabric shall be inert to commonly encountered chemicals and hydrocarbons, and will be rot and mildew resistant. It shall be manufactured from fibers consisting of long chain synthetic polymers, and composed of a minimum of 85% by weight of polyolephins, polyesters, or polyamides. The geotectile fabric shall resist deterioration from ultraviolet exposure.

In addition, Classes A through E shall have a 0.01 cm./sec. minimum permeability when tested in accordance with MSMT 507, and an apparent minimum elongation of 20 percent (20%) when tested in accordance with the grab tensile strength requirements listed above.

Silt Fence
Class F geotextile fabrics for silt fence shall have a 50 lb./in. minimum tensile strength and a 20 lb./in. minimum tensile modules when tested in accordance with MSMT 509. The material shall also have a 0.3 gal./ft./min. flow rate and seventy-five percent (75%) minimum filtering efficiency when tested in accordance with MSMT 322. Geotextile fabrics used in the construction of silt fence shall resist deterioration from ultraviolet exposure. The fabric shall contain sufficient amounts of ultraviolet ray inhibitors and stabilizers to provide a minimum of 12 months of expected usable construction life at a temperature range of 0 to 120 degrees F.

DEVELOPERS CERTIFICATION:

"I/We certify that all development and construction will be done according to this plan, and that any responsible personnel involved in the construction project will have a Certificate of Attendance at a Department of the Environment Approved Training Program for the Control of Sediment and Erosion before beginning the project. I also authorize periodic on-site inspection by the Howard Soil Conservation District."

5/22/97
Date

ENGINEER'S CERTIFICATION:

"I certify that this plan for erosion and sediment control represents a practical and workable plan based on my personal knowledge of the site conditions and that it was prepared in accordance with the requirements of the Howard Soil Conservation District."

5/22/97
Date
John W. Ranocchia, Sr.

Reviewed for Howard Soil Conservation District and meets Technical Requirements.

Cheryl Simmons 5/30/97
Natural Resources Conservation Service Date

This Development Plan is Approved for Soil Erosion and Sediment Control by the Howard Soil Conservation District.

John R. Robinson 5/30/97
Howard Soil Conservation District Date

APPROVED
PLANNING BOARD
OF HOWARD COUNTY
DATE 4/23/97

APPROVED: HOWARD COUNTY DEPT. OF PLANNING & ZONING

CHIEF, DEVELOPMENT ENGINEERING DIVISION — DATE 6/16/97
CHIEF, DIVISION OF LAND DEVELOPMENT — DATE 6/20/97
DIRECTOR — DATE 6/20/97

Date	No.	Revision Description

THE MALL IN COLUMBIA
PHASE I EXPANSION
TOWN CENTER
SECTION 2 AREA 1, 2/2
LOTS 8,10-13, 15, 17, 19-22, 24-26, 28-30, 33, 34, 3

OWNER /DEVELOPER:
THE HOWARD RESEARCH & DEVELOPMENT CORP.
COLUMBIA MALL, INC.
10275 LITTLE PATUXENT PARKWAY
COLUMBIA, MARYLAND 21044 HOWARD COUNTY

DMW
Daft-McCune-Walker, Inc.
200 East Pennsylvania Avenue
Towson, Maryland 21286
(410) 296-3333
Fax 296-4705

A Team of Land Planners, Landscape Architects, Engineers, Surveyors & Environmental Professionals

SUBDIVISION NAME		SECTION/AREA		PARCEL #
COLTC		2/1 2/2		See gen. note #6
TAX MAP # GRID #	BLOCK #	ZONE	TAXZONE MAP	ELEC. DISTRICT	CENSUS TRACT
24A 4A6		NT	30, 34	5TH	6054
WATER CODE		SEWER CODE			

TITLE
PHASE IA
EROSION AND SEDIMENT CONTROL
DETAIL SHEET

Des By	CRW/JLS	Scale	AS SHOWN	Proj. No.	95019B
Drn By	JEF	Date	5/22/97		
Chk By	JWR	Approved			32 OF 35

SDP-97-107

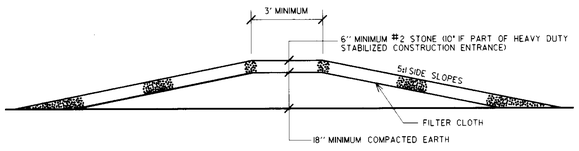

IF MOUNTABLE BERM IS PART OF A "B" CLASS DIKE, COMPACTED EARTH MUST BE 30" MINIMUM.

MOUNTABLE BERM DETAIL

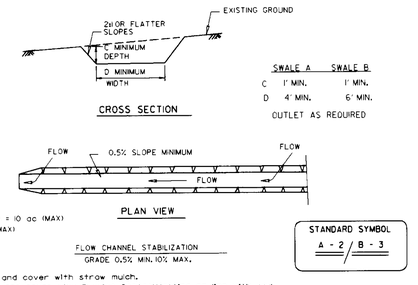

1. Seed and cover with straw mulch.
2. Seed and cover with Erosion Control Matting or line with sod.
3. 4"-7" stone or recycled concrete equivalent pressed into soil in a minimum 7" layer.

Construction Specifications

1. All temporary swales shall have uninterrupted positive grade to an outlet. Spot elevations may be necessary for grades less than 1%.

2. Runoff diverted from a disturbed area shall be conveyed to a sediment trapping device.

3. Runoff diverted from an undisturbed area shall outlet directly into an undisturbed stabilized area at a non-erosive velocity.

4. All trees, brush, stumps, obstructions, and other objectional material shall be removed and disposed of so as not to interfere with the proper functioning of the swale.

5. The swale shall be excavated or shaped to line, grade and cross section as required to meet the criteria specified herein and be free of bank projections or other irregularities which will impede normal flow.

6. Fill, if necessary, shall be compacted by earth moving equipment.

7. All earth removed and not needed for construction shall be placed so that it will not interfere with the functioning of the swale.

8. Inspection and maintenance must be provided periodically and after each rain event.

U.S. DEPARTMENT OF AGRICULTURE SOIL CONSERVATION SERVICE — *A - 2 - 4* — *MARYLAND DEPARTMENT OF ENVIRONMENT WATER MANAGEMENT ADMINISTRATION*

TEMPORARY SWALE NOT TO SCALE

5/22/97
Date

STATE OF MARYLAND
JOHN W. RANOCCHIA SR.
No. 10557
REGISTERED
PROFESSIONAL ENGINEER

Professional Engr. No. 10557

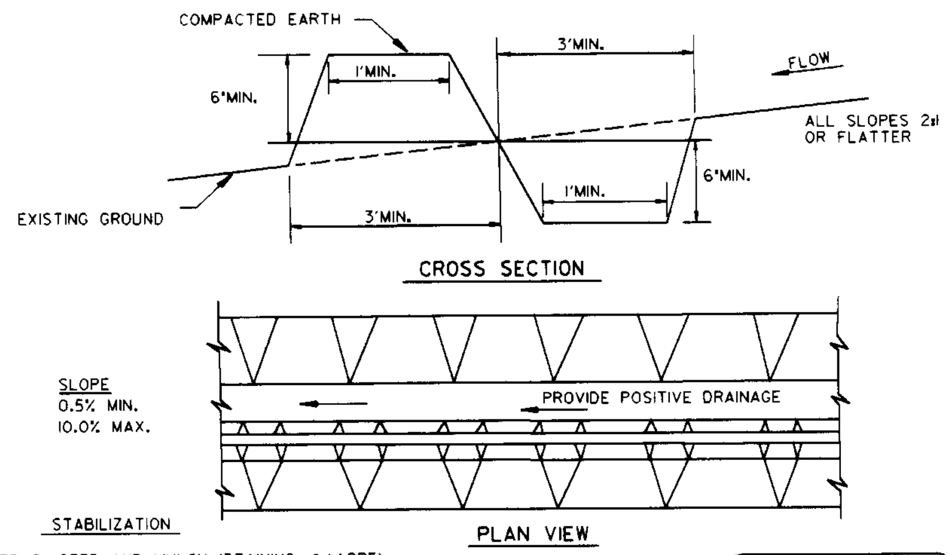

PD/S-1 SEED AND MULCH (DRAINING ≤ 1 ACRE)
PD/S-2 SEED AND COVER WITH SOIL
STABILIZATION MATTING OR
LINE WITH SOD (DRAINING BETWEEN 1 AND 2 ACRES)

STANDARD SYMBOL
PD/S-1

Construction Specifications

1. All perimeter dike/swales shall have an uninterrupted positive grade to an outlet. Spot elevations may be necessary for grades less than 1%.

2. Runoff diverted from a disturbed area shall be conveyed to a sediment trapping device.

3. Runoff diverted from an undisturbed area shall outlet into an undisturbed stabilized area at a non-erosive velocity.

4. The swale shall be excavated or shaped to line, grade, and cross-section as required to meet the criteria specified in the standard.

5. Fill shall be compacted by earth moving equipment.

6. Stabilization with seed and mulch or as specified of the area disturbed by the dike and swale shall be completed within 7 days upon removal.

7. Inspection and required maintenance shall be provided after each rain event.

Note: The maximum drainage area for this practice is 2 acres.

U.S. DEPARTMENT OF AGRICULTURE SOIL CONSERVATION SERVICE A - 3 - 3 *MARYLAND DEPARTMENT OF ENVIRONMENT WATER MANAGEMENT ADMINISTRATION*

PERIMETER DIKE / SWALE

NOT TO SCALE

DUST CONTROL
SPECIFICATIONS

Temporary Methods:

1. Mulches - See Standards for vegetative stabilization with mulches only. Mulch should be crimped or tacked to prevent blowing.
2. Vegetative Cover - See standards for temporary vegetative cover.
3. Tillage - To roughen surface and bring clods to the surface. This is an emergency measure which should be used before soil blowing starts. Begin plowing on windward side of site. Chisel-type plows spaced about 12 inches apart, spring-toothed harrows, and similar plows are examples of equipment which may produce the desired effect.
4. Irrigation - This is generally done as an emergency treatment. Site is sprinkled with water until the surface is moist. Repeat as needed. At no time should the site be irrigated to the point the runoff begins to flow.
5. Barriers - Solid board fences, snow fences, burlap fences, straw bales, and similar material can be used to control air curents and soil blowing. Barriers placed at right angles to prevailing currents at intervals of about 10 times their height are affective in controlling soil blowing.
6. Calcium Chloride - Apply at a rate that will keep surface moist. May need retreatment.

Permanent Methods:

1. Permanent Vegetation - See standards for permanent vegetative cover, and permanent stabilization with sod. Existing trees or large shrubs may afford valuable protection if left in place.
2. Topsoiling - Covering with less erosive soil materials. See standards for topsoiling.
3. Stone - Cover surface with crushed stone or coarse gravel.

U.S. DEPARTMENT OF AGRICULTURE SOIL CONSERVATION SERVICE H - 30 - 1 *MARYLAND DEPARTMENT OF ENVIRONMENT WATER MANAGEMENT ADMINISTRATION*

DUST CONTROL SPECIFICATIONS

NOT TO SCALE

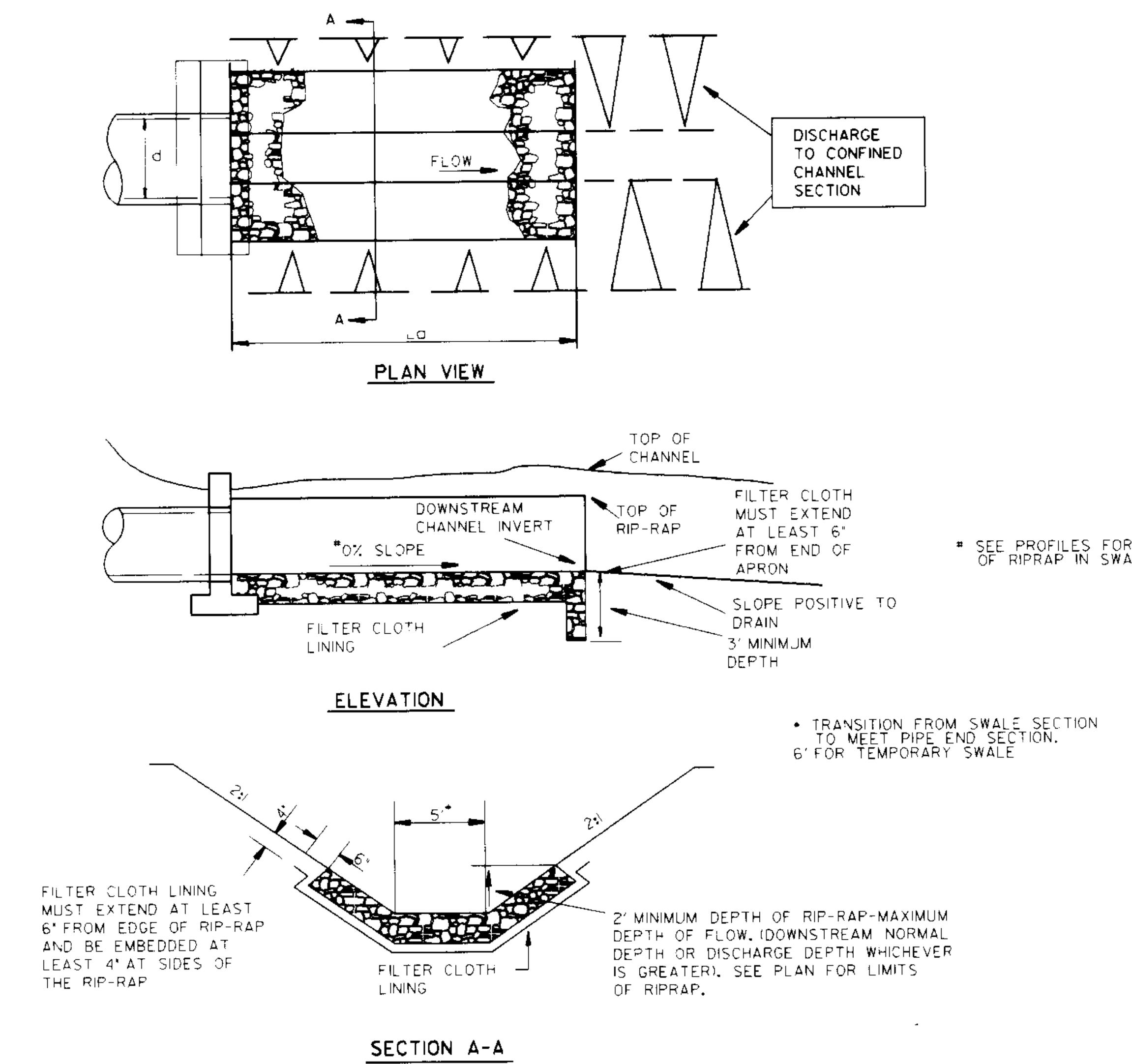

NOTE: FILTER CLOTH SHALL BE GEOTEXTILE CLASS C

U.S. DEPARTMENT OF AGRICULTURE SOIL CONSERVATION SERVICE F - 18 - 9A *MARYLAND DEPARTMENT OF ENVIRONMENT WATER MANAGEMENT ADMINISTRATION*

ROCK OUTLET PROTECTION II

NOT TO SCALE

Construction Specifications

1. The subgrade for the filter, rip-rap, or gabion shall be prepared to the required lines and grades. Any fill required in the subgrade shall be compacted to a density of approximately that of the surrounding undisturbed material.

2. The rock or gravel shall conform to the specified grading limits when installed respectively in the rip-rap or filter.

3. Geotextile class C shall be protected from punching, cutting, or tearing. Any damage other than an occasional small hole shall be repaired by placing another piece of geotextile over the damaged part or by completely replacing the geotextile. All overlaps whether for repairs or for joining two pieces of geotextile shall be a minimum of one foot.

4. Stone for the rip-rap or gabion outlets may be placed by equipment. They shall be constructed to the full course thickness in one operation and in such a manner as to avoid displacement of underlying materials. The stone for rip-rap or gabion outlets shall be delivered and placed in a manner that will ensure that it is reasonably homogeneous with the smaller stones and spalls filling the voids between the larger stones. Rip-rap shall be placed in a manner to prevent damage to the filter blanket or geotextile. Hand placement will be required to the extent necessary to prevent damage to the permanent works.

5. The stone shall be placed so that it blends in with the existing ground. If the stone is placed too high then the flow will be forced out of the channel and scour adjacent to the stone will occur.

U.S. DEPARTMENT OF AGRICULTURE SOIL CONSERVATION SERVICE F - 18 - 8A, 9A, 10A *MARYLAND DEPARTMENT OF ENVIRONMENT WATER MANAGEMENT ADMINISTRATION*

ROCK OUTLET PROTECTION SPECIFICATIONS

PERMANENT SEEDING NOTES

APPLY TO GRADED OR CLEARED AREAS NOT SUBJECT TO IMMEDIATE FURTHER DISTURBANCE WHERE A PERMANENT LONG-LIVED VEGETATIVE COVER IS NEEDED.

SEEDBED PREPARATION: LOOSEN UPPER THREE INCHES OF SOIL BY RAKING, DISKING OR OTHER ACCEPTABLE MEANS BEFORE SEEDING, IF NOT PREVIOUSLY LOOSENED.

SOIL AMENDMENTS: IN LIEU OF SOIL TEST RECOMMENDATIONS, USE ONE OF THE FOLLOWING SCHEDULES:
1. PREFERRED - APPLY 2 TONS PER ACRES DOLOMITIC LIMESTONE (92 LBS/1000 SQ.FT.) AND 1000 LBS. PER ACRE 10-10-10 FERTILIZER (14 LBS./1000 SQ.FT.) BEFORE SEEDING. HARROW OR DISK INTO UPPER THREE INCHES OF SOIL. AT TIME OF SEEDING, APPLY 400 LBS. PER ACRE 30-0-0 UREAFORM FERTILIZER (9 LBS./1000 SQ.FT.)
2. ACCEPTABLE - APPLY 2 TOMS PER ACRES DOLOMITIC LIMESTONE (92 LBS/1000 SQ.FT.) AND 1000 LBS. PER ACRE 10-10-10 FERTILIZER (23 LBS./1000 SQ.FT.) BEFORE SEEDING. HARROW OR DISK INTO UPPER THREE INCHES OF SOIL.

SEEDING - FOR THE PERIODS MARCH 1 THRU APRIL 30, AND AUGUST 1 THRU OCTOBER 15, SEED WITH 60 LBS. PER ACRE (1.4 LBS/1000 SQ.FT.) OF KENTUCKY 31 TALL FESCUE. FOR THE PERIOD MAY 1 THRU JULY 31 SEED WITH 60 LBS. KENTUCKY 31 TALL FESCUE PER ACRE AND 2 LBS. PER ACRE (.05 LBS/1000 SQ.FT.) OF WEEPING LOVEGRASS. DURING THE PERIOD OF OCTOBER 16 THRU FEBRUARY 28, PROTECT SITE BY: OPTION (1) - 2 TONS PER ACRE OF WELL ANCHORED STRAW MULCH AND SEED AS SOON AS POSSIBLE IN THE SPRING. OPTION (2) - USE SOD. OPTION (3) - SEED WITH 60 LBS/ACRE KENTUCKY 31 TALL FESCUE AND MULCH WITH 2 TONS/ACRE WELL ANCHORED STRAW.

MULCHING - APPLY 1-1/2 TO 2 TONS PER ACRE (70 TO 90 LBS/1000 SQ.FT.) OF UNROTTED SMALL GRAIN STRAW IMMEDIATELY AFTER SEEDING. ANCHOR MULCH IMMEDIATELY AFTER APPLICATIONS USING MULCH ANCHORING TOOL OR 218 GALLONS PER ACRE (5 GAL/1000 SQ.FT.) OF EMULSIFIED ASPHALT ON FLAT AREAS. ON SLOPES 8 FEET OR HIGHER, USE 348 GALLONS PER ACRE (8 GAL/1000 SQ.FT.) FOR ANCHORING.

MAINTENANCE - INSPECT ALL SEEDING AREAS AND MAKE NEEDED REPAIRS, REPLACEMENTS AND RESEEDING.

TEMPORARY SEEDING NOTES

APPLY TO GRADED OR CLEARED AREAS LIKELY TO BE REDISTURBED WHERE A SHORT-TERM VEGETATIVE COVER IS NEEDED.

SEEDBED PREPARATION - LOOSEN UPPER THREE INCHES OF SOIL BE RAKING, DISKING OR OTHER ACCEPTABLE MEANS BEFORE SEEDING, IF NOT PREVIOUSLY LOOSENED.

SOIL AMENDMENTS - APPLY 600 LBS. PER ACRE 10-10-10 FERTILIZER (14 LBS/1000 SQ.FT.)

SEEDING - FOR THE PERIODS MARCH 1 THRU APRIL 30, AND AUGUST 15 OCTOBER 15, SEED WITH 2-1/2 BUSHEL PER ACRE OF ANNUAL RYE (3.2 LBS/1000 SQ.FT.). FOR THE PERIOD MAY 1 THRU AUGUST 14, SEED WITH 3 LBS PER ACRE OF WEEPING LOVEGRASS (.07 LBS/1000 SQ.FT.). FOR THE PERIOD NOVEMBER 16 THRU FEBRUARY 28, PROTECT SITE BY APPLYING 2 TONS PER ACRE OF WELL ANCHORED STRAW MULCH AND SEED AS SOON AS POSSIBLE IN THE SPRING, OR USE SOD.

MULCHING - APPLY 1-1/2 TO 2 TONS PER ACRE (70 TO 90 LBS/1000 SQ.FT.) OF UNROTTED WEED FREE SMALL GRAIN STRAW IMMEDIATELY AFTER SEEDING. ANCHOR MULCH IMMEDIATELY AFTER APPLICATION USING MULCH ANCHORING TOOL OR 218 GAL. PER ACRE (5 GAL/1000 SQ.FT.) OF EMULSIFIED ASPHLAT ON FLAT AREAS. ON SLOPES 8 FT. OR HIGHER, USE 348 GAL. PER ACRE (8 GAL/1000 SQ.FT.) FOR ANCHORING.

REFER TO THE 1994 MARYLAND STANDARDS AND SPECIFICATIONS FOR SOIL EROSION AND SEDIMENT CONTROL FOR ADDITIONAL RATES AND METHODS NOT COVERED.

PERMANENT SEEDING NOTES

1. A MINIMUM OF 24 HOURS NOTICE MUST BE GIVEN TO THE HOWARD COUNTY OFFICE OF INSPECTIONS AND PERMITS PRIOR TO THE START OF ANY CONSTRUCTION (992-2437).
2. ALL VEGETATIVE AND STRUCTURAL PRACTICES ARE TO BE INSTALLED ACCORDING TO THE PROVISIONS OF THIS PLAN AND ARE TO BE IN CONFORMANCE WITH THE '1994 MARYLAND STANDARDS AND SPECIFICATIONS FOR SOIL EROSION AND SEDIMENT CONTROL.'
3. FOLLOWING INITIAL SOIL DISTURBANCE OR REDISTURBANCE, PERMANENT OR TEMPORARY STABILIZATION SHALL BE COMPLETED WITHIN:
   - A. SEVEN CALENDAR DAYS FOR ALL PERIMETER SEDIMENT CONTROL STRUCTURES, DIKES, PERIMETER SLOPES AND ALL SLOPES GREATER THAN 3:1
   - B. FOURTEEN DAYS AS TO ALL OTHER DISTURBED OR GRADED AREAS ON THE PROJECT SITE
4. ALL SEDIMENT TRAPS/BASINS SHOWN MUST BE FENCED AND WARNING SIGNS POSTED AROUND THEIR PERIMETER IN ACCORDANCE WITH VOL. I, CHAPTER 12, OF THE 'HOWARD COUNTY DESIGN MANUAL,' STORM DRAINAGE.
5. ALL DISTURBED AREAS MUST BE STABILIZED WITHIN THE TIME PERIOD SPECIFIED ABOVE IN ACCORDANCE WITH THE '1994 MARYLAND STANDARDS AND SPECIFICATIONS FOR SOIL EROSION AND SEDIMENT CONTROL' FOR PERMANENT SEEDINGS, SOD, TEMPORARY SEEDING, AND MULCHING (SECTION G). TEMPORARY STABILIZATION WITH MULCH ALONE CAN ONLY BE DONE WHEN RECOMMENDED SEEDING DATES DO NOT ALLOW FOR PROPER GERMINATION AND ESTABLISHMENT OF GRASSES.
6. ALL SEDIMENT CONTROL STRUCTURES ARE TO REMAIN IN PLACE AND ARE TO BE MAINTAINED IN OPERATIVE CONDITION UNTIL PERMISSION FOR THEIR REMOVAL HAS BEEN OBTAINED FROM THE HOWARD COUNTY SEDIMENT CONTROL INSPECTOR.
7. SITE ANALYSIS:

TOTAL AREA OF SITE	
AREA DISTURBED	19.8 ACRES
AREA TO BE ROOFED OR PAVED	9.8 ACRES
AREA TO BE VEGETATIVELY STABILIZED	10.0 ACRES
TOTAL CUT	407000 CUBIC YARDS
TOTAL FILL	90000 CUBIC YARDS
*OFF-SITE WASTE/BORROW AREA LOCATION WASTE = 317000 CY	

8. ANY SEDIMENT CONTROL PRACTICE WHICH IS DISTURBED BY GRADING ACTIVITY FOR PLACEMENT OF UTILITIES MUST BE REPAIRED ON THE SAME DAY OF DISTURBANCE.
9. ADDITIONAL SEDIMENT CONTROLS MUST BE PROVIDED, IF DEEMED NECESSARY BY THE HOWARD COUNTY DPW SEDIMENT CONTROL INSPECTOR.
10. ON ALL SITES WITH DISTURBED AREAS IN EXCESS OF 2 ACRES, APPROVAL OF THE INSPECTION AGENCY SHALL BE REQUESTED UPON COMPLETION OF INSTALLATION OF PERIMETER EROSION AND SEDIMENT CONTROLS, BUT BEFORE PROCEEDING WITH ANY OTHER EARTH DISTURBANCE OR GRADING. OTHER BUILDING OR GRADING INSPECTION APPROVALS MAY NOT BE AUTHORIZED UNTIL THIS INITIAL APPROVAL BY THE INSPECTION AGENCY IS MADE.

• EXCESS MATERIAL SHALL BE HAULED TO AN APPROVED SITE WITH A CURRENT GRADING PERMIT.

SEDIMENT CONTROL GENERAL NOTES

DEVELOPERS CERTIFICATION:

"I/We certify that all development and construction will be done according to this plan, and that any responsible personnel involved in the construction project will have a Certificate of Attendance at a Department of the Environment Approved Training Program for the Control of Sediment and Erosion before beginning the project. I also authorize periodic on-site inspection by the Howard Soil Conservation District."

[signature] 5/22/97 Date

ENGINEER'S CERTIFICATION:

"I certify that this plan for erosion and sediment control represents a practical and workable plan based on my personal knowledge of the site conditions and that it was prepared in accordance with the requirements of the Howard Soil Conservation District."

[signature] John W. Ranocchia, Sr. PE 10551 — 5/22/97 Date

Reviewed for Howard Soil Conservation District and meets Technical Requirements.

Cheryl Simmons — Natural Resources Conservation Service — 5/30/97 Date

This Development Plan is Approved for Soil Erosion and Sediment Control by the Howard Soil Conservation District.

John R. Robertson — Howard Soil Conservation District — 5/30/97 Date

APPROVED
PLANNING BOARD OF HOWARD COUNTY
DATE 4/23/97

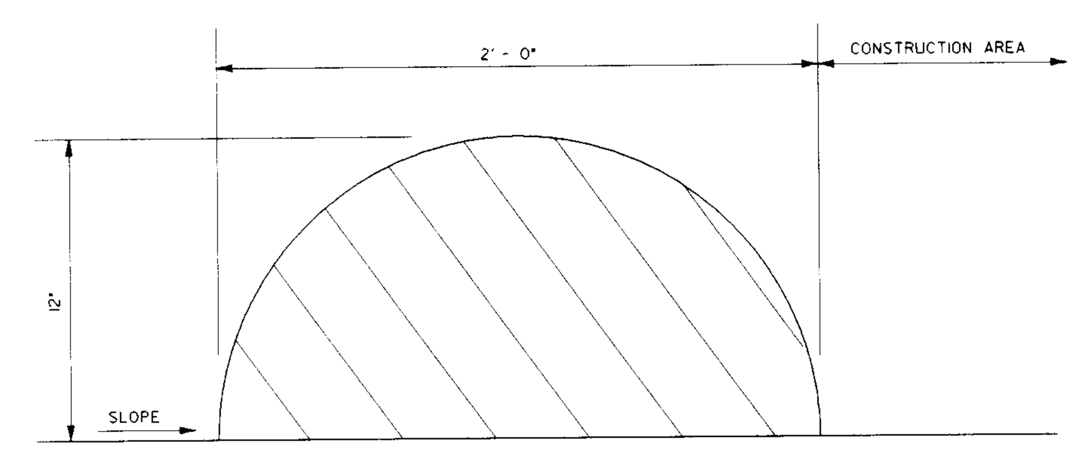

BITUMINOUS CURB DIVERSION

UTILITY CONSTRUCTION OUTSIDE SEDIMENT CONTROL PRACTICES

1. EXCAVATED TRENCH MATERIAL SHALL BE PLACED ON UPSTREAM SIDE OF TRENCH.
2. IMMEDIATELY FOLLOWING PIPE INSTALLATION, THE TRENCH SHALL BE BACKFILLED, COMPACTED AND IMMEDIATELY STABILIZED (MULCHED, SEEDED, AND/OR SODDED MECHANICAL STABILIZATION) AT THE END OF EACH WORK DAY.
3. SILT FENCE SHALL BE PLACED IMMEDIATELY DOWN STREAM OF ANY DISTURBED AREA INTENDED TO REMAIN DISTURBED LONGER THAN ONE (1) WORKING DAY. (SILT FENCE AS PER SCS STANDARD DRAWING - E-15-3)
4. THE CONTRACTOR SHALL DISTURB AND OPEN TRENCH THE MINIMUM PRACTICAL AREA REQUIRED TO ACCOMPLISH THE WORK DESIGNATED FOR EACH DAY.
5. ALL SEDIMENT AND EROSION CONTROL PRACTICES AND VEGETATIVE STABILIZATION SHALL BE IN ACCORDANCE WITH THE 'STANDARDS AND SPECIFICATIONS FOR SOIL EROSION AND SEDIMENT CONTROL IN DEVELOPING AREAS.' ANY EROSION AND SEDIMENT CONTROL PRACTICES DAMAGED BY UTILITY CONSTRUCTION ARE TO BE REPAIRED IMMEDIATELY.

UTILITY CONSTRUCTION OUTSIDE SEDIMENT CONTROL

5/22/97
Date

STATE OF MARYLAND — JOHN W. RANOCCHIA, SR. — No. 10551 — REGISTERED — PROFESSIONAL ENGINEER

Professional Engr. No. 10551

APPROVED: HOWARD COUNTY DEPT. OF PLANNING & ZONING

CHIEF, DEVELOPMENT ENGINEERING DIVISION MK	DATE 6/10/97
CHIEF, DIVISION OF LAND DEVELOPMENT	DATE 6/20/97
DIRECTOR	DATE 6/20/97

Date	No.	Revision Description

THE MALL IN COLUMBIA
PHASE I EXPANSION
TOWN CENTER
SECTION 2 AREA 1, 2/2
LOTS 8, 10–13, 15, 17, 19–22, 24–26, 28–30, 33, 34, 3

OWNER /DEVELOPER:
THE HOWARD RESEARCH & DEVELOPMENT CORP.
COLUMBIA MALL, INC.
10275 LITTLE PATUXENT PARKWAY
COLUMBIA, MARYLAND 21044 HOWARD COUNTY

DMW
Daft·McCune·Walker, Inc.
200 East Pennsylvania Avenue
Towson, Maryland 21286
(410) 296-3333
Fax 296-4705

A Team of Land Planners, Landscape Architects, Engineers, Surveyors & Environmental Professionals

SUBDIVISION NAME	SECTION/AREA		LOT/PARCEL #
Col. T.C.	2/1 2/2		see gen note #6
PLAT # OR L/F FOLIO / BLOCK # / ZONE	TAX/ZONE MAP	ELECT. DISTRICT	CENSUS TRACT
3074A-446 / NT	30,36	5th	6054
WATER CODE	SEWER CODE		

TITLE
PHASE 1A
EROSION AND SEDIMENT CONTROL DETAIL SHEET

Des By CRW/JLS	Scale AS SHOWN	Proj. No. 95019B
Drn By JEF	Date 5/22/97	31 OF 35
Chk By JWR	Approved	

SDP-97-107

Wed May 21 13:11:10 1997 c:\95019b\95019b.def

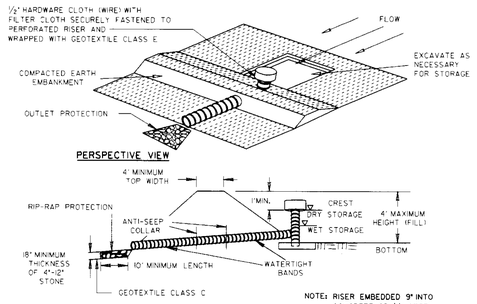

NOTE: RISER EMBEDDED 9" INTO CONCRETE OR ¼" STEEL PLATE ATTACHED TO RISER WITH A CONTINUOUS WELD ON BOTTOM AND 2' OF STONE PLACED ON STEEL PLATE TWICE THE RISER DIAMETER (MIN.)

U.S. DEPARTMENT OF AGRICULTURE SOIL CONSERVATION SERVICE C - 9 - 7 *MARYLAND DEPARTMENT OF ENVIRONMENT WATER MANAGEMENT ADMINISTRATION*

PIPE OUTLET SEDIMENT TRAP - ST I

Construction Specifications

1. The area under the embankment shall be cleared, grubbed and stripped of any vegetation and root mat. The pool area shall be cleared.
2. The fill material for the embankment shall be free of roots or other woody vegetation as well as oversized stones, rocks, organic material, or other objectionable material. The embankment shall be compacted by traversing with equipment while it is being constructed.
3. The total trap volume as measured from the bottom to riser crest elevation shall be 3600 cubic feet per acre of drainage area (see Table 9). The top of embankment must be ≧1' above the riser crest elevation.
4. Sediment shall be removed and the trap restored to its original dimensions when the sediment has accumulated to one half of the wet storage depth of the trap (900cf/ac). The sediment shall be deposited in a suitable area and in such a manner that it will not erode.
5. The structure shall be inspected periodically and after each rain and repairs made as necessary.
6. Construction operations shall be carried out in such a manner that erosion and water pollution are abated. Once constructed, the top and outside face of the embankment shall be stabilized with seed and mulch. Points of concentrated inflow shall be protected in accordance with Grade Stabilization Structure criteria. The remainder of the interior slopes should be stabilized (one time) with seed and mulch upon trap completion and monitored and maintained erosion free during the life of the trap.
7. The structure shall be removed and area stabilized when the drainage area has been properly stabilized.
8. All cut and fill slopes shall be 2:1 or flatter.
9. All pipe connections shall be watertight.
10. Above the wet storage elevation, the riser shall be perforated with ½" wide by 6" long slits or 1" diameter holes spaced 6" vertically and horizontally. No perforations will be allowed within 6" of the horizontal barrel.
11. The riser shall be wrapped with ½" hardware cloth (wire) then wrapped with Geotextile Class E. The filter cloth shall extend 6" above the highest slit and 6" below the lowest slit. Where ends of filter cloth come together, they shall be overlapped, folded and fastened to prevent bypass. Filter cloth shall be replaced as necessary to prevent clogging.
12. Straps or connecting bands shall be used to hold the filter cloth and wire fabric in place. They shall be placed at the top and bottom of the cloth.
13. Fill material around the pipe spillway shall be hand compacted in 4" layers. A minimum of 2' of hand-compacted backfill shall be placed over the pipe spillway before crossing it with construction equipment.
14. The riser shall be anchored with either a concrete base or steel plate base to prevent flotation. Concrete bases shall be at least twice the riser diameter and 12" deep with the riser embedded 9". Steel plate bases shall be at least twice the riser diameter, ¼" minimum thickness and attached to the bottom of the riser by a continuous weld to form a watertight connection. Then place 2' of stone, gravel or tamped earth on the plate.
15. Anti seep collars shall be constructed in accordance with plans (ref. Table 16 and Details C-10-23 AND C-10-24).
16. Concentric trash rack and anti-vortex device design details are on Detail C-10-26 AND C-10-26A.
17. Refer to Section D for dewatering requirements of sediment traps.
18. Outlet - An outlet shall be provided, which includes a means of conveying the discharge in an erosion free manner to an existing stable channel.
19. Where discharge occurs at the property line, local ordinances and drainage easement requirements shall be met.

U.S. DEPARTMENT OF AGRICULTURE SOIL CONSERVATION SERVICE C - 9 - 7A *MARYLAND DEPARTMENT OF ENVIRONMENT WATER MANAGEMENT ADMINISTRATION*

PIPE OUTLET SEDIMENT TRAP - ST I

NOT TO SCALE

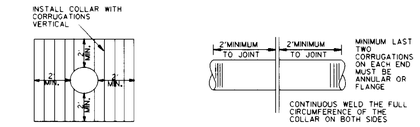

COLLAR WELDED IN PLACE ON BARREL SECTION

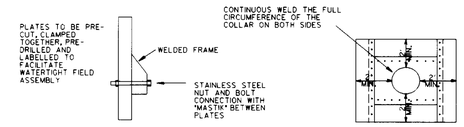

ANTI-SEEP COLLAR DESIGN

COLLAR FOR FLANGE JOINT PIPE

U.S. DEPARTMENT OF AGRICULTURE SOIL CONSERVATION SERVICE C - 10 - 24 *MARYLAND DEPARTMENT OF ENVIRONMENT WATER MANAGEMENT ADMINISTRATION*

TYPICAL ANTI-SEEP COLLARS

NOT TO SCALE

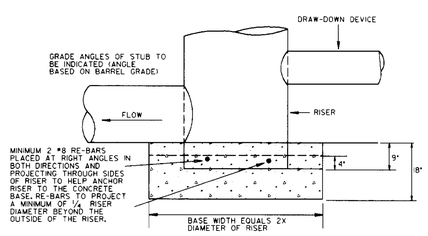

NOTE: ANCHORING BARS SHOULD PROJECT ¼ DIAMETER BEYOND OUTSIDE OF THE RISER.

Construction Specifications

The riser shall have a base attached with a watertight connection and shall have sufficient weight to prevent flotation of the riser. Two approved bases for risers 10' or less in height are:

1. A concrete base 18" thick with the riser embedded 9" in the base.

2. A ¼" minimum thickness steel plate attached to the riser by a continuous weld around the circumference of the riser to form a watertight connection. The plate shall have 2' of stone, gravel, or compacted earth placed on it to prevent flotation. In either case, each side of the square base shall be twice the riser diameter.

Note: For risers greater than ten feet high computations shall be made to design a base which will prevent flotation. The minimum factor of safety shall be 1.20 (downward forces = 1.20 x upward forces).

U.S. DEPARTMENT OF AGRICULTURE SOIL CONSERVATION SERVICE C - 10 - 25 *MARYLAND DEPARTMENT OF ENVIRONMENT WATER MANAGEMENT ADMINISTRATION*

RISER BASE DETAIL

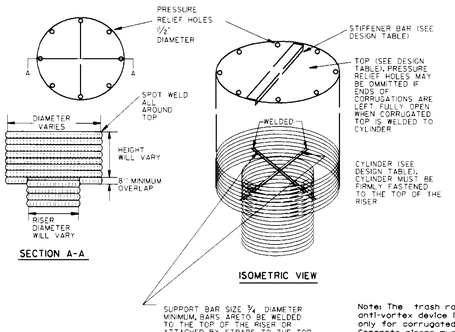

Notes: The trash rack and anti-vortex device information is only for corrugated metal pipe. Concrete risers must meet the requirements to MD 378.

Riser Diam., In.	Trash Rack Cylinder Diam. In.	Trick., gage	H. In.	Minimum Size Support Bar	Minimum Top Thickness	Stiffener
12	18	16	6	*6 Rebar	16 ga.	--
15	21	16	7	"	"	--
18	27	16	8	"	"	--
21	30	16	11	"	"	--
24	36	16	13	"	14 ga.	--
27	42	16	15	"	14 ga.	--
36	54	14	17	*8 Rebar	12 ga.	--
42	60	14	19	"	"	--
48	72	12	21	1-1/4" pipe or 1-1/4 x 1-1/4 x 1/4 angle	10 ga.	--
54	78	12	25	"	"	--
60	90	12	29	1-1/2" pipe or 1-1/2 x 1-1/2 x 1/4 angle	8 ga.	--
66	96	10	33	2" pipe or 2x2x3/16 angle	8 ga. w/stiffener	2x2x1/4 angle
72	102	10	36	"	"	2-1/2x2-1/2x1/4 angle
78	114	10	39	2-1/2" pipe or 2x2x1/4 angle	"	"
84	120	10	42	2-1/2" pipe or 2-1/2x2-1/2x1/4 angle	"	2-1/2x2-1/2x 3/8 angle

U.S. DEPARTMENT OF AGRICULTURE SOIL CONSERVATION SERVICE C - 10 - 26 *MARYLAND DEPARTMENT OF ENVIRONMENT WATER MANAGEMENT ADMINISTRATION*

CONCENTRIC TRASH RACK AND ANTI-VORTEX DEVICE

NOT TO SCALE

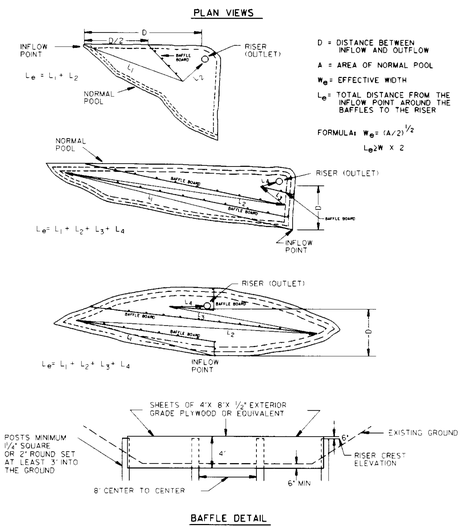

D = DISTANCE BETWEEN INFLOW AND OUTFLOW

A = AREA OF NORMAL POOL

W_e = EFFECTIVE WIDTH

L_e = TOTAL DISTANCE FROM THE INFLOW POINT AROUND THE BAFFLES TO THE RISER

FORMULA: $W_e = (A/2D)^{1/2}$

$L_e = 2W \times 2$

$L_e = L_1 + L_2$

$L_e = L_1 + L_2 + L_3 + L_4$

BAFFLE DETAIL

U.S. DEPARTMENT OF AGRICULTURE SOIL CONSERVATION SERVICE C - 10 - 28 *MARYLAND DEPARTMENT OF ENVIRONMENT WATER MANAGEMENT ADMINISTRATION*

SEDIMENT BASIN BAFFLES

NOT TO SCALE

DEVELOPERS CERTIFICATION:

"I/We certify that all development and construction will be done according to this plan, and that any responsible personnel involved in the construction project will have a Certificate of Attendance at a Department of the Environment Approved Training Program for the Control of Sediment and Erosion before beginning the project. I also authorize periodic on-site inspection by the Howard Soil Conservation District."

5/22/97 Date

ENGINEER'S CERTIFICATION:

"I certify that this plan for erosion and sediment control represents a practical and workable plan based on my personal knowledge of the site conditions and that it was prepared in accordance with the requirements of the Howard Soil Conservation District."

5/22/97 Date

John W. Ranocchia, Sr. PE10551

Reviewed for Howard Soil Conservation District and meets Technical Requirements.

Natural Resources Conservation Service — 5/30/97 Date

This Development Plan is Approved for Soil Erosion and Sediment Control by the Howard Soil Conservation District.

Howard Soil Conservation District — 5/30/97 Date

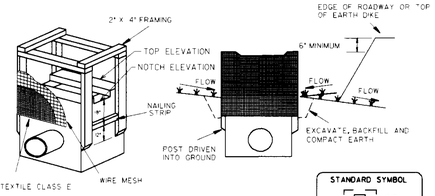

MAX. DRAINAGE AREA = ¼ ACRE

Construction Specifications

1. Excavate completely around the inlet to a depth of 18" below the notch elevation.

2. Drive the 2" x 4" construction grade lumber posts 1' into the ground at each corner of the inlet. Place nail strips between the posts on the ends of the inlet. Assemble the top portion of the 2" x 4" frame using the overlap joint shown on Detail. The top of the frame (weir) must be 6" below adjacent roadways where flooding and safety issues may arise.

3. Stretch the ½" x ½" wire mesh tightly around the frame and fasten securely. The ends must meet and overlap at a post.

4. Stretch the Geotextile Class E tightly over the wire mesh with the geotextile extending from the top of the frame to 18" below the inlet notch elevation. Fasten the geotextile firmly to the frame. The ends of the geotextile must meet at a post, be overlapped and folded, then fastened down.

5. Backfill around the inlet in compacted 6" layers until the layer of earth is level with the notch elevation on the ends and top elevation on the sides.

6. If the inlet is not in a sump, construct a compacted earth dike across the ditch line directly below it. The top of the earth dike should be at least 6" higher than the top of the frame.

7. The structure must be inspected periodically and after each rain and the geotextile replaced when it becomes clogged.

U.S. DEPARTMENT OF AGRICULTURE SOIL CONSERVATION SERVICE E - 16 - 5 *MARYLAND DEPARTMENT OF ENVIRONMENT WATER MANAGEMENT ADMINISTRATION*

STANDARD INLET PROTECTION

NOT TO SCALE

5/22/97 Date

STATE OF MARYLAND — JOHN W. RANOCCHIA SR. — No. 10551 — REGISTERED PROFESSIONAL ENGINEER

Professional Engr. No. 10551

APPROVED
PLANNING BOARD
OF HOWARD COUNTY
DATE 4/23/97

APPROVED: HOWARD COUNTY DEPT. OF PLANNING & ZONING

CHIEF, DEVELOPMENT ENGINEERING DIVISION — 6/16/97 DATE

CHIEF, DIVISION OF LAND DEVELOPMENT — 6/20/97 DATE

DIRECTOR — 6/20/97 DATE

Date	No.	Revision Description

THE MALL IN COLUMBIA

PHASE I EXPANSION
TOWN CENTER
SECTION 2 AREA 1, 2/2
LOTS 8,10-13, 15, 17, 19-22, 24-26, 28-30, 33, 34, 7

OWNER / DEVELOPER:
THE HOWARD RESEARCH & DEVELOPMENT CORP.
COLUMBIA MALL, INC.
10275 LITTLE PATUXENT PARKWAY
COLUMBIA, MARYLAND 21044 HOWARD COUNTY

DMW
Daft-McCune-Walker, Inc.
200 East Pennsylvania Avenue
Towson, Maryland 21286
(410) 296-3333
Fax 296-4705

A Team of Land Planners, Landscape Architects, Engineers, Surveyors & Environmental Professionals

SUBDIVISION NAME	SECTION/AREA	LOT/PARCEL #
Lot 7 TC	2/1 2/2	see gen note #6
PLAT OR TAX MAP #	ZONE	TAX MAP NO.	ELECT. DISTRICT	CENSUS TRACT
37 & 43	N.T.	30, 36	6TH	6004
WATER CODE	SEWER CODE			

TITLE
PHASE IA EROSION AND SEDIMENT CONTROL DETAIL SHEET

Des By	CRW/JLS	Scale	AS SHOWN	Proj. No.	95019B
Drn By	JEF	Date	5/22/97		30 OF 35
Chk By	JWR	Approved			

SDP-97-107

Wed May 21 12:42:13 1997 c:\95\95019b\95019bdet

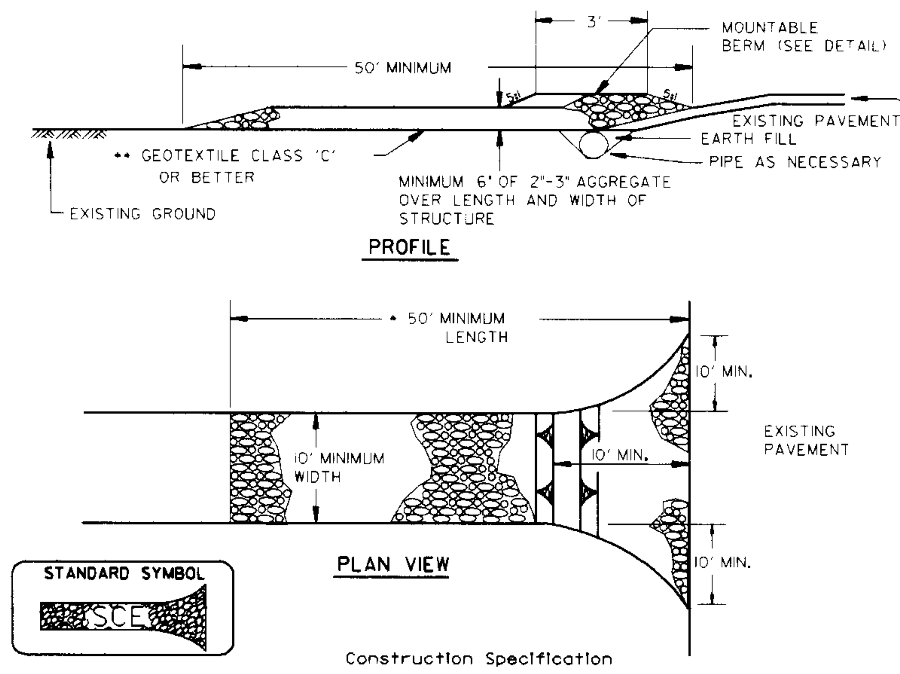

Construction Specification

1. Length - minimum of 50' (*30' for single residence lot).

2. Width - 10' minimum, should be flared at the existing road to provide a turning radius.

3. Geotextile fabric Class C (filter cloth) shall be placed over the existing ground prior to placing stone. **The plan approval authority may not require single family residences to use geotextile.

4. Stone - crushed aggregate (2" to 3") or reclaimed or recycled concrete equivalent shall be placed at least 6" deep over the length and width of the entrance.

5. Surface Water - all surface water flowing to or diverted toward construction entrances shall be piped through the entrance, maintaining positive drainage. Pipe installed through the stabilized construction entrance shall be protected with a mountable berm with 5:1 slopes and a minimum of 6" of stone over the pipe. Pipe has to be sized according to the drainage. When the SCE is located at a high spot and has no drainage to convey a pipe will not be necessary. Pipe should be sized according to the amount of runoff to be conveyed. A 6" minimum will be required.

6. Location - A stabilized construction entrance shall be located at every point where construction traffic enters or leaves a construction site. Vehicles leaving the site must travel over the entire length of the stabilized construction entrance.

U.S. DEPARTMENT OF AGRICULTURE
SOIL CONSERVATION SERVICE

F - 17 - 3

MARYLAND DEPARTMENT OF ENVIRONMENT
WATER MANAGEMENT ADMINISTRATION

STABILIZED CONSTRUCTION ENTRANCE

NOT TO SCALE

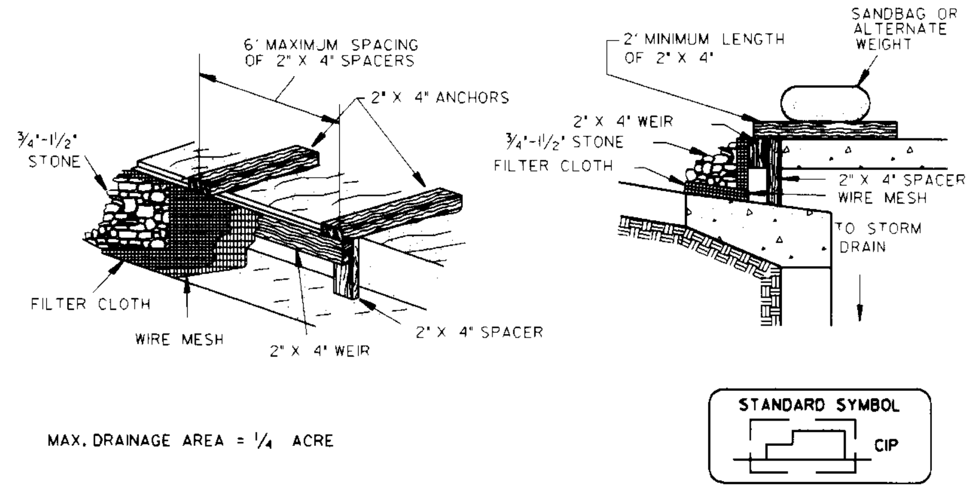

MAX. DRAINAGE AREA = 1/4 ACRE

Construction Specifications

1. Attach a continuous piece of 1/2" X 1/2" wire mesh (30" minimum width by throat length plus 4') to the 2" x 4" weir (measuring throat length plus 2') as shown on the standard drawing.

2. Place a continuous piece of Geotextile Class E the same dimensions as the wire mesh over the wire mesh and securely attach it to the 2" x 4" weir.

3. Securely nail the 2" X 4" weir to a 9" long vertical spacer to be located between the weir and the inlet face (max. 4' apart).

4. Place the assembly against the inlet throat and nail (minimum 2' lengths of 2" x 4" to the top of the weir at spacer locations). These 2" x 4" anchors shall extend across the inlet top and be held in place by sandbags or alternate weight.

5. The assembly shall be placed so that the end spacers are a minimum 1' beyond both ends of the throat opening.

6. Form the 1/2" x 1/2" wire mesh and the geotextile fabric to the concrete gutter and against the face of the curb on both sides of the inlet. Place clean 3/4" x 1 1/2" stone over the wire mesh and geotextile in such a manner to prevent water from entering the inlet under or around the geotextile.

7. This type of protection must be inspected frequently and the filter cloth and stone replaced when clogged with sediment.

8. Assure that storm flow does not bypass the inlet by installing a temporary earth or asphalt dike to direct the flow to the inlet.

U.S. DEPARTMENT OF AGRICULTURE
SOIL CONSERVATION SERVICE

E - 16 - 5B

MARYLAND DEPARTMENT OF ENVIRONMENT
WATER MANAGEMENT ADMINISTRATION

CURB INLET PROTECTION (COG OR COS INLETS)

NOT TO SCALE

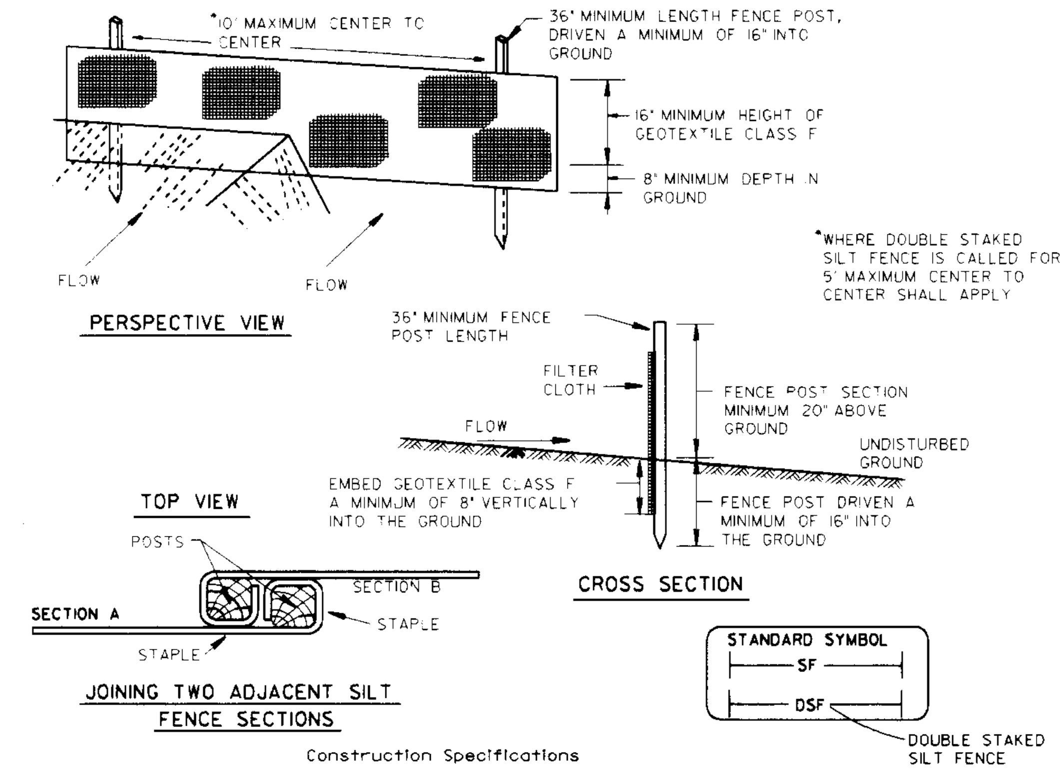

Construction Specifications

1. Fence posts shall be a minimum of 36" long driven 16" minimum into the ground. Wood posts shall be 1 1/2" x 1 1/2" square (minimum) cut, or 1 3/4" diameter (minimum) round and shall be of sound quality hardwood. Steel posts will be standard T or U section weighting not less than 1.00 pond per linear foot.

2. Geotextile shall be fastened securely to each fence post with wire ties or staples at top and mid-section and shall meet the following requirements for Geotextile Class F:

Tensile Strength	50 lbs/in (min.)	Test: MSMT 509
Tensile Modulus	20 lbs/in (min.)	Test: MSMT 509
Flow Rate	0.3 gal ft/minute (max.)	Test: MSTM 322
Filtering Efficiency	75% (min.)	Test: MSMT 322

3. Where ends of geotextile fabric come together, they shall be overlapped, folded and stapled to prevent sediment bypass.

4. Silt Fence shall be inspected after each rainfall event and maintained when bulges occur or when sediment accumulation reached 50% of the fabric height.

U.S. DEPARTMENT OF AGRICULTURE
SOIL CONSERVATION SERVICE

E - 15 - 3

MARYLAND DEPARTMENT OF ENVIRONMENT
WATER MANAGEMENT ADMINISTRATION

SILT FENCE

NOT TO SCALE

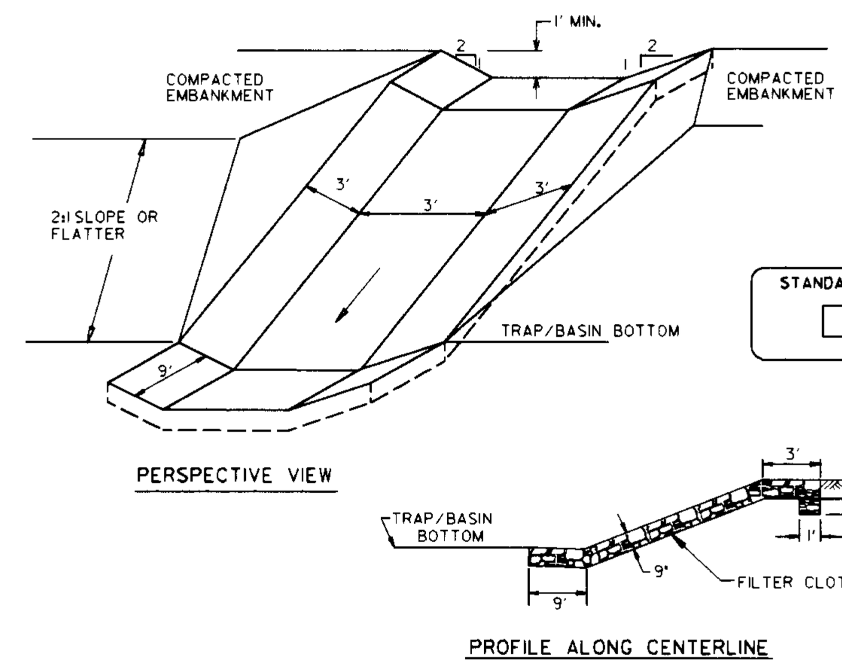

Construction Specifications

1. Gabion inflow protection shall be constructed of 9' x 3' x 9" gabion baskets forming a trapezoidal cross section 1' deep, with 2:1 side slopes, and a 3' bottom width.

2. Geotextile Class C shall be installed under all gabion baskets.

3. The stone used to fill the gabion baskets shall be 4" - 7".

4. Gabions shall be installed in accordance with manufacturers recommendations.

5. Gabion Inflow Protection shall be used where concentrated flow is present on slopes steeper than 4:1.

U.S. DEPARTMENT OF AGRICULTURE
SOIL CONSERVATION SERVICE

B - 7 - 2

MARYLAND DEPARTMENT OF ENVIRONMENT
WATER MANAGEMENT ADMINISTRATION

GABION INFLOW PROTECTION

NOT TO SCALE

DEVELOPERS CERTIFICATION:

"I/We certify that all development and construction will be done according to this plan, and that any responsible personnel involved in the construction project will have a Certificate of Attendance at a Department of the Environment Approved Training Program for the Control of Sediment and Erosion before beginning the project. I also authorize periodic on-site inspection by the Howard Soil Conservation District."

[signature] 5/22/97
Date

ENGINEER'S CERTIFICATION:

"I certify that this plan for erosion and sediment control represents a practical and workable plan based on my personal knowledge of the site conditions and that it was prepared in accordance with the requirements of the Howard Soil Conservation District."

[signature] John W. Ranocchia, Sr. PE 10551 5/22/97
Date

Reviewed for Howard Soil Conservation District and meets Technical Requirements.

Cheryl Simmons 5/30/97
Natural Resources Conservation Service — Date

This Development Plan is Approved for Soil Erosion and Sediment Control by the Howard Soil Conservation District.

John R. Robertson 5/30/97
Howard Soil Conservation District — Date

APPROVED
PLANNING BOARD
OF HOWARD COUNTY
DATE 4/23/97

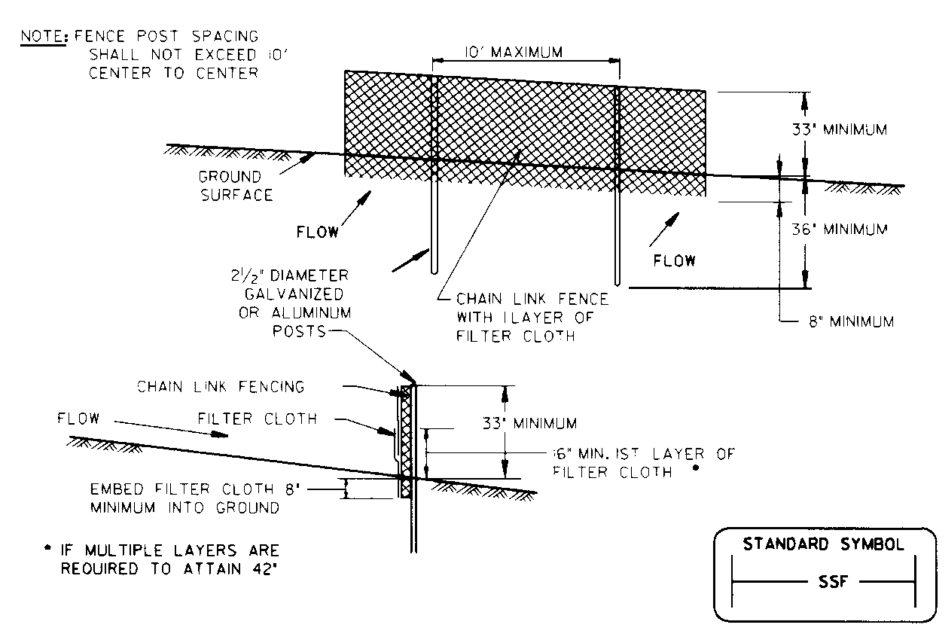

Construction Specifications

1. Fencing shall be 42 inches in height and constructed in accordance with the latest Maryland State Highway (SHA) Details for Chain Link Fencing. The specification for a 6' fence shall be used, substituting 42" fabric and 6' length posts.

2. The posts do not need to be set in concrete.

3. Chain link fence shall be fastened securely to the fence posts with wire ties or staples. The lower tension wire, brace and truss rods, drive anchors and post caps are not required except on the ends of the fence. The chain link fencing shall be six (6) guage or heavier.

4. Filter cloth shall be fastened securely to the chain link fence with ties spaced every 24" at the top and mid section.

5. Filter cloth shall be embedded a minimum of 8" into the ground.

6. When two sections of filter cloth adjoin each other, they shall be overlapped by 6" and folded.

7. Maintenance shall be performed as needed and silt buildups removed when "bulges" develop in the silt fence, or when silt reaches 50% of fence height

U.S. DEPARTMENT OF AGRICULTURE
SOIL CONSERVATION SERVICE

H - 26 - 3

MARYLAND DEPARTMENT OF ENVIRONMENT
WATER MANAGEMENT ADMINISTRATION

SUPER SILT FENCE

NOT TO SCALE

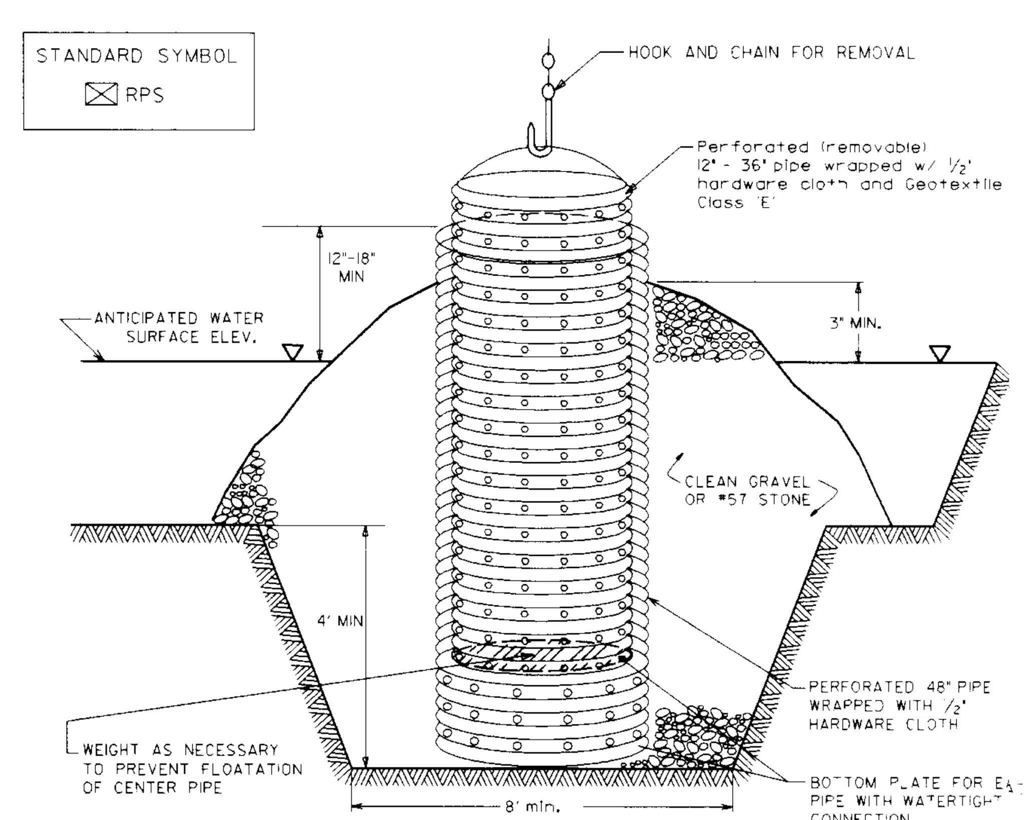

Construction Specifications

1. The outer pipe should be 48" dia. or shall, in any case, be at least 4" greater in diameter than the center pipe. The outer pipe shall be wrapped with 1/2" hardware cloth to prevent backfill material from entering the perforations.

2. After installing the outer pipe, backfill around outer pipe with 2" aggregate or clean gravel.

3. The inside stand pipe (center pipe) should be constructed by perforating a corrugated or PVC pipe between 12" and 36" in diameter. The perforations shall be 1/2" X 6" slits or 1" diameter holes 6" on center. The center pipe shall be wrapped with 1/2" hardware cloth first, then wrapped again with Geotextile Class E.

4. The center pipe should extend 12" to 18" above the anticipated water surface elevation or riser crest elevation when dewatering a basin.

U.S. DEPARTMENT OF AGRICULTURE
SOIL CONSERVATION SERVICE

D - 12 - 5

MARYLAND DEPARTMENT OF ENVIRONMENT
WATER MANAGEMENT ADMINISTRATION

REMOVABLE PUMPING STATION

NOT TO SCALE

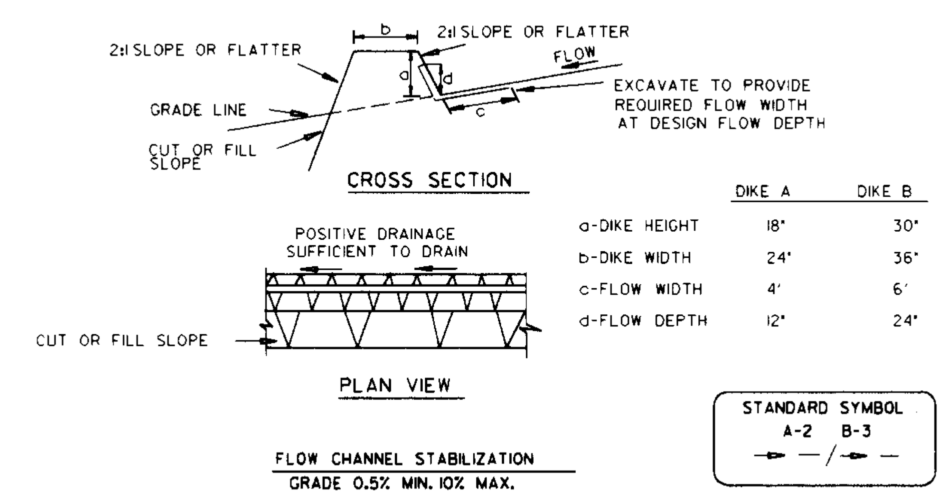

	DIKE A	DIKE B
a-DIKE HEIGHT	18"	30"
b-DIKE WIDTH	24"	36"
c-FLOW WIDTH	4'	6'
d-FLOW DEPTH	12"	24"

STANDARD SYMBOL
A-2 B-3

FLOW CHANNEL STABILIZATION
GRADE 0.5% MIN. 10% MAX.

1. Seed and cover with straw mulch.
2. Seed and cover with Erosion Control Matting or line with sod.
3. 4" - 7" stone or recycled concrete equivalent pressed into the soil 7" minimum

Construction Specifications

1. All temporary earth dikes shall have uninterrupted positive grade to an outlet. Spot elevations may be necessary for grades less than 1%.

2. Runoff diverted from a disturbed area shall be conveyed to a sediment trapping device.

3. Runoff diverted from an undisturbed area shall outlet directly into an undisturbed, stabilized area at a non-erosive velocity.

4. All trees, brush, stumps, obstructions, and other objectional material shall be removed and disposed of so as not to interfere with the proper functioning of the dike.

5. The dike shall be excavated or shaped to line, grade and cross section as required to meet the criteria specified herein and be free of bank projections or other irregularities which will impede normal flow.

6. Fill shall be compacted by earth moving equipment.

7. All earth removed and not needed for construction shall be placed so that it will not interfere with the functioning of the dike.

8. Inspection and maintenance must be provided periodically and after each rain event.

U.S. DEPARTMENT OF AGRICULTURE
SOIL CONSERVATION SERVICE

A - 1 - 6

MARYLAND DEPARTMENT OF ENVIRONMENT
WATER MANAGEMENT ADMINISTRATION

EARTH DIKE

NOT TO SCALE

5/22/97
Date

Professional Engr. No. 10551

APPROVED: HOWARD COUNTY DEPT. OF PLANNING & ZONING

[signature] 6/16/97
CHIEF, DEVELOPMENT ENGINEERING DIVISION MK — DATE

[signature] 6/20/97
CHIEF, DIVISION OF LAND DEVELOPMENT — DATE

[signature] 6/30/97
DIRECTOR — DATE

Date	No.	Revision Description

THE MALL IN COLUMBIA
PHASE I EXPANSION
TOWN CENTER
SECTION 2 AREA 1, 2/2
LOTS 8,10–13, 15, 17, 19–22, 24–26, 28–30, 33, 34, 3

OWNER /DEVELOPER:
THE HOWARD RESEARCH & DEVELOPMENT CORP.
COLUMBIA MALL, INC.
10275 LITTLE PATUXENT PARKWAY
COLUMBIA, MARYLAND 21044 HOWARD COUNTY

DMW
Daft-McCune-Walker, Inc.
200 East Pennsylvania Avenue
Towson, Maryland 21286
(410) 296-3333
Fax 296-4705
A Team of Land Planners, Landscape Architects, Engineers, Surveyors & Environmental Professionals

SUBDIVISION NAME	SECTION/AREA	LOT/PARCEL #
Col. T.C.	2/1 2/2	see general note #6
PLAT# or LFDP 3654A-442 / BLOCK # / ZONE N.T.	TAX/ZONE MAP 30 36 / ELECT. DISTRICT 5th	CENSUS TRACT 6054
WATER CODE	SEWER CODE	

TITLE
PHASE IA
EROSION AND SEDIMENT CONTROL
DETAIL SHEET

Des By	CRW/JLS	Scale	AS SHOWN	Proj. No. 95019B
Drn By	JEF	Date	5/22/97	29 OF 35
Chk By	JWR	Approved		

SDP-97-107

Wed May 21 12:29:32 1997 c:\95019b\95019b.det

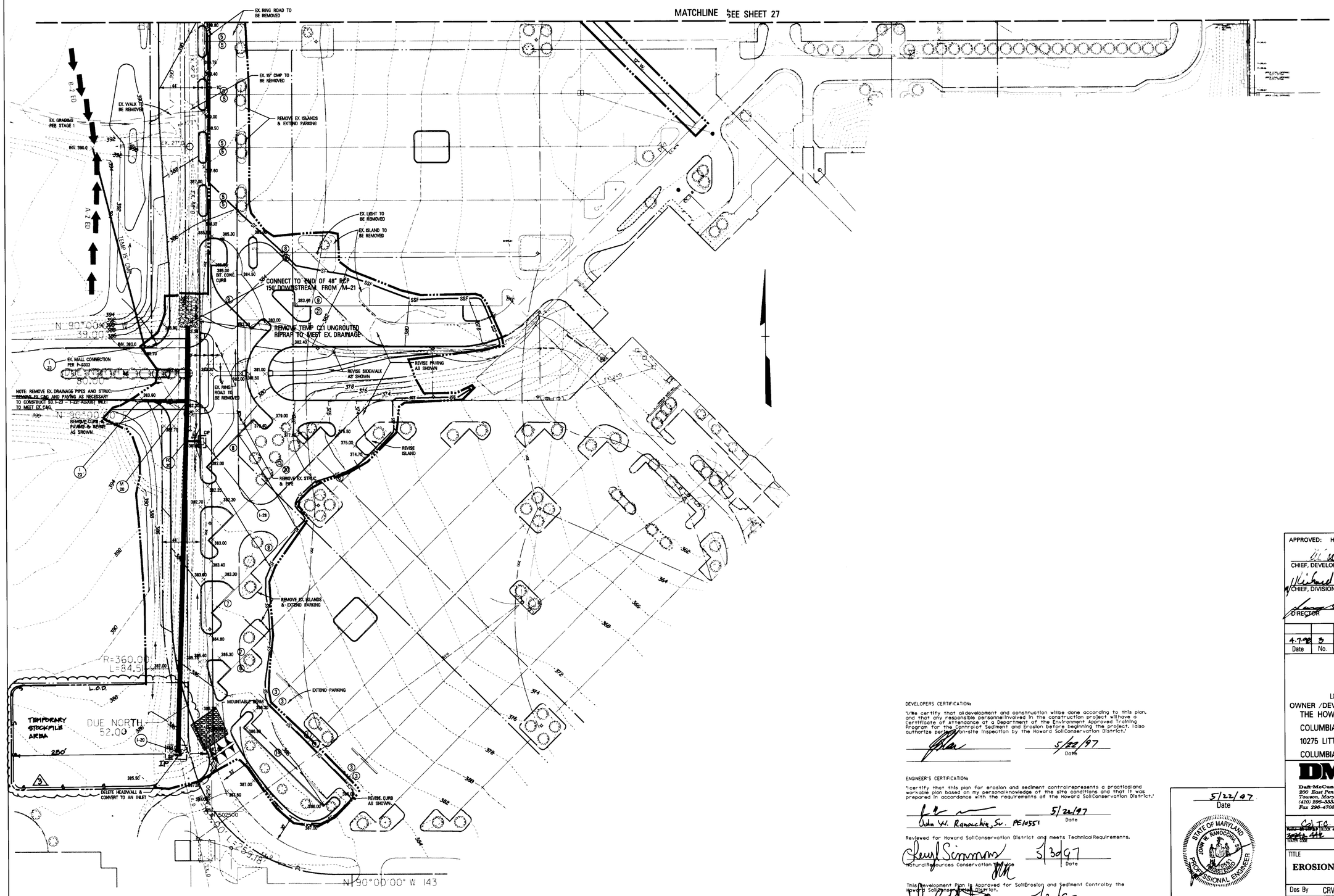

LEGEND

- EX. MAJOR CONTOUR
- EX. MINOR CONTOUR
- EX. WATER
- EX. SANITARY SEWER
- EX. STORM DRAIN
- EX. GAS
- EX. EDGE OF ROAD
- PROP. UTILITIES
- PROP. EDGE OF ROAD
- SILT FENCE
- SUPER SILT FENCE
- IP INLET PROTECTION
- SP INLET PROTECTION
- STABILIZED CONSTRUCTION ENT.
- MOUNTABLE BERM
- TEMPORARY SWALE
- A-2 ED EARTH DIKE
- LIMIT OF DISTURBANCE
- STAGE ISWALE TOPO
- PROPOSED CONTOUR
- × 360.70 SPOT ELEVATION

APPROVED
PLANNING BOARD
OF HOWARD COUNTY
DATE 4/23/97

APPROVED: HOWARD COUNTY DEPT. OF PLANNING & ZONING

CHIEF, DEVELOPMENT ENGINEERING DIVISION — DATE 6/16/97

CHIEF, DIVISION OF LAND DEVELOPMENT — DATE 6/20/97

DIRECTOR — DATE 6/20/97

Date	No.	Revision Description
4-7-98	3	Add Temp Stockpile Area

DEVELOPERS CERTIFICATION

"I/we certify that all development and construction will be done according to this plan, and that any responsible personnel involved in the construction project will have a Certificate of Attendance at a Department of the Environment Approved Training Program for the Control of Sediment and Erosion before beginning the project. I also authorize periodic on-site inspection by the Howard Soil Conservation District."

5/22/97
Date

ENGINEER'S CERTIFICATION

"I certify that this plan for erosion and sediment control represents a practical and workable plan based on my personal knowledge of the site conditions and that it was prepared in accordance with the requirements of the Howard Soil Conservation District."

John W. Ranocchia, Sr. PE10551 — 5/22/97 Date

5/22/97
Date

Professional Engr. No. 10551

Reviewed for Howard Soil Conservation District and meets Technical Requirements.

Natural Resources Conservation Service — 5/30/97 Date

This Development Plan is Approved for Soil Erosion and Sediment Control by the Howard Soil Conservation District.

Howard Soil Conservation District — 5/30/97 Date

THE MALL IN COLUMBIA
PHASE I EXPANSION
TOWN CENTER
SECTION 2 AREA 1 2/2
LOTS 8,10-13, 15, 17, 19-22, 24-26, 28-30, 33, 34, 5

OWNER /DEVELOPER:
THE HOWARD RESEARCH & DEVELOPMENT CORP.
COLUMBIA MALL, INC.
10275 LITTLE PATUXENT PARKWAY
COLUMBIA, MARYLAND 21044 HOWARD COUNTY

DMW
Daft-McCune-Walker, Inc.
200 East Pennsylvania Avenue
Towson, Maryland 21286
(410) 296-3333
Fax 296-4705
A Team of Land Planners, Landscape Architects, Engineers, Surveyors & Environmental Professionals

COLTC	SECTION/AREA 2/1 2/2		LIBER/FOLIO #
TAX MAP 42 GRID 4 PARCEL 448	NTS	TAX MAP 39 36 / ELEC. DISTRICT 6TH / SENSUS TRACT	GRID/ZONE HMC CO54

TITLE
PHASE 1A
EROSION AND SEDIMENT CONTROL PLAN
STAGE 4

Des By	CRW/JLS	Scale	1" = 50'	Proj. No.	95019B
Drn By	JEF	Date	5/16/97		28 OF 35
Chk By	JWR	Approved			

SDP-97-107

Thu May 22 07:50:43 1997 c:\95019b\95019bsheet3

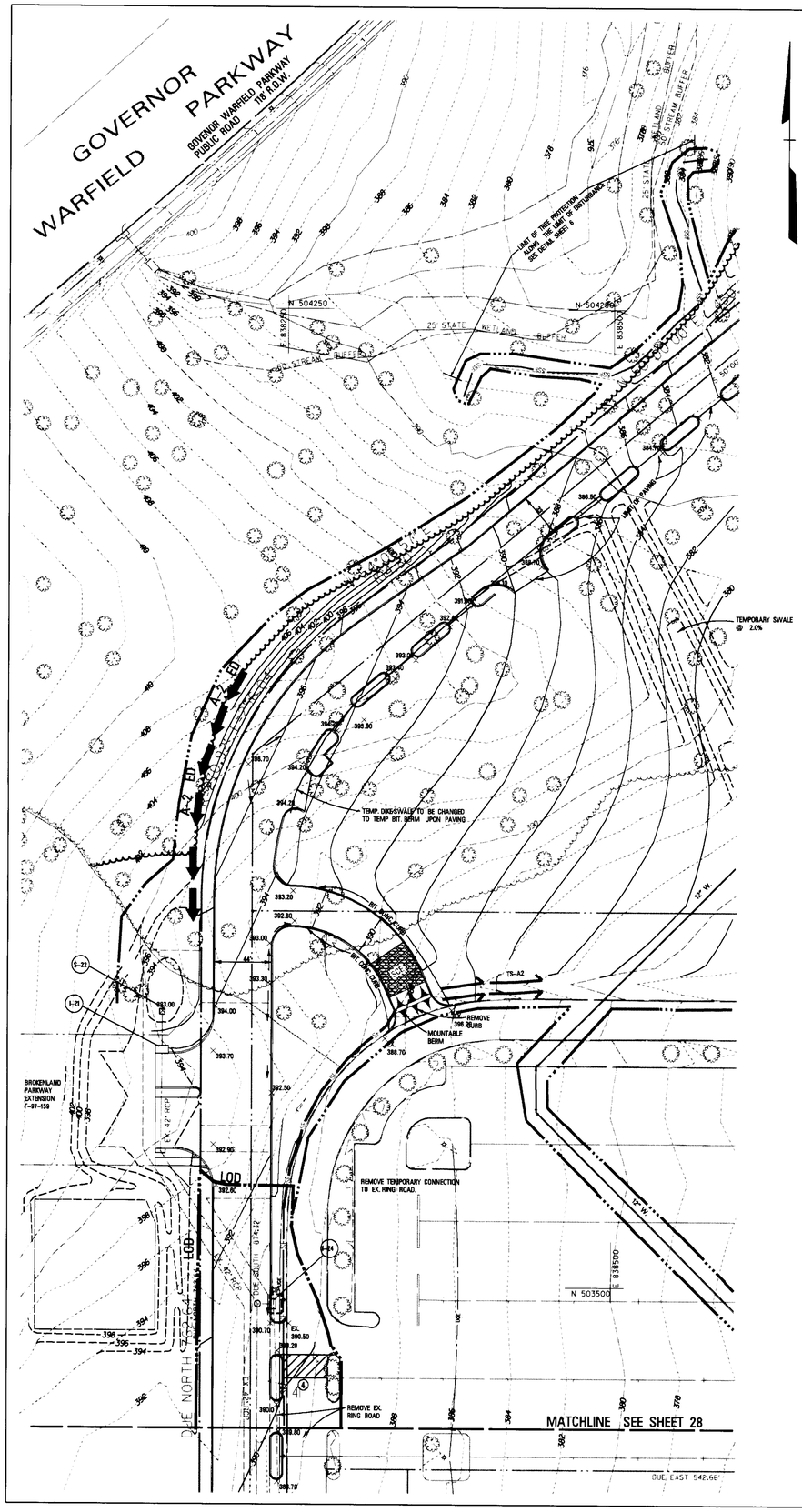

DIKES AND SWALES TO BE ADJUSTED AT THE END OF EACH DAY TO MAINTAIN POSITIVE DRAINAGE TO TRAPS.

DEVELOPERS CERTIFICATION:

"I/We certify that all development and construction will be done according to this plan, and that any responsible personnel involved in the construction project will have a Certificate of Attendance at a Department of the Environment Approved Training Program for the Control of Sediment and Erosion before beginning the project. I also authorize periodic on-site inspection by the Howard Soil Conservation District."

5/22/97
Date

ENGINEER'S CERTIFICATION:

"I certify that this plan for erosion and sediment control represents a practical and workable plan based on my personal knowledge of the site conditions and that it was prepared in accordance with the requirements of the Howard Soil Conservation District."

John W. Ranocchia, Sr.
5/22/97
Date

Reviewed for Howard Soil Conservation District and meets Technical Requirements.

Cheryl Simmons
Natural Resources Conservation Service
5/30/97
Date

This Development Plan is Approved for Soil Erosion and Sediment Control by the Howard Soil Conservation District.

John R. Robertson
Howard Soil Conservation District
5/30/97
Date

LEGEND

- EX. MAJOR CONTOUR
- EX. MINOR CONTOUR
- EX. WATER
- EX. SANITARY SEWER
- EX. STORM DRAIN
- EX. GAS
- EX. EDGE OF ROAD
- PROP. UTILITIES
- PROP. EDGE OF ROAD
- SILT FENCE
- SUPER SILT FENCE
- CIP INLET PROTECTION
- SIP INLET PROTECTION
- STABILIZED CONSTRUCTION ENT.
- MOUNTABLE BERM
- TEMPORARY SWALE
- A-2 ED EARTH DIKE
- LIMIT OF DISTURBANCE
- TEMP DIKE/ SWALE
- STAGE I SWALE TOPO
- PROPOSED CONTOUR
- × 360.70 SPOT ELEVATION

5/22/97
Date

STATE OF MARYLAND
JOHN W. RANOCCHIA, SR.
No. 10551
REGISTERED
PROFESSIONAL ENGINEER

Professional Engr. No. 10551

APPROVED
PLANNING BOARD
OF HOWARD COUNTY
DATE 4/23/97

APPROVED: HOWARD COUNTY DEPT. OF PLANNING & ZONING

CHIEF, DEVELOPMENT ENGINEERING DIVISION MK — 6/16/97 DATE

CHIEF, DIVISION OF LAND DEVELOPMENT — 6/20/97 DATE

DIRECTOR — 6/20/97 DATE

Date	No.	Revision Description

THE MALL IN COLUMBIA
PHASE I EXPANSION
TOWN CENTER
SECTION 2 AREA 1, 2/2
LOTS 8,10-13, 15, 17, 19-22, 24-26, 28-30, 33, 34, 3

OWNER /DEVELOPER:
THE HOWARD RESEARCH & DEVELOPMENT CORP.
COLUMBIA MALL, INC.
10275 LITTLE PATUXENT PARKWAY
COLUMBIA, MARYLAND 21044 HOWARD COUNTY

DMW
Daft·McCune·Walker, Inc.
200 East Pennsylvania Avenue
Towson, Maryland 21286
(410) 296-3333
Fax 296-4705
A Team of Land Planners, Landscape Architects, Engineers, Surveyors & Environmental Professionals

SUBDIVISION NAME	SECTION/AREA	LOT/PARCEL #
Col. T.C.	2/1 2/2	See gen note #6
PLAT # 3554A-442 / BLOCK # / ZONE N.T.	ANCONE MAP 30,320 / ELECT. DISTRICT 5th	CENSUS TRACT 6054
WATER CODE	SEWER CODE	

TITLE
PHASE IA
EROSION AND SEDIMENT CONTROL PLAN
STAGE 4

Des By	CRW/JLS	Scale	1" = 50'	Proj. No.	95019B
Drn By	JEF	Date	5/22/97	27 OF 35	
Chk By	JWR	Approved			

SDP-97-107

Wed May 21 14:58:32 1997 C:\95019b\95019b.es2

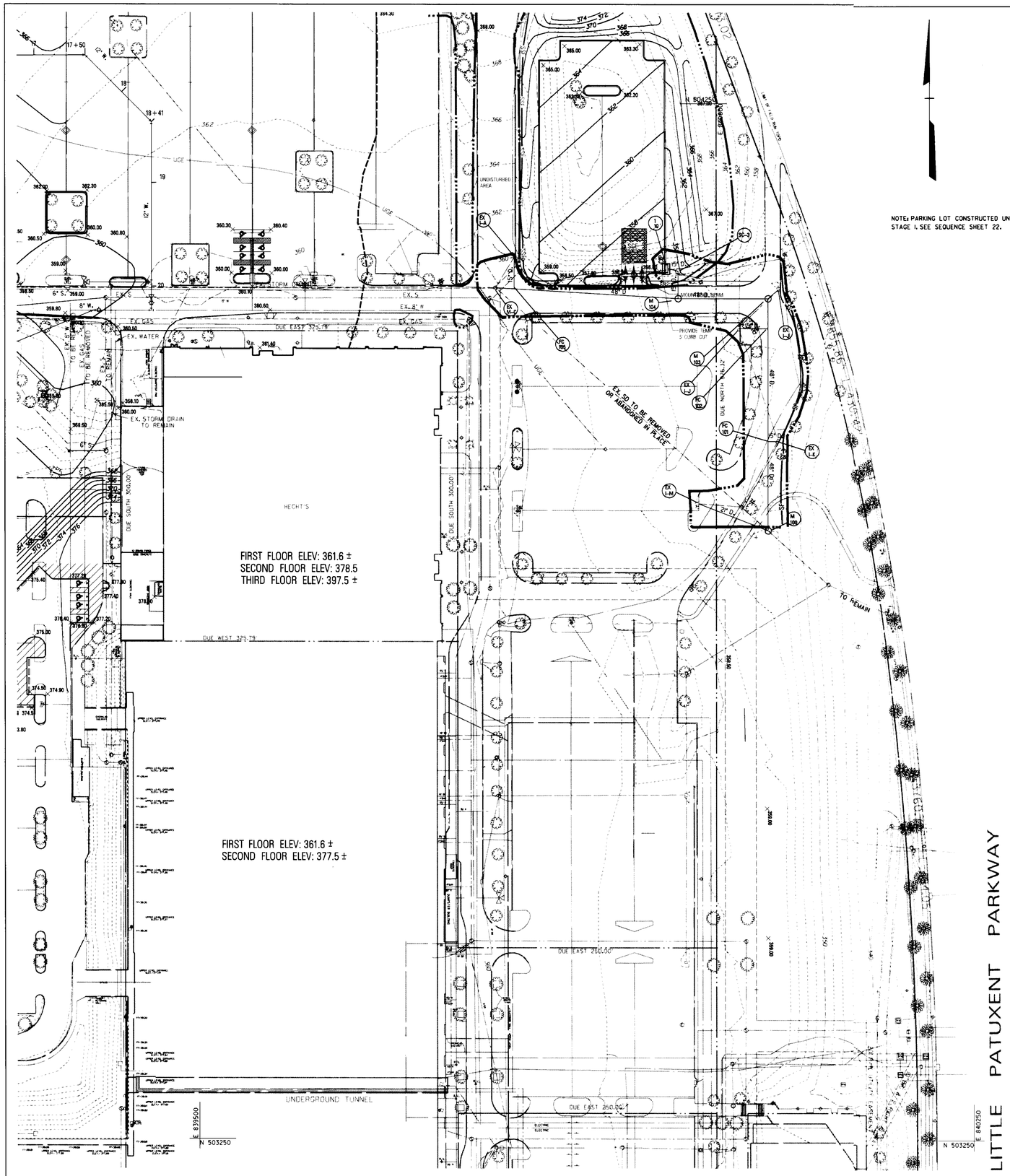

NOTE: PARKING LOT CONSTRUCTED UNDER STAGE I. SEE SEQUENCE SHEET 22.

LEGEND

- EX. MAJOR CONTOUR
- EX. MINOR CONTOUR
- EX. WATER
- EX. SANITARY SEWER
- EX. STORM DRAIN
- EX. GAS
- EX. EDGE OF ROAD
- PROP. UTILITIES
- PROP. EDGE OF ROAD
- SILLT FENCE
- SUPER SILT FENCE
- INLET PROTECTION
- INLET PROTECTION
- STABILIZED CONSTRUCTION ENT.
- MOUNTABLE BERM
- TEMPORARY SWALE
- EARTH DIKE
- LIMIT OF DISTURBANCE
- STAGE I SILT FENCE
- STAGE I LIMITOF DISTURBANCE
- PROPOSED CONTOUR
- × 360.70 SPOT ELEVATION

APPROVED
PLANNING BOARD
OF HOWARD COUNTY
DATE 4/23/97

APPROVED: HOWARD COUNTY DEPT. OF PLANNING & ZONING

CHIEF, DEVELOPMENT ENGINEERING DIVISION MK — DATE 6/16/97

CHIEF, DIVISION OF LAND DEVELOPMENT — DATE 6/20/97

DIRECTOR — DATE 6/20/97

Date	No.	Revision Description

DEVELOPERS CERTIFICATION:

"I/We certify that all development and construction will be done according to this plan, and that any responsible personnel involved in the construction project will have a Certificate of Attendance at a Department of the Environment Approved Training Program for the Control of Sediment and Erosion before beginning the project. I also authorize periodic on-site inspection by the Howard Soil Conservation District."

5/22/97
Date

ENGINEER'S CERTIFICATION:

"I certify that this plan for erosion and sediment control represents a practical and workable plan based on my personal knowledge of the site conditions and that it was prepared in accordance with the requirements of the Howard Soil Conservation District."

John W. Ranocchia, Sr. PE#10551 — 5/22/97
Date

Reviewed for Howard Soil Conservation District and meets Technical Requirements.

Natural Resources Conservation Service — 5/30/97
Date

This Development Plan is Approved for Soil Erosion and Sediment Control by the Howard Soil Conservation District.

Howard Soil Conservation District — 5/30/97
Date

5/22/97
Date

STATE OF MARYLAND — JOHN W. RANOCCHIA, JR. — No. 10551 — REGISTERED PROFESSIONAL ENGINEER

Professional Engr. No. 10551

THE MALL IN COLUMBIA
PHASE I EXPANSION
TOWN CENTER
SECTION 2 AREA 1, 2/2
LOTS 8,10–13, 15, 17, 19–22, 24–26, 28–30, 33, 34, 3

OWNER /DEVELOPER:
THE HOWARD RESEARCH & DEVELOPMENT CORP.
COLUMBIA MALL, INC.
10275 LITTLE PATUXENT PARKWAY
COLUMBIA, MARYLAND 21044 HOWARD COUNTY

DMW
Daft-McCune-Walker, Inc.
200 East Pennsylvania Avenue
Towson, Maryland 21286
(410) 296-3333
Fax 296-4705
A Team of Land Planners, Landscape Architects, Engineers, Surveyors & Environmental Professionals

SUBDIVISION NAME	SECTION/AREA	LOT/PARCEL #
Col. T.C.	2/1 2/2	Lee gen. note #6
PLAT # 30546 BLOCK # 440 ZONE N.T.	TAX/ZONE MAP 30736 ELECT. DISTRICT 5th	CENSUS TRACT 6004
WATER CODE	SEWER CODE	

TITLE
PHASE IA
EROSION AND SEDIMENT CONTROL PLAN
STAGE 3

Des By	CRW/JLS	Scale	1" = 50'	Proj. No.	95019B
Drn By	JEF	Date	5/22/97		
Chk By	JWR	Approved			

26 OF 35

SDP-97-107

Wed May 21 14:41:07 1997 c:\95019b\95019b.es4

DIKES, SWALES AND TRAP SLOPES TO BE ADJUSTED AT THE END OF EACH DAY TO MAINTAIN POSITIVE DRAINAGE TO TRAPS.

LEGEND

- EX. MAJOR CONTOUR
- EX. MINOR CONTOUR
- EX. WATER
- EX. SANITARY SEWER
- EX. STORM DRAIN
- EX. GAS
- EX. EDGE OF ROAD
- PROP. UTILITIES
- PROP. EDGE OF ROAD
- SILT FENCE
- SUPER SILT FENCE
- INLET PROTECTION
- INLET PROTECTION
- STABILIZED CONSTRUCTION ENT.
- MOUNTABLE BERM
- TEMPORARY SWALE
- A-2 ED EARTH DIKE
- LIMIT OF DISTURBANCE
- PROPOSED CONTOUR
- 380.70 SPOT ELEVATION

NOTE: DELAY CONSTRUCTION OF INLET AND ISLAND UNTIL PERMISSION TO REMOVE BITUMINOUS CURB DIVERSION IS OBTAINED FROM THE SEDIMENT CONTROL INSPECTOR

NOTE: BRICK SHOT INLETS UNTIL PROPOSED BOX CULVERT IS FUNCTIONAL

PROP. INLET TRAP
D.A. = 3.6 AC.
INLET CREST 359.0
TRAP BOTTOM 358.0
STORAGE REQUIRED = 6480 C.F.
STORAGE PROVIDED = 18x380x1 = 6480 C.F.
DEPTH = 1'

NOTE: TEMP. INLET AND 15" CMP SHALL BE REMOVED AT TIME EX. 48" S.D. IS REMOVED

NOTE: CONTRACTOR TO MEET CROWN OF EXIST. 48" D ENTERING MH OR 12 MIN. GRADE ON 15" CMP

RELOCATED GAS SERVICE LOCATION TO NORDSTROMS

SUPER SILT FENCE TO EXTEND A MINIMUM OF 10' ALONG FACE OF BUILDING

DA TO TRAP #2
EX. = 2.5 AC.±
INT. = 4.5 AC.±
PROP. = 4.5 AC.±

DEVELOPERS CERTIFICATION:

"I/We certify that all development and construction will be done according to this plan, and that all responsible personnel involved in the construction project will have a certificate of attendance at a Department of the Environment Approved Training Program for the Control of Sediment and Erosion before beginning the project. I also authorize periodic on-site inspection by the Howard Soil Conservation District."

1/12/98
Date

ENGINEER'S CERTIFICATION:

"I certify that this plan for erosion and sediment control represents a practical and workable plan based on my personal knowledge of the site conditions and that it was prepared in accordance with the requirements of the Howard Soil Conservation District."

Jeffrey L. Schaub
Jeffrey L. Schaub

1/9/98
Date

Reviewed for Howard Soil Conservation District and meets Technical Requirements.

Natural Resources Conservation Service

1/9/98
Date

This Development Plan is Approved for Soil Erosion and Sediment Control by the Howard Soil Conservation District.

Howard Soil Conservation District

1/9/98
Date

SEDIMENT TRAP DATA

Trap Number		2 (STAGE 2)
Trap Type		POST 1
Existing Drainage Area Ac.		2.5
Interim Drainage Area Ac.		4.5
Proposed Drainage Area Ac.		4.5
Storage Required C.F.	Wet	8,100
	Dry	8,100
	Total	16,200
Storage Provided C.F.	Wet	8,750
	Dry	9,800
	Total	18,550
Existing Ground Elev.		370.0
Top Embankment Elev.		364.0
Weir Crest Elev.		363.0
Wet Storage / Outlet Elev.		361.6
Cleanout Elev.		360.8
Bottom Elev.		360.0
Depth of Channel(a)		N/A
Outlet Width (b)		N/A
Bottom Dimension		70' X 75'
Trap Sideslopes		2:1
Trap Depth	Wet	1.6
	Dry	1.4
	Total	3.0
Barrel Diameter		2''
Riser Diameter		2''
Wet Storage Zone Elev.		360.0-361.6
Dry Storage Zone Elev.		361.6-363.0

APPROVED
PLANNING BOARD
OF HOWARD COUNTY
DATE APRIL 23, 1997
RB

APPROVED: HOWARD COUNTY DEPT. OF PLANNING & ZONING

CHIEF, DEVELOPMENT ENGINEERING DIVISION MK — 1/14/98 DATE

CHIEF, DIVISION OF LAND DEVELOPMENT — 1/21/98 DATE

DIRECTOR — 1/21/98 DATE

Date	No.	Revision Description
1-5-98	2	MOVED PIPE RELEASE FROM PROP. INLET TRAP &
		ADD BIT. CURB DIVERSION & PROP. INLET TRAP

THE MALL IN COLUMBIA
PHASE I EXPANSION
TOWN CENTER
SECTION 2 AREA 1 & 2.2
LOTS 8,10-13, 15, 17, 19-22, 24-26, 28-30, 33, 34

OWNER /DEVELOPER:
THE HOWARD RESEARCH & DEVELOPMENT CORP.
COLUMBIA MALL, INC.
10275 LITTLE PATUXENT PARKWAY
COLUMBIA, MARYLAND 21044

DMW
Daft-McCune-Walker, Inc.
200 East Pennsylvania Avenue
Towson, Maryland 21286
(410) 296-3333
Fax 296-4705

A Team of Land Planners, Landscape Architects, Engineers, Surveyors & Environmental Professionals

1-6-98
Date

STATE OF MARYLAND — JOHN W. RICHARDSON — 10561 — REGISTERED PROFESSIONAL ENGINEER

Professional Engr. No. 10561

SECTION/AREA | LOT/PARCEL #
PLAT # OR L/F | BLOCK # | ZONE | TAX/ZONE MAP | ELECT. DISTRICT | CENSUS TRACT
WATER CODE | SEWER CODE

TITLE
REVISED EROSION & SEDIMENT CONTROL PLAN STAGE 2

Des By	CRW/JLS	Scale	1" = 50'	Proj. No.	95019B
Drn By	JEF	Date	5/22/97	25 OF 35	
Chk By	JWR	Approved			

SDP-97-107

Tue Jan 6 14:49:29 1998 d:\95019b\95019bes5

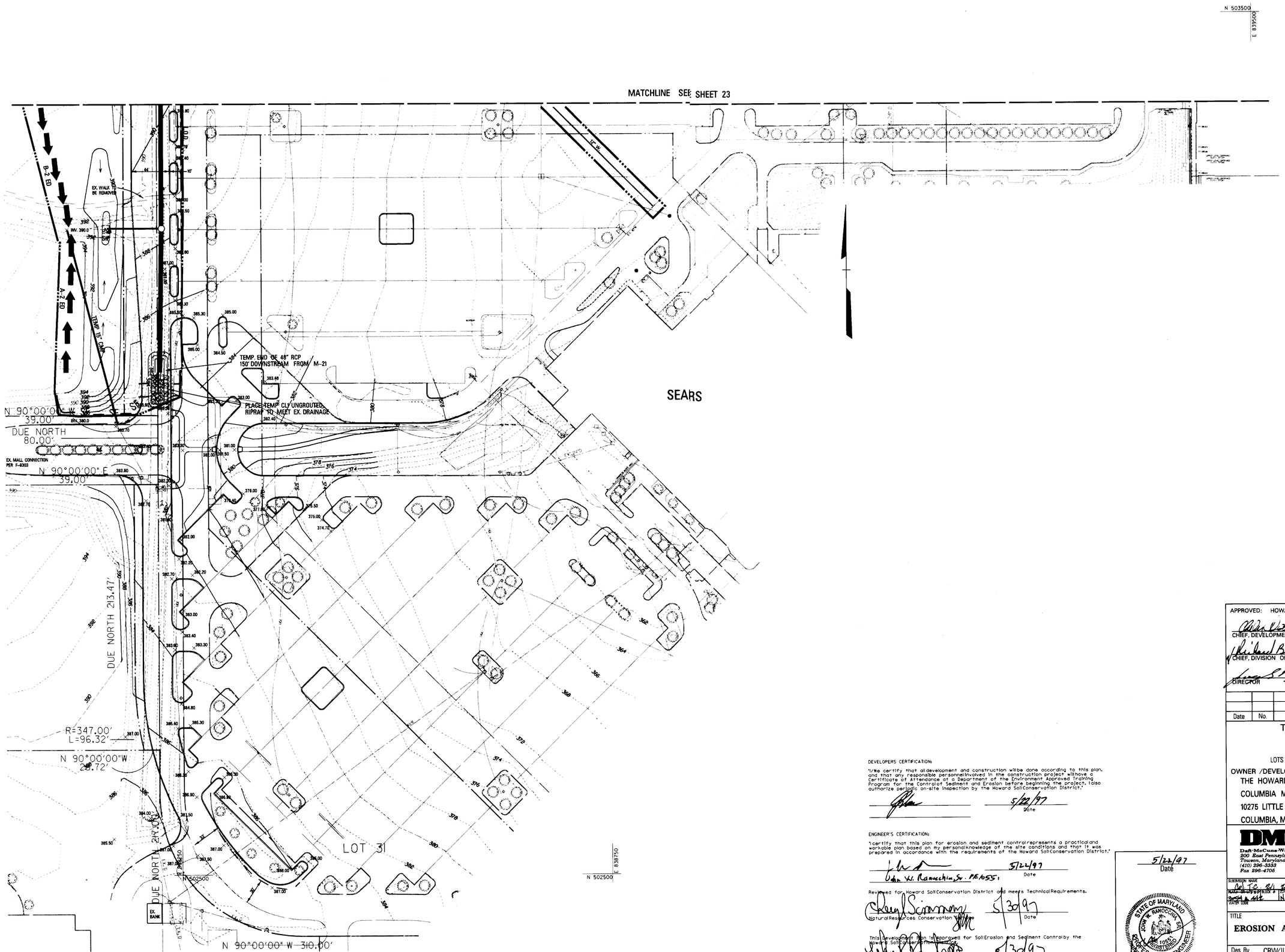

LEGEND

- EX. MAJOR CONTOUR
- EX. MINOR CONTOUR
- EX. WATER
- EX. SANITARY SEWER
- EX. STORM DRAIN
- EX. GAS
- EX. EDGE OF ROAD
- PROP. UTILITIES
- PROP. EDGE OF ROAD
- SILLT FENCE
- SUPER SILT FENCE
- CP INLET PROTECTION
- SP INLET PROTECTION
- STABILIZED CONSTRUCTION ENT.
- MOUNTABLE BERM
- TEMPORARY SWALE
- A-2 ED EARTH DIKE
- LIMIT OF DISTURBANCE
- PROPOSED CONTOUR
- × 380.70 SPOT ELEVATION

APPROVED
PLANNING BOARD
OF HOWARD COUNTY
DATE 4/23/97

APPROVED: HOWARD COUNTY DEPT. OF PLANNING & ZONING

CHIEF, DEVELOPMENT ENGINEERING DIVISION MK — 4/16/97 DATE

CHIEF, DIVISION OF LAND DEVELOPMENT — 6/20/97 DATE

DIRECTOR — 6/20/97 DATE

DEVELOPERS CERTIFICATION:

"I/We certify that all development and construction will be done according to this plan, and that any responsible personnel involved in the construction project will have a Certificate of Attendance at a Department of the Environment Approved Training Program for the Control of Sediment and Erosion before beginning the project. I also authorize periodic on-site inspection by the Howard Soil Conservation District."

5/22/97 Date

ENGINEER'S CERTIFICATION:

"I certify that this plan for erosion and sediment control represents a practical and workable plan based on my personal knowledge of the site conditions and that it was prepared in accordance with the requirements of the Howard Soil Conservation District."

John W. Ranocchia Sr. PE#5551 — 5/24/97 Date

Reviewed for Howard Soil Conservation District and meets Technical Requirements.

Natural Resources Conservation — 5/30/97 Date

This Development Plan is approved for Soil Erosion and Sediment Control by the Howard Soil Conservation District.

Howard Soil Conservation Distrlct — 5/30/97 Date

5/22/97 Date

STATE OF MARYLAND — JOHN W. RANOCCHIA — 10551 — REGISTERED PROFESSIONAL ENGINEER

Professional Engr. No. 10551

Date	No.	Revision Description

THE MALL IN COLUMBIA

PHASE I EXPANSION
TOWN CENTER
SECTION 2 AREA 1 & 2/2

LOTS 8,10-13, 15, 17, 19-22, 24-26, 28-30, 33, 34, 3

OWNER /DEVELOPER:
THE HOWARD RESEARCH & DEVELOPMENT CORP.
COLUMBIA MALL, INC.
10275 LITTLE PATUXENT PARKWAY
COLUMBIA, MARYLAND 21044 HOWARD COUNTY

DMW
Daft-McCune-Walker, Inc.
200 East Pennsylvania Avenue
Towson, Maryland 21286
(410) 296-3333
Fax 296-4705

A Team of Land Planners, Landscape Architects, Engineers, Surveyors & Environmental Professionals

SUBDIVISION NAME	SECTION/AREA	LOT/PARCEL #
Del TC 81/4 & Parcel A-1	2/1 & 1/2	see general note #6
TAX MAP NO. & GRID	PARCEL	ELEC. DIST.	CENSUS TRACT
37 & 44	N.T.	3rd	6th	10054
WATER CODE	SEWER CODE	

TITLE
PHASE IA
EROSION AND SEDIMENT CONTROL PLAN
STAGE 1

Des By	CRW/JLS	Scale	1" = 50'	Proj. No.	95019B
Drn By	JEF	Date	5/22/97	24 OF 35	
Chk By	JWR	Approved			

SDP-97-107

Wed May 21 14:05:59 1997 c:\95019b\95019bas6

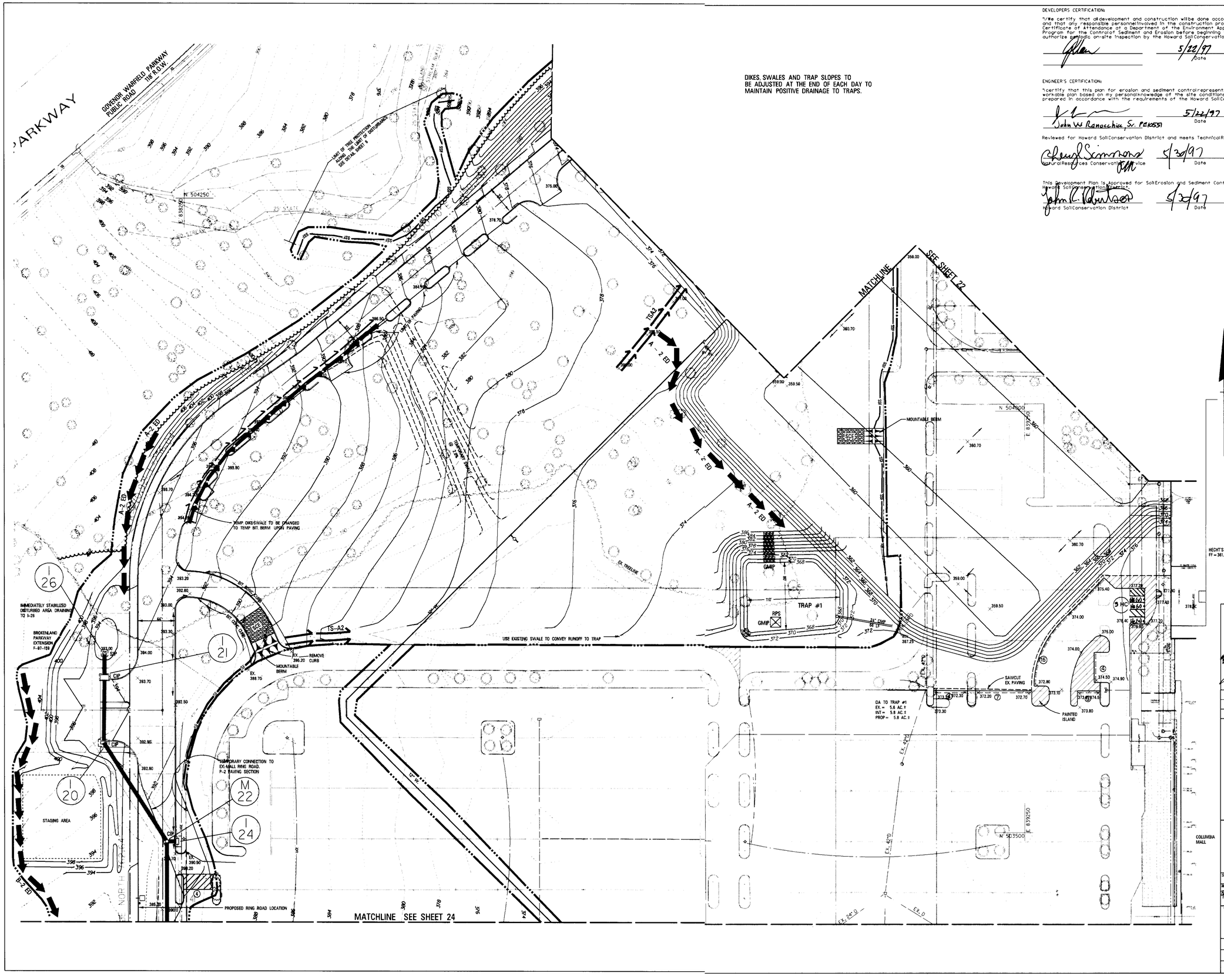

DIKES, SWALES AND TRAP SLOPES TO BE ADJUSTED AT THE END OF EACH DAY TO MAINTAIN POSITIVE DRAINAGE TO TRAPS.

DEVELOPERS CERTIFICATION:

"I/We certify that all development and construction will be done according to this plan, and that any responsible personnel involved in the construction project will have a Certificate of Attendance at a Department of the Environment Approved Training Program for the Control of Sediment and Erosion before beginning the project. I also authorize periodic on-site inspection by the Howard Soil Conservation District."

5/22/97
Date

ENGINEER'S CERTIFICATION:

"I certify that this plan for erosion and sediment control represents a practical and workable plan based on my personal knowledge of the site conditions and that it was prepared in accordance with the requirements of the Howard Soil Conservation District."

John W Ranacchia, Sr. PE10551
5/22/97
Date

Reviewed for Howard Soil Conservation District and meets Technical Requirements.

Cheryl Simmons
Natural Resources Conservation Service
5/30/97
Date

This Development Plan is Approved for Soil Erosion and Sediment Control by the Howard Soil Conservation District.

John R. Robertson
Howard Soil Conservation District
5/30/97
Date

SEDIMENT TRAP DATA

Trap Number		1
Trap Type		POST
Existing Drainage Area Ac.		5.6
Interim Drainage Area Ac.		5.8
Proposed Drainage Area Ac.		5.8
Storage Required C.F.	Wet	10,440
	Dry	10,440
	Total	20,880
Storage Provided C.F.	Wet	13,200
	Dry	15,300
	Total	28,500
Existing Ground Elev.		371.0
Top Embankment Elev.		372.0
Weir Crest Elev.		371.0
Wet Storage / Outlet Elev.		369.5
Cleanout Elev.		378.6
Bottom Elev.		368.0
Depth of Channel(a)		N/A
Outlet Width (b)		N/A
Bottom Dimension		80' X 110'
Trap Sideslopes		2:1
Trap Depth	Wet	1.5
	Dry	1.5
	Total	3.0
Barrel Diameter		24"
Riser Diameter		30"
Wet Storage Zone Elev.		368.0-369.5
Dry Storage Zone Elev.		369.5-371.0

LEGEND

- EX. MAJOR CONTOUR
- EX. MINOR CONTOUR
- EX. WATER
- EX. SANITARY SEWER
- EX. STORM DRAIN
- EX. GAS
- EX. EDGE OF ROAD
- PROP. UTILITIES
- PROP. EDGE OF ROAD
- SILT FENCE
- SUPER SILT FENCE
- INLET PROTECTION
- INLET PROTECTION
- STABILIZED CONSTRUCTION ENT.
- MOUNTABLE BERM
- TEMPORARY SWALE
- A-2 ED EARTH DIKE
- LIMIT OF DISTURBANCE
- TEMP DIKE/ SWALE
- PROPOSED CONTOUR
- × 360.70 SPOT ELEVATION

5/22/97
Date

STATE OF MARYLAND
JOHN W. RANACCHIA, SR.
No. 10551
REGISTERED
PROFESSIONAL ENGINEER

Professional Engr. No. 10551

APPROVED
PLANNING BOARD
OF HOWARD COUNTY
DATE 4/23/97

APPROVED: HOWARD COUNTY DEPT. OF PLANNING & ZONING

CHIEF, DEVELOPMENT ENGINEERING DIVISION MK — DATE 6/16/97

CHIEF, DIVISION OF LAND DEVELOPMENT — DATE 6/20/97

DIRECTOR — DATE 6/20/97

Date	No.	Revision Description

THE MALL IN COLUMBIA
PHASE I EXPANSION
TOWN CENTER
SECTION 2 AREA 1, 2/2
LOTS 8,10-13, 15, 17, 19-22, 24-26, 28-30, 33, 34, 3

OWNER /DEVELOPER:
THE HOWARD RESEARCH & DEVELOPMENT CORP.
COLUMBIA MALL, INC.
10275 LITTLE PATUXENT PARKWAY
COLUMBIA, MARYLAND 21044 Howard County

DMW
Daft-McCune-Walker, Inc.
200 East Pennsylvania Avenue
Towson, Maryland 21286
(410) 296-3333
Fax 296-4705

A Team of Land Planners, Landscape Architects, Engineers, Surveyors & Environmental Professionals

SUBDIVISION NAME	SECTION/AREA	LOT/PARCEL #
Col. T.C.	2/1 2/2	See acct. note #6
PLAT # OR LT # CAP	BLOCK #	ZONE	TAX/ZONE MAP	ELECT. DISTRICT	CENSUS TRACT
3054 A 44	N.T.	30.36	5th	6054
WATER CODE		SEWER CODE	

TITLE
PHASE IA
EROSION AND SEDIMENT CONTROL PLAN
STAGE 1

Des By	CRW/JLS	Scale	1" = 50'	Proj. No.	95019B
Drn By	JEF	Date	5/22/97	23 OF 35	
Chk By	JWR	Approved			

SDP-97-107

Wed May 21 13:29:28 1997 c:\95019b\95019b.es7

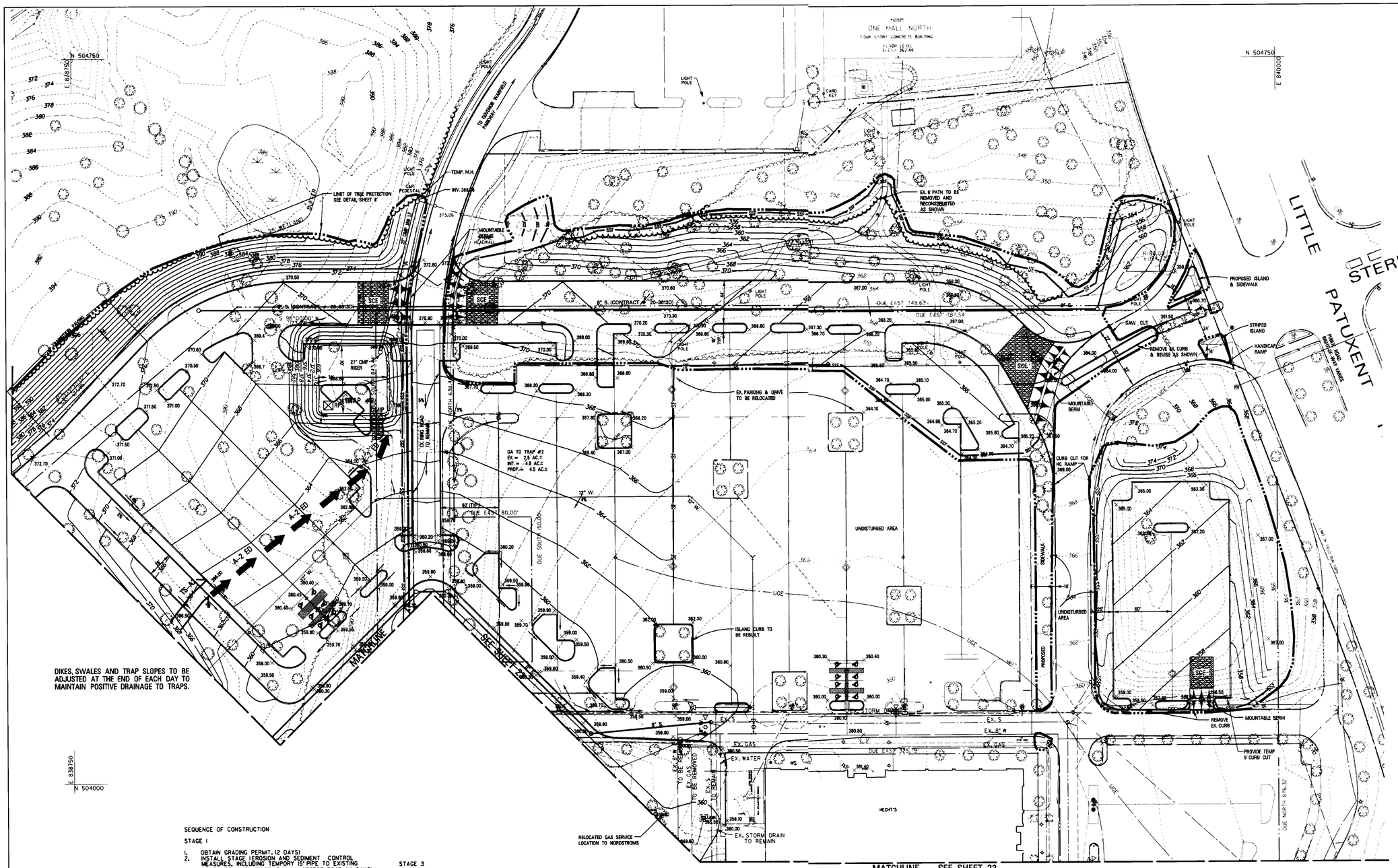

LEGEND

- EX. MAJOR CONTOUR
- EX. MINOR CONTOUR
- EX. WATER
- EX. SANITARY SEWER
- EX. STORM DRAIN
- EX. GAS
- EX. EDGE OF ROAD
- PROP. UTILITIES
- PROP. EDGE OF ROAD
- SILT FENCE
- SUPER SILT FENCE
- INLET PROTECTION
- INLET PROTECTION
- STABILIZED CONSTRUCTION ENT.
- MOUNTABLE BERM
- TEMPORARY SWALE
- A-2 ED EARTH DIKE
- LIMIT OF DISTURBANCE
- PROPOSED CONTOUR
- ×360.70 SPOT ELEVATION

DIKES, SWALES AND TRAP SLOPES TO BE ADJUSTED AT THE END OF EACH DAY TO MAINTAIN POSITIVE DRAINAGE TO TRAPS.

SEDIMENT TRAP DATA

Trap Number		2
Trap Type		POST 1
Existing Drainage Area Ac.		2.5
Interim Drainage Area Ac.		4.5
Proposed Drainage Area Ac.		4.5
Storage Required C.F.	Wet	8,100
	Dry	8,100
	Total	16,200
Storage Provided C.F.	Wet	8,600
	Dry	8,935
	Total	17,535
Existing Ground Elev.		377.0
Top Embankment Elev.		376.0
Weir Crest Elev.		372.0
Wet Storage / Outlet Elev.		370.5
Cleanout Elev.		369.8
Bottom Elev.		369.0
Depth of Channel(a)		N/A
Outlet Width (b)		N/A
Bottom Dimension		70' X 70'
Trap Sideslopes		2:1
Trap Depth	Wet	1.5
	Dry	1.2
	Total	3.0
Barrel Diameter		24"
Riser Diameter		24"
Wet Storage Zone Elev.		369.0-370.5
Dry Storage Zone Elev.		370.6-372.0

SEQUENCE OF CONSTRUCTION

STAGE 1

1. OBTAIN GRADING PERMIT. (2 DAYS)
2. INSTALL STAGE 1EROSION AND SEDIMENT CONTROL MEASURES, INCLUDING TEMPORY 15" PIPE TO EXISTING STORM DRAIN ON EXISTING MALL ACCESS ROAD. (14 DAYS)
3. INSTALL STORM DRAINAGE I-26 TO 150± DOWNSTEAM FROM M-2INCLUDING TEMPORARY RIPRAP AND STABILIZE. INSTALL SUPER SILT FENCE IN SWALE AS SHOWN. (14 DAYS)
4. CLEAR AND GRUB SITE DRAININAGE TO STAGE 1CONTROLS (14 DAYS)
5. CONSTRUCT PROPOSED SEWER TO MANHOLE IMMEDIATELY EAST OF EXISTING MALL RING ROAD. (7 DAYS)
6. ROUGH GRADE SITE DRAINING TO STAGE 1CONTROLS. ADJUST EROSION AND SEDIMENT CONTROLS AS NECESSARY TO MAINTAIN POSITIVE FLOW TO TRAPS. CONSTRUCT UTILITIES AND PROPOSED MALL RING ROAD WITH TEMPORARY CONNECTION AND PARKING LOT ON EAST SIDE OF MALL AND STABILIZE SLOPES. PROVIDE TEMPORARY CURB CUT TO DRAIN PARKING LOT. (60 DAYS)
7. AFTER PROPOSED MALL RING ROAD IS OPERATIONAL AND STAGE 1GRADING IS COMPLETE, ADJUST STAGE 1EROSION AND SEDIMENT CONTROL MEASURES AS NECESSARY TO BEGIN STAGE 2 CONSTRUCTION AND INSTALL STAGE 2 EROSION AND SEDIMENT CONTROL MEASURES. (7 DAYS)

STAGE 2

1. REMOVE EXISTING MALL RING ROAD AS NECESSARY TO COMPLETE GRADING OF PAD AREA. ADJUST SUPER SILT FENCE IN FIELD AS NECESSARY. (2 DAYS)
2. ROUGH GRADE PAD AREA. (14 DAYS)
3. CONSTRUCT UNDERGROUND SWM FACILITY ADJUST OUTFALLS FROM TRAPS AS NECESSARY TO CONNECT TO RELOCATED STORM DRAINAGE. REGRADE TRAP #2. (30 DAYS)
4. BEGIN STAGE 2 GRADING OF PROPOSED PARKING LOT WEST OF PAD AND REMOVE EXISTING PARKING AS NECESSARY TO MEET PROPOSED GRADING. (7 DAYS)
5. CONSTRUCT STORM DRAINAGE AND INSTALL INLET PROTECTION. (21 DAYS)
6. CONSTRUCT WATER, SEWER, AND UTILITIES. (30 DAYS)
7. FINE GRADE AND CONSTRUCT PROPOSED PARKING LOTS. REMOVE TRAP #2 WITH APPROVAL OF THE SEDIMENT CONTROL INSPECTOR AND COMPLETE PAVING. (7 DAYS)

STAGE 3

1. INSTALL STAGE 3 EROSION AND SEDIMENT CONTROL MEASURES. (7 DAYS)
2. FLUSH STORM DRAIN SYSTEM. (1 DAY)
3. CONSTRUCT RELOCATED STORM DRAINAGE M-C THRU M-100.
4. RESTORE AREAS DISTURBED DURING CONSTRUCTION TO ORIGINAL GRADES AND STABILIZE. (7 DAYS)
5. UPON APPROVAL OF THE SEDIMENT CONTROL INSPECTOR, REMOVE EROSION AND SEDIMENT CONTROL MEASURES AND STABILIZE. (7 DAYS)

STAGE 4

1. UPON COMPLETION OF THE CONNECTION OF BROKEN LAND PARKWAY EXTENDED WITH THE PROPOSED MALL RING ROAD; COMMENCE STAGE 4.
2. INSTALL STAGE 4 EROSION AND SEDIMENT CONTROL MEASURES. (7 DAYS)
3. CONSTRUCT PROPOSED STORM DRAINAGE WORKING FORM DOWN STREAM TO UPSTREAM, STABILIZING AREAS DISTURBED AT THE END OF EACH WORKING DAY. (14 DAYS)
4. FINE GRADE AND CONSTRUCT PROPOSED UTILITIES (30 DAYS)
5. CONSTRUCT PROPOSED PAVING AND ISLANDS. (14 DAYS)
6. STABILIZE ISLANDS. (2 DAYS)
7. UPON APPROVAL OF THE SEDIMENT CONTROL INSPECTOR, REMOVE EROSION AND SEDIMENT CONTROL MEASURES AND STABILIZE. (14 DAYS)

DEVELOPERS CERTIFICATION:

"I/We certify that all development and construction will be done according to this plan, and that any responsible personel involved in the construction project will have a Certificate of Attendance at a Department of the Environment Approved Training Program for the Control of Sediment and Erosion before beginning the project. I also authorize periodic on-site inspection by the Howard Soil Conservation District."

5/22/97 Date

ENGINEER'S CERTIFICATION:

"I certify that this plan for erosion and sediment control represents a practical and workable plan based on my personal knowledge of the site conditions and that it was prepared in accordance with the requirements of the Howard Soil Conservation District."

John W. Ranocchia, Jr. PE#15571 — 5/22/97 Date

Reviewed for Howard Soil Conservation District and meets Technical Requirements.

Natural Resources Conservation Service — 5/30/97 Date

This Development Plan is approved for Soil Erosion and Sediment Control by the Howard Soil Conservation District.

Howard Soil Conservation District — 5/30/97 Date

5/22/97 Date

JOHN W. RANOCCHIA JR. — STATE OF MARYLAND — 15571 — REGISTERED PROFESSIONAL ENGINEER

Professional Engr. No. 15571

APPROVED
PLANNING BOARD
OF HOWARD COUNTY
DATE 4/23/97

APPROVED: HOWARD COUNTY DEPT. OF PLANNING & ZONING

CHIEF, DEVELOPMENT ENGINEERING DIVISION MK — 6/16/97 DATE

CHIEF, DIVISION OF LAND DEVELOPMENT — 6/24/97 DATE

DIRECTOR — 6/26/97 DATE

Date	No.	Revision Description

THE MALL IN COLUMBIA

PHASE I EXPANSION
TOWN CENTER
SECTION 2 AREA 1 2/2
LOTS 8,10-13, 15, 17, 19-22, 24-26, 28-30, 33, 34, 5

OWNER /DEVELOPER:
THE HOWARD RESEARCH & DEVELOPMENT CORP.
COLUMBIA MALL, INC.
10275 LITTLE PATUXENT PARKWAY
COLUMBIA, MARYLAND 21044 HOWARD COUNTY

DMW
Daft-McCune-Walker, Inc.
200 East Pennsylvania Avenue
Towson, Maryland 21286
(410) 296-3333
Fax 296-4705

A Team of Land Planners, Landscape Architects, Engineers, Surveyors & Environmental Professionals

SECTION/AREA	2/1	2/2	UNIT/LOT #
			See geo. note #6
TAX MAP	BLOCK	ZONE	PLAT REF.
42	17	NT	30,36
WATER CODE		SEWER CODE	

TITLE
PHASE 1A
EROSION & SEDIMENT CONTROL PLAN
STAGE 1

Des By	CRW/JLS	Scale	1" = 50'	Proj. No.	950198
Drn By	JEF	Date	5/22/97		
Chk By	JWR	Approved			22 OF 35

SDP-97-107

Thu May 22 09:45:48 1997 C:\WINDOWS\Desktop\950198.dwg

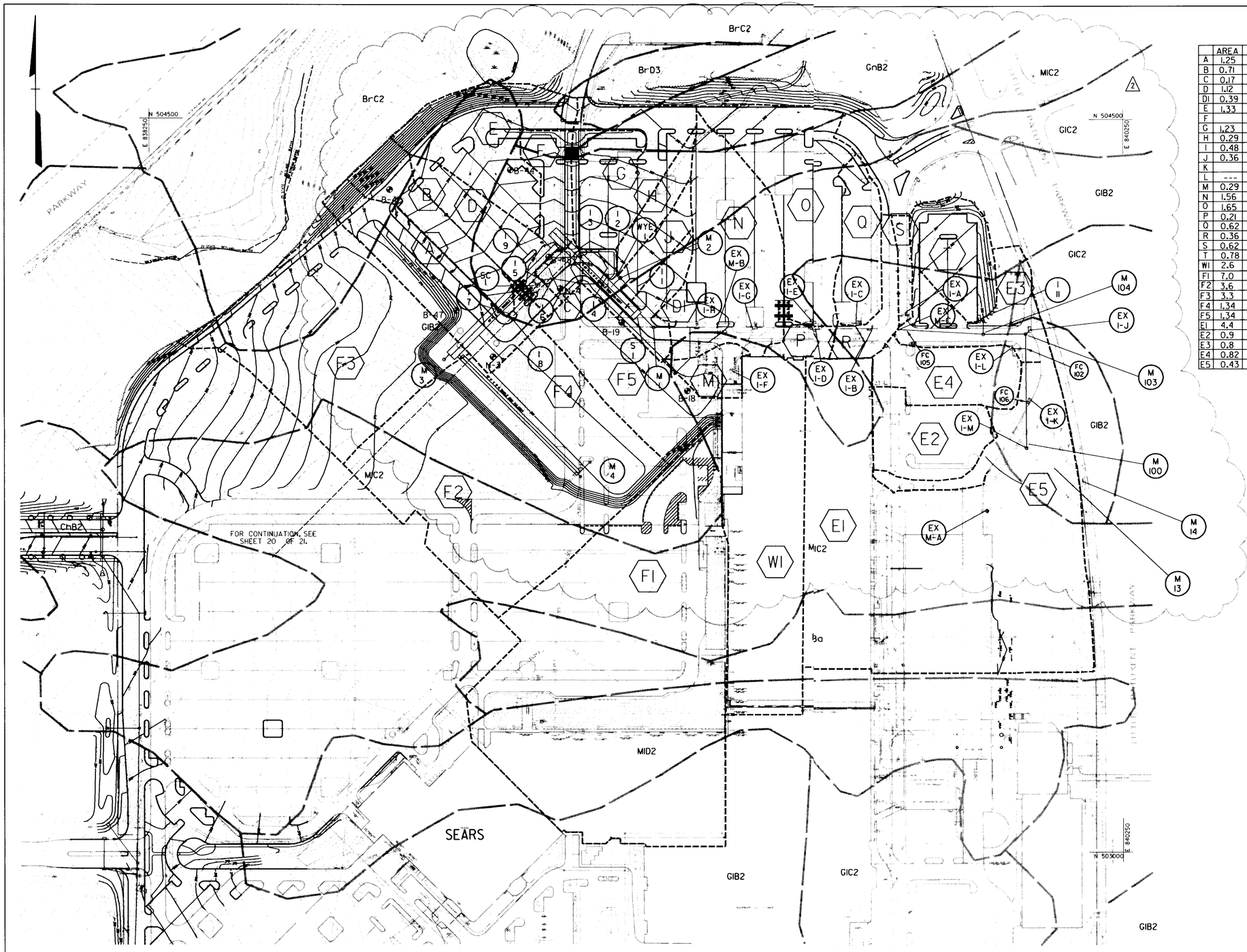

	AREA	C	% IMP
A	1.25	0.60	55
B	0.71	0.75	74
C	0.17	0.75	74
D	1.12	0.90	93
DI	0.39	0.90	0.94
E	1.33	0.70	66
F			
G	1.23	0.90	93
H	0.29	0.90	93
I	0.48	0.90	93
J	0.36	0.90	93
K			
L	---	---	---
M	0.29	0.90	95
N	1.56	0.90	95
O	1.65	0.90	95
P	0.21	0.90	95
Q	0.62	0.77	80
R	0.36	0.66	60
S	0.62	0.77	80
T	0.78	0.68	60
WI	2.6	0.95	100
FI	7.0	0.90	95
F2	3.6	0.90	95
F3	3.3	0.90	95
F4	1.34	0.95	100
F5	1.34	0.95	100
EI	4.4	0.93	98
E2	0.9	0.90	95
E3	0.8	0.90	95
E4	0.82	0.90	95
E5	0.43	0.90	95

SOILS LEGEND

HYDROLOGIC SOILS	KEY	NAME	SLOPE
D	Ba	BAILE SILT LOAM	
C	BrC2	BRANDYWINE LOAM	8 TO 15 PERCENT SLOPES, MODERATELY ERODED
C	BrD3	BRANDYWINE LOAM	15 TO 25 PERCENT SLOPES, SEVERELY ERODED
B	ChB2	CHESTER SILT LOAM	3 TO 8 PERCENT SLOPES, MODERATELY ERODED
B	GIB2	GLENELG LOAM	3 TO 8 PERCENT SLOPES, MODERATELY ERODED
B	GIC2	GLENELG LOAM	8 TO 15 PERCENT SLOPES, MODERATELY ERODED
C	GnB2	GLENVILLE SILT LOAM	3 TO 8 PERCENT SLOPES, MODERATELY ERODED
B	MIC2	MANOR LOAM	8 TO 15 PERCENT SLOPES, MODERATELY ERODED
B	MID2	MANOR LOAM	15 TO 25 PERCENT SLOPES, MODERATELY ERODED

SEE SOILS MAP 24

APPROVED
PLANNING BOARD
OF HOWARD COUNTY
DATE APRIL 23, 1997
RB

APPROVED: HOWARD COUNTY DEPT. OF PLANNING & ZONING

CHIEF, DEVELOPMENT ENGINEERING DIVISION MK — 1/21/98 DATE

CHIEF, DIVISION OF LAND DEVELOPMENT — 1/21/98 DATE

DIRECTOR — 1/21/98 DATE

Date	No.	Revision Description
1-5-98	2	REVISE DRAINAGE AREA MAP

THE MALL IN COLUMBIA

PHASE I EXPANSION
TOWN CENTER
SECTION 2 AREA 1 & 2 /2
LOTS 8,10-13, 15, 17, 19-22, 24-26, 28-30, 33, 34

OWNER /DEVELOPER:

THE HOWARD RESEARCH & DEVELOPMENT CORP.
COLUMBIA MALL, INC.
10275 LITTLE PATUXENT PARKWAY
COLUMBIA, MARYLAND 21044

Daft·McCune·Walker, Inc.
200 East Pennsylvania Avenue
Towson, Maryland 21286
(410) 296-3333
Fax 296-4705

A Team of Land Planners, Landscape Architects, Engineers, Surveyors & Environmental Professionals

1-6-98
Date

STATE OF MARYLAND — JOHN W. RANOCCHIA — No. 10561 — REGISTERED PROFESSIONAL ENGINEER

Professional Engr. No. 10561

SECTION/AREA			LOT/PARCEL #
PLAT # OR L#	BLOCK #	ZONE	TAX/ZONE MAP	ELECT. DISTRICT	CENSUS TRACT
WATER CODE		SEWER CODE	

TITLE

PHASE 1A
REVISED STORM DRAIN
DRAINAGE AREA MAP & SOILS MAP

Des By	RCJS	Scale	1" = 100'	Proj. No.	95019B
Drn By	JEF	Date	5/22/97		21 OF 35
Chk By	JWR	Approved			

SDP-97-107

Tue Jan 6 14:46:27 1998 d:\95019b\95019bdm5

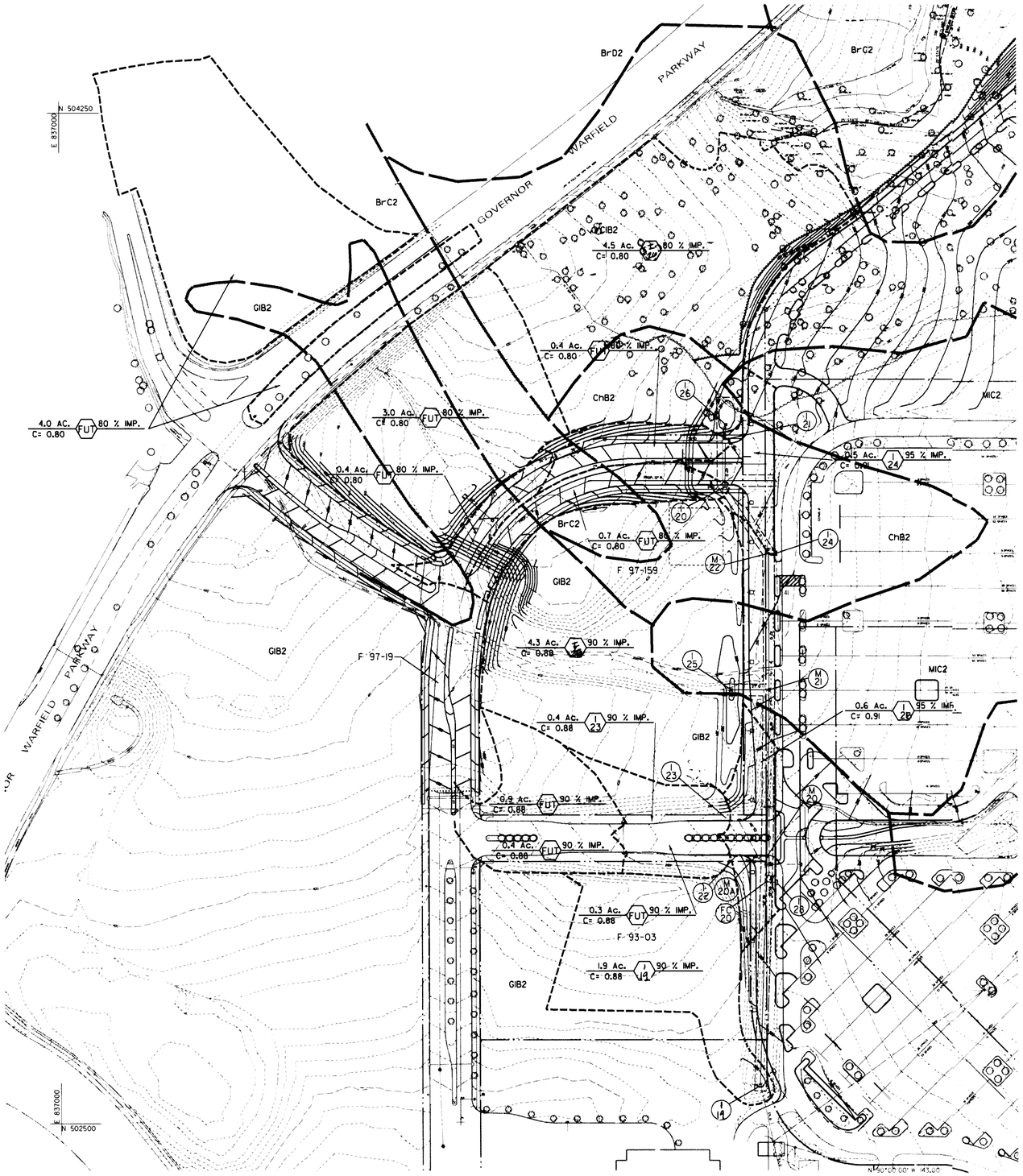

FOR CONTINUATION, SEE SHEET 21 OF 35

APPROVED
PLANNING BOARD
OF HOWARD COUNTY
DATE 4/23/97

APPROVED: HOWARD COUNTY DEPT. OF PLANNING & ZONING

CHIEF, DEVELOPMENT ENGINEERING DIVISION MK	6/16/97 DATE
CHIEF, DIVISION OF LAND DEVELOPMENT	6/20/97 DATE
DIRECTOR	6/20/97 DATE

Date	No.	Revision Description

THE MALL IN COLUMBIA
PHASE I EXPANSION
TOWN CENTER
SECTION 2 AREA 1 & 2/2
LOTS 8,10–13, 15, 17, 19–22, 24–26, 28–30, 33, 34, 3

OWNER /DEVELOPER:

THE HOWARD RESEARCH & DEVELOPMENT CORP.
COLUMBIA MALL, INC.
10275 LITTLE PATUXENT PARKWAY
COLUMBIA, MARYLAND 21044 HOWARD COUNTY

DMW
Daft·McCune·Walker, Inc.
200 East Pennsylvania Avenue
Towson, Maryland 21286
(410) 296-3333
Fax 296-4705

A Team of Land Planners, Landscape Architects, Engineers, Surveyors & Environmental Professionals

SUBDIVISION NAME	SECTION/AREA	LOT/PARCEL #
Col. T.C.	2/1 2/2	See get Note #6
BLOCK #	ZONE	TAX/ZONE MAP	ELECT. DISTRICT	CENSUS TRACT
3054A-442	N.T.	30,36	5th	6054
WATER CODE	SEWER CODE	

TITLE
PHASE 1A
STORM DRAIN
DRAINAGE AREA MAP

Des By	JS	Scale	1" = 100'	Proj. No.	95019B
Drn By	JEF	Date	5/22/97	20 OF 35	
Chk By	JWR	Approved			

5/22/97
Date

STATE OF MARYLAND
JOHN W. RANOCCHIA SR.
No. 10557
REGISTERED
PROFESSIONAL ENGINEER

Professional Engr. No. 10557

SDP-97-107

Thu May 22 18:08:51 1997 c:\95019b\95019b.dm6

LEGEND

WOODS

CONTOURS

DRAINAGE AREA LIMIT

TC PATH

DRAINAGE AREA DESIGNATION

	AREA(A_{ac})	AREA (SM)	RCN	TC
I	0.26	0.0004	97	0.1
J	0.24	0.0004	97	0.1
WI	2.6	0.0041	98	0.1
M	0.29	0.0004	96	0.1
N	1.56	0.0024	96	0.1
O	1.65	0.0026	96	0.1
P	0.21	0.0003	96	0.1
Q	0.62	0.0010	89	0.1
R	0.36	0.0006	83	0.1
S	0.62	0.0010	96	0.1
T	0.78	0.0012	84	0.1
E1	5.31	0.0083	97	0.1
E2	0.90	0.0014	96	0.1
E3	0.80	0.0012	96	0.1
E4	0.82	0.0013	96	0.1
E5	0.43	0.0007	96	0.1

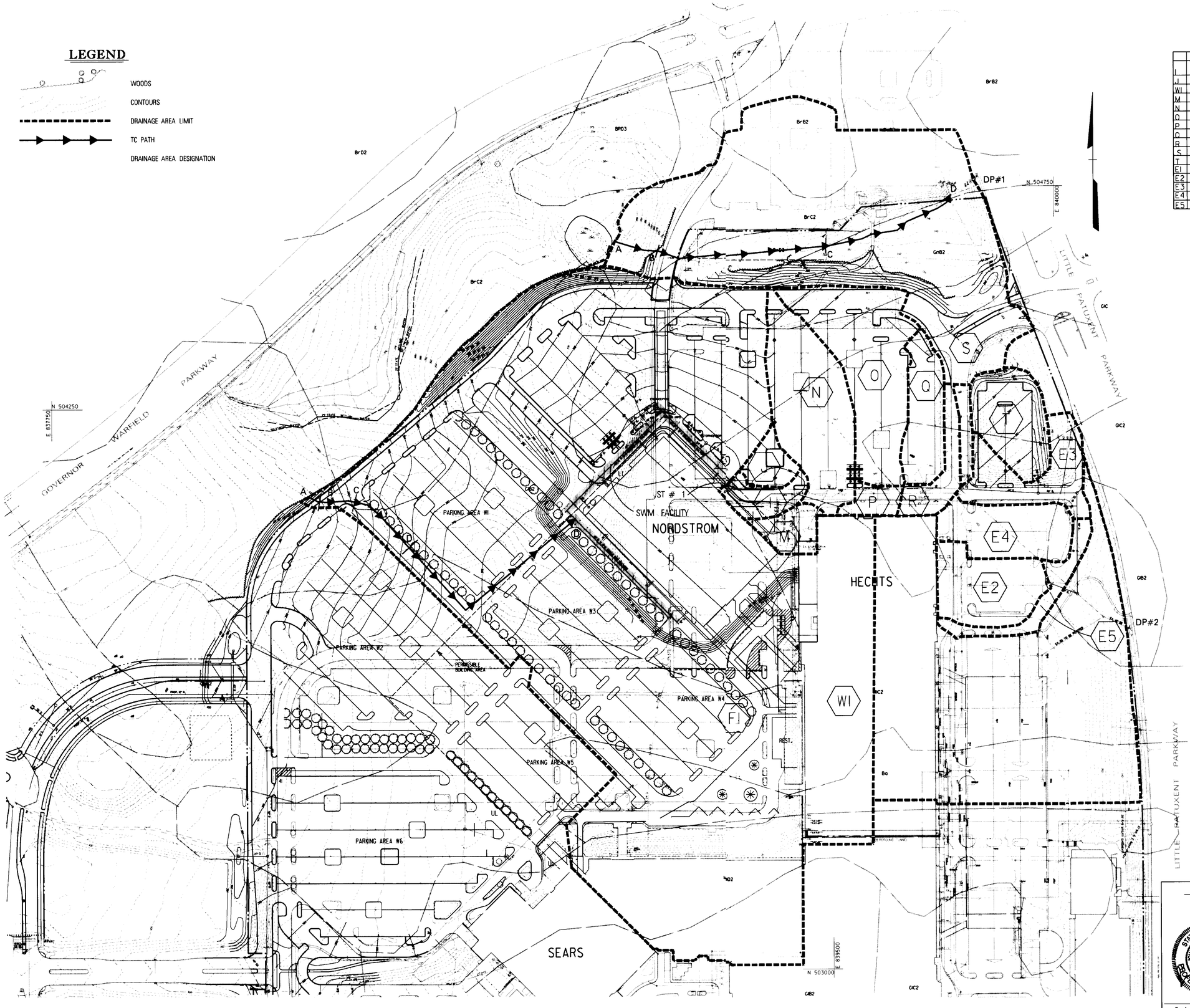

APPROVED
PLANNING BOARD
OF HOWARD COUNTY
DATE 4/23/97

APPROVED: HOWARD COUNTY DEPT. OF PLANNING & ZONING

CHIEF, DEVELOPMENT ENGINEERING DIVISION MK — DATE 6-6-97

CHIEF, DIVISION OF LAND DEVELOPMENT — DATE 6/20/97

DIRECTOR — DATE 6/20/97

Date	No.	Revision Description

THE MALL IN COLUMBIA
PHASE I EXPANSION
TOWN CENTER
SECTION 2 AREA 1, & 2/2

OWNER /DEVELOPER:

THE HOWARD RESEARCH & DEVELOPMENT CORP.
COLUMBIA MALL, INC.
10275 LITTLE PATUXENT PARKWAY
COLUMBIA, MARYLAND 21044 HOWARD COUNTY

DMW
Daft-McCune-Walker, Inc.
200 East Pennsylvania Avenue
Towson, Maryland 21286
(410) 296-3333
Fax 296-4705

A Team of Land Planners, Landscape Architects, Engineers, Surveyors & Environmental Professionals

5/22/97
Date

STATE OF MARYLAND — JOHN W. RANEY — No. 10551 — REGISTERED PROFESSIONAL ENGINEER

Professional Engr. No. 10551

SUBDIVISION NAME: Col TC	SECTION/AREA: 2/1 & 2/2	LOT/PARCEL #: Consent note #6
PLAT: 3rd Rep BLOCK #: 30 & 44	ZONE: N.T.	ELEC. DISTRICT: 5th	CENSUS TRACT: 6054
WATER CODE:	SEWER CODE:	

TITLE
PHASE 1A
STORM WATER MANAGEMENT
PROPOSED DRAINAGE AREA MAP

Des By REC/JLS	Scale 1" = 100'	Proj. No. 95019B
Drn By CLZ	Date 5/22/97	19 OF 35
Chk By JWR	Approved	

SDP-97-107

LEGEND

WOODS

CONTOURS

DRAINAGE AREA LIMIT

TC PATH

9.97 Ac. / 0.0156 Sq. Mi. — DA A — TC = 0.41 — RCN = 55 — DRAINAGE AREA DESIGNATION

11.25 Ac. / 0.0176 Sq. Mi. — DP 1 — TC = 0.35 — RCN = 74

28.73 Ac. / 0.0449 Sq. Mi. — DA B — TC = 0.12 — RCN = 90

DP#1

DP#2

N 504750 E 840000

N 504250 E 837750

N 503000 E 839500

WOODS

GOVERNOR WARFIELD PARKWAY

LITTLE PATUXENT PARKWAY

APPROVED
PLANNING BOARD
OF HOWARD COUNTY
DATE 4/23/97

APPROVED: HOWARD COUNTY DEPT. OF PLANNING & ZONING

CHIEF, DEVELOPMENT ENGINEERING DIVISION — DATE 6/16/97

CHIEF, DIVISION OF LAND DEVELOPMENT — DATE 6/20/97

DIRECTOR — DATE 6/20/97

Date	No.	Revision Description

THE MALL IN COLUMBIA
PHASE I EXPANSION
TOWN CENTER
SECTION 2 AREA 1, 2, 2

OWNER /DEVELOPER:
THE HOWARD RESEARCH & DEVELOPMENT CORP.
COLUMBIA MALL, INC.
10275 LITTLE PATUXENT PARKWAY
COLUMBIA, MARYLAND 21044 HOWARD COUNTY

DMW
Daft-McCune-Walker, Inc.
200 East Pennsylvania Avenue
Towson, Maryland 21286
(410) 296-3333
Fax 296-4705

A Team of Land Planners, Landscape Architects, Engineers, Surveyors & Environmental Professionals

5/24/97
Date

Professional Engr. No. 10551

SUBDIVISION NAME: Del. T.C.	SECTION/AREA: 2/1	2/2	COUNTY: 2nd Rev. #6
BLOCK: 24 & 44	ZONE: NT	TAXMAP: 32 & 39	ELEC. DISTRICT: 5TH	CENSUS TRACT: 6065.04
WATER CODE	SEWER CODE		

TITLE
PHASE 1A
STORM WATER MANAGEMENT
EXISTING DRAINAGE AREA MAP

Des By	REC/JLS	Scale	1" = 100'	Proj. No. 950198
Drn By	CLZ	Date	5/22/97	
Chk By	JWR	Approved		18 OF 35

SDP-97-107

Thu May 22 16:07:10 1997 c:\950198\DM2.snp

CSR

Hydro Conduit
6800 Loisdale Road, Springfield, VA 22150 (703) 971-1900

STC 900

PRECAST CONCRETE STORMCEPTOR

DR. BY:	EPOM
CK. BY:	RCH
DATE:	12-17-96
SCALE:	1/4" = 1'-0"
DWG.#	CA-0225-02

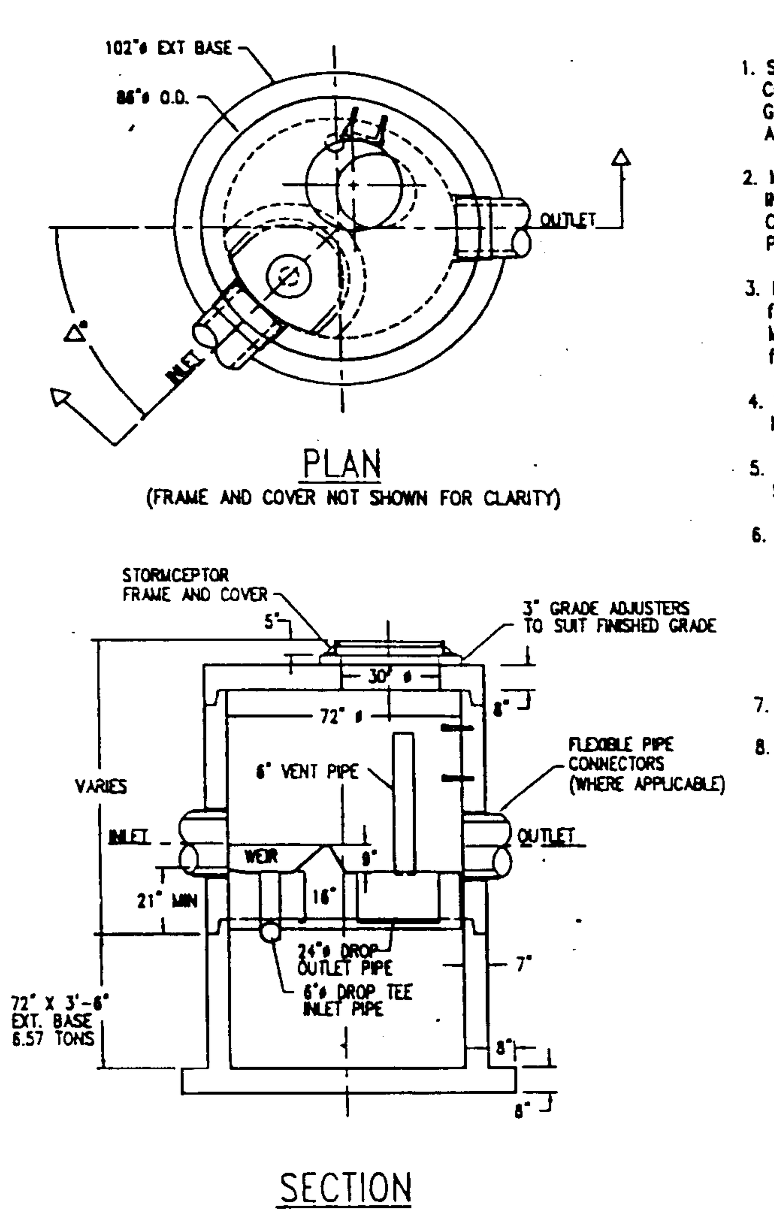

GENERAL NOTES

1. STORMCEPTOR SECTIONS SHALL CONFORM TO ASTM C 478, PROFILE GASKETED JOINTS CONFORMING TO ASTM C 443.
2. MANHOLE STEPS PROVIDED ABOVE INSERT @ 16" O.C. AND SHALL BE COPOLYMER POLYPROPYLENE PLASTIC ENCAPSULATED GR. 60 STEEL.
3. MINIMUM CONCRETE STRENGTH f'c= 4,000 PSI MINIMUM STEEL STRENGTH fy= 60,000 PSI
4. REINFORCEMENT DESIGN SHALL MEET ASTM C 478.
5. FLEXIBLE PIPE CONNECTORS SHALL MEET ASTM C 923.
6. HANDLING:
   A. ALL RISERS SHALL HAVE 2 EA. 1 1/2"ø HOLES FOR LIFTING @ 1/3 WAY DOWN FROM SPIGOT.
   B. ALL LG. DIAM. BASE SECTIONS FLATTOPS, AND REDUCERS TO HAVE LIFT HOOKS.
7. DESIGNED FOR AASHTO H-20 LOADING.
8. FIBERGLASS STORMCEPTOR INSERT REFERENCE DRAWING # CA-0225-01

REV.	DESCRIPTION	BY:	DATE

CSR

Hydro Conduit
6800 Loisdale Road, Springfield, VA 22150 (703) 971-1900

STC 1800

PRECAST CONCRETE STORMCEPTOR

DR. BY:	EPOM
CK. BY:	RCH
DATE:	12-18-96
SCALE:	1/4" = 1'-0"
DWG.#	CA-0225-04

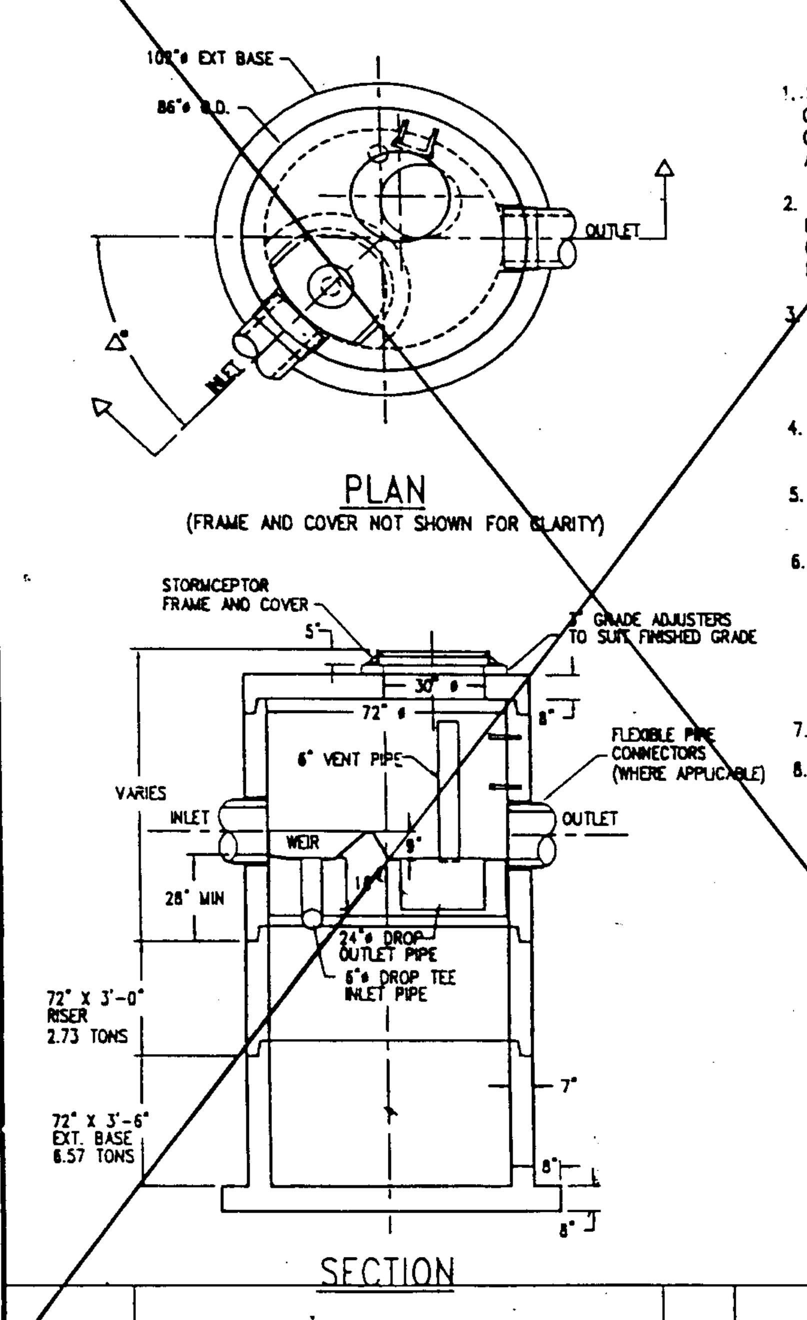

GENERAL NOTES

1. STORMCEPTOR SECTIONS SHALL CONFORM TO ASTM C 478, PROFILE GASKETED JOINTS CONFORMING TO ASTM C 443.
2. MANHOLE STEPS PROVIDED ABOVE INSERT @ 16" O.C. AND SHALL BE COPOLYMER POLYPROPYLENE PLASTIC ENCAPSULATED GR. 60 STEEL.
3. MINIMUM CONCRETE STRENGTH f'c= 4,000 PSI MINIMUM STEEL STRENGTH fy= 60,000 PSI
4. REINFORCEMENT DESIGN SHALL MEET ASTM C 478.
5. FLEXIBLE PIPE CONNECTORS SHALL MEET ASTM C 923.
6. HANDLING:
   A. ALL RISERS SHALL HAVE 2 EA. 1 1/2"ø HOLES FOR LIFTING @ 1/3 WAY DOWN FROM SPIGOT.
   B. ALL LG. DIAM. BASE SECTIONS FLATTOPS, AND REDUCERS TO HAVE LIFT HOOKS.
7. DESIGNED FOR AASHTO H-20 LOADING.
8. FIBERGLASS STORMCEPTOR INSERT REFERENCE DRAWING # CA-0225-01

REV.	DESCRIPTION	BY:	DATE

CSR

Hydro Conduit
6800 Loisdale Road, Springfield, VA 22150 (703) 971-1900

STC 3600

PRECAST CONCRETE STORMCEPTOR

DR. BY:	EPOM
CK. BY:	RCH
DATE:	12-17-96
SCALE:	1/4" = 1'-0"
DWG.#	CA-0225-06

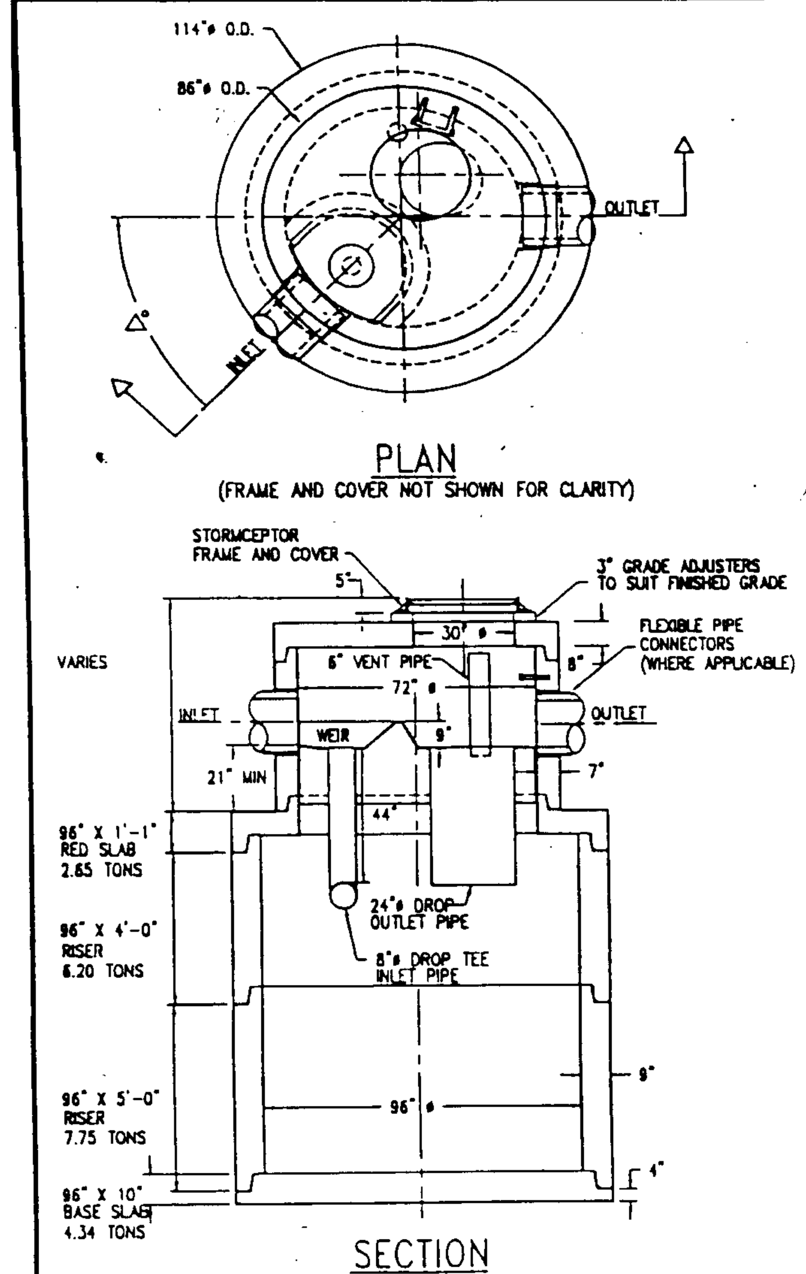

GENERAL NOTES

1. STORMCEPTOR SECTIONS SHALL CONFORM TO ASTM C 478, PROFILE GASKETED JOINTS CONFORMING TO ASTM C 443.
2. MANHOLE STEPS PROVIDED ABOVE INSERT @ 16" O.C. AND SHALL BE COPOLYMER POLYPROPYLENE PLASTIC ENCAPSULATED GR. 60 STEEL.
3. MINIMUM CONCRETE STRENGTH f'c= 4,000 PSI MINIMUM STEEL STRENGTH fy= 60,000 PSI
4. REINFORCEMENT DESIGN SHALL MEET ASTM C 478.
5. FLEXIBLE PIPE CONNECTORS SHALL MEET ASTM C 923.
6. HANDLING:
   A. ALL RISERS SHALL HAVE 2 EA. 1 1/2"ø HOLES FOR LIFTING @ 1/3 WAY DOWN FROM SPIGOT.
   B. ALL LG. DIAM. BASE SECTIONS FLATTOPS, AND REDUCERS TO HAVE LIFT HOOKS.
7. DESIGNED FOR AASHTO H-20 LOADING.
8. FIBERGLASS STORMCEPTOR INSERT REFERENCE DRAWING # CA-0225-01

REV.	DESCRIPTION	BY:	DATE

OPERATION AND MAINTENANCE SCHEDULE FOR STORMCEPTOR WATER QUALITY DEVICE

1. The Stormceptor water quality structure shall be periodically inspected and cleaned to maintain operation and function. The owner shall inspect the Stormceptor unit yearly at a minimum, utilizing the Stormceptor Inspection/Monitoring Form. Inspections shall be done by using a clear Plexiglass tube ("sludge judge") to extract a water column sample. When the sediment depths exceed the level specified in Table 6 of the Stormceptor Technical Manual, the unit must be cleaned.
2. The Stormceptor water quality structure shall be checked and cleaned immediately after petroleum spills. The owner shall contact the appropriate regulatory agencies.
3. The maintenance of the Stormceptor unit shall be done using a vacuum truck which will remove the water, sediment, debris, floating hydrocarbons and other materials in the unit. Proper cleaning and disposal of the removed materials and liquid must be followed by the owner.
4. The inlet and outlet pipes shall be checked for any obstructions at least once every six months. If obstructions are found the owner shall have them removed. Structural parts of the Stormceptor unit shall be repaired as needed.
5. The owner shall retain and make the Stormceptor Inspection/Monitoring Forms available the Howard County officials upon their request.

Concrete Storm*ceptor*® Order Request Form *

Contractor Information

Name: Whiting Turner (general)
Address: 300 East Joppa Road, Suite 800
City: Towson, MD
State:
Zip Code: 21286
Contact: Robert Ryan
Phone: (410) 821-1100
Fax: (410) 337-5760

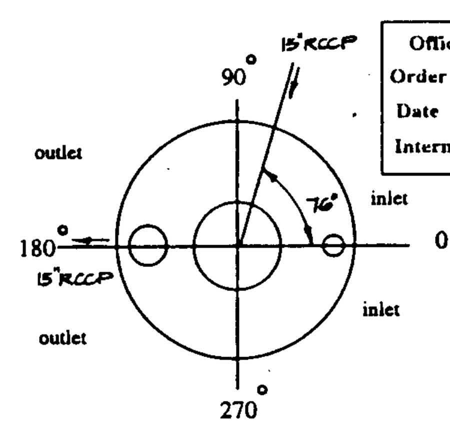

Office Use Only
Order #
Date
Internal Sale

Please draw orientation (angle) of inlet pipes (max 2) and outlet pipe (1) on diagram along with pipe inside diameter (in.) and invert elevation (ft). Clearly mark inlet pipes with an I and outlet pipe with an O and provide the inlet/outlet pipe angle in degrees.

Owner Information

Name: Columbia Mall Inc.
Phone: (410) 992-6000
Fax: (410) 992-6149

Storm*ceptor*® Model: 900 ■ 1200 □ 1800 □ 2400 □ 3600 □ 4800 □ 6000 □ 7200 □

IMPERV. D. AREA= 0.48 Ac.

Insert Size: DISC ■ 22" □ 32" □ 44" □ Custom ___

Manhole Number	SC 3
Finish Top Elevation (ft)	358.0
Top Slab Elevation (ft)	357.0
Inlet Pipe Invert (ft)	351.82
Outlet Pipe Invert (ft)	351.74
Pipe Type:	RCCP
Pipe Inside Diam. (in) [ID]	15"
Pipe Outside Diam. (in) [OD]	19"

Project Name: The Mall in Columbia, Phase 1 Expansion
Approximate time frame until required delivery (weeks): Mid July
Delivery Address: Street: Columbia Mall
City: Columbia State: MD Zip Code: 21044
Designer Company: Daft McCune Walker, Inc.
Designer Contact: Robert Hurwitz Phone: (410) 296-3333 Fax: (410) 296-4705

Please fax this order to Stormceptor at (301) 762-4190
For Technical Assistance Please Call Stormceptor Corporation at (301) 762-8361 or toll free at 1 (800) 762-4703

ALL LIFTING APPARATUS TO BE PROVIDED BY THE INSTALLATION CONTRACTOR

* TO BE INCLUDED ON DESIGN PLAN BY DESIGNER 3/14/97

Concrete Storm*ceptor*® Order Request Form *

Contractor Information

Name: Whiting Turner (general)
Address: 300 East Joppa Road, Suite 800
City: Towson, MD
State:
Zip Code: 21286
Contact: Robert Ryan
Phone: (410) 821-1100
Fax: (410) 337-5760

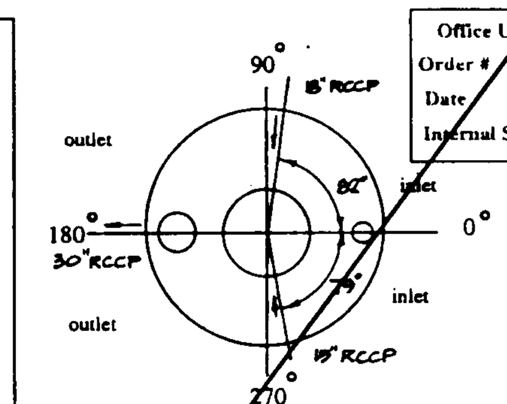

Office Use Only
Order #
Date
Internal Sale

Please draw orientation (angle) of inlet pipes (max 2) and outlet pipe (1) on diagram along with pipe inside diameter (in.) and invert elevation (ft). Clearly mark inlet pipes with an I and outlet pipe with an O and provide the inlet/outlet pipe angle in degrees.

Owner Information

Name: Columbia Mall Inc.
Phone: (410) 992-6000
Fax: (410) 992-6149

Storm*ceptor*® Model: 900 □ 1200 □ 1800 ■ 2400 □ 3600 □ 4800 □ 6000 □ 7200 □

IMPERV. D. AREA= 1.70 Ac.

Insert Size: DISC ■ 22" □ 32" □ 44" □ Custom ___

Manhole Number	SC 1
Finish Top Elevation (ft)	359.75
Top Slab Elevation (ft)	358.75
Inlet Pipe Invert (ft)	352.35
Outlet Pipe Invert (ft)	352.10
Pipe Type:	RCCP
Pipe Inside Diam. (in) [ID]	15", 18", 24"
Pipe Outside Diam. (in) [OD]	19", 23", 30"

Project Name: The Mall in Columbia Phase 1 Expansion
Approximate time frame until required delivery (weeks): Mid July
Delivery Address: Street: Columbia Mall
City: Columbia State: MD Zip Code: 21044
Designer Company: Daft McCune Walker Inc.
Designer Contact: Robert Hurwitz Phone: (410) 296-3333 Fax: (410) 296-4705

Please fax this order to Stormceptor at (301) 762-4190
For Technical Assistance Please Call Stormceptor Corporation at (301) 762-8361 or toll free at 1 (800) 762-4703

ALL LIFTING APPARATUS TO BE PROVIDED BY THE INSTALLATION CONTRACTOR

* TO BE INCLUDED ON DESIGN PLAN BY DESIGNER 3/14/97

Concrete Storm*ceptor*® Order Request Form *

Contractor Information

Name: Whiting Turner (general)
Address: 300 East Joppa Road, Suite 800
City: Towson, MD
State:
Zip Code: 21286
Contact: Robert Ryan
Phone: (410) 821-1100
Fax: (410) 337-5760

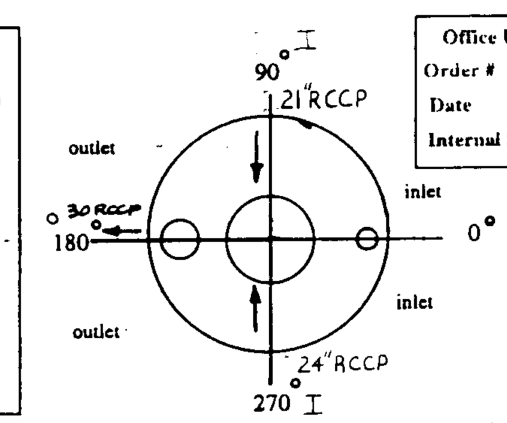

Office Use Only
Order #
Date
Internal Sale

Please draw orientation (angle) of inlet pipes (max 2) and outlet pipe (1) on diagram along with pipe inside diameter (in.) and invert elevation (ft). Clearly mark inlet pipes with an I and outlet pipe with an O and provide the inlet/outlet pipe angle in degrees.

Owner Information

Name: Columbia Mall Inc.
Phone: (410) 992-6000
Fax: (410) 992-6149

Storm*ceptor*® Model: 900 □ 1200 □ 1800 □ 2400 □ 3600 ■ 4800 □ 6000 □ 7200 □

IMPERV. D. AREA= 2.88 Ac.

Insert Size: DISC ■ 22" □ 32" □ 44" □ Custom ___

Manhole Number	SC 1
Finish Top Elevation (ft)	359.20
Top Slab Elevation (ft)	358.20
Inlet Pipe Invert (ft)	351.99
Outlet Pipe Invert (ft)	351.74
Pipe Type:	RCCP
Pipe Inside Diam. (in) [ID]	24" 21" 30"
Pipe Outside Diam. (in) [OD]	30" 27" 37"

Project Name: The Mall in Columbia Phase 1A Expansion
Approximate time frame until required delivery (weeks): OCT
Delivery Address: Street: Columbia Mall
City: Columbia State: MD Zip Code: 21044
Designer Company: Daft-McCune-Walker, Inc.
Designer Contact: Robert Hurwitz Phone: (410) 296-3333 Fax: (410) 296-4705

Please fax this order to Stormceptor at (301) 762-4190
For Technical Assistance Please Call Stormceptor Corporation at (301) 762-8361 or toll free at 1 (800) 762-4703

ALL LIFTING APPARATUS TO BE PROVIDED BY THE INSTALLATION CONTRACTOR

* TO BE INCLUDED ON DESIGN PLAN BY DESIGNER 3/14/97

APPROVED
PLANNING BOARD
OF HOWARD COUNTY
DATE April 23, 1997
RB

APPROVED: HOWARD COUNTY DEPT. OF PLANNING & ZONING

CHIEF, DEVELOPMENT ENGINEERING DIVISION MK — DATE 1/14/98
CHIEF, DIVISION OF LAND DEVELOPMENT — DATE 1/21/98
DIRECTOR — DATE 1/21/98

Date	No.	Revision Description
1/5/98	2	REVISED SC1 AND DELETED SC2

1-6-98
Date

STATE OF MARYLAND — JOHN W. RANOCCHIA — No. 10551 REGISTERED PROFESSIONAL ENGINEER

Professional Engr. No. 10551

THE MALL IN COLUMBIA
PHASE I EXPANSION
TOWN CENTER
SECTION 2 AREA 1, 2 & 2

OWNER /DEVELOPER:
THE HOWARD RESEARCH & DEVELOPMENT CORP.
COLUMBIA MALL, INC.
10275 LITTLE PATUXENT PARKWAY
COLUMBIA, MARYLAND 21044 HOWARD COUNTY

DMW
Daft-McCune-Walker, Inc.
200 East Pennsylvania Avenue
Towson, Maryland 21286
(410) 296-3333
Fax 296-4705
A Team of Land Planners, Landscape Architects, Engineers, Surveyors & Environmental Professionals

SUBDIVISION NAME: Col. T.C. SECTION/AREA: 2/1 2/2 LOT/PARCEL #: See gen note #6
BLOCK #: 44 ZONE: NT TAX MAP: 30 36 ELECT DISTRICT: 5th CENSUS TRACT: 6054

TITLE: PHASE 1A STORMCEPTOR DETAILS

Des By	MJP	Scale	Proj. No. 95019 B
Drn By	CLZ	Date 4/21/97	17 OF 35
Chk By	JWR	Approved	

SDP-97-107

Wed May 21 10:38:13 1997 c:\95019b\95019bd14

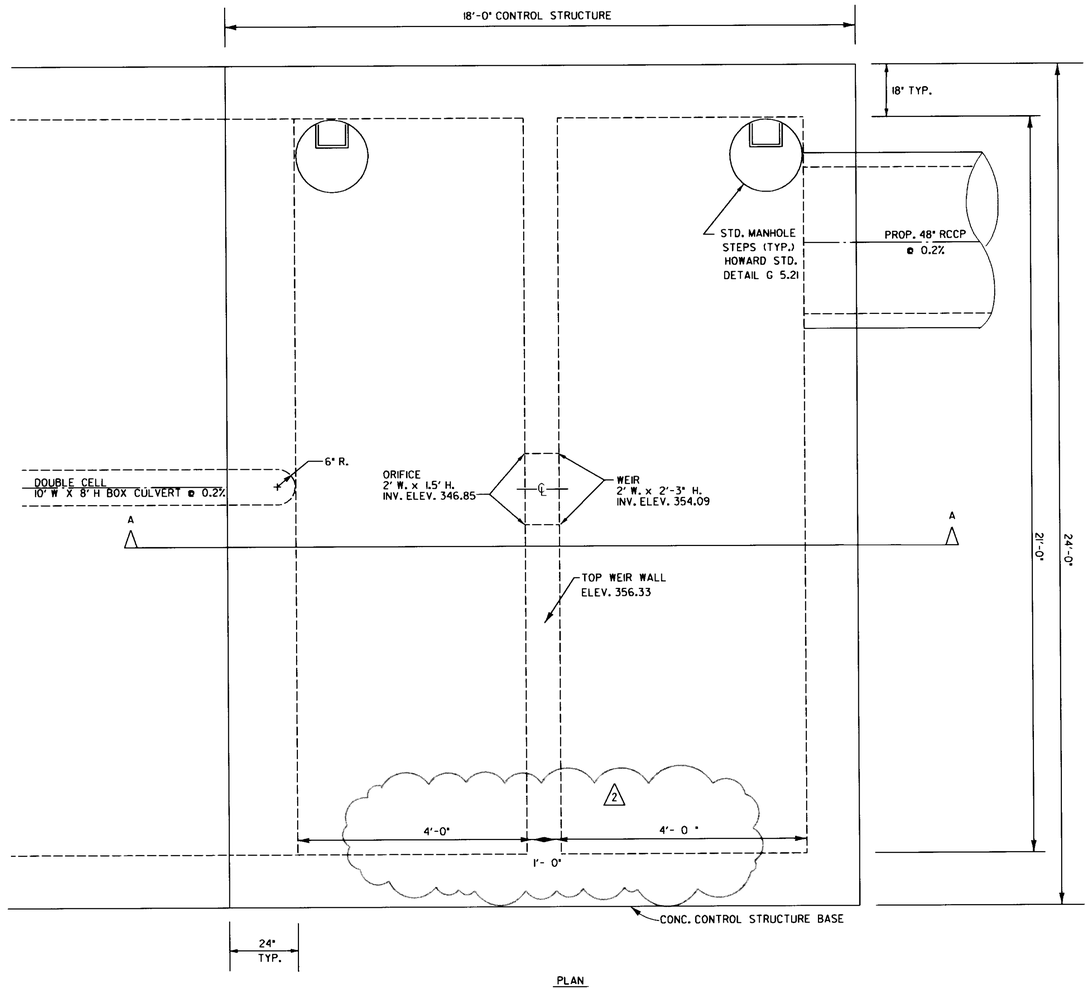

PLAN
NTS

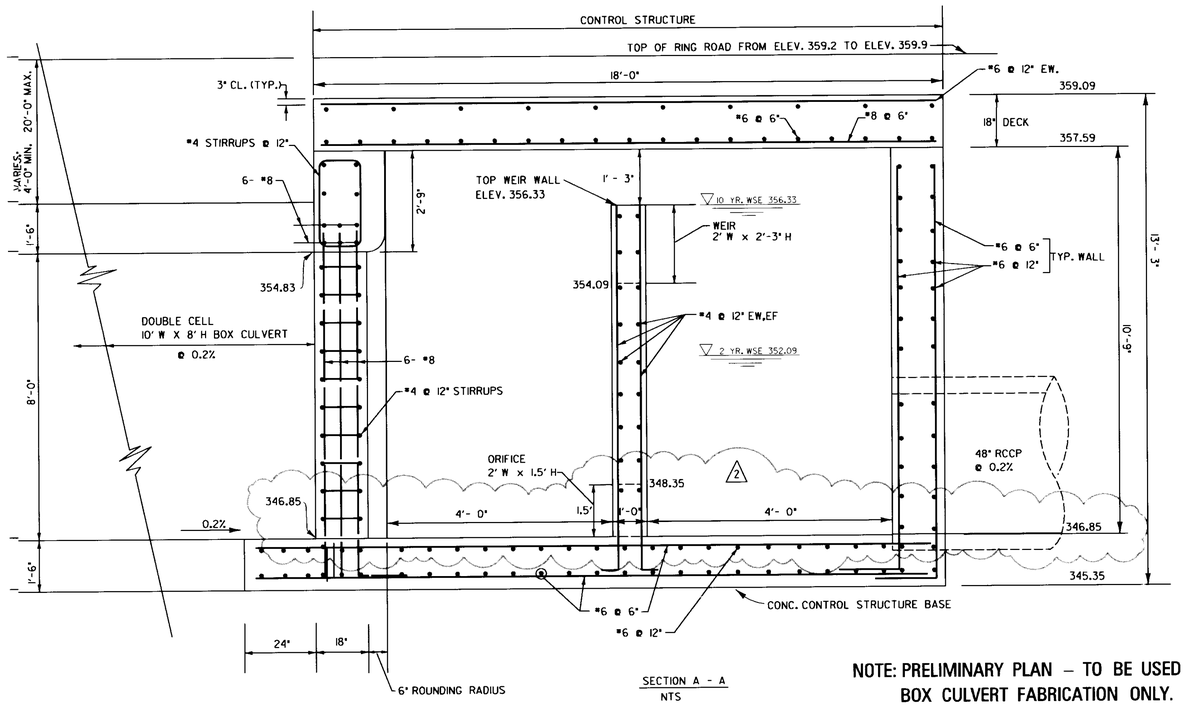

SECTION A - A
NTS

NOTE: PRELIMINARY PLAN – TO BE USED FOR BOX CULVERT FABRICATION ONLY.

NOTE:

SHOP DRAWINGS AND DESIGN COMPUTATIONS SIGNED, SEALED AND DATED BY A PROFESSIONAL ENGINEER REGISTERED IN THE STATE OF MARYLAND, TO BE SUBMITTED BY CONTRACTOR AND APPROVED PRIOR TO FABRICATION.

LOADINGS:
1. AASHTO HS 27-44 AND MD. TYPE 3
2. ASSUMED SOIL PROPERTIES :
   UNIT WEIGHT OF SOIL - 120 pcf
   EQUIVALENT FLUID PRESSURE 35 pcf min.

	2 YEAR	10 YEAR
PROPOSED INFLOW (cfs)	75.23	126.88
ALLOWABLE RELEASE RATE (cfs)	25.67	56.88
PROPOSED OUTFLOW (cfs)	25.67	56.88
WATER SURFACE ELEVATION (ft.)	352.09	356.33
STORAGE PROVIDED (ac. ft.)	1.47	2.62

THE DRAINAGE AREA TO THIS FACILITY IS 0.0360 SQ. MILES OR 23.03 ACRES +/-

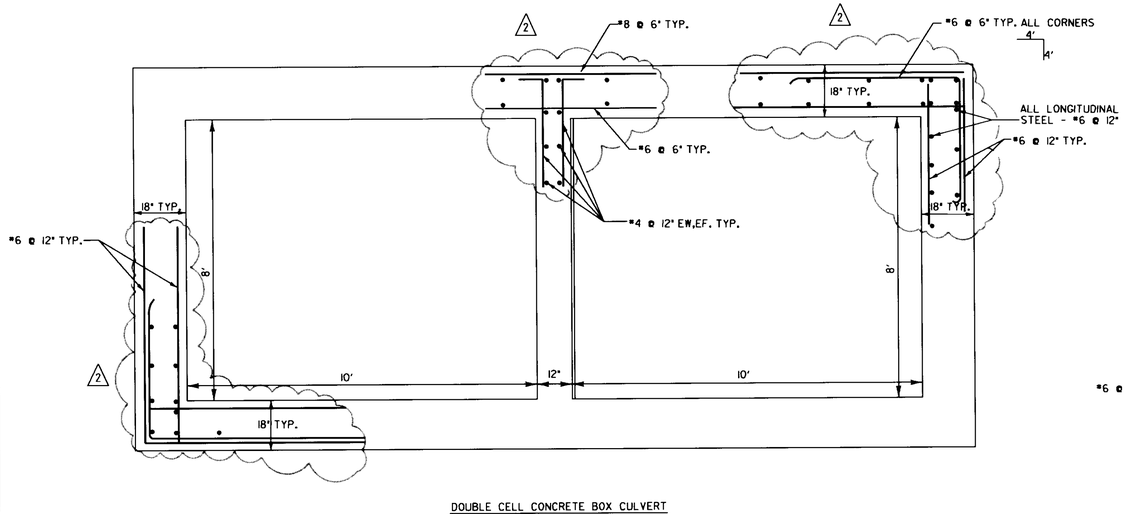

DOUBLE CELL CONCRETE BOX CULVERT
NTS

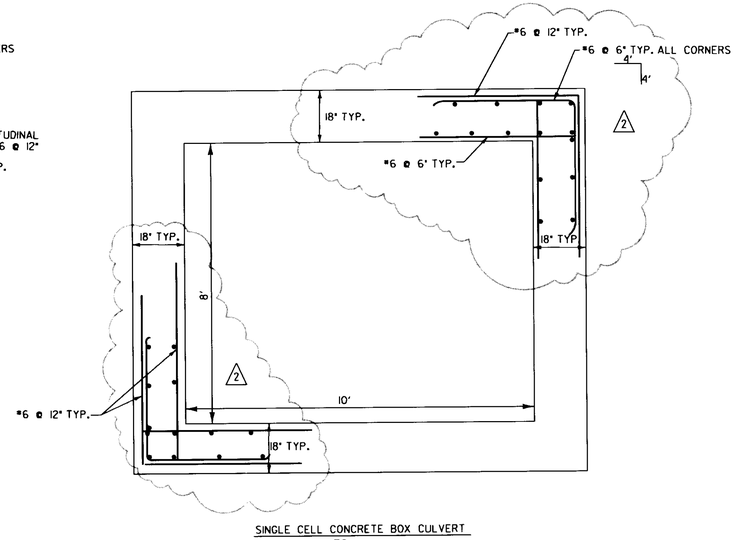

SINGLE CELL CONCRETE BOX CULVERT
NTS

APPROVED
PLANNING BOARD
of HOWARD COUNTY
DATE APRIL 23, 1997
RB

APPROVED: HOWARD COUNTY DEPT. OF PLANNING & ZONING

CHIEF, DEVELOPMENT ENGINEERING DIVISION MK — 11/4/98 DATE

CHIEF, DIVISION OF LAND DEVELOPMENT — 11/21/98 DATE

DIRECTOR — 11/21/98 DATE

Date	No.	Revision Description
1-5-98	2	REVISED DETAILS

THE MALL IN COLUMBIA
PHASE I EXPANSION
TOWN CENTER
SECTION 2 AREA 1 & 2 /2
LOTS 8,10–13, 15, 17, 19–22, 24–26, 28–30, 33, 34

OWNER /DEVELOPER:
THE HOWARD RESEARCH & DEVELOPMENT CORP.
COLUMBIA MALL, INC.
10275 LITTLE PATUXENT PARKWAY
COLUMBIA, MARYLAND 21044

DMW
Dan McCune-Walker, Inc.
200 East Pennsylvania Avenue
Towson, Maryland 21286
(410) 296-3333
Fax 296-4705

A Team of Land Planners, Landscape Architects, Engineers, Surveyors & Environmental Professionals

SUBDIVISION NAME		SECTION/AREA		LOT/PARCEL #
PLAT # OR L#	BLOCK #	ZONE	TAX/ZONE MAP	ELECT. DISTRICT	CENSUS TRACT
WATER CODE		SEWER CODE		

TITLE
PHASE 1A
REVISED SWM DETAILS

Des By	MJP	Scale	1" = 20'	Proj. No.	95019 B
Drn By	CLZ	Date	5/22/97		16 OF 35
Chk By	JWR	Approved			

SDP-97-107

1-6-98
Date

STATE OF MARYLAND — JOHN W. RENOCCHI — No. 10561 — REGISTERED PROFESSIONAL ENGINEER

Professional Engr. No. 10561

Tue Jan 6 14:37:02 1998 d:\95019\95019utl1

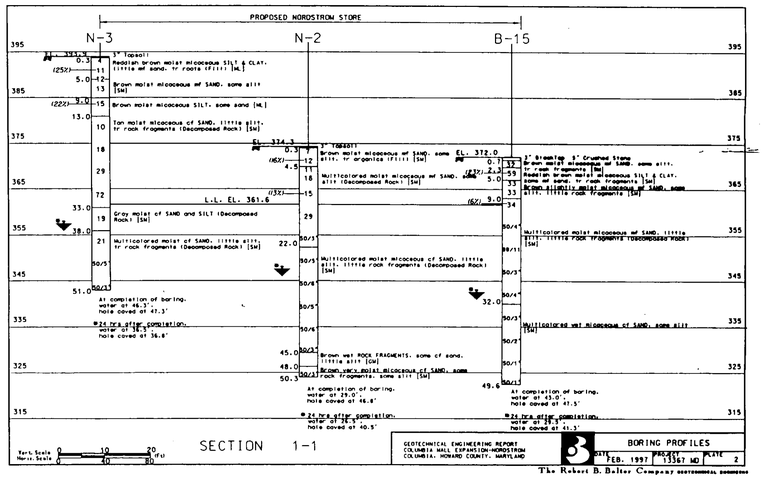

The Robert B. Balter Company GEOTECHNICAL ENGINEERS

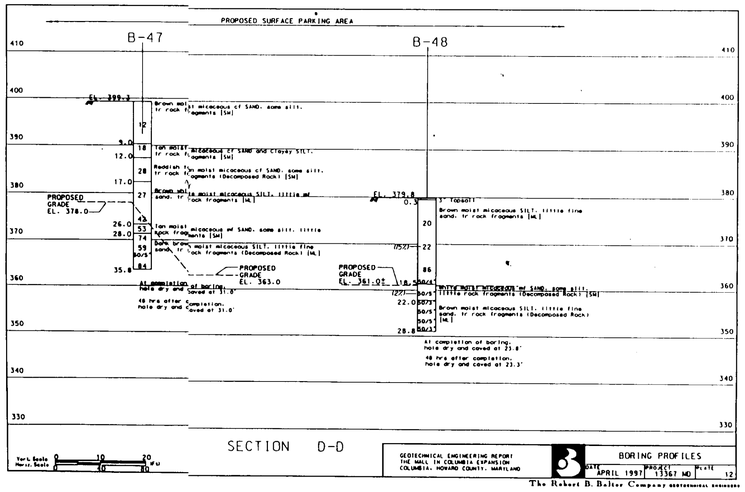

The Robert B. Balter Company GEOTECHNICAL ENGINEERS

The Robert B. Balter Company GEOTECHNICAL ENGINEERS

The Robert B. Balter Company GEOTECHNICAL ENGINEERS

4/23/97

APPROVED: HOWARD COUNTY DEPT. OF PLANNING & ZONING

CHIEF, DEVELOPMENT ENGINEERING DIVISION — DATE 6/16/97

CHIEF, DIVISION OF LAND DEVELOPMENT — DATE 6/20/97

DIRECTOR — DATE 6/20/97

Date	No	Revision Description

THE MALL IN COLUMBIA

PHASE I EXPANSION
TOWN CENTER
SECTION 2 AREA 1, 2/2
LOTS 8,10-13, 15, 17, 19-22, 24-26, 28-30, 33, 34, 3

OWNER /DEVELOPER:
THE HOWARD RESEARCH & DEVELOPMENT CORP.
COLUMBIA MALL, INC.
10275 LITTLE PATUXENT PARKWAY
COLUMBIA, MARYLAND 21044 HOWARD COUNTY

DMW
Daft·McCune·Walker, Inc.
200 East Pennsylvania Avenue
Towson, Maryland 21286
(410) 296-3333
Fax 296-4705

A Team of Land Planners, Landscape Architects, Engineers, Surveyors & Environmental Professionals

Col. T.C.		SECTION/AREA 2/2	2/1	LOCATION OF SITE See geo. note #6
TAX MAP NO. OF SUB-BLOCK # 37 GRID 4 PARCEL 448	ZONE N.T.	TAX MAP 30	ELEC. DISTRICT 6TH	CENSUS TRACT 6054
WATER CODE		SEWER CODE		

TITLE

PHASE 1A
SOIL BORINGS PLAN

Des By	RH/JS	Scale	1" = 50'	Proj. No.	950198
Drn By	JEF	Date	5/16.97		
Chk By	JWR	Approved			15 OF 35

5/22/97
Date

Professional Engr. No. 10581

SDP-97-107

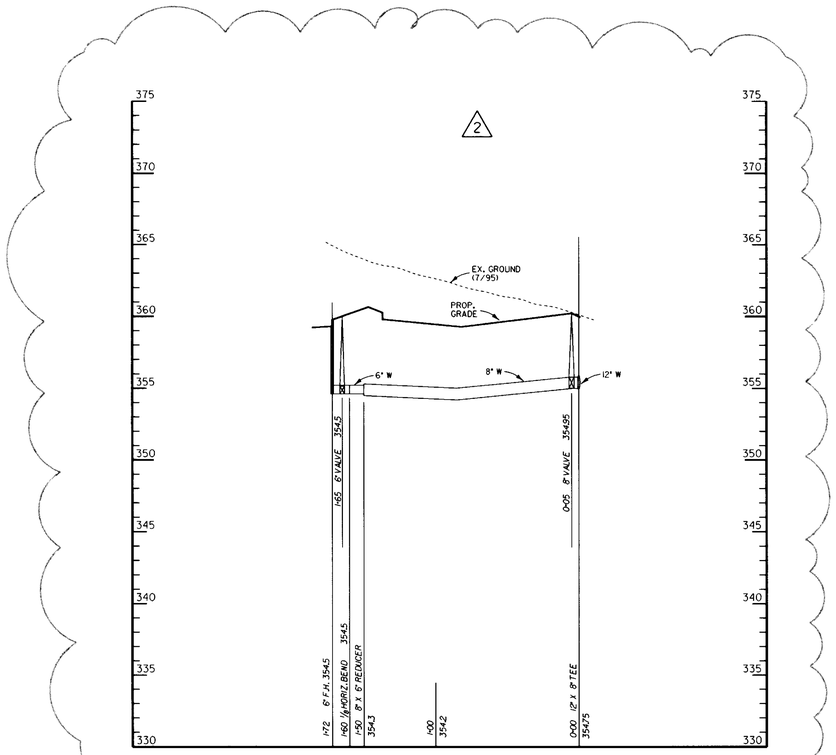

FIRE HYDRANT CONNECTION

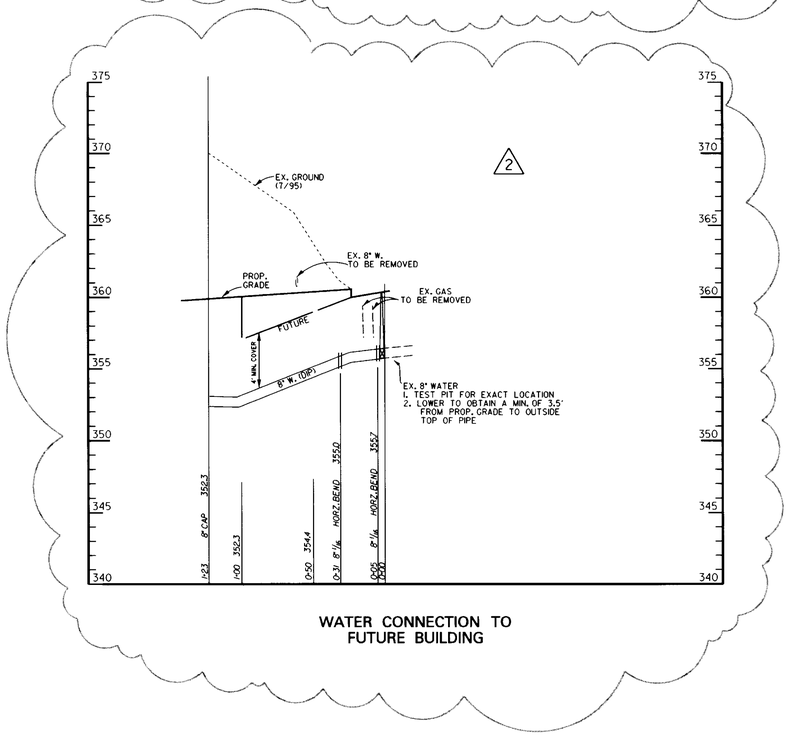

WATER CONNECTION TO FUTURE BUILDING

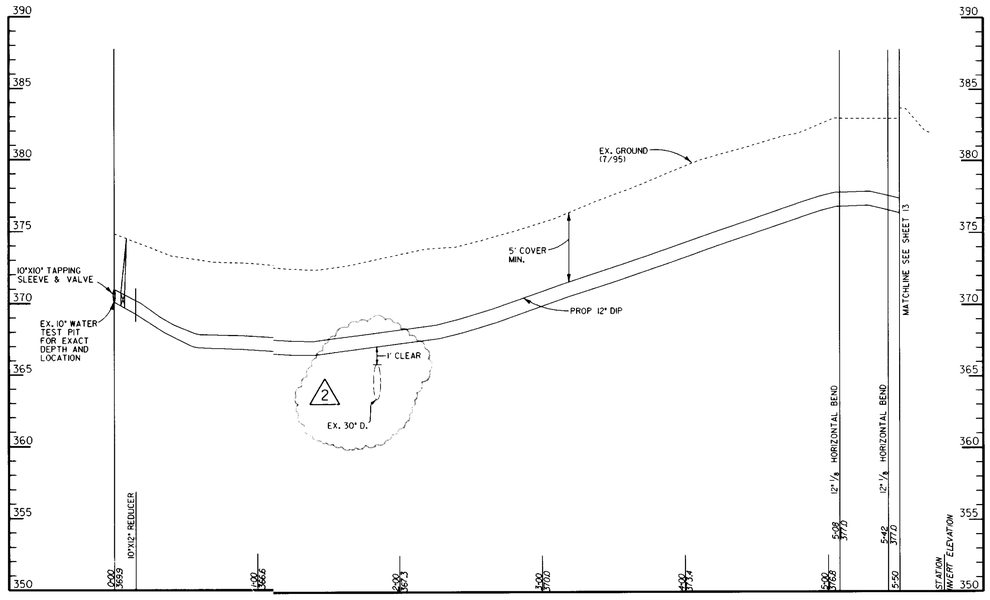

APPROVED
PLANNING BOARD
HOWARD COUNTY
DATE APRIL 23, 1997
RB

APPROVED: HOWARD COUNTY DEPT. OF PLANNING & ZONING

CHIEF, DEVELOPMENT ENGINEERING DIVISION MK — 11/4/98 DATE

CHIEF, DIVISION OF LAND DEVELOPMENT — 11/21/97 DATE

DIRECTOR — 11/21/97 DATE

Date	No.	Revision Description
1-5-98	2	REVISED WATER CONNECTION

THE MALL IN COLUMBIA
PHASE I EXPANSION
TOWN CENTER
SECTION 2 AREA 1 & 2/2
LOTS 8,10–13, 15, 17, 19–22, 24–26, 28–30, 33, 34

OWNER /DEVELOPER:
THE HOWARD RESEARCH & DEVELOPMENT CORP.
COLUMBIA MALL, INC.
10275 LITTLE PATUXENT PARKWAY
COLUMBIA, MARYLAND 21044

DMW
Daft-McCune-Walker, Inc.
200 East Pennsylvania Avenue
Towson, Maryland 21286
(410) 296-3333
Fax 296-4705

A Team of Land Planners, Landscape Architects, Engineers, Surveyors & Environmental Professionals

SUBDIVISION NAME | SECTION/AREA | LOT/PARCEL #
PLAT # OR L/F | BLOCK # | ZONE | TAX/ZONE MAP | ELECT DISTRICT | CENSUS TRACT
WATER CODE | SEWER CODE

TITLE
PHASE 1A
REVISED PRIVATE
WATER MAIN PROFILES

Des By	RLH	Scale	1" = 50'	Proj. No.	95019B
Drn By	JEF	Date	5/22/97	14	OF 35
Chk By	JWR	Approved			

SDP-97-107

1-6-98
Date

JOHN W. BANOCZAY SR. No. 10551 REGISTERED PROFESSIONAL ENGINEER STATE OF MARYLAND

Professional Engr. No. 10551

Tue Jan 6 14:26:46 1998 d:\95019b\95019bdr3

APPROVED
PLANNING BOARD
of HOWARD COUNTY
DATE APRIL 23, 1997
RB

1-6-98
Date

STATE OF MARYLAND
JOHN W. RANOCCHIA, SR.
No. 10551
REGISTERED
PROFESSIONAL ENGINEER

Professional Engr. No. 10551

APPROVED: HOWARD COUNTY DEPT. OF PLANNING & ZONING

CHIEF, DEVELOPMENT ENGINEERING DIVISION MK — DATE 1/14/98

CHIEF, DIVISION OF LAND DEVELOPMENT — DATE 1/21/98

DIRECTOR — DATE 1/21/98

Date	No.	Revision Description
1-5-98	2	REVISED GRADING; ADJUST WATER LINE

THE MALL IN COLUMBIA
PHASE I EXPANSION
TOWN CENTER
SECTION 2 AREA 1 & 2/2
HOWARD COUNTY, MD
LOTS 3, 8,10-13, 15, 17, 19-22, 24-26, 28-30, 33, 34

OWNER /DEVELOPER:
THE HOWARD RESEARCH & DEVELOPMENT CORP.
COLUMBIA MALL, INC.
10275 LITTLE PATUXENT PARKWAY
COLUMBIA, MARYLAND 21044

DMW
Daft·McCune·Walker, Inc.
200 East Pennsylvania Avenue
Towson, Maryland 21286
(410) 296-3333
Fax 296-4705

A Team of Land Planners, Landscape Architects, Engineers, Surveyors & Environmental Professionals

SUBDIVISION NAME			SECTION/AREA		LOT/PARCEL #
COLUMBIA TOWN CTR.			2/1 & 2/2		SEE GENERAL NOTE # 6
SDP 3054A- 442	BLOCK #	ZONE NT	TAX/ZONE MAP 30, 36	ELECT. DISTRICT 5TH	CENSUS TRACT 6054
WATER CODE			SEWER CODE		

TITLE
PHASE 1A
REVISED PRIVATE
WATER MAIN PROFILES

Des By	RLH	Scale	HORZ. 1" = 50' VERT. 1" = 5'	Proj. No.	95019B
Drn By	JEF	Date	5/22/97	13 OF 35	
Chk By	JRW	Approved			

SDP-97-107

Tue Jan 6 14:22:32 1998 d:\95019b\95019b.pr4

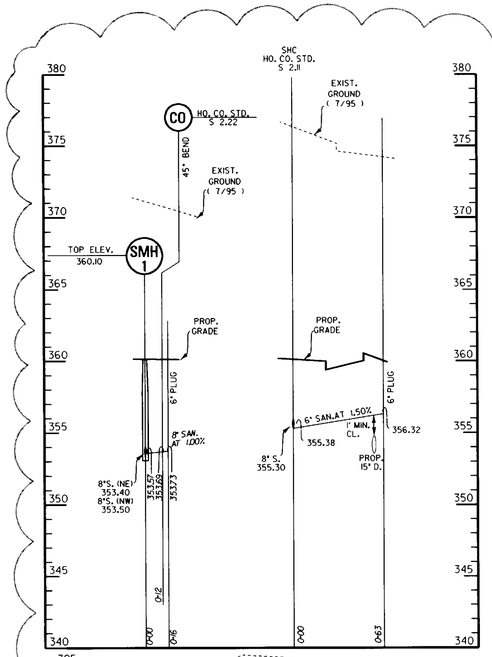

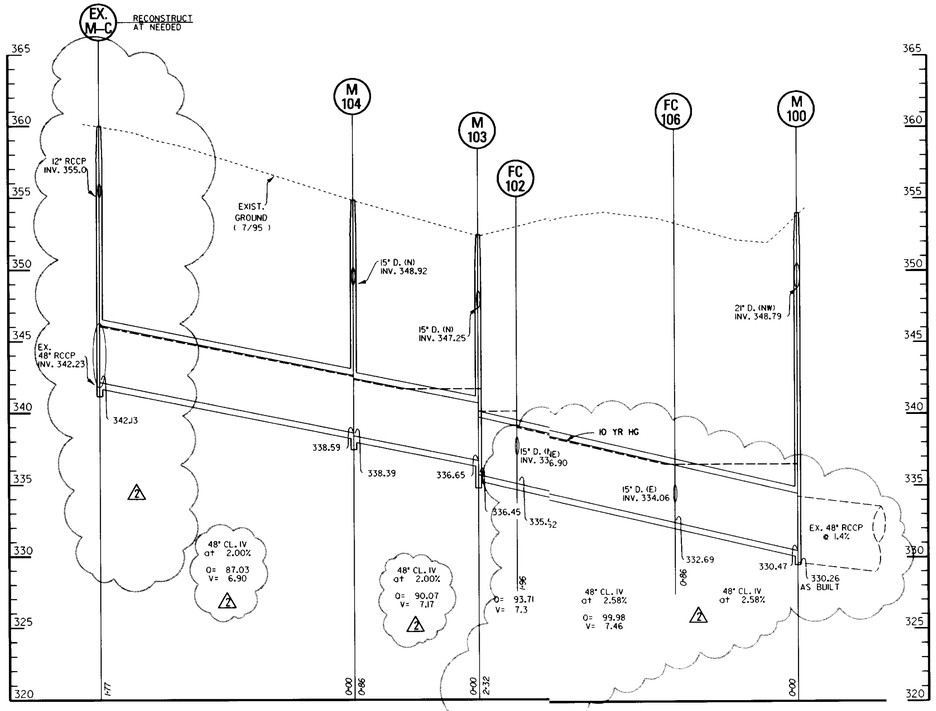

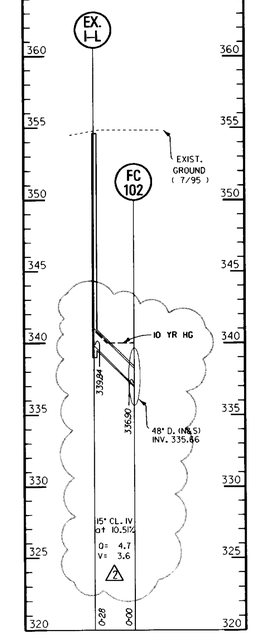

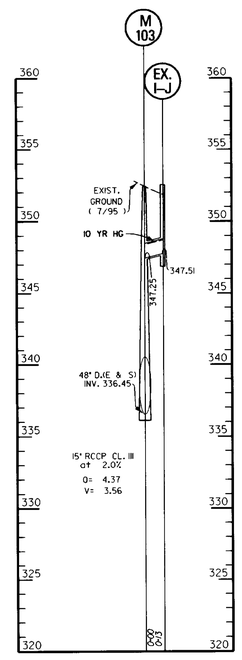

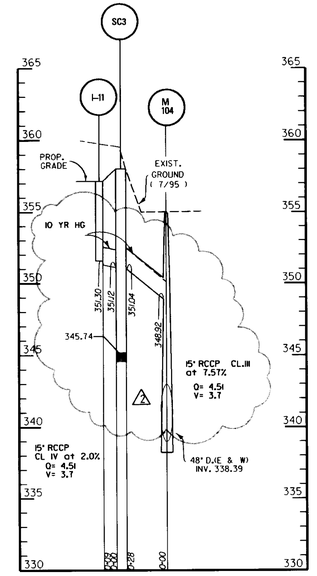

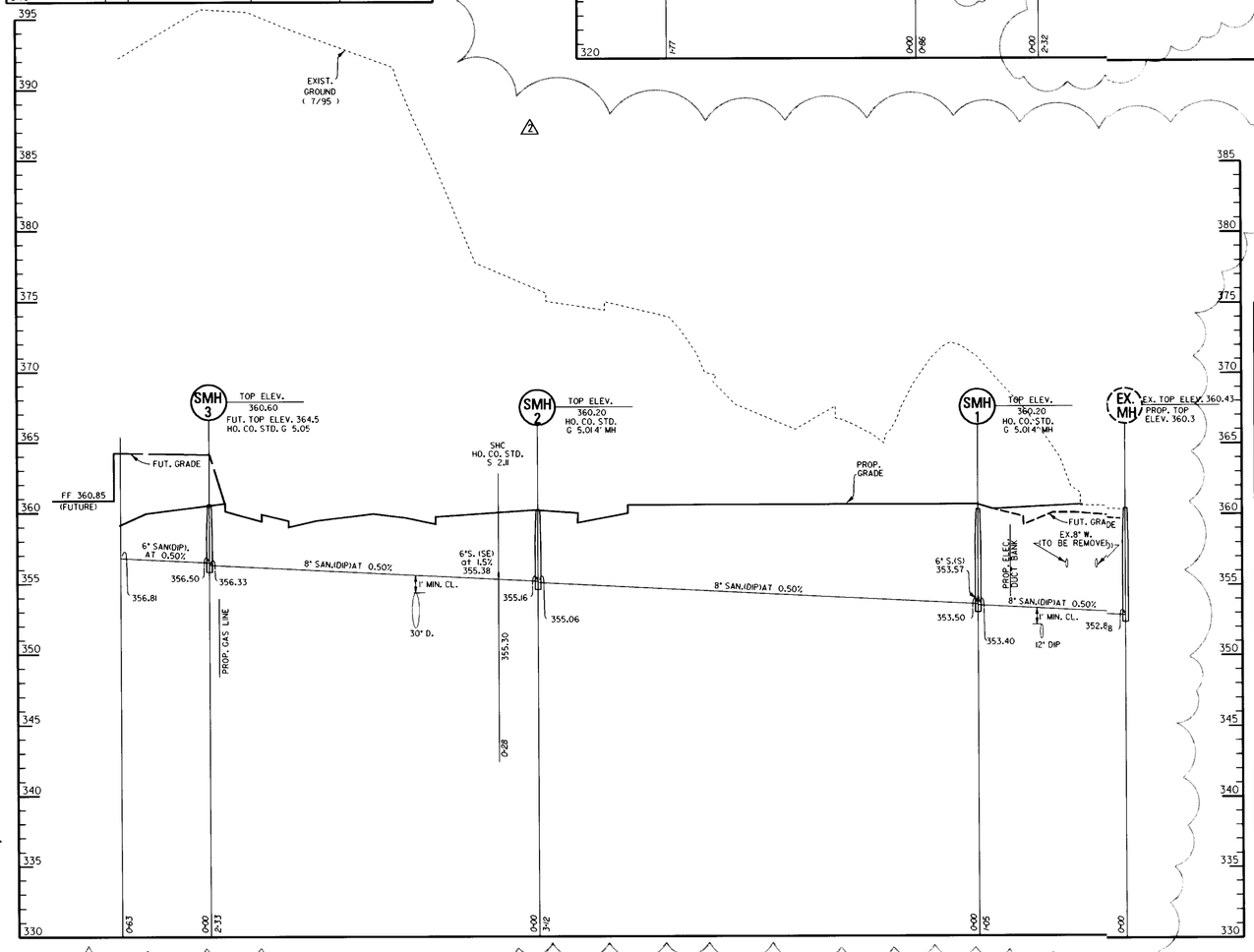

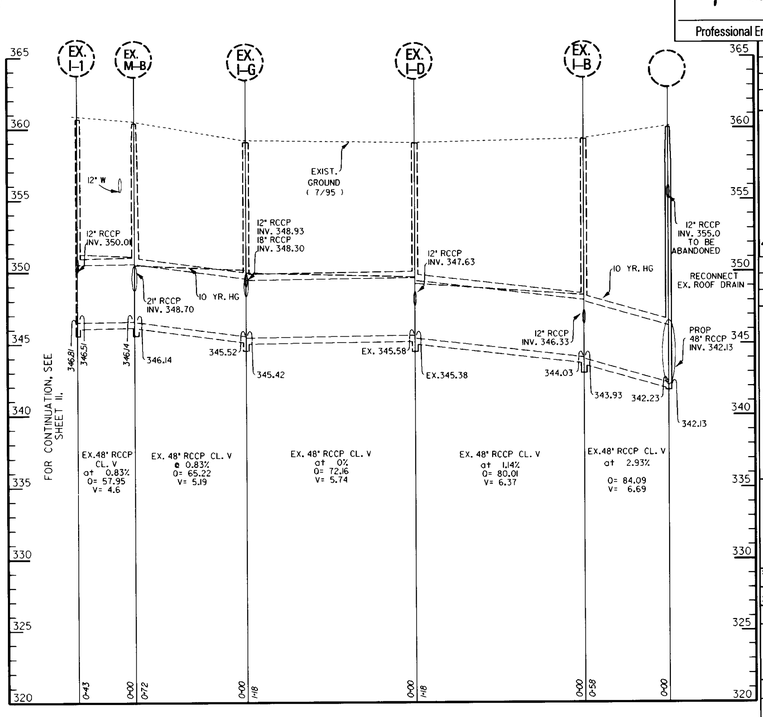

1-6-98
Date

STATE OF MARYLAND — JOHN W. PANOCONIA — No. 10561 — REGISTERED PROFESSIONAL ENGINEER

Professional Engr. No. 10561

APPROVED
PLANNING BOARD
of HOWARD COUNTY
DATE APRIL 23, 1997
RB

Date	No.	Revision Description
1-5-98	2	REVISED SANITARY PROFILES

APPROVED: HOWARD COUNTY DEPT. OF PLANNING & ZONING

CHIEF, DEVELOPMENT ENGINEERING DIVISION MK — 1/14/98 DATE

CHIEF, DIVISION OF LAND DEVELOPMENT — 1/21/98 DATE

DIRECTOR — 1/21/98 DATE

Date	No.	Revision Description

THE MALL IN COLUMBIA
PHASE I EXPANSION
TOWN CENTER
SECTION 2 AREA 1 & 2/2
HOWARD COUNTY

LOTS 3, 8,10-13, 15, 17, 19-22, 24-26, 28-30, 33, 34

OWNER /DEVELOPER:
THE HOWARD RESEARCH & DEVELOPMENT CORP.
COLUMBIA MALL, INC.
10275 LITTLE PATUXENT PARKWAY
COLUMBIA, MARYLAND 21044

DMW
Daft-McCune-Walker, Inc.
200 East Pennsylvania Avenue
Towson, Maryland 21286
(410) 296-3333
Fax 296-4705
A Team of Land Planners, Landscape Architects, Engineers, Surveyors & Environmental Professionals

SUBDIVISION NAME: COLUMBIA TOWN CTR.		SECTION/AREA: 2/1 & 2/2	LOT/PARCEL #: SEE GENERAL NOTE # 6
TAX MAP: 30A4	BLOCK #: 442	ZONE: NT	TAX/ZONE MAP: 30, 36
ELECT. DISTRICT: 5TH	CENSUS TRACT: 6054		
WATER CODE:	SEWER CODE:		

TITLE
PHASE 1A
REVISED STORM DRAIN & SEWER PROFILES

Des By	RLH	Scale	HORIZ 1" = 50' VERT 1" = 5'	Proj. No.	95019 B
Dm By	KDE	Date	5/22/97		
Chk By	KDE	Approved		12 OF 35	

SDP-97-107

Tue Jan 6 14:59:9 1998 d:\95019e\95019dpr6

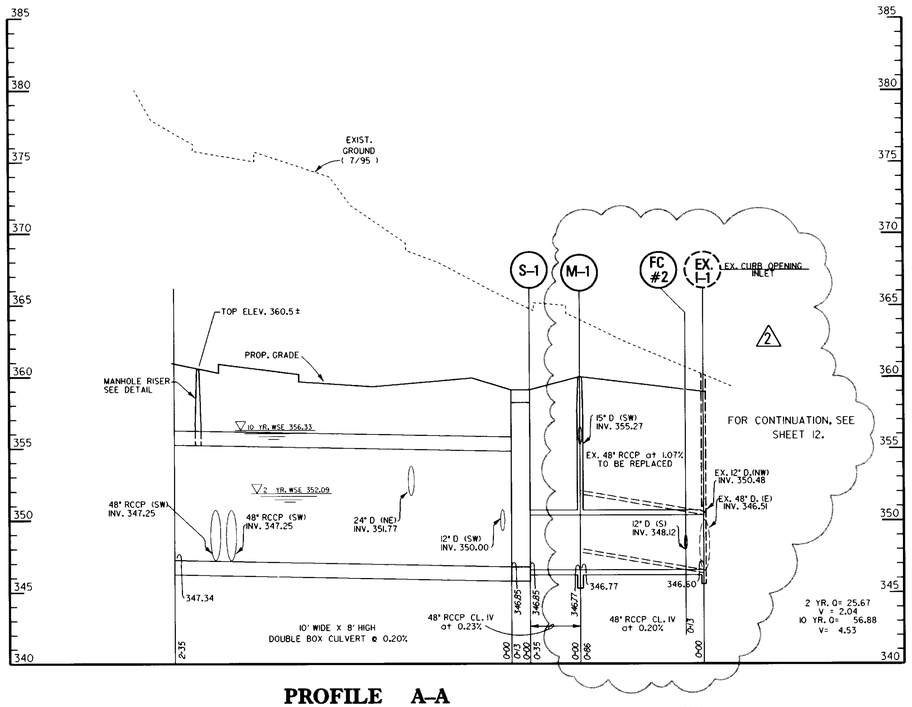

PROFILE A-A

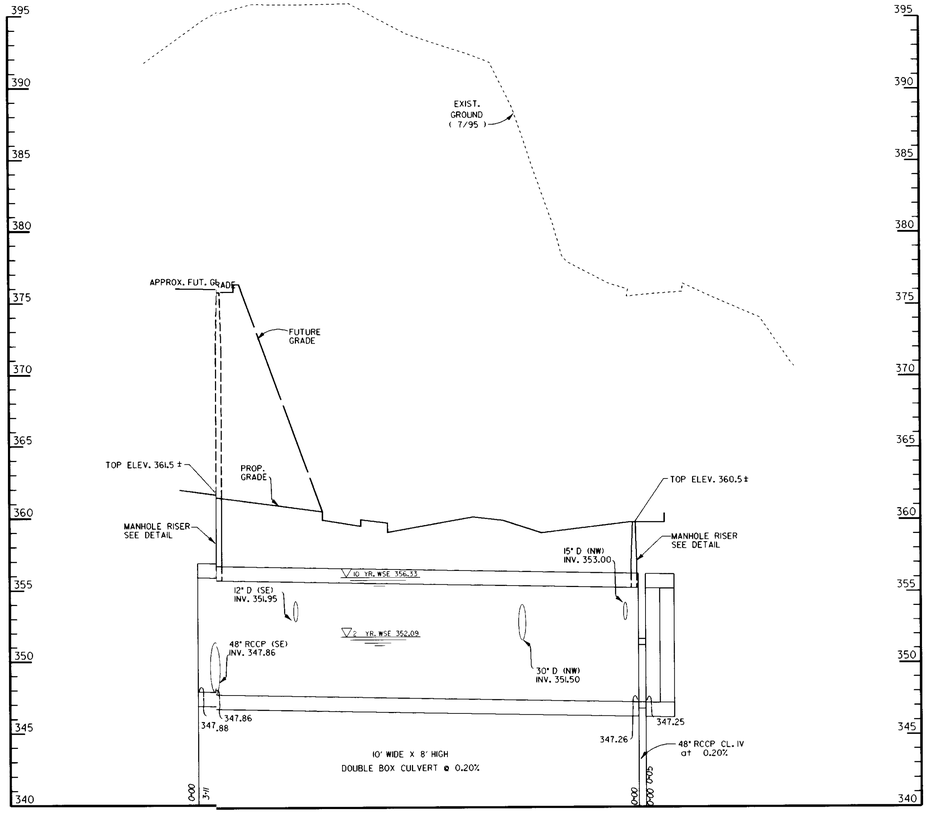

OPERATION AND MAINTENANCE SCHEDULE FOR STORMWATER MANAGEMENT

1) THE UNDERGROUND FACILITY SHALL BE INSPECTED YEARLY AT A MINIMUM. AT THE TIME THE SEDIMENT IS OVER 6" IN DEPTH THE SEDIMENT SHALL BE REMOVED.

2) THE FACILITY SHALL BE INSPECTED AFTER EACH MAJOR STORM.

3) TRASH SHALL BE REMOVED AS NEEDED.

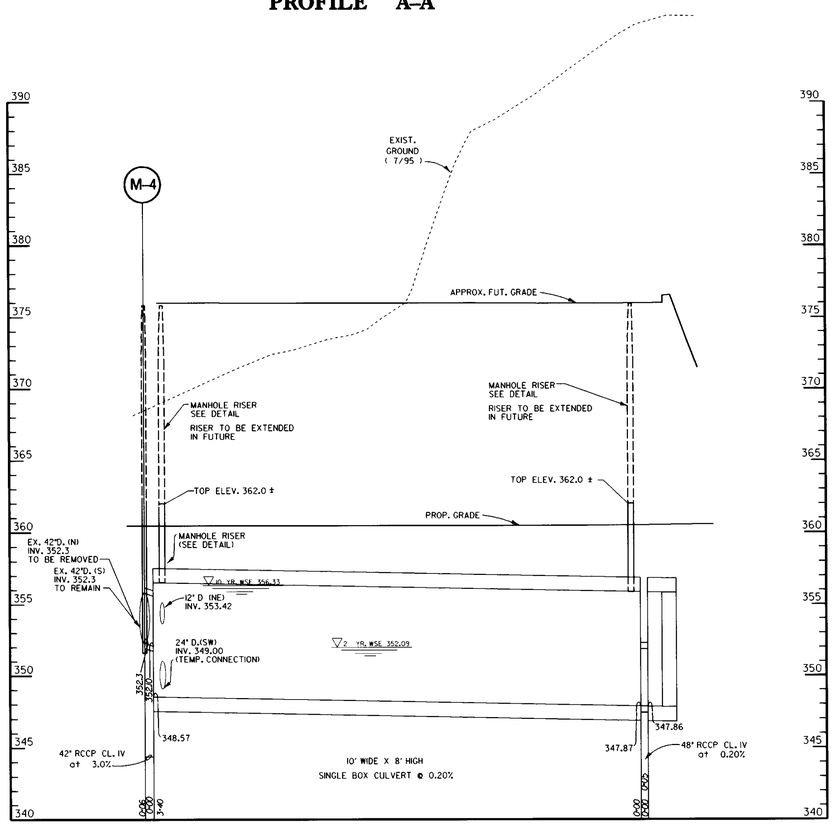

PROFILE C-C

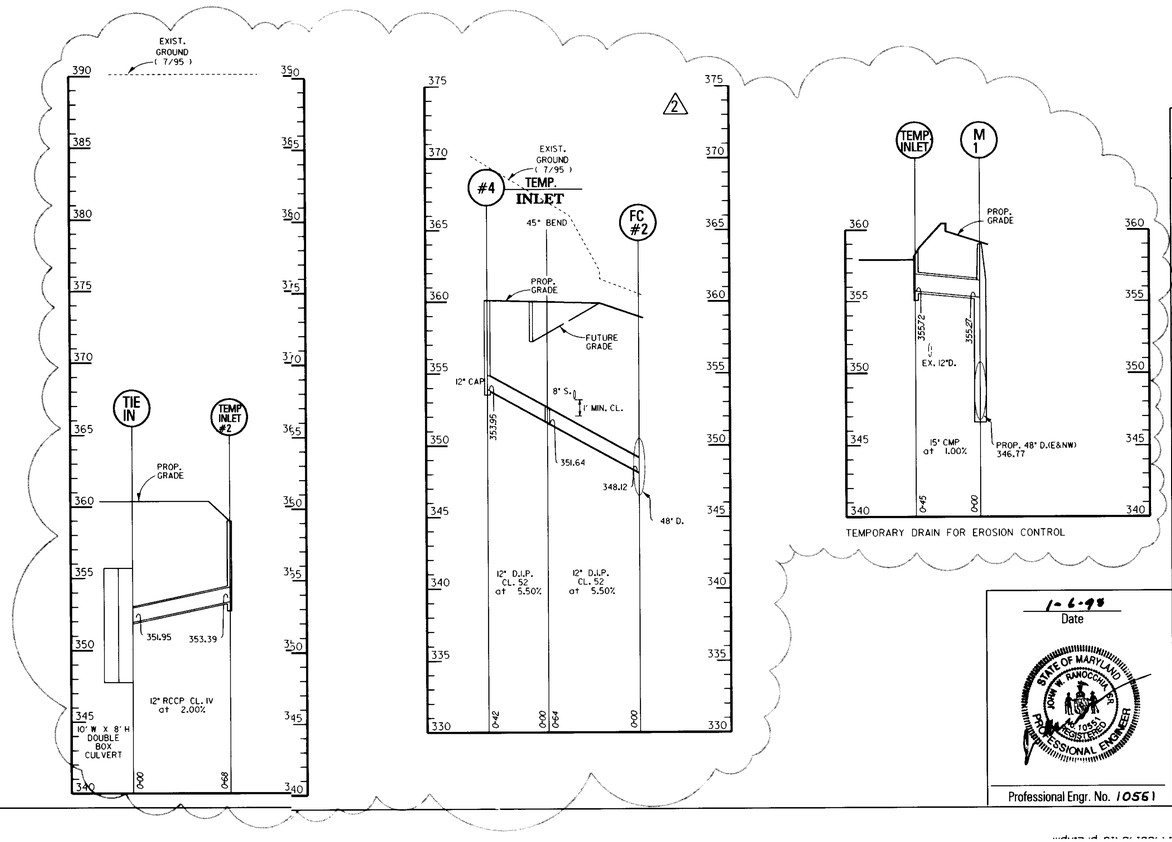

APPROVED
PLANNING BOARD
of HOWARD COUNTY
DATE APRIL 23, 1997
RB

Date	No.	Revision Description
1-5-98	2	REVISED NORDSTROM ROOF CONNECTION #4 ADDED TEMP. DRAIN FOR EROSION CONTROL

APPROVED: HOWARD COUNTY DEPT. OF PLANNING & ZONING

CHIEF, DEVELOPMENT ENGINEERING DIVISION MK — 1/14/98 DATE

CHIEF, DIVISION OF LAND DEVELOPMENT — 1/21/98 DATE

DIRECTOR — 1/21/98 DATE

THE MALL IN COLUMBIA

PHASE I EXPANSION
TOWN CENTER
SECTION 2 AREA 1 & 2/2
LOTS 8,10-13, 15, 17, 19-22, 24-26, 28-30, 33, 34

OWNER /DEVELOPER:
THE HOWARD RESEARCH & DEVELOPMENT CORP.
COLUMBIA MALL, INC.
10275 LITTLE PATUXENT PARKWAY
COLUMBIA, MARYLAND 21044

DMW
Daft-McCune-Walker, Inc.
200 East Pennsylvania Avenue
Towson, Maryland 21286
(410) 296-3333
Fax 296-4705

A Team of Land Planners, Landscape Architects, Engineers, Surveyors & Environmental Professionals

SUBDIVISION NAME		SECTION/AREA		LOT/PARCEL #
COLUMBIA TOWN CTR.				
PLAT # OR L/F	BLOCK # / ZONE	TAX/ZONE MAP	ELEC. DISTRICT	CENSUS TRACT
			5TH	
WATER CODE		SEWER CODE		

TITLE
PHASE 1A REVISED SWM PROFILES & STORM DRAIN PROFILE

Des By	RLH	Scale	HORZ 1" = 50' VERT 1" = 5'	Proj. No.	95019B
Drn By	JEF	Date	5/22/97		11 OF 35
Chk By	JWR	Approved			

1-6-98
Date

STATE OF MARYLAND — JOHN W. RANCOCAS JR. — 10561 — REGISTERED PROFESSIONAL ENGINEER

Professional Engr. No. 10561

SDP-97-107

Tue Jan 6 14:46:33 1998 d:\95019b\95019bpr2

MANHOLE SCHEDULE

NO.	TYPE	SIZE	INV. OUT	TOP ELEV.	DETAIL NO.	COORDINATES
M-1	72" DIA		346.77	359.30	SHA MD 384.65	N504072.5, E839284.0
M-2	48" DIA		352.67	359.50	G 5.03	N504173.1, E839215.9
* M-3	72" DIA		351.18	** 368.00	SHA MD 384.65	N504006.8, E838854.8
M-4	72" DIA		352.30	*** 362.00	SHA MD 384.65	N503766.5, E839134.1
* M-100	84" DIA		330.27	354.00	SHA MD 384.67	N503827.5, E840051.7
* M-103	72" DIA		336.45	352.4	SHA MD 384.65	N504061.5, E840050.0
* M-104	72" DIA		338.39	354.80	SHA MD 384.65	N504061.5, E839963.0

* NOTE: PROVIDE GRANITE BLOCK BOTTOM.
** TEMP TOP ELEV. 367.00, ULTIMATE TOP ELEV. 374.00 ±
*** TEMP TOP ELEV. 362.00, ULTIMATE TOP ELEV. 377.00 ±

STRUCTURE SCHEDULE

NO.	TYPE	INV. IN	INV. OUT	TOP ELEVATION UPPER	TOP ELEVATION LOWER	REMARKS
FC-102	FIELD CON.	——	——	——	——	HO.CO. STD. S.D.2.01 15"X48"
FC-1	FIELD CON.	——	——	——	——	HO.CO. STD. S.D.2.01 15"X48"
FC-106	FIELD CON.	——	——	——	——	HO.CO. STD. S.D.2.01 15"X48"
WYE-1	WYE CON.	——	353.12	——	——	HO.CO. STD. S.D.2.11 15"X21"
2 FC-2	FIELD CON.	——	——	——	——	HO.CO. STD. S.D.2.01 12"X48"

WATER LINE COORDINATE TABLE

	STATION	BEND	COORDINATES
	PROPOSED 12" WATER		
*	0+00	EX. 10" W	N503275.2, E838806 ±
	5+08	1/8	N503634.7, E838442.3
	5+42	1/8	N503668.8, E838442.2
	14+25	1/8	N504294.5, E839065.1
	17+50	1/8	N504296.1, E839389.8
	18+41	1/8	N504231.9, E839454.0
*	20+23	EX. 8" W	N504049.7, E839454.0 ±
	PROPOSED 8" WATER - FIRE HYDRANT CONNECTION		
	0+00/19+83	TEE	N504090.2, E839454.0
	1+60	1/8	N504090.2, E839294.4
	FH		N504082.0, E839286.3
	NORDSTROM WATER SERVICE		
1 *	0+00	VALVE	N504049.7, E839426.0 ±
1	0+05	1/16	N504049.7, E839420.8
1	0+31	1/16	N504039.6, E839396.3
1	1+23	8" CAP	N503975.1, E839331.8

* TEST PIT FOR EXACT LOCATION

STORMCEPTOR STRUCTURE SCHEDULE

NO.	TYPE	SIZE	INV. OUT	TOP ELEV.	DETAIL NO.
SC1	STC 3600		351.74	359.20	
SC3	STC 900		351.04	358.00	

2 ALL STORMCEPTORS WILL BE MADE OF CONCRETE AND USE THE DISK INSERT.
SEE SHEET 17 FOR THE DETAIL AND ORDER FORM.

INLET SCHEDULE

NO.	TYPE	Q 10YR	INV. OUT	TOP ELEV.*	DETAIL	WIDTH
I-1	A-10	2.7	355.00	359.60	SD 4.02	2'-6"
I-2	A-10	2.2	353.42	360.10	SD 4.02	3'-0"
I-3	A-10	9.4	355.30	359.90	SD 4.02	2'-6"
I-4	A-10	3.7	355.00	359.60	SD 4.02	2'-6"
I-5	A-5	7.1	352.13	359.60	SD 4.01	2'-6"
I-6	A-10	1.1	352.55	359.60	SD 4.02	2'-6"
I-7	A-10	4.5	354.37	359.60	SD 4.02	2'-6"
I-8	A-10	6.4	355.00	359.60	SD 4.02	2'-6"
I-9	A-10	7.9	357.00	361.60	SD 4.02	2'-6"
I-11	DBL. S INLET	-	344.98	*** 358.9	SD 4.23	2'-7½"

NOTE: TRANSITION FROM 6" C & G TO HEADPIECE ON BOTH SIDES OF INLET.
* NOTE: ELEVATIONS REPRESENT TOP OF HEADPIECE FOR ALL INLETS ⊕ ℄ OF INLET
*** NOTE: TOP OF GRATE

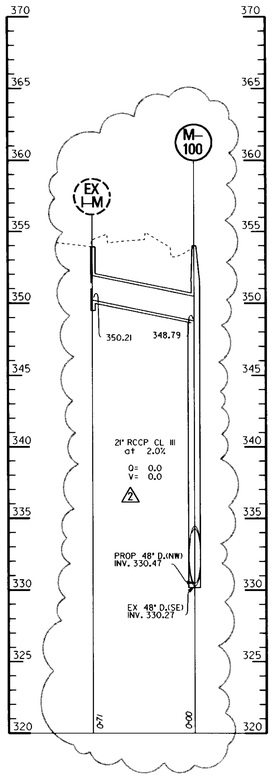

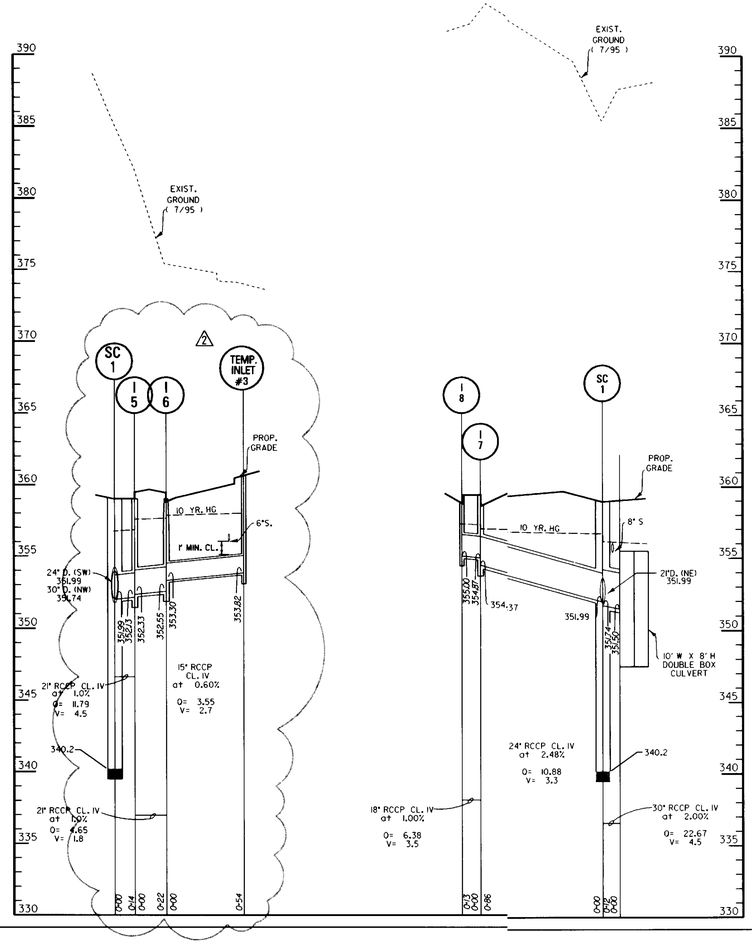

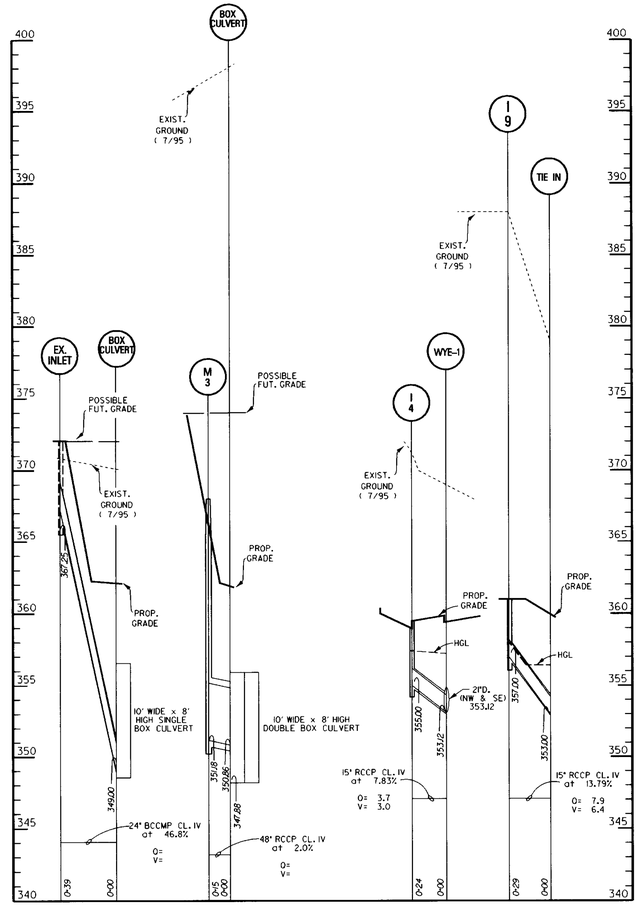

APPROVED
PLANNING BOARD
OF HOWARD COUNTY
DATE April 23, 1997
213

Date	No.	Revision Description
1-5-98	2	REVISED SD FROM I-6 TO TEMP. INLET, NORDSTROM WATER LINE COORDINATE TABLE, ADDED FC-2.

APPROVED: HOWARD COUNTY DEPT. OF PLANNING & ZONING

CHIEF, DEVELOPMENT ENGINEERING DIVISION MK — 1/14/98 DATE

CHIEF, DIVISION OF LAND DEVELOPMENT — 1/21/98 DATE

DIRECTOR — 1/21/98 DATE

THE MALL IN COLUMBIA

PHASE 1 EXPANSION
TOWN CENTER
SECTION 2 AREA 1 & 2 /2
HOWARD COUNTY
LOTS 3, 8,10-13, 15, 17, 19-22, 24-26, 28-30, 33, 34

OWNER /DEVELOPER:
THE HOWARD RESEARCH & DEVELOPMENT CORP.
COLUMBIA MALL, INC.
10275 LITTLE PATUXENT PARKWAY
COLUMBIA, MARYLAND 21044

DMW
Dan McCune-Walker, Inc.
200 East Pennsylvania Avenue
Towson, Maryland 21286
(410) 296-3333
Fax 296-4705
A Team of Land Planners, Landscape Architects, Engineers, Surveyors & Environmental Professionals

SUBDIVISION NAME			SECT/AREA		LOT/PARCEL #
COLUMBIA TOWN CTR.			2/1 2/2		SEE GENERAL NOTE # 6
PLAT	BLOCK #	ZONE	TAX/ZONE MAP	ELEC. DISTRICT	CENSUS TRACT
3054A - 442		NT	30,36	5TH	6054
WATER CODE			SEWER CODE		

1-6-98
Date

STATE OF MARYLAND — JOHN W. RANCOCAS — 10551 — REGISTERED PROFESSIONAL ENGINEER

Professional Engr. No. 10551

TITLE
PHASE 1A REVISED STORM DRAIN PROFILES

Des By	RLN	Scale	HORZ 1" = 50' VERT 1" = 5'	Proj. No.	95019.B
Dm By	JEF	Date	5/22/97	10 OF 35	
Chk By	JWR	Approved			

SDP-97-107

Tue Jan 6 14:11:48 1998 d:\95019\95019b.prl

STRUCTURE SCHEDULE △

NO.	TYPE	INV. IN	INV. OUT	TOP ELEVATION UPPER	TOP ELEVATION LOWER	REMARKS
I-19	MOD. "D" INLET	374.13	EX.374.03	384.83		SEE DETAIL THIS SHEET 6' SO
I-28	A-10 INLET	——	378.0	382.4		HO.CO. STD. S.D.4.02 W=2'-6'
I-22	A-10 INLET	Ex. 378.1 378.95	378.2	384.73	384.41	HO.CO. STD. S.D.4.02 W=2'-6'
I-24	A-10 INLET	——	385.15	391.45	391.34	HO.CO. STD. S.D.4.02 W=2'-6'
M-20	PRECAST MANHOLE	375.85 376.05	375.32	382.5		SHA MD 384.07
M-20A	60" DIAMETER	377.25 376.80	376.05	382.7		HO.CO. STD. S.D.5.02
I-21	A-10 INLET	385.23 FUT. 385.03	385.13	395.0		HO.CO. STD. S.D.4.02 W=2'-6'
I-20	A-10 INLET	384.20	384.0	—— 395.0 ——		HO.CO. STD. S.D.4.02 W=2'-6'
M-22	PRECAST MANHOLE	382.60 384.85	382.44	—— 39.0 ——		SHA MD 384.05
M-21	PRECAST MANHOLE	380.06 380.36	379.56	388.2		SHA MD 384.05
I-25	MOD. "D" INLET	——	382.55	387.83		SEE DETAIL THIS SHEET 6'SO
I-26	MOD. "D" INLET	——	385.55	393.83		SEE DETAIL THIS SHEET 6'SO
FC-20	FIELD CON.	——	——	——		HO.CO. STD. S.D.2.01 15"X54"
M-23	PRECAST MANHOLE	393.38 REM	384.78	394.78		SHA MD 384.07 84" DIA.

⚠1 * SHOP DWGS. TO BE SUBMITTED TO ENGINEER PRIOR TO CONSTRUCTION. PROVIDE SLOTS IN ALL SIDES SEE HO.CO. STD. SD 4.11

△ ALL INVERTS TO BE FULLY DEVELOPED.

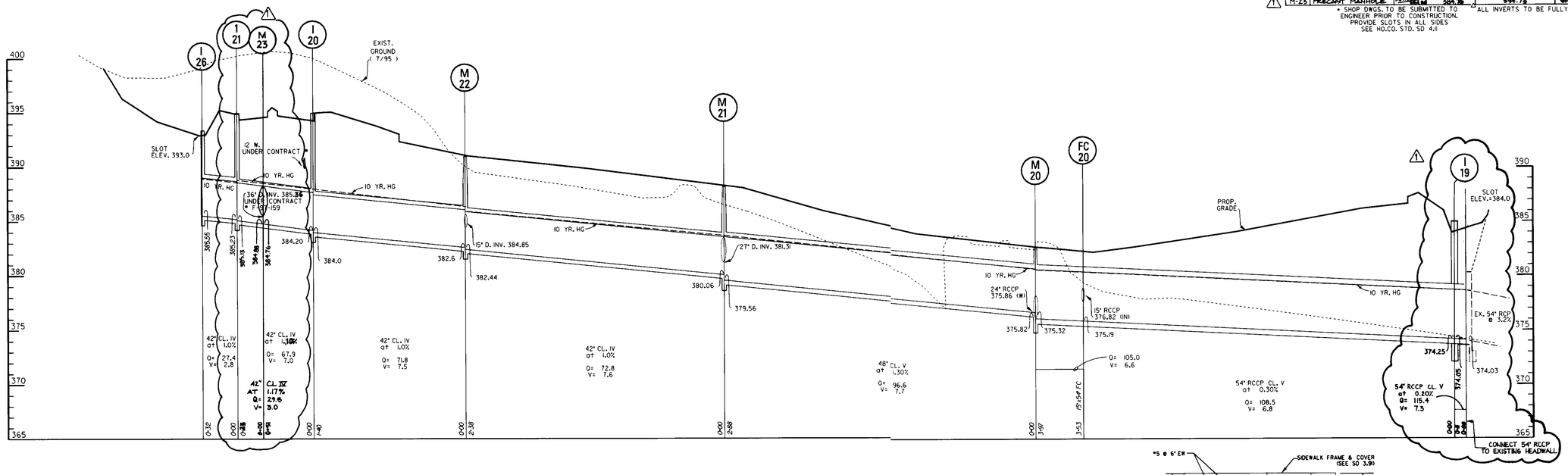

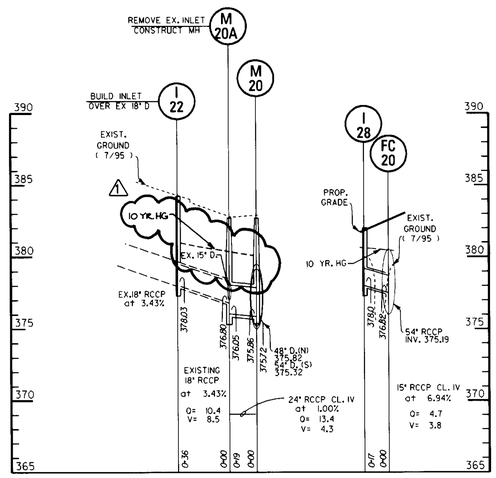

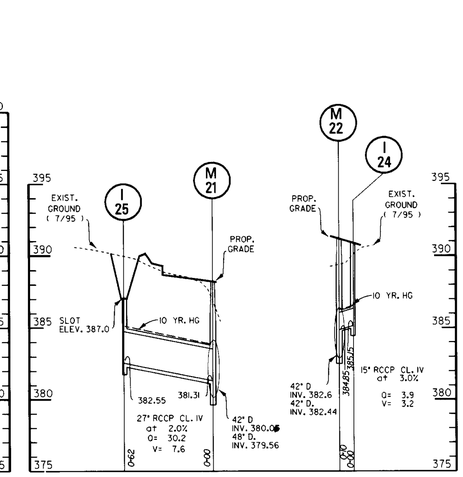

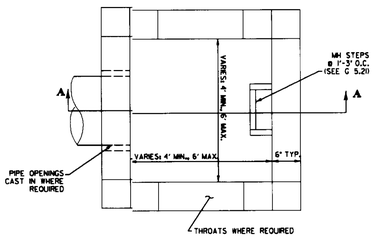

PLAN - BELOW SLAB
N.T.S.

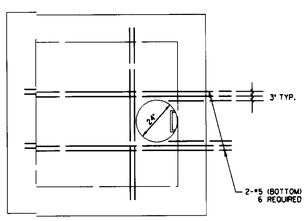

TOP SLAB
N.T.S.

1. MIX No.3 CONCRETE
2. ASTM A615 GRADE 60 REINFORCING

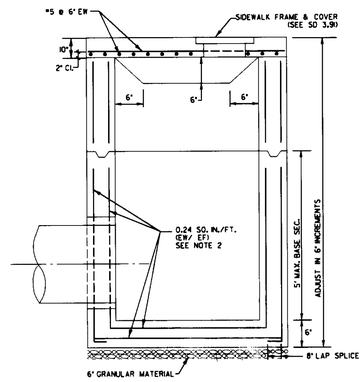

SECTION A-A
N.T.S.

NOTES:

1. CONCRETE SHALL CONFORM TO THE MARYLAND D.O.T. S.H.A. STANDARD SPECS. FOR CONSTRUCTION AND MATERIALS, 1982 MIX No.6 EXCEPT THAT TY. III CEMENT & ASTM C 33 No.8 COARSE AGG. SHALL BE USED.
2. WELDED WIRE FABRIC SHALL CONFORM TO ASTM A-185. LAP SPLICES SHALL BE A MIN. OF 1-1/2 TRANSVERSE WIRE SPACES. WIRE CAGES SHALL BE TACK WELDED TO PRODUCE A RIGID UNIT.
3. OVERALL HEIGHT OF PRECAST IS ADJUSTABLE IN 6" INCREMENTS. FINAL GRADE ADJUSTMENTS SHALL BE MADE BY CONTRACTOR WITH BRICK AND MORTAR.

MODIFIED "D" INLET
N.T.S.

APPROVED
PLANNING BOARD
OF HOWARD COUNTY
DATE 4/23/97

APPROVED: HOWARD COUNTY DEPT. OF PLANNING & ZONING

CHIEF, DEVELOPMENT ENGINEERING DIVISION MK — 6/16/97 DATE

CHIEF, DIVISION OF LAND DEVELOPMENT — 6/20/97 DATE

DIRECTOR — 6/20/97 DATE

Date	No.	Revision Description
⚠ 9-18-97	1	ADD MH23 TO PROFILE & REV. PROFILES

THE MALL IN COLUMBIA

PHASE I EXPANSION
TOWN CENTER
SECTION 2 AREA 1 & 2

LOTS 8,10-13, 15, 17, 19-22, 24-26, 28-30, 33, 34, 5

OWNER /DEVELOPER:
THE HOWARD RESEARCH & DEVELOPMENT CORP.
COLUMBIA MALL, INC.
10275 LITTLE PATUXENT PARKWAY
COLUMBIA, MARYLAND 21044

DMW
Daft-McCune-Walker, Inc.
200 East Pennsylvania Avenue
Towson, Maryland 21286
(410) 296-3333
Fax 296-4705

A Team of Land Planners, Landscape Architects, Engineers, Surveyors & Environmental Professionals

5/22/97
Date

Professional Engr. No. 10557

SUBDIVISION NAME: COLUMBIA TOWN CTR.	SECTION/AREA: 2/1 & 2/2		LOT/PARCEL #: See gen note #6
PLAT #: 5448 & 5449	BLOCK #: NAP	ZONE: NT	ZAP/ZONE MAP #: 32 & 36	ELEC. DISTRICT: 5TH	GRID/E TRICT: 6
WATER CODE: 3004		SEWER CODE: 1004			

TITLE: **PHASE 1A STORM DRAIN PROFILES**

Des By	CRW/JLS	Scale	HORZ. 1" = 50' VERT. 1" = 5'	Proj. No.	95019B
Drn By	KDE	Date	5/22/97		9 OF 35
Chk By	JWR	Approved			

SDP-97-107

Fri May 23 08:45:53 1997 c:\95019b\950192pr5

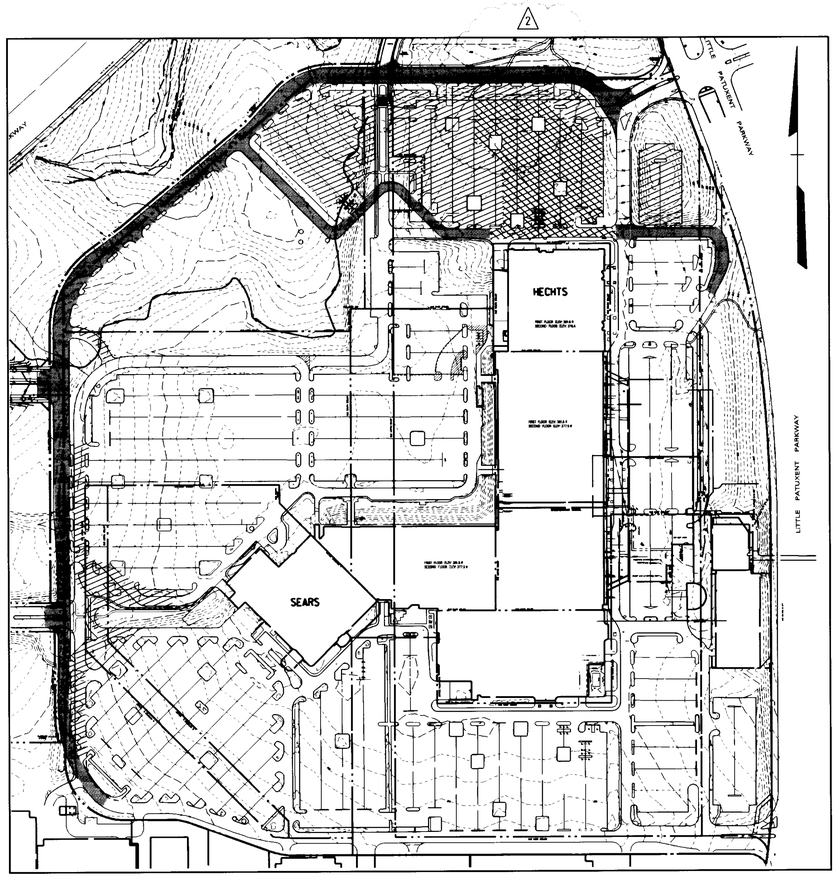

PAVING LEGEND

SCALE: 1" = 200'

SEE SHEETS 2-5 FOR SAW CUT LOCATIONS

LEGEND

SYMBOL	DESCRIPTION
	P-5 PAVING
	P-2 PAVING
	1" ± OVERLAY

SEE SHEET 7 FOR PAVING DETAILS.

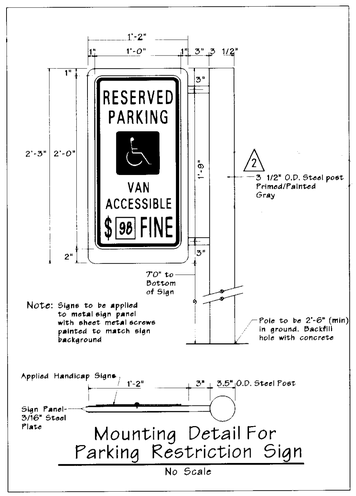

Mounting Detail For Parking Restriction Sign

No Scale

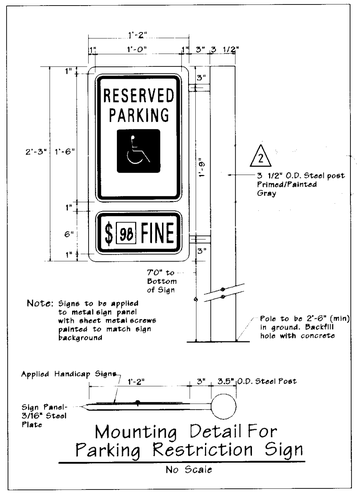

Mounting Detail For Parking Restriction Sign

No Scale

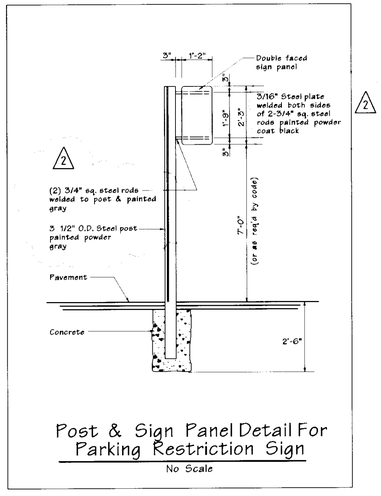

Post & Sign Panel Detail For Parking Restriction Sign

No Scale

Parking Restriction Sign for Handicapped Parking

No Scale

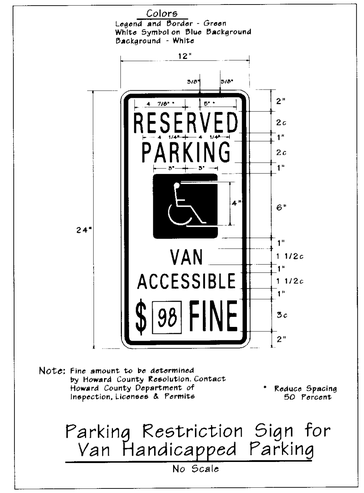

Parking Restriction Sign for Van Handicapped Parking

No Scale

APPROVED
PLANNING BOARD
OF HOWARD COUNTY
DATE APRIL 23, 1997
RB

APPROVED: HOWARD COUNTY DEPT. OF PLANNING & ZONING

CHIEF, DEVELOPMENT ENGINEERING DIVISION MK — 1/21/98 DATE

CHIEF, DIVISION OF LAND DEVELOPMENT — 1/21/98 DATE

DIRECTOR — 1/21/98 DATE

Date	No.	Revision Description
1-5-98	2	REVISED PAVING LEGEND & POST COLOR

THE MALL IN COLUMBIA
PHASE I EXPANSION
TOWN CENTER
SECTION 2 AREA 1 & 2/2
HOWARD COUNTY, MD

LOTS 3, 8,10-13, 15, 17, 19-22, 24-26, 28-30, 33, 34

OWNER /DEVELOPER:
THE HOWARD RESEARCH & DEVELOPMENT CORP.
COLUMBIA MALL, INC.
10275 LITTLE PATUXENT PARKWAY
COLUMBIA, MARYLAND 21044

1-6-98
Date

STATE OF MARYLAND — JOHN W. RANOCCHIA — No. 10551 — REGISTERED PROFESSIONAL ENGINEER

Professional Engr. No. 10551

DMW
Daft-McCune-Walker, Inc.
200 East Pennsylvania Avenue
Towson, Maryland 21286
(410) 296-3333
Fax 296-4706

A Team of Land Planners, Landscape Architects, Engineers, Surveyors & Environmental Professionals

SUBDIVISION NAME		SECTION/AREA		LIBER/FOLIO
COLUMBIA TOWN CENTER		2/1 & 2/2		SEE GENERAL NOTE # 6
TCP	BLOCK #	ZONE	TAX/ZONE MAP	ELECT DISTRICT	CENSUS TRACT
3054A-442		NT	30, 36	5 TH	6054
WATER CODE			SEWER CODE		

TITLE
PHASE 1A
REVISED PAVING LEGEND
& SITE DETAILS

Des By	MJP	Scale	AS SHOWN	Proj. No.	95019 B
Drn By	CLZ	Date	5-22-97	8 OF 35	
Chk By	JWR	Approved			

SDP-97-107

Tue Apr 6 15:55:20 1998 d:\950\dwg\950fig1.dft

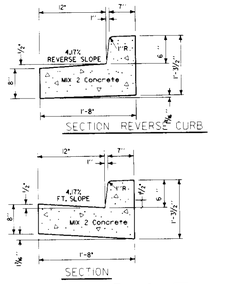

Concrete Curb, Typ.
Not To Scale

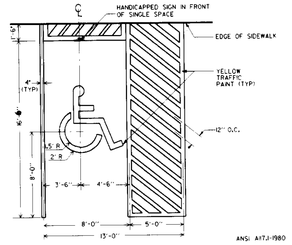

Handicapped Parking Space
Not To Scale

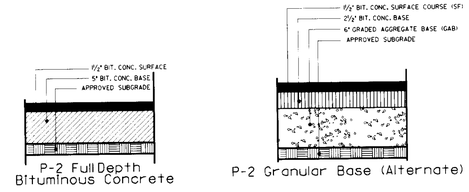

Parking & Travel Lane
Typical Paving Section (P-2)
Not To Scale

See Sheet 8 For Paving Legend

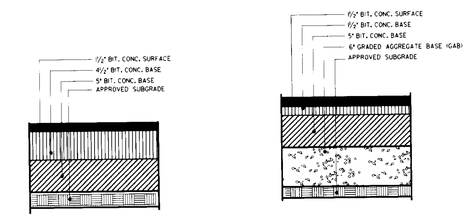

Ring Road
Typical Paving Section (P-5)
Not To Scale

NOTES:
1. ½" PREFORMED BITUMINOUS EXPANSION MATERIAL IN EXPANSION JOINTS TO BE KEPT ¼" BELOW SURFACE OF SIDEWALK
2. CONCRETE TO BE MIX NO. 2
3. WHEN SIDEWALK ABUTS CURB, WALK SHALL BE ¼" ABOVE CURB WITH ½" PREFORMED BITUMINOUS EXPANSION MATERIAL BETWEEN SIDEWALK AND CURB
4. CONCRETE WALK WITHIN 6'-0" OF BUILDING SHALL HAVE 6" OF #67 STONE OR APPROVED EQUAL AS A BASE COURSE

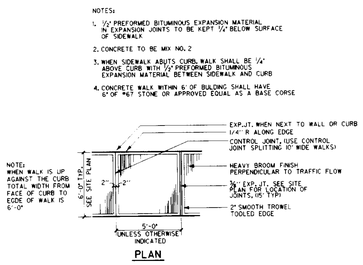

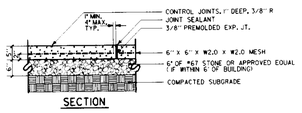

Concrete Walk
Not To Scale

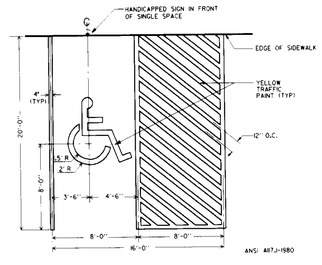

Handicapped Van Parking Space
Not To Scale

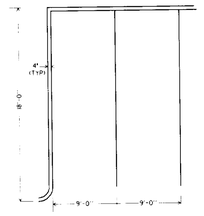

Standard Parking Space
Not To Scale

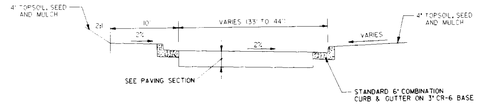

Typical Section
Ring Road (Private Drive)
Not To Scale

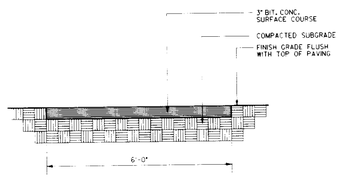

Light Duty Bit. Conc. Walk
Not To Scale

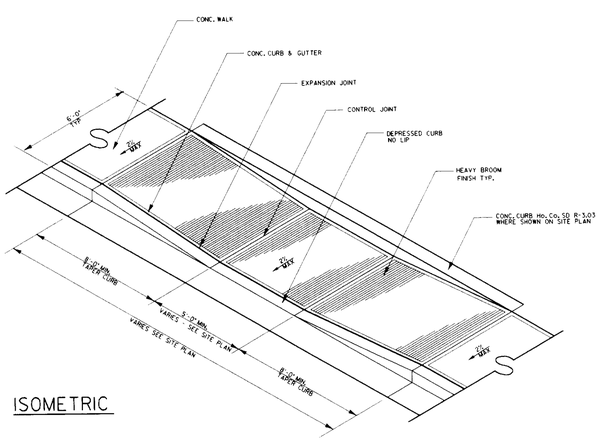

Handicapped Ramp – A
Not To Scale

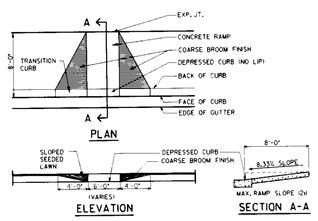

Handicapped Ramp – C
Not To Scale

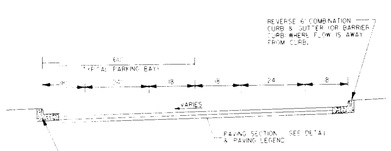

Typical Section
Private Parking
Not To Scale

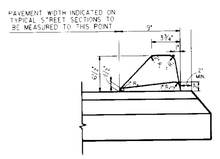

Standard Bituminous Curb
Not To Scale

APPROVED
PLANNING BOARD
OF HOWARD COUNTY
DATE 4/23/97

APPROVED: HOWARD COUNTY DEPT. OF PLANNING & ZONING

CHIEF, DEVELOPMENT ENGINEERING DIVISION MK — 6/16/97 DATE

CHIEF, DIVISION OF LAND DEVELOPMENT — 6/20/97 DATE

DIRECTOR — 6/20/97 DATE

Date	No.	Revision Description

THE MALL IN COLUMBIA
PHASE I EXPANSION
TOWN CENTER
SECTION 2 AREA 1 & 2/2

OWNER / DEVELOPER:
THE HOWARD RESEARCH & DEVELOPMENT CORP.
COLUMBIA MALL, INC.
10275 LITTLE PATUXENT PARKWAY
COLUMBIA, MARYLAND 21044 Howard County

DMW
Daft-McCune-Walker, Inc.
200 East Pennsylvania Avenue
Towson, Maryland 21286
(410) 296-3333
Fax 296-4705

A Team of Land Planners, Landscape Architects, Engineers, Surveyors & Environmental Professionals

SUBDIVISION NAME		SECTION/AREA		LOT/PARCEL #
6B T.C.		2/1 2/2		See gen note #6
PLAT OR L/F FOLIO #	ZONE	TAX/ZONE MAP	ELEC. DISTRICT	CENSUS TRACT
3654A 447	N.T.	30, 36	6TH	6065
WATER CODE		SEWER CODE		

TITLE
PHASE 1A
SITE DETAILS

Des By	MJP	Scale	AS SHOWN	Proj. No.	95019 B
Drn By	CLZ	Date	5/22/97	7 OF 35	
Chk By	JWR	Approved			

5/22/97
Date

STATE OF MARYLAND — JOHN W. RAMCCUNE — 10551 — REGISTERED PROFESSIONAL ENGINEER

Professional Engr. No. 10551

SDP-97-107

Thu May 22 15:54:02 1997 D:\95019\DWG\95019A.MTG

NOTES:
1. MANHOLES SHALL BE CONSTRUCTED IN ACCORDANCE WITH AASHTO M 199.
2. CONCRETE SHALL BE MIX NO. 6 (4500 PSI).
3. WALL REINFORCEMENT FOR BASE UNITS, RISER UNITS AND ECCENTRICAL CONE UNITS SHALL BE REINFORCEMENT BARS OR WELDED WIRE FABRIC WITH A MINIMUM AREA OF 0.18 IN.²/FT. FOR THE 72" DIAMETER MANHOLES. WELDED WIRE FABRIC SHALL CONFORM TO ASTM A 185 AND A 82. REINFORCEMENT BARS SHALL MEET ASTM A 615, GRADE 60.
4. BASE REINFORCEMENT TO BE REINFORCEMENT BARS OR WELDED WIRE FABRIC WITH A MINIMUM AREA OF 0.27 IN.²/FT. THE BASE SHALL BE CAST MONOLITHIC WITH THE BASE UNIT OR JOINTED PER MANUFACTURER'S DESIGN.
5. THE MANUFACTURER SHALL FORM MALE AND FEMALE ENDS OF JOINTS USING THEIR OWN DESIGN. THE JOINTS SHALL BE SEALED BY THE CONTRACTOR AND MADE WATERTIGHT USING: WHERE APPLICABLE: MORTAR, RUBBER O-RING GASKETS MEETING ASTM C 361 & C 443 OR FLEXIBLE PLASTIC GASKETS MEETING AASHTO M 198, TYPE B.
6. LADDER RUNGS SHALL BE INSTALLED IN VERTICAL ALIGNMENT AT 11"-4" MAXIMUM C/C. RUNG TYPES SHALL BE IN ACCORDANCE WITH STANDARDS MD-383.91 OR MD-383.92. LADDER RUNGS SHALL BE INCIDENTAL TO THE COST OF THE MANHOLE.
7. WHEN THE DISTANCE BETWEEN MULTIPLE OPENINGS IN THE BASE UNIT OR ANY RISER UNIT IS LESS THAN 6" ADDITIONAL NO. 3 BARS ARE REQUIRED AROUND OPENINGS.
8. LIFT HOLES OR LIFT EYES SHALL BE PROVIDED IN EACH SECTION FOR HANDLING.
9. MIN NO. 2 CONCRETE OR BRICK CHANNEL SHALL BE PROVIDED IN THE FIELD AND SHALL SLOPE 2" PER FOOT TOWARD OUTLET OR AS DIRECTED BY THE ENGINEER.
10. THE DRIP STONE LANDING SHALL BE USED ONLY WHEN THERE ARE PIPES CONNECTED TO THE RISER UNITS. SEE STD. MD-384.13 FOR DETAILS.
11. MINIMUM DEPTH PAYMENT PER EACH SHALL BE 6'-0" MEASURED FROM THE BOTTOM OF THE BASE UNIT TO THE TOP OF THE MANHOLE COVER. VERTICAL DEPTH PAYMENT PER LINEAR FOOT SHALL INCLUDE ALL DEPTHS IN EXCESS OF 6'-0". THE COST OF THE DRIP STONE LANDING, NO. 57 AGGREGATE, GROUT, SEALANT, AND ALL NECESSARY APPURTENANCES SHALL BE INCIDENTAL TO THE PRICE BID.

CATEGORY CODE ITEM XXXXXX
SPECIFICATION 603

APPROVED

APPROVAL & DNR REVISIONS	APPROVAL & FEDERAL HIGHWAY ADMINISTRATION
APPROVAL 2-23-87	APPROVAL 1-6-87
REVISED	REVISED
REVISED	REVISED
REVISED	REVISED
REVISED	REVISED
REVISED	REVISED

Maryland Department of Transportation
STATE HIGHWAY ADMINISTRATION
STANDARDS FOR HIGHWAYS AND INCIDENTAL STRUCTURES

72" DIAMETER PRECAST MANHOLE
FOR 42" & 48" PIPES

STANDARD NO. MD-384.05

SECTION A-A
SECTION B-B
SECTION VIEW

NOTES:
1. MANHOLES SHALL BE CONSTRUCTED IN ACCORDANCE WITH AASHTO M 199.
2. CONCRETE SHALL BE MIX NO. 6 (4500 PSI).
3. WALL REINFORCEMENT FOR BASE UNITS AND RISER UNITS SHALL BE REINFORCEMENT BARS OR WELDED WIRE FABRIC WITH A MINIMUM AREA OF 0.21 IN.²/FT. FOR THE 84" DIAMETER MANHOLES. WELDED WIRE FABRIC SHALL CONFORM TO ASTM A 185 AND A 82. REINFORCEMENT BARS SHALL MEET ASTM A 615 GRADE 60.
4. BASE REINFORCEMENT TO BE REINFORCEMENT BARS OR WELDED WIRE FABRIC WITH A MINIMUM AREA OF 0.27 IN.²/FT. THE BASE SHALL BE CAST MONOLITHIC WITH THE BASE UNIT OR JOINTED PER MANUFACTURER'S DESIGN.
5. THE MANUFACTURER SHALL FORM MALE AND FEMALE ENDS OF JOINTS USING THEIR OWN DESIGN. THE JOINTS SHALL BE SEALED BY THE CONTRACTOR AND MADE WATERTIGHT USING: WHERE APPLICABLE: MORTAR, RUBBER O-RING GASKETS MEETING ASTM C 361 AND C 443 OR FLEXIBLE PLASTIC GASKETS MEETING AASHTO M 198, TYPE B.
6. LADDER RUNGS SHALL BE INSTALLED IN VERTICAL ALIGNMENT AT 11"-4" MAXIMUM C/C. RUNG TYPES SHALL BE IN ACCORDANCE WITH STANDARDS MD-383.91 OR MD-383.92. LADDER RUNGS SHALL BE INCIDENTAL TO THE COST OF THE MANHOLE.
7. WHEN THE DISTANCE BETWEEN MULTIPLE PIPE OPENINGS IN THE BASE UNIT OR ANY RISER UNIT IS LESS THAN 6" ADDITIONAL NO. 3 BARS ARE REQUIRED AROUND OPENINGS.
8. LIFT HOLES OR LIFT EYES SHALL BE PROVIDED IN EACH SECTION FOR HANDLING.
9. MIN NO. 2 CONCRETE OR BRICK CHANNEL SHALL BE PROVIDED IN THE FIELD AND SHALL SLOPE 2" PER FOOT TOWARD OUTLET OR AS DIRECTED BY THE ENGINEER.
10. THE DRIP STONE LANDING SHALL BE USED ONLY WHEN THERE ARE PIPES CONNECTED TO THE RISER UNITS. SEE STD. MD-384.13 FOR DETAILS.
11. MINIMUM DEPTH PAYMENT PER EACH SHALL BE 10'-0" MEASURED FROM THE BOTTOM OF THE BASE UNIT TO THE TOP OF THE MANHOLE COVER. VERTICAL DEPTH PAYMENT PER LINEAR FOOT SHALL INCLUDE ALL DEPTHS IN EXCESS OF 10'-0". THE COST OF THE DRIP STONE LANDING, NO. 57 AGGREGATE, GROUT, SEALANT, AND ALL NECESSARY APPURTENANCES SHALL BE INCIDENTAL TO THE PRICE BID.

CATEGORY CODE ITEM XXXXXX
SPECIFICATION 603

APPROVED

APPROVAL & DNR REVISIONS	APPROVAL & FEDERAL HIGHWAY ADMINISTRATION
APPROVAL 2-23-87	APPROVAL 1-6-87
REVISED	REVISED
REVISED	REVISED
REVISED	REVISED
REVISED	REVISED
REVISED	REVISED

Maryland Department of Transportation
STATE HIGHWAY ADMINISTRATION
STANDARDS FOR HIGHWAYS AND INCIDENTAL STRUCTURES

84" DIAMETER PRECAST MANHOLE
FOR 54" & 60" PIPES

STANDARD NO. MD-384.07

Blaze Orange Plastic Mesh

Notes
1. Forest protection device only.
2. Retention Area will be set as part of the review process
3. Boundaries of Retention Area should be staked and flagged prior to installing device
4. Root damage should be avoided.
5. Protective signage may also be used.
6. Device should be maintained thoughout construction.

Source: Prince Georges County, Maryland Woodland Conservation Manual

4/23/97

APPROVED: HOWARD COUNTY DEPT. OF PLANNING & ZONING

CHIEF, DEVELOPMENT ENGINEERING DIVISION MK — 6/16/97 DATE

CHIEF, DIVISION OF LAND DEVELOPMENT — 6/20/97 DATE

DIRECTOR — 6/20/97 DATE

Date	No.	Revision Description

THE MALL IN COLUMBIA
PHASE I EXPANSION
TOWN CENTER
SECTION 2 AREA 1 & 2/2

OWNER /DEVELOPER:
THE HOWARD RESEARCH & DEVELOPMENT CORP.
COLUMBIA MALL, INC.
10275 LITTLE PATUXENT PARKWAY
COLUMBIA, MARYLAND 21044 HOWARD COUNTY

DMW
Daft-McCune-Walker, Inc.
200 East Pennsylvania Avenue
Towson, Maryland 21286
(410) 296-3333
Fax 296-4705

A Team of Land Planners, Landscape Architects, Engineers, Surveyors & Environmental Professionals

SUBDIVISION NAME	SECTION NAME		LOT/PARCEL #
Dl. T.C.	2/1	2/2	see geon note #6
PLAT OR L/F OR DEED & LIBER	TAXMAP NAME	ELECT. DISTRICT	CENSUS TRACT
3054A 448 INT.	30,31	5th	6054
WATER CODE	SEWER CODE		

TITLE
PHASE 1A
SITE DETAILS

Des By	MJP	Scale	N/A	Proj. No. 95019 B
Drn By	CLZ	Date	5/16/97	6 OF 35
Chk By	JWR	Approved		

5/22/97
Date

Professional Engr. No. 10991

SDP-97-107

Tue May 13 18:47:31 1997 d:\94\95019\95019d14

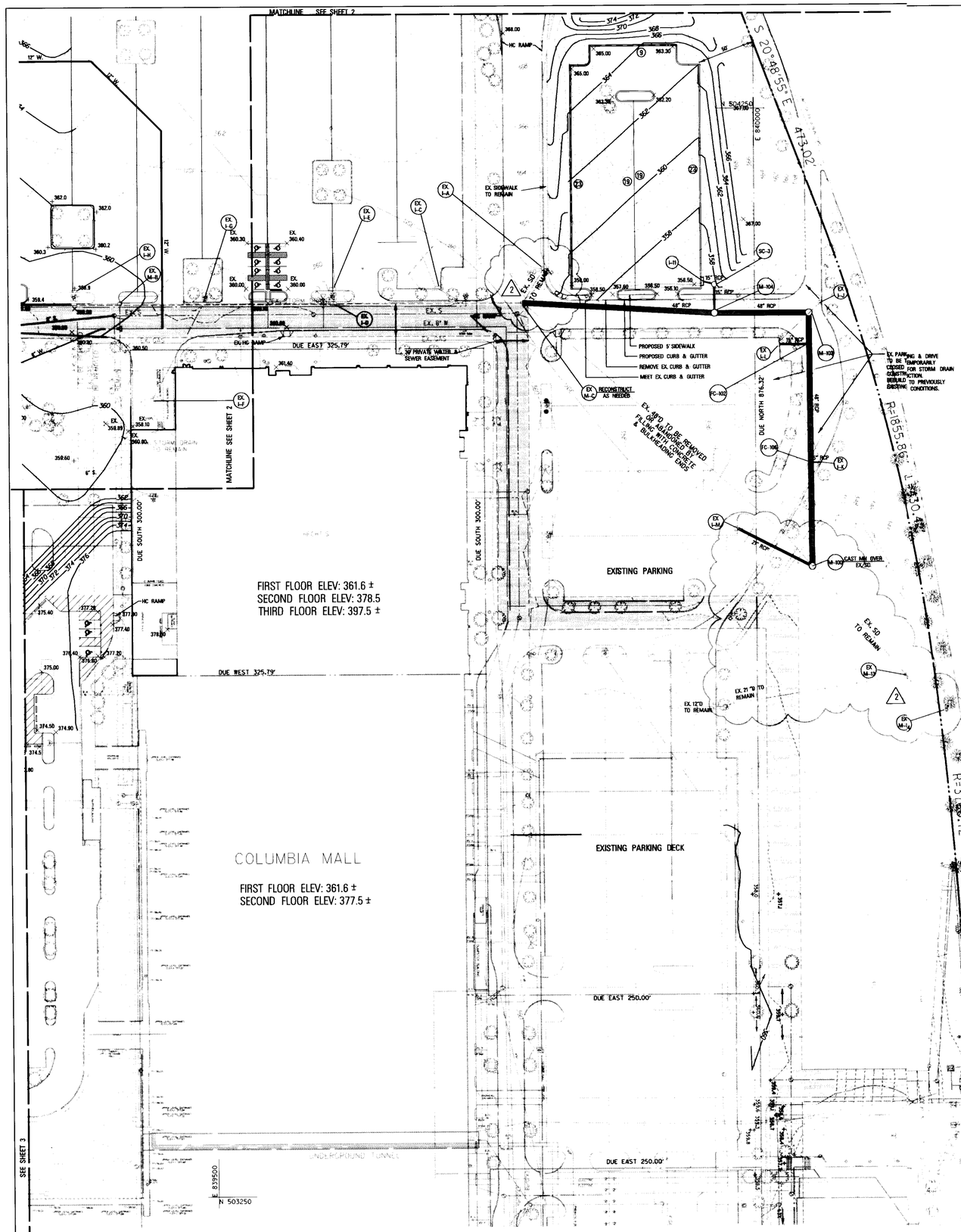

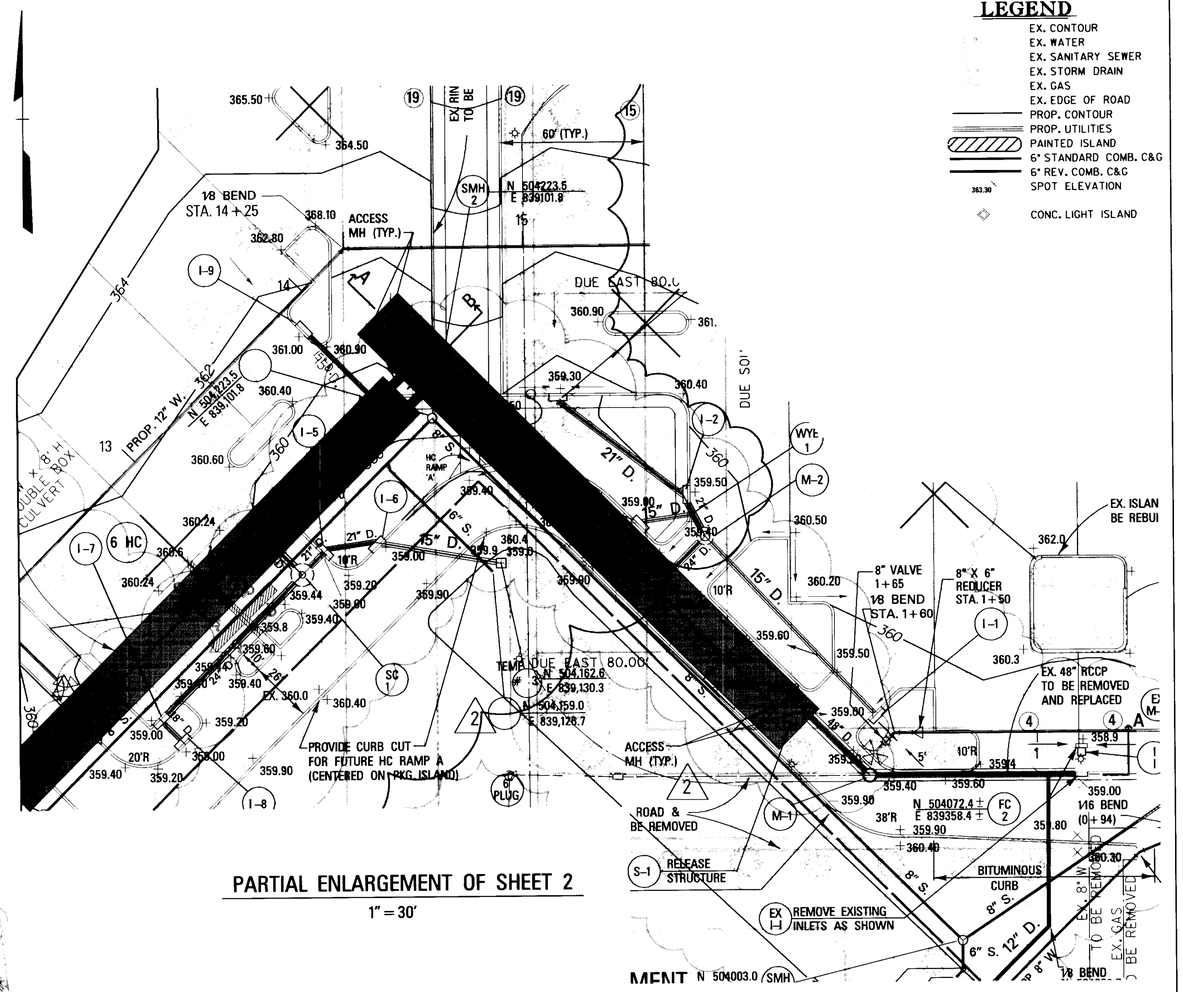

PARTIAL ENLARGEMENT OF SHEET 2

1" = 30'

LEGEND

- EX. CONTOUR
- EX. WATER
- EX. SANITARY SEWER
- EX. STORM DRAIN
- EX. GAS
- EX. EDGE OF ROAD
- PROP. CONTOUR
- PROP. UTILITIES
- PAINTED ISLAND
- 6" STANDARD COMB. C&G
- 6" REV. COMB. C&G
- SPOT ELEVATION
- CONC. LIGHT ISLAND

APPROVED: HOWARD COUNTY DEPT. OF PLANNING & ZONING

CHIEF, DEVELOPMENT ENGINEERING DIVISION — DATE 1/14/98

CHIEF, DIVISION OF LAND DEVELOPMENT — DATE 1/21/98

DIRECTOR — DATE 1/21/98

Date	No.	Revision Description
1-5-98	2	ADJUSTED C & G GRADES & UTILITIES

APPROVED
PLANNING BOARD
of HOWARD COUNTY
DATE April 23, 1997
RB

1-6-98
Date

STATE OF MARYLAND — JOHN W. RANOCCHIA — No. 10551 — REGISTERED PROFESSIONAL ENGINEER

Professional Engr. No. 10551

Date	No.	Revision Description

THE MALL IN COLUMBIA

PHASE I EXPANSION
TOWN CENTER
SECTION 2 AREA 1 & 2/2
HOWARD COUNTY, MD

LOTS 8,10-13, 15, 17, 19-22, 24-26, 28-30, 33, 34

OWNER /DEVELOPER:

THE HOWARD RESEARCH & DEVELOPMENT CORP.
COLUMBIA MALL, INC.
10275 LITTLE PATUXENT PARKWAY
COLUMBIA, MARYLAND 21044

DMW
Daft-McCune-Walker, Inc.
200 East Pennsylvania Avenue
Towson, Maryland 21286
(410) 296-3333
Fax 296-4705

A Team of Land Planners, Landscape Architects, Engineers, Surveyors & Environmental Professionals

SUBDIVISION NAME		SECTION/AREA	LOT/PARCEL #
COLUMBIA TOWN CTR.		2/1 & 2/2	SEE GENERAL NOTE # 6
SDP	BLOCK # / ZONE	ZONE/ZONE MAP	ELECT. DISTRICT	CENSUS TRACT
3054A - 442	NT	30, 36	5TH	6054
WATER CODE		SEWER CODE	

TITLE

PHASE 1A
REVISED SITE DEVELOPMENT PLAN

Des By	MJP	Scale	1" = 50'	Proj. No.	95019B
Drn By	CLZ	Date	5/22/97		5 OF 35
Chk By	JWR	Approved			

SDP-97-107

Tue Jan 6 11:43:24 1998 J:\95\95019\95019B.dgn

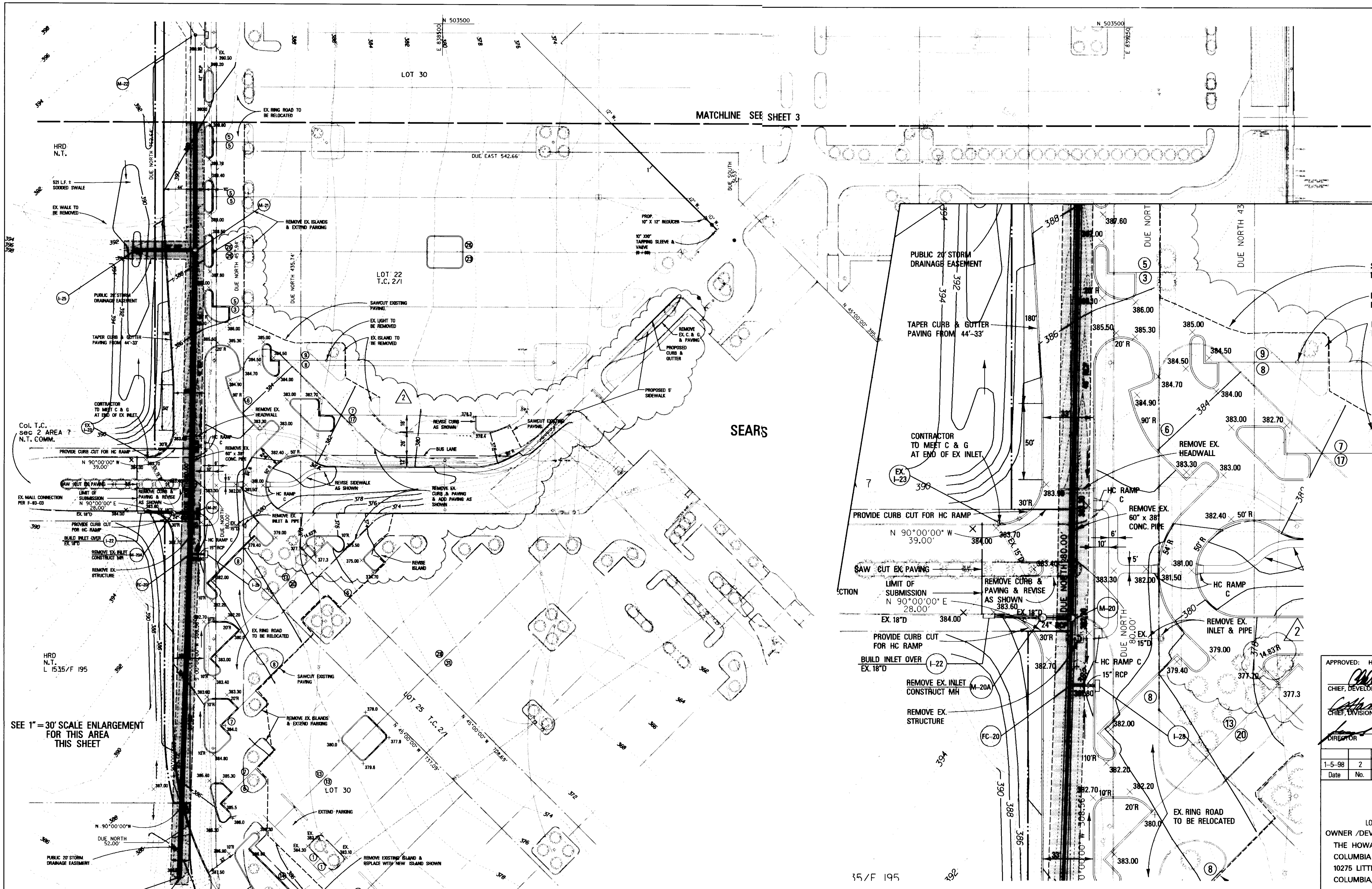

PARTIAL ENLARGEMENT OF THIS SHEET

1" = 30'

LEGEND

	EX. CONTOUR
	EX. WATER
	EX. SANITARY SEWER
	EX. STORM DRAIN
	EX. GAS
	EX. EDGE OF ROAD
	PROP. CONTOUR
	PROP. UTILITIES
	PAINTED ISLAND
	6" STANDARD COMB. C&G
	6" REV. COMB. C&G
×387.60	SPOT ELEVATION

APPROVED
PLANNING BOARD
of HOWARD COUNTY
DATE April 23, 1997
RB

APPROVED: HOWARD COUNTY DEPT. OF PLANNING & ZONING

CHIEF, DEVELOPMENT ENGINEERING DIVISION MK — 1/14/98 DATE

CHIEF, DIVISION OF LAND DEVELOPMENT — 1/21/98 DATE

DIRECTOR — 1/21/98 DATE

Date	No.	Revision Description
1-5-98	2	ADD BUS DROP OFF, REV. ISLANDS, ADD HC CURB CUTS

THE MALL IN COLUMBIA

PHASE I EXPANSION
TOWN CENTER
SECTION 2 AREA 1 & 2/2
LOTS 8,10-13, 15, 17, 19-22, 24-26, 28-30, 33, 34

OWNER /DEVELOPER:
THE HOWARD RESEARCH & DEVELOPMENT CORP.
COLUMBIA MALL, INC.
10275 LITTLE PATUXENT PARKWAY
COLUMBIA, MARYLAND 21044

1-6-98
Date

STATE OF MARYLAND — JOHN W. RANOCCHIA — REGISTERED PROFESSIONAL ENGINEER

Professional Engr. No. 10561

DMW
Daft·McCune·Walker, Inc.
200 East Pennsylvania Avenue
Towson, Maryland 21286
(410) 296-3333
Fax 296-4705

A Team of Land Planners, Landscape Architects, Engineers, Surveyors & Environmental Professionals

SUBDIVISION NAME	SECTION/AREA	LOT/PARCEL #
PLAT# OR L/F / BLOCK # / ZONE	TAX/ZONE MAP / ELECT. DISTRICT	CENSUS TRACT
WATER CODE	SEWER CODE	

TITLE

PHASE 1A
REVISED SITE DEVELOPMENT PLAN

Des By	MJP	Scale	1" = 50'	Proj. No. 95019.B
Drn By	CLZ	Date	5/22/97	4 OF 35
Chk By	JWR	Approved		

SDP-97-107

Tue Jan 6 10:50:29 1998 d:\95019b\95019bbs3

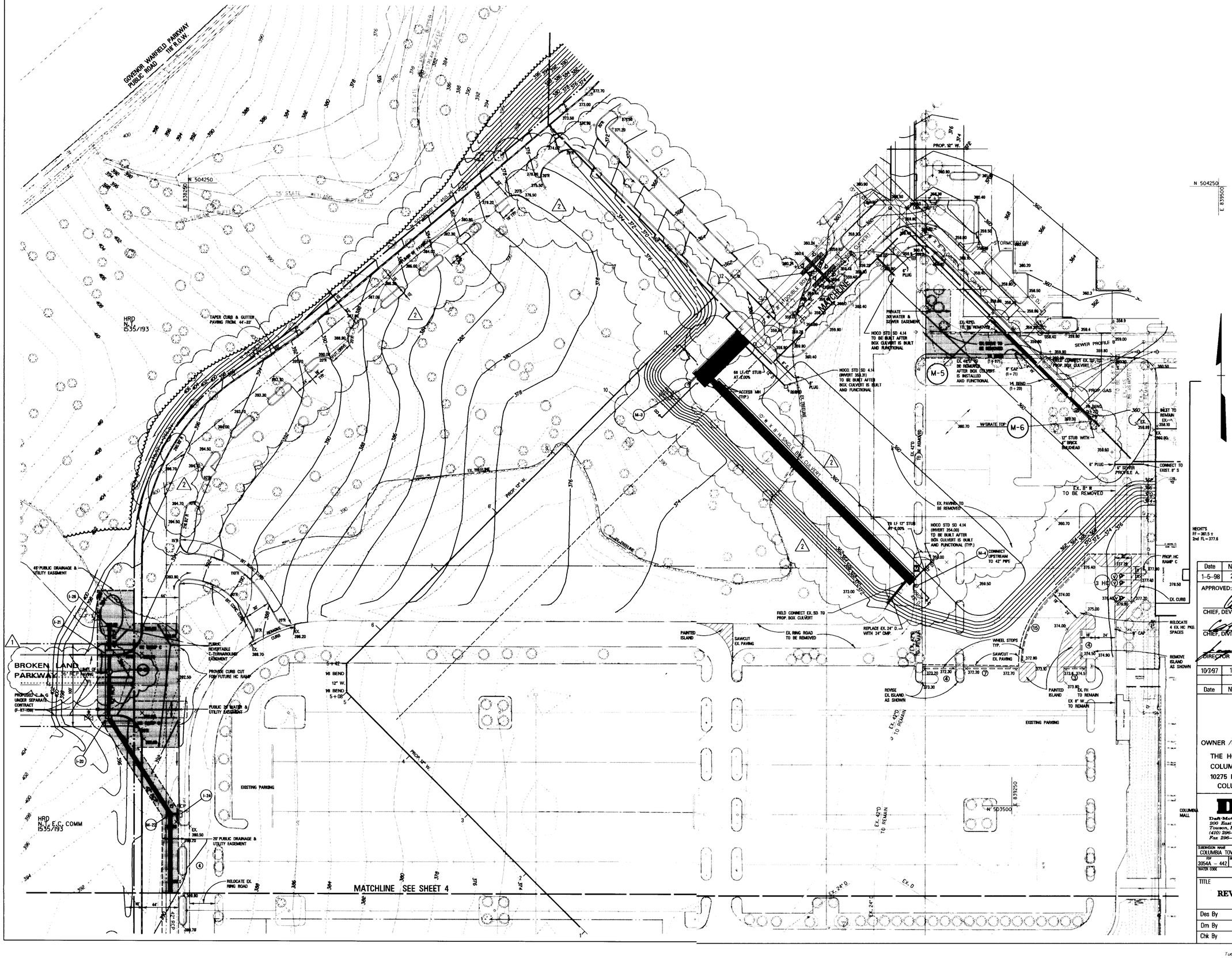

LEGEND

- EX. CONTOUR
- EX. WATER
- EX. SANITARY SEWER
- EX. STORM DRAIN
- EX. GAS
- EX. EDGE OF ROAD
- PROP. CONTOUR
- PROP. UTILITIES
- PAINTED ISLAND
- 6" STANDARD COMB. C&G
- 6" REV. COMB. C&G
- CONC. LIGHT POLE ISLAND

1-6-98
Date

STATE OF MARYLAND — JOHN W. RANCOCAS, JR. — No. 10551 — REGISTERED PROFESSIONAL ENGINEER

Professional Engr. No. 10551

APPROVED
PLANNING BOARD
OF HOWARD COUNTY
DATE April 23, 1997
RB

Date	No.	Revision Description
1-5-98	2	ADJUSTED GRADING, C & G, & UTILITIES

APPROVED: HOWARD COUNTY DEPT. OF PLANNING & ZONING

CHIEF, DEVELOPMENT ENGINEERING DIVISION MK — 1/14/98 DATE

CHIEF, DIVISION OF LAND DEVELOPMENT — 1/21/98 DATE

DIRECTOR — 1/21/98 DATE

Date	No.	Revision Description
10/7/97	1	REV. 36" RCP IN BROKEN LAND PKWY.

THE MALL IN COLUMBIA

PHASE I EXPANSION
TOWN CENTER
SECTION 2 AREA 1 & 2 /2
HOWARD COUNTY, MD

LOTS 3, 8,10–13, 15, 17, 19–22, 24–26, 28–30, 33, 34

OWNER /DEVELOPER:

THE HOWARD RESEARCH & DEVELOPMENT CORP.
COLUMBIA MALL, INC.
10275 LITTLE PATUXENT PARKWAY
COLUMBIA, MARYLAND 21044

DMW
Daft-McCune-Walker, Inc.
200 East Pennsylvania Avenue
Towson, Maryland 21286
(410) 296-3333
Fax 296-4706

A Team of Land Planners, Landscape Architects, Engineers, Surveyors & Environmental Professionals

SUBDIVISION NAME		SECTION/AREA		LOT/PARCEL #
COLUMBIA TOWN CENTER		2/1 & 2/2		SEE GENERAL NOTE # 6
TAX MAP	BLOCK # ZONE	TAX/ZONE SUB	ELECT. DISTRICT	CENSUS TRACT
30/4A – 442	NT	30, 36	5TH	6054
WATER CODE		SEWER CODE		

TITLE

PHASE 1A
REVISED SITE DEVELOPMENT PLAN

Des By	MJP	Scale	1" = 50'	Proj. No.	95019B
Drn By	CLZ	Date	5/22/97		3 OF 35
Chk By	JWR	Approved			

SDP-97-107

Tue Jan 6 09:20:01 1998 d:\95019b\95019ba2

LANDSCAPE NOTES

1. The contractor shall review architectural/engineering plans to become thoroughly familiar with grading and surface utilities.

2. All equipment and tools shall be placed so as not to interfere or hinder the pedestrian and vehicular traffic flow.

3. The contractor shall coordinate with lighting and irrigation contractors regarding timing of installation of plant material.

4. The contractor shall insure that his work does not interrupt established or projected drainage patterns.

5. During planting operations, excess waste materials shall be promptly and frequently removed from the site.

6. Call Miss Utility a minimum of three days prior to any excavation. The contractor is advised of the existence of underground utilities on the site. Their exact location shall be verified in the field with the owner or general contractor prior to the commencement of any digging operations. In the event they are uncovered, the contractor shall be held responsible for all damage to utilities and such damage shall not result in any additional expenses to the owner. Any damage of unreported lines shall not be the responsibility of the contractor.

7. If utility lines are encountered in excavation of tree pits, other locations for trees shall be made by the contractor without additional compensation. No changes of location shall be made without approval by the landscape architect.

8. Maintain positive drainage out of planting beds at a minimum 2% slope. All grades, dimensions, and existing conditions shall be verified by the contractor on site before construction begins. Any discrepancies shall be brought to the attention of the landscape architect or owner.

9. Every possible safeguard shall be taken to protect building surfaces, equipment, and furnishing. The contractor shall be responsible for any damage or injury to person or property which may occur as a result of his negligence in the execution of the work.

10. In the event of variation between quantities shown on the plant list and the plans, the plans shall control. The contractor is responsible for verifying all plant quantities prior to the commencement of work. Seed quantity take-offs are the responsibility of the contractor. All discrepancies shall be reported to the landscape architect for clarification prior to bidding. The contractor shall furnish plant material in sizes as specified in plant list.

11. Plants shall be located as shown on the drawings or as designated in the field. The contractor shall stake all material located on the site for review and/or adjustment by the landscape architect prior to planting. All locations are to be approved by the landscape architect before excavation.

12. Plants shall conform to current "American Standards for Nursery Stock" by American Association of Nurserymen (AAN), particularly with regard to size, growth, size of ball, and density of branch structure. Plant material shall be tagged at the source by the landscape architect unless this requirement is specifically waived.

13. All plants (B&B or container) shall be properly identified by weather-proof labels securely attached thereto before delivery to project site. Labels shall identify plants by name, species, and size. Labels shall not be removed until the final inspection by the landscape architect or agent in charge.

14. Any material and/or work may be rejected by the landscape architect if it does not meet the requirements of the specifications. All rejected materials shall be removed from the site by the contractor.

15. No substitutions shall be made without written consent of the owner or landscape architect.

16. The landscape architect or owner shall have the right, at any stage of the operations, to reject any and all work and material which, in his opinion, does not meet the requirements of these plans and specifications.

17. The contractor shall be wholly responsible for stability and conditions of all trees and shrubs and shall be legally liable for any damage caused by instability of any plant materials. Staking of all trees shall be done utilizing a method agreed upon by the landscape architect, as indicated on the documents.

18. All proposed trees to be installed either entirely on or entirely out of planting beds. Planting bed lines are not to be obstructed. All shrubs and ground cover areas shall be planted in continuous prepared bed and top dressed with 3-inch shredded hardwood mulch. Mulch shall have been shredded within the last six months.

19. Spade edge all planting beds.

20. Maintenance shall begin after each plant has been installed and shall continue until 90 days after final acceptance by the architect or owner representative. Maintenance includes watering, pruning, weeding, fertilizing, mulching, replacement of sick or dead plants, and any other care necessary for the proper growth of the plant material. The contractor must be able to provide continued maintenance if requested by the owner.

21. Upon completion of all landscaping, an acceptance of work shall be held. The contractor shall notify the landscape architect or owner for scheduling the inspection at least seven (7) days prior to the anticipated inspection date.

22. All trees shall be guaranteed for 12 months from the date of acceptance. All shrubs and ground covers shall be guaranteed for 12 months from the date of acceptance. Replacement plants used shall be guaranteed for an additional 90 days.

23. The contractor is responsible for testing project soils. The contractor is to provide a certified soils report to the owner. The contractor shall verify that the soils on site are acceptable for the proper growth of the proposed plant material. Should the contractor find poor soil conditions, the contractor shall be required to provide soil amendments as necessary. These amendments shall include, but not be limited to, fertilizers, lime, and topsoil. Proper planting soils must be verified prior to planting of materials.

24. The contractor shall dispose of stumps and major roots of all plants to be removed. Any depressions caused by removal operations shall be refilled with fertile, friable soil placed and compacted so as to reestablish proper grade for new planting and/or lawn areas.

25. The contractor shall insure adequate vertical drainage in all plant beds.

26. All disturbed areas of the site not planted with shrubs or ground cover shall be fine graded and seeded. See Sediment & Erosion Control Plans for details.

NOTES:
1 FOR CONTAINER SHRUBS, COMPLETELY REMOVE ALL NON-BIODEGRADABLE CONTAINERS AND SCARIFY ROOTBALL BY USING A SHARP BLADE AND MAKING 4 TO 5 ONE INCH CUTS THE LENGTH OF THE ROOTBALL.
2 FOR B&B SHRUBS, CUT AND REMOVE BURLAP FROM TOP 1/3 OF ROOT BALL

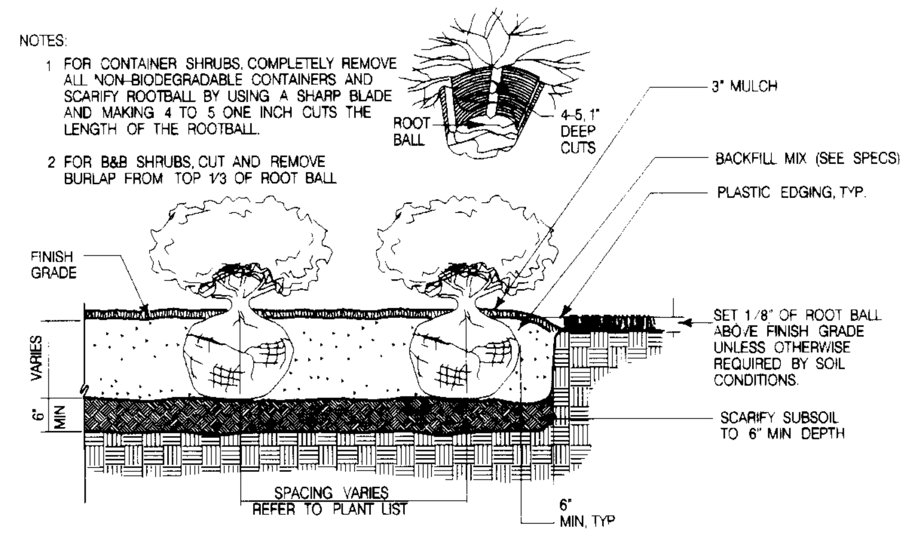

SHRUB BED PLANTING

NOT TO SCALE

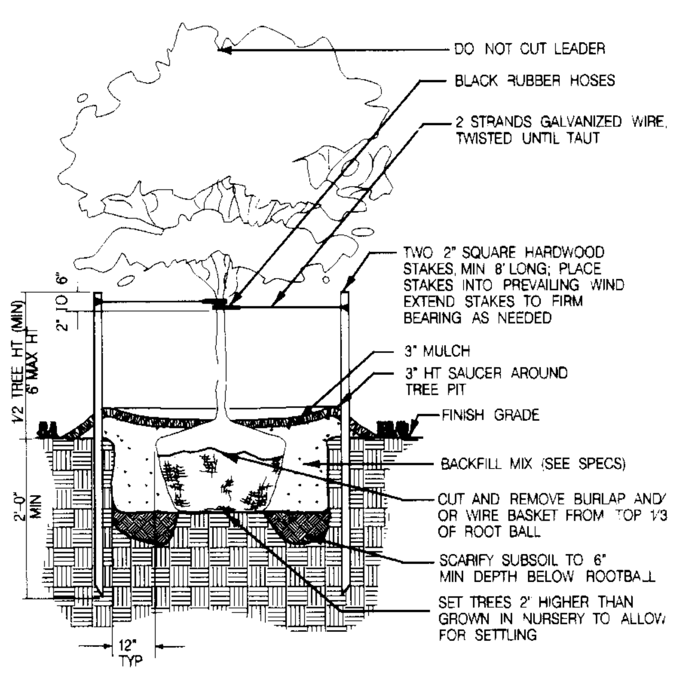

TREE PLANTING -LESS THAN 3" CALIPER

NOT TO SCALE

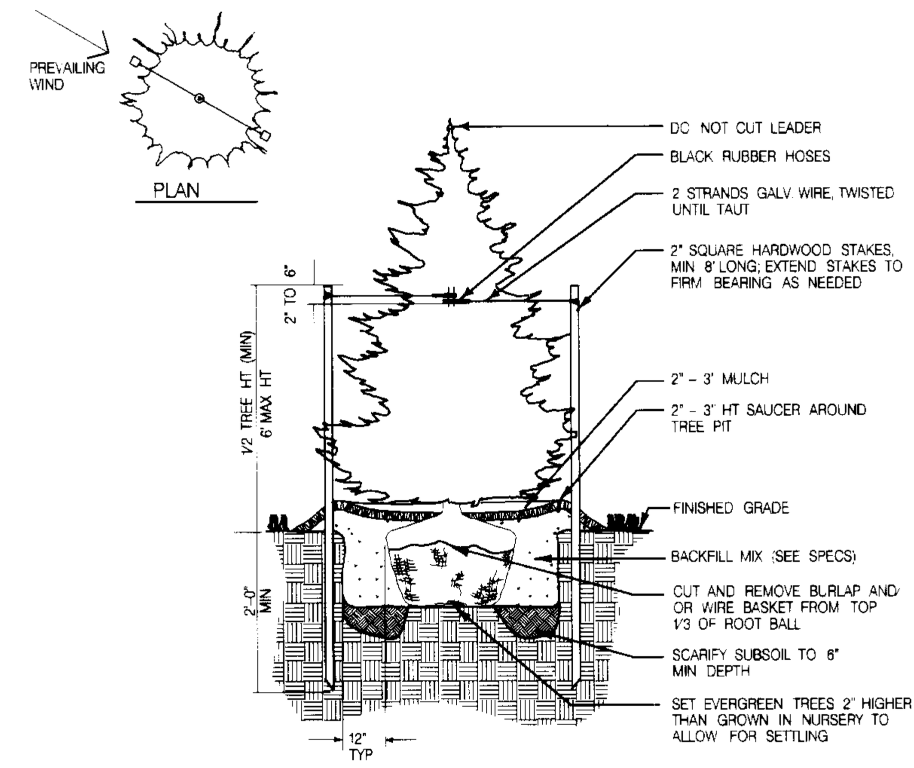

EVERGREEN TREE PLANTING

NOT TO SCALE

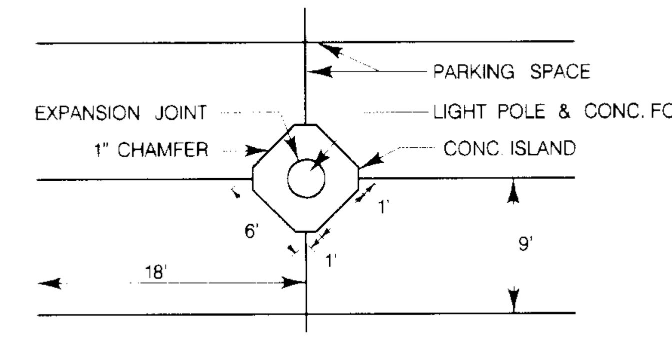

POLE BASE DETAIL

N.T.S.

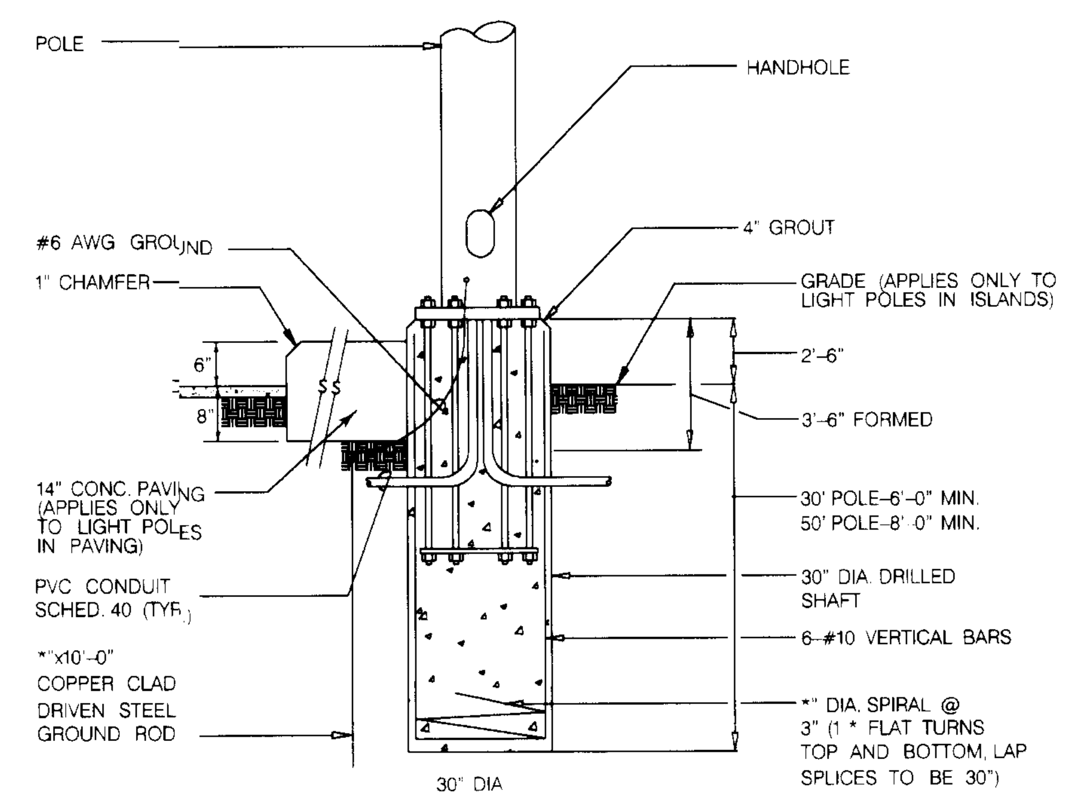

POLE BASE DETAIL (RAISED)

N.T.S.

DETAIL NOTES

1. CONCRETE SHALL HAVE A COMPRESSIVE STRENGTH OF 3000 PSI IN 28 DAYS
2. REINFORCING STEEL SHALL BE ASTM A-615 GRADE 60.
3. ALL REINFORCING STEEL SHALL HAVE A MINIMUM COVER OF 3".

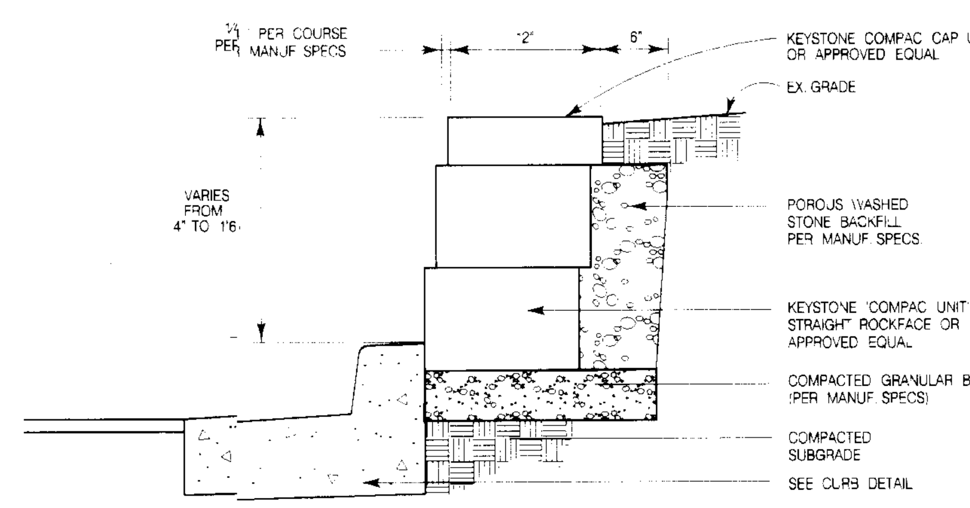

RETAINING WALL DETAIL

N.T.S.

PLANT LIST

KEY	QUANTITY	BOTANICAL NAME	COMMON NAME	SIZE	CONDITION	REMARKS
SHADE TREES						
PA	92	Platanus x acerfolia	London Planetree	2 1/2-3" cal, 12'-14' ht.	B&B	Full Head
FLOWERING TREES						
PCR	55	Pyrus calleryana 'Redspire'	Redspire Pear	2-2 1/2" cal, 2'-10' ht.	B&B	Full Head
PT	27	Prunus cerasifera 'Thundercloud'	Purpleleaf Flowering Plum	2-2 1/2" cal, 2'-10' ht.	B&B	Full Head
EVERGREEN TREES						
IO	7	Ilex opaca	American Holly	6'-8' ht.	B&B	Unsheared
SHRUBS						
TMH	39	Taxus media 'Hicksii'	Hicks Yew	2 1/2-3" cal, 12'-14' ht.	B&B	3.0' OC

LIGHT FIXTURE SCHEDULE

SYMBOL	FIXTURE TYPE	DESCRIPTION
(four-head symbol)	SI	50' POLE WITH (4) 1000W. METAL HALIDE HEADS
(two-head symbol)	S2	50' POLE WITH (2) 1000W. METAL HALIDE HEADS
(one-head symbol)	S3	30' POLE WITH (1) 400W. METAL HALIDE HEADS

SCHEDULE A

LANDSCAPE REQUIREMENTS:

	ADJACENT TO ROADWAYS
PERIMETER	1
• LINEAR FEET OF ROADWAY FRONTAGE/PERIMETER	240 LF
• CREDIT FOR EXISTING VEGETATION	* 240 LF
• CREDIT FOR WALL, FENCE OR BERM	** 240 LF
• NUMBER OF PLANTS REQUIRED	
SHADE TREES	0
EVERGREEN TREES	0
SHRUBS	0
• NUMBER OF PLANTS PROVIDED	
SHADE TREES	0
EVERGREEN TREES	0
OTHER TREES (2:1 SUB.)	0
SHRUBS (10:1 SUB.)	0

* CREDIT FOR EXISTING TREES LOCATED ALONG LITTLE PATUXENT PARKWAY ALONG PERIMETER 1

** CREDIT FOR PROPOSED 3' HIGH BERM.

NOTE: THIS PLAN HAS BEEN PREPARED IN ACCORDANCE WITH THE PROVISIONS OF SECTION 16.124 OF THE HOWARD CO. LANDSCAPE MANUAL. FINANCIAL SURETY FOR THE REQUIRED LANDSCAPING HAS BEEN POSTED AS PART OF THE DPW DEVELOPER'S AGREEMENT IN THE AMOUNT OF $2,000.00

SCHEDULE B

PARKING LOT INTERNAL LANDSCAPING

• NUMBER OF PARKING SPACES	397
• NUMBER OF TREES REQUIRED @ 1/20 SPACES	20
• NUMBER OF TREES PROVIDED SHADE TREES	20+
OTHER TREES (2:1 SUB.)	
• PARKING ISLANDS REQUIRED @ 1/20 SPACES	20
• PARKING ISLANDS PROVIDED	20+

APPROVED
PLANNING BOARD
OF HOWARD COUNTY
DATE 4/23/97

APPROVED: HOWARD COUNTY DEPT. OF PLANNING & ZONING

[signature] CHIEF, DEVELOPMENT ENGINEERING DIVISION MK — DATE 6/16/97

[signature] CHIEF, DIVISION OF LAND DEVELOPMENT ~~& RESEARCH~~ — DATE 6/20/97

[signature] DIRECTOR — DATE 6/20/97

Date	No.	Revision Description

THE MALL IN COLUMBIA
PHASE I EXPANSION
TOWN CENTER
SECTION 2 AREA 1, 2/2

OWNER /DEVELOPER:
THE HOWARD RESEARCH & DEVELOPMENT CORP.
COLUMBIA MALL, INC.
10275 LITTLE PATUXENT PARKWAY
COLUMBIA, MARYLAND 21044 HOWARD COUNTY

DMW
Daft·McCune·Walker, Inc.
200 East Pennsylvania Avenue
Towson, Maryland 21286
(410) 296-3333
Fax 296-4705

A Team of Land Planners, Landscape Architects, Engineers, Surveyors & Environmental Professionals

5/22/97
Date
STATE OF MARYLAND — THOMAS H. RESPESS — REGISTERED LANDSCAPE ARCHITECT — NO. 268
No. 268
Professional Engr. No.

SUBDIVISION NAME	SECTION/AREA	LOT/PARCEL #
Col. T.C.	21 2/2	see gen note #6
PLAT# or LFFDP / BLOCK # / ZONE: 3594 & 44 / N.T.	TAX/ZONE MAP 30,36 / ELECT. DISTRICT 5TH	CENSUS TRACT 6054
WATER CODE	SEWER CODE	

TITLE: PHASE 1A LANDSCAPE/LIGHTING DETAILS

Des By	MJP	Scale	AS SHOWN	Proj. No.	95019B
Drn By	CLZ	Date	5/22/97	35 OF 35	
Chk By	THR	Approved			

SDP-97-109

Thu May 22 16:54:28 1997 c:\95019b\95019bJal