4	Rev. hse. & grd. lot 27,20	4-2-98

ADDRESS CHART

Lot #'s	Street Address
10	6901 Berry Wood Court
11	6909
12	6909
13	6908
14	6903 Mystic Woods Way
15	6907 " " "
16	6811 Roslyn Court
17	6814
18	6810
19	6806
20	6800
21	6815 Mystic Woods Way
22	6915
23	6923
24	6927
25	6920
26	6916
27	6912
28	6908
29	6904
30	6900 Berry Wood Court

MINIMUM LOT SIZE TABULATION

Lot Nº	Gross Area	Pipestem	Remaining	100 Yr. Floodplain	25% Slopes	Min. Lot Size
18	15581 SF	1172 SF	14389 SF	0	0	14389 SF
22	14999 SF	815 SF	14184 SF	0	0	14184 SF
23	15471 SF	1122 SF	14299 SF	0	0	14299 SF
24	15593 SF	1508 SF	14085 SF	0	0	14085 SF
26	22796 SF	2212 SF	20584 SF	0	0	20584 SF
27	22117 SF	1291 SF	20826 SF	0	0	20826 SF

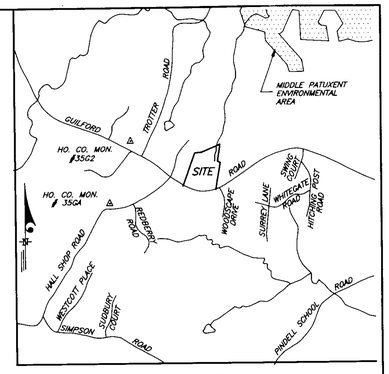

VICINITY MAP

SCALE 1"=2000'

GENERAL NOTES:

1. Subject property is zoned: R-20 per 10-18-93 Comprehensive Zoning Plan.
2. The total area included in this submission is : 7.714 Acres
3. The total number of lots included in this submission is: 21
4. Improvement to property : Single Family Detached
5. SHC Elevations shown are located at the property line
6. Department of Planning and Zoning reference file numbers are F-77-112, BA 80-08, BA 83-116, S-96-12, P96-03, WP 96-96, F-96-105, F-97-195
7. Utilities shown as existing are taken from approved Water and Sewer plans Contract 34-3926-D ; approved Road Construction plans F-96-105 , and actual field survey.
8. Any damage to county owned rights-of-way shall be corrected at the developer's expense.
9. All roadways are public and existing.
10. The existing topography was taken from Road Construction plans prepared by LDE, Inc., F-96-105.
11. The coordinates shown hereon are based upon the Howard County Geodetic Control which is based upon the Maryland State Plane Coordinate System — Howard County Monument Nos.: 35GA and 35GZ.
12. The contractor shall notify the Department of Public Works/ Division of Construction Inspection at (410) 313-1880 at least twenty-four (24) hours prior to the start of work.
13. The contractor shall notify "Miss Utility" at 1-800-257-7777 at least 48 hours prior to any excavation work.
14. For driveway entrance details, refer to Ho. Co. Design Manual Volume IV details R-6.03 and R-6.05, R-6.06
15. In accordance with Sections 128.A.1.b and .c of the Zoning Regulations, bay windows or chimneys not more than feet in width may project not more than 4 feet into any setbacks; porches and decks may project not more than 10 feet into the front or rear setbacks.
16. Stormwater Management is provided per F-96-105 Quantity Management is by Detention & Retention Quality Management is by Extended Detention & Retention
17. No clearing, grading or construction is permitted within the wetlands and stream buffers, or Forest conservation areas. Future exception of areas covered under 401 permit Nº 89-WQ-0100 and 404 Permit Nº 89-00137-5
18. Lots 17, 18 and 19 all require private individual Storm-water Management Systems (dry wells) to meet Qualitative Management Requirements
19. This plan has been prepared in accordance with the provisions of section 16.124 of the Howard County Code and the Landscape Manual. Financial surety for the required 9 trees in the amount of $900.00 shall be part of the builders grading permit application.

SPECIAL NOTES:

This plan is for house siting and lot grading only. Improvements shown within the rights-of-way on this S.D.P. are not to be used for construction. For construction, see approved Road Construction Plans F-96-105 and/or approved Water and Sewer Plans Contract # 34-3926-D

BENCHMARKS

Ho Co Monument 35GZ	Ho Co Monument 35GA
Stamped Conc. Mon. NW Corner of Inter of Guilford and Rotter Rd	Stamped Conc. Mon. N side of Hall Shop Rd past Red Berry Road

SHEET INDEX

DESCRIPTION	SHEET No.
SITE DEVELOPMENT PLAN	1&2
Sediment / Erosion Control	3-5

SUBDIVISION NAME: SCOTT ACRES			SECT/AREA 3	Lot No 10-30
PLAT No. ~~or Liber~~ 12412-12414	BLOCK No. 20	ZONE R-20	TAX/ZONE MAP 35	ELECT. DIST. 5TH	CENSUS TR. 6085
WATER CODE I-13		SEWER CODE G652500		

LEGEND

CONTOUR INTERVAL
EXISTING CONTOUR
PROPOSED CONTOUR
DIRECTION OF DRAINAGE
WALK OUT BASEMENT

SEWER
WATER
STORM DRAIN
EXISTING TREES TO REMAIN

VICTORIA

ZACHARY

NEWCASTLE

AVALON

MARQUETTE

REGENCY / ROSEMONT

VANDENBURG

DEVONSHIRE/YORKSHIRE

3	Rev. hse. & grd. Lot 29 to show As-Built Cond.	8.23.97
2	Rev. grd. & lower hse. lots 20,21,25-27	2.4.97
1	Added note 10 to General Note	10.31.96
Nº	REVISION	DATE

APPROVED: DEPARTMENT OF PLANNING & ZONING

CHIEF, DIVISION OF ENGINEERING	12/9/96 DATE
CHIEF, DIVISION OF LAND DEVELOPMENT	12/11/96 DATE
DIRECTOR	12/13/96 DATE

CLARK • FINEFROCK & SACKETT, INC.
ENGINEERS • PLANNERS • SURVEYORS
7135 MINSTREL WAY • COLUMBIA, MD 21045 • (410) 381-7500 BALTO • (301) 621-8100 WASH

DESIGNED DM JME	SITE DEVELOPMENT PLAN LOTS 10 THRU 18, 20 THRU 30 AND 33 SCOTT ACRES SECTION 3 TAX MAP 35 PO. PARCEL 353 5th ELECTION DISTRICT HOWARD COUNTY, MARYLAND	SCALE 1"=30'
DRAWN ZH 7/96		DRAWING 1 OF 5
CHECKED		JOB NO. 90-196
DATE	FOR: RYAN HOMES 11460 CRONRIDGE DRIVE, SUITE 128 OWINGS MILLS, MARYLAND 21117	FILE NO 90-196X

SDP 97-17

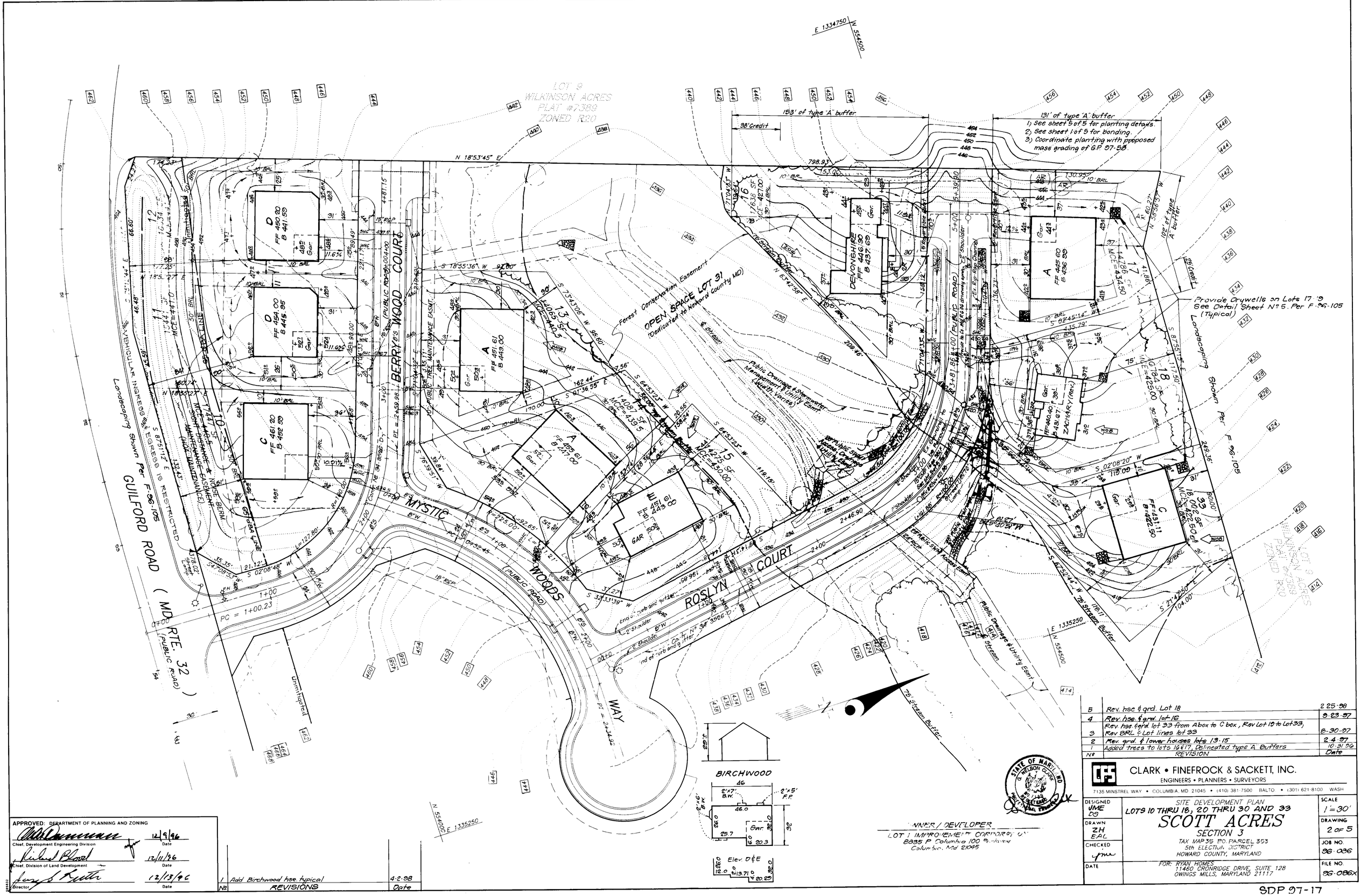

No	REVISION	Date
5	Rev. hse & grd. Lot 18	2-25-98
4	Rev. hse. & grd. lot 16	9-23-97
3	Rev. hse. & grd. lot 33 from A box to C box, Rev Lot 19 to Lot 33, Rev BRL & Lot lines lot 33	8-30-97
2	Rev. grd. & lower houses lots 13-15	2-4-97
1	Added trees to lots 16 & 17, Delineated type "A" Buffers	10-31-96

CLARK • FINEFROCK & SACKETT, INC.
ENGINEERS • PLANNERS • SURVEYORS
7135 MINSTREL WAY • COLUMBIA, MD 21045 • (410) 381-7500 BALTO • (301) 621-8100 WASH

DESIGNED: JME DS
DRAWN: ZH EAL
CHECKED: jme
DATE:

SITE DEVELOPMENT PLAN
LOTS 10 THRU 18, 20 THRU 30 AND 33
SCOTT ACRES
SECTION 3
TAX MAP 35 P.O. PARCEL 353
5th ELECTION DISTRICT
HOWARD COUNTY, MARYLAND

FOR: RYAN HOMES
11460 CRONRIDGE DRIVE, SUITE 128
OWINGS MILLS, MARYLAND 21117

SCALE: 1"=30'
DRAWING: 2 OF 5
JOB NO.: 96-086
FILE NO.: 96-086X

OWNER / DEVELOPER
LOT 1 IMPROVEMENT CORPORATION
8835 P Columbia 100 Parkway
Columbia, Md 21045

APPROVED: DEPARTMENT OF PLANNING AND ZONING

Chief, Development Engineering Division	12/9/96 Date
Chief, Division of Land Development	12/11/96 Date
Director	12/13/96 Date

No	REVISIONS	Date
1	Add Birchwood hse. typical	4-2-98

SDP 97-17

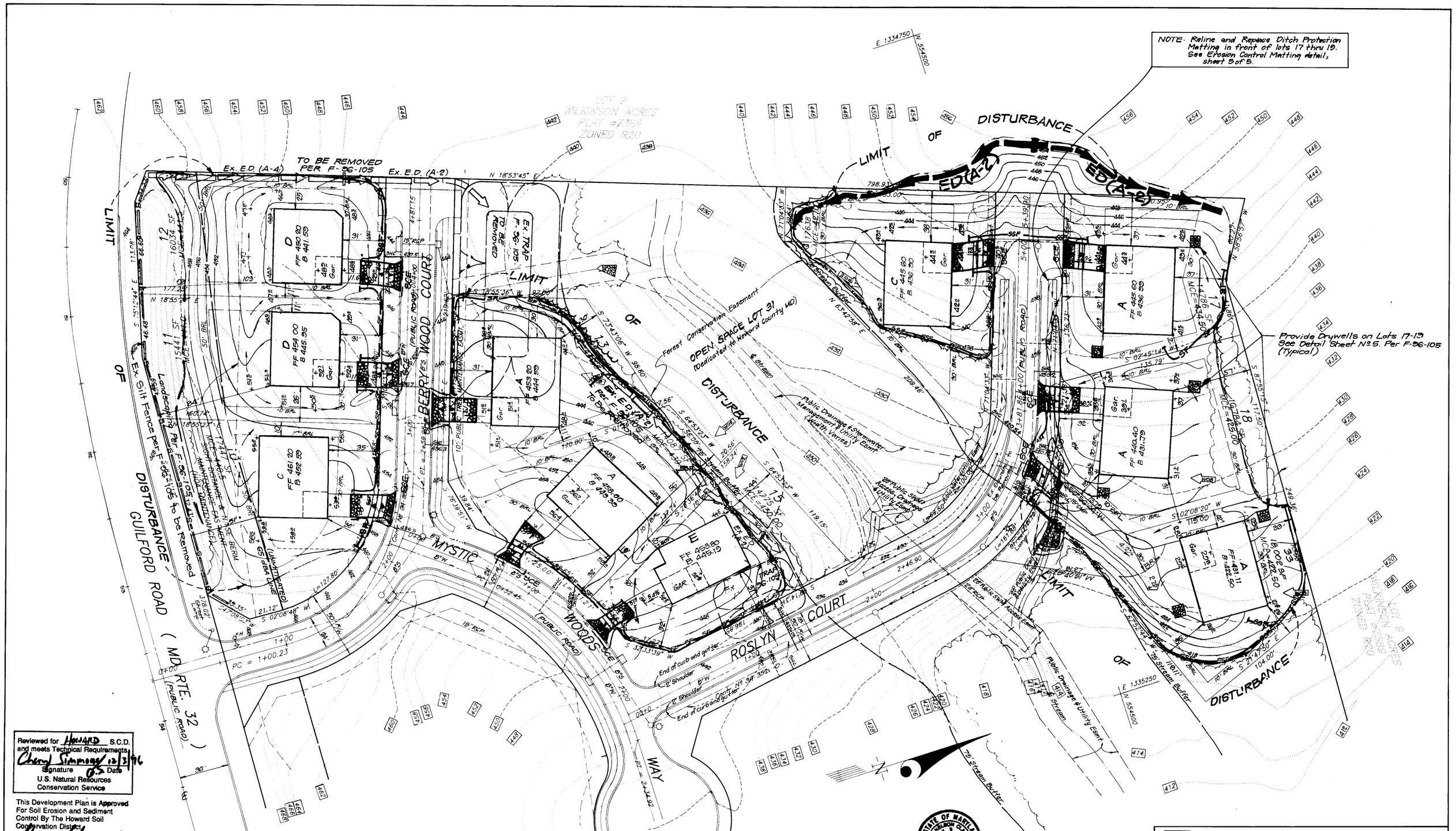

Reviewed for HOWARD S.C.D. and meets Technical Requirements

Cheryl Simmons 12/3/96
Signature Date
U.S. Natural Resources Conservation Service

This Development Plan is Approved For Soil Erosion and Sediment Control By The Howard Soil Conservation District

12/3/96
Approved Date

APPROVED: DEPARTMENT OF PLANNING AND ZONING

Chief, Development Engineering Division	12/9/96 Date
Chief, Division of Land Development	12/11/96 Date
Director	12/13/96 Date

DEVELOPER'S/BUILDERS CERTIFICATE

"I/We certify that all development and construction will be done according to this plan of development and plan for erosion and sediment control and that all responsible personnel involved in the construction project will have a Certificate of Attendance at a Dept. of the Environment Approved Training Program for the Control of Sediment and Erosion before beginning the project. I also authorize periodic on-site inspection by Howard Soil Conservation District or their authorized agencies, as are deemed necessary."

Signature of Developer/Builder — 8-16-96 Date

ENGINEER'S CERTIFICATE

I hereby certify that this plan for Erosion and Sediment Control represents a practical and workable plan based on my personal knowledge of the site conditions and that it was prepared in accordance with the requirements of the Howard Soil Conservation District.

G. Nelson Clark — 8-16-96 Date

STATE OF MARYLAND — G. NELSON CLARK — No. 7125 — PROFESSIONAL ENGINEER

OWNER / DEVELOPER
LOT 1 IMPROVEMENT CORPORATION
8835 P Columbia 100 Parkway
Columbia, Md. 21045

CLARK • FINEFROCK & SACKETT, INC.
ENGINEERS • PLANNERS • SURVEYORS
7135 MINSTREL WAY • COLUMBIA, MD. 21045 • (410) 381-7500 – BALTO. • (301) 621-8100 – WASH.

DESIGNED ZAL	SEDIMENT & EROSION CONTROL PLAN LOTS 10 THRU 18, 20 THRU 30 AND 33	SCALE 1"=30'
DRAWN BAL	SCOTT ACRES SECTION 3	DRAWING 4 OF 5
CHECKED ZAL	TAX MAP 35 P.O. PARCEL 353 5th ELECTION DISTRICT HOWARD COUNTY, MARYLAND	JOB NO. 96-086
DATE	FOR: RYAN HOMES 11480 CRONRIDGE DRIVE, SUITE 128 OWINGS MILLS, MARYLAND 21117	FILE NO. 96-086

SDP 97-17

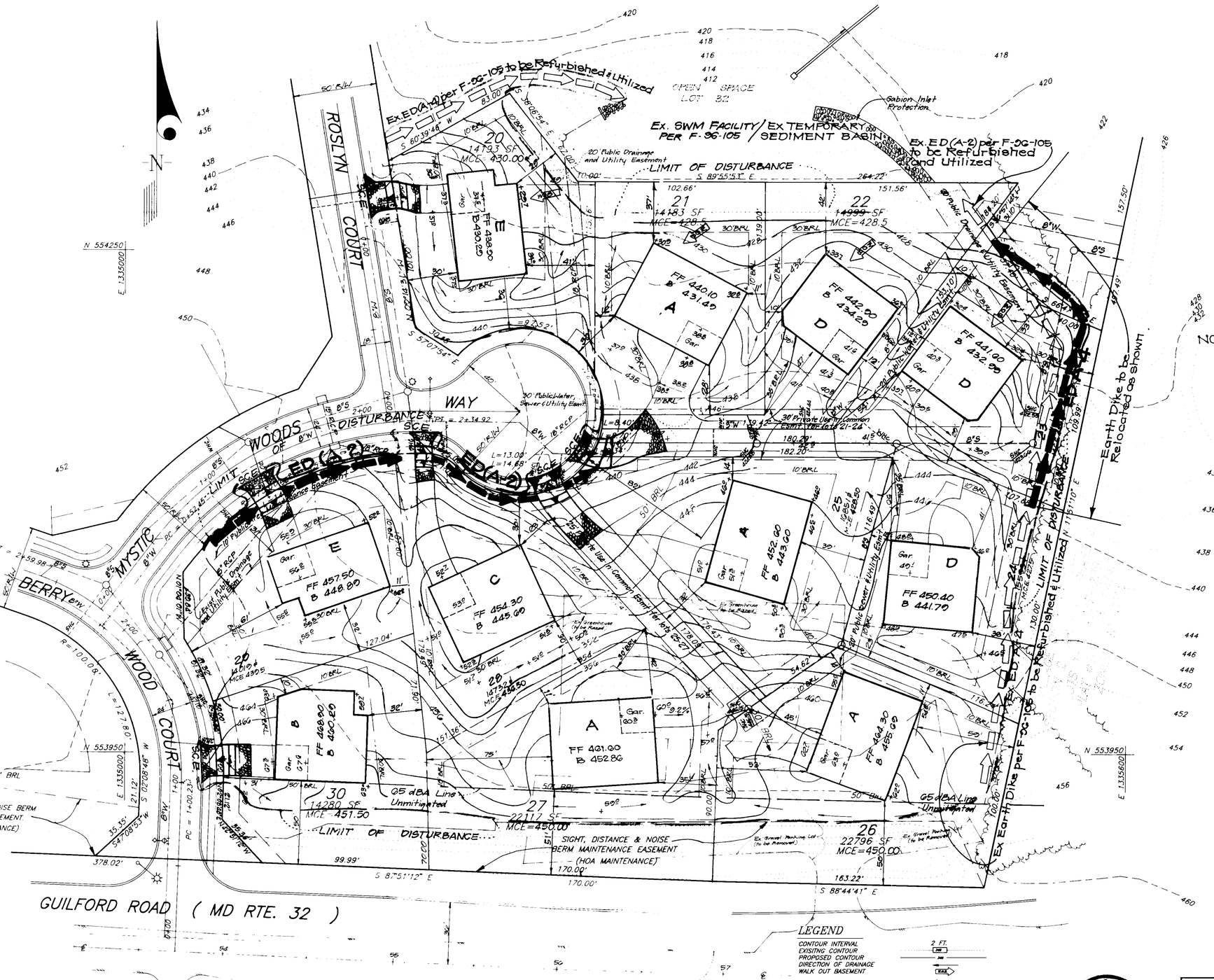

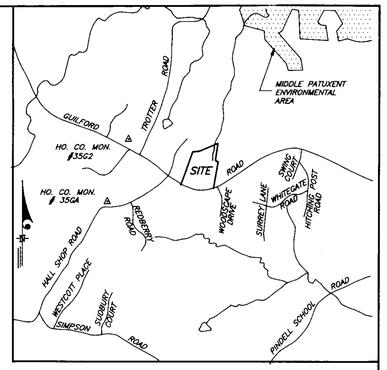

VICINITY MAP
SCALE 1" = 2000'

NOTES:
1. The existing Temporary Sediment Basin is to be utilized to provide sediment control for lots 20-30.
2. Sediment Trap to be maintained per construction sequence schedule and details on Sheets 10 & 11 of F-96-105
3. Drainage Area = 4.1 Ac.
4. The builder is responsible for the expense of cleaning all sediment from the receiving Temporary Sediment Basin generated from implementation of this plan.

EXISTING TEMPORARY SEDIMENT BASIN DATA
(Per F-96-105)

Total Drainage Area : 4.47 Ac.
Volume Required : 16,092 cf
Volume Provided : 33,377 cf
Riser Crest Elevation : 416.0
Permanent Pool Elevation : 412.6
Basin Cleanout Elevation : 413.5
Spillway Barrel Length : 80'
Barrel Diameter : 24"
Riser Diameter : 48"
Trash Rack Diameter : 4'-8"

LEGEND

CONTOUR INTERVAL
EXISTING CONTOUR
PROPOSED CONTOUR
DIRECTION OF DRAINAGE
WALK OUT BASEMENT
SEWER
WATER
STORM DRAIN
EXISTING TREES TO REMAIN
Silt Fence
Super Silt Fence
Ex. Silt Fence
Ex. Earth Dike
Stabilized Construction Entrance

Reviewed for HOWARD S.C.D. and meets Technical Requirements
Cheryl Simpson 12/3/96
Signature Date
U.S. Natural Resources Conservation Service

THIS DEVELOPMENT PLAN IS APPROVED FOR SOIL EROSION AND SEDIMENT CONTROL BY THE HOWARD SOIL CONSERVATION DISTRICT.
Approved 12/3/96

APPROVED: DEPARTMENT OF PLANNING & ZONING
CHIEF, DEVELOPMENT ENGINEERING DIVISION — DATE 12/9/96
CHIEF, DIVISION OF LAND DEVELOPMENT — DATE 12/11/96
DIRECTOR — DATE 12/13/96

DEVELOPER'S/BUILDER'S CERTIFICATE
"I/We certify that all development and construction will be done according to this plan of development and plan for sediment and erosion control and that all responsible personnel involved in the construction project will have a Certificate of Attendance at a Department of the Environment Approved Training Program for the Control of Sediment and Erosion before beginning the project. I also authorize periodic on-site inspection by the Howard Soil Conservation District or their authorized agents, as are deemed necessary".
NAME — DATE 8-16-96

ENGINEER'S CERTIFICATE
I hereby certify that this plan for Sediment and Erosion Control represents a practical and workable plan based on my personal knowledge of the site conditions and that it was prepared in accordance with the requirements of the Howard Soil Conservation District.
G. NELSON CLARK — DATE 8-16-96

STATE OF MARYLAND — G. NELSON CLARK — No. 8113 — PROFESSIONAL ENGINEER

CLARK • FINEFROCK & SACKETT, INC.
ENGINEERS • PLANNERS • SURVEYORS
7135 MINSTREL WAY • COLUMBIA, MD 21045 • (410) 381-7500 – BALTO • (301) 621-8100 – WASH.

DESIGNED ZAL	SEDIMENT AND EROSION CONTROL PLAN LOTS 10 THRU 18, 20 THRU 30 AND 33 SCOTT ACRES SECTION 3 TAX MAP 35 P.O. PARCEL 353 5th ELECTION DISTRICT HOWARD COUNTY, MARYLAND	SCALE 1" = 30'
DRAWN ZH / PS		DRAWING 3 OF 5
CHECKED ZAL		JOB NO. 96-080
DATE	FOR: RYAN HOMES 11460 CRONRIDGE DRIVE, SUITE 128 OWINGS MILLS, MARYLAND 21117	FILE NO. 96-080SE

SDP 97-17

DETAIL 33 - SUPER SILT FENCE

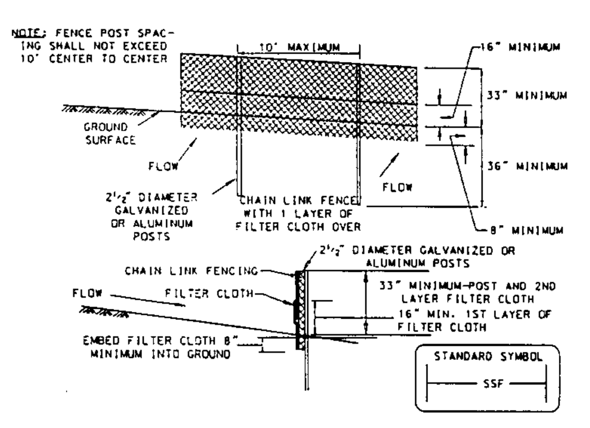

Construction Specifications

Fencing shall be 42 inches in height and constructed in accordance with the latest Maryland State Highway Details for Chain Link Fencing. The specification for a 6 foot fence shall be used, substituting 42 inch fabric and 6 foot length posts.

1. The poles do not need to set in concrete.
2. Chain link fence shall be fastened securely to the fence posts with wire ties or staples.
3. Filter cloth shall be fastened securely to the chain link fence with ties spaced every 24" at the top and mid section.
4. Filter cloth shall be embedded a minimum of 6" into the ground.
5. When two sections of filter cloth adjoin each other, they shall be overlapped by 6" and folded.
6. Maintenance shall be performed as needed and silt buildups removed when "bulges" develop in the silt fence.

U.S. DEPARTMENT OF AGRICULTURE SOIL CONSERVATION SERVICE	PAGE H - 26 - 3	MARYLAND DEPARTMENT OF ENVIRONMENT WATER MANAGEMENT ADMINISTRATION

DETAIL 24 - STABILIZED CONSTRUCTION ENTRANCE

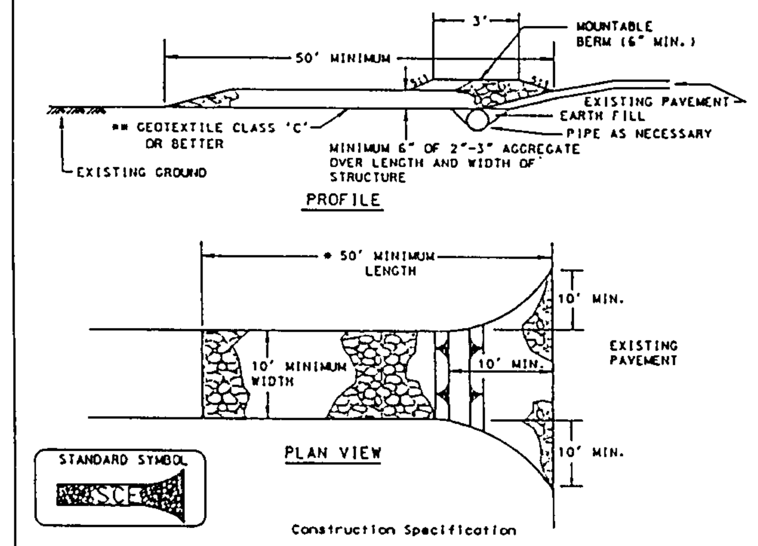

Construction Specification

1. Length - minimum of 50' (*30' for single residence lot).
2. Width - 10' minimum, should be flared at the existing road to provide a turning radius.
3. Geotextile fabric (filter cloth) shall be placed over the existing ground prior to placing stone. **The plan approval authority may not require single family residences to use geotextile.
4. Stone - crushed aggregate (2" to 3") or reclaimed or recycled concrete equivalent shall be placed at least 6" deep over the length and width of the entrance.
5. Surface Water - all surface water flowing to or diverted toward construction entrances shall be piped through the entrance, maintaining positive drainage. Pipe installed through the stabilized construction entrance shall be protected with a mountable berm with 5:1 slopes and a minimum of 6" of stone over the pipe. Pipe has to be sized according to the drainage. When the SCE is located at a high spot and has no drainage to convey a pipe will not be necessary. Pipe should be sized according to the amount of runoff to be conveyed. A 6" minimum will be required.
6. Location - A stabilized construction entrance shall be located at every point where construction traffic enters or leaves a construction site. Vehicles leaving the site must travel over the entire length of the stabilized construction entrance.

U.S. DEPARTMENT OF AGRICULTURE SOIL CONSERVATION SERVICE	PAGE F - 17 - 3	MARYLAND DEPARTMENT OF ENVIRONMENT WATER MANAGEMENT ADMINISTRATION

DETAIL 22 - SILT FENCE

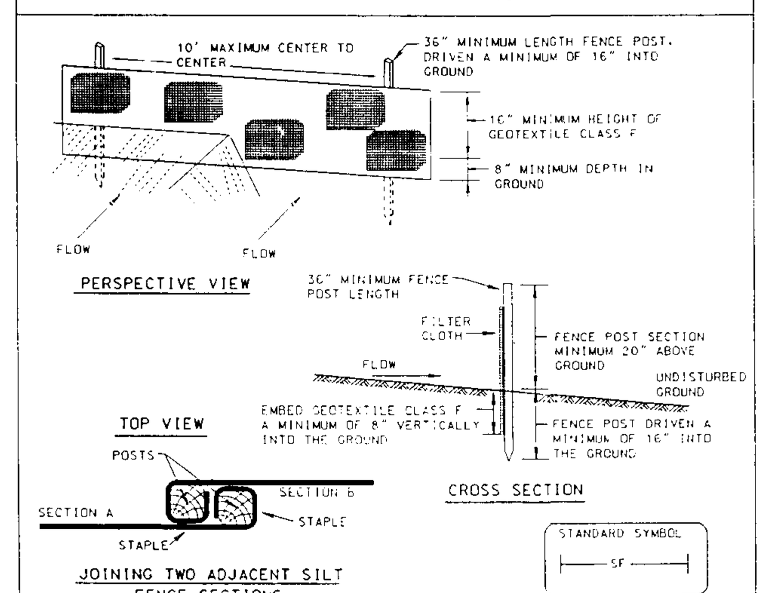

Construction Specifications

1. Fence posts shall be a minimum of 36" long driven 16" minimum into the ground. Wood posts shall be 1½" x 1½" square (minimum) cut, or 1¾" diameter (minimum) round and shall be of sound quality hardwood. Steel posts will be standard T or U section weighting not less than 1.00 pond per linear foot.
2. Geotextile shall be fastened securely to each fence post with wire ties or staples at top and mid-section and shall meet the following requirements for Geotextile Class F:

Tensile Strength	50 lbs/in (min.)	Test: MSMT 509
Tensile Modulus	20 lbs/in (min.)	Test: MSMT 509
Flow Rate	0.3 gal ft²/ minute (max.)	Test: MSMT 322
Filtering Efficiency	75% (min.)	Test: MSMT 322

3. Where ends of geotextile fabric come together, they shall be overlapped, folded and stapled to prevent sediment bypass.
4. Silt Fence shall be inspected after each rainfall event and maintained when bulges occur or when sediment accumulation reached 50% of the fabric height.

U.S. DEPARTMENT OF AGRICULTURE SOIL CONSERVATION SERVICE	PAGE E - 15 - 3	MARYLAND DEPARTMENT OF ENVIRONMENT WATER MANAGEMENT ADMINISTRATION

PERMANENT SEEDING NOTES

APPLY TO GRADED OR CLEARED AREAS NOT SUBJECT TO IMMEDIATE FURTHER DISTURBANCE WHERE A PERMANENT LONG-LIVED VEGETATIVE COVER IS NEEDED.

SEEDBED PREPARATION: Loosen upper three inches of soil by raking, discing or other acceptable means before seeding, if not previously loosened.

SOIL AMENDMENTS: In lieu of soil test recommendations, use one of the following schedules:

1) Preferred–Apply 2 tons per acre dolomitic limestone (92 lbs/100 sq.ft.) and 600 lbs per acre 10–10–10 fertilizer (14 lbs./1000 sq.ft.) before seeding. Harrow or disc into upper three inches of soil. At the time of seeding, apply 400 lbs. per acre 30–0–0 ureaform fertilizer (9 lbs/1000 sq.ft.)
2) Acceptable–Apply 2 tons per acre dolomatic limestone (92 lbs/1000 sq.ft.) and apply 1000 lbs. per acre 10–10–10– fertilizer (23 lbs./1000 sq.ft.) before seeding. Harrow or disc into upper three inches of soil.

SEEDING: For the periods March 1 thru April 30, and August 1 thru October 15, seed with 60 lbs. per acre (1.4 lbs/1000 sq.ft.) of Kentucky 31 Tall Fescue. For the period May 1 thru July 31, seed with 60 lbs. Kentucky 31 Tall Fescue per acre and 2 lbs. per acre (.05 lbs./1000 sq.ft.) of weeping lovegrass. During the period of October 16 thru February 28, protect site by: Option (1) 2 tons per acre well anchored straw mulch and seed as soon as possible in the spring. Option (2) Use sod. Option (3) Seed with 60 lbs/acre Kentucky 31 Tall Fescue and mulch with 2 tons/acre well anchored straw.

MULCHING: Apply 1 1/2 to 2 tons per acre (70 to 90 lbs/1000 sq. ft.) of unrotted small grain straw immediately after seeding. Anchor mulch immediately after application using mulch anchoring tool or 218 gallons per acre (5 gal/1000 sq.ft.) of emulsified asphalt on flat areas. On slopes 8 feet or higher, use 348 gallons per acre (8 gal/1000 sq.ft.) for anchoring.

MAINTENANCE: Inspect all seeded areas and make needed repairs, replacements and reseedings.

TEMPORARY SEEDING NOTES

SEEDBED PREPARATION: Loosen upper three inches of soil by raking, discing or other acceptable means before seeding, if not previously loosened.

SOIL AMENDMENTS: Apply 600 lbs. per acre 10–10–10 fertilizer (14 lbs./1000 sq.ft).

SEEDING: For periods March 1 thru April 30 and from August 15 thru November 15, seed with 2 1/2 bushel per acre of annual rye (3.2 lbs./1000 sq.ft.) For the period May 1 thru August 14, seed with 3 lbs. per acre of weeping lovegrass (.07 lbs./1000 sq.ft.). For the period November 1 thru February 28, protect site by applying 2 tons per acre of well anchored straw mulch and seed as soon as possible in the spring, or use sod.

MULCHING: Apply 1 1/2 to 2 tons per acre (70 to 90 lbs./1000 sq.ft.) of unrotted small grain straw immediately after seeding. Anchor mulch immediately after application using mulch anchoring tool or 218 gallons per acre (5 gal/1000 sq.ft.) of emulsified asphalt on flat areas. On slopes 8 feet or higher, use 348 gallons per acre (8 gal/1000 sq.ft.) for anchoring.

REFER TO THE 1994 MARYLAND STANDARDS AND SPECIFICATIONS FOR SOIL EROSION AND SEDIMENT CONTROL FOR RATE AND METHODS NOT COVERED.

SEDIMENT AND EROSION CONTROL NOTES

1. A minimum of 48 hours notice must be given to the Howard County Department of Inspections, Licenses and Permits, Sediment Control Division prior to the start of any construction (313–1855).
2. All vegetative and structural practices are to be installed according to the provisions of this plan and are to be in conformance with the 1994 MARYLAND STANDARDS AND SPECS. FOR SOIL EROSION AND SEDIMENT CONTROL and revisions thereto.
3. Following initial soil disturbance or redisturbance, permanent or temporary stabilization shall be completed within:
   a) 7 calendar days for all perimeter sediment control stuctures, dikes, perimeter slopes and all slopes greater than 3:1
   b) 14 days as to all other disturbed or graded areas on the project site.
4. All sediment traps/basins shown must be fenced and warning signs posted around their perimeters in accordance with Vol.1, Chapter 7, of the HOWARD COUNTY DESIGN MANUAL, Storm Drainage.
5. All disturbed areas must be stabilized within the time period specified above, in accordance with the 1994 MARYLAND STANDARDS AND SPECIFICATIONS FOR SOIL EROSION AND SEDIMENT CONTROL for permanent seedings, sod, temporary seeding and mulching (Sec G). Temporary stabilization with mulch alone can only be done when recommended seeding dates do not allow for proper germination and establishment of grasses.
6. All sediment control structures are to remain in place and are to be maintained in operative condition until permission for their removal has been obtained from the Howard County Sediment Control Inspector.
7. SITE ANALYSIS:

Total Area of Site:	7.71 Ac.
Area Disturbed:	6.70 Ac.
Area to be roofed or paved:	1.41 Ac.
Area to be vegetatively stabilized:	5.29 Ac.
Total Cut:	8263 c.y.
Total Fill:	9147 c.y.
Offsite Waste/Borrow Area Location:	*

8. Any sediment control practice which is disturbed by grading activity for placement of utilities must be repaired on the same day of disturbance.
9. Additional sediment control must be provided, if deemed necessary by the Howard County DPW Sediment Control Inspector.
10. On all sites with disturbed areas in excess of 2 acres, approval of the inspection agency shall be requested upon completion of installation of perimeter erosion and sediment controls, but before proceeding with any other earth disturbance or grading. Other building or grading inspection approvals may not be authorized until this initial approval by the inspection agency is made.
11. Trenches for the construction of utilities is limited to three pipe lengths or that which shall be back–filled and stabilized within one working day, whichever is shorter.
12. The total amount of silt fence = 615 LF
    Super Silt Fence 1175 LF

* It is the responsibility of the contractor to identify the spoil/borrow site and notify and gain approval from the sediment control inspector of the site and it's grading permit number at the time of construction.

CONSTRUCTION SEQUENCE:

	NO. OF DAYS
1. Obtain grading permit.	7
2. Install tree protection fence.	7
3. Install sediment and erosion control devices and stabilize.	14
4. Excavate for foundations, rough grade and temporarily stabilize.	30
5. Construct structures, sidewalks and driveways.	60
6. Final grade and stabilize in accordance with Stds. and Specs.	14
7. Upon approval of the sediment control inspector, remove sediment and erosion control devices and stabilize.	7

NOTE: The builder is responsible for cleaning all sediment from the receiving Temporary Sediment Basin generated from implementation of this plan.

21.0 STANDARDS AND SPECIFICATIONS FOR TOPSOIL

Definition

Placement of topsoil over a prepared subsoil prior to establishment of permanent vegetation.

Purpose

To provide a suitable soil medium for vegetable growth. Soils of concern have low moisture content, low nutrient levels, low pH, materials toxic to plants, and/or unacceptable soil gradation.

Conditions Where Practice Applies

I. This practice is limited to areas having 2:1 or flatter slopes where:

a. The texture of the exposed subsoil/parent material is not adequate to produce vegetative growth.

b. The soil material is so shallow that the rooting zone is not deep enough to support plants or furnish continuing supplies of moisture and plant nutrients.

c. The original soil to be vegetated contains material toxic to plant growth.

d. The soil is so acidic that treatment with limestone is not feasible.

II. For the purpose of these Standards and Specifications, areas having slopes steeper than 2:1 require special consideration and design for adequate stabilization. Areas having slopes steeper than 2:1 shall have the appropriate stabilization shown on the plans.

Construction and Material Specifications

I. Topsoil salvaged from the existing site may be used provided that it meets the standards as set forth in these specifications. Typically, the depth of topsoil to be salvaged for a given soil type can be found in the representative soil profile section in the Soil Survey published by USDA–SCS in cooperation with Maryland Agricultural Experimental Station.

II. Topsoil Specifications – Soil to be used as topsoil must meet the following:

i. Topsoil shall be a loam, sandy loam, clay loam, silt loam, sandy clay loam, loamy sand. Other soils may be used if recommended by an agronomist or a soil scientist and approved by the appropriate approval authority. Regardless, topsoil shall not be a mixture of contrasting textured subsoils and shall contain less than 5% by volume of cinders, stones, slag, coarse fragments, gravel, sticks, roots, trash, or other materials larger that 1 and 1/2" in diameter.

ii. Topsoil must be free of plants or plant parts such as Bermuda grass, quackgrass, Johnsongrass, nutsedge, poison ivy, thistle, or others as specified.

iii. Where the subsoil is either highly acidic or composed of heavy clays, ground limestone shall be spread at the rate of 4–8 tons/acre (200–400 pounds per 1,000 square feet) prior to the placement of topsoil. Lime shall be distributed uniformly over designated areas and worked into the soil in conjunction with tillage operations as described in the following procedures.

II. For sites having disturbed areas under 5 acres:

i. Place topsoil (if required) and apply soil amendments as specified in 20.0 Vegetative Stabilization – Section I – Vegetative Stabilization Methods and Materials.

V. Topsoil Application

i. When topsoiling, maintain needed erosion and sediment control practices such as diversions, Grade Stabilization Structures, Earth Dikes, Slope Silt Fence and Sediment Traps and Basins.

ii. Grades on the areas to be topsoiled, which have been previously established, shall be maintained, albeit 4" – 8" higher in elevation.

iii. Topsoil shall be uniformly distributed in a 4" – 8" layer and lightly compacted to a minimum thickness of 4". Spreading shall be performed in such a manner that sodding or seeding can proceed with a minimum of additional soil preparation and tillage. Any irregularities in the surface resulting from topsoiling or other operations shall be corrected in order to prevent the formation of depressions or water pockets.

iv. Topsoil shall not be place while the topsoil or subsoil is in a frozen or muddy condition, when the subsoil is excessively wet or in a condition that may otherwise be detrimental to proper grading and seedbed preparation.

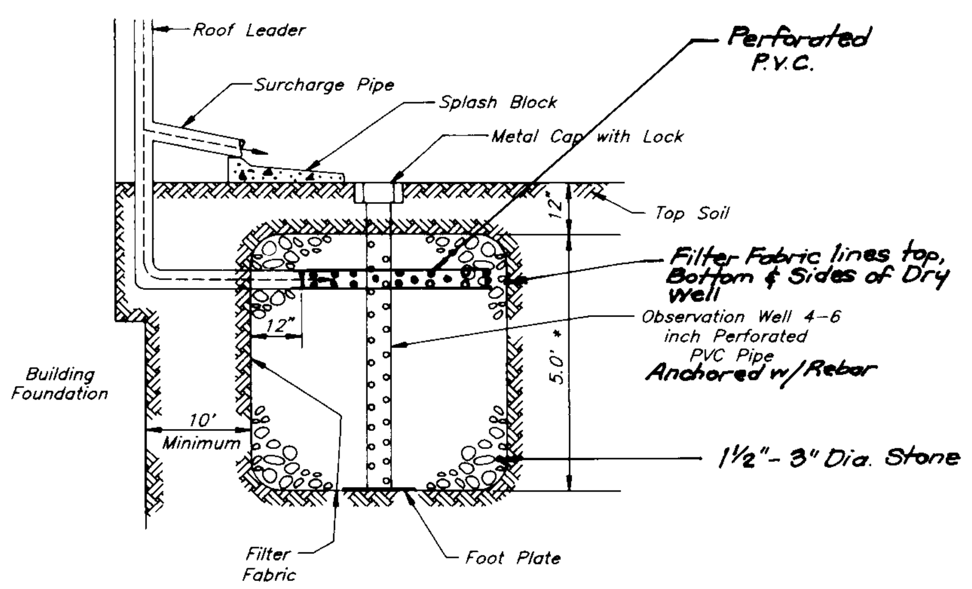

PROFILE
NO SCALE

DRY WELL CHART				
LOT NO.	AREA REQUIRED	AREA PROVIDED	NO. OF WELLS	SIZE OF WELLS
17	312 SQ. FT.	338 SQ. FT.	2	6.5'x6.5'x4'
18	312 SQ. FT.	338 SQ. FT.	2	6.5'x6.5'x4'
19	312 SQ. FT.	338 SQ. FT.	2	6.5'x6.5'x4'

TYPICAL DRY WELL CROSS SECTION

DETAIL 30 - EROSION CONTROL MATTING

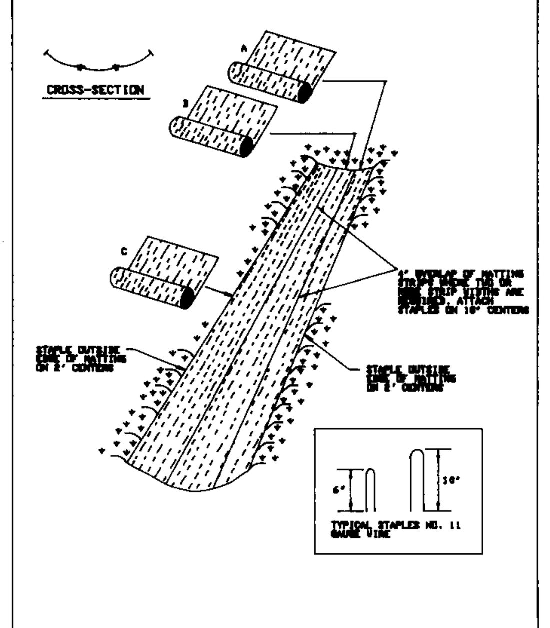

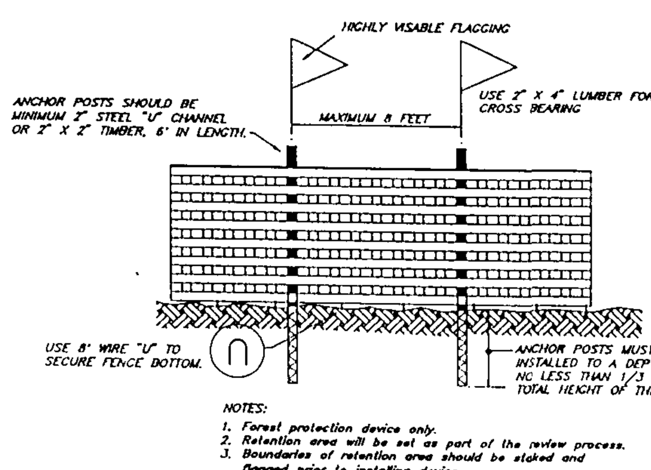

NOTES:
1. Forest protection device only.
2. Retention area will be set as part of the review process.
3. Boundaries of retention area should be staked and flagged prior to installing device.
4. Root damage should be avoided.
5. Protection signage may also be used.
6. Device should be maintained throughout construction.

BLAZE ORANGE PLASTIC MESH
TYPICAL TREE PROTECTION FENCE DETAIL
NO SCALE

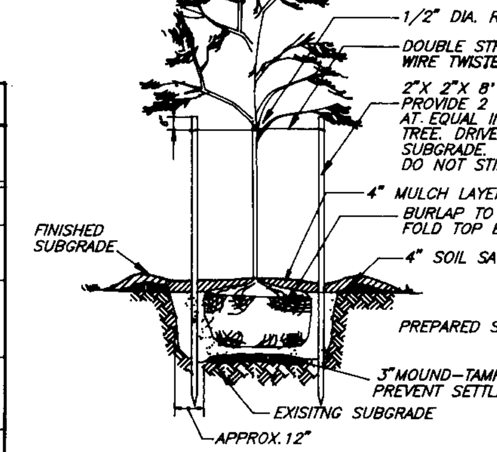

PLANTING DETAIL
NO SCALE

SCHEDULE A PERIMETER LANDSCAPE EDGE		
Category	Adjacent to Roadways	Adjacent to Perimeter Properties
Landscape Type		A
Linear Feet of Perimeter		386'
Credit for Existing Vegetation (Yes, No, Linear Feet) (Describe below if needed)		63'
Credit for Wall, Fence or Berm (Yes, NO, Linear Feet) (Describe below if needed)		–
Number of Plants Required Shade Trees Evergreen Trees Shrubs		(BASED ON 323) 5
Number of Plants Provided Shade Trees Evergreen trees Other Trees (2:1 substitution) Shrubs (10:1 substitution) (Describe plant substitution credits below if needed)		5

PLANT LIST

KEY	QNTY	PLANT NAME	SIZE	REMARKS
AR	5	ACER RUBRUM Red Maple	2½"-3"C	B&B

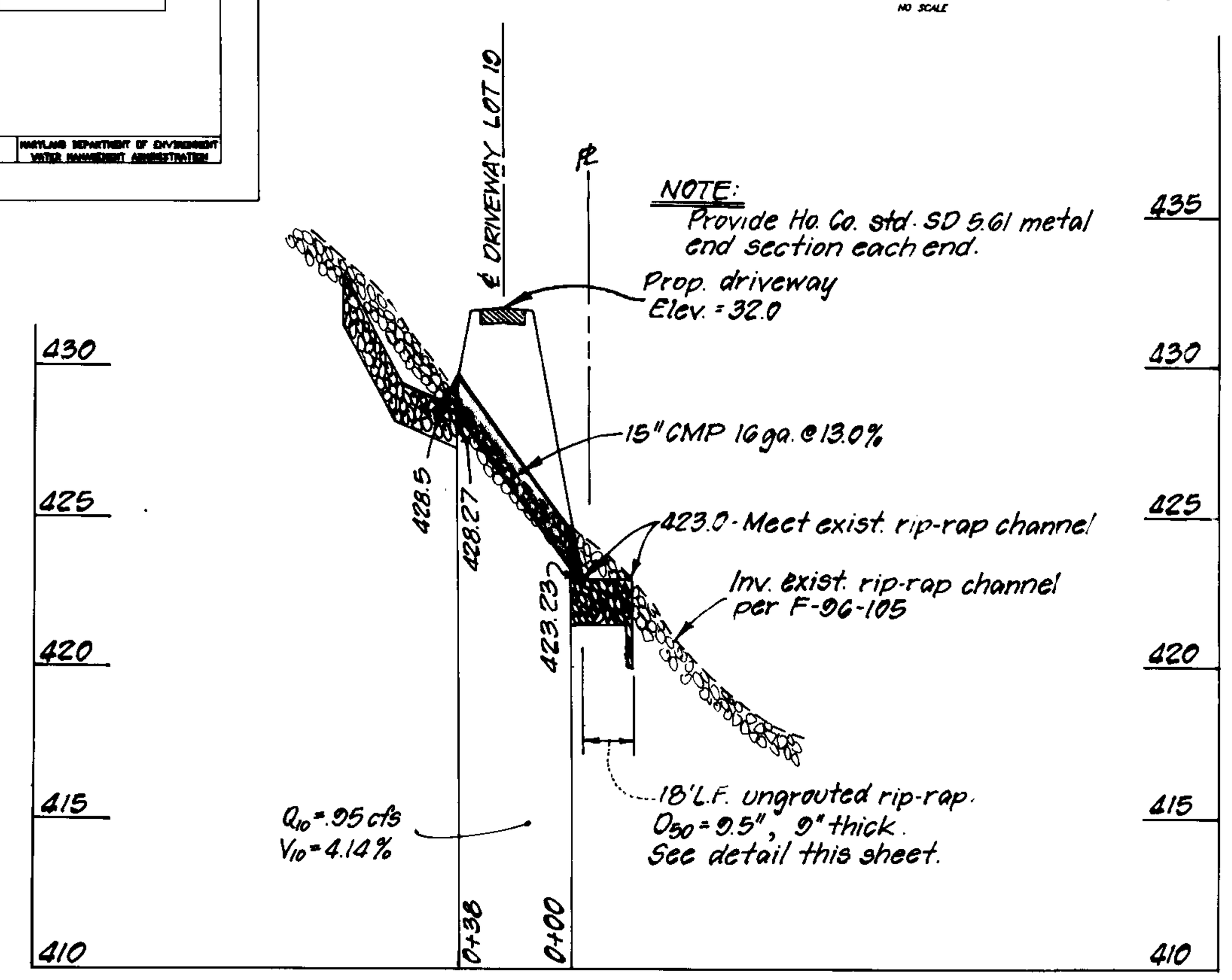

PROFILE - DRIVEWAY CULVERT LOT 19

Scale = Horiz: 1"=50' Vert: 1"=5'

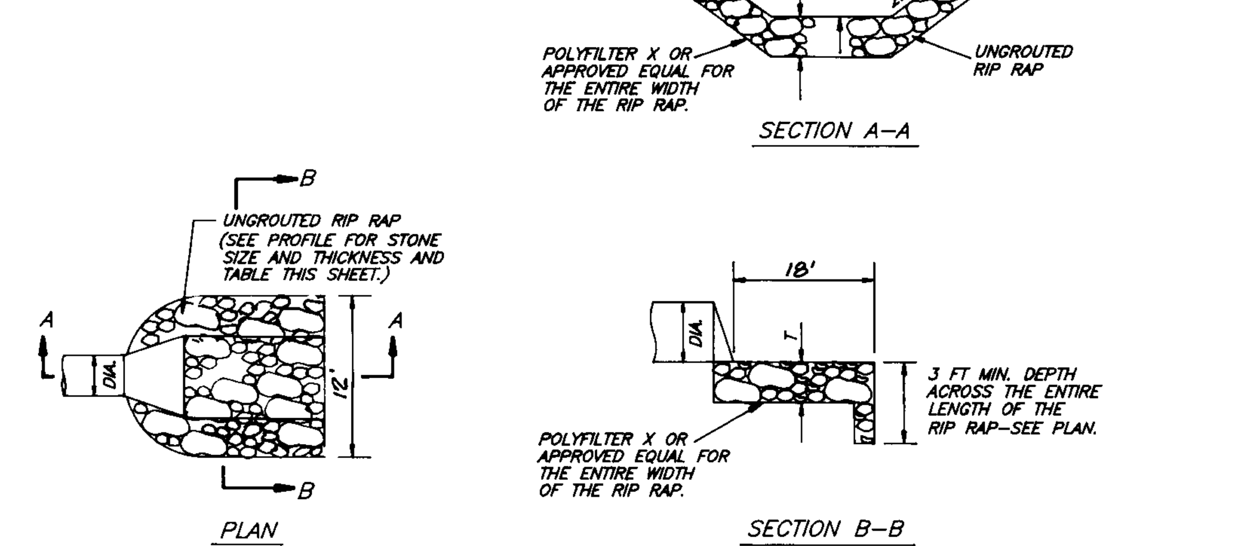

UNGROUTED RIP RAP DETAILS
NO SCALE

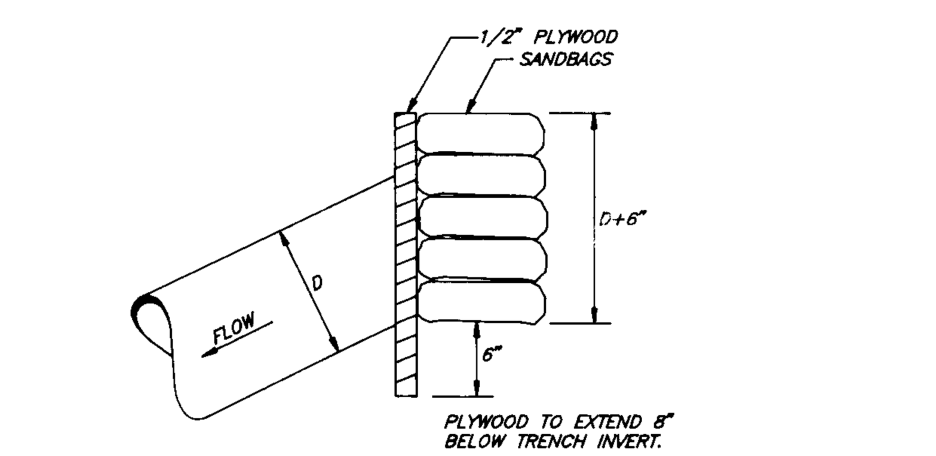

CULVERT BLOCKING DETAIL
NO SCALE

OWNER/DEVELOPER

LOT I IMPROVEMENT CORPORATION
8835 P Columbia 100 Parkway
Columbia, Maryland 21045

Reviewed for HOWARD S.C.D. and meets Technical Requirements
Signature: (signature) /cs. Date: 12/3/96
U.S. Natural Resources Conservation Service

THIS DEVELOPMENT PLAN IS APPROVED FOR SOIL EROSION AND SEDIMENT CONTROL BY THE HOWARD SOIL CONSERVATION DISTRICT.

(signature) 12/3/96
Approved

DEVELOPER'S/BUILDER'S CERTIFICATE

"I/We certify that all development and construction will be done according to this plan of development and plan for sediment and erosion control and that all responsible personnel involved in the construction project will have a Certificate of Attendance at a Department of the Environment Approved Training Program for the Control of Sediment and Erosion before beginning the project. I also authorize periodic on–site inspection by the Howard Soil Conservation District or their authorized agents, as are deemed necessary".

NAME: (signature) DATE: 8-16-96

ENGINEER'S CERTIFICATE

I hereby certify that this plan for Sediment and Erosion Control represents a practical and workable plan based on my personal knowledge of the site condtions and that it was prepared in accordance with the requirements of the Howard Soil Conservation District.

(signature) 8-16-96
G. Nelson Clark — Date

STATE OF MARYLAND — G. NELSON CLARK — NO. 7139 — PROFESSIONAL ENGINEER

APPROVED: DEPARTMENT OF PLANNING AND ZONING

(signature) Chief, Development Engineering Division	12/9/96 Date
(signature) Chief, Division of Land Development	12/11/96 Date
(signature) Director	12/13/96 Date

585632

Nº	REVISION	DATE
1	Added planting detail, plant list	10-31-96

CLARK • FINEFROCK & SACKETT, INC.
ENGINEERS • PLANNERS • SURVEYORS
7135 MINSTREL WAY • COLUMBIA, MD 21045 • (410) 381-7500 – BALTO. • (301) 621-8100 – WASH.

DESIGNED JME	SEDIMENT AND EROSION CONTROL PLAN LOTS 10 THRU 18, 20 THRU 30 AND 33	SCALE 1"=30'
DRAWN ZH / PS	SCOTT ACRES SECTION 3	DRAWING 5 of 5
CHECKED ZAL	TAX MAP 35 P.O. PARCEL 353 5th ELECTION DISTRICT HOWARD COUNTY, MARYLAND	JOB NO. 96-086
DATE	FOR: RYAN HOMES 11460 CRONRIDGE DRIVE, SUITE 128 OWINGS MILLS, MARYLAND 21117	FILE NO. 96-086SE

SDP 97-17