GENERAL NOTES

1. ALL CONSTRUCTION SHALL BE IN ACCORDANCE WITH THE LATEST STANDARDS AND SPECIFICATIONS OF HOWARD COUNTY, PLUS MSHA STANDARDS AND SPECIFICATIONS, IF APPLICABLE.
2. THE CONTRACTOR SHALL NOTIFY THE DEPARTMENT OF PUBLIC WORKS/ CONSTRUCTION INSPECTION DIVISION AT (410)-313-1880 AT LEAST FIVE (5) WORKING DAYS PRIOR TO THE START OF WORK.
3. THE CONTRACTOR SHALL NOTIFY "MISS UTILITY" AT 1-800-257-7777 AT LEAST 48 HOURS PRIOR TO ANY EXCAVATION WORK.
4. PROJECT BACKGROUND:

   LOCATION: TAX MAP 46, PARCEL 224, 5TH ELECTION DISTRICT.
   ZONING: B-2
   AREA: 2.709 AC. (LIBER 2542, FOLIO 0063)
   DPZ FILES: SDP-85-124
   BA 95-61E - SPECIAL EXCEPTION ALLOWING THE ESTABLISHMENT OF A GASOLINE SERVICE STATION WITH A CONVENIENCE STORE - APPROVED ON JANUARY 31, 1996, SUBJECT TO 7 CONDITIONS PUT FORTH IN THE RECOMMENDATION OF THE PLANNING BOARD.

5. BOUNDARY INFORMATION IS BASED ON A SITE DEVELOPMENT PLAN FOR FULTON STATION PREPARED BY FISHER, COLLINS & CARTER, INC. ON JANUARY 30, 1985.
6. HORIZONTAL AND VERTICAL DATUM SHOWN IS BASED ON NAD'83 HOWARD COUNTY CONTROL STATIONS 41GA AND 46B2 .

   HO. CO. 41GA N 541,399.1020 ELEV. 462.84
   E 1,333,808.2700
   HO. CO. 46B2 N 539,987.7280 ELEV. 475.35
   E 1,337,218.4800

7. SOILS BOUNDARY BASED ON HOWARD COUNTY SOILS SURVEY DATED 1968, SHEET 32.
8. NO STEEP SLOPES EXIST ON SITE.
9. ALL SPOT ELEVATIONS ARE TO THE BOTTOM OF THE CURB UNLESS OTHERWISE NOTED.
10. BASED ON THE FOREST STAND DELINEATION PREPARED BY CHESAPEAKE ENVIRONMENTAL MANAGEMENT, INC. DATED APRIL 1996, THIS PROJECT IS EXEMPT FROM THE FOREST CONSERVATION ORDINANCE REQUIREMENTS. AREA OF CLEARING UNDER 40,000 SQ. FT.
11. NO FLOODPLAIN OR WETLANDS EXIST ON SITE.
12. STORMWATER MANAGEMENT WILL BE PROVIDED BY DETENTION. WATER QUALITY WILL BE PROVIDED BY STORMCEPTOR, 900 SERIES OR EQUIVALENT. FACILITY IS PRIVATELY OWNED AND MAINTAINED.
13. MAXIMUM DEPTH OF POND'S EMBANKMENT IS LESS THAN 3'. POND IS NOT REQUIRED TO MEET MD-378 REQUIREMENTS. POND WILL BE PRIVATE.
14. GEOTECHNICAL REPORT PREPARED BY HILLIS-CARNES ENGINEERING ASSOCIATES, INC. DATED JUNE 12, 1996.
15. ALL PLAN DIMENSIONS ARE TO FACE OF CURB UNLESS OTHERWISE NOTED.
16. NO TRAFFIC STUDY IS REQUIRED FOR THIS PROJECT.
17. STATIONING ALONG MD RT 216 AND LIME KILN ROAD IS ASSUMED STATIONING STARTING AT STA 0+00 AT THE SOUTHEASTERN MOST CORNER OF THE PROPERTY.
18. THE MAIN ENTRANCE TO THE BUILDING WILL BE ACCESSIBLE BY HANDICAPPED PERSONS.
19. SITE DATA:

    PROPOSED USE: GAS STATION, CONVENIENCE STORE, AND RETAIL BUILDING
    LOT COVERAGE:
    MAXIMUM: 30%
    PROPOSED: 2.05% , 2,424 SQ. FT.
    PARKING REQUIREMENT :

BUILDING A	
GAS STATION	3 SPACES
CONVENIENCE STORE, 2424 SQ. FT. AT 2 SPACES PER 1000 SQ. FT.	5 SPACES
BUILDING B	
RETAIL, 1815 SQ. FT. AT 5 SPACES PER 1000 SQ. FT.	9 SPACES
RELOCATED BUILDING	
RETAIL, 732 SQ. FT. AT 5 SPACES PER 1000 SQ. FT.	4 SPACES
TOTAL REQUIRED	21 SPACES
PROVIDED	22 SPACES

20. FULTON STATION AND THE PROPOSED CONVENIENCE STORE ARE TO BE HOOKED TO PUBLIC SEWER UNDER CONTRACT # 20-3506. CONNECTION TO STRUCTURES OTHER THAN THE CONVENIENCE STORE TO BE BY OTHERS.
21. ONE (1) FOOT CONTOURS ARE PROVIDED FOR PROPOSED CONDITIONS TO BETTER REPRESENT THE GRADING.
22. IMPROVEMENTS TO MD RT 216 ARE BASED ON SHA RECOMMENDATIONS.
23. ROAD DEDICATION BASED ON RECOMMENDATIONS BY THE DEPARTMENT OF PLANNING AND ZONING.
24. THE HOURS OF OPERATION FOR THE GASOLINE SERVICE STATION SHALL BE 5:30 AM TO 11:00 PM.
25. STORAGE OF AUTOMOTIVE SUPPLIES SHALL BE WITHIN THE MAIN STRUCTURE.
26. THE OUTDOOR LIGHTING SHALL BE LOCATED AND SHIELDED TO PREVENT SHINING OR REFLECTING ONTO ADJACENT RESIDENTIAL PROPERTIES AND PUBLIC ROADS.
27. ALL EXISTING FACILITIES SHALL BE CONNECTED TO PUBLIC SEWER PRIOR TO OCCUPANCY APPROVAL OF ANY NEW CONSTRUCTION.
28. CONSTRUCTION TRAFFIC INGRESS AND EGRESS IS TO BE LIMITED TO THE LIME KILN ROAD ENTRANCE.
29. WATER WILL BE PRIVATE. A PROPOSED WELL IS SHOWN ON-SITE.

SHEET INDEX

SHEET	TITLE
1	SITE PLAN
2	[redacted] AND SEDIMENT CONTROL PLAN
3	[redacted] CONTROL NOTES AND DETAILS
4	SEDIMENT CONTROL NOTES AND DETAILS
5	DETAILS AND STORM DRAIN PROFILES
6	SOILS AND PROPOSED DRAINAGE AREA MAP
7	LANDSCAPE PLAN

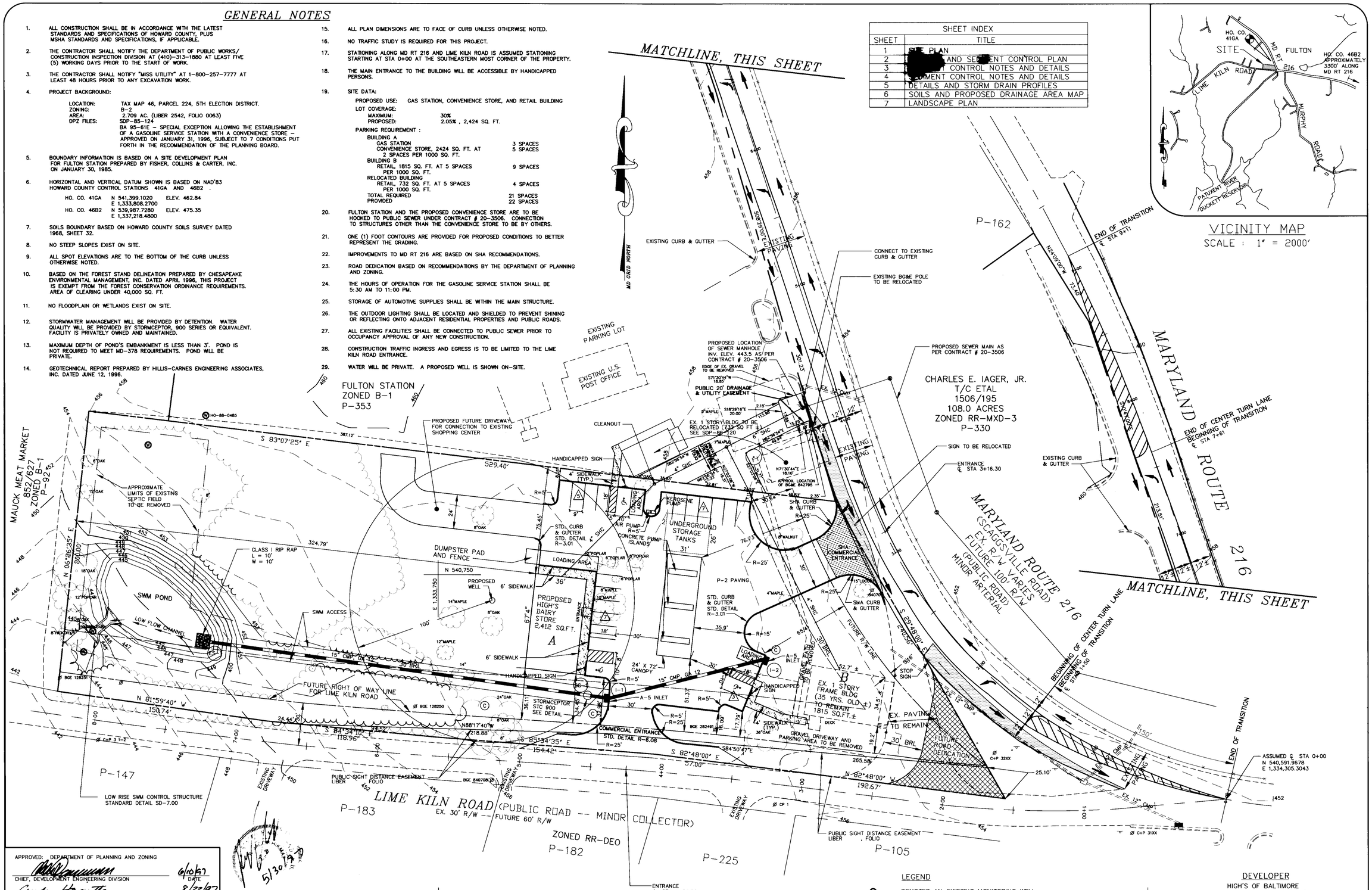

VICINITY MAP
SCALE : 1" = 2000'

APPROVED: DEPARTMENT OF PLANNING AND ZONING

CHIEF, DEVELOPMENT ENGINEERING DIVISION	DATE 6/10/97
CHIEF, DIVISION OF LAND DEVELOPMENT	DATE 8/22/97
DIRECTOR Acting	DATE 8/22/97

APPROVED : FOR PRIVATE WATER AND PUBLIC SEWER. HOWARD COUNTY HEALTH DEPARTMENT.

HOWARD COUNTY HEALTH OFFICER — DATE 8-18-97

ADDRESS CHART	
PARCEL NO.	STREET ADDRESS
PARCEL 224:	
BLDG A	11840 LIME KILN ROAD
BLDG B	11821 SCAGGSVILLE ROAD

PROJECT NAME			SECTION/AREA	PARCEL #
FULTON HIGH'S			N/A	224
LIBER/FOLIO	BLOCK #	ZONE	TAX/ZONE MAP	ELEC. DIST.	CENSUS TRACT
1320/0058	2	B-2	46	FIFTH	6051.02
WATER CODE			SEWER CODE	
N/A			7690000	

LEGEND

- DENOTES AN EXISTING MONITORING WELL
- DENOTES AN EXISTING CLEANOUT
- DENOTES AREA TO BE DEDICATED TO HOWARD COUNTY, MARYLAND FOR THE PURPOSE OF A PUBLIC ROAD
- DENOTES ADDITIONAL HIGHWAY PAVING REQUIRED
- DENOTES SHA COMMERCIAL ENTRANCE
- DENOTES NUMBER OF PARKING SPACES

DEVELOPER
HIGH'S OF BALTIMORE
1340-L CHARWOOD ROAD
HANOVER, MARYLAND 21076
(410) 859-3636

OWNER
HUGH F. COLE & GROUP FIVE PARTNERSHIP
8835 P COLUMBIA 100 PARKWAY
COLUMBIA, MARYLAND 21045
(410) 730-0810

project	date
95081	JULY 1996
illustration	engineering
SJD	SJD
scale	approval
1"=30'	RJH

no.	description	date
	revisions	

TAX MAP 46 - PARCEL 224 - BLOCK 2
FULTON HIGH'S
HOWARD COUNTY, MARYLAND
FIFTH ELECTION DISTRICT
SITE PLAN

MILDENBERG, BOENDER & ASSOC., INC.
Engineers Planners Surveyors
5072 Dorsey Hall Drive, Suite 202, Ellicott City, Maryland 21042
(410) 997-0296 Bal. (301) 621-5321 Wash. (410) 997-0298 Fax.

1 OF 7

SDP-97-11

81-SDP.DWG

LEGEND

- DENOTES FLOW PATH
- DENOTES STABILIZED CONSTRUCTION ENTRANCE
- DENOTES LIMIT OF DISTURBANCE
- DENOTES SILT FENCE
- DENOTES SUPER SILT FENCE
- DENOTES AN EXISTING MONITORING WELL
- DENOTES AN EXISTING CLEANOUT
- DENOTES AREA OF ROAD DEDICATION
- DENOTES HIGHWAY PAVING REQUIRED
- DENOTES SHA COMMERCIAL ENTRANCE

NOTE : FOR HANDICAP ACCESS DETAILS, SEE SHEET 4 OF 7.

POND GRADING NOTES

1. THE HOWARD COUNTY HEALTH DEPARTMENT SHALL BE NOTIFIED AT LEAST 48 HOURS PRIOR TO THE START OF GRADING AT (410) 313-2640.
1. SILT FENCES TO BE INSTALLED AT 40' INTERVALS. SUPER SILT FENCE TO BE PROVIDED AT THE LOWEST AREA.
2. EXCAVATION TO PROCEED FROM THE HIGHER ELEVATION TO AN ELEVATION AT OR BELOW THE FIRST SILT FENCE.
3. ALL OF THE MATERIAL SHALL BE DISPOSED OF TO A SITE APPROVED BY THE HEALTH DEPARTMENT.
4. NO WASTEWATER SHALL BE ALLOWED TO RUNOFF THE SITE. SHOULD WASTEWATER BE ENCOUNTERED, IT SHALL BE PUMPED INTO SEPTIC TRUCKS AND DISPOSED OF TO AN APPROVED SITE.

FOR SEQUENCE OF CONSTRUCTION SEE SHEET 3 OF 7

POND DATA

HAZARD CLASSIFICATION – N/A
DRAINAGE AREA – 2.36 ACRES
RCN – 74
Tc – 0.19 HRS.
TYPE – DETENTION
2 YEAR STORM POOL ELEV. = 446.02
Q = 0.3 CFS
V = 0.11 AC. FT.
10 YEAR STORM POOL ELEV. = 446.96
Q = 1.9 CFS
V = 0.20 AC. FT.
100 YEAR STORM POOL ELEV. – N/A (NOT MD 378)
OWNERSHIP – PRIVATE

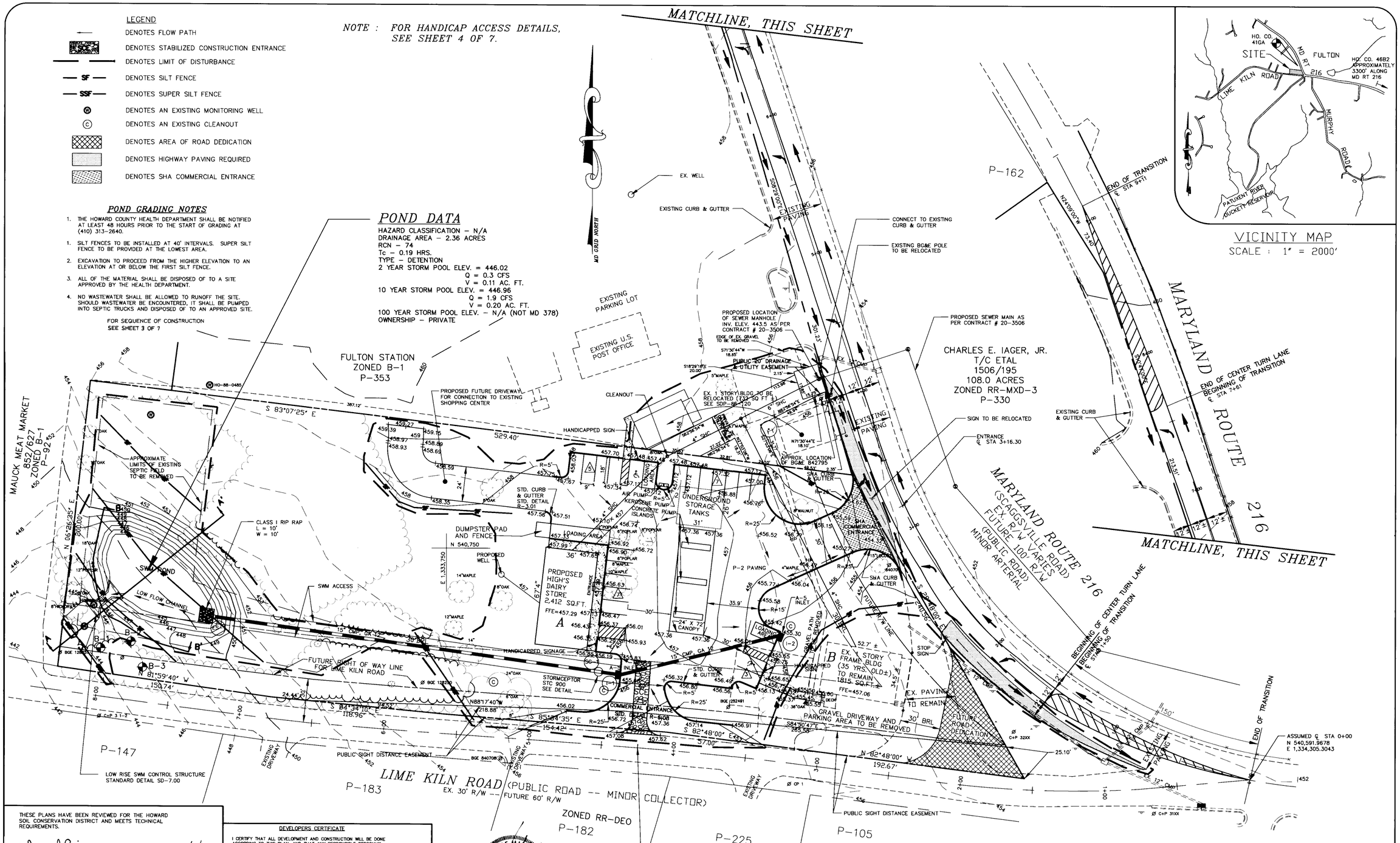

VICINITY MAP
SCALE : 1" = 2000'

THESE PLANS HAVE BEEN REVIEWED FOR THE HOWARD SOIL CONSERVATION DISTRICT AND MEETS TECHNICAL REQUIREMENTS.

USDA – NATURAL RESOURCE CONSERVATION SERVICE — DATE 6/3/97

THIS DEVELOPMENT PLAN IS APPROVED FOR SOIL EROSION AND SEDIMENT CONTROL BY THE HOWARD SOIL CONSERVATION DISTRICT.

HOWARD SOIL CONSERVATION DISTRICT — DATE 6/3/97

APPROVED: DEPARTMENT OF PLANNING AND ZONING

CHIEF, DEVELOPMENT ENGINEERING DIVISION — DATE 6/10/97
CHIEF, DIVISON OF LAND DEVELOPMENT — DATE 8/22/97
DIRECTOR — DATE 8/22/97

DEVELOPERS CERTIFICATE

I CERTIFY THAT ALL DEVELOPMENT AND CONSTRUCTION WILL BE DONE ACCORDING TO THIS PLAN, AND THAT ANY RESPONSIBLE PERSONNEL INVOLVED IN THE CONSTRUCTION PROJECT WILL HAVE A CERTIFICATE OF ATTENDANCE AT A DEPARTMENT OF THE ENVIRONMENT APPROVED TRAINING PROGRAM FOR THE CONTROL OF SEDIMENT AND EROSION BEFORE BEGINNING THE PROJECT. I ALSO AUTHORIZE PERIODIC ON-SITE INSPECTION BY THE NATURAL RESOURCE CONSERVATION SERVICE.

SIGNATURE OF DEVELOPER — DATE 5/30/97
BRIAN DORNELL, HIGH'S OF BALTIMORE
PRINTED NAME OF DEVELOPER

ENGINEER'S CERTIFICATE

I CERTIFY THAT THIS PLAN FOR EROSION AND SEDIMENT CONTROL REPRESENTS A PRACTICAL AND WORKABLE PLAN BASED ON MY PERSONAL KNOWNEDGE OF THE SITE CONDITIONS AND THAT IT WAS PREPARED IN ACCORDANCE WITH THE REQUIREMENTS OF THE NATURAL RESOURCE CONSERVATION SERVICE.

SIGNATURE OF ENGINEER — DATE 5/30/97
R. JACOB HIKMAT
PRINTED NAME OF ENGINEER

STATE OF MARYLAND — R. JACOB HIKMAT — 5/30/97

APPROVED ; FOR PRIVATE WATER AND PUBLIC SEWER. HOWARD COUNTY HEALTH DEPARTMENT.

HOWARD COUNTY HEALTH OFFICER — DATE 8-18-97

DEVELOPER
HIGH'S OF BALTIMORE
1340-L CHARWOOD ROAD
HANOVER, MARYLAND 21076
(410) 859-3636

OWNER
HUGH F. COLE & GROUP FIVE PARTNERSHIP
8835 P COLUMBIA 100 PARKWAY
COLUMBIA, MARYLAND 21045
(410) 730-0810

project	date
95081	JULY 1996
illustration	engineering
SJD	SJD
scale	approval
1"=30'	RJH

no.	description / revisions	date

TAX MAP 46 – PARCEL 224 – BLOCK 2
FULTON HIGH'S
HOWARD COUNTY, MARYLAND
FIFTH ELECTION DISTRICT
GRADING AND SEDIMENT CONTROL PLAN

MILDENBERG, BOENDER & ASSOC., INC.
Engineers Planners Surveyors
5072 Dorsey Hall Drive, Suite 202, Ellicott City, Maryland 21042
(410) 997-0296 Balt. (301) 621-5521 Wash. (410) 997-0298 Fax

SDP-97-11

81-GSCP2.DWG

LEGEND

- DENOTES AN EXISTING MONITORING WELL
- DENOTES AN EXISTING CLEANOUT
- DENOTES FLOW PATH
- DENOTES AREA OF ROAD DEDICATION
- DENOTES HIGHWAY PAVING REQUIRED
- DENOTES SHA COMMERCIAL ENTRANCE
- POND DRAINAGE AREA DIVIDE
- INLET DRAINAGE AREA DIVIDE

SOIL LEGEND

GROUP	SOIL	DESCRIPTION
B	MID3	MANOR LOAM, 15-25% SLOPES, SEVERELY ERODED
C	GnA	GLENVILLE SILT LOAM, 0 TO 3% SLOPES

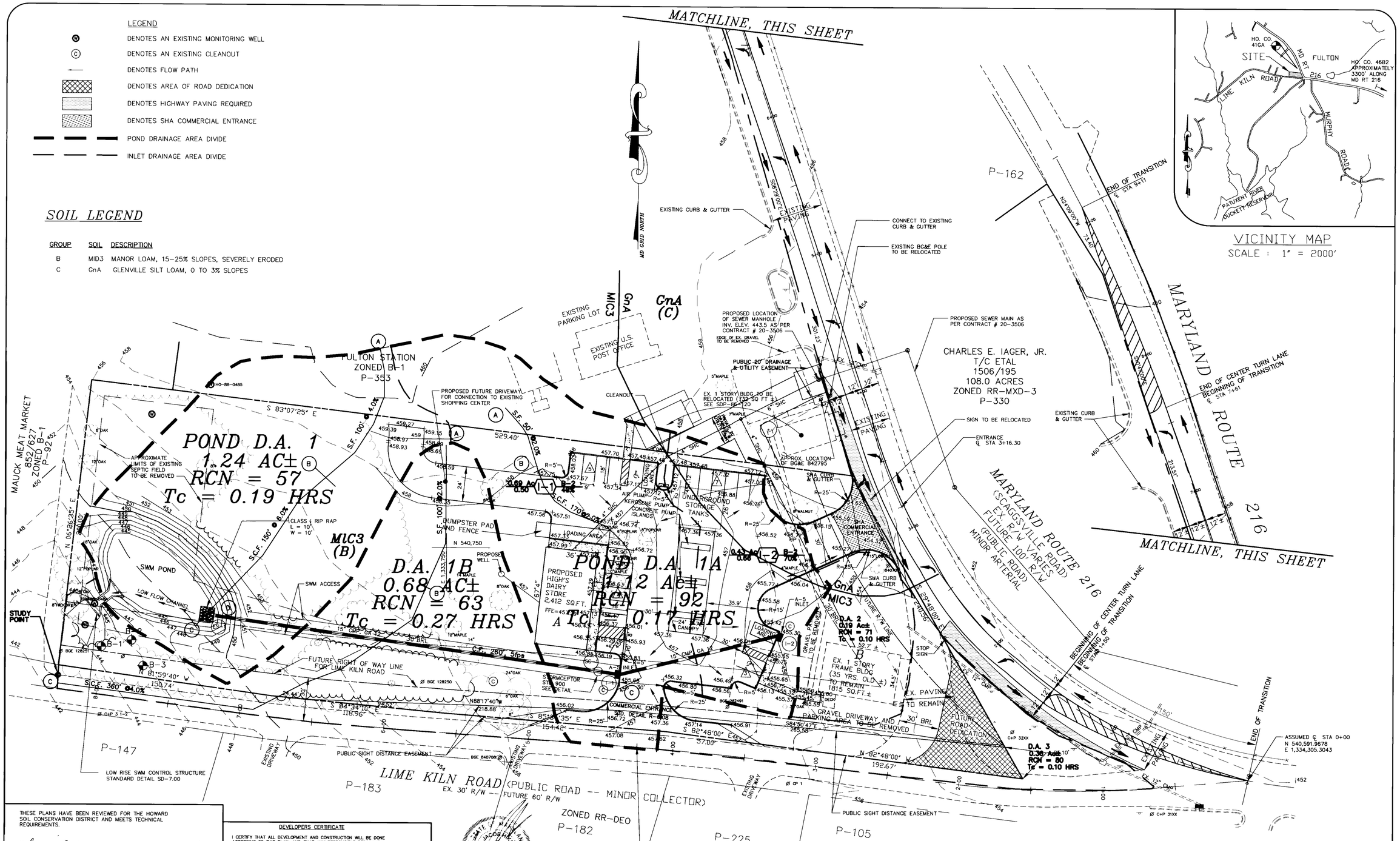

VICINITY MAP
SCALE : 1" = 2000'

THESE PLANS HAVE BEEN REVIEWED FOR THE HOWARD SOIL CONSERVATION DISTRICT AND MEETS TECHNICAL REQUIREMENTS.

Cheryl Simmons — USDA - NATURAL RESOURCE CONSERVATION SERVICE — 6/3/97 DATE

THIS DEVELOPMENT PLAN IS APPROVED FOR SOIL EROSION AND SEDIMENT CONTROL BY THE HOWARD SOIL CONSERVATION DISTRICT.

John R Robertson — HOWARD SOIL CONSERVATION DISTRICT — 6/3/97 DATE

APPROVED: DEPARTMENT OF PLANNING AND ZONING

CHIEF, DEVELOPMENT ENGINEERING DIVISION — DATE 6/10/97

Andy Hamitter — CHIEF, DIVISION OF LAND DEVELOPMENT — DATE 8/22/97

Marsha McLaughlin — DIRECTOR — DATE 8/24/97

DEVELOPERS CERTIFICATE

I CERTIFY THAT ALL DEVELOPMENT AND CONSTRUCTION WILL BE DONE ACCORDING TO THIS PLAN, AND THAT ANY RESPONSIBLE PERSONNEL INVOLVED IN THE CONSTRUCTION PROJECT WILL HAVE A CERTIFICATE OF ATTENDANCE AT A DEPARTMENT OF THE ENVIRONMENT APPROVED TRAINING PROGRAM FOR THE CONTROL OF SEDIMENT AND EROSION BEFORE BEGINNING THE PROJECT. I ALSO AUTHORIZE PERIODIC ON-SITE INSPECTION BY THE NATURAL RESOURCE CONSERVATION SERVICE.

Brian Dornell — SIGNATURE OF DEVELOPER — DATE 5/30/97

BRIAN DORNELL, HIGH'S OF BALTIMORE — PRINTED NAME OF DEVELOPER

ENGINEER'S CERTIFICATE

I CERTIFY THAT THIS PLAN FOR EROSION AND SEDIMENT CONTROL REPRESENTS A PRACTICAL AND WORKABLE PLAN BASED ON MY PERSONAL KNOWEDGE OF THE SITE CONDITIONS AND THAT IT WAS PREPARED IN ACCORDANCE WITH THE REQUIREMENTS OF THE NATURAL RESOURCE CONSERVATION SERVICE.

SIGNATURE OF ENGINEER — DATE 5/30/97

R. JACOB WIKMAT — PRINTED NAME OF ENGINEER

APPROVED ; FOR PRIVATE WATER AND PUBLIC SEWER. HOWARD COUNTY HEALTH DEPARTMENT.

Joyce M. Boyd MD for S.J. — HOWARD COUNTY HEALTH OFFICER — DATE 8-18-97

DEVELOPER
HIGH'S OF BALTIMORE
1340-L CHARWOOD ROAD
HANOVER, MARYLAND 21076
(410) 859-3636

OWNER
HUGH F. COLE & GROUP FIVE PARTNERSHIP
8835 P COLUMBIA 100 PARKWAY
COLUMBIA, MARYLAND 21045
(410) 730-0810

project	date
95061	JULY 1996
illustration	engineering
SJD	SJD
scale	approval
1"=30'	RJH

no.	description	date
	revisions	

TAX MAP 46 - PARCEL 224 - BLOCK 2
FULTON HIGH'S
HOWARD COUNTY, MARYLAND
FIFTH ELECTION DISTRICT
SOILS AND PROPOSED DRAINAGE AREA MAP

MILDENBERG, BOENDER & ASSOC., INC.
Engineers Planners Surveyors
5072 Dorsey Hall Drive, Suite 202, Ellicott City, Maryland 21042
(410) 987-0296 Balt. (301) 621-5321 Wash. (410) 987-0298 Fax.

SDP-97-11

81-PDAM2.DWG

POND SPECIFICATIONS

THESE SPECIFICATIONS ARE APPROPRIATE TO ALL PONDS WITHIN THE SCOPE OF THE STANDARD FOR PRACTICE MD-378. ALL REFERENCES TO ASTM AND AASHTO SPECIFICATIONS APPLY TO THE MOST RECENT VERSION.

SITE PREPARATION

AREAS DESIGNATED FOR BORROW AREAS, EMBANKMENT, AND STRUCTURAL WORKS SHALL BE CLEARED, GRUBBED AND STRIPPED OF TOPSOIL. ALL TREES, VEGETATION, ROOTS AND OTHER OBJECTIONABLE MATERIAL SHALL BE REMOVED. CHANNEL BANKS AND SHARP BREAKS SHALL BE SLOPED TO NO STEEPER THAN 1:1

AREAS TO BE COVERED BY THE RESERVOIR WILL BE CLEARED OF ALL TREES, BRUSH, LOGS, RUBBISH AND OTHER OBJECTIONABLE MATERIAL UNLESS OTHERWISE DESIGNATED TO THE PLANS. TREES, BRUSH AND STUMPS SHALL BE CUT APPROXIMATELY LEVEL WITH THE GROUND SURFACE. FOR DRY STORMWATER MANAGEMENT PONDS, A MINIMUM OF A 50 FOOT RADIUS AROUND THE INLET STRUCTURE SHALL BE CLEARED.

ALL CLEARED AND GRUBBED MATERIAL SHALL BE DISPOSED OF OUTSIDE AND BELOW THE LIMITS OF THE DAM AND RESERVOIR AS DIRECTED BY THE OWNER OR HIS REPRESENTATIVE. WHEN SPECIFIED, A SUFFICIENT QUALITY OF TOPSOIL WILL BE STOCKPILED IN A SUITABLE LOCATION FOR USE ON THE EMBANKMENT AND OTHER DESIGNATED AREAS.

EARTH FILL

MATERIAL– THE FILL MATERIAL SHALL BE TAKEN FROM APPROVED DESIGNATED BORROW AREAS. IT SHALL BE FREE OF ROOTS, STUMPS, WOOD, RUBBISH, STONES GREATER THAN 6", FROZEN OR OTHER OBJECTIONABLE MATERIALS. FILL MATERIAL FOR THE CENTER OF THE EMBANKMENT AND CUT OFF TRENCH SHALL CONFORM TO UNIFIED SOIL CLASSIFICATION GC, SC, CH, OR CL. CONSIDERATION MAY BE GIVEN TO THE USE OF OTHER MATERIALS IN THE EMBANKMENT IF DESIGN AND CONSTRUCTION ARE SUPERVISED BY A GEOTECHNICAL ENGINEER.

PLACEMENT– AREAS ON WHICH FILL IS TO BE SHALL BE SCARIFIED PRIOR TO PLACEMENT OF FILL. FILL MATERIALS SHALL BE PLACED IN MAXIMUM 8 INCH THICK (BEFORE COMPACTION) LAYERS WHICH ARE TO BE CONTINUOUS OVER THE ENTIRE LENGTH OF THE FILL. THE MOST PERMEABLE BORROW MATERIAL SHALL BE PLACED IN THE DOWNSTREAM PORTIONS OF THE EMBANKMENT. THE PRINCIPAL SPILLWAY MUST BE INSTALLED CONCURRENTLY WITH FILL PLACEMENT AND NOT EXCAVATED INTO THE EMBANKMENT.

COMPACTION– THE MOVEMENT OF AND SPREADING EQUIPMENT OVER THE FILL SHALL BE CONTROLLED SO THAT THE ENTIRE SURFACE OF EACH LIFT SHALL BE TRAVERSE BY NOT LESS THAN ONE TREAD TRACK OF THE EQUIPMENT OR COMPACTION SHALL BE ACHIEVED BY A MINIMUM OF FOUR COMPLETE PASSES OF A SHEEPSFOOT, RUBBER TIRED OR VIBRATORY ROLLER. FILL MATERIAL SHALL CONTAIN SUFFICIENT MOISTURE SUCH THAT THE REQUIRED DEGREE OF COMPACTION WILL BE OBTAINED WITH THE EQUIPMENT USED. THE FILL MATERIAL SHALL CONTAIN SUFFICIENT MOISTURE SO THAT IF FORMED INTO A BALL IT WILL NOT CRUMBLE YET NOT BE SO WET THAT WATER CAN BE SQUEEZED OUT.

WHERE A MINIMUM REQUIRED DENSITY IS SPECIFIED, IT SHALL NOT BE LESS 95% OF MAXIMUM DRY DENSITY WITH A MOISTURE CONTENT WITHIN+– 2% OF THE OPTIMUM. EACH LAYER OF FILL SHALL BE COMPACTED AS NECESSARY TO OBTAIN THAT DENSITY, AND IS TO BE CERTIFIED BY THE ENGINEER AT THE TIME OF CONSTRUCTION. ALL COMPACTION IS TO BE DETERMINED BY AASHTO METHOD T-99

CUT OFF TRENCH– THE CUFF OFF TRENCH SHALL BE EXCAVATED INTO IMPERVIOUS MATERIAL ALONG OR PARALLEL TO THE CENTERLINE OF THE EMBANKMENT AS SHOWN ON THE PLANS. THE BOTTOM WIDTH OF THE TRENCH SHALL BE GOVERNED BY THE EQUIPMENT USED FOR EXCAVATION, WITH THE MINIMUM WIDTH BEING FOUR FEET. THE DEPTH SHALL BE AT LEAST FOUR FEET BELOW EXISTING GRADE OR AS SHOWN ON THE PLANS. THE SIDE SLOPES OF THE TRENCH SHALL BE 1 TO 1 OR FLATTER. THE BACKFILL SHALL BE COMPACTED WITH CONSTRUCTION EQUIPMENT, ROLLERS, OR HAND TAMPERS TO ASSURE MAXIMUM DENSITY AND MINIMUM PERMEABILITY.

STRUCTURE BACKFILL

BACKFILL ADJACENT TO PIPES OR STRUCTURES SHALL BE OF THE TYPE AND QUALITY CONFORMING TO THAT SPECIFIED FOR THE ADJOINING FILL MATERIAL. THE FILL MATERIAL SHALL BE PLACED IN HORIZONTAL LAYERS NOT TO EXCEED FOUR INCHES IN THICKNESS AND COMPACTED BY HAND TAMPERS OR OTHER MANUALLY DIRECTED COMPACTION EQUIPMENT. THE MATERIAL NEEDS TO FILL COMPLETELY ALL SPACES UNDER AND ADJACENT TO THE PIPE. AT NO TIME DURING THE BACKFILLING OPERATION SHALL DRIVEN EQUIPMENT BE ALLOWED TO OPERATE CLOSER THAN FOUR FEET, MEASURED HORIZONTALLY, TO ANY PART OF A STRUCTURE. UNDER NO CIRCUMSTANCES SHALL EQUIPMENT BE DRIVEN OVER ANY PART OF A CONCRETE FILL OF 24" OR GREATER OVER THE STRUCTURE OR PIPE.

PIPE CONDUITS

ALL PIPES SHALL BE CIRCULAR IN CROSS SECTION.

CORRUGATED METAL PIPE– ALL OF THE FOLLOWING CRITERIA SHALL APPLY FOR CORRUGATED METAL PIPE:
1. MATERIALS– (STEEL PIPE)– THIS PIPE AND ITS APPURTENANCE SHALL BE GALVANIZED AND FULLY BITUMINOUS COATED AND SHALL CONFORM TO THE REQUIREMENTS OF AASHTO SPECIFICATION M-190 TYPE A WITH WATERTIGHT COUPLING BANDS. ANY BITUMINOUS COATING DAMAGED OR OTHERWISE REMOVED SHALL BE REPLACED WITH COLD APPLIED BITUMINOUS COATING COMPOUND. STEEL PIPES WITH POLYMERIC COATINGS SHALL HAVE A MINIMUM COATING THICKNESS OF 0.01 INCH (10 MIL) ON BOTH SIDES OF THE PIPE. THE FOLLOWING COATINGS OR AN APPROVED EQUAL MAY BE USED: NEXON, PLASTI-COTE, BLAC-KLAD, AND BETH-CU-LOY. COATED CORRUGATED STEEL PIPE SHALL MEET THE REQUIREMENTS OF AASHTO M-245 AND M-246.

MATERIALS– (ALUMINUM COATED STEEL PIPE)– THIS PIPE AND ITS APPURTENANCES SHALL CONFORM TO THE REQUIREMENTS OF AASHTO SPECIFICATION M-274 WITH WATERTIGHT COUPLING BANDS OR FLANGES. ANY ALUMINUM COATING DAMAGED OF OTHERWISE REMOVED SHALL BE REPLACED WITH COLD APPLIED BITUMINOUS COATING COMPOUND.?

MATERIALS–(ALUMINUM PIPE)– THIS PIPE AND ITS APPURTENANCES SHALL CONFORM TO THE REQUIREMENTS OF AASHTO SPECIFICATION M-196 OR M-211 WITH WATERTIGHT COUPLINGS BANDS OR FLANGES. ALUMINUM SURFACES THAT ARE TO BE IN CONTACT WITH CONCRETE SHALL BE PAINTED WITH ONE COAT OF ZINC CHROMATE PRIMER. HOT DIP GALVANIZED BOLTS MAY BE USED FOR CONNECTIONS. THE PH OF THE SURROUNDING SOILS SHALL BE BETWEEN 4 AND 9.

2. COUPLING BANDS, ANTI-SEEP COLLARS, END SECTIONS, ETC., MUST BE COMPOSED OF THE SAME MATERIAL AS THE PIPE. METALS MUST BE INSULATED FROM DISSIMILAR MATERIALS WITH USE RUBBER OR PLASTIC INSULATING MATERIALS AT LEAST 24 MILS IN THICKNESS.

3. CONNECTIONS– ALL CONNECTIONS WITH PIPES MUST BE COMPLETELY WATERTIGHT. THE DRAIN PIPE OR BARREL CONNECTION TO THE RISER SHALL BE WELDED ALL AROUND WHEN THE PIPE AND RISER ARE METAL. ANTI-STEEP COLLARS SHALL BE CONNECTED TO THE PIPE IN SUCH A MANNER AS TO BE COMPLETELY WATERTIGHT. DIMPLE BANDS ARE NOT CONSIDERED TO BE WATERTIGHT.

ALL CONNECTIONS SHALL USE A RUBBER OF NEOPRENE GASKET WHEN JOINING PIPE SECTIONS. THE END OF EACH PIPE SHALL BE-ROLLED AND ADEQUATE NUMBER OF CORRUGATIONS TO ACCOMMODATE THE BAND WIDTH. THE FOLLOWING TYPE CONNECTIONS ARE ACCEPTABLE FOR PIPE LESS THAN 24" IN DIAMETER: FLANGES ON BOTH ENDS OF THE PIPE, A 12" WIDE STANDARD LAP TYPE BAND WITH 12" WIDE BY 3/8" THICK CLOSED CELL CIRCULAR NEOPRENE GASKET; AND A 12" WIDE HUGGER TYPE BAND WITH O-RING GASKETS HAVING MINIMUM DIAMETER OF 1/2" GREATER THAN THE CORRUGATION DEPTH. PIPES 24: IN DIAMETER AND LARGER SHALL BE CONNECTED BY A 24" LONG ANNULAR CORRUGATED BAND USING RODS AND LUGS. A 12" WIDE BY 3/8" THICK CLOSED CELL CIRCULAR NEOPRENE GASKET WILL BE INSTALLED ON THE END OF EACH PIPE FOR A TOTAL OF 24"

HELICALLY CORRUGATED PIPE SHALL HAVE EITHER CONTINUOUSLY WELDED SEAMS OR HAVE LOCK SEAMS WITH INTERNAL CAULKING OR A NEOPRENE BEAD.

4. BEDDING– THE PIPE SHALL BE FIRMLY AND UNIFORMLY BEDDED THROUGHOUT ITS ENTIRE LENGTH. WHERE ROCK OR SOFT, SPONGY OR OTHER UNSTABLE SOIL IS ENCOUNTERED ALL SUCH MATERIAL SHALL BE REMOVED AND REPLACED WITH SUITABLE EARTH COMPACTED TO PROVIDE ADEQUATE SUPPORT.

5. BACKFILLING SHALL CONFORM TO "STRUCTURE BACKFILL."

6. OTHER DETAILS (ANTI-SEEP COLLARS, VALVES, ETC.) SHALL BE AS SHOWN ON THE DRAWINGS.

REINFORCED CONCRETE PIPE– ALL OF THE FOLLOWING CRITERIA SHALL APPLY FOR REINFORCED CONCRETE PIPE:

1. MATERIALS–REINFORCED CONCRETE PIPE SHALL HAVE BELL AND SPIGOT JOINTS WITH RUBBER GASKETS AND SHALL EQUAL OR EXCEED ASTM DESIGNATION C-361.

2. BEDDING– ALL REINFORCED CONCRETE PIPE CONDUITS SHALL BE LAID IN A CONCRETE BEDDING FOR THEIR ENTIRE LENGTH. THIS BEDDING SHALL CONSIST OF HIGH SLUMP CONCRETE PLACED UNDER THE PIPE AND UP THE SIDES OF THE PIPE AT LEAST 10% OF ITS OUTSIDE DIAMETER WITH A MINIMUM THICKNESS OF 3 INCHES, OR AS SHOWN ON THE DRAWINGS.

3. LAYING PIPE– BELL AND SPIGOT PIPE SHALL BE PLACED WITH THE BELL END UPSTREAM. JOINTS SHALL BE MADE IN ACCORDANCE WITH RECOMMENDATIONS OF THE MANUFACTURER OF THE MATERIAL. AFTER THE JOINTS ARE SEALED FOR THE ENTIRE LINE, THE BEDDING SHALL BE PLACED SO THAT ALL SPACES UNDER THE PIPE ARE FILLED. CARE SHALL BE EXERCISED TO PREVENT ANY DEVIATION FROM THE ORIGINAL LINE AND GRADE OF THE PIPE. THE FIRST JOINT MUST BE LOCATED WITHIN 2 FEET FROM THE RISER.

4. BACKFILLING SHALL CONFORM TO "STRUCTURE BACKFILL."

5. OTHER DETAILS (ANTI-SEEP COLLARS, VALVES, ETC.) SHALL BE AS SHOWN ON THE DRAWINGS.

POLYVINYL CHLORIDE (PVC) PIPE– ALL OF THE FOLLOWING CRITERIA SHALL APPLY FOR POLYVINYL CHLORIDE (PVC) PIPE:

1. MATERIALS–PVC PIPE SHALL BE PVC-1120 OR PVC-1220 CONFORMING TO ASTM D-1785 OR ASTM D-2241.

2. JOINTS AND CONNECTIONS TO ANTI-SEEP COLLARS SHALL BE COMPLETELY WATERTIGHT.

3. BEDDING– THE PIPE SHALL BE FIRMLY AND UNIFORMLY BEDDED THROUGHOUT ITS ENTIRE LENGTH. WHERE ROCK OR SOFT, SPONGY OR OTHER UNSTABLE SOIL IS ENCOUNTERED, ALL SUCH MATERIAL SHALL BE REMOVED AND REPLACED WITH SUITABLE EARTH COMPACTED TO PROVIDE ADEQUATE SUPPORT.

4. BACKFILLING SHALL CONFORM TO "STRUCTURE BACKFILL."

5. OTHER DETAILS (ANTI-SEEP COLLARS, VALVES, ETC.) SHALL BE AS SHOWN ON THE DRAWINGS.

CONCRETE

CONCRETE SHALL MEET THE REQUIREMENTS OF MARYLAND DEPARTMENT OF TRANSPORTATION, STATE HIGHWAY ADMINISTRATION STANDARD SPECIFICATIONS FOR CONSTRUCTION AND MATERIALS, SECTION 905.

THE RIPRAP SHALL BE PLACED TO THE REQUIRED THICKNESS IN ONE OPERATION. THE ROCK SHALL BE DELIVERED AND PLACED IN A MANNER THAT WILL INSURE THE RIPRAP IN PLACE SHALL BE REASONABLY HOMOGENOUS WITH THE LARGER ROCKS UNIFORMLY DISTRIBUTED AND FIRMLY IN CONTACT ONE TO ANOTHER WITH THE SMALLER ROCKS FILLING THE VOIDS BETWEEN THE LARGER ROCKS. FILTER CLOTH SHALL BE REPLACED UNDER ALL RIPRAP AND SHALL MEET THE REQUIREMENTS OF MARYLAND DEPARTMENT OF TRANSPORTATION, STATE HIGHWAY ADMINISTRATION STANDARD SPECIFICATIONS FOR CONSTRUCTION AND MATERIALS, SECTION 919.12.?

CARE OF WATER DURING CONSTRUCTION

ALL WORK ON THE PERMANENT STRUCTURES SHALL BE CARRIED OUT IN AREAS FREE FROM WATER. THE CONTRACTOR SHALL CONSTRUCT AND MAINTAIN ALL TEMPORARY DIKES, LEVEES, COFFERDAMS, DRAINAGE CHANNELS, AND STREAM DIVERSIONS NECESSARY TO PROTECT THE AREAS TO BE OCCUPIED BY THE PERMANENT WORKS. THE CONTRACTOR SHALL ALSO FURNISH, INSTALL, OPERATE AND MAINTAIN ALL NECESSARY PUMPING AND OTHER EQUIPMENT REQUIRED FOR REMOVAL OF WATER FROM THE VARIOUS PARTS OF THE WORK AND FOR MAINTAINING THE EXCAVATIONS, FOUNDATION AND OTHER PARTS OF THE WORK FREE FROM WATER AS REQUIRED OR DIRECTED BY THE ENGINEER FOR CONSTRUCTING EACH PART OF THE WORK. AFTER HAVING SERVED THEIR PURPOSE, ALL TEMPORARY PROTECTIVE WORKS SHALL BE REMOVED OR LEVELED AND GRADED TO THE EXTENT REQUIRED TO PREVENT OBSTRUCTION IN ANY DEGREE WHATSOEVER OF THE FLOW OF WATER TO THE SPILLWAY OR OUTLET WORKS AND SO AS NOT TO INTERFERE IN ANY WAY WITH THE OPERATION OR MAINTENANCE OF THE STRUCTURE. STREAM DIVERSIONS SHALL BE MAINTAINED UNTIL THE FULL FLOW CAN BE PASSED THROUGH THE PERMANENT WORKS. THE REMOVAL OF WATER FROM THE REQUIRED EXCAVATION AND THE FOUNDATION SHALL BE ACCOMPLISHED IN A MANNER AND TO THE EXTENT THAT WILL MAINTAIN STABILITY OF THE EXCAVATED SLOPES AND BOTTOM OF THE REQUIRED EXCAVATIONS AND WILL ALLOW SATISFACTORY PERFORMANCE OF ALL AND CONSTRUCTION OPERATIONS. DURING THE PLACING AND COMPACTING OF MATERIAL IN REQUIRED EXCAVATIONS, THE WATER LEVEL AT THE LOCATIONS BEING REFILLED SHALL BE MAINTAINED BELOW THE BOTTOM OF THE EXCAVATION AT SUCH LOCATIONS WHICH MAY REQUIRE DRAINING THE WATER TO SUMPS FROM WHICH THE WATER SHALL BE PUMPED.

STABILIZATION

ALL BORROW AREAS SHALL BE GRADED TO PROVIDE PROPER DRAINAGE AND LEFT IN A SLIGHTLY CONDITION. ALL EXPOSED SURFACES OF THE EMBANKMENT, SPILLWAY, SPOIL AND BORROW AREAS, AND BERMS SHALL BE STABILIZED BY SEEDING, LIMING, FERTILIZING AND MULCHING IN ACCORDANCE WITH THE MARYLAND SOIL CONSERVATION SERVICE STANDARDS AND SPECIFICATIONS FOR CRITICAL AREA PLANTING (MD-342) OR AS SHOWN ON THE ACCOMPANYING DRAWINGS.

EROSION AND SEDIMENT CONTROL

CONSTRUCTION OPERATIONS WILL BE CARRIED OUT IN SUCH A MANNER THAT EROSION WILL BE CONTROLLED AND WATER AND AIR POLLUTION MINIMIZED. STATE AND LOCAL LAWS CONCERNING POLLUTION ABATEMENT WILL BE FOLLOWED. CONSTRUCTION PLANS SHALL DETAIL EROSION AND SEDIMENT CONTROL MEASURES TO BE EMPLOYED DURING THE CONSTRUCTION PROCESS.

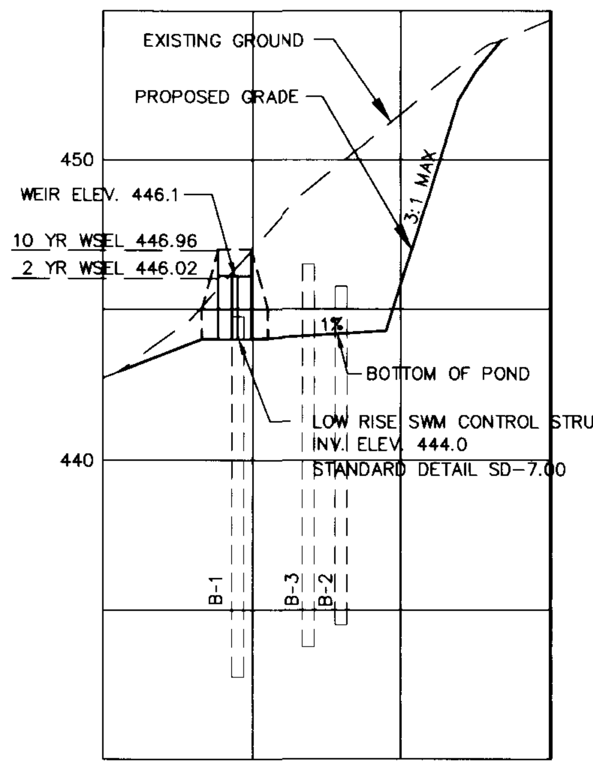

SPILLWAY PROFILE
SECTION A – A'

HORIZONTAL SCALE : 1" = 50'
VERTICAL SCALE : 1" = 5'

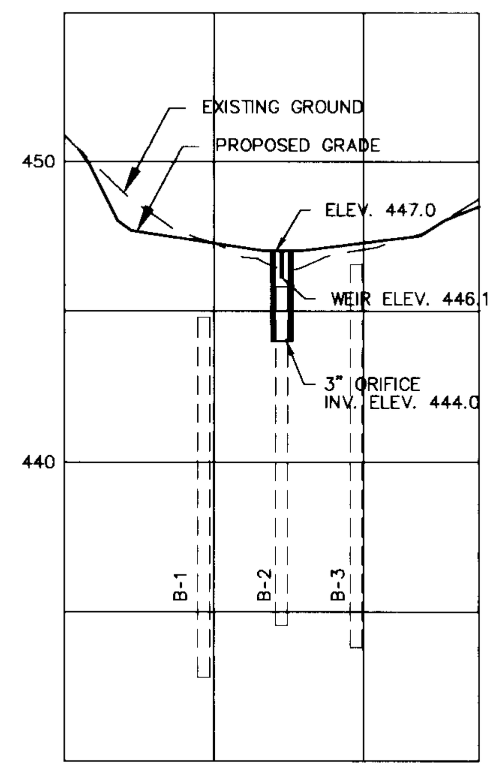

PROFILE OF ℄ OF DAM
SECTION B – B'

HORIZONTAL SCALE : 1" = 50'
VERTICAL SCALE : 1" = 5'

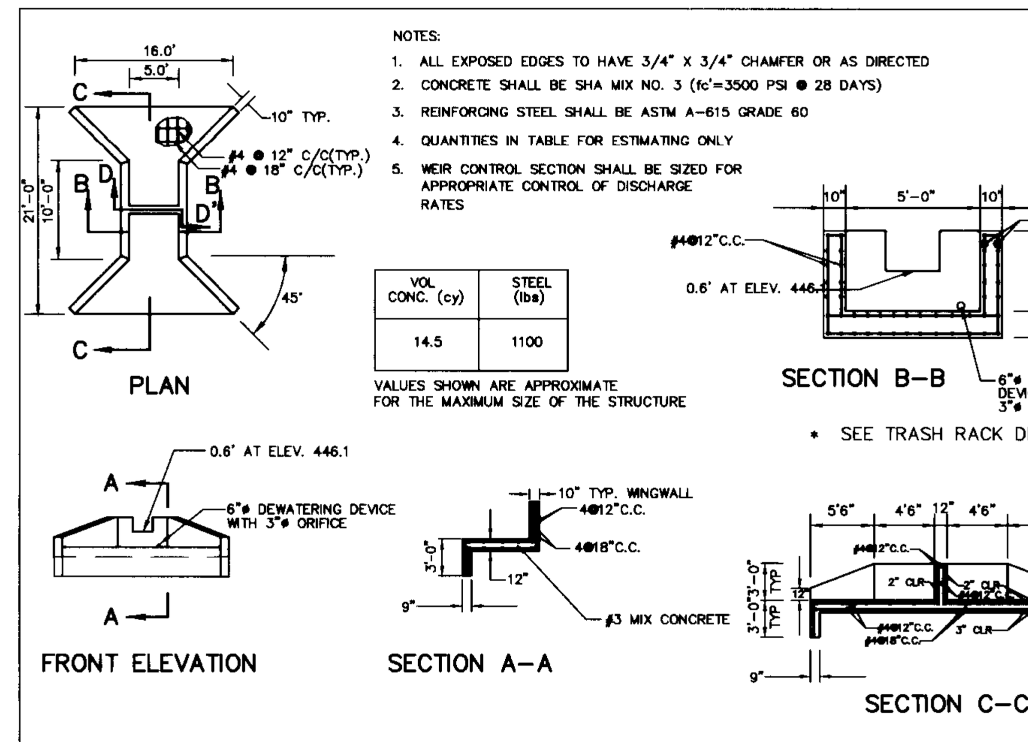

NOTES:
1. ALL EXPOSED EDGES TO HAVE 3/4" X 3/4" CHAMFER OR AS DIRECTED
2. CONCRETE SHALL BE SHA MIX NO. 3 (fc'=3500 PSI @ 28 DAYS)
3. REINFORCING STEEL SHALL BE ASTM A-615 GRADE 60
4. QUANTITIES IN TABLE FOR ESTIMATING ONLY
5. WEIR CONTROL SECTION SHALL BE SIZED FOR APPROPRIATE CONTROL OF DISCHARGE RATES

VOL CONC. (cy)	STEEL (lbs)
14.5	1100

VALUES SHOWN ARE APPROXIMATE FOR THE MAXIMUM SIZE OF THE STRUCTURE

* SEE TRASH RACK DETAIL.

LOW RISE STORMWATER MANAGEMENT CONTROL STRUCTURE
(NOT TO SCALE)

HOWARD COUNTY STANDARD DETAIL
SD-7.00

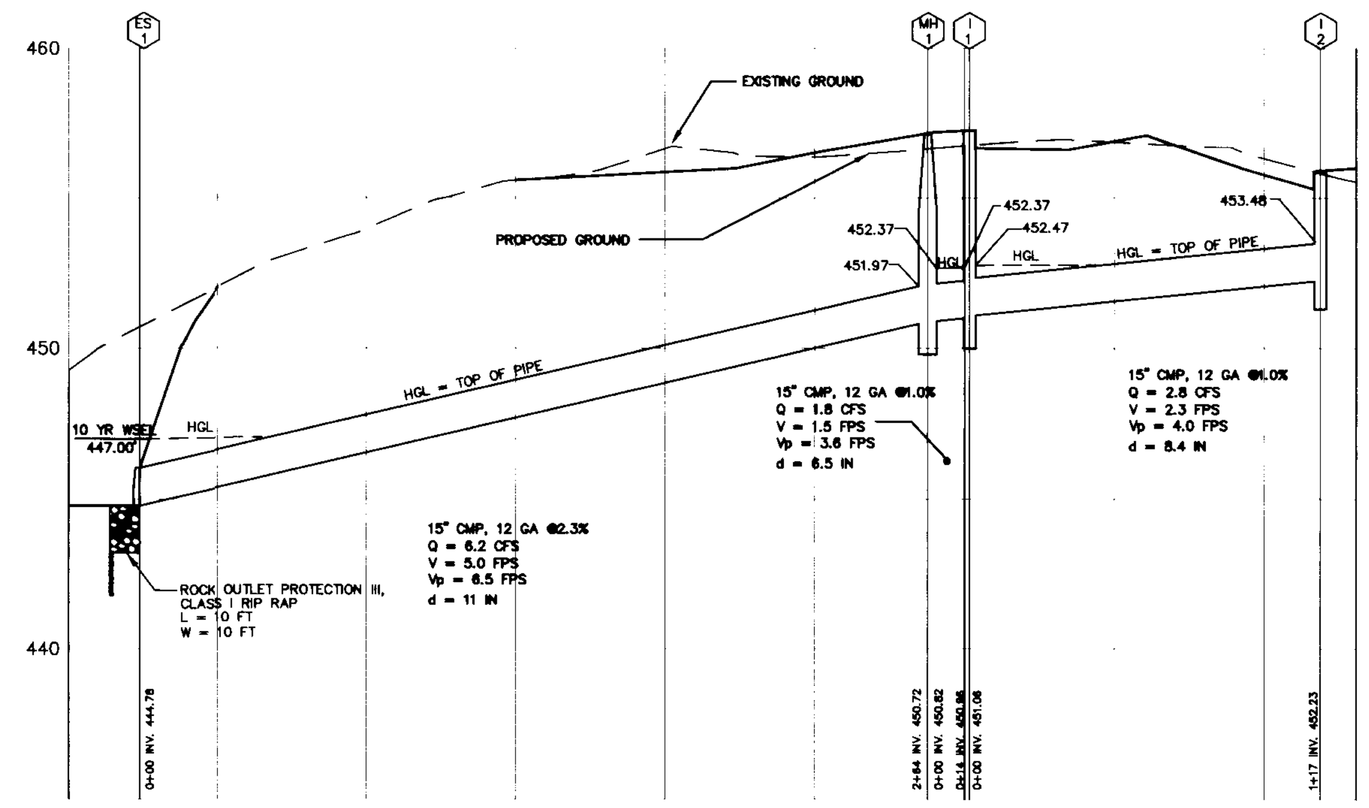

STORM DRAIN PROFILE

HORIZONTAL SCALE : 1" = 50'
VERTICAL SCALE : 1" = 5'

STRUCTURE SCHEDULE					
NO.	LOCATION	RIM ELEV.	INV. IN	INV. OUT	COMMENTS
I-2	N 540,689.3124 E 1,333,987.9406	455.91	---	452.31	SD 4.01
I-1	N 540,663.0152 E 1,333,870.2701	456.28	451.06	450.96	SD 4.01
SC-1	N 540,665.1765 E 1,333,854.9542	456.20	450.82	450.72	SEE DETAIL
ES1	N 540,702.1903 E 1,333,590.9317	---	444.78	---	SD 5.61

NOTE:
INLET LOCATIONS ARE TO THE CENTERLINE OF THE INLET ALONG THE FACE OF CURB. STORMCEPTOR LOCATION IS TO CENTERLINE OF MANHOLE COVER. END SECTION LOCATION IS AT THE INTERSECTION OF THE END SECTION AND THE DRAINAGE PIPE ALONG THE CENTERLINE.

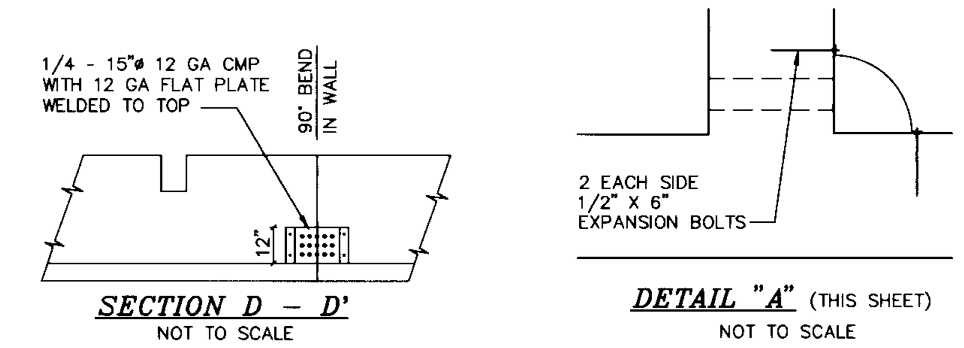

SECTION D – D'
NOT TO SCALE

DETAIL "A" (THIS SHEET)
NOT TO SCALE

TRASH RACK DETAIL
(ADD TO STD DETAIL SD-7.00 ABOVE)

SWM POND MAINTENANCE REQUIREMENTS

a. SILT SHALL BE REMOVED WHEN ACCUMULATION EXCEEDS SIX (6) INCHES IN BASIN OR FOUR (4) INCHES IN THE FOREBAY.

b. ACCUMULATED PAPER, TRASH AND DEBRIS SHALL BE REMOVED AS NECESSARY.

c. ANNUAL INSPECTION AND REPAIR, IF REQUIRED, OF THE STRUCTURE SHALL BE PERFORMED.

OPERATION AND MAINTENANCE SCHEDULE FOR STORMCEPTOR WATER QUALITY DEVICE

1. STORMCEPTOR WATER QUALITY STRUCTURES WILL REQUIRE PERIODIC INSPECTION AND CLEANING TO MAINTAIN OPERATION AND FUNCTION. OWNERS WILL HAVE THE STORMCEPTOR UNIT INSPECTED YEARLY OR AS REQUIRED BY HOWARD COUNTY, UTILIZING THE STORMCEPTOR INSPECTION/MONITORING FORM. INSPECTIONS CAN BE DONE BY USING A CLEAR PLEXIGLAS TUBE ("SLUDGE JUDGE") TO EXTRACT A WATER COLUMN SAMPLE. WHEN SEDIMENT DEPTHS EXCEED THE SPECIFIED LEVEL (TABLE 6 OF TECHNICAL MANUAL) THEN CLEANING OF THE UNIT IS REQUIRED.
2. STORMCEPTOR WATER QUALITY STRUCTURES MUST BE CHECKED AND CLEANED IMMEDIATELY AFTER PETROLEUM SPILLS, CONTACT APPROPRIATE REGULATORY AGENCIES.
3. MAINTENANCE OF STORMCEPTOR UNITS SHOULD BE DONE BY A VACUUM TRUCK WHICH WILL REMOVE THE WATER, SEDIMENT, DEBRIS, FLOATING HYDROCARBONS AND OTHER MATERIALS IN UNIT. THE PROPER CLEANING AND DISPOSAL OF THE REMOVED MATERIALS AND LIQUID MUST BE FOLLOWED.
4. INLET AND OUTLET PIPES MUST BE CHECKED FOR ANY OBSTRUCTIONS AND IF ANY OBSTRUCTIONS AREA FOUND THEY MUST BE REMOVED. STRUCTURAL PARTS OF THE STORMCEPTOR WILL BE REPAIRED AS NEEDED.
5. OWNER SHALL RETAIN AND MAKE STORMCEPTOR INSPECTION/MONITORING FORMS AVAILABLE TO HOWARD COUNTY OFFICIALS UPON THEIR REQUEST.

DEVELOPERS CERTIFICATE

I CERTIFY THAT ALL DEVELOPMENT AND CONSTRUCTION WILL BE DONE ACCORDING TO THIS PLAN, AND THAT ANY RESPONSIBLE PERSONNEL INVOLVED IN THE CONSTRUCTION PROJECT WILL HAVE A CERTIFICATE OF ATTENDANCE AT A DEPARTMENT OF THE ENVIRONMENT APPROVED TRAINING PROGRAM FOR THE CONTROL OF SEDIMENT AND EROSION BEFORE BEGINNING THE PROJECT. I ALSO AUTHORIZE PERIODIC ON-SITE INSPECTION BY THE NATURAL RESOURCE CONSERVATION SERVICE.

[signature] 5/30/97
SIGNATURE OF DEVELOPER — DATE

BRIAN DARNELL, HIGH'S OF BALTIMORE
PRINTED NAME OF DEVELOPER

ENGINEER'S CERTIFICATE

I CERTIFY THAT THIS PLAN FOR EROSION AND SEDIMENT CONTROL REPRESENTS A PRACTICAL AND WORKABLE PLAN BASED ON MY PERSONAL KNOWEDGE OF THE SITE CONDTIONS AND THAT IT WAS PREPARED IN ACCORDANCE WITH THE REQUIREMENTS OF THE NATURAL RESOURCE CONSERVATION SERVICE.

[signature] 5/30/97
SIGNATURE OF ENGINEER — DATE

R. JACOB HIKMAT
PRINTED NAME OF ENGINEER

THESE PLANS HAVE BEEN REVIEWED FOR THE HOWARD SOIL CONSERVATION DISTRICT AND MEETS TECHNICAL REQUIREMENTS.

[signature] 6/3/97
USDA – NATURAL RESOURCE CONSERVATION SERVICE — DATE

THIS DEVELOPMENT PLAN IS APPROVED FOR SOIL EROSION AND SEDIMENT CONTROL BY THE HOWARD SOIL CONSERVATION DISTRICT.

[signature] 6/3/97
HOWARD SOIL CONSERVATION DISTRICT — DATE

APPROVED: DEPARTMENT OF PLANNING AND ZONING

[signature] 6/10/97
CHIEF, DEVELOPMENT ENGINEERING DIVISION — DATE

Cindy Hamilton 8/22/97
CHIEF, DIVISION OF LAND DEVELOPMENT — DATE

[signature] 8/22/97
DIRECTOR — DATE

APPROVED ; FOR PRIVATE WATER AND PUBLIC SEWER.
HOWARD COUNTY HEALTH DEPARTMENT.

[signature] 8-18-97
HOWARD COUNTY HEALTH OFFICER — DATE

STATE OF MARYLAND — R. JACOB HIKMAT — PROFESSIONAL ENGINEER — 5/30/97

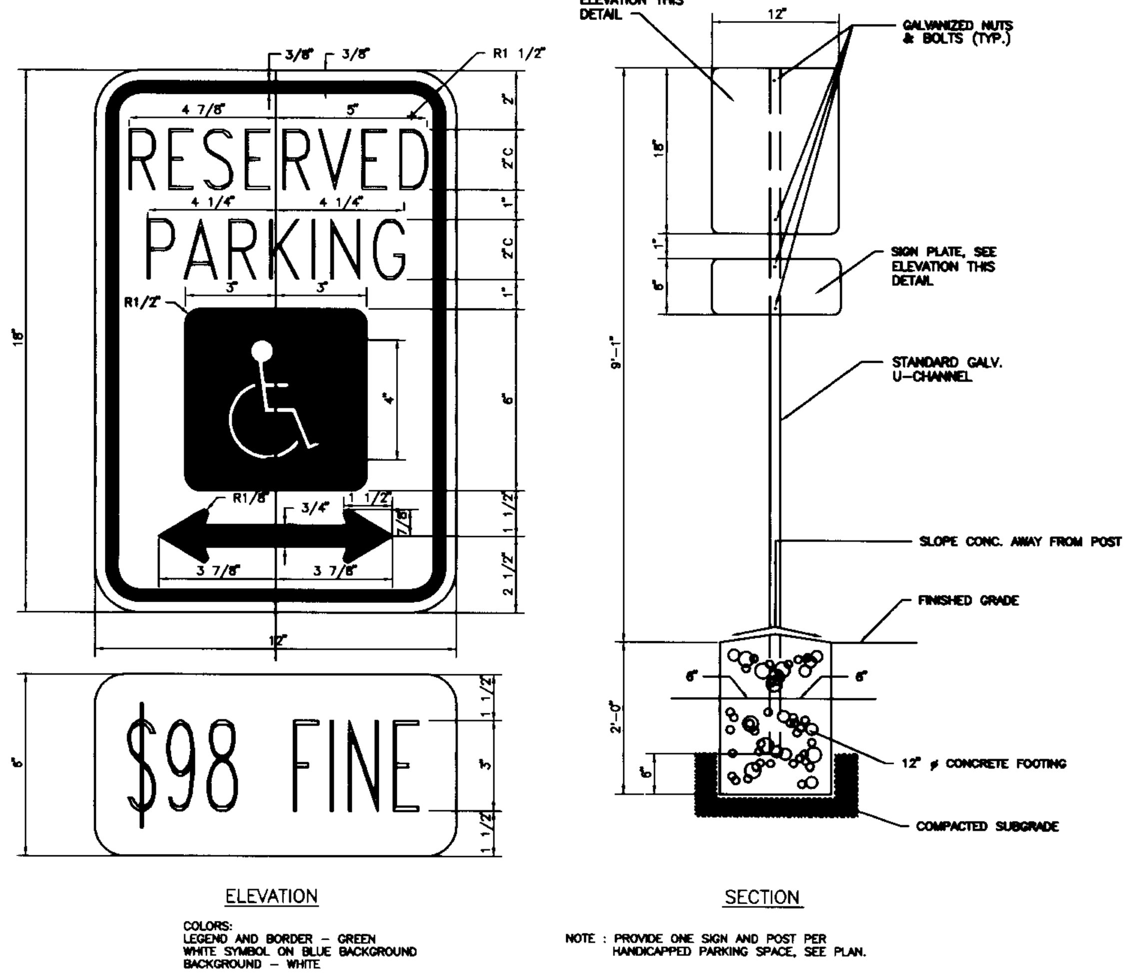

COLORS:
LEGEND AND BORDER – GREEN
WHITE SYMBOL ON BLUE BACKGROUND
BACKGROUND – WHITE

NOTE : PROVIDE ONE SIGN AND POST PER HANDICAPPED PARKING SPACE, SEE PLAN.

HANDICAPPED SIGN AND POST
NOT TO SCALE

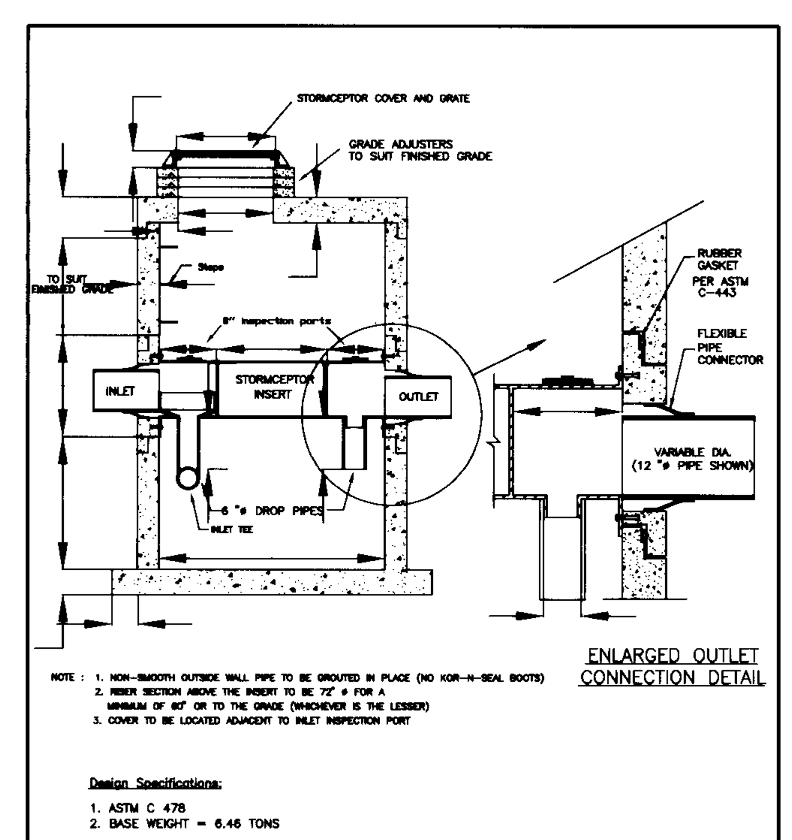

NOTE : 1. NON-SMOOTH OUTSIDE WALL PIPE TO BE GROUTED IN PLACE (NO KOR-N-SEAL BOOTS)
2. RISER SECTION ABOVE THE INSERT TO BE 72" ø FOR A MINIMUM OF 60" OR TO THE GRADE (WHICHEVER IS THE LESSER)
3. COVER TO BE LOCATED ADJACENT TO INLET INSPECTION PORT

Design Specifications:
1. ASTM C 478
2. BASE WEIGHT = 6.46 TONS

G.B. — 08/16/95 — NTS — U.S.
STC 900 PRECAST CONCRETE STORMCEPTOR
900 US GALLON CAPACITY

Concrete Stormceptor Order Form *

Contractor Information
Name:
Address:
City:
State:
Zip Code:
Contact:
Phone:
Fax:

Office Use Only
Order #:
Date:
Internal Sale:

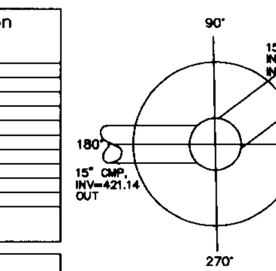

Owner Information
Name: BRANTLY DEVELOPMENT CORP. Hugh Cole & John Liparini, Trustees
Phone: (410) 730-0810
Fax:

Please draw orientation of inlet and outlet pipes on diagram along with pipe inside diameter (in.) and invert elevation (ft.). Clearly mark inlet pipes with an I and outlet pipes with an O and provide the inlet/outlet pipe angle in degrees.

Stormceptor Model		Insert Size	
900 ■	3600 □	22"	■
1200 □	4800 □	32"	□
1800 □	6000 □	44"	□
2400 □	7200 □	Custom	□

Manhole Number	1
Top Elevation (ft.)	456.10
Inlet Pipe Invert (ft)	450.82
Outlet Pipe Invert (ft)	450.72
Pipe Type:	CMP
Pipe Inside Diameter (in.)(ID)	15"
Pipe Outside Diameter (in)(OD)	N/A

Project Name: FULTON HIGH'S
Approximate time until required delivery (weeks)
Delivery Address: Street INTERSECTION OF MD RT 216 AND LIME KILN ROAD
City: FULTON State: MARYLAND Zip Code:
Designer Company : MILDENBERG, BOENDER & ASSOCIATES, INC.
Designer Contact: Jacob Hikmat Phone: (410) 997-0296 Fax: (410) 997-0298

For Technical Assistance and Stormceptor Order Information
Please Call Stormceptor Corporation at (301) 762-8361
or toll free at 1-(800)-762-4703

* TO BE INCLUDED ON SWM PLAN BY DESIGNER

DEVELOPER
HIGH'S OF BALTIMORE
1340-L CHARWOOD ROAD
HANOVER, MARYLAND 21076
(410) 859-3636

OWNER
HUGH F. COLE & GROUP FIVE PARTNERSHIP
8835 P COLUMBIA 100 PARKWAY
COLUMBIA, MARYLAND 21045
(410) 730-0810

project	date	illustration	engineering	scale	approval
95081	JULY 1996	SJD	SJD	AS SHOWN	RJH

no.	description revisions	date

TAX MAP 46 – PARCEL 224 – BLOCK 2
FULTON HIGH'S
FIFTH ELECTION DISTRICT — HOWARD COUNTY, MARYLAND
DETAILS AND STORM DRAIN PROFILES

MILDENBERG, BOENDER & ASSOC., INC.
Engineers Planners Surveyors
5072 Dorsey Hall Drive, Suite 202, Ellicott City, Maryland 21042
(410) 997-0296 Balt. (301) 621-5521 Wash. (410) 997-0298 Fax.

81-D-SDP.DWG

DETAIL 33 - SUPER SILT FENCE

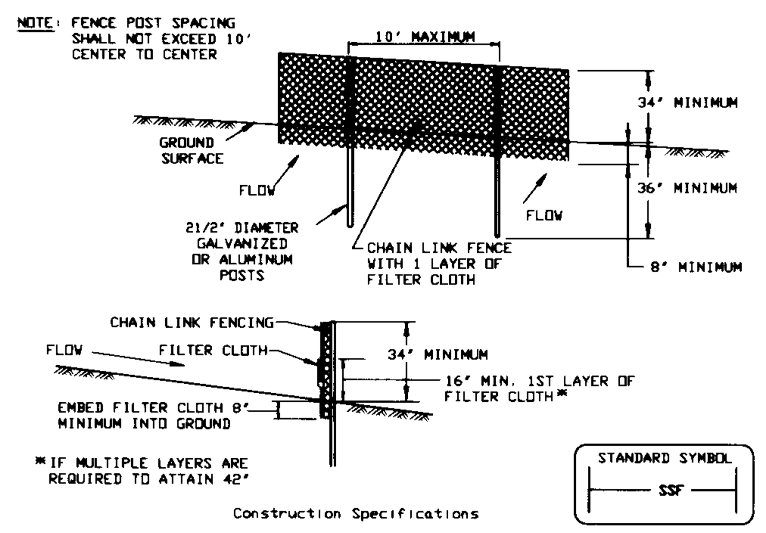

Construction Specifications

1. Fencing shall be 42" in height and constructed in accordance with the latest Maryland State Highway Details for Chain Link Fencing. The specification for a 6' fence shall be used, substituting 42" fabric and 6' length posts.

2. Chain link fence shall be fastened securely to the fence posts with wire ties. The lower tension wire, brace and truss rods, drive anchors and post caps are not required except on the ends of the fence.

3. Filter cloth shall be fastened securely to the chain link fence with ties spaced every 24" at the top and mid section.

4. Filter cloth shall be embedded a minimum of 8" into the ground.

5. When two sections of filter cloth adjoin each other, they shall be overlapped by 6" and folded.

6. Maintenance shall be performed as needed and silt buildups removed when 'bulges' develop in the silt fence, or when silt reaches 50% of fence height

7. Filter cloth shall be fastened securely to each fence post with wire ties or staples at top and mid section and shall meet the following requirements for Geotextile Class F:

Tensile Strength	50 lbs/in (min.)	Test: MSMT 509
Tensile Modulus	20 lbs/in (min.)	Test: MSMT 509
Flow Rate	0.3 gal/ft²/minute (max.)	Test: MSMT 322
Filtering Efficiency	75% (min.)	Test: MSMT 322

U.S. DEPARTMENT OF AGRICULTURE SOIL CONSERVATION SERVICE	PAGE H - 26 - 3	MARYLAND DEPARTMENT OF ENVIRONMENT WATER MANAGEMENT ADMINISTRATION

SUPER SILT FENCE

Design Criteria

Slope	Slope Steepness	Slope Length (maximum)	Silt Fence Length (maximum)
0 - 10%	0 - 10:1	Unlimited	Unlimited
10 - 20%	10:1 - 5:1	200 feet	1,500 feet
20 - 33%	5:1 - 3:1	100 feet	1,000 feet
33 - 50%	3:1 - 2:1	100 feet	500 feet
50% +	2:1 +	50 feet	250 feet

U.S. DEPARTMENT OF AGRICULTURE SOIL CONSERVATION SERVICE	PAGE H - 26 - 3A	MARYLAND DEPARTMENT OF ENVIRONMENT WATER MANAGEMENT ADMINISTRATION

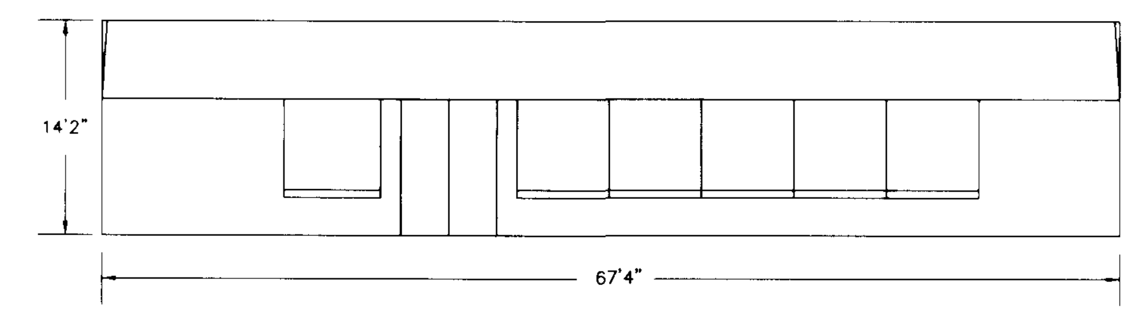

FRONT ELEVATION
SCALE: 1 = 10'

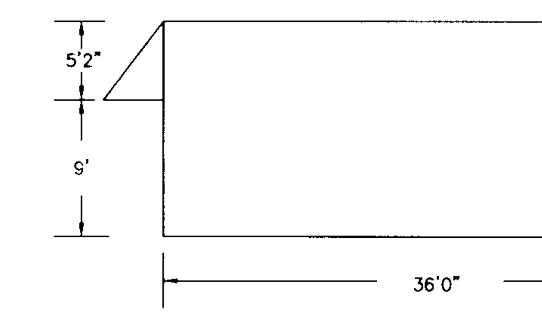

SIDE ELEVATION
SCALE: 1 = 10'

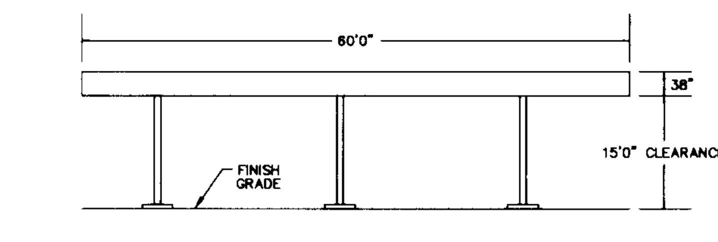

CANOPY DETAIL
SCALE : 1" = 20'

GAS STATION STRUCTURE (BUILDING A)

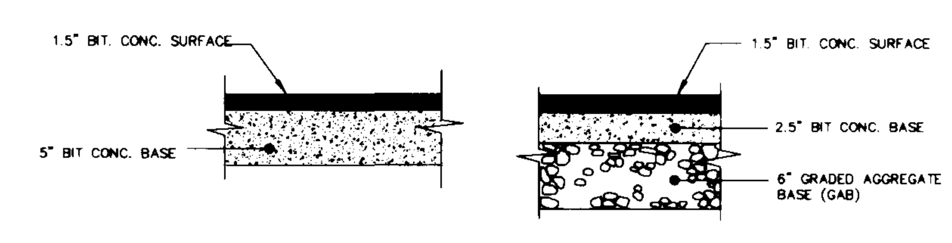

PAVING SECTION P-2
NOT TO SCALE

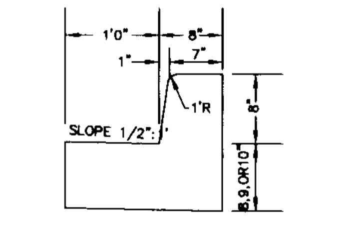

MD. S.H.A. TYPE "A" CONCRETE COMBINATION CURB & GUTTER STANDARD NO. MD. 620.02
NOT TO SCALE

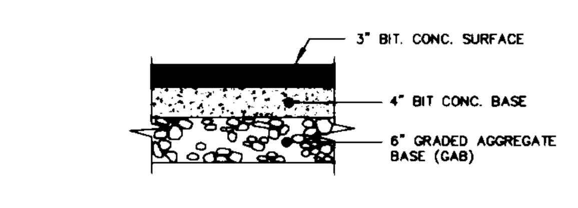

MD. S.H.A. PAVING SECTION
NOT TO SCALE
NOTE : CONFORM TO EXISTING GRADE OF ±1%.

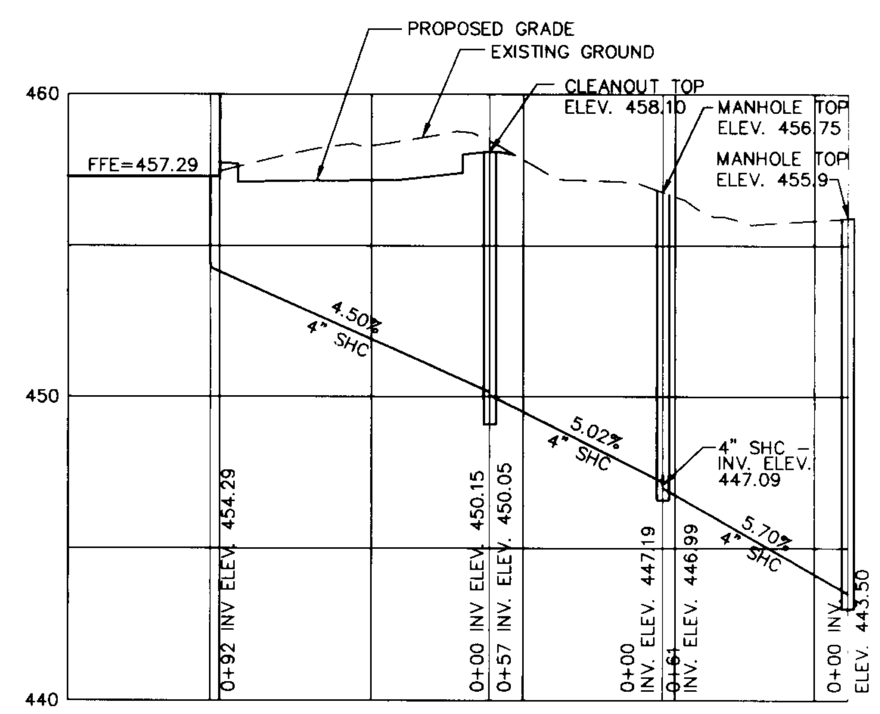

SHC PROFILE FROM BUILDING A TO PUBLIC SEWER MH
HORIZONTAL SCALE : 1" = 50'
VERTICAL SCALE : 1" = 5'

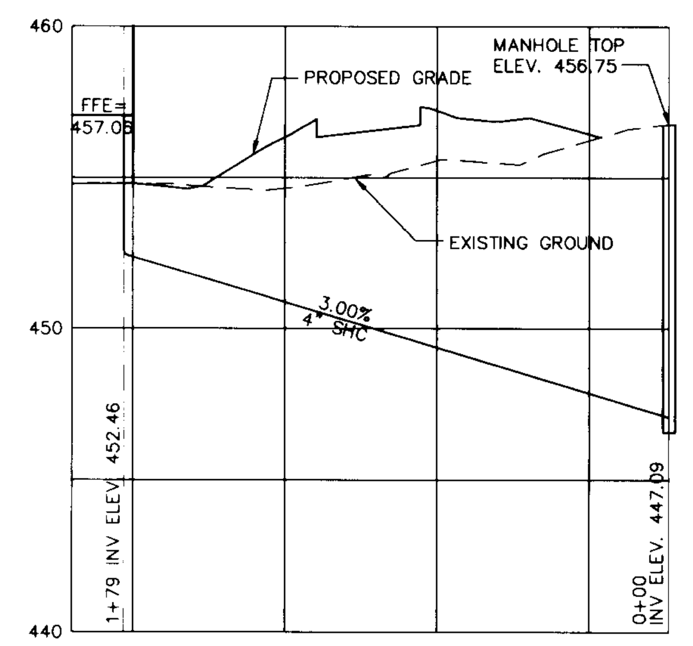

SHC PROFILE FROM BUILDING B TO MH 1
HORIZONTAL SCALE : 1" = 50'
VERTICAL SCALE : 1" = 5'

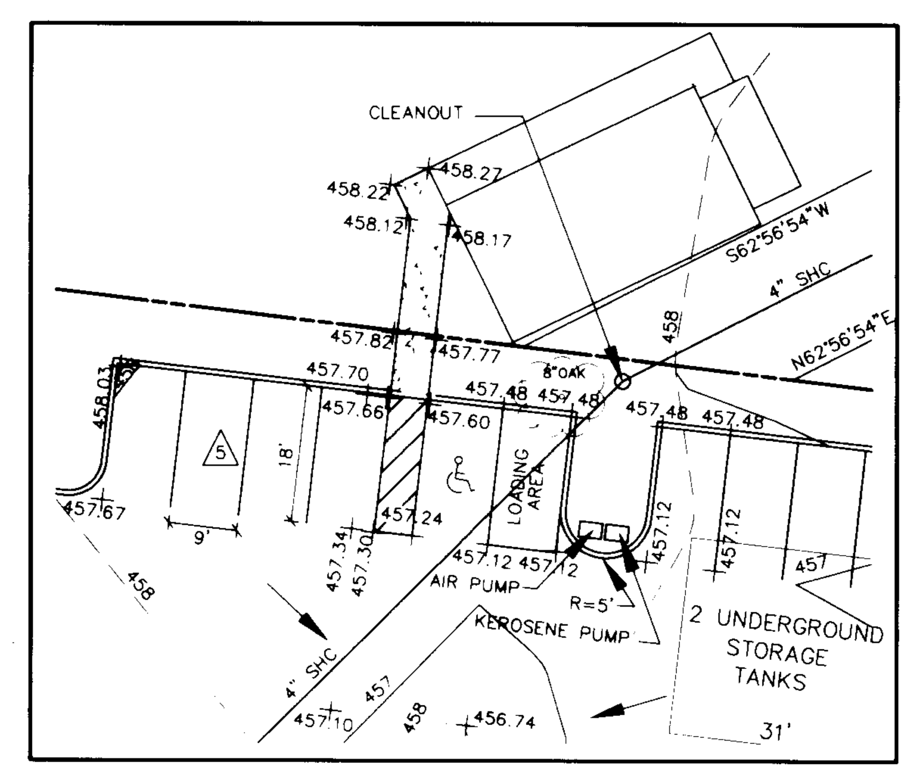

HANDICAPPED ACCESS (RELOCATED BUILDING)
SCALE : 1"=20'

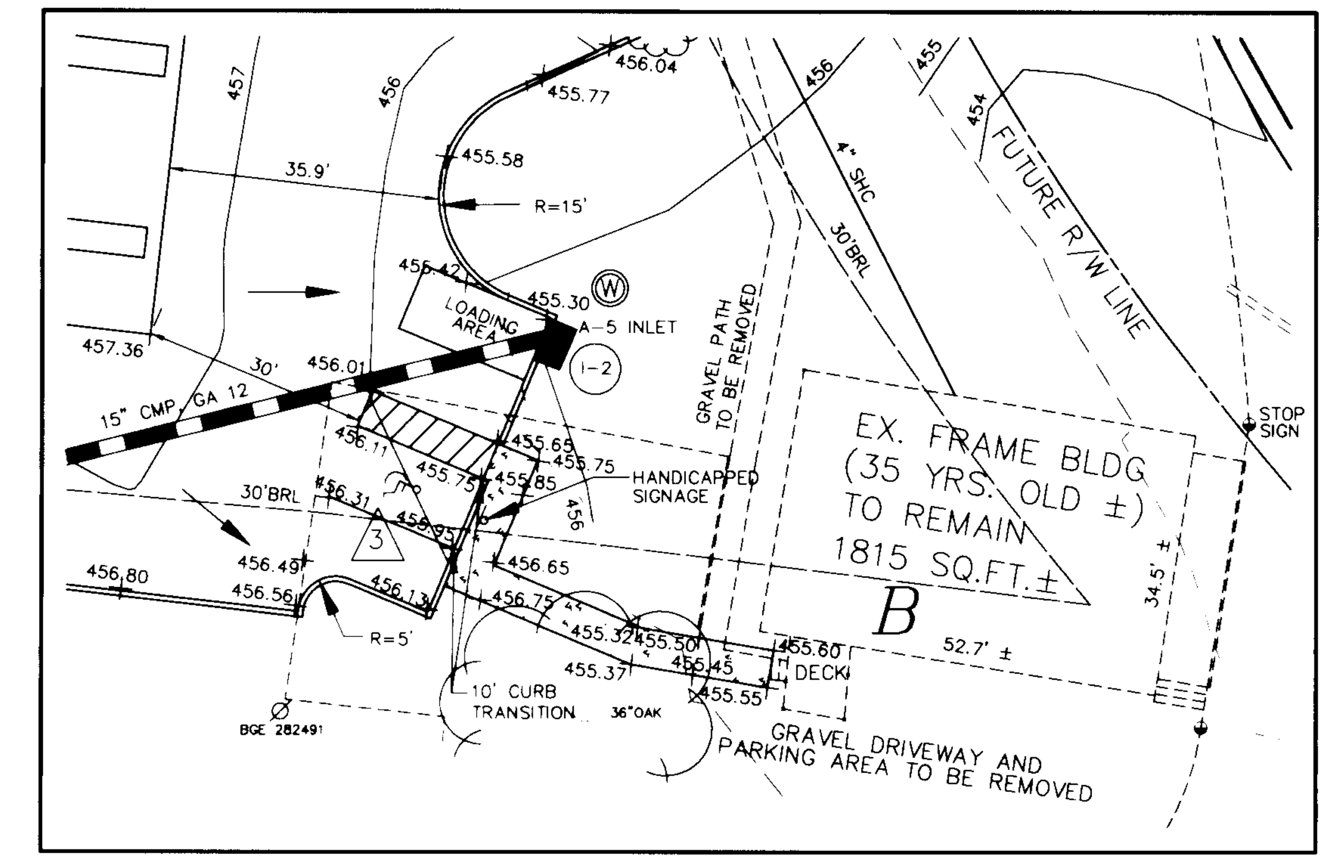

HANDICAPPED ACCESS (BUILDING B)
SCALE : 1"=20'

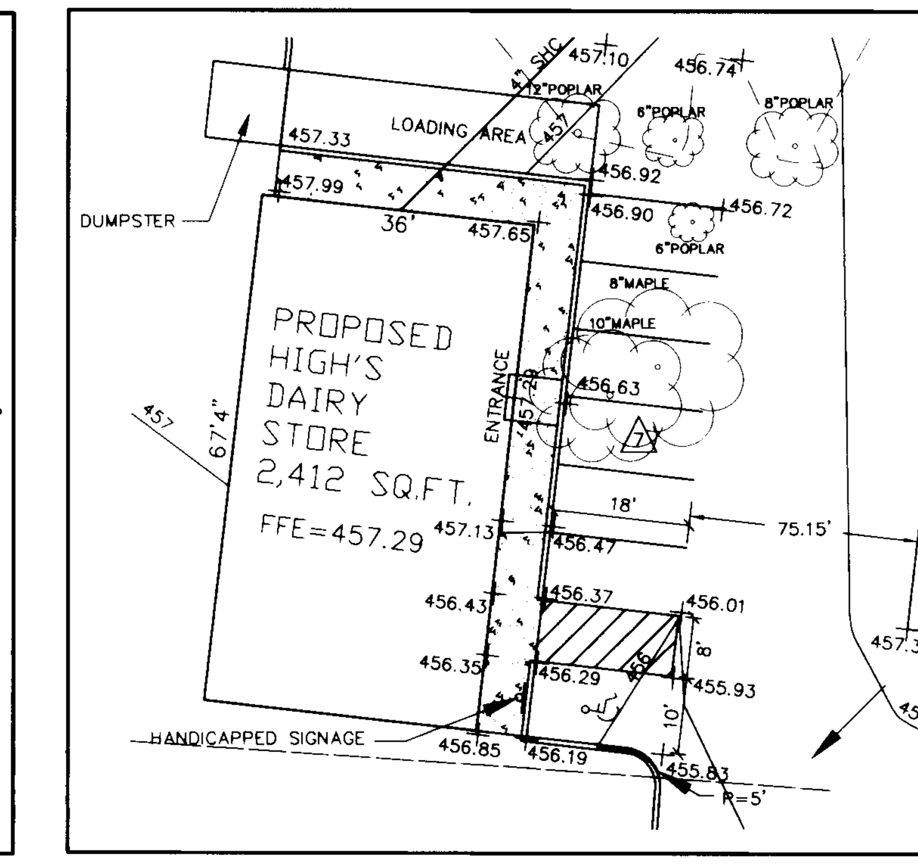

HANDICAPPED ACCESS (BUILDING A)
SCALE : 1"=20'

DEVELOPERS CERTIFICATE

I CERTIFY THAT ALL DEVELOPMENT AND CONSTRUCTION WILL BE DONE ACCORDING TO THIS PLAN, AND THAT ANY RESPONSIBLE PERSONNEL INVOLVED IN THE CONSTRUCTION PROJECT WILL HAVE A CERTIFICATE OF ATTENDANCE AT A DEPARTMENT OF THE ENVIRONMENT APPROVED TRAINING PROGRAM FOR THE CONTROL OF SEDIMENT AND EROSION BEFORE BEGINNING THE PROJECT. I ALSO AUTHORIZE PERIODIC ON-SITE INSPECTION BY THE NATURAL RESOURCE CONSERVATION SERVICE.

SIGNATURE OF DEVELOPER — DATE 5/30/97

BRIAN DARNELL, HIGH'S OF BALTIMORE
PRINTED NAME OF DEVELOPER

ENGINEER'S CERTIFICATE

I CERTIFY THAT THIS PLAN FOR EROSION AND SEDIMENT CONTROL REPRESENTS A PRACTICAL AND WORKABLE PLAN BASED ON MY PERSONAL KNOWEDGE OF THE SITE CONDTIONS AND THAT IT WAS PREPARED IN ACCORDANCE WITH THE REQUIREMENTS OF THE NATURAL RESOURCE CONSERVATION SERVICE.

SIGNATURE OF ENGINEER — DATE 5/30/97

R. JACOB HIKMAT
PRINTED NAME OF ENGINEER

THESE PLANS HAVE BEEN REVIEWED FOR THE HOWARD SOIL CONSERVATION DISTRICT AND MEETS TECHNICAL REQUIREMENTS.

USDA - NATURAL RESOURCE CONSERVATION SERVICE — DATE 6/3/97

THIS DEVELOPMENT PLAN IS APPROVED FOR SOIL EROSION AND SEDIMENT CONTROL BY THE HOWARD SOIL CONSERVATION DISTRICT.

HOWARD SOIL CONSERVATION DISTRICT — DATE

APPROVED: DEPARTMENT OF PLANNING AND ZONING

CHIEF, DEVELOPMENT ENGINEERING DIVISION — DATE 6/10/97

CHIEF, DIVISION OF LAND DEVELOPMENT — DATE 8/22/97

DIRECTOR — DATE 8/22/97

APPROVED ; FOR PRIVATE WATER AND PUBLIC SEWER. HOWARD COUNTY HEALTH DEPARTMENT.

HOWARD COUNTY HEALTH OFFICER — DATE 8-18-97

81-SCN-D.DWG

HILLIS - CARNES ENGINEERING ASSOCIATES, INC.
Page 1 of 1
RECORD OF SOIL EXPLORATION

Project Name Fulton High's — Boring # B-1
Location Fulton, Maryland — Job # 96129A

SAMPLER: Hammer Wt. 140 Lbs. — Hammer Drop 30 Inches — Pipe Size 2.0 Inches OD
Hole Diameter 6" — Rock Core Dia. — Boring Method HSA
Datum — Surf. Elev. — Date Started 5-29-96
Foreman W. Massey — Inspector — Date Completed 5-29-96

ELEV.	SOIL DESCRIPTION (Color, Moisture, Density, Size, Proportion)	STRA. DEPTH	DEPTH SCALE	CON	SAMPLE BLOWS 6"	NO.	REC.	BORING & SAMPLING NOTES
	SURFACE		0.0					
	Red to brown, damp to wet, soft to stiff, micaceous silt with some fine to coarse gravel and sand			D	1-2-2	1	14"	2" Topsoil; Groundwater encountered at 3.0' while drilling
				D	2-2-2	2	10"	Sample for S-4 from cuttings
			5					Caved at 5.0'
				D	4-4-4	3	2"	Offset boring 15.0' West
				D	3-5-8	4	0"	
			10					
		12.0		D	7-7-8-9	5	21"	
	Bottom of Hole at 12.0'		15					
			20					

SAMPLER TYPE: DRIVEN SPLIT SPOON UNLESS OTHERWISE NOTED. PT-PRESSED SHELBY TUBE; CA-CONTINUOUS FLIGHT AUGER; RC-ROCK CORE
SAMPLE CONDITIONS: D-DISINTEGRATED; I-INTACT; U-UNDISTURBED; L-LOST
GROUND WATER DEPTH: AT COMPLETION 2.5 FT.; AFTER ___ FT.; AFTER ___ FT.
BORING METHOD: HSA-HOLLOW STEM AUGERS; CFA-CONT. FLIGHT AUGERS; DC-DRIVING CASING; MD-MUD DRILLING
STANDARD PENETRATION TEST-DRIVING 2" OD SAMPLER 1' WITH 140# HAMMER FALLING 30":COUNT MADE AT 6" INTERVALS

HILLIS - CARNES ENGINEERING ASSOCIATES, INC.
Page 1 of 1
RECORD OF SOIL EXPLORATION

Project Name Fulton High's — Boring # B-2
Location Fulton, Maryland — Job # 96129A

SAMPLER: Hammer Wt. 140 Lbs. — Hammer Drop 30 Inches — Pipe Size 2.0 Inches OD
Hole Diameter 6" — Rock Core Dia. — Boring Method HSA
Datum — Surf. Elev. — Date Started 5-29-96
Foreman W. Massey — Inspector — Date Completed 5-29-96

ELEV.	SOIL DESCRIPTION (Color, Moisture, Density, Size, Proportion)	STRA. DEPTH	DEPTH SCALE	CON	SAMPLE BLOWS 6"	NO.	REC.	BORING & SAMPLING NOTES
	SURFACE		0.0					
	Orange, moist, stiff, silt with some roots	1.5		I	1-4-9	1	8"	No groundwater encountered while drilling
	Red to brown and green damp stiff to medium stiff, micaceous silt with some fine sand; S-5 is very stiff			I	3-5-6	2	18"	
			5					Caved at 7.0'
				I	3-3-4	3	16"	Offset boring 15.0' West
				I	3-3-5	4	18"	
			10					
		12.0		I	5-8-8-8	5	6"	
	Bottom of Hole at 12.0'		15					
			20					

SAMPLER TYPE: DRIVEN SPLIT SPOON UNLESS OTHERWISE NOTED. PT-PRESSED SHELBY TUBE; CA-CONTINUOUS FLIGHT AUGER; RC-ROCK CORE
SAMPLE CONDITIONS: D-DISINTEGRATED; I-INTACT; U-UNDISTURBED; L-LOST
GROUND WATER DEPTH: AT COMPLETION Dry FT.; AFTER ___ FT.; AFTER ___ FT.
BORING METHOD: HSA-HOLLOW STEM AUGERS; CFA-CONT. FLIGHT AUGERS; DC-DRIVING CASING; MD-MUD DRILLING
STANDARD PENETRATION TEST-DRIVING 2" OD SAMPLER 1' WITH 140# HAMMER FALLING 30":COUNT MADE AT 6" INTERVALS

HILLIS - CARNES ENGINEERING ASSOCIATES, INC.
Page 1 of 1
RECORD OF SOIL EXPLORATION

Project Name Fulton High's — Boring # B-3
Location Fulton, Maryland — Job # 96129A

SAMPLER: Hammer Wt. 140 Lbs. — Hammer Drop 30 Inches — Pipe Size 2.0 Inches OD
Hole Diameter 6" — Rock Core Dia. — Boring Method HSA
Datum — Surf. Elev. — Date Started 5-29-96
Foreman W. Massey — Inspector — Date Completed 5-29-96

ELEV.	SOIL DESCRIPTION (Color, Moisture, Density, Size, Proportion)	STRA. DEPTH	DEPTH SCALE	CON	SAMPLE BLOWS 6"	NO.	REC.	BORING & SAMPLING NOTES
	SURFACE		0.0					
	Brown damp stiff silty clay with some rock fragments	2.5		I	2-5-8	1	18"	3" Topsoil; Groundwater encountered at 3.0' while drilling
	Red to gray, damp to moist, medium stiff to soft silt with some rock fragments and roots			I	2-3-3	2	16"	
			5					Caved at 6.0'
		7.5		I	3-1-3	3	10"	Offset boring 25.0' West
	Brown, damp, medium stiff to stiff, micaceous silt			I	5-3-5	4	12"	
			10					
		12.0		I	5-7-8-9	5	12"	
	Bottom of Hole at 12.0'		15					
			20					

SAMPLER TYPE: DRIVEN SPLIT SPOON UNLESS OTHERWISE NOTED. PT-PRESSED SHELBY TUBE; CA-CONTINUOUS FLIGHT AUGER; RC-ROCK CORE
SAMPLE CONDITIONS: D-DISINTEGRATED; I-INTACT; U-UNDISTURBED; L-LOST
GROUND WATER DEPTH: AT COMPLETION 3.0 FT.; AFTER ___ FT.; AFTER ___ FT.
BORING METHOD: HSA-HOLLOW STEM AUGERS; CFA-CONT. FLIGHT AUGERS; DC-DRIVING CASING; MD-MUD DRILLING
STANDARD PENETRATION TEST-DRIVING 2" OD SAMPLER 1' WITH 140# HAMMER FALLING 30":COUNT MADE AT 6" INTERVALS

DEVELOPER	OWNER
HIGH'S OF BALTIMORE 1340-L CHARWOOD ROAD HANOVER, MARYLAND 21076 (410) 859-3636	HUGH F. COLE & GROUP FIVE PARTNERSHIP 8835 P COLUMBIA 100 PARKWAY COLUMBIA, MARYLAND 21045 (410) 730-0810

project 95081	date JULY 1996
illustration SJD	engineering SJD
scale N.T.S.	approved RJH

no.	description revisions	date

TAX MAP 46 - PARCEL 224 - BLOCK 2
FULTON HIGH'S
FIFTH ELECTION DISTRICT — HOWARD COUNTY, MARYLAND
SEDIMENT CONTROL NOTES AND DETAILS

MILDENBERG, BOENDER & ASSOC., INC.
Engineers Planners Surveyors
5072 Dorsey Hall Drive, Suite 202, Ellicott City, Maryland 21042
(410) 997-0296 Balt. (301) 621-5521 Wash. (410) 997-0298 Fax

SDP-97-11

HOWARD SOIL CONSERVATION DISTRICT
PERMANENT SEEDING NOTES

APPLY TO GRADED OR CLEARED AREAS NOT SUBJECT TO IMMEDIATE FURTHER DISTURBANCE WHERE A PERMANENT LONG-LIVED VEGETATIVE COVER IS NEEDED.

SEEDBED PREPARATION: LOOSEN UPPER THREE INCHES OF SOIL BY RAKING , DISKING OR OTHER ACCEPTABLE MEANS BEFORE SEEDING, IF NOT PREVIOUSLY LOOSENED.

SOIL AMENDMENTS: IN LIEU OF SOIL TEST RECOMMENDATIONS, USE ONE OF THE FOLLOWING SCHEDULES:
1) PREFERRED – APPLY 2 TONS PER ACRES DOLOMITIC LIMESTONE (92 LBS/1000 SQ.FT.) AND 600 LBS. PER ACRE 10-10-10 FERTILIZER (14 LBS/1000 SQ.FT.) BEFORE SEEDING. HARROW OR DISK INTO UPPER THREE INCHES OF SOIL. AT TIME OF SEEDING , APPLY 400 LBS. PER ACRE 30-0-0 UREAFORM FERTILIZER (9 LBS./1000 SQ.FT.).
2) ACCEPTABLE – APPLY 2 TONS PER ACRE DOLOMITIC LIMESTONE (92 LBS./1000 SQ.FT.) AND 1000 LBS. PER ACRE 10-10-10 FERTILIZER (23 LBS./1000 SQ.FT.) BEFORE SEEDING. HARROW OR DISK INTO UPPER THREE INCHES OF SOIL.

SEEDING – FOR THE PERIODS MARCH 1 THRU APRIL 30, AND AUGUST 1 THRU OCTOBER 15, SEED WITH 60 LBS. PER ACRE 1.4 LBS/1000 SQ.FT.) OF KENTUCKY 31 TALL FESCUE. FOR THE PERIOD MAY 1 THRU JULY 31, SEED WITH 60 LBS. KENTUCKY 31 TALL FESCUE PER ACRE AND 2 LOBS. PER ACRE (.05 LBS./1000 SQ.FT.) OF WEEPING LOVEGRASS. DURING THE PERIOD OF OCTOBER 16 THRU FEBRUARY 28, PROTECT SITE BY: OPTION (1) – 2 TONS PER ACRE OF WELL ANCHORED STRAW MULCH AND SEED AS SOON AS POSSIBLE IN THE SPRING. OPTION (2) – USE SOD. OPTION (3) – SEED WITH 60 LBS./ACRE KENTUCKY 31 TALL FESCUE AND MULCH WITH 2 TONE/ACRE WELL ANCHORED STRAW.

MULCHING – APPLY 1-1/2 TO 2 TONS PER ACRE (70 TO 90 LBS./1000 SQ.FT) OF UNROTTED SMALL GRAIN STRAW IMMEDIATELY AFTER SEEDING. ANCHOR MULCH IMMEDIATELY AFTER APPLICATION USING MULCH ANCHORING TOOL OR 218 GALLONS PER ACRE (5 GAL/1000 SQ.FT.) OF EMULSIFIED ASPHALT ON FLAT AREAS. ON SLOPES 8 FEET OR HIGHER, USE 348 GALLONS PER ACRE (8 GAL/1000 SQ.FT.) FOR ANCHORING.

MAINTENANCE – INSPECT ALL SEEDING AREAS AND MAKE NEEDED REPAIRS, REPLACEMENTS AND RESEEDINGS.

TEMPORARY SEEDING NOTES

APPLY TO GRADED OR CLEARED AREAS LIKELY TO BE REDISTURBED WHERE A SHORT-TERM VEGETATIVE COVER IS NEEDED.

SEEDBED PREPARATION: LOOSEN UPPER THREE INCHES OF SOIL BY RAKING, DISKING OR OTHER ACCEPTABLE MEANS BEFORE SEEDING, FOR NOT PREVIOUSLY LOOSENED.

SOIL AMENDMENTS: APPLY 600 LBS. PER ACRE 10-10-10 FERTILIZER (14 LBS./1000 SQ.FT.)

SEEDING: FOR PERIODS MARCH 1 THRU APRIL 30 AND FROM AUGUST 15 THRU OCTOBER 15, SEED WITH 2-1/2 BUSHEL PER ACRE OF ANNUAL RYE (3.2 LBS./1000 SQ.FT.) FOR THE PERIOD MAY 1 THRU AUGUST 14, SEED WITH 3 LBS. PER ACRE OF WEEPING LOVEGRASS (.07 LBS./1000 SQ.FT.). FOR THE PERIOD NOVEMBER 16 THRU NOVEMBER 28, PROTECT SITE BY APPLYING 2 TONS PER ACRE OF WELL ANCHORED STRAW MULCH AND SEED AS SOON AS POSSIBLE IN THE SPRING, OR USE SOD.

MULCHING: APPLY 1-1/2 TO 2 TONS PER ACRE (70 TO 90 LBS./1000 SQ.FT.) OF UNROTTED WEED FREE SMALL GRAIN STRAW IMMEDIATELY AFTER SEEDING. ANCHOR MULCH IMMEDIATELY AFTER APPLICATION USING MULCH ANCHORING TOOL OR 218 GAL PER ACRE (5 GAL/1000 SQ.FT.) OF EMULSIFIED ASPHALT ON FLAT AREAS. ON SLOPES 8 FEET OR HIGHER, USE 348 GAL PER ACRE (8 GAL/1000 SQ.FT.) FOR ANCHORING.

REFER TO THE 1983 MARYLAND STANDARDS AND SPECIFICATIONS FOR SOIL EROSION AND SEDIMENT CONTROL FOR ADDITIONAL RATES AND METHODS NOT COVERED.

HOWARD SOIL CONSERVATION DISTRICT
STANDARD SEDIMENT CONTROL NOTES

1) A MINIMUM OF 48 HOURS NOTICE MUST BE GIVEN TO THE HOWARD COUNTY DEPARTMENT OF INSPECTIONS, LICENSES AND PERMITS, SEDIMENT CONTROL DIVISION PRIOR TO THE START OF NAY CONSTRUCTION, (313-1855).

2) ALL VEGETATIVE AND STRUCTURAL PRACTICES ARE TO BE INSTALLED ACCORDING TO THE PROVISIONS OF THIS PLAN AND ARE TO BE IN CONFORMANCE WITH THE MOST CURRENT "MARYLAND STANDARDS AND SPECIFICATIONS FOR SOIL EROSION AND SEDIMENT CONTROL", AND REVISIONS THERETO.

3) FOLLOWING INITIAL SOIL DISTURBANCE OR REDISTURBANCE, PERMANENT OR TEMPORARY STABILIZATION SHALL BE COMPLETED WITHIN: A) 7 CALENDAR DAYS FOR ALL PERIMETER SEDIMENT CONTROL STRUCTURES, DIKES, PERIMETER SLOPES AND ALL SLOPES GREATER THAN 3:1, B) 14 DAYS AS TO ALL OTHER DISTURBED OR GRADED AREAS ON THE PROJECT SITE.

4) ALL SEDIMENT TRAPS/BASINS SHOWN MUST BE FENCED AND WARNING SIGNS POSTED AROUND THEIR PERIMETER IN ACCORDANCE WITH VOL. 1, CHAPTER 12, OF THE HOWARD COUNTY DESIGN MANUAL, STORM DRAINAGE.

5) ALL DISTURBED AREAS MUST BE STABILIZED WITHIN THE TIME PERIOD SPECIFIED ABOVE IN ACCORDANCE WITH THE 1994 MARYLAND STANDARDS AND SPECIFICATIONS FOR SOIL EROSION AND SEDIMENT CONTROL FOR PERMANENT SEEDING (SEC.51), SOD (SEC. 54), TEMPORARY SEEDING (SEC. 50) AND MULCHING (SEC.52). TEMPORARY STABILIZATION WITH MULCH ALONE CAN ONLY BE DONE WHEN RECOMMENDED SEEDING DATES DO NOT ALLOW FOR PROPER GERMINATION AND ESTABLISHMENT OF GRASSES.

6) ALL SEDIMENT CONTROL STRUCTURES ARE TO REMAIN IN PLACE AND ARE TO BE MAINTAINED IN OPERATIVE CONDITION UNTIL PERMISSION FOR THEIR REMOVAL HAS BEEN OBTAINED FROM THE HOWARD COUNTY SEDIMENT CONTROL INSPECTOR.

7) SITE ANALYSIS:

TOTAL AREA OF SITE:	2.709	ACRES ±
AREA DISTURBED:	1.98	ACRES ±
AREA TO BE ROOFED OR PAVED:	0.66	ACRES ±
AREA TO BE VEGITATIVELY STABILIZED:	1.32	ACRES ±
TOTAL CUT:	3,100	CU. YDS. ±
TOTAL FILL:	3,100	CU. YDS. ±
TOTAL WASTE/BORROW AREA LOCATION:	N/A	

8) ANY SEDIMENT CONTROL PRACTICE WHICH IS DISTURBED BY GRADING ACTIVITY FOR PLACEMENT OF UTILITIES MUST BE REPAIRED ON THE SAME DAY OF DISTURBANCE.

9) ADDITIONAL SEDIMENT CONTROL MUST BE PROVIDED, IF DEEMED NECESSARY BY THE HOWARD COUNTY SEDIMENT CONTROL INSPECTOR.

10) ON ALL SITES WITH DISTURBED AREAS IN EXCESS OF 2 ACRES, APPROVAL OF THE INSPECTION AGENCY SHALL BE REQUESTED UPON COMPLETION OF INSTALLATION OF PERIMETER EROSION AND SEDIMENT CONTROLS, BUT BEFORE PROCEEDING WITH ANY OTHER EARTH DISTURBANCE OR GRADING. OTHER BUILDING OR GRADING INSPECTION APPROVALS MAY NOT BE AUTHORIZED UNTIL THIS INITIAL APPROVAL BY THE INSPECTION AGENCY IS MADE.

11) TRENCHES FOR THE CONSTRUCTION OF UTILITIES IS LIMITED TO THREE PIPE LENGTHS OR THAT WHICH CAN BE BACK FILLED AND STABILIZED WITHIN ONE WORKING DAY, WHICHEVER IS SHORTER.

STANDARD AND SPECIFICATIONS FOR TOPSOIL

Definition
Placement of topsoil over a prepared subsoil prior to establishment of permanent vegetation.

Purpose

To provide a suitable soil medium for vegetative growth. soils of concern have low moisture content, low nutrient levels, low pH, materials toxic to plants, and/or unacceptable soil gradation.

Conditions Where Practice Applies

I. This practice is limited to areas have 2:1 or flatter slopes where:

a. The texture of the exposed subsoil/parent material is not adequate to produce vegetative growth.

b. The soil material is so shallow that the rooting zone is not deep enough to support plants or furnish continuing supplies of moisture and plant nutrients.

c. The original soil to be vegetated contains material toxic to plant growth.

d. The soil is so acidic that treatment with limestone is not feasible.

II. For the purpose of these Standards and Specifications, areas having slopes steeper than 2:1 require special consideration and design for adequate stabilization. Areas having slopes steeper than 2:1 shall have the appropriate stabilization shown on the plans.

Construction and Material Specifications

I. Topsoil salvaged from the existing site may be used provided that it meets the standards as set forth in these specifications. Typically the depth of topsoil to be salvaged for a given soil type can be found in the representative soil profile section in the Soil Survey published by USDA-SCS in cooperation with Maryland Agricultural Experimental Station.

II. Topsoil Specifications – Soil to be used as topsoil must meet the following:

i. Topsoil shall be a loam, sandy loam, clay loam, silt loam, sandy clay loam, loamy sand. Other soils may be used if recommended by an agronomist or soil scientist and approved by the appropriate approval authority. Regardless, topsoil shall not be mixture of contrasting textured subsoils and shall contain less than 5% by volume of cinders, stones, slag, coarse fragments, gravel, sticks, roots, trash, or other materials larger that 1 1/2" in diameter.

ii. Topsoil must be of plants or plant parts such as bermuda grass, quackgrass, Johnsongrass, nutsedge, poison ivy, thistle, or others as specified.

iii. Where the subsoil is either highly acidic or composed of heavy clays, ground limestone shall be spread at the rate of 4-8 tons/acre (200-400 pounds per 1,000 square feet) prior to the placement or topsoil. limestone shall be distributed uniformly over designated areas and worked into the soil in conjunction with tillage operations as described in the following procedures.

II. For sites having disturbed areas under 5 acres:

i. Place topsoil (if required) and add soil amendments as specified in 20.0 Vegetative Stabilization – Section I – Vegetative Stabilization Methods and Materials

III. For sites having disturbed areas over 5 acres:

i. On soil meeting Topsoil specifications, obtain test results dictating fertilizer and lime amendments required to bring the soil into compliance with the following:

a. pH for topsoil shall be between 6.0 and 7.5. If the tested soil demonstrates a pH of less than 6.0, sufficient lime shall be prescribed to raise the pH to 6.5 or higher.

b. Organic content of soil shall be not less than 1.5% by weight.

c. Topsoil having soluble salt content greater than 500 parts per million shall not be used.

d. No sod or seed shall be placed on soil which has been treated with soil sterilants or chemicals used for weed control until sufficient time has elapsed (14 days min.) to permit dissipation of phyto-toxic materials.

Note: Topsoil substitutes or amendments, as recommended by a qualified agronomist or soil scientist and approved by the appropriate approval authority may be used in lieu of natural topsoil.

ii. Place topsoil (if required) and apply soil amendments as specified in 20.0 Vegetative Stabilization – Section I – Vegetative Stabilization Methods and Materials.

V. Topsoil Application

i. When topsoiling, maintain needed erosion and sediment control practices such as diversions, grade stabilization structures, earth dikes, slope silt fence and sediment traps and basins.

ii. Grades on the areas to be topsoiled, which have been previously established, shall be maintained, albeit 4" – 8" in elevation.

iii. Topsoil shall be uniformly distributed in a 4" – 8" layer and lightly compacted to a minimum thickness of 4". Spreading shall be performed in such a manner that sodding or seeding can proceed with a minimum of soil preparation and tillage. Any irregularities in the surface resulting from topsoiling or other operations shall be corrected in order to prevent the formation of depressions or water pockets.

iv. Topsoil shall not be placed while the topsoil or subsoil is in a frozen or muddy condition, when the subsoil is excessively wet or in a condition that may otherwise be detrimental to proper grading and seeded preparation.

VI. Alternative for Permanent Seeding – Instead of applying the full amounts or lime and commercial fertilizer, comported sludge and amendments may be applied as specified below:

i. Comported Sludge Material for use as a soil conditioner for sites having disturbed areas over 5 acres shall be tested to prescribe amendments and for sites having disturbed areas under 5 acres shall conform to the following requirements:

a. Comported sludge shall be supplied by, or originate from, a person or persons that are permitted (at the time of acquisition of the compost) by the Maryland Department of the Environment under COMAR 26.04.06.

b. Comported sludge shall contain at least 1 percent nitrogen, 1.5 percent phosphorous, and 0.2 percent potassium and have a pH of 7.0 to 8.0. If compost does not net these requirements, the appropriate constituents must be added to meet the requirements prior to use.

c. Composted sludge shall be applied at a rate of 1 ton/1,000 square feet

ii. Comported sludge shall be amended with a potassium fertilizer applied at the rate of 4lb/1,000 square feet, and 1/3 the normal lime application rate.

SEQUENCE OF CONSTRUCTION

1. OBTAIN GRADING PERMIT.
2. INSTALL STABILIZED CONSTRUCTION ENTRANCE AS SHOWN ON PLAN. ONE (1) DAY.
3. CONSTRUCT SUPER SILT FENCE AND SEDIMENT CONTROL MEASURES AS SHOWN. ONE (1) DAY.
4. HILLIS-CARNES ENGINEERING ASSOCIATES SHALL BE PRESENT TO OVERSEE ANY POND EXCAVATION OR SEPTIC FIELD ABANDONMENT THAT OCCURS ON-SITE TO ENSURE COMPLIANCE **WITH THE RECOMMENDATIONS IN THEIR LETTER DATED AUGUST 14, 1997 TO THE HEALTH** DEPARTMENT.
5. HOWARD COUNTY HEALTH DEPARTMENT SHALL BE PRESENT TO OVERSEE REMOVAL OF ANY MONITORING WELLS IN CONNECTION WITH THE SEPTIC SYSTEM ON-SITE.
6. EXISTING SEPTIC HOLDING TANKS SHALL BE PUMPED AND PROPERLY ABANDONED WITH DOCUMENTATION BY HILLIS-CARNES.
7. CONSTRUCT THE LOW FLOW RISER STRUCTURE. THREE (3) DAYS.
8. PERFORM MASS GRADING, CONSTRUCT THE STORM DRAIN SYSTEM AND SEWER HOUSE CONNECTIONS, AND CONNECT TO PUBLIC SEWER MANHOLE. BLOCK INLETS WITH SAND BAGS. SEVEN (7) DAYS.
9. AFTER THE SITE IS PAVED, REMOVE THE SAND BAGS. ONE (1) DAY.
10. AFTER THE SITE IS PERMANENTLY STABILIZED. EXCAVATE THE POND TO FINAL GRADE AND STABILIZE. THREE (3) DAYS.
11. WHEN ALL UPSTREAM AREAS OF A SEDIMENT CONTROL DEVICE HAVE BEEN PERMANENTLY STABILIZED, AND WITH THE APPROVAL OF THE SEDIMENT CONTROL INSPECTOR, REMOVE THESE DEVICES AND SEED AND MULCH THE RESULTING DISTURBED AREAS.

DETAIL 25 – ROCK OUTLET PROTECTION I

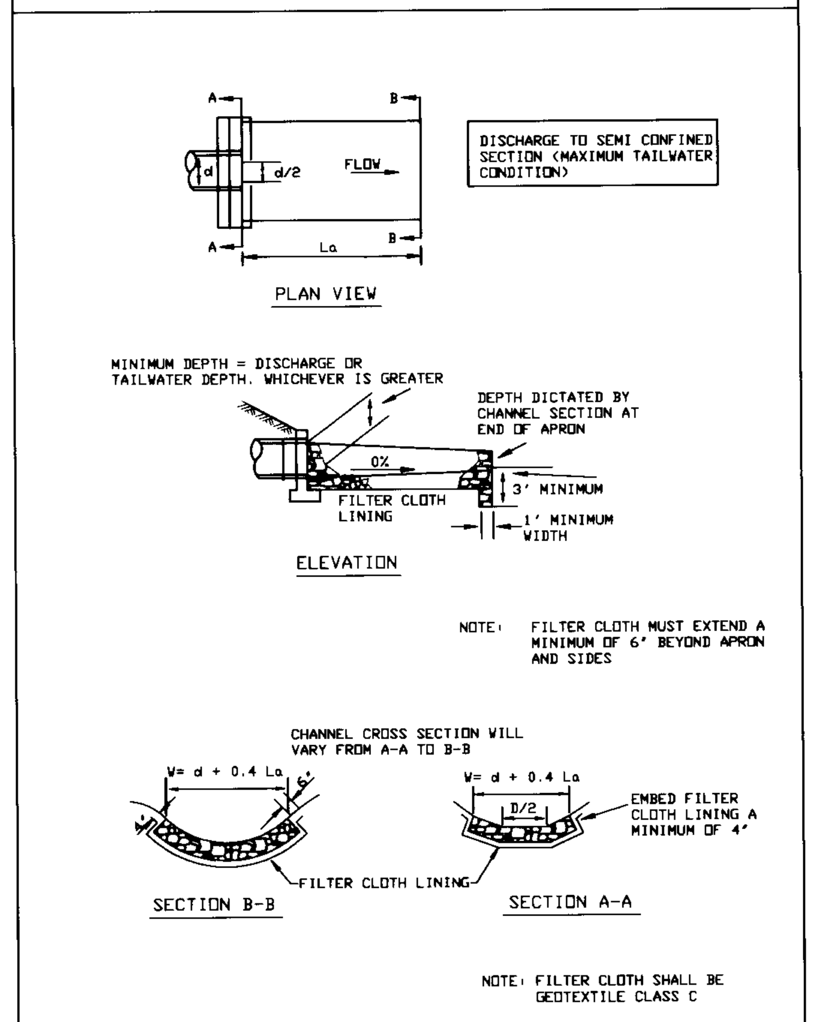

U.S. DEPARTMENT OF AGRICULTURE SOIL CONSERVATION SERVICE	PAGE F - 18 - 8	MARYLAND DEPARTMENT OF ENVIRONMENT WATER MANAGEMENT ADMINISTRATION

ROCK OUTLET PROTECTION

Construction Specifications

1. The subgrade for the filter, rip-rap, or gabion shall be prepared to the required lines and grades. Any fill required in the subgrade shall be compacted to a density of approximately that of the surrounding undisturbed material.

2. The rock or gravel shall conform to the specified grading limits when installed respectively in the rip-rap or filter.

3. Geotextile shall be protected from punching, cutting, or tearing. Any damage other than an occasional small hole shall be repaired by placing another piece of geotextile over the damaged part or by completely replacing the geotextile. All overlaps whether for repairs or for joining two pieces of geotextile shall be a minimum of one foot.

4. Stone for the rip-rap or gabion outlets may be placed by equipment. They shall be constructed to the full course thickness in one operation and in such a manner as to avoid displacement of underlying materials. The stone for rip-rap or gabion outlets shall be delivered and placed in a manner that will ensure that it is reasonably homogeneous with the smaller stones and spalls filling the voids between the larger stones. Rip-rap shall be placed in a manner to prevent damage to the filter blanket or geotextile. Hand placement will be required to the extent necessary to prevent damage to the permanent works.

5. The stone shall be placed so that it blends in with the existing ground. If the stone is placed too high then the flow will be forced out of the channel and scour adjacent to the stone will occur.

U.S. DEPARTMENT OF AGRICULTURE SOIL CONSERVATION SERVICE	PAGE F - 18 - 8A	MARYLAND DEPARTMENT OF ENVIRONMENT WATER MANAGEMENT ADMINISTRATION

DEVELOPERS CERTIFICATE

I CERTIFY THAT ALL DEVELOPMENT AND CONSTRUCTION WILL BE DONE ACCORDING TO THIS PLAN, AND THAT ANY RESPONSIBLE PERSONNEL INVOLVED IN THE CONSTRUCTION PROJECT WILL HAVE A CERTIFICATE OF ATTENDANCE AT A DEPARTMENT OF THE ENVIRONMENT APPROVED TRAINING PROGRAM FOR THE CONTROL OF SEDIMENT AND EROSION BEFORE BEGINNING THE PROJECT. I ALSO AUTHORIZE PERIODIC ON-SITE INSPECTION BY THE NATURAL RESOURCE CONSERVATION SERVICE.

Brian Darnell 5/30/97
SIGNATURE OF DEVELOPER — DATE
BRIAN DARNELL, HIGH'S OF BALTIMORE
PRINTED NAME OF DEVELOPER

ENGINEER'S CERTIFICATE

I CERTIFY THAT THIS PLAN FOR EROSION AND SEDIMENT CONTROL REPRESENTS A PRACTICAL AND WORKABLE PLAN BASED ON MY PERSONAL KNOWEDGE OF THE SITE CONDTIONS AND THAT IT WAS PREPARED IN ACCORDANCE WITH THE REQUIREMENTS OF THE NATURAL RESOURCE CONSERVATION SERVICE.

5/30/97
SIGNATURE OF ENGINEER — DATE
R. JACOB HIKMAT
PRINTED NAME OF ENGINEER

STATE OF MARYLAND — R. JACOB HIKMAT — ENGINEER
5/30/97

THESE PLANS HAVE BEEN REVIEWED FOR THE HOWARD SOIL CONSERVATION DISTRICT AND MEETS TECHNICAL REQUIREMENTS.

Cheryl Simmons 6/3/97
USDA – NATURAL RESOURCE CONSERVATION SERVICE — DATE

THIS DEVELOPMENT PLAN IS APPROVED FOR SOIL EROSION AND SEDIMENT CONTROL BY THE HOWARD SOIL CONSERVATION DISTRICT.

John R. Robertson 6/3/97
HOWARD SOIL CONSERVATION DISTRICT — DATE

APPROVED: DEPARTMENT OF PLANNING AND ZONING

6/10/97
CHIEF, DEVELOPMENT ENGINEERING DIVISION — DATE
Cindy Hamilton 8/22/97
CHIEF, DIVISION OF LAND DEVELOPMENT — DATE
8/22/97
DIRECTOR — DATE

APPROVED ; FOR PRIVATE WATER AND PUBLIC SEWER. HOWARD COUNTY HEALTH DEPARTMENT.

8-18-97
HOWARD COUNTY HEALTH OFFICER — DATE

81-SCN-D.DWG

DETAIL 22 – SILT FENCE

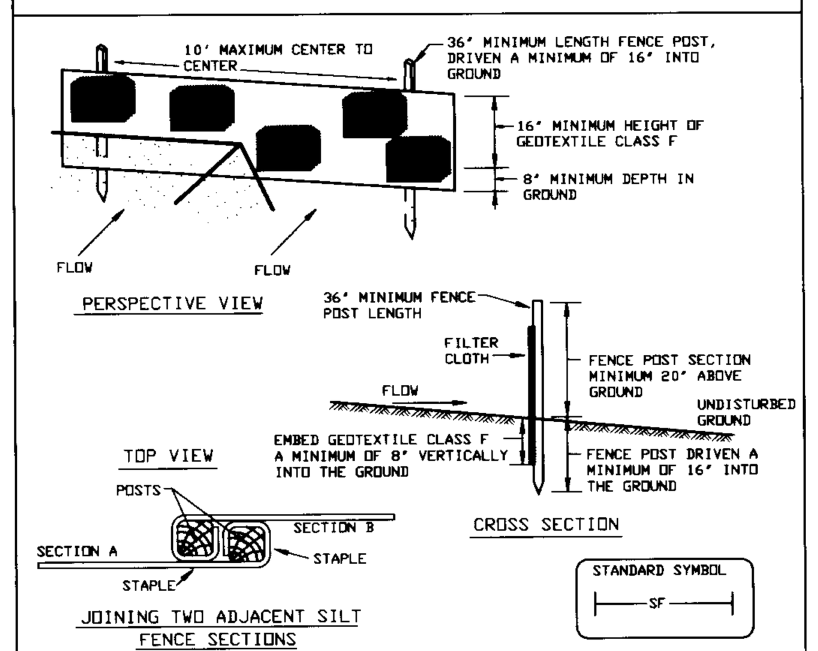

Construction Specifications

1. Fence posts shall be a minimum of 36" long driven 16" minimum into the ground. Wood posts shall be 11/2" x 11/2" square (minimum) cut, or 13/4" diameter (minimum) round and shall be of sound quality hardwood. Steel posts will be standard T or U section weighting not less than 1.00 pond per linear foot.

2. Geotextile shall be fastened securely to each fence post with wire ties or staples at top and mid-section and shall meet the following requirements for Geotextile Class F:

Tensile Strength	50 lbs/in (min.)	Test: MSMT 509
Tensile Modulus	20 lbs/in (min.)	Test: MSMT 509
Flow Rate	0.3 gal ft²/ minute (max.)	Test: MSMT 322
Filtering Efficiency	75% (min.)	Test: MSMT 322

3. Where ends of geotextile fabric come together, they shall be overlapped, folded and stapled to prevent sediment bypass.

4. Silt Fence shall be inspected after each rainfall event and maintained when bulges occur or when sediment accumulation reached 50% of the fabric height.

U.S. DEPARTMENT OF AGRICULTURE SOIL CONSERVATION SERVICE	PAGE E - 15 - 3	MARYLAND DEPARTMENT OF ENVIRONMENT WATER MANAGEMENT ADMINISTRATION

SILT FENCE

Silt Fence Design Criteria

Slope Steepness	(Maximum) Slope Length	(Maximum) Silt Fence Length
Flatter than 50:1	unlimited	unlimited
50:1 to 10:1	125 feet	1,000 feet
10:1 to 5:1	100 feet	750 feet
5:1 to 3:1	60 feet	500 feet
3:1 to 2:1	40 feet	250 feet
2:1 and steeper	20 feet	125 feet

Note: In areas of less than 2% slope and sandy soils (USDA general classification system, soil Class A) maximum slope length and silt fence length will be unlimited. In these areas a silt fence may be the only perimeter control required.

U.S. DEPARTMENT OF AGRICULTURE SOIL CONSERVATION SERVICE	PAGE E - 15 - 3A	MARYLAND DEPARTMENT OF ENVIRONMENT WATER MANAGEMENT ADMINISTRATION

DETAIL 24 – STABILIZED CONSTRUCTION ENTRANCE

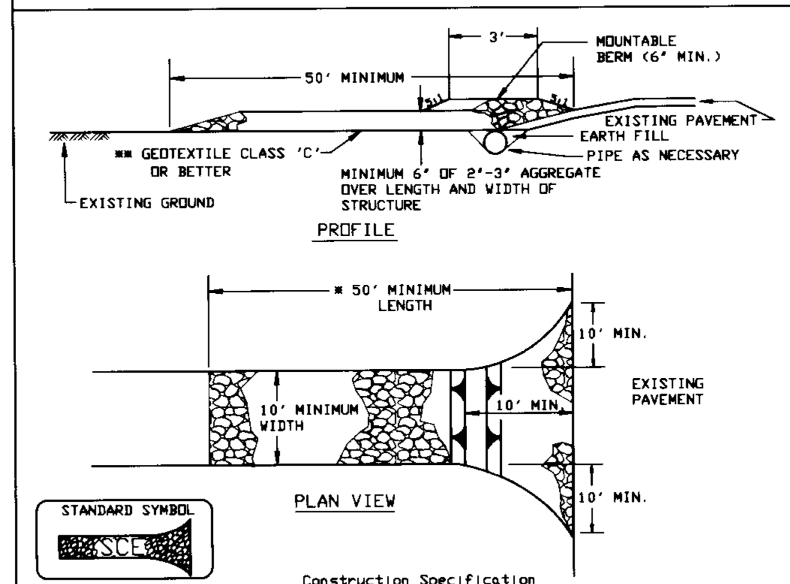

Construction Specification

1. Length – minimum of 50' (*30' for single residence lot).

2. Width – 10' minimum, should be flared at the existing road to provide a turning radius.

3. Geotextile fabric (filter cloth) shall be placed over the existing ground prior to placing stone. **The plan approval authority may not require single family residences to use geotextile.

4. Stone – crushed aggregate (2" to 3") or reclaimed or recycled concrete equivalent shall be placed at least 6" deep over the length and width of the entrance.

5. Surface Water – all surface water flowing to or diverted toward construction entrances shall be piped through the entrance, maintaining positive drainage. Pipe installed through the stabilized construction entrance shall be protected with a mountable berm with 5:1 slopes and a minimum of 6" of stone over the pipe. Pipe has to be sized according to the drainage. When the SCE is located at a high spot and has no drainage to convey a pipe will not be necessary. Pipe should be sized according to the amount of runoff to be conveyed. A 6" minimum will be required.

6. Location – A stabilized construction entrance shall be located at every point where construction traffic enters or leaves a construction site. Vehicles leaving the site must travel over the entire length of the stabilized construction entrance.

U.S. DEPARTMENT OF AGRICULTURE SOIL CONSERVATION SERVICE	PAGE F - 17 - 3	MARYLAND DEPARTMENT OF ENVIRONMENT WATER MANAGEMENT ADMINISTRATION

STABILIZED CONSTRUCTION ENTRANCE

Construction Specification

1. Length – minimum of 50' (**30' for single residence lot).

2. Width – 10' minimum, should be flared at the existing road to provide a turning radius.

3. Geotextile fabric (filter cloth) shall be placed over the existing ground prior to placing stone. **The plan approval authority may not require single family residences to use geotextile.

4. Stone – crushed aggregate (2" to 3"), or reclaimed or recycled concrete equivalent shall be placed at least 6" deep over the length and width of the entrance.

5. Surface Water – all surface water flowing to or diverted toward construction entrances shall be piped through the entrance, maintaining positive drainage. Pipe installed through the stabilized construction entrance shall be protected with a mountable berm with 5:1 slopes and a minimum of 6" of stone over the pipe. Pipe has to be sized according to the drainage. When the SCE is located at a high spot and has no drainage to convey a pipe will not be necessary. Pipe should be sized according to the amount of runoff to be conveyed. A 6" minimum will be required.

6. Location – A stabilized construction entrance shall be located at every point where construction traffic enters or leaves a construction site. Vehicles leaving the site must travel over the entire length of the stabilized construction entrance.

U.S. DEPARTMENT OF AGRICULTURE SOIL CONSERVATION SERVICE	PAGE F - 17 - 3A	MARYLAND DEPARTMENT OF ENVIRONMENT WATER MANAGEMENT ADMINISTRATION

DEVELOPER
HIGH'S OF BALTIMORE
1340-L CHARWOOD ROAD
HANOVER, MARYLAND 21076
(410) 859-3636

OWNER
HUGH F. COLE & GROUP FIVE PARTNERSHIP
8835 P COLUMBIA 100 PARKWAY
COLUMBIA, MARYLAND 21045
(410) 730-0810

project	date
95081	JULY 1996
illustration	engineering
SJD	SJD
scale	approval
N.T.S.	RJH

no.	description	date
	revisions	

TAX MAP 46 – PARCEL 224 – BLOCK 2
FULTON HIGH'S
FIFTH ELECTION DISTRICT — HOWARD COUNTY, MARYLAND
SEDIMENT CONTROL NOTES AND DETAILS

MILDENBERG, BOENDER & ASSOC., INC.
Engineers Planners Surveyors
5072 Dorsey Hall Drive, Suite 202, Ellicott City, Maryland 21042
(410) 997-0296 Balt. (301) 621-5521 Wash. (410) 997-0298 Fax.

SDP-97-11

SCHEDULE A : PERIMETER LANDSCAPED EDGE

CATEGORY	ADJACENT TO ROADWAYS			ADJACENT TO PERIMETER PROPERTIES
LANDSCAPE TYPE	B (PERIMETER 2)	C (PERIMETERS 3 & 5)	E (PERIMETERS 1 & 4)	A (PERIMETERS 6 & 7)
LINEAR FEET OF PERIMETER	112 LF	463 LF	124 LF	678 LF
CREDIT FOR EXISTING VEGETATION (YES, NO, LINEAR FEET)	NO	YES, 1 – EX. 36" OAK PLUS 125 LF	NO	YES, 103 LF
CREDIT FOR WALL, FENCE, OR BERM (YES, NO, LINEAR FEET)	NO	NO	NO	NO
NUMBER OF PLANTS REQUIRED SHADE TREES EVERGREEN TREES SHRUBS	2 SHADE TREES 3 EVERGREEN TREES 0 SHRUBS	8 SHADE TREES 17 EVERGREEN TREES 0 SHRUBS	3 SHADE TREES 0 EVERGREEN TREES 31 SHRUBS	10 SHADE TREES 0 EVERGREEN TREES 0 SHRUBS
NUMBER OF PLANTS PROVIDED SHADE TREES EVERGREEN TREES OTHER TREES (2:1 SUBSTITUTION) SHRUBS (10:1 SUBSTITUTION)	2 SHADE TREES 3 EVERGREEN TREES 0 SUBSTITUTION TREES 0 SHRUBS	8 SHADE TREES 17 EVERGREEN TREES 0 SUBSTITUTION TREES 0 SHRUBS	3 SHADE TREES 0 EVERGREEN TREES 0 SUBSTITUTION TREES 31 SHRUBS	10 SHADE TREES 0 EVERGREEN TREES 0 SUBSTITUTION TREES 0 SHRUBS

GENERAL NOTES :

- THIS PLAN HAS BEEN PREPARED IN ACCORDANCE WITH THE PROVISIONS OF SECTION 16.124 OF THE HOWARD COUNTY CODE AND THE LANDSCAPE MANUAL.
- FINANCIAL SURETY FOR THE REQUIRED LANDSCAPING HAS BEEN POSTED AS PART OF THE DPW DEVELOPER'S AGREEMENT IN THE AMOUNT OF $ 5,200.00 .

SCHEDULE B: PARKING LOT INTERNAL LANDSCAPING

NUMBER OF PARKING SPACES	23
NUMBER OF PLANTING ISLANDS REQUIRED	1
NUMBER OF PLANTING ISLANDS PROVIDED	1
NUMBER OF TREES REQUIRED SHADE TREES	1 SHADE TREE
NUMBER OF TREES PROVIDED SHADE TREES OTHER TREES (2:1 SUBSTITUTION)	1 SHADE TREE 0 TREES

SCHEDULE D: STORMWATER MANAGEMENT AREA LANDSCAPING

LINEAR FEET OF PERIMETER	460 LF
CREDIT FOR EXISTING VEGETATION (NO, YES AND LINEAR FEET)	YES, 128'
CREDIT FOR OTHER LANDSCAPING (NO, YES AND %)	YES, 248 LF
NUMBER OF TREES REQUIRED SHADE TREES EVERGREEN TREES	2 SHADE TREES 2 EVERGREEN TREES
NUMBER OF TREES PROVIDED SHADE TREES EVERGREEN TREES OTHER TREES (2:1 SUBSTITUTION)	2 SHADE TREES 2 EVERGREEN TREES 0 SUBSTITUTION TREES

PERIMETER	EDGE TYPE
PERIMETER 1 PARKING TO ROAD – 38 LF 1 SHADE TREE / 40 LF 1 1 SHRUB / 4 LF 10	E
PERIMETER 2 NON–RES TO ROAD – 112 LF 1 SHADE TREE / 50 LF 2 1 EVERGREEN / 40 LF 3	B
PERIMETER 3 NON–RES TO ROAD – 94 LF ONE (1) EX. 36" OAK TO REMAIN 1 SHADE TREE / 40 LF 2 1 EVERGREEN / 20 LF 5	C
PERIMETER 4 PARKING TO ROAD – 86 LF 1 SHADE TREE / 40 LF 2 1 SHRUB / 4 LF 21	E
PERIMETER 5 NON–RES TO ROAD – 125 LF EXISTING TREES TO REMAIN	C
NON–RES TO ROAD – 244 LF 1 SHADE TREE / 40 LF 6 1 EVERGREEN / 20 LF 12	C
PERIMETER 6 NON–RES TO NON–RES – 186 LF 1 SHADE TREE / 60 LF 3	A
PERIMETER 7 NON–RES TO NON–RES – 103 LF EXISTING TREES TO REMAIN	A
NON–RES TO NON–RES – 389 LF 1 SHADE TREE / 60 LF 7	A
TOTAL PLANTING OBLIGATION SHADE TREES 23 EVERGREEN TREES 20 SHRUBS 31	

NOTE : THIS PLAN IS TO BE USED ONLY FOR LANDSCAPING PURPOSES.

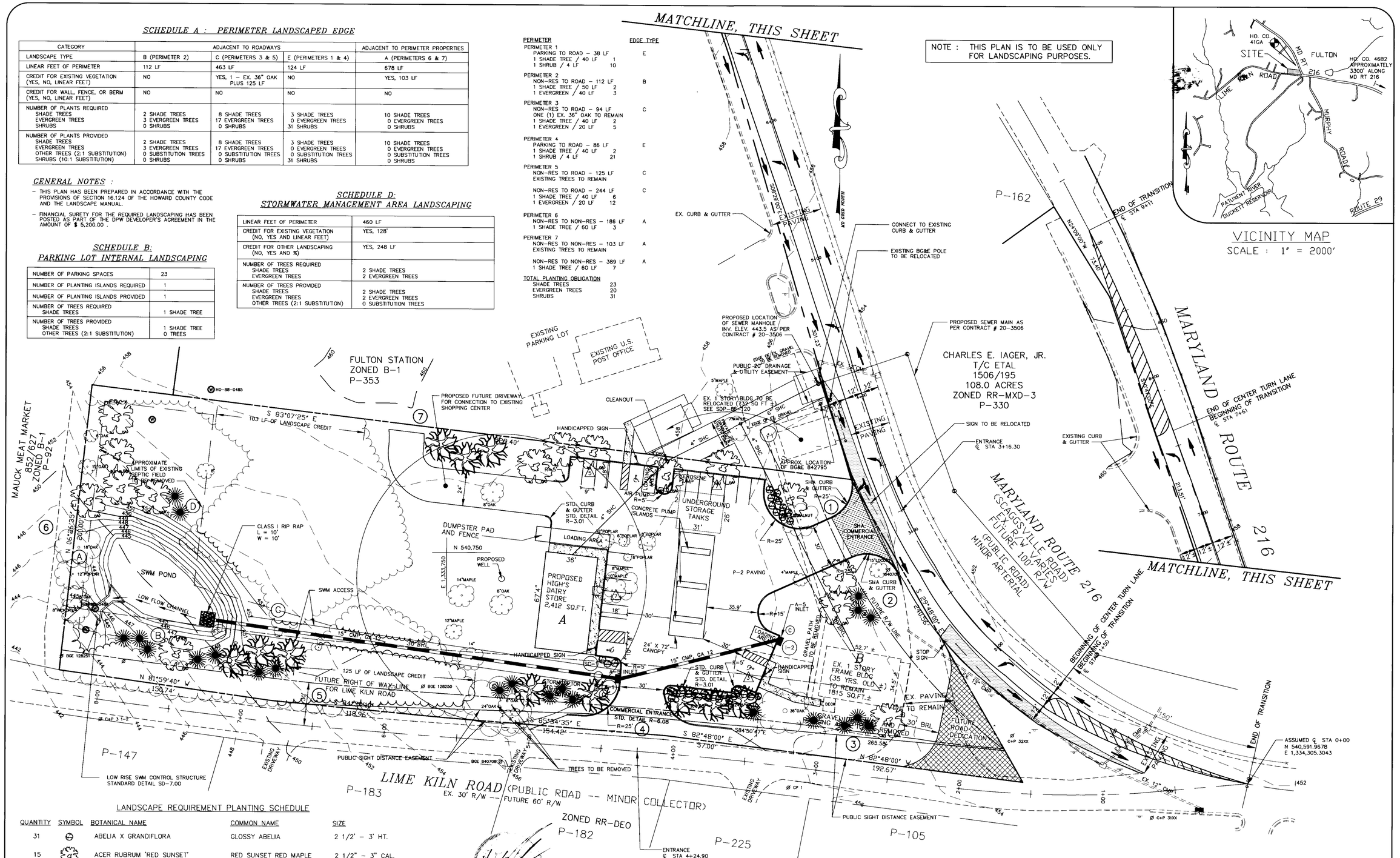

VICINITY MAP
SCALE : 1" = 2000'

LANDSCAPE REQUIREMENT PLANTING SCHEDULE

QUANTITY	SYMBOL	BOTANICAL NAME	COMMON NAME	SIZE
31		ABELIA X GRANDIFLORA	GLOSSY ABELIA	2 1/2' – 3' HT.
15		ACER RUBRUM 'RED SUNSET'	RED SUNSET RED MAPLE	2 1/2" – 3" CAL.
22		PINUS STROBUS	EASTERN WHITE PINE	6' – 8' HT.
11		QUERCUS RUBRA	NORTHERN RED OAK	2 1/2" – 3" CAL.

TOTAL
79 TREES & SHRUBS (26 SHADE TREES, 22 EVERGREEN TREES, 31 SHRUBS)

SWM PERIMETER LANDSCAPE EDGE

SWM PERIMETER	EDGE TYPE
SWM PERIMETER A SWM TO NON–RES – 111 LF CREDIT FOR PERIMETER EDGE & EXISTING TREES	B
SWM PERIMETER B SWM TO ROAD – 137 LF CREDIT FOR PERIMETER EDGE & EXISTING TREES	B
SWM PERIMETER C SWM TO NON–RES – 78 LF EXISTING TREES TO REMAIN	B
SWM PERIMETER D SWM TO NON–RES – 50 LF EXISTING TREES TO REMAIN	B
SWM TO NON–RES – 84 LF 1 SHADE TREE / 50 LF 2 1 EVERGREEN / 40 LF 2	B
TOTAL PLANTING OBLIGATION SHADE TREES 2 EVERGREEN TREES 2 SHRUBS 0	

LEGEND

- DENOTES AN EXISTING MONITORING WELL
- DENOTES AN EXISTING CLEANOUT
- DENOTES AREA TO BE DEDICATED TO HOWARD COUNTY, MARYLAND FOR THE PURPOSE OF A PUBLIC ROAD
- DENOTES ADDITIONAL HIGHWAY PAVING REQUIRED
- DENOTES SHA COMMERCIAL ENTRANCE
- DENOTES NUMBER OF PARKING SPACES
- DENOTES A PERIMETER LANDSCAPE EDGE

APPROVED: DEPARTMENT OF PLANNING AND ZONING

CHIEF, DEVELOPMENT ENGINEERING DIVISION — DATE 6/10/97

CHIEF, DIVISION OF LAND DEVELOPMENT — DATE 8/22/97

DIRECTOR — DATE 8/12/97

APPROVED ; FOR PRIVATE WATER AND PUBLIC SEWER. HOWARD COUNTY HEALTH DEPARTMENT.

HOWARD COUNTY HEALTH OFFICER — DATE 8-18-97

5/30/97

DEVELOPER
HIGH'S OF BALTIMORE
1340-L CHARWOOD ROAD
HANOVER, MARYLAND 21076
(410) 859-3636

OWNER
HUGH F. COLE & GROUP FIVE PARTNERSHIP
8835 P COLUMBIA 100 PARKWAY
COLUMBIA, MARYLAND 21045
(410) 730-0810

project	date
95081	JULY 1996
illustration	engineering
SJD	SJD
scale	approval
1" = 30'	RJH

no.	description	date
	revisions	

TAX MAP 46 – PARCEL 224 – BLOCK 2
FULTON HIGH'S
FIFTH ELECTION DISTRICT — HOWARD COUNTY, MARYLAND
LANDSCAPE PLAN

MILDENBERG, BOENDER & ASSOC., INC.
Engineers Planners Surveyors
5072 Dorsey Hall Drive, Suite 202, Ellicott City, Maryland 21042
(410) 997-0296 Balt. (301) 621-5321 Wash. (410) 997-0298 Fax

7 OF 7

SDP-97-11

81-LP.DWG

SCHEDULE A : PERIMETER LANDSCAPED EDGE

CATEGORY	ADJACENT TO ROADWAYS			ADJACENT TO PERIMETER PROPERTIES
LANDSCAPE TYPE	B (PERIMETER 2)	C (PERIMETERS 3 & 5)	E (PERIMETERS 1 & 4)	A (PERIMETERS 6 & 7)
LINEAR FEET OF PERIMETER	112 LF	463 LF	124 LF	678 LF
CREDIT FOR EXISTING VEGETATION (YES, NO, LINEAR FEET)	NO	YES, 1 – EX. 36" OAK PLUS 125 LF	NO	YES, 103 LF
CREDIT FOR WALL, FENCE, OR BERM (YES, NO, LINEAR FEET)	NO	NO	NO	NO
NUMBER OF PLANTS REQUIRED SHADE TREES EVERGREEN TREES SHRUBS	2 SHADE TREES 3 EVERGREEN TREES 0 SHRUBS	8 SHADE TREES 17 EVERGREEN TREES 0 SHRUBS	3 SHADE TREES 0 EVERGREEN TREES 31 SHRUBS	10 SHADE TREES 0 EVERGREEN TREES 0 SHRUBS
NUMBER OF PLANTS PROVIDED SHADE TREES EVERGREEN TREES OTHER TREES (2:1 SUBSTITUTION) SHRUBS (10:1 SUBSTITUTION)	2 SHADE TREES 3 EVERGREEN TREES 0 SUBSTITUTION TREES 0 SHRUBS	8 SHADE TREES 17 EVERGREEN TREES 0 SUBSTITUTION TREES 0 SHRUBS	3 SHADE TREES 0 EVERGREEN TREES 0 SUBSTITUTION TREES 31 SHRUBS	10 SHADE TREES 0 EVERGREEN TREES 0 SUBSTITUTION TREES 0 SHRUBS

GENERAL NOTES :

- THIS PLAN HAS BEEN PREPARED IN ACCORDANCE WITH THE PROVISIONS OF SECTION 16.124 OF THE HOWARD COUNTY CODE AND THE LANDSCAPE MANUAL.
- FINANCIAL SURETY FOR THE REQUIRED LANDSCAPING HAS BEEN POSTED AS PART OF THE DPW DEVELOPER'S AGREEMENT IN THE AMOUNT OF $ 5,200.00 .

SCHEDULE B: PARKING LOT INTERNAL LANDSCAPING

NUMBER OF PARKING SPACES	23
NUMBER OF PLANTING ISLANDS REQUIRED	1
NUMBER OF PLANTING ISLANDS PROVIDED	1
NUMBER OF TREES REQUIRED SHADE TREES	1 SHADE TREE
NUMBER OF TREES PROVIDED SHADE TREES OTHER TREES (2:1 SUBSTITUTION)	1 SHADE TREE 0 TREES

SCHEDULE D: STORMWATER MANAGEMENT AREA LANDSCAPING

LINEAR FEET OF PERIMETER	460 LF
CREDIT FOR EXISTING VEGETATION (NO, YES AND LINEAR FEET)	YES, 128'
CREDIT FOR OTHER LANDSCAPING (NO, YES AND %)	YES, 248 LF
NUMBER OF TREES REQUIRED SHADE TREES EVERGREEN TREES	2 SHADE TREES 2 EVERGREEN TREES
NUMBER OF TREES PROVIDED SHADE TREES EVERGREEN TREES OTHER TREES (2:1 SUBSTITUTION)	2 SHADE TREES 2 EVERGREEN TREES 0 SUBSTITUTION TREES

PERIMETER	EDGE TYPE
PERIMETER 1 PARKING TO ROAD – 38 LF 1 SHADE TREE / 40 LF 1 1 SHRUB / 4 LF 10	E
PERIMETER 2 NON–RES TO ROAD – 112 LF 1 SHADE TREE / 50 LF 2 1 EVERGREEN / 40 LF 3	B
PERIMETER 3 NON–RES TO ROAD – 94 LF ONE (1) EX. 36" OAK TO REMAIN 1 SHADE TREE / 40 LF 2 1 EVERGREEN / 20 LF 5	C
PERIMETER 4 PARKING TO ROAD – 86 LF 1 SHADE TREE / 40 LF 2 1 SHRUB / 4 LF 21	E
PERIMETER 5 NON–RES TO ROAD – 125 LF EXISTING TREES TO REMAIN	C
NON–RES TO ROAD – 244 LF 1 SHADE TREE / 40 LF 6 1 EVERGREEN / 20 LF 12	C
PERIMETER 6 NON–RES TO NON–RES – 186 LF 1 SHADE TREE / 60 LF 3	A
PERIMETER 7 NON–RES TO NON–RES – 103 LF EXISTING TREES TO REMAIN	A
NON–RES TO NON–RES – 389 LF 1 SHADE TREE / 60 LF 7	A
TOTAL PLANTING OBLIGATION SHADE TREES 23 EVERGREEN TREES 20 SHRUBS 31	

NOTE : THIS PLAN IS TO BE USED ONLY FOR LANDSCAPING PURPOSES.

VICINITY MAP
SCALE : 1" = 2000'

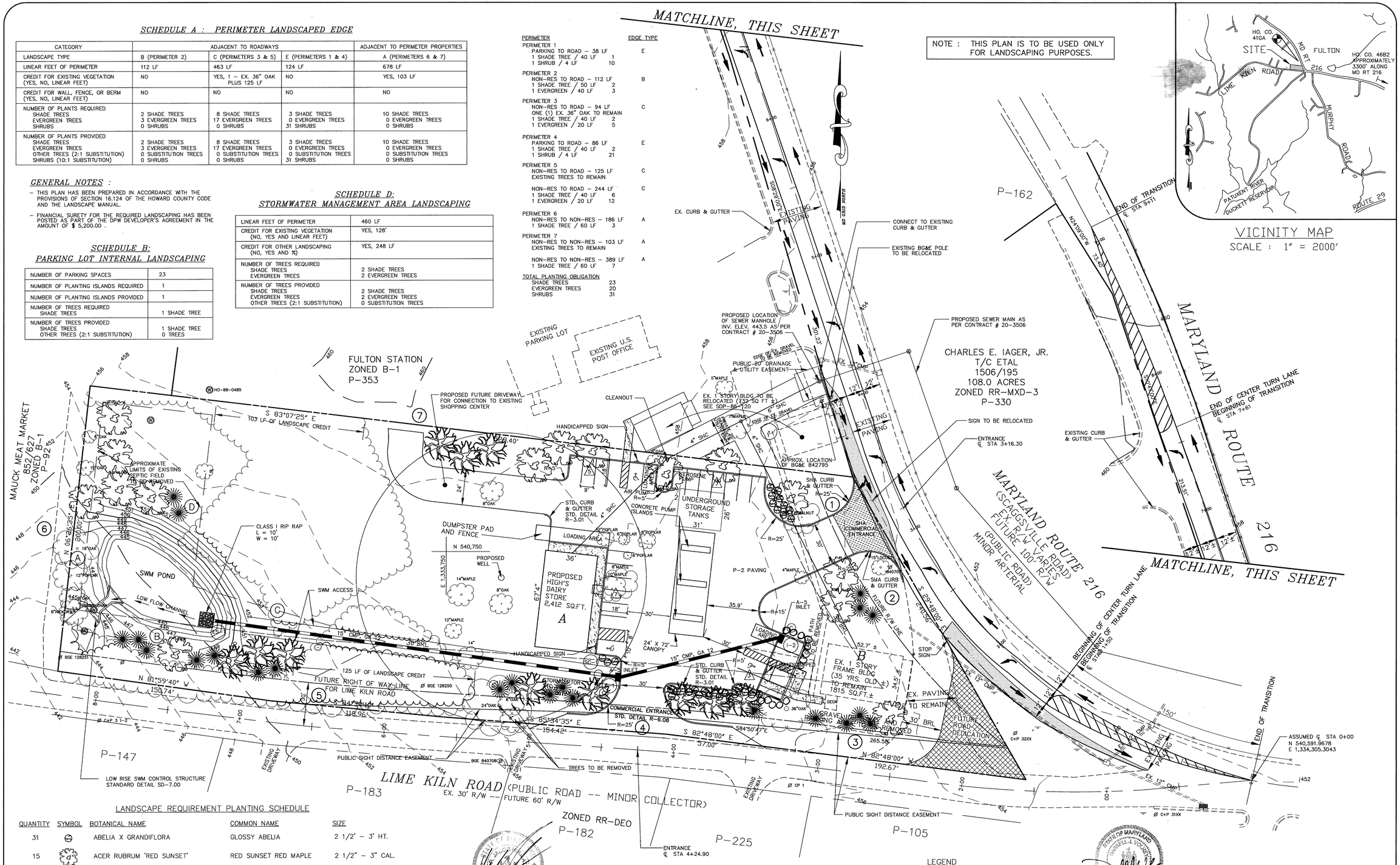

LANDSCAPE REQUIREMENT PLANTING SCHEDULE

QUANTITY	SYMBOL	BOTANICAL NAME	COMMON NAME	SIZE
31		ABELIA X GRANDIFLORA	GLOSSY ABELIA	2 1/2' – 3' HT.
15		ACER RUBRUM 'RED SUNSET'	RED SUNSET RED MAPLE	2 1/2" – 3" CAL.
22		PINUS STROBUS	EASTERN WHITE PINE	6' – 8' HT.
11		QUERCUS RUBRA	NORTHERN RED OAK	2 1/2" – 3" CAL.

TOTAL
79 TREES & SHRUBS (26 SHADE TREES, 22 EVERGREEN TREES, 31 SHRUBS)

SWM PERIMETER LANDSCAPE EDGE

SWM PERIMETER	EDGE TYPE
SWM PERIMETER A SWM TO NON–RES – 111 LF CREDIT FOR PERIMETER EDGE & EXISTING TREES	B
SWM PERIMETER B SWM TO ROAD – 137 LF CREDIT FOR PERIMETER EDGE & EXISTING TREES	B
SWM PERIMETER C SWM TO NON–RES – 78 LF EXISTING TREES TO REMAIN	B
SWM PERIMETER D SWM TO NON–RES – 50 LF EXISTING TREES TO REMAIN	B
SWM TO NON–RES – 84 LF 1 SHADE TREE / 50 LF 2 1 EVERGREEN / 40 LF 2	B
TOTAL PLANTING OBLIGATION SHADE TREES 2 EVERGREEN TREES 2 SHRUBS 0	

LEGEND

- DENOTES AN EXISTING MONITORING WELL
- DENOTES AN EXISTING CLEANOUT
- DENOTES AREA TO BE DEDICATED TO HOWARD COUNTY, MARYLAND FOR THE PURPOSE OF A PUBLIC ROAD
- DENOTES ADDITIONAL HIGHWAY PAVING REQUIRED
- DENOTES SHA COMMERCIAL ENTRANCE
- DENOTES NUMBER OF PARKING SPACES
- DENOTES A PERIMETER LANDSCAPE EDGE

APPROVED: DEPARTMENT OF PLANNING AND ZONING

CHIEF, DEVELOPMENT ENGINEERING DIVISION	DATE 6/10/97
CHIEF, DIVISION OF LAND DEVELOPMENT	DATE 8/22/97
DIRECTOR	DATE 8/22/97

APPROVED ; FOR PRIVATE WATER AND PUBLIC SEWER. HOWARD COUNTY HEALTH DEPARTMENT.

HOWARD COUNTY HEALTH OFFICER — DATE 8-18-97

AS-BUILT 3/18/99

5/30/97

10-30-00 FOR REVISION ⚠ ONLY

DEVELOPER
HIGH'S OF BALTIMORE
1340–L CHARWOOD ROAD
HANOVER, MARYLAND 21076
(410) 859–3636

OWNER
HUGH F. COLE & GROUP FIVE PARTNERSHIP
8835 P COLUMBIA 100 PARKWAY
COLUMBIA, MARYLAND 21045
(410) 730–0810

no.	description / revisions	date
1	ADDED SHRUBS AROUND RELOCATED PARKING SPACES.	9-6-00

project 95081	date JULY 1996		
illustration SJD	engineering SJD		
scale 1"=30'	approval RJH		

TAX MAP 46 – PARCEL 224 – BLOCK 2
FULTON HIGH'S
HOWARD COUNTY, MARYLAND
FIFTH ELECTION DISTRICT
LANDSCAPE PLAN

MILDENBERG, BOENDER & ASSOC., INC.
Engineers Planners Surveyors
5072 Dorsey Hall Drive, Suite 202, Ellicott City, Maryland 21042
(410) 997-0296 Balt. (301) 621-5321 Wash. (410) 997-0298 Fax.

SDP-97-11

81-LP.DWG

POND SPECIFICATIONS

THESE SPECIFICATIONS ARE APPROPRIATE TO ALL PONDS WITHIN THE SCOPE OF THE STANDARD FOR PRACTICE MD-378. ALL REFERENCES TO ASTM AND AASHTO SPECIFICATIONS APPLY TO THE MOST RECENT VERSION.

SITE PREPARATION

AREAS DESIGNATED FOR BORROW AREAS, EMBANKMENT, AND STRUCTURAL WORKS SHALL BE CLEARED, GRUBBED AND STRIPPED OF TOPSOIL. ALL TREES, VEGETATION, ROOTS AND OTHER OBJECTIONABLE MATERIAL SHALL BE REMOVED. CHANNEL BANKS AND SHARP BREAKS SHALL BE SLOPED TO NO STEEPER THAN 1:1

AREAS TO BE COVERED BY THE RESERVOIR WILL BE CLEARED OF ALL TREES, BRUSH, LOGS, RUBBISH AND OTHER OBJECTIONABLE MATERIAL UNLESS OTHERWISE DESIGNATED TO THE PLANS. TREES, BRUSH AND STUMPS SHALL BE CUT APPROXIMATELY LEVEL WITH THE GROUND SURFACE. FOR DRY STORMWATER MANAGEMENT PONDS, A MINIMUM OF A 50 FOOT RADIUS AROUND THE INLET STRUCTURE SHALL BE CLEARED.

ALL CLEARED AND GRUBBED MATERIAL SHALL BE DISPOSED OF OUTSIDE AND BELOW THE LIMITS OF THE DAM AND RESERVOIR AS DIRECTED BY THE OWNER OR HIS REPRESENTATIVE. WHEN SPECIFIED, A SUFFICIENT QUALITY OF TOPSOIL WILL BE STOCKPILED IN A SUITABLE LOCATION FOR USE ON THE EMBANKMENT AND OTHER DESIGNATED AREAS.

EARTH FILL

MATERIAL– THE FILL MATERIAL SHALL BE TAKEN FROM APPROVED DESIGNATED BORROW AREAS. IT SHALL BE FREE OF ROOTS, STUMPS, WOOD, RUBBISH, STONES GREATER THAN 6", FROZEN OR OTHER OBJECTIONABLE MATERIALS. FILL MATERIAL FOR THE CENTER OF THE EMBANKMENT AND CUT OFF TRENCH SHALL CONFORM TO UNIFIED SOIL CLASSIFICATION GC, SC, CH, OR CL. CONSIDERATION MAY BE GIVEN TO THE USE OF OTHER MATERIALS IN THE EMBANKMENT IF DESIGN AND CONSTRUCTION ARE SUPERVISED BY A GEOTECHNICAL ENGINEER.

PLACEMENT– AREAS ON WHICH FILL IS TO BE SHALL BE SCARIFIED PRIOR TO PLACEMENT OF FILL. FILL MATERIALS SHALL BE PLACED IN MAXIMUM 8 INCH THICK (BEFORE COMPACTION) LAYERS WHICH ARE TO BE CONTINUOUS OVER THE ENTIRE LENGTH OF THE FILL. THE MOST PERMEABLE BORROW MATERIAL SHALL BE PLACED IN THE DOWNSTREAM PORTIONS OF THE EMBANKMENT. THE PRINCIPAL SPILLWAY MUST BE INSTALLED CONCURRENTLY WITH FILL PLACEMENT AND NOT EXCAVATED INTO THE EMBANKMENT.

COMPACTION– THE MOVEMENT OF AND SPREADING EQUIPMENT OVER THE FILL SHALL BE CONTROLLED SO THAT THE ENTIRE SURFACE OF EACH LIFT SHALL BE TRAVERSE BY NOT LESS THAN ONE TREAD TRACK OF THE EQUIPMENT OR COMPACTION SHALL BE ACHIEVED BY A MINIMUM OF FOUR COMPLETE PASSES OF A SHEEPSFOOT, RUBBER TIRED OR VIBRATORY ROLLER. FILL MATERIAL SHALL CONTAIN SUFFICIENT MOISTURE SUCH THAT THE REQUIRED DEGREE OF COMPACTION WILL BE OBTAINED WITH THE EQUIPMENT USED. THE FILL MATERIAL SHALL CONTAIN SUFFICIENT MOISTURE SO THAT IF FORMED INTO A BALL IT WILL NOT CRUMBLE YET NOT BE SO WET THAT WATER CAN BE SQUEEZED OUT.

WHERE A MINIMUM REQUIRED DENSITY IS SPECIFIED, IT SHALL NOT BE LESS 95% OF MAXIMUM DRY DENSITY WITH A MOISTURE CONTENT WITHIN+– 2% OF THE OPTIMUM. EACH LAYER OF FILL SHALL BE COMPACTED AS NECESSARY TO OBTAIN THAT DENSITY, AND IS TO BE CERTIFIED BY THE ENGINEER AT THE TIME OF CONSTRUCTION. ALL COMPACTION IS TO BE DETERMINED BY AASHTO METHOD T-99

CUT OFF TRENCH– THE CUFF OFF TRENCH SHALL BE EXCAVATED INTO IMPERVIOUS MATERIAL ALONG OR PARALLEL TO THE CENTERLINE OF THE EMBANKMENT AS SHOWN ON THE PLANS. THE BOTTOM WIDTH OF THE TRENCH SHALL BE GOVERNED BY THE EQUIPMENT USED FOR EXCAVATION, WITH THE MINIMUM WIDTH BEING FOUR FEET. THE DEPTH SHALL BE AT LEAST FOUR FEET BELOW EXISTING GRADE OR AS SHOWN ON THE PLANS. THE SIDE SLOPES OF THE TRENCH SHALL BE 1 TO 1 OR FLATTER. THE BACKFILL SHALL BE COMPACTED WITH CONSTRUCTION EQUIPMENT, ROLLERS, OR HAND TAMPERS TO ASSURE MAXIMUM DENSITY AND MINIMUM PERMEABILITY.

STRUCTURE BACKFILL

BACKFILL ADJACENT TO PIPES OR STRUCTURES SHALL BE OF THE TYPE AND QUALITY CONFORMING TO THAT SPECIFIED FOR THE ADJOINING FILL MATERIAL. THE FILL MATERIAL SHALL BE PLACED IN HORIZONTAL LAYERS NOT TO EXCEED FOUR INCHES IN THICKNESS AND COMPACTED BY HAND TAMPERS OR OTHER MANUALLY DIRECTED COMPACTION EQUIPMENT. THE MATERIAL NEEDS TO FILL COMPLETELY ALL SPACES UNDER AND ADJACENT TO THE PIPE. AT NO TIME DURING THE BACKFILLING OPERATION SHALL DRIVEN EQUIPMENT BE ALLOWED TO OPERATE CLOSER THAN FOUR FEET, MEASURED HORIZONTALLY, TO ANY PART OF A STRUCTURE. UNDER NO CIRCUMSTANCES SHALL EQUIPMENT BE DRIVEN OVER ANY PART OF A CONCRETE FILL OF 24" OR GREATER OVER THE STRUCTURE OR PIPE.

PIPE CONDUITS

ALL PIPES SHALL BE CIRCULAR IN CROSS SECTION.

CORRUGATED METAL PIPE– ALL OF THE FOLLOWING CRITERIA SHALL APPLY FOR CORRUGATED METAL PIPE:
1. MATERIALS– (STEEL PIPE)– THIS PIPE AND ITS APPURTENANCE SHALL BE GALVANIZED AND FULLY BITUMINOUS COATED AND SHALL CONFORM TO THE REQUIREMENTS OF AASHTO SPECIFICATION M-190 TYPE A WITH WATERTIGHT COUPLING BANDS. ANY BITUMINOUS COATING DAMAGED OR OTHERWISE REMOVED SHALL BE REPLACED WITH COLD APPLIED BITUMINOUS COATING COMPOUND. STEEL PIPES WITH POLYMERIC COATINGS SHALL HAVE A MINIMUM COATING THICKNESS OF 0.01 INCH (10 MIL) ON BOTH SIDES OF THE PIPE. THE FOLLOWING COATINGS OR AN APPROVED EQUAL MAY BE USED: NEXON, PLASTI-COTE, BLAC-KLAD, AND BETH-CU-LOY. COATED CORRUGATED STEEL PIPE SHALL MEET THE REQUIREMENTS OF AASHTO M-245 AND M-246.

MATERIALS– (ALUMINUM COATED STEEL PIPE)– THIS PIPE AND ITS APPURTENANCES SHALL CONFORM TO THE REQUIREMENTS OF AASHTO SPECIFICATION M-274 WITH WATERTIGHT COUPLING BANDS OR FLANGES. ANY ALUMINUM COATING DAMAGED OF OTHERWISE REMOVED SHALL BE REPLACED WITH COLD APPLIED BITUMINOUS COATING COMPOUND.?

MATERIALS–(ALUMINUM PIPE)– THIS PIPE AND ITS APPURTENANCES SHALL CONFORM TO THE REQUIREMENTS OF AASHTO SPECIFICATION M-196 OR M-211 WITH WATERTIGHT COUPLINGS BANDS OR FLANGES. ALUMINUM SURFACES THAT ARE TO BE IN CONTACT WITH CONCRETE SHALL BE PAINTED WITH ONE COAT OF ZINC CHROMATE PRIMER. HOT DIP GALVANIZED BOLTS MAY BE USED FOR CONNECTIONS. THE PH OF THE SURROUNDING SOILS SHALL BE BETWEEN 4 AND 9.

2. COUPLING BANDS, ANTI-SEEP COLLARS, END SECTIONS, ETC., MUST BE COMPOSED OF THE SAME MATERIAL AS THE PIPE. METALS MUST BE INSULATED FROM DISSIMILAR MATERIALS WITH USE RUBBER OR PLASTIC INSULATING MATERIALS AT LEAST 24 MILS IN THICKNESS.

3. CONNECTIONS– ALL CONNECTIONS WITH PIPES MUST BE COMPLETELY WATERTIGHT. THE DRAIN PIPE OR BARREL CONNECTION TO THE RISER SHALL BE WELDED ALL AROUND WHEN THE PIPE AND RISER ARE METAL. ANTI-STEEP COLLARS SHALL BE CONNECTED TO THE PIPE IN SUCH A MANNER AS TO BE COMPLETELY WATERTIGHT. DIMPLE BANDS ARE NOT CONSIDERED TO BE WATERTIGHT.

ALL CONNECTIONS SHALL USE A RUBBER OF NEOPRENE GASKET WHEN JOINING PIPE SECTIONS. THE END OF EACH PIPE SHALL BE-ROLLED AND ADEQUATE NUMBER OF CORRUGATIONS TO ACCOMMODATE THE BAND WIDTH. THE FOLLOWING TYPE CONNECTIONS ARE ACCEPTABLE FOR PIPE LESS THAN 24" IN DIAMETER: FLANGES ON BOTH ENDS OF THE PIPE, A 12" WIDE STANDARD LAP TYPE BAND WITH 12" WIDE BY 3/8" THICK CLOSED CELL CIRCULAR NEOPRENE GASKET; AND A 12" WIDE HUGGER TYPE BAND WITH O-RING GASKETS HAVING MINIMUM DIAMETER OF 1/2" GREATER THAN THE CORRUGATION DEPTH. PIPES 24: IN DIAMETER AND LARGER SHALL BE CONNECTED BY A 24" LONG ANNULAR CORRUGATED BAND USING RODS AND LUGS. A 12" WIDE BY 3/8" THICK CLOSED CELL CIRCULAR NEOPRENE GASKET WILL BE INSTALLED ON THE END OF EACH PIPE FOR A TOTAL OF 24"

HELICALLY CORRUGATED PIPE SHALL HAVE EITHER CONTINUOUSLY WELDED SEAMS OR HAVE LOCK SEAMS WITH INTERNAL CAULKING OR A NEOPRENE BEAD.

4. BEDDING– THE PIPE SHALL BE FIRMLY AND UNIFORMLY BEDDED THROUGHOUT ITS ENTIRE LENGTH. WHERE ROCK OR SOFT, SPONGY OR OTHER UNSTABLE SOIL IS ENCOUNTERED ALL SUCH MATERIAL SHALL BE REMOVED AND REPLACED WITH SUITABLE EARTH COMPACTED TO PROVIDE ADEQUATE SUPPORT.

5. BACKFILLING SHALL CONFORM TO "STRUCTURE BACKFILL."

6. OTHER DETAILS (ANTI-SEEP COLLARS, VALVES, ETC.) SHALL BE AS SHOWN ON THE DRAWINGS.

REINFORCED CONCRETE PIPE– ALL OF THE FOLLOWING CRITERIA SHALL APPLY FOR REINFORCED CONCRETE PIPE:

1. MATERIALS–REINFORCED CONCRETE PIPE SHALL HAVE BELL AND SPIGOT JOINTS WITH RUBBER GASKETS AND SHALL EQUAL OR EXCEED ASTM DESIGNATION C-361.

2. BEDDING– ALL REINFORCED CONCRETE PIPE CONDUITS SHALL BE LAID IN A CONCRETE BEDDING FOR THEIR ENTIRE LENGTH. THIS BEDDING SHALL CONSIST OF HIGH SLUMP CONCRETE PLACED UNDER THE PIPE AND UP THE SIDES OF THE PIPE AT LEAST 10% OF ITS OUTSIDE DIAMETER WITH A MINIMUM THICKNESS OF 3 INCHES, OR AS SHOWN ON THE DRAWINGS.

3. LAYING PIPE– BELL AND SPIGOT PIPE SHALL BE PLACED WITH THE BELL END UPSTREAM. JOINTS SHALL BE MADE IN ACCORDANCE WITH RECOMMENDATIONS OF THE MANUFACTURER OF THE MATERIAL. AFTER THE JOINTS ARE SEALED FOR THE ENTIRE LINE, THE BEDDING SHALL BE PLACED SO THAT ALL SPACES UNDER THE PIPE ARE FILLED. CARE SHALL BE EXERCISED TO PREVENT ANY DEVIATION FROM THE ORIGINAL LINE AND GRADE OF THE PIPE. THE FIRST JOINT MUST BE LOCATED WITHIN 2 FEET FROM THE RISER.

4. BACKFILLING SHALL CONFORM TO "STRUCTURE BACKFILL."

5. OTHER DETAILS (ANTI-SEEP COLLARS, VALVES, ETC.) SHALL BE AS SHOWN ON THE DRAWINGS.

POLYVINYL CHLORIDE (PVC) PIPE– ALL OF THE FOLLOWING CRITERIA SHALL APPLY FOR POLYVINYL CHLORIDE (PVC) PIPE:

1. MATERIALS–PVC PIPE SHALL BE PVC-1120 OR PVC-1220 CONFORMING TO ASTM D-1785 OR ASTM D-2241.

2. JOINTS AND CONNECTIONS TO ANTI-SEEP COLLARS SHALL BE COMPLETELY WATERTIGHT.

3. BEDDING– THE PIPE SHALL BE FIRMLY AND UNIFORMLY BEDDED THROUGHOUT ITS ENTIRE LENGTH. WHERE ROCK OR SOFT, SPONGY OR OTHER UNSTABLE SOIL IS ENCOUNTERED, ALL SUCH MATERIAL SHALL BE REMOVED AND REPLACED WITH SUITABLE EARTH COMPACTED TO PROVIDE ADEQUATE SUPPORT.

4. BACKFILLING SHALL CONFORM TO "STRUCTURE BACKFILL."

5. OTHER DETAILS (ANTI-SEEP COLLARS, VALVES, ETC.) SHALL BE AS SHOWN ON THE DRAWINGS.

CONCRETE

CONCRETE SHALL MEET THE REQUIREMENTS OF MARYLAND DEPARTMENT OF TRANSPORTATION, STATE HIGHWAY ADMINISTRATION STANDARD SPECIFICATIONS FOR CONSTRUCTION AND MATERIALS, SECTION 905.

THE RIPRAP SHALL BE PLACED TO THE REQUIRED THICKNESS IN ONE OPERATION. THE ROCK SHALL BE DELIVERED AND PLACED IN A MANNER THAT WILL INSURE THE RIPRAP IN PLACE SHALL BE REASONABLY HOMOGENOUS WITH THE LARGER ROCKS UNIFORMLY DISTRIBUTED AND FIRMLY IN CONTACT ONE TO ANOTHER WITH THE SMALLER ROCKS FILLING THE VOIDS BETWEEN THE LARGER ROCKS. FILTER CLOTH SHALL BE REPLACED UNDER ALL RIPRAP AND SHALL MEET THE REQUIREMENTS OF MARYLAND DEPARTMENT OF TRANSPORTATION, STATE HIGHWAY ADMINISTRATION STANDARD SPECIFICATIONS FOR CONSTRUCTION AND MATERIALS, SECTION 919.12.?

CARE OF WATER DURING CONSTRUCTION

ALL WORK ON THE PERMANENT STRUCTURES SHALL BE CARRIED OUT IN AREAS FREE FROM WATER. THE CONTRACTOR SHALL CONSTRUCT AND MAINTAIN ALL TEMPORARY DIKES, LEVEES, COFFERDAMS, DRAINAGE CHANNELS, AND STREAM DIVERSIONS NECESSARY TO PROTECT THE AREAS TO BE OCCUPIED BY THE PERMANENT WORKS. THE CONTRACTOR SHALL ALSO FURNISH, INSTALL, OPERATE AND MAINTAIN ALL NECESSARY PUMPING AND OTHER EQUIPMENT REQUIRED FOR REMOVAL OF WATER FROM THE VARIOUS PARTS OF THE WORK AND FOR MAINTAINING THE EXCAVATIONS, FOUNDATION AND OTHER PARTS OF THE WORK FREE FROM WATER AS REQUIRED OR DIRECTED BY THE ENGINEER FOR CONSTRUCTING EACH PART OF THE WORK. AFTER HAVING SERVED THEIR PURPOSE, ALL TEMPORARY PROTECTIVE WORKS SHALL BE REMOVED OR LEVELED AND GRADED TO THE EXTENT REQUIRED TO PREVENT OBSTRUCTION IN ANY DEGREE WHATSOEVER OF THE FLOW OF WATER TO THE SPILLWAY OR OUTLET WORKS AND SO AS NOT TO INTERFERE IN ANY WAY WITH THE OPERATION OR MAINTENANCE OF THE STRUCTURE. STREAM DIVERSIONS SHALL BE MAINTAINED UNTIL THE FULL FLOW CAN BE PASSED THROUGH THE PERMANENT WORKS. THE REMOVAL OF WATER FROM THE REQUIRED EXCAVATION AND THE FOUNDATION SHALL BE ACCOMPLISHED IN A MANNER AND TO THE EXTENT THAT WILL MAINTAIN STABILITY OF THE EXCAVATED SLOPES AND BOTTOM OF THE REQUIRED EXCAVATIONS AND WILL ALLOW SATISFACTORY PERFORMANCE OF ALL AND CONSTRUCTION OPERATIONS. DURING THE PLACING AND COMPACTING OF MATERIAL IN REQUIRED EXCAVATIONS, THE WATER LEVEL AT THE LOCATIONS BEING REFILLED SHALL BE MAINTAINED BELOW THE BOTTOM OF THE EXCAVATION AT SUCH LOCATIONS WHICH MAY REQUIRE DRAINING THE WATER TO SUMPS FROM WHICH THE WATER SHALL BE PUMPED.

STABILIZATION

ALL BORROW AREAS SHALL BE GRADED TO PROVIDE PROPER DRAINAGE AND LEFT IN A SLIGHTLY CONDITION. ALL EXPOSED SURFACES OF THE EMBANKMENT, SPILLWAY, SPOIL AND BORROW AREAS, AND BERMS SHALL BE STABILIZED BY SEEDING, LIMING, FERTILIZING AND MULCHING IN ACCORDANCE WITH THE MARYLAND SOIL CONSERVATION SERVICE STANDARDS AND SPECIFICATIONS FOR CRITICAL AREA PLANTING (MD-342) OR AS SHOWN ON THE ACCOMPANYING DRAWINGS.

EROSION AND SEDIMENT CONTROL

CONSTRUCTION OPERATIONS WILL BE CARRIED OUT IN SUCH A MANNER THAT EROSION WILL BE CONTROLLED AND WATER AND AIR POLLUTION MINIMIZED. STATE AND LOCAL LAWS CONCERNING POLLUTION ABATEMENT WILL BE FOLLOWED. CONSTRUCTION PLANS SHALL DETAIL EROSION AND SEDIMENT CONTROL MEASURES TO BE EMPLOYED DURING THE CONSTRUCTION PROCESS.

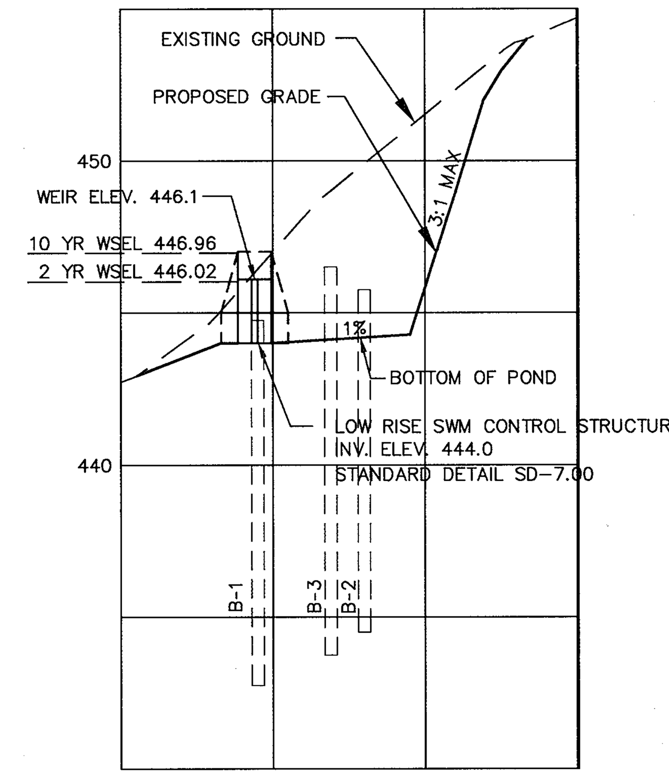

SPILLWAY PROFILE
SECTION A – A'

HORIZONTAL SCALE : 1" = 50'
VERTICAL SCALE : 1" = 5'

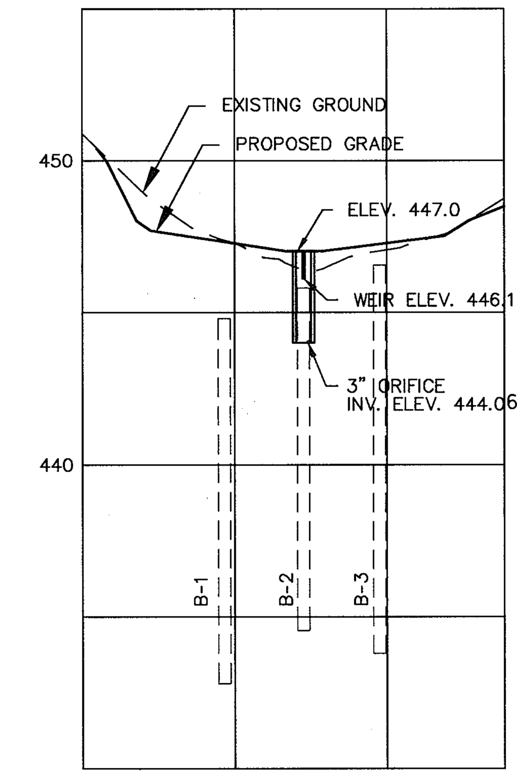

PROFILE OF ℄ OF DAM
SECTION B – B'

HORIZONTAL SCALE : 1" = 50'
VERTICAL SCALE : 1" = 5'

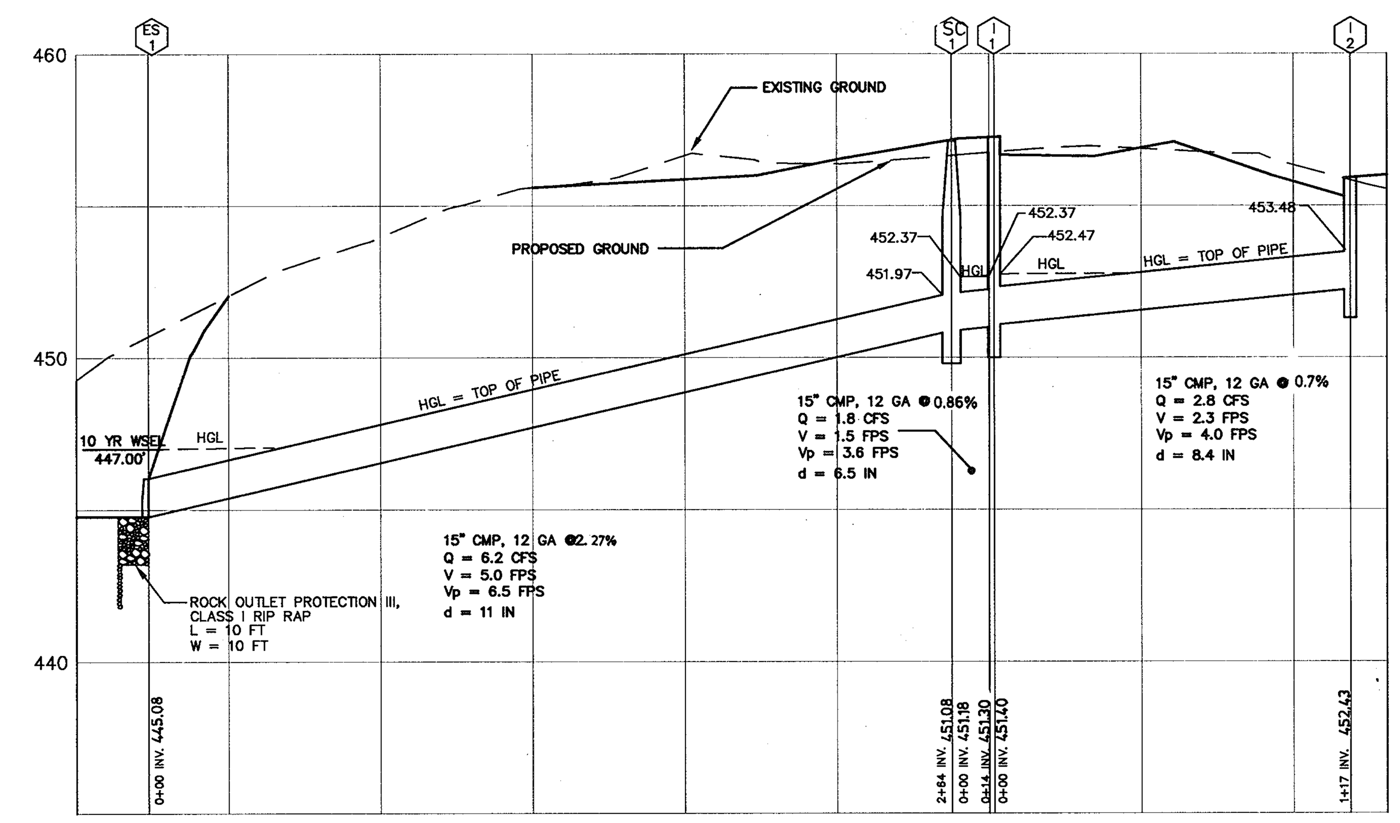

STORM DRAIN PROFILE

HORIZONTAL SCALE : 1" = 50'
VERTICAL SCALE : 1" = 5'

STRUCTURE SCHEDULE					
NO.	LOCATION	RIM ELEV.	INV. IN	INV. OUT	COMMENTS
I-2	N 540,689.3124 E 1,333,987.9406	455.91	---	452.31	SD 4.01
I-1	N 540,663.0152 E 1,333,870.2701	456.28	451.06	450.96	SD 4.01
SC-1	N 540,665.1765 E 1,333,854.9542	456.20	450.82	450.72	SEE DETAIL
ES1	N 540,702.1903 E 1,333,590.9317	---	444.78	---	SD 5.61

NOTE:
INLET LOCATIONS ARE TO THE CENTERLINE OF THE INLET ALONG THE FACE OF CURB. STORMCEPTOR LOCATION IS TO CENTERLINE OF MANHOLE COVER. END SECTION LOCATION IS AT THE INTERSECTION OF THE END SECTION AND THE DRAINAGE PIPE ALONG THE CENTERLINE.

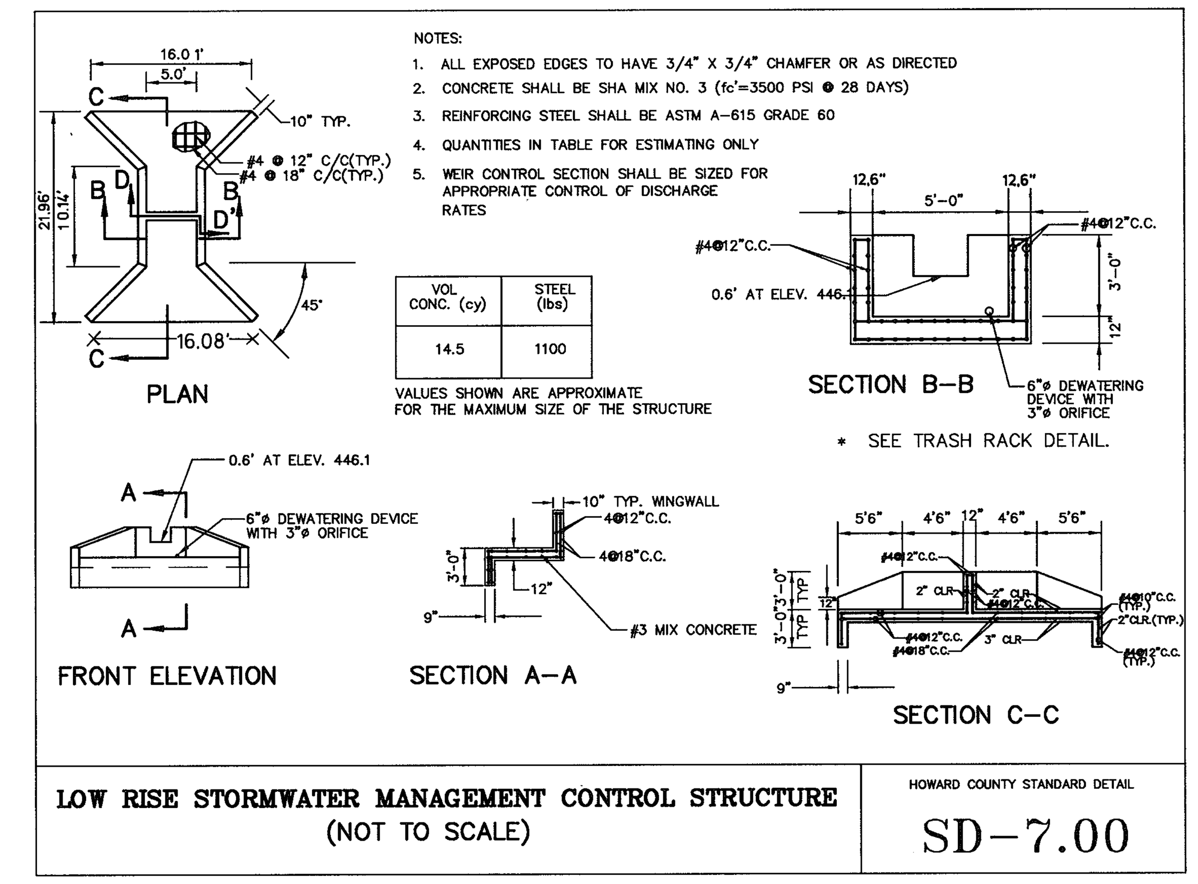

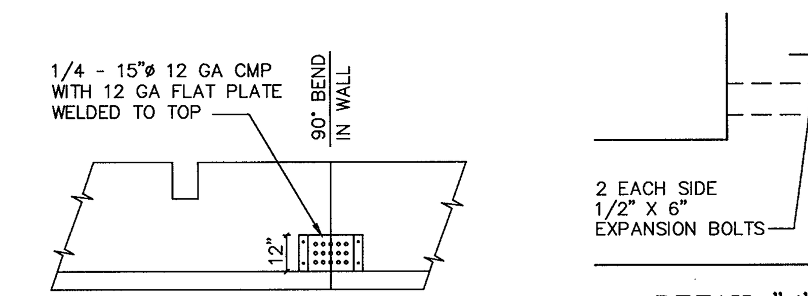

SECTION D – D'
NOT TO SCALE

DETAIL "A" (THIS SHEET)
NOT TO SCALE

TRASH RACK DETAIL
(ADD TO STD DETAIL SD-7.00 ABOVE)

SWM POND MAINTENANCE REQUIREMENTS

a. SILT SHALL BE REMOVED WHEN ACCUMULATION EXCEEDS SIX (6) INCHES IN BASIN OR FOUR (4) INCHES IN THE FOREBAY.

b. ACCUMULATED PAPER, TRASH AND DEBRIS SHALL BE REMOVED AS NECESSARY.

c. ANNUAL INSPECTION AND REPAIR, IF REQUIRED, OF THE STRUCTURE SHALL BE PERFORMED.

OPERATION AND MAINTENANCE SCHEDULE FOR STORMCEPTOR WATER QUALITY DEVICE

1. STORMCEPTOR WATER QUALITY STRUCTURES WILL REQUIRE PERIODIC INSPECTION AND CLEANING TO MAINTAIN OPERATION AND FUNCTION. OWNERS WILL HAVE THE STORMCEPTOR UNIT INSPECTED YEARLY OR AS REQUIRED BY HOWARD COUNTY, UTILIZING THE STORMCEPTOR INSPECTION/MONITORING FORM. INSPECTIONS CAN BE DONE BY USING A CLEAR PLEXIGLAS TUBE ("SLUDGE JUDGE") TO EXTRACT A WATER COLUMN SAMPLE. WHEN SEDIMENT DEPTHS EXCEED THE SPECIFIED LEVEL (TABLE 6 OF TECHNICAL MANUAL) THEN CLEANING OF THE UNIT IS REQUIRED.
2. STORMCEPTOR WATER QUALITY STRUCTURES MUST BE CHECKED AND CLEANED IMMEDIATELY AFTER PETROLEUM SPILLS, CONTACT APPROPRIATE REGULATORY AGENCIES.
3. MAINTENANCE OF STORMCEPTOR UNITS SHOULD BE DONE BY A VACUUM TRUCK WHICH WILL REMOVE THE WATER, SEDIMENT, DEBRIS, FLOATING HYDROCARBONS AND OTHER MATERIALS IN UNIT. THE PROPER CLEANING AND DISPOSAL OF THE REMOVED MATERIALS AND LIQUID MUST BE FOLLOWED.
4. INLET AND OUTLET PIPES MUST BE CHECKED FOR ANY OBSTRUCTIONS AND IF ANY OBSTRUCTIONS AREA FOUND THEY MUST BE REMOVED. STRUCTURAL PARTS OF THE STORMCEPTOR WILL BE REPAIRED AS NEEDED.
5. OWNER SHALL RETAIN AND MAKE STORMCEPTOR INSPECTION/MONITORING FORMS AVAILABLE TO HOWARD COUNTY OFFICIALS UPON THEIR REQUEST.

DEVELOPERS CERTIFICATE

I CERTIFY THAT ALL DEVELOPMENT AND CONSTRUCTION WILL BE DONE ACCORDING TO THIS PLAN, AND THAT ANY RESPONSIBLE PERSONNEL INVOLVED IN THE CONSTRUCTION PROJECT WILL HAVE A CERTIFICATE OF ATTENDANCE AT A DEPARTMENT OF THE ENVIRONMENT APPROVED TRAINING PROGRAM FOR THE CONTROL OF SEDIMENT AND EROSION BEFORE BEGINNING THE PROJECT. I ALSO AUTHORIZE PERIODIC ON-SITE INSPECTION BY THE NATURAL RESOURCE CONSERVATION SERVICE.

Brian Darnell — 5/30/97
SIGNATURE OF DEVELOPER — DATE

BRIAN DARNELL, HIGH'S OF BALTIMORE
PRINTED NAME OF DEVELOPER

ENGINEER'S CERTIFICATE

I CERTIFY THAT THIS PLAN FOR EROSION AND SEDIMENT CONTROL REPRESENTS A PRACTICAL AND WORKABLE PLAN BASED ON MY PERSONAL KNOWEDGE OF THE SITE CONDTIONS AND THAT IT WAS PREPARED IN ACCORDANCE WITH THE REQUIREMENTS OF THE NATURAL RESOURCE CONSERVATION SERVICE.

5/30/97
SIGNATURE OF ENGINEER — DATE

R. JACOB HIKMAT
PRINTED NAME OF ENGINEER

THESE PLANS HAVE BEEN REVIEWED FOR THE HOWARD SOIL CONSERVATION DISTRICT AND MEETS TECHNICAL REQUIREMENTS.

Cheryl Simmons — 6/3/97
USDA – NATURAL RESOURCE CONSERVATION SERVICE — DATE

THIS DEVELOPMENT PLAN IS APPROVED FOR SOIL EROSION AND SEDIMENT CONTROL BY THE HOWARD SOIL CONSERVATION DISTRICT.

John L. Robertson — 6/3/97
HOWARD SOIL CONSERVATION DISTRICT — DATE

APPROVED: DEPARTMENT OF PLANNING AND ZONING

6/10/97
CHIEF, DEVELOPMENT ENGINEERING DIVISION — DATE

Cindy Hamilton — 8/22/97
CHIEF, DIVISION OF LAND DEVELOPMENT — DATE

8/22/97
DIRECTOR — DATE

APPROVED ; FOR PRIVATE WATER AND PUBLIC SEWER. HOWARD COUNTY HEALTH DEPARTMENT.

Joyce M. Boyd — 8-18-97
HOWARD COUNTY HEALTH OFFICER — DATE

STATE OF MARYLAND — R. JACOB HIKMAT — 17942 — PROFESSIONAL ENGINEER

81-D-SDP.DWG

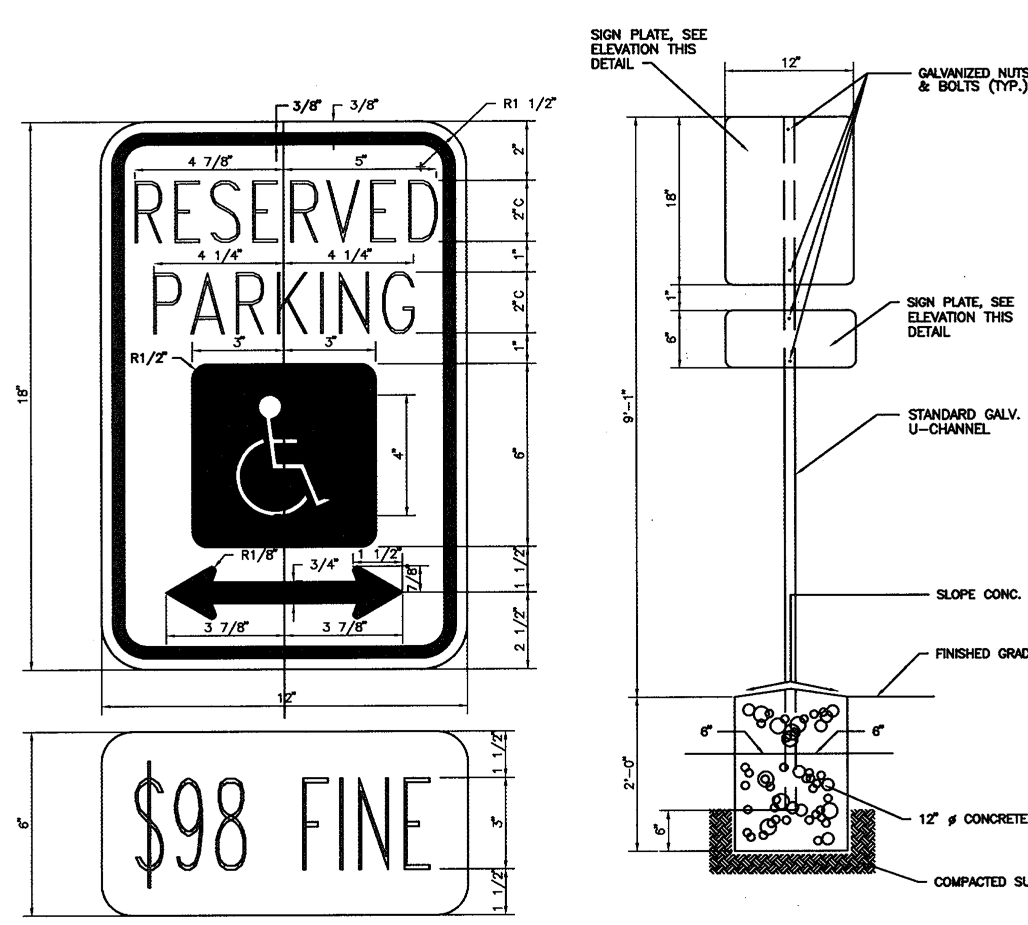

ELEVATION

COLORS:
LEGEND AND BORDER – GREEN
WHITE SYMBOL ON BLUE BACKGROUND
BACKGROUND – WHITE

SECTION

NOTE : PROVIDE ONE SIGN AND POST PER HANDICAPPED PARKING SPACE, SEE PLAN.

HANDICAPPED SIGN AND POST
NOT TO SCALE

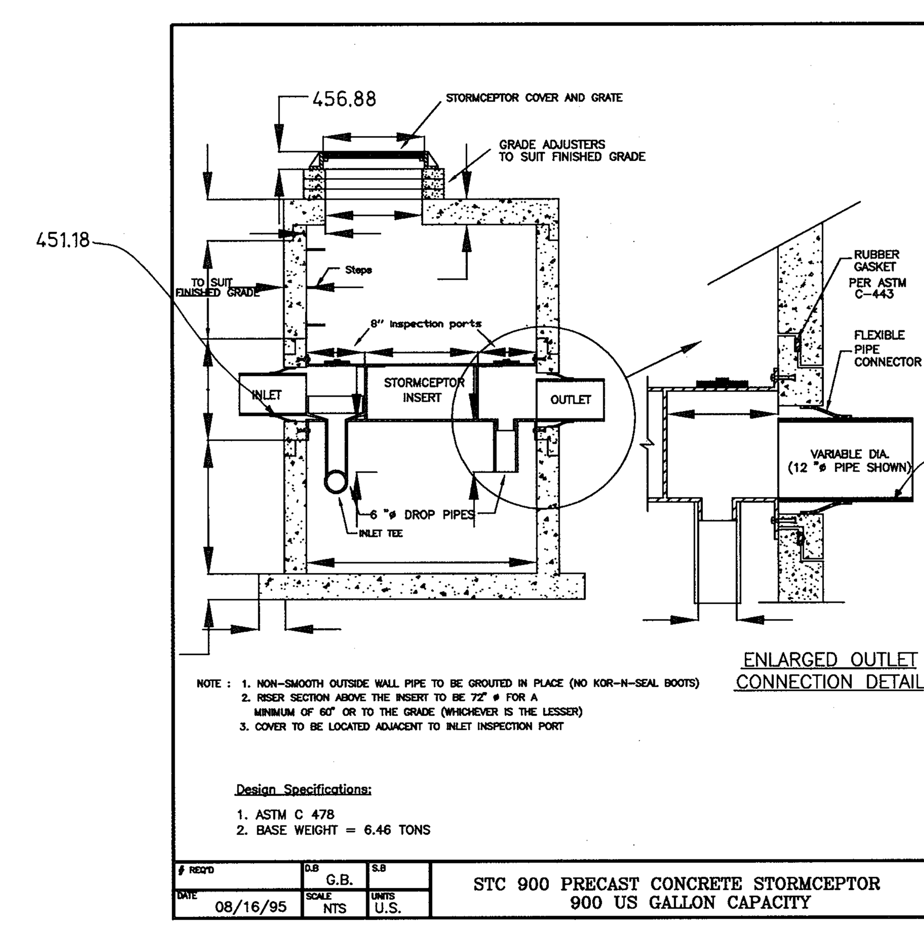

Concrete Stormceptor Order Form *

Contractor Information
Name:
Address:
City:
State:
Zip Code:
Contact:
Phone:
Fax:

Office Use Only
Order #:
Date:
Internal Sale:

90° / 0° / 180° / 270°
15" CMP, INV.=421.04 IN
15" CMP, INV=421.14 OUT

Owner Information
Name: BRANTLY DEVELOPMENT CORP. Hugh Cole & John Liparini, Trustees
Phone: (410) 730-0810
Fax:

Please draw orientation of inlet and outlet pipes on diagram along with pipe inside diameter (in.) and invert elevation (ft.). Clearly mark inlet pipes with an I and outlet pipes with an O and provide the inlet/outlet pipe angle in degrees.

Stormceptor Model			
900	■	3600	□
1200	□	4800	□
1800	□	6000	□
2400	□	7200	□

Insert Size	
22"	■
32"	□
44"	□
Custom	□

Manhole Number	1
Top Elevation (ft.)	456.88
Inlet Pipe Invert (ft)	451.18
Outlet Pipe Invert (ft)	451.08
Pipe Type:	CMP
Pipe Inside Diameter (in.)(ID)	15"
Pipe Outside Diameter (in)(OD)	N/A

Project Name: FULTON HIGH'S
Approximate time until required delivery (weeks)
Delivery Address: Street INTERSECTION OF MD RT 216 AND LIME KILN ROAD
City: FULTON State: MARYLAND Zip Code:
Designer Company : MILDENBERG, BOENDER & ASSOCIATES, INC.
Designer Contact: Jacob Hikmat Phone: (410) 997-0296 Fax: (410) 997-0298

For Technical Assistance and Stormceptor Order Information
Please Call Stormceptor Corporation at (301) 762-8361
or toll free at 1-(800)-762-4703

* TO BE INCLUDED ON SWM PLAN BY DESIGNER

DEVELOPER
HIGH'S OF BALTIMORE
1340-L CHARWOOD ROAD
HANOVER, MARYLAND 21076
(410) 859-3636

OWNER
HUGH F. COLE & GROUP FIVE PARTNERSHIP
8835 P COLUMBIA 100 PARKWAY
COLUMBIA, MARYLAND 21045
(410) 730-0810

project	date
95081	JULY 1996
illustration	engineering
SJD	SJD
scale	approval
AS SHOWN	RJH

no.	description (revisions)	date

TAX MAP 46 – PARCEL 224 – BLOCK 2
FULTON HIGH'S
FIFTH ELECTION DISTRICT — HOWARD COUNTY, MARYLAND
DETAILS AND STORM DRAIN PROFILES

MILDENBERG, BOENDER & ASSOC., INC.
Engineers Planners Surveyors
5072 Dorsey Hall Drive, Suite 202, Ellicott City, Maryland 21042
(410) 997-0296 Balt. (301) 621-5521 Wash. (410) 997-0298 Fax.

DETAIL 33 - SUPER SILT FENCE

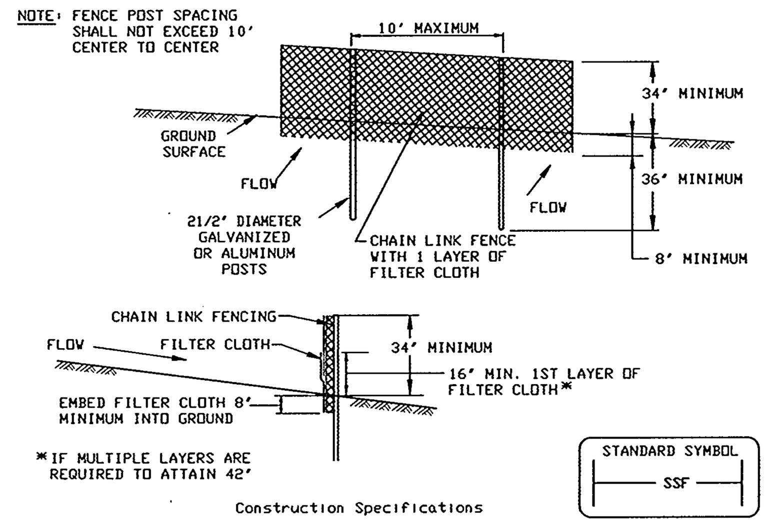

Construction Specifications

1. Fencing shall be 42" in height and constructed in accordance with the latest Maryland State Highway Details for Chain Link Fencing. The specification for a 6' fence shall be used, substituting 42" fabric and 6' length posts.

2. Chain link fence shall be fastened securely to the fence posts with wire ties. The lower tension wire, brace and truss rods, drive anchors and post caps are not required except on the ends of the fence.

3. Filter cloth shall be fastened securely to the chain link fence with ties spaced every 24" at the top and mid section.

4. Filter cloth shall be embedded a minimum of 8" into the ground.

5. When two sections of filter cloth adjoin each other, they shall be overlapped by 6" and folded.

6. Maintenance shall be performed as needed and silt buildups removed when 'bulges' develop in the silt fence, or when silt reaches 50% of fence height

7. Filter cloth shall be fastened securely to each fence post with wire ties or staples at top and mid section and shall meet the following requirements for Geotextile Class F:

Tensile Strength	50 lbs/in (min.)	Test: MSMT 509
Tensile Modulus	20 lbs/in (min.)	Test: MSMT 509
Flow Rate	0.3 gal/ft²/minute (max.)	Test: MSMT 322
Filtering Efficiency	75% (min.)	Test: MSMT 322

U.S. DEPARTMENT OF AGRICULTURE SOIL CONSERVATION SERVICE	PAGE H - 26 - 3	MARYLAND DEPARTMENT OF ENVIRONMENT WATER MANAGEMENT ADMINISTRATION

SUPER SILT FENCE

Design Criteria

Slope	Slope Steepness	Slope Length (maximum)	Silt Fence Length (maximum)
0 - 10%	0 - 10:1	Unlimited	Unlimited
10 - 20%	10:1 - 5:1	200 feet	1,500 feet
20 - 33%	5:1 - 3:1	100 feet	1,000 feet
33 - 50%	3:1 - 2:1	100 feet	500 feet
50% +	2:1 +	50 feet	250 feet

U.S. DEPARTMENT OF AGRICULTURE SOIL CONSERVATION SERVICE	PAGE H - 26 - 3A	MARYLAND DEPARTMENT OF ENVIRONMENT WATER MANAGEMENT ADMINISTRATION

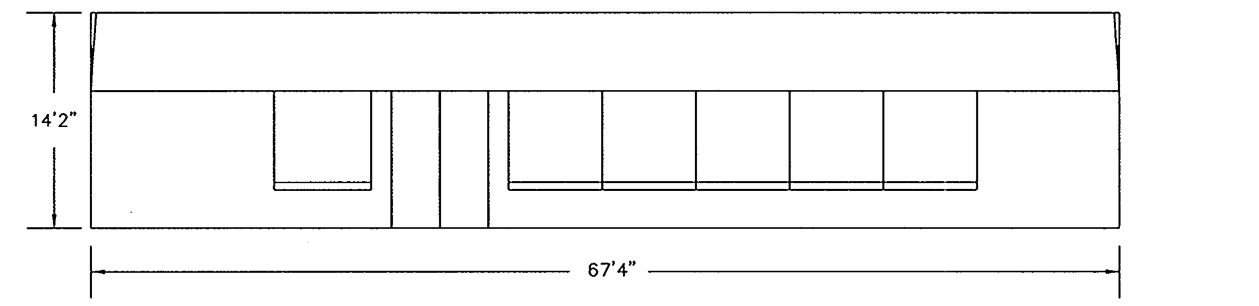

FRONT ELEVATION
SCALE: 1 = 10'

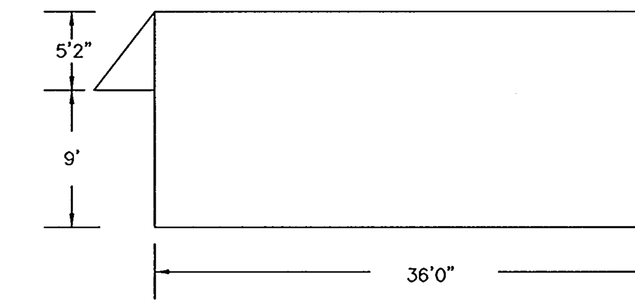

SIDE ELEVATION
SCALE: 1 = 10'

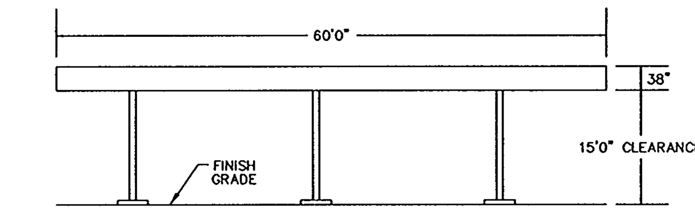

CANOPY DETAIL
SCALE : 1" = 20'

GAS STATION STRUCTURE (BUILDING A)

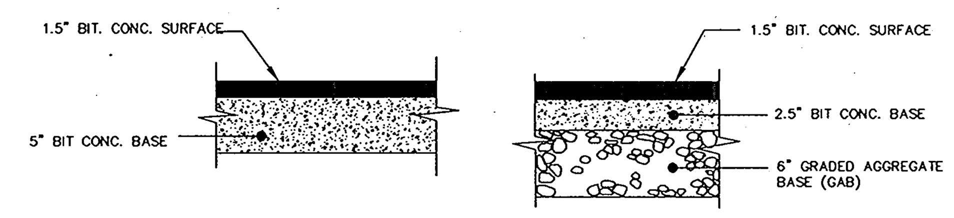

PAVING SECTION P-2
NOT TO SCALE

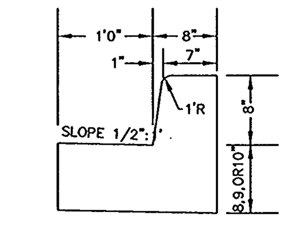

MD. S.H.A. TYPE "A"
CONCRETE COMBINATION
CURB & GUTTER
STANDARD NO. MD. 620.02
NOT TO SCALE

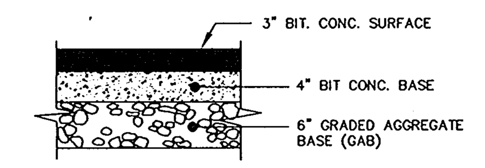

MD. S.H.A. PAVING SECTION
NOT TO SCALE

NOTE : CONFORM TO EXISTING GRADE OF ±1%.

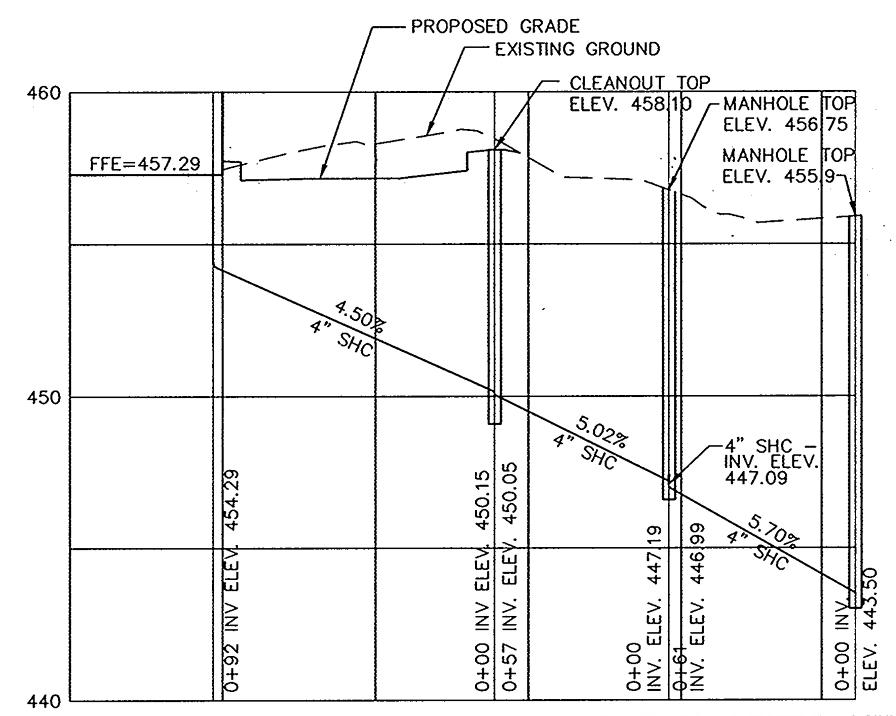

SHC PROFILE FROM BUILDING A TO PUBLIC SEWER MH
HORIZONTAL SCALE : 1" = 50'
VERTICAL SCALE : 1" = 5'

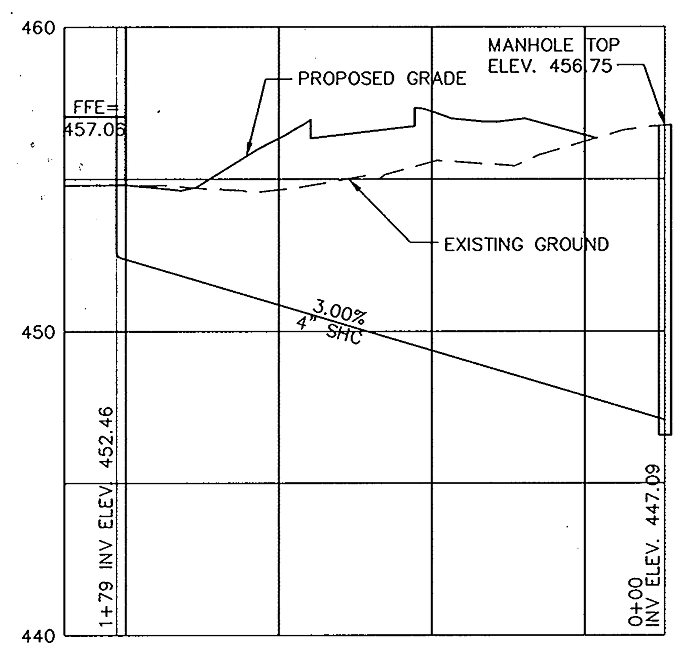

SHC PROFILE FROM BUILDING B TO MH 1
HORIZONTAL SCALE : 1" = 50'
VERTICAL SCALE : 1" = 5'

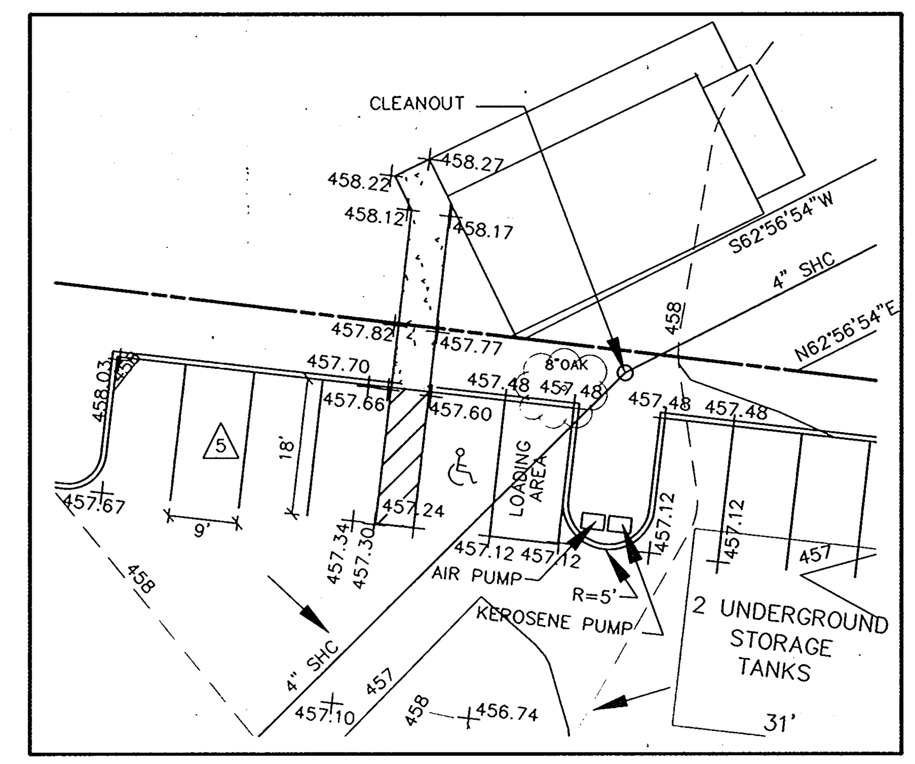

HANDICAPPED ACCESS (RELOCATED BUILDING)
SCALE : 1"=20'

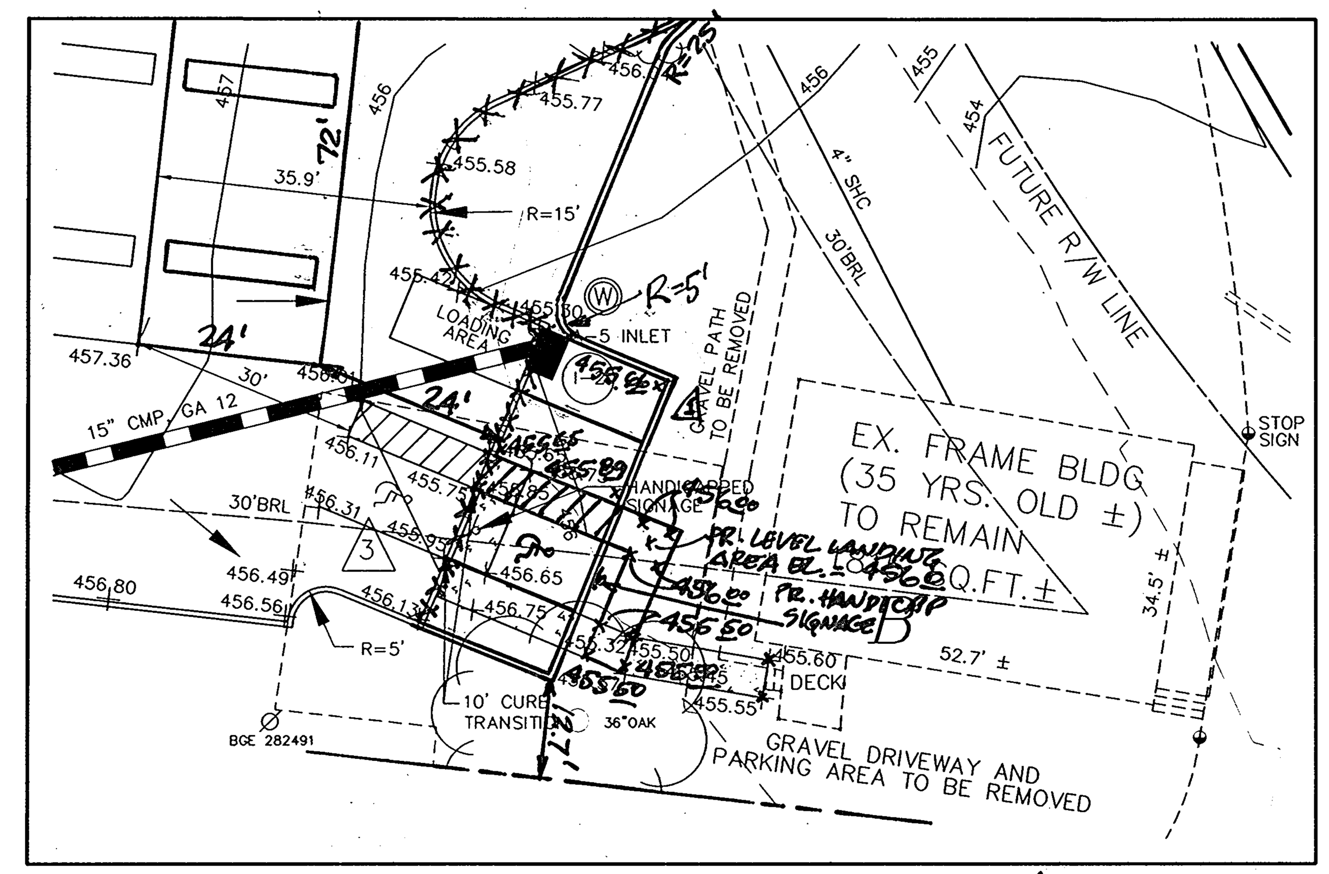

HANDICAPPED ACCESS (BUILDING B)
SCALE : 1"=20'

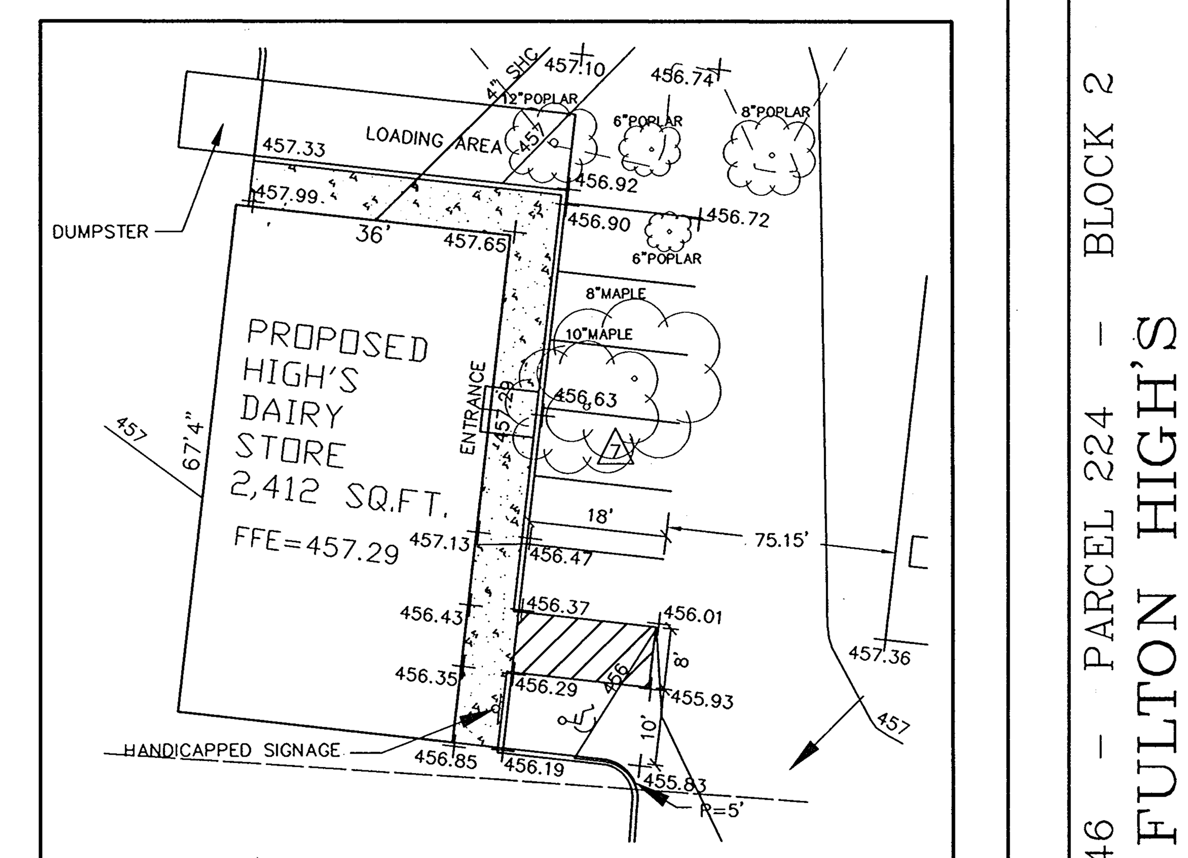

HANDICAPPED ACCESS (BUILDING A)
SCALE : 1"=20'

DEVELOPERS CERTIFICATE

I CERTIFY THAT ALL DEVELOPMENT AND CONSTRUCTION WILL BE DONE ACCORDING TO THIS PLAN, AND THAT ANY RESPONSIBLE PERSONNEL INVOLVED IN THE CONSTRUCTION PROJECT WILL HAVE A CERTIFICATE OF ATTENDANCE AT A DEPARTMENT OF THE ENVIRONMENT APPROVED TRAINING PROGRAM FOR THE CONTROL OF SEDIMENT AND EROSION BEFORE BEGINNING THE PROJECT. I ALSO AUTHORIZE PERIODIC ON-SITE INSPECTION BY THE NATURAL RESOURCE CONSERVATION SERVICE.

SIGNATURE OF DEVELOPER — 5/30/97 DATE

BRIAN DARNELL, HIGH'S OF BALTIMORE
PRINTED NAME OF DEVELOPER

ENGINEER'S CERTIFICATE

I CERTIFY THAT THIS PLAN FOR EROSION AND SEDIMENT CONTROL REPRESENTS A PRACTICAL AND WORKABLE PLAN BASED ON MY PERSONAL KNOWEDGE OF THE SITE CONDTIONS AND THAT IT WAS PREPARED IN ACCORDANCE WITH THE REQUIREMENTS OF THE NATURAL RESOURCE CONSERVATION SERVICE.

SIGNATURE OF ENGINEER — 5/30/97 DATE

R. JACOB HIKMAT
PRINTED NAME OF ENGINEER

THESE PLANS HAVE BEEN REVIEWED FOR THE HOWARD SOIL CONSERVATION DISTRICT AND MEETS TECHNICAL REQUIREMENTS.

USDA – NATURAL RESOURCE CONSERVATION SERVICE — 6/3/97 DATE

THIS DEVELOPMENT PLAN IS APPROVED FOR SOIL EROSION AND SEDIMENT CONTROL BY THE HOWARD SOIL CONSERVATION DISTRICT.

HOWARD SOIL CONSERVATION DISTRICT — DATE

APPROVED: DEPARTMENT OF PLANNING AND ZONING

CHIEF, DEVELOPMENT ENGINEERING DIVISION — 6/10/97 DATE

CHIEF, DIVISION OF LAND DEVELOPMENT — 8/22/97 DATE

DIRECTOR — 8/22/97 DATE

APPROVED ; FOR PRIVATE WATER AND PUBLIC SEWER.
HOWARD COUNTY HEALTH DEPARTMENT.

HOWARD COUNTY HEALTH OFFICER — 8-18-97 DATE

STATE OF MARYLAND — JACOB HIKMAT — PROFESSIONAL ENGINEER — 5/30/97

STATE OF MARYLAND — DARRELL J. VOLNEY — 10-30-06

FOR REVIEW △1 ONLY

81-SCN-D.DWG

HILLIS – CARNES
ENGINEERING ASSOCIATES, INC.
Page 1 of 1

RECORD OF SOIL EXPLORATION

Project Name Fulton High's — Boring # B-1
Location Fulton, Maryland — Job # 96129A

SAMPLER
Datum — Hammer Wt. 140 Lbs. — Hole Diameter 6" — Foreman W. Massey
Surf. Elev. — Hammer Drop 30 Inches — Rock Core Dia. — Inspector
Date Started 5-29-96 — Pipe Size 2.0 Inches OD — Boring Method HSA — Date Completed 5-29-96

ELEV.	SOIL DESCRIPTION Color, Moisture, Density, Size, Proportion	STRA. DEPTH	DEPTH SCALE	CON	SAMPLE BLOWS 6"	NO.	REC.	BORING & SAMPLING NOTES
	SURFACE		0.0					
	Red to brown, damp to wet, soft to stiff, micaceous silt with some fine to coarse gravel and sand			D	1-2-2	1	14"	2" Topsoil Groundwater encountered at 3.0' while drilling
				D	2-2-2	2	10"	Sample for S-4 from cuttings
			5					Caved at 5.0'
				D	4-4-4	3	2"	Offset boring 15.0' West
				D	3-5-8	4	0"	
			10					
		12.0		D	7-7-8-9	5	21"	
	Bottom of Hole at 12.0'		15					
			20					

SAMPLER TYPE: DRIVEN SPLIT SPOON UNLESS OTHERWISE NOTED. PT-PRESSED SHELBY TUBE; CA-CONTINUOUS FLIGHT AUGER; RC-ROCK CORE
SAMPLE CONDITIONS: D-DISINTEGRATED; I-INTACT; U-UNDISTURBED; L-LOST
GROUND WATER DEPTH: AT COMPLETION 2.5 FT.; AFTER ___ FT.; AFTER ___ FT.
BORING METHOD: HSA-HOLLOW STEM AUGERS; CFA-CONT. FLIGHT AUGERS; DC-DRIVING CASING; MD-MUD DRILLING
STANDARD PENETRATION TEST-DRIVING 2" OD SAMPLER 1' WITH 140# HAMMER FALLING 30":COUNT MADE AT 6" INTERVALS

HILLIS – CARNES
ENGINEERING ASSOCIATES, INC.
Page 1 of 1

RECORD OF SOIL EXPLORATION

Project Name Fulton High's — Boring # B-2
Location Fulton, Maryland — Job # 96129A

SAMPLER
Datum — Hammer Wt. 140 Lbs. — Hole Diameter 6" — Foreman W. Massey
Surf. Elev. — Hammer Drop 30 Inches — Rock Core Dia. — Inspector
Date Started 5-29-96 — Pipe Size 2.0 Inches OD — Boring Method HSA — Date Completed 5-29-96

ELEV.	SOIL DESCRIPTION Color, Moisture, Density, Size, Proportion	STRA. DEPTH	DEPTH SCALE	CON	SAMPLE BLOWS 6"	NO.	REC.	BORING & SAMPLING NOTES
	SURFACE		0.0					
	Orange, moist, stiff, silt with some roots	1.5		I	1-4-9	1	8"	No groundwater encountered while drilling
	Red to brown and green damp stiff to medium stiff, micaceous silt with some fine sand S-5 is very stiff			I	3-5-6	2	18"	
			5					Caved at 7.0'
				I	3-3-4	3	16"	Offset boring 15.0' West
				I	3-3-5	4	18"	
			10					
		12.0		I	5-8-8-8	5	6"	
	Bottom of Hole at 12.0'		15					
			20					

SAMPLER TYPE: DRIVEN SPLIT SPOON UNLESS OTHERWISE NOTED. PT-PRESSED SHELBY TUBE; CA-CONTINUOUS FLIGHT AUGER; RC-ROCK CORE
SAMPLE CONDITIONS: D-DISINTEGRATED; I-INTACT; U-UNDISTURBED; L-LOST
GROUND WATER DEPTH: AT COMPLETION Dry FT.; AFTER ___ FT.; AFTER ___ FT.
BORING METHOD: HSA-HOLLOW STEM AUGERS; CFA-CONT. FLIGHT AUGERS; DC-DRIVING CASING; MD-MUD DRILLING
STANDARD PENETRATION TEST-DRIVING 2" OD SAMPLER 1' WITH 140# HAMMER FALLING 30":COUNT MADE AT 6" INTERVALS

HILLIS – CARNES
ENGINEERING ASSOCIATES, INC.
Page 1 of 1

RECORD OF SOIL EXPLORATION

Project Name Fulton High's — Boring # B-3
Location Fulton, Maryland — Job # 96129A

SAMPLER
Datum — Hammer Wt. 140 Lbs. — Hole Diameter 6" — Foreman W. Massey
Surf. Elev. — Hammer Drop 30 Inches — Rock Core Dia. — Inspector
Date Started 5-29-96 — Pipe Size 2.0 Inches OD — Boring Method HSA — Date Completed 5-29-96

ELEV.	SOIL DESCRIPTION Color, Moisture, Density, Size, Proportion	STRA. DEPTH	DEPTH SCALE	CON	SAMPLE BLOWS 6"	NO.	REC.	BORING & SAMPLING NOTES
	SURFACE		0.0					
	Brown damp stiff silty clay with some rock fragments	2.5		I	2-5-8	1	18"	3" Topsoil Groundwater encountered at 3.0' while drilling
	Red to gray, damp to moist, medium stiff to soft silt with some rock fragments and roots			I	2-3-3	2	16"	
			5					Caved at 6.0'
		7.5		I	3-1-3	3	10"	Offset boring 25.0' West
	Brown, damp, medium stiff to stiff, micaceous silt			I	5-3-5	4	12"	
			10					
		12.0		I	5-7-8-9	5	12"	
	Bottom of Hole at 12.0'		15					
			20					

SAMPLER TYPE: DRIVEN SPLIT SPOON UNLESS OTHERWISE NOTED. PT-PRESSED SHELBY TUBE; CA-CONTINUOUS FLIGHT AUGER; RC-ROCK CORE
SAMPLE CONDITIONS: D-DISINTEGRATED; I-INTACT; U-UNDISTURBED; L-LOST
GROUND WATER DEPTH: AT COMPLETION 3.0 FT.; AFTER ___ FT.; AFTER ___ FT.
BORING METHOD: HSA-HOLLOW STEM AUGERS; CFA-CONT. FLIGHT AUGERS; DC-DRIVING CASING; MD-MUD DRILLING
STANDARD PENETRATION TEST-DRIVING 2" OD SAMPLER 1' WITH 140# HAMMER FALLING 30":COUNT MADE AT 6" INTERVALS

DEVELOPER
HIGH'S OF BALTIMORE
1340-L CHARWOOD ROAD
HANOVER, MARYLAND 21076
(410) 859-3636

OWNER
HUGH F. COLE & GROUP FIVE PARTNERSHIP
8835 P COLUMBIA 100 PARKWAY
COLUMBIA, MARYLAND 21045
(410) 730-0810

project	date
95081	JULY 1996
illustration	engineering
SJD	SJD
scale	approval
N.T.S.	RJH

no.	description	date
△1	RELOCATE HANDICAP & LOADING SPACES PROVIDE ADDITIONAL SPOT ELEVATIONS.	9-6-06

revisions

TAX MAP 46 – PARCEL 224 – BLOCK 2
FULTON HIGH'S
FIFTH ELECTION DISTRICT — HOWARD COUNTY, MARYLAND
SEDIMENT CONTROL NOTES AND DETAILS

MILDENBERG, BOENDER & ASSOC., INC.
Engineers Planners Surveyors
5072 Dorsey Hall Drive, Suite 202, Ellicott City, Maryland 21042
(410) 997-0296 Balt. (301) 621-5521 Wash. (410) 997-0298 Fax.

SDP-97-11

HOWARD SOIL CONSERVATION DISTRICT
PERMANENT SEEDING NOTES

APPLY TO GRADED OR CLEARED AREAS NOT SUBJECT TO IMMEDIATE FURTHER DISTURBANCE WHERE A PERMANENT LONG-LIVED VEGETATIVE COVER IS NEEDED.

SEEDBED PREPARATION: LOOSEN UPPER THREE INCHES OF SOIL BY RAKING , DISKING OR OTHER ACCEPTABLE MEANS BEFORE SEEDING, IF NOT PREVIOUSLY LOOSENED.

SOIL AMENDMENTS: IN LIEU OF SOIL TEST RECOMMENDATIONS, USE ONE OF THE FOLLOWING SCHEDULES:
1) PREFERRED – APPLY 2 TONS PER ACRES DOLOMITIC LIMESTONE (92 LBS/1000 SQ.FT.) AND 600 LBS. PER ACRE 10–10–10 FERTILIZER (14 LBS/1000 SQ.FT.) BEFORE SEEDING. HARROW OR DISK INTO UPPER THREE INCHES OF SOIL. AT TIME OF SEEDING , APPLY 400 LBS. PER ACRE 30–0–0 UREAFORM FERTILIZER (9 LBS./1000 SQ.FT.).
2) ACCEPTABLE – APPLY 2 TONS PER ACRE DOLOMITIC LIMESTONE (92 LBS./1000 SQ.FT.) AND 1000 LBS. PER ACRE 10–10–10 FERTILIZER (23 LBS./1000 SQ.FT.) BEFORE SEEDING. HARROW OR DISK INTO UPPER THREE INCHES OF SOIL.

SEEDING – FOR THE PERIODS MARCH 1 THRU APRIL 30, AND AUGUST 1 THRU OCTOBER 15, SEED WITH 60 LBS. PER ACRE 1.4 LBS/1000 SQ.FT.) OF KENTUCKY 31 TALL FESCUE. FOR THE PERIOD MAY 1 THRU JULY 31, SEED WITH 60 LBS. KENTUCKY 31 TALL FESCUE PER ACRE AND 2 LOBS. PER ACRE (.05 LBS./1000 SQ.FT.) OF WEEPING LOVEGRASS. DURING THE PERIOD OF OCTOBER 16 THRU FEBRUARY 28, PROTECT SITE BY: OPTION (1) – 2 TONS PER ACRE OF WELL ANCHORED STRAW MULCH AND SEED AS SOON AS POSSIBLE IN THE SPRING. OPTION (2) – USE SOD. OPTION (3) – SEED WITH 60 LBS./ACRE KENTUCKY 31 TALL FESCUE AND MULCH WITH 2 TONE/ACRE WELL ANCHORED STRAW.

MULCHING – APPLY 1–1/2 TO 2 TONS PER ACRE (70 TO 90 LBS./1000 SQ.FT) OF UNROTTED SMALL GRAIN STRAW IMMEDIATELY AFTER SEEDING. ANCHOR MULCH IMMEDIATELY AFTER APPLICATION USING MULCH ANCHORING TOOL OR 218 GALLONS PER ACRE (5 GAL/1000 SQ.FT.) OF EMULSIFIED ASPHALT ON FLAT AREAS. ON SLOPES 8 FEET OR HIGHER, USE 348 GALLONS PER ACRE (8 GAL/1000 SQ.FT.) FOR ANCHORING.

MAINTENANCE – INSPECT ALL SEEDING AREAS AND MAKE NEEDED REPAIRS, REPLACEMENTS AND RESEEDINGS.

TEMPORARY SEEDING NOTES

APPLY TO GRADED OR CLEARED AREAS LIKELY TO BE REDISTURBED WHERE A SHORT–TERM VEGETATIVE COVER IS NEEDED.

SEEDBED PREPARATION: LOOSEN UPPER THREE INCHES OF SOIL BY RAKING, DISKING OR OTHER ACCEPTABLE MEANS BEFORE SEEDING, FOR NOT PREVIOUSLY LOOSENED.

SOIL AMENDMENTS: APPLY 600 LBS. PER ACRE 10–10–10 FERTILIZER (14 LBS./1000 SQ.FT.)

SEEDING: FOR PERIODS MARCH 1 THRU APRIL 30 AND FROM AUGUST 15 THRU OCTOBER 15, SEED WITH 2–1/2 BUSHEL PER ACRE OF ANNUAL RYE (3.2 LBS./1000 SQ.FT.) FOR THE PERIOD MAY 1 THRU AUGUST 14, SEED WITH 3 LBS. PER ACRE OF WEEPING LOVEGRASS (.07 LBS./1000 SQ.FT.). FOR THE PERIOD NOVEMBER 16 THRU NOVEMBER 28, PROTECT SITE BY APPLYING 2 TONS PER ACRE OF WELL ANCHORED STRAW MULCH AND SEED AS SOON AS POSSIBLE IN THE SPRING, OR USE SOD.

MULCHING: APPLY 1–1/2 TO 2 TONS PER ACRE (70 TO 90 LBS./1000 SQ.FT.) OF UNROTTED WEED FREE SMALL GRAIN STRAW IMMEDIATELY AFTER SEEDING. ANCHOR MULCH IMMEDIATELY AFTER APPLICATION USING MULCH ANCHORING TOOL OR 218 GAL PER ACRE (5 GAL/1000 SQ.FT.) OF EMULSIFIED ASPHALT ON FLAT AREAS. ON SLOPES 8 FEET OR HIGHER, USE 348 GAL PER ACRE (8 GAL/1000 SQ.FT.) FOR ANCHORING.

REFER TO THE 1983 MARYLAND STANDARDS AND SPECIFICATIONS FOR SOIL EROSION AND SEDIMENT CONTROL FOR ADDITIONAL RATES AND METHODS NOT COVERED.

HOWARD SOIL CONSERVATION DISTRICT
STANDARD SEDIMENT CONTROL NOTES

1) A MINIMUM OF 48 HOURS NOTICE MUST BE GIVEN TO THE HOWARD COUNTY DEPARTMENT OF INSPECTIONS, LICENSES AND PERMITS, SEDIMENT CONTROL DIVISION PRIOR TO THE START OF NAY CONSTRUCTION, (313–1855).

2) ALL VEGETATIVE AND STRUCTURAL PRACTICES ARE TO BE INSTALLED ACCORDING TO THE PROVISIONS OF THIS PLAN AND ARE TO BE IN CONFORMANCE WITH THE MOST CURRENT "MARYLAND STANDARDS AND SPECIFICATIONS FOR SOIL EROSION AND SEDIMENT CONTROL", AND REVISIONS THERETO.

3) FOLLOWING INITIAL SOIL DISTURBANCE OR REDISTURBANCE, PERMANENT OR TEMPORARY STABILIZATION SHALL BE COMPLETED WITHIN: A) 7 CALENDAR DAYS FOR ALL PERIMETER SEDIMENT CONTROL STRUCTURES, DIKES, PERIMETER SLOPES AND ALL SLOPES GREATER THAN 3:1, B) 14 DAYS AS TO ALL OTHER DISTURBED OR GRADED AREAS ON THE PROJECT SITE.

4) ALL SEDIMENT TRAPS/BASINS SHOWN MUST BE FENCED AND WARNING SIGNS POSTED AROUND THEIR PERIMETER IN ACCORDANCE WITH VOL. 1, CHAPTER 12, OF THE HOWARD COUNTY DESIGN MANUAL, STORM DRAINAGE.

5) ALL DISTURBED AREAS MUST BE STABILIZED WITHIN THE TIME PERIOD SPECIFIED ABOVE IN ACCORDANCE WITH THE 1994 MARYLAND STANDARDS AND SPECIFICATIONS FOR SOIL EROSION AND SEDIMENT CONTROL FOR PERMANENT SEEDING (SEC.51), SOD (SEC. 54), TEMPORARY SEEDING (SEC. 50) AND MULCHING (SEC.52). TEMPORARY STABILIZATION WITH MULCH ALONE CAN ONLY BE DONE WHEN RECOMMENDED SEEDING DATES DO NOT ALLOW FOR PROPER GERMINATION AND ESTABLISHMENT OF GRASSES.

6) ALL SEDIMENT CONTROL STRUCTURES ARE TO REMAIN IN PLACE AND ARE TO BE MAINTAINED IN OPERATIVE CONDITION UNTIL PERMISSION FOR THEIR REMOVAL HAS BEEN OBTAINED FROM THE HOWARD COUNTY SEDIMENT CONTROL INSPECTOR.

7) SITE ANALYSIS:

TOTAL AREA OF SITE:	2.709	ACRES ±
AREA DISTURBED:	1.98	ACRES ±
AREA TO BE ROOFED OR PAVED:	0.66	ACRES ±
AREA TO BE VEGITATIVELY STABILIZED:	1.32	ACRES ±
TOTAL CUT:	3,100	CU. YDS. ±
TOTAL FILL:	3,100	CU. YDS. ±
TOTAL WASTE/BORROW AREA LOCATION:	N/A	

REVISION △1 DISTURBANCE = 0.11AC.

8) ANY SEDIMENT CONTROL PRACTICE WHICH IS DISTURBED BY GRADING ACTIVITY FOR PLACEMENT OF UTILITIES MUST BE REPAIRED ON THE SAME DAY OF DISTURBANCE.

9) ADDITIONAL SEDIMENT CONTROL MUST BE PROVIDED, IF DEEMED NECESSARY BY THE HOWARD COUNTY SEDIMENT CONTROL INSPECTOR.

10) ON ALL SITES WITH DISTURBED AREAS IN EXCESS OF 2 ACRES, APPROVAL OF THE INSPECTION AGENCY SHALL BE REQUESTED UPON COMPLETION OF INSTALLATION OF PERIMETER EROSION AND SEDIMENT CONTROLS, BUT BEFORE PROCEEDING WITH ANY OTHER EARTH DISTURBANCE OR GRADING. OTHER BUILDING OR GRADING INSPECTION APPROVALS MAY NOT BE AUTHORIZED UNTIL THIS INITIAL APPROVAL BY THE INSPECTION AGENCY IS MADE.

11) TRENCHES FOR THE CONSTRUCTION OF UTILITIES IS LIMITED TO THREE PIPE LENGTHS OR THAT WHICH CAN BE BACK FILLED AND STABILIZED WITHIN ONE WORKING DAY, WHICHEVER IS SHORTER.

STANDARD AND SPECIFICATIONS FOR TOPSOIL

Definition
Placement of topsoil over a prepared subsoil prior to establishment of permanent vegetation.

Purpose

To provide a suitable soil medium for vegetative growth. soils of concern have low moisture content, low nutrient levels, low pH, materials toxic to plants, and/or unacceptable soil gradation.

Conditions Where Practice Applies

I. This practice is limited to areas have 2:1 or flatter slopes where:

a. The texture of the exposed subsoil/parent material is not adequate to produce vegetative growth.

b. The soil material is so shallow that the rooting zone is not deep enough to support plants or furnish continuing supplies of moisture and plant nutrients.

c. The original soil to be vegetated contains material toxic to plant growth.

d. The soil is so acidic that treatment with limestone is not feasible.

II. For the purpose of these Standards and Specifications, areas having slopes steeper than 2:1 require special consideration and design for adequate stabilization. Areas having slopes steeper than 2:1 shall have the appropriate stabilization shown on the plans.

Construction and Material Specifications

I. Topsoil salvaged from the existing site may be used provided that it meets the standards as set forth in these specifications. Typically the depth of topsoil to be salvaged for a given soil type can be found in the representative soil profile section in the Soil Survey published by USDA–SCS in cooperation with Maryland Agricultural Experimental Station.

II. Topsoil Specifications – Soil to be used as topsoil must meet the following:

i. Topsoil shall be a loam, sandy loam, clay loam, silt loam, sandy clay loam, loamy sand. Other soils may be used if recommended by an agronomist or soil scientist and approved by the appropriate approval authority. Regardless, topsoil shall not be mixture of contrasting textured subsoils and shall contain less than 5% by volume of cinders, stones, slag, coarse fragments, gravel, sticks, roots, trash, or other materials larger that 1 1/2" in diameter.

ii. Topsoil must be of plants or plant parts such as bermuda grass, quackgrass, Johnsongrass, nutsedge, poison ivy, thistle, or others as specified.

iii. Where the subsoil is either highly acidic or composed of heavy clays, ground limestone shall be spread at the rate of 4–8 tons/acre (200–400 pounds per 1,000 square feet) prior to the placement or topsoil. limestone shall be distributed uniformly over designated areas and worked into the soil in conjunction with tillage operations as described in the following procedures.

II. For sites having disturbed areas under 5 acres:

i. Place topsoil (if required) and add soil amendments as specified in 20.0 Vegetative Stabilization – Section I – Vegetative Stabilization Methods and Materials

III. For sites having disturbed areas over 5 acres:

i. On soil meeting Topsoil specifications, obtain test results dictating fertilizer and lime amendments required to bring the soil into compliance with the following:

a. pH for topsoil shall be between 6.0 and 7.5. If the tested soil demonstrates a pH of less than 6.0, sufficient lime shall be prescribed to raise the pH to 6.5 or higher.

b. Organic content of soil shall be not less than 1.5% by weight.

c. Topsoil having soluble salt content greater than 500 parts per million shall not be used.

d. No sod or seed shall be placed on soil which has been treated with soil sterilants or chemicals used for weed control until sufficient time has elapsed (14 days min.) to permit dissipation of phyto–toxic materials.

Note: Topsoil substitutes or amendments, as recommended by a qualified agronomist or soil scientist and approved by the appropriate approval authority may be used in lieu of natural topsoil.

ii. Place topsoil (if required) and apply soil amendments as specified in 20.0 Vegetative Stabilization – Section I – Vegetative Stabilization Methods and Materials.

V. Topsoil Application

i. When topsoiling, maintain needed erosion and sediment control practices such as diversions, grade stabilization structures, earth dikes, slope silt fence and sediment traps and basins.

ii. Grades on the areas to be topsoiled, which have been previously established, shall be maintained, albeit 4" – 8" in elevation.

iii. Topsoil shall be uniformly distributed in a 4" – 8" layer and lightly compacted to a minimum thickness of 4". Spreading shall be performed in such a manner that sodding or seeding can proceed with a minimum of soil preparation and tillage. Any irregularities in the surface resulting from topsoiling or other operations shall be corrected in order to prevent the formation of depressions or water pockets.

iv. Topsoil shall not be placed while the topsoil or subsoil is in a frozen or muddy condition, when the subsoil is excessively wet or in a condition that may otherwise be detrimental to proper grading and seeded preparation.

VI. Alternative for Permanent Seeding – Instead of applying the full amounts or lime and commercial fertilizer, comported sludge and amendments may be applied as specified below:

i. Comported Sludge Material for use as a soil conditioner for sites having disturbed areas over 5 acres shall be tested to prescribe amendments and for sites having disturbed areas under 5 acres shall conform to the following requirements:

a. Comported sludge shall be supplied by, or originate from, a person or persons that are permitted (at the time of acquisition of the compost) by the Maryland Department of the Environment under COMAR 26.04.06.

b. Comported sludge shall contain at least 1 percent nitrogen, 1.5 percent phosphorous, and 0.2 percent potassium and have a pH of 7.0 to 8.0. If compost does not net these requirements, the appropriate constituents must be added to meet the requirements prior to use.

c. Composted sludge shall be applied at a rate of 1 ton/1,000 square feet

ii. Comported sludge shall be amended with a potassium fertilizer applied at the rate of 4lb/1,000 square feet, and 1/3 the normal lime application rate.

SEQUENCE OF CONSTRUCTION

1. OBTAIN GRADING PERMIT.
2. INSTALL STABILIZED CONSTRUCTION ENTRANCE AS SHOWN ON PLAN. ONE (1) DAY.
3. CONSTRUCT SUPER SILT FENCE AND SEDIMENT CONTROL MEASURES AS SHOWN. ONE (1) DAY.
4. HILLIS-CARNES ENGINEERING ASSOCIATES SHALL BE PRESENT TO OVERSEE ANY POND EXCAVATION OR SEPTIC FIELD ABANDONMENT THAT OCCURS ON-SITE TO ENSURE COMPLIANCE WITH THE RECOMMENDATIONS IN THEIR LETTER DATED AUGUST 14, 1997 TO THE HEALTH DEPARTMENT.
5. HOWARD COUNTY HEALTH DEPARTMENT SHALL BE PRESENT TO OVERSEE REMOVAL OF ANY MONITORING WELLS IN CONNECTION WITH THE SEPTIC SYSTEM ON-SITE.
6. EXISTING SEPTIC HOLDING TANKS SHALL BE PUMPED AND PROPERLY ABANDONED WITH DOCUMENTATION BY HILLIS-CARNES.
7. CONSTRUCT THE LOW FLOW RISER STRUCTURE. THREE (3) DAYS.
8. PERFORM MASS GRADING, CONSTRUCT THE STORM DRAIN SYSTEM AND SEWER HOUSE CONNECTIONS, AND CONNECT TO PUBLIC SEWER MANHOLE. BLOCK INLETS WITH SAND BAGS. SEVEN (7) DAYS.
9. AFTER THE SITE IS PAVED, REMOVE THE SAND BAGS. ONE (1) DAY.
10. AFTER THE SITE IS PERMANENTLY STABILIZED. EXCAVATE THE POND TO FINAL GRADE AND STABILIZE. THREE (3) DAYS.
11. WHEN ALL UPSTREAM AREAS OF A SEDIMENT CONTROL DEVICE HAVE BEEN PERMANENTLY STABILIZED, AND WITH THE APPROVAL OF THE SEDIMENT CONTROL INSPECTOR, REMOVE THESE DEVICES AND SEED AND MULCH THE RESULTING DISTURBED AREAS.

DETAIL 25 - ROCK OUTLET PROTECTION I

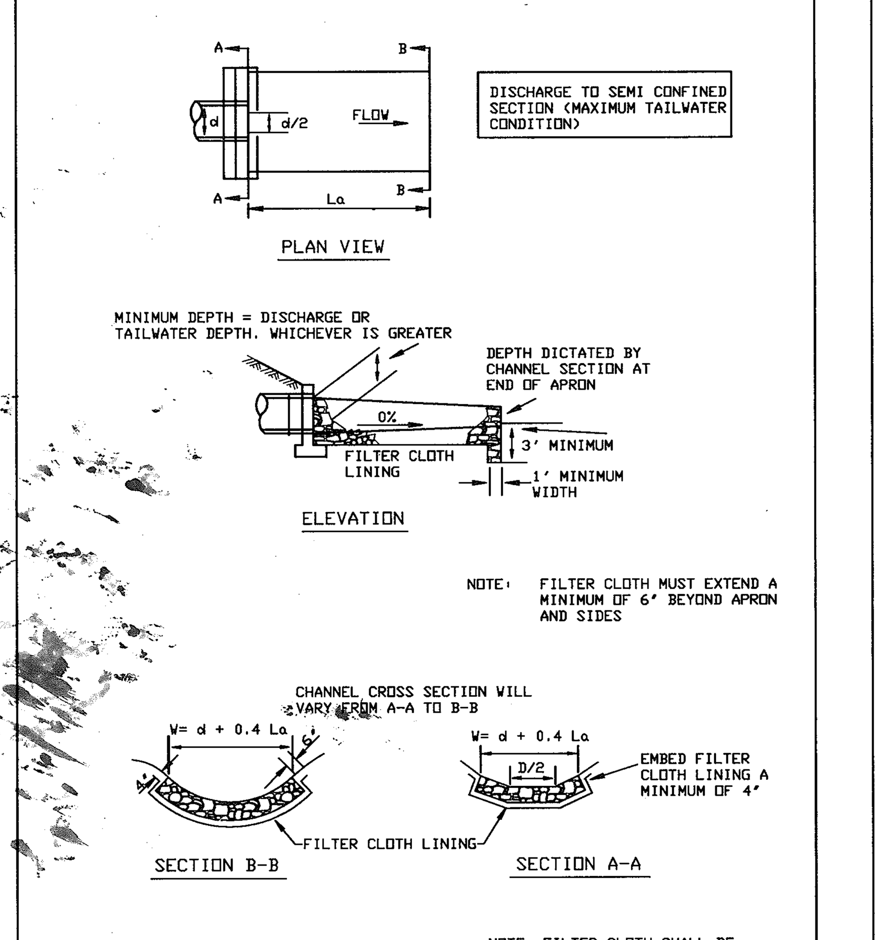

U.S. DEPARTMENT OF AGRICULTURE SOIL CONSERVATION SERVICE	PAGE F - 18 - 8	MARYLAND DEPARTMENT OF ENVIRONMENT WATER MANAGEMENT ADMINISTRATION

ROCK OUTLET PROTECTION

Construction Specifications

1. The subgrade for the filter, rip-rap, or gabion shall be prepared to the required lines and grades. Any fill required in the subgrade shall be compacted to a density of approximately that of the surrounding undisturbed material.

2. The rock or gravel shall conform to the specified grading limits when installed respectively in the rip-rap or filter.

3. Geotextile shall be protected from punching, cutting, or tearing. Any damage other than an occasional small hole shall be repaired by placing another piece of geotextile over the damaged part or by completely replacing the geotextile. All overlaps whether for repairs or for joining two pieces of geotextile shall be a minimum of one foot.

4. Stone for the rip-rap or gabion outlets may be placed by equipment. They shall be constructed to the full course thickness in one operation and in such a manner as to avoid displacement of underlying materials. The stone for rip-rap or gabion outlets shall be delivered and placed in a manner that will ensure that it is reasonably homogeneous with the smaller stones and spalls filling the voids between the larger stones. Rip-rap shall be placed in a manner to prevent damage to the filter blanket or geotextile. Hand placement will be required to the extent necessary to prevent damage to the permanent works.

5. The stone shall be placed so that it blends in with the existing ground. If the stone is placed too high then the flow will be forced out of the channel and scour adjacent to the stone will occur.

U.S. DEPARTMENT OF AGRICULTURE SOIL CONSERVATION SERVICE	PAGE F - 18 - 8A	MARYLAND DEPARTMENT OF ENVIRONMENT WATER MANAGEMENT ADMINISTRATION

DEVELOPERS CERTIFICATE

I CERTIFY THAT ALL DEVELOPMENT AND CONSTRUCTION WILL BE DONE ACCORDING TO THIS PLAN, AND THAT ANY RESPONSIBLE PERSONNEL INVOLVED IN THE CONSTRUCTION PROJECT WILL HAVE A CERTIFICATE OF ATTENDANCE AT A DEPARTMENT OF THE ENVIRONMENT APPROVED TRAINING PROGRAM FOR THE CONTROL OF SEDIMENT AND EROSION BEFORE BEGINNING THE PROJECT. I ALSO AUTHORIZE PERIODIC ON-SITE INSPECTION BY THE NATURAL RESOURCE CONSERVATION SERVICE.

[signature] 5/30/97
SIGNATURE OF DEVELOPER — DATE
BRIAN DARNELL, HIGH'S OF BALTIMORE
PRINTED NAME OF DEVELOPER

ENGINEER'S CERTIFICATE

I CERTIFY THAT THIS PLAN FOR EROSION AND SEDIMENT CONTROL REPRESENTS A PRACTICAL AND WORKABLE PLAN BASED ON MY PERSONAL KNOWEDGE OF THE SITE CONDTIONS AND THAT IT WAS PREPARED IN ACCORDANCE WITH THE REQUIREMENTS OF THE NATURAL RESOURCE CONSERVATION SERVICE.

[signature] 5/30/97
SIGNATURE OF ENGINEER — DATE
R. JACOB HIKMAT
PRINTED NAME OF ENGINEER

THESE PLANS HAVE BEEN REVIEWED FOR THE HOWARD SOIL CONSERVATION DISTRICT AND MEETS TECHNICAL REQUIREMENTS.

[signature] 6/3/97
USDA – NATURAL RESOURCE CONSERVATION SERVICE — DATE

THIS DEVELOPMENT PLAN IS APPROVED FOR SOIL EROSION AND SEDIMENT CONTROL BY THE HOWARD SOIL CONSERVATION DISTRICT.

[signature] 6/3/97
HOWARD SOIL CONSERVATION DISTRICT — DATE

APPROVED: DEPARTMENT OF PLANNING AND ZONING

[signature] 6/10/97
CHIEF, DEVELOPMENT ENGINEERING DIVISION — DATE
[signature] 8/22/97
CHIEF, DIVISION OF LAND DEVELOPMENT — DATE
[signature] 8/22/97
DIRECTOR — DATE

APPROVED ; FOR PRIVATE WATER AND PUBLIC SEWER. HOWARD COUNTY HEALTH DEPARTMENT.

[signature] 8-18-97
HOWARD COUNTY HEALTH OFFICER — DATE

STATE OF MARYLAND — R. JACOB HIKMAT — PROFESSIONAL ENGINEER 5/30/97

STATE OF MARYLAND — DARRELL J. VOLNEY — 10/30/06 FOR REVISION △1 ONLY

81-SCN-D.DWG

DETAIL 22 - SILT FENCE

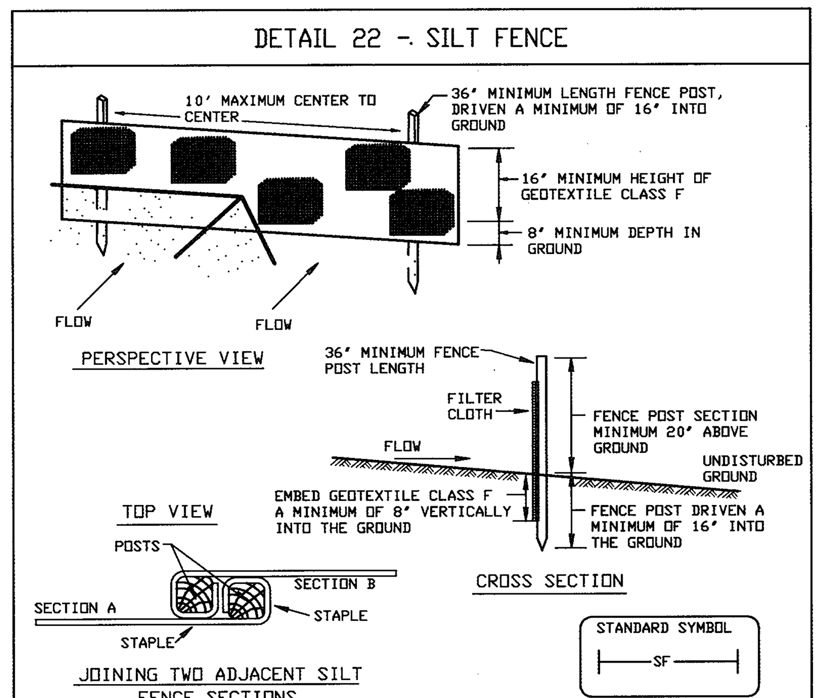

Construction Specifications

1. Fence posts shall be a minimum of 36" long driven 16" minimum into the ground. Wood posts shall be 11/2" x 11/2" square (minimum) cut, or 13/4" diameter (minimum) round and shall be of sound quality hardwood. Steel posts will be standard T or U section weighting not less than 1.00 pond per linear foot.

2. Geotextile shall be fastened securely to each fence post with wire ties or staples at top and mid-section and shall meet the following requirements for Geotextile Class F:

Tensile Strength	50 lbs/in (min.)	Test: MSMT 509
Tensile Modulus	20 lbs/in (min.)	Test: MSMT 509
Flow Rate	0.3 gal ft²/ minute (max.)	Test: MSMT 322
Filtering Efficiency	75% (min.)	Test: MSMT 322

3. Where ends of geotextile fabric come together, they shall be overlapped, folded and stapled to prevent sediment bypass.

4. Silt Fence shall be inspected after each rainfall event and maintained when bulges occur or when sediment accumulation reached 50% of the fabric height.

U.S. DEPARTMENT OF AGRICULTURE SOIL CONSERVATION SERVICE	PAGE E - 15 - 3	MARYLAND DEPARTMENT OF ENVIRONMENT WATER MANAGEMENT ADMINISTRATION

SILT FENCE

Silt Fence Design Criteria

Slope Steepness	(Maximum) Slope Length	(Maximum) Silt Fence Length
Flatter than 50:1	unlimited	unlimited
50:1 to 10:1	125 feet	1,000 feet
10:1 to 5:1	100 feet	750 feet
5:1 to 3:1	60 feet	500 feet
3:1 to 2:1	40 feet	250 feet
2:1 and steeper	20 feet	125 feet

Note: In areas of less than 2% slope and sandy soils (USDA general classification system, soil Class A) maximum slope length and silt fence length will be unlimited. In these areas a silt fence may be the only perimeter control required.

U.S. DEPARTMENT OF AGRICULTURE SOIL CONSERVATION SERVICE	PAGE E - 15 - 3A	MARYLAND DEPARTMENT OF ENVIRONMENT WATER MANAGEMENT ADMINISTRATION

DETAIL 24 - STABILIZED CONSTRUCTION ENTRANCE

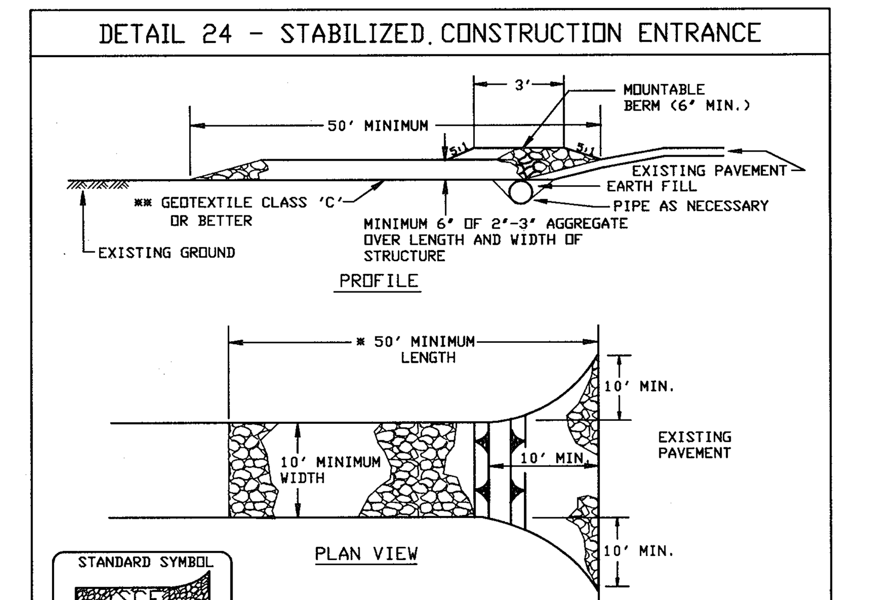

Construction Specification

1. Length – minimum of 50' (*30' for single residence lot).

2. Width – 10' minimum, should be flared at the existing road to provide a turning radius.

3. Geotextile fabric (filter cloth) shall be placed over the existing ground prior to placing stone. **The plan approval authority may not require single family residences to use geotextile.

4. Stone – crushed aggregate (2" to 3") or reclaimed or recycled concrete equivalent shall be placed at least 6" deep over the length and width of the entrance.

5. Surface Water – all surface water flowing to or diverted toward construction entrances shall be piped through the entrance, maintaining positive drainage. Pipe installed through the stabilized construction entrance shall be protected with a mountable berm with 5:1 slopes and a minimum of 6" of stone over the pipe. Pipe has to be sized according to the drainage. When the SCE is located at a high spot and has no drainage to convey a pipe will not be necessary. Pipe should be sized according to the amount of runoff to be conveyed. A 6" minimum will be required.

6. Location – A stabilized construction entrance shall be located at every point where construction traffic enters or leaves a construction site. Vehicles leaving the site must travel over the entire length of the stabilized construction entrance.

U.S. DEPARTMENT OF AGRICULTURE SOIL CONSERVATION SERVICE	PAGE F - 17 - 3	MARYLAND DEPARTMENT OF ENVIRONMENT WATER MANAGEMENT ADMINISTRATION

STABILIZED CONSTRUCTION ENTRANCE

Construction Specification

1. Length – minimum of 50' (*30' for single residence lot).

2. Width – 10' minimum, should be flared at the existing road to provide a turning radius.

3. Geotextile fabric (filter cloth) shall be placed over the existing ground prior to placing stone. **The plan approval authority may not require single family residences to use geotextile.

4. Stone – crushed aggregate (2" to 3"), or reclaimed or recycled concrete equivalent shall be placed at least 6" deep over the length and width of the entrance.

5. Surface Water – all surface water flowing to or diverted toward construction entrances shall be piped through the entrance, maintaining positive drainage. Pipe installed through the stabilized construction entrance shall be protected with a mountable berm with 5:1 slopes and a minimum of 6" of stone over the pipe. Pipe has to be sized according to the drainage. When the SCE is located at a high spot and has no drainage to convey a pipe will not be necessary. Pipe should be sized according to the amount of runoff to be conveyed. A 6" minimum will be required.

6. Location – A stabilized construction entrance shall be located at every point where construction traffic enters or leaves a construction site. Vehicles leaving the site must travel over the entire length of the stabilized construction entrance.

U.S. DEPARTMENT OF AGRICULTURE SOIL CONSERVATION SERVICE	PAGE F - 17 - 3A	MARYLAND DEPARTMENT OF ENVIRONMENT WATER MANAGEMENT ADMINISTRATION

DEVELOPER
HIGH'S OF BALTIMORE
1340–L CHARWOOD ROAD
HANOVER, MARYLAND 21076
(410) 859–3636

OWNER
HUGH F. COLE & GROUP FIVE PARTNERSHIP
8835 P COLUMBIA 100 PARKWAY
COLUMBIA, MARYLAND 21045
(410) 730–0810

project	date	illustration	engineering	scale	approval
95081	JULY 1996	SJD	SJD	N.T.S.	RJH

no.	description	date
△1	ADDED REVISION △1 DISTURBANCE TO SITE ANALYSIS.	9-6-06

revisions

TAX MAP 46 – PARCEL 224 – BLOCK 2
FULTON HIGH'S
FIFTH ELECTION DISTRICT — HOWARD COUNTY, MARYLAND
SEDIMENT CONTROL NOTES AND DETAILS

MILDENBERG, BOENDER & ASSOC., INC.
Engineers Planners Surveyors
5072 Dorsey Hall Drive, Suite 202, Ellicott City, Maryland 21042
(410) 997–0296 Balt. (301) 621–5521 Wash. (410) 997–0298 Fax.

SDP-97-11

LEGEND

- DENOTES FLOW PATH
- DENOTES STABILIZED CONSTRUCTION ENTRANCE
- DENOTES LIMIT OF DISTURBANCE
- SF — DENOTES SILT FENCE
- SSF — DENOTES SUPER SILT FENCE
- DENOTES AN EXISTING MONITORING WELL
- DENOTES AN EXISTING CLEANOUT
- DENOTES AREA OF ROAD DEDICATION
- DENOTES HIGHWAY PAVING REQUIRED
- DENOTES SHA COMMERCIAL ENTRANCE

NOTE : FOR HANDICAP ACCESS DETAILS, SEE SHEET 4 OF 7.

POND GRADING NOTES

1. THE HOWARD COUNTY HEALTH DEPARTMENT SHALL BE NOTIFIED AT LEAST 48 HOURS PRIOR TO THE START OF GRADING AT (410) 313-2640.
1. SILT FENCES TO BE INSTALLED AT 40' INTERVALS. SUPER SILT FENCE TO BE PROVIDED AT THE LOWEST AREA.
2. EXCAVATION TO PROCEED FROM THE HIGHER ELEVATION TO AN ELEVATION AT OR BELOW THE FIRST SILT FENCE.
3. ALL OF THE MATERIAL SHALL BE DISPOSED OF TO A SITE APPROVED BY THE HEALTH DEPARTMENT.
4. NO WASTEWATER SHALL BE ALLOWED TO RUNOFF THE SITE. SHOULD WASTEWATER BE ENCOUNTERED, IT SHALL BE PUMPED INTO SEPTIC TRUCKS AND DISPOSED OF TO AN APPROVED SITE.

FOR SEQUENCE OF CONSTRUCTION SEE SHEET 3 OF 7

POND DATA

HAZARD CLASSIFICATION – N/A
DRAINAGE AREA – 2.36 ACRES
RCN – 74
Tc – 0.19 HRS.
TYPE – DETENTION
2 YEAR STORM POOL ELEV. = 446.02
Q = 0.3 CFS
V = 0.11 AC. FT.
10 YEAR STORM POOL ELEV. = 446.96
Q = 1.9 CFS
V = 0.20 AC. FT.
100 YEAR STORM POOL ELEV. – N/A (NOT MD 378)
OWNERSHIP – PRIVATE

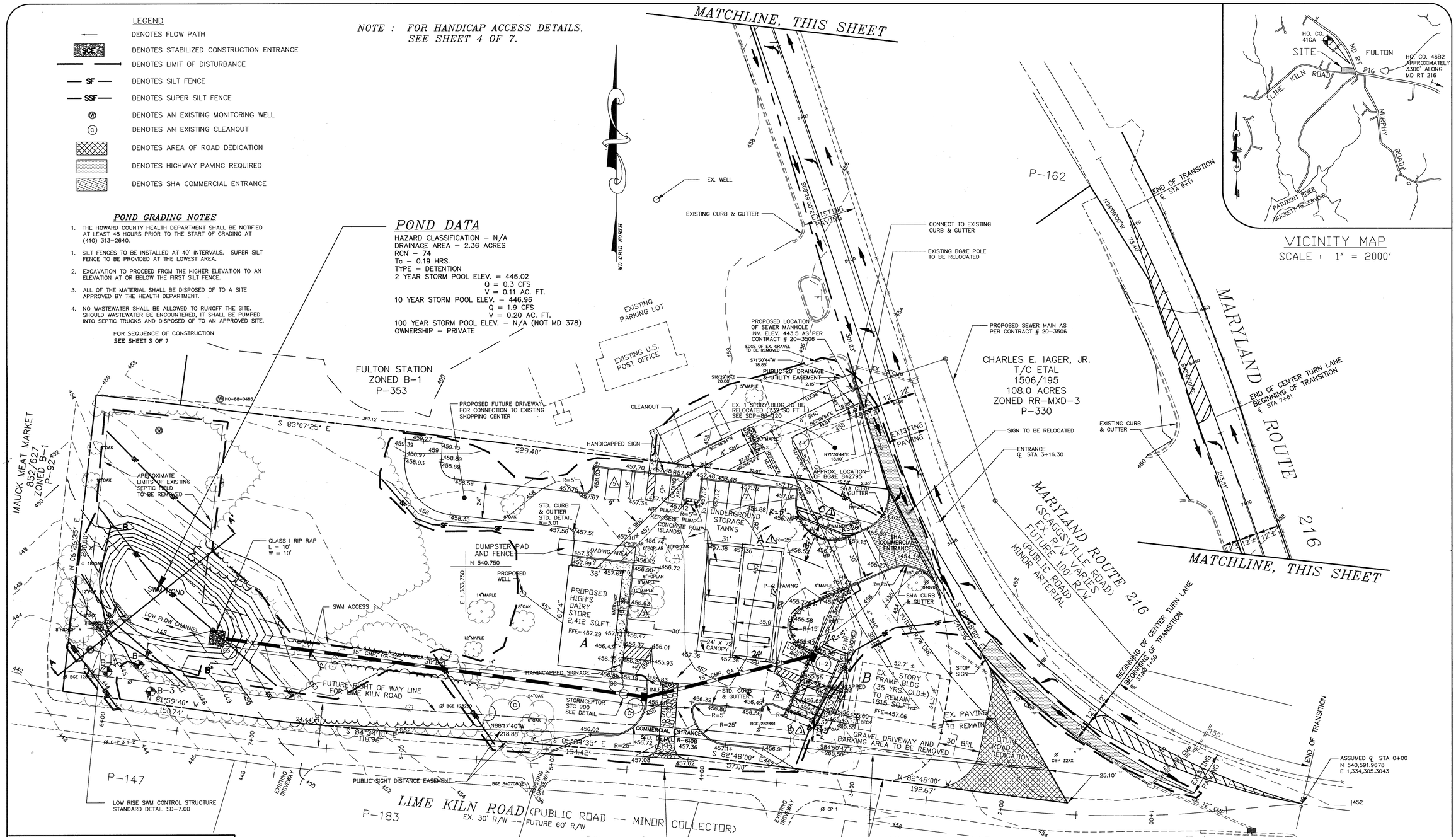

VICINITY MAP
SCALE : 1" = 2000'

THESE PLANS HAVE BEEN REVIEWED FOR THE HOWARD SOIL CONSERVATION DISTRICT AND MEETS TECHNICAL REQUIREMENTS.

USDA – NATURAL RESOURCE CONSERVATION SERVICE — DATE 6/3/97

THIS DEVELOPMENT PLAN IS APPROVED FOR SOIL EROSION AND SEDIMENT CONTROL BY THE HOWARD SOIL CONSERVATION DISTRICT.

HOWARD SOIL CONSERVATION DISTRICT — DATE 6/3/97

APPROVED: DEPARTMENT OF PLANNING AND ZONING

CHIEF, DEVELOPMENT ENGINEERING DIVISION — DATE 6/10/97
CHIEF, DIVISION OF LAND DEVELOPMENT — DATE 8/22/97
DIRECTOR — DATE 8/22/97

DEVELOPERS CERTIFICATE

I CERTIFY THAT ALL DEVELOPMENT AND CONSTRUCTION WILL BE DONE ACCORDING TO THIS PLAN, AND THAT ANY RESPONSIBLE PERSONNEL INVOLVED IN THE CONSTRUCTION PROJECT WILL HAVE A CERTIFICATE OF ATTENDANCE AT A DEPARTMENT OF THE ENVIRONMENT APPROVED TRAINING PROGRAM FOR THE CONTROL OF SEDIMENT AND EROSION BEFORE BEGINNING THE PROJECT. I ALSO AUTHORIZE PERIODIC ON-SITE INSPECTION BY THE NATURAL RESOURCE CONSERVATION SERVICE.

SIGNATURE OF DEVELOPER — DATE 5/30/97
BRIAN DORNELL, HIGH'S OF BALTIMORE
PRINTED NAME OF DEVELOPER

ENGINEER'S CERTIFICATE

I CERTIFY THAT THIS PLAN FOR EROSION AND SEDIMENT CONTROL REPRESENTS A PRACTICAL AND WORKABLE PLAN BASED ON MY PERSONAL KNOWEDGE OF THE SITE CONDITIONS AND THAT IT WAS PREPARED IN ACCORDANCE WITH THE REQUIREMENTS OF THE NATURAL RESOURCE CONSERVATION SERVICE.

SIGNATURE OF ENGINEER — DATE 5/30/97
R. JACOB HIKMAT
PRINTED NAME OF ENGINEER

APPROVED ; FOR PRIVATE WATER AND PUBLIC SEWER. HOWARD COUNTY HEALTH DEPARTMENT.

HOWARD COUNTY HEALTH OFFICER — DATE 8-8-97

AS-BUILT
STATE OF MARYLAND R. JACOB HIKMAT 5/30/97 PROFESSIONAL ENGINEER

FOR REVISION Δ ONLY

AREA ID	TOTAL AREA OF DISTURBANCE Δ
A	1996 S.F.
B	2400 S.F.
C	1468 S.F.
TOTAL	4,794 S.F.

DEVELOPER
HIGH'S OF BALTIMORE
1340-L CHARWOOD ROAD
HANOVER, MARYLAND 21076
(410) 859-3636

OWNER
HUGH F. COLE & GROUP FIVE PARTNERSHIP
8835 P COLUMBIA 100 PARKWAY
COLUMBIA, MARYLAND 21045
(410) 730-0810

project	date
95081	JULY 1996
illustration	engineering
SJD	SJD
scale	approval
1"=30'	RJH

no.	description	date
1	ADDED ADDITIONAL FLOW ISLANDS AND ADJUSTED PARKING SPACES & DRIVE AISLES, ADDED LIMITS OF DISTURBANCE & SILT FENCE	7-6-00

revisions

TAX MAP 46 – PARCEL 224 – BLOCK 2
FULTON HIGH'S
HOWARD COUNTY, MARYLAND
FIFTH ELECTION DISTRICT
GRADING AND SEDIMENT CONTROL PLAN

MILDENBERG, BOENDER & ASSOC., INC.
Engineers Planners Surveyors
5072 Dorsey Hall Drive, Suite 202, Ellicott City, Maryland 21042
(410) 997-0296 Balt. (301) 621-5321 Wash. (410) 997-0298 Fax.

SDP-97-11

81-GSCP2.DWG

GENERAL NOTES

1. ALL CONSTRUCTION SHALL BE IN ACCORDANCE WITH THE LATEST STANDARDS AND SPECIFICATIONS OF HOWARD COUNTY, PLUS MSHA STANDARDS AND SPECIFICATIONS, IF APPLICABLE.
2. THE CONTRACTOR SHALL NOTIFY THE DEPARTMENT OF PUBLIC WORKS/ CONSTRUCTION INSPECTION DIVISION AT (410)-313-1880 AT LEAST FIVE (5) WORKING DAYS PRIOR TO THE START OF WORK.
3. THE CONTRACTOR SHALL NOTIFY "MISS UTILITY" AT 1-800-257-7777 AT LEAST 48 HOURS PRIOR TO ANY EXCAVATION WORK.
4. PROJECT BACKGROUND:

   LOCATION: TAX MAP 46, PARCEL 224, 5TH ELECTION DISTRICT.
   ZONING: B-2
   AREA: 2.709 AC. (LIBER 2542, FOLIO 0063)
   DPZ FILES: SDP-85-124
   BA 95-61E - SPECIAL EXCEPTION ALLOWING THE ESTABLISHMENT OF A GASOLINE SERVICE STATION WITH A CONVENIENCE STORE - APPROVED ON JANUARY 31, 1996, SUBJECT TO 7 CONDITIONS PUT FORTH IN THE RECOMMENDATION OF THE PLANNING BOARD.
5. BOUNDARY INFORMATION IS BASED ON A SITE DEVELOPMENT PLAN FOR FULTON STATION PREPARED BY FISHER, COLLINS & CARTER, INC. ON JANUARY 30, 1985.
6. HORIZONTAL AND VERTICAL DATUM SHOWN IS BASED ON NAD'83 HOWARD COUNTY CONTROL STATIONS 41GA AND 46B2 .

   HO. CO. 41GA N 541,399.1020 ELEV. 462.84
   E 1,333,808.2700
   HO. CO. 46B2 N 539,987.7280 ELEV. 475.35
   E 1,337,218.4800
7. SOILS BOUNDARY BASED ON HOWARD COUNTY SOILS SURVEY DATED 1968, SHEET 32.
8. NO STEEP SLOPES EXIST ON SITE.
9. ALL SPOT ELEVATIONS ARE TO THE BOTTOM OF THE CURB UNLESS OTHERWISE NOTED.
10. BASED ON THE FOREST STAND DELINEATION PREPARED BY CHESAPEAKE ENVIRONMENTAL MANAGEMENT, INC. DATED APRIL 1996, THIS PROJECT IS EXEMPT FROM THE FOREST CONSERVATION ORDINANCE REQUIREMENTS. AREA OF CLEARING UNDER 40,000 SQ. FT.
11. NO FLOODPLAIN OR WETLANDS EXIST ON SITE.
12. STORMWATER MANAGEMENT WILL BE PROVIDED BY DETENTION. WATER QUALITY WILL BE PROVIDED BY STORMCEPTOR, 900 SERIES OR EQUIVALENT. FACILITY IS PRIVATELY OWNED AND MAINTAINED.
13. MAXIMUM DEPTH OF POND'S EMBANKMENT IS LESS THAN 3'. POND IS NOT REQUIRED TO MEET MD-378 REQUIREMENTS. POND WILL BE PRIVATE.
14. GEOTECHNICAL REPORT PREPARED BY HILLIS-CARNES ENGINEERING ASSOCIATES, INC. DATED JUNE 12, 1996.
15. ALL PLAN DIMENSIONS ARE TO FACE OF CURB UNLESS OTHERWISE NOTED.
16. NO TRAFFIC STUDY IS REQUIRED FOR THIS PROJECT.
17. STATIONING ALONG MD RT 216 AND LIME KILN ROAD IS ASSUMED STATIONING STARTING AT STA 0+00 AT THE SOUTHEASTERN MOST CORNER OF THE PROPERTY.
18. THE MAIN ENTRANCE TO THE BUILDING WILL BE ACCESSIBLE BY HANDICAPPED PERSONS.
19. SITE DATA:

    PROPOSED USE: GAS STATION, CONVENIENCE STORE, AND RETAIL BUILDING
    LOT COVERAGE:
    MAXIMUM: 30%
    PROPOSED: 2.05% , 2,424 SQ. FT.

    PARKING REQUIREMENT :

BUILDING A	
GAS STATION	3 SPACES
CONVENIENCE STORE, 2424 SQ. FT. AT 2 SPACES PER 1000 SQ. FT.	5 SPACES
BUILDING B	
RETAIL, 1815 SQ. FT. AT 5 SPACES PER 1000 SQ. FT.	9 SPACES
RELOCATED BUILDING	
RETAIL, 732 SQ. FT. AT 5 SPACES PER 1000 SQ. FT.	4 SPACES
TOTAL REQUIRED	21 SPACES
PROVIDED	22 SPACES

20. FULTON STATION AND THE PROPOSED CONVENIENCE STORE ARE TO BE HOOKED TO PUBLIC SEWER UNDER CONTRACT # 20-3506. CONNECTION TO STRUCTURES OTHER THAN THE CONVENIENCE STORE TO BE BY OTHERS.
21. ONE (1) FOOT CONTOURS ARE PROVIDED FOR PROPOSED CONDITIONS TO BETTER REPRESENT THE GRADING.
22. IMPROVEMENTS TO MD RT 216 ARE BASED ON SHA RECOMMENDATIONS.
23. ROAD DEDICATION BASED ON RECOMMENDATIONS BY THE DEPARTMENT OF PLANNING AND ZONING.
24. THE HOURS OF OPERATION FOR THE GASOLINE SERVICE STATION SHALL BE 5:30 AM TO 11:00 PM.
25. STORAGE OF AUTOMOTIVE SUPPLIES SHALL BE WITHIN THE MAIN STRUCTURE.
26. THE OUTDOOR LIGHTING SHALL BE LOCATED AND SHIELDED TO PREVENT SHINING OR REFLECTING ONTO ADJACENT RESIDENTIAL PROPERTIES AND PUBLIC ROADS.
27. ALL EXISTING FACILITIES SHALL BE CONNECTED TO PUBLIC SEWER PRIOR TO OCCUPANCY APPROVAL OF ANY NEW CONSTRUCTION.
28. CONSTRUCTION TRAFFIC INGRESS AND EGRESS IS TO BE LIMITED TO THE LIME KILN ROAD ENTRANCE.
29. WATER WILL BE PRIVATE. A PROPOSED WELL IS SHOWN ON-SITE.
30. BOA CASE NO. 06-0106 - ALLOWING A CONDITIONAL USE FOR THE EXPANSION AND MODIFICATION OF THE GASOLINE SERVICE STATION INCLUDING CONVENIENCE STORE IN A B-2 ZONING DISTRICT WAS GRANTED ON JULY 17, 2006.

SHEET INDEX

SHEET	TITLE
1	SITE PLAN
2	GRADING AND SEDIMENT CONTROL PLAN
3	SEDIMENT CONTROL NOTES AND DETAILS
4	SEDIMENT CONTROL NOTES AND DETAILS
5	DETAILS AND STORM DRAIN PROFILES
6	SOILS AND PROPOSED DRAINAGE AREA MAP
7	LANDSCAPE PLAN

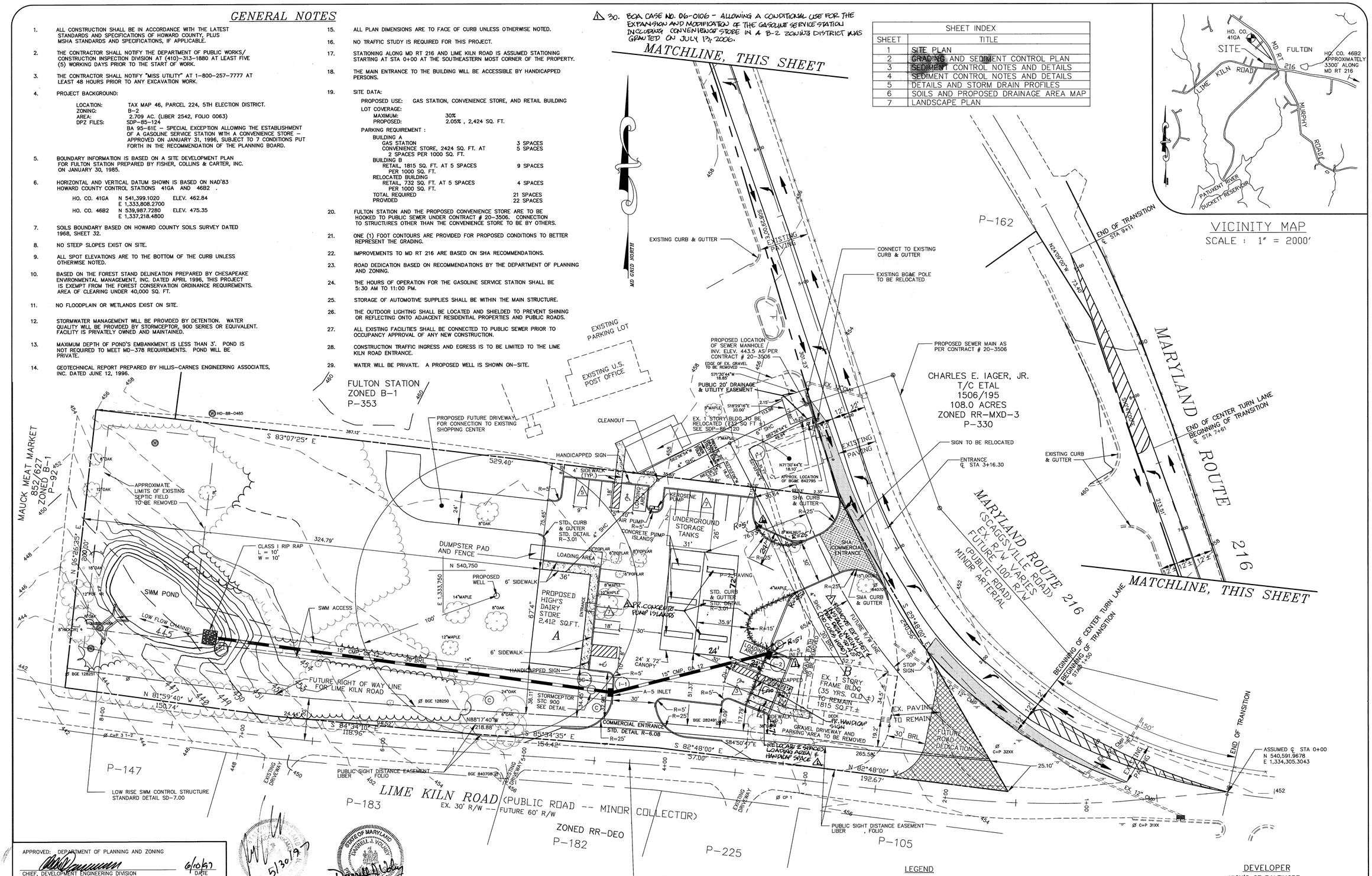

VICINITY MAP
SCALE : 1" = 2000'

APPROVED: DEPARTMENT OF PLANNING AND ZONING

CHIEF, DEVELOPMENT ENGINEERING DIVISION	DATE 6/10/97
CHIEF, DIVISION OF LAND DEVELOPMENT	DATE 8/22/97
DIRECTOR Acting	DATE 8/22/97

APPROVED ; FOR PRIVATE WATER AND PUBLIC SEWER. HOWARD COUNTY HEALTH DEPARTMENT.

HOWARD COUNTY HEALTH OFFICER — DATE 8-18-97

5/30/97

STATE OF MARYLAND — DANIELL H. VOLKS — No. 30788 — 10-30-00 — FOR REVISION ONLY

AS-BUILT — STATE OF MARYLAND — JACOB WEIGHT — No. 19994 — PROFESSIONAL ENGINEER

ADDRESS CHART	
PARCEL NO.	STREET ADDRESS
PARCEL 224:	
BLDG A	11840 LIME KILN ROAD
BLDG B	11821 SCAGGSVILLE ROAD

PROJECT NAME FULTON HIGH'S			SECTION/AREA N/A		PARCEL # 224	
LIBER/FOLIO 1320/0058	BLOCK # 2	ZONE B-2	TAX/ZONE MAP 46	ELEC. DIST. FIFTH	CENSUS TRACT 6051.02	
WATER CODE N/A			SEWER CODE 7690000			

LEGEND

- (W) DENOTES AN EXISTING MONITORING WELL
- (C) DENOTES AN EXISTING CLEANOUT
- DENOTES AREA TO BE DEDICATED TO HOWARD COUNTY, MARYLAND FOR THE PURPOSE OF A PUBLIC ROAD
- DENOTES ADDITIONAL HIGHWAY PAVING REQUIRED
- DENOTES SHA COMMERCIAL ENTRANCE
- (#) DENOTES NUMBER OF PARKING SPACES

DEVELOPER
HIGH'S OF BALTIMORE
1340-L CHARWOOD ROAD
HANOVER, MARYLAND 21076
(410) 859-3636

OWNER
HUGH F. COLE & GROUP FIVE PARTNERSHIP
8835 P COLUMBIA 100 PARKWAY
COLUMBIA, MARYLAND 21045
(410) 730-0810

project 95081	date JULY 1996
illustration SJD	engineering SJD
scale 1"=30'	approval RJH

no.	description	date
1	ADDED ADDITIONAL PUMP ISLANDS AND ADJUST PARKING SPACES & DRIVE AISLES, ADDED NOTE #30	9-6-06

revisions

TAX MAP 46 - PARCEL 224 - BLOCK 2
FULTON HIGH'S
FIFTH ELECTION DISTRICT — HOWARD COUNTY, MARYLAND
SITE PLAN

MILDENBERG, BOENDER & ASSOC., INC.
Engineers Planners Surveyors
5072 Dorsey Hall Drive, Suite 202, Ellicott City, Maryland 21042
(410) 997-0296 Balt. (301) 621-5321 Wash. (410) 997-0298 Fax.

1 OF 7

SDP-97-11

81-SDP.DWG