CENTRE 9500

PARCEL K

THE TIMBERS AT TROY GOLF COURSE

SITE DEVELOPMENT PLAN

CLUBHOUSE AND MAINTENANCE FACILITIES

GENERAL NOTES

1. TOPOGRAPHIC INFORMATION WAS TAKEN FROM HAND PLOTTED MANUSCRIPTS BY AIR SURVEY AND DESIGN INC. AND PROVIDED BY LAND DESIGN ENGINEERING INC. BENCH MARKS: CONTROL STA 37EA EL=291.77
CONTROL STA 37F3 EL=248.11

2. ALL WORK SHALL BE IN ACCORDANCE WITH THE LATEST HOWARD COUNTY STANDARDS & SPECIFICATIONS AND MSHA STANDARDS AND SPECIFICATIONS IF APPLICABLE.

3. DEVIATIONS FROM THESE PLANS AND SPECIFICATIONS WITHOUT PRIOR WRITTEN CONSENT OF THE ENGINEER MAY CAUSE THE WORK TO BE UNACCEPTABLE.

4. THE CONTRACTOR SHALL TAKE ALL NECESSARY PRECAUTIONS TO PROTECT EXISTING UTILITIES AND MAINTAIN UNINTERUPTED SERVICE. ANY DAMAGE INCURRED DUE TO CONTRACTOR'S ACTIONS SHALL BE REPARIED IMMEDIATELY AT THE CONTRACTOR'S EXPENSE.

5. THE CONTRACTOR SHALL VERIFY THE LOCATIONS OF ALL UTILITIES WITHIN THE LIMITS OF CONSTRUCTION AND MAINTAIN MINIMUM COVER IN ACCORDANCE WITH THE HOWARD COUNTY DESIGN MANUAL.

6. THE CONTRACTOR SHALL NOTIFY THE FOLLOWING AT LEAST 48 HOURS BEFORE THE START OF WORK SHOWN ON THESE PLANS.

"MISS UTILITY"	1-800-257-7777
BALTIMORE GAS & ELECTRIC CO.	(410) 954-6260
C & P TELEPHONE CO.	(410) 393-3648

7. FAILURE TO MENTION SPECIFICALLY ANY WORK WHICH WOULD NOT NORMALLY BE REQUIRED TO COMPLETE THE PROJECT SHALL NOT RELIEVE THE CONTRACTOR OF HIS RESPONSIBILITY TO PREFORM SUCH WORK.

8. THE CONTRACTOR SHALL OBTAIN THE NECESSARY PERMITS FOR CONSTRUCTION.

9. ALL UTILITES ARE TO BE RETAINED UNLESS MARKED OTHEWISE AND APPURTENANCES ARE TO BE ADJUSTED TO FINISHED GRADE.

10. THE CONTRACTOR SHALL CONTACT THE DEPARTMENT OF PUBLIC WORKS CONSTRUCTION INSPECTION DIVISION AT (410) 313-1880 24 HOURS IN ADVANCE OF THE COMMENCEMENT OF WORK.

11. PRIOR TO THE START OF CONSTRUCTION, THE CONTRACTOR SHALL STAKE OUT ALL CONSTRUCTION AND VERIFIY ALL OFFSETS, SETBACKS, EXISITNG UTILITY LOCATIONS (HORIZONTAL AND VERTICAL), AND DIMENSIONS.

12. SCALING OF THESE PLANS IS DISCOURAGED UNLESS DIRECTED BY THE ENGINEER. ALL PLAN DIMENSIONS ARE TO FACE OF CURB UNLESS OTHERWISE NOTED.

13. ALL FILL SHALL BE PLACED IN ACCORDANCE WITH THE GEOTECHNICAL ENGINEERS RECOMMENDATIONS AND REQUIREMENTS. REFER TO GEOTECHNICAL REPORT BY MKM ENGINEERS, INC. DATED MARCH 1995.

14. ALL NON-TIDAL WETLANDS, WETLAND BUFFERS, AND STREAM BUFFERS WHICH AFFECT THE SITE ARE SHOWN. DELINEATIONS WERE TAKEN FROM INFORMATION PROVIDED BY LAND DESIGN ENGINEERING INC. REFER TO WETLANDS REPORT BY EXPLORATION RESEARCH INC. DATED 1991, APPROVED BY USCOE 6/92.

15. THE LOCATION OF OFF-SITE GRAVITY SEWER WAS TAKEN FROM PLANS BY LAND DESIGN ENGINEERING INC. SEWER CONTRACT 14-3314-D. INFORMATION ON THE EXISTING 36 INCH WATER MAIN WAS TAKEN FROM CONTRACT 626-W. INFORMATION ON THE PROPOSED 36 INCH WATER MAIN WAS TAKEN FROM CONTRACT 44-3327 (CP W-8169).

16. TRAFFIC CONTROL SIGNS AND MARKINGS SHALL BE IN ACCORDANCE WITH THE LATEST EDITION OF THE MANUAL ON UNIFORM TRAFFIC CONTROL DEVICES (MUTCD). ALL STREET AND REGULATORY SIGNS SHALL BE IN PLACE PRIOR TO PLACEMENT OF ANY ASPHALT.

17. STORMWATER MANAGEMENT QUALITY CONTROL IS BEING PROVIDED BY AN ON SITE POND UTILIZING EXTENDED DETENTION. WATER QUANTITY CONTROL IS BEING PROVIDED FOR 2- AND 10- YEAR STORMS WITHIN THE POND. THE EMBANKMENT IS CLASS A. FACILITY WILL BE OWNED AND MAINTAINED BY HOWARD COUNTY.

18. ADJUSTMENTS TO THE SEQUENCE OF CONSTRUCTION MUST BE APPROVED BY THE HOWARD COUNTY DEPARTMENT OF INSPECTIONS, LICENSES AND PERMITS PRIOR TO SUCH ADJUSTMENTS. SEE THE SEDIMENT CONTROL PLAN FOR ADDITIONAL NOTES.

19. ALL CONSTRUCTION RELATING TO THE GOLF COURSE INCLUDING CARTPATHS, BRIDGES, TEES, GREENS, ETC. ARE SHOWN ON SDP-93-75 BY LAND DESIGN ENGINEERING INC. USER SHALL REFER TO THOSE PLANS FOR CONSTRUCTION DETAILS.

20. ALL PROPOSED SEWER LINES ARE PUBLIC. THESE SHALL BE MAINTAINED BY THE HOWARD COUNTY DEPARTMENT OF UTILITIES. SEWER LINES SHOWN ARE FOR SERVICING THE CLUBHOUSE AND MAINTENANCE BUILDINGS ONLY. ALL PROPOSED 6 INCH AND 8 INCH WATER LINES INCLUDING FIRE HYDRANTS ARE PUBLIC. LINES 4 INCH AND 2 INCH ARE PRIVATE. REFER TO CONTRACT 14-3423-D FOR DETAILS.

21. TWO TRAFFIC STUDIES WERE PREPARED BY LEE CUNNINGHAM & ASSOCIATES, INC. THE FIRST WAS DATED 12/31/92 AND APPROVED 12/31/92 (S-93-02) THE SECOND WAS DATED 9/93 AND APPROVED 6/10/94 (F-94-26)

22. FLOODPLAIN DELINEATIONS ARE BASED ON F-94-26. REFER TO REPORT BY LAND DESIGN ENGINEERING, INC. DATED 12/92 AND APPROVED ON 12/31/92.

* 23. WAIVER PETITION WP-95-108 REQUESTING A WAIVER FROM THE HOWARD COUNTY SUBDIVISION AND LAND DEVELOPMENT REGULATIONS, SECTION 16.116(a)(1) AND 16.116(a)(2)(ii) WAS FILED ON MAY 1, 1995 AND WAS APPROVED ON 5/18/95.
USCOE PERMIT NO. CENAB-OP-RP 91-00069-7.

* SECTION 16.116(a)(1) AND 16.116(a)(2)(ii) ARE TO PERMIT CONSTRUCTION OF THE SWM OUTFALL WITHIN THE 25' WETLAND AND 50' STREAM BUFFERS.

LEGEND:

EXISTING	PROPOSED
CONTOUR	CONTOUR
TREE LINE	TREE LINE
PAVING	SPOT ELEVATIONS
PROPERTY LINE	CURB AND GUTTER
WETLAND LIMIT	SOIL BORING
WETLAND BUFFER	BUILDING STRUCTURE
STREAM LINE	GREEN LIMIT
STREAM BUFFER	STORM SEWER
WATER LINE	SANITARY SEWER (GRAVITY)
	SANITARY SEWER (FORCED)
	WATER LINE
	PARKING SPACE COUNT
	PATHWAY
	CONCRETE
	RETAINING WALL
	HEAVY DUTY PAVING

EASEMENT LINE INFORMATION
WETLAND W 135
FLOODPLAIN FP 33
(REFER TO TABLE OF VALUES, SHEET 9)

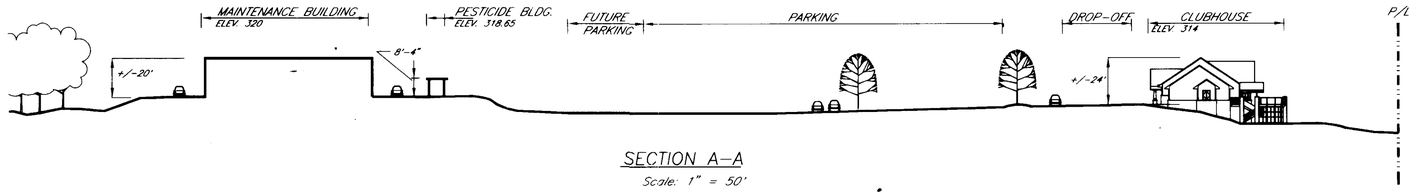

SECTION A-A
Scale: 1" = 50'

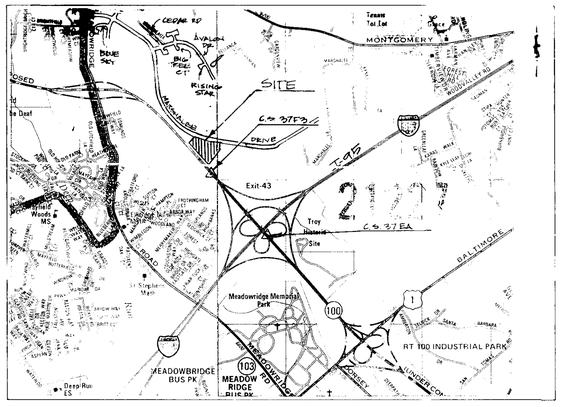

VICINITY MAP
Scale: 1" = 2000'

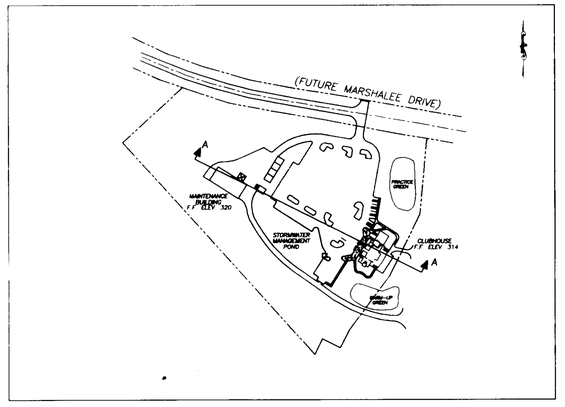

LOCATION PLAN
Scale: 1" = 200'

PREPARED FOR:

RAINMAKER / KILLIAN L.L.C.

5111 AVOCA AVENUE
ELLICOTT CITY, MARYLAND 21043
(410) 750-0733

OWNER:

HOWARD COUNTY

3430 COURTHOUSE DRIVE
ELLICOTT CITY, MARYLAND 21043
(410) 313-2354

APPROVED: FOR PUBLIC WATER, PUBLIC SEWERAGE SYSTEMS, STORM DRAINAGE SYSTEMS AND PUBLIC ROADS.
HOWARD COUNTY DEPARTMENT OF PUBLIC WORKS

DIRECTOR — DATE 5/26/95

CHIEF, BUREAU OF ENGINEERING — DATE 5/26/95

APPROVED: HOWARD DEPARTMENT OF PLANNING AND ZONING

DIRECTOR — DATE 5/31/95

CHIEF, DIVISION OF LAND DEVELOPMENT AND RESEARCH — DATE 5/31/95

APPROVED: FOR PUBLIC WATER AND PUBLIC SEWERAGE SYSTEMS, HOWARD COUNTY HEALTH DEPARTMENT.

COUNTY HEALTH OFFICER — DATE 5/30/95

SHEET INDEX

SHEET NO.	TITLE	SHEET REFERENCE
1	TITLE SHEET	C-1
2	EXISTING CONDITIONS PLAN	C-2
3	EXISTING CONDITIONS PLAN	C-3
4	SITE LAYOUT & UTILITIES PLAN	C-4
5	SITE LAYOUT & UTILITIES PLAN	C-5
6	GRADING AND DRAINAGE PLAN	C-6
7	GRADING AND DRAINAGE PLAN	C-7
8	SITE DETAILS	C-8
9	SITE DETAILS	C-9
10	PROFILES	C-10
11	PROFILES	C-11
12	STORMWATER DETAILS	C-12
13	STORMWATER NOTES	C-13
14	SEDIMENT CONTROL PLAN	C-14
15	SEDIMENT CONTROL PLAN	C-15
16	SEDIMENT CONTROL NOTES	C-16
17	SEDIMENT CONTROL DETAILS	C-17
18	LANDSCAPE PLAN	L-1
19	LANDSCAPE PLAN	L-2
20	DRAINAGE AREA MAP	D-1

SITE ANALYSIS

1. AREA OF PARCEL: 9.0666 AC. (394,941 SQ. FT.)
2. ZONING: PEC
3. PROPOSED USE OF STRUCTURE: CLUBHOUSE, MAINTENANCE BUILDING AND STORAGE BUILDING.
4. PROPOSED CLUBHOUSE FLOOR AREA:
   FIRST FLOOR: 3,049 SF — COVERED PORCH: 906 SF
   BASEMENT: 4,065 SF — OPEN DECK: 1,164 SF
5. MAINTENANCE BUILDING FLOOR AREA: 5000 SF
6. PROPOSED PARKING:

TYPICAL STALLS	155
BARRIER FREE	8
TOTAL	163

7. FUTURE PARKING:

TYPICAL STALLS	42
TOTAL FUTURE PARKING	205

8. REQUIRED PARKING: 8 SP. PER HOLE x 18 HOLES = 144
   DRIVING RANGE (40 TEES) 13
   TOTAL SPACES REQUIRED: 157
9. GREEN SPACE TO REMAIN: 265,903 SQ. FT. (6.10 AC.) 67.33% OF GROSS AREA
10. BUILDING COVERAGE: 10,119 SQ. FT. (0.23 AC.) 2.56% OF GROSS AREA
11. PARKING AREAS (INCLUDING ISLES):
    PROPOSED: 91,315 SQ. FT. (2.10 Ac), 23.12% OF GROSS AREA
    FUTURE: 14,100 SQ. FT. (0.32 Ac), 3.57% OF GROSS AREA
12. OTHER IMPERVIOUS AREA: 13,504 SQ. FT. (0.31 AC.) 3.42% OF GROSS AREA
13. TOTAL LIMITS OF DISTURBANCE: 7.09 AC.
14. NUMBER OF LANDSCAPE ISLAND:
    REQUIRED: (1 PER 20 SPACES):8
    PROVIDED: 8

ADDRESS CHART

BUILDING	STREET ADDRESS
CLUBHOUSE	6100 MARSHALEE DRIVE
MAINT. BLDG.	6070 MARSHALEE DRIVE

SUBDIVISION NAME				SECTION/AREA	LOT/PARCEL
CENTRE 9500				N/A	PARCEL K
PLAT	BLOCK	ZONE	TAX/ZONE MAP	ELEC. DIST.	CENSUS TR
11524	10	PEC	37	1 ST.	6011.01
WATER CODE			SEWER CODE		
D04			2612000		

5/17/95

revisions		
no.	description	date

JOHN W. CLAPSADDLE, P.E.
MD. NO. 16956

prepared by:
THE RBA GROUP ENGINEERS • ARCHITECTS • PLANNERS
7164 COLUMBIA GATEWAY DRIVE SUITE 205
COLUMBIA, MARYLAND 21046
410/312-0966

owner: HOWARD COUNTY
3430 COURTHOUSE DRIVE
ELLICOTT CITY, MARYLAND 21043

TITLE SHEET

CENTRE 9500, PARCEL K
THE TIMBERS AT TROY GOLF COURSE
CLUBHOUSE AND MAINTENANCE FACILITIES

1 ST ELECTION DISTRICT — HOWARD COUNTY, MARYLAND
TAX MAP 37, CENSUS TRACT 6011.01
WATER CODE: D04, SEWER CODE: 2612000

SCALE: AS SHOWN
DRAWN: ELB — CHECKED: JWC
PROJ. NO.: J1212 — DATE: 5/16/95
SHEET: 1 — SHEET REF.: C-1
OF 20

SDP-95-92

DRAWING FILE: 1212COV

SOILS

KEY	DESCRIPTION	HYDRIC?	HYDROLOGIC GROUP
ClC3	CHILLUM GRAVELLY LOAM 5-10%, SEVERELY ERODED	NO	C
ClD2	CHILLUM GRAVELLY LOAM 10-15%, MODERATELY ERODED	NO	C
CmB2	CHILLUM SILT LOAM 1-5%, MODERATELY ERODED	NO	C
Cs	COMUS SILT LOAM	NO	B
Mo	MIXED ALLUVIAL	YES (WHOLE UNIT)	
SfD2	SASSAFRAS GRAVELLY SANDY LOAM 10-15%, MODERATELY ERODED	NO	B
SfB2	SASSAFRAS GRAVELLY SANDY LOAM 1-5%, MODERATELY ERODED	NO	B
SsE	SASSAFRAS SOILS 1-5%, MODERATELY ERODED	NO	B

KEY

SLOPES 15%-24.9%

SLOPES >/= 25%

APPROVED: FOR PUBLIC WATER, PUBLIC SEWERAGE SYSTEMS, STORM DRAINAGE SYSTEMS AND PUBLIC ROADS. HOWARD COUNTY DEPARTMENT OF PUBLIC WORKS

DIRECTOR — DATE 5/26/95

CHIEF, BUREAU OF ENGINEERING — DATE 5/26/95

APPROVED: HOWARD DEPARTMENT OF PLANNING AND ZONING

DIRECTOR — DATE 5/31/95

CHIEF, DIVISION OF LAND DEVELOPMENT AND RESEARCH — DATE 5/31/95

APPROVED: FOR PUBLIC WATER AND PUBLIC SEWERAGE SYSTEMS, HOWARD COUNTY HEALTH DEPARTMENT

COUNTY HEALTH OFFICER — DATE 5/30/95

REFER TO SHEET 3 FOR CONTINUATION

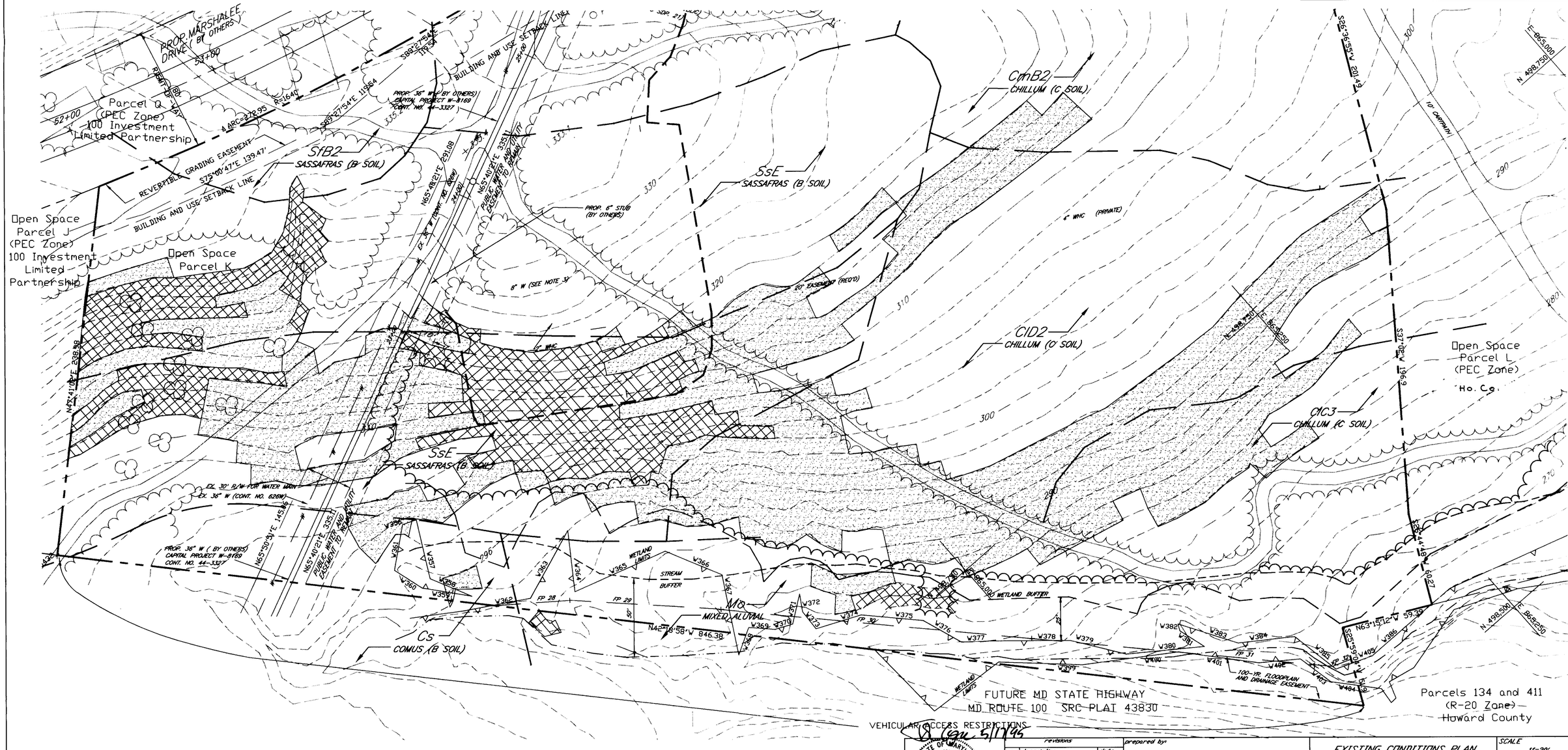

JOHN W. CLAPSADDLE, P.E. MD. NO. 16956

revisions		
no.	description	date

prepared by: The RBA ENGINEERS • ARCHITECTS • PLANNERS

7164 COLUMBIA GATEWAY DRIVE SUITE 205 COLUMBIA, MARYLAND 21046 410/312-0966

owner: HOWARD COUNTY 3430 COURTHOUSE DRIVE ELLICOTT CITY, MARYLAND 21043

EXISTING CONDITIONS PLAN

CENTRE 9500, PARCEL K
THE TIMBERS AT TROY GOLF COURSE
CLUBHOUSE AND MAINTENANCE FACILITIES

1 ST. ELECTION DISTRICT HOWARD COUNTY, MARYLAND
TAX MAP 37, CENSUS TRACT 6011.01
WATER CODE: D04 SEWER CODE: 2610000

SCALE 1"=30'

DRAWN ELB — CHECKED JWC

PROJ. NO. J1212 — DATE 5/16/9

SHEET 2 OF 20 — SHEET REF. C-2

DRAWING FILE: 1212PLA

SDP-95-92

APPROVED: FOR PUBLIC WATER, PUBLIC SEWERAGE SYSTEMS, STORM DRAINAGE SYSTEMS AND PUBLIC ROADS.
HOWARD COUNTY DEPARTMENT OF PUBLIC WORKS

DIRECTOR — DATE 5/26/95

CHIEF, BUREAU OF ENGINEERING — DATE 5/26/95

APPROVED: HOWARD DEPARTMENT OF PLANNING AND ZONING

DIRECTOR — DATE 5/31/95

A/ CHIEF, DIVISION OF LAND DEVELOPMENT AND RESEARCH — DATE 5/31/95

APPROVED: FOR PUBLIC WATER AND PUBLIC SEWERAGE SYSTEMS, HOWARD COUNTY HEALTH DEPARTMENT

COUNTY HEALTH OFFICER — DATE 5/30/95

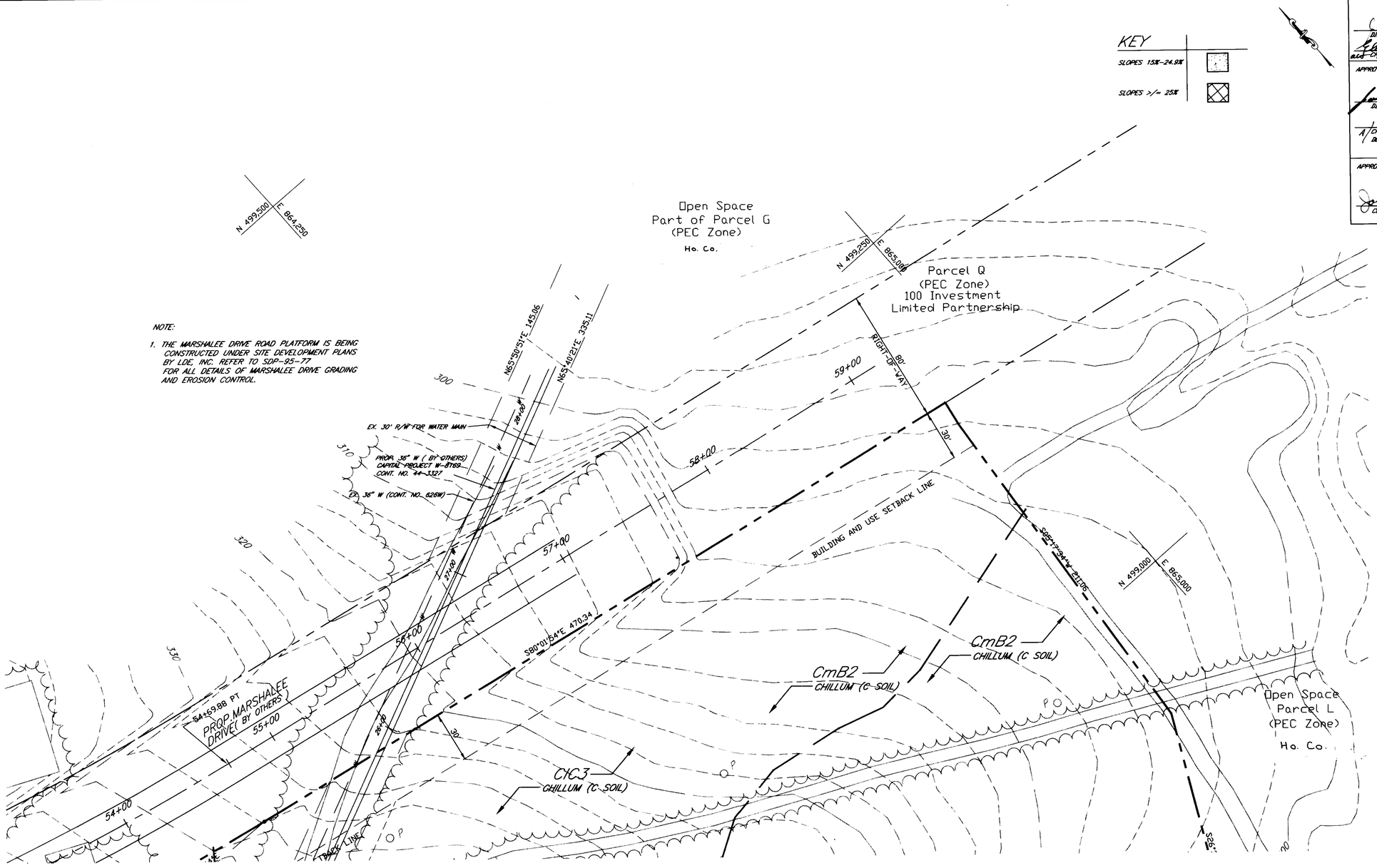

NOTE:

1. THE MARSHALEE DRIVE ROAD PLATFORM IS BEING CONSTRUCTED UNDER SITE DEVELOPMENT PLANS BY LDE, INC. REFER TO SDP-95-77 FOR ALL DETAILS OF MARSHALEE DRIVE GRADING AND EROSION CONTROL.

REFER TO SHEET 2 FOR CONTINUATION

SOILS

KEY	DESCRIPTION	HYDRIC?	HYDROLOGIC GROUP
CIC3	CHILLUM GRAVELLY LOAM 5-10%, SEVERELY ERODED	NO	C
CID2	CHILLUM GRAVELLY LOAM 10-15%, MODERATELY ERODED	NO	C
CmB2	CHILLUM SILT LOAM 1-5%, MODERATELY ERODED	NO	C
Cs	COMUS SILT LOAM	NO	B
Mo	MIXED ALLUVIAL	YES (WHOLE UNIT)	
SfD2	SASSAFRAS GRAVELLY SANDY LOAM 10-15%, MODERATELY ERODED	NO	B
SfB2	SASSAFRAS GRAVELLY SANDY LOAM 1-5%, MODERATELY ERODED	NO	B
SsE	SASSAFRAS SOILS 1-5%, MODERATELY ERODED	NO	B

5/17/95

STATE OF MARYLAND — JOHN W. CLAPSADDLE, P.E. — NO. 16956 — REGISTERED PROFESSIONAL ENGINEER

JOHN W. CLAPSADDLE, P.E.
NO. NO. 16956

revisions		
no.	description	date

prepared by:

The RBA ENGINEERS • ARCHITECTS • PLANNERS
Wilson Brown, P.E. Cert. No. 16956
John Murphy, P.E. Cert. No. 16956
Warren Bankers, R.A. Cert. No. 16956
7164 COLUMBIA GATEWAY DRIVE SUITE 205
COLUMBIA, MARYLAND 21046
410/312-0966

owner: HOWARD COUNTY
3430 COURTHOUSE DRIVE
ELLICOTT CITY, MARYLAND 21043

EXISTING CONDITIONS PLAN

CENTRE 9500, PARCEL K
THE TIMBERS AT TROY GOLF COURSE
CLUBHOUSE AND MAINTENANCE FACILITIES

1 ST. ELECTION DISTRICT — HOWARD COUNTY, MARYLAND
TAX MAP 37, CENSUS TRACT 6011.01
WATER CODE: DBA SEWER CODE: 2610000

SDP-95-92

SCALE 1" = 30'	
DRAWN ELB	CHECKED JWC
PROJ. NO. J1212	DATE 5/16/
SHEET 3 OF 20	SHEET REF. C-

DRAWING FILE: 1212PL

REFER TO SHEET 5 FOR CONTINUATION

Parcel Q
(PEC Zone)
100 Investment
Limited Partnership

Open Space
Parcel L
(PEC Zone)
Ho. Co.

PROP. MARSHALEE DRIVE (BY OTHERS)

PRACTICE GREEN

HOLE 9 GREEN

HOLE 10 TEE

CHIPPING GREEN

WARM-UP GREEN

CLUBHOUSE 46'-8"

MAINTENANCE BUILDING

FUTURE PARKING AREA

BUILDING AND USE SETBACK LINE

PUBLIC WATER AND UTILITY EASEMENT TO REMAIN

PROP. 36" W/ (BY OTHERS) CAPITAL PROJECT W-8169 CONT. NO. 44-3327

EX. 36" W (CONT. NO. 6209)

FORCE MAIN (PUBLIC) (PVC SDR 21)

20' EASEMENT (RED'D)

FUTURE CONC. CURB

EXISTING ROAD TO BE REMOVED (TYP. ALL ROADS)

PUMP STATION REFER TO MECHANICAL PLAN FOR DETAILS

STD. 7" CONC. CURB & GUTTER PER HCDPW STD. R3.01

REFER TO ARCH. PLANS FOR DETAILS WITH PLAZA AREA

LANDSCAPE ISLANDS REFER TO LANDSCAPE PLANS (TYP. ALL ISLANDS)

LOT LIGHTS (TYP. OF 8)

END PAVING

HANDICAP SIGNS (TYP. OF 8)

CONCRETE WALK AS PER HCDPW STD. R3.05

WHEEL STOPS (TYP. OF 8)

PAVEMENT MARKING

CART STAGING FOR HANDICAPPED USERS ONLY

VAN ACCESSIBLE SIGNS

INTERNATIONAL HDCP. SYMBOL

BITUMINOUS PAVING (LIGHT DUTY)

BITUMINOUS PAVING (HEAVY DUTY)

BITUMINOUS PAVING (MED. DUTY)

6' CHAIN LINK FENCE

DOUBLE SWING GATE (W=22')

DOUBLE SWING GATE (W=15')

15'x8' CONC. PAD FOR 1000 GAL FUEL TANK

12'x15' OPEN BINS (TYP. OF 4)

OPEN BIN

PROP. 6" STUB (BY OTHERS)

HANDICAP SIGNS

WHEEL STOP

4" W (PRIVATE)

10'x10' EASEMENT

3" METER VAULT

4" W

8" W (SEE NOTE 3)

4" WHC (PRIVATE)

6" S (PUBLIC)

WHITE STRIPE

GREASE TRAP

SUNDECK AT FIRST FLOOR LEVEL

CONCRETE WASH AREA

END PAVING

GRAVEL PAVING

WOOD FENCE

10'x20' CONC. SLAB PER HCDPW STD. R7.01.01

NOSE DOWN CURB

5' TO FACE OF BARRICADE

TRAFFIC BARRIER

8' CARTPATH

10' CARTPATH

WETLAND LIMITS

STREAM BUFFER

WETLAND BUFFER

100-YR. FLOODPLAIN AND DRAINAGE EASEMENT

FP 28

FP 29

FP 30

FP 31

FUTURE MD STATE HIGHWAY
MD ROUTE 100 SRC PLAT 43830

VEHICULAR ACCESS RESTRICTIONS

E 865,000
N 498,750

N 498,500
E 865,000

Parcels 134 and 411
(R-20 Zone)
Howard County

APPROVED FOR PUBLIC WATER, PUBLIC SEWERAGE SYSTEMS, STORM DRAINAGE SYSTEMS AND PUBLIC ROADS.
HOWARD COUNTY DEPARTMENT OF PUBLIC WORKS,
DIRECTOR — DATE 5/26/95
CHIEF, BUREAU OF ENGINEERING — DATE 5/26/95

APPROVED HOWARD DEPARTMENT OF PLANNING AND ZONING
DIRECTOR — DATE 5/31/95
CHIEF, DIVISION OF LAND DEVELOPMENT AND RESEARCH — DATE 5/31/95

APPROVED FOR PUBLIC WATER AND PUBLIC SEWERAGE SYSTEMS, HOWARD COUNTY HEALTH DEPARTMENT
COUNTY HEALTH OFFICER — DATE 5/30/95

NOTES:

1. ALL CONSTRUCTION RELATING TO THE GOLF COURSE INCLUDING CARPATHS, BRIDGES, TEES, GREENS, ETC. ARE SHOWN ON SDP-93-75 BY LAND DESIGN ENGINEERING INC., USER SHALL REFER TO THOSE PLANS FOR CONSTRUCTION DETAILS.
2. ALL RADII ARE 5' UNLESS NOTED OTHERWISE.
3. 8 INCH PUBLIC WATERLINE AND SEWER LINES ARE TO BE CONSTRUCTED UNDER CONTRACT NO. 14-3423-D. REFER CONTRACT DRAWINGS FOR DETAILS.
4. ALL EXISTING STRUCTURES, ROADS AND UTILITIES ON SITE ARE TO BE REMOVED OR RELOCATED.
5. ALL WATER METERS ARE INSIDE OF THE BUILDINGS. NO OUTSIDE METER VAULTS ARE PROPOSED.

5/17/95

STATE OF MARYLAND — JOHN W. CLAPSADDLE — No. 16956 — PROFESSIONAL ENGINEER

revisions		
no.	description	date
1	MAINTENANCE BLDG. WHC SIZE	6/95
2	ADDED IRRIGATION METER VAULT & EASEMENT	8/96

prepared by:
The RBA — ENGINEERS • ARCHITECTS • PLANNERS
7164 COLUMBIA GATEWAY DRIVE SUITE 205
COLUMBIA, MARYLAND 21046
410/312-0966

owner: HOWARD COUNTY
3430 COURTHOUSE DRIVE
ELLICOTT CITY, MARYLAND 21043

SITE LAYOUT AND UTILITIES PLAN

CENTRE 9500, PARCEL K
THE TIMBERS AT TROY GOLF COURSE
CLUBHOUSE AND MAINTENANCE FACILITIES

1ST ELECTION DISTRICT — HOWARD COUNTY, MARYLAND
TAX MAP 37, CENSUS TRACT 6011.01
WATER CODE: 2014 SEWER CODE: 2610000

SCALE	1"=30'
DRAWN	ELB
CHECKED	JWC
PROJ. NO.	91212
DATE	5/16/95
SHEET	4 OF 20
SHEET REF:	C-4

SDP-95-92

DRAWING FILE: 1212PLA1

APPROVED: FOR PUBLIC WATER, PUBLIC SEWERAGE SYSTEMS, STORM DRAINAGE SYSTEMS AND PUBLIC ROADS.
HOWARD COUNTY DEPARTMENT OF PUBLIC WORKS

DIRECTOR — DATE 5/26/95

ACT CHIEF, BUREAU OF ENGINEERING CD 5/26/95 — DATE 5/26/95

APPROVED: HOWARD DEPARTMENT OF PLANNING AND ZONING

DIRECTOR — DATE 5/31/95

CHIEF, DIVISION OF LAND DEVELOPMENT AND RESEARCH — DATE 5/31/95

APPROVED: FOR PUBLIC WATER AND PUBLIC SEWERAGE SYSTEMS, HOWARD COUNTY HEALTH DEPARTMENT

COUNTY HEALTH OFFICER — DATE 5/30/95

NOTE:

1. THE MARSHALEE DRIVE ROAD PLATFORM IS BEING CONSTRUCTED UNDER SITE DEVELOPMENT PLANS BY LDE, INC. REFER TO SDP-95-77 FOR ALL DETAILS OF MARSHALEE DRIVE GRADING AND EROSION CONTROL.

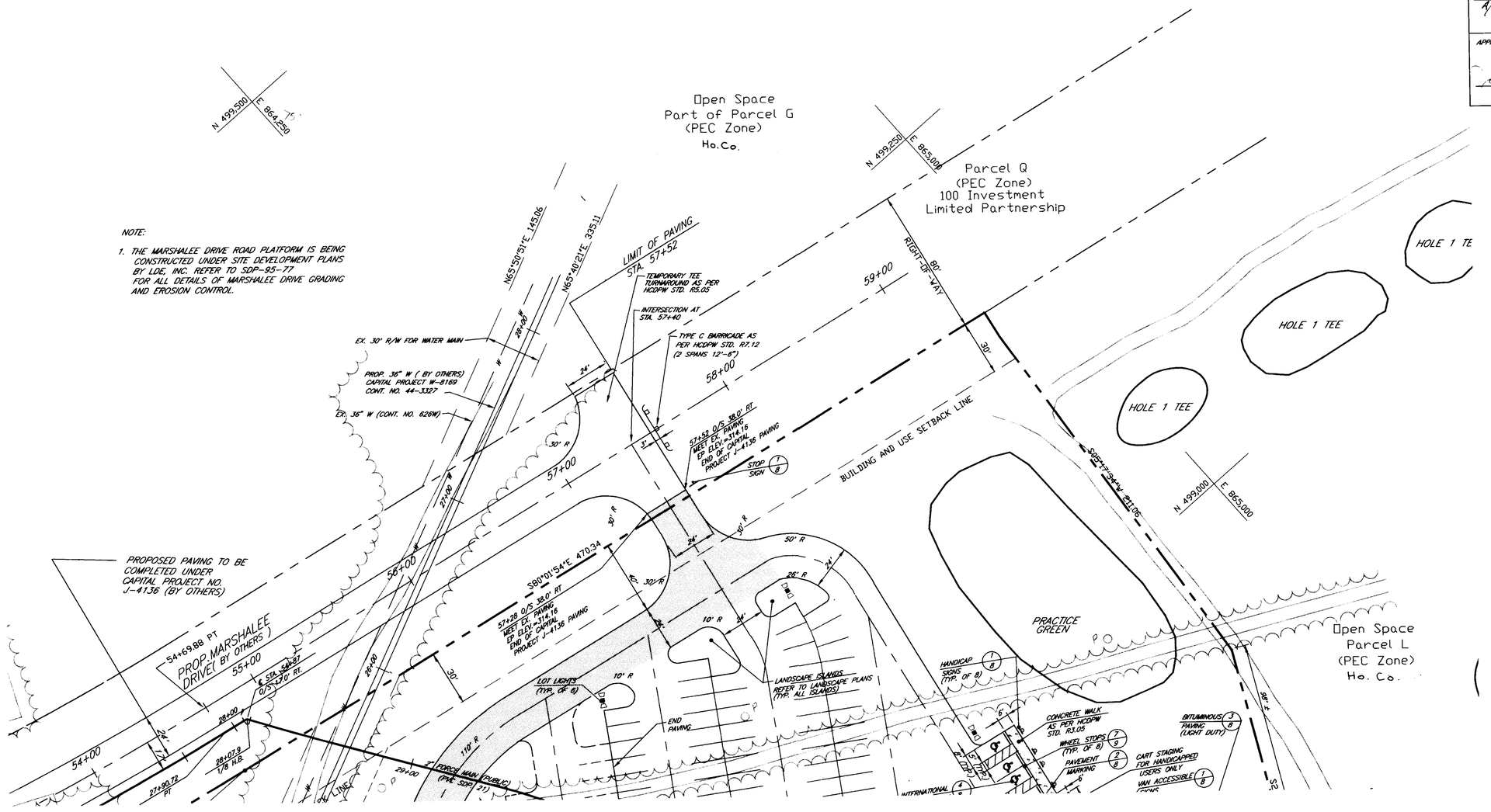

REFER TO SHEET 4 FOR CONTINUATION

5/17/95

STATE OF MARYLAND — JOHN WINFRED CLAPSADDLE — NO. 16956 — REGISTERED PROFESSIONAL ENGINEER

JOHN W. CLAPSADDLE, P.E.
MD. NO. 16956

revisions		
no.	description	date

prepared by:

The RBA ENGINEERS • ARCHITECTS • PLANNERS
Wilson Bowen P.E., P.A. Lic. No. 16956
John Morgan, P.A. Cert. No. C-5085
Warren Bowen, P.A. Cert. No. C-4048

7164 COLUMBIA GATEWAY DRIVE SUITE 205
COLUMBIA, MARYLAND 21046
410/312-0966

owner: HOWARD COUNTY
3430 COURTHOUSE DRIVE
ELLICOTT CITY, MARYLAND 21043

SITE LAYOUT AND UTILITIES PLAN

CENTRE 9500, PARCEL K
THE TIMBERS AT TROY GOLF COURSE
CLUBHOUSE AND MAINTENANCE FACILITIES

1 ST. ELECTION DISTRICT — HOWARD COUNTY, MARYLAND
TAX MAP 37, CENSUS TRACT 601101
WATER CODE: 004 SEWER CODE: 2610000

SDP-95-92

SCALE	1"=30'
DRAWN	ELB
CHEC	JW
PROJ. NO.	J1212
DATE	5/1
SHEET	5
SHEE REF.	
OF	20
DRAWING FILE:	1212

REFER TO SHEET 7 FOR CONTINUATION

APPROVED: FOR PUBLIC WATER, PUBLIC SEWERAGE SYSTEMS, STORM DRAINAGE SYSTEMS AND PUBLIC ROADS.
HOWARD COUNTY DEPARTMENT OF PUBLIC WORKS

DIRECTOR — DATE 5/26/95

ACT CHIEF, BUREAU OF ENGINEERING — DATE 5/26/95

APPROVED: HOWARD DEPARTMENT OF PLANNING AND ZONING

DIRECTOR — DATE 5/31/95

CHIEF, DIVISION OF LAND DEVELOPMENT AND RESEARCH — DATE 5/31/95

APPROVED: FOR PUBLIC WATER AND PUBLIC SEWERAGE SYSTEMS, HOWARD COUNTY HEALTH DEPARTMENT

COUNTY HEALTH OFFICER — DATE 5/30/95

NOTES:

1. POND PROVIDES WATER QUALITY BY EXTENDED DETENTION AND WATER QUANTITY CONTROL FOR THE 2- AND 10- YEAR STORMS.
2. POND EMBANKMENT IS HAZARD CLASS "A".
3. THE STORMWATER MANAGEMENT POND IS PRIVATE AND IS TO BE MAINTAINED BY THE OWNER.

OPERATION MAINTENANCE AND INSPECTION

INSPECTION OF POND(S) SHOWN HEREON SHALL BE PERFORMED AT LEAST ANNUALLY, IN ACCORDANCE WITH THE CHECKLIST AND REQUIREMENTS CONTAINED WITHIN USDA, SCS "STANDARDS AND SPECIFICATIONS FOR PONDS" (MD-378). THE POND OWNER(S) AND ANY HEIR, SUCCESSORS, OR ASSIGNS SHALL BE RESPONSIBLE FOR THE SAFETY OF THE POND AND THE CONTINUED OPERATION, SURVEILLANCE, INSPECTION AND MAINTENANCE THEREOF. THE POND OWNER(S) SHALL PROMPTLY NOTIFY THE SOIL AND CONSERVATION DISTRICT OF ANY UNUSAL OBSERVATIONS THAT MAY BE INDICATIONS OF DISTRESS SUCH AS EXCESSIVE SEEPAGE, TURBID SEEPAGE, SLIDING OR SLUMPING. OWNER SHALL ALSO FOLLOW THE O&M SCHEDULE ON SHEET 13 OF 20.

POND SUMMARY TABLE

DRAINAGE AREA = 3.97 ACRES

ALLOWABLE RELEASE RATE			
2-YEAR	5.0 cfs		
10-YEAR	14.7 cfs		
100-YEAR	34.5 cfs		
COMPUTED INFLOW RATE			
2-YEAR	12.8 cfs		
10-YEAR	22.9 cfs		
100-YEAR	34.5 cfs		
DISCHARGE RATE	POND	TRADE OFF	TOTAL
2-YEAR	0.3 cfs	4.0 cfs	4.2 cfs
10-YEAR	2.4 cfs	9.4 cfs	9.7 cfs
100-YEAR	29.3 cfs	–	–
WATER SURFACE ELEVATION			
2-YEAR	302.64		
10-YEAR	304.46		
100-YEAR	305.97		
STORAGE VOLUME PROVIDED			
2-YEAR	0.44 ACRE-FT.		
10-YEAR	0.73 ACRE-FT.		
100-YEAR	1.03 ACRE-FT.		

5/17/95

STATE OF MARYLAND — JOHN WINFRED CLAPSADDLE — NO. 16956 — REGISTERED PROFESSIONAL ENGINEER

JOHN W. CLAPSADDLE, P.E.
MD. NO. 16956

revisions		
no.	description	date

prepared by:
The RBA Group — ENGINEERS • ARCHITECTS • PLANNERS
7164 COLUMBIA GATEWAY DRIVE SUITE 205
COLUMBIA, MARYLAND 21046
410/312-0966

owner: HOWARD COUNTY
3430 COURTHOUSE DRIVE
ELLICOTT CITY, MARYLAND 21043

GRADING AND DRAINAGE PLAN

CENTRE 9500, PARCEL K
THE TIMBERS AT TROY GOLF COURSE
CLUBHOUSE AND MAINTENANCE FACILITIES

1 ST. ELECTION DISTRICT — HOWARD COUNTY, MARYLAND
TAX MAP 37, CENSUS TRACT 6011.01
WATER CODE: D04 SEWER CODE: 2610000

SCALE 1"=30'	
DRAWN ELB	CHECKED JWC
PROJ. NO. J1212	DATE 5/16/95
SHEET 6	SHEET REF. C-6
OF 20	

SDP-95-92

DRAWING FILE: 1212PLA1

APPROVED: FOR PUBLIC WATER, PUBLIC SEWERAGE SYSTEMS, STORM DRAINAGE SYSTEMS AND PUBLIC ROADS.
HOWARD COUNTY DEPARTMENT OF PUBLIC WORKS

DIRECTOR — DATE 5/26/95

CHIEF, BUREAU OF ENGINEERING — DATE 5/26/95

APPROVED: HOWARD DEPARTMENT OF PLANNING AND ZONING

DIRECTOR — DATE 5/31/95

CHIEF, DIVISION OF LAND DEVELOPMENT AND RESEARCH — DATE 5/31/95

APPROVED: FOR PUBLIC WATER AND PUBLIC SEWERAGE SYSTEMS, HOWARD COUNTY HEALTH DEPARTMENT

COUNTY HEALTH OFFICER — DATE 5/30/95

NOTE:

1. THE MARSHALEE DRIVE ROAD PLATFORM IS BEING CONSTRUCTED UNDER SITE DEVELOPMENT PLANS BY LDE, INC. REFER TO SDP-95-77 FOR ALL DETAILS OF MARSHALEE DRIVE GRADING AND EROSION CONTROL.

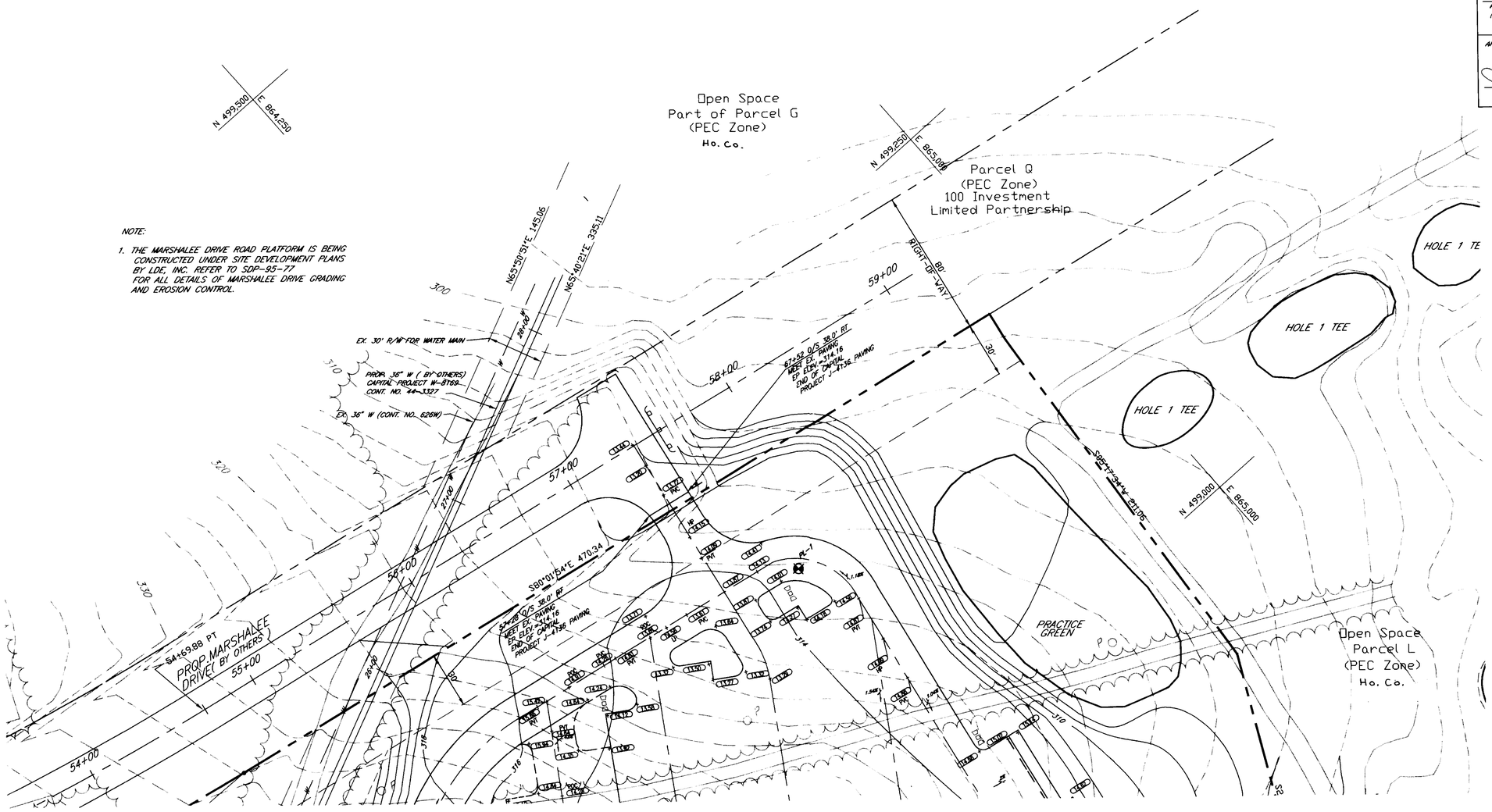

REFER TO SHEET 6 FOR CONTINUATION

5/17/95

STATE OF MARYLAND — JOHN W. CLAPSADDLE, P.E. — NO. 16956 — PROFESSIONAL ENGINEER

JOHN W. CLAPSADDLE, P.E.
NO. NO. 16956

revisions		
no.	description	date

prepared by:

RBA ENGINEERS • ARCHITECTS • PLANNERS

7164 COLUMBIA GATEWAY DRIVE SUITE 205
COLUMBIA, MARYLAND 21046
410/312-0966

owner: HOWARD COUNTY
3430 COURTHOUSE DRIVE
ELLICOTT CITY, MARYLAND 21043

GRADING AND DRAINAGE PLAN

CENTRE 9500, PARCEL K
THE TIMBERS AT TROY GOLF COURSE
CLUBHOUSE AND MAINTENANCE FACILITIES

1 ST. ELECTION DISTRICT — HOWARD COUNTY, MARYLAND
TAX MAP 37, CENSUS TRACT 6011.01
WATER CODE: 004 SEWER CODE: 2610000

SCALE 1" = 30'

DRAWN	CHECKED
ELB	JWC
PROJ. NO.	DATE
J1212	5/16/
SHEET 7	SHEET REF.
OF 20	C-

DRAWING FILE: 1212PL

SDP-95-92

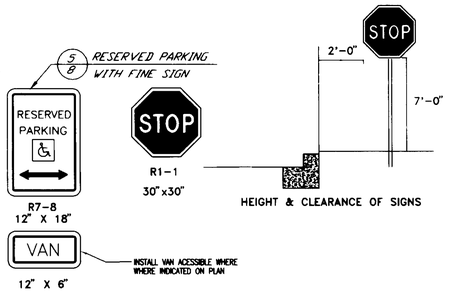

NOTE: SET BOTTOM OF RESERVED PARKING SIGN AT 7'-0" HEIGHT.

1/8 SIGNS DETAIL
SCALE: SCALE

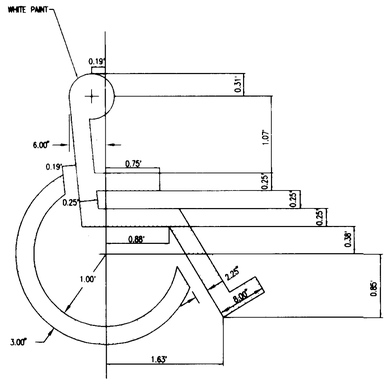

4/8 INTERNATIONAL HDCP. SYMBOL
SCALE: SCALE

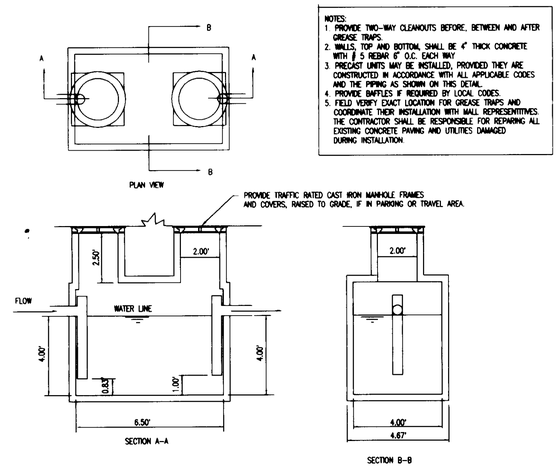

7/8 750 GALLON GREASE TRAP
SCALE: NTS

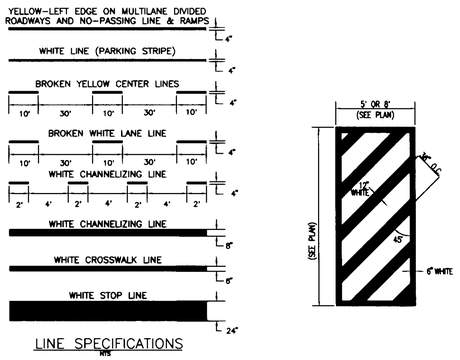

2/8 PAVEMENT MARKING
SCALE: NTS

5/8 RESERVED PARKING
SCALE: NTS

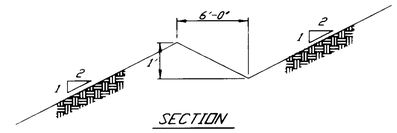

NO SCALE

8/8 EROSION CHECK BENCHING
SCALE: NTS

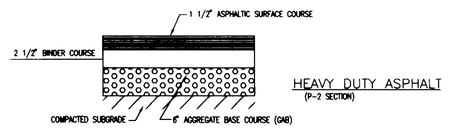

3/8 PAVEMENT SECTIONS (HCDPW STD. R-20.1)
SCALE: NTS

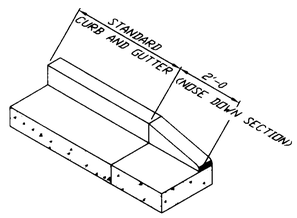

NOTE: REFER TO HCDPW STD. NO. R3.01 AND SPECIFICATIONS FOR DETAILS NOT SHOWN.

6/8 NOSE DOWN CURB
SCALE: NTS

APPROVED: FOR PUBLIC WATER, PUBLIC SEWERAGE SYSTEMS, STORM DRAINAGE SYSTEMS AND PUBLIC ROADS HOWARD COUNTY DEPARTMENT OF PUBLIC WORKS

DIRECTOR — DATE 5/26/95

CHIEF, BUREAU OF ENGINEERING — DATE 5/26/95

APPROVED: HOWARD DEPARTMENT OF PLANNING AND ZONING

DIRECTOR — DATE 5/31/95

CHIEF, DIVISION OF LAND DEVELOPMENT AND RESEARCH — DATE 5/31/95

APPROVED: FOR PUBLIC WATER AND PUBLIC SEWERAGE SYSTEMS, HOWARD COUNTY HEALTH DEPARTMENT

COUNTY HEALTH OFFICER — DATE 5/30/95

5/11/95

STATE OF MARYLAND — JOHN WINFIELD CLAPSADDLE — NO. 16956 — PROFESSIONAL ENGINEER

JOHN W. CLAPSADDLE, P.E.
NO. NO. 16956

revisions		
no.	description	date

prepared by:
The RBA ENGINEERS • ARCHITECTS • PLANNERS
7164 COLUMBIA GATEWAY DRIVE SUITE 205
COLUMBIA, MARYLAND 21046
410/312-0966

owner: HOWARD COUNTY
3430 COURTHOUSE DRIVE
ELLICOTT CITY, MARYLAND 21043

SITE DETAILS

CENTRE 9500, PARCEL K
THE TIMBERS AT TROY GOLF COURSE
CLUBHOUSE AND MAINTENANCE FACILITIES

1ST ELECTION DISTRICT — HOWARD COUNTY, MARYLAND
TAX MAP 37, CENSUS TRACT 6061.01
WATER CODE: 1104 SEWER CODE: 7NJ0000

SCALE: AS SHOWN
DRAWN: ELB
CHECKED: JWC
PROJ. NO.: J1212
DATE: 5/16/95
SHEET: 8
SHEET REF.: C-8
OF 20

SDP-95-92

DRAWING TITLE: 1212DET1

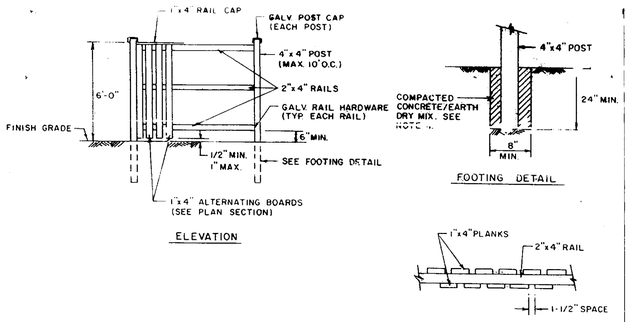

NOTES:

1) ALL LUMBER SHALL BE CCA TREATED #2 OR BETTER.
2) ALL HARDWARE AND NAILS SHALL BE GALVANIZED FOR CORROSION RESISTENCE.
3) ASSEMBLE WITH APPROPRIATE SIZE NAILS OR FASTENERS.
4) MIX SHALL CONSIST OF 50% CONCRETE MIX (DRY) AND EARTH BACKFILL POURED (WET) CONCRETE. MAY BE SUBSTITUTED.

1/9 WOOD FENCE
SCALE: SCALE

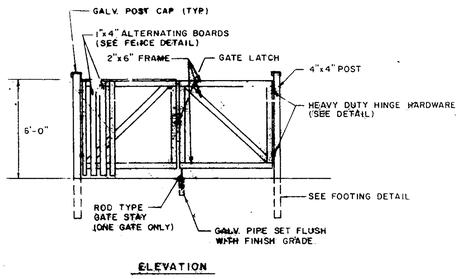

ELEVATION

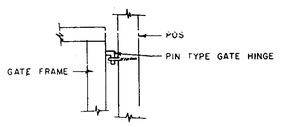

HINGE DETAIL

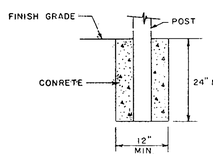

FOOTING DETAIL

2/9 WOOD GATE
SCALE: NTS

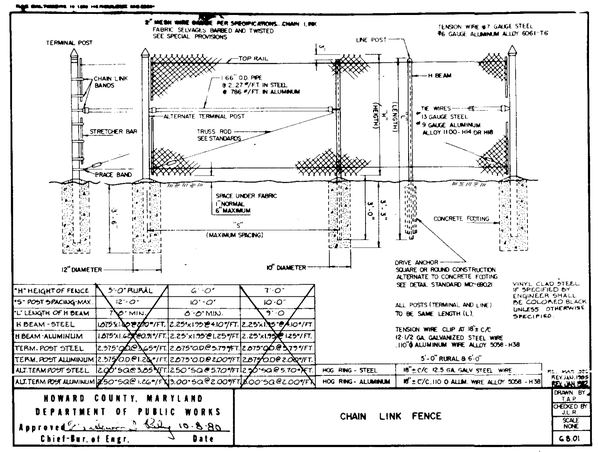

"H" HEIGHT OF FENCE	5'-0" RURAL	6'-0"	7'-0"
"S" POST SPACING MAX	12'-0"	10'-0"	10'-0"
"L" LENGTH OF H BEAM	7'-0" MIN.	8'-0" MIN.	9'-0"
H BEAM - STEEL	.075"x3.0"x3.0"/FT.	2.25"x1.75"#4.0"/FT.	2.25"x1.75"#4.0"/FT.
H BEAM-ALUMINUM	.075"x3.0"x3.0"/FT.	2.25"x1.75"#1.25"/FT.	2.25"x1.75"#1.25"/FT.
TERM.-POST STEEL	2.375"OD#3.65"/FT.	2.375"OD#5.73"/FT.	2.375"OD#5.73"/FT.
TERM. POST ALUMINUM	2.375"OD#1.22"/FT.	2.375"OD#2.00"/FT.	2.375"OD#2.00"/FT.
ALT TERM.POST STEEL	2.00"SQ#3.65"/FT.	2.50"SQ#5.70"/FT.	2.50"SQ#5.70"/FT.
ALT TERM.POST ALUMINUM	2.50"SQ#2.66"/FT.	3.00"SQ#2.00"/FT.	3.00"SQ#2.00"/FT.

HOG RING - STEEL: 18" C/C 12.5 GA. GALV STEEL WIRE
HOG RING - ALUMINUM: 18" C/C 11G ALUM. WIRE ALLOY 5056-H38

5'-0" RURAL & 6'-0"

FS MAS 350 REVISIONS REVISIONS

HOWARD COUNTY, MARYLAND
DEPARTMENT OF PUBLIC WORKS
Approved [signature] 10-8-80
Chief-Bur. of Engr. Date

CHAIN LINK FENCE

DRAWN BY T.E.P.
CHECKED BY J.L.R.
SCALE NONE
G.B.01

4/9 CHAIN LINK FENCE
SCALE SCALE

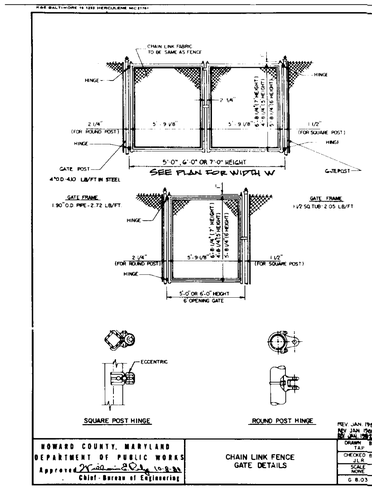

HOWARD COUNTY, MARYLAND
DEPARTMENT OF PUBLIC WORKS
Approved [signature] 10-8-80
Chief-Bureau of Engineering

CHAIN LINK FENCE GATE DETAILS

REV JAN 1989
REV JAN 1990
REV JAN 1992
DRAWN BY T.E.P.
CHECKED BY J.L.R.
SCALE NONE
G.B.02

5/9 DOUBLE SWING GATE
SCALE: NTS

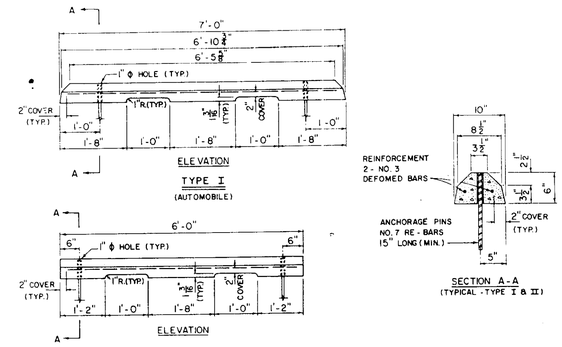

7/9 CONCRETE WHEEL STOP
MDOT SHA STD. NO. MD-725.01
SCALE NTS

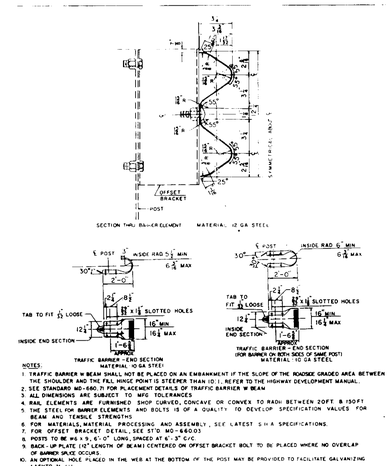

NOTES:
1. TRAFFIC BARRIER W BEAM SHALL NOT BE PLACED ON AN EMBANKMENT IF THE SLOPE OF THE ROADSIDE GRADED AREA BETWEEN THE SHOULDER AND THE FILL HINGE POINT IS STEEPER THAN (0:1). REFER TO THE Highway DEVELOPMENT MANUAL.
2. SEE STANDARD MD-680.71 FOR PLACEMENT DETAILS OF TRAFFIC BARRIER W BEAM
3. ALL DIMENSIONS ARE SUBJECT TO MFG TOLERANCES
4. RAIL ELEMENTS ARE FURNISHED SHOP CURVED, CONCAVE OR CONVEX TO RADII BETWEEN 200FT & 1500FT
5. THE STEEL FOR BARRIER ELEMENTS AND BOLTS IS OF A QUALITY TO DEVELOP SPECIFICATION VALUES FOR BEAM AND TENSILE STRENGTHS
6. FOR MATERIALS, MATERIAL PROCESSING AND ASSEMBLY, SEE LATEST SHA SPECIFICATIONS.
7. FOR OFFSET BRACKET DETAIL, SEE STD. NO - 680.03
8. POSTS TO BE W6 x 9, 6'-0" LONG, SPACED AT 6'-3" C/C
9. BACK-UP PLATE (12" LENGTH OF BEAM) CENTERED ON OFFSET BRACKET BOLT TO BE PLACED WHERE NO OVERLAP OF BARRIER SPLICE OCCURS
10. AN OPTIONAL HOLE PLACED IN THE WEB AT THE BOTTOM OF THE POST MAY BE PROVIDED TO FACILITATE GALVANIZING AASHTO M-111.
11. BARRIER SECTIONS SHALL BE 12'-6" OR 25'-0" LENGTHS

8/9 TRAFFIC BARRIER
MDOT SHA STD. NO. MD-660.01
SCALE: NTS

WETLAND TABLE				FLOODPLAIN TABLE	
W356 S 68° 07' 19" E	9.30'	W376 S 19° 22' 35" E	28.19'	FP28 S 53° 38' 02" E	54.84'
W357 S 27° 52' 55" W	38.90'	W377 S 50° 56' 38" E	21.90'	FP29 S 45° 55' 49" E	96.13'
W358 S 25° 59' 38" E	28.96'	W378 S 49° 08' 34" E	48.19'	FP30 S 43? 15' 30" E	207.04'
W359 N 39° 35' 04" W	32.18'	W379 S 35° 11' 21" E	36.93'	FP21 S 43? 13' 22" E	196.10'
W360 N 16° 02' 56" W	21.21'	W380 S 54° 16' 11" E	50.58'	FP32 S 73° 27' 20" E	11.57'
W361 N 51° 11' 18" E	29.82'	W381 N 16° 05' 27" W	18.66'		
W362 S 59° 45' 32" E	24.62'	W382 N 26° 07' 35" E	4.49'		
W363 N 69° 57' 15" E	49.99'	W383 S 31° 16' 57" E	40.50'		
W364 S 34° 28' 33" W	39.81'	W384 S 55° 28' 37" E	36.49'		
W365 S 73° 14' 37" E	63.61'	W385 S 10° 45' 54" E	33.73'		
W366 S 26° 16' 55" E	39.67'	W386 S 89° 53' 14" E	16.59'		
W367 S 29° 26' 16" W	38.56'	W399 S 48° 15' 46" E	54.37'		
W368 N 61° 23' 40" E	5.13'	W400 S 56° 19' 10" E	62.42'		
W369 S 44° 35' 55" E	17.20'	W401 S 41° 11' 03" E	51.91'		
W370 S 65° 15' 43" E	11.85'	W402 S 54° 04' 17" E	26.96'		
W371 N 54° 13' 33" E	20.15'	W403 S 12° 08' 46 E	24.53'		
W372 S 31° 59' 03" W	11.91'	W404 S 41? 05' 54" E	17.55'		
W373 S 02° 30' 36" W	13.88'	W405 S 68? 46' 33" E	11.07'		
W374 S 65° 41' 00" E	30.49'				
W375 S 43° 40' 16" E	40.41'				

3/9 TABLE OF VALUES
SCALE: NTS

ATABLESASC

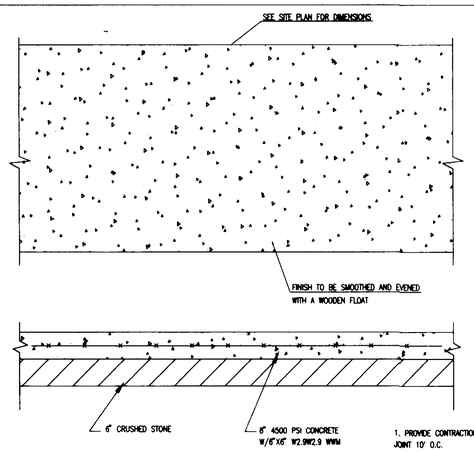

1. PROVIDE CONTRACTION JOINT 10' O.C.
2. REFER TO HCDPW STD. R11.01 FOR ADDITIONAL DETAILS NOT SHOWN.

6/9 CONCRETE PAD
SCALE: NTS

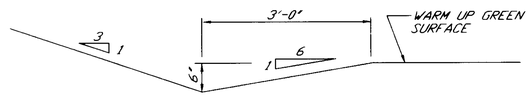

9/9 DRAINAGE SWALE
SCALE: NTS

5/17/95

STATE OF MARYLAND
JOHN V. CLAPSADDLE
No. 16956
REGISTERED PROFESSIONAL ENGINEER
JOHN V. CLAPSADDLE, P.E.
MD. NO. 16956

revisions

no.	description	date

prepared by:

The RBA ENGINEERS • ARCHITECTS • PLANNERS
Rubin Brown, AIA Gary Roberts, AIA
Rubin Brown Architects, P.A. Gary Roberts, AIA
Rubin Brown Architects, P.A. Gary Roberts, AIA
7164 COLUMBIA GATEWAY DRIVE SUITE 205
COLUMBIA, MARYLAND 21046
410/312-0966

owner: HOWARD COUNTY
3430 COURTHOUSE DRIVE
ELLICOTT CITY, MARYLAND 21043

SITE DETAILS

CENTRE 9500 PARCEL K
THE TIMBERS AT TROY GOLF COURSE
CLUBHOUSE AND MAINTENANCE FACILITIES

1 ST. ELECTION DISTRICT
1 ST. (90) TH CENSUS TRACT 6011.01
WATER CODE: 8W SEWER CODE: 8SH000
HOWARD COUNTY, MARYLAND

SCALE: AS SHOWN
DRAWN: ELB
CHECKED: JWC
PROJ. NO.: J1212
DATE: 5/16/95
SHEET: 9
OF: 20
SHEET REF: C-9

SDP-95-92

DRAWING FILE: 1212DET2

APPROVED: FOR PUBLIC WATER, PUBLIC SEWERAGE SYSTEMS, STORM DRAINAGE SYSTEMS AND PUBLIC ROADS.
HOWARD COUNTY DEPARTMENT OF PUBLIC WORKS
DIRECTOR — DATE 5/26/95
CHIEF, BUREAU OF ENGINEERING — DATE 5/26/95

APPROVED: HOWARD DEPARTMENT OF PLANNING AND ZONING
DIRECTOR — DATE 5/31/95
CHIEF, DIVISION OF LAND DEVELOPMENT AND RESEARCH — DATE 5/31/95

APPROVED: FOR PUBLIC WATER AND PUBLIC SEWERAGE SYSTEMS
HOWARD COUNTY HEALTH DEPARTMENT
COUNTY HEALTH OFFICER — DATE 5/30/95

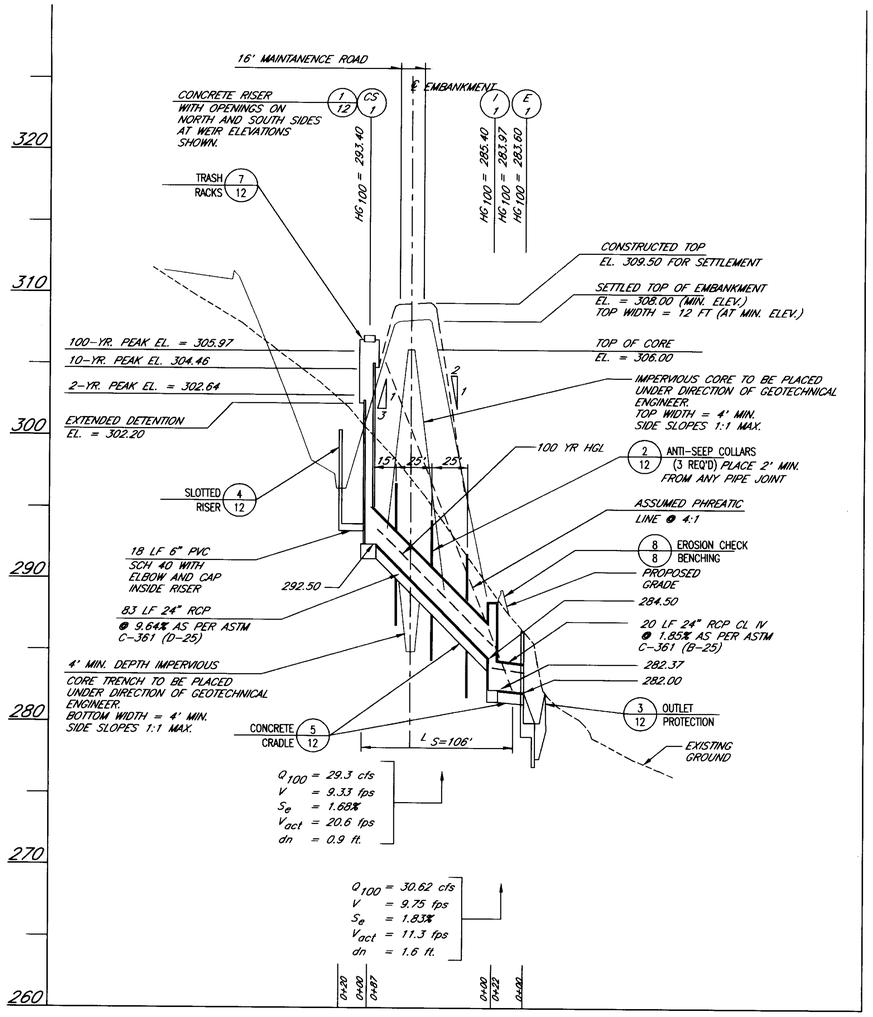

1/10 **PRINCIPAL SPILLWAY PROFILE**
SCALE: HORIZ:1"=50'VERT:1"=5'

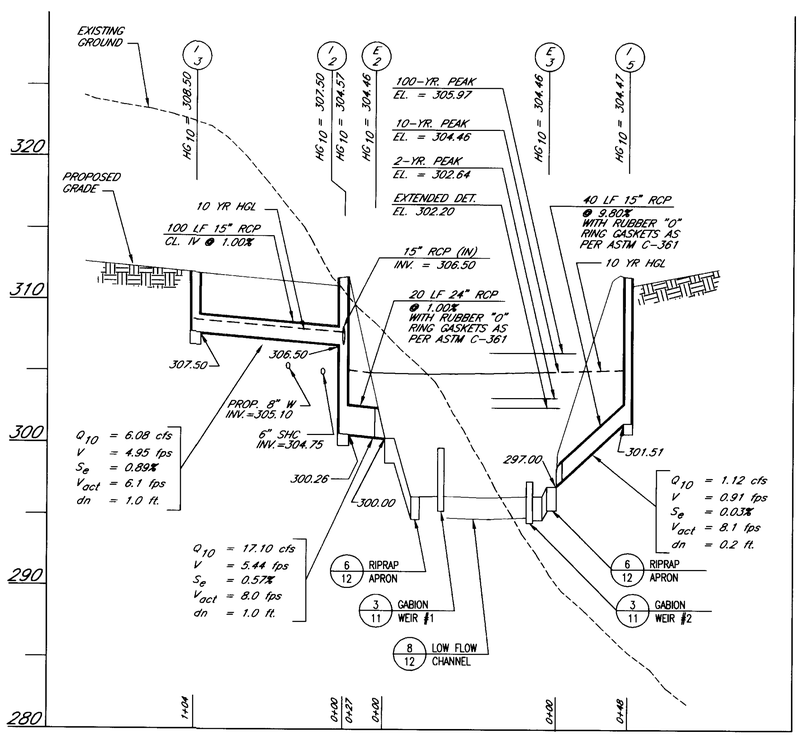

2/10 **STORM DRAIN PROFILE**
SCALE: HORIZ:1"=50'VERT:1"=5'

STRUCTURE SCHEDULE

NUMBER	TYPE	INVERT IN	INVERT OUT	TOP ELEVATION UPPER	TOP ELEVATION LOWER	SIZE	REMARKS (1)
I-1	PRECAST MANHOLE	284.50	282.37	288.50	–	4'-0"	HCDPW STD G 5.12 (2)
I-2	A-15 INLET	306.50(2)	300.26	311.22	311.22	W=3'-0"	HCDPW STD SD4.02 (3)
I-3	E INLET	–	307.50	311.62	–	2'-6"x4' 1/2"	HCDPW STD SD4.21
I-4	YARD INLET	–	312.50	317.70	–	24"	HCDPW STD SD4.14
I-5	A-5 INLET	–	301.51	311.24	311.12	W=3'-0"	HCDPW STD SD4.01
E-1	END WALL	–	282.00	288.50	–	(4)	HCDPW STD SD5.11(60")
E-2	END SECTION	–	300.00	–	–	24"	HCDPW STD SD5.51(24")
E-3	END SECTION	–	297.00	–	–	15"	HCDPW STD SD5.51(15")
CS-1	CONTROL STRUCTURE	(5)	(5)	(5)	(5)	(5)	SEE NOTE 5
FD-1	FLOOR DRAIN	–	316.30	319.30	–	(6)	SEE NOTE 6

NOTES:
1. ALL INLETS ARE HOWARD COUNTY DPW STANDARDS UNLESS NOTED OTHERWISE. INLETS MAY BE PRE-CAST.
2. PROVIDE GRATED MANHOLE LID – NEENAH R-2390, TYPE C GRATE.
3. MODIFY LENGTH TO 16'-0".
4. USE END WALL SPECIFICATIONS FOR D=60" SET INVERTS AS SHOWN ON PLANS.
5. SPECIAL DESIGN – SEE DETAILS ON SHEET 1/12
6. PROVIDE STANDARD 4 INCH FLOOR DRAIN.

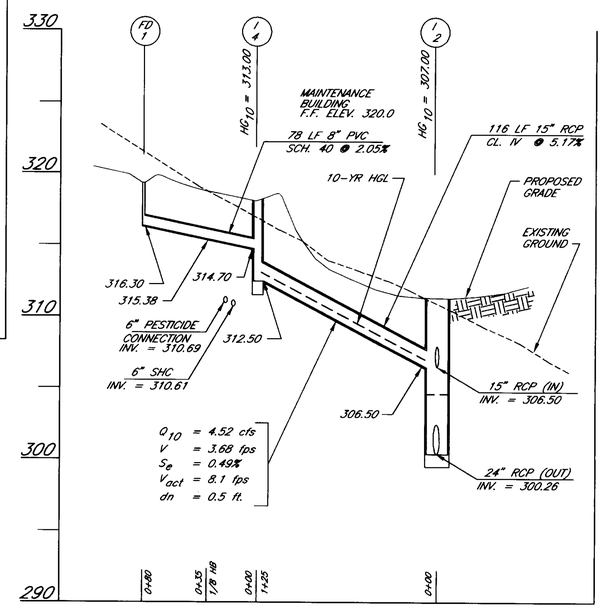

3/10 **STORM DRAIN PROFILE**
SCALE: HORIZ:1"=50'VERT:1"=5'

PIPE SCHEDULE (1)

SIZE	TYPE	LENGTH
15"	RCP CL. IV	216 LF
15"	RCP ASTM C-361	40 LF
24"	RCP CL IV	23 LF
24"	ASTM C-361 (D-25)	83 LF
24"	ASTM C-361 (B-25)	20 LF

NOTES:
1. PIPE SCHEDULE IS GIVEN FOR STORM SEWER PIPE ONLY. REFER TO PROFILES FOR ADDITIONAL PIPE QUANTITIES.
2. ALL PIPE SHALL BE LAID ON A SHAPED SUBGRADE AS PER HCDPW STD. G2.01 UNLESS NOTED OTHERWISE.

APPROVED: FOR PUBLIC WATER, PUBLIC SEWERAGE SYSTEMS, STORM DRAINAGE SYSTEMS AND PUBLIC ROADS.
HOWARD COUNTY DEPARTMENT OF PUBLIC WORKS
DIRECTOR — DATE 5/26/95
CHIEF, BUREAU OF ENGINEERING — DATE 5/26/95

APPROVED: HOWARD DEPARTMENT OF PLANNING AND ZONING
DIRECTOR — DATE 5/31/95
CHIEF, DIVISION OF LAND DEVELOPMENT AND RESEARCH — DATE 5/31/95

APPROVED: FOR PUBLIC WATER AND PUBLIC SEWERAGE SYSTEMS, HOWARD COUNTY HEALTH DEPARTMENT
COUNTY HEALTH OFFICER — DATE 5/30/95

JOHN W. CLAPSADDLE, P.E.
NO. NO. 16956
5/11/95

revisions		
no.	description	date

prepared by:
The RBA ENGINEERS • ARCHITECTS • PLANNERS
7164 COLUMBIA GATEWAY DRIVE SUITE 205
COLUMBIA, MARYLAND 21046
410/312-0966
owner: HOWARD COUNTY
3430 COURTHOUSE DRIVE
ELLICOTT CITY, MARYLAND 21043

PROFILES

CENTRE 9500, PARCEL K
THE TIMBERS AT TROY GOLF COURSE
CLUBHOUSE AND MAINTENANCE FACILITIES

1 ST. ELECTION DISTRICT — HOWARD COUNTY, MARYLAND
TAX MAP 32, CENSUS TRACT 6011.01
WATER CODE: 1104 SEWER CODE: 8610000

SCALE: AS SHOWN	
DRAWN: ELB	CHECKED: JWC
PROJ. NO.: 11212	DATE: 5/16/95
SHEET 10 OF 20	SHEET REF.: C-10

SDP-95-92
DRAWING FILE: 12121PRO

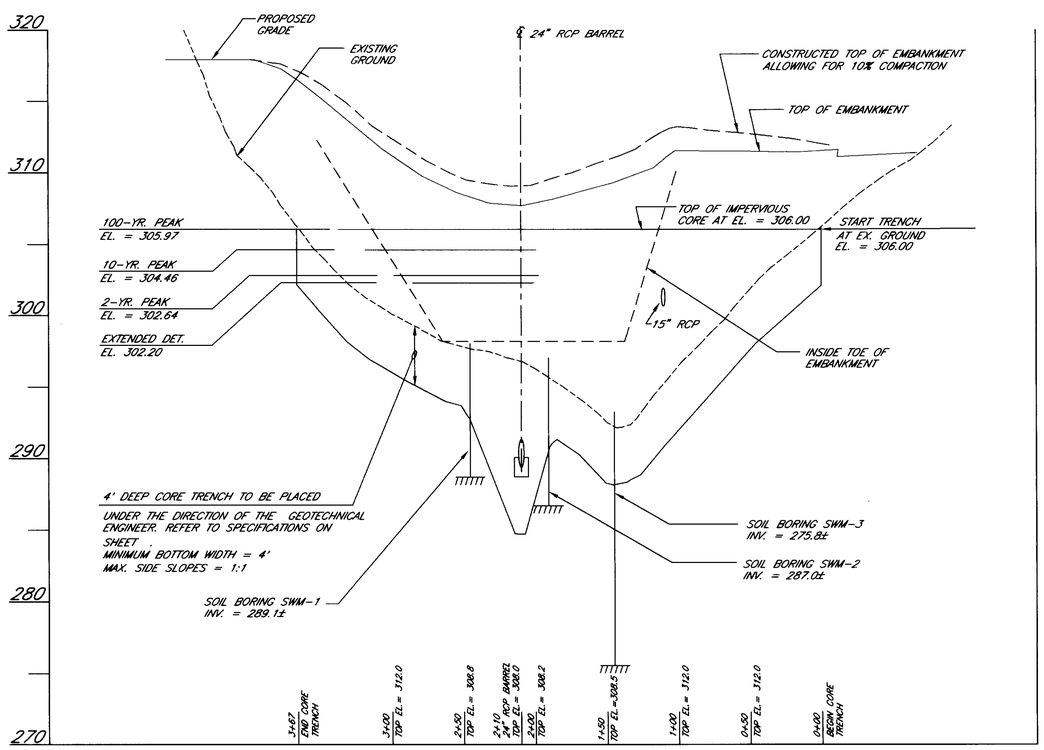

1/11 PROFILE THROUGH CENTERLINE EMBANKMENT
SCALE: HORIZ:1"=50'VERT:1"=5'

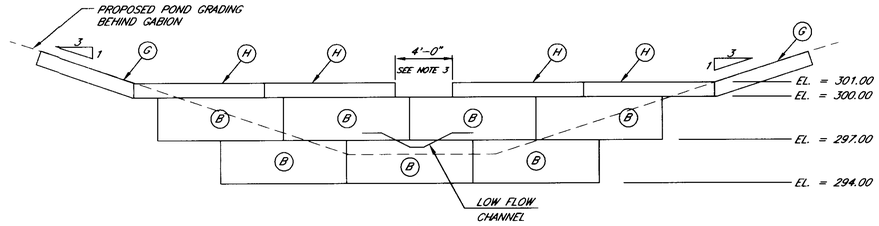

GABION #1
SECTION
(LOOKING DOWNSTREAM)

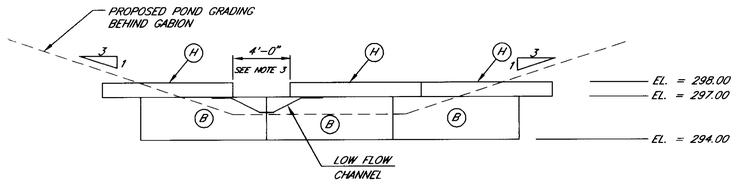

GABION #2
SECTION
(LOOKING DOWNSTREAM)

SIZE CHART

LETTER CODE	LENGTH (ft)	WIDTH (ft)	HEIGHT (ft)	QUANTITY
(B)	9	3	3	10
(H)	9	3	1	7
(G)	6	3	1	2

NOTES:
1. GABIONS SUPPLIED BY MACCAFERRI GABIONS INC. 10303 GOVERNOR LANE BLVD. WILLIAMSPORT, MD. 21795-9602 PHONE: (301) 223-6910
2. ALL GABIONS SHALL BE INSTALLED AS PER MANUFACTURESS SPECIFICATIONS.
3. POSITION WEIR OPENING TO BE CENTERED OVER LOW FLOW CHANNEL.

3/11 GABION WEIRS
SCALE: NTS

APPROVED: FOR PUBLIC WATER, PUBLIC SEWERAGE SYSTEMS, STORM DRAINAGE SYSTEMS AND PUBLIC ROADS. HOWARD COUNTY, DEPARTMENT OF PUBLIC WORKS

DIRECTOR — DATE 5/26/95

Chief, Bureau of Engineering — DATE 5/26/95

APPROVED: HOWARD DEPARTMENT OF PLANNING AND ZONING

DIRECTOR — DATE 5/31/95

Chief, Division of Land Development and Research — DATE 5/31/95

APPROVED: FOR PUBLIC WATER AND PUBLIC SEWERAGE SYSTEMS. HOWARD COUNTY HEALTH DEPARTMENT

COUNTY HEALTH OFFICER — DATE 5/30/95

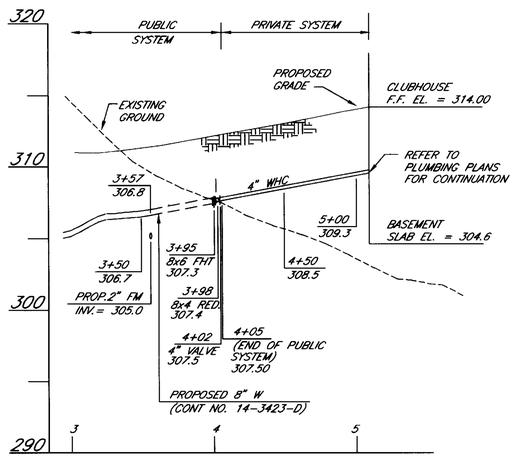

2/11 CLUBHOUSE BUILDING WHC PROFILE
SCALE: HORIZ:1"=50'VERT:1"=5'

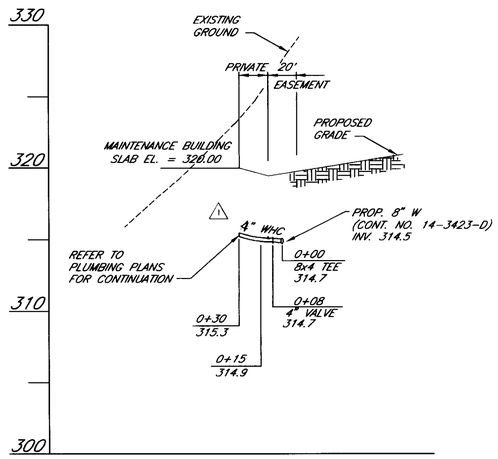

4/11 MAINTENANCE BUILDING WHC PROFILE
SCALE: HORIZ:1"=50'VERT:1"=5'

5/11/95

revisions			
no.	description	date	
1	MAINTENANCE BLDG. WHC SIZE	6/95	

JOHN W. CLAPSADDLE P.E. NO. NO. 16956

prepared by: The RBA ENGINEERS • ARCHITECTS • PLANNERS
7164 COLUMBIA GATEWAY DRIVE SUITE 205
COLUMBIA, MARYLAND 21046
410/312-0966

owner: HOWARD COUNTY
3430 COURTHOUSE DRIVE
ELLICOTT CITY, MARYLAND 21043

PROFILES

CENTRE 9500, PARCEL K
THE TIMBERS AT TROY GOLF COURSE
CLUBHOUSE AND MAINTENANCE FACILITIES

1ST ELECTION DISTRICT — HOWARD COUNTY, MARYLAND
TAX MAP 37, GRIDS 12, TRACT 6A1181
WATER CODE: 1104 SEWER CODE: 2610000

SCALE	AS SHOWN
DRAWN	ELB
CHECKED	JWC
PROJ. NO.	J1212
DATE	5/16/95
SHEET	11
OF	20
SHEET REF.	C-11

SDP-95-92

DRAWING FILE: 1212PROF

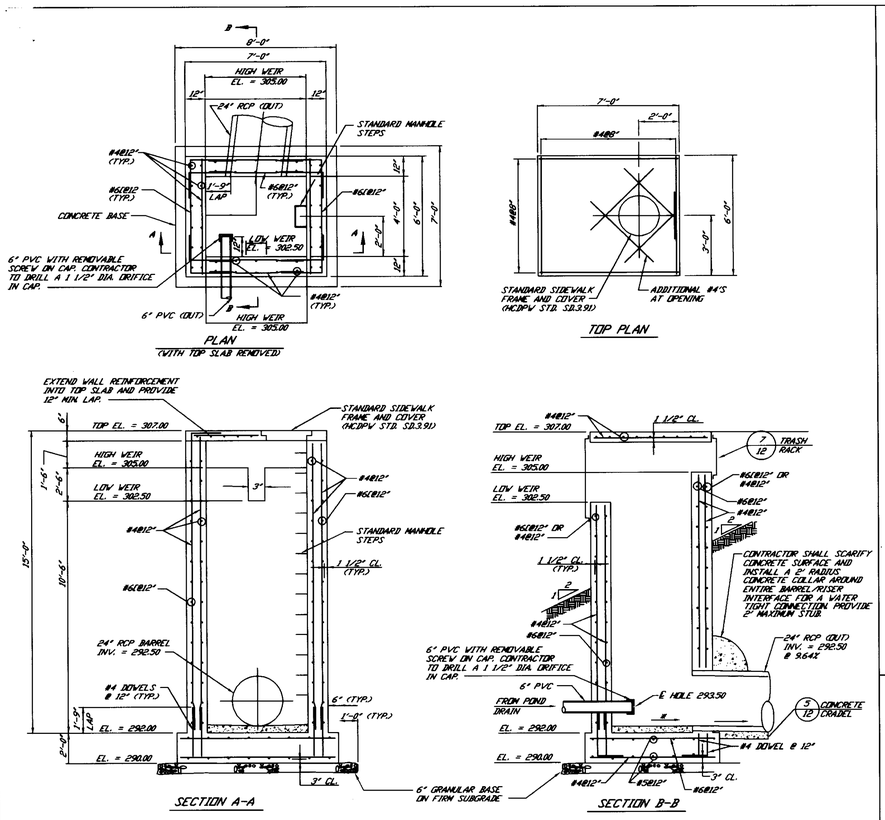

1 / 12 **CONTROL STRUCTURE CS-1**
SCALE: NO SCALE

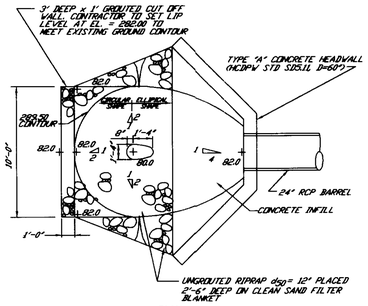

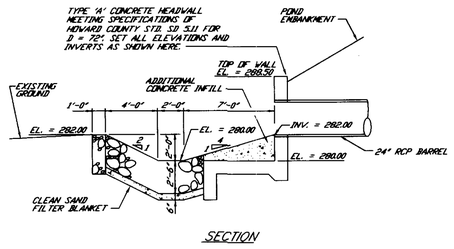

3 / 12 **OUTLET PROTECTION (SCOUR HOLE)**
SCALE: NO SCALE

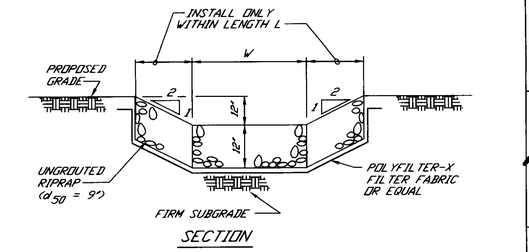

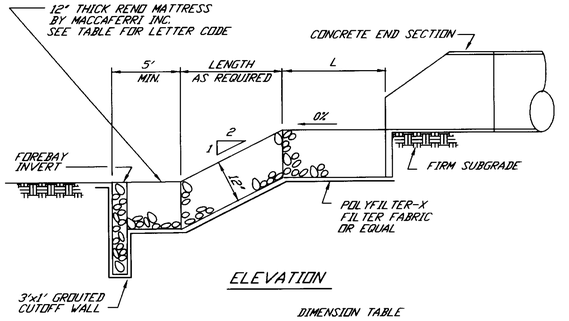

DIMENSION TABLE

STRUCTURE	W	L	GABION LETTER CODE
E-2	6'-0"	8'-0"	Z (TWO REQ'D)
E-3	6'-0"	6'-0"	Z (ONE REQ'D)

6 / 12 **RIPRAP APRON**
SCALE: NO SCALE

APPROVED: FOR PUBLIC WATER PUBLIC SEWERAGE SYSTEMS STORM DRAINAGE SYSTEMS AND PUBLIC ROADS. HOWARD COUNTY DEPARTMENT OF PUBLIC WORKS
DIRECTOR — DATE 5/26/95
CHIEF, BUREAU OF ENGINEERING — DATE 5/26/95

APPROVED: HOWARD DEPARTMENT OF PLANNING AND ZONING
DIRECTOR — DATE 5/31/95
CHIEF, DIVISION OF LAND DEVELOPMENT AND RESEARCH — DATE 5/31/95

APPROVED: FOR PUBLIC WATER AND PUBLIC SEWERAGE SYSTEMS. HOWARD COUNTY HEALTH DEPARTMENT
COUNTY HEALTH OFFICER — DATE 5/30/95

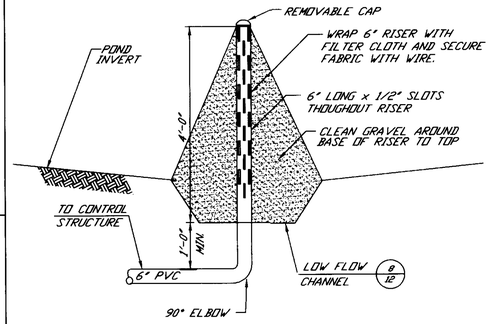

4 / 12 **SLOTTED RISER**
SCALE: NO SCALE

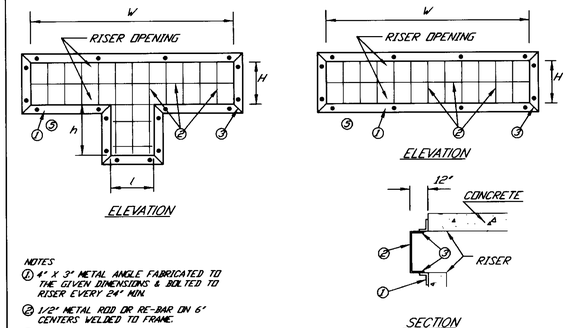

NOTES:
1. 4" X 3" METAL ANGLE FABRICATED TO THE GIVEN DIMENSIONS & BOLTED TO RISER EVERY 24" MIN.
2. 1/2" METAL ROD OR RE-BAR ON 6" CENTERS" WELDED TO FRAME.
3. WELDED
4. ALL MATERIAL TO BE GALVANIZED AFTER FABRICATION AND PAINTED BATTLESHIP GREY.
5. CENTER RACK HORIZONTALLY & VERTICALLY OVER OPENINGS.
6. DIMENSIONS ARE INSIDE OF FRAME DIMENSIONS.

DIMENSION TABLE (6)

RISER FACE	W	H	l	h
NORTH (FACING POND)	5'-2"	1'-8"	1'-4"	2'-7"
SOUTH (FACING DAM)	5'-2"	1'-8"	-	-

7 / 12 **TRASH RACK**
SCALE: NO SCALE

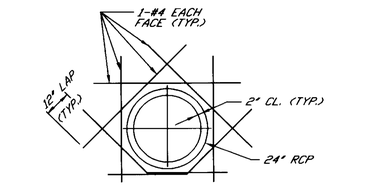

9 / 12 **ADDITIONAL REINFORCING • 24" RCP**
SCALE: NO SCALE

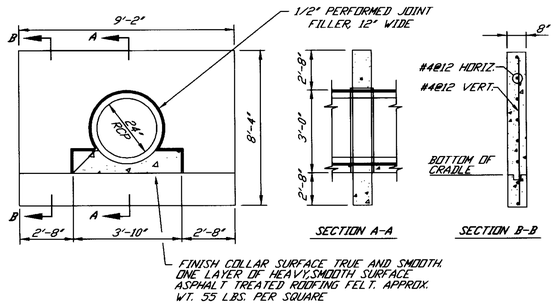

NOTES:
1.) ASPHALT JOINT FILLER MATERIAL SHALL BE PLACED BETWEEN ALL CONCRETE SURFACES EXCEPT BETWEEN PIPE AND CRADLE.
2.) COLLAR SHALL BE PLACED 2' MIN. FROM ANY PIPE JOINT.

2 / 12 **CONCRETE ANTI-SEEP COLLAR**
(THREE REQUIRED)
SCALE: NO SCALE

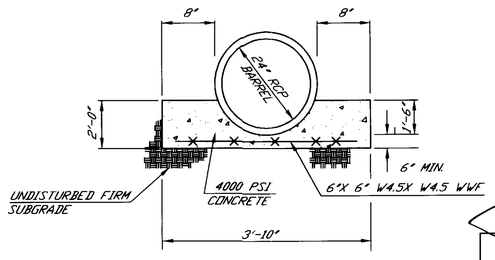

5 / 12 **CONCRETE CRADLE (TR46-A2)**
SCALE: NO SCALE

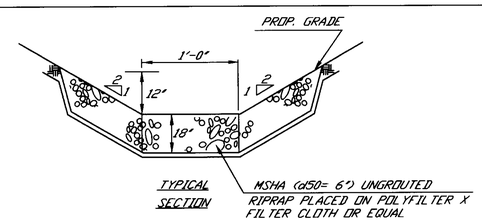

8 / 12 **LOW FLOW CHANNEL**
SCALE: NO SCALE

STATE OF MARYLAND — JOHN WINFRED CLAPSADDLE — No. 16956 — REGISTERED PROFESSIONAL ENGINEER
JOHN W. CLAPSADDLE, P.E.
MD. NO. 16956

revisions		
no.	description	date

prepared by:
The RBA ENGINEERS • ARCHITECTS • PLANNERS
Elliott Berry, AICP, Leed AP
Jon Clapsaddle, P.E., Leed AP
Norma Rollins, LEED AP, Co. & Site Dev.
7164 COLUMBIA GATEWAY DRIVE SUITE 205
COLUMBIA, MARYLAND 21046
410/312-0966

owner: HOWARD COUNTY
3430 COURTHOUSE DRIVE
ELLICOTT CITY, MARYLAND 21043

STORMWATER DETAILS

CENTRE 9500, PARCEL K
THE TIMBERS AT TROY GOLF COURSE
CLUBHOUSE AND MAINTENANCE FACILITIES

1 ST. ELECTION DISTRICT — HOWARD COUNTY, MARYLAND
TAX MAP 32, CENSUS TRACT 6011.01
WATER CODE: 2AM SEWER CODE: 2AJ0000

SCALE	
AS SHOWN	
DRAWN: ELB	CHECKED: JWC
PROJ. NO.: J1212	DATE: 5/16/95
SHEET 12 OF 20	SHEET REF.: C-12

DRAWING FILE: 1212STWDE

SDP-95-92

STORMWATER MANAGEMENT POND CONSTRUCTION SPECIFICATIONS

THESE SPECIFICATIONS ARE APPROPRIATE TO ALL PONDS WITHIN THE SCOPE OF THE STANDARD FOR PRACTICE MD-378. ALL REFERENCES TO ASTM AND AASHTO SPECIFICATIONS APPLY TO THE MOST RECENT VERSION.

SITE PREPARATION

AREAS DESIGNATED FOR BORROW AREAS, EMBANKMENT, AND STRUCTURAL WORKS SHALL BE CLEARED, GRUBBED AND STRIPPED OF TOPSOIL. ALL TREES, VEGETATION, ROOTS AND OTHER OBJECTIONABLE MATERIALS SHALL BE REMOVED. CHANNEL BANKS AND SHARP BREAKS SHALL BE SLOPED TO NO STEEPER THAN 1:1.

AREAS TO BE COVERED BY THE RESERVOIR WILL BE CLEARED OF ALL TREES, BRUSH, LOGS, FENCES, RUBBISH AND OTHER OBJECTIONABLE MATERIALS UNLESS OTHERWISE DESIGNATED ON THE PLANS. TREES, BRUSH AND STUMPS SHALL BE CUT APPROXIMATELY LEVEL WITH THE GROUND SURFACE. FOR DRY STORMWATER MANAGEMENT PONDS, A MINIMUM OF A 50 FOOT RADIUS AROUND THE INLET STRUCTURE SHALL BE CLEARED.

ALL CLEARED AND GRUBBED MATERIAL SHALL BE DISPOSED OF OUTSIDE AND BELOW THE LIMITS OF THE DAM AND RESERVOIR AS DIRECTED BY THE OWNER OR HIS REPRESENTATIVE. WHEN SPECIFIED, A SUFFICIENT QUANTITY OF TOPSOIL WILL BE STOCKPILED IN A SUITABLE LOCATION FOR USE ON THE EMBANKMENT AND OTHER DESIGNATED AREAS.

EARTH FILL

MATERIAL- THE FILL MATERIAL SHALL BE TAKEN FROM APPROVED DESIGNATED BORROW AREAS. IT SHALL BE FREE OF ROOTS, STUMPS, WOOD, RUBBISH, STONES GREATER THAN 6", FROZEN OR OTHER OBJECTIONABLE MATERIALS. FILL MATERIAL FOR THE CENTER OF THE EMBANKMENT AND CUT OFF TRENCH SHALL CONFORM TO UNIFIED SOIL CLASSIFICATION GC, SC, CH, OR CL. CONSIDERATION MAY BE GIVEN TO THE USE OF OTHER MATERIALS IN THE EMBANKMENT IF DESIGN AND CONSTRUCTION ARE SUPERVISED BY A GEOTECHNICAL ENGINEER.

PLACEMENT- AREAS ON WHICH FILL IS TO BE PLACED SHALL BE SCARIFIED PRIOR TO PLACEMENT OF FILL. FILL MATERIALS SHALL BE PLACED IN MAXIMUM 8 INCH THICK (BEFORE COMPACTION) LAYERS WHICH ARE TO BE CONTINUOUS OVER THE ENTIRE LENGTH OF THE FILL. THE MOST PERMEABLE BORROW MATERIAL SHALL BE PLACED IN THE DOWNSTREAM PORTIONS OF THE EMBANKMENT. THE PRINCIPAL SPILLWAY MUST BE INSTALLED CONCURRENTLY WITH FILL PLACEMENT AND NOT EXCAVATED INTO THE EMBANKMENT.

COMPACTION- THE MOVEMENT OF THE HAULING AND SPREADING EQUIPMENT OVER THE FILL SHALL BE CONTROLLED SO THAT THE ENTIRE SURFACE OF EACH LIFT SHALL BE TRAVERSED BY NOT LESS THAN ONE TREAD TRACK OF THE EQUIPMENT OR COMPACTION SHALL BE ACHIEVED BY A MINIMUM OF FOUR COMPLETE PASSES OF A SHEEPSFOOT, RUBBER TIRED OR VIBRATORY ROLLER. FILL MATERIAL SHALL CONTAIN SUFFICIENT MOISTURE SUCH THAT THE REQUIRED DEGREE OF COMPACTION WILL BE OBTAINED WITH THE EQUIPMENT USED. THE FILL MATERIALS SHALL CONTAIN SUFFICIENT MOISTURE SO THAT IF FORMED INTO A BALL, IT WILL NOT CRUMBLE YET NOT BE SO WET THAT WATER CAN BE SQUEEZED OUT.

WHERE A MINIMUM REQUIRED DENSITY IS SPECIFIED, IT SHALL NOT BE LESS THAN 95% OF MAXIMUM DRY DENSITY WITH A MOISTURE CONTENT WITHIN ±2% OF THE OPTIMUM. EACH LAYER OF FILL SHALL BE COMPACTED AS NECESSARY TO OBTAIN THAT DENSITY, AND IS TO BE CERTIFIED BY THE ENGINEER AT THE TIME OF CONSTRUCTION. ALL COMPACTION IS TO BE DETERMINED BY AASHTO METHOD T-99.

CUT OFF TRENCH- THE CUTOFF TRENCH SHALL BE EXCAVATED INTO IMPERVIOUS MATERIAL ALONG OR PARALLEL TO THE CENTERLINE OF THE EMBANKMENT AS SHOWN ON THE PLANS. THE BOTTOM WIDTH OF THE TRENCH SHALL BE GOVERNED BY THE EQUIPMENT USED FOR EXCAVATION, WITH THE MINIMUM WIDTH BEING FOUR FEET. THE DEPTH SHALL BE AT LEAST FOUR FEET BELOW EXISTING GRADE OR AS SHOWN ON THE PLANS. THE SIDE SLOPES OF THE TRENCH SHALL BE 1 TO 1 OR FLATTER. THE BACKFILL SHALL BE COMPACTED WITH CONSTRUCTION EQUIPMENT, ROLLERS, OR HAND TAMPERS TO ASSURE MAXIMUM DENSITY AND MINIMUM PERMEABILITY.

STRUCTURE BACKFILL

BACKFILL ADJACENT TO PIPES OR STRUCTURES SHALL BE OF THE TYPE AND QUALITY CONFORMING TO THAT SPECIFIED FOR THE ADJOINING FILL MATERIAL. THE FILL SHALL BE PLACED IN HORIZONTAL LAYERS NOT TO EXCEED FOUR INCHES IN THICKNESS AND COMPACTED BY HAND TAMPERS OR OTHER MANUALLY DIRECTED COMPACTION EQUIPMENT. THE MATERIAL NEEDS TO FILL COMPLETELY ALL SPACES UNDER AND ADJACENT TO THE PIPE. AT NO TIME DURING THE BACKFILLING OPERATION SHALL DRIVEN EQUIPMENT BE ALLOWED TO OPERATE CLOSER THAN FOUR FEET, MEASURED HORIZONTALLY, TO ANY PART OF A STRUCTURE. UNDER NO CIRCUMSTANCES SHALL EQUIPMENT BE DRIVEN OVER ANY PART OF A CONCRETE STRUCTURE OR PIPE, UNLESS THERE IS A COMPACTED FILL OF 24" OR GREATER OVER THE STRUCTURE OR PIPE.

PIPE CONDUITS

ALL PIPES SHALL BE CIRCULAR IN CROSS SECTION.

CORRUGATED METAL PIPE- ALL OF THE FOLLOWING CRITERIA SHALL APPLY FOR CORRUGATED METAL PIPE:

1. MATERIALS - (STEEL PIPE) - THIS PIPE AND ITS APPURTENANCES SHALL BE GALVANIZED AND FULLY BITUMINOUS COATED AND SHALL CONFORM TO THE REQUIREMENTS OF AASHTO SPECIFICATION M-190 TYPE A WITH WATERTIGHT COUPLING BANDS. ANY BITUMINOUS COATING DAMAGED OR OTHERWISE REMOVED SHALL BE REPLACED WITH COLD APPLIED BITUMINOUS COATING COMPOUND. STEEL PIPES WITH POLYMERIC COATINGS SHALL HAVE A MINIMUM COATING THICKNESS OF 0.01 INCH (10 MIL) ON BOTH SIDES OF THE PIPE. THE FOLLOWING COATINGS OR AN APPROVED EQUAL MAY BE USED: NEXON, PLASTI-COTE, BLAC-KLAD, AND BETH-CU-LOY. COATED CORRUGATED STEEL PIPE SHALL MEET THE REQUIREMENTS OF AASHTO M-245 AND M-246.

   MATERIALS - (ALUMINUM COATED STEEL PIPE) - THIS PIPE AND ITS APPURTENANCES SHALL CONFORM TO THE REQUIREMENTS OF AASHTO SPECIFICATION M-274 WITH WATERTIGHT COUPLING BANDS OR FLANGES. ANY ALUMINUM COATING DAMAGED OR OTHERWISE REMOVED SHALL BE REPLACED WITH COLD APPLIED BITUMINOUS COATING COMPOUND.

   MATERIALS - (ALUMINUM PIPE) - THIS PIPE AND ITS APPURTENANCES SHALL CONFORM TO THE REQUIREMENTS OF AASHTO SPECIFICATION M-196 OR M-211 WITH WATERTIGHT COUPLING BANDS OR FLANGES. ALUMINUM SURFACES THAT ARE TO BE IN CONTACT WITH CONCRETE SHALL BE PAINTED WITH ONE COAT OF ZINC CHROMATE PRIMER. HOT DIP GALVANIZED BOLTS MAY BE USED FOR CONNECTIONS. THE PH OF THE SURROUNDING SOILS SHALL BE BETWEEN 4 AND 9.

2. COUPLING BANDS, ANTI-SEEP COLLARS, END SECTIONS, ETC., MUST BE COMPOSED OF THE SAME MATERIAL AS THE PIPE. METALS MUST BE INSULATED FROM DISSIMILAR MATERIALS WITH USE OF RUBBER OR PLASTIC INSULATING MATERIALS AT 24 MILS IN THICKNESS.

3. CONNECTIONS - ALL CONNECTIONS WITH PIPES MUST BE COMPLETELY WATERTIGHT. THE DRAIN PIPE OR BARREL CONNECTION TO THE RISER SHALL BE WELDED ALL AROUND WHEN THE PIPE AND RISER ARE METAL. ANTI-SEEP COLLARS SHALL BE CONNECTED TO THE PIPE IN SUCH A MANNER AS TO BE COMPLETELY WATERTIGHT. DIMPLE BANDS ARE NOT CONSIDERED TO BE WATERTIGHT.

   ALL CONNECTIONS SHALL USE A RUBBER OR NEOPRENE GASKET WHEN JOINING PIPE SECTIONS. THE END OF EACH PIPE SHALL BE RE-ROLLED AN ADEQUATE NUMBER OF CORRUGATIONS TO ACCOMMODATE THE BAND WIDTH. THE FOLLOWING TYPE CONNECTIONS ARE ACCEPTABLE FOR PIPES LESS THAN 24" IN DIAMETER: FLANGES ON BOTH ENDS OF THE PIPE, A 12" WIDE STANDARD LAP TYPE BANK WITH 12" WIDTH BY 3/8" THICK CLOSED CELL CIRCULAR NEOPRENE GASKET; AND A 12" WIDE HUGGER TYPE BAND WITH O-RING GASKETS HAVING A MINIMUM DIAMETER OF 1/2" GREATER THAN THE CORRUGATION DEPTH. PIPES 24" IN DIAMETER AND LARGER SHALL BE CONNECTED BY A 24" LONG ANNULAR CORRUGATED BAND USING RODS AND LUGS. A 12" WIDE BY 3/8" THICK CLOSED CELL CIRCULAR NEOPRENE GASKET WILL BE INSTALLED ON THE END OF EACH PIPE FOR A TOTAL OF 24"

   HELICALLY CORRUGATED PIPE SHALL HAVE EITHER CONTINUOUSLY WELDED SEAMS OR HAVE LOCK SEAMS WITH INTERNAL CAULKING OR A NEOPRENE BEAD.

4. BEDDING - THE PIPE SHALL BE FIRMLY AND UNIFORMLY BEDDED THROUGHOUT ITS ENTIRE LENGTH. WHERE ROCK OR SOFT, SPONGY OR OTHER UNSTABLE SOIL IS ENCOUNTERED, ALL SUCH MATERIAL SHALL BE REMOVED AND REPLACED WITH SUITABLE EARTH COMPACTED TO PROVIDE ADEQUATE SUPPORT.

5. BACKFILLING SHALL CONFORM TO "STRUCTURE BACKFILL."

6. OTHER DETAILS (ANTI-SEEP COLLARS, VALVES, ETC.) SHALL BE AS SHOWN ON THE DRAWINGS.

REINFORCED CONCRETE PIPE- ALL OF THE FOLLOWING CRITERIA SHALL APPLY FOR REINFORCED CONCRETE PIPE:

1. MATERIALS - REINFORCED CONCRETE PIPE SHALL HAVE BELL AND SPIGOT JOINTS WITH RUBBER GASKETS AND SHALL EQUAL OR EXCEED ASTM DESIGNATION C-361.

2. BEDDING - ALL REINFORCED CONCRETE PIPE CONDUITS SHALL BE LAID IN A CONCRETE BEDDING FOR THEIR ENTIRE LENGTH. THIS BEDDING SHALL CONSIST OF HIGH SLUMP CONCRETE PLACED UNDER THE PIPE AND UP THE SIDES OF THE PIPE AT LEAST 10% OF ITS OUTSIDE DIAMETER WITH A MINIMUM THICKNESS OF 3 INCHES, OR AS SHOWN ON THE DRAWINGS.

3. LAYING PIPE - BELL AND SPIGOT PIPE SHALL BE PLACED WITH THE BELL END UPSTREAM. JOINTS SHALL BE MADE IN ACCORDANCE WITH RECOMMENDATIONS OF THE MANUFACTURER OF THE MATERIAL. AFTER THE JOINTS ARE SEALED FOR THE ENTIRE LINE, THE BEDDING SHALL BE PLACED SO THAT ALL SPACES UNDER THE PIPE ARE FILLED. CARE SHALL BE EXERCISED TO PREVENT ANY DEVIATION FROM THE ORIGINAL LINE AND GRADE OF THE PIPE. THE FIRST JOINT MUST BE LOCATED WITHIN 2 FEET FROM THE RISER.

4. BACKFILLING SHALL CONFORM TO STRUCTURE BACKFILL.

5. OTHER DETAILS (ANTI-SEEP COLLARS, VALVES, ETC.) SHALL BE AS SHOWN ON THE DRAWINGS.

POLYVINYL CHLORIDE (PVC) PIPE- ALL OF THE FOLLOWING CRITERIA SHALL APPLY FOR POLYVINYL CHLORIDE (PVC) PIPE:

1. MATERIALS - PVC PIPE SHALL BE PVC-1120 OR PVC-1220 CONFORMING TO ASTM D-1785 OR ASTM D-2241.

2. JOINTS AND CONNECTIONS TO ANTI-SEEP COLLARS SHALL BE COMPLETELY WATERTIGHT

3. BEDDING - THE PIPE SHALL BE FIRMLY AND UNIFORMLY BEDDED THROUGHOUT ITS ENTIRE LENGTH. WHERE ROCK OR SOFT, SPONGY OR OTHER UNSTABLE SOIL IS ENCOUNTERED, ALL SUCH MATERIALS SHALL BE REMOVED AND REPLACED WITH SUITABLE EARTH COMPACTED TO PROVIDE ADEQUATE SUPPORT.

4. BACKFILLING SHALL CONFORM TO "STRUCTURE BACKFILL"."

5. OTHER DETAILS (ANTI-SEEP COLLARS, VALVES, ETC.) SHALL BE AS SHOWN ON THE DRAWINGS.

CONCRETE

CONCRETE SHALL MEET THE REQUIREMENTS OF MARYLAND DEPARTMENT OF TRANSPORTATION, STATE HIGHWAY ADMINISTRATION STANDARD SPECIFICATIONS FOR CONSTRUCTION AND MATERIALS, SECTION 902, MIX NO. 3.

ROCK RIP-RAP

ROCK RIP-RAP SHALL MEET THE REQUIREMENTS OF MARYLAND DEPARTMENT OF TRANSPORTATION, STATE HIGHWAY ADMINISTRATION, STANDARD SPECIFICATIONS FOR CONSTRUCTION AND MATERIALS, SECTION 901.02.

THE RIP-RAP SHALL BE PLACED TO THE REQUIRED THICKNESS IN ONE OPERATION. THE ROCK SHALL BE DELIVERED AND PLACED IN A MANNER THAT WILL INSURE THE RIP-RAP IN PLACE SHALL BE REASONABLY HOMOGENEOUS WITH THE LARGER ROCKS UNIFORMLY DISTRIBUTED AND FIRMLY IN CONTACT ONE TO ANOTHER WITH THE SMALLER ROCKS FILLING THE VOIDS BETWEEN THE LARGER ROCKS. FILTER CLOTH SHALL BE PLACED UNDER ALL RIP-RAP AND SHALL MEET THE REQUIREMENTS OF MARYLAND DEPARTMENT OF TRANSPORTATION, STATE HIGHWAY ADMINISTRATION STANDARD SPECIFICATIONS FOR CONSTRUCTION AND MATERIALS, SECTION 311.

CARE OF WATER DURING CONSTRUCTION

ALL WORK ON PERMANENT STRUCTURES SHALL BE CARRIED OUT IN AREAS FREE FROM WATER. THE CONTRACTOR SHALL CONSTRUCT AND MAINTAIN ALL TEMPORARY DIKES, LEVEES, COFFERDAMS, DRAINAGE CHANNELS, AND STREAM DIVERSIONS NECESSARY TO PROTECT THE AREAS TO BE OCCUPIED BY THE PERMANENT WORKS. THE CONTRACTOR SHALL ALSO FURNISH, INSTALL, OPERATE, AND MAINTAIN ALL NECESSARY PUMPING AND OTHER EQUIPMENT REQUIRED FOR REMOVAL OF WATER FROM THE VARIOUS PARTS OF THE WORK AND FOR MAINTAINING THE EXCAVATIONS, FOUNDATION, AND OTHER PARTS OF THE WORK FREE FROM WATER AS REQUIRED OR DIRECTED BY THE ENGINEER FOR CONSTRUCTING EACH PART OF THE WORK. AFTER HAVING SERVED THEIR PURPOSE, ALL TEMPORARY PROTECTIVE WORKS SHALL BE REMOVED OR LEVELED AND GRADED TO THE EXTENT REQUIRED TO PREVENT OBSTRUCTION IN ANY DEGREE WHATSOEVER OF THE FLOW OF WATER TO THE SPILLWAY OR OUTLET WORKS AND SO AS NOT TO INTERFERE IN ANY WAY WITH THE OPERATION OR MAINTENANCE OF THE STRUCTURE. STREAM DIVERSIONS SHALL BE MAINTAINED UNTIL THE FULL FLOW CAN BE PASSED THROUGH THE PERMANENT WORKS. THE REMOVAL OF WATER FROM THE REQUIRED EXCAVATION AND THE FOUNDATION SHALL BE ACCOMPLISHED IN A MANNER AND TO THE EXTENT THAT WILL MAINTAIN STABILITY OF THE EXCAVATED SLOPES AND BOTTOM OF REQUIRED EXCAVATIONS AND WILL ALLOW SATISFACTORY PERFORMANCE OF ALL CONSTRUCTION OPERATIONS. DURING THE PLACING AND COMPACTING OF MATERIAL IN REQUIRED EXCAVATIONS, THE WATER LEVEL AT THE LOCATIONS BEING REFILLED SHALL BE MAINTAINED BELOW THE BOTTOM OF THE EXCAVATION AT SUCH LOCATIONS WHICH MAY REQUIRE DRAINING THE WATER TO SUMPS FROM WHICH THE WATER SHALL BE PUMPED.

STABILIZATION

ALL BORROW AREAS SHALL BE GRADED TO PROVIDE PROPER DRAINAGE AND LEFT IN A SIGHTLY CONDITION. ALL EXPOSED SURFACES OF THE EMBANKMENT, SPILLWAY, SPOIL AND BORROW AREAS, AND BERMS SHALL BE STABILIZED BY SEEDING, LIMING, FERTILIZING AND MULCHING IN ACCORDANCE WITH THE MARYLAND SOIL CONSERVATION SERVICE STANDARDS AND SPECIFICATIONS FOR CRITICAL AREA PLANTING (MD-342) OR AS SHOWN ON THE ACCOMPANYING DRAWINGS.

EROSION AND SEDIMENT CONTROL

CONSTRUCTION OPERATIONS WILL BE CARRIED OUT IN SUCH A MANNER THAT EROSION WILL BE CONTROLLED AND WATER AND AIR POLLUTION MINIMIZED. STATE AND LOCAL LAWS CONCERNING POLLUTION ABATEMENT WILL BE FOLLOWED. CONSTRUCTION PLANS SHALL DETAIL EROSION AND SEDIMENT CONTROL MEASURES TO BE EMPLOYED DURING THE CONSTRUCTION PROCESS.

APPROVED: FOR PUBLIC WATER, PUBLIC SEWERAGE SYSTEMS, STORM DRAINAGE SYSTEMS AND PUBLIC ROADS.
HOWARD COUNTY DEPARTMENT OF PUBLIC WORKS

James M. Irvin — DIRECTOR — 5/26/95 DATE

Elizabeth Rudeisa Calea — act CHIEF, BUREAU OF ENGINEERING — 5/26/95 DATE

APPROVED: HOWARD DEPARTMENT OF PLANNING AND ZONING

Joseph Rutter — DIRECTOR — 5/31/95 DATE

Richard B. Good — CHIEF, DIVISION OF LAND DEVELOPMENT AND RESEARCH — 5/31/95 DATE

APPROVED: FOR PUBLIC WATER AND PUBLIC SEWERAGE SYSTEMS.
HOWARD COUNTY HEALTH DEPARTMENT

Joyce M Boyd per — COUNTY HEALTH OFFICER — 5/30/95 DATE

* REFER TO GEOTECHNICAL REPORT BY MKM ENGINEERS, INC. DATED MARCH 1995 FOR ADDITIONAL REQUIREMENTS CONCERNING CONSTRUCTION OF STORMWATER MANAGEMENT POND EMBANKMENT.

SOIL BORING LOGS

MKM — DRILLING LOG

HOLE NO.: SWM-1 (1/1) ELEV.: 304.1 STA.: -

Client: Rainmaker/Kilian L.L.C.
Project: Howard County Golf Course — Project Number: 950201
Location: Howard County, Maryalnd

Date: Started 02/24/95 Completed 02/24/95 Driller John Shindledecker
Sampler: Dia 2" ins. Type SS Hammer Wt. 140 lbs. Fall 30 ins.
Casing: Dia 3 1/4" ins. Type HSA Hammer Wt. ___ lbs. Fall ___ ins.
Water/Mud used in drilling Yes ___ No X Number ___ Other ___

Elev.	Depth (Ft.)	Material Description	Sample No.	Sample Depth	Blows/0.5'	N	Rec (Ft.)
303.6	0.5	TOP SOIL					
	2.0	Brown SANDY SILT damp. (ML)					
301.1	3.0						
	4.0	Dense to very dense reddish brown and gray CLAYEY SAND (SC)	1	3.5	05-11-20	31	1.0
	6.0						
	8.0		2	8.5	10-18-25	43	0.8
	10.0						
	12.0						
	14.0		3	13.5	18-26-47	50+	0.9
289.1	15.0	TERMINATION DEPTH 15.0'					

Water Depth: During Drilling - Ft.; Upon Compl. - Ft.; - Hrs. after Compl.

MKM — DRILLING LOG

HOLE NO.: SWM-2 (1/1) ELEV.: 302.0 STA.:

Client: Rainmaker/Kilian L.L.C.
Project: Howard County Golf Course — Project Number: 950201
Location: Howard County, Maryalnd

Date: Started 02/24/95 Completed 02/24/95 Driller John Shindledecker
Sampler: Dia 2" ins. Type SS Hammer Wt. 140 lbs. Fall 30 ins.
Casing: Dia 3 1/4" ins. Type HSA Hammer Wt. ___ lbs. Fall ___ ins.
Water/Mud used in drilling Yes ___ No X Number ___ Other ___

Elev.	Depth (Ft.)	Material Description	Sample No.	Sample Depth	Blows/0.5'	N	Rec (Ft.)
301.5	0.5	TOP SOIL					
	2.0	Medium stiff reddish brown SANDY CLAY, some silt moist. (CL-ML)					
	4.0		1	3.5	07-06-09	15	1.0
297.5	4.5						
	5.0	Hard brown and gray SILTY CLAY, moist to wet. (CL-ML)					
	8.0		2	8.5	10-19-49	68	1.0
	10.0						
	12.0						
	14.0		3	13.5	10-24-23	47	1.1
287.0	15.0	TERMINATION DEPTH 15.0'					

Water Depth: During Drilling - Ft.; Upon Compl. - Ft.; - Hrs. after Compl.

MKM — DRILLING LOG

HOLE NO.: SWM-3 (1/1) ELEV.: - STA.: -

Client: Rainmaker/Kilian L.L.C.
Project: Howard County Golf Course — Project Number: 950201
Location: Howard County, Maryalnd

Date: Started 02/24/95 Completed 02/24/95 Driller John Shindledecker
Sampler: Dia 2" ins. Type SS Hammer Wt. 140 lbs. Fall 30 ins.
Casing: Dia 3 1/4" ins. Type HSA Hammer Wt. ___ lbs. Fall ___ ins.
Water/Mud used in drilling Yes ___ No X Number ___ Other ___

Elev	Depth (Ft.)	Material Description	Sample No.	Sample Depth	Blows/0.5'	N	Rec (Ft.)
	0.5	TOP SOIL					
	2.0						
	4.0	Hard reddish brown and gray SILTY CLAY trace to little sand, damp (CL-ML)	1	3.5	14-28-36	54	1.2
	6.0						
	8.0		2	8.5	14-28-36	64	0.9
	10.0						
	12.0						
	13.0						
	14.0	Very dense brown SAND, wet (SP-SM)	3	13.5	38-40-35	75	1.2
	15.0	TERMINATION DEPTH 15.0'					

Water Depth: During Drilling - Ft.; Upon Compl. - Ft.; - Hrs. after Compl.

5/17/95

OPERATION AND MAINTENANCE SCHEDULE
OF PRIVATELY OWNED AND MAINTAINED STORMWATER
MANAGEMENT FACILITY - EXTENDED DETENTION POND

ROUTINE MAINTENANCE

1. FACILITY SHALL BE INSPECTED ANNUALLY AND AFTER MAJOR STORMS. INSPECTIONS SHOULD BE PERFORMED DURING WET WEATHER TO DETERMINE IF THE POND IS FUNCTIONING PROPERLY. INSPECTIONS SHALL BE COMPLETED IN ACCORDANCE WITH THE CHECKLIST AND REQUIREMENTS CONTAINED WITHIN USDA, SCS "STANDARDS AND SPECIFICATIONS FOR PONDS" (MD-378). THE POND OWNER(S) AND ANY HEIRS, SUCCESSORS, OR ASSIGNS SHALL BE RESPONSIBLE FOR THE SAFETY OF THE POND AND THE CONTINUED OPERATION, SURVEILLANCE, INSPECTION, AND MAINTENANCE THEREOF. THE POND OWNER(S) SHALL PROMPTLY NOTIFY THE SOIL CONSERVATION DISTRICT OF ANY UNUSUAL OBSERVATIONS OF DISTRESS SUCH AS EXCESSIVE SEEPAGE, TURBID SEEPAGE, SLIDING OR SLUMPING.
2. THE TOP AND SIDE SLOPES OF THE EMBANKMENT SHALL BE MOWED A MINIMUM OF TWO (2) TIMES A YEAR, ONCE IN JUNE AND ONCE IN SEPTEMBER. OTHER SLOPES SHOULD BE MOWED AS NEEDED.
3. DEBRIS AND LITTER NEXT TO THE OUTLET STRUCTURE AND WITHIN THE POND AREA SHALL BE REMOVED DURING PERIODIC INSPECTIONS AND AS NEEDED.
4. VISIBLE SIGNS OF EROSION IN THE POND AS WELL AS THE RIPRAP OUTLET AREA SHALL BE REPAIRED AS SOON AS IT IS NOTICED.

NON-ROUTINE MAINTENANCE

1. STRUCTURAL COMPONENTS OF THE POND SUCH AS THE DAM, THE RISER, AND THE PIPES SHALL BE REPAIRED UPON THE DETECTION OF ANY DAMAGE. THE COMPONENTS SHOULD BE INSPECTED DURING ROUTINE MAINTENANCE OPERATIONS.
2. SEDIMENT SHOULD BE REMOVED WHEN ITS ACCUMULATION EXCEEDS THE FOREBAY VOLUME OR INTERFERES WITH THE FUNCTION OF THE RISER, WHEN DEEMED NECESSARY FOR AESTHETIC REASONS, OR WHEN DEEMED NECESSARY BY THE HOWARD COUNTY'S DEPARTMENT OF PUBLIC WORKS.

JOHN W. CLAPSADDLE, P.E.
MD. NO. 16956

revisions		
no.	description	date

prepared by:
The RBA Group — ENGINEERS • ARCHITECTS • PLANNERS
7164 COLUMBIA GATEWAY DRIVE SUITE 205
COLUMBIA, MARYLAND 21046
410/312-0966

owner: HOWARD COUNTY
3430 COURTHOUSE DRIVE
ELLICOTT CITY, MARYLAND 21043

STORMWATER NOTES

CENTRE 9500, PARCEL K
THE TIMBERS AT TROY GOLF COURSE
CLUBHOUSE AND MAINTENANCE FACILITIES

1 ST. ELECTION DISTRICT — HOWARD COUNTY, MARYLAND
TAX MAP 37, CENSUS TRACT 6011.01
WATER CODE: D04 SEWER CODE: 2610000

SCALE: NONE
DRAWN: ELB — CHECKED: JWC
PROJ. NO.: J1212 — DATE: 5/16/95
SHEET 13 OF 20 — SHEET REF. C-13

SDP-95-92

DRAWING FILE: 1212SWSP

REFER TO SHEET 15 FOR CONTINUATION

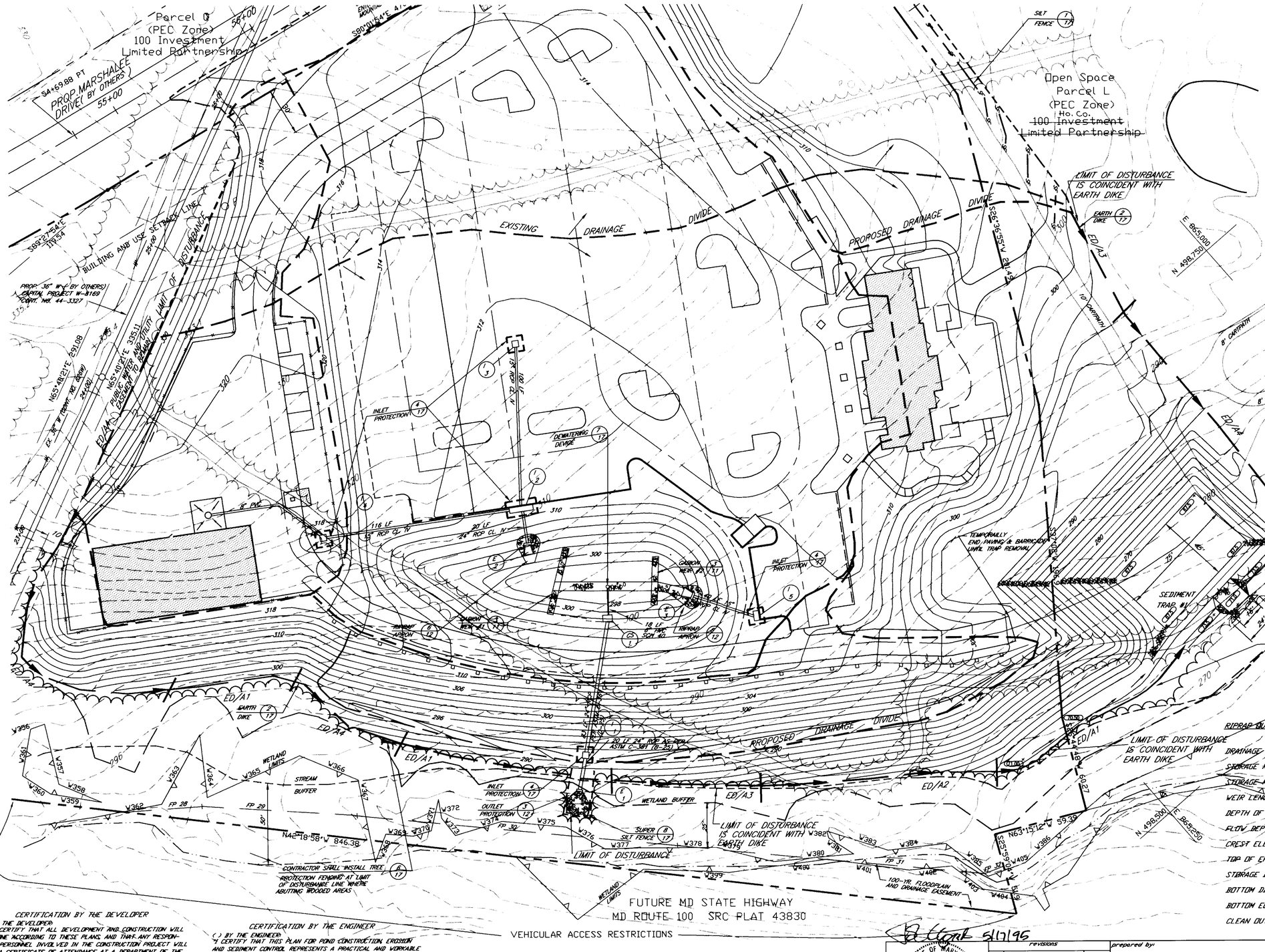

APPROVED FOR PUBLIC WATER, PUBLIC SEWERAGE SYSTEMS, STORM DRAINAGE SYSTEMS AND PUBLIC ROADS.
HOWARD COUNTY DEPARTMENT OF PUBLIC WORKS

DIRECTOR — DATE 5/26/95

CHIEF, BUREAU OF ENGINEERING — DATE 5/25/95

APPROVED HOWARD DEPARTMENT OF PLANNING AND ZONING

DIRECTOR — DATE 5/31/95

CHIEF, DIVISION OF LAND DEVELOPMENT AND RESEARCH — DATE 5/31/95

APPROVED FOR PUBLIC WATER AND PUBLIC SEWERAGE SYSTEMS
HOWARD COUNTY HEALTH DEPARTMENT

COUNTY HEALTH OFFICER — DATE 5/30/95

LEGEND

- EARTH DIKE — ED/A1
- LIMIT OF DISTURBANCE
- SILT FENCE — SF
- DRAINAGE DIVIDE
- INLET PROTECTION
- STABILIZED CONSTRUCTION ENTR.
- SUPER SILT FENCE — SSF

RIPRAP OUTLET SEDIMENT TRAP #1

DRAINAGE AREA:	4.98 ACRES
STORAGE REQUIRED:	9,364 CUBIC FEET
STORAGE PROVIDED:	10,000 CUBIC FEET
WEIR LENGTH:	15 FEET
DEPTH OF CHANNEL:	1.5 FEET
FLOW DEPTH:	1.0 FEET
CREST ELEVATION:	271.0
TOP OF EMBANKMENT:	273.5
STORAGE DEPTH:	2.5 FEET
BOTTOM DIMENSIONS:	75' X 45'
BOTTOM ELEVATION:	267.5
CLEAN OUT ELEVATION:	268.5

SEDIMENT TRAP #2 (STORMWATER POND)

DRAINAGE AREA:	3.97 ACRES
STORAGE REQUIRED:	7,146 CUBIC FEET
STORAGE PROVIDED:	20,776 CUBIC FEET (AT LOWER WEIR)
BARREL DIAMETER:	24 INCH
CREST ELEVATION:	302.5 (LOWER WEIR)
TOP OF EMBANKMENT:	308.00 (MIN.)
STORAGE DEPTH:	6.5 FEET
BOTTOM DIMENSIONS:	AS SHOWN
BOTTOM ELEVATION:	296.0 (LOW POINT)
CLEAN OUT ELEVATION:	299.2

CERTIFICATION BY THE DEVELOPER

( ) BY THE DEVELOPER:
"I/WE CERTIFY THAT ALL DEVELOPMENT AND CONSTRUCTION WILL BE DONE ACCORDING TO THESE PLANS, AND THAT ANY RESPONSIBLE PERSONNEL INVOLVED IN THE CONSTRUCTION PROJECT WILL HAVE A CERTIFICATE OF ATTENDANCE AT A DEPARTMENT OF THE ENVIRONMENT APPROVED TRAINING PROGRAM FOR THE CONTROL OF SEDIMENT AND EROSION BEFORE BEGINNING THE PROJECT. I SHALL ENGAGE A REGISTERED PROFESSIONAL ENGINEER TO SUPERVISE POND CONSTRUCTION AND PROVIDE THE HOWARD SOIL CONSERVATION DISTRICT WITH AN "AS-BUILT" PLAN OF THE POND WITHIN 30 DAYS OF COMPLETION. I ALSO AUTHORIZE PERIODIC ON-SITE INSPECTION BY THE HOWARD SOIL CONSERVATION DISTRICT".

SIGNATURE OF DEVELOPER — DATE 5/18/95
(PRINT NAME BELOW SIGNATURE)
Scott E. Artzbuger

CERTIFICATION BY THE ENGINEER

( ) BY THE ENGINEER:
"I CERTIFY THAT THIS PLAN FOR POND CONSTRUCTION, EROSION AND SEDIMENT CONTROL REPRESENTS A PRACTICAL AND WORKABLE PLAN BASED ON MY PERSONAL KNOWLEDGE OF THE SITE CONDITIONS. THIS PLAN WAS PREPARED IN ACCORDANCE WITH THE REQUIREMENTS OF THE HOWARD SOIL CONSERVATION DISTRICT. I HAVE NOTIFIED THE DEVELOPER THAT HE/SHE MUST ENGAGE A REGISTERED PROFESSIONAL ENGINEER TO SUPERVISE POND CONSTRUCTION AND PROVIDE THE HOWARD SOIL CONSERVATION DISTRICT WITH AN "AS-BUILT" PLAN OF THE POND WITHIN 30 DAYS OF COMPLETION".

SIGNATURE OF ENGINEER — DATE 5/17/95
(PRINT NAME BELOW SIGNATURE) JOHN CLAPSADDLE

( ) THESE PLANS FOR SMALL POND CONSTRUCTION, SOIL EROSION AND SEDIMENT CONTROL MEET THE REQUIREMENTS OF THE HOWARD SOIL CONSERVATION DISTRICT.

APPROVED Geoffrey W. Schomer — HOWARD SCD — DATE 5/23/95

( ) THESE PLANS HAVE BEEN REVIEWED FOR THE HOWARD SOIL CONSERVATION DISTRICT AND MEET THE TECHNICAL REQUIREMENTS FOR SMALL POND CONSTRUCTION, SOIL EROSION AND SEDIMENT CONTROL.

APPROVED Patricia Englar — U.S. NATURAL RESOURCES CONSERVATION SERVICE — DATE 5/23/95

STATE OF MARYLAND — JOHN W. CLAPSADDLE — No. 16956 — PROFESSIONAL ENGINEER

JOHN W. CLAPSADDLE, P.E.
MD. NO. 16956

revisions		
no.	description	date

prepared by:
The RBA — ENGINEERS • ARCHITECTS • PLANNERS
7164 COLUMBIA GATEWAY DRIVE SUITE 205
COLUMBIA, MARYLAND 21046
410/312-0966

owner: HOWARD COUNTY
3430 COURTHOUSE DRIVE
ELLICOTT CITY, MARYLAND 21043

SEDIMENT CONTROL PLAN

CENTRE 9500, PARCEL K
THE TIMBERS AT TROY GOLF COURSE
CLUBHOUSE AND MAINTENANCE FACILITIES

1ST ELECTION DISTRICT — HOWARD COUNTY, MARYLAND
TAX MAP 37, CENSUS TRACT 6011.01
WATER CODE: 3BH SEWER CODE: 2BJ0000

SCALE	1"=30'
DRAWN	CHECKED
ELB	JWC
PROJ. NO.	DATE
JI212	5/16/95
SHEET	SHEET REF.
14 OF 20	C-14

DRAWING FILE: 1212PLA1

SDP-95-92

APPROVED: FOR PUBLIC WATER, PUBLIC SEWERAGE SYSTEMS, STORM DRAINAGE SYSTEMS AND PUBLIC ROADS.
HOWARD COUNTY DEPARTMENT OF PUBLIC WORKS

DIRECTOR — DATE 5/26/95

CHIEF, BUREAU OF ENGINEERING — DATE 5/26/95

APPROVED: HOWARD DEPARTMENT OF PLANNING AND ZONING

DIRECTOR — DATE 5/31/95

CHIEF, DIVISION OF LAND DEVELOPMENT AND RESEARCH — DATE 5/31/95

APPROVED: FOR PUBLIC WATER AND PUBLIC SEWERAGE SYSTEMS, HOWARD COUNTY HEALTH DEPARTMENT

COUNTY HEALTH OFFICER — DATE 5/30/95

LEGEND

EARTH DIKE — ED/A1
LIMIT OF DISTURBANCE
SILT FENCE — SF — SF — SF —
DRAINAGE DIVIDE
STABILIZED CONSTRUCTION ENTRANCE — SCE
SUPER SILT FENCE — SSF — SSF —

NOTE:

1. THE MARSHALEE DRIVE ROAD PLATFORM IS BEING CONSTRUCTED UNDER SITE DEVELOPMENT PLANS BY LDE, INC. REFER TO SDP-95-77 FOR ALL DETAILS OF MARSHALEE DRIVE GRADING AND EROSION CONTROL.

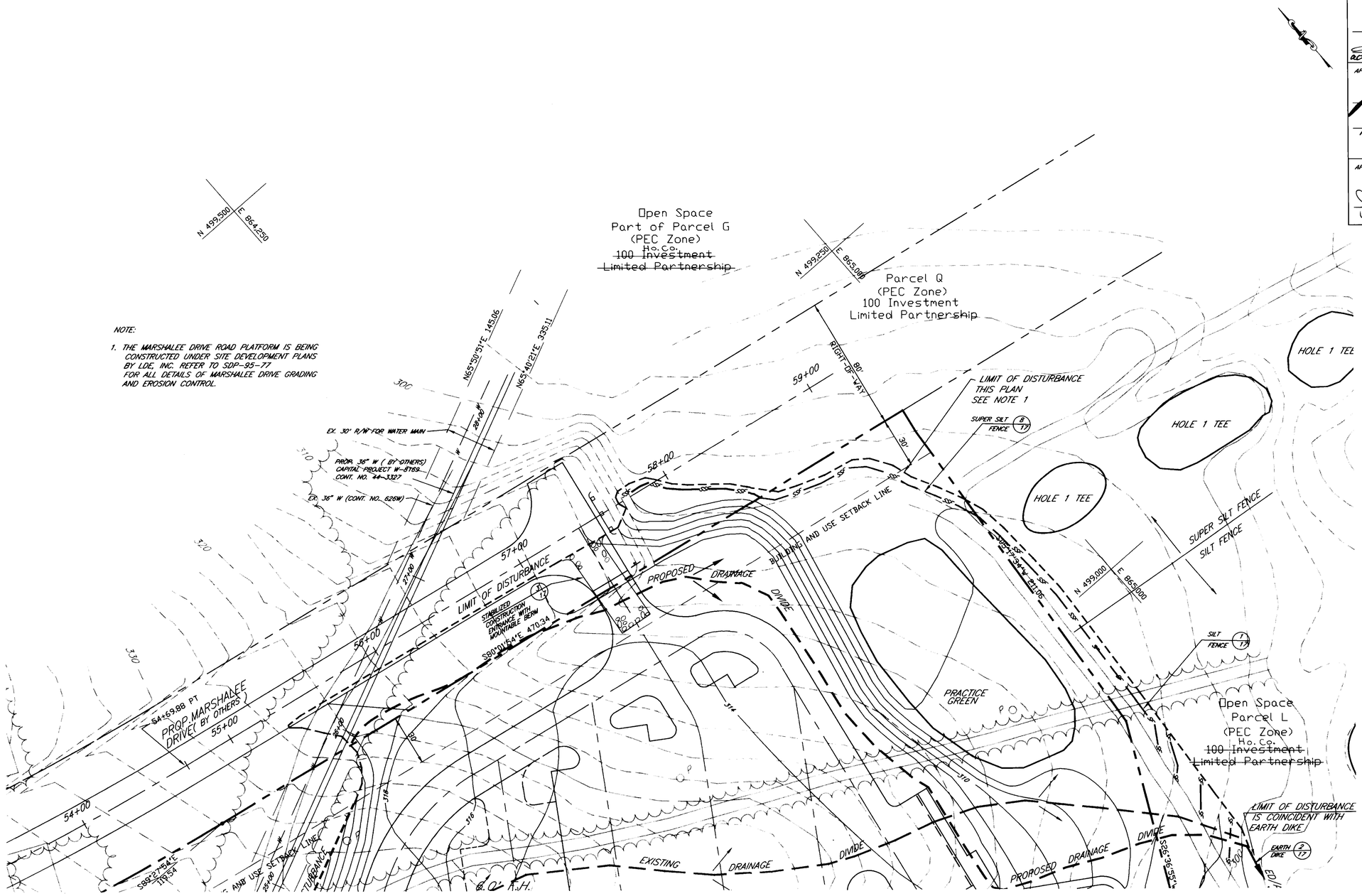

REFER TO SHEET 14 FOR CONTINUATION

CERTIFICATION BY THE DEVELOPER

( ) BY THE DEVELOPER
"I/WE CERTIFY THAT ALL DEVELOPMENT AND CONSTRUCTION WILL BE DONE ACCORDING TO THESE PLANS, AND THAT ANY RESPONSIBLE PERSONNEL INVOLVED IN THE CONSTRUCTION PROJECT WILL HAVE A CERTIFICATE OF ATTENDANCE AT A DEPARTMENT OF THE ENVIRONMENT APPROVED TRAINING PROGRAM FOR THE CONTROL OF SEDIMENT AND EROSION BEFORE BEGINNING THE PROJECT. I SHALL ENGAGE A REGISTERED PROFESSIONAL ENGINEER TO SUPERVISE POND CONSTRUCTION AND PROVIDE THE HOWARD SOIL CONSERVATION DISTRICT WITH AN "AS-BUILT" PLAN OF THE POND WITHIN 30 DAYS OF COMPLETION. I ALSO AUTHORIZE PERIODIC ON-SITE INSPECTION BY THE HOWARD SOIL CONSERVATION DISTRICT."

SIGNATURE OF DEVELOPER — DATE 5/18/95
(PRINT NAME BELOW SIGNATURE)
Scott E. ARTERBURN

CERTIFICATION BY THE ENGINEER

( ) BY THE ENGINEER
"I CERTIFY THAT THIS PLAN FOR POND CONSTRUCTION, EROSION AND SEDIMENT CONTROL REPRESENTS A PRACTICAL AND WORKABLE PLAN BASED ON MY PERSONAL KNOWLEDGE OF THE SITE CONDITIONS. THIS PLAN WAS PREPARED IN ACCORDANCE WITH THE REQUIREMENTS OF THE HOWARD SOIL CONSERVATION DISTRICT. I HAVE NOTIFIED THE DEVELOPER THAT HE/SHE MUST ENGAGE A REGISTERED PROFESSIONAL ENGINEER TO SUPERVISE POND CONSTRUCTION AND PROVIDE THE HOWARD SOIL CONSERVATION DISTRICT WITH AN "AS-BUILT" PLAN OF THE POND WITHIN 30 DAYS OF COMPLETION."

SIGNATURE OF ENGINEER — DATE 5/17/95
(PRINT NAME BELOW SIGNATURE)
JOHN CLAPSADDLE

( ) THESE PLANS FOR SMALL POND CONSTRUCTION, SOIL EROSION AND SEDIMENT CONTROL MEET THE REQUIREMENTS OF THE HOWARD SOIL CONSERVATION DISTRICT.

APPROVED — HOWARD S.C.D. — DATE 5/25/95

( ) THESE PLANS HAVE BEEN REVIEWED FOR THE HOWARD SOIL CONSERVATION DISTRICT AND MEET THE TECHNICAL REQUIREMENTS FOR SMALL POND CONSTRUCTION, SOIL EROSION AND SEDIMENT CONTROL.

APPROVED — U.S. NATURAL RESOURCES CONSERVATION SERVICE — DATE 5/25/95

5/17/95

STATE OF MARYLAND — JOHN WILLIAMS CLAPSADDLE — No. 16956 — PROFESSIONAL ENGINEER

JOHN W. CLAPSADDLE, P.E.
MD. NO. 16956

revisions		
no.	description	date

prepared by:
The RBA GROUP — ENGINEERS • ARCHITECTS • PLANNERS
7164 COLUMBIA GATEWAY DRIVE SUITE 205
COLUMBIA, MARYLAND 21046
410/312-0966
owner: HOWARD COUNTY
3430 COURTHOUSE DRIVE
ELLICOTT CITY, MARYLAND 21043

SEDIMENT CONTROL PLAN

CENTRE 9500, PARCEL K
THE TIMBERS AT TROY GOLF COURSE
CLUBHOUSE AND MAINTENANCE FACILITIES

1 ST. ELECTION DISTRICT — HOWARD COUNTY, MARYLAND
TAX MAP 32, GRIDS: TRACT 6811.01
WATER CODE: 1804 SEWER CODE: 2610000

SDP-95-92

SCALE	1"=30'
DRAWN	ELB
CHECKED	JWC
PROJ. NO.	J1212
DATE	5/16/95
SHEET	15 OF 20
SHEET REF:	C-15

DRAWING FILE: 1212PLA2

SEDIMENT AND EROSION CONTROL NOTES

1. A MINIMUM OF 48 HOURS NOTICE MUST BE GIVEN TO THE HOWARD COUNTY DEPARTMENT OF INSPECTIONS, LICENSES AND PERMITS, SEDIMENT CONTROL DIVISION PRIOR TO THE START OF ANY CONSTRUCTION (313-1855).

2. ALL VEGETATIVE AND STRUCTURAL PRACTICES ARE TO BE INSTALLED ACCORDING TO THE PROVISIONS OF THIS PLAN AND ARE TO BE INCONFORMANCE WITH THE MOST CURRENT "MD STANDARDS AND SPECIFICATIONS FOR SOIL EROSION AND SEDIMENT CONTROL", AND REVISIONS HERETO.

3. FOLLOWING THE INITIAL SOIL DISTURBANCE OR REDISTURBANCE, PERMANENT OR TEMPORARY STABILIZATION SHALL BE COMPLETE WITHIN: A) SEVEN (7) CALENDAR DAYS FOR ALL PERIMETER SEDIMENT CONTROL STRUCTURES, DIKES, PERIMETER SLOPES AND ALL SLOPES GREATER THAN 3:1, B) 14 DAYS AS TO ALL OTHER DISTURBED OR GRADED AREAS ON THE PROJECT SITE.

4. ALL SEDIMENT TRAPS/BASINS SHOWN MUST BE FENCED AND WARNING SIGNS POSTED AROUND THEIR PERIMETER IN ACCORDANCE WITH VOL. 1, CHAPTER 12, OF THE HOWARD COUNTY DESIGN MANUAL, STORM DRAINAGE.

5. ALL DISTURBED AREAS MUST BE STABILIZED WITHIN THE TIME PERIOD SPECIFIED ABOVE IN ACCORDANCE WITH THE MOST CURRENT MARYLAND STANDARDS AND SPECIFICATIONS FOR SOIL AND SEDIMENT CONTROL FOR PERMANENT SEEDINGS (SEC. 51), SOD (SEC. 54), TEMPORARY SEEDING (SEC. 50), AND MULCHING (SEC. 52). TEMPORARY STABILIZATION WITH MULCH ALONE CAN ONLY BE DONE WHEN RECOMMENDED SEEDING DATES DO NOT ALLOW FOR PROPER GERMINATION AND ESTABLISHMENT OF GRASSES.

6. ALL SEDIMENT CONTROL STRUCTURES ARE TO REMAIN IN PLACE AND ARE TO BE MAINTAINED IN OPERATIVE CONDITION UNTILL PERMISSION FOR THEIR REMOVAL HAS BEEN OBTAINED FROM THE HOWARD COUNTY SEDIMENT CONTROL INSPECTOR.

7. SITE ANALYSIS:

TOTAL AREA OF THE SITE:	9.07	ACRES
AREA DISTRUBED:	7.09	ACRES
AREA TO BE ROOFED OR PAVED:	2.96	ACRES
AREA TO BE VEGETATIVELY STABILIZED:	4.13	ACRES
TOTAL CUT:	26,790	CU. YDS.
TOTAL FILL:	45,345	CU. YDS.

OFFSITE WASTE/BORROW AREA LOCATION: EXCESS TO BE MOVED TO GOLF COURSE (SDP-93-75 OR SDP-95-77)

8. ANY SEDIMENT CONTROL PRACTICE WHICH IS DISTURBED BY GRADING ACTIVITY FOR PLACEMENT OF UTILITIES MUST BE REPAIRED ON THE SAME DAY OF DISTURBANCE

9. ADDITIONAL SEDIMENT CONTROLS MUST BE PROVIDED IF DEEMED NECESSARY BY THE HOWARD COUNTY DEPT. OF PUBLIC WORKS SEDIMENT CONTROL INSPECTOR.

10. ON ALL SITES, DISTURBED AREAS IN EXCESS OF 2 ACRES, APPROVAL OF THE INSPECTION AGENCY SHALL BE REQUESTED UPON COMPLETION OF INSTALLATION OF PERIMETER EROSION AND SEDIMENT CONTROLS, BUT BEOFRE PROCEEDING WITH ANY OTHER EARTH DISTURBANCE OR GRADING. OTHER BUILDING OR GRADING INSPECTION APPROVALS MAY NOT BE AUTHORIZED UNTIL THIS INITIAL APPROVAL BY THE INSPECTION AGENCY IS MADE.

11. TRENCHES FOR THE CONSTRUCTION OF UTILITIES IS LIMITED TO THREE PIPE LENGTHS OR THAT WHICH CAN BE BACKFILLED AND STABILIZED WITHIN ONE WORKING DAY, WHICHEVER IS SHORTER.

12. WITH THE APPROVAL OF THE SEDIMENT CONTROL INSPECTOR, MINOR FIELD ADJUSTMENTS CAN AND WILL BE MADE TO INSURE THE CONTROL OF ANY SEDIMENT. CHANGES IN THE SEDIMENT CONTROL PRACTICES REQUIRE PRIOR APPROVAL OF THE SEDIMENT CONTROL INSPECTOR AND THE HOWARD COUNTY SOIL CONSERVATION DISTRICT.

13. ANY CHANGE TO THE GRADING PROPOSED ON THIS PLAN REQUIRES RE-SUBMISSION TO HOWARD COUNTY SOIL CONSERVATION DISTRICT FOR APPROVAL.

14. ANY VARIATION FROM THE SEQUENCE OF OPERATIONS STATED ON THIS PLAN REQUIRES THE APPROVAL OF THE SEDIMENT CONTROL INSPECTOR AND THE HOWARD COUNTY SOIL CONSERVATION DISTRICT PRIOR TO THE INITIATION OF THE CHANGE.

15. AT THE END OF EACH WORK DAY ALL SEDIMENT CONTROL PRACTICEWILL BE INSPECTED AND LEFT IN THE OPERATIONAL CONDITION.

16. ALL SEDIMENT AND EROSION CONTROL SHALL BE IN ACCORDANCE WITH THE AGREEMENT MADE BETWEEN COLUMBIA ASSOCIATION AND HSCD AND AS AMENDED 8/1/90.

17. THE DEVELOPER IS RESPONSIBLE FOR THE ACQUISITION OF ALL EASEMENTS, RIGHTS, AND/OR RIGHTS-OF-WAYS THAT MAY BE REQUIRED FOR THE SEDIMENT AND EROSION CONTROL PRACTICES, STORMWATER MANAGEMENT PRACTICES AND THE DISCHARGE OF STORMWATER ONTO OR ACROSS ADJACENT OR DOWNSTREAM PROPERTIES INCLUDED IN THIS PLAN. HE IS ALSO RESPONSIBLE FOR THE ACQUISITION OF ALL EASEMENTS, RIGHTS AND/OR RIGHT S-OF-WAYS THAT MAY BE REQUIRED FOR GRADING AND/OR WORK ON ADJACENT PROPERTIES INCLUDED IN THIS PLAN.

18. THE SEDIMENT CONTROL APPROVALS ON THIS PLAN EXTEND ONLY TO AREAS AND PRACTICES IDENTIFIED AS PROPOSED WORK AND SHALL APPLY AS IF SHOWN ON ALL PLANS.

19. THE APPROVAL OF THE PLAN FOR SEDIMENT AND EROSION CONTROL DOES NOT RELIEVE THE DEVELOPER/CONSULTANT FROM COMPLYING WITH ANY FEDERAL/STATE/COUNTY REQUIREMENTS PERTAINING TO ENVIRONMENTAL ISSUES.

PERMANENT SEEDING NOTES

APPLY TO GRADED OR CLEARED AREAS NOT SUBJECT TO IMMEDIATE FURTHER DISTURBANCE WHERE A PERMANENT LONG-LIVED VEGETATIVE COVER IS NEEDED.

SEEDBED PREPARATION: LOOSEN UPPER THREE INCHES OF SOIL BY RAKING, DISKING OR OTHER ACCEPTABLE MEANS BEFORE SEEDING, IF NOT PREVIOUSLY LOOSENED.

SOIL AMENDMENTS: IN LIEU OF SOIL TESTS RECOMMENDATIONS. USE ONE OF THE FOLLOWING SCHEDULES:

1. PREFERRED - APPLY 2 TONS PER ARCE DOLOMITIC LIMESTONE (92 LBS/1000 SQ. FT.) AND 600 LBS PER ACRE 10-10-10 FERTILIZER (14 LBS/1000 SQ. FT.) BEFORE SEEDING. HARROW OR DISK INTO UPPER THREE INCHES OF SOIL AT THE TIME OF SEEDING APPLY 400 LB. PER ACRE 30-0-0 UREAFORM FERTILIZER (9 LBS/1000 SQ FT.)

2. ACCEPTABLE - APPLY 2 TONS PER ACRE DOLOMETRIC LIMESTONE ((2 LBS/1000 SQ. FT.) BEFORE SEEDING. HARROW OR DISC INTO UPPER THREE INCHES OF SOIL.

SEEDING- FOR THE PERIODS MARCH 1 THRU APRIL 30, AND AUGUST 1 THRU OCTOBER 15, SEED WITH 60 LBS. PER ACRE (1.4 LBS/1000 SQ. FT.) OF KENTUCKY 31 TALL FESCUE. FOR THE PERIOD MAY 1 THRU JULY 31, SEED WITH 60 LBS KENTUCKY 31 TALL FESCUE PER ACRE AND 2 LBS PER ACRE (.05 LBS/100 SQ. FT.) OF WEEPING LOVEGRASS. DURING THE PERIOD OF OCTOBER 16 THRU FEBRUARY 28, PROTECT SITE BY: OPTION (1) 2 TONS PER ACRE OF WELL ANCHORED STRAW MULCH AND SEED AS SOON AS POSSIBLE IN THE SPRING. OPTION (2) USE SOD. OPTION (3) SEED WITH 60 LBS/ACRE KENTUCKY 31 TALL FESCUE AND MULCH WITH 2 TONS/ACRE WELL ANCHORED STRAW.

MULCHING - APPLY 1 1/2 TO TO TONS PER ACRE (70 TO 90 LBS /1000 SQ. FT.) OF UNROTTED SMALL GRAN STRAW IMMEDIATELY AFTER SEEDING. ANCHOR MULCH IMMEDIATELY AFTER APPLICATION USING MULCH ANCHORING TOL OR 218 GALLONS PER ACRE (5 GAL/1000 SQ. FT.) OF EMULSIFIED ASPHALT ON FLAT AREAS. ON SLOPES 8 FEET OR HIGHER, USE 348 GALLONS PER ACRE (8 GAL/1000 SQ. FT.) FOR ANCHORING.

MAINTENANCE - INSPECT AL SEEDED AREAS AND MAKE NEEDED REPAIRS, REPLACEMENTS AND RESEEDINGS.

TEMPORARY SEEDING NOTES

APPLY TO GRADED OR CLEARED AREAS LIKELY TO BE REDISTURBED WHERE A SHORT-TERM VEGETATIVE COVER IS NEEDED.

SEEDBED PREPARATION: LOOSEN UPPER THREE INCHES OF SOIL BY RAKING, DISKING OR OTHER ACCEPTABLE MEANS BEFORE SEEDING, IF NOT PREVIOUSLY LOOSENED.

SOIL AMENDMENTS: APPLY 600 LBS PER ACRE 10-10-10 FERTILIZER (14 LBS/1000 SQ. FT.)

SEEDING: FOR THE PERIODS MARCH 1 THRU APRIL 30, AND AUGUST 15 THRU NOVEMBER 15, SEED WITH 2 1/2 BUSHEL PER ACRE OF ANNUAL RYE (3.2 LBS/100 SQ. FT.) FOR THE PERIOD OF MAY 1 THRU AUGUST 14, SEED WITH 3 LBS PER ACRE OF WEEPING LOVEGRASS (.07 LBS/1000 SQ. FT.) FOR THE PERIOD OF NOVEMBER 16 THRU FEBRUARY 28. PROTECT SITE BY APPLYING 2 TONS PER ACRE OF WELL ANCHORED STRAW MULCH AND SEED AS SOON AS POSSIBLE IN THE SPRING OR USE SOD.

MULCHING - APPLY 1 1/2 TO TO OTONS PER ACRE (70 TO 90 LBS/1000 SQ. FT.) OF UNROTTED SMALL GRAN STRAW IMMEDIATELY AFTER SEEDING. ANCHOR MULCH IMMEDIATELY AFTER APPLICATION USING MULCH ANCHORING TOOL OR 218 GALLONS PER ACRE (5 GAL /1000 SQ. FT.) OF EMULSIFIED ASPHALT ON FLAT AREAS. ON SLOPES 8 FEET OR HIGHER, USE 348 GALLONS PER ACRE (8 GAL/1000 SQ. FT.) FOR ANCHORING.

REFER TO THE 1983 MARYLAND STANDARDS AND SPECIFICATIONS FOR SOIL EROSION AND SEDIMENT CONTROL FOR RATE AND METHODS NOT COVERED.

SEQUENCE OF CONSTRUCTION

1. OBTAIN ALL NECESSARY PERMITS FOR THE PROPOSED WORK AND HAVE ALL EXISTING UTILITIES MARKED IN THE FIELD. SCHEDULE A PRE-CONSTRUCTION MEETING WITH THE ASSIGNED INSPECTOR. RESOLVE ALL SITE RELATED ISSUES BEFORE PROCEEDING. — 2 WEEKS

2. INSTALL STABILIZED CONSTRUCTION ENTRANCE AS SHOWN ON THE APPROVED PLANS. INSTALL TREE PROTECTION FENCING ALONG ALL LIMITS OF DISTURBANCE ABUTTING TREES. CLEAR AND GRUB ONLY AREAS NECESSARY AND INSTALL PERIMETER EARTH DIKES, SILT FENCES AND RIP-RAP OUTLET SEDIMENT TRAP. — 2 WEEKS

3. OBTAIN INSPECTOR APPROVAL OF ALL SEDIMENT CONTROL DEVICES PRIOR TO PROCEEDING. — 1 WEEK

4. CLEAR AND GRUB REMAINDER OF SITE. MAINTAIN ALL SEDIMENT CONTROL DEVICES AS NECESSARY. — 4 WEEKS

5. BEGIN CONSTRUCTION OF STORMWATER MANAGEMENT POND EMBANKMENT, RISER AND BARREL. PROCEED AS FOLLOWS:

   A. UNDERCUT POND AND MAINTENANCE ROAD EMBANKMENT AND BEGIN CORE TRENCH CONSTRUCTION. — 1 WEEK

   B. BEGIN INSTALLATION OF BARREL, INLET I-1 AND OUTLET PROTECTION. EFFECTIVELY BLOCK BARREL AT UPSTREAM END AT THE END OF EACH DAY TO ELIMINATE SITE DRAINAGE ENTERING BARREL. MAINTAIN ALL PERIMETER EARTH DIKES TO INSURE DIVERSION OF WATER TO SEDIMENT TRAP NO. 1. — 1 WEEK

   C. BEGIN EMBANKMENT CONSTRUCTION INCLUDING IMPERVIOUS CORE. WORK UNDER THE DIRECTION OF A GEOTECHNICAL ENGINEER TO INSURE ALL SOIL CONDITIONS ARE MONITORED AND ADJUSTED AS NECESSARY TO MEET PLAN SPECIFICATIONS. — 2 WEEKS

   D. COMPLETE RISER CONSTRUCTION INCLUDING DEWATERING DEVICE. UPON COMPLETION OF RISER AND EMBANKMENT, REMOVE BLOCKING FROM BARREL AND DIVERT ALL UPLAND FLOW INTO STORMWATER POND TO BE USED AS A SEDIMENT TRAP. DELAY CONSTRUCTION OF GABION WEIRS AND RIP-RAP APRONS AT STORM DRAIN OUTFALLS. — 1 WEEK

6. AS ROUGH GRADING IS ACHIEVED, BEGIN BUILDING AND UTILITY CONSTRUCTION. — 16 WEEKS

7. INSTALL INLET PROTECTION DEVICES IMMEDIATELY UPON STORM DRAIN CONSTRUCTION. — 1 WEEK

8. UPON COMPLETION OF UTILITIES , BACKFILL AND BEGIN FINE GRADING AND PAVEMENT CONSTRUCTION. DELAY CONSTRUCTION OF SURFACE PAVING UNTIL ALL HEAVY EQUIPMENT HAS BEEN REMOVED FROM SITE. — 4 WEEKS

9. REMOVE SILT FROM SEDIMENT TRAPS AS REQUIRED AND MAINTAIN ALL SEDIMENT AND CONTROL DEVICES. — 1 WEEK

10. UPON COMPLETION OF WORK IN A GIVEN AREA, STABILIZE AREA IMMEDIATELY. — 1 WEEK

11. UPON COMPLETE STABILIZATION OF ALL CONTRIBUTING DRAINAGE AREAS AND UPON INSPECTOR APPROVAL, REMOVE RIP-RAP OUTLET SEDIMENT TRAP NO. 1. CONTINUE USING STORMWATER POND AS SEDIMENT TRAP NO. 2. STABILIZE ALL DISTURBED AREAS RESULTING FROM TRAP NO. 1 REMOVAL IMMEDIATELY. — 2 WEEKS

12. UPON COMPLETION OF BUILDING CONSTRUCTION AND BASE PAVING, AND UPON COMPLETE STABILIZATION OF ALL CONTRIBUTING DRAINAGE AREAS, FLUSH ALL STORM SEWERS CLEAN AND BEGIN POND RESTORATION. PROCEED WITH SEDIMENT CONTROL REMOVAL ONLY AFTER INSPECTOR APPROVAL. — 2 WEEKS

13. INSTALL REMAINING STORMWATER MANAGEMENT POND FEATURES AND STABILIZE POND AREAS WITH FINAL VEGETATION. INSTALL REMAINING LANDSCAPE MATERIALS. APPLY FINAL SURFACE COURSE PAVING. — 2 WEEKS

B:SDC.ASC

APPROVED: FOR PUBLIC WATER, PUBLIC SEWERAGE SYSTEMS, STORM DRAINAGE SYSTEMS AND PUBLIC ROADS.
HOWARD COUNTY DEPARTMENT OF PUBLIC WORKS

DIRECTOR — DATE 5/26/95

act CHIEF, BUREAU OF ENGINEERING — DATE 5/26/95

APPROVED: HOWARD DEPARTMENT OF PLANNING AND ZONING

DIRECTOR — DATE 5/31/95

CHIEF, DIVISION OF LAND DEVELOPMENT AND RESEARCH — 5/31/95

APPROVED: FOR PUBLIC WATER AND PUBLIC SEWERAGE SYSTEMS, HOWARD COUNTY HEALTH DEPARTMENT

Joyce M Boyland per — COUNTY HEALTH OFFICER — DATE 5/30/95

CERTIFICATION BY THE DEVELOPER

( ) BY THE DEVELOPER:
"I/WE CERTIFY THAT ALL DEVELOPMENT AND CONSTRUCTION WILL BE DONE ACCORDING TO THESE PLANS, AND THAT ANY RESPONSIBLE PERSONNEL INVOLVED IN THE CONSTRUCTION PROJECT WILL HAVE A CERTIFICATE OF ATTENDANCE AT A DEPARTMENT OF THE ENVIRONMENT APPROVED TRAINING PROGRAM FOR THE CONTROL OF SEDIMENT AND EROSION BEFORE BEGINNING THE PROJECT. I SHALL ENGAGE A REGISTERED PROFESSIONAL ENGINEER TO SUPERVISE POND CONSTRUCTION AND PROVIDE THE HOWARD SOIL CONSERVATION DISTRICT WITH AN "AS-BUILT" PLAN OF THE POND WITHIN 30 DAYS OF COMPLETION. I ALSO AUTHORIZE PERIODIC ON-SITE INSPECTION BY THE HOWARD SOIL CONSERVATION DISTRICT".

SIGNATURE OF DEVELOPER — DATE 5/18/95
(PRINT NAME BELOW SIGNATURE)
SCOTT E. ARTERBURN

CERTIFICATION BY THE ENGINEER

( ) BY THE ENGINEER:
"I CERTIFY THAT THIS PLAN FOR POND CONSTRUCTION, EROSION AND SEDIMENT CONTROL REPRESENTS A PRACTICAL AND WORKABLE PLAN BASED ON MY PERSONAL KNOWLEDGE OF THE SITE CONDITIONS. THIS PLAN WAS PREPARED IN ACCORDANCE WITH THE REQUIREMENTS OF THE HOWARD SOIL CONSERVATION DISTRICT I HAVE NOTIFIED THE DEVELOPER THAT HE/SHE MUST ENGAGE A REGISTERED PROFESSIONAL ENGINEER TO SUPERVISE POND CONSTRUCTION AND PROVIDE THE HOWARD SOIL CONSERVATION DISTRICT WITH AN "AS-BUILT" PLAN OF THE POND WITHIN 30 DAYS OF COMPLETION".

SIGNATURE OF ENGINEER — DATE 5/17/95
(PRINT NAME BELOW SIGNATURE)
JOHN CLAPSADDLE

( ) THESE PLANS FOR SMALL POND CONSTRUCTION, SOIL EROSION AND SEDIMENT CONTROL MEET THE REQUIREMENTS OF THE HOWARD SOIL CONSERVATION DISTRICT.

APPROVED — HOWARD S.C.D. — DATE 5/25/95

( ) THESE PLANS HAVE BEEN REVIEWED FOR THE HOWARD SOIL CONSERVATION DISTRICT AND MEET THE TECHNICAL REQUIREMENTS FOR SMALL POND CONSTRUCTION, SOIL EROSION AND SEDIMENT CONTROL

APPROVED — U.S. NATURAL RESOURCES CONSERVATION SERVICE — DATE 5/25/95

5/17/95

STATE OF MARYLAND — JOHN WINFRED CLAPSADDLE — NO. 16956 — REGISTERED PROFESSIONAL ENGINEER

JOHN W. CLAPSADDLE, P.E.
MD. NO. 16956

revisions		
no.	description	date

prepared by:
The RBA Group — ENGINEERS • ARCHITECTS • PLANNERS
7164 COLUMBIA GATEWAY DRIVE SUITE 205
COLUMBIA, MARYLAND 21046
410/312-0966

owner: HOWARD COUNTY
3430 COURTHOUSE DRIVE
ELLICOTT CITY, MARYLAND 21043

SEDIMENT CONTROL NOTES

CENTRE 9500, PARCEL K
THE TIMBERS AT TROY GOLF COURSE
CLUBHOUSE AND MAINTENANCE FACILITIES

1 ST. ELECTION DISTRICT — HOWARD COUNTY, MARYLAND
TAX MAP 37, CENSUS TRACT 6011.01
WATER CODE: D04 SEWER CODE: 2610000

SCALE NONE	
DRAWN ELB	CHECKED JWC
PROJ. NO. J1212	DATE 5/16/95
SHEET 16	SHEET REF.
OF 20	C-16

SDP-95-92

DRAWING FILE: 1212SCD1

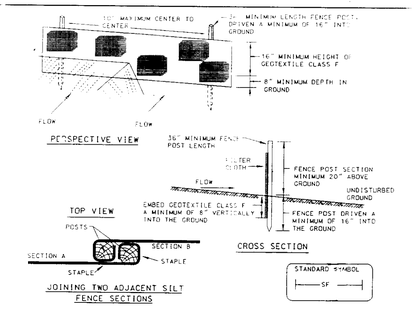

Construction Specifications

1. Fence posts shall be a minimum of 36" long driven 16" minimum into the ground. Wood posts shall be 1½" x 1½" square (minimum) cut, or 1¾" diameter (minimum) round and shall be of sound quality hardwood. Steel posts will be standard T or U section weighing not less than 1.00 pond per linear foot.

2. Geotextile shall be fastened securely to each fence post with wire ties or staples at top and mid-section and shall meet the following requirements for Geotextile class F:

Tensile Strength	50 lbs/in (min.)	Test: MSMT 509
Tensile Modulus	20 lbs/in (min.)	Test: MSMT 509
Flow Rate	0.3 gal ft²/ minute (max.)	Test: MSMT 322
Filtering Efficiency	75% (min.)	Test: MSMT 322

3. Where ends of geotextile fabric come together, they shall be overlapped, folded and stapled to prevent sediment bypass.

4. Silt Fence shall be inspected after each rainfall event and maintained when bulges occur or when sediment accumulation reached 50% of the fabric height.

1/17 SILT FENCE
SCALE: NTS

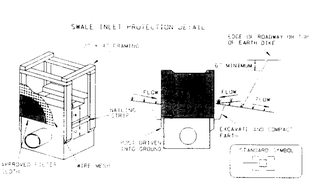

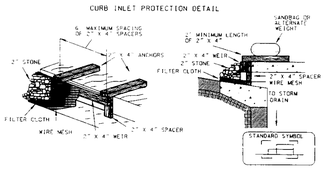

4/17 INLET PROTECTION
SCALE: NTS

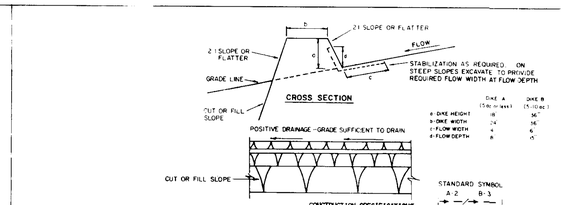

1. ALL DIKES SHALL BE COMPACTED BY EARTH-MOVING EQUIPMENT.
2. ALL DIKES SHALL HAVE POSITIVE DRAINAGE TO AN OUTLET.
3. TOP WIDTH MAY BE WIDER AND SIDE SLOPES MAY BE FLATTER IF DESIRED TO FACILITATE CROSSING BY CONSTRUCTION TRAFFIC.
4. FIELD LOCATION SHOULD BE ADJUSTED AS NEEDED TO UTILIZE A STABILIZED SAFE OUTLET.
5. EARTH DIKES SHALL HAVE AN OUTLET THAT FUNCTIONS WITH A MINIMUM OF EROSION. RUNOFF SHALL BE CONVEYED TO A SEDIMENT TRAPPING DEVICE SUCH AS A SEDIMENT TRAP OR SEDIMENT BASIN WHERE EITHER THE DIKE CHANNEL OR THE DRAINAGE AREA ABOVE THE DIKE ARE NOT ADEQUATELY STABILIZED.
6. STABILIZATION SHALL BE: (A) IN ACCORDANCE WITH STANDARD SPECIFICATIONS FOR SEED AND STRAW MULCH OR STRAW MULCH IF NOT IN SEEDING SEASON, (B) FLOW CHANNEL AS PER THE CHART BELOW.

FLOW CHANNEL STABILIZATION

TYPE OF TREATMENT	CHANNEL GRADE	DIKE A	DIKE B
1	.5-3.0%	SEED AND STRAW MULCH	SEED AND STRAW MULCH
2	3.1-5.0%	SEED AND STRAW MULCH	SEED USING JUTE, OR EXCELSIOR; SOD; 2" STONE
3	5.1-8.0%	SEED WITH JUTE, OR SOD; 2" STONE	LINED RIP-RAP 4-8"
4	8.1-20%	LINED RIP-RAP 4-8"	ENGINEERING DESIGN

A. STONE TO BE 2 INCH STONE, OR RECYCLED CONCRETE EQUIVALENT, IN A LAYER AT LEAST 3 INCHES IN THICKNESS AND BE PRESSED INTO THE SOIL WITH CONSTRUCTION EQUIPMENT.
B. RIP-RAP TO BE 4-8 INCHES IN A LAYER AT LEAST 8 INCHES THICKNESS AND PRESSED INTO THE SOIL.
C. APPROVED EQUIVALENTS CAN BE SUBSTITUTED FOR ANY OF THE ABOVE MATERIALS.
7. PERIODIC INSPECTION AND REQUIRED MAINTENANCE MUST BE PROVIDED AFTER EACH RAIN EVENT.

2/17 EARTH DIKE
SCALE NTS

RIPRAP OUTLET SEDIMENT TRAP ST-VI

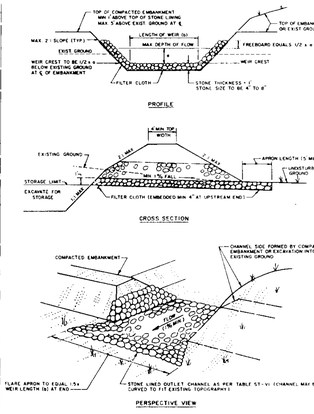

CONSTRUCTION SPECIFICATIONS FOR ST-VI

1. The area under embankment shall be cleared, grubbed and stripped of any vegetation and root mat. The pool area shall be cleared.
2. The fill material for the embankment shall be free of roots or other woody vegetation as well as over-sized stones, rocks, organic material or other objectionable material. The embankment shall be compacted by traversing with equipment while it is being constructed. Maximum height of embankment shall be five (5) feet, measured at centerline of embankment.
3. All fill slopes shall be 2:1 or flatter; cut slopes 1:1 or flatter.
4. Elevation of the top of any dike directing water into trap must equal or exceed the height of embankment.
5. Storage area provided shall be figured by computing the volume available behind the outlet channel up to an elevation of one (1) foot below the level weir crest.
6. Filter cloth shall be placed over the bottom and sides of the outlet channel prior to placement of stone. Sections of fabric must overlap at least one (1) foot with section nearest the entrance placed on top. Fabric shall be embedded at least six (6) inches into existing ground at entrance of outlet channel.
7. Stone used in the outlet channel shall be four (4) to eight(8) inches (riprap). To provide a filtering effect, a layer of filter cloth shall be embedded one (1) foot back into the upstream face of the outlet stone or a one (1) foot thick layer of two (2) inch or finer aggregate shall be placed on the upstream face of the outlet.
8. Sediment shall be removed and trap restored to its original dimensions when the sediment has accumulated to 1/2 the design depth of the trap. Removed sediment shall be deposited in a suitable area and in such a manner that it will not erode.
9. The structure shall be inspected after each rain and repaired as needed.
10. Construction operations shall be carried out in such a manner that erosion and water pollution are minimized.
11. The structure shall be removed and the area stabilized when the drainage area has been properly stabilized.
12. Drainage area for this practice is limited to 15 acres or less.

5/17 RIPRAP OUTLET SEDIMENT TRAP
SCALE: NTS

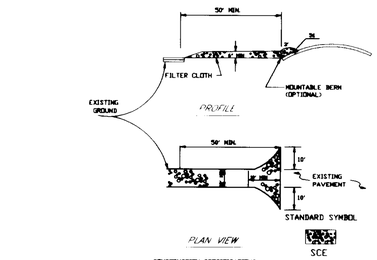

CONSTRUCTION SPECIFICATIONS

1. STONE SIZE - USE 2" STONE OR RECLAIMED OR RECYCLED CONCRETE EQUIVALENT.
2. LENGTH - AS REQUIRED BUT NOT LESS THAN 50 FEET (EXCEPT ON A RESIDENCE LOT WHERE A 30 FOOT MINIMUM LENGTH WOULD APPLY.
3. THICKNESS - NOT LESS THAN SIX (6) INCHES.
4. WIDTH - TEN (10) FOOT MINIMUM BUT NOT LESS THAN FULL WIDTH AT POINTS WHERE INGRESS OR EGRESS OCCURS.
5. FILTER CLOTH - WILL BE PLACED OVER THE ENTIRE AREA PRIOR TO PLACING OF STONE. FILTER WILL NOT BE REQUIRED ON A SINGLE FAMILY RESIDENCE LOT.
6. SURFACE WATER - ALL SURFACE WATER FLOWING OR DIVERTED TOWARD CONSTRUCTION ENTRANCES SHALL BE PIPED ACROSS THE ENTRANCE. IF PIPING IS IMPRACTICAL A MOUNTABLE BERM WITH 5:1 SLOPES WILL BE PERMITTED.
7. MAINTENANCE - THE ENTRANCE SHALL BE MAINTAINED IN A CONDITION WHICH WILL PREVENT TRACKING OR FLOWING OF SEDIMENT ONTO PUBLIC RIGHTS-OF WAY. THIS MAY REQUIRE PERIODIC DRESSING WITH ADDITIONAL STONE AS CONDITIONS DEM AND AND REPAIR AND/OR CLEANOUT OF ANY MEASURES USED TO TRAP SEDIMENT. ALL SEDIMENT SPILLED, DROPPED, WASHED OR TRACKED ONTO PUBLIC RIGHTS-OF-WAY MUST BE REMOVED IMMEDIATELY.
8. WASHING - WHEELS SHALL BE CLEANED TO REMOVE SEDIMENT PRIOR TO ENTRANCE ONTO PUBLIC RIGHTS-OF-WAY. WHEN WASHING IS REQUIRED IT SHALL BE DONE IN AN AREA STABILIZED WITH STONE AND WHICH DRAINS INTO AN APPROVED SEDIMENT TRAPPING DEVICE.
9. PERIODIC INSPECTION AND NEEDED MAINTENANCE SHALL BE PROVIDED AFTER EACH RUN.

3/17 STABILIZED CONSTRUCTION ENTRANCE
SCALE NTS

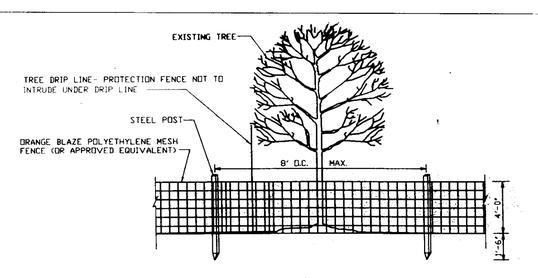

TREE PROTECTION PROCEDURES

1. TREE PROTECTION FENCE SHALL BE INSTALLED AT THE DRIP LINE OF THE TREES TO BE PROTECTED PRIOR TO THE START OF ANY CONSTRUCTION ACTIVITIES.
2. THE GENERAL CONTRACTOR SHALL HAVE THE RESPONSIBILITY FOR TREE PROTECTION. HE SHALL TAKE CARE TO PROTECT TREE ROOT SYSTEMS FROM DAMAGE INCLUDING SMOTHERING, FLOODING, AND SPILLAGE.
3. REMOVAL OF TOPSOIL OR ROOT MAT WITHIN THE TREE PRESERVATION AREA WILL BE PROHIBITED.
4. FOOT AND VEHICULAR TRAFFIC SHALL BE KEPT TO MINIMUM IN THE TREE PROTECTION. THE FOLLOWING CONSTRUCTION ACTIVITIES ARE PROHIBITED: PLACING BACKFILL IN THE PROTECTED AREA; BANKING IN OR IN CLOSE PROXIMITY TO PROTECTED AREAS; FELLING TREES IN THE PROTECTED AREA; STORING SUPPLIES IN THE PROTECTED AREA; OR CONDUCT-TRENCHING OPERATIONS IN THE PROTECTED AREA.
5. ALL TREES TO BE REMOVED WITHIN 50 FEET OF THE TREE PROTECTION AREA ARE TO TO BE REMOVED IN A MANNER THAT WILL NOT DAMAGE THE TREES OR ROOTS OF THE TREES IN THE TREE PROTECTION AREA.

6/17 TREE PROTECTION FENCE
SCALE: NTS

SEDIMENT BASIN DEWATERING DEVICE I
WITH 6" PERFORATED RISER

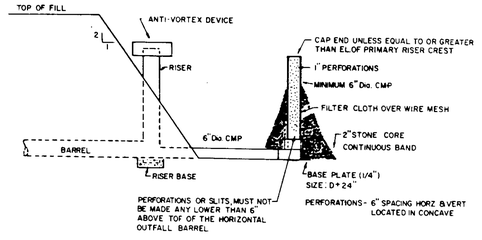

7/17 DEWATERING DEVICE TYPE 1
SCALE: NTS

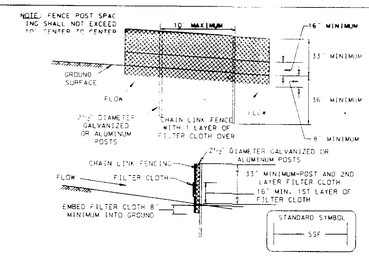

Construction Specifications

Fencing shall be 42 inches in height and constructed in accordance with the latest Maryland State Highway Details for Chain Link Fencing. The specification for a 6 foot fence shall be used, substituting 42 inch fabric and 6 foot length posts.

1. The poles do not need to set in concrete.
2. Chain link fence shall be fastened securely to the fence posts with wire ties or staples.
3. Filter cloth shall be fastened securely to the chain link fence with ties spaced every 24" at the top and mid section.
4. Filter cloth shall be embedded a minimum of 8" into the ground.
5. When two sections of filter cloth adjoin each other, they shall be overlapped by 6" and folded.
6. Maintenance shall be performed as needed and silt buildups removed when "bulges" develop in the silt fence.

8/17 SUPER SILT FENCE
SCALE: NTS

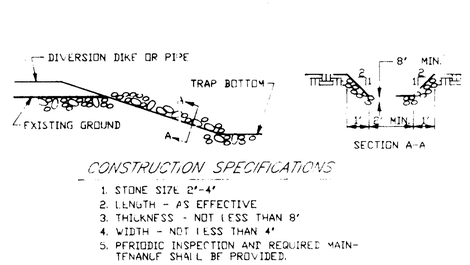

CONSTRUCTION SPECIFICATIONS

1. STONE SIZE 2"-4"
2. LENGTH - AS EFFECTIVE
3. THICKNESS - NOT LESS THAN 8"
4. WIDTH - NOT LESS THAN 4'
5. PERIODIC INSPECTION AND REQUIRED MAINTENANCE SHALL BE PROVIDED.
6. COMPACT STONE AFTER PLACEMENT WITH AVAILABLE EQUIPMENT.

9/17 STONE STABILIZATION STRUCTURE
SCALE: NTS

APPROVED: FOR PUBLIC WATER, PUBLIC SEWERAGE SYSTEMS, STORM DRAINAGE SYSTEMS AND PUBLIC ROADS:
HOWARD COUNTY DEPARTMENT OF PUBLIC WORKS
DIRECTOR — DATE 5/26/95
CHIEF, BUREAU OF ENGINEERING — DATE 5/26/95

APPROVED: HOWARD DEPARTMENT OF PLANNING AND ZONING
DIRECTOR — DATE 5/31/95
CHIEF, DIVISION OF LAND DEVELOPMENT AND RESEARCH — DATE 5/31/95

APPROVED: FOR PUBLIC WATER AND PUBLIC SEWERAGE SYSTEMS, HOWARD COUNTY HEALTH DEPARTMENT
COUNTY HEALTH OFFICER — DATE 5/30/95

CERTIFICATION BY THE DEVELOPER

( ) BY THE DEVELOPER:
"I/WE CERTIFY THAT ALL DEVELOPMENT AND CONSTRUCTION WILL BE DONE ACCORDING TO THESE PLANS, AND THAT ANY RESPONSIBLE PERSONNEL INVOLVED IN THE CONSTRUCTION PROJECT WILL HAVE A CERTIFICATE OF ATTENDANCE AT A DEPARTMENT OF THE ENVIRONMENT APPROVED TRAINING PROGRAM FOR THE CONTROL OF SEDIMENT AND EROSION BEFORE BEGINNING THE PROJECT. I SHALL ENGAGE A REGISTERED PROFESSIONAL ENGINEER TO SUPERVISE POND CONSTRUCTION AND PROVIDE THE HOWARD SOIL CONSERVATION DISTRICT WITH AN "AS-BUILT" PLAN OF THE POND WITHIN 30 DAYS OF COMPLETION. I ALSO AUTHORIZE PERIODIC ON-SITE INSPECTION BY THE HOWARD SOIL CONSERVATION DISTRICT"

Scott E. Osterburn — 5/18/95
SIGNATURE OF DEVELOPER — DATE
(PRINT NAME BELOW SIGNATURE)
SCOTT E. OSTERBURN

CERTIFICATION BY THE ENGINEER

( ) BY THE ENGINEER:
"I CERTIFY THAT THIS PLAN FOR POND CONSTRUCTION, EROSION AND SEDIMENT CONTROL REPRESENTS A PRACTICAL AND WORKABLE PLAN BASED ON MY PERSONAL KNOWLEDGE OF THE SITE CONDITIONS. THIS PLAN WAS PREPARED IN ACCORDANCE WITH THE REQUIREMENTS OF THE HOWARD SOIL CONSERVATION DISTRICT. I HAVE NOTIFIED THE DEVELOPER THAT HE/SHE MUST ENGAGE A REGISTERED PROFESSIONAL ENGINEER TO SUPERVISE POND CONSTRUCTION AND PROVIDE THE HOWARD SOIL CONSERVATION DISTRICT WITH AN "AS-BUILT" PLAN OF THE POND WITHIN 30 DAYS OF COMPLETION"

SIGNATURE OF ENGINEER — DATE 5/17/95
(PRINT NAME BELOW SIGNATURE)
JOHN CLAPSADDLE

( ) THESE PLANS FOR SMALL POND CONSTRUCTION, SOIL EROSION AND SEDIMENT CONTROL MEET THE REQUIREMENTS OF THE HOWARD SOIL CONSERVATION DISTRICT.

APPROVED — HOWARD S.C.D. — DATE 5/25/95

( ) THESE PLANS HAVE BEEN REVIEWED FOR THE HOWARD SOIL CONSERVATION DISTRICT AND MEET THE TECHNICAL REQUIREMENTS FOR SMALL POND CONSTRUCTION, SOIL EROSION AND SEDIMENT CONTROL

APPROVED — U.S. NATURAL RESOURCES CONSERVATION SERVICE — DATE 5/25/95

JOHN V. CLAPSADDLE, P.E.
MD. NO. 16956

revisions		
no.	description	date

prepared by:
The RBA ENGINEERS • ARCHITECTS • PLANNERS
7164 COLUMBIA GATEWAY DRIVE SUITE 205
COLUMBIA, MARYLAND 21046
410/312-0966

owner: HOWARD COUNTY
3430 COURTHOUSE DRIVE
ELLICOTT CITY, MARYLAND 21043

SEDIMENT CONTROL DETAILS

CENTRE 9500, PARCEL K
THE TIMBERS AT TROY GOLF COURSE
CLUBHOUSE AND MAINTENANCE FACILITIES

1ST ELECTION DISTRICT — HOWARD COUNTY, MARYLAND
TAX MAP 37, CENSUS TRACT 6011.01
WATER CODE: 1104 SEWER CODE: 7610000

SCALE	AS SHOWN
DRAWN	CHECKED
ELB	JVC
PROJ NO.	DATE
11212	5/16/95
SHEET 17 OF 20	SHEET REF. C-17

DRAWING FILE: 12125C01

SDP-95-92

APPROVED FOR PUBLIC WATER, PUBLIC SEWERAGE SYSTEMS, STORM DRAINAGE SYSTEMS AND PUBLIC ROADS
HOWARD COUNTY DEPARTMENT OF PUBLIC WORKS
DIRECTOR — DATE 5/26/95
CHIEF, BUREAU OF ENGINEERING — DATE 5/26/95

APPROVED HOWARD DEPARTMENT OF PLANNING AND ZONING
DIRECTOR — DATE 5/31/95
CHIEF, DIVISION OF LAND DEVELOPMENT AND RESEARCH — DATE 5/31/95

APPROVED FOR PUBLIC WATER AND PUBLIC SEWERAGE SYSTEMS, HOWARD COUNTY HEALTH DEPARTMENT
COUNTY HEALTH OFFICER — DATE 5/30/95

MATCHLINE A-A (SEE SHEET L-2)

MATCHLINE B-B (SEE SHEET L-2)

MARSHALEE DRIVE (FUTURE)

(2) RED MAPLE
(4) KWANZAN CHERRY
(3) JAP BLACK PINE
(12) SCHIP LAUREL
(40) CANDYTUFT
(1000 s.f.) ANNUALS
(17) SCHIP LAUREL

40' TYPE "E" BUFFER

(4) BARBERRY
(6) BARBERRY

OPEN SPACE Parcel K

FUTURE PARKING AREA

FUEL BLDG.
OPEN BIN
OPEN BIN
OPEN BIN
PESTICIDE BUILDING

NOTE: SCREENING/ PLANTING IN THIS AREA TO BE ADDRESSED WITH FUTURE PARKING.

PUBLIC WATER AND UTILITY EASEMENT TO REMAIN

MAINTENANCE BUILDING

16" P.W.M. (TO BE REMOVED)
16" P.W.M. (TO REMAIN)

5' STREAM BUFFER

25' WETLAND BUFFER

WETLAND LIMITS

PRACTICE GREEN

(8) DEL VALLEY AZALEA
(10) DEL VALLEY AZALEA
(25) SCHIP LAUREL
(3) PURPLE LEAF PLUM
(19) YEW
(175 s.f.) PERIWINKLE
(2) REDBUD
(10) HOT SHOT AZALEA
(13) HOT SHOT AZALEA
(13) RHODODENDRON
(60 s.f.) PERIWINKLE
(1) RIVER BIRCH

S26°36'55"W 28.45

CLUB HOUSE

LANDING ZONE

(1) GAUCER MAGNOLIA
(50 s.f.) ANNIA G
(20) CANDYTUFT
(2) FOSTER HOLLY
(9) YEW
(8) YEW
(9) YEW

(120 s.f.) PERIWINKLE
(1) RIVER BIRCH
(4) WHITE PINE
(17) LEATHERLEAF VIBURNUM
(7) BARBERRY
(17) BARBERRY
(1) BLUE SPRUCE

WARM-UP GREEN

HOLE 9 TEE

N 498,750 E 865,500

OPEN SPACE Parcel L Ho. Co.

8' CARTPATH

HOLE 10 TEE

HOLE 10 TEE

N 495,500 E 865,500

S25°44'48"W 602.7

N63°15'12"W 59.38

S25°59'04"W 515

N 498,750 E 864,250

(8) SCHIP LAUREL
(25) LONDON PLANE
(3) PURPLELEAF PLUM
(4) JAP BLACK PINE
(18) SCHIP LAUREL
(12) WHITE PINE

FUTURE MARYLAND STATE HIGHWAY MD. ROUTE 100 SRC PLAT 43830

The Timbers at Troy Golf Course

revisions		
no.	description	date
	REV. PER. COUNTY COMMENTS GRADING REVISIONS	4.1996

prepared by:
MARINA SCHOFIELD LANDSCAPE ARCHITECTURE
117 MAPLE DRIVE
ANNAPOLIS, MD 21403
(410)263-4496

LANDSCAPE PLAN
CENTRE 9500
PARCEL K
HOWARD COUNTY GOLF COURSE
CLUB HOUSE AND MAINTENANCE FACILITIES
HOWARD COUNTY 3430 COURTHOUSE Dr., Ellicott City, MARYLAND MD 21043

SCALE 1"=30
DRAWN | CHECKED
PROJ. NO | DATE 3/20/95
SHEET L-1
sheet 18 of 20

SDP-95-92

PLANT LIST						
			Size			
Quantity	Botanical/ Common Names	Caliper	Height	Spread	Spacing	Comments
28	Platanus x acerifolia "Bloodgood"/ London Planetree	2 1/2-3"	12-14'		See Plan	B&B; Full Crown; Center Leader
5	Acer rubrum "October Glory"/ Red Maple	2 1/2-3"	12-14'		See Plan	B&B; Full Crown; Center Leader
1	Picea Pungens Glauca/ Blue Colorado Spruce		10-12'		See Plan	B&B; Full Specimen
16	Pinus Strobus/ Eastern White Pine		6-8'		See Plan	B&B; Full
8	Pinus Thunbergiana/ Japanese Black Pine		6-8'		See Plan	B&B; Full
2	Ilex x attenuata "Fosteri #2"/ Foster Holly		7-8'		See Plan	B&B; Full Matching Specimens
2	Cercis canadensis/ Eastern Redbud	2-2 1/2"	8-10'		See Plan	B&B; Full Crown
6	Prunus cerisifera "Thundercloud"/ Purple-leaf Plum	2-2 1/2"	8-10'		See Plan	B&B; Full Crown
1	Magnolia soulangiana/ Saucer magnolia		8-10'		See Plan	B&B; Multistem Specimen
7	Prunus serrulata "Kwanzan"/ Kwanzan Cherry	2-2 1/2"	8-10'		See Plan	B&B; Full Crown
2	Betula nigra "Heritage"/ River Birch		10-12'		See Plan	B&B; Multistem specimen
13	Rhododendron spp. "P.J.M." Rhododendron		30-36"	30-36"	4' o.c.	Full
30	Rhododendron spp. "Delaware Valley"/ Delaware Valley Azalea		24-30"	24-30"	3' o.c.	Full
23	Rhododendron spp. "Girard Hot Shot"/ Hot Shot Azalea		24-30"	24-30"	3' o.c.	Full
49	Berberis thunbergii var.atropurpurea "Crimson Pygmy"/ Barberry		18-24"	18-24"	3' o.c.	Full
17	Viburnum rhytidophyllum/ Leatherleaf Viburnum		30-36"	24-30"	4' o.c.	Full
88	Prunus laurocerasus "Schipkaensis"/ Schip Laurel		24-30"	24-30"	4' o.c.	Full
68	Taxus baccata "Repandens"/ Spreading English Yew		18-24"	24-30"	3' o.c.	Full
60	Iberis sempervirens/ Candytuft				12" o.c.	1 gal. pots
255 s.f.	Vinca minor/ Periwinkle				8" o.c.	2 1/4" pots
150 s.f.	Annuals				6" o.c.	2 1/4" pots
7	Pinus Strobus/ Eastern White Pine		4'		See Plan	B&B; Full

PLANTING NOTES:

1. No planting to occur on any utility line or within any utility easement. Contractor to verify locations of utilities and shift planting to avoid them, if necessary.
2. All plant material to be nursery stock, healthy, vigorous, full, well shaped, and conform to the standards as given in "Grades and Standards for Nursery Plants" published by the American Association of Nurserymen.
3. Any substitutions in specified plant material, or changes to plan, must be approved by landscape architect prior to planting.
4. Maintenance agreement and guarantee period to be determined by owner.
5. **Plant beds:**
   Soil mix to consist of (1) part existing topsoil, to (1) part peat moss, to (1) part clean sand. If the contractor should find the existing soil conditions to be adverse to normal planting, it is his/her responsibility to modify the soil so that the plants will thrive.
   Fertilizer - All plant beds to receive an osmocote fertilizer applied at the rate of 4 lb./100 sq. ft.
   Mulch- All plant beds and tree rings to be mulched with a 3" layer of shredded, hardwood bark mulch.
   Bedlines- Curvilinear planting bed edges are to be smooth and continuous as shown on plan. All beds and tree rings to have neatly defined spaded edges. Proposed trees are to be planted either completely in or completely out of planting beds, without obstructing the planting bed edges.

GRAPHIC NOTES:

1. AREAS SHOWN STIPPLED TO BE SODDED. ALL OTHER NON-PLANTED OR NON-PAVED OPEN AREAS TO BE SEEDED W/SAME SEED MIX USED ON GOLF COURSE ROUGH.
2. TREES SHOWN IN DARK OUTLINE INDICATE TREES COUNTED TOWARD COUNTY REQUIREMENTS.

Tree Planting/Guying Detail

Tree Staking Detail

Shrub Planting Detail

Triangular Spacing/Bed Line Detail

SCHEDULE A
PERIMETER LANDSCAPE EDGE

Category	Adjacent to Roadways	Adjacent to Perimeter Properties
Landscape Type	Non-residential	N/A
Linear Feet of Roadway Frontage/Perimeter (TYPE 'B')	160 l.f.	"
Credit for Existing Vegetation (Yes, No, Linear Feet) (Describe below if needed)	No	"
Credit for Wall, Fence or Berm (Yes, No, Linear Feet) (Describe below if needed)	No	"
Number of Plants Required Shade Trees Evergreen Trees Shrubs	 3.2 (1:50') 4 (1:40') 0	"
Number of Plants Provided Shade Trees Evergreen Trees Other Trees (2:1 substitution) Shrubs (10:1 substitution) (Describe plant substitution credits below if needed)	 0 4 7 0	"
BUFFER-PARKING ADJACENT TO ROADWAY / TYPE 'E' 140 l.f. / # OF PLANTS REQUIRED: SHADE (1:40') = 3.5 = 4; SHRUBS (1:4') = 35	# OF PLANTS PROVIDED: SHADE TREES: 5; SHRUBS: 35	"

Comments Flowering trees substituted for shade trees at a 2:1 ratio, to provide seasonal interest and understory canopy (Required Street trees fulfill the upperstory canopy in the same area, and do not allow room for more shade trees. Note: Street trees do not fulfill frontage/perimeter planting requirements.)

SCHEDULE B
PARKING LOT INTERNAL LANDSCAPING

Number of Parking Spaces (CURRENTLY PROPOSED)	166 SPACES
Number of Trees Required / NO. OF LANDSCAPED ISLANDS REQUIRED	1:20 SPACES = 8.3 = 9 REQUIRED
Number of Trees Provided Shade Trees Other Trees (2:1 substitution)	NO. OF TREES PROVIDED = 16 NO. OF ISLANDS PROVIDED = 16+

* NOTE: FUTURE PARKING (SHOWN DASHED ON PLAN) LANDSCAPE REQUIREMENTS WILL BE ADDRESSED WHEN THESE SPACES ARE PROPOSED. THE TREES CURRENTLY SHOWN IN THE FUTURE PARKING AREAS ARE PROPOSED NOW IN ORDER TO ESTABLISH GROWTH & MATCH SIZE OF ALL OTHER TREES AT THE TIME OF FUTURE PARKING INSTALLATION.

APPROVED: FOR PUBLIC WATER, PUBLIC SEWERAGE SYSTEMS, STORM DRAINAGE SYSTEMS AND PUBLIC ROADS
HOWARD COUNTY DEPARTMENT OF PUBLIC WORKS
James M. Irvin — DIRECTOR — DATE 5/26/95
Elizabeth Anderson Calle — act. CHIEF, BUREAU OF ENGINEERING — DATE 5/20/95

APPROVED: HOWARD DEPARTMENT OF PLANNING AND ZONING
[signature] — DIRECTOR — DATE 5/31/95
Richard Blood — A/CHIEF, DIVISION OF LAND DEVELOPMENT AND RESEARCH — DATE 5/31/95

APPROVED: FOR PUBLIC WATER AND PUBLIC SEWERAGE SYSTEMS HOWARD COUNTY HEALTH DEPARTMENT
Joyce M. Boyd per [signature] — COUNTY HEALTH OFFICER — DATE 5/30/95

HOLE 1 TEE

HOLE 1 TEE

The Timbers at Troy Golf Course

Marina A. Schofield

revisions		
no.	description	date
	REV. PER COUNTY COMMENTS; GRADING REV.	4.19.95

prepared by:
MARINA SCHOFIELD
LANDSCAPE ARCHITECTURE
117 MAPLE DRIVE
ANNAPOLIS, MD 21403
(410)263-4496

Marina A. Schofield

LANDSCAPE PLAN
CENTRE 9500
PARCEL K
HOWARD COUNTY GOLF COURSE
CLUB HOUSE AND MAINTENANCE FACILITIES
HOWARD COUNTY, MARYLAND
3430 Courthouse Dr., Ellicott City, MD 21043
SDP-95-92

SCALE 1"=30'
DRAWN | CHECKED
PROJ. NO. | DATE 3/20/9
SHEET L-2
Sheet 19 of 20

APPROVED — HOWARD COUNTY DEPARTMENT OF PUBLIC WORKS

Director — 5/26/95

Chief, Bureau of Engineering — 5/26/95

APPROVED — HOWARD COUNTY OFFICE OF PLANNING AND ZONING

Director — 5/31/95

Chief, Division of Land Development and Research — 5/31/95 DATE

APPROVED — HOWARD COUNTY HEALTH DEPARTMENT

5/30/95

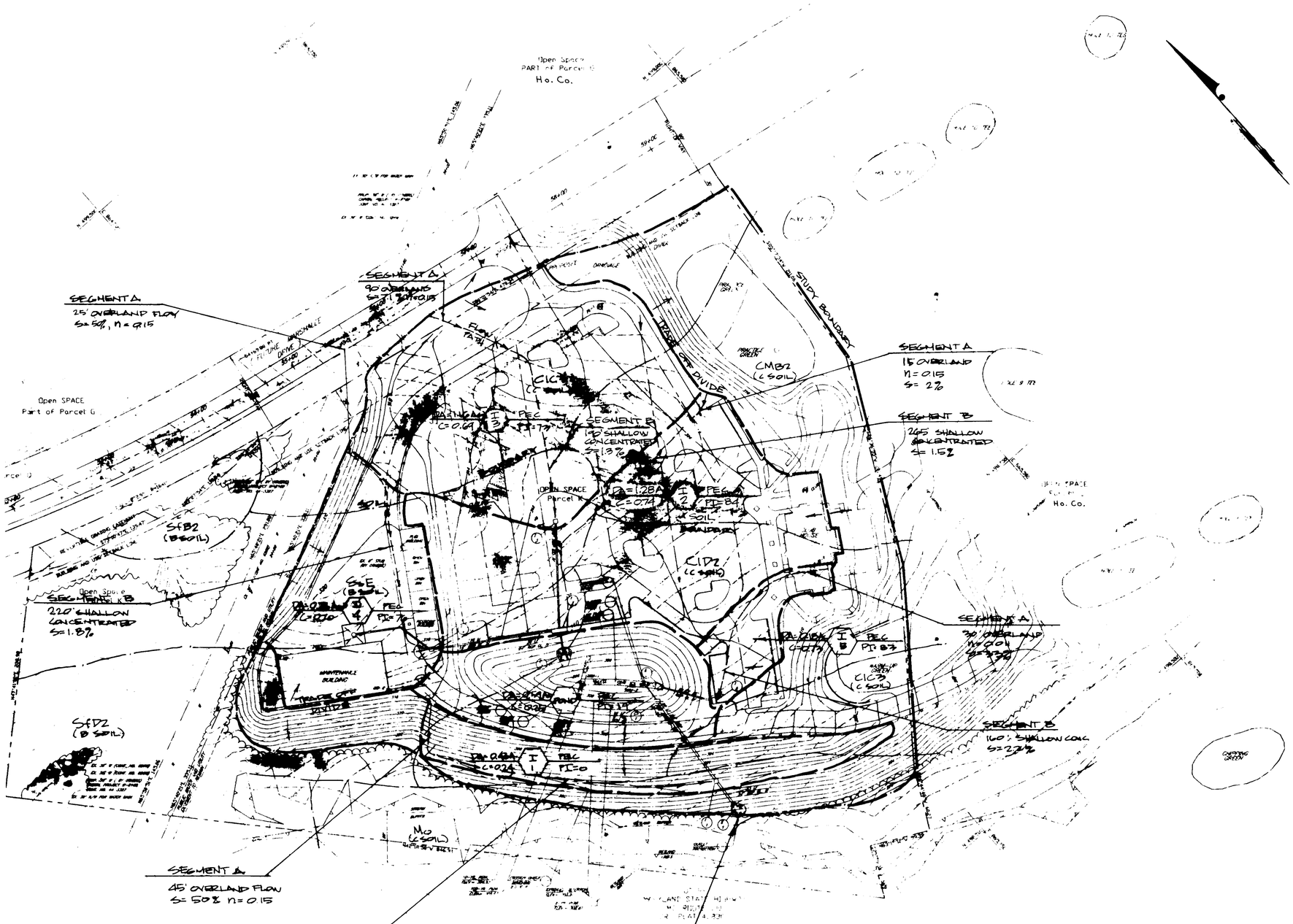

LEGEND

- PAVING
- TREE LINE
- DRAINAGE DIVIDE
- STUDY BOUNDARY
- FLOW PATH
- SOIL BOUNDARY

5/24/95

JOHN V. CLAPSADDLE, P.E.
MD. NO. 16956

NO.	REVISIONS	DATE

prepared by

The RBA Group — ENGINEERS • ARCHITECTS • PLANNERS
7164 COLUMBIA GATEWAY DRIVE SUITE 205
COLUMBIA, MARYLAND 21046
410/381-0966

OWNER: HOWARD COUNTY
3430 COURTHOUSE DRIVE
ELLICOTT CITY, MARYLAND 21043

DRAINAGE AREA MAP
POST DEVELOPED CONDITION

CENTRE SOUTH PARCEL K
THE TIMBERS AT TROY GOLF COURSE
CLUBHOUSE AND MAINTENANCE FACILITIES

TAX MAP 37 GRID 12 PARCEL 125
2ND ELECTION DISTRICT HOWARD COUNTY, MARYLAND

SCALE	1" = 50'
DRAWN	CHECKED
E.T.B.	J.V.C.
PROJ. NO.	DATE
3121-2	3/95
SHEET	SHEET REF.
20 of 20	D-1

SDP-95-92,