SHEET INDEX	
SHT. 1	SITE DEVELOPMENT PLAN
SHT. 2	STORMWATER MANAGEMENT PLAN
SHT. 3	LANDSCAPE PLAN & DRAINAGE AREAS

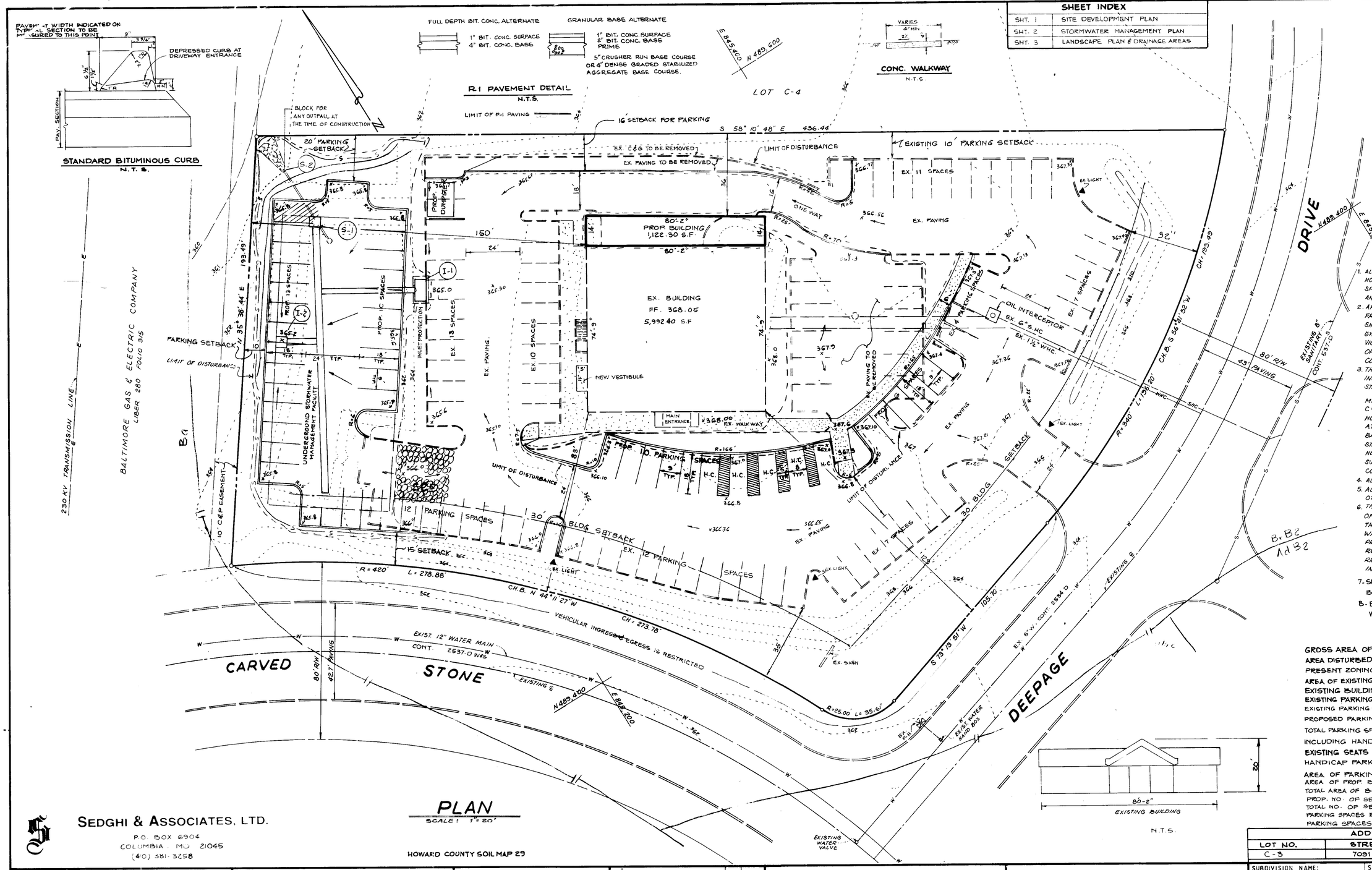

PLAN
SCALE: 1" = 20'

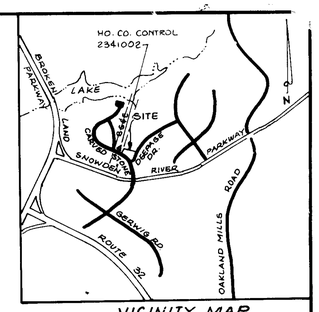

VICINITY MAP
SCALE: 1" = 2000'

BENCH MARK:
"X" CUT SET ON BOLT ON FIRE HYDRANT AT P.C. OF CURB RETURN DEEPAGE DRIVE AT CARVED STONE ELEV. 363.60

GENERAL NOTES:

1. ALL WORK SHALL BE PERFORMED IN ACCORDANCE WITH THE HOWARD COUNTY DESIGN MANUAL, VOLUME IV, STANDARD SPECIFICATIONS AND DETAILS FOR CONSTRUCTION, 1989 AMENDMENTS.
2. APPROXIMATE LOCATION OF EXISTING UTILITIES ARE SHOWN FROM BEST AVAILABLE INFORMATION. THE CONTRACTOR SHALL TAKE NECESSARY PRECAUTIONS TO PROTECT THE EXISTING UTILITIES AND MAINTAIN UNINTERUPTED SERVICE. ANY DAMAGED INCURED DUE TO CONTRACTOR'S OPERATION SHALL BE REPAIRED IMMEDIATELY AT THE CONTRACTOR'S EXPENSE.
3. THE CONTRACTOR IS REQUIRED TO NOTIFY THE FOLLOWING UTILITIES OR AGENCIES AT LEAST FIVE DAYS BEFORE STARTING WORK SHOWN ON THESE DRAWINGS.

MISS UTILITY	1-800-257-7777
C & P TELEPHONE CO.	725-9976
HOWARD COUNTY BUREAU OF UTILITIES	313-2366
AT & T CABLE LOCATION DIVISION	393-3553
BALT. GAS & ELECTRIC CO.	685-0123
STATE HIGHWAY ADMINISTRATION	531-5533
HOWARD COUNTY CONSTRUCTION/INSPECTION SURVEY DIVISION (24 HOURS PRIOR TO COMMENCEMENT OF WORK)	792-7272

4. ALL PIPES ELEVATIONS SHOWN ARE INVERT ELEVATIONS.
5. ALL PLAN DIMENSIONS ARE TO FACE OF CURB UNLESS OTHERWISE NOTED.
6. THE DEVELOPER IS RESPONSIBLE FOR THE ACQUISITION OF ANY EASEMENTS, RIGHTS AND/OR RIGHTS OF WAY THAT MAY BE REQUIRED AND THE DISCHARGE OF STORM WATER ONTO OR ACROSS ADJACENT OR DOWNSTREAM PROPERTIES INCLUDED IN THIS PLAN. HE IS ALSO RESPONSIBLE FOR THE ACQUISITION OF ALL EASEMENTS RIGHTS AND/OR WORK ON ADJACENT PROPERTIES INCLUDED IN THIS PLAN.
7. SEE F-79-09C, SDP-80-164 & PLANNING BOARD APPROVED 8-13-80
8. EX. W&S CONTRACT NO: SEWER - 537-D WATER - 2534-D & 2537-D

SITE TABULATION

GROSS AREA OF SITE	87,066 S.F. (1.999 AC.)
AREA DISTURBED	20,130 S.F. (0.46 AC.)
PRESENT ZONING	NT - EMPLOYMENT CENTER, COMMERCIAL
AREA OF EXISTING BUILDING	5,992 S.F. (0.138 AC.)
EXISTING BUILDING USE	RESTAURANT
EXISTING PARKING SPACES	81
EXISTING PARKING SPACES TO REMAIN	70
PROPOSED PARKING SPACES	43
TOTAL PARKING SPACES PROVIDED INCLUDING HANDICAP	113
EXISTING SEATS	196
HANDICAP PARKING PROVIDED	5
AREA OF PARKING	41,350 S.F. OR 0.95 AC.
AREA OF PROP. BUILDING	1,122.30 S.F. OR 0.026 AC.
TOTAL AREA OF BUILDING	7,114.70 S.F. (0.16 AC - 0.08%)
PROP. NO. OF SEATS	60
TOTAL NO. OF SEATS	256
PARKING SPACES REQUIRED	256/4 = 64
PARKING SPACES PROVIDED	113

ADDRESS CHART	
LOT NO.	STREET ADDRESS
C-3	7091 DEEPAGE DRIVE

SEDGHI & ASSOCIATES, LTD.
P.O. BOX 6904
COLUMBIA, MD 21045
(410) 381-3258

HOWARD COUNTY SOIL MAP 29

APPROVED: FOR PUBLIC WATER AND PUBLIC SEWERAGE SYSTEMS HOWARD COUNTY HEALTH DEPARTMENT.
9-21-95
COUNTY HEALTH OFFICER — DATE

APPROVED: DEPARTMENT OF PLANNING AND ZONING
9/20/95 — Chief, Development Engineering Division — Date
9/29/95 — Chief, Division of Land Development and Research — Date
10/2/95 — Director — Date

REVIEWED FOR HOWARD COUNTY SOIL CONSERVATION DISTRICT AND MEETS TECHNICAL REQUIREMENTS.
9/14/95
U.S. SOIL CONSERVATION SERVICE — DATE

THIS DEVELOPMENT IS APPROVED FOR EROSION AND SEDIMENT CONTROL BY THE HOWARD SOIL CONSERVATION DISTRICT.
9/14/95
HOWARD COUNTY SOIL CONSERVATION DISTRICT — DATE

APPROVED
Planning Board
of Howard County
19 January 1995

NO.	REVISION	BY	DATE
1	Add Buildings	W.J.	7-30-97

ENGINEER'S CERTIFICATE

I HEREBY CERTIFY THAT THIS PLAN FOR EROSION AND SEDIMENT CONTROL REPRESENT A PRACTICAL AND WORKABLE PLAN BASED ON MY PERSONAL KNOWLEDGE OF THE SITE CONDITIONS AND THAT IT WAS PREPARED IN ACCORDANCE WITH THE REQUIREMENTS OF THE HOWARD SOILS CONSERVATION DISTRICT.

Mike Sedghi, P.E. 13816 — 9-20-94
SIGNATURE OF ENGINEER — DATE

DEVELOPER'S CERTIFICATE

I/WE CERTIFY THAT ALL DEVELOPMENT AND CONSTRUCTION WILL BE DONE ACCORDING TO THIS PLAN OF DEVELOPMENT AND PLAN FOR EROSION AND SEDIMENT CONTROL AND THAT ALL RESPONSIBLE PERSONNEL INVOLVED IN THE CONSTRUCTION PROJECT WILL HAVE A CERTIFICATE OF ATTENDANCE AT A DEPARTMENT OF ENVIRONMENT APPROVED TRAINING PROGRAM FOR THE CONTROL OF SEDIMENT AND EROSION BEFORE BEGINNING THE PROJECT. I ALSO AUTHORIZE PERIODIC ONSITE INSPECTOR BY THE HOWARD SOIL CONSERVATION DISTRICT OR THEIR AUTHORIZED AGENTS AS DEEMED NECESSARY.

Ricardo Langford — 9/1/95
SIGNATURE OF DEVELOPER — DATE

SUBDIVISION NAME: HUNAN MANOR RESTAURANT	SECTION: V.O.B. 2/2	PARCEL: LOT C-3	
PLAT NO: 4068 / BLOCK NO: / ZONE: NT	TAX MAP: 42	ELEC. DIST. 6TH	CENSUS TR. 6061.03
WATER CODE E-12	SEWER CODE 5330300		

DESIGNED BY: VS.	**SITE DEVELOPMENT PLAN** PARKING ADDITION TO EX. RESTAURANT **HUNAN MANOR RESTAURANT** V.O.B. 2/2, LOT C-3 6TH ELECTION DISTRICT HOWARD COUNTY, MD.	SCALE: 1" = 20'
DRAWN BY: VS.		DRAWING NO: 1 OF 3
CHECKED BY: MS.	SEE SDP-80-164	DATE: 9-20-94

OWNER
HUNAN MANOR RESTAURANT
7091 DEEPAGE DR.
COLUMBIA, MD. 21045

SDP-95-27

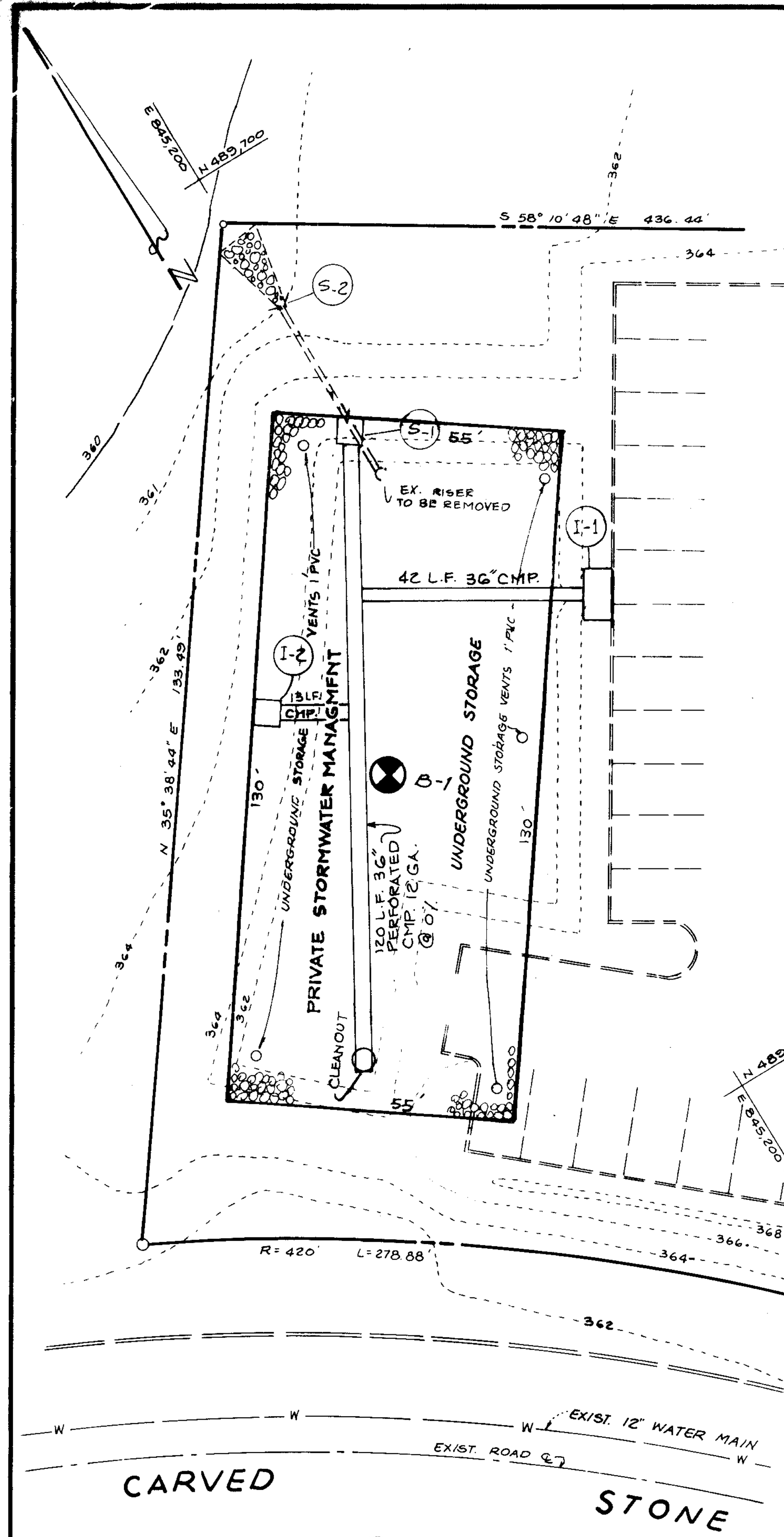

PLAN
SCALE: 1" = 20'

SOIL BORING RESULT

SURFACE ELEV.	BORING NO.	DEPTH	INFILT. RATE	
360.80	1	0' - 8'	NOT SUITABLE	RED-BROWN DRY TO MOIST SANDY CLAY LOAM (SC)

INFILTRATION RATE 0.17
GROUNDWATER AT 7'

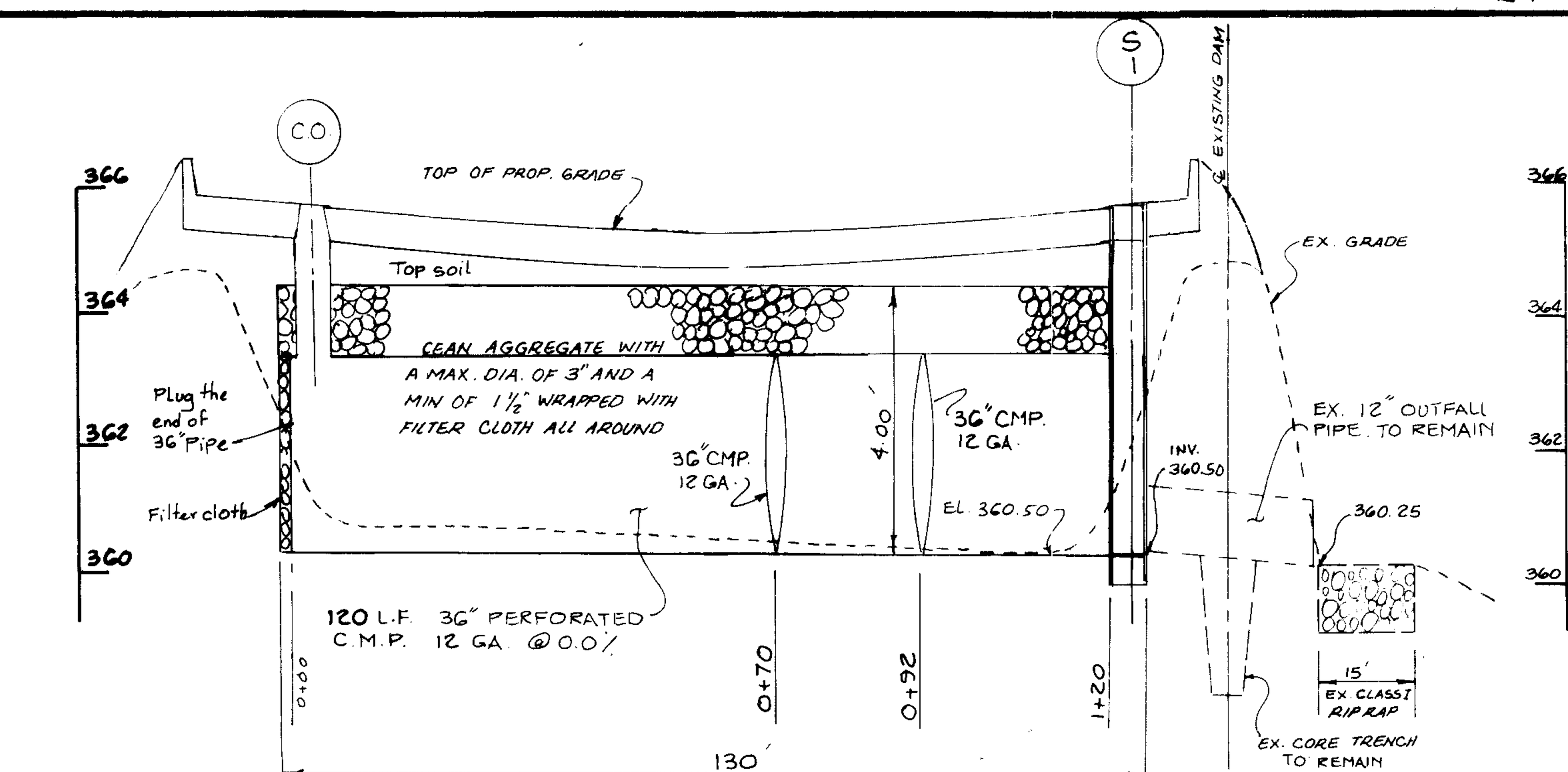

SECTION THROUGH S.W.M. FACILITY
SCALE: HORIZ. 1" = 20'
VERT. 1" = 2'

NOTE:

1. STORMWATER MANAGEMENT FACILITY WILL BE OWNED AND MAINTAINED BY THE OWNER.
2. SEE SHEET #1 FOR GRADES

STORMWATER MANAGEMENT
OPERATION & MAINTENENCE SCHEDULE

Routine maintenance

1. Facility shall be inspected annually and after major storms. Inspection should be performed during wet weather to determine if the facility is functioning properly.
2. Visible signs of errosion in the riprap outlet area shall be repaired as soon as it is noticed.

None routine maintenance

1. Structural components of the facility such as pipes, inlets and riser inlet shall be repaired upon the detection of any damage. The components should be inspected during routine maintenance operation.
2. Sediment shall be removed from inlets and pipes when its accumulation significantly interfere with the function of the facility. When deemed necessary for aesthetic reasons, or when deemed necessary by Howard County.

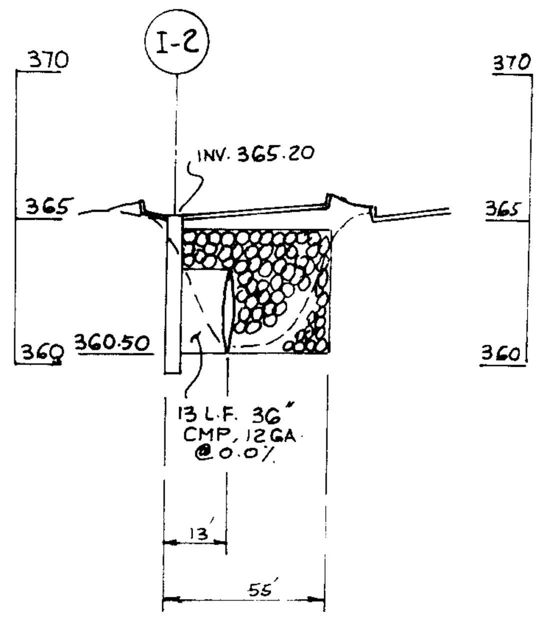

PROFILE I-2
SCALE: HORIZ 1" = 50'
VERT 1" = 5'

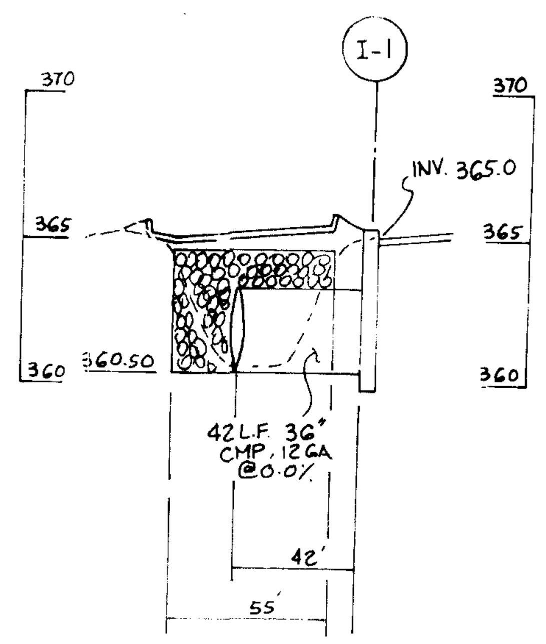

PROFILE I-1
SCALE: HORIZ 1" = 50'
VERT 1" = 5'

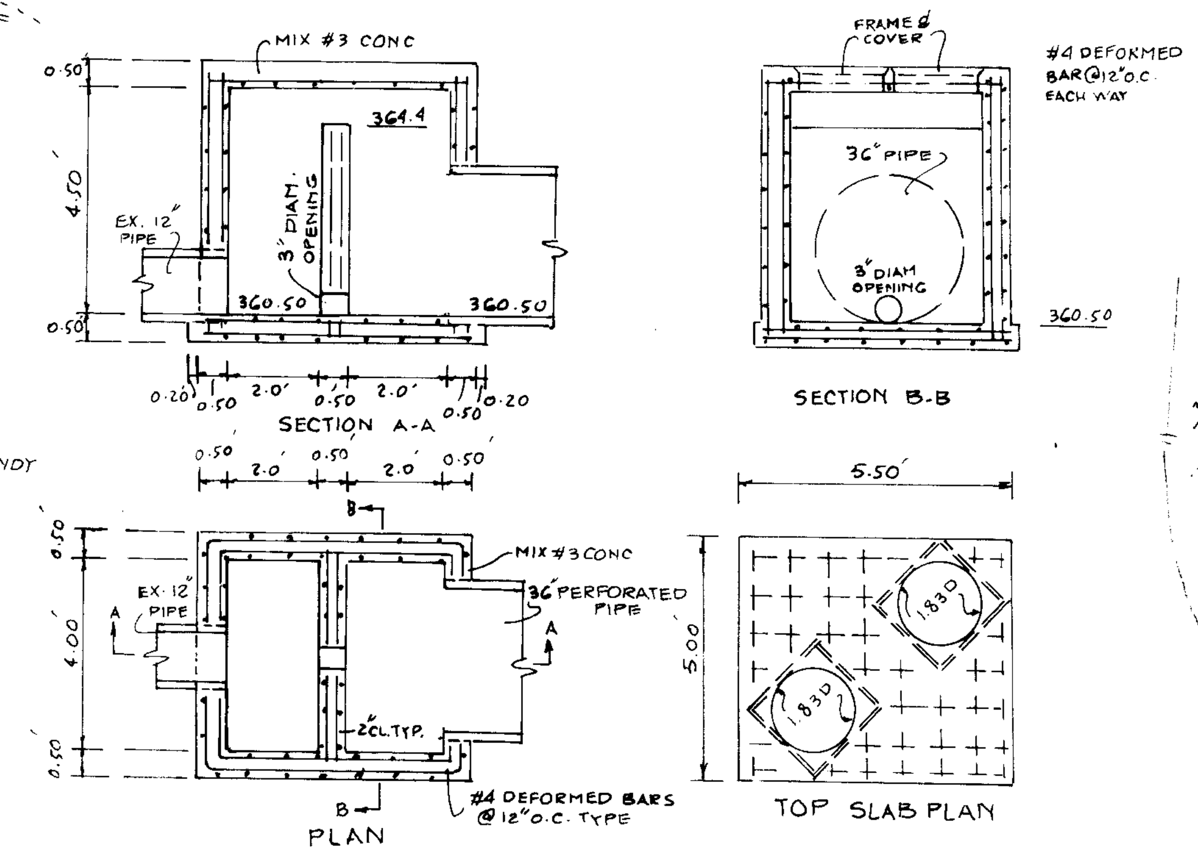

STRUCTURE S-1
SCALE: 1" = 3'

STRUCTURE SCHEDULE				
NO	TYPE	TOP EL	INV. IN	INV. OUT
I-1	A-10 INLET, H.C. S.D. 4.02	365.58	—	360.50
I-2	S INLET, H.C. S.D. 4.22	365.20	—	360.50
S-1	SPECIAL MADE, SEE DETAIL	365.50	360.50	360.50
S-2	EXISTING	—	—	360.25

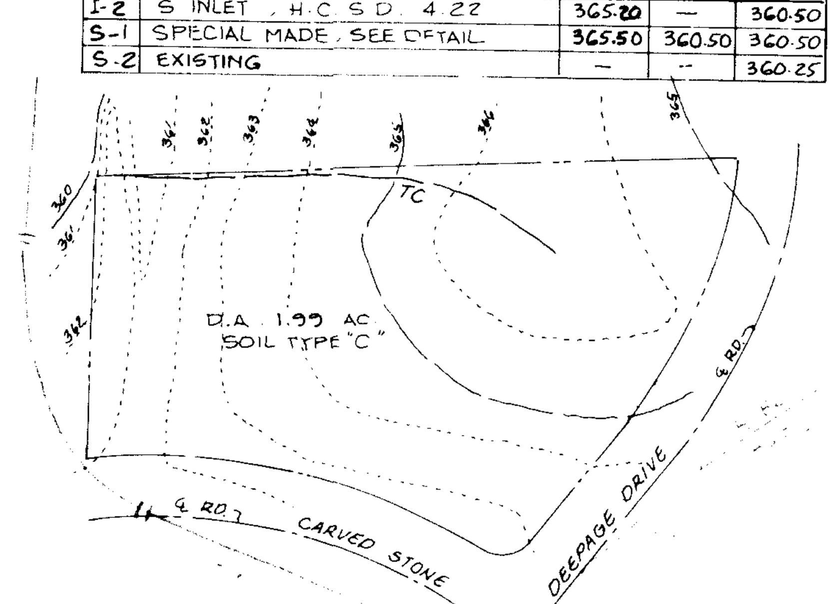

EXISTING DRAINAGE AREA
SCALE 1" = 100'

HOWARD COUNTY SOIL MAP 29

SEQUENCE OF CONSTRUCTION

1. OBTAIN GRADING PERMIT 3 DAYS
2. NOTIFY HOWARD COUNTY, INSPECTION AND PERMITS AT 792-7272 A MINIMUM OF 24 HOURS PRIOR TO THE START OF ANY WORK. 1 DAY
3. INSTALL SILT FENCES 2 DAYS
4. INSTALL STABILIZED CONST. ENTRANCE TO S.W.M. 1 DAY
5. CONSTRUCT STORMWATER MANAGEMENT FACILITY AND STORM DRAINS. 20 DAYS
6. CONSTRUCT CURBS AND LAY BASE COURSE. 10 DAYS
7. CLEAN BASE COURSE, APPLY TACK COAT TO BASE COURSE AND LAY SURFACE COURSE, STABILIZE ALL REMAINING OF DISTURBED AREAS. 7 DAYS
8. WITH THE APPROVAL OF THE SEDIMENT CONTROL INSPECTORS, REMOVE ALL SEDIMENT AND EROSION CONTROL MEASURES ONCE ALL THE AREAS DRAINING TO THEM ARE PERMANENTLY STABILIZED. 7 DAYS

SEDIMENT & EROSION CONTROL LEGEND

—— S ——	SILT FENCE
——┤├——	SOIL LINES
— — — —	LIMIT OF DISTURBANCE
- - - - - -	EXISTING CONTOURS
————	PROPOSED CONTOURS
x 362.00	SPOT ELEVATIONS
(hatched)	STABILIZED CONST. ENTRANCE
(square)	INLET PROTECTION

STANDARD SEDIMENT CONTROL NOTES

1. A minimum of 48 hours notice must be given to the Howard County Department of Inspections, Licenses and Permits, Sediment Control Division prior to the start of any construction (313-1855).
2. All vegetative and structural practices are to be installed according to the provisions of this plan and are to be in conformance with the ***1994 MARYLAND STANDARDS AND SPECIFICATIONS FOR SOIL EROSION AND SEDIMENT CONTROL*** and revisions thereto.
3. Following initial soil disturbance or re-disturbance, permanent or temporary stabilization shall be completed within: a) 7 calendar days for all perimeter sediment control structures, dikes, perimeter slopes and all slopes steeper than 3:1, b) 14 days as to all other disturbed or graded areas on the project site.
4. All sediment traps/basins shown must be fenced and warning signs posted around their perimeter in accordance with Vol 1, Chapter 7 of the ***HOWARD COUNTY DESIGN MANUAL***, Storm Drainage.
5. All disturbed areas must be stabilized within the time period specified above in accordance with the ***1994 MARYLAND STANDARDS AND SPECIFICATIONS FOR SOIL EROSION AND SEDIMENT CONTROL*** for permanent seeding, sod, temporary seeding, and mulching (Sec. G). Temporary stabilization with mulch alone shall only be done when recommended seeding dates do not allow for proper germination and establishment of grasses.
6. All sediment control structuresare to remain in place and are to be maintained in operative condition until permission for their removal has been obtained from the Howard County Sediment Control Inspector.
7. *Site Analysis*

Total Area of Site	=	1.09 Acres
Area Disturbed	=	0.43 Acres
Area to be roofed or paved	=	0.37 Acres
Area to be vegetatively stabilized	=	0.06 Acres
Total Cut	=	100 Cu. Yds.
Total Fill	=	100 Cu. Yds.
Offsite waste/borrow area location:		NONE, SWM Filled w/stone

8. Any sediment control practice which is disturbed by grading activity for placement of utilities must be repaired on the same day of disturbance.
9. Additional sediment control must be provided, if deemed necessary by the Howard County Sediment Control Inspector.
10. On all sites with disturbed areas in excess of 2 acres, approval of the inspection agency shall be requested upon completion of installation of perimeter erosion and sediment controls, but before proceeding with any other earth disturbance or grading. Other building or grading inspection approvals may not be authorized until this initial approval by the inspection agency is made.
11. Trenches for the construction of utilities is limited to three pipe lengths or that which shall be back-filled and stabilized within one working day, whichever is shorter.

SOD MAINTENANCE

1. In the absence of adequate rainfall, watering shall be performed daily or as often as necessary during the first week and in sufficient quantities to maintain moist soil to a depth of 4". watering should be done during the heat of the day to prevent wilting.
2. After the first week, sod watering is required as necessary to maintain adequate moisture content.
3. The first mowing of sod should not be attempted until the sod is firmly rooted. No more than 1/3 of the grass leaf shall be removed by the initial cutting or subsequent cuttings. Grass height shall be maintained between 2" and 3" unless otherwise specified

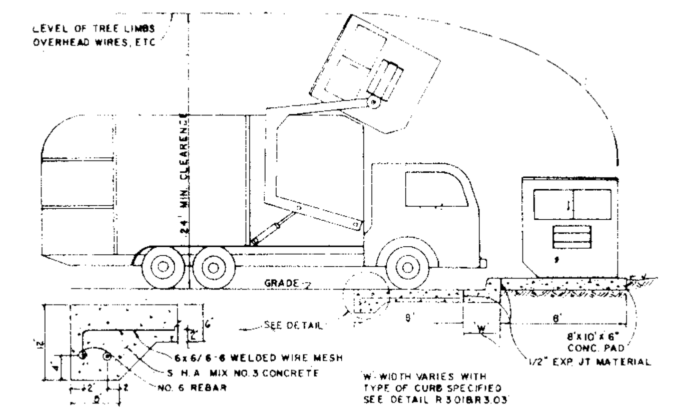

DUMPSTER DETAIL
N.T.S.

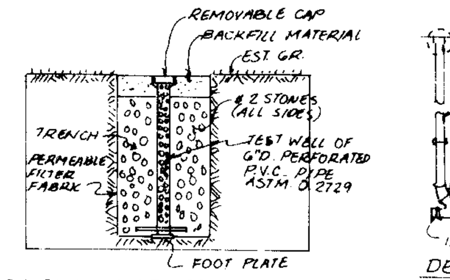

DETAIL OF OBSERVATION WELL
N.T.S.

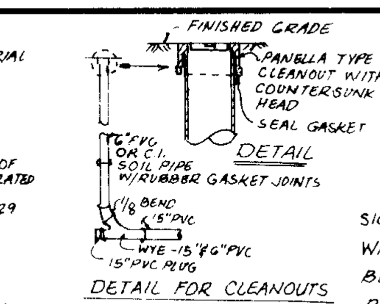

DETAIL FOR CLEANOUTS
N.T.S.

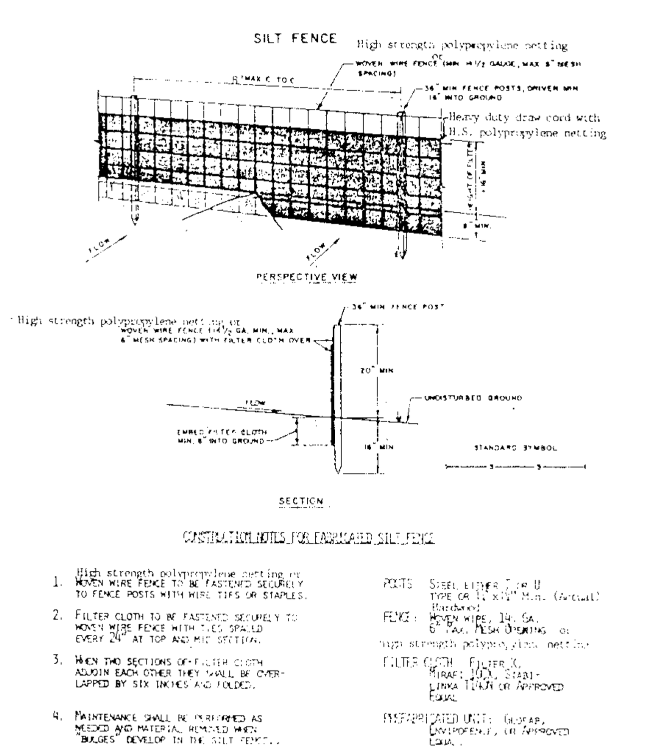

SILT FENSE

SIGN TO UTILIZE AN ALUMINUM BLANK 6" x 12" x 0.080 THICK WITH TWO (2) SINGLE POST MOUNTING HOLES. THE TEXT AND BORDER SHALL BE STANDARD GREEN TO MATCH THE R7-8 RESERVED PARKING SIGN AND THE BACKGROUND SHALL BE REFLECTIVE WHITE. THE TEXT SHALL BE 3" CHARACTERS.

MOUNTING:
THE FINE SIGN SHALL BE MOUNTED UNDERNEATH THE BELOW R7-8 RESERVED PARKING SIGN. THE BOTTOM EDGE SHALL BE NO LESS 7 FEET ABOVE GROUND. IF THE SIGN IS PLACED AGAINST A BUILDING, STRUCTURE OR OTHER LOCATION WHERE VEHICLE OR PEDESTRIAN TRAFFIC IS NOT OBSTRUCTED, THE BOTTOM EDGE OF THE SIGN SHALL BE AT LEAST 6 FEET, BUT NO MORE THAN 10 FEET ABOVE GROUND BECAUSE THIS IS IN ADDITION TO EXISTING SIGN INSTALLATIONS, SOME ADJUSTMENT IN HEIGHT WILL BE NECESSARY.

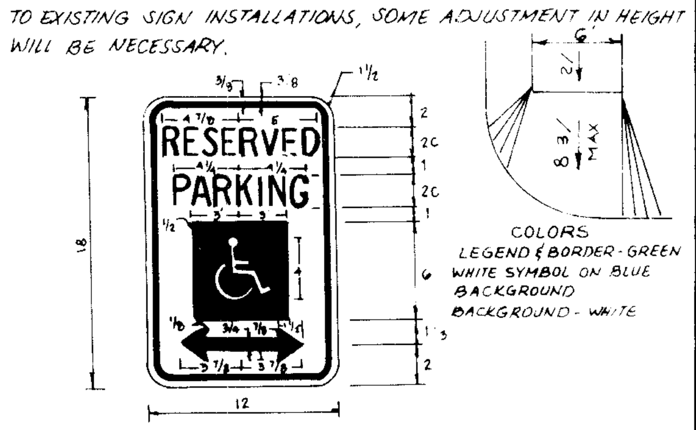

HANDICAPPED PARKING SIGN SPECIFICATIONS

STANDARDS AND SPECIFICATIONS
FOR
VEGETATIVE STABILIZATION
WITH SOD

SPECIFICATIONS

1. Class of turfgrass sod shall be Maryland or Virginia State Certified, or Maryland or Virginia State approved sod.
2. Sod shall be machine cut at a uniform soil thickness of 3/4 inch, plus or minus 1/4 inch, at the time of cutting. Measurement for thickness shall exclude top growth and thatch.
3. Standard size sections of sod shall be strong enough to support their own weight and retain their size and shape when suspended vertically with a firm grasp on the upper 10 percent of the section.
4. Individual pieces of sod shall be cut to the suppliers width and length. Maximum allowable deviation from standard widths and lengths shall be 5%. Broken pads and torn or uneven ends will not be acceptable.
5. Sod shall not be harvested or transplanted when moisture content (excessively dry or wet) may adversely affect its survival.
6. Sod shall be harvested, delivered and installed within a period of 36 hours. Sod not transplanted within this period shall be inspected and approved prior to its installation.

I. SITE PREPARATION

Fertilizer and lime application rates shall be determined by soil tests. Under unusual circumstances where there is insufficient time for a complete soil test, fertilizer and lime materials may be applied in amounts shown under B, below.

A. Prior to sodding, the surface shall be cleared of all trash, debris, and of all roots, brush, wire, grade stakes and other objects that would interfere with planting, fertilizing or maintenance operations.

B. Where the soil is acid or composed of heavy clays, ground limestone shall be spread at the rate of 2 tons/acre or 100 pounds per 1,000 square feet. In all soils 1,000 pounds per acre or 25 pounds per 1,000 square feet of 10-10-10 fertilizer or equivalent shall be uniformly applied and mixed into the top 3 inches of soil with the required lime.

C. All areas receiving sod shall be uniformly fine graded. Hard-packed earth shall be scarified prior to placement of sod.

PERMANENT SEEDING NOTES

Apply to graded or cleared areas not subject to immediate further disturbance where a permanent long-lived vegetative cover is needed.

Seedbed Preparation: Loosen upper three inches of soil by raking, discing or other acceptable means before seeding, if not previously loosened.

Soil Amendments: In lieu of soil test recommendations, use one of the following schedules:

1) Preferred -- Apply 2 tons per acre dolomitic limestone (92 lbs/1000 square ft) and 600 lbs per acre 10-10-10 fertilizer (14 lbs/1000 sq ft) before seeding. Harrow or disc into upper three inches of soil. At time of seeding, apply 400 lbs per acre 30-0-0 ureaform fertilizer (9 lbs/1000 sq ft).

2) Acceptable -- Apply 2 tons per acre dolomitic limestone (92 lbs/1000 sq ft) and 1000 lbs per acre 10-10-10 fertilizer (23 lbs/1000 sq ft) before seeding. Harrow or disc into upper three inches of soil.

Seeding - For the periods March 1 thru April 30, and August 1 thru October 15, seed with 60 lbs per acre (1.4 lbs/1000 sq ft) of Kentucky 31 Tall Fescue. For the period May 1 thru July 31, seed with 60 lbs Kentucky 31 Tall Fescue per acre and 2 lbs per acre (.05 lbs/1000 sq ft) of weeping lovegrass. During the period of October 16 thru February 28, protect site by: Option (1) 2 tons per acre of well anchored straw mulch and seed as soon as possible in the spring. Option (2) Use sod. Option (3) Seed with 60 lbs/acre Kentucky 31 Tall Fescue and mulch with 2 tons/acre well anchored straw.

Mulching -- Apply 1½ to 2 tons per acre (70 to 90 lbs/1000 sq ft) of unrotted small grain straw immediately after seeding. Anchor mulch immediately after application using mulch anchoring tool or 218 gallons per acre (5 gal/1000 sq ft) of emulsified asphalt on flat areas. On slopes 8 feet or higher, use 348 gallons per acre (8 gal/1000 sq ft) for anchoring.

Maintenance -- Inspect all seeded areas and make needed repairs, replacements and reseedings.

TEMPORARY SEEDING NOTES

Apply to graded or cleared areas likely to be redisturbed where a short-term vegetative cover is needed.

Seedbed Preparation: Loosen upper three inches of soil by raking, discing or other acceptable means before seeding, if not previously loosened.

Soil Amendments: Apply 60 lbs per acre 10-10-10 fertilizer (14 lbs/1000 sq ft).

Seeding: For periods March 1 thru April 30 and from August 15 thru November 15, seed with 2½ bushel per acre of annual rye (3.2 lbs/1000 sq ft). For the period May 1 thru August 14, seed with 3 lbs per acre of weeping lovegrass (.07 lbs/1000 sq ft). For the period November 16 thru February 28, protect site by applying 2 tons per acre of well anchored straw mulch and seed as soon as possible in the spring, or use sod.

Mulching: Apply 1½ to 2 tons per acre (70 to 90 lbs/1000 sq ft) of unrotted small grain straw immediately after seeding. Anchor mulch immediately after application using mulch anchoring tool or 218 gal per acre (5 gal/1000 sq ft) of emulsified asphalt on flat areas. On slopes 8 ft or higher, use 348 gal per acre (8 gal/1000 sq ft) for anchoring.

Refer to the 1983 MARYLAND STANDARDS AND SPECIFICATIONS FOR SOIL EROSION AND SEDIMENT CONTROL for rate and methods not covered.

GENERAL NOTES

1) Refer to "1983 Maryland Standards and Specifications for Soil Erosion and Sediment Control" for standard details and details for practice specified herein.
2) With the approval of the sediment control inspector, changes can and will be made to insure the control of sediment. Changes in sediment control practices require prior approval of the inspector and the County Soil Conservation District.
3) At the end of each working day, all sediment control practices are inspected and left in operational condition.
4) Following initial soil disturbance or redisturbance, temporary stabilization shall be completed within calendar days as to the surface of all perimeter controls, dikes, swales, ditches, perimeter slopes, and all slopes greater than 3 horizontal to 1 vertical and b.) fourteen days as to all other disturbed areas.
5) Any change to the grading proposed on this plan requires approval of the County Soil Conservation District.
6) Dust control will be provided for all disturbed areas. Refer to Maryland Standards and Specifications for Soil Erosion and Sediment Control, pp 62.01 and 62.02 for acceptable methods of dust control.
7) Any variation from the sequence of operations stated on this plan requires the approval of the sediment control inspector and the Soil Conservation District prior to the initiation of the change.
8) Excess cut or borrow material shall go to or come from a site with an approved sediment control plan.

The following item may be used as applicable:

9) Refer to "Maryland's Guidelines to Waterway Construction" by the Water Resources Administration (WRA), dated January, 1986 for standard details and detailed specifications of each practice specified herein for waterway construction.

SOD:

1. Class of turfgrass sod shall be Md. Certified or approved. Sod labels shall be made avalable to the job forman & inspector
2. Sod shall be machine cut at a uniform soil thickness of 3/4", plus or minus 1/4", at the time of cutting. Measurement for thickness shall exclude top growth and thatch. Individual pieces of sod shall be cut to the sopplies width and length. Maximum allowable deviation from standard widths and lengths shall be 5 percent. Broken pads and torn or uneven ends will not be acceptable
3. Standard size section of sod shall be strong enough to support their own weight and retain their size and shape when supported vertically with a firm grasp on the upper 10% of the section.
4. Sod shall not be harvested or transplanted when moisture content (excessively dry or wet) may adversely effect its survival.
5. Sod shall be harvested, delivered and installed within a period of 36 hrs. Sod not transplanted within this period shall be approved by an agronomist or soil scientist prior to its installation.

SOD INSTALLATION

1. During of excessively high temperature or in areas having dry subsoil, the subsoil shall be lightly irrigated immediately prior to laying the sod.
2. The first row of sod shall be laid in a straight line with subsequent rows placed parallel to and tightly wedged against each other. Lateral joint shall be staggered to promote more uniform growth and strength. Ensure that sod is not stretched or overlapped and that all joints are butted light in order to prevent void which would cause air drying of the roots.
3. Whenever possible, sod shall be laid with the long edges parallel to the contour and with staggering joints. Sod shall be rolled and tamped, pegged or otherwise secured to prevent slippage on slopes and to ensure solid contact between sod roots & the underlying soil surface.
4. Sod shall be watered immediately following rolling or tamping until the underside of the new sod pad and soil surface below the sod are thoroughly wet. The operations of laying, tamping and irrigating for any piece of sod shall be completed within eight hours.

SEDGHI & ASSOCIATES, LTD.
P.O. BOX 6904
COLUMBIA, MD 21045
(410) 381-3258

APPROVED: FOR PUBLIC WATER AND PUBLIC SEWERAGE SYSTEMS HOWARD COUNTY HEALTH DEPARTMENT.
Joyce M. Boyd 9-21-95
COUNTY HEALTH OFFICER

APPROVED: DEPARTMENT OF PLANNING AND ZONING
Chief, Development Engineering Division — Date 9/18/95
Gina Swarmony — Chief, Division of Land Development and Research — Date 9/29/95
Director — Date 10/2/95

REVIEWED FOR HOWARD COUNTY SOIL CONSERVATION DISTRICT AND MEETS TECHNICAL REQUIREMENTS.
Patricia Engler 9/14/95
U.S. SOIL CONSERVATION SERVICE — DATE

THIS DEVELOPMENT IS APPROVED FOR EROSION AND SEDIMENT CONTROL BY THE HOWARD SOIL CONSERVATION DISTRICT.
John R. Robertson 9/14/95
HOWARD COUNTY SOIL CONSERVATION DISTRICT — DATE

19 January 1995

NO.	REVISION	BY	DATE

ENGINEER'S CERTIFICATE

I HEREBY CERTIFY THAT THIS PLAN FOR EROSION AND SEDIMENT CONTROL REPRESENT A PRACTICAL AND WORKABLE PLAN BASED ON MY PERSONAL KNOWLEDGE OF THE SITE CONDITIONS AND THAT IT WAS PREPARED IN ACCORDANCE WITH THE REQUIREMENTS OF THE HOWARD SOILS CONSERVATION DISTRICT.

P.E. 13816 9-20-94
SIGNATURE OF ENGINEER — DATE

DEVELOPER'S CERTIFICATE

I/WE CERTIFY THAT ALL DEVELOPMENT AND CONSTRUCTION WILL BE DONE ACCORDING TO THIS PLAN OF DEVELOPMENT AND PLAN FOR EROSION AND SEDIMENT CONTROL AND THAT ALL RESPONSIBLE PERSONNEL INVOLVED IN THE CONSTRUCTION PROJECT WILL HAVE A CERTIFICATE OF ATTENDANCE AT A DEPARTMENT OF ENVIRONMENT APPROVED TRAINING PROGRAM FOR THE CONTROL OF SEDIMENT AND EROSION BEFORE BEGINNING THE PROJECT. I ALSO AUTHORIZE PERIODIC ONSITE INSPECTOR BY THE HOWARD SOIL CONSERVATION DISTRICT OR THEIR AUTHORIZED AGENTS AS DEEMED NECESSARY.

Ricardo Langford 9/1/95
SIGNATURE OF DEVELOPER — DATE

SUBDIVISION NAME: HUNAN MANOR RESTAURANT			SECTION:	PARCEL: LOT C-3	
PLAT NO: 4068	BLOCK NO:	ZONE: NT	TAX MAP: 42	ELEC. DIST. 6TH	CENSUS TR. 6061.03
WATER CODE E-12			SEWER CODE 5330300		

DESIGNED BY: MS	**STORMWATER MANAGEMENT PLAN** **HUNAN MANOR RESTAURANT** 6TH ELECTION DISTRICT HOWARD COUNTY, MD.	SCALE: 1" = 20'
DRAWN BY: VS		DRAWING NO: 2 OF 3
CHECKED BY: MS		DATE: 9-20-94

OWNER:
HUNAN MANOR RESTAURANT
7091 DEEPAGE DRIVE
COLUMBIA, MD. 21045

SDP-95-27

NOTE:
CONTRACTOR SHALL VERIFY LOCATION OF UNDERGROUND UTILITIES PRIOR TO DIGGING. FINAL LOCATIONS OF TREES MAY BE ADJUSTED SLIGHTLY TO ACCOMODATE FIELD CONDITIONS. PLANTING PROCEDURES SHALL COMPLY WITH LANDSCAPE SPECIFICATIONS FOR BALTIMORE-WASHINGTON METROPOLITAN AREAS. SUBSTITUTION TO THE ABOVE SPECIES MAY BE PERMITTED, PROVIDED THAT THE PLANTING IS IN ACCORDANCE WITH THE STREET TREE AND LANDSCAPE REQUIREMENTS AS SPECIFIED IN SECTION 16-131 OF THE HOWARD COUNTY SUBDIVISION REGULATIONS.

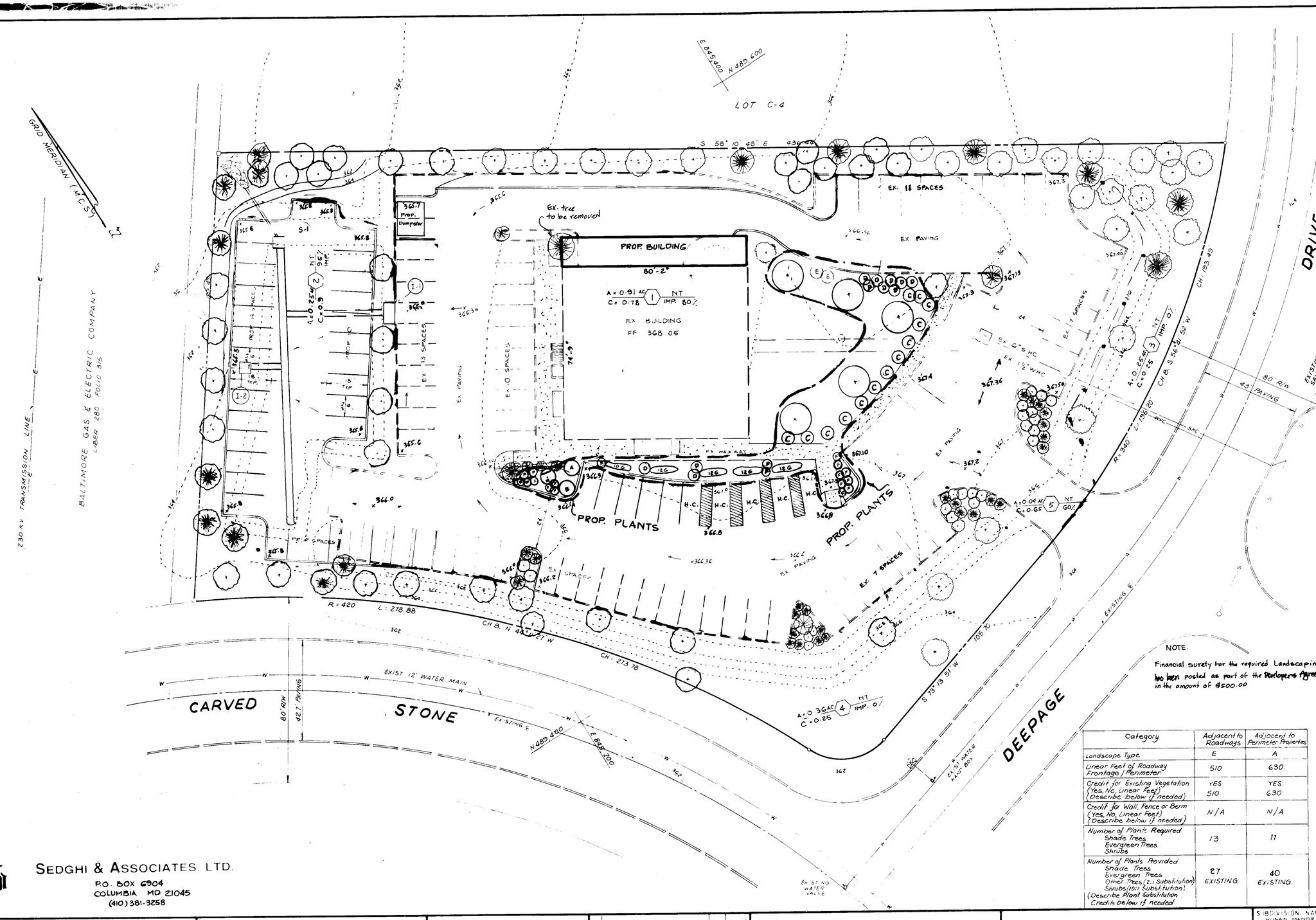

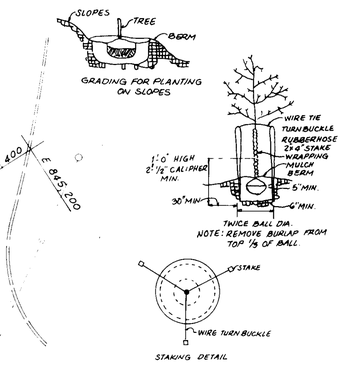

TREE PLANTING
N.T.S.

NEW PLANTS & MATERIALS

KEY	QTY.	SIZE	NAME
A	2	5'-6'	JUNIPERUS CHINENSIS 'KAIZUKA' HOLLYWOOD JUNIPER - POM-POM
B	1	3'-4'	ACER PALMATUM 'DISECTUM' CUTLEAF JAPANESE RED MAPLE
C	13	5'-6'	CHAMAECYPARIS OBTUSA GRACILIS SLENDER HINOKI FALSE CYPRESS
D	11	24-36"	ILEX CRENATA JAPANESE HOLLY
E	2	1-2'	PINUS THUNBERGII JAPANESE BLACK PINE
F	19	24-36"	RHOPODENDRON OBTUSUM VAR. HINO CRIMSOM AZALEA
G	58	2 gal	JUNIPERUS HORIZONTALIS WILTONII WILTON CARPET JUNIPER

EXISTING PLANTS

KEY	QTY	NAME
+	59	ACER RUBRUM, RED MAPLE
	17	PINUS STROBUS, WHITE PINE
	23	EVERGREEN SHRUBS
	29	DECIDUOUS SHRUBS

* NOTE:
ALL TREES ARE 3" CALIPHER OR LARGER SIZE

NOTE:
Financial Surety for the required Landscaping has been posted as part of the Developers Agreement in the amount of $500.00

Category	Adjacent to Roadways	Adjacent to Perimeter Properties
Landscape Type	E	A
Linear Feet of Roadway Frontage / Perimeter	510	630
Credit for Existing Vegetation (Yes, No, Linear Feet) (Describe below if needed)	YES 510	YES 630
Credit for Wall, Fence or Berm (Yes, No, Linear Feet) (Describe below if needed)	N/A	N/A
Number of Plants Required Shade Trees Evergreen Trees Shrubs	13	11
Number of Plants Provided Shade Trees Evergreen Trees Other Trees (2:1 Substitution) Shrubs (10:1 Substitution) (Describe Plant Substitution Credits below if needed	27 EXISTING	40 EXISTING

PROPOSED TREES

+	5	ACER RUBRUM RED MAPLE — 2½"-3" CAL. 12'-14' HT.

NOTE
IF ANY TREES ARE DAMAGED OR REMOVED THEY WILL BE REPLACED BY EQUAL OR LARGER SIZE.

SEDGHI & ASSOCIATES, LTD.
P.O. BOX 6904
COLUMBIA MD 21045
(410) 381-3258

APPROVED: FOR PUBLIC WATER AND PUBLIC SEWERAGE SYSTEMS HOWARD COUNTY HEALTH DEPARTMENT
COUNTY HEALTH OFFICER — DATE 9-21-95

APPROVED: DEPARTMENT OF PLANNING AND ZONING
Chief, Development Engineering Division — Date 9/18/95
Chief, Division of Land Development and Research — Date 9/29/95
Director — Date 10/2/95

REVIEWED FOR HOWARD COUNTY SOIL CONSERVATION DISTRICT AND MEETS TECHNICAL REQUIREMENTS
US SOIL CONSERVATION SERVICE — DATE 9/14/95

THIS DEVELOPMENT IS APPROVED FOR EROSION AND SEDIMENT CONTROL BY THE HOWARD SOIL CONSERVATION DISTRICT
HOWARD COUNTY SOIL CONSERVATION DISTRICT — DATE 9/14/95

APPROVED
PLANNING BOARD
DATE 19 January 1995

NO	REVISION	BY	DATE
1	Add Building	MS	7-30-97

ENGINEER'S CERTIFICATE
I HEREBY CERTIFY THAT THIS PLAN FOR EROSION AND SEDIMENT CONTROL REPRESENT A PRACTICAL AND WORKABLE PLAN BASED ON MY PERSONAL KNOWLEDGE OF THE SITE CONDITIONS AND THAT IT WAS PREPARED IN ACCORDANCE WITH THE REQUIREMENTS OF THE HOWARD SOILS CONSERVATION DISTRICT.
SIGNATURE OF ENGINEER — PE. 13816 — DATE 9-20-94

DEVELOPER'S CERTIFICATE
I/WE CERTIFY THAT ALL DEVELOPMENT AND CONSTRUCTION WILL BE DONE ACCORDING TO THIS PLAN OF DEVELOPMENT AND PLAN FOR EROSION AND SEDIMENT CONTROL AND THAT ALL RESPONSIBLE PERSONNEL INVOLVED IN THE CONSTRUCTION PROJECT WILL HAVE A CERTIFICATE OF ATTENDANCE AT A DEPARTMENT OF ENVIRONMENT APPROVED TRAINING PROGRAM FOR THE CONTROL OF SEDIMENT AND EROSION BEFORE BEGINNING THE PROJECT I ALSO AUTHORIZE PERIODIC ONSITE INSPECTOR BY THE HOWARD SOIL CONSERVATION DISTRICT OR THEIR AUTHORIZED AGENTS AS DEEMED NECESSARY
SIGNATURE OF DEVELOPER — DATE 9/1/95

SUBDIVISION NAME: HUNAN MANOR RESTAURANT		SECTION:	PARCEL: LOT C-3
PLAT NO: 4068	BLOCK NO	ZONE: NT	TAX MAP: 42
ELEC. DIST.: 6TH	CENSUS TR.: 6061.03	WATER CODE: E-12	SEWER CODE: 5330300

DESIGNED BY: VS
DRAWN BY: VS
CHECKED BY: MS

LANDSCAPE PLAN & DRAINAGE AREA MAP
HUNAN MANOR RESTAURANT
6TH ELECTION DISTRICT
HOWARD COUNTY, MD

SCALE: 1"=20'
DRAWING NO: 3 OF 3
DATE: 9-20-94

OWNER
HUNAN MANOR RESTAURANT
7051 DEEPAGE DR.
COLUMBIA, MD 21045

STATE OF MARYLAND — MIKE SEDGHI — PE 13816 — PROFESSIONAL ENGINEER

SDP-95-27