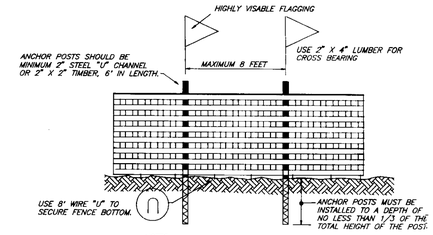

NOTES:
1. Forest protection device only.
2. Retention area will be set as part of the review process.
3. Boundaries of retention area should be staked and flagged prior to installing device.
4. Root damage should be avoided.
5. Protection signage may also be used.
6. Device should be maintained throughout construction.

BLAZE ORANGE PLASTIC MESH TYPICAL TREE PROTECTION FENCE DETAIL

NO SCALE

LEGEND

CONTOUR INTERVAL	2 FT.
EXISITNG CONTOUR	414
PROPOSED CONTOUR	414
DIRECTION OF DRAINAGE	
WALK OUT BASEMENT	W.O.B.
EXISITNG SEWER MAIN	8" SEWER
EXISITNG WATER MAIN	8" WATER
EXISTING STORM DRAIN	15" S.D.
EXISTING TREES TO REMAIN	
Tree Protection Fence	

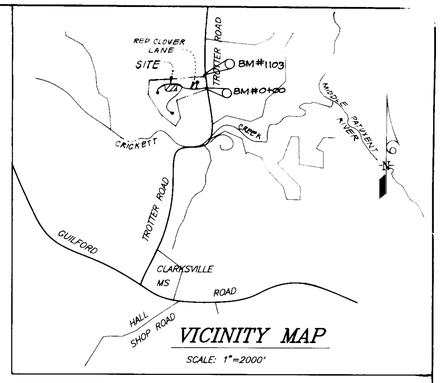

VICINITY MAP

SCALE: 1"=2000'

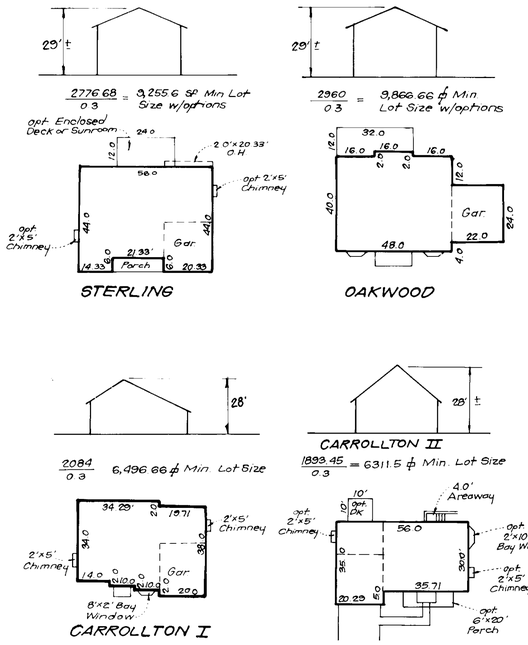

TYPICAL HOUSES

SCALE 1"=30'

NOTE: All units have 1' roof eaves front and rear

GENERAL NOTES:

1. The contractor shall notify the Department of Public Works/ Bureau of Construction Inspection a (301) 792-7272 at least five (5) working days prior to the start of work.
2. The contractor shall notify "Miss Utility" at 1-800-257-7777 at least 48 hours prior to any excavation work.
3. The existing topography shown was taken form F-92-87 that was prpared by John R. Hendrichs.P.E.
4. The coordinates shown hereon are based upon the Howard County Geodetic Control which is based upon the NAD 27', Maryland Coordinate System - Control Stations No.'s 2437001, 2337002, and 2330033.
5. Storm water management is provided per: F-92-87.
6. Any damage to county owned rights-of-way shall be corrected at the developer's expense.
7. Utilities shown as existing are taken from approved water and sewer plan Contract #34-3178-D , approved road construction plans F-92-87 , and actual field survey.
8. Department of Planning and Zoning reference file numbers are: S-92-02, PB Case 274, W.P.-92-22, F-92-87, FDP-214.
9. All roadways are public and existing.
10. Subject property is zoned: New Town per 8-2-85 Comprehensive Zoning Plan.
11. The total area included in this submission is : 83,234 ¢ or 1.91 Ac.
12. The total number of lots included in this submission are: 3
13. No clearing, grading, or construction is permitted within the wetland or stream buffers, except as approved by the Dept. of Planning and Zoning.
14. The maximum lot coverage is: 30%
15. Improvement to property: Single Family Detached Unit
16. See Howard County Standard Driveway Abutting Detail R-6.05
17. The minimum setback restrictions from the property lines and the public road right-of-way are to be in accordance with FDP-214.

SPECIAL NOTES:

This plan is for house siting and lot grading only. Improvements shown within the rights-of-way on this S.D.P. are not to be used for construction. For construction, see approved Road Construction Plans F-92-87 and/or approved Water and Sewer Plans Contract #C-34-3178-D

ADDRESS CHART

LOT NUMBER	STREET ADDRESS	
24	6035	RED CLOVER LANE
25	6031	RED CLOVER LANE
26	6027	RED CLOVER LANE

APPROVED: FOR PUBLIC WATER AND PUBLIC SEWERAGE SYSTEMS. HOWARD COUNTY HEALTH DEPARTMENT

COUNTY HEALTH OFFICER — DATE 8/10/92

APPROVED: HOWARD COUNTY DEPT OF PLANNING & ZONING

DIRECTOR — DATE 8/12/92

CHIEF DIVISION OF COMMUNITY PLANNING AND LAND DEVELOPMENT — DATE 8/12/92

APPROVED: FOR PUBLIC WATER AND PUBLIC SEWERAGE STORM DRAINAGE SYSTEMS AND PUBLIC ROADS HOWARD COUNTY DEPARTMENT OF PUBLIC WORKS

DIRECTOR — DATE 8/6/92

CHIEF BUREAU OF ENGINEERING — DATE 8-6-92

2	Rev. hse. & grd. lot 26	6 14 93
1	Rev. hse & grd lot 24, Add hse typical	3 19 93
No	REVISIONS	Date

SHEET INDEX

Sheet 1 - Site Development Plan
Sheets 2 & 3 - Sediment & Erosion Control Plan

OWNER / DEVELOPER:
HOWARD RESEARCH AND DEVELOPMENT CORPORATION
10275 Little Patuxent Parkway
Columbia, MD. 21044

SUBDIVISION NAME			SECTION/AREA	LOTS/PARCELS	
COLUMBIA VILLAGE OF RIVER HILL			1/4	G.P. 11 & 12	SDP 24-26
PLAT NO.	BLOCK NO.	ZONE	TAX MAP NO.	ELECTION DIST.	CENSUS TRACT
10368	8	N.T. S.F.L.D.	35	5TH	6055
WATER CODE			SEWER CODE		
I-10			6653500		

CLARK • FINEFROCK & SACKETT, INC.
ENGINEERS • PLANNERS • SURVEYORS
210 MINCKLE WAY • COLUMBIA, MD. 21044 • 410-997-7900 • FAX 410-997-7960

DESIGNED VLP	SITE DEVELOPMENT PLAN FOR LOTS 24-26 GRADING PLAN LOTS 11 & 12	SCALE 1"=30'
DRAWN BAL KIWM	COLUMBIA VILLAGE OF RIVER HILL SECTION 1 AREA 4 5TH ELECTION DISTRICT HOWARD COUNTY, MARYLAND	DRAWING 1 OF 3
CHECKED JME		JOB NO 92-068
DATE JUNE 1992	FOR: DOUGLAS HOMES P.O. BOX 628 Ellicott City, Md. 21043	FILE NO 92-068-X

SDP 92-122

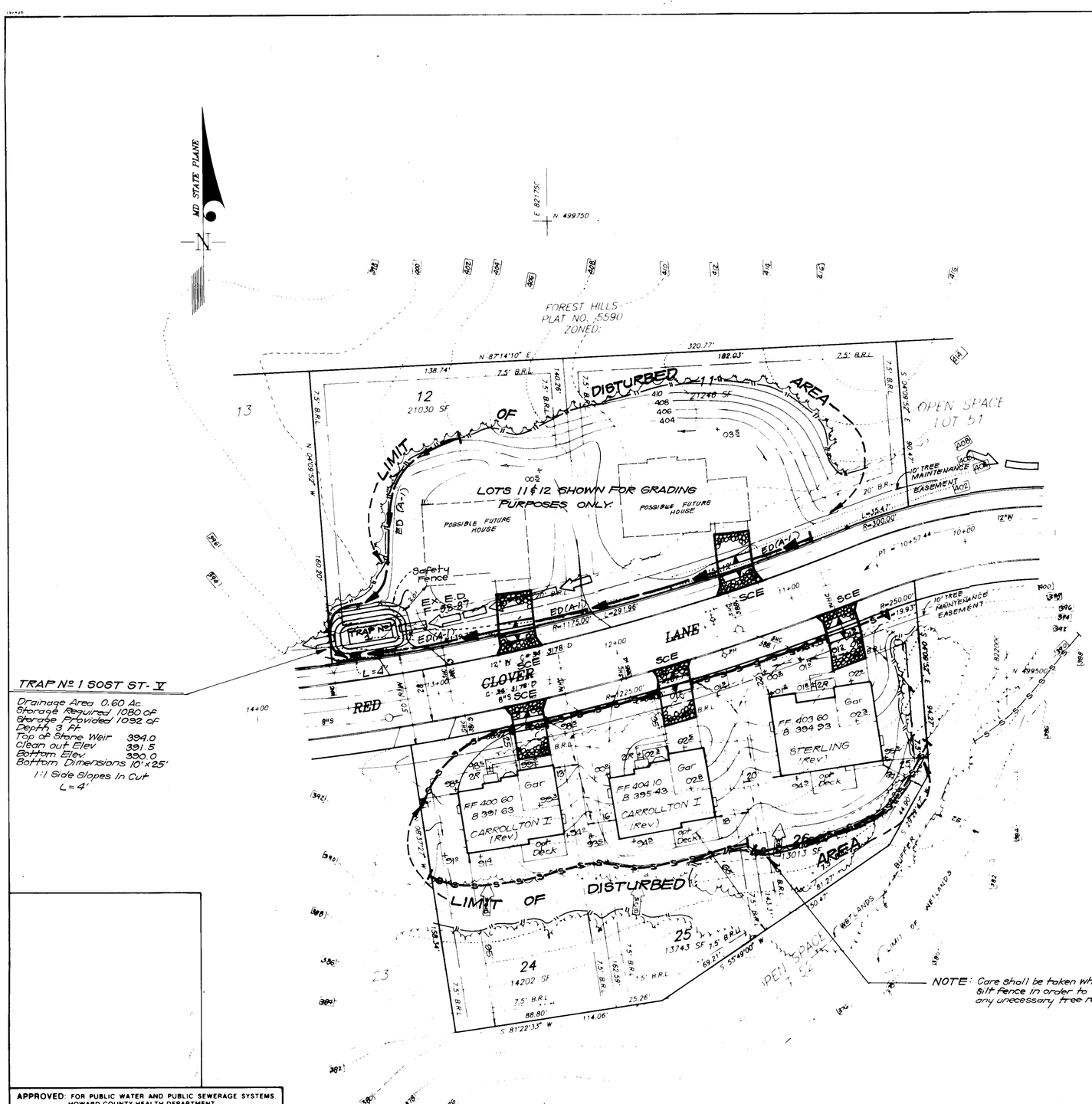

NOTE: Care shall be taken when placing silt fence in order to eliminate any unnecessary tree removal.

LEGEND

CONTOUR INTERVAL	2 FT.
EXISITNG CONTOUR	413
PROPOSED CONTOUR	414
DIRECTION OF DRAINAGE	
WALK OUT BASEMENT	W.O.B.
EXISITNG SEWER MAIN	8" SEWER
EXISITNG WATER MAIN	8" WATER
EXISTING STORM DRAIN	15" S.D.
EXISTING TREES TO REMAIN	
Tree Protection Fence	
Earth Dike	E.D. (A-1)
Silt Fence	—S—S—S—S—
Existing Earth Dike	
Existing Silt Fence	—S—S—S—S—
Stabilized Construction Entrance w/Mountable Berm	SCE

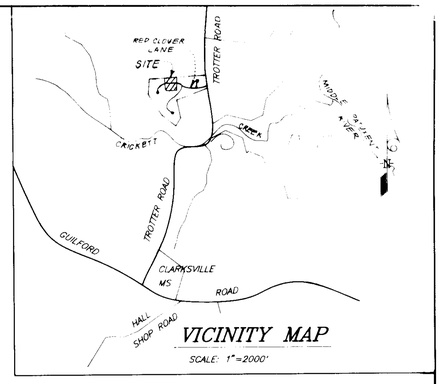

VICINITY MAP

SCALE: 1"=2000'

TRAP Nº 1 SOST ST- V

Drainage Area 0.60 Ac.
Storage Required 1080 cf
Storage Provided 1092 cf
Depth 3 ft
Top of Stone Weir 394.0
Clean out Elev 391.5
Bottom Elev 390.0
Bottom Dimensions 10'x25'
1:1 Side Slopes In Cut
L = 4'

APPROVED: FOR PUBLIC WATER AND PUBLIC SEWERAGE SYSTEMS. HOWARD COUNTY HEALTH DEPARTMENT

COUNTY HEALTH OFFICER — DATE 8/10/92

APPROVED: HOWARD COUNTY DEPT OF PLANNING & ZONING

DIRECTOR — DATE 8/12/92

CHIEF DIVISION OF COMMUNITY PLANNING AND LAND DEVELOPMENT — DATE 8/12/92

APPROVED: FOR PUBLIC WATER AND PUBLIC SEWERAGE STORM DRAINAGE SYSTEMS AND PUBLIC ROADS HOWARD COUNTY DEPARTMENT OF PUBLIC WORKS

DIRECTOR — DATE 8/6/92

CHIEF BUREAU OF ENGINEERING — DATE 8-6-92

Reviewed for HOWARD S.C.D.
Name
and meets Technical Requirements
Signature — Date 7/31/92
US Soil Conservation Service

THIS DEVELOPMENT PLAN IS APPROVED FOR SOIL EROSION AND SEDIMENT CONTROL BY THE HOWARD SOIL CONSERVATION DISTRICT.

Approved — 7/31/92

DEVELOPER'S/BUILDER'S CERTIFICATE

"I/We certify that all development and construction will be done according to this plan of development and plan for sediment and erosion control and that all responsible personnel involved in the construction project will have a Certificate of Attendance at a Department of the Environment Approved Training Program for the Control of Sediment and Erosion before beginning the project. I also authorize periodic on-site inspection by the Howard Soil Conservation District or their authorized agents, as are deemed necessary."

Signature — Date 6-22-92

ENGINEER'S CERTIFICATE

I hereby certify that this plan for Sediment and Erosion Control represents a practical and workable plan based on my personal knowledge of the site conditions and that it was prepared in accordance with the requirements of the Howard Soil Conservation District.

Signature — Date 6/17/92

OWNER - DEVELOPER
HOWARD RESEARCH AND DEVELOPMENT CORPORATION
10275 Little Patuxent Parkway
Columbia, MD 21044

CLARK • FINEFROCK & SACKETT, INC.
ENGINEERS • PLANNERS • SURVEYORS
7135 Minstrel Way • Columbia, Md. 21045 • (301) 381-7500 Balt. • (301) 621-8100 Wash.

DESIGNED KIWM	SEDIMENT & EROSION CONTROL PLAN LOTS 11, 12 AND 24 THRU 26	SCALE 1"=30'
DRAWN BAL	COLUMBIA VILLAGE OF RIVER HILL SECTION 1 AREA 4 5TH ELECTION DISTRICT HOWARD COUNTY, MARYLAND	DRAWING 2 OF 3
CHECKED KIWM	FOR: DOUGLAS HOMES P.O. Box 628 Ellicott City, Md. 21043	JOB NO 92-068
DATE JUNE 1992		FILE NO 92-068-SE

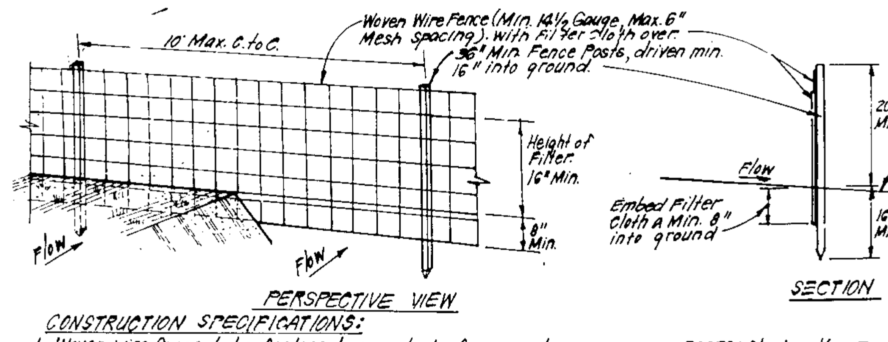

CONSTRUCTION SPECIFICATIONS:

1. Woven wire fence to be fastened securely to fence posts with wire ties or staples.
2. Filter Cloth to be fastened securely to woven wire fence with ties spaced every 24" at top and mid section.
3. When 2 sections of filter cloth adjoin each other they shall be overlapped by 6" and folded.
4. Maintenance shall be performed as needed and material removed when "Bulges" develop in Silt Fence.

POSTS: Steel either T or U Type or 2" Hardwood.
FENCE: Woven Wire, 14½ Gage 6" Max. Mesh Opening.
FILTER CLOTH: FilterX, Mirafi 100X, Stablinka, T140N or Approv. equal.
PREFABRICATED UNIT: Geofab, Envirofence, or Approv. equal.

SILT FENCE DETAIL (S)

NO SCALE

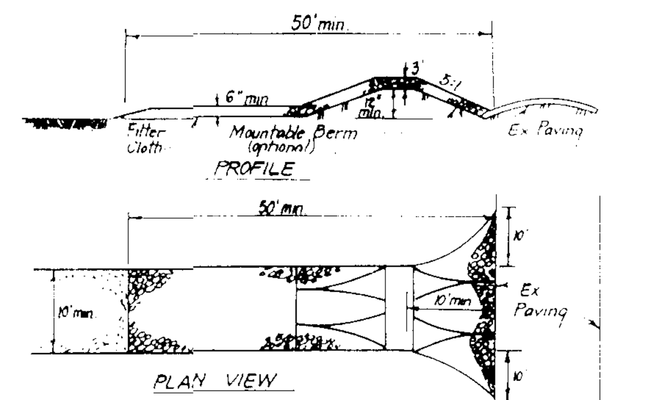

CONSTRUCTION SPECIFICATIONS:

1. Stone size - Use 2" stone, or reclaimed or recycled concrete equivalent.
2. Length - As required, but not less than 50 feet (except on a single residence lot where a 30 foot minimum length would apply.
3. Thickness - Not less than six (6) inches.
4. Width - Ten (10) foot minimum, but not less than the full width at points where ingress or egress occurs.
5. Filter Cloth - Will be placed over the entire area prior to placing of stone. Filter will not be required on a single family residence lot.
6. Surface Water - All surface water flowing or diverted toward construction entrances shall be piped across the entrance. If piping is impractical, a mountable berm with 5:1 slopes will be permitted.
7. Maintenance - The entrance shall be maintained in a condition which will prevent tracking or flowing of sediment onto public rights-of-way. This may require periodic top dressing with additional stone as conditions demand and repair and/or cleanout of any measures used to trap sediment. All sediment spilled, dropped, washed or tracked onto public rights-of-way must be removed immediately.
8. Washing - Wheels shall be cleaned to remove sediment prior to entrance onto public rights-of-way. When washing is required, it shall be done on an area stabilized with stone and which drains into an approved sediment trapping device.
9. Periodic inspection and needed maintenance shall be provided after each rain.

STABILIZED CONSTRUCTION ENTRANCE (SCE)

NO SCALE

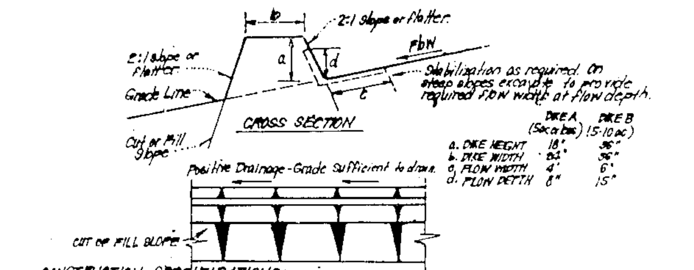

	DIKE A (5 ac. less)	DIKE B (5-10 ac)
a. DIKE HEIGHT	18"	36"
b. DIKE WIDTH	24"	36"
c. FLOW WIDTH	4'	6'
d. FLOW DEPTH	8"	15"

CONSTRUCTION SPECIFICATIONS:

1. All dikes shall be compacted by earth-moving equipment.
2. All dikes shall have positive drainage to an outlet.
3. Top width may be wider and side slopes may be flatter if desired, to facilitate crossing by construction traffic.
4. Field location should be adjusted as needed to utilize a stabilized safe outlet.
5. Earth dikes shall have an outlet that functions with a minimum of erosion. Runoff shall be conveyed to a sediment trapping device such as a sediment trap or sediment basin where either the dike channel or the drainage area above the dike are not adequately stabilized.
6. Stabilization shall be: (A) In accordance with standard specifications for seed and straw mulch or straw mulch if not in seeding season, (B) flow channel as per chart below.

FLOW CHANNEL STABILIZATION

TYPE OF TREATMENT	CHANNEL GRADE	DIKE A	DIKE B
1.	0.5-3.0%	Seed & Straw Mulch	Seed or Straw Mulch
2.	3.1-5.0%	Seed & Straw Mulch	Seed w/Jute, or Excelsior; Sod, 2" Stone
3	5.1-8.0%	Seed w/Jute or Sod, 2" Stone	Lined Rip Rap 4"-8" Stone
4	8.1-20.0%	Lined Rip Rap 4"-8" Stone	Engineering Design

A. Stone to be 2" Stone, or recycled concrete equivalent, in a layer at least 3" thick and be pressed into soil with construction equipment.
B. Rip Rap to be 4"-8" in a layer at least 8" thick, pressed into soil.
C. Approved equivalents can be substituted for any of the above materials.
7. Periodic Inspection and Required Maintenance must be provided after each rain.

EARTH DIKE DETAIL (E.D.)

NO SCALE

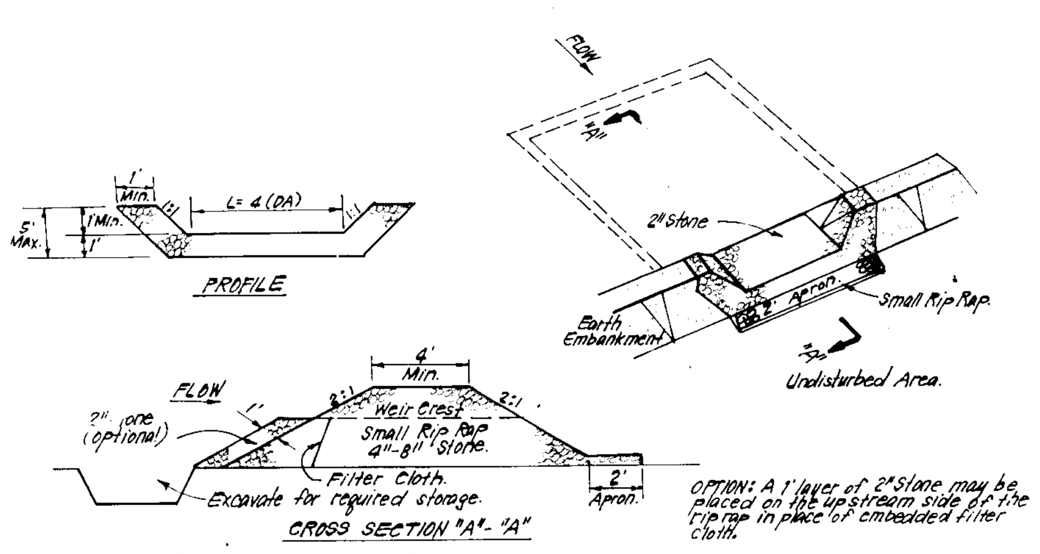

CONSTRUCTION SPECIFICATIONS:

1. Area under embankment shall be cleared, grubbed and stripped of any vegetation and root mat. The pool area shall be cleared.
2. The fill material for the embankment shall be free of roots and other woody vegetation as well as over-sized stones, rocks, organic material or other objectionable material. The embankment shall be compacted by traversing with equipment while it is being constructed.
3. All cut and fill slopes shall be 2:1 or flatter.
4. The stone used in the outlet shall be small rip-rap 4"-8" along with 1' thickness of 2" aggregate placed on the up-grade side on the small rip rap or embedded filter cloth in the rip rap.
5. Sediment shall be removed and trap restored to its original dimensions when the sediment has accumulated to ½ the design depth of the trap.
6. The structure shall be inspected after each rain and repairs made as needed.
7. Construction operations shall be carried out in such a manner than erosion and water pollution is minimized.
8. The structure shall be removed and the area stabilized when the drainage area has been properly stabilized.

STONE OUTLET SEDIMENT TRAP (S.O.S.T.) ST-V.

NO SCALE

SEDIMENT CONTROL NOTES

1) A minimum of 24 hours notice must be given to the Howard County Office of Inspection and Permits prior to the start of any construction. (992-2437)
2) All vegetative and structural practices are to be installed according to the provisions of this plan and are to be in conformance with the 1983 MARYLAND STANDARDS AND SPECIFICATIONS FOR SOIL EROSION AND SEDIMENT CONTROL.
3) Following initial soil disturbance or redisturbance, permanent or temporary stabilization shall be completed within: a) 7 calendar days for all perimeter sediment control structures, dikes, perimeter slopes and all slopes greater than 3:1, b) 14 days as to all other disturbed or graded areas on the project site.
4) All sediment traps/basins shown must be fenced and warning signs posted around their perimeter in accordance with Vol. 1, Chaper 12, of the HOWARD COUNTY DESIGN MANUAL, Storm Drainage.
5) All disturbed areas must be stabilized within the time period specified above in accordance with the 1983 MARYLAND STANDARDS AND SPECIFICATIONS FOR SOIL EROSION AND SEDIMENT CONTROL for permanent seedings (Sec. 51) sod (Sec. 54), temporary seeding (Sec. 50) and mulching (Sec. 52.) Temporary stabilization with mulch alone can only be done when recommended seeding dates do not allow for proper germination and establishment of grasses.
6) All sediment control structures are to remain in place and are to be maintained in operative condition until permission for their removal has been obtained from the Howard County Sediment Control Inspector
7) Site Analysis:

Total Area of Site	1.91	Acres
Area Disturbed	1.22	Acres
Area to be roofed or paved	0.26	Acres
Area to be vegetatively stabilized	0.96	Acres
Total Cut	5600	Cu. yds
Total Fill	570	Cu. yds
Offsite waste/borrow area location	*	

8) Any sediment control practice which is disturbed by grading activity for placement of utilities must be repaired on the same day of disturbance.
9) Additional sediment control must be provided, if deemed necessary by the Howard County DPW sediment control inspector.
10) On all sites with disturbed areas in excess of 2 acres, approval of the inspection agency shall be requested upon completion of installation of perimeter erosion and sediment controls, but before proceeding with any other earth disturbance or grading. Other building or grading inspection approvals may not be authorized until this initial approval by the inspection agency is made.
11) If houses are to be constructed on an "As-Sold" basis, at random, Single Lot Sediment Control as shown below shall be implemented.
12) ~~All pipes to be blocked at the end of each day (see detail below).~~ N/A
13) The total amount of straw bale dikes/silt fence equals 510 L.F.

*** It is the responsibility of the contractor to identify the spoil/borrow site and notify and gain approval fror the sediment control inspector of the site and it's grading permit number at the time of construction.**

PERMANENT SEEDING NOTES

Apply to graded or cleared areas not subject to immediate further disturbance where a permanent long-lived vegetative cover is needed.

Seedbed Preparation: Loosen upper three inches of soil by raking, discing or other acceptable means before seeding, if not previously loosened.

Soil Amendments: In lieu of soil test recommendations, use one of the following schedules

1) Preferred - Apply 2 tons per acre dolomitic limestone (92 lbs/1000 square ft) and 600 lbs per acre 10-10-10 fertilizer (14 lbs/1000 sq ft) before seeding. Harrow or disc into upper three inches of soil. At time of seeding, apply 400 lbs per acre 30-0-0 ureaform fertilizer (9 lbs/1000 sq ft).
2) Acceptable - Apply 2 tons per acre dolomitic limestone (92 lbs/1000 sq ft) and 1000 lbs per acre 10-10-10 fertilizer (23 lbs/1000 sq ft) before seeding. Harrow or disc into upper three inches of soil.

Seeding - For the periods March 1 thru April 30, and August 1 thru October 15, seed with 60 lbs per acre (1.4 lbs/1000 sq ft) of Kentucky 31 Tall Fescue. For the period May 1 thru July 31, seed with 60 lbs Kentucky 31 Tall Fescue per acre and 2 lbs per acre (.05 lbs/1000 sq ft) of weeping lovegrass. During the period of October 16 thru February 28, protect site by: Option (1) 2 tons per acre of well anchored straw mulch and seed as soon as possible in the spring. Option (2) Use sod. Option (3) Seed with 60 lbs/acre Kentucky 31 Tall Fescue and mulch with 2 tons/acre well anchored straw.

Mulching - Apply 1½ to 2 tons per acre (70 to 90 lbs/1000 sq ft) of unrotted small grain straw immediately after seeding. Anchor mulch immediately after application using mulch anchoring tool or 218 gallons per acre (5 gal/1000 sq ft) of emulsified asphalt on flat areas. On slopes 8 feet or higher, use 348 gallons per acre (8 gal/1000 sq ft) for anchoring.

Maintenance - Inspect all seeded areas and make needed repairs, replacements and reseedings.

TEMPORARY SEEDING NOTES

Apply to graded or cleared areas likely to be redisturbed where a short-term vegetative cover is needed.

Seedbed Preparation: Loosen upper three inches of soil by raking, discing or other acceptable means before seeding, if not previously loosened.

Soil Amendments: Apply 600 lbs per acre 10-10-10 fertilizer (14 lbs/1000 sq ft)

Seeding: For periods March 1 thru April 30 and from August 15 thru November 15, seed with 2½ bushel per acre of annual rye (3.2 lbs/1000 sq ft). For the period May 1 thru August 14, seed with 3 lbs per acre of weeping lovegrass (.07 lbs/1000 sq ft). For the period November 16 thru February 28, protect site by applying 2 tons per acre of well anchored straw mulch and seed as soon as possible in the spring, or use sod.

Mulching: Apply 1½ to 2 tons per acre (70 to 90 lbs/1000 sq ft) of unrotted small grain straw immediately after seeding. Anchor mulch immediately after application using mulch anchoring tool or 218 gal per acre (5 gal/1000 sq ft) of emulsified asphalt on flat areas. On slopes, 8 ft or higher, use 348 gal per acre (8 gal/1000 sq ft) for anchoring.

Refer to the 1983 MARYLAND STANDARDS AND SPECIFICATIONS FOR SOIL EROSION AND SEDIMENT CONTROL for rate and methods not covered.

CONSTRUCTION SEQUENCE:

		No. of Days
A.	Obtain Grading Permit and Install Sediment and Erosion Control Devices Tree Protection Fence and Stabilize.	7
B.	Excavate for foundations and Rough Grade & Temporarily Stabilize.	30
C.	Construct Structures, Sidewalks and Driveways.	60
D.	Final Grade and stabilize in accordance with Stds. & Specs.	14
E.	Upon approval of the sediment control inspector, remove sediment and erosion controls and stabilize.	7

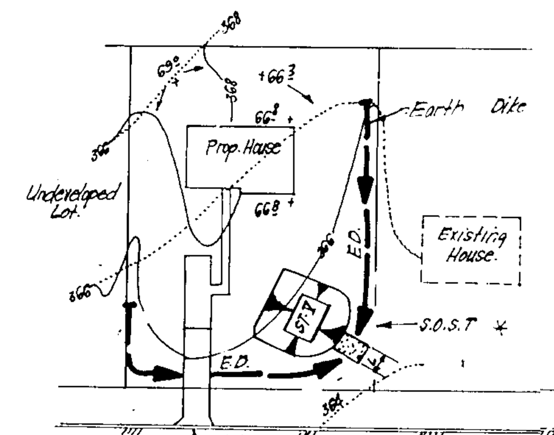

* NOTE: Single lot detail can not be utilized if any two lots sharing common property lines are to be disturbed at the same time or on any lots showing a sediment trap.

* S.O.S.T. (ST-V) Pg. 16.12			
LOT SIZE	¼ Ac	½ Ac	1 Ac.
L	2'	3'	6'
Depth	2'	2'	2'
+ Bot. Length	11'	26'	26'
+ Bot. Width	11'	11'	26'
Bot. Area	121□	286□	676□

\+ can be adjusted in field, but bottom area must be as given or greater

SINGLE LOT SEDIMENT CONTROL PLAN

NO SCALE

APPROVED: FOR PUBLIC WATER AND Public SEWERAGE SYSTEMS. HOWARD COUNTY HEALTH DEPARTMENT
Joyce M Boyd... 8/10/92
COUNTY HEALTH OFFICER — DATE

APPROVED: HOWARD COUNTY DEPT. OF PLANNING & ZONING
[signature] 8/12/92
DIRECTOR — DATE
[signature] 8/12/92
CHIEF DIVISION OF COMMUNITY PLANNING AND LAND DEVELOPMENT — DATE

APPROVED: FOR PUBLIC WATER AND PUBLIC SEWERAGE, STORM DRAINAGE SYSTEMS AND PUBLIC ROADS HOWARD COUNTY DEPARTMENT OF PUBLIC WORKS
[signature] Acting 8/6/92
DIRECTOR — DATE
[signature] 8-6-92
CHIEF BUREAU OF ENGINEERING — DATE

Reviewed for HOWARD S.C.D.
Name
and meets Technical Requirements
[signature] 7/31/92
Signature — Date
US Soil Conservation Service

THIS DEVELOPMENT PLAN IS APPROVED FOR SOIL EROSION AND SEDIMENT CONTROL BY THE HOWARD SOIL CONSERVATION DISTRICT.
[signature] 7/31/92
Approved

DEVELOPER'S/BUILDER'S CERTIFICATE

"I/We certify that all development and construction will be done according to this plan of development and plan for sediment and erosion control and that all responsible personnel involved in the construction project will have a Certificate of Attendance at a Department of the Environment Approved Training Program for the Control of Sediment and Erosion before beginning the project. I also authorize periodic on-site inspection by the Howard Soil Conservation District or their authorized agents, as are deemed necessary".

[signature] 6-22-92
Signature — Date

ENGINEER'S CERTIFICATE

I hereby certify that this plan for Sediment and Erosion Control represents a practical and workable plan based on my personal knowledge of the site condtions and that it was prepared in accordance with the requirements of the Howard Soil Conservation District.

Jeffrey L. Schwalb 6/17/92
Signature — Date

OWNER / DEVELOPER:
HOWARD RESEARCH AND DEVELOPMENT CORPORATION
10275 Little Patuxent Parkway
Columbia, MD 21044

CLARK • FINEFROCK & SACKETT, INC.
ENGINEERS • PLANNERS • SURVEYORS
7135 Minstrel Way • Columbia, Md. 21045 • (301) 381-7500 Balt • (301) 621-8100 Wash.

DESIGNED KIWM	SEDIMENT & EROSION CONTROL PLAN LOTS 11, 12 AND LOTS 24 THRU 26	SCALE 1" = 30'
DRAWN BAL	COLUMBIA	DRAWING 3 OF 3
CHECKED KIWM	VILLAGE OF RIVER HILL SECTION 1 AREA 4 5TH ELECTION DISTRICT HOWARD COUNTY, MARYLAND	JOB NO. 92-068
DATE JUNE 1992	FOR: DOUGLAS HOMES P.O. Box 628 Ellicott City, Md. 21043	FILE NO. 92-068

DP 9[illegible]

133838