As Built drawing.

THE HOWARD COUNTY PUBLIC SAFTEY COMPLEX.

SCAGGSVILLE ANNEX

11226 RT 216, LAUREL MD.

CAPITAL PROJECT NO. C - 0227

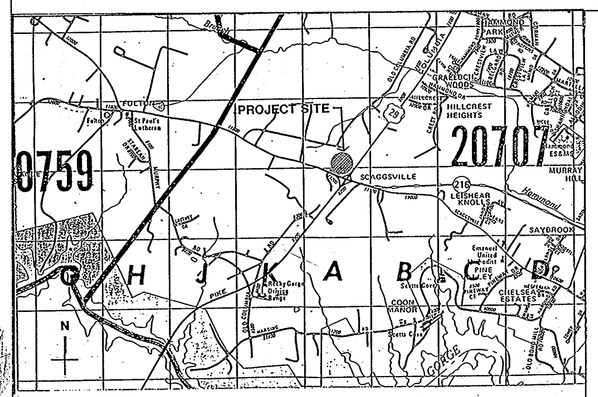

LOCATION MAP 1"= 2000'-0

DRAWING INDEX

COVER SHEET

CIVIL DRAWINGS:

C-1.1	EXISTING CONDITIONS
C-2.1	DEMOLITION PLAN
C-3.1	LAYOUT PLAN
C-4.1	SITE DEVELOPMENT PLAN
C-4.2	SITE PLAN
C-4.3	DRAINAGE AREA MAP
C-5.1	SEWER LINE PROFILE
C-6.1	WATER MAIN & STORM DRAIN PROFILES
C-7.1	STORM DRAIN PROFILES
C-8.1	EROSION & SEDIMENT CONTROL PLAN
C-9.1	EROSION & SEDIMENT CONTROL DETAILS
C-10.1	FUEL PUMP CANOPY
C4.4	REVISED SANITARY SEWER AND STORMDRAIN PLAN
C5.2	REVISED STORMDRAIN AND SANITARY SEWER PROFILE
L-1.1	LANDSCAPE PLAN

ARCHITECTURAL:

A-1.1	ABBREVIATIONS & SYMBOLS
A-1.2	SITE PLAN AND DETAILS
A-1.3	DETAILS
A-2.1	FIRST FLOOR PLAN-FIRE STATION
A-2.2	FIRST FLOOR PLAN-POLICE STATIONS
A-3.1	ELEVATIONS
A-3.2	ELEVATIONS
A-3.3	ELEVATIONS
A-4.1	ROOF PLAN-FIRE STATION
A-4.2	ROOF PLAN-POLICE STATION
A-5.1	BUILDING SECTIONS
A-5.2	BUILDING SECTIONS
A-6.1	WALL SECTIONS
A-6.2	WALL SECTIONS
A-6.3	WALL SECTIONS
A-7.1	DETAIL PLANS-FIRE STATION
A-7.2	DETAIL PLANS-POLICE STATION
A-7.3	DETAILS
A-7.4	DETAILS PLANS
A-7.5	DETAILS
A-7.6	DETAILS
A-8.1	REFLECTED CEILING PLAN-FIRE STATION
A-8.2	REFLECTED CEILING PLAN-POLICE STATION
A-9.1	DOOR SCHEDULE-DETAILS FIRE STATION
A-9.2	DOOR SCHEDULE-DETAILS POLICE STATION PHASE 1
A-9.3	DOOR SCHEDULE-DETAILS POLICE STATION PHASE 1&2

STRUCTURAL:

S-1.1	PARTIAL FOUNDATION PLAN
S-1.2	PARTIAL FOUNDATION PLAN
S-2.1	PARTIAL ROOF FRAMING PLAN
S-2.2	PARTIAL ROOF FRAMING PLAN
S-3.1	GENERAL NOTES AND SCHEDULES
S-3.2	SECTIONS AND DETAILS
S-3.3	SECTIONS AND DETAILS
S-3.4	SECTIONS AND DETAILS
S-3.5	SECTIONS AND DETAILS
S-3.6	SECTIONS AND DETAILS

MECHANICAL:

M-1.1	MECHANICAL GEN.NOTES,SYMBOLS,ABBR.
M-2.1	SITE PLAN - PHASE 1
M-3.1	FIRST FLOOR PLAN-PIPING FIRE STATION
M-3.2	FIRST FLOOR PLAN-PIPING POLICE STATION
M-4.1	FIRST FLOOR PLAN-HVAC FIRE STATION
M-4.2	FIRST FLOOR PLAN-HVAC POLICE STATION
M-5.1	SECTIONS-FIRE STATION
M-5.2	SECTIONS-POLICE STATION PHASE 1
M-6.1	PART PLANS-PLUMBING FIRE STATION
M-6.2	PART PLANS-PLUMBING POLICE STATION PHASE 1
M-7.1	WATER RISER DIAGRAMS
M-7.2	SANITARY RISER DIAGRAMS - FIRE AND POLICE STATION
M-8.1	PART PLANS-MECHANICAL ROOM
M-8.2	SECTIONS-MECHANICAL ROOM
M-9.1	AUTOMATIC TEMPERATURE CONTROL DIAGRAM
M-10.1	DETAILS
M-10.2	DETAILS
M-10.3	DETAILS
M-11.1	SCHEDULES-PHASE 1
FP-1.1	FIRST FLOOR PLAN-SPRINKLER FIRE STATION
FP-1.2	FIRST FLOOR PLAN-SPRINKLER POLICE STATION PHASE 1

ELECTRICAL:

E-0	ELECTRICAL-GEN.NOTES AND LEGEND
E-1.1	SITE PLAN-REMOVAL WORK
E-1.2	SITE PLAN-PHASE 1
E-2.1	FIRST FLOOR PLAN-POWER FIRE STATION
E-2.2	FIRST FLOOR PLAN-POWER POLICE STATION PHASE 1
E-3.1	FIRST FLOOR PLAN-LIGHTING FIRE STATION
E-3.2	FIRST FLOOR PLAN-LIGHTING POLICE STATION PHASE 1
E-4.1	SPECIAL SYSTEMS-FIRE STATION
E-4.2	SPECIAL SYSTEMS-POLICE STATION PHASE 1
E-5.1	ROOF PLAN-LIGHTNING PROTECTION
E-6.1	ONE LINE DIAGRAM-POWER
E-6.2	ONE LINE FDAS, PAGING AND CCTV SYSTEMS
E-7.1	PART PLANS
E-7.2	MCC AND LIGHTING FIXTURES
E-8.1	DETAILS
E-8.2	DETAILS
E-8.3	DETAILS
E-9.1	PANEL BOARD SCHEDULES
E-9.2	PANEL BOARD SCHEDULES

ARCHITECHTURAL TECHNOLOGIES INC.
Architects and Construction Consultants
9192 Red Branch Rd. Suite 300
Columbia MD. 21045 (301) 995-4067

IN ASSOCIATION WITH:
CIVIL & GEOTECH ENGINEER: E B A ENGINEERING, INC.
STRUCTURAL ENGINEER: QODESH ENGINEERING SERVICES, INC.
MECHANICAL & ELECTRICAL ENGINEER: BHARGAVA INTERNATIONAL, INC.
FIRE PROTECTION ENGINEER: STANTON ENGINEERING

REGIS. SEAL:

COVER SHEET		1 OF 90
REVISIONS	HOWARD COUNTY PUBLIC SAFETY COMPLEX	CAPITAL PROJECT NO. C - 0227
	SCAGGSVILLE ANNEX 11226 ROUTE 216 LAUREL, MD. 20707	DATE: 3/25/92
		DRAWING NO. COVER

1650

APPROVED: FOR PUBLIC WATER AND PUBLIC SEWERAGE SYSTEMS.
HOWARD COUNTY HEALTH DEPARTMENT.

COUNTY HEALTH OFFICER — DATE 2-27-92

APPROVED: HOWARD COUNTY DEPARTMENT OF PLANNING & ZONING

DIRECTOR — DATE 3/6/92

CHIEF, DIVISION OF COMMUNITY PLANNING AND LAND DEVELOPMENT — DATE 3/6/92

APPROVED: FOR PUBLIC WATER AND PUBLIC SEWERAGE, STORM DRAINAGE SYSTEMS AND PUBLIC ROADS
HOWARD COUNTY DEPARTMENT OF PUBLIC WORKS.

DIRECTOR — DATE 2/24/92

CHIEF, BUREAU OF ENGINEERING — DATE 2-21-92

VICINITY MAP
SCALE: 1" = 600'

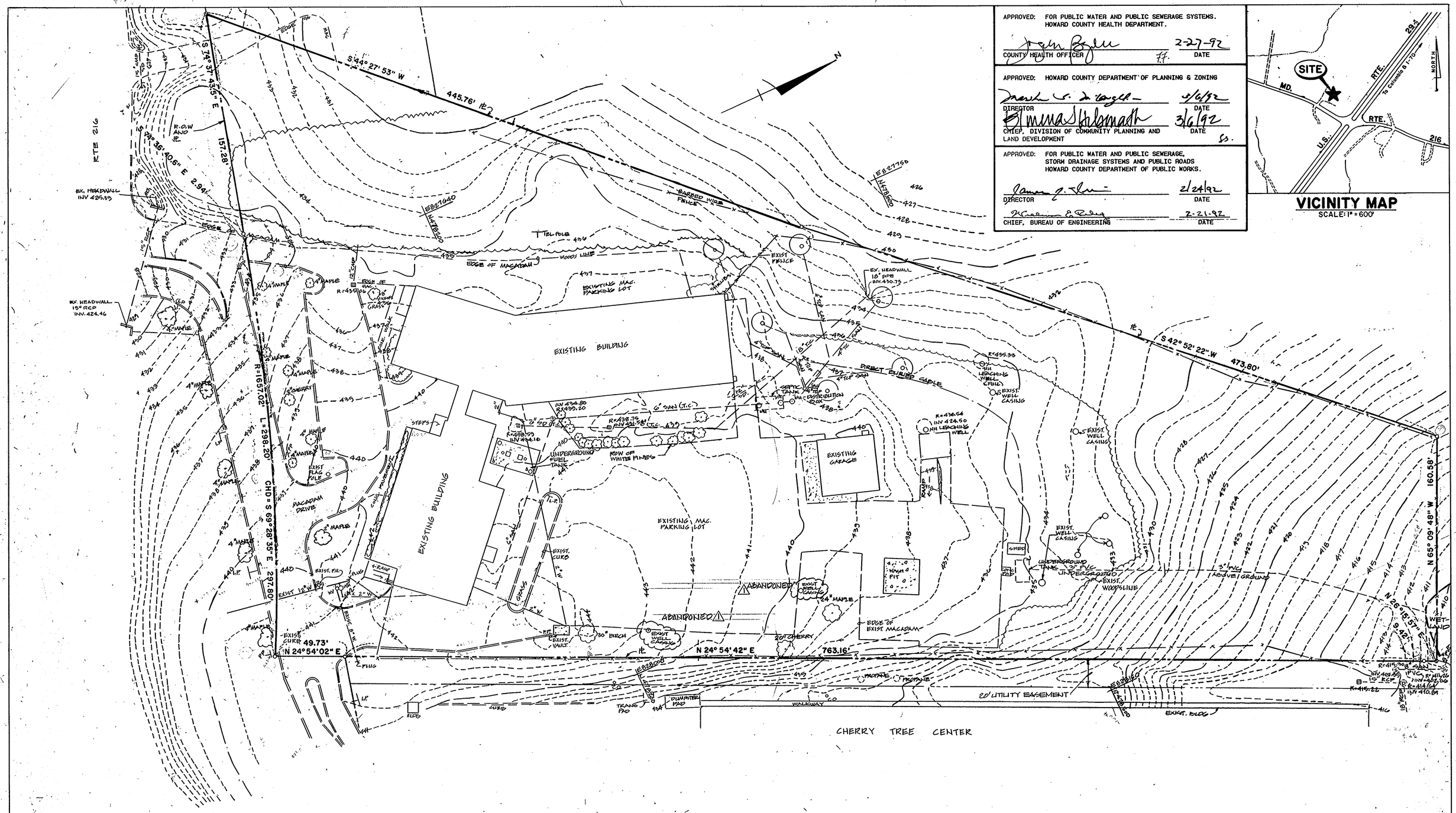

SCALE: 1" = 30'
30 15 0 30

ARCHITECTURAL TECHNOLOGIES, INC. Architects and Construction Consultants 9192 Red Branch Road, Suite 300 Columbia, MD. 21045 (301)995-4067	IN ASSOCIATION WITH:	REVISIONS	EXISTING CONDITIONS
	CIVIL & GEOTECH ENGINEER: E B A ENGINEERING, INC.	1 AS BUILT 11/28/94	HOWARD COUNTY PUBLIC SAFETY COMPLEX
	STRUCTURAL ENGINEER: GODESH ENGINEERING SERVICES, INC.		SCAGGSVILLE ANNEX 11226 ROUTE 216 LAUREL, MD. 20707
	MECHANICAL & ELECTRICAL ENGINEER: BHARGAVA INTERNATIONAL, INC.		
	FIRE PROTECTION ENGINEER: STANTON ENGINEERING		

SEAL: STATE OF MARYLAND — KENNETH W. BOWDEN — REGISTERED PROFESSIONAL ENGINEER — No. 19819

2 OF 90

CAPITAL PROJECT NO. C - 0227

DATE: 2-20-92

DRAWING NO. C-1.1

SHEET 1 OF 13

SDP-91-100

1650

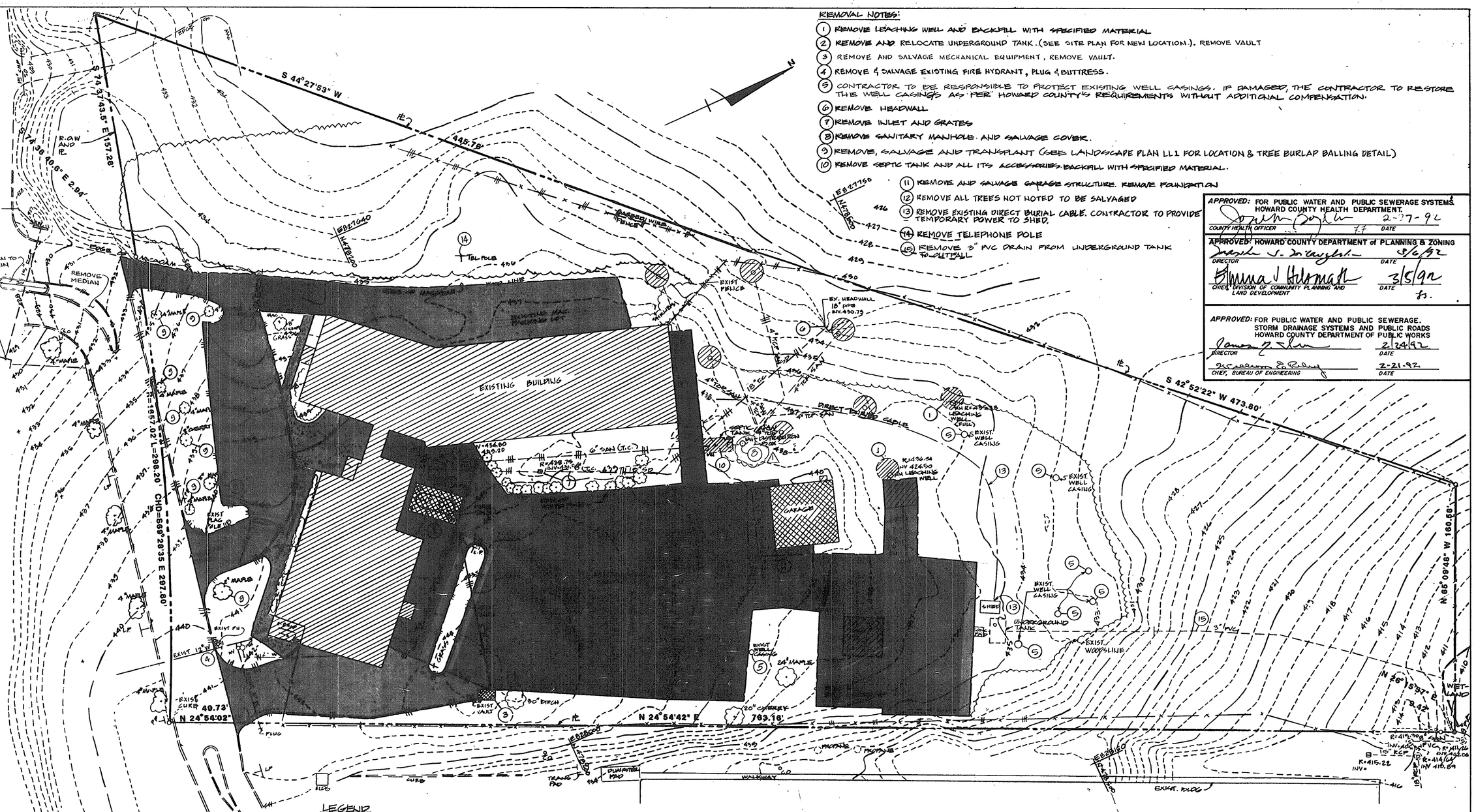

REMOVAL NOTES:

1. REMOVE LEACHING WELL AND BACKFILL WITH SPECIFIED MATERIAL
2. REMOVE AND RELOCATE UNDERGROUND TANK. (SEE SITE PLAN FOR NEW LOCATION.). REMOVE VAULT
3. REMOVE AND SALVAGE MECHANICAL EQUIPMENT, REMOVE VAULT.
4. REMOVE & SALVAGE EXISTING FIRE HYDRANT, PLUG & BUTTRESS.
5. CONTRACTOR TO BE RESPONSIBLE TO PROTECT EXISTING WELL CASINGS. IF DAMAGED, THE CONTRACTOR TO RESTORE THE WELL CASINGS AS PER HOWARD COUNTY'S REQUIREMENTS WITHOUT ADDITIONAL COMPENSATION.
6. REMOVE HEADWALL
7. REMOVE INLET AND GRATES
8. REMOVE SANITARY MANHOLE AND SALVAGE COVER.
9. REMOVE, SALVAGE AND TRANSPLANT (SEE LANDSCAPE PLAN LL1 FOR LOCATION & TREE BURLAP BALLING DETAIL)
10. REMOVE SEPTIC TANK AND ALL ITS ACCESSORIES. BACKFILL WITH SPECIFIED MATERIAL.
11. REMOVE AND SALVAGE GARAGE STRUCTURE. REMOVE FOUNDATION
12. REMOVE ALL TREES NOT NOTED TO BE SALVAGED
13. REMOVE EXISTING DIRECT BURIAL CABLE. CONTRACTOR TO PROVIDE TEMPORARY POWER TO SHED.
14. REMOVE TELEPHONE POLE
15. REMOVE 3" PVC DRAIN FROM UNDERGROUND TANK TO OUTFALL

APPROVED: FOR PUBLIC WATER AND PUBLIC SEWERAGE SYSTEMS. HOWARD COUNTY HEALTH DEPARTMENT.
COUNTY HEALTH OFFICER — DATE 2-27-92

APPROVED: HOWARD COUNTY DEPARTMENT of PLANNING & ZONING
DIRECTOR — DATE 3/6/92
CHIEF, DIVISION OF COMMUNITY PLANNING AND LAND DEVELOPMENT — DATE 3/5/92

APPROVED: FOR PUBLIC WATER AND PUBLIC SEWERAGE. STORM DRAINAGE SYSTEMS AND PUBLIC ROADS HOWARD COUNTY DEPARTMENT OF PUBLIC WORKS
DIRECTOR — DATE 2/24/92
CHIEF, BUREAU OF ENGINEERING — DATE 2-21-92

LEGEND

- STRUCTURES TO BE REMOVED INCLUDING FOUNDATIONS
- STRUCTURES TO BE REMOVED, SEE REMOVAL NOTES.
- CURBS TO BE REMOVED
- W — WATER LINE TO BE ABANDONDED
- SAN — SANITARY LINE TO BE ABANDONDED
- SD — STORM DRAIN TO BE ABANDONDED
- PAVEMENT TO BE REMOVED
- FENCE TO BE REMOVED

SCALE: 1"=30'
30 15 0 30

ARCHITECTURAL TECHNOLOGIES, INC.
Architects and Construction Consultants
9192 Red Branch Road, Suite 300
Columbia, MD, 21045 (301)995-4067

IN ASSOCIATION WITH:

CIVIL & GEOTECH ENGINEER:	E B A ENGINEERING, INC.
STRUCTURAL ENGINEER:	QODESH ENGINEERING SERVICES, INC.
MECHANICAL & ELECTRICAL ENGINEER:	BHARGAVA INTERNATIONAL, INC.
FIRE PROTECTION ENGINEER:	STANTON ENGINEERING

SEAL

REVISIONS

1 AS BUILT	11/24/94

DEMOLITION PLAN

3 OF 90

HOWARD COUNTY PUBLIC SAFETY COMPLEX

SCAGGSVILLE ANNEX
11226 ROUTE 216
LAUREL, MD. 20707

CAPITAL PROJECT NO. C - 0227
DATE: 2-20-92
DRAWING NO. C-2.1

SDP-91-100

SHEET 2 OF 13

1650

COORDINATES HEREON ARE BASED ON HOWARD COUNTY HORIZONTAL CONTROL STATION:

2039001	N 477,614.342	E 828108.318	EL. 447.251
2039002	N 477,493.563	E 829043.326	EL. —
2039003	N 477,222.641	E 830705.905	EL. 400.862
2139005	N 481,233.128	E 830424.775	EL. 375.434

CURVE DATA

No.	Δ	Δ/2	Dc.	R	T	L	CH.	DEF (min./ft.)
C-1	84°15'39"	42°07'49.5"	114.35	50.00'	45.23'	73.53'	67.08'	34.3774677'
C-2	76° 24' 14.5"	38° 12' 07.3"	114.35	50.00'	39.35'	66.68'	61.84'	34.3774677'
C-3	103° 35' 45.5"	51° 47' 52.7"	114.35	50.00'	63.53'	90.40'	78.58'	34.3774677'
~~C-4~~	~~[illegible]~~	~~[illegible]~~	~~114.35~~	~~50.00'~~	~~45.23'~~	~~73.53'~~	~~67.08'~~	~~34.3774677'~~
C-5	68° 23' 35"	34° 11' 47.5"	114.35	50.00'	33.98'	59.68'	56.20'	34.3774677'
C-6	56° 41' 32.3"	28° 20' 46.2"	114.35	50.00'	26.97'	49.47'	47.48'	34.3774677'
C-7	90° 00' 00"	45° 00' 00"	344.07	16.65'	16.65'	26.16'	23.55'	103.2356388'
C-8	81° 34' 54.2"	40° 47' 27.1"	954.55	6.00	5.18'	8.54'	7.84'	286.4788976'
C-9	90° 00' 00"	45° 00' 00"	190.59	30.00'	30.00'	47.12'	42.43'	57.29577952'
C-4	89°57'35"	44°58'47.5"	21.97	15.00'	14.99'	23.55'	21.21'	

COORDINATES

PT. No.	NORTH	EAST	DESCR.
10	478,002.112	827,867.420	℄ 'A'
11	478,500.940	828,099.091	℄ 'A'
12	477,997.895	827,633.918	℄ 'B'
13	478,587.418	827,907.711	℄ 'B'
14	478,076.501	827,841.327	BLDG. CORNER
15	478,111.884	827,765.142	"
16	478,200.766	827,806.422	"
17	478,330.809	827,844.942	"
18	478,422.412	827,887.486	"
19	478,375.796	827,987.859	"
20	478,166.383	827,882.606	"
21	478,120.035	827,861.545	"

NOTES:

1. STATIONS AND OFFSETS ARE FROM ℄ TO FACE OF CURB
2. CONTRACTOR SHALL PROVIDE ALL SURVEY WORKS AS NECESSARY FOR HIM TO COMPLETE THE PROJECT.
3. FOR HEAD TO HEAD PARKING, A MINIMUM OF 40' IS REQUIRED.

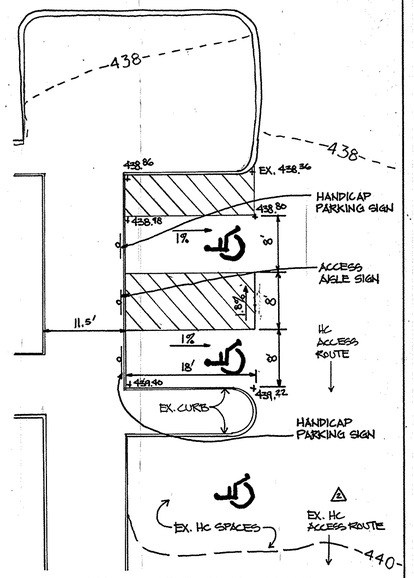

HANDICAP PARKING DETAIL

SCALE: 1"=10'

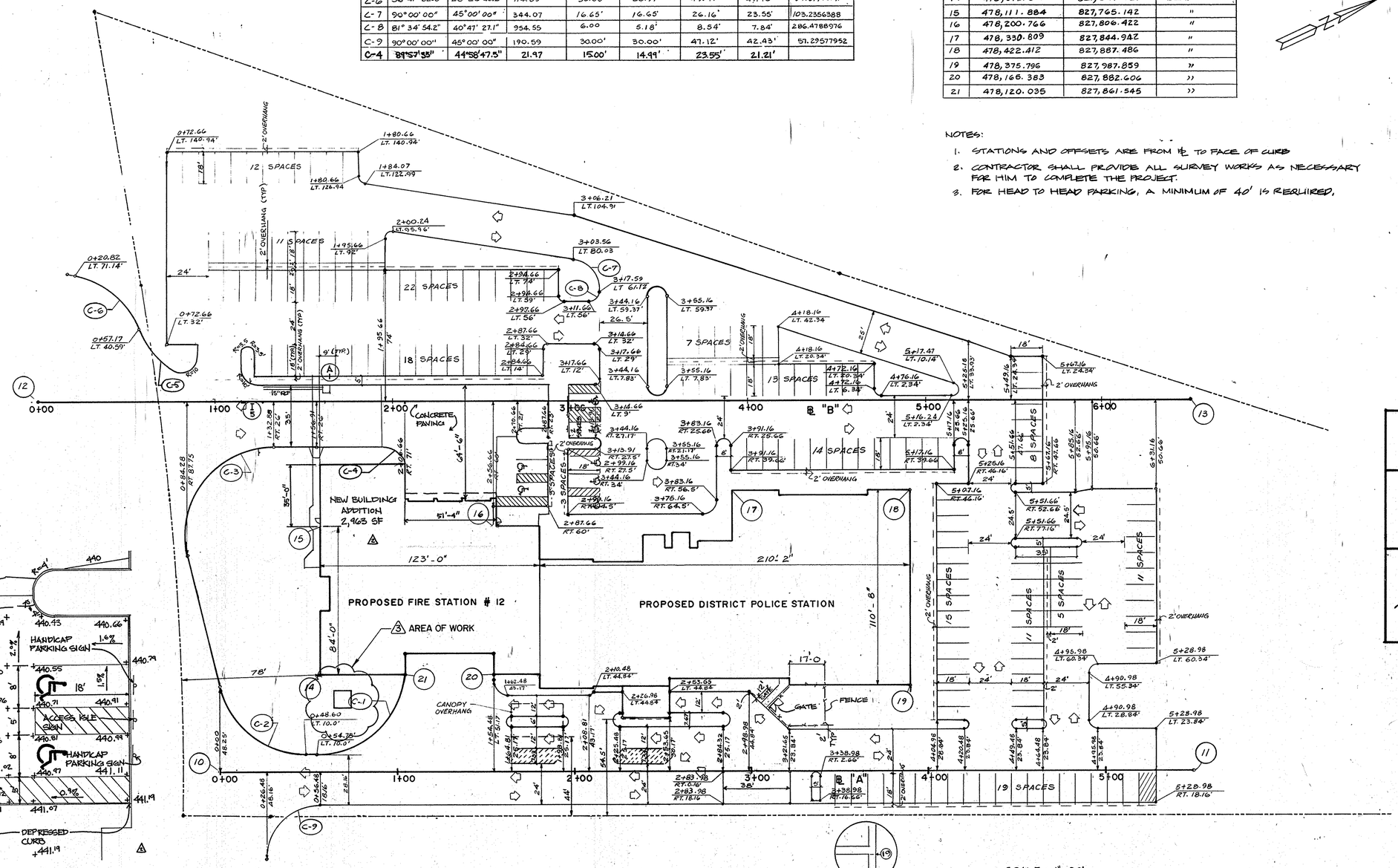

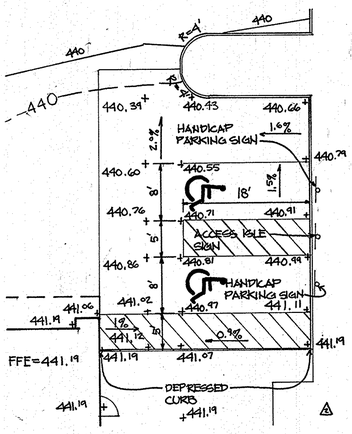

HANDICAP PARKING DETAIL

SCALE: 1"=10'

APPROVED: FOR PUBLIC WATER AND PUBLIC SEWERAGE SYSTEMS. HOWARD COUNTY HEALTH DEPARTMENT.

COUNTY HEALTH OFFICER — DATE 2-27-92

APPROVED: HOWARD COUNTY DEPARTMENT of PLANNING & ZONING

DIRECTOR — DATE 3/6/92

CHIEF, DIVISION OF COMMUNITY PLANNING AND LAND DEVELOPMENT — DATE 3/5/92

APPROVED: FOR PUBLIC WATER AND PUBLIC SEWERAGE. STORM DRAINAGE SYSTEMS AND PUBLIC ROADS HOWARD COUNTY DEPARTMENT OF PUBLIC WORKS

DIRECTOR — DATE 2/24/92

CHIEF, BUREAU OF ENGINEERING — DATE 2-21-92

STATE OF MARYLAND — SUPERVISOR OF ENGINEERING — REGISTERED PROFESSIONAL ENGINEER — 8-31-15

PROFESSIONAL CERTIFICATE:

I HEREBY CERTIFY THAT THE INFORMATION CLOUDED AND LISTED UNDER REVISION #3 ON THIS DOCUMENT WAS PREPARED OR APPROVED BY ME.

NORTH EAST BLDG CORNER N.T.S.

SCALE: 1"=30'

3 THIS SHEET WAS MODIFIED TO INCLUDE THE RAINWATER HARVESTING FACILITIES DESIGN INFORMATION. REFER TO THE SOUTH COUNTY RAINWATER HARVESTING AND WASH PAD DESIGN PACKAGE, CAPITAL PROJECT C-0313, ORIGINALLY DATED APRIL 2015, (LATEST REVISION).

1650

ARCHITECTURAL TECHNOLOGIES, INC.
Architects and Construction Consultants
9192 Red Branch Road, Suite 300
Columbia, MD, 21045 (301)995-4067

IN ASSOCIATION WITH:

CIVIL & GEOTECH ENGINEER:	E B A ENGINEERING, INC.
STRUCTURAL ENGINEER:	QODESH ENGINEERING SERVICES, INC.
MECHANICAL & ELECTRICAL ENGINEER:	BHARGAVA INTERNATIONAL, INC.
FIRE PROTECTION ENGINEER:	STANTON ENGINEERING

SEAL:

REVISIONS

1. AS BUILT 11/24/94
2. ADD BLDG. ADD., REV. WTR & SDWLK. 7/7/09
3. REVISION No. 3: REDLINE REVISIONS - SEE NOTE

LAYOUT PLAN

HOWARD COUNTY PUBLIC SAFETY COMPLEX

SCAGGSVILLE ANNEX
11226 ROUTE 216
LAUREL, MD. 20707

4 OF 90

CAPITAL PROJECT NO. C.-0227

DATE: 2-20-92

DRAWING NO. C-3.1

SHEET 5 OF 13

SDP-91-100

SECTION A-A
SCALE: 1"=40'

PROPOSED ADDITION ELEVATION
SCALE: 1"=40'

NOTES

- LOCATIONS ARE TO CENTER OF STRUCTURES.
- OFFSETS FOR INLETS ARE TO FACE OF CURB

GENERAL NOTES

1.- ALL CONSTRUCTION TO BE IN ACCORDANCE WITH THE HOWARD COUNTY DESIGN MANUAL, VOL. IV
2.- CONTRACTOR TO VERIFY THE LOCATION OF ALL UNDERGROUND UTILITIES PRIOR TO BEGINNING WORK.
3.- FOR STRUCTURE AND PROPERTY LINE OFFSET DIMENSIONS SEE SHEET C-3.1 (LAYOUT PLAN).
4.- A BUILDING PERMIT SHALL BE OBTAINED WITHIN 1 YEAR OF THIS REDLINE APPROVAL BY DED FOR THE NEW BUILDING ADDITION.

STRUCTURE SCHEDULE

No.	TYPE	@	LOCATION	TOP OF GR/COV	INV IN	INV OUT	REMARKS
SAN-1	STD. SANITARY MH.	'A'	325' RT. STA. 4+92.50	430.30	424.84	422.71	Ho. Co. STD. G 5.01
SAN-2	STD. SANITARY MH.	'A'	12.50' LT. STA. 4+07.00	439.35	429.41	429.21	Ho. Co. STD. G 5.01
SAN-3	STD. SANITARY MH.	'A'	12.50' LT. STA. 0+93.00	441.50	435.71	435.61	Ho. Co. STD. G 5.01
SD-1	STD. STORM D. MH.	'A'	2.00' LT. STA. 2+78.00	440.00	435.32	434.82	Ho. Co. STD. G 5.05
SD-2	STD. STORM D. MH.	'B'	35.00' RT. STA. 6+38.00	434.40	424.91	424.60	Ho. Co. STD. G 5.12
I-1	STD. 'S' COMB. INLET	'A'	18.16' RT. STA. 2+78.00	439.80	—	436.80	Ho. Co. STD., SD-4.32
I-2	STD. 'S' COMB. INLET	'A'	7.50' LT. STA. 5+28.98	434.40	429.82	425.00	SEE DETAIL ON SHEET C-7.1
I-3	STD. 'S' COMB. INLET	'B'	50.52' LT. STA. 4+74.00	435.40	426.87	426.67	Ho. Co. STD. SD-4.32
I-4	STD. 'S' COMB. INLET	'B'	88.77' LT. STA. 3+56.00	434.00	428.32	428.07	Ho. Co. STD. SD-4.32
I-5	STD. 'S' COMB. INLET	'B'	9.00' LT. STA. 1+26.00	436.80	—	433.80	Ho. Co. STD. SD-4.32
I-6	STD. 'S' COMB. INLET	'B'	140.94' LT. STA. 1+75.00	432.60	430.25	430.15	Ho. Co. STD. SD-4.32
S-1	STD. SINGLE BRICK 'Y'	'A'	2.00' RT. STA. 3+79.00	439.40	—	432.84	Ho. Co. STD. SD-1.11
I-7	STD. 'S' COMB. INLET	'A'	18.16' RT. STA. 3+62.50	438.50	—	435.50	Ho. Co. STD. SD-4.32

NOTE: SEE SHEET C-3.1 FOR BASE LINES INFORMATION.

SITE EVALUATION

Area of parcel (Phase I): 5.75 AC. (Gross)
Present zoning: R
Proposed use : Government Facilities

Floor Space : Phase I : 31,263 S.F. = 0.72 AC.
Phase II: 21,841 S.F. = 0.50 AC.

Occupant Load : Phase I : 251
Phase II: 121

* Number of Parking spaces required: Phase I : 156
Phase II: 110
264 △

Number of Parking spaces provided: (For clarity see SHT. C-3.1 for parking space count) Phase I : 156
Phase II: 101 **
257 **

Green space to remain on site (Phase I): 2.55 AC. and 44.3% of Gross Area
Building coverage of site (Phase I): 0.70 AC. and 12.2% of Gross

Paved Parking (Phase I): 2.50 AC. and 43.5% of Gross

TOTAL PARKING PROVIDED FOR SITE SHOWN ON THIS PLAN = 156 SPACES (INCLUDES 7 HC SPACES)
** REFLECTS CHANGES MADE WITH SDP-93-66 AND REVISIONS TO SDP-93-66.

SITE ANALYSIS

	Phase I	Phase II
Total area of site :	5.75 AC.	2 AC (±) required
Disturbed area :	5.45 AC.	2.25 AC (±)
Area to be roofed or paved :	3.20 AC.	2.25 AC (±)

Area to be vegetatively stabilized : 2.24 AC.
Total Cut : 5,200 Cu. Yd.
Total Fill : 3780 Cu. Yd.
Offsite waste borrow area location : Not Applicable
NOTE: Quantities shown should not be used as a basis for bid.

* PARKING SPACES REQUIRED: 1 SPACE PER 200 S.F. OF FLOOR AREA.

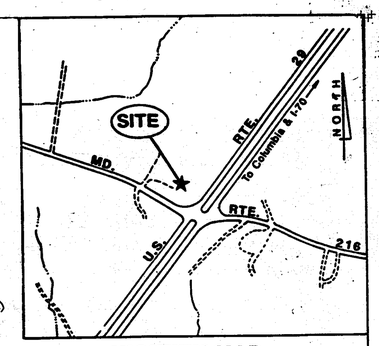

VICINITY MAP
SCALE: 1" = 600'

TYPICAL PAVING SECTION
(NOT TO SCALE)

HANDICAP SIGN INSTALLATION

*REDUCE SPACING 50%
COLORS:
LEGEND AND BORDER - GREEN
WHITE SYMBOL ON BLUE BACKGROUND
BACKGROUND - WHITE

SO FINE

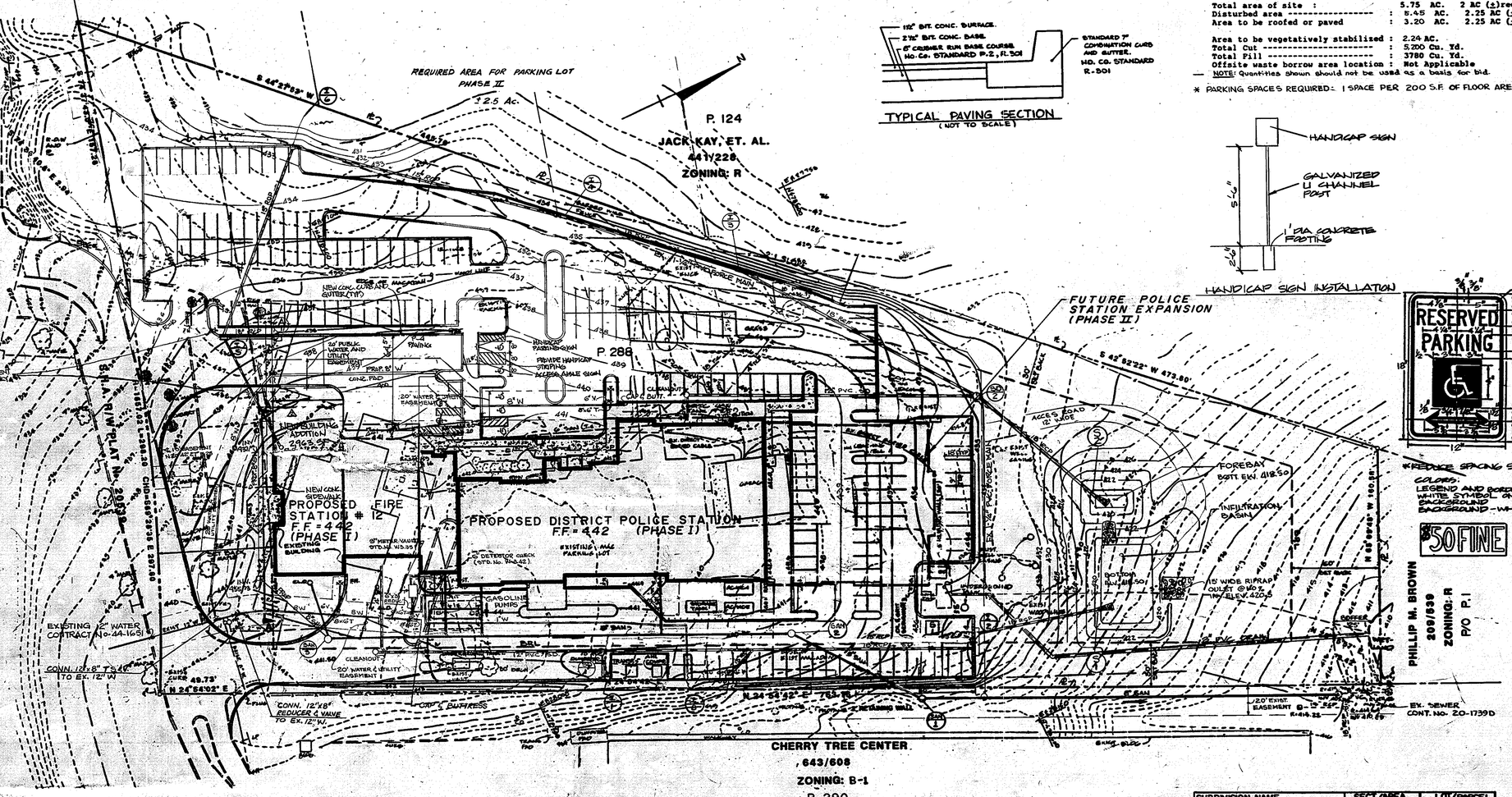

SCALE: 1" = 40'
40 20 0 40

SEE SHEET C4.4 FOR REVISED STORM DRAIN AND SANITARY SEWER △

DESIGN CERTIFICATION

I HEREBY CERTIFY THAT THIS PLAN HAS BEEN DESIGNED IN ACCORDANCE WITH THE 1983 STANDARDS AND SPECIFICATIONS FOR SOIL EROSION AND SEDIMENT CONTROL OR CURRENT REVISIONS THEROF, AND DEPARTMENT OF THE ENVIRONMENT STORMWATER MANAGEMENT REGULATIONS.

2/20/92 — DATE
DESIGNER'S SIGNATURE
MD REGISTRATION NO. 10989 — KENNETH M. JOHNS
(P.E.) R.L.S. OR R.L.A. (CIRCLE) — PRINTED NAME

OWNER'S/DEVELOPER'S CERTIFICATION

"I/WE HEREBY CERTIFY THAT ALL CLEARING, GRADING, CONSTRUCTION AND/OR DEVELOPMENT WILL BE DONE PURSUANT TO THIS PLAN AND THAT ANY RESPONSIBLE PERSONNEL INVOLVED IN THE CONSTRUCTION PROJECT WILL HAVE A CERTIFICATE OF ATTENDANCE AT A MARYLAND DEPARTMENT OF THE ENVIRONMENT APPROVED TRAINING PROGRAM FOR THE CONTROL OF SEDIMENT AND EROSION BEFORE BEGINNING THE PROJECT. I HEREBY AUTHORIZE THE RIGHT OF ENTRY FOR PERIODIC ON-SITE EVALUATION BY THE STATE OF MARYLAND, DEPARTMENT OF THE ENVIRONMENT, COMPLIANCE INSPECTORS."

2/24/92 — DATE
OWNER/DEVELOPER SIGNATURE
CARD NO. — PRINTED NAME AND TITLE

APPROVED: FOR PUBLIC WATER AND PUBLIC SEWERAGE SYSTEMS. HOWARD COUNTY HEALTH DEPARTMENT.
COUNTY HEALTH OFFICER — DATE 2-27-92

APPROVED: HOWARD COUNTY DEPARTMENT of PLANNING & ZONING
DIRECTOR — DATE 3/6/92
CHIEF, DIVISION OF COMMUNITY PLANNING AND LAND DEVELOPMENT — DATE 3/5/92

APPROVED: FOR PUBLIC WATER AND PUBLIC SEWERAGE, STORM DRAINAGE SYSTEMS AND PUBLIC ROADS HOWARD COUNTY DEPARTMENT OF PUBLIC WORKS
DIRECTOR — DATE 2/24/92
CHIEF, BUREAU OF ENGINEERING — DATE 2-21-92

THE DEVELOPMENT PLAN IS APPROVED FOR SOIL EROSION AND SEDIMENT CONTROL BY THE HOWARD SOIL CONSERVATION DISTRICT.

APPROVED _____ Howard S.C.D. DATE 2/25/92
REVIEWED FOR _____ Name HOWARD S.C.D.
AND MEETS TECHNICAL REQUIREMENTS.
SIGNATURE — DATE 2/25/92
U.S. SOIL CONSERVATION SERVICE

SUBDIVISION NAME				SECT/AREA	LOT/PARCEL
Ho.Co. Public Safety Complex				5.75 Ac.	P.288
PLAT No. OR L/F	BLOCK No.	ZONE	TAX/ZONE MAP	ELE. DIST.	CENSUS TR
161/182	4	R	46	5	6051.02
WATER CODE			SEWER CODE		
E20			7690000		

ARCHITECTURAL TECHNOLOGIES, INC.
Architects and Construction Consultants
9192 Red Branch Road, Suite 300
Columbia MD, 21045 (301)995-4067

IN ASSOCIATION WITH:
CIVIL & GEOTECH ENGINEER: E B A ENGINEERING, INC.
STRUCTURAL ENGINEER: QODESH ENGINEERING SERVICES, INC.
MECHANICAL & ELECTRICAL ENGINEER: BHARGAVA INTERNATIONAL, INC.
FIRE PROTECTION ENGINEER: STANTON ENGINEERING

SEAL: REGISTERED PROFESSIONAL ENGINEER

REVISIONS
△1 AS BUILT 11/24/04
△2 ADD BLDG. ADDITION, REV. WTR, REV SEWER 7/7/09

SITE DEVELOPMENT PLAN
HOWARD COUNTY, PUBLIC SAFETY COMPLEX
SCAGGSVILLE ANNEX
11226 ROUTE 216
LAUREL, MD. 20707

5 OF 90
CAPITAL PROJECT NO. C - 0227
DATE: 2-20-92
DRAWING NO. C-4.1

SDP-91-100

1650

STATE OF MARYLAND
SECOND PROFESSIONAL ENGINEER
No. 15911
PROFESSIONAL ENGINEER

8-31-15

PROFESSIONAL CERTIFICATE:
I HEREBY CERTIFY THAT THE INFORMATION CLOUDED AND LISTED UNDER REVISION #3 ON THIS DOCUMENT WAS PREPARED OR APPROVED BY ME.

APPROVED: FOR PUBLIC WATER AND PUBLIC SEWERAGE SYSTEMS.
HOWARD COUNTY HEALTH DEPARTMENT

2-27-92
COUNTY HEALTH OFFICER — DATE

APPROVED: HOWARD COUNTY DEPARTMENT of PLANNING & ZONING

3/6/92
DIRECTOR — DATE

3/5/92
CHIEF, DIVISION OF COMMUNITY PLANNING AND LAND DEVELOPMENT — DATE

APPROVED: FOR PUBLIC WATER AND PUBLIC SEWERAGE.
STORM DRAINAGE SYSTEMS AND PUBLIC ROADS
HOWARD COUNTY DEPARTMENT OF PUBLIC WORKS

2/24/92
DIRECTOR — DATE

2-21-92
CHIEF, BUREAU OF ENGINEERING — DATE

THE DEVELOPMENT PLAN IS APPROVED FOR SOIL EROSION AND SEDIMENT CONTROL BY THE HOWARD SOIL CONSERVATION DISTRICT.

APPROVED _____ DATE 2/25/92
Howard S.C.D.

REVIEWED FOR _____ HOWARD S.C.D.
Name

AND MEETS TECHNICAL REQUIREMENTS.

2/25/92
SIGNATURE — DATE
U.S. SOIL CONSERVATION SERVICE

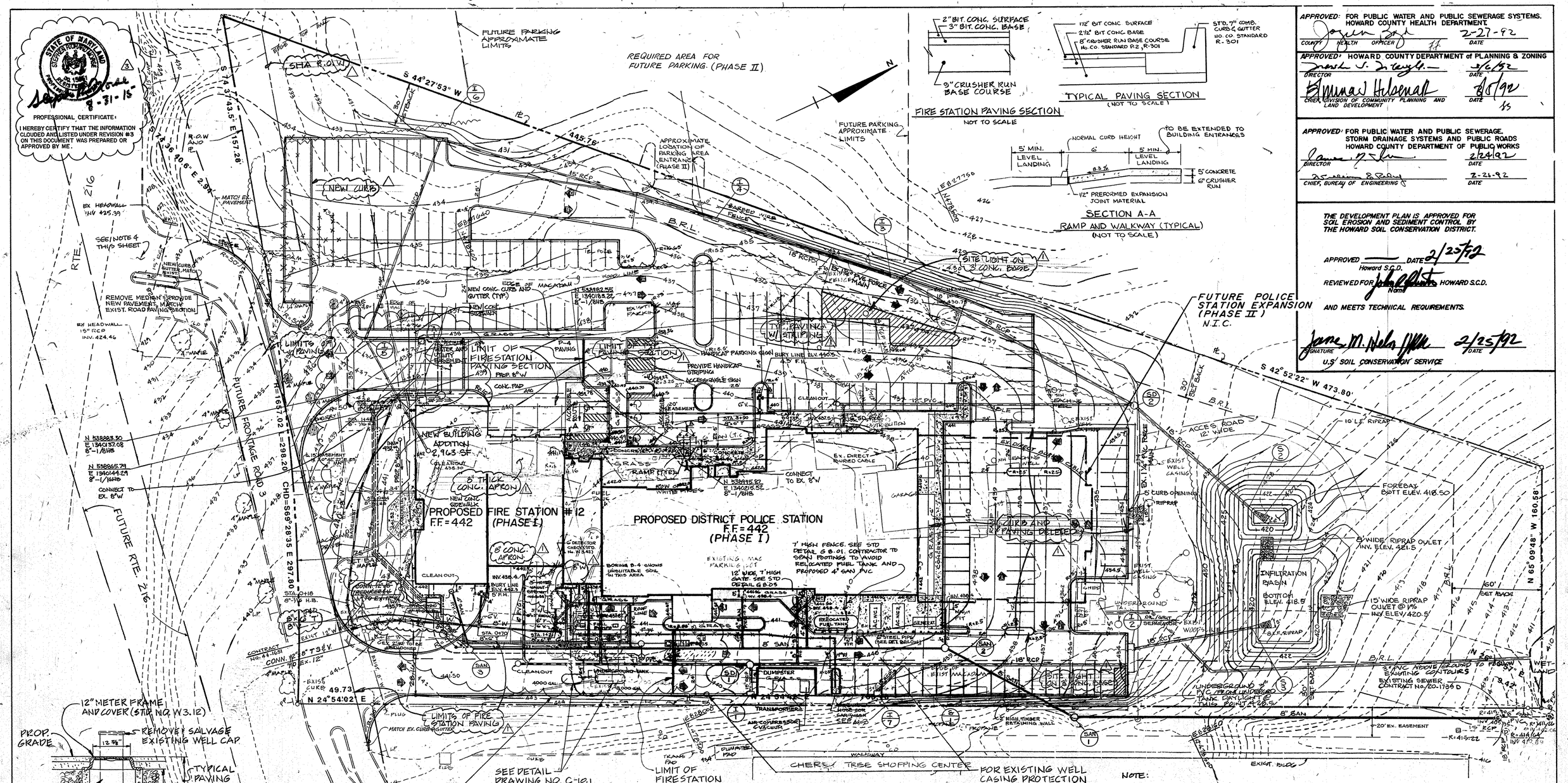

FIRE STATION PAVING SECTION
NOT TO SCALE

TYPICAL PAVING SECTION
(NOT TO SCALE)

SECTION A-A
RAMP AND WALKWAY (TYPICAL)
(NOT TO SCALE)

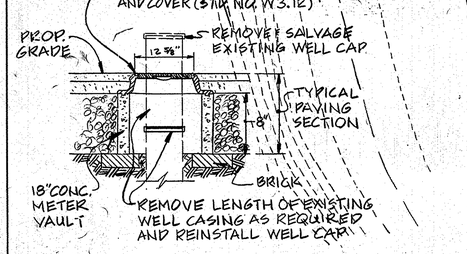

WELL CASING PROTECTION DETAIL
NOT TO SCALE

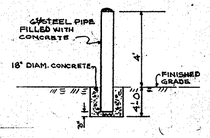

6" STEEL PIPE DETAIL TYP.
NTS

NOTE:
1. FOR CLARITY, SEE SHEET 3.1 FOR PARKING SPACE COUNT
2. FOR STRUCTURE DIMENSIONS, SEE SHEET C-3.1 (LAYOUT PLAN)
3. FOR MORE INFORMATION ABOUT WATER & SEWER LINES, SEE HOWARD COUNTY PUBLIC SAFETY COMPLEX CONTRACT NO. 24-3175.
4. ROAD LEADING TO CHERRY TREE SHOPPING CENTER CAN NOT BE BLOCKED AT ANY TIME.

3 THIS SHEET WAS MODIFIED TO INCLUDE THE RAINWATER HARVESTING FACILITIES DESIGN INFORMATION. REFER TO THE SOUTH COUNTY RAINWATER HARVESTING AND WASH PAD DESIGN PACKAGE, CAPITAL PROJECT C-0313, ORIGINALLY DATED APRIL 2015, (LATEST REVISION).

WATER AND SEWER COUNTY CODES	
WATER	1E20
SEWER	7690000

SEE SHEET C4.4 FOR REVISED STORM DRAIN AND SANITARY SEWER

SCALE: 1" = 30'
30 15 0 30

ARCHITECTURAL TECHNOLOGIES, INC.
Architects and Construction Consultants
9192 Red Branch Road, Suite 300
Columbia, MD, 21045 (301)995-4067

IN ASSOCIATION WITH:

CIVIL & GEOTECH ENGINEER:	E B A ENGINEERING, INC.
STRUCTURAL ENGINEER:	QODESH ENGINEERING SERVICES, INC.
MECHANICAL & ELECTRICAL ENGINEER:	BHARGAVA INTERNATIONAL, INC.
FIRE PROTECTION ENGINEER:	STANTON ENGINEERING

SEAL

REVISIONS

1	AS BUILT	11/24/94
2	ADD BLDG. ADD, REV. WTR. & SDWLK.	7/7/09
3	REDLINE REVISIONS - SEE NOTE	

SITE PLAN

HOWARD COUNTY
PUBLIC SAFETY COMPLEX

SCAGGSVILLE ANNEX
11226 ROUTE 216
LAUREL, MD. 20707

6 OF 90

CAPITAL PROJECT NO. C - 0227

DATE: 2-20-92

DRAWING NO. C-4.2

SDP-91-100

SHEET 3 of 13

1650

APPROVED: FOR PUBLIC WATER AND PUBLIC SEWERAGE SYSTEMS, HOWARD COUNTY HEALTH DEPARTMENT

COUNTY HEALTH OFFICER — DATE 2-27-92

APPROVED: HOWARD COUNTY DEPARTMENT of PLANNING & ZONING

DIRECTOR — DATE 3/6/92

CHIEF, DIVISION OF COMMUNITY PLANNING AND LAND DEVELOPMENT — DATE 3/5/92

APPROVED: FOR PUBLIC WATER AND PUBLIC SEWERAGE, STORM DRAINAGE SYSTEMS AND PUBLIC ROADS HOWARD COUNTY DEPARTMENT OF PUBLIC WORKS

DIRECTOR — DATE 2/24/92

CHIEF, BUREAU OF ENGINEERING — DATE 2-21-92

THE DEVELOPMENT PLAN IS APPROVED FOR SOIL EROSION AND SEDIMENT CONTROL BY THE HOWARD SOIL CONSERVATION DISTRICT.

APPROVED _____ Howard S.C.D. DATE 2/25/92

REVIEWED FOR _____ Name HOWARD S.C.D.

AND MEETS TECHNICAL REQUIREMENTS.

SIGNATURE — DATE 2/25/92

U.S. SOIL CONSERVATION SERVICE

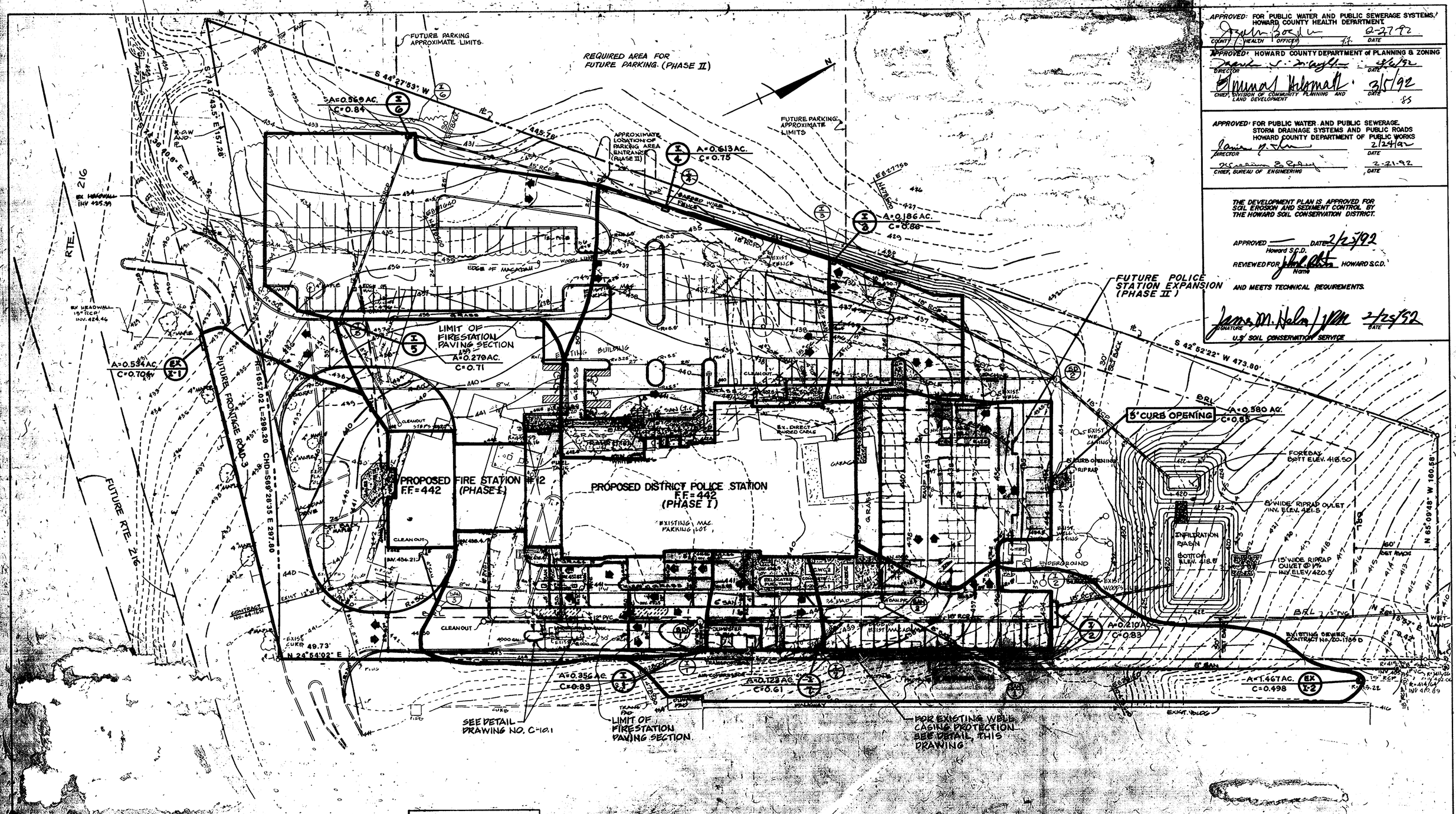

WATER AND SEWER COUNTY CODES

WATER 820
SEWER 7690000

SCALE 1"=50'

DRAINAGE AREA MAP

HOWARD COUNTY
PUBLIC SAFETY COMPLEX

SCAGGSVILLE ANNEX
11226 ROUTE 216
LAUREL, MD. 20707

7 OF 90

CAPITAL PROJECT NO. C - 8227

DATE 2-20-92

DRAWING NO. C-4.3

SHEET 6 OF 13

SDP-91-100

ARCHITECTURAL TECHNOLOGIES, INC.
Architects and Construction Consultants
9102 Red Branch Road, Suite 300
Columbia, MD. 21045 (301) 995-4067

IN ASSOCIATION WITH:

CIVIL & GEOTECH ENGINEER:	E B A ENGINEERING, INC.
STRUCTURAL ENGINEER:	GODESH ENGINEERING SERVICES, INC.
MECHANICAL & ELECTRICAL ENGINEER:	BHARGAVA INTERNATIONAL, INC.
FIRE PROTECTION ENGINEER:	STANTON ENGINEERING

REVISIONS

1	12/01/92	

STRUCTURE SCHEDULE

NUMBER	TYPE	LOCATION		TOP ELEVATION	SIZE	REMARKS
A1	TYPE S INLET	N530897.19	E1340115.68	436.65	2'-7" X 2-7 1/2"	HO. CO. D-4.22

NOTES:
1) ALL STRUCTURES ARE HOWARD COUNTY STANDARDS UNLESS NOTED OTHERWISE. CONTRACTOR MAY USE PRECAST STRUCTURE WHERE AVAILABLE TO MEET THE STANDARD STRUCTURE SPECIFIED.
2) STATIONS ARE GIVEN TO CENTER OF STRUCTURE AT FACE OF CURB FOR CURB INLETS AND TO CENTER OF STRUCTURE FOR ALL OTHER STRUCTURES.
3) ELEVATIONS ARE GIVEN TO TOP OF CURB FOR CURB INLETS, TOP OF GRATE FOR GRATE INLETS AND TOP OF LID FOR MANHOLES.
4) PIPE LENGTHS ARE GIVEN TO THE CENTER OF THE STRUCTURE. CONTRACTOR SHALL ADJUST LENGTH TO OBTAIN ACTUAL PIPE LENGTHS.

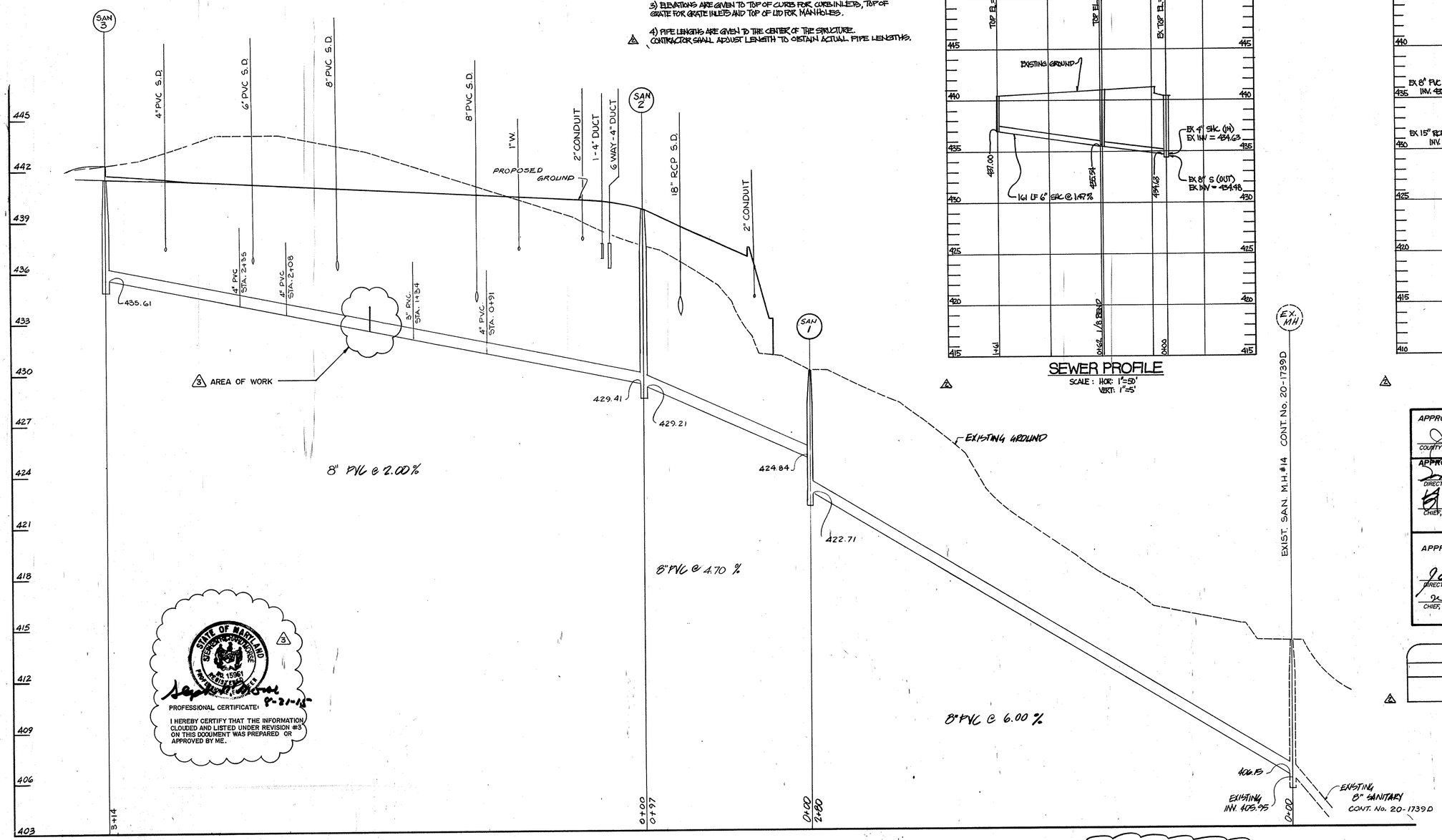

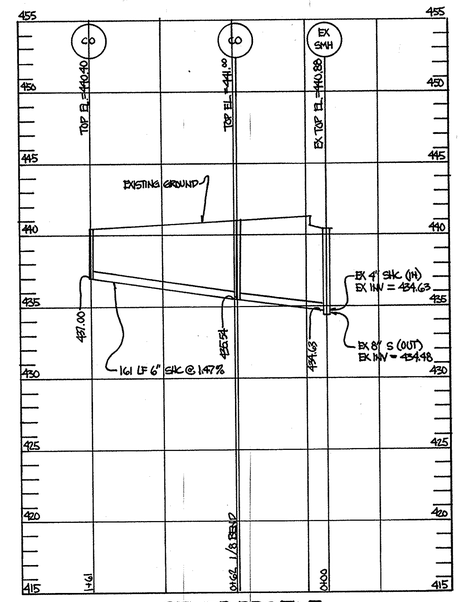

SEWER PROFILE
SCALE: HOR: 1"=50' VERT: 1"=5'

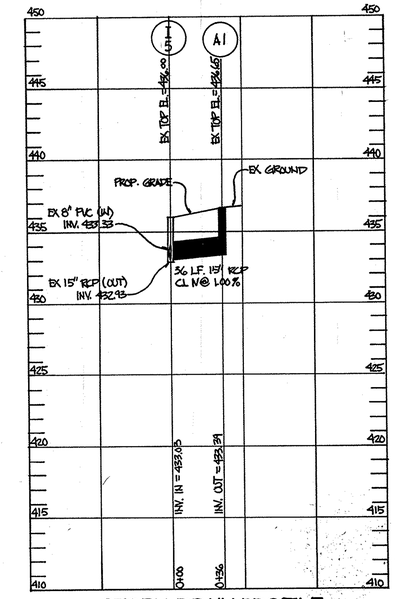

STORM DRAIN PROFILE
SCALE: HOR: 1"=50' VERT: 1"=5'

APPROVED: FOR PUBLIC WATER AND PUBLIC SEWERAGE SYSTEMS. HOWARD COUNTY HEALTH DEPARTMENT.
COUNTY HEALTH OFFICER — DATE 2-27-92

APPROVED: HOWARD COUNTY DEPARTMENT of PLANNING & ZONING
DIRECTOR — DATE 3/2/92
CHIEF, DIVISION OF COMMUNITY PLANNING AND LAND DEVELOPMENT — DATE 3/5/92

APPROVED: FOR PUBLIC WATER AND PUBLIC SEWERAGE. STORM DRAINAGE SYSTEMS AND PUBLIC ROADS HOWARD COUNTY DEPARTMENT OF PUBLIC WORKS
DIRECTOR — DATE 2/24/92
CHIEF, BUREAU OF ENGINEERING — DATE 2-21-92

PIPE SCHEDULE

SIZE	TYPE	LINEAR FOOTAGE
15"	RCP CLIV	36

STATE OF MARYLAND — GEORGE H. JENKINS — No. 15961 — REGISTERED PROFESSIONAL ENGINEER

PROFESSIONAL CERTIFICATE:
I HEREBY CERTIFY THAT THE INFORMATION CLOUDED AND LISTED UNDER REVISION #3 ON THIS DOCUMENT WAS PREPARED OR APPROVED BY ME.
9-21-15

3 THIS SHEET WAS MODIFIED TO INCLUDE THE RAINWATER HARVESTING FACILITIES DESIGN INFORMATION. REFER TO THE SOUTH COUNTY RAINWATER HARVESTING AND WASH PAD DESIGN PACKAGE. CAPITAL PROJECT C-0313, ORIGINALLY DATED APRIL 2015, (LATEST REVISION).

SEWER LINE PROFILE
SCALE H: 1"=50' V: 1"=3'

SEE SHEET C5.2 FOR REVISED SEWER PROFILE

ARCHITECTURAL TECHNOLOGIES, INC.
Architects and Construction Consultants
9192 Red Branch Road, Suite 300
Columbia, MD 21045 (301)995-4067

IN ASSOCIATION WITH:
CIVIL & GEOTECH ENGINEER: E B A ENGINEERING, INC.
STRUCTURAL ENGINEER: QODESH ENGINEERING SERVICES, INC.
MECHANICAL & ELECTRICAL ENGINEER: BHARGAVA INTERNATIONAL, INC.
FIRE PROTECTION ENGINEER: STANTON ENGINEERING

STATE OF MARYLAND — KENNETH M. JENNINGS — No. 19059 — REGISTERED PROFESSIONAL ENGINEER

REVISIONS
1 AS-BUILT 11/24/04
2 ADD UTILITY PROFILES 7/7/09
3 REDLINE REVISIONS - SEE NOTE

SEWER LINE PROFILE
HOWARD COUNTY PUBLIC SAFETY COMPLEX
SCAGGSVILLE ANNEX
11226 ROUTE 216
LAUREL, MD. 20707

8 OF 90
CAPITAL PROJECT NO. C - 0227
DATE: 2-20-92
DRAWING NO. C-5.1

SDP-91-100
SHEET 7 OF 13

1650

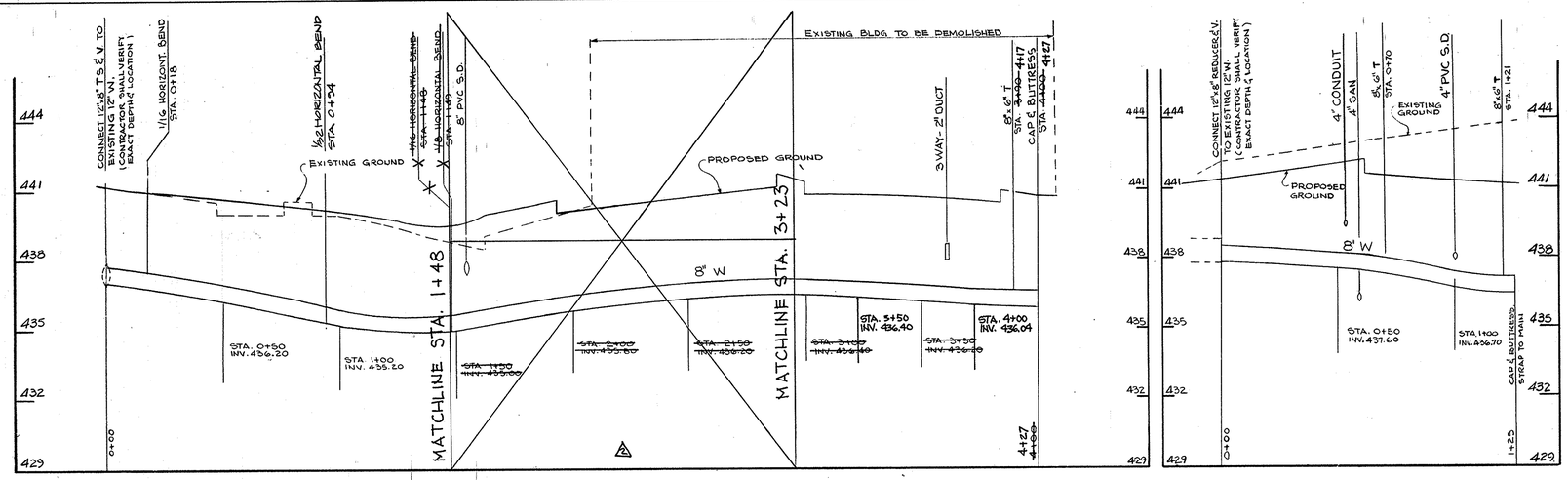

WATER MAIN PROFILE

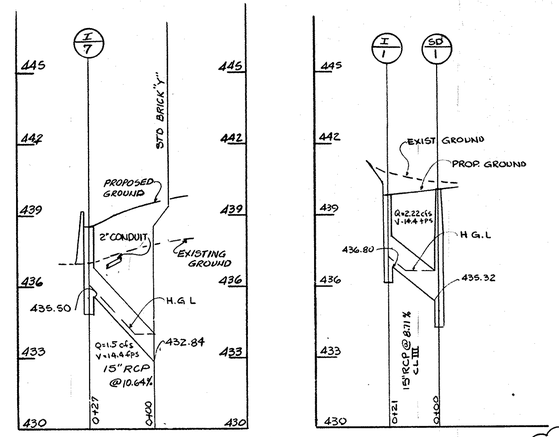

PARKING LOT, EAST OF BUILDING

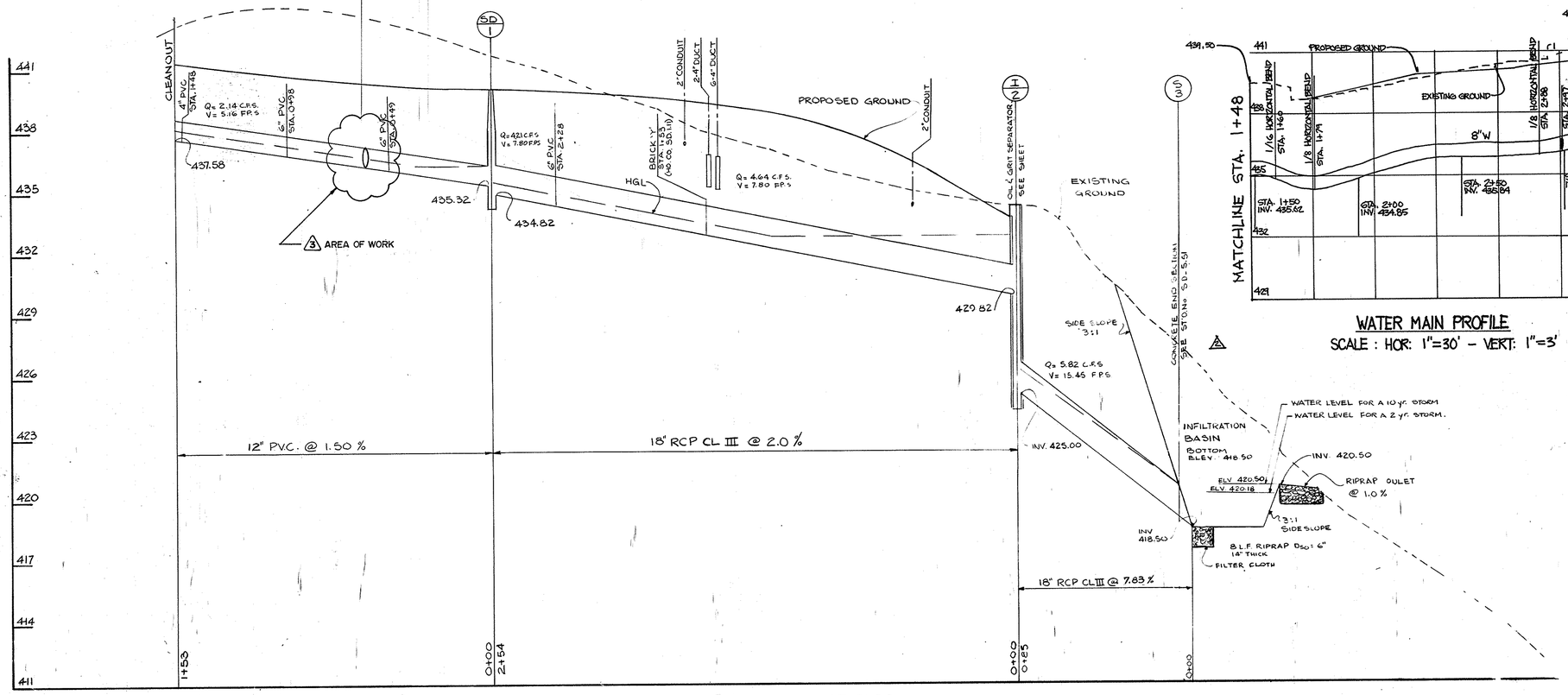

STORM DRAIN PROFILE, EAST OF BLDG.

SCALE: HOR. 1"=30'
VER. 1"=3'

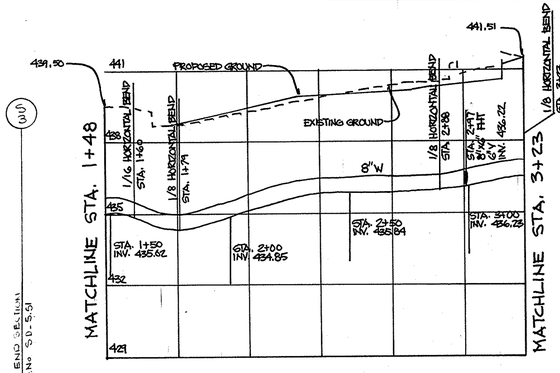

WATER MAIN PROFILE
SCALE : HOR: 1"=30' - VERT: 1"=3'

PROFESSIONAL CERTIFICATE:
I HEREBY CERTIFY THAT THE INFORMATION CLOUDED AND LISTED UNDER REVISION #3 ON THIS DOCUMENT WAS PREPARED OR APPROVED BY ME.

APPROVED: FOR PUBLIC WATER AND PUBLIC SEWERAGE SYSTEMS. HOWARD COUNTY HEALTH DEPARTMENT.
COUNTY HEALTH OFFICER — DATE 2-27-92

APPROVED: HOWARD COUNTY DEPARTMENT of PLANNING & ZONING
DIRECTOR — DATE 4/6/92
CHIEF, DIVISION OF COMMUNITY, PLANNING AND LAND DEVELOPMENT — DATE 3/5/92

APPROVED: FOR PUBLIC WATER AND PUBLIC SEWERAGE. STORM DRAINAGE SYSTEMS AND PUBLIC ROADS HOWARD COUNTY DEPARTMENT OF PUBLIC WORKS
DIRECTOR — DATE 2/24/92
CHIEF, BUREAU OF ENGINEERING — DATE 2-21-92

THE DEVELOPMENT PLAN IS APPROVED FOR SOIL EROSION AND SEDIMENT CONTROL BY THE HOWARD SOIL CONSERVATION DISTRICT.
APPROVED — DATE 2/25/92
HOWARD S.C.D.
REVIEWED FOR — HOWARD S.C.D.
NAME
AND MEETS TECHNICAL REQUIREMENTS
SIGNATURE — DATE 2/25/92
U.S. SOIL CONSERVATION SERVICE

3 THIS SHEET WAS MODIFIED TO INCLUDE THE RAINWATER HARVESTING FACILITIES DESIGN INFORMATION. REFER TO THE SOUTH COUNTY RAINWATER HARVESTING AND WASH PAD DESIGN PACKAGE, CAPITAL PROJECT C-0313, ORIGINALLY DATED APRIL 2015, (LATEST REVISION).

SEE SHEETS C4.4 & C5.2 FOR REVISED STORM DRAIN

ARCHITECTURAL TECHNOLOGIES, INC.
Architects and Construction Consultants
9192 Red Branch Road, Suite 300
Columbia, MD. 21045 (301)995-4067

IN ASSOCIATION WITH:
CIVIL & GEOTECH ENGINEER: E B A ENGINEERING, INC.
STRUCTURAL ENGINEER: QODESH ENGINEERING SERVICES, INC.
MECHANICAL & ELECTRICAL ENGINEER: BHARGAVA INTERNATIONAL, INC.
FIRE PROTECTION ENGINEER: STANTON ENGINEERING

REVISIONS
1 AS BUILT 11/24/94
2 REVISE WATER PROFILE 7/7/09
3 REDLINE REVISIONS - SEE NOTE

WATER MAIN & STORM DRAIN PROFILES
HOWARD COUNTY PUBLIC SAFETY COMPLEX
SCAGGSVILLE ANNEX
11226 ROUTE 216
LAUREL, MD. 20707

9 OF 90
CAPITAL PROJECT NO. C - 0227
DATE: 2-20-92
DRAWING NO. C-6.1

SDP-91-100

1650

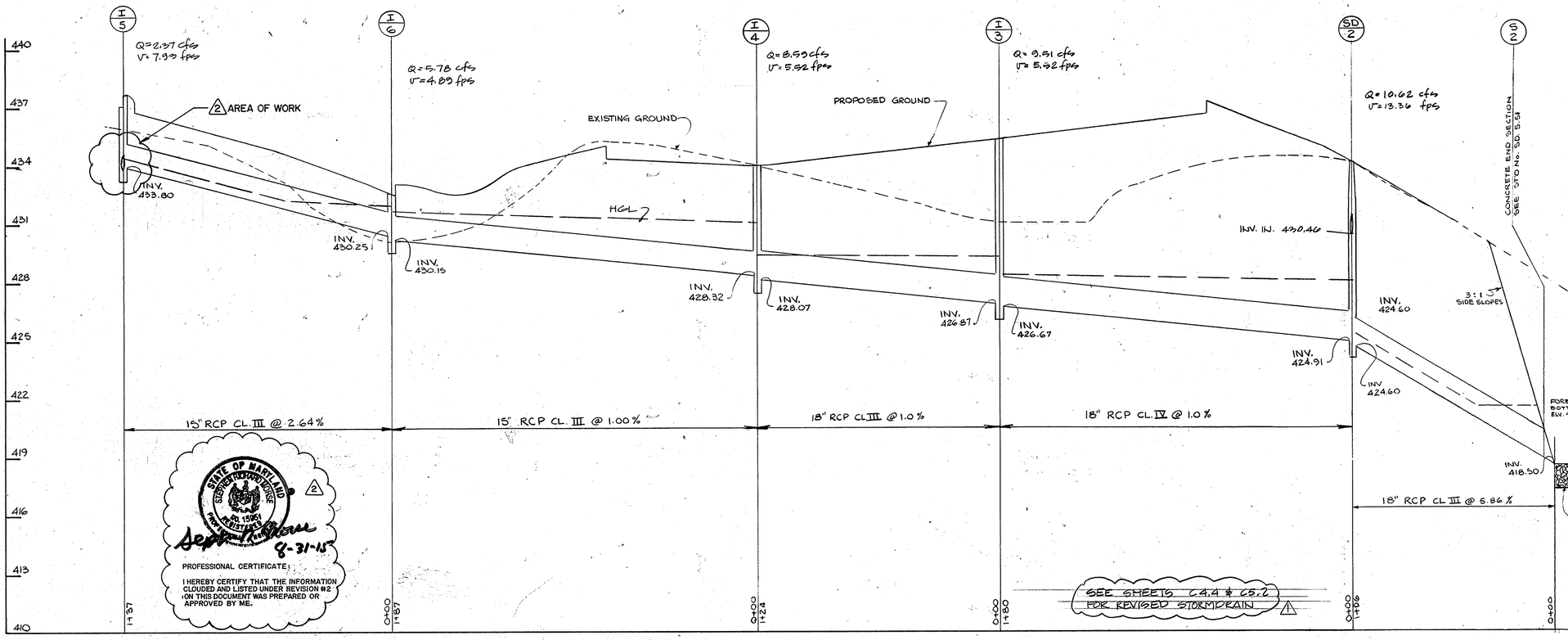

SEE SHEETS C4.4 & C5.2 FOR REVISED STORMDRAIN

STATE OF MARYLAND — STEPHEN R. HORNE — No. 15951 — REGISTERED PROFESSIONAL ENGINEER

9-31-15

PROFESSIONAL CERTIFICATE:

I HEREBY CERTIFY THAT THE INFORMATION CLOUDED AND LISTED UNDER REVISION #2 ON THIS DOCUMENT WAS PREPARED OR APPROVED BY ME.

2 THIS SHEET WAS MODIFIED TO INCLUDE THE RAINWATER HARVESTING FACILITIES DESIGN INFORMATION. REFER TO THE SOUTH COUNTY RAINWATER HARVESTING AND WASH PAD DESIGN PACKAGE, CAPITAL PROJECT C-0313, ORIGINALLY DATED APRIL 2015, (LATEST REVISION).

STORM DRAIN PROFILE, WEST OF BLDG

SCALE H 1"=50' V 1"=3'

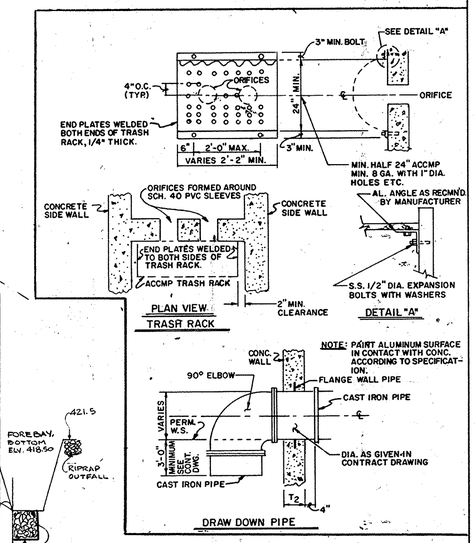

APPROVED: FOR PUBLIC WATER AND PUBLIC SEWERAGE SYSTEMS. HOWARD COUNTY HEALTH DEPARTMENT

COUNTY HEALTH OFFICER — DATE 2-27-92

APPROVED HOWARD COUNTY DEPARTMENT of PLANNING & ZONING

DIRECTOR — DATE 3/6/92

CHIEF, DIVISION OF COMMUNITY PLANNING AND LAND DEVELOPMENT — DATE 3/5/92

APPROVED: FOR PUBLIC WATER AND PUBLIC SEWERAGE. STORM DRAINAGE SYSTEMS AND PUBLIC ROADS HOWARD COUNTY DEPARTMENT OF PUBLIC WORKS

DIRECTOR — DATE 2/24/92

CHIEF, BUREAU OF ENGINEERING — DATE 2-21-92

THE DEVELOPMENT PLAN IS APPROVED FOR SOIL EROSION AND SEDIMENT CONTROL BY THE HOWARD SOIL CONSERVATION DISTRICT.

APPROVED — HOWARD S.C.D. — DATE 2/25/92

REVIEWED FOR — NAME — HOWARD S.C.D.

AND MEETS TECHNICAL REQUIREMENTS

SIGNATURE — DATE 2/25/92

U.S. SOIL CONSERVATION SERVICE

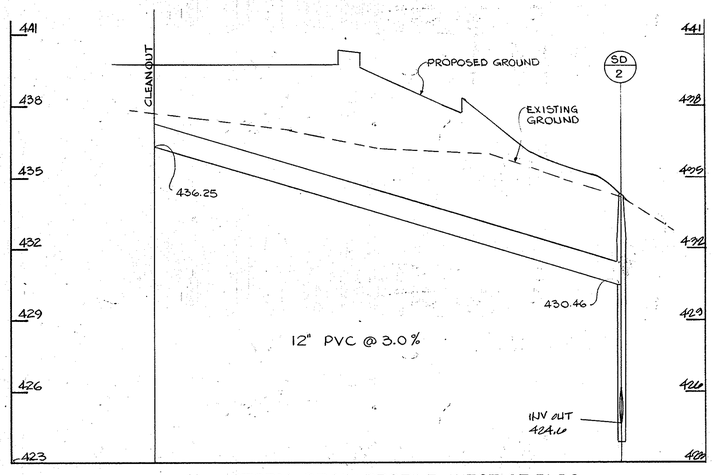

STORM DRAIN PROFILE, WEST OF BLDG FROM ROOF LEADER

SCALE H 1"=20' V 1"=5'

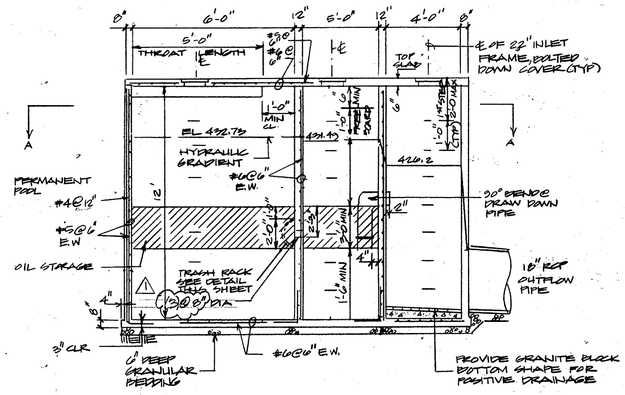

OIL AND GRIT SEPARATOR (SECTION B-B)

NOT TO SCALE

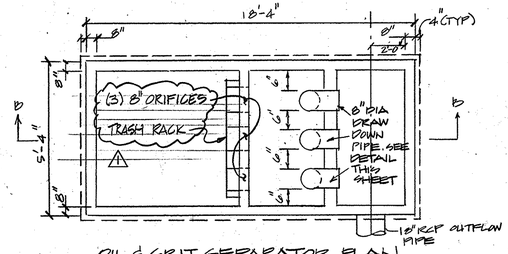

OIL & GRIT SEPARATOR PLAN

SECTION B-B

NOT TO SCALE

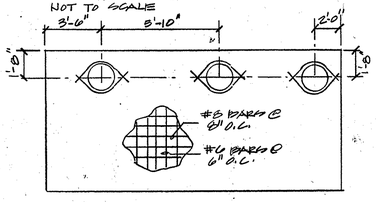

OIL AND GRID SEPARATOR TOP SLAB

NO SCALE

ARCHITECTURAL TECHNOLOGIES, INC. Architects and Construction Consultants 9192 Red Branch Road, Suite 300 Columbia, MD. 21045 (301)995-4067	IN ASSOCIATION WITH:		
	CIVIL & GEOTECH ENGINEER:	E B A ENGINEERING, INC.	
	STRUCTURAL ENGINEER:	QODESH ENGINEERING SERVICES, INC.	
	MECHANICAL & ELECTRICAL ENGINEER:	BHARGAVA INTERNATIONAL, INC.	
	FIRE PROTECTION ENGINEER:	STANTON ENGINEERING	

SEAL: STEPHEN R. HORNE — No. 15951 — REGISTERED PROFESSIONAL ENGINEER

REVISIONS

1 AS BUILT 11/24/94

2 REVISION No. 2: REDLINE REVISIONS - SEE NOTE

STORM DRAIN PROFILES

HOWARD COUNTY PUBLIC SAFETY COMPLEX

SCAGGSVILLE ANNEX
11226 ROUTE 216
LAUREL, MD. 20707

10 OF 90

CAPITAL PROJECT NO. C - 0227

DATE: 2-20-92

DRAWING NO. C-7.1

SDP-91-100

SHEET 9 OF 13

1650

NOTE: ALL SEDIMENT CONTROL MEASURES SHALL NOT BE REMOVED WITHOUT PERMISSION OF THE SEDIMENT CONTROL INSPECTOR.

SEQUENCE OF CONSTRUCTION

1. OBTAIN GRADING PERMIT FROM THE HOWARD COUNTY DEPT OF PUBLIC WORKS.
2. INSTALL STABILIZED CONSTRUCTION ENTRANCE, SILT FENCE, PERIMETER DIKE/SWALE, TEMPORARY SWALE AND SEDIMENT TRAPS AS SHOWN ON THIS SHEET.
3. DEMOLISH EXISTING STRUCTURES AS PER THE DEMOLITION PLAN.
4. PERFORM GRADING.
5. CONSTRUCT SANITARY SEWER, WATER AND STORM DRAIN SYSTEMS AND TEMPORARILY PLUG PIPES AT INLETS. PROVIDE TEMPORARY STABILIZATION.
6. CONSTRUCT PROPOSED BUILDING.
7. INSTALL BASE COURSE FOR PARKING LOT
8. REMOVE SEDIMENT TRAP #1 AND CONSTRUCT INFILTRATION BASIN. STABILIZE DISTURBED AREA AROUND THE BASIN AREA.
9. REMOVE TEMPORARY PLUGS ON INLET PIPES.
10. CONSTRUCT CURB AND GUTTER AND PAVE PARKING AREA.
11. STABILIZE REMAINING DISTURBED AREAS.
12. UPON APPROVAL OF THE EROSION/SEDIMENT CONTROL INSPECTOR, REMOVE ALL SEDIMENT CONTROL DEVICES.

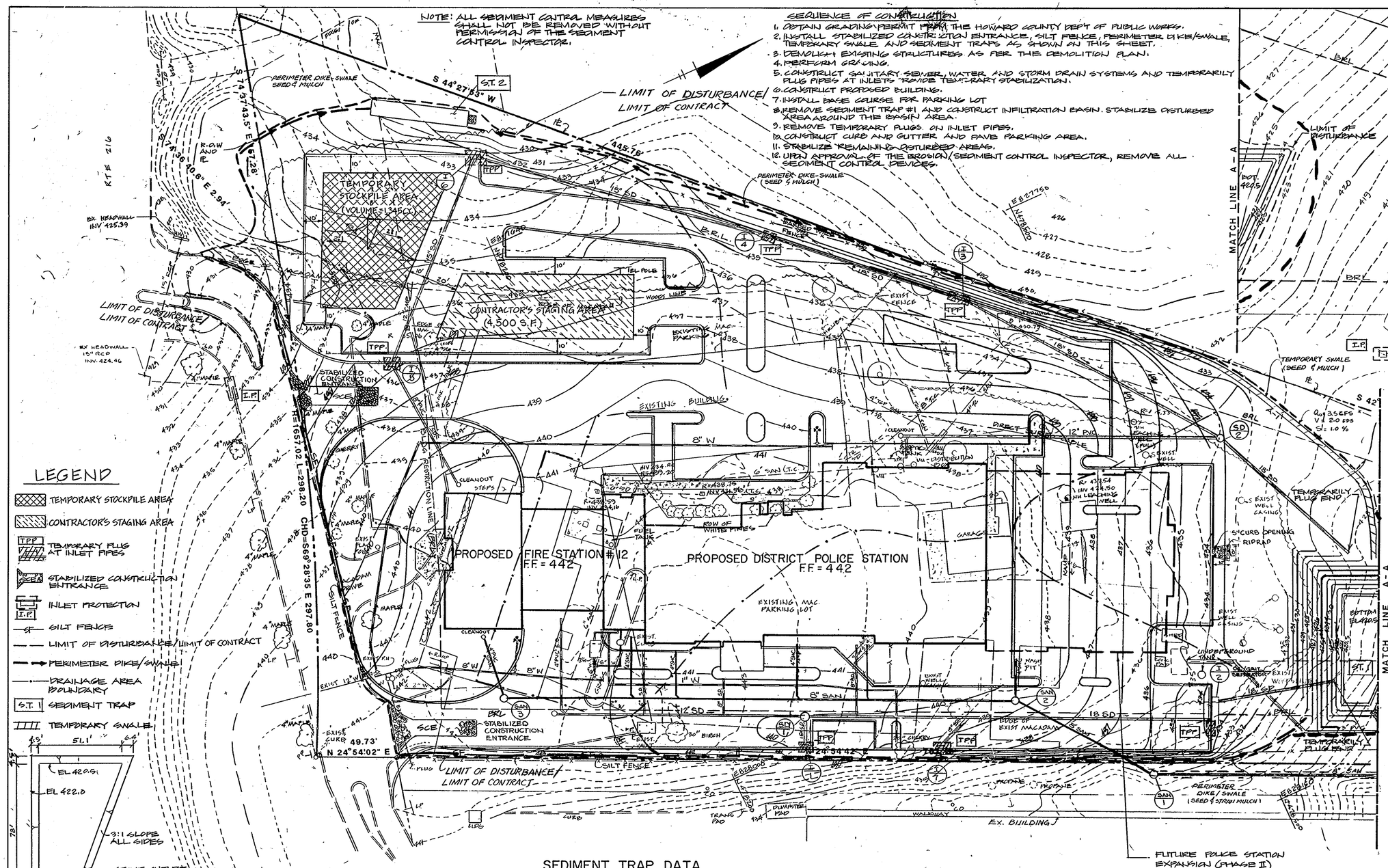

LEGEND

- TEMPORARY STOCKPILE AREA
- CONTRACTOR'S STAGING AREA
- TPP — TEMPORARY PLUG AT INLET PIPES
- S.C.E. — STABILIZED CONSTRUCTION ENTRANCE
- I.P. — INLET PROTECTION
- S.F. — SILT FENCE
- LIMIT OF DISTURBANCE/LIMIT OF CONTRACT
- PERIMETER DIKE/SWALE
- DRAINAGE AREA BOUNDARY
- S.T. 1 — SEDIMENT TRAP
- TEMPORARY SWALE

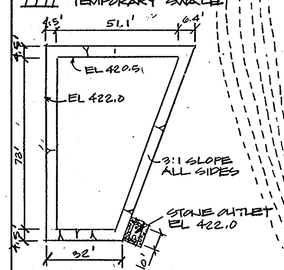

SEDIMENT TRAP #1

SEDIMENT TRAP DATA

No.	TYPE	DRAIN. AREA	VOLUME REQUIRED	DIMENSIONS AT BOTTOM & DEPTH	VOLUME PROVIDED	CREST WIDTH	BOTTOM ELEV.	OUTLET ELEV.	CLN'OUT ELEV.
1	ST V *	2.5 Ac.	4500 CU.FT.	*	5077 CU.FT.	10'	420.5	422.0	421.25
2	ST V	1.2 Ac.	2,160 CU.FT.	10'x60'x2.0'	2184 CU.FT.	5.00'	426.0	427.0	427.0

* SEDIMENT TRAP #1 TO BE LOCATED AT PROPOSED INFILTRATION BASIN. AT COMPLETION OF WORK, TRAP TO BE GRADED TO REQUIRED DEPTH AND STONE OUTLET TO BE REMOVED. FOR TRAP CONFIGURATION, SEE DETAIL THIS SHEET.

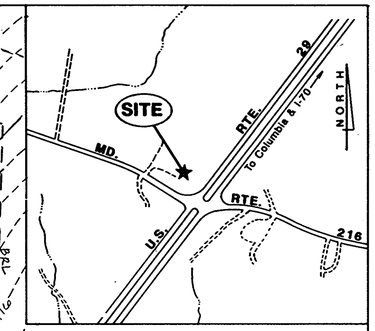

VICINITY MAP

SCALE: 1" = 600'

DESIGN CERTIFICATION

I HEREBY CERTIFY THAT THIS PLAN HAS BEEN DESIGNED IN ACCORDANCE WITH THE 1983 STANDARDS AND SPECIFICATIONS FOR SOIL EROSION AND SEDIMENT CONTROL OR CURRENT REVISIONS THEROF, AND DEPARTMENT OF THE ENVIRONMENT STORMWATER MANAGEMENT REGULATIONS.

2/20/92 — DATE
DESIGNER'S SIGNATURE
NO. REGISTRATION No. 10989 (P.E.) R.L.S. OR R.L.A. (CIRCLE) — Kenneth M. Johns, PRINTED NAME

OWNER'S/DEVELOPER'S CERTIFICATION

"I/WE HEREBY CERTIFY THAT ALL CLEARING, GRADING, CONSTRUCTION AND/OR DEVELOPMENT WILL BE DONE PURSUANT TO THIS PLAN AND THAT ANY RESPONSIBLE PERSONNEL INVOLVED IN THE CONSTRUCTION PROJECT WILL HAVE A CERTIFICATE OF ATTENDANCE AT A MARYLAND DEPARTMENT OF THE ENVIRONMENT APPROVED TRAINING PROGRAM FOR THE CONTROL OF SEDIMENT AND EROSION BEFORE BEGINNING THE PROJECT. I HEREBY AUTHORIZE THE RIGHT OF ENTRY FOR PERIODIC ON-SITE EVALUATION BY STATE OF MARYLAND, DEPARTMENT OF THE ENVIRONMENT, COMPLIANCE INSPECTORS."

2/24/92 — DATE
OWNER/DEVELOPER SIGNATURE
CARD NO. — PRINTED NAME AND TITLE

APPROVED: FOR PUBLIC WATER AND PUBLIC SEWERAGE SYSTEMS. HOWARD COUNTY HEALTH DEPARTMENT.
County Health Officer — Date 2-27-92

APPROVED: HOWARD COUNTY DEPARTMENT of PLANNING & ZONING
Director — Date 2/6/92
Chief, Division of Community Planning and Land Development — Date 3/5/92

APPROVED: FOR PUBLIC WATER AND PUBLIC SEWERAGE. STORM DRAINAGE SYSTEMS AND PUBLIC ROADS HOWARD COUNTY DEPARTMENT OF PUBLIC WORKS
Director — Date 2.24.92
Chief, Bureau of Engineering — Date 2-21-92

THE DEVELOPMENT PLAN IS APPROVED FOR SOIL EROSION AND SEDIMENT CONTROL BY THE HOWARD SOIL CONSERVATION DISTRICT.

APPROVED _____ Howard S.C.D. DATE 2/27/92
REVIEWED FOR _____ Name HOWARD S.C.D.
AND MEETS TECHNICAL REQUIREMENTS.
Signature — Date 2-27-92
U.S. SOIL CONSERVATION SERVICE

SCALE: 1" = 30'
30 15 0 30

REVISIONS

EROSION & SEDIMENT CONTROL PLAN

HOWARD COUNTY
PUBLIC SAFETY COMPLEX

SCAGGSVILLE ANNEX
11226 ROUTE 216
LAUREL, MD. 20707

11 OF 90

CAPITAL PROJECT NO. C - 0227
DATE: 2-20-92
DRAWING NO. C-8.1

ARCHITECTURAL TECHNOLOGIES, INC.
Architects and Construction Consultants
9192 Red Branch Road, Suite 300
Columbia, MD, 21045 (301)995-4067

IN ASSOCIATION WITH:
CIVIL & GEOTECH ENGINEER: E B A ENGINEERING, INC.
STRUCTURAL ENGINEER: GODESH ENGINEERING SERVICES, INC.
MECHANICAL & ELECTRICAL ENGINEER: BHARGAVA INTERNATIONAL, INC.
FIRE PROTECTION ENGINEER: STANTON ENGINEERING

SEAL: STATE OF MARYLAND — KENNETH M. JOHNS — REGISTERED PROFESSIONAL ENGINEER

SDP-91-100

SHEET 100 F 13

1650

SILT FENCE

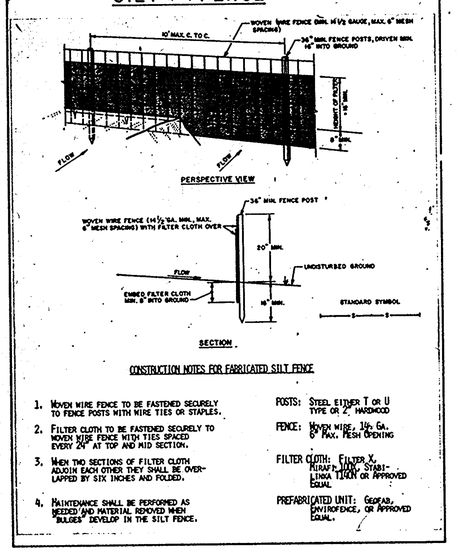

CONSTRUCTION NOTES FOR FABRICATED SILT FENCE

1. WOVEN WIRE FENCE TO BE FASTENED SECURELY TO FENCE POSTS WITH WIRE TIES OR STAPLES.
2. FILTER CLOTH TO BE FASTENED SECURELY TO WOVEN WIRE FENCE WITH TIES SPACED EVERY 24" AT TOP AND MID SECTION.
3. WHEN TWO SECTIONS OF FILTER CLOTH ADJOIN EACH OTHER THEY SHALL BE OVER-LAPPED BY SIX INCHES AND FOLDED.
4. MAINTENANCE SHALL BE PERFORMED AS NEEDED AND MATERIAL REMOVED WHEN "BULGES" DEVELOP IN THE SILT FENCE.

POSTS: STEEL EITHER T OR U TYPE OR 2" HARDWOOD

FENCE: WOVEN WIRE, 14½ GA. 6" MAX. MESH OPENING

FILTER CLOTH: FILTER X, MIRAFI 140N, STABI-LINKA T140N OR APPROVED EQUAL

PREFABRICATED UNIT: GEOFAB, ENVIROFENCE, OR APPROVED EQUAL.

SILT FENCE
NTS

PERIMETER DIKE / SWALE

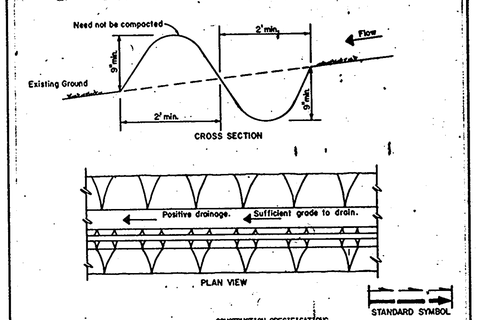

CONSTRUCTION SPECIFICATIONS

1. ALL PERIMETER DIKE/SWALE SHALL HAVE UNINTERRUPTED POSITIVE GRADE TO AN OUTLET.
2. DIVERTED RUNOFF FROM A DISTURBED AREA SHALL BE CONVEYED TO A SEDIMENT TRAPPING DEVICE.
3. DIVERTED RUNOFF FROM AN UNDISTURBED AREA SHALL OUTLET INTO AN UNDISTURBED STABILIZED AREA AT NON-EROSION VELOCITY.
4. THE SWALE SHALL BE EXCAVATED OR SHAPED TO LINE, GRADE, AND CROSS SECTION AS REQUIRED TO MEET THE CRITERIA SPECIFIED IN THE STANDARD.
5. STABILIZATION OF THE AREA DISTURBED BY THE DIKE AND SWALE SHALL BE DONE IN ACCORDANCE WITH THE STANDARD AND SPECIFICATION FOR SEED AND STRAW MULCH, AND SHALL BE DONE WITHIN 10 DAYS.
6. PERIODIC INSPECTION AND REQUIRED MAINTENANCE MUST BE PROVIDED AFTER EACH RAIN EVENT.

Max. Drainage Area Limit: 2 Acres

PERIMETER DIKE / SWALE
NTS

SEDIMENT CONTROL / GENERAL NOTES

1. Notification of MDE Enforcement Division (301)974-2641, at least 5 days prior to the start of work.
2. Prior to the start of work, the contractor is to obtain approval of any proposed plan changes and sequence of construction, specifically relating to installation, inspection, maintenance and removal of erosion and sediment control measures.
3. Sediment control measures are not to be removed until the areas served have established vegetative cover or stabilized, with the permission of the MDE Enforcement Inspector.
4. When pumping sediment-laden water, the discharge must be directed to approved sediment trapping measure prior to release from the site.
5. All temporary stockpiles are to be located within areas protected by sediment control measures, and are to be temporarily stabilized.
6. All sediment control dikes, swales, basins and flow lines to basins will be temporarily seeded immediately upon installation to reduce the contribution to sediment loading.
7. Disposal of excess earth materials on state or federal property require MDE approval, otherwise materials are to be disposed of at a location by the local authority.
8. Temporary soil erosion control and sediment control measures are to be provided as per the approved plan prior to grading operations. Location adjustments are to be made in the field as necessary. The minimum area practical shall be disturbed for the minimum possible time.
9. If grading is completed out of a seeding, graded areas are to be temporarily stabilized by mulch and mulch anchoring. Mulch material shall be unweathered, unchopped small grain straw spread at the rate of 1 1/2 to 2 tons per acre. Mulch anchoring to be accomplished by an approved method, use of a mulch anchoring tool is recommended where possible.
10. Permanent seeding specifications:
    a) Seed bed preparation
    b) Lime, fertilizer and seed
    c) Mulch and anchoring method
    d) Time frame to accomplish
11. Temporary seeding specifications:
    a) Surface preparation
    b) Lime, fertilizer and seed
    c) Mulch and anchoring method
    d) Time frame to accomplish
12. Permanent sodding specification:
    a) Sod type
    b) Surface preparation
    c) Lime and fertilizer as necessary
    d) Watering and rolling
    e) Time frame to accomplish
13. Implementation of the sediment control plan shall be in accordance with the, "1983 Maryland Standards and Specifications for Soil Erosion and Sediment Control", of the Department of Natural Resources.
14. The contractor is responsible for implementation and maintenance of the approval plan, and all other measures necessary to control, filter, or prevent sediment from leaving the site.
15. Sediment control measures for the contractor's offices, staging and stockpile areas, if located outside of the designed sediment control measures, must be submitted to MDE for approval.
16. Roadbeds are to be stabilized by installation of aggregate sub-base within 5 days of reaching grade, or water breaks shall be cut into the roadbed to direct drainage onto stable areas or into an approved sediment trapping device.
17. Sediment control for utility construction in areas outside of designed controls:
    a. Excavated trench material shall be placed on the high side of the trench.
    b. Immediately following pipe installation the trench shall be backfilled, compacted and stabilized at the end of each working day.
    c. Temporary silt fence or straw bale dikes shall be placed immediately downstream of any disturbed area intended to remain disturbed longer than one working day.

SEDIMENT CONTROL GENERAL NOTES

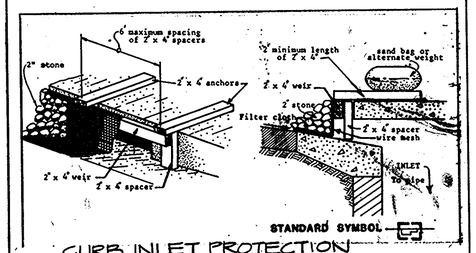

CURB INLET PROTECTION

DESIGN CERTIFICATION

I HEREBY CERTIFY THAT THIS PLAN HAS BEEN DESIGNED IN ACCORDANCE WITH THE 1983 STANDARDS AND SPECIFICATIONS FOR SOIL EROSION AND SEDIMENT CONTROL OR CURRENT REVISIONS THEROF, AND DEPARTMENT OF THE ENVIRONMENT STORMWATER MANAGEMENT REGULATIONS.

2/20/92 — DATE
DESIGNER'S SIGNATURE

MD REGISTRATION NO. 10989 (P.E.) R.L.S. OR R.L.A. (CIRCLE)
KENNETH M. JOHNS — PRINTED NAME

OWNER'S/DEVELOPER'S CERTIFICATION

"I/WE HEREBY CERTIFY THAT ALL CLEARING, GRADING, CONSTRUCTION AND/OR DEVELOPMENT WILL BE DONE PURSUANT TO THIS PLAN AND THAT ANY RESPONSIBLE PERSONNEL INVOLVED IN THE CONSTRUCTION PROJECT WILL HAVE A CERTIFICATE OF ATTENDANCE AT A MARYLAND DEPARTMENT OF THE ENVIRONMENT APPROVED TRAINING PROGRAM FOR THE CONTROL OF SEDIMENT AND EROSION BEFORE BEGINNING THE PROJECT. I HEREBY AUTHORIZE THE RIGHT OF ENTRY FOR PERIODIC ON-SITE EVALUATION BY THE STATE OF MARYLAND, DEPARTMENT OF THE ENVIRONMENT COMPLIANCE INSPECTORS."

2/24/92 — DATE
OWNER/DEVELOPER SIGNATURE

CARD NO.
PRINTED NAME AND TITLE

APPROVED: FOR PUBLIC WATER AND PUBLIC SEWERAGE SYSTEMS. HOWARD COUNTY HEALTH DEPARTMENT.

2-27-92
COUNTY HEALTH OFFICER — DATE

APPROVED: HOWARD COUNTY DEPARTMENT of PLANNING & ZONING

3/5/92
DIRECTOR — DATE

3/5/92
CHIEF, DIVISION OF COMMUNITY PLANNING AND LAND DEVELOPMENT — DATE

APPROVED: FOR PUBLIC WATER AND PUBLIC SEWERAGE. STORM DRAINAGE SYSTEMS AND PUBLIC ROADS HOWARD COUNTY DEPARTMENT OF PUBLIC WORKS

2/24/92
DIRECTOR — DATE

2-21-92
CHIEF, BUREAU OF ENGINEERING — DATE

THE DEVELOPMENT PLAN IS APPROVED FOR SOIL EROSION AND SEDIMENT CONTROL BY THE HOWARD SOIL CONSERVATION DISTRICT.

APPROVED _____ DATE 2/25/92
Howard S.C.D.

REVIEWED FOR _____ HOWARD S.C.D.
Name

AND MEETS TECHNICAL REQUIREMENTS.

2/25/92
SIGNATURE — DATE
U S SOIL CONSERVATION SERVICE

STONE OUTLET SEDIMENT TRAP

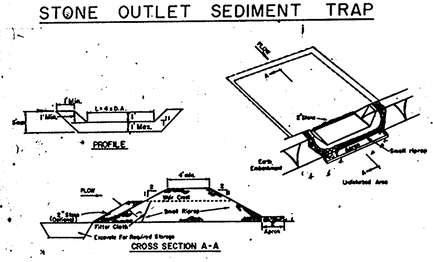

OPTION: A one foot layer of 2" stone may be placed on the upstream side of the riprap in place of the embedded filter cloth.

CONSTRUCTION SPECIFICATIONS FOR ST-V

1. Area under embankment shall be cleared, grubbed and stripped of any vegetation and root mat. The pool area shall be cleared.
2. The fill material for the embankment shall be free of roots and other woody vegetation as well as oversized stones, rocks, organic material or other objectionable material. The embankment shall be compacted by traversing with equipment while it is being constructed.
3. All cut and fill slopes shall be 2:1 or flatter.
4. The stone used in the outlet shall be small riprap 4"-8" along with a 1' thickness of 2" aggregate placed on the up-grade side of the small riprap or embedded filter cloth in the riprap.
5. Sediment shall be removed and trap restored to its original dimensions when the sediment has accumulated to ½ the design depth of the trap.
6. The structure shall be inspected after each rain and repairs made as needed.
7. Construction operations shall be carried out in such a manner than erosion and water pollution is minimized.
8. The structure shall be removed and the area stabilized when the drainage area has been properly stabilized.

Maximum Drainage Area: 5 Acres

STONE OUTLET SEDIMENT TRAP
NTS

STABILIZED CONSTRUCTION ENTRANCE

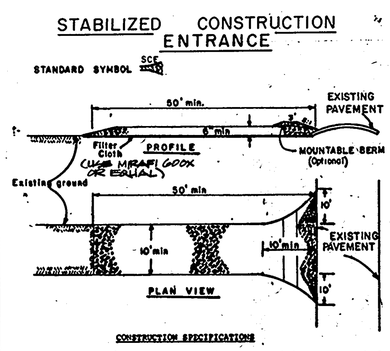

CONSTRUCTION SPECIFICATIONS

1. Stone Size - Use 2" stone, or recycled or recycled concrete equivalent.
2. Length - As required, but not less than 50 feet (except on a single residence lot where a 30 foot minimum length would apply).
3. Thickness - Not less than six (6) inches.
4. Width - Ten (10) foot minimum, but not less than the full width at points where ingress or egress occurs.
5. Filter Cloth - Will be placed over the entire area prior to placing of stone. Filter will not be required on a single family residence lot.
6. Surface Water - All surface water flowing or diverted toward construction entrances shall be piped across the entrance. If piping is impractical, a mountable berm with 5:1 slopes will be permitted.
7. Maintenance - The entrance shall be maintained in a condition which will prevent tracking or flowing of sediment onto public rights-of-way. This may require periodic top dressing with additional stone as conditions depend and repair and/or cleanout of any measures used to trap sediment. All sediment spilled, dropped, washed or tracked onto public rights-of-way must be removed immediately.
8. Washing - Wheels shall be cleaned to remove sediment prior to entrance onto public rights-of-way. When washing is required, it shall be done on an area stabilized with stone and which drains into an approved sediment trapping device.
9. Periodic inspection and needed maintenance shall be provided after each rain.

STABILIZED CONSTR. ENT.
NTS

TEMPORARY SEEDING NOTES

Apply to graded or cleared areas likely to be redisturbed where a short-term vegetative cover is needed.

Seedbed Preparation: Loosen upper three inches of soil by raking, disking or other acceptable means before seeding, if not previously loosened.

Soil Amendments: - Apply 60 lbs per acre 10-10-10 fertilizer (14 lbs/1000 sq.ft.).

Seeding: - For periods March 1 thru April 30 and from August 15 thru October 15, seed with 2-1/2 bushels per acre of annual rye (3.2 lbs/1000 sq.ft.). For the period May 1 thru August 14, seed with 3 lbs.per acre of weeping lovegrass (.07 lbs/1000 sq.ft.). For the period November 16 thru February 28, protect site by applying 2 tons per acre of well anchored straw mulch and seed as soon as possible in the spring, or use sod.

Mulching: - Apply 1-1/2 to 2 tons per acre (70 to 90 lbs/1000 sq.ft.) of unrotted small grain straw immediately after seeding. Anchor mulch immediately after application using mulch anchoring tool for 218 gal per acre (5 gal/1000 sq.ft.) of emulsified asphalt on flat areas. On slopes 8 ft. or higher, use 348 gal per acre (8 gal/1000 sq.ft.) for anchoring.

Refer to the 1983 MARYLAND STANDARDS AND SPECIFICATIONS FOR SOIL EROSION AND SEDIMENT CONTROL for rates and methods not covered.

PERMANENT SEEDING NOTES

Apply to graded or cleared areas not subject to immediate further disturbance, where a permanent long-lived vegetative cover is needed.

Seedbed Preparation: Loosen upper three inches of soil by raking, disking or other acceptable means before seeding, if not previously loosened.

Soil Amendments: In lieu of soil test recommendations, use one of the following schedules:

1) Preferred - Apply 2 tons per acre dolomitic limestone (92 lbs/1000 sq.ft.) and 600 lbs per acre 10-10-10 fertilizer (14 lbs/100 sq.ft.) before seeding. Narrow or disk into upper three inches of soil. At time of seeding, apply 400 lbs per acre 30-0-0 ureaform fertilizer (9 lbs/1000 sq.ft.)

2) Acceptable - Apply 2 tons per acre dolomitic limestone (92 lbs/1000 sq.ft.) and 1000 lbs per acre 10-10-10 fertilizer (23 lbs/1000 sq.ft.) before seeding. Narrow or disk into upper three inches of soil.

Seeding - For the periods march 1 thru April 30, and August 1 thru October 15, seed with 60 lbs per acre (1.4 lbs/1000 sq.ft.) of kentucky 31 tall Fescue. For the period May 1 thru July 31, seed with 60 lbs Kentucky 31 tall fescue per acre and 2 lbs per acre (.05 lbs/1000 sq.ft.) of weeping lovegrass. During the period of October 16 thru February 28 protect site by: Option (1) 2 tons per acre of well anchored straw mulch and seed as soon as possible on the spring. Option (2) Use sod. Option (3) Seed with 60 lbs/acre Kentucky 31 tall Fescue and mulch with 2 tons/acre well anchored straw.

Mulching - Apply 1-1/2 to 2 tons per acre (70 to 90 lbs/1000 sq.ft.) of unrotted small grain straw immediately after seeding. Anchor mulch immediately after application using mulch anchoring tool for 218 gallons per acre (5 gal/1000 sq.ft.) for anchoring.

Maintenance - Inspect all seeded areas and make needed repairs, replacements and reseeding.

SEEDING NOTES

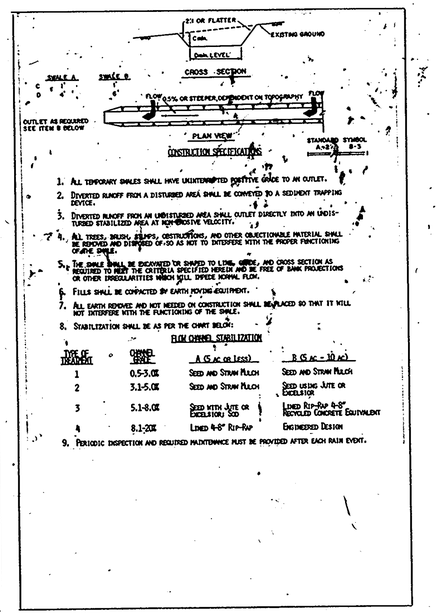

CONSTRUCTION SPECIFICATIONS

1. ALL TEMPORARY SWALES SHALL HAVE UNINTERRUPTED POSITIVE GRADE TO AN OUTLET.
2. DIVERTED RUNOFF FROM A DISTURBED AREA SHALL BE CONVEYED TO A SEDIMENT TRAPPING DEVICE.
3. DIVERTED RUNOFF FROM AN UNDISTURBED AREA SHALL OUTLET DIRECTLY INTO AN UNDISTURBED STABILIZED AREA AT NON-EROSIVE VELOCITY.
4. ALL TREES, BRUSH, STUMPS, OBSTRUCTIONS, AND OTHER OBJECTIONABLE MATERIAL SHALL BE REMOVED AND DISPOSED OF SO AS NOT TO INTERFERE WITH THE PROPER FUNCTIONING OF THE SWALE.
5. THE SWALE SHALL BE EXCAVATED OR SHAPED TO LINE, GRADE, AND CROSS SECTION AS REQUIRED TO MEET THE CRITERIA SPECIFIED HEREIN AND BE FREE OF BANK PROJECTIONS OR OTHER IRREGULARITIES WHICH WILL IMPEDE NORMAL FLOW.
6. FILLS SHALL BE COMPACTED BY EARTH MOVING EQUIPMENT.
7. ALL EARTH REMOVED AND NOT NEEDED ON CONSTRUCTION SHALL BE PLACED SO THAT IT WILL NOT INTERFERE WITH THE FUNCTIONING OF THE SWALE.
8. STABILIZATION SHALL BE AS PER THE CHART BELOW:

FLOW CHANNEL STABILIZATION

TYPE OF TREATMENT	CHANNEL GRADE	A (5 ac or less)	B (5 ac - 10 ac)
1	0.5-3.0%	SEED AND STRAW MULCH	SEED AND STRAW MULCH
2	3.1-5.0%	SEED AND STRAW MULCH	SEED USING JUTE OR EXCELSIOR
3	5.1-8.0%	SEED WITH JUTE OR EXCELSIOR; SOD	LINED RIP-RAP 6-9" RECYCLED CONCRETE EQUIVALENT
4	8.1-20%	LINED 4-8" RIP-RAP	ENGINEERED DESIGN

9. PERIODIC INSPECTION AND REQUIRED MAINTENANCE MUST BE PROVIDED AFTER EACH RAIN EVENT.

TEMPORARY SWALE
NTS

ARCHITECTURAL TECHNOLOGIES, INC.
Architects and Construction Consultants
9192 Red Branch Road, Suite 300
Columbia, MD, 21045 (301)995-4067

IN ASSOCIATION WITH:

CIVIL & GEOTECH ENGINEER:	E B A ENGINEERING, INC.
STRUCTURAL ENGINEER:	QODESH ENGINEERING SERVICES, INC.
MECHANICAL & ELECTRICAL ENGINEER:	BHARGAVA INTERNATIONAL, INC.
FIRE PROTECTION ENGINEER:	STANTON ENGINEERING

SEAL — STATE OF MARYLAND — REGISTERED PROFESSIONAL ENGINEER

REVISIONS

EROSION & SEDIMENT CONTROL DETAILS

HOWARD COUNTY
PUBLIC SAFETY COMPLEX

SCAGGSVILLE ANNEX
11226 ROUTE 216
LAUREL, MD. 20707

CAPITAL PROJECT NO. C - 0227

DATE: 2-20-92

DRAWING NO. C-9.1

SDP-91-100

SHEET 16 OF 13

1650

GENERAL NOTE:

1. FOR DESIGN CRITERIA, SEE STRUCTURAL DRAWINGS.

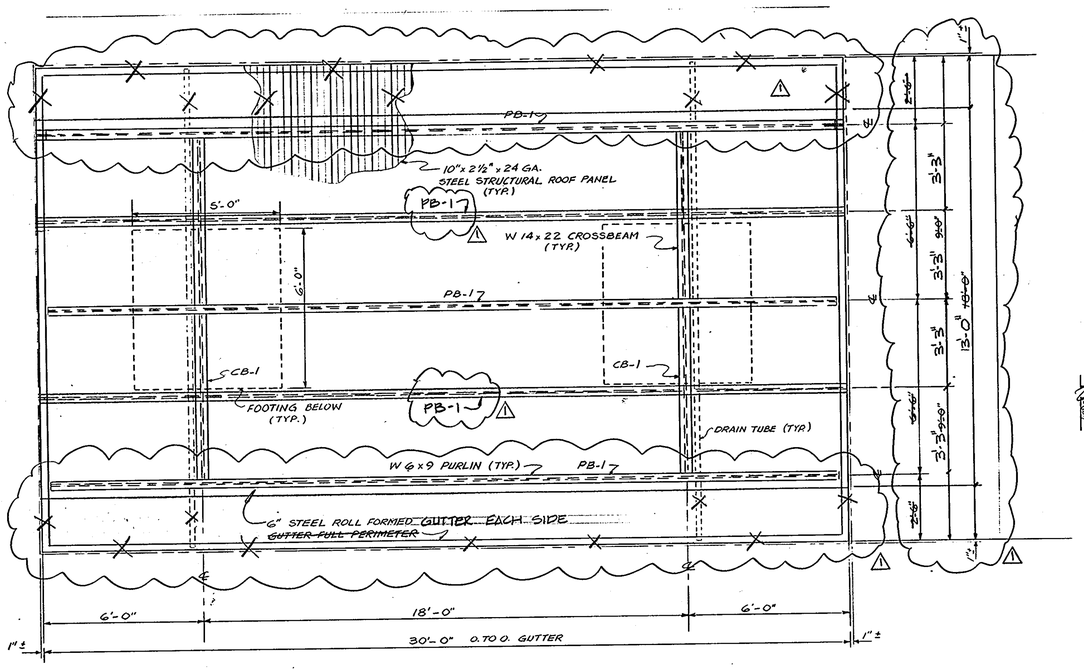

FRAMING PLAN

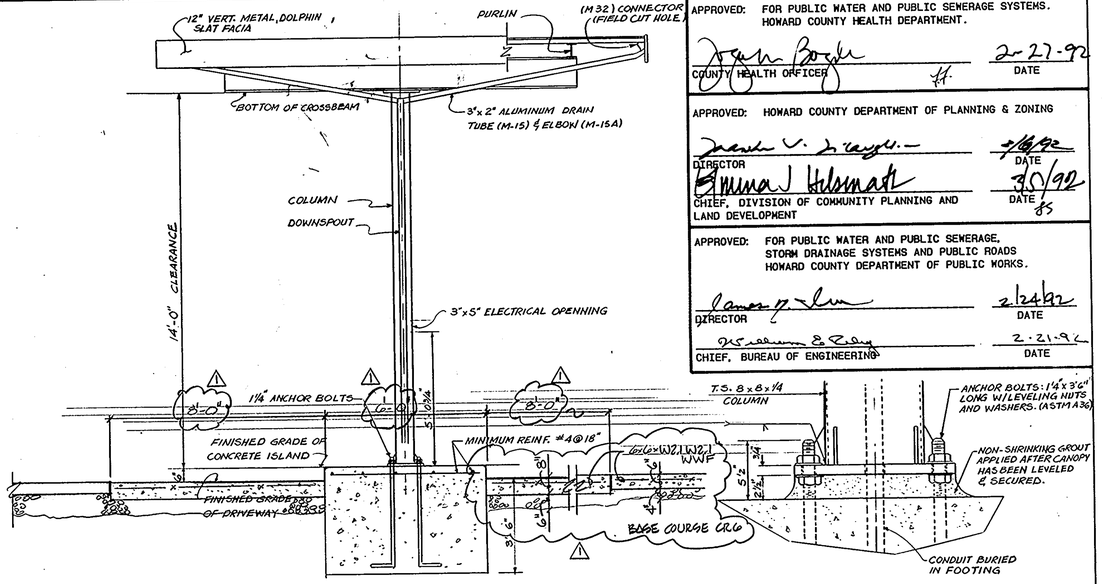

NORTH ELEVATION

ANCHOR BOLT DETAIL
(NOT TO SCALE)

APPROVED: FOR PUBLIC WATER AND PUBLIC SEWERAGE SYSTEMS. HOWARD COUNTY HEALTH DEPARTMENT.

COUNTY HEALTH OFFICER — DATE 2-27-92

APPROVED: HOWARD COUNTY DEPARTMENT OF PLANNING & ZONING

DIRECTOR — DATE 2/18/92

CHIEF, DIVISION OF COMMUNITY PLANNING AND LAND DEVELOPMENT — DATE 3/5/92

APPROVED: FOR PUBLIC WATER AND PUBLIC SEWERAGE, STORM DRAINAGE SYSTEMS AND PUBLIC ROADS HOWARD COUNTY DEPARTMENT OF PUBLIC WORKS.

DIRECTOR — DATE 2/24/92

CHIEF, BUREAU OF ENGINEERING — DATE 2-21-92

TANK CAPACITY (GALLONS)	L	W
4000	27'	12'
6000	33'	14'

NOTE: FOR PIPING DETAILS, SEE MANUFACTURER'S REQUIREMENTS.

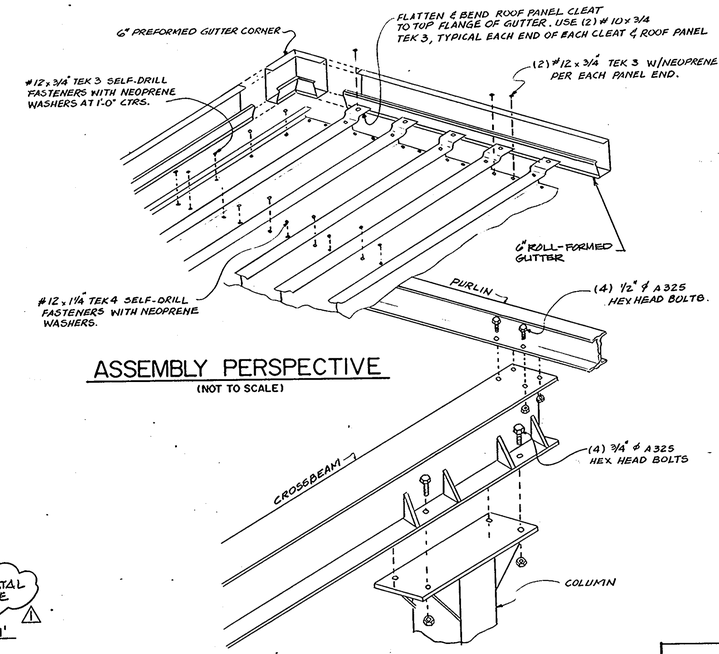

ASSEMBLY PERSPECTIVE
(NOT TO SCALE)

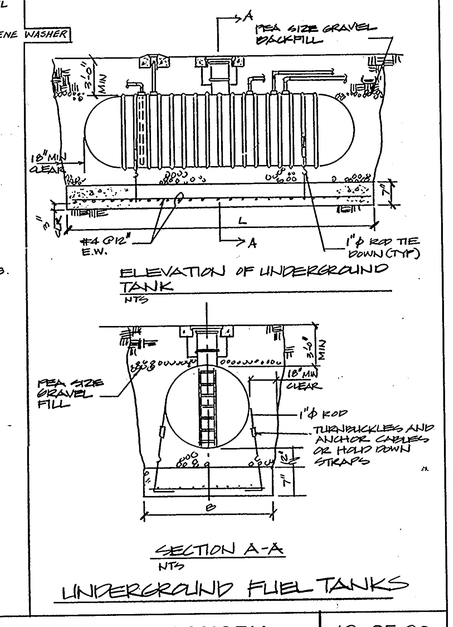

ELEVATION OF UNDERGROUND TANK
NTS

SECTION A-A
NTS

UNDERGROUND FUEL TANKS

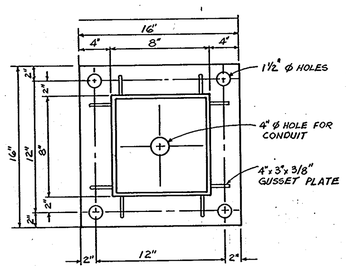

BASE PLATE DETAIL
(NOT TO SCALE)

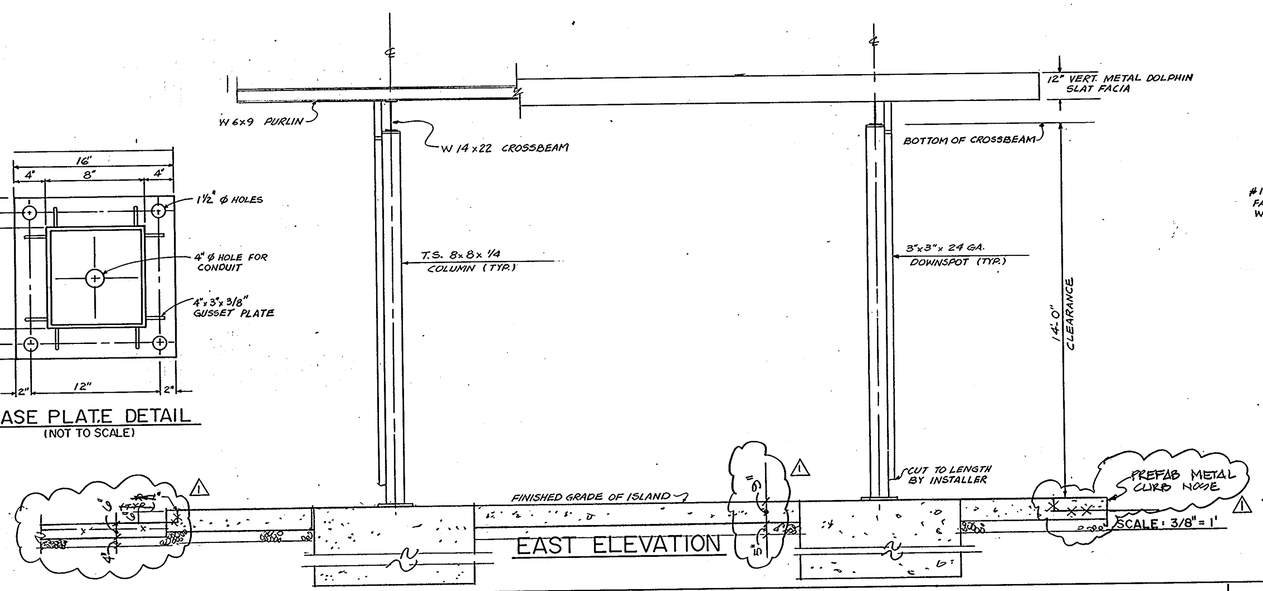

EAST ELEVATION

1650

ARCHITECTURAL TECHNOLOGIES, INC.
Architects and Construction Consultants
9192 Red Branch Road, Suite 300
Columbia, MD, 21045 (301)995-4067

IN ASSOCIATION WITH:

CIVIL & GEOTECH ENGINEER:	E B A ENGINEERING, INC.
STRUCTURAL ENGINEER:	QODESH ENGINEERING SERVICES, INC.
MECHANICAL & ELECTRICAL ENGINEER:	BHARGAVA INTERNATIONAL, INC.
FIRE PROTECTION ENGINEER:	STANTON ENGINEERING

STATE OF MARYLAND — KENNETH M. QODESH — No. 10389 — REGISTERED PROFESSIONAL ENGINEER

REVISIONS

1 AS BUILT 11/24/94

FUEL PUMP CANOPY

HOWARD COUNTY
PUBLIC SAFETY COMPLEX

SCAGGSVILLE ANNEX
11226 ROUTE 216
LAUREL, MD. 20707

13 OF 90

CAPITAL PROJECT NO. C - 0227

DATE: 2-20-92

DRAWING NO. C-10.1

SDP-91-100

SHEET 12 OF 13

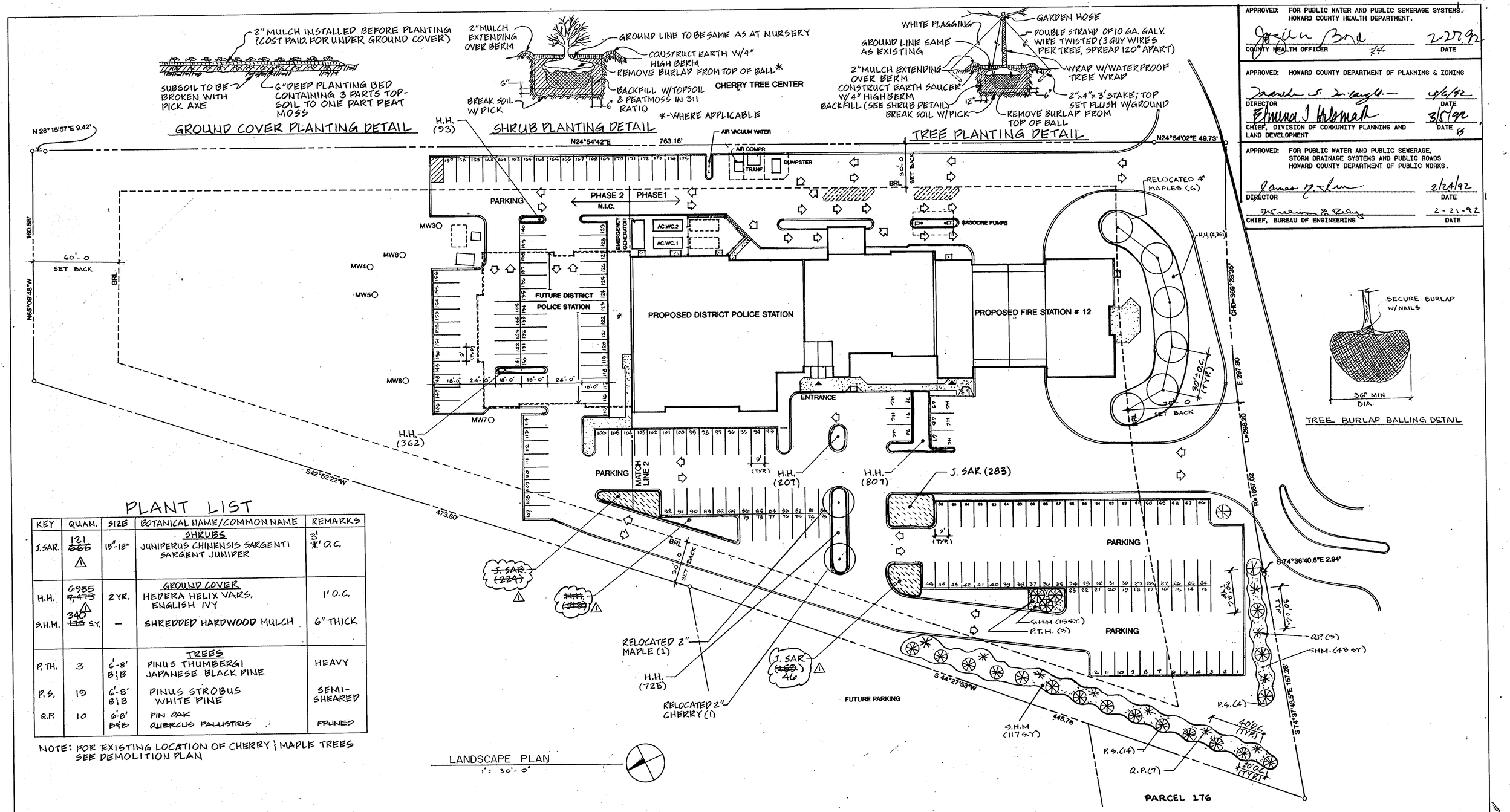

PLANT LIST

KEY	QUAN.	SIZE	BOTANICAL NAME/COMMON NAME	REMARKS
			SHRUBS	
J.SAR.	121 ~~666~~ △	15"-18"	JUNIPERUS CHINENSIS SARGENTI SARGENT JUNIPER	3' O.C.
			GROUND COVER	
H.H.	6955 ~~7,473~~ △	2 YR.	HEDERA HELIX VARS. ENGLISH IVY	1' O.C.
S.H.M.	340 ~~115~~ S.Y.	—	SHREDDED HARDWOOD MULCH	6" THICK
			TREES	
P.TH.	3	6'-8' B&B	PINUS THUMBERGI JAPANESE BLACK PINE	HEAVY
P.S.	10	6'-8' B&B	PINUS STROBUS WHITE PINE	SEMI-SHEARED
Q.P.	10	6'-8' B&B	PIN OAK QUERCUS PALUSTRIS	PRUNED

NOTE: FOR EXISTING LOCATION OF CHERRY & MAPLE TREES SEE DEMOLITION PLAN

APPROVED: FOR PUBLIC WATER AND PUBLIC SEWERAGE SYSTEMS. HOWARD COUNTY HEALTH DEPARTMENT.

COUNTY HEALTH OFFICER — DATE 2-27-92

APPROVED: HOWARD COUNTY DEPARTMENT OF PLANNING & ZONING

DIRECTOR — DATE 2/26/92

CHIEF, DIVISION OF COMMUNITY PLANNING AND LAND DEVELOPMENT — DATE 3/5/92

APPROVED: FOR PUBLIC WATER AND PUBLIC SEWERAGE, STORM DRAINAGE SYSTEMS AND PUBLIC ROADS HOWARD COUNTY DEPARTMENT OF PUBLIC WORKS.

DIRECTOR — DATE 2/24/92

CHIEF, BUREAU OF ENGINEERING — DATE 2-21-92

ARCHITECTURAL TECHNOLOGIES INC.
Architects and Construction Consultants
9192 Red Branch Rd. Suite 300
Columbia MD. 21045 (301) 995-4067

IN ASSOCIATION WITH:

CIVIL & GEOTECH ENGINEER:	E B A ENGINEERING, INC.
STRUCTURAL ENGINEER:	QODESH ENGINEERING SERVICES, INC.
MECHANICAL & ELECTRICAL ENGINEER:	BHARGAVA INTERNATIONAL, INC.
FIRE PROTECTION ENGINEER:	STANTON ENGINEERING

SEAL

REVISIONS

△ AS BUILT 11/24/94

LANDSCAPE PLAN

HOWARD COUNTY PUBLIC SAFETY COMPLEX

SCAGGSVILLE ANNEX
11226 ROUTE 216
LAUREL, MD. 20707

14 OF 90

CAPITAL PROJECT NO. C - 0227

DATE: 2-20-92

DRAWING NO. L-L.1

SDP-91-100

SHEET 13 OF 13

1650

ARCHITECTURAL ABBREVIATIONS

ABV	ABOVE
AFF	ABOVE FINISHED FLOOR
AD	ACCESS DOOR
AC	ACOUSTIC(AL)
ACPL	ACOUSTICAL PLASTER
ATC	ACOUSTICAL TILE CEILING
ACP	ACRYLIC PLASTIC
ADD	ADDENDUM
ADH	ADHESIVE(LY)
ADDL	ADDITIONAL
ADJ	ADJACENT
ADJT	ADJUSTABLE
ALT	ALTERNATE(ING)
AL	ALUMINUM
AB	ANCHOR BOLT
∠	ANGLE
ANOD	ANODIZED
APX	APPROXIMATE
ARCH	ARCHITECT(URAL)
ASB	ASBESTOS
ASPH	ASPHALT
AT	ASPHALT TILE
AUTO	AUTOMATIC
BSP	BACKSPLASH
BSMT	BASEMENT
BM	BEAM
BET	BETWEEN
BVL	BEVEL(ED)
BIT	BITUMINOUS
BLK	BLOCK(ING)
BL	BORROWED LIGHT
BD	BOARD
BS	BOTH SIDES
BW	BOTH WAYS
BOT	BOTTOM
BC(S)	BRICK COURSE(S)
BLDG	BUILDING
BB	BULLETIN BOARD
CLG	CEILING
CERT	CERAMIC TILE
CTR	CENTER
CIRC	CIRCUMFERENCE
CLR	CLEAR(ANCE)
CO	CLEANOUT
CLO	CLOSET
COL	COLUMN
COMB	COMBINATION
COND	CONDUCTIVE
COMP	COMPRESS(ED) (ION) (IBLE)
CONC	CONCRETE
CMU	CONCRETE MASONRY UNIT
CSML	CONDUCTIVE SEAMLESS
CV	CONDUCTIVE VINYL
CONF	CONFERENCE
CONST	CONSTRUCTION
CONT	CONTINUOUS
CONTR	CONTRACTOR
CG	CORNER GUARD
CORR	CORRUGATED
CFL	COUNTERFLASHING
CSK	COUNTERSUNK
CC(T)	CUBICLE CURTAIN (AND TRACK)
CT	CURTAIN TRACK
CYL	CYLINDER
DB	DECIBEL
DP	DEEP, DEPTH
DEMO	DEMOLISH, DEMOLITION
DMT	DEMOUNTABLE
DEP	DEPRESS(ED) (ION)
DIAG	DIAGONAL
DIA	DIAMETER
DIM	DIMENSION
DPR	DISPENSER
DIV	DIVISION
DR	DOOR
DBL	DOUBLE
DA	DOUBLE ACTING
DTA	DOVETAIL ANCHOR
DTS	DOVETAIL ANCHOR SLOT
DWL	DOWEL
DS	DOWNSPOUT
D	DRAIN
DWR	DRAWER
DWG	DRAWING
DF	DRINKING FOUNTAIN
EA	EACH
EF	EACH FACE
EFV	EACH FACE VERTICALLY
EW	EACH WAY
E	EAST
ELEC	ELECTRIC(AL)
EWC	ELECTRIC WATER COOLER
EL	ELEVATION
ELEV	ELEVATOR
EMER	EMERGENCY
EC	EMPTY CONDUIT
ENC	ENCLOSE(URE)
EG	END GUARD
EQ	EQUAL
EX	EXISTING
EB	EXPANSION BOLT
EJ	EXPANSION JOINT
EXP	EXPANSION
EXPO	EXPOSED
EXT	EXTERIOR
FEM	FEMALE
FLEX	FLEXIBLE
FIN	FINISH(ED)
FF	FINISHED FLOOR
FA	FIRE ALARM
FE	FIRE EXTINGUISHER
FEC	FIRE EXTINGUISHER CABINET
FE&C	FIRE EXTINGUISHER AND CABINET
FHC	FIRE HOSE CABINET
FP	FIREPROOF
FL	FLOOR(ING)
FD	FLOOR DRAIN
FT	FOOT
FTG	FOOTING
FDN	FOUNDATION
FR	FIRE RATED(ING)
GA	GAUGE
GALV	GALVANIZED
GI	GALVANIZED IRON
GC	GENERAL CONTRAC(OR)
GL	GLASS, GLAZING
GMU	GLAZED MASONRY UNIT
GST	GLAZED STRUCTURAL TILE
GB	GRAB BAR
GWB	GYPSUM WALLBOARD
GPL	GYPSUM LATH
GPP	GYPSUM PLASTER
GYP	GYPSUM
HGR	HANGER
HDW	HARDWARE
HT	HEIGHT
HP	HIGH POINT
HS	HIGH STRENGTH
HC	HOLLOW CORE
HM	HOLLOW METAL
HK	HOOK(ED)
HOR	HORIZONTAL
H&V	HORIZONTALLY & VERTICALLY
HB	HOSE BIBB
HR	HOUR
IMP	IMPERIAL
INCIN	INCINERATOR
INCL	INCLUDE(D) (ING)
ID	INSIDE DIAMETER
INS	INSULATE(D) (ION)
IF	INSIDE FACE
INTG	INTEGRAL
INT	INTERIOR
INV	INVERT
IPS	IRON PIPE SIZE
JC	JANITORS CLOSET
JT	JOINT
JST	JOIST
JR	JUNIOR
KIT	KITCHEN
KB	KNEE BRACE
KO	KNOCKOUT
LBL	LABEL(ED)
LAB	LABORATORY
LAM	LAMINATE(D)
LAV	LAVATORY
LH	LEFT HAND
LL	LEAD LINE(D) (ING)
LT	LIGHT
LPR	LIGHTPROOF
LSL	LIGHT-SEALED
LW	LIGHTWEIGHT
LC	LINEN CHUTE
LKR	LOCKER
LG	LONG, LENGTH
LP	LOW POINT
LVR	LOUVER
MCJ	MASSONRY CONTROL JOINT
MH	MANHOLE
MFR	MANUFACTURER
MC	MAILCHUTE
MAS	MASONRY
MO	MASONRY OPENING
MTL	MATERIAL(S)
MAX	MAXIMUM
MECH	MECHNICAL
MED	MEDIUM
MET	METAL
M	METER
MM	MILLIMETER
MIN	MINIMUM
MISC	MISCELLANEOUS
MR	MOP RECEPTOR
MT	MOUNTED(ING)
MOV	MOVABLE
MULL	MULLION
NOM	NOMINAL
N	NORTH
NIC	NOT IN CONTRACT
NTS	NOT TO SCALE
NO	NUMBER
OBS	OBSCURE
OFF	OFFICE
OC	ON CENTER
OPG	OPENING
OPP	OPPOSITE
OD	OUTSIDE DIAMETER
OF	OUTSIDE FACE
OZ	OUNCE
OA	OVERALL
OH	OVERHEAD
P	PAINT(ED)
PR	PAIR
PNL	PANEL
PTN	PARTITION
PERF	PERFORATED
PERI	PERIMETER
PLAS	PLASTER
PLAM	PLASTIC LAMINATE
PL	PLATE
PWD	PLYWOOD
PTS	PNEUMATIC TUBE STATION
PT	POINT
POLY	POLYETHYLENE
PVC	POLYVINYL CHLORIDE
PSF	POUNDS PER SQUARE FOOT
PSI	POUNDS PER SQUARE INCH
PREP	PREPARATION
PROJ	PROJECTED(ION)
QT	QUARRY TILE
RAD	RADIUS
RWC	RAINWATER CONDUCTOR
REF	REFERENCE
REFR	REFRIGERATOR
REINF	REINFORCE(D) (ING)
REQ	REQUIRED
RES	RESILIENT
REV	REVISION
RH	RIGHT HAND
R	RISER
RD	ROOF DRAIN
RFG	ROOFING
RM	ROOM
RO	ROUGH OPENING
RB	RUBBER BASE
SND	SANITARY NAPKIN DISPOSAL
SNV	SANITARY NAPKIN VENDOR
SCH	SCHEDULE
SSK	SERVICE SINK
SH	SHELF, SHELVING
SIM	SIMILAR
SML	SEAMLESS
SECY	SECRETARY
SW	SHEAR WALL
SOG	SLAB ON GRADE
SC	SOLID CORE
S	SOUTH
SPEC	SPECIFICATION
SPF	SPRAYED FIREPROOFING
SQ	SQUARE
SST	STAINLESS STEEL
STD	STANDARD
STA	STATION
ST	STEEL
STO	STORAGE
STR	STRUCTURAL
SUS	SUSPENDED
SYM	SYMMETRICAL
TKB	TACKBOARD
TEL	TELEPHONE
TV	TELEVISION
TC	TERRA COTTA
TZ	TERRAZZO
THK	THICK(NESS)
THR	THRESHOLD
TOIL	TOILET
TPTN	TOILET PARTITION
TOL	TOLERANCE
T&G	TONGUE AND GROOVE
TW	TOP OF WALL
TB	TOWEL BAR
TNSV	TRANSVERSE
T	TREAD
TYP	TYPICAL
UC	UNDERCUT
UNF	UNFINISHED
UR	URINAL
VB	VAPOR BARRIER
VIF	VERIFY IN FIELD
VERT	VERTICAL
VB	VINYL BASE
VWC	VINYL WALL COVERING
VT	VINYL TILE
VP	VISION PANEL
WP	WATERPROOFING
WWF	WELDED WIRE FABRIC
W	WEST
WDW	WINDOW
WG	WIRE GLASS
W/	WITH
W/O	WITHOUT
WD	WOOD
WB	WOOD BASE
WI	WROUGHT IRON

ARCHITECTURAL SYMBOLS LEGEND

N	WALL TYPE
1 2	FIRE WALL
	CMU WALL
	CONCRETE
	WINDOW
W1	WINDOW NO.
	DOOR
12	DOOR NO.
	STEEL
1/A-3	WALL SECTION
2/A-8 1/A-9 8-1/A-6	ELEVATION
	WOOD BLOCK
	WOOD FINISH
	INSULATION
	COMPACT EARTH
	CRUSHED STONE
N	NORTH DIRECTION
	STEEL TUBE
MILL	MILLWORK

ARCHITECTURAL TECHNOLOGIES INC.
Architects and Construction Consultants
9192 Red Branch Rd. Suite 300
Columbia MD. 21045. (301) 995-4067

IN ASSOCIATION WITH:

CIVIL & GEOTECH ENGINEER:	E B A ENGINEERING, INC.
STRUCTURAL ENGINEER:	QODESH ENGINEERING SERVICES, INC.
MECHANICAL & ELECTRICAL ENGINEER:	BHARGAVA INTERNATIONAL, INC.
FIRE PROTECTION ENGINEER:	STANTON ENGINEERING

ARCHITECTURAL REGISTRATION SEAL: 3295-A STATE OF MARYLAND

REVISIONS

ABBREVIATIONS & SYMBOLS

HOWARD COUNTY
PUBLIC SAFETY COMPLEX

SCAGGSVILLE ANNEX
11226 ROUTE 216
LAUREL, MD. 20707

CAPITAL PROJECT NO. C - 0227

DATE: 3-25-92

DRAWING NO. A1.1

1650

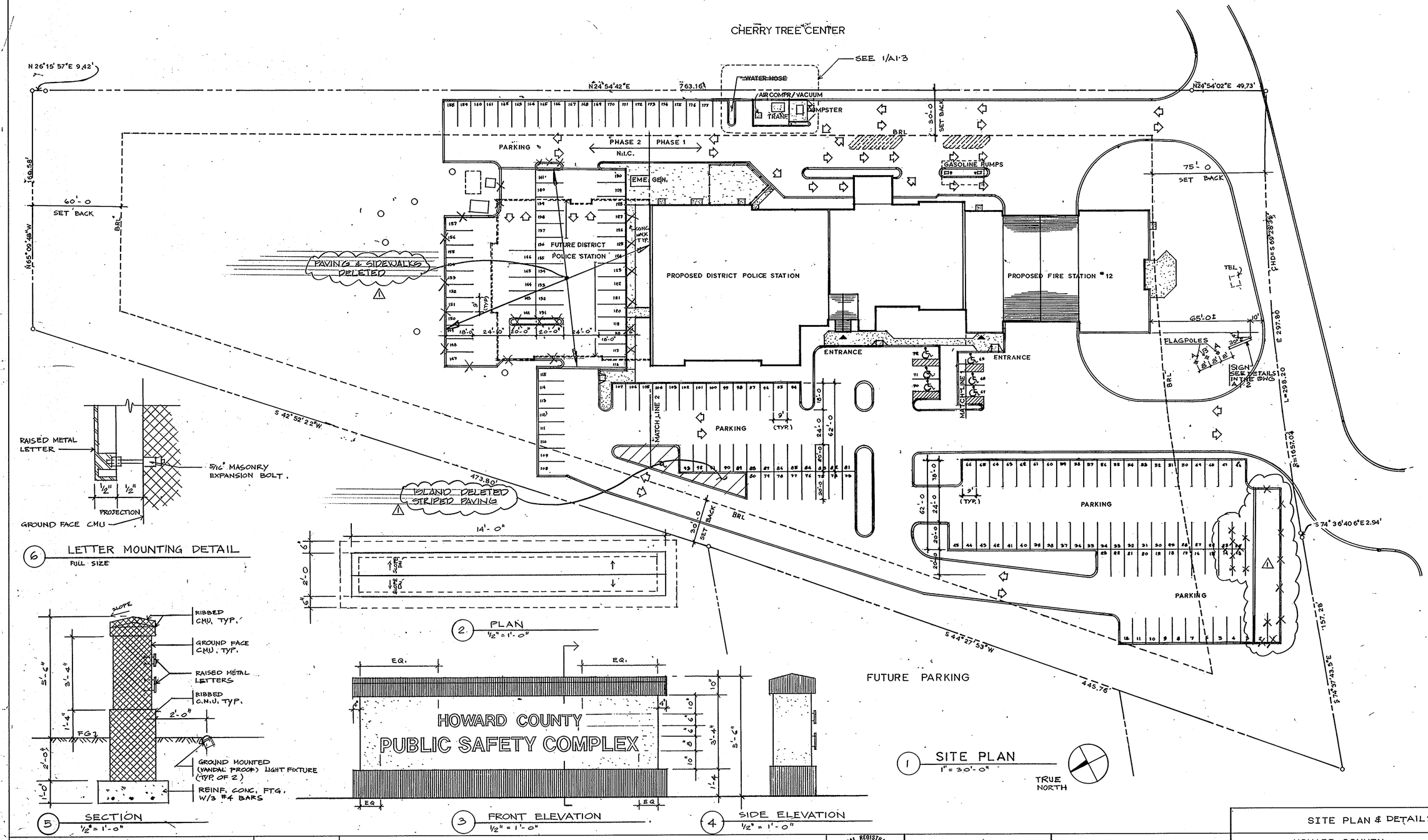

ARCHITECTURAL TECHNOLOGIES INC.
Architects and Construction Consultants
9192 Red Branch Rd. Suite 300
Columbia MD. 21045 (301) 995-4067

IN ASSOCIATION WITH:

CIVIL & GEOTECH ENGINEER:	E B A ENGINEERING, INC.
STRUCTURAL ENGINEER:	QODESH ENGINEERING SERVICES, INC.
MECHANICAL & ELECTRICAL ENGINEER:	BHARGAVA INTERNATIONAL, INC.
FIRE PROTECTION ENGINEER:	STANTON ENGINEERING

ARCHITECTURAL REGISTRATION BOARD SEAL: 3295-A STATE OF MARYLAND

REVISIONS
1 AS BUILT 11/24/94

SITE PLAN & DETAILS

HOWARD COUNTY
PUBLIC SAFETY COMPLEX

SCAGGSVILLE ANNEX
11226 ROUTE 216
LAUREL, MD. 20707

16 OF 90

CAPITAL PROJECT NO.
C - 0227

DATE: 3-25-92

DRAWING NO:
A1.2

1650

PROVIDE: AIR/VAC AS MANUFACTURED BY AMERICAN PRODUCTS CO. (1-800-542-3336)
MODEL # K552-750-3/4HP, 120VAC, 40AMP CRK BRKR.
60 HZ. SINGLE PHASE W/GFCI.
NO COIN OPERATION
3 YRS. WARRANTY (LABOR & MAT.)
VACUUM HOSE (BLACK)
& AIR HOSE
PROVIDE IDENT. TAGS

SUBMIT SHOP DWGS. PRODUCT DATA PER SECTION 01340

PROVIDE CAM LOCKS

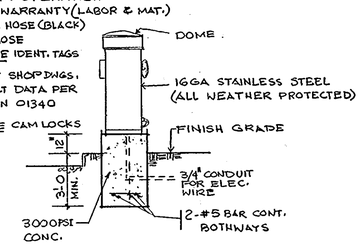

PROVIDE MAINTENANCE/OPERATION/SAFETY MANUALS - 4 BOUND COPIES.

4. AIR/VAC DETAIL NO SCALE

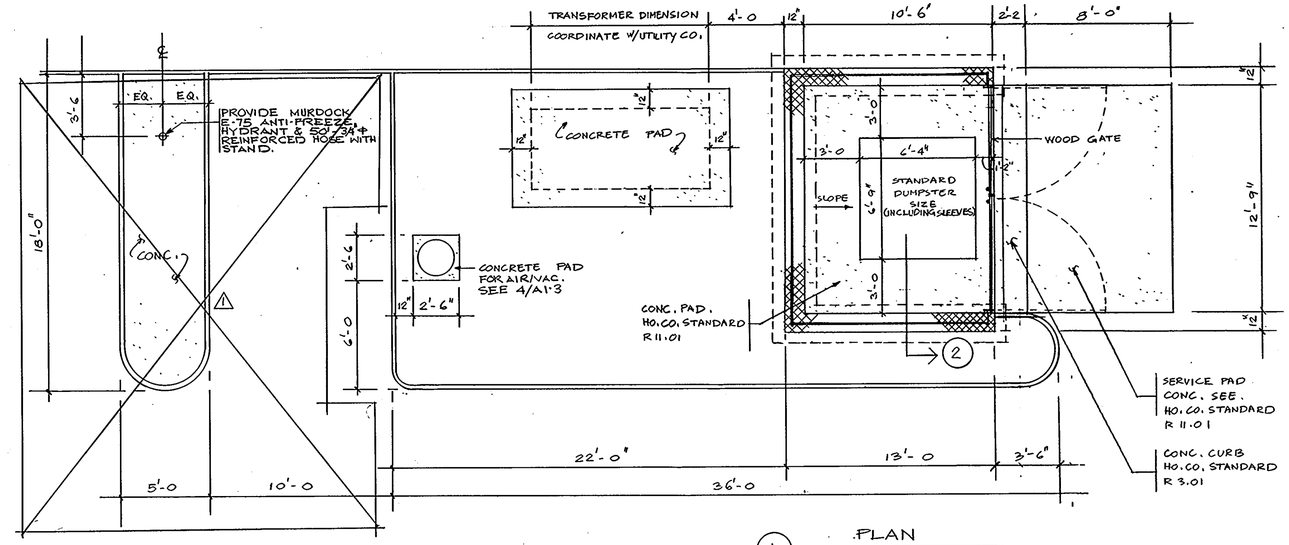

1 PLAN
1/4" = 1'-0"

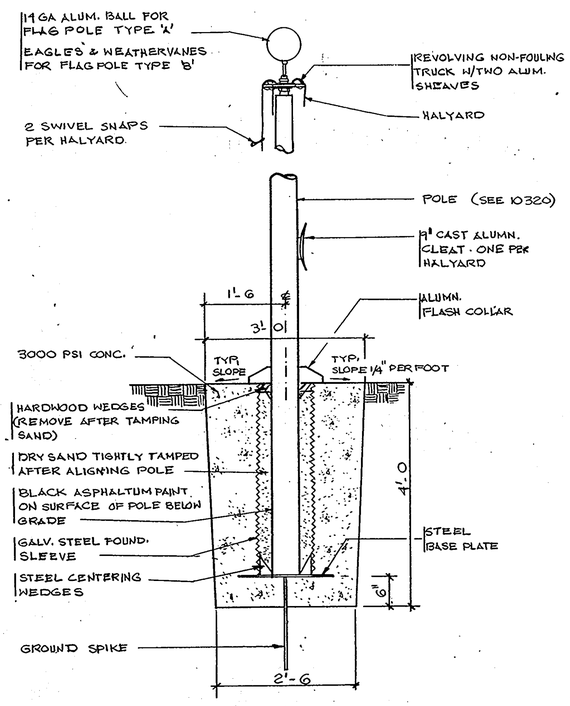

5. TYP. FOUNDATION DETAIL FOR FLAG-POLE - TYPE 'A' & 'B'
NO SCALE

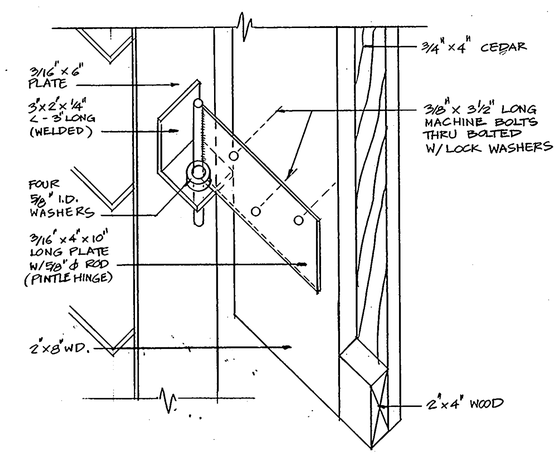

3 GATE HINGE DETAIL
3" = 1'-0"

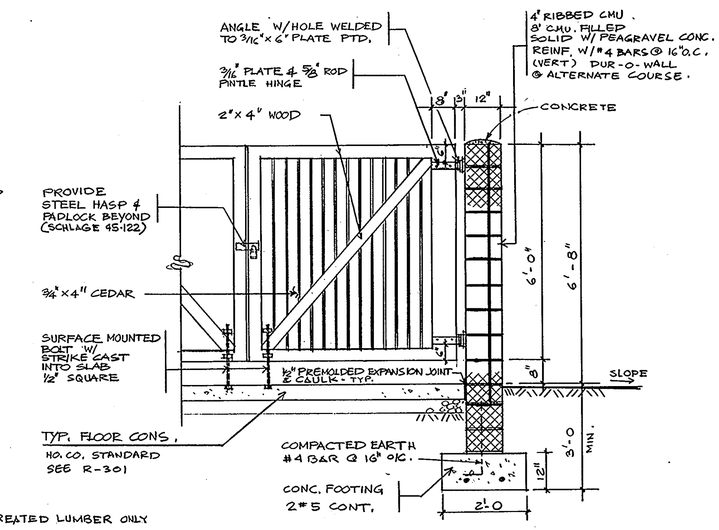

NOTE: USE TREATED LUMBER ONLY

2 SECTION
1/2" = 1'-0"

ARCHITECHTURAL TECHNOLOGIES INC.	IN ASSOCIATION WITH:	REVISIONS	DETAILS — 17 OF 90
Architects and Construction Consultants 9192 Red Branch Rd. Suite 300 Columbia MD. 21045 (301) 995-4067	CIVIL & GEOTECH ENGINEER: E B A ENGINEERING, INC. STRUCTURAL ENGINEER: QODESH ENGINEERING SERVICES, INC. MECHANICAL & ELECTRICAL ENGINEER: BHARGAVA INTERNATIONAL, INC. FIRE PROTECTION ENGINEER: STANTON ENGINEERING	1 AS-BUILT 11/24-94	HOWARD COUNTY PUBLIC SAFETY COMPLEX SCAGGSVILLE ANNEX 11226 ROUTE 216 LAUREL, MD. 20707
	ARCHITECTURAL REGISTRATION SEAL: 3229 STATE OF MARYLAND		CAPITAL PROJECT NO. C - 0227 DATE: 3-25-92 DRAWING NO. A1.3.

1650

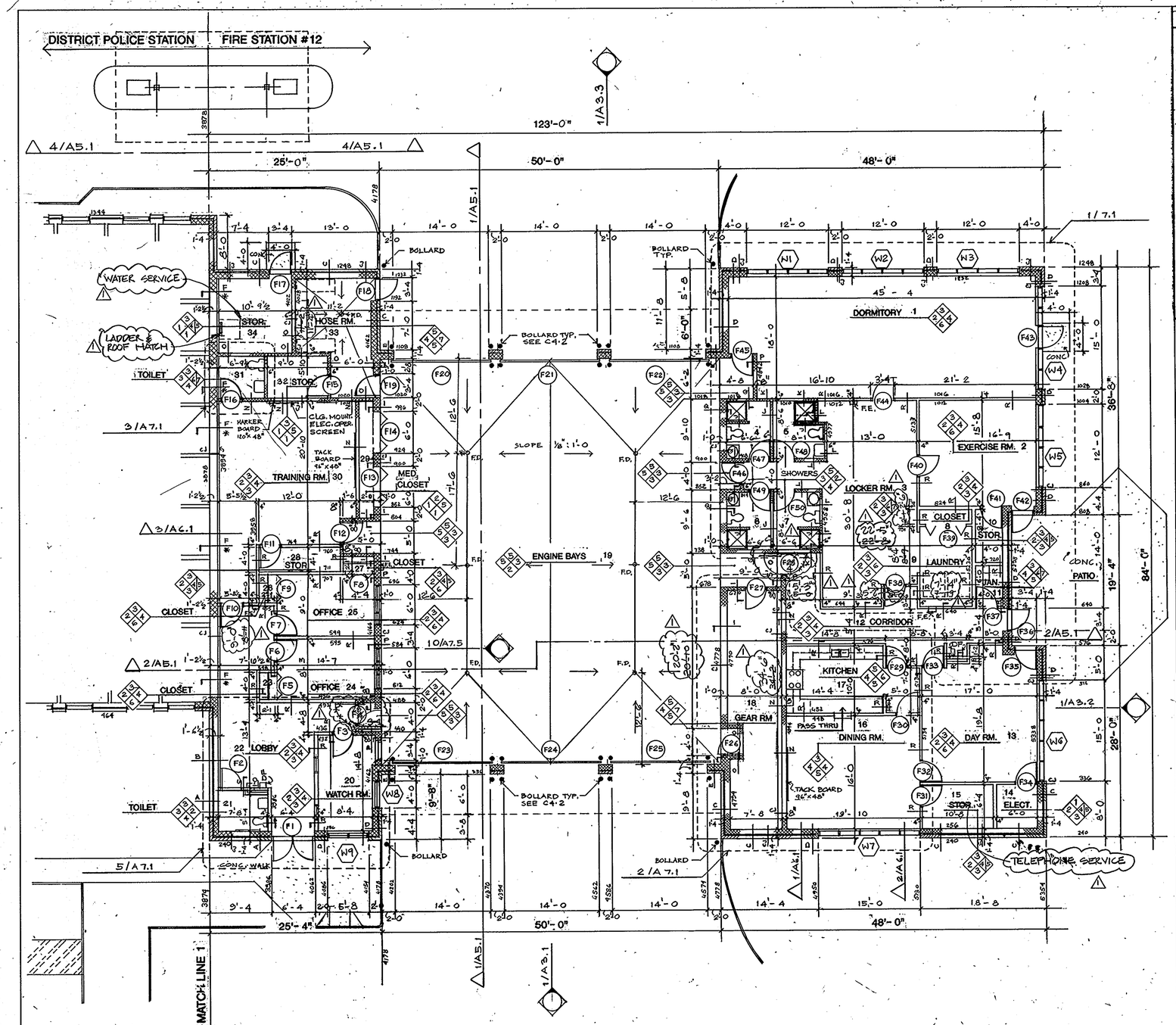

1. FIRST FLOOR PLAN 1/8 = 1' - 0"

PHASE 1

THRU NORTH

2 KEY PLAN — FIRE RATED PARTITION

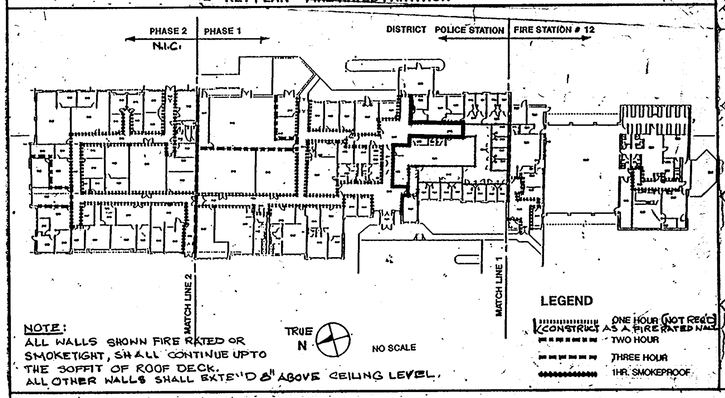

NOTE:
ALL WALLS SHOWN FIRE RATED OR SMOKETIGHT, SHALL CONTINUE UPTO THE SOFFIT OF ROOF DECK.
ALL OTHER WALLS SHALL EXTEND 8" ABOVE CEILING LEVEL.

3 FINISH SCHEDULE

FLOOR
1. CONCR. SEALED
2. CONC. TOPPING VT.
3. VINYL COMP. TILE
4. CERAMIC TILE
5. QUARRY TILE
6. CARPET

BASE
1. NONE
2. VINYL
3. CERAMIC TILE
4. QUARRY TILE
5. GLAZED CMU

WALL
1. NO FINISH
2. CERAMIC TILE
3. GLAZED CMU
4. PAINTED G.W.B
5. PAINTED CMU
6. EPOXY PAINTED G.W.B
7. EPOXY PAINTED CMU

CEILING
1. EXPOSED TO STRUCTURE
2. PAINTED G.W.B
3. SUSP. ACOUST. TILE
4. SECURITY METAL TILE
5. EPOXY PAINTED G.W.B

4. WALL TYPES:

A — EXTERIOR WALL

A — INTERIOR WALL INDICATES THAT WALL SHALL EXTEND TO A MINIMUM OF 8" ABOVE THE CEILING. HOWEVER, METAL STUD WALL SHALL CONTINUE TO THE UNDER SIDE OF THE ROOF DECK.

A — INTERIOR WALL SHALL CONTINUE TO THE UNDER SIDE OF THE ROOF DECK.

A — INTERIOR WALL DESIGNATES THE FOLLOWING: CMU WALL FILLED ENTIRELY WITH GROUT PER SPEC. HORIZONTAL TRUSS TYPE REINFORCED AT EVERY ALTERNATE COURSE AND VERTICAL #5 BARS @ 16" O.C.

A — EXTERIOR WALL DESIGNATES INTERIOR BACK-UP WALL FILLED ENTIRELY WITH GROUT. HORIZONTAL TRUSS TYPE REINFORCEMENT AT EVERY SECOND COURSE AND VERTICAL #5 BARS @ 16" O.C.

O — 1 OR 2 HOUR RATE COMPLY WITH U-906 6"/8" CMU WALL PER DRAWING DUR-O-WALL AT ALTERNATE COURSE

P — 1 OR 2 HOUR RATE-COMPLY WITH U-906 6"/8"/12" GLAZED TILE (CMU) 14' HT ABOVE 14' PLAIN PAINTED CMU WALL DUR-O-WALL AT EVERY ALTERNATE COURSE ON OTHER SIDE 7/8" METAL FURRING CHANNELS @ 24" O.C & 5/8" G.W.B.

Q — 6" OR 12" GLAZED TILE (CMU) 14' HT. ABOVE 14' PLAIN PAINTED CMU WALL DUR-O-WALL AT EVERY ALTERNATE COURSE ON OTHER SIDE. CERAMIC TILE

R — 1 HOUR RATE - COMPLY WITH U-405 4" METAL STUDS @ 24" O.C, 5/8" G.W.B ON BOTH SIDES.

S — 1 HOUR RATE - COMPLY WITH U-405 4" METAL STUDS @ 24" O.C. 5/8" G.W.B ON ONE SIDE ON OTHER SIDE, CERAMIC TILE ON 5/8" WATER RESISTANT BOARD.

T — CHASE WALL 4" METAL STUDS @ 24" O.C. CERAMIC TILE ON 1/2" WATER RESISTANT BOARDS ON BOTH SIDES.

I — 6", 8" OR 12" GLAZED TILE (CMU) ON BOTH SIDES. DUR-O-WALL AT EVERY ALTERNATE COURSE.

J — 6" OR 8" CMU WALL WITH SKIM COAT CERAMIC TILE ON BOTH SIDES

K — 1 OR 2 HOUR RATE-COMPLY WITH U-906 6" OR 8" CMU WALL PER DRAWING DUR-O-WALL AT EVERY ALTERNATE COURSE. ON ONE SIDE 5/8" G.W.B ON 7/8" METAL FURRING CHANNELS @ 24" O.C. ON OTHER SIDE SKIM COAT & CERAMIC TILE.

L — 6" OR 8" CMU WALL. DUR-O-WALL AT EVERY ALTERNATE COURSE. SKIM COAT AND CERAMIC TILE ON ONE SIDE.

M — 1 OR 2 HOUR RATE-COMPLY WITH U-906 6" OR 8" OR 12" CMU WALL. DUR-O-WALL AT EVERY ALTERNATE COURSE. 5/8" G.W.B ON 7/8" METAL FURRING CHANNELS @ 24" O.C - BOTH SIDES.

N — 1 OR 2 HOUR RATE-COMPLY WITH U-906 6" OR 8" CMU WALL. DUR-O-WALL AT EVERY ALTERNATE COURSE. ON ONE SIDE 5/8" G.W.B ON 7/8" METAL FURRING CHANNELS @ 24" O.C.

A — 4" CMU (RIBBED OR GROUND FACE) 2" AIR SPACE & INSULATION PER SPEC. 10" CMU. DUR-O-WALL AT EVERY ALTERNATE COURSE. 1/2" WATER RESISTANT BOARDS ON 7/8" METAL FURRING CHANNEL @24" O.C. CERAMIC TILE.

B — 4" CMU (RIBBED OR GROUND FACE) 2" AIR SPACE & INSULATION PER SPEC. 10" CMU. DUR-O-WALL AT EVERY ALTERNATE COURSE. 2-1/2" METAL STUDS @24" O.C. SOUND ATTENUATION BLANKET PER SPEC. 5/8" G.W.B.

C — 4" CMU (RIBBED OR GROUND FACE) 2" AIR SPACE & INSULATION PER SPEC. 8" OR 10" CMU. DUR-O-WALL AT EVERY ALTERNATE COURSE.

D — 4" CMU (RIBBED OR GROUND FACE) 2" AIR SPACE & INSULATION PER SPEC. 8" OR 10" CMU. DUR-O-WALL AT EVERY ALTERNATE COURSE. 1/2" G.W.B ON 7/8" METAL FURRING CHANNEL @24" O.C.

E — 4" CMU (RIBBED OR GROUND FACE) 2" AIR SPACE & INSULATION PER SPEC. 10" GLAZED TILE (CMU). DUR-O-WALL AT EVERY ALTERNATE COURSE. GLAZED TILE UPTO 14' HT. ABOVE 14' PLAIN CMU WALL PAINTED.

F — 2 OR 3 HR. RATE- COMPLY WITH U-904 AND U-906. 8" OR 12" CMU WALL. DUR-O-WALL AT EVERY ALTERNATE COURSE. 2-1/2" METAL STUDS @ 24" O.C. SOUND ATTENUATION BLANKET PER SPEC. 5/8" G.W.B.

G — 3 HR. RATE- COMPLY WITH U-904. 4" CMU PAINTED. 2" AIR SPACE & INSULATION PER SPEC. 10" CMU. DUR-O-WALL AT EVERY ALTERNATE COURSE. 1/2" G.W.B ON 7/8" METAL FURRING CHANNEL @24" O.C.

H — 3 HR. RATE- COMPLY WITH U-904. 4" CMU PAINTED. 2" AIR SPACE & INSULATION PER SPEC. 10" CMU. DUR-O-WALL AT EVERY ALTERNATE COURSE.

ARCHITECTURAL TECHNOLOGIES INC.
Architects and Construction Consultants
9192 Red Branch Rd. Suite 300
Columbia MD. 21045 (301) 995-4067

IN ASSOCIATION WITH:

CIVIL & GEOTECH ENGINEER:	E B A ENGINEERING, INC.
STRUCTURAL ENGINEER:	QODESH ENGINEERING SERVICES, INC.
MECHANICAL & ELECTRICAL ENGINEER:	BHARGAVA INTERNATIONAL, INC.
FIRE PROTECTION ENGINEER:	STANTON ENGINEERING

ARCHITECTURAL REGISTRATION BOARD SEAL — STATE OF MARYLAND

REVISIONS
1 NO. DUCT 11/24/94

FIRST FLOOR PLAN
POLICE STATION

HOWARD COUNTY
PUBLIC SAFETY COMPLEX

SCAGGSVILLE ANNEX
11226 ROUTE 216
LAUREL, MD. 20707

CAPITAL PROJECT NO. C - 0227

DATE: 3-25-92

DRAWING NO. A 2.1

1650

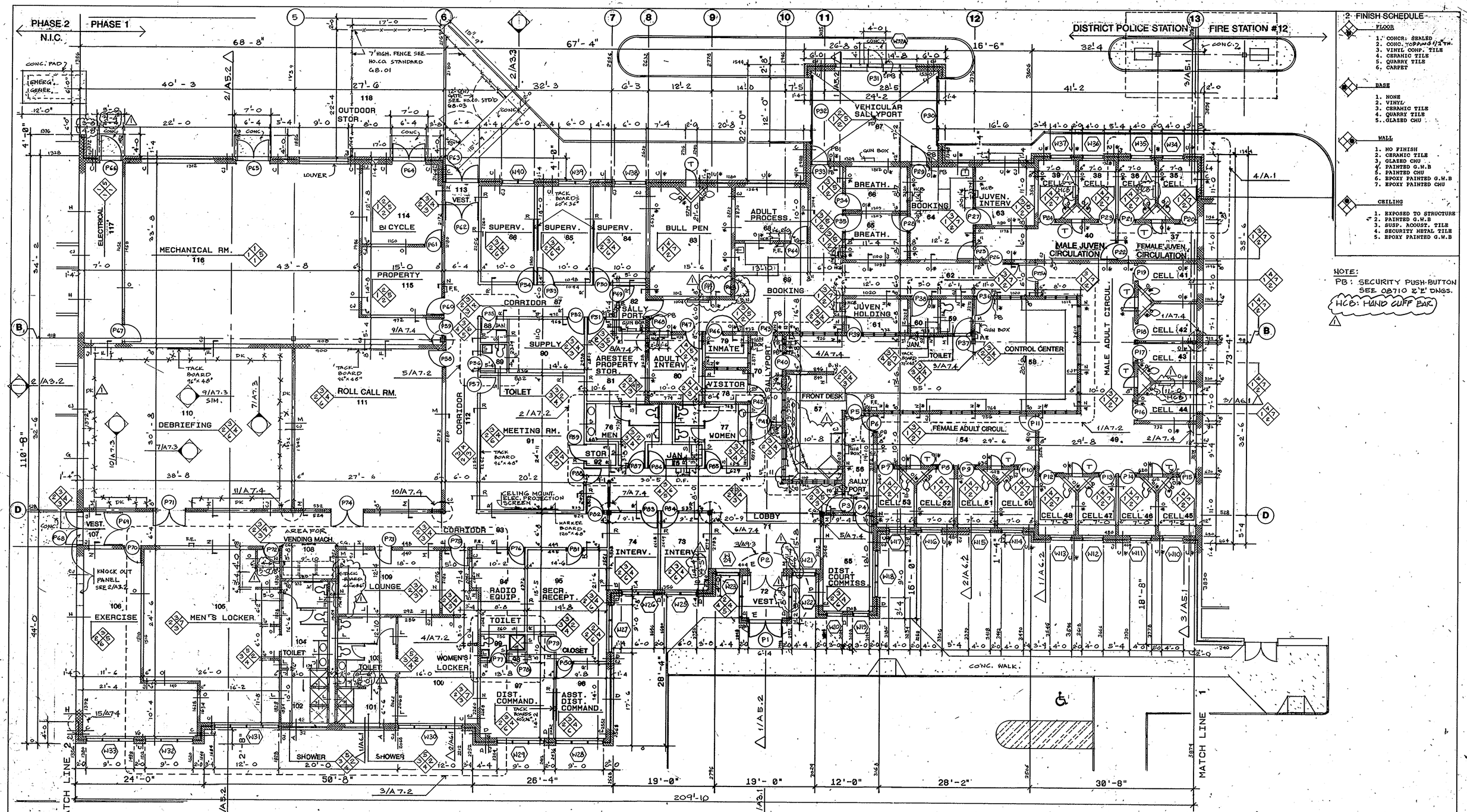

2. FINISH SCHEDULE

FLOOR

1. CONCR: SEALED
2. CONC. TOPPING 1/2" TH.
3. VINYL COMP. TILE
4. CERAMIC TILE
5. QUARRY TILE
6. CARPET

BASE

1. NONE
2. VINYL
3. CERAMIC TILE
4. QUARRY TILE
5. GLAZED CHU

WALL

1. NO FINISH
2. CERAMIC TILE
3. GLAZED CHU
4. PAINTED G.W.B
5. PAINTED CHU
6. EPOXY PAINTED G.W.B
7. EPOXY PAINTED CHU

CEILING

1. EXPOSED TO STRUCTURE
2. PAINTED G.W.B
3. SUSP. ACOUST. TILE
4. SECURITY METAL TILE
5. EPOXY PAINTED G.W.B

NOTE:
PB: SECURITY PUSH-BUTTON SEE 08710 & 'E' DWGS.
HCB: HAND CUFF BAR

1. FIRST FLOOR PLAN 1/8" = 1' - 0

PHASE 1

ARCHITECTURAL TECHNOLOGIES INC.
Architects and Conetruction Consultants
9192 Red Branch Rd. Suite 300
Columbia MD. 21045 (301) 995-4067

IN ASSOCIATION WITH:

CIVIL & GEOTECH ENGINEER:	E B A ENGINEERING, INC.
STRUCTURAL ENGINEER:	QODESH ENGINEERING SERVICES, INC.
MECHANICAL & ELECTRICAL ENGINEER:	BHARGAVA INTERNATIONAL, INC.
FIRE PROTECTION ENGINEER:	STANTON ENGINEERING

ARCHITECTURAL REGISTRATION SEAL — STATE OF MARYLAND

REVISIONS
1 AS BUILT 11/24/94

FIRST FLOOR PLAN
POLICE STATION

HOWARD COUNTY
PUBLIC SAFETY COMPLEX

SCAGGSVILLE ANNEX
11226 ROUTE 216
LAUREL, MD. 20707

CAPITAL PROJECT NO. C - 0227
DATE: 3-25-92
DRAWING NO. A 2.2

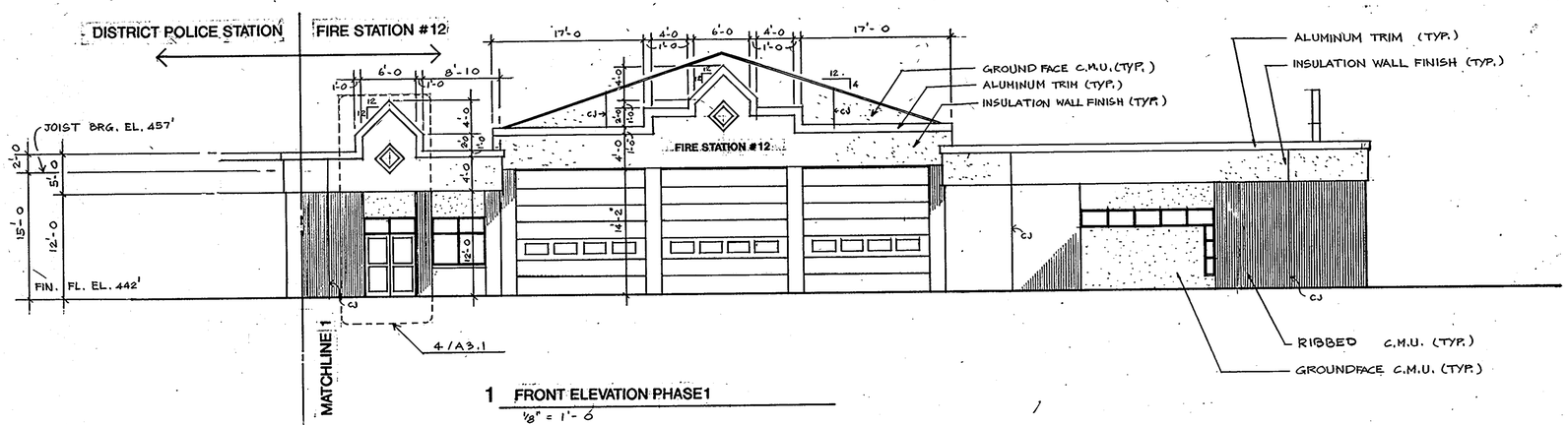

1 FRONT ELEVATION PHASE1
1/8" = 1'-0

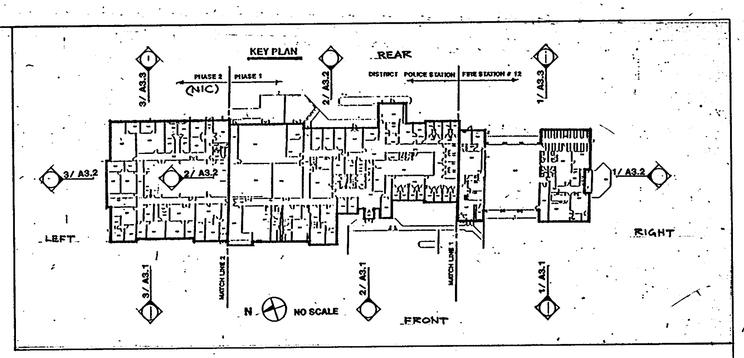

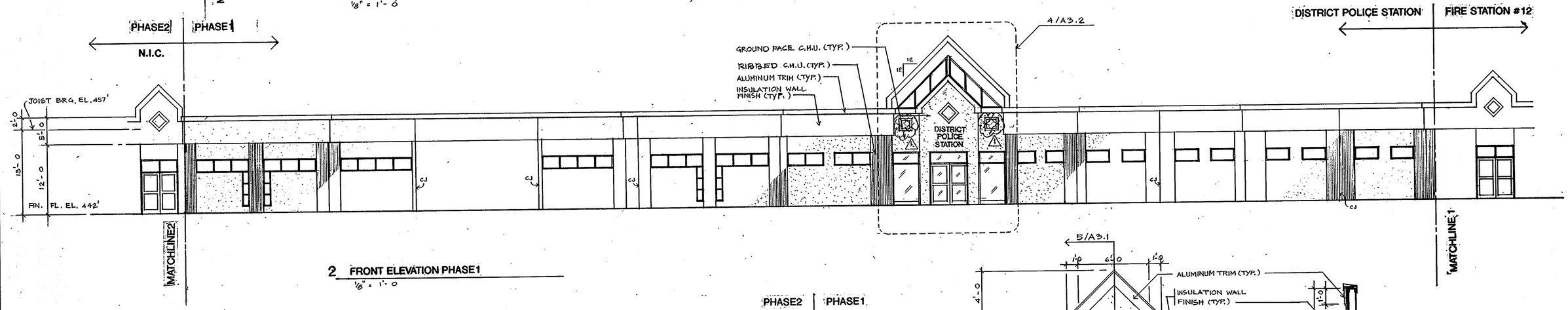

2 FRONT ELEVATION PHASE1
1/8" = 1'-0

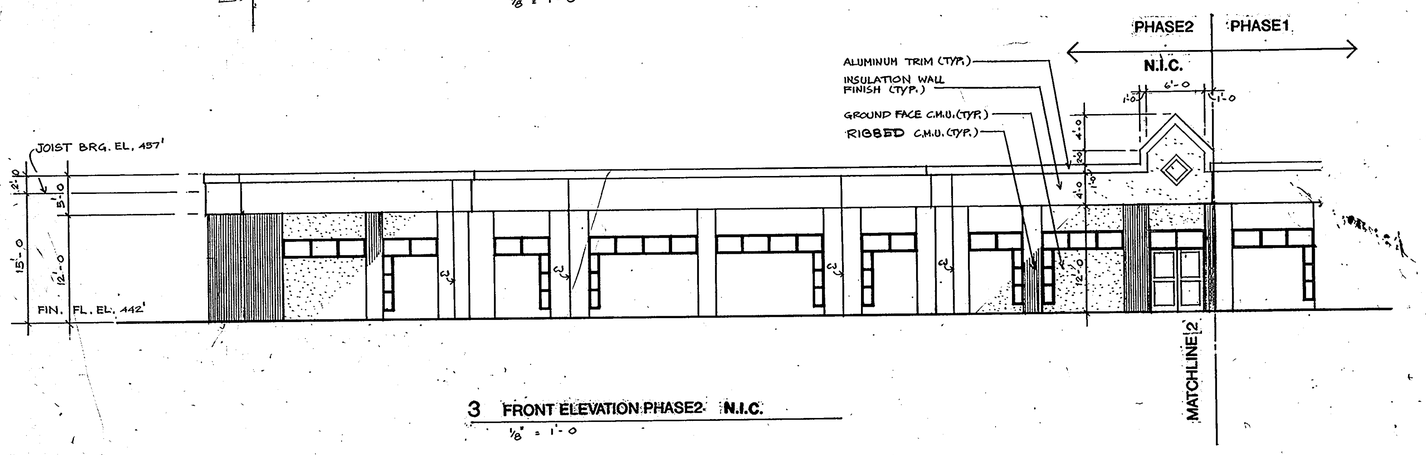

3 FRONT ELEVATION PHASE2 N.I.C.
1/8" = 1'-0

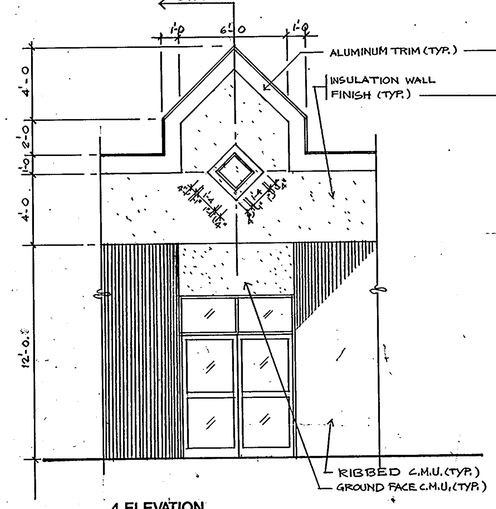

4 ELEVATION
1/4" = 1'-0

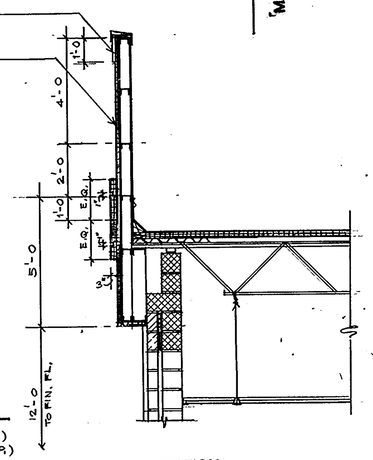

5 SECTION
3/16" = 1'-0

ARCHITECTURAL TECHNOLOGIES INC.
Architects and Construction Consultants
9192 Red Branch Rd. Suite 300
Columbia MD. 21045 (301) 995-4067

IN ASSOCIATION WITH:

CIVIL & GEOTECH ENGINEER:	E B A ENGINEERING, INC.
STRUCTURAL ENGINEER:	QODESH ENGINEERING SERVICES, INC.
MECHANICAL & ELECTRICAL ENGINEER:	BHARGAVA INTERNATIONAL, INC.
FIRE PROTECTION ENGINEER:	STANTON ENGINEERING

SEAL: ARCHITECTURAL REGISTRATION NO. 3295 STATE OF MARYLAND

REVISIONS
1 AS BUILT 11/24/94

ELEVATIONS

HOWARD COUNTY
PUBLIC SAFETY COMPLEX

SCAGGSVILLE ANNEX
11226 ROUTE 216
LAUREL, MD. 20707

CAPITAL PROJECT NO. C - 0227
DATE: 3-25-92
DRAWING NO. A 3.1

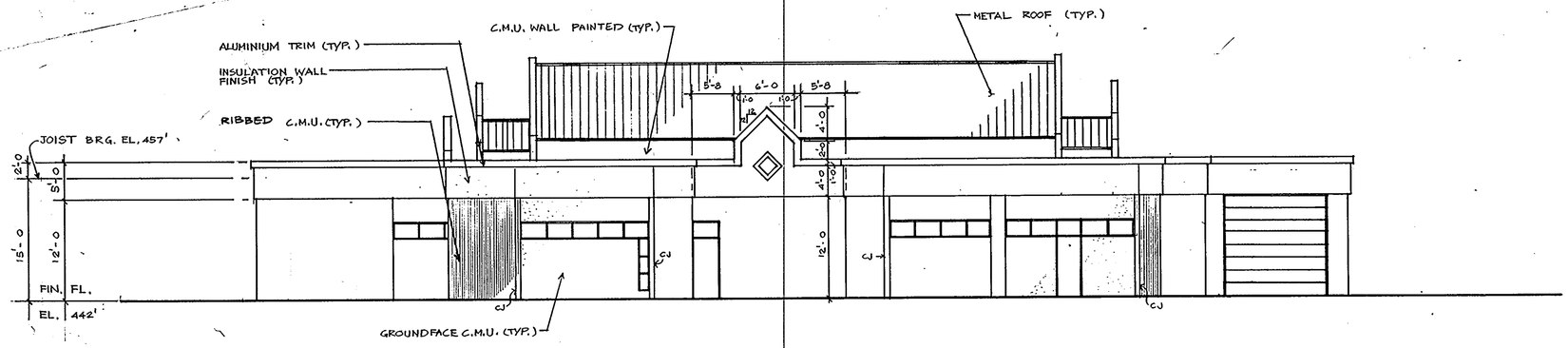

1 RIGHT ELEVATION PHASE1
1/8" = 1'-0

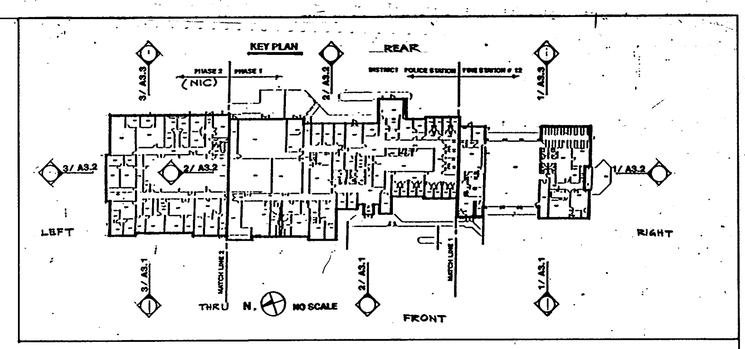

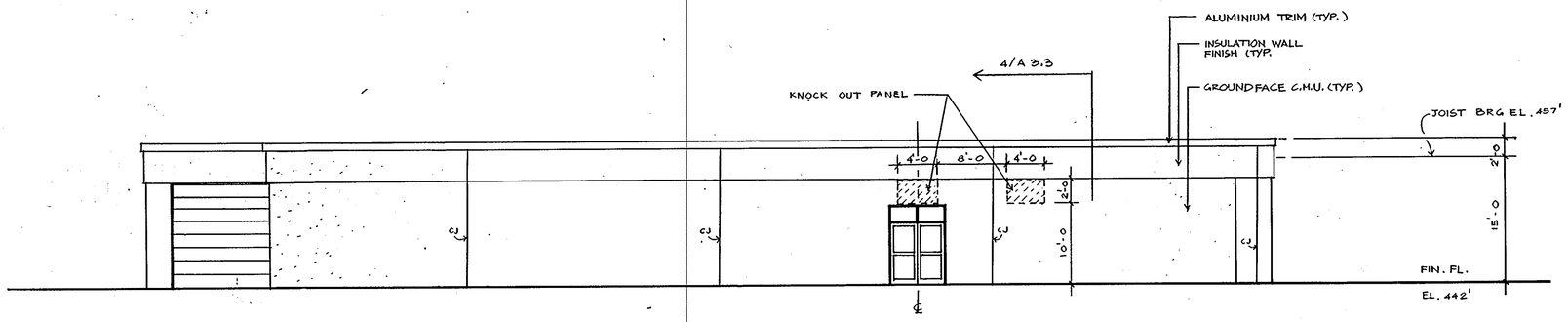

2 LEFT ELEVATION PHASE1
1/8" = 1'-0

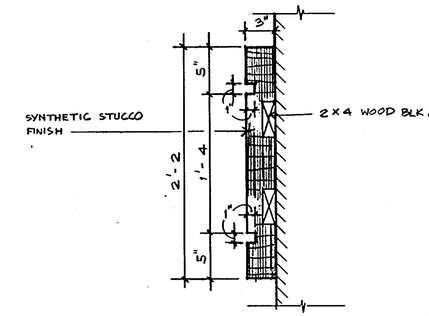

5 SECTION
3/8" = 1'-0"

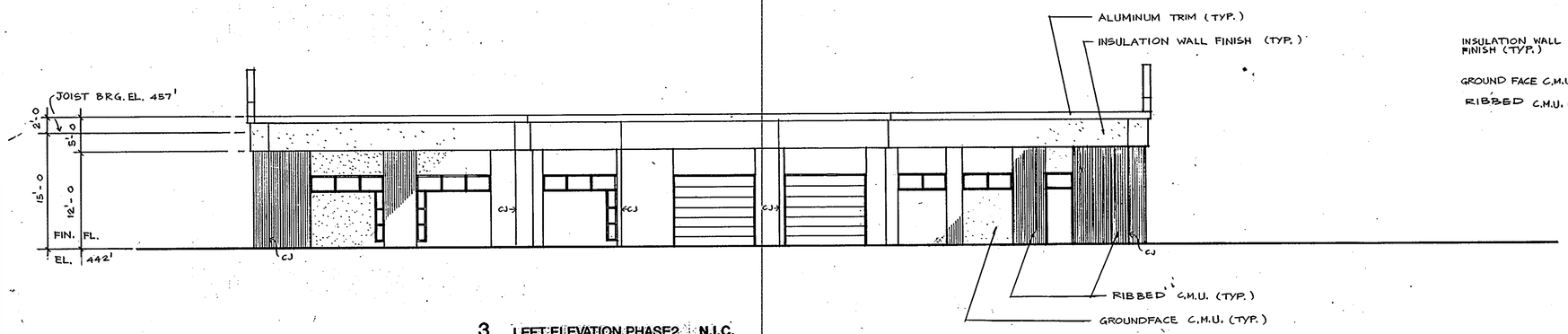

3 LEFT ELEVATION PHASE2 N.I.C.
1/8" = 1'-0

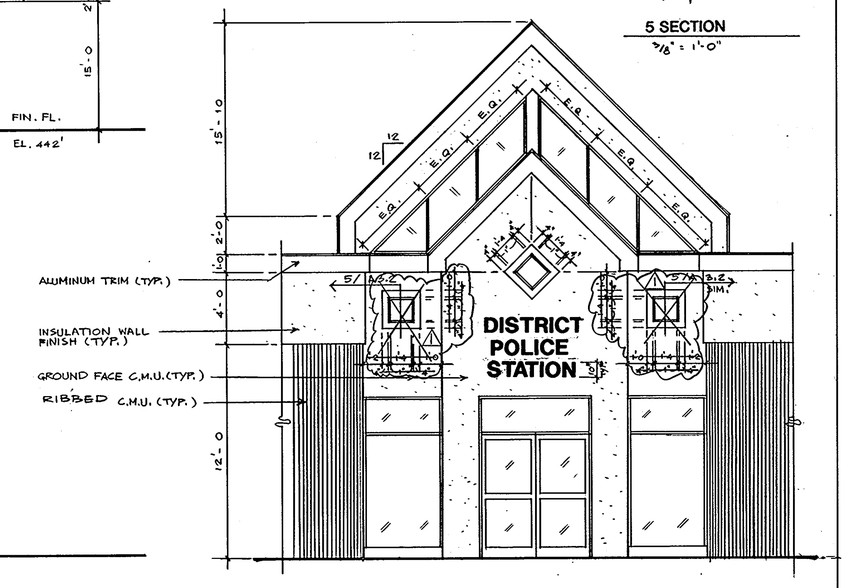

4 ELEVATION
1/4" = 1'-0"

ARCHITECTURAL TECHNOLOGIES INC.
Architects and Construction Consultants
9192 Red Branch Rd. Suite 300
Columbia MD. 21045 (301) 995-4067

IN ASSOCIATION WITH:

CIVIL & GEOTECH ENGINEER:	E B A ENGINEERING, INC.
STRUCTURAL ENGINEER:	QODESH ENGINEERING SERVICES, INC.
MECHANICAL & ELECTRICAL ENGINEER:	BHARGAVA INTERNATIONAL, INC.
FIRE PROTECTION ENGINEER:	STANTON ENGINEERING

ARCHITECTURAL REGISTRATION SEAL 3295 STATE OF MARYLAND

REVISIONS
1 AS BUILT 11/24/94

ELEVATIONS

HOWARD COUNTY
PUBLIC SAFETY COMPLEX

SCAGGSVILLE ANNEX
11226 ROUTE 216
LAUREL, MD. 20707

21 OF 90

CAPITAL PROJECT NO. C - 0227

DATE: 3-25-92

DRAWING NO. A 3.2

1650

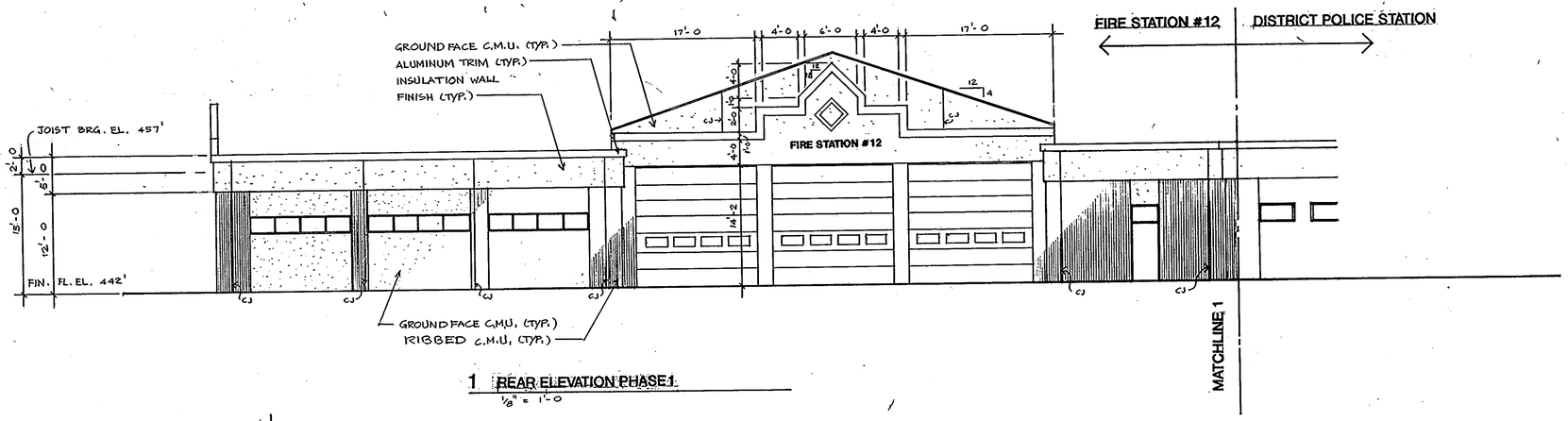

1 REAR ELEVATION PHASE1
1/8" = 1'-0

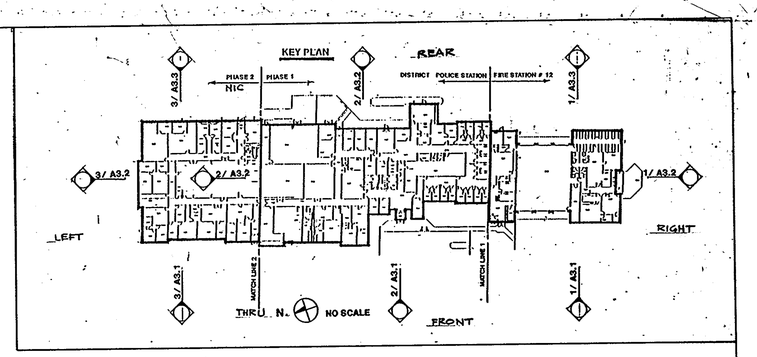

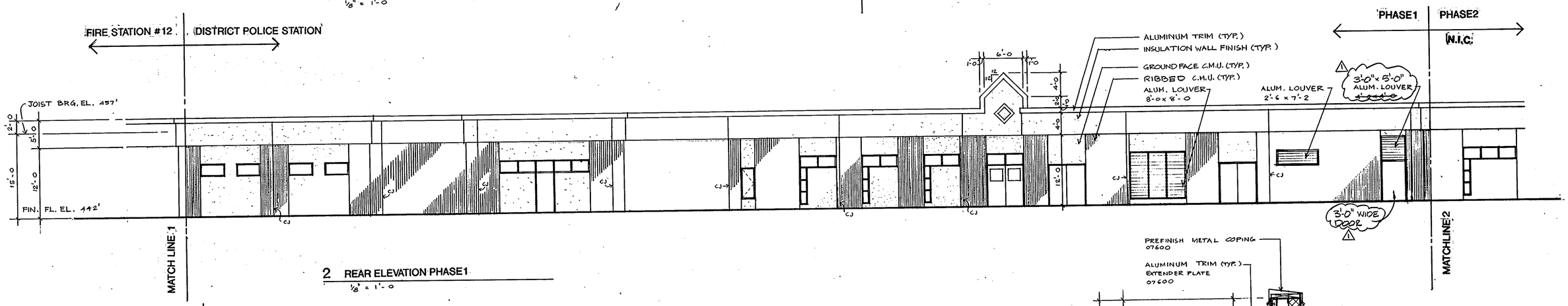

2 REAR ELEVATION PHASE1
1/8" = 1'-0

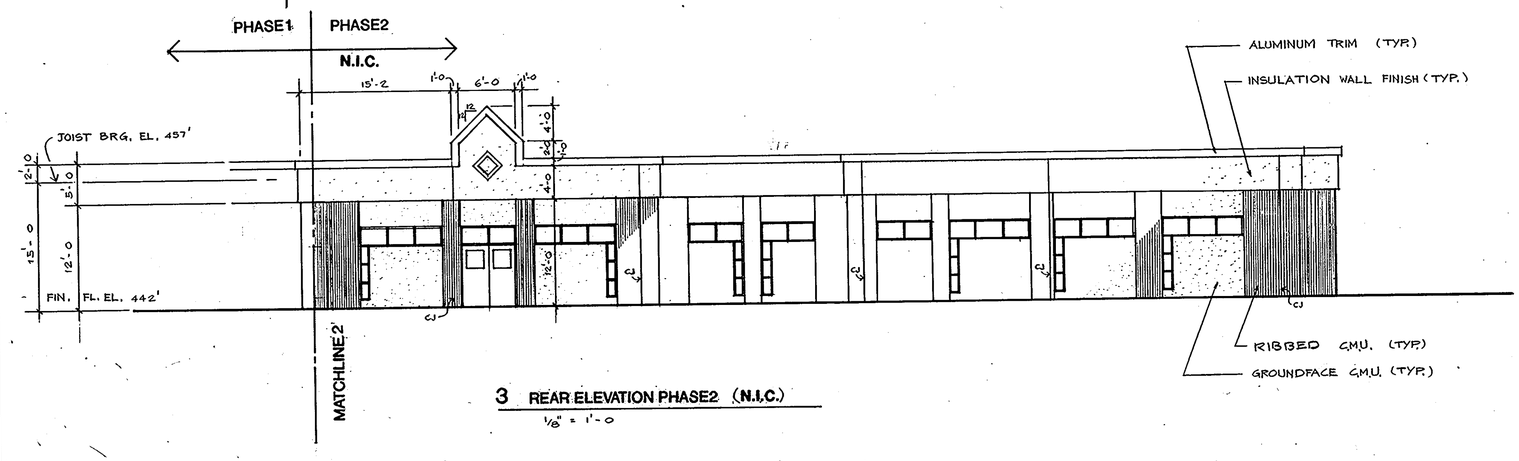

3 REAR ELEVATION PHASE2 (N.I.C.)
1/8" = 1'-0

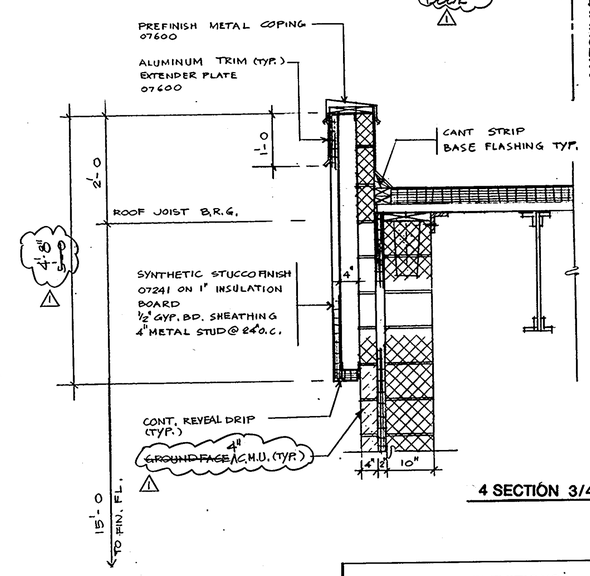

4 SECTION 3/4"=1'-0"

ARCHITECTURAL TECHNOLOGIES INC.
Architects and Construction Consultants
9192 Red Branch Rd. Suite 300
Columbia MD. 21045 (301) 995-4067

IN ASSOCIATION WITH:

CIVIL & GEOTECH ENGINEER:	E B A ENGINEERING, INC.
STRUCTURAL ENGINEER:	QODESH ENGINEERING SERVICES, INC.
MECHANICAL & ELECTRICAL ENGINEER:	BHARGAVA INTERNATIONAL, INC.
FIRE PROTECTION ENGINEER:	STANTON ENGINEERING

ARCHITECTURAL REGISTRATION SEAL 3295-A STATE OF MARYLAND

REVISIONS

1 AS BUILT	11/24/94

ELEVATIONS

HOWARD COUNTY
PUBLIC SAFETY COMPLEX

SCAGGSVILLE ANNEX
11226 ROUTE 216
LAUREL, MD. 20707

22 OF 90

CAPITAL PROJECT NO. C - 0227

DATE: 3-25-92

DRAWING NO. A 3.3

1650

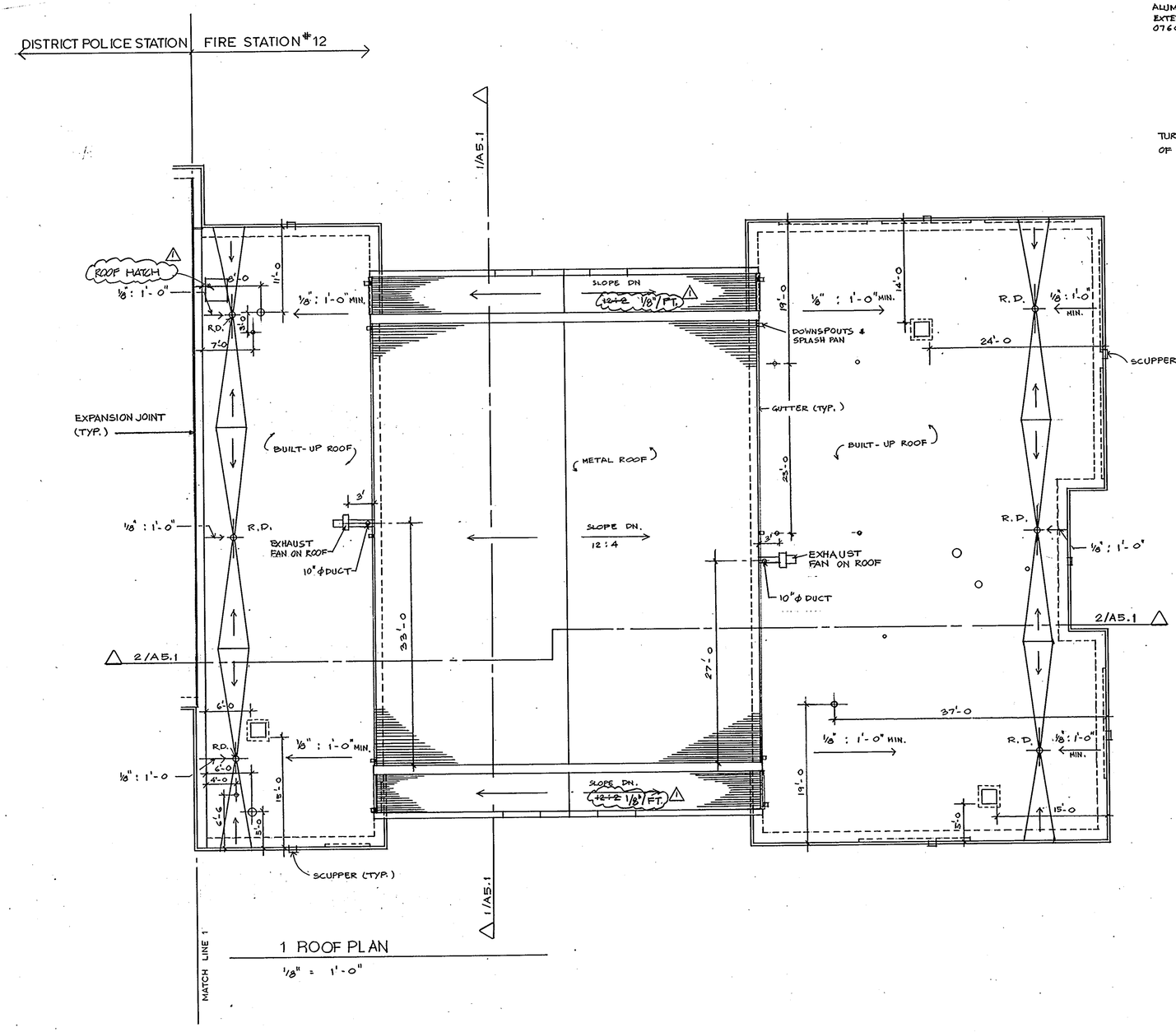

1 ROOF PLAN

1/8" = 1'-0"

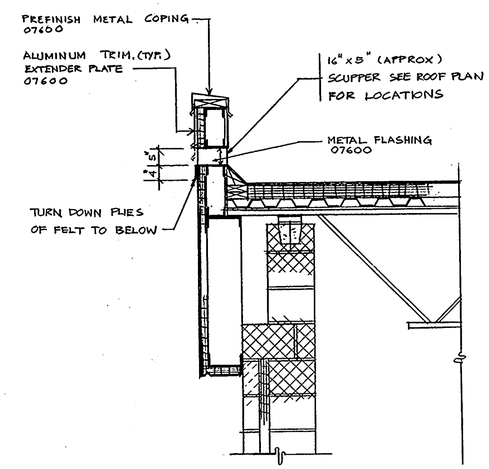

2 DETAIL 3/4" = 1'-0"

TYP. SCUPPER

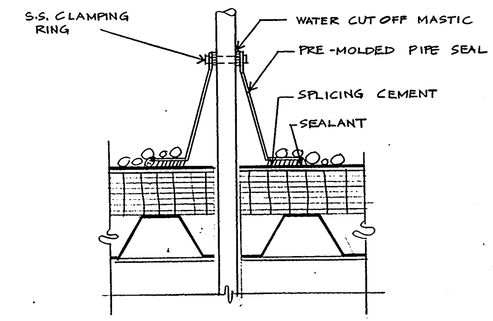

3 DETAIL N.T.S.

TYP. VENT. PIPE FLASHING

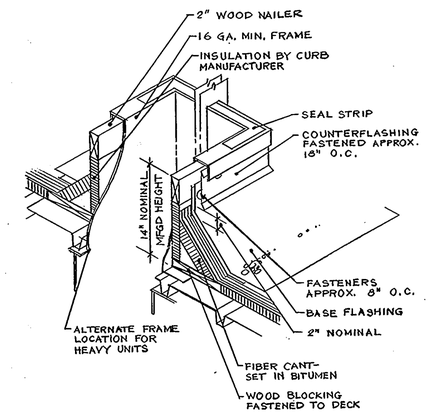

5 MECH ROOF CURB (TYP.)

NO SCALE

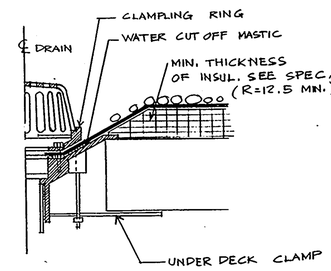

4 DETAIL N.T.S.

TYP. ROOF DRAIN

1650

ARCHITECTURAL TECHNOLOGIES INC.
Architects and Construction Consultants
9192 Red Branch Rd. Suite 300
Columbia MD. 21045 (301) 995-4067

IN ASSOCIATION WITH:

CIVIL & GEOTECH ENGINEER:	E B A ENGINEERING, INC.
STRUCTURAL ENGINEER:	GODESH ENGINEERING SERVICES, INC.
MECHANICAL & ELECTRICAL ENGINEER:	BHARGAVA INTERNATIONAL, INC.
FIRE PROTECTION ENGINEER:	STANTON ENGINEERING

ARCHITECTURAL REGISTRATION SEAL: 3295 STATE OF MARYLAND

REVISIONS

1 AS BUILT	11/24/94

ROOF PLAN - FIRE STATION

HOWARD COUNTY PUBLIC SAFETY COMPLEX

SCAGGSVILLE ANNEX
11226 ROUTE 216
LAUREL, MD. 20707

CAPITAL PROJECT NO. C - 0227

DATE: 3-25-92

DRAWING NO. A 4.1

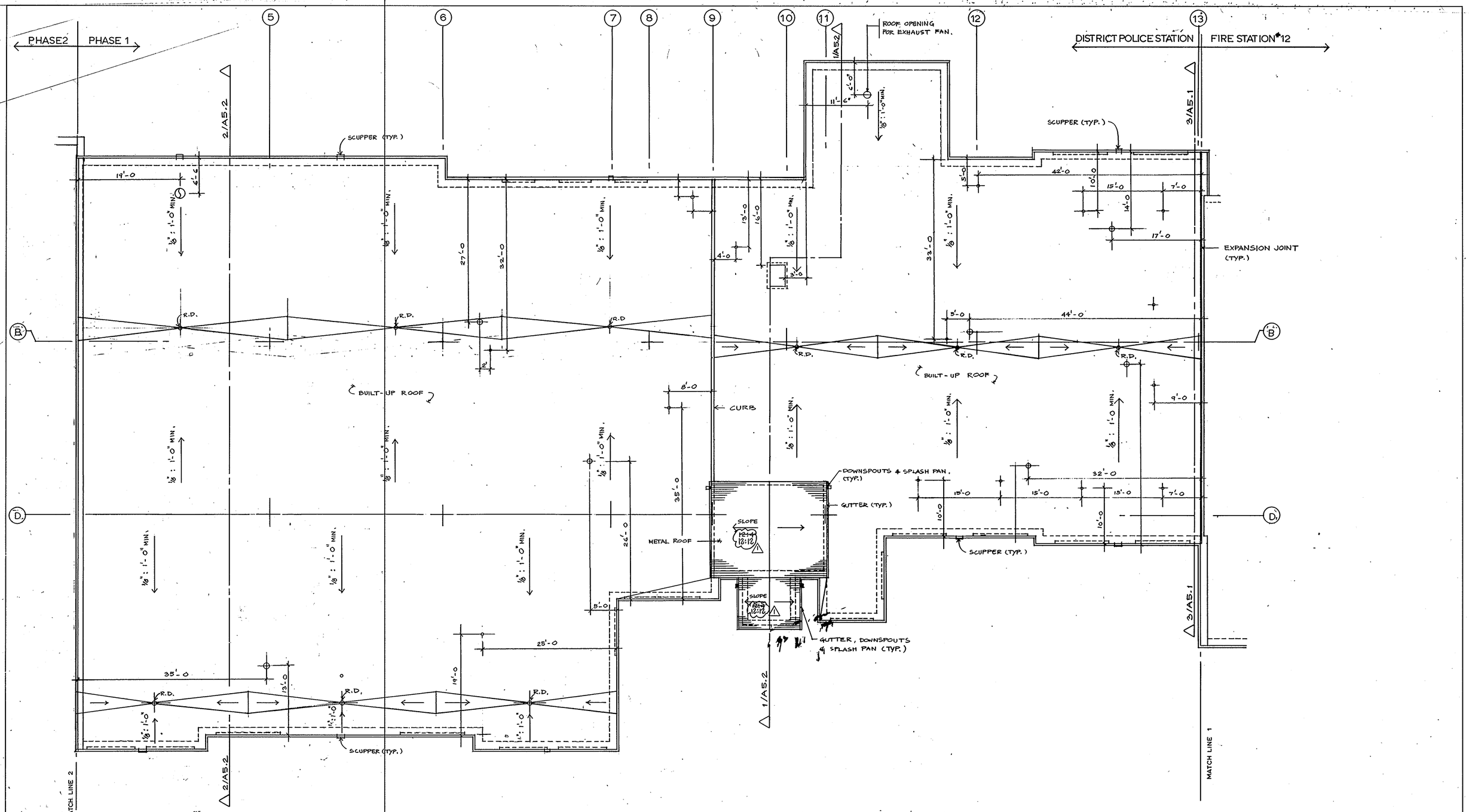

1 ROOF PLAN PHASE 1
1/8" = 1'-0"

ARCHITECTURAL TECHNOLOGIES INC.	IN ASSOCIATION WITH:	REVISIONS	ROOF PLAN - POLICE STATION
Architects and Construction Consultants	CIVIL & GEOTECH ENGINEER: E B A ENGINEERING, INC.	1 AS BUILT 11/24/94	HOWARD COUNTY PUBLIC SAFETY COMPLEX
9192 Red Branch Rd. Suite 300	STRUCTURAL ENGINEER: QODESH ENGINEERING SERVICES, INC.		SCAGGSVILLE ANNEX
Columbia MD. 21045 (301) 995-4067	MECHANICAL & ELECTRICAL ENGINEER: BHARGAVA INTERNATIONAL, INC.		11226 ROUTE 216
	FIRE PROTECTION ENGINEER: STANTON ENGINEERING		LAUREL, MD. 20707

ARCHITECTURAL REGISTRATION BOARD SEAL 3889 STATE OF MARYLAND

24 OF 90

CAPITAL PROJECT NO. C - 0227

DATE: 3-25-92

DRAWING NO. A 4.2

1650

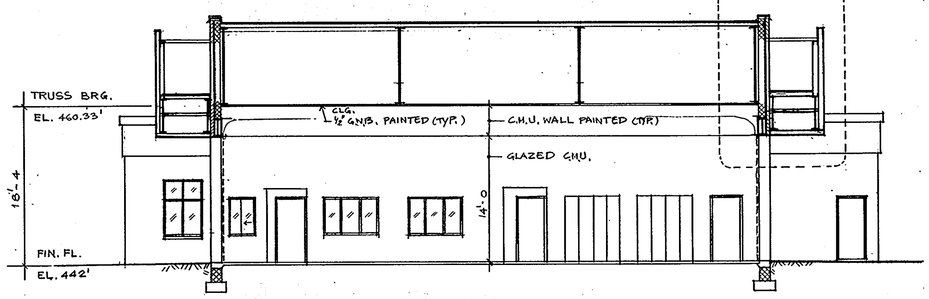

1. SECTION 1/6"= 1'- 0"

PHASE 1

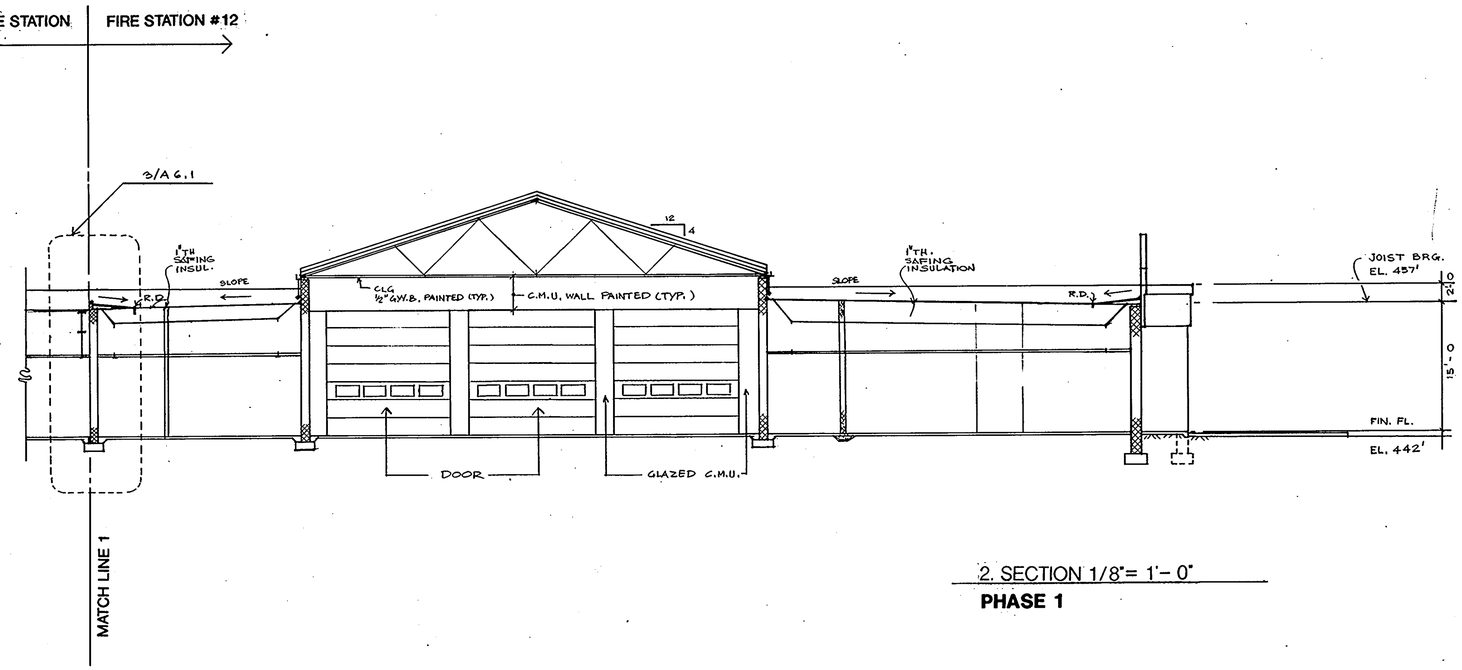

2. SECTION 1/8"= 1'- 0"

PHASE 1

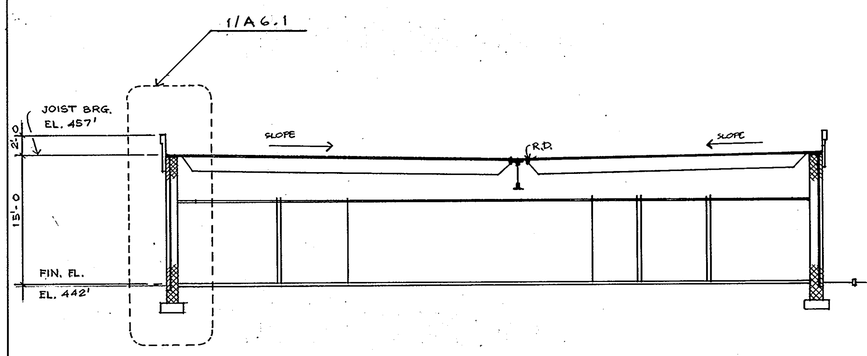

3. SECTION 1/8"= 1'- 0"

PHASE 1

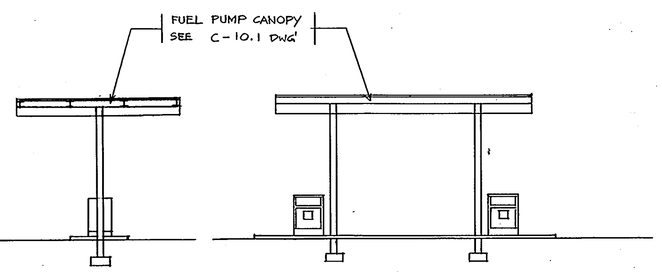

4 SECTION 1/8"= 1'- 0"

PHASE 1

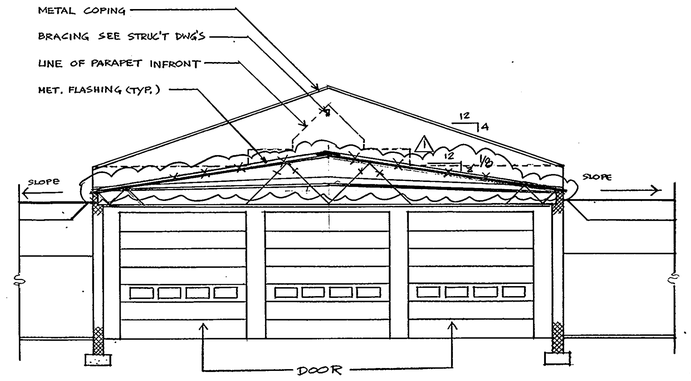

5 SECTION 1/8"= 1'- 0"

PHASE 1

ARCHITECTURAL TECHNOLOGIES INC.
Architects and Construction Consultants
9192 Red Branch Rd. Suite 300
Columbia MD. 21045 (301) 995-4067

IN ASSOCIATION WITH:

CIVIL & GEOTECH ENGINEER:	E B A ENGINEERING, INC.
STRUCTURAL ENGINEER:	QODESH ENGINEERING SERVICES, INC.
MECHANICAL & ELECTRICAL ENGINEER:	BHARGAVA INTERNATIONAL, INC.
FIRE PROTECTION ENGINEER:	STANTON ENGINEERING

ARCHITECTURAL REGISTRATION BOARD SEAL: 3295-A STATE OF MARYLAND

REVISIONS

NO.	BUILT	11/24/94

BUILDING SECTION

HOWARD COUNTY
PUBLIC SAFETY COMPLEX

SCAGGSVILLE ANNEX
11226 ROUTE 216
LAUREL, MD. 20707

CAPITAL PROJECT NO. C - 0227

DATE: 3-25-92

DRAWING NO. **A 5.1**

1650

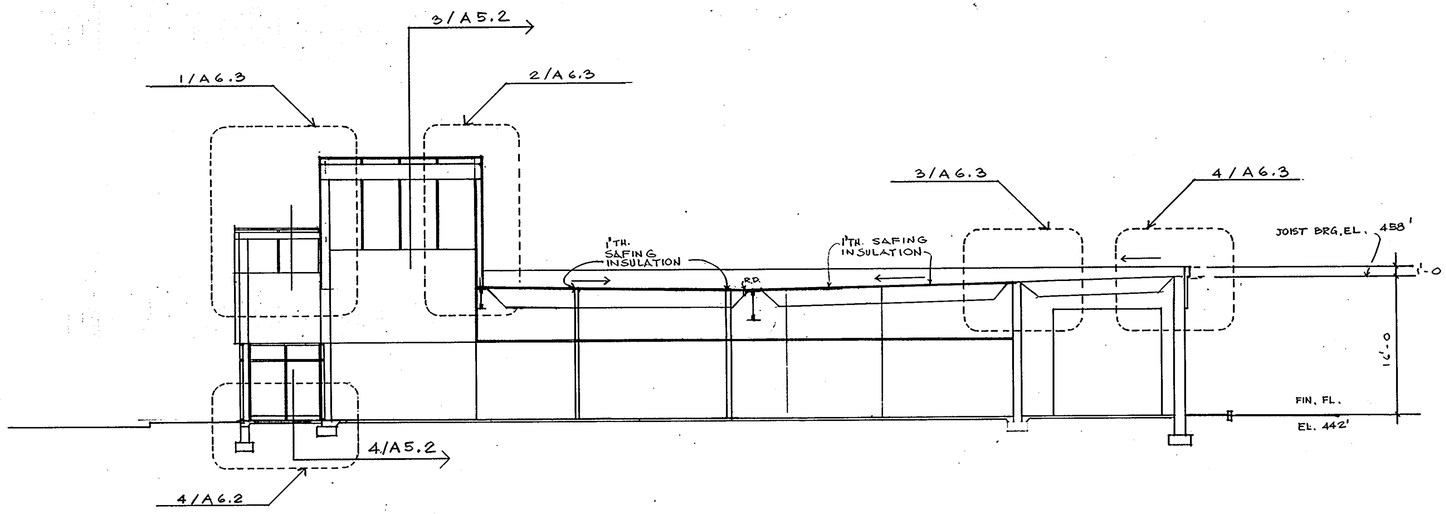

1. SECTION 1/8"= 1'- 0"

PHASE 1

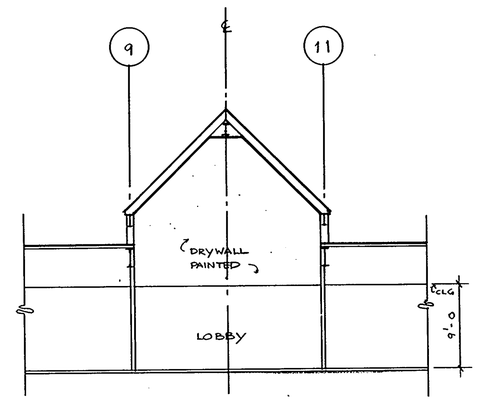

3 SECTION 1/8"=1'-0"

PHASE 1

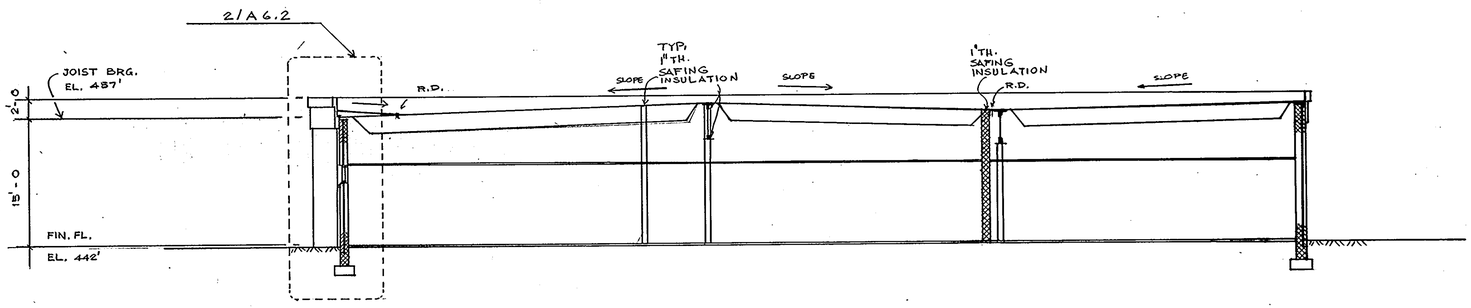

2. SECTION 1/8"= 1'- 0"

PHASE 1

NOTE:
PROVIDE 1"TH. SAFING INSULATION FOR ALL FIRE RATED & SMOKE TIGHT WALLS. TYP. LOCATION AS SHOWN IN FLOOR PLANS & BUILDING SECTIONS.

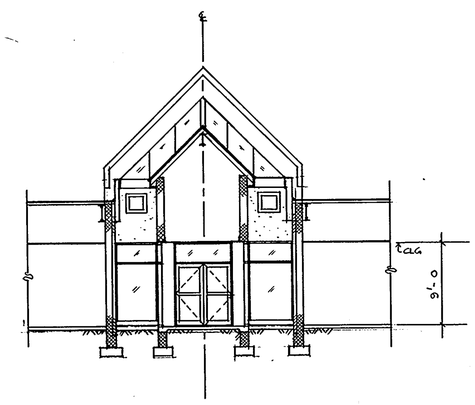

4 SECTION 1/8"=1'-0"

PHASE 1

ARCHITECTURAL TECHNOLOGIES INC.
Architects and Construction Consultants
9192 Red Branch Rd. Suite 300
Columbia MD. 21045 (301) 995-4067

IN ASSOCIATION WITH:

CIVIL & GEOTECH ENGINEER:	E B A ENGINEERING, INC.
STRUCTURAL ENGINEER:	QODESH ENGINEERING SERVICES, INC.
MECHANICAL & ELECTRICAL ENGINEER:	BHARGAVA INTERNATIONAL, INC.
FIRE PROTECTION ENGINEER:	STANTON ENGINEERING

ARCHITECTURAL REGISTRATION SEAL 3295 STATE OF MARYLAND

REVISIONS

AS BUILT	11/24/94

BUILDING SECTION

HOWARD COUNTY
PUBLIC SAFETY COMPLEX

SCAGGSVILLE ANNEX
11226 ROUTE 216
LAUREL, MD. 20707

CAPITAL PROJECT NO. C - 0227

DATE: 3-25-92

DRAWING NO. **A 5.2**

1650

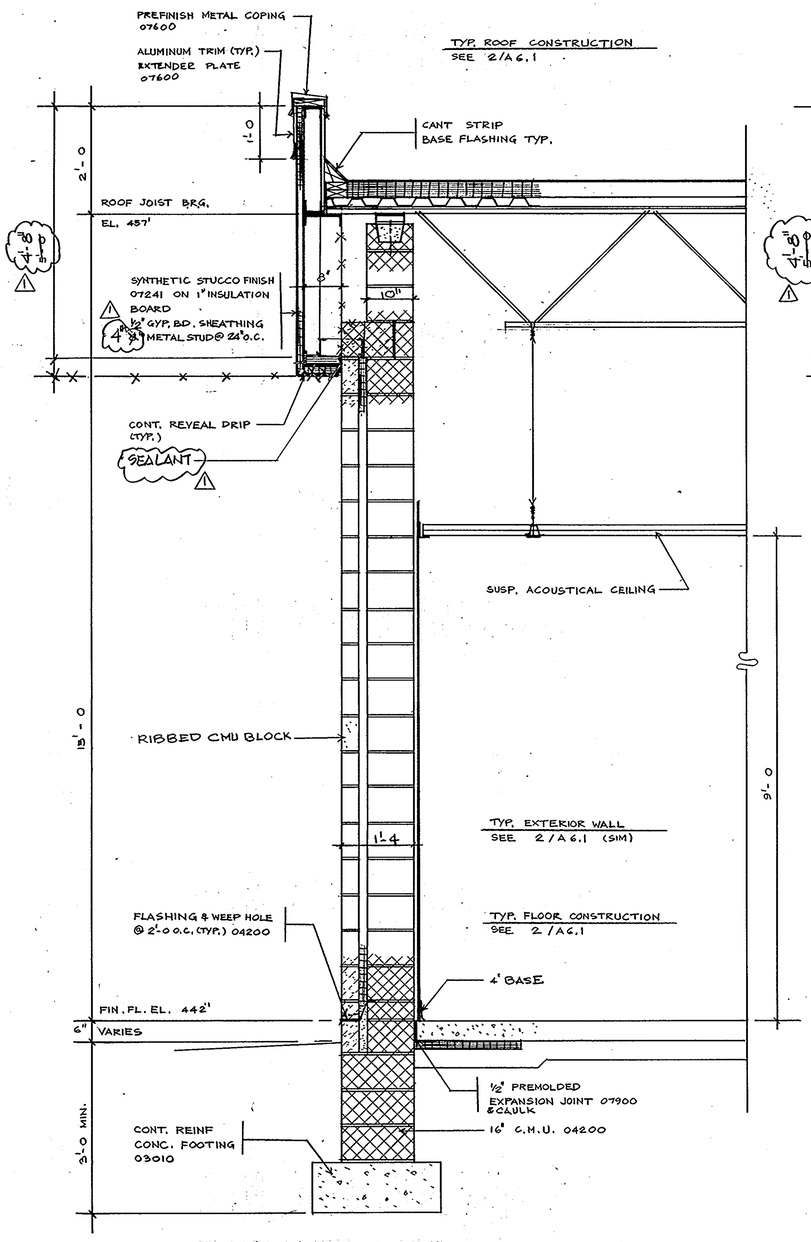

1 WALL SECTION 3/4"= 1'- 0"

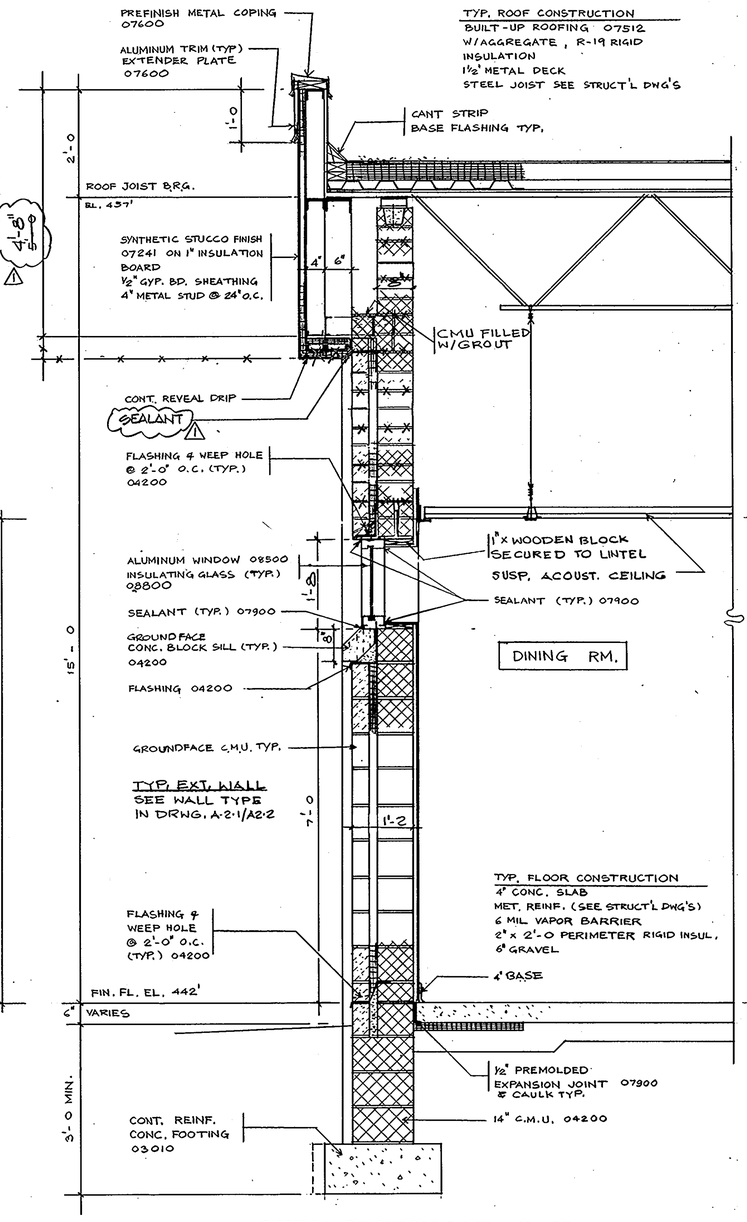

2 WALL SECTION 3/4"= 1'- 0"

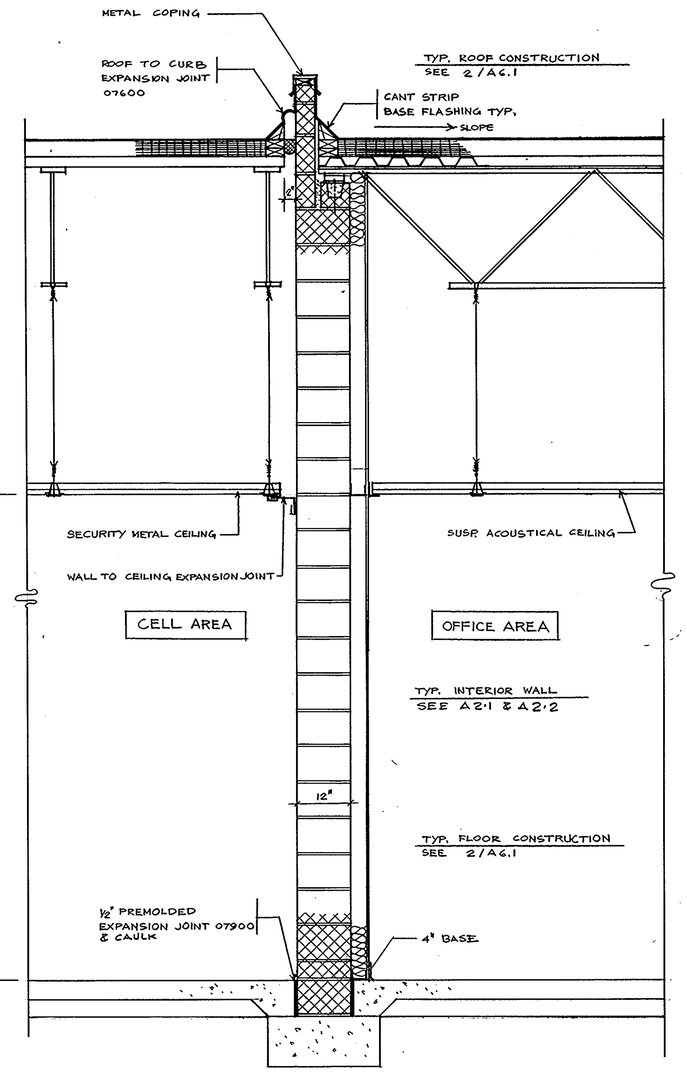

3 WALL SECTION 3/4"= 1'- 0"

ARCHITECTURAL TECHNOLOGIES INC.
Architects and Construction Consultants
9192 Red Branch Rd. Suite 300
Columbia MD. 21045 (301) 995-4067

IN ASSOCIATION WITH:

CIVIL & GEOTECH ENGINEER:	E B A ENGINEERING, INC.
STRUCTURAL ENGINEER:	QODESH ENGINEERING SERVICES, INC.
MECHANICAL & ELECTRICAL ENGINEER:	BHARGAVA INTERNATIONAL, INC.
FIRE PROTECTION ENGINEER:	STANTON ENGINEERING

SEAL: ARCHITECTURAL REGISTRATION BOARD 3295-A

REVISIONS

1 AS BUILT 11/24/94

WALL SECTIONS

HOWARD COUNTY PUBLIC SAFETY COMPLEX

SCAGGSVILLE ANNEX
11226 ROUTE 216
LAUREL, MD. 20707

CAPITAL PROJECT NO. C - 0227

DATE: 3-25-92

DRAWING NO. A6.1

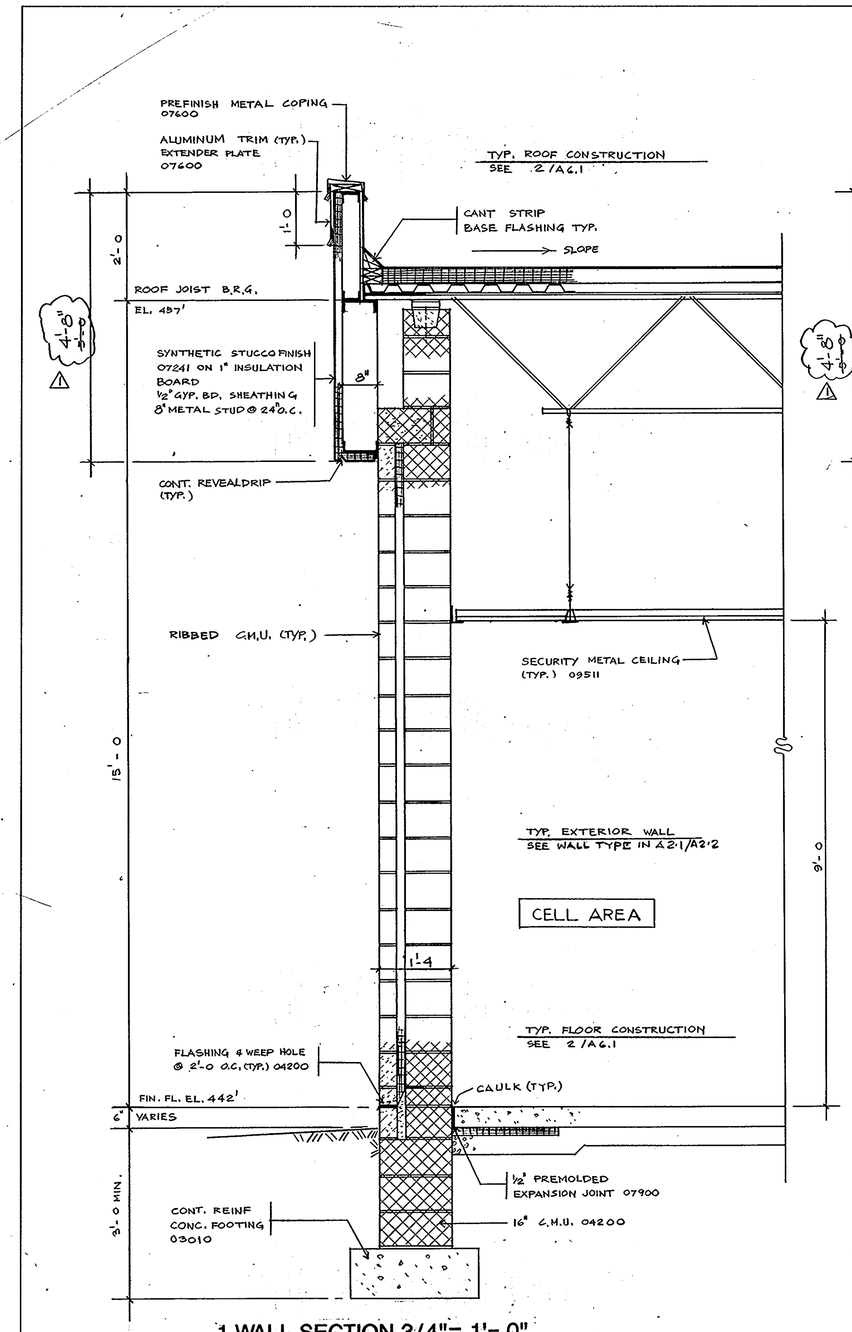

1 WALL SECTION 3/4"= 1'-0"

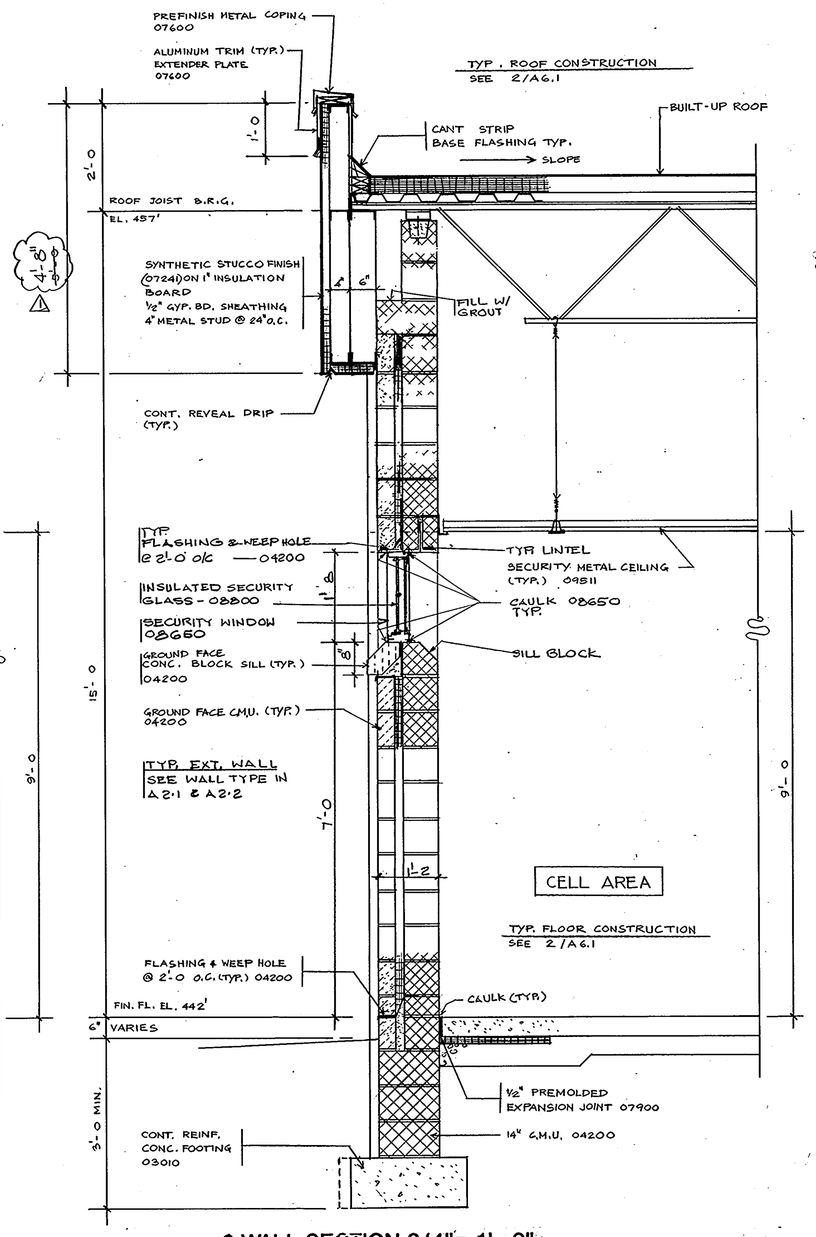

2 WALL SECTION 3/4"= 1'-0"

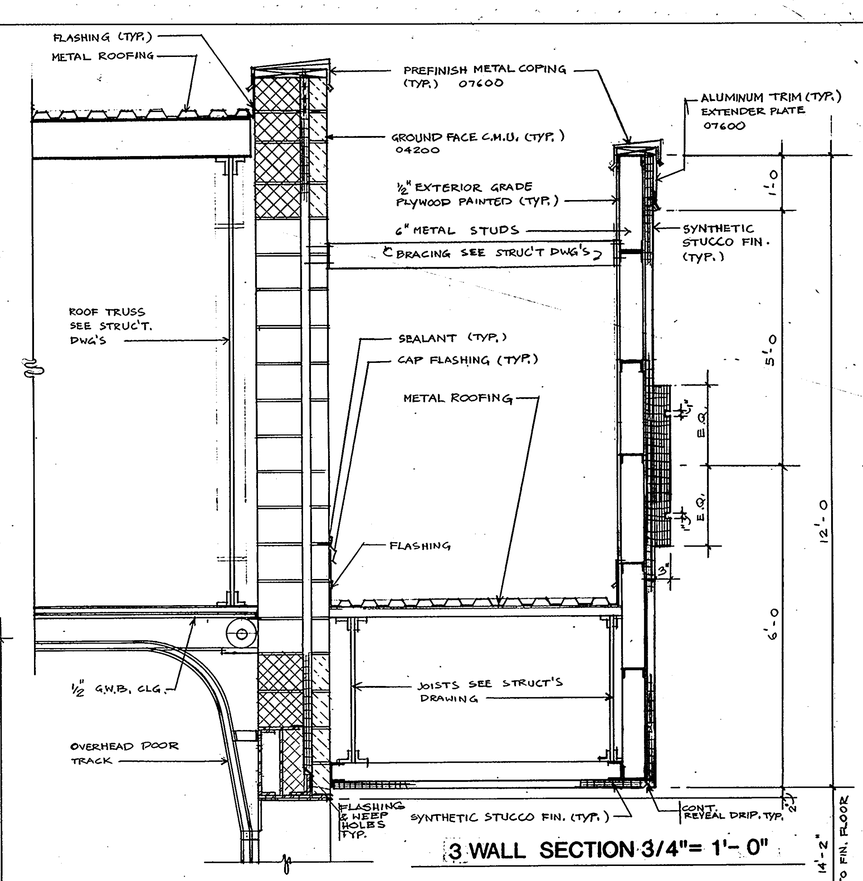

3 WALL SECTION 3/4"= 1'-0"

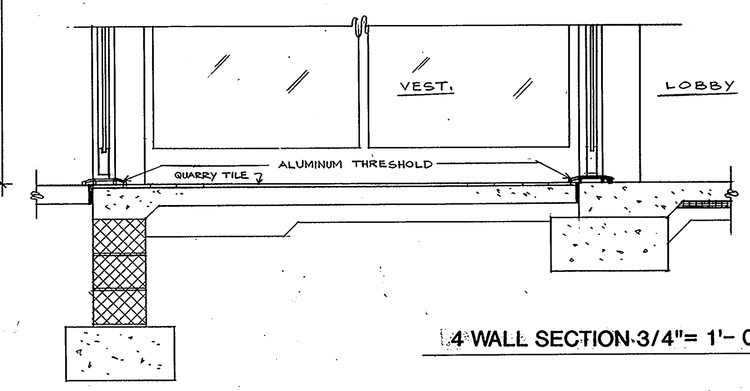

4 WALL SECTION 3/4"= 1'-0"

ARCHITECTURAL TECHNOLOGIES INC.
Architects and Construction Consultants
9192 Red Branch Rd. Suite 300
Columbia MD. 21045 (301) 995-4067

IN ASSOCIATION WITH:

CIVIL & GEOTECH ENGINEER:	E B A ENGINEERING, INC.
STRUCTURAL ENGINEER:	QODESH ENGINEERING SERVICES, INC.
MECHANICAL & ELECTRICAL ENGINEER:	BHARGAVA INTERNATIONAL, INC.
FIRE PROTECTION ENGINEER:	STANTON ENGINEERING

ARCHITECTURAL REGISTRATION BOARD SEAL 3295-A STATE OF MARYLAND

REVISIONS

1 AS BUILT	11/24/94

WALL SECTIONS

HOWARD COUNTY PUBLIC SAFETY COMPLEX

SCAGGSVILLE ANNEX
11226 ROUTE 216
LAUREL, MD. 20707

CAPITAL PROJECT NO. C - 0227

DATE: 3-25-92

DRAWING NO. A6.2

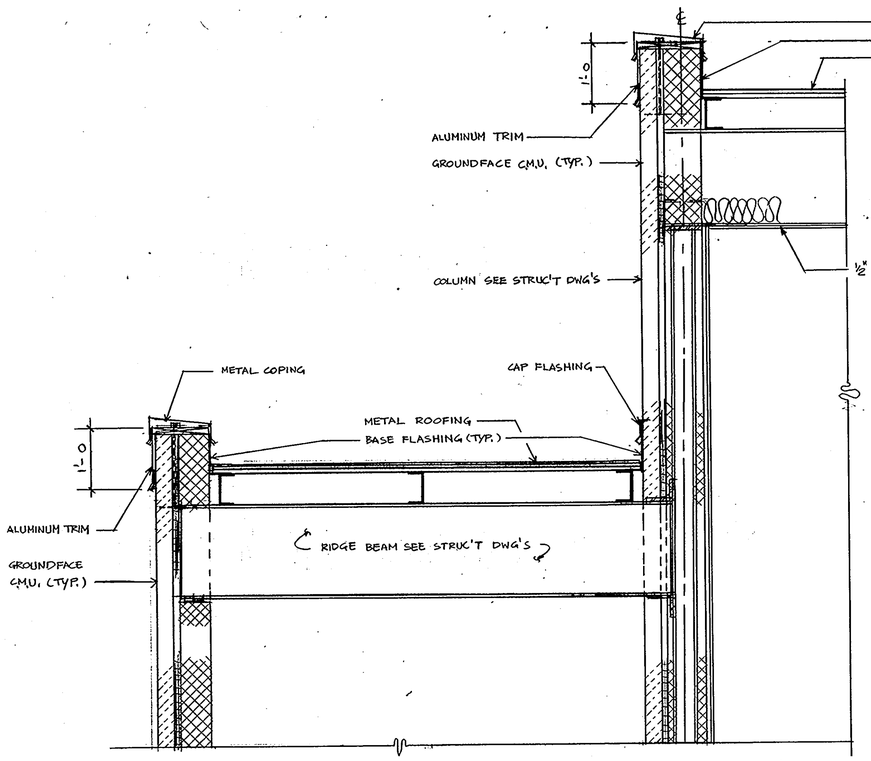

1 WALL SECTION 3/4"= 1'- 0"

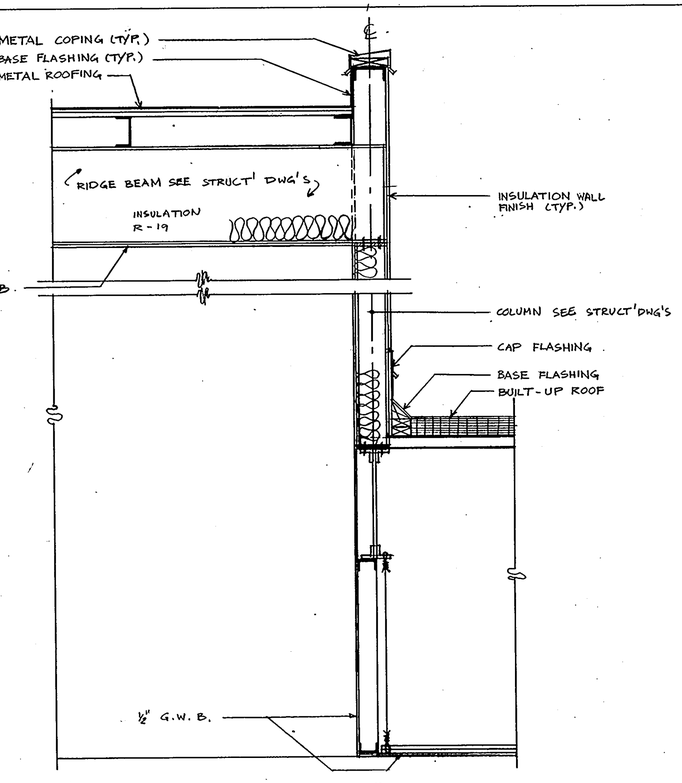

2 WALL SECTION 3/4"= 1'- 0"

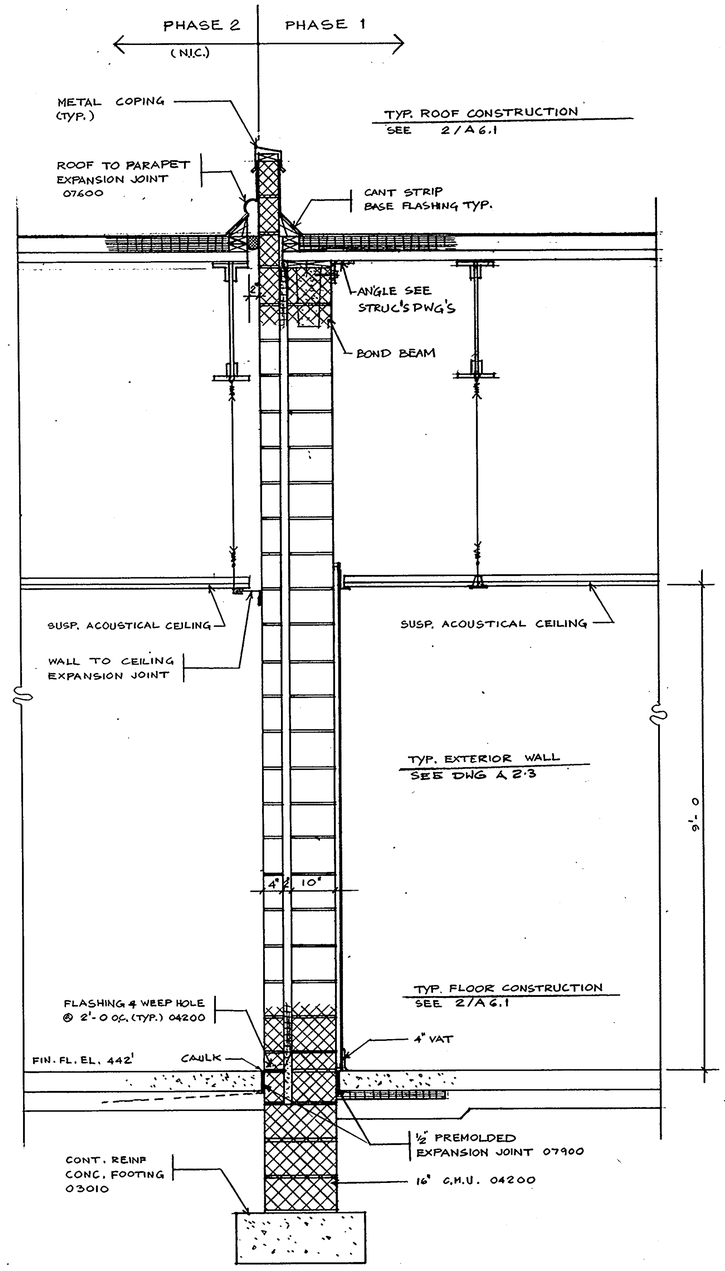

5 WALL SECTION 3/4"= 1'- 0"

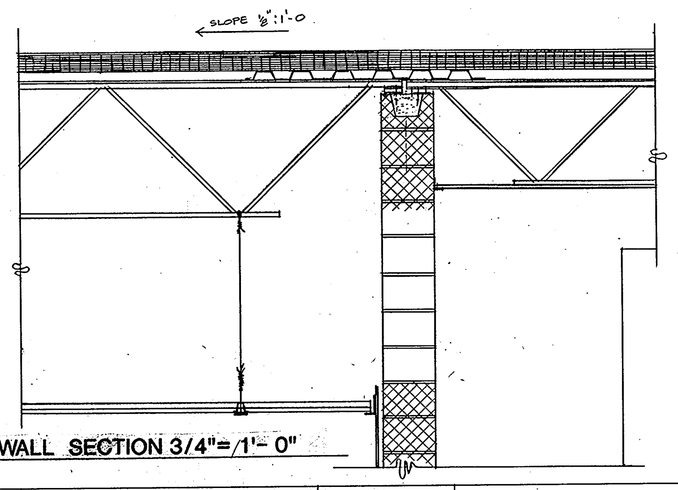

3 WALL SECTION 3/4"= 1'- 0"

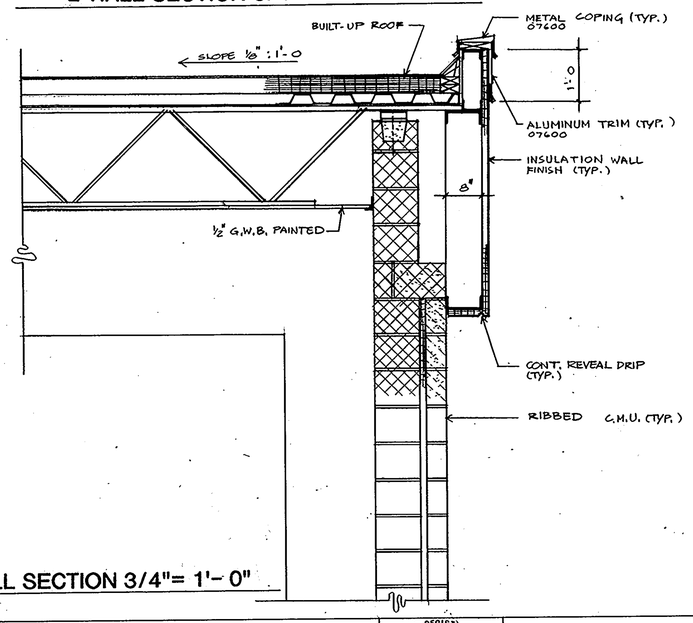

4 WALL SECTION 3/4"= 1'- 0"

ARCHITECTURAL TECHNOLOGIES INC.
Architects and Construction Consultants
9192 Red Branch Rd. Suite 300
Columbia MD. 21045 (301) 995-4067

IN ASSOCIATION WITH:
CIVIL & GEOTECH ENGINEER: E B A ENGINEERING, INC.
STRUCTURAL ENGINEER: GODESH ENGINEERING SERVICES, INC.
MECHANICAL & ELECTRICAL ENGINEER: BHARGAVA INTERNATIONAL, INC.
FIRE PROTECTION ENGINEER: STANTON ENGINEERING

ARCHITECTURAL REGISTRATION BOARD SEAL 3295-A STATE OF MARYLAND

REVISIONS	
AS BUILT	11/24/94

WALL SECTIONS

HOWARD COUNTY
PUBLIC SAFETY COMPLEX

SCAGGSVILLE ANNEX
11226 ROUTE 216
LAUREL, MD. 20707

29 OF 90

CAPITAL PROJECT NO. C - 0227

DATE: 3-25-92

DRAWING NO. A6.3

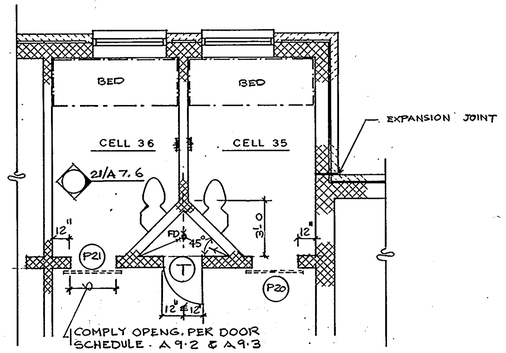

4. DETAIL FLOOR PLAN 1/4"= 1'- 0"
TYP. FOR CELLS

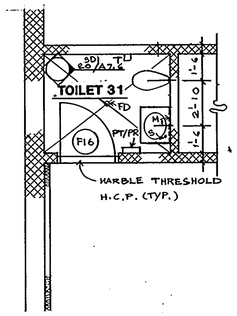

3. DETAIL FLOOR PLAN 1/4"= 1'- 0"

6. LEGEND:

T:	TOILET TISSUE HOLDER; BOBRICK B288 OR EQUAL.
PT/PR:	SEMIRECESSED PAPER TOWEL DISPENSER/RECEPTACLE; BOBRICK B38032 OR EQUAL.
S:	LAVATORY MOUNTED SOAP DISPENSER; BOBRICK B8226 OR EQUAL
M:	S/S FRAMED MIRROR W/SHELF; BOBRICK B292-2430 OR EQUAL
SD1:	RECESSED SANITARY NAPKIN DISPOSAL; BOBRICK B35303 OR EQUAL
SD2:	SANITARY NAPKIN DISPOSAL; BOBRICK B354 OR EQUAL
FD:	FLOOR DRAIN
MR:	MOP RACK; BOBRICK B223 OR EQUAL
SH:	SHELF 1'± x AS SHOWN ON PLAN; BOBRICK B298 OR EQUAL
DK:	LAMINATED COUNTER TOP
GB1:	GRAB BAR 36"long x 1-1/2" dia; BOBRICK B6206.99 OR EQUAL
GB2:	GRAB BAR 42"long x 1-1/2" dia; BOBRICK B6206.99 OR EQUAL
GB3:	GRAB BAR AT SHOWER 2' + 3'; BOBRICK B62616.99 OR EQUAL
TB:	TOWEL BAR 30" LONG; BOBRICK B530 OR EQUAL
RH:	ROBE HOOK; BOBRICK B2116 OR EQUAL
SC:	SHOWER CURTAIN ROD & HOOK; BOBRICK B207 & B204-1 OR EQUAL
FS:	FOLDING SHOWER SEAT; B518 (LEFT/RIGHT HAND SEATED AS SHOWN IN THE DRAWING; OR EQUAL.
DF:	DRINKING FOUNTAIN; HALSEY TAYLOR OR -ESR
M2	S/S FRAMED MIRROR FULL SIZE/DWG DETAIL ; BOBRICK B 290 SERIES OR EQUAL

NOTE: ALL MODEL NUMBERS AS SHOWN ABOVE ARE TAKEN FROM THE SWEET'S CATALOG 1991.

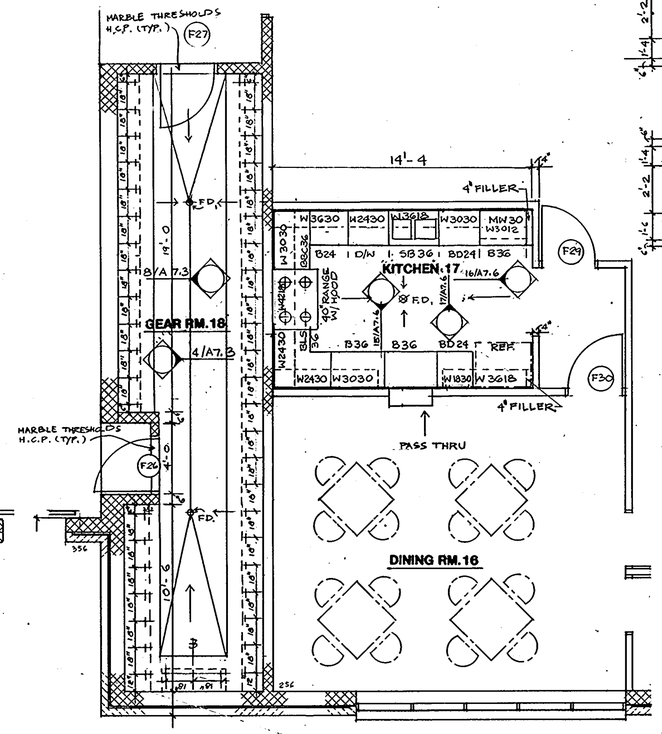

2. DETAIL FLOOR PLAN 1/4"= 1'- 0"

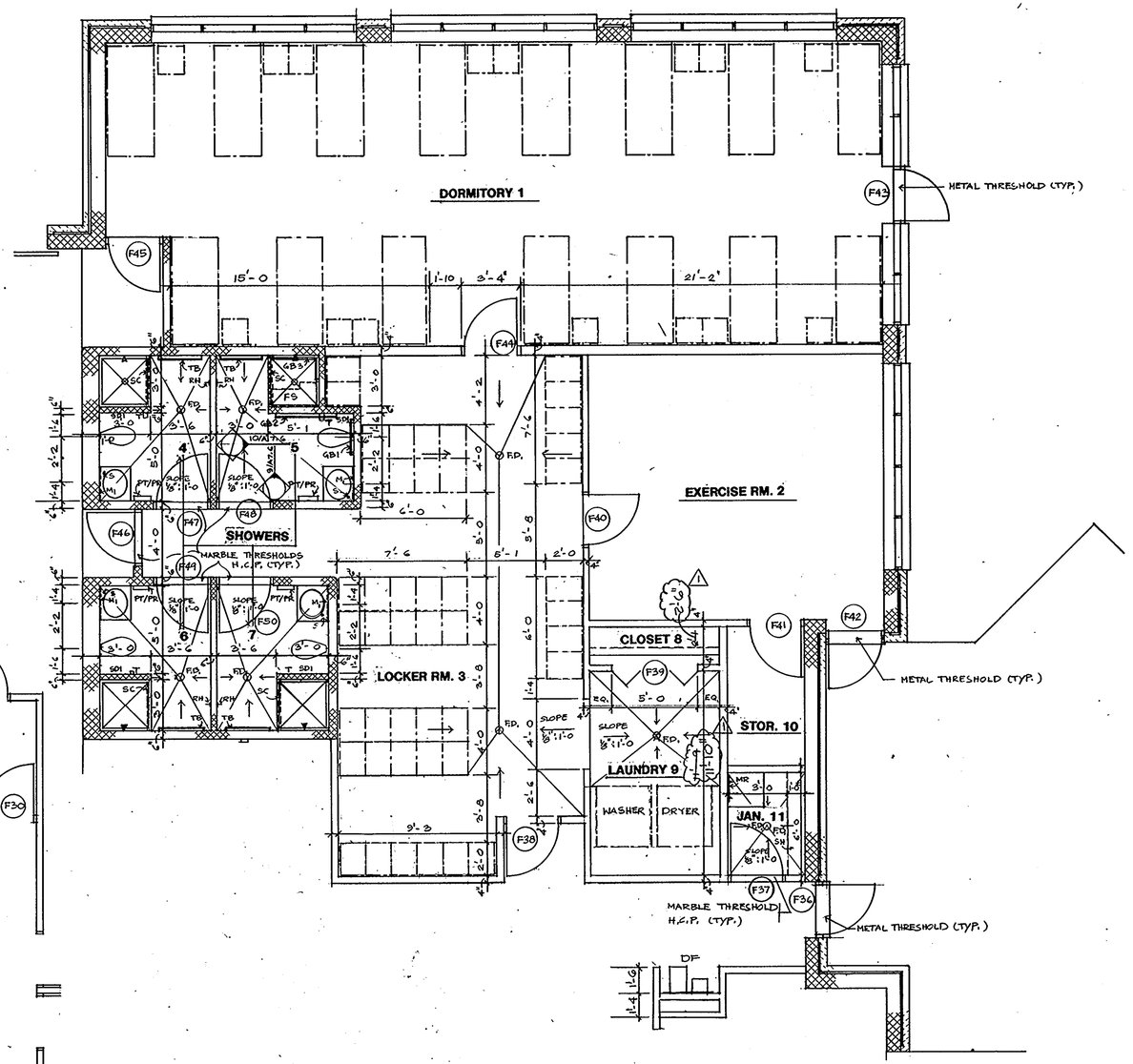

1. DETAIL FLOOR PLAN 1/4"= 1'- 0"

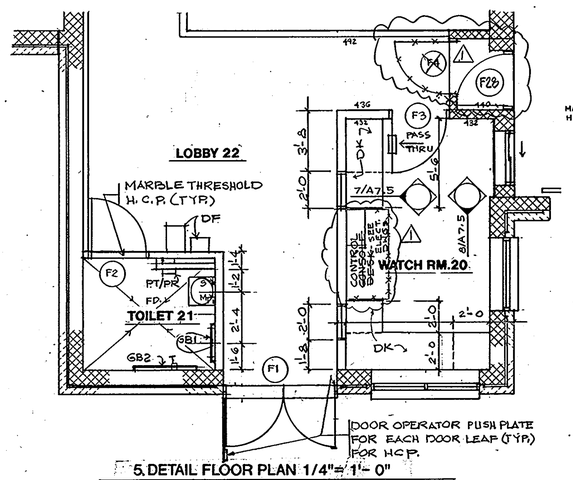

5. DETAIL FLOOR PLAN 1/4"= 1'- 0"

ARCHITECTURAL TECHNOLOGIES INC.
Architects and Construction Consultants
9192 Red Branch Rd. Suite 300
Columbia MD. 21045 (301) 995-4067

IN ASSOCIATION WITH:

CIVIL & GEOTECH ENGINEER:	E B A ENGINEERING, INC.
STRUCTURAL ENGINEER:	QODESH ENGINEERING SERVICES, INC.
MECHANICAL & ELECTRICAL ENGINEER:	BHARGAVA INTERNATIONAL, INC.
FIRE PROTECTION ENGINEER:	STANTON ENGINEERING

SEAL: ARCHITECTURAL REGISTRATION BOARD 3295-A STATE OF MARYLAND

REVISIONS
1 AS BUILT 11/24/94

DETAIL PLANS
FIRE STATION

HOWARD COUNTY
PUBLIC SAFETY COMPLEX

SCAGGSVILLE ANNEX
11226 ROUTE 216
LAUREL, MD. 20707

CAPITAL PROJECT NO. C - 0227

DATE: 3-25-92

DRAWING NO. A 7.1

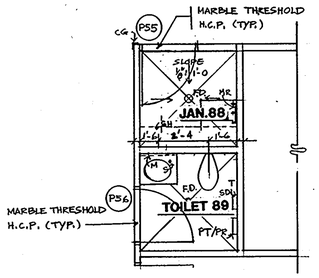

5 DETAIL FLOOR PLAN 1/4"= 1'- 0"

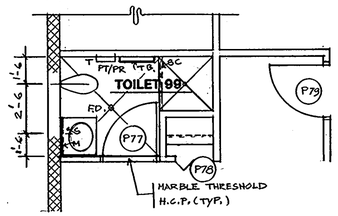

4 DETAIL FLOOR PLAN 1/4"= 1'- 0"

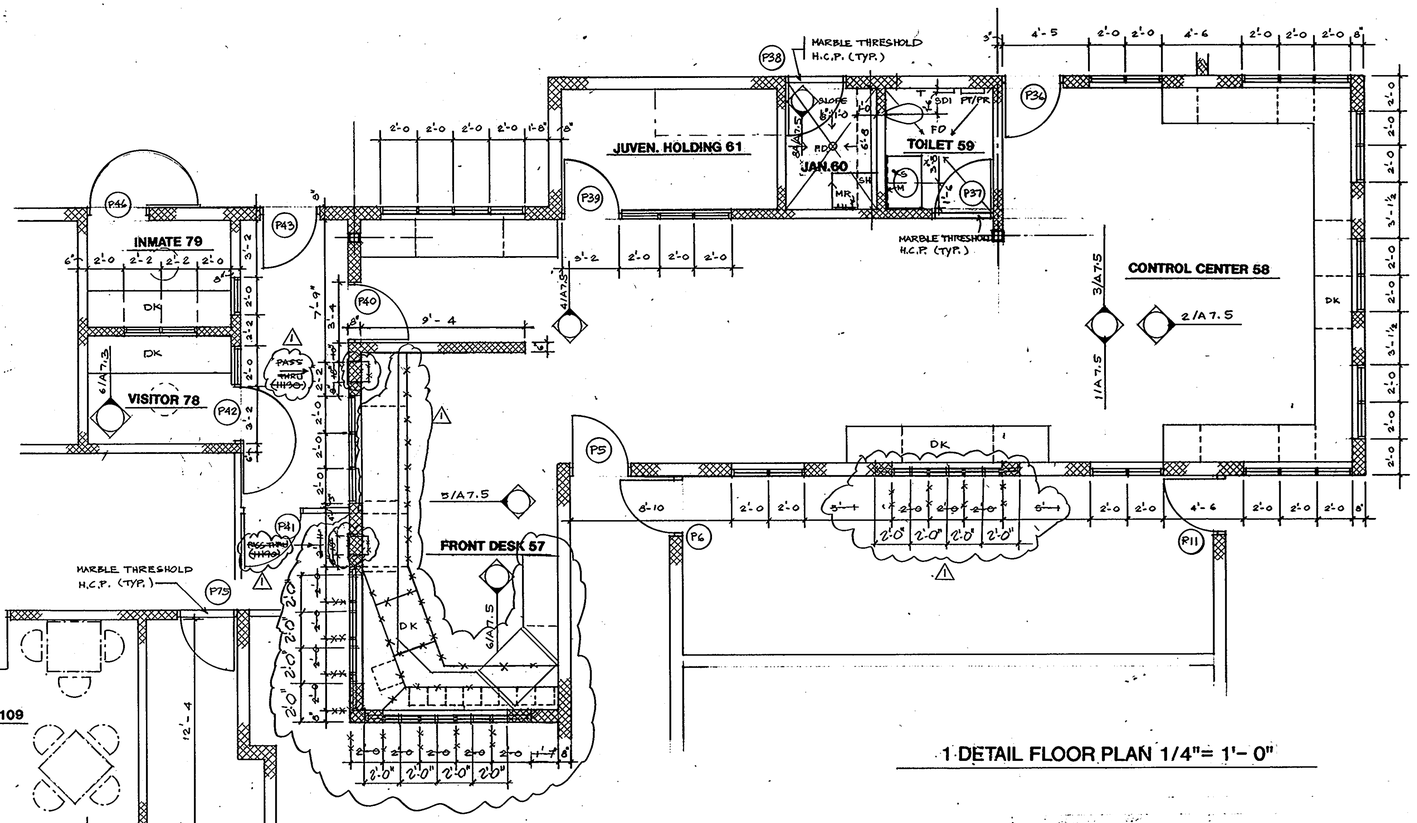

1 DETAIL FLOOR PLAN 1/4"= 1'- 0"

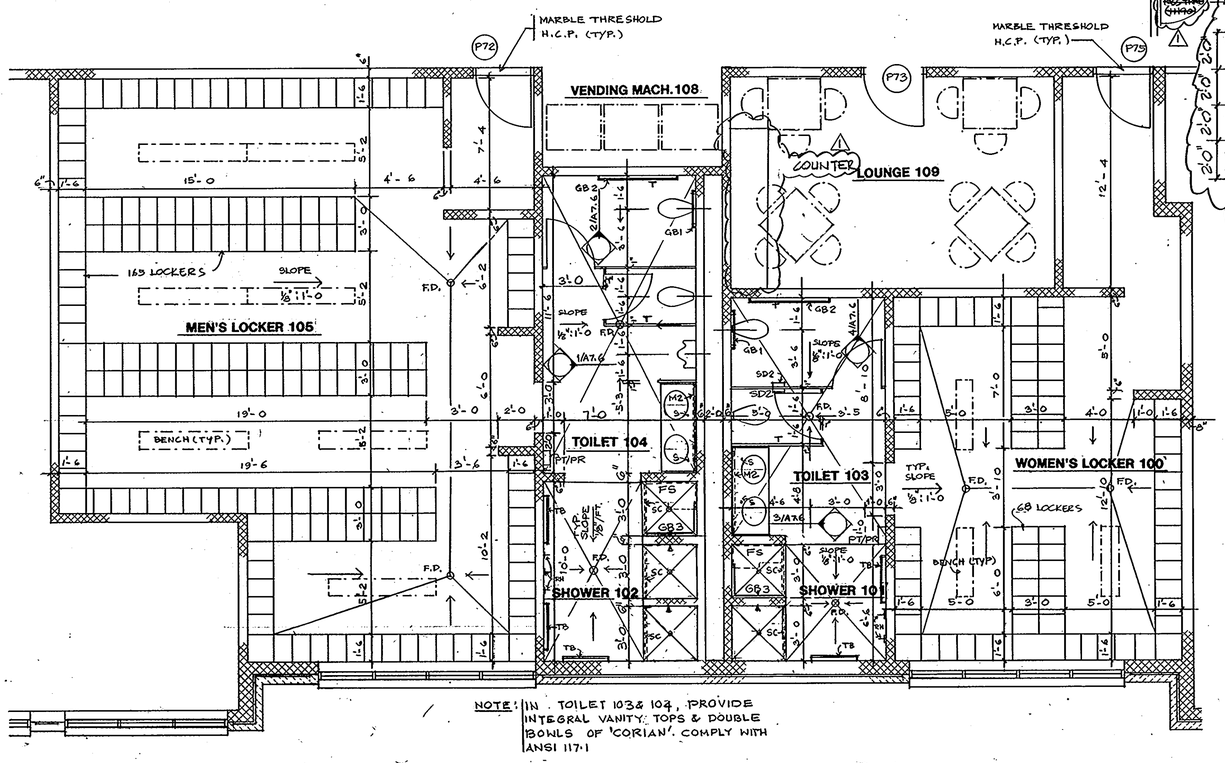

3 DETAIL FLOOR PLAN 1/4"= 1'- 0"

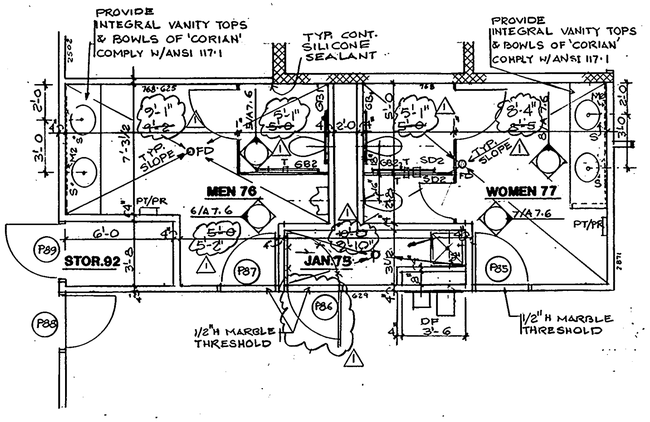

2 DETAIL FLOOR PLAN 1/4"= 1'- 0"

6. LEGEND:

T:	TOILET TISSUE HOLDER; BOBRICK B288 OR EQUAL.
PT/PR:	SEMIRECESSED PAPER TOWEL DISPENSER/RECEPTACLE; BOBRICK B38032 OR EQUAL.
S:	LAVATORY MOUNTED SOAP DISPENSER; BOBRICK B8226 OR EQUAL
M:	S/S FRAMED MIRROR W/SHELF; BOBRICK B292-1824 OR EQUAL
SD1:	RECESSED SANITARY NAPKIN DISPOSAL; BOBRICK B35303 OR EQUAL
SD2:	SANITARY NAPKIN DISPOSAL; BOBRICK B354 OR EQUAL
FD:	FLOOR DRAIN
MR:	MOP RACK; BOBRICK B223 OR EQUAL
SH:	SHELF 1'± x AS SHOWN ON PLAN; BOBRICK B298 OR EQUAL
DK:	LAMINATED COUNTER TOP
GB1:	GRAB BAR 36"long x 1-1/2" dia; BOBRICK B6206.99 OR EQUAL
GB2:	GRAB BAR 42"long x 1-1/2" dia; BOBRICK B6206.99 OR EQUAL
GB3:	GRAB BAR AT SHOWER 2' + 3'; BOBRICK B62616.99 OR EQUAL
TB:	TOWEL BAR 30" LONG; BOBRICK B530 OR EQUAL
RH:	ROBE HOOK; BOBRICK B2116 OR EQUAL
SC:	SHOWER CURTAIN ROD & HOOK; BOBRICK B207 & B204-1 OR EQUAL
FS:	FOLDING SHOWER SEAT; B518 (LEFT/RIGHT HAND SEATED AS SHOWN IN THE DRAWING; OR EQUAL.
DF:	DRINKING FOUNTAIN; HALSEY TAYLOR ~~SH~~ ESR.
M2:	S/S FRAMED MIRROR FULL SIZE/LNG DETAIL. BOBRICK B290 OR EQUAL

NOTE: ALL MODEL NUMBERS AS SHOWN ABOVE ARE TAKEN FROM THE SWEET'S CATALOG 1991.

ARCHITECTURAL TECHNOLOGIES INC.
Architects and Construction Consultants
9192 Red Branch Rd. Suite 300
Columbia MD. 21045 (301) 995-4067

IN ASSOCIATION WITH:

CIVIL & GEOTECH ENGINEER:	E B A ENGINEERING, INC.
STRUCTURAL ENGINEER:	QODESH ENGINEERING SERVICES, INC.
MECHANICAL & ELECTRICAL ENGINEER:	BHARGAVA INTERNATIONAL, INC.
FIRE PROTECTION ENGINEER:	STANTON ENGINEERING

ARCHITECTURAL REGISTRATION BOARD SEAL: 3295-A STATE OF MARYLAND

REVISIONS
1 AS BUILT 11/24/94

DETAIL PLANS
POLICE STATION - PHASE 1

HOWARD COUNTY
PUBLIC SAFETY COMPLEX

SCAGGSVILLE ANNEX
11226 ROUTE 216
LAUREL, MD. 20707

CAPITAL PROJECT NO. C - 0227

DATE: 3-25-92

DRAWING NO. A7.2

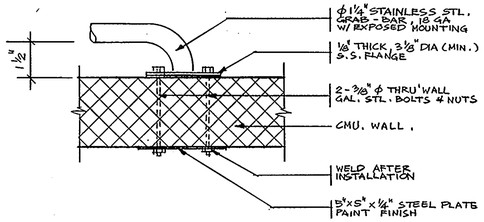

13 HANDCUFF BAR (HCB)
NO SCALE

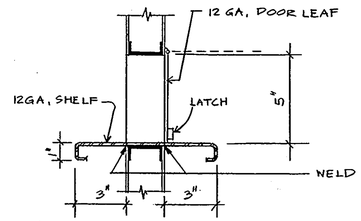

12 PASS THRU AT DOOR
NO SCALE

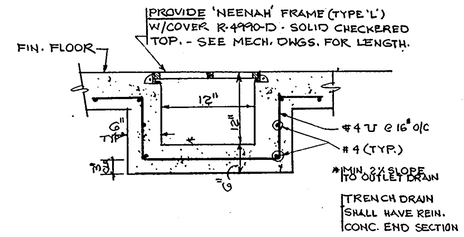

11. TYP. TRENCH DRAIN DETAIL
NO SCALE

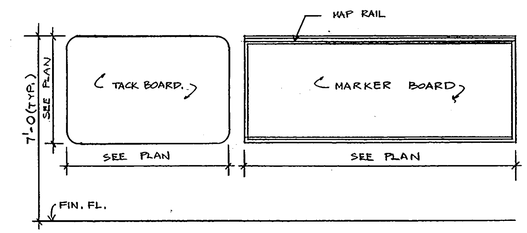

1 TACK & MARKER BOARD ELEVATION
NO SCALE

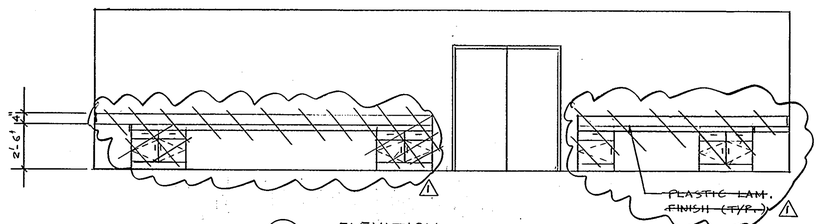

10 ELEVATION
1/4" = 1'-0"

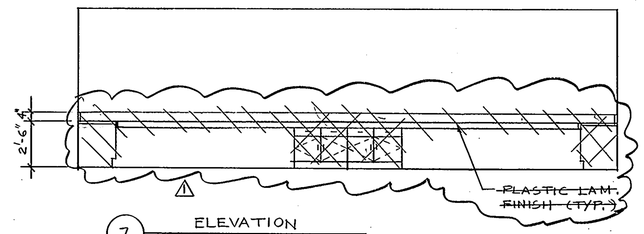

7 ELEVATION
1/4" = 1'-0"

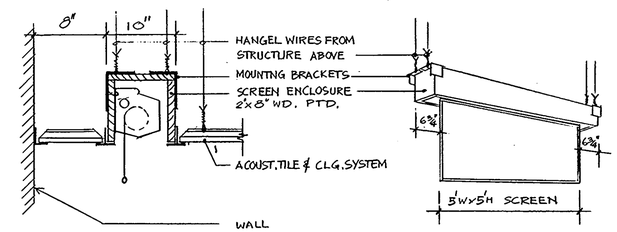

2 PROJECTION SCREEN
NO SCALE

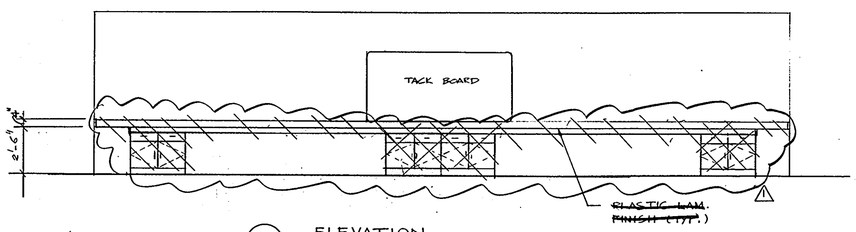

9 ELEVATION
1/4" = 1'-0"

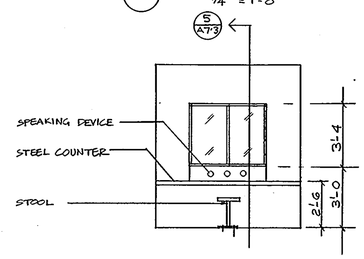

6 ELEVATION
1/4" = 1'-0"

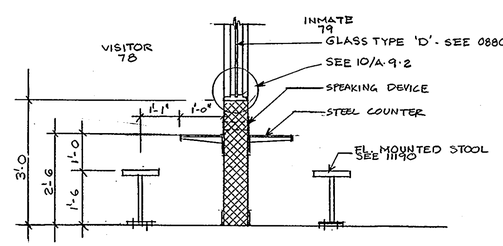

5 SECTION
1/2" = 1'-0"

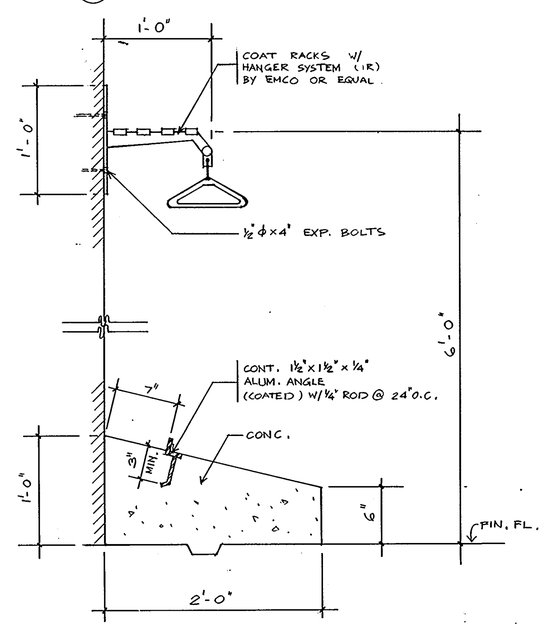

3 SECTION
1½" = 1'-0"

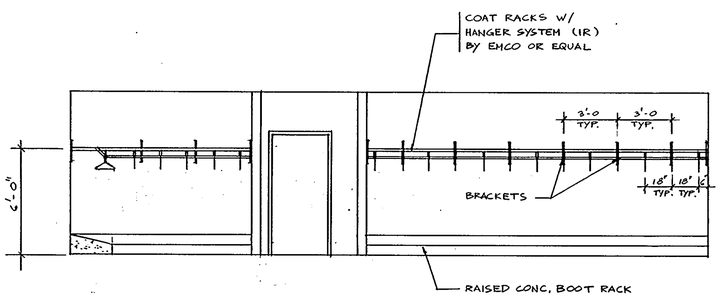

8 ELEVATION
1/4" = 1'-0"

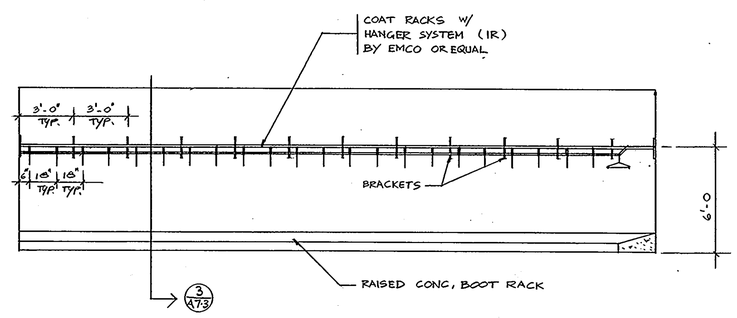

4 ELEVATION
1/2" = 1'-0"

ARCHITECHTURAL TECHNOLOGIES INC.
Architects and Construction Consultants
9192 Red Branch Rd. Suite 300
Columbia MD. 21045 (301) 995-4067

IN ASSOCIATION WITH:
CIVIL & GEOTECH ENGINEER: E & A ENGINEERING, INC.
STRUCTURAL ENGINEER: RODESH ENGINEERING SERVICES, INC.
MECHANICAL & ELECTRICAL ENGINEER: BHARGAVA INTERNATIONAL, INC.
FIRE PROTECTION ENGINEER: STANTON ENGINEERING

SEAL: ARCHITECTURAL REGISTRATION 3295-A STATE OF MARYLAND

REVISIONS
1 AS BUILT 11/24/94

DETAILS
HOWARD COUNTY PUBLIC SAFETY COMPLEX
SCAGGSVILLE ANNEX
11226 ROUTE 216
LAUREL, MD. 20707

32 OF 90
CAPITAL PROJECT NO. C - 0227
DATE: 3-25-92
DRAWING NO. A7.3

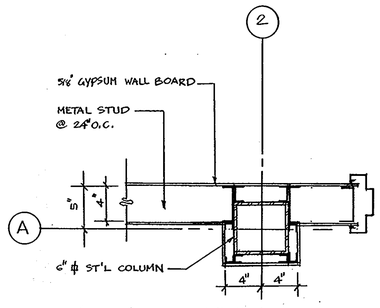

(NIC)

13 DETAIL

1½" = 1'-0"

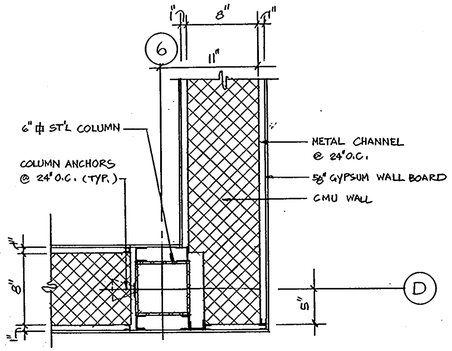

10 DETAIL

1½" = 1'-0"

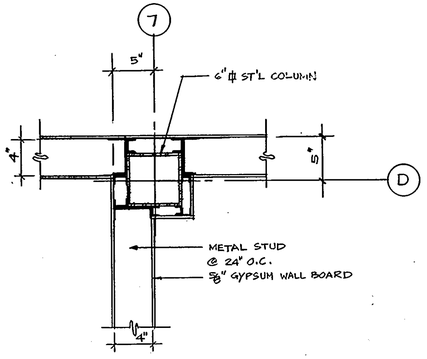

7 DETAIL

1½" = 1'-0"

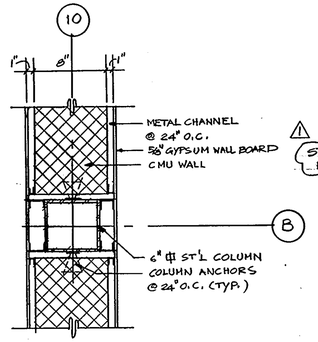

4 DETAIL

1½" = 1'-0"

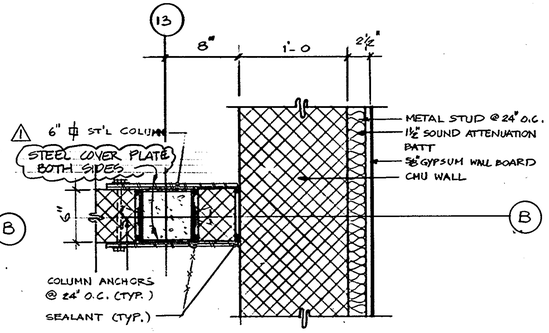

1 DETAIL

1½" = 1'-0"

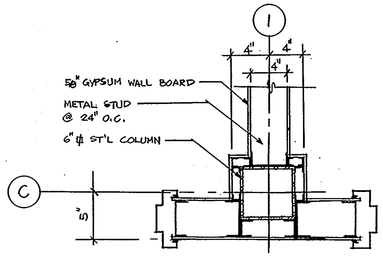

(NIC)

14 DETAIL

1½" = 1'-0"

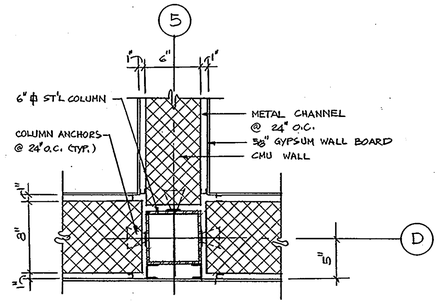

11 DETAIL

1½" = 1'-0"

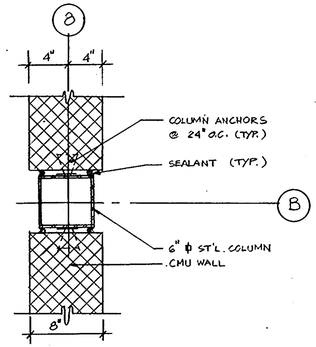

8 DETAIL

1½" = 1'-0"

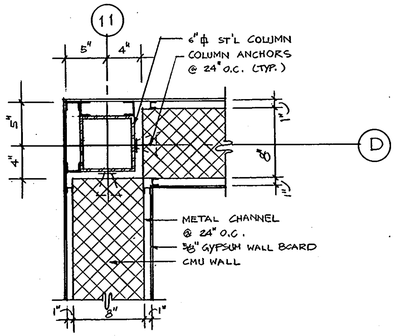

5 DETAIL

1½" = 1'-0"

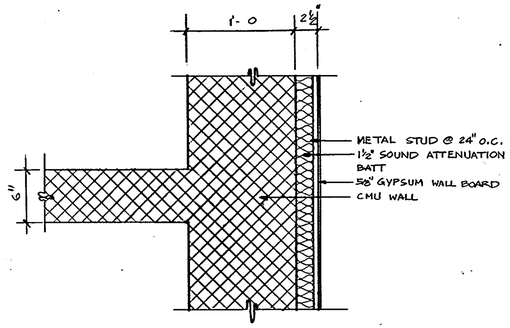

2 DETAIL

1½" = 1'-0"

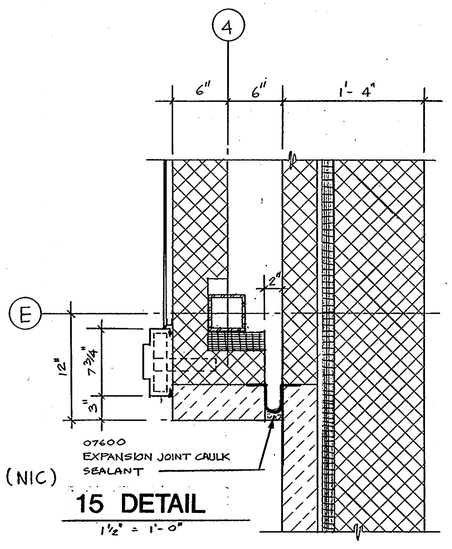

(NIC)

15 DETAIL

1½" = 1'-0"

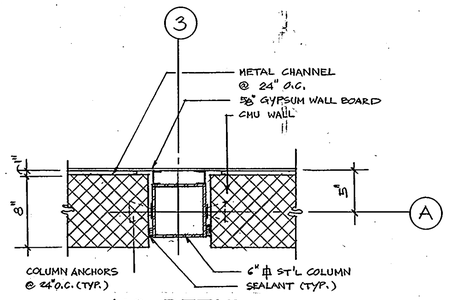

12 DETAIL

1½" = 1'-0"

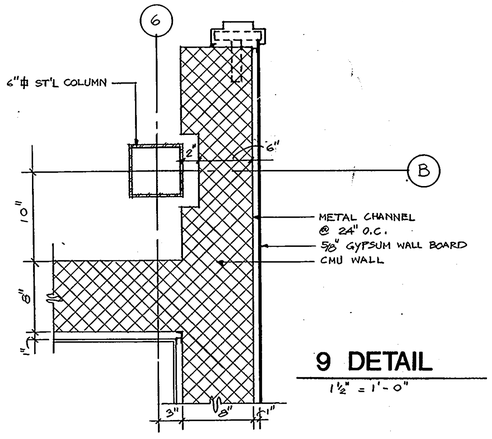

9 DETAIL

1½" = 1'-0"

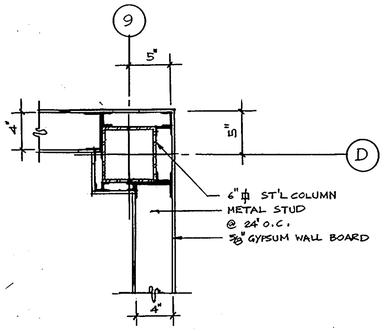

6 DETAIL

1½" = 1'-0"

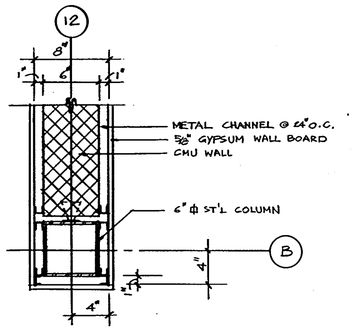

3 DETAIL

1½" = 1'-0"

ARCHITECTURAL TECHNOLOGIES INC. Architects and Construction Consultants 9192 Red Branch Rd. Suite 300 Columbia MD. 21045 (301) 995-4067	IN ASSOCIATION WITH: CIVIL & GEOTECH ENGINEER: E B A ENGINEERING, INC. STRUCTURAL ENGINEER: QODESH ENGINEERING SERVICES, INC. MECHANICAL & ELECTRICAL ENGINEER: BHARGAVA INTERNATIONAL, INC. FIRE PROTECTION ENGINEER: STANTON ENGINEERING	ARCHITECTURAL REGISTRATION SEAL 3295-A STATE OF MARYLAND	REVISIONS 1 AS BUILT 11/24/94

DETAIL PLANS	33 OF 90
HOWARD COUNTY PUBLIC SAFETY COMPLEX	CAPITAL PROJECT NO. C - 0227
SCAGGSVILLE ANNEX 11226 ROUTE 216 LAUREL, MD. 20707	DATE: 3-25-92 DRAWING NO. A 7.4

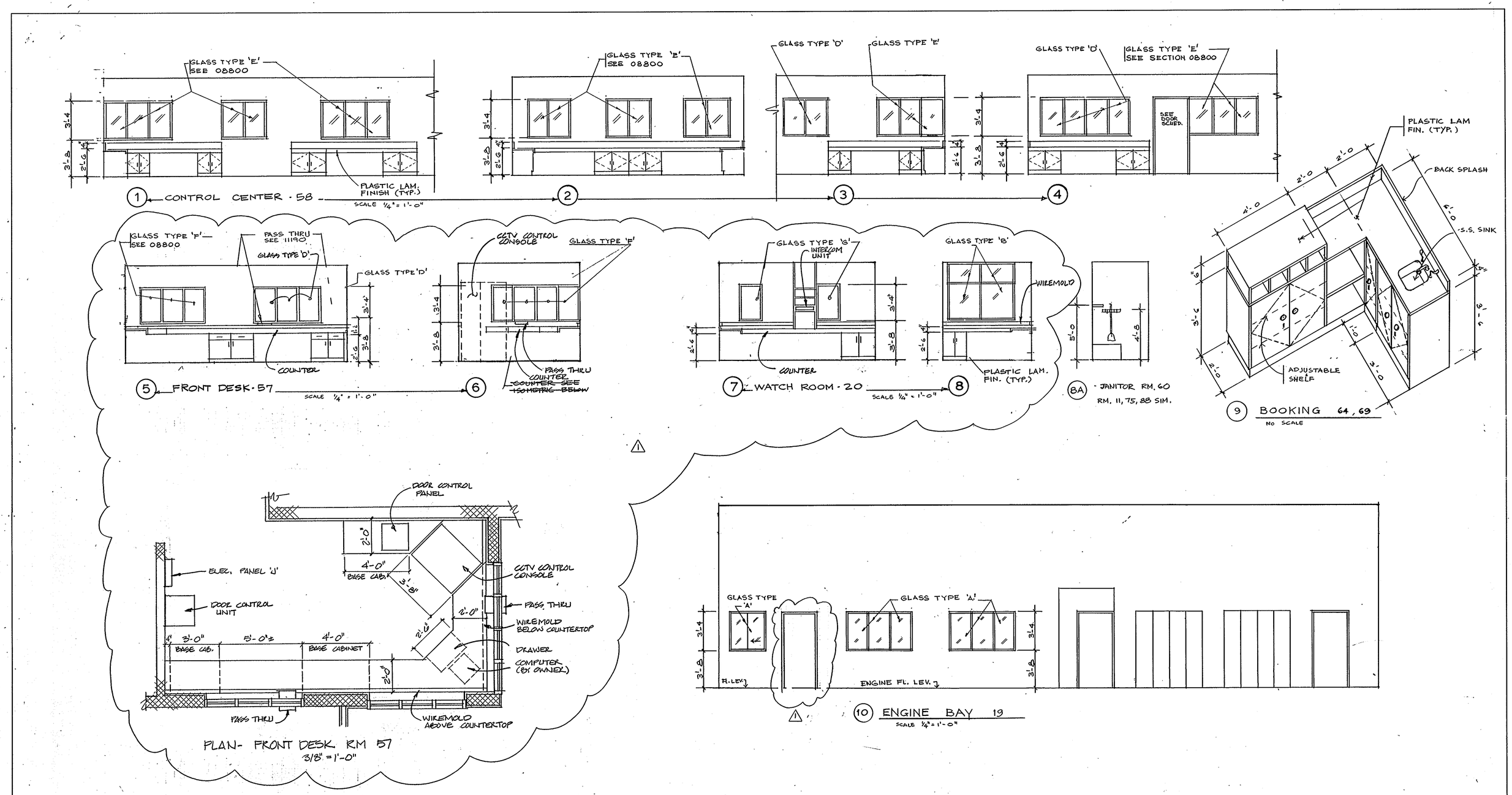

1650

ARCHITECTURAL TECHNOLOGIES INC.
Architects and Construction Consultants
9192 Red Branch Rd. Suite 300
Columbia MD, 21045 (301) 995-4067

IN ASSOCIATION WITH:

CIVIL & GEOTECH ENGINEER:	E B A ENGINEERING, INC.
STRUCTURAL ENGINEER:	QODESH ENGINEERING SERVICES, INC.
MECHANICAL & ELECTRICAL ENGINEER:	BHARGAVA INTERNATIONAL, INC.
FIRE PROTECTION ENGINEER:	STANTON ENGINEERING

SEAL: ARCHITECTURAL REGISTRATION BOARD 3295-A STATE OF MARYLAND

REVISIONS

1 AS BUILT 11/24/94

DETAILS

HOWARD COUNTY PUBLIC SAFETY COMPLEX

SCAGGSVILLE ANNEX
11226 ROUTE 216
LAUREL, MD. 20707

34 OF 90

CAPITAL PROJECT NO. C - 0227

DATE: 3-25-92

DRAWING NO. A.7.5

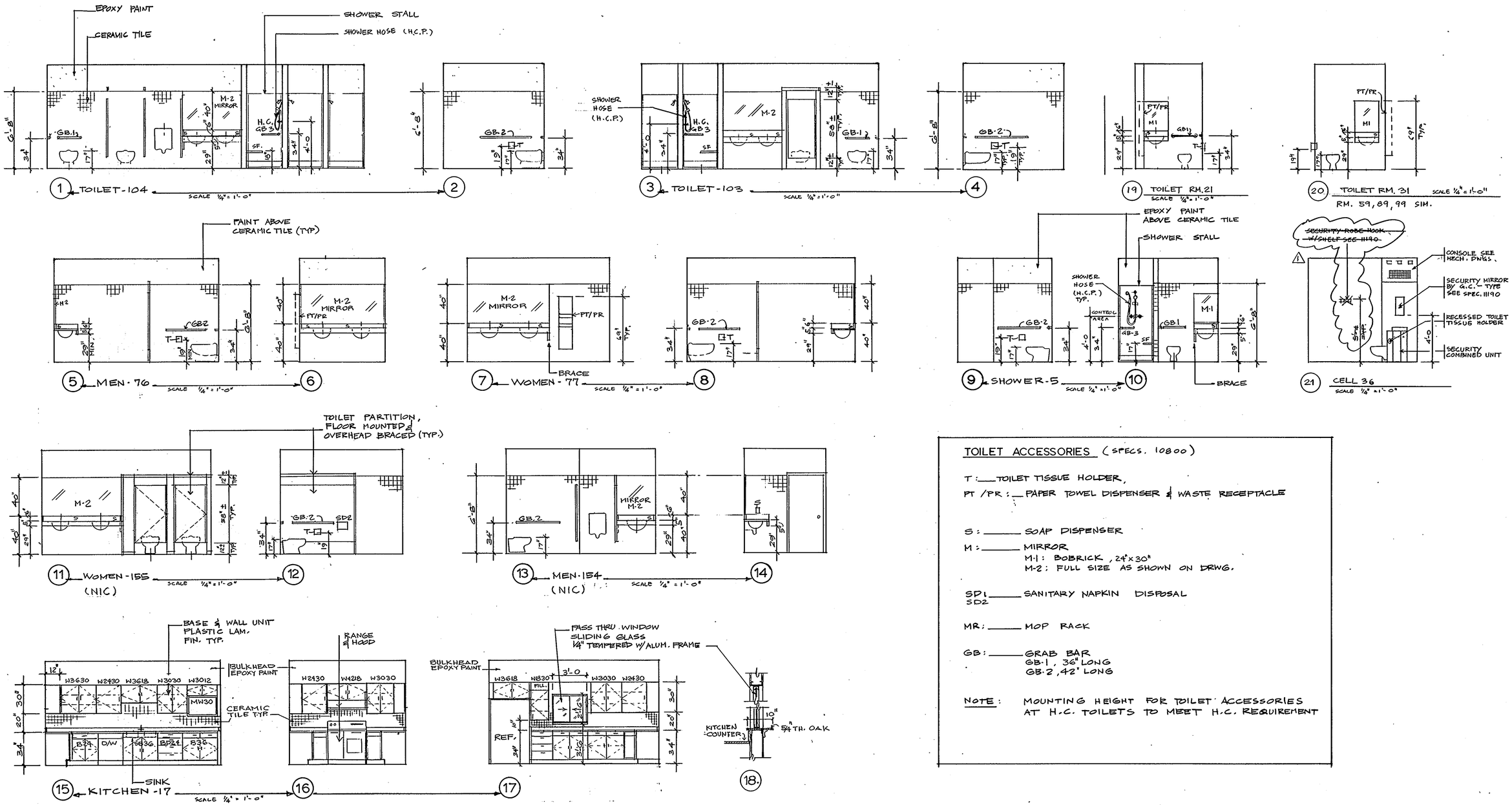

TOILET ACCESSORIES (SPECS. 10800)

T: ___ TOILET TISSUE HOLDER,

PT/PR: ___ PAPER TOWEL DISPENSER & WASTE RECEPTACLE

S: ___ SOAP DISPENSER

M: ___ MIRROR
M-1: BOBRICK, 24"x30"
M-2: FULL SIZE AS SHOWN ON DRWG.

SD1, SD2 ___ SANITARY NAPKIN DISPOSAL

MR: ___ MOP RACK

GB: ___ GRAB BAR
GB-1, 36" LONG
GB-2, 42" LONG

NOTE: MOUNTING HEIGHT FOR TOILET ACCESSORIES AT H.C. TOILETS TO MEET H.C. REQUIREMENT

ARCHITECTURAL TECHNOLOGIES INC.
Architects and Construction Consultants
9192 Red Branch Rd. Suite 300
Columbia MD. 21045 (301) 995-4067

IN ASSOCIATION WITH:

CIVIL & GEOTECH ENGINEER:	E B A ENGINEERING, INC.
STRUCTURAL ENGINEER:	QODESH ENGINEERING SERVICES, INC.
MECHANICAL & ELECTRICAL ENGINEER:	BHARGAVA INTERNATIONAL, INC.
FIRE PROTECTION ENGINEER:	STANTON ENGINEERING

ARCHITECTURAL REGISTRATION SEAL 3295

REVISIONS
1 AS-BUILT 11/24/94

DETAILS

HOWARD COUNTY PUBLIC SAFETY COMPLEX

SCAGGSVILLE ANNEX
11226 ROUTE 216
LAUREL, MD. 20707

CAPITAL PROJECT NO. C - 0227
DATE: 3-25-92
DRAWING NO. A 7.6

1650

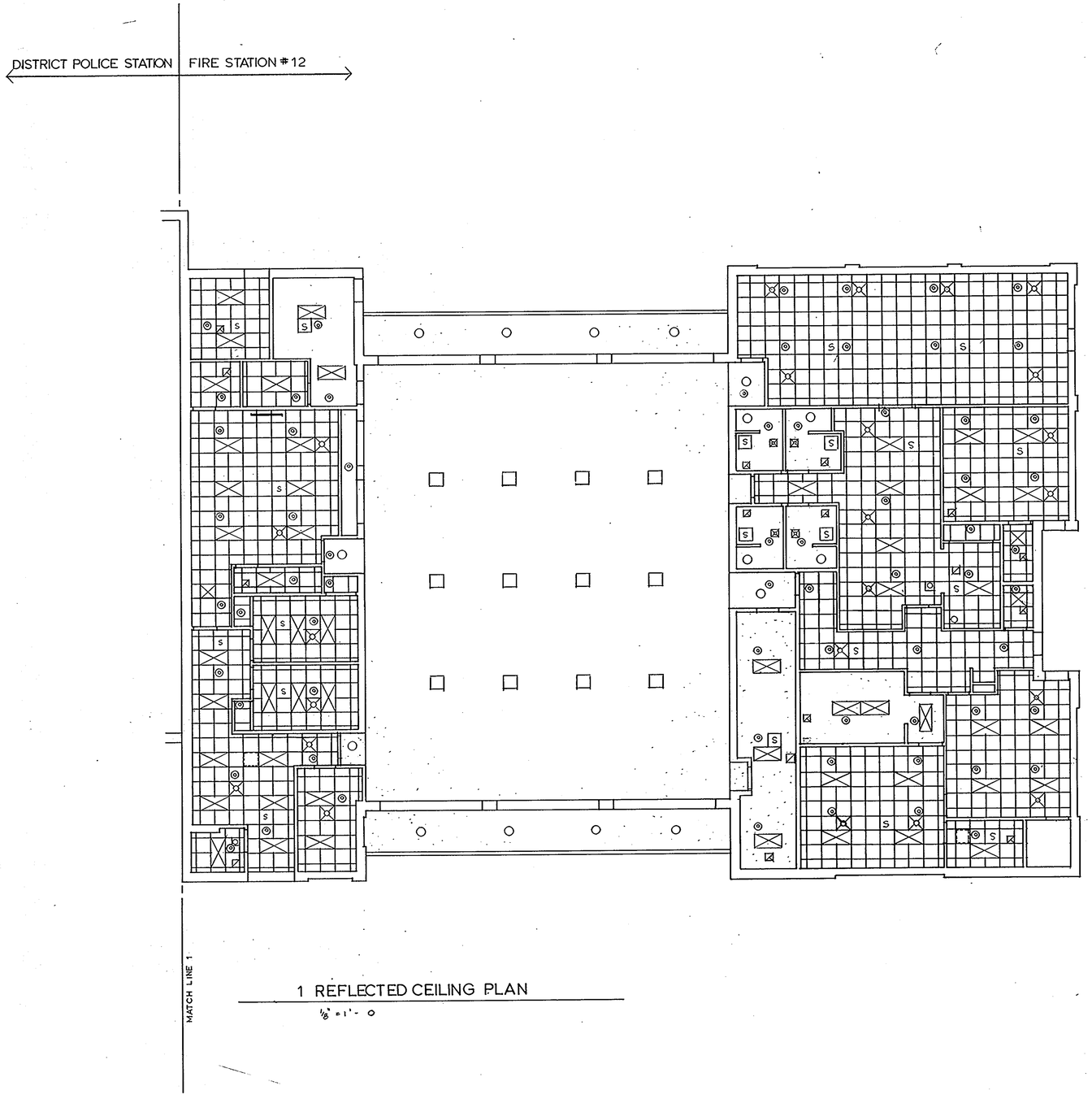

1 REFLECTED CEILING PLAN

1/8" = 1'-0

REFLECTED CEILING PLAN FIRE STATION			36 OF 90
HOWARD COUNTY PUBLIC SAFETY COMPLEX	REVISIONS		CAPITAL PROJECT NO. C - 0227
SCAGGSVILLE ANNEX 11226 ROUTE 216 LAUREL, MD. 20707	AS BUILT 11/24/94		DATE: 3-25-92 DRAWING NO. A 8.1

ARCHITECTURAL TECHNOLOGIES INC.
Architects and Construction Consultants
9192 Red Branch Rd. Suite 300
Columbia MD. 21045 (301) 995-4067

IN ASSOCIATION WITH:

CIVIL & GEOTECH ENGINEER:	E B A ENGINEERING, INC.
STRUCTURAL ENGINEER:	QODESH ENGINEERING SERVICES, INC.
MECHANICAL & ELECTRICAL ENGINEER:	BHARGAVA INTERNATIONAL, INC.
FIRE PROTECTION ENGINEER:	STANTON ENGINEERING

ARCHITECTURAL REGISTRATION BOARD SEAL: 3295-A STATE OF MARYLAND

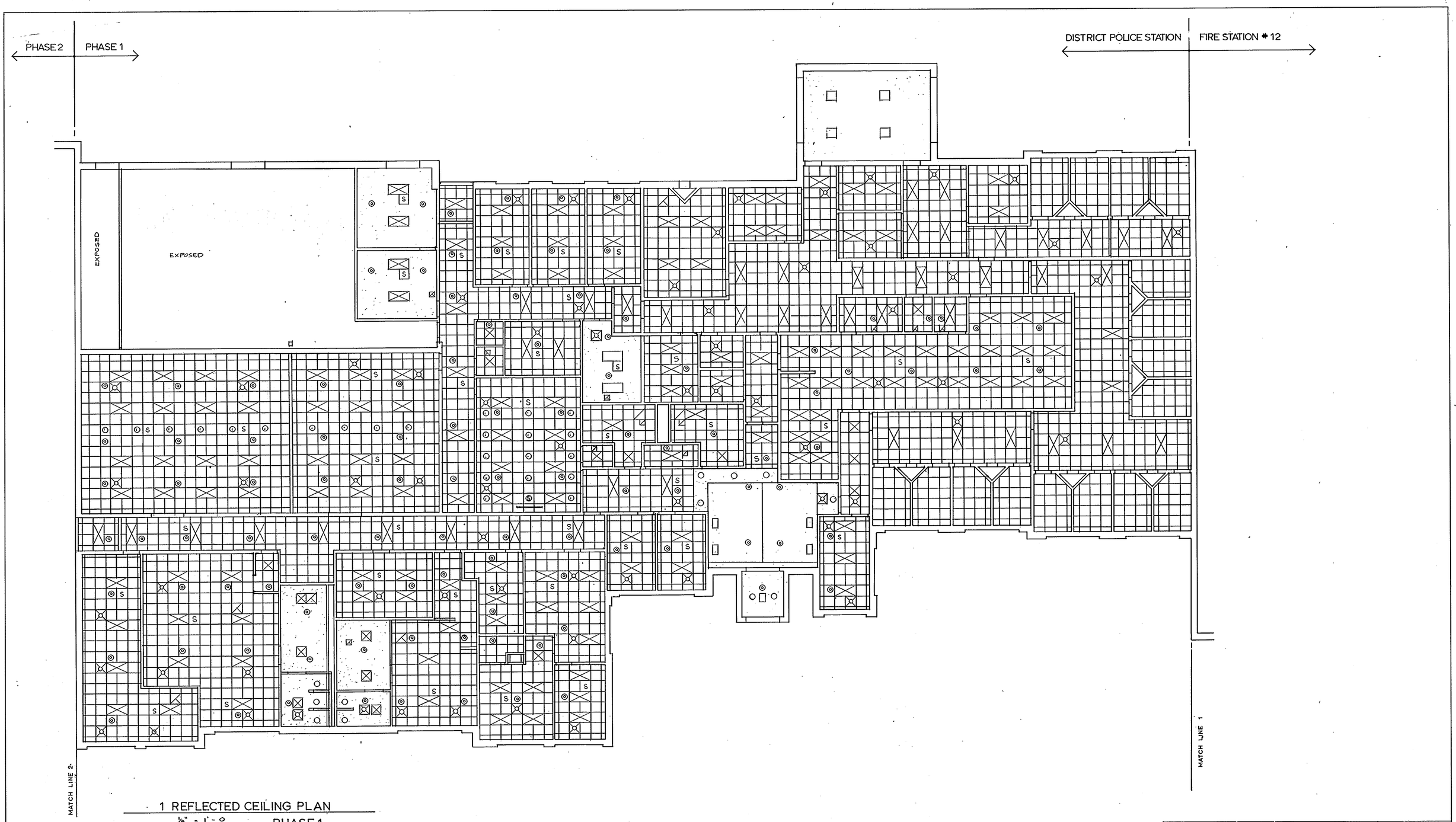

1 REFLECTED CEILING PLAN
1/8" = 1'-0
PHASE 1

ARCHITECTURAL TECHNOLOGIES INC. Architects and Construction Consultants 9192 Red Branch Rd. Suite 300 Columbia MD. 21045 (301) 995-4067	IN ASSOCIATION WITH: CIVIL & GEOTECH ENGINEER: E B A ENGINEERING, INC. STRUCTURAL ENGINEER: QODESH ENGINEERING SERVICES, INC. MECHANICAL & ELECTRICAL ENGINEER: BHARGAVA INTERNATIONAL, INC. FIRE PROTECTION ENGINEER: STANTON ENGINEERING	ARCHITECTURAL REGISTRATION SEAL 3295 STATE OF MARYLAND	REVISIONS AS BUILT 11/24/94	REFLECTED CEILING PLAN POLICE STATION HOWARD COUNTY PUBLIC SAFETY COMPLEX SCAGGSVILLE ANNEX 11226 ROUTE 216 LAUREL, MD. 20707	37 OF 90 CAPITAL PROJECT NO. C - 0227 DATE: 3-25-92 DRAWING NO. A 8.2

1650

1. DOOR SCHEDULE

DOOR Mark	DOOR Size W x H x TH.	DOOR Material & Construction	DOOR Type	FRAME Material & Construction	Detail	FIRE-REST. Label	FIRE-REST. Hour	HARDWARE SET
F1	2-3'-0x6'-8	STOREFRONT ALUM. & GLASS	A	ALUM. & GLASS	GLASS TYPE 'B'			M
F2	3'-0 x 6'-8 x 1 3/4"	SOLID CORE WOOD	E	HOLLOW METAL 16GA				
F3	↓	↓	D	↓	GLASS TYPE 'G'			
F4		HOLLOW METAL - 16 GA	D		↓			
F5	OPENING SIZE: 4'-0 x 6'-10	SOLID CORE WOOD	H	METAL				
F6	3'-0 x 6'-8 x 1 3/4"	SOLID CORE WOOD	D	HOLLOW METAL 16 GA	GLASS TYPE 'G'			
F7	↓	↓	D	↓	↓			
F8	OPENING SIZE: 4'-0 x 6'-10	SOLID CORE WOOD (BIFOLD DOOR)	H	METAL				
F9	↓	↓	H	↓				
F10	3'-0 x 6'-8 x 1-3/4"	SOLID CORE WOOD	G	HOLLOW METAL - 16 GA	GLASS TYPE 'G'			
F11	↓	SOLID CORE WOOD	E	↓				
F12	↓	HOLLOW METAL 16 GA.	D	HOLLOW METAL - 16GA	GLASS TYPE 'C'			
F13	OPENING SIZE 6'-0 x 7'-0	HOLLOW METAL - 18 GA. BIFOLD DOORS	H	METAL				
F14	↓	↓	H	↓				
F15	3'-0 x 6'-8 x 1 3/4"	HOLLOW METAL - 18 GA.	F	HOLLOW METAL - 16 GA				
F16	↓	SOLID CORE WOOD	F	↓				
F17	↓	HOLLOW METAL - 16 GA.	C	↓	GLASS TYPE 'B'			
F18	↓	↓	C	↓	↓			
F19	↓	↓	D	↓	GLASS TYPE 'C'			
F20	OPENING SIZE 14'-0 x 14'-0	INSULATED STEEL OVERHEAD DOOR	J	OVERHEAD DOOR FRAME				E
F21	↓	↓	↓	↓				E
F22	↓	↓	↓	↓				E
F23	↓	↓	↓	↓				E
F24	↓	↓	↓	↓				E
F25	↓	↓	↓	↓				E
F26	3'-0 x 6'-8 x 1-3/4	HOLLON METAL - 16 GA.	F	HOLLOW METAL - 16 GA.				
F27	↓	↓	F	↓				
F28	↓	↓	D	↓	GLASS TYPE 'G'			
F29	↓	SOLID CORE WOOD	G	↓	↓			
F30	↓	↓	G	↓	GLASS TYPE 'G'			
F31	↓	↓	E	↓				
F32	↓	↓	G	↓	GLASS TYPE 'G'			
F33	↓	↓	G	↓	↓			
F34	↓	↓	F	↓			1/3	
F35	3'-0 x 6'-8 x 1 3/4	HOLLOW METAL - 16 GA.	C	↓	GLASS TYPE 'B'			
F36	3'-0 x 6'-8 x 1-3/4"	HOLLOW METAL - 16 GA	C	HOLLOW METAL - 16GA	GLASS TYPE 'B'			
F37	↓	SOLID CORE WOOD	E	↓				
F38	↓	↓	D	↓	GLASS TYPE 'G'			
F39	OPENING SIZE 5'-0 x 6'-10	SOLID CORE WOOD BIFOLD DOORS	H	METAL				
F40	3'-0 x 6'-8 x 1-3/4"	SOLID CORE WOOD	G	HOLLOW METAL - 16GA	GLASS TYPE 'C'			
F41	↓	↓	F	↓				
F42	↓	HOLLOW METAL - 16 GA	C	↓	GLASS TYPE 'B'			
F43	3'-0 x 6'-8 x 1-3/4"	↓	B	↓	↓			
F44	3'-0 x 6'-8 x 1-3/4"	SOLID CORE WOOD	F	HOLLOW METAL - 16GA				
F45	3'-0 x 6'-8 x 1-3/4"	HOLLOW METAL - 16 GA.	F	↓				
F46	↓	↓	F	↓				
F47	↓	SOLID CORE WOOD	F	↓				
F48	↓	↓	F	↓				
F49	↓	↓	F	↓				
F50	↓	↓	F	↓				

NOTE:
E = DOOR REQUIRES ELECTRIC CONNECTIONS
FOR GLASS TYPE, SEE SECTION 08800

SEE HARDWARE SCHEDULE TYP. FOR ALL DOORS

SEE HARDWARE SCHEDULE 08710 TYP. FOR ALL DOORS

2. DOOR TYPES

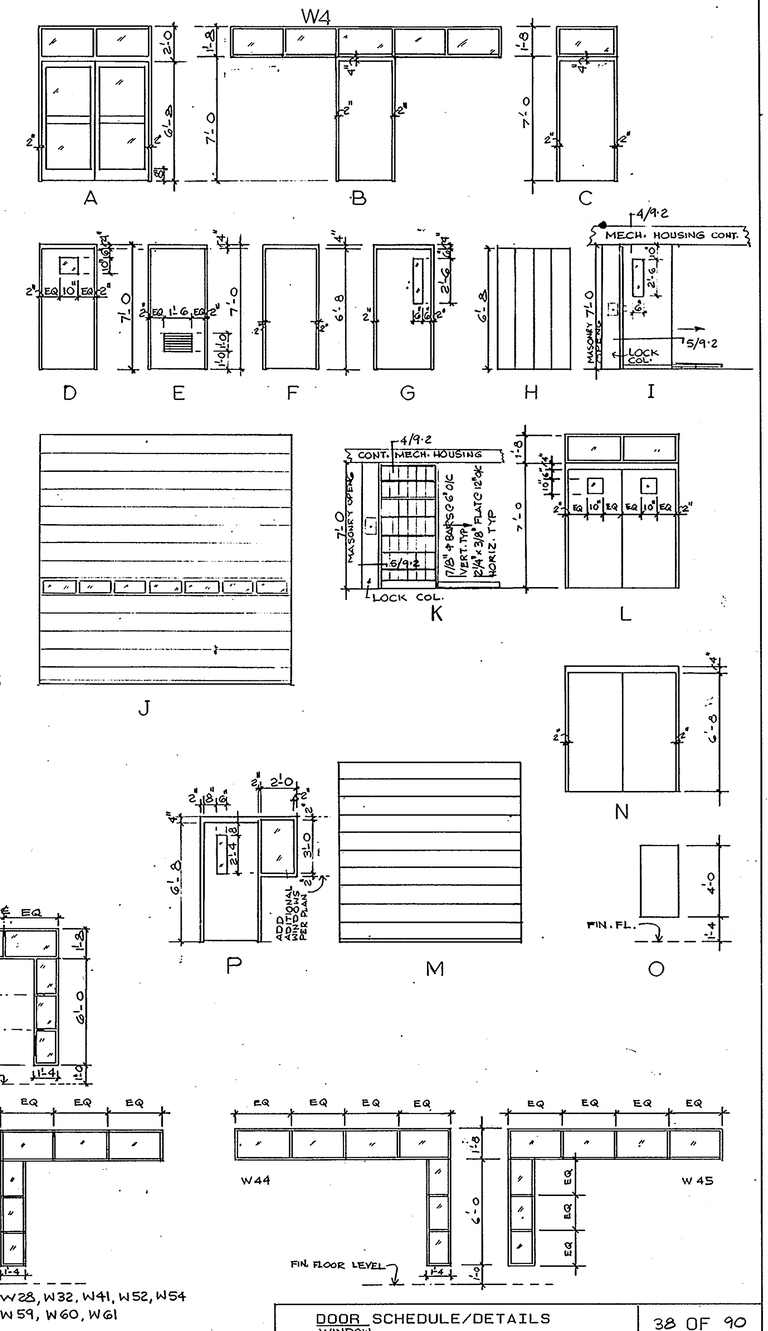

3 WINDOW TYPES

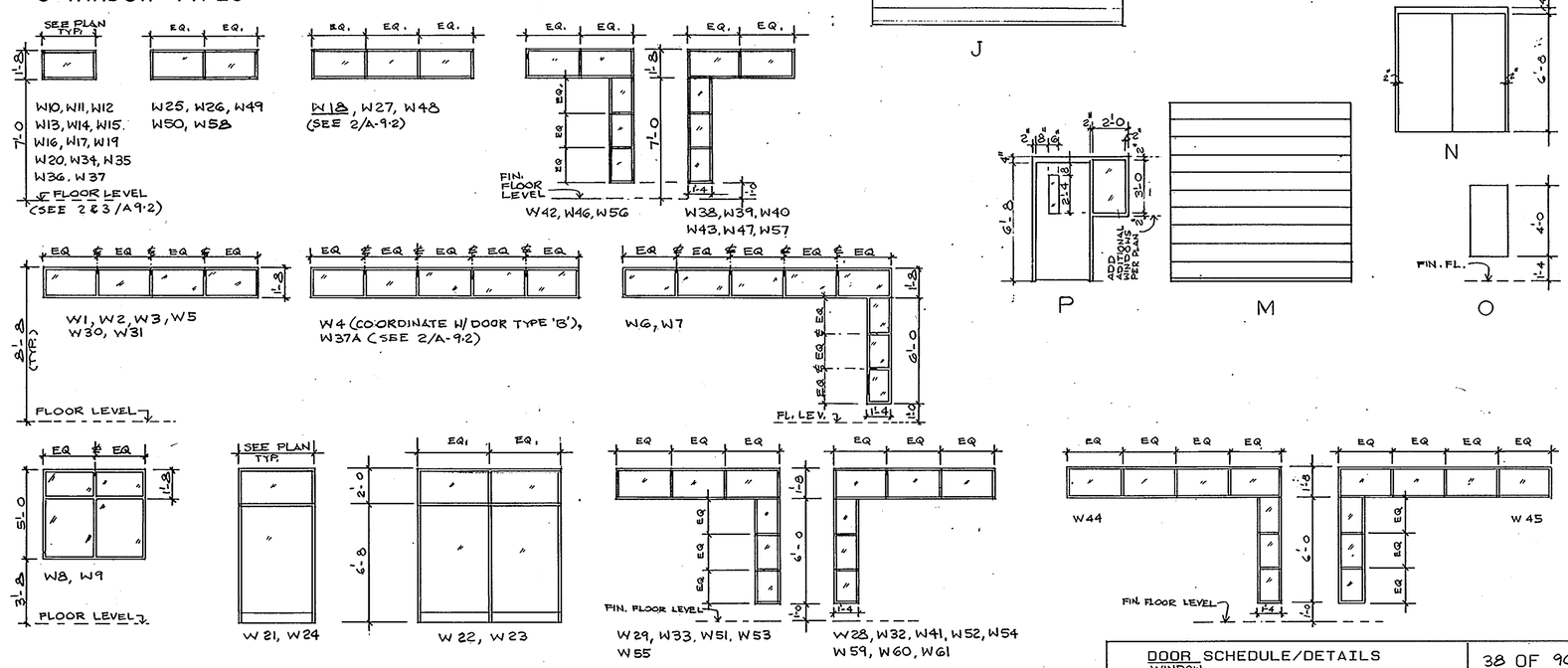

ARCHITECTURAL TECHNOLOGIES INC.
Architects and Construction Consultants
9192 Red Branch Rd. Suite 300
Columbia MD. 21045 (301) 995-4067

IN ASSOCIATION WITH:

CIVIL & GEOTECH ENGINEER:	E B A ENGINEERING, INC.
STRUCTURAL ENGINEER:	QODESH ENGINEERING SERVICES, INC.
MECHANICAL & ELECTRICAL ENGINEER:	BHARGAVA INTERNATIONAL, INC.
FIRE PROTECTION ENGINEER:	STANTON ENGINEERING

ARCHITECTURAL REGISTRATION BOARD SEAL: 3295-A STATE OF MARYLAND

REVISIONS
AS BUILT 11/24/94

DOOR SCHEDULE/DETAILS
WINDOW

HOWARD COUNTY
PUBLIC SAFETY COMPLEX

SCAGGSVILLE ANNEX
11226 ROUTE 216
LAUREL, MD. 20707

CAPITAL PROJECT NO. C - 0227
DATE: 3-25-92
DRAWING NO. A 9.1

1. DOOR SCHEDULE

* SEE HARDWARE SCHEDULE 08710, TYP. FOR ALL DOORS

DOOR Mark	Size W x H x TH.	Material & Construction	Type	FRAME Material & Construction	Detail	FIRE-REST. Label	FIRE-REST. Hour	HARDWARE SET *
P1	2-3'-0 x 6'-8	ALUM. & GLASS STORE FRONT	A	ALUM.				E
P2	↓	↓	A	↓				E
*S P3	3'-0 x 6'-8 x 1-3/4"	HOLLOW METAL - 14 GA	D	HOLLOW METAL - 12 GA.	GLASS TYPE 'D'	C	1/3	E
*S P4	↓	↓	D	↓	↓	C	1/3	
*S P5	↓	↓	D	↓	↓			E
*S P6	↓	↓	D	↓	↓			E
*S P7	2'-8 (W) CLEAR OPENING x 7'-0 (H)	HOLLOW METAL - 12 GA	I	COMPLETE HOUSING FOR SLIDING DOOR	↓			E
*S P8	2'-8 (W) CLR. OPENG. x 7'-0 (H)	↓	↓	↓	↓			E
*S P9	2'-8 (W) CLR. OPENG x 7'-0 (H)	↓	↓	↓	↓			E
*S P10	↓	↓	↓	↓	↓			E
*S P11	3'-0 x 6'-8 x 1-3/4"	↓	D	HOLLOW METAL - 10 GA	↓			
*S P12	2'-8 (W) CLR. OPENG x 7'-0 (H)	HOLLOW METAL - 12 GA	I	COMPLETE HOUSING FOR SLIDING DOOR	↓			E
*S P13	↓	↓	I	↓	↓			E
*S P14	↓	↓	I	↓	↓			E
*S P15	↓	↓	I	↓	↓			E
*S P16	2'-8 (W) CLR. OPENG x 7'-0 (H)	STL. GRILL DOOR	K	↓				E
*S P17	2'-8 (W) CLR. OPENG x 7'-0 (H)	↓	K	↓				E
*S P18	↓	↓	K	↓				E
*S P19	↓	↓	K	↓				E
*S P20	↓	HOLLOW METAL - 12 GA	I	↓	GLASS TYPE 'D'			E
*S P21	↓	HOLLOW METAL - 12 GA	I	↓	↓			E
*S P22	3'-0 x 6'-8 x 1-3/4"	↓	D	HOLLOW METAL - 10 GA	↓			
*S P23	2'-8 (W) CLR. OPENG x 7'-0 (H)	↓	I	↓	↓			E
*S P24	↓	↓	I	↓	↓			E
*S P25	3'-0 x 6'-8 x 1-3/4"	↓	D	↓	↓			
*S P25A	↓	↓	D	↓	↓	C	1/3	
*S P26	3'-0 x 6'-8 x 1-3/4"	HOLLOW METAL - 14 GA	D	HOLLOW METAL - 12 GA	↓	C	1/3	E
*S P27	↓	↓	D	↓	↓			
*S P28	↓	↓	D	↓	↓			
*S P29	↓	↓	F	↓				E
P30	ROLLING DOOR 12'-0 x 12'-0	INSULATED STEEL ROLLING DOOR (SEE SECTION 08360)	M	STEEL (SEE SECTION 08360)				E
P31	3'-0 x 6'-8 x 1-3/4	HOLLOW METAL - 14 GA	B	HOLLOW METAL - 12 GA	GLASS TYPE 'A'			E
P32	ROLLING DOOR 12'-0 x 12'-0	INSULATED STEEL ROLLING DOOR (SEE SECTION 08360)	M	STEEL (SEE SECTION 08360)				E
*S P33	3'-0 x 6'-8 x 1-3/4	HOLLOW METAL - 14 GA	F	HOLLOW METAL - 12 GA				E
*S P34	↓	↓	D	↓	GLASS TYPE 'D'	C	1/3	
*S P35	↓	↓	D	↓	↓	C	1/3	
*S P36	↓	↓	D	↓	↓	C	1/3	E
P37	3'-0 x 6'-8 x 1-3/4	HOLLOW METAL - 18 GA.	F	HOLLOW METAL - 16 GA				
P38	↓	↓	F	↓		C	1/3	
P39	↓	HOLLOW METAL - 16 GA	P	↓	GLASS TYPE 'C'			
P40	↓	↓	D	↓	GLASS TYPE 'D'	C	1/3	E
P41	↓	HOLLOW METAL - 18 GA	G	↓	↓			E
P42	↓	↓	P	↓	↓			
*S P43	3'-0 x 6'-8 x 1-3/4	HOLLOW METAL - 14 GA	D	HOLLOW METAL - 12 GA	↓			E
*S P44	↓	HOLLOW METAL - 12 GA	D	HOLLOW METAL - 10 GA	↓			
*S P45	↓	↓	G	↓	↓			
*S P46	↓	↓	D	↓	↓			
*S P47	↓	↓	D	↓	↓			
*S P48	3'-0 x 6'-8 x 1-3/4	HOLLOW METAL - 14 GA	D	HOLLOW METAL - 12 GA	↓			E
P49	↓	↓	D	↓	↓			E
P50	↓	SOLID CORE WOOD	G	HOLLOW METAL - 16 GA	GLASS TYPE 'G'			
P51	↓	↓	E	↓		C	1/3	
P52	↓	↓	E	↓		C	1/3	
P53	↓	↓	G	↓	GLASS TYPE 'G'			
P54	↓	↓	G	↓	↓			
P55	3'-0 x 6'-8 x 1-3/4	↓	E	↓		C	1/3	
P56	↓	↓	F	↓		C	1/3	
P57	↓	SOLID CORE WOOD	F	↓				
P58	↓	↓	F	HOLLOW METAL - 14 GA		C	1/3	
P59	3'-0 x 6'-8 x 1-3/4	HOLLOW METAL - 18 GA	F	HOLLOW METAL - 16 GA		B	1 1/2	
P60	↓	↓	F	↓		C	1/3	
P61	↓	↓	F	↓				
P62	2-3'-0 x 6'-8 x 1-3/4	HOLLOW METAL - 16 GA	L	HOLLOW METAL - 14 GA	GLASS TYPE 'A'			
P63	↓	↓	L	↓	↓			
P64	↓	↓	N	↓				
P65	↓	↓	N	↓				
P66	3'-0 x 6'-8 x 1-3/4	↓	F	↓				
P67	↓	↓	F	↓				
P68	2-3'-0 x 6'-8	STORE FRONT ALUM. & GLASS	A	ALUM.	GLASS TYPE 'B'			
P69	2-3'-0 x 6'-8 x 1-3/4	HOLLOW METAL - 16 GA	H	HOLLOW METAL - 14 GA		B	1 1/2	
P70	3'-0 x 6'-8 x 1-3/4	SOLID CORE WOOD	F	HOLLOW METAL - 16 GA		C	1/3	
P71	2-3'-0 x 6'-8 x 1-3/4	SOLID CORE WOOD	M	↓				
P72	3'-0 x 6'-8 x 1-3/4	↓	F	↓		C	1/3	
P73	↓	↓	G	↓	GLASS TYPE 'G'			

SEE HARDWARE SCHEDULE 08710 TYP. FOR ALL DOORS

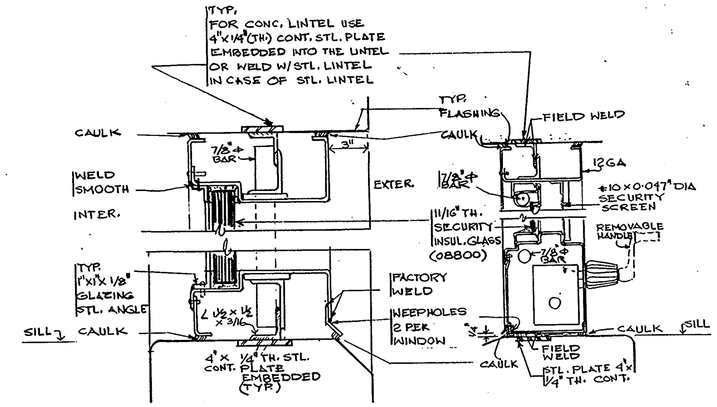

2. Security Window (S600tr) NO SCALE
SEE SECTION 08650

3. Security Window (sno-1) NO SCALE
SEE SECTION 08650

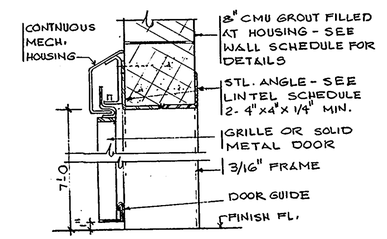

4. Manual Slider Header
TYP. NO SCALE

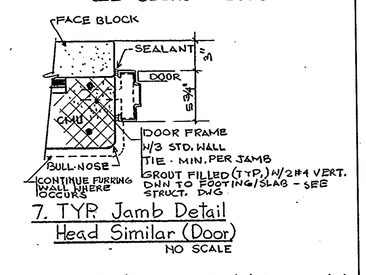

7. TYP. Jamb Detail
Head Similar (Door)
NO SCALE

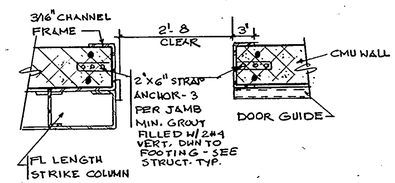

5. Jamb-Sliding Door
TYP. NO SCALE

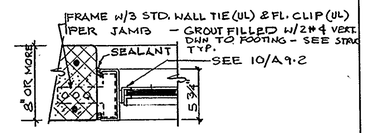

8. Jamb: Interior Window
Typ. Head Similar. NO SCALE

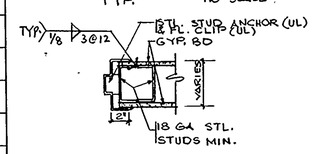

6. Jamb AT Stud Wall Typ.
NO SCALE

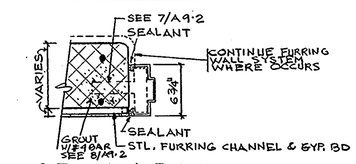

9. Typ. Jamb Detail
NO SCALE

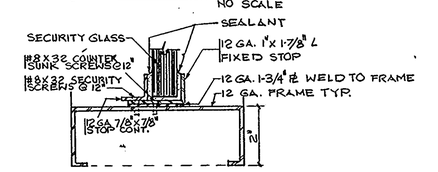

10. Security Glazing Typ Sill
NO SCALE

NOTES:
*S = SECURITY DOOR
E = DOOR REQUIRES ELECTRIC CONNECTIONS

ARCHITECTURAL TECHNOLOGIES INC.
Architects and Construction Consultants
9192 Red Branch Rd. Suite 300
Columbia MD. 21045 (301) 995-4067

IN ASSOCIATION WITH:
CIVIL & GEOTECH ENGINEER: E B A ENGINEERING, INC.
STRUCTURAL ENGINEER: QODESH ENGINEERING SERVICES, INC.
MECHANICAL & ELECTRICAL ENGINEER: BHARGAVA INTERNATIONAL, INC.
FIRE PROTECTION ENGINEER: STANTON ENGINEERING

ARCHITECTURAL REGISTRATION SEAL: 3285-L STATE OF MARYLAND

REVISIONS
AS-BUILT 11/24/94

DOOR SCHEDULE/DETAILS
WINDOW

HOWARD COUNTY
PUBLIC SAFETY COMPLEX

SCAGGSVILLE ANNEX
11226 ROUTE 216
LAUREL, MD. 20707

CAPITAL PROJECT NO. C - 0227
DATE: 3-25-92
DRAWING NO. A 9.2

1. DOOR SCHEDULE

DOOR				FRAME		FIRE-REST.		HARDWARE SET
Mark	Size W x H x TH.	Material & Construction	Type	Material & Construction	Detail	Label	Hour	
P74	2-3'-0 x 6'-8 x 1-3/4	SOLID CORE WOOD	L	HOLLOW METAL - 16GA	GLASS TYPE 'D'			
P75	3'-0 x 6'-8 x 1-3/4	↓	F	↓		C	1/3	
P76	↓	↓	E	↓		C	1/3	
P77	↓	↓	F	↓				
P78	OPENING SIZE: 2'-6 x 6'-10	SOLID CORE WOOD (BIFOLD)	H	METAL				
P79	3'-0 x 6'-8 x 1-3/4	↓	G	HOLLOW METAL - 16GA	GLASS TYPE 'G'			
P80	↓	↓	G	↓	↓			
P81	↓	↓	D	↓	↓			
P82	↓	↓	G	↓	↓	C	1/3	
P83	↓	↓	D	↓	↓			
P84	↓	↓	D	↓	↓			
P85	3'-0 x 6'-8 x 1-3/4	↓	F	↓				
P86	↓	↓	E	↓				
P87	↓	↓	F	↓				
P88	3'-0 x 6'-8 x 1-3/4	SOLID CORE WOOD	D	HOLLOW METAL - 16GA	GLASS TYPE 'G'			
P89	↓	↓	F	↓				
P90	2-3'-0 x 6'-8 x 1-3/4	ALUM. & GLASS STOREFRONT	A	ALUM.	GLASS TYPE 'B'			E
P91	↓	↓	A	↓	↓			E
P92	3'-0 x 6'-8 x 1-3/4	SOLID CORE WOOD	G	HOLLOW METAL - 16GA	GLASS TYPE 'G'			SEE HARDWARE SCHEDULE 08710 TYP. FOR ALL DOORS
P93	OPENING SIZE 5'-0 x 6'-10 (BIFOLD)	SOLID CORE WOOD (BIFOLD)	H	METAL				
P94	3'-0 x 6'-8 x 1-3/4*	SOLID CORE WOOD	D	HOLLOW METAL - 16 GA	GLASS TYPE 'G'			
P95	OPENING SIZE 5'-0 x 6'-10 (BIFOLD)	SOLID CORE WOOD (BIFOLD)	H	METAL				
P96	3'-0 x 6'-8 x 1-3/4	SOLID CORE WOOD	G	HOLLOW METAL - 16GA	GLASS TYPE 'G'			
P97	↓	↓	D	↓	↓			
P98	2-3'-0 x 6'-8 x 1-3/4	↓	L	↓	↓			
P99	3'-0 x 6'-8 x 1-3/4	↓	G	↓	↓			
P100 P104	↓	↓	G	↓	↓			
P101	↓	↓	E	↓				
P102	↓	↓	E	↓				
P105	↓	↓	D	↓	GLASS TYPE 'G'			
P103 P106	↓	↓	D	↓	↓			
P107	3'-0 x 6'-8 x 1-3/4	HOLLOW METAL - 18 GA	F	HOLLOW METAL - 16GA		C	1/3	
P108	↓	↓	D	↓	GLASS TYPE 'G'			
P109	↓	↓	F	↓		C	1/3	
P110	↓	HOLLOW METAL - 16 GA	C	HOLLOW METAL - 16 GA	GLASS TYPE 'A'			
P111	↓	HOLLOW METAL - 18 GA.	F	↓				
P112	↓	↓	F	↓		C	1/3	

DOOR				FRAME		FIRE-REST.		HARDWARE SET
Mark	Size W x H x TH.	Material & Construction	Type	Material & Construction	Detail	Label	Hour	
P113	ROLLING DOOR 10'-0 x 10'-0	INSULATED ROLLING DOOR SEE SECTION 08360	M	METAL - SEE 08360				E
P114	↓	↓	M	↓				E
P115	3'-0 x 6'-8 x 1-3/4	HOLLOW METAL - 18 GA	F	HOLLOW METAL - 16GA				
P116	↓	SOLID CORE WOOD	D	↓	GLASS TYPE 'G'			
P117	↓	↓	D	↓	↓			
P118	↓	↓	D	↓	↓	C	1/3	
P119	↓	↓	G	↓	↓	C	1/3	
P120	↓	↓	D	↓	↓			
P121	↓	↓	D	↓	↓			
P122	↓	↓	D	↓	↓	C	1/3	
P123	3'-0 x 6'-8 x 1-3/4	SOLID CORE WOOD	D	HOLLOW METAL - 16GA	↓			
P124	↓	↓	D	↓	↓			
P125	↓	↓	D	↓	↓			
P126	↓	↓	D	↓	↓			
P127	↓	↓	G	↓	↓			
P128	↓	↓	G	↓	↓			
P129	2-3'-0 x 6'-8 x 1-3/4	STOREFRONT ALUM. & GLASS	A	ALUM.	GLASS TYPE 'B'			
P130	↓	↓	A	↓	↓			SEE HARDWARE SCHEDULE 08710 TYP FOR ALL DOORS
P131	↓	SOLID CORE WOOD	L	HOLLOW METAL - 16 GA	GLASS TYPE 'G'			
P132	3'-0 x 6'-8 x 1-3/4	↓	F	↓				
P133	↓	↓	F	↓				
P134	↓	HOLLOW METAL - 16 GA	F	HOLLOW METAL - 16GA		C	1/3	
P135	↓	SOLID CORE WOOD	F	↓		C	1/3	
P136	↓	↓	F	↓		C	1/3	
P137	2-3'-0 x 6'-8 x 1-3/4	↓	L	↓	GLASS TYPE 'G'			
P138	↓	↓	L	↓	↓			
P139	3'-0 x 6'-8 x 1-3/4	↓	G	↓	↓			
P140	↓	↓	G	↓	↓			
P141	↓	↓	G	↓	↓			
P142	↓	↓	G	↓	↓			
P143	↓	↓	E	↓		C	1/3	
P144	↓	↓	E	↓		C	1/3	

P90 - P144 : NOT IN CONTRACT.

2. TYP. PUSH BUTTON (PB) LOCATION

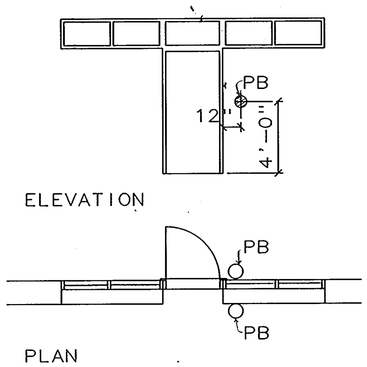

DOOR NO. P31

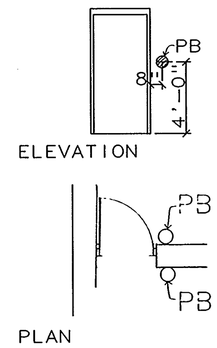

DOOR NO. P5, P29
P33, P36
P40, P43
P48, P49
P3, P6, P26
P41,

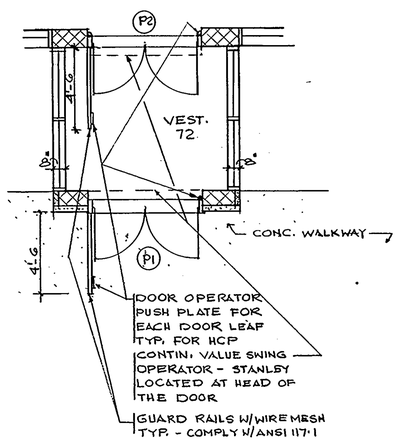

3. ENTRANCE DETAIL
1/4" = 1'-0

NOTES:
*S = SECURITY DOOR
E = DOOR REQUIRES ELECTRIC CONNECTIONS

ARCHITECTURAL TECHNOLOGIES INC.
Architects and Construction Consultants
9192 Red Branch Rd. Suite 300
Columbia MD. 21045 (301) 995-4067

IN ASSOCIATION WITH:
CIVIL & GEOTECH ENGINEER: E B A ENGINEERING, INC.
STRUCTURAL ENGINEER: QODESH ENGINEERING SERVICES, INC.
MECHANICAL & ELECTRICAL ENGINEER: BHARGAVA INTERNATIONAL, INC.
FIRE PROTECTION ENGINEER: STANTON ENGINEERING

ARCHITECTURAL REGISTRATION BOARD SEAL: 3235 STATE OF MARYLAND

REVISIONS
AS BUILT 11/24/94

DOOR SCHEDULE/DETAILS
POLICE STATION - PHASE 1 & 2

HOWARD COUNTY
PUBLIC SAFETY COMPLEX

SCAGGSVILLE ANNEX
11226 ROUTE 216
LAUREL, MD. 20707

CAPITAL PROJECT NO. C - 0227
DATE: 3-25-92
DRAWING NO. A 9.3

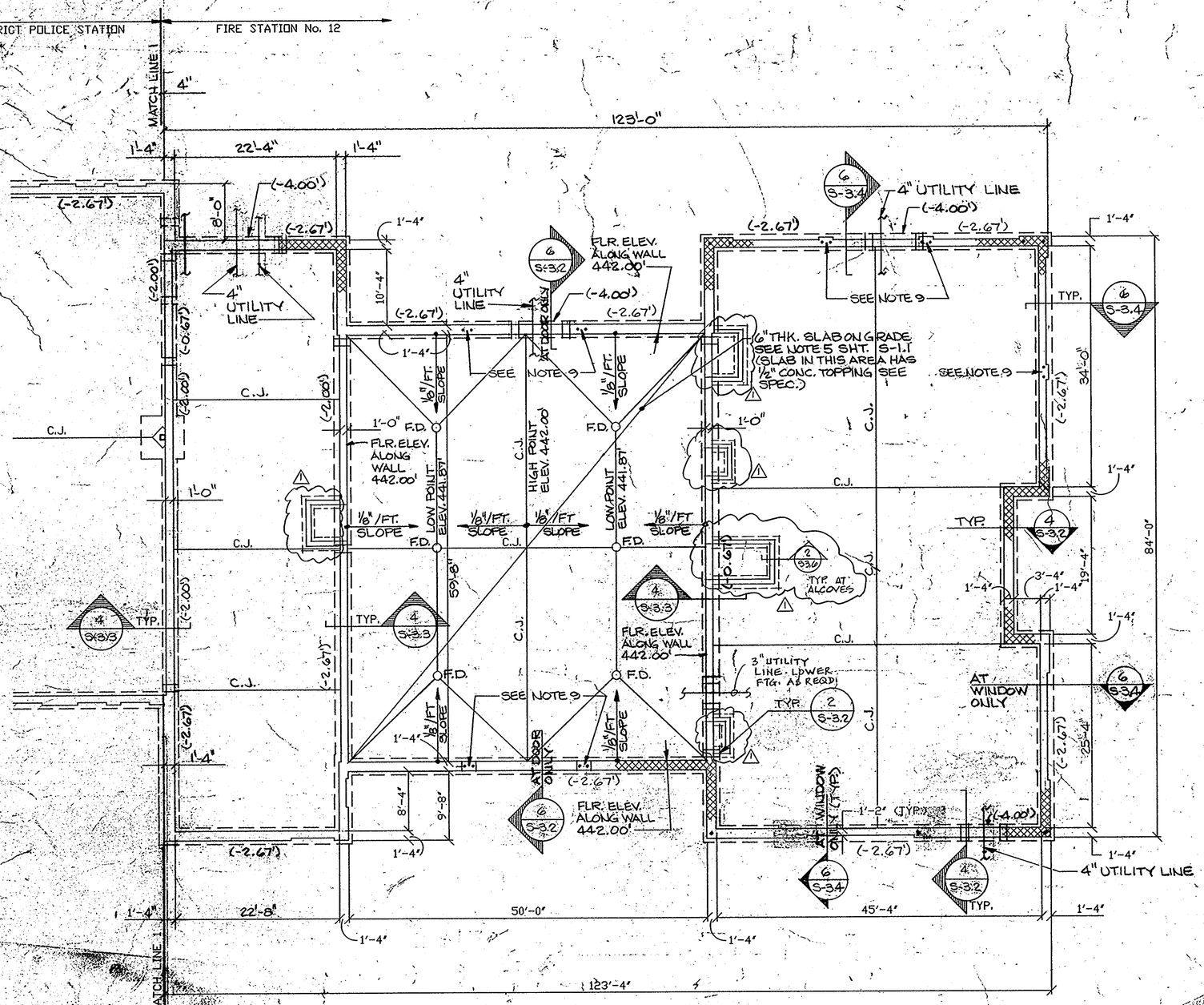

PARTIAL FOUNDATION PLAN

SCALE : 1/8" = 1'-0"

FOUNDATION AND SLAB ON GRADE NOTES

1. THE TOP OF FINISHED FLOOR SHALL BE AT ELEV. 442.00 EQUALS REFERENCE DATUM 0.00', UNLESS NOTED OTHERWISE ON PLAN.
2. ALL ELEVATIONS NOTED ON PLAN ARE WITH RESPECT TO REFERENCE DATUM.
3. ELEVATIONS NOTED THUS : (-XX.XX) ARE TOP OF FOOTING ELEVATIONS. TOP OF ALL INTERIOR FOOTINGS SHALL BE AT ELEV. (-0.67') UNLESS NOTED OTHERWISE ON PLAN.
4. BOTTOM OF ALL EXTERIOR FOOTINGS SHALL BE MIN. 3'-0" BELOW EXTERIOR FINISHED GRADE.
5. THE SLAB ON GRADE SHALL BE 5" THICK CONCRETE SLAB REINFORCED WITH 6x6-W2.0xW2.0 W.W.F. UNLESS NOTED AS 6" THICK CONCRETE SLAB WHICH SHALL BE REINFORCED WITH 6x6-W2.9xW2.9 W.W.F. ALL SLABS SHALL BE PLACED ON VAPOR BARRIER OVER 4" WASHED GRAVEL OR CRUSHED STONE UNLESS NOTED OTHERWISE ON PLAN OR SECTIONS.
6. FOR SIZE AND LOCATION OF SLAB OPENINGS, DEPRESSIONS, SLOPES, ETC. NOT SHOWN ON PLAN, SEE ARCH./MECH/ & ELECT. DRAWINGS.
7. WORK THIS DRAWING WITH :
   a) GENERAL NOTES ON DWG. S-3.1
   b) TYPICAL FOUNDATION DETAILS ON DWGS. S-3.2 & S-3.3
   c) FOOTING SCHEDULES ON DWG. S-3.4
   d) SECTIONS ON DWGS. S-3.4, S-3.5, S-3.6.
   e) ENTIRE CONTRACT DOCUMENTS ON THIS PROJECT.
8. ALL FOUNDATION MASONRY WALLS SHALL CONFORM TO ASTM C-145, U.N.O. IN SECTIONS.
9. PROVIDE 2-#4 CONT. @ PIER. REBARS START FROM UNDERNEATH OF BOND BEAM DOWN INTO FOOTING. FILL CELLS SOLID WITH GROUT AT REBAR LOCATIONS. DOWEL AS SHOWN ON SECTION 6/S-3.4.
10. CONTRACTOR SHALL VERIFY THE LOCATIONS AND ELEVATIONS PLUMBING, SANITARY AND STORM DRAIN LINES BY COORDINATION WITH MECHANICAL AND CIVIL DRAWINGS.
11. 3-#5 CONT. @ PIER REBAR STARTS FROM UNDERNEATH OF BOND BEAM DOWN TO FOOTING. FILL CELLS SOLID WITH GROUT AT REBAR LOCATIONS. DOWELS AS SHOWN ON SECTION 6/S-3.4.
12. C.J. ON PLAN INDICATES SLAB-ON-GRADE CONTROL JOINT. SEE TYPICAL DETAIL 1/S-3.2.
13. EXTERIOR MASONRY WALLS AT THESE AREAS NOTED ON FOUNDATION PLAN SHALL BE REINFORCED WITH #5 VERT. @ 4'-0" %. FROM UNDERNEATH BOND BEAM DOWN INTO FOOTING. FILL CELLS SOLID WITH GROUT AT LOCATION OF REBARS. SEE DETAIL 4A/S-3.2.
14. LOWER FOOTINGS AT ALL LOCATIONS WHERE UTILITY LINES PENETRATE THE FOUNDATION WALLS AS PER TYPICAL DETAIL 2/S-3.2.

ARCHITECTURAL TECHNOLOGIES, INC.
Architects and Construction Consultants
9192 Red Branch Rd. Suite 300
Columbia, MD. 21045 (301) 995-4067

IN ASSOCIATION WITH:
CIVIL & GEOTECH ENGINEER: E B A ENGINEERING, INC.
STRUCTURAL ENGINEER: QODESH ENGINEERING SERVICES, INC.
MECHANICAL & ELECTRICAL ENGINEER: BHARGAVA INTERNATIONAL, INC.
FIRE PROTECTION ENGINEER: STANTON ENGINEERING

QODESH ENGINEERING SERVICES, INC.
Mill Centre, Suite 100
2000 Chestnut Avenue
Baltimore, MD 21211
(301) 889-1903

REVISIONS
1 AS BUILT 11/24/94

PARTIAL FOUNDATION PLAN

HOWARD COUNTY
PUBLIC SAFETY COMPLEX

SCAGGSVILLE ANNEX
11226 ROUTE 216
LAUREL, MD. 20707

41 OF 90

CAPITAL PROJECT NO. 6-0227
DATE 3-25-92
DRAWING NO. S-1.1

1650

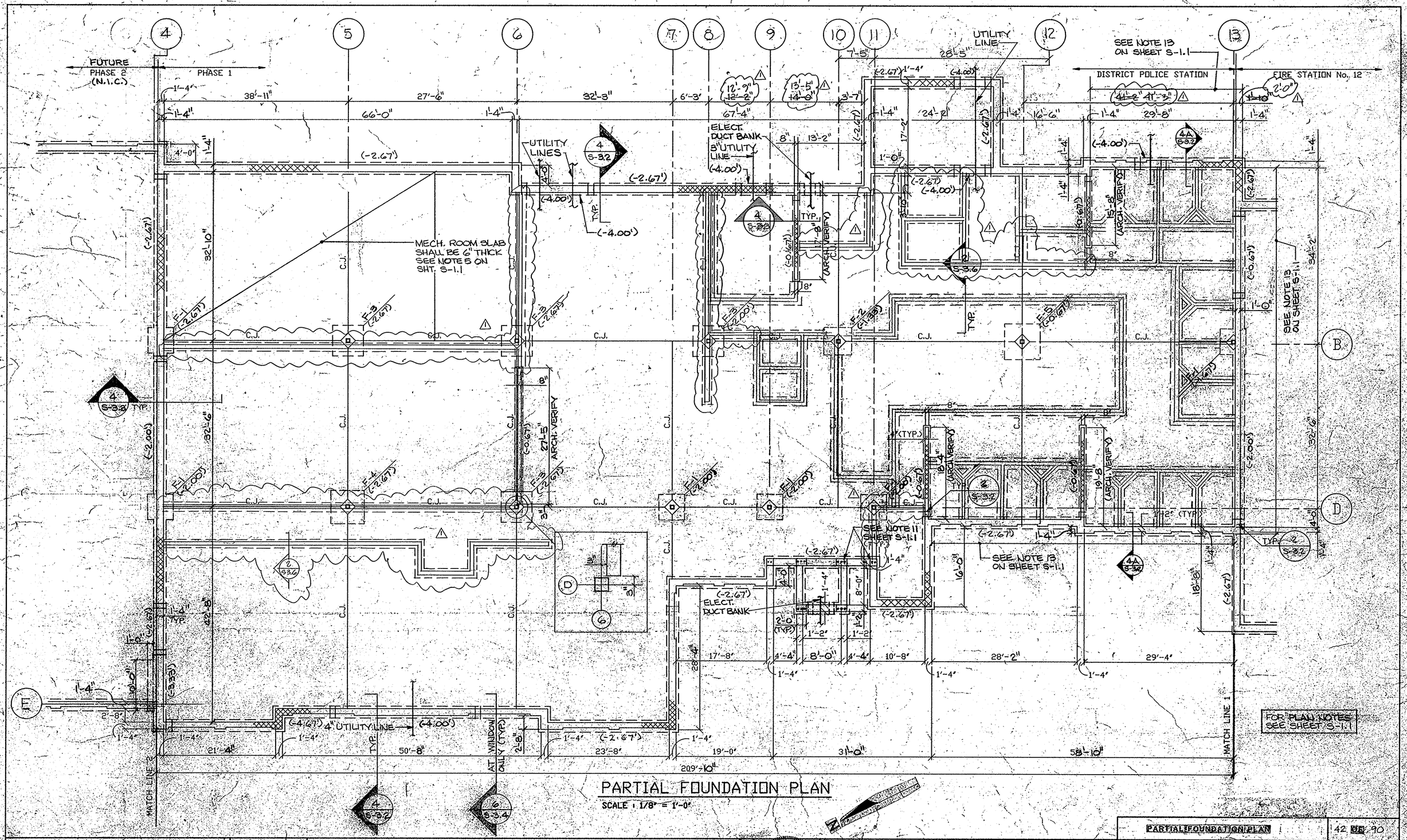

PARTIAL FOUNDATION PLAN

SCALE : 1/8" = 1'-0"

ARCHITECTURAL TECHNOLOGIES INC.
Architects and Construction Consultants
9192 Red Branch Rd. Suite 300
Columbia MD. 21045 (301) 995-4067

IN ASSOCIATION WITH:
CIVIL & GEOTECH ENGINEER: E B A ENGINEERING, INC.
STRUCTURAL ENGINEER: QODESH ENGINEERING SERVICES, INC.
MECHANICAL & ELECTRICAL ENGINEER: BHARGAVA INTERNATIONAL, INC.
FIRE PROTECTION ENGINEER: STANTON ENGINEERING

STATE OF MARYLAND PROFESSIONAL ENGINEER

QODESH ENGINEERING SERVICES, INC.
Mill Centre, Suite 100
3000 Chestnut Avenue
Baltimore, MD 21211
(301) 889-1303

REVISIONS
1 AS BUILT 11/24/94

PARTIAL FOUNDATION PLAN
HOWARD COUNTY
PUBLIC SAFETY COMPLEX
SCAGGSVILLE ANNEX
11226 ROUTE 216
LAUREL, MD. 20707

42 OF 90
CAPITAL PROJECT NO.
DATE 3-25-92
DRAWING NO. S 1.2

1650

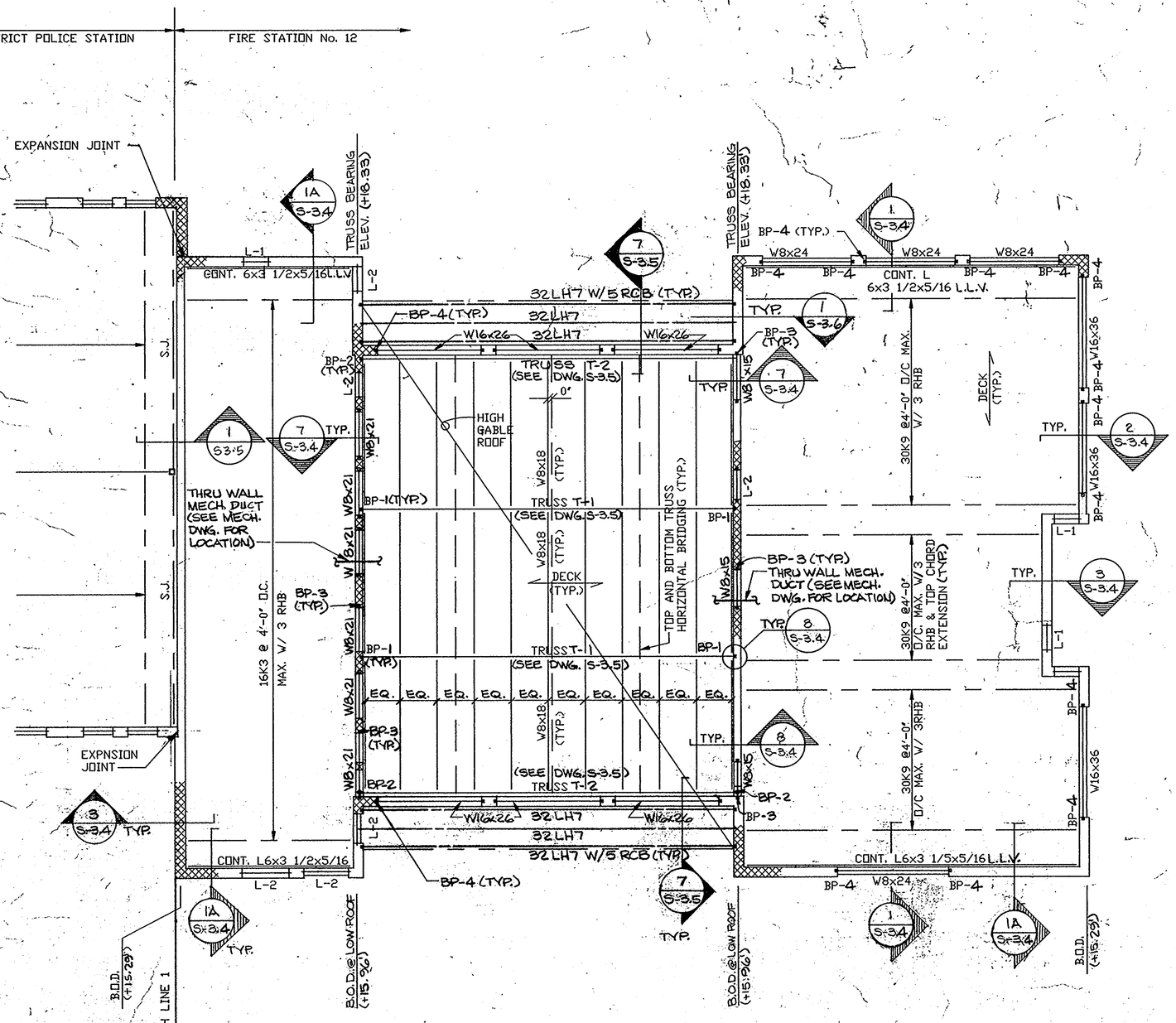

PARTIAL ROOF FRAMING PLAN

SCALE : 1/8" = 1'-0"

ROOF FRAMING NOTES

1. THE BOTTOM OF DECK (B.O.D.) ELEVATIONS SHOWN THUS : (+0.00') ON PLAN ARE TYPICALLY CONSTANT ALONG INDICATED COLUMN GRID LINES OR WALL U.N.O.
2. ALL ELEVATIONS NOTED ON PLAN ARE WITH RESPECT TO REFERENCE DATUM 0.00' WHICH EQUALS TOP OF FINISHED FLOOR ELEVATION.
3. TOP OF STEEL GIRDER OR JOIST GIRDER (JG) SHALL BE AT JOIST BEARING ELEVATION 2 1/2' BELOW B.O.D. ELEVATION, U.N.O.
4. TOP OF BEAM, PARALLEL TO ADJACENT JOIST, SHALL BE AT B.O.D. ELEVATION AT COLUMN.
5. SLOPE JOISTS, TIE BEAMS AND FILLER BEAMS, BETWEEN SUPPORTS, AS REQUIRED, TO MAINTAIN ROOF DECK PITCH SPECIFIED BY THE ARCHITECT.
6. PROVIDE CONTINUOUS HORIZONTAL BRIDGINGS AS NOTED ON PLAN. ATTACH ONE TO TOP CHORD OF JOIST AND OTHER TO BOTTOM AT EACH ROW. THE TYPICAL HORIZONTAL BRIDGING SHALL BE L1'x1'x7/64' CONT.
7. FOR SIZE AND LOCATIONS OF ROOF OPENINGS NOT SHOWN ON PLAN SEE ARCH./MECH. DRAWINGS.
8. THE SPACING, EXACT LOCATION AND OTHER DESIGN REQUIREMENTS OF ALL ROOF MEMBERS, SUCH AS JOISTS, JOIST GIRDERS, STEEL BEAMS, ETC., SUPPORTING MECHANICAL AND ELECTRICAL UNITS, SHALL BE COORDINATED WITH MECH./ELECT. CONTRACTOR.
9. WORK THIS DRAWING WITH :
   a) GENERAL NOTES ON DWG. S-3.1
   b) TYPICAL DETAILS ON DWGS. S-3.2 & S-3.3
   c) SECTIONS ON DWGS. S-3.4 & S-3.5
   d) ENTIRE CONTRACT DOCUMENTS ON THIS PROJECT.
10. MECHANICAL CONTRACTOR SHALL VERIFY THE EXACT LOCATION AND SIZE OF ROOF OPENINGS.
11. MC ON PLAN INDICATES FULLY DEVELOPED MOMENT CONNECTION.
12. S.J. ON PLAN INDICATES STRUT JOIST AT COLUMN CENTERLINE.
13. "RHB" ON PLAN INDICATES ROWS OF HORIZONTAL BRIDGING. "RCB" INDICATES ROWS OF CROSS BRIDGING.

ARCHITECTURAL TECHNOLOGIES INC.
Architects and Construction Consultants
9192 Red Branch Rd. Suite 300
Columbia, MD. 21045 (301) 995-4067

IN ASSOCIATION WITH:
CIVIL & GEOTECH ENGINEER: E B A ENGINEERING, INC.
STRUCTURAL ENGINEER: QODESH ENGINEERING SERVICES, INC.
MECHANICAL & ELECTRICAL ENGINEER: BHARGAVA INTERNATIONAL, INC.
FIRE PROTECTION ENGINEER: STANTON ENGINEERING

QODESH ENGINEERING SERVICES, INC.
Mill Centre, Suite 100
5000 Chestnut Avenue
Baltimore, MD 21211
(301) 889-1303

REVISIONS
AS BUILT 11/24/94

PARTIAL ROOF FRAMING PLAN

HOWARD COUNTY
PUBLIC SAFETY COMPLEX

SCAGGSVILLE ANNEX
11226 ROUTE 216
LAUREL, MD. 20707

CAPITAL PROJECT NO. [redacted]
DATE: 3-25-92
DRAWING NO. S 2.1

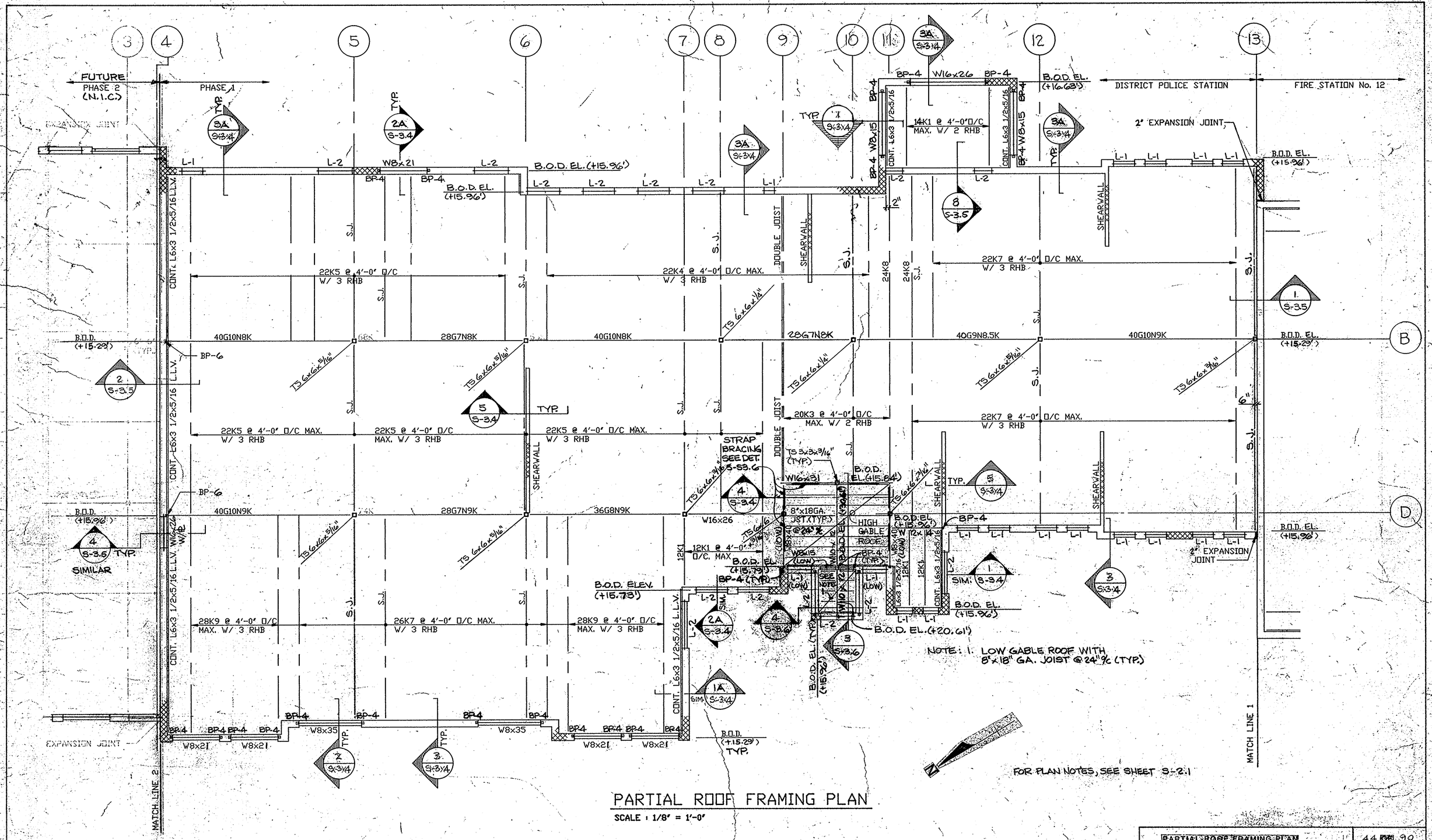

PARTIAL ROOF FRAMING PLAN

SCALE : 1/8" = 1'-0"

ARCHITECTURAL TECHNOLOGIES INC. Architects and Construction Consultants 9192 Red Branch Rd. Suite 300 Columbia MD. 21045 (301) 995-4067	IN ASSOCIATION WITH: CIVIL & GEOTECH ENGINEER: E B A ENGINEERING, INC. STRUCTURAL ENGINEER: QODESH ENGINEERING SERVICES, INC. MECHANICAL & ELECTRICAL ENGINEER: BHARGAVA INTERNATIONAL, INC. FIRE PROTECTION ENGINEER: STANTON ENGINEERING	STATE OF MARYLAND PROFESSIONAL ENGINEER	QODESH ENGINEERING SERVICES, INC.	REVISIONS AS BUILT 11/24/94	PARTIAL ROOF FRAMING PLAN HOWARD COUNTY PUBLIC SAFETY COMPLEX SCAGGSVILLE ANNEX 11226 ROUTE 216 LAUREL, MD. 20707

44 OF 90

CAPITAL PROJECT NO. [illegible]

DATE: 3-25-92

DRAWING NO. S 2.2

FOUNDATIONS

1. ALL FOOTINGS SHALL BEAR ON NATURAL UNDISTURBED SOIL OR ON STRUCTURAL FILL HAVING A MINIMUM SAFE BEARING CAPACITY OF 2,000 PSF U.N.O. AN INSPECTION AGENCY OR SOIL ENGINEER SHALL BE RETAINED AS STIPULATED IN THE SPECIFICATIONS FOR FIELDING A VERIFICATION OF THE ASSUMED SOIL BEARING PRESSURES. SHOULD IN THE SOIL BEARING PRESSURE BE FOUND TO BE LESS THAN 2,000 PSF, THE CONTRACTOR SHALL IMMEDIATELY NOTIFY THE STRUCTURAL ENGINEER. UNSUITABLE SOIL SHALL BE REPLACED BY SELECTED AND STRUCTURAL FILL AS DESCRIBED IN GEOTECHNICAL REPORT BY E.B.A. ENGINEERING INC.

2. ISOLATED FOOTINGS SHALL BE LOWERED AND PIERS SHALL BE ADDED IN HEIGHT, ALL AS APPROVED, WHERE SOIL OF THE SPECIFIED BEARING CAPACITY IS FOUND AT A LOWER ELEVATION THAN SHOWN ON THE PLANS.

3. BACKFILLING AGAINST FOUNDATION WALLS SHALL NOT BE DONE UNTIL WALLS HAVE BEEN CURED TO A SUFFICIENT STRENGTH (7 DAYS MINIMUM), AND WALLS ARE PROPERLY SHORED OR BRACED FOR AN ADDITIONAL 7 DAYS.

4. THE CONTRACTOR SHALL SAFEGAURD AND PROTECT ALL EXCAVATIONS, AND EXCAVATIONS SHALL BE KEPT FREE OF WATER.

5. EDGES OF FOOTINGS SHALL NOT BE PLACED AT A SLOPE GREATER THAN 1 (VERTICAL) TO 2 (HORIZONTAL) WITH RESPECT TO ANY ADJACENT FOOTINGS.

6. THE FOUNDATION CONTRACTOR SHALL REFER TO THE MECHANICAL AND ELECTRICAL CONTRACT DRAWINGS FOR ALL LOCATIONS OF TRENCHES, PITS, CONDUITS, UNDERFLOOR AND PERIMETER DRAINAGE SYSTEMS ETC.

7. THE BOTTOM OF ALL EXTERIOR FOOTINGS SHALL BE A MINIMUM OF 3'-0" BELOW FINISH GRADE.

CONCRETE

1. ALL CONCRETE WORK SHALL CONFORM WITH THE REQUIREMENTS OF THE AMERICAN CONCRETE INSTITUTE A.C.I. 318-89.

2. ALL CONCRETE UNLESS NOTED OTHERWISE SHALL BE STONE CONCRETE HAVING A MINIMUM ULTIMATE COMPRESSIVE STRENGTH OF 3,000 PSI AFTER 28 DAYS.

3. REPRESENTATIVE TEST CYLINDERS WILL BE TAKEN FROM THE CONCRETE PLACED EACH DAY IN ACCORDANCE WITH CONCRETE SPECIFICATIONS.

4. REINFORCING STEEL SHALL BE DEFORMED BARS OF INTERMEDIATE GRADE NEW BILLET STEEL CONFORMING TO CURRENT REQUIREMENTS OF A.S.T.M. A-615 GRADE 60. DESIGN STRESS = 24,000 PSI. LAP BARS, 40 DIAM. UNLESS OTHERWISE SHOWN.

5. WELDED WIRE FABRIC SHALL HAVE A MINIMUM ULTIMATE STRENGTH OF 70,000 PSI AND SHALL CONFORM TO A.S.T.M. A-185.

6. MINIMUM STEEL PROTECTION, UNLESS OTHERWISE SHOWN, SHALL BE 3/4" FOR SLABS, 1 1/2" FOR BEAMS, 3" FOR FOOTINGS AND OTHER STRUCTURAL CONCRETE DEPOSITED AGAINST GROUND.

7. THE CONTRACTOR SHALL COOPERATE WITH OTHER TRADES AND WHERE REQUIRED, INSTALL ALL BUILT-IN WORK, SLEEVES, INSERT, ETC. AS REQUIRED FOR THE COMPLETION OF THE JOB.

8. EXCAVATIONS SHALL BE KEPT FREE OF WATER. NO CONCRETE SHALL BE PLACED IN WATER.

9. ALL SLABS ON GRADE SHALL HAVE THICKENINGS, DEPRESSIONS, OPENINGS, ETC. AS REQUIRED OR AS SHOWN HEREIN OR ON ARCHITECTURAL DRAWINGS.

10. ALL MESH SHALL BE SPLICED SO THAT THE OVERLAP BETWEEN OUTERMOST CROSS WIRES OF EACH SHEET IS NOT LESS THAN THE SPACING OF THE CROSS WIRES PLUS TWO INCHES, UNLESS OTHERWISE SHOWN ON DRAWINGS.

11. FOR ALL SLABS ON GRADE WHERE NOT OTHERWISE SPECIFIED, USE STYLE 6 x 6 - W1.4 x W1.4 W.W.F.

12. ALL SLABS ON GRADE SHALL BE TROWELLED IN AT EVERY COLUMN LINE AND ELSEWHERE SHOWN ON FOUNDATION PLAN. SEE TYPICAL SLAB ON GRADE DETAIL FOR CONTROL JOINTS.

MASONRY

1. ALL MATERIALS AND CONSTRUCTION SHALL CONFORM TO THE REQUIREMENTS OF THE NATIONAL CONCRETE MASONRY ASSOCIATION, AND ACI 530/ASCE 5.

2. ALL EXTERIOR AND INTERIOR BEARING WALLS SHALL BE CONSTRUCTED OF LOAD BEARING UNITS.

3. HOLLOW LOAD BEARING BLOCK SHALL CONFORM TO ASTM C-90 AND SOLID LOAD BEARING BLOCK SHALL CONFORM TO ASTM C-145.

4. ALL MASONRY WALLS SHALL BE REINFORCED WITH TRUSS TYPE GALVANIZED DUR-O-WALL SPACED VERTICALLY AT 16" O.C. U.N.O. PROVIDE CORNER AND TEE PIECES AT ALL INTERSECTIONS. LAP ALL DUR-O-WAL 6" MINIMUM.

5. ALL LOAD BEARING AND EXTERIOR WALLS SHALL BE LAID WITH TYPE S MORTAR UNLESS NOTED OTHERWISE IN SPECIFICATION SECTION 04200.

6. BRACE AND SHORE ALL WALLS AND LINTELS AS REQUIRED DURING CONSTRUCTION. SEE LINTEL SCHEDULE FOR END BEARING REQUIREMENTS.

7. ALL FILL FOR MASONRY WALLS SHALL BE CONCRETE GROUT CONFORMING TO A.S.T.M. C476. GROUTING SHALL BE PLACED IN 5'-0" MAXIMUM LIFTS.

8. PROVIDE CONTINUOUS BOND BEAM FILLED SOLID WITH GROUT AND CONTINUOUS REINFORCING UNDER ALL SUPPORT FOR OPEN WEB STELL JOISTS AND STEEL JOIST GIRDERS.

9. PROVIDE CONTROL JOINTS AT 30'-0" MAXIMUM ON CENTER IN ALL MASONRY WALLS. REFER TO ARCHITECTURAL DRAWINGS FOR LOCATIONS.

10. LAP ALL VERTICAL REINFORCING 48 BAR DIAMETER MINIMUM.

METAL DECKS

1. ALL METAL DECKING SHALL BE DESIGNED, FABRICATED AND ERECTED IN ACCORDANCE WITH THE LATEST EDITION OF, THE "SPECIFICATION OF THE STEEL DECK INSTITUTE".

2. ALL METAL DECK SHALL BE GALVANIZED. ALL GALVANIZING SHALL CONFORM TO THE REQUIREMENTS OF ASTM A525, G60.

1. METAL DECK SHALL BE AS FOLLOWS:

   NON-COMPOSITE ROOF DECK SHALL BE 22 GAUGE STEEL DECK WITH WIDE RIBS SPACED 6" O.C. AND DEPTH EQUAL TO 1 1/2". DECK SHALL HAVE THE FOLLOWING MINIMUM PROPERTIES PER FOOT WIDTH:

   I = .167 IN4
   +S = .186 IN3
   -S = .194 IN3

3. ALL METAL DECKS HAVE BEEN DESIGNED TO BE CONTINOUS OVER 3 SPANS MINIMUM, AND SHALL BEAR AT LEAST 2" ON STEEL SUPPORTS.

4. DECK SHALL BE WELDED TO SUPPORTING STEEL AT ENDS OF UNITS AND ALL INTERMEDIATE SUPPORTS IN ACCORDANCE WITH MANUFACTURER'S RECOMMENDATIONS (UNLESS NOTED OTHERWISE ON PLAN).

5. STANDARD CLOSURE SHALL BE PROVIDED AS REQUIRED.

6. SHOP DRAWINGS SHALL INDICATE ALL INFORMATION NECESSARY FOR A COMPLETE FABRICATION AND ERECTION OF THE METAL DECK.

7. PROVIDE STEEL HEADER FRAMES FOR SUPPORT OF METAL DECKING FOR ALL OPENINGS GREATER THAN 10" SQUARE.

8. PROVIDE STEEL LEDGER ANGLE 2 1/2" x 2 1/2" x 1/4" AT STEEL COLUMNS AS REQUIRED FOR SUPPORT OF METAL DECKING.

DESIGN LIVE LOADS

1. SLAB ON GRADE: ENGINE BAY = 150 P.S.F.
   MECHANICAL ROOM = 150 P.S.F.
   OTHER SPACES = 100 P.S.F.

2. ROOF: = 30 P.S.F.

3. WIND LOAD: = 70 MPH

STEEL JOISTS

1. ALL OPEN WEB K JOISTS AND JOIST GIRDERS SHALL BE DESIGNED, FABRICATED, AND ERECTED IN ACCORDANCE WITH THE LATEST EDITION OF "STANDARD SPECIFICATIONS AND LOAD TABLES" AS ADOPTED BY THE STEEL JOIST INSTITUTE.

2. STEEL JOISTS AND STEEL JOIST GIRDERS SHALL BE SHOP PAINTED WITH AN APPROVED CORROSION RESISTANT PRIMER. ALL STEEL SHALL BE PAINTED IN STRICT ACCORDANCE WITH THE AISC SPECIFICATIONS AND MANUFACTURER'S RECOMMENDATIONS. PRIOR TO PAINTING, ALL STEEL SURFACES SHALL BE PREPARED IN ACCORDANCE WITH SSPC. REFER TO SPECIFICATIONS.

3. MECHANICAL EQUIPMENT NOT SHOWN ON PLAN SHALL NOT BE PLACED DIRECTLY ON THE JOISTS WITHOUT THE APPROVAL OF THE ENGINEER. NO EQUIPMENT SHALL BE SUPPORTED FROM THE BOTTOM CHORD OR BETWEEN PANEL POINTS OF THE JOISTS.

4. ALL STEEL JOISTS, SHALL BE INSPECTED BY AN AGENCY AS STIPULATED IN THE SPECIFICATIONS.

5. PROVIDE AND INSTALL BRIDGING IN ACCORDANCE WITH STEEL JOIST INSTITUTE'S STANDARDS.

6. NO CONSTRUCTION LOAD SHALL BE PLACED ON THE JOISTS BEFORE THE JOISTS ARE PERMANENTLY FASTENED TO SUPPORTS AND ALL BRIDGING AND ANCHORS ARE COMPLETELY INSTALLED.

STRUCTURAL AND MISCELLANEOUS STEEL

1. ALL STRUCTURAL AND MISCELLANEOUS STEEL SHALL CONFORM TO THE NINTH EDITION OF THE AISC "SPECIFICATION FOR THE DESIGN, FABRICATION AND ERECTION OF STRUCTURAL STEEL FOR BUILDINGS" AND ALL ITS SUPPLEMENTS, AND TO THE AISC "CODE OF STANDARD PRACTICE FOR STEEL BUILDINGS AND BRIDGES".

2. ALL STRUCTURAL AND MISCELLANEOUS STEEL SHALL CONFORM TO ASTM A-36 HAVING A MINIMUM YIELD STRENGTH OF 36,000 PSI.

3. STEEL TUBES SHALL CONFORM TO ASTM A 500 GRADE B, FY= 46,000 PSI.

4. ALL WELDED CONNECTIONS SHALL BE DONE WITH E70XX ELECTRODES. ALL BOLTED CONNECTIONS SHALL USE 3/4" ASTM A325N HIGH STRENGTH BOLTS UNLESS NOTED OTHERWISE. ALL BEAM CONNECTIONS SHALL DEVELOP THE FULL UNIFORM LOAD CAPACITY THE MEMBER CAN CARRY WITH DUE CONSIDERATION TO CONCENTRATED LOADS AT THE ENDS OF THE MEMBER. NO CONNECTION SHALL BE MADE USING LESS THAN TWO BOLTS. ALL ANCHOR BOLTS SHALL BE ASTM A-307.

5. SHOP AND FIELD WELDS SHALL BE MADE BY APPROVED CERTIFIED WELDERS AND SHALL CONFORM TO THE AMERICAN WELDING SOCIETY CODE FOR BUILDINGS AWS D1.1. WELDS SHALL DEVELOP THE FULL STRENGTH OF MATERIALS BEING WELDED, UNLESS OTHERWISE NOTED.

6. NO OPENINGS IN BEAMS SHALL BE PERMITTED WITHOUT THE WRITTEN PERMISSION OF THE ENGINEER.

7. THE USE OF A GAS-CUTTING TORCH IN THE FIELD FOR CUTTING HOLES OR FOR CORRECTING FABRICATION ERRORS WILL NOT BE PERMITTED ON NEW STRUCTURAL FRAMING MEMBERS EXCEPT WITH THE WRITTEN APPROVAL OF THE ENGINEER FOR EACH SPECIFIC CONDITION.

8. ALL STRUCTURAL STEEL SHALL BE SHOP PAINTED WITH AN APPROVED CORROSION RESISTANT PRIMER. ALL STEEL SHALL BE PAINTED IN STRICT ACCORDANCE WITH THE AISC SPECIFICATIONS AND MANUFACTURER'S RECOMMENDATIONS. PRIOR TO PAINTING, ALL STEEL SURFACES SHALL BE PREPARED IN ACCORDANCE WITH SSPC. REFER TO SPECIFICATIONS SECTION 05120.

9. ERECTED STRUCTURAL STEEL SHALL BE INSPECTED BY QUALIFIED INSPECTORS AS STIPULATED IN THE SPECIFICATIONS. FIELD INSPECTION REPORTS TO BE FILED WITH THE STRUCTURAL ENGINEER WITHIN 5 DAYS OF TIME OF ACTUAL INSPECTION. INSPECTORS MUST BE NOTIFIED OF ALL PHASES OF CONSTRUCTION AND WELDING BY GENERAL CONTRACTOR.

10. DURING ERECTION, STRUCTURAL STEEL FRAME SHALL BE ADEQUATELY BRACED IN ALL LINES, TWO WAYS, IN PERPENDICULAR DIRECTIONS.

LINTEL SCHEDULE

1. FOR ALL OPENINGS NOT SPECIFICALLY SHOWN ON PLAN, (OPENINGS FOR MECHANICAL TRADES, OPENINGS IN NON-BEARING WALLS, ETC.) PROVIDE L-1, L-2, P-1 OR P-2 COORDINATE WITH ALL THE CONSTRUCTION DOCUMENTS.

2. WELD ALL MULTIPLE ANGLE LINTELS AT ENDS AND 1/3 POINTS.

3. SHORE LINTELS TO PREVENT ROTATION DURING CONSTRUCTION.

4. ALL LINTELS TO HAVE A MINIMUM 8" SOLID BEARING UNLESS NOTED OTHERWISE.

5. FOR 10" WALL, USE MULTIPLES OF 4x4x5/16" ANGLES FOR L-1. CONDITION AND MULTIPLES OF 6x4x5/16" L.L.V. ANGLES FOR L-2.

MARK	MATERIAL	REMARKS
L-1	1-4x3 1/2 x 5/16 ANGLE FOR EACH 4" WALL THICKNESS FOR OPENINGS UP TO 6'-0". SEE NOTE 5 ABOVE	FOR CAVITY WALLS, REPLACE 1-4x3 1/2 x 5/16 ANGLE WITH 1-6x6 x 5/16 ANGLE.LLV
L-2	1-6x3 1/2 x 5/16 ANGLE FOR EACH 4" WALL THICKNESS FOR OPENINGS FROM 6'-1" TO 10'-0". SEE NOTE 5 ABOVE	FOR CAVITY WALLS, REPLACE 1-6x3 1/2 x 5/16 ANGLE WITH 1-6x6 x 5/16 ANGLE.LLV
P-1	8" MIN. DEEP PRECAST 1-#3 T & B FOR EACH 4" WALL THICKNESS OR FRACTION THEREOF.	FOR OPENINGS UP TO 6'-0".
P-2	16" MIN. DEEP PRECAST 1-#6 T & B FOR EACH 4" WALL THICKNESS OR FRACTION THEREOF.	FOR OPENINGS FROM 6'-1" TO 15'-0"

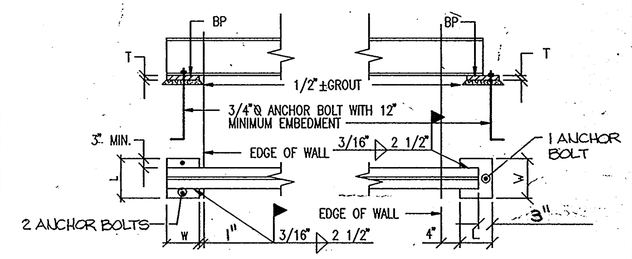

BEAM PERPENDICULAR TO WALL

BEAM PARALLEL TO WALL

PROVIDE 16" MINIMUM DEEP SOLID BEARING BELOW ALL BEARING PLATES ON MASONRY. SOLID BEARING SHALL BE TWICE THE LARGEST PLATE DIMENSION IN LENGTH. THE SOLID BEARING SHALL BE CMU FILLED SOLID WITH GROUT.

SCHEDULE	
MARK	SIZE. T x W x L (INCHES)
BP-1	1 3/8"x8"x1'-10"
BP-2	1"x8"x1'-6"
BP-3	1/2"x10"x0'-10"
BP-4	1/2"x8"x0'-10"
BP-5	3/4"x8"x1'-8"
BP-6	1 3/4"x8"x1'-6"

TYPICAL BEAM BEARING PLATE SCHEDULE 1/S3.1

ARCHITECTURAL TECHNOLOGIES INC.
Architects and Construction Consultants.
9192 Red Branch Rd. Suite 300
Columbia MD. 21045 (301) 995-4067

IN ASSOCIATION WITH:
CIVIL & GEOTECH ENGINEER: E B A ENGINEERING, INC.
STRUCTURAL ENGINEER: QODESH ENGINEERING SERVICES, INC.
MECHANICAL & ELECTRICAL ENGINEER: BHARGAVA INTERNATIONAL, INC.
FIRE PROTECTION ENGINEER: STANTON ENGINEERING

QODESH ENGINEERING SERVICES, INC.
Mill Centre, Suite 100
3000 Chestnut Avenue
Baltimore, MD 21211
(301) 889-1303

REVISIONS
AS BUILT 11/24/94

GENERAL NOTES AND SCHEDULES

HOWARD COUNTY
PUBLIC SAFETY COMPLEX

SCAGGSVILLE ANNEX
11226 ROUTE 216
LAUREL, MD. 20707

CAPITAL PROJECT NO. [illegible]
DATE: 3-25-92
DRAWING NO. S 3.1

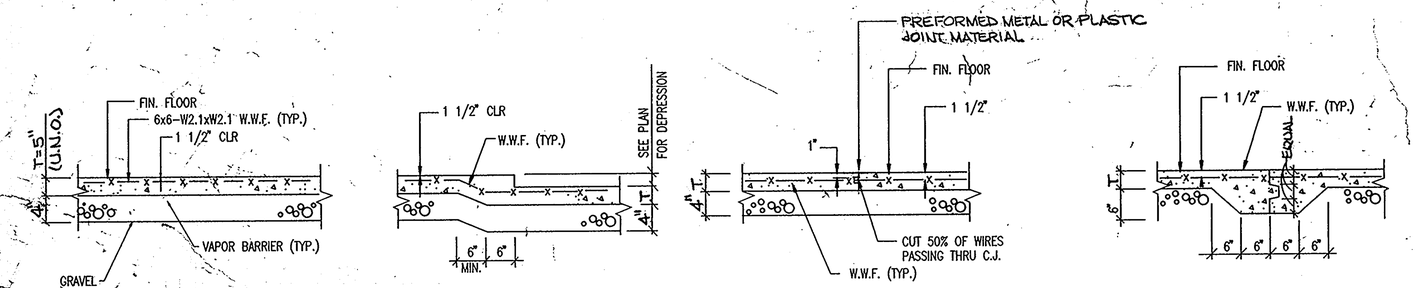

TYPICAL SLAB ON GRADE DETAILS (1 / S3.2)

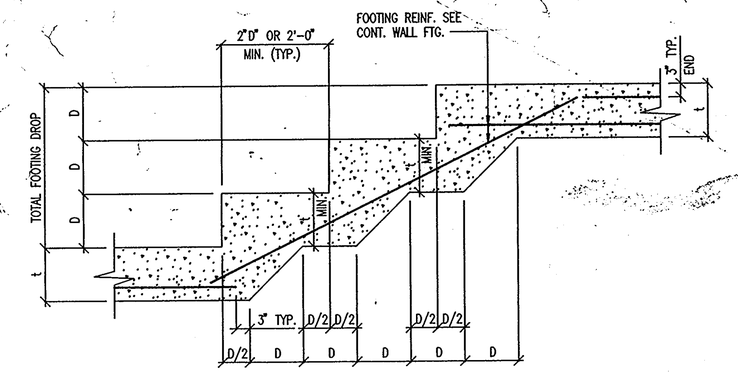

CONTINUOUS WALL FOOTING STEP DETAIL (2 / S3.2)

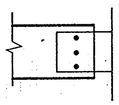

TYPICAL BEAM SHEAR CONN. (3 / S3.2)

NOTE:

1. ALL CONN. SHALL BE BOLTED OR WELDED, AND SHALL BE IN ACCORDANCE WITH TABLES 2 THRU 8 A.I.S.C MANUAL 9th EDITION.
2. CONN. SHALL DEVELOP END REACTION FOR SPECIFIED SHAPE, SPAN AND STEEL GRADE AS COMPUTED FROM TABLES INDICATING UNIFORM LOAD CONSTANTS FOR BEAMS LATERALLY SUPPORTED. A.I.S.C. MANUAL 9th EDITION UNLESS OTHERWISE NOTED ON PLAN.
3. ALL BOLTS USED FOR FINAL CONN. SHALL BE A-325 H.S BOLTS

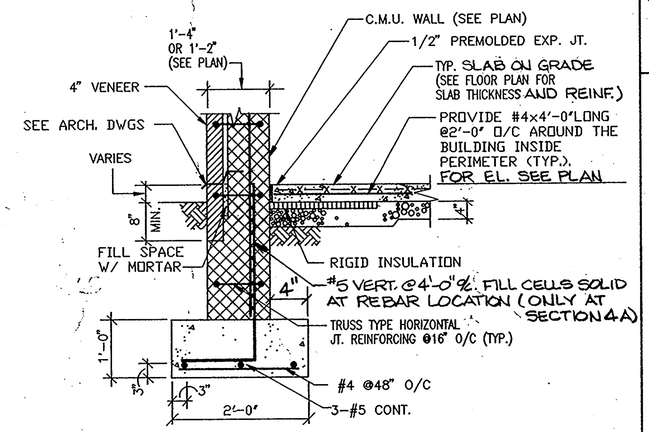

SECTION (4 / S3.2) (4A / S3.2)

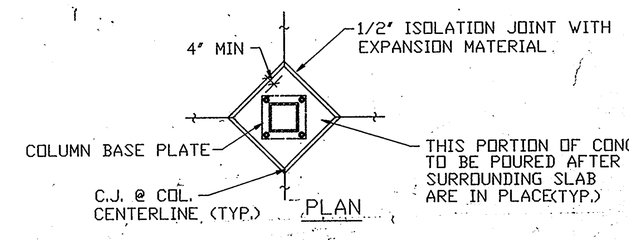

PLAN

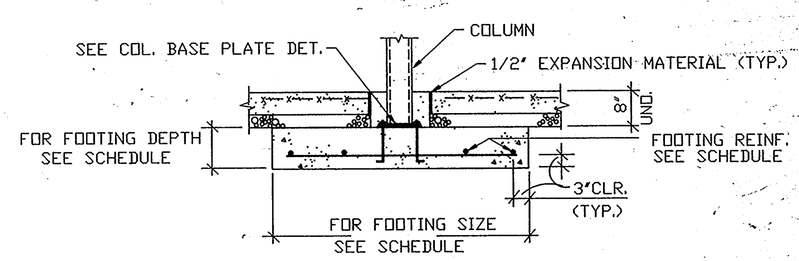

TYPICAL INTERIOR COLUMN FOOTING DETAIL (7 / S3.2)

NOTE: WHERE PIER IS REQUIRED, PROVIDE PIER AS SHOWN IN TYPICAL DETAIL.

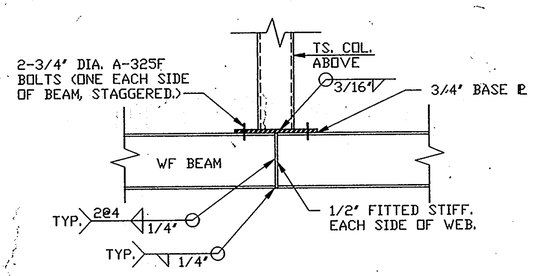

TYPICAL COLUMN ON STEEL BEAM DETAIL (5 / S3.2)

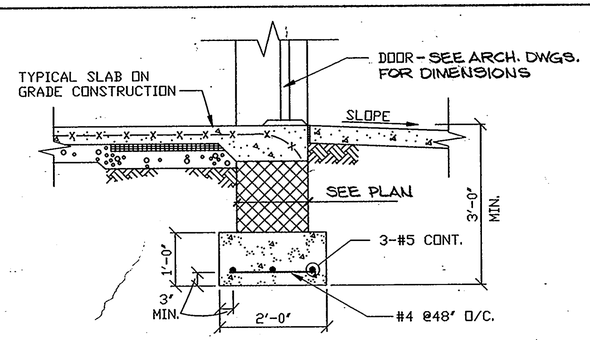

TYPICAL SECTION AT DOOR (6 / S3.2)

ARCHITECTURAL TECHNOLOGIES INC.
Architects and Construction Consultants
9192 Red Branch Rd. Suite 300
Columbia, MD. 21045 (301) 995-4067

IN ASSOCIATION WITH:
CIVIL & GEOTECH ENGINEER:
STRUCTURAL ENGINEER:
MECHANICAL & ELECTRICAL ENGINEER:
FIRE PROTECTION ENGINEER:

E B A ENGINEERING, INC.
QODESH ENGINEERING SERVICES, INC.
BHARGAVA INTERNATIONAL, INC.
STANTON ENGINEERING

QODESH ENGINEERING SERVICES, INC.
Mill Centre, Suite 100
3000 Chestnut Avenue
Baltimore, MD 21211
(301) 889-1303

REVISIONS
AS BUILT 11/24/94

SECTIONS AND DETAILS

HOWARD COUNTY PUBLIC SAFETY COMPLEX
SCAGGSVILLE ANNEX
11226 ROUTE 216
LAUREL, MD. 20707

46 OF 90

CAPITAL PROJECT NO. C-0227
DATE: 3-25-92
DRAWING NO. S 3.2

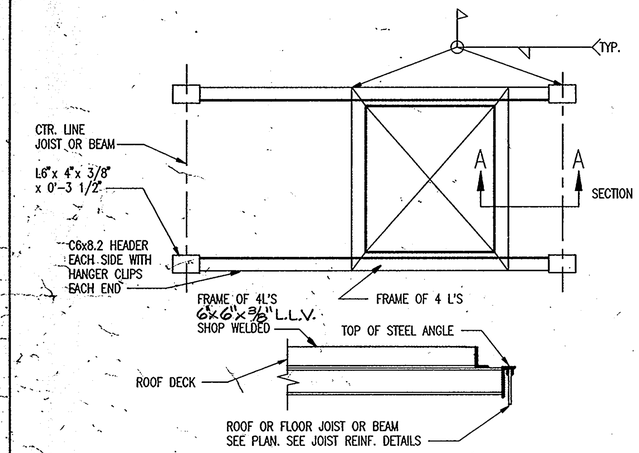

TYPICAL MECHANICAL OPEN DETIAL SECTION A-A (1 / S3.3)

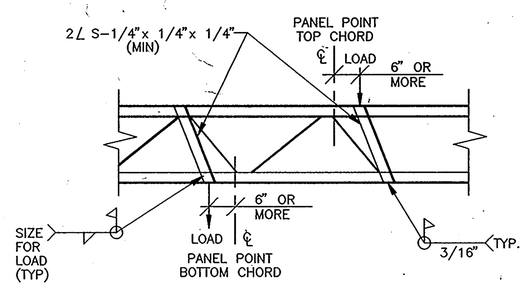

WHERE LOADS ARE APPLIED TO JOIST BETWEEN PANEL POINTS, REINFORCE AS SHOWN. LOADS INCLUDE BUT ARE NOT LIMITED TO MECHANICAL EQUIPMENT AND PIPES. (SUBJECT TO APPROVAL BY STRUCTURAL ENGINEER.)

TYPICAL JOIST REINFORCEMENT DETAIL (2 / S3.3)

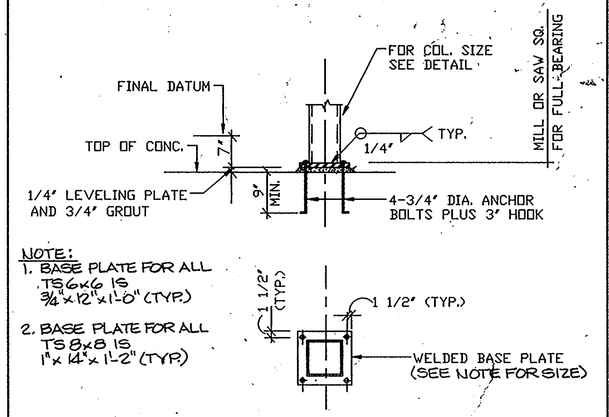

TYPICAL TUBE COLUMN BASE DETAIL (4 A.B.) (3 / S3.3)

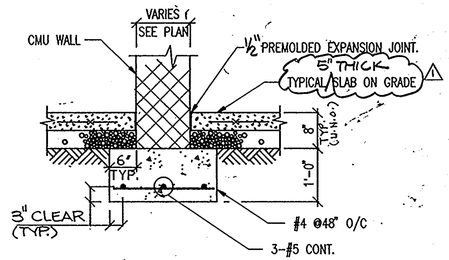

SECTION TYP. AT SHEARWALL (4 / S3.3)

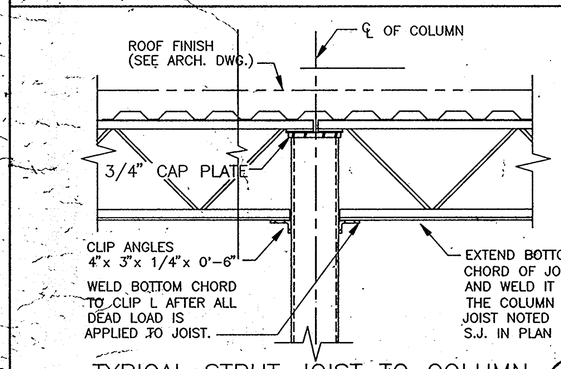

TYPICAL STRUT JOIST TO COLUMN (5 / S3.3)
NOT TO SCALE

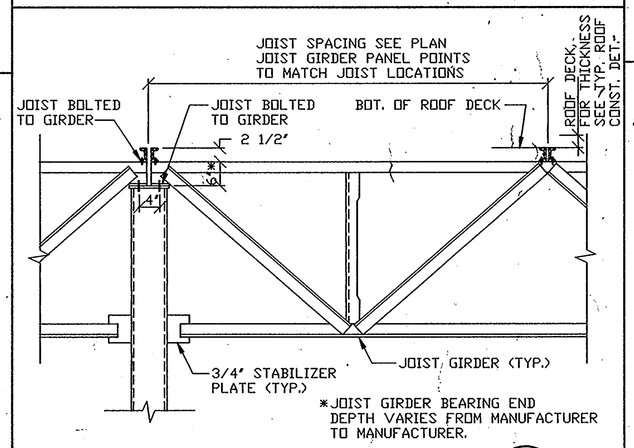

JOIST GIRDER TO COLUMN DETAIL (6 / S3.3)
U.N.O.

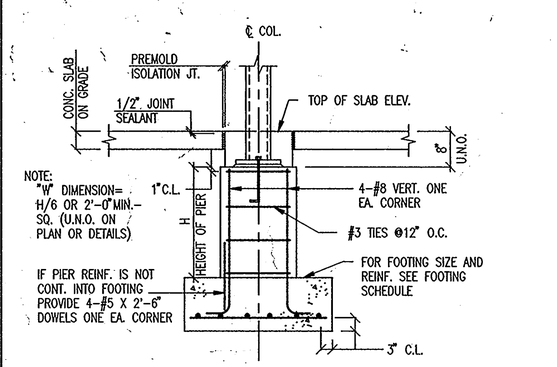

TYPICAL INTERIOR COLUMN FOOTING WITH COLUMN PIER (7 / S3.3)

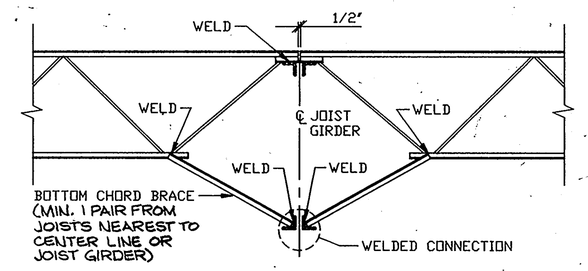

JOIST GIRDER BOTTOM CHORD BRACE DETAIL (8 / S3.3)

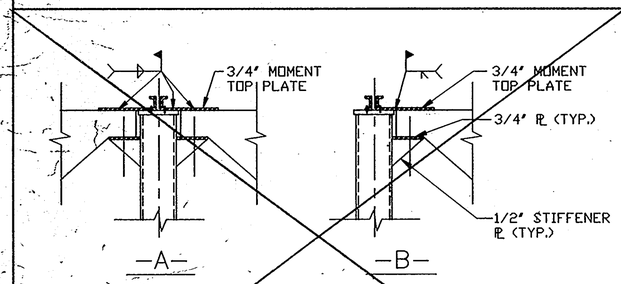

TYPICAL JOIST GIRDER MOMENT CONNECTION DETAILS (9 / S3.3)

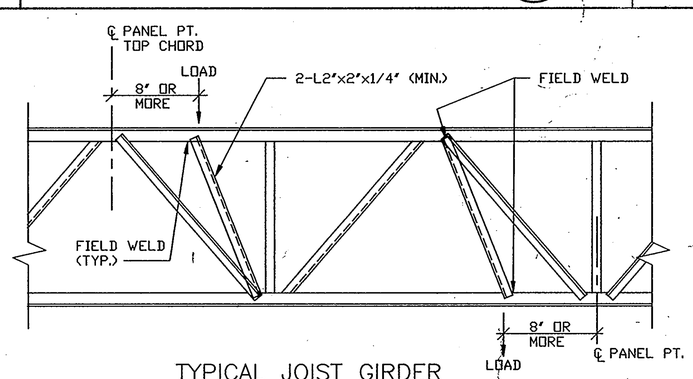

TYPICAL JOIST GIRDER REINFORCING IN FIELD DETAIL (10 / S3.3)
(FOR OFF PANEL POINT LOADS)

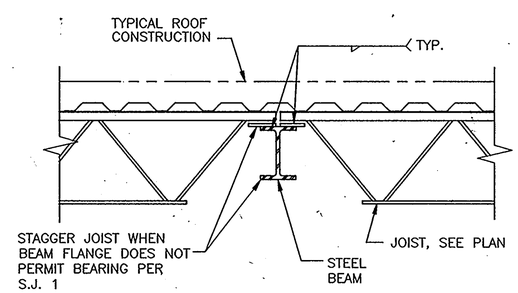

TYPICAL STEEL JOIST ON BEAM (11 / S3.3)
NOT TO SCALE

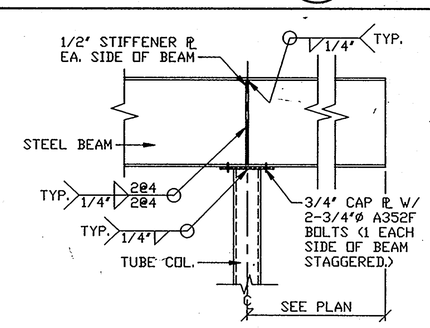

TYPICAL CANTILEVER BEAM DETAIL (12 / S3.3)

ARCHITECTURAL TECHNOLOGIES INC.
Architects and Construction Consultants
9192 Red Branch Rd. Suite 300
Columbia, MD. 21045 (301) 995-4067

IN ASSOCIATION WITH:
CIVIL & GEOTECH ENGINEER: E B A ENGINEERING, INC.
STRUCTURAL ENGINEER: QODESH ENGINEERING SERVICES, INC.
MECHANICAL & ELECTRICAL ENGINEER: BHARGAVA INTERNATIONAL, INC.
FIRE PROTECTION ENGINEER: STANTON ENGINEERING.

QODESH ENGINEERING SERVICES, INC.
Mill Centre, Suite 100
2000 Chestnut Avenue
Baltimore, MD 21211
(301) 889-1003

STATE OF MARYLAND REGISTERED PROFESSIONAL ENGINEER

REVISIONS
1 AS BUILT 11/24/94

SECTIONS AND DETAILS

HOWARD COUNTY PUBLIC SAFETY COMPLEX
SCAGGSVILLE ANNEX
11226 ROUTE 216
LAUREL, MD. 20707

CAPITAL PROJECT NO. OF-0227
DATE: 3-25-92
DRAWING NO. S 3.3

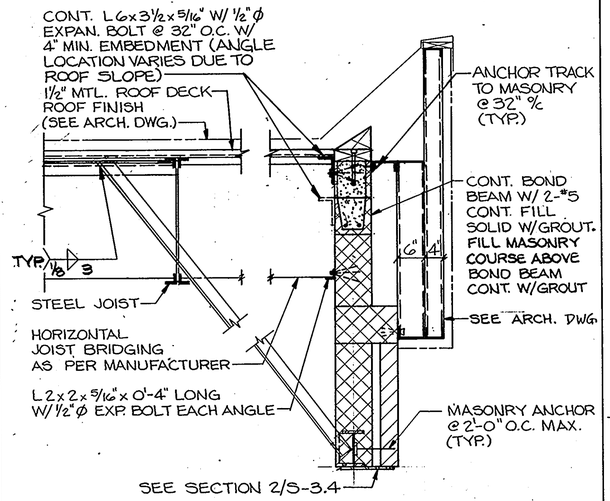

SECTION 1/S-3.4 1A/S-3.4
NO BRACING ANGLE & LINTEL IN SECTION 1A

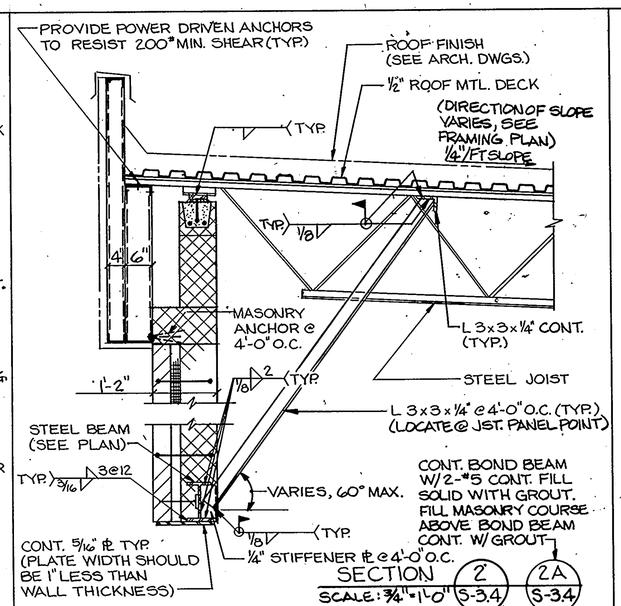

SECTION 2/S-3.4 2A/S-3.4
SCALE: ¾"=1'-0"

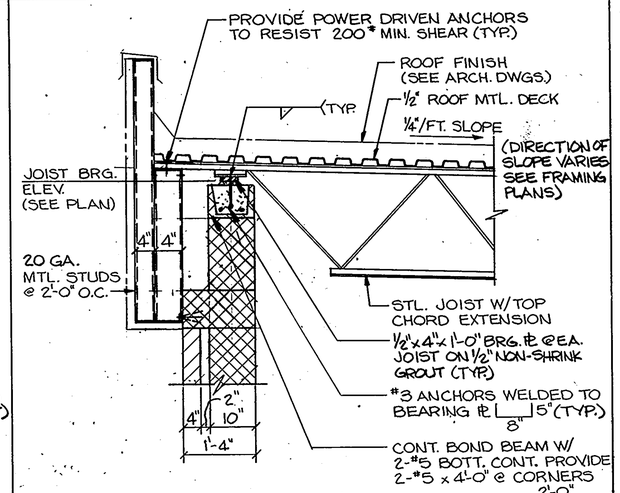

SECTION 3/S-3.4 3A/S-3.4
SCALE: ¾"=1'-0"

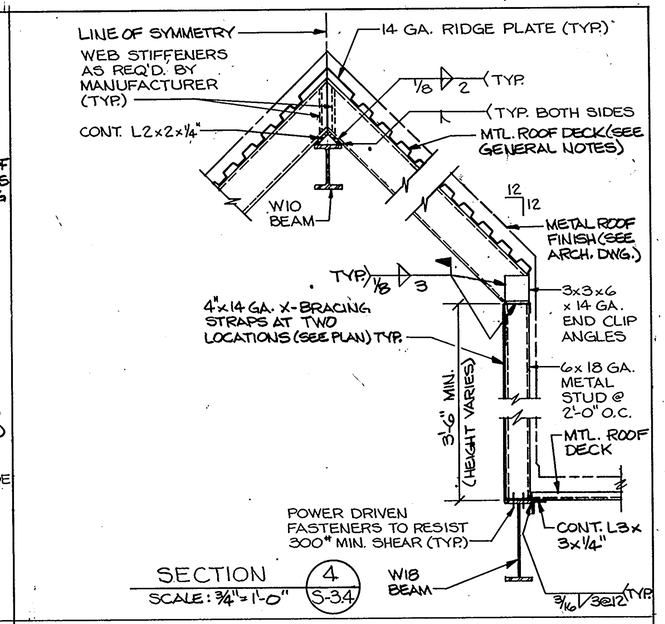

SECTION 4/S-3.4
SCALE: ¾"=1'-0"

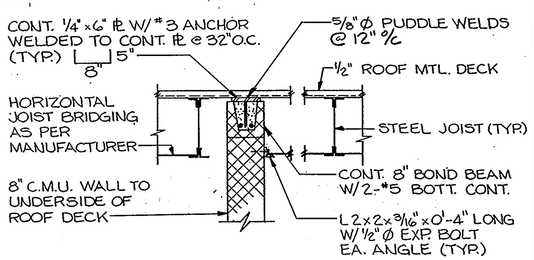

SECTION 5/S-3.4
SCALE: ¾"=1'-0"

FOOTING SCHEDULE

MARK	SIZE	DEPTH	REINFORCING	REMARKS
F-1	5'-0" x 5'-0"	12"	4-#5 BOTTOM EACH WAY.	SOIL BEARING CAPACITY 2000 P.S.F.
F-2	5'-6" x 5'-6"	12"	5-#5 BOTTOM EACH WAY.	DO
F-3	6'-0" x 6'-0"	12"	6-#5 BOTTOM EACH WAY.	DO
F-4	6'-6" x 6'-6"	14"	7-#5 BOTTOM EACH WAY.	DO
F-5	7'-0" x 7'-0"	14"	7-#5 BOTTOM EACH WAY	DO

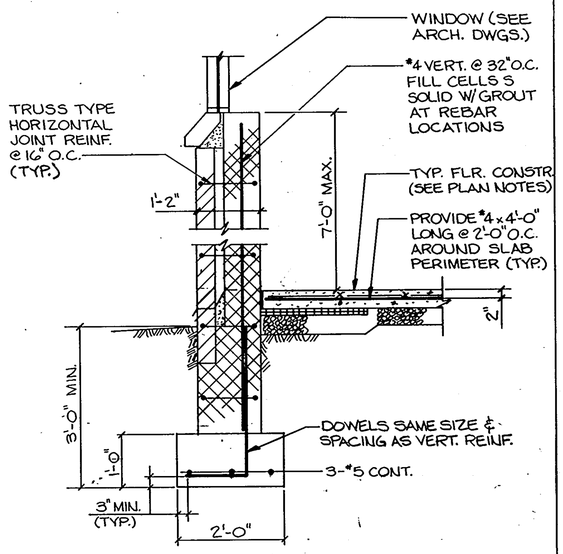

WALL SECTION UNDER WINDOW 6/S-3.4
SCALE: ¾"=1'-0"

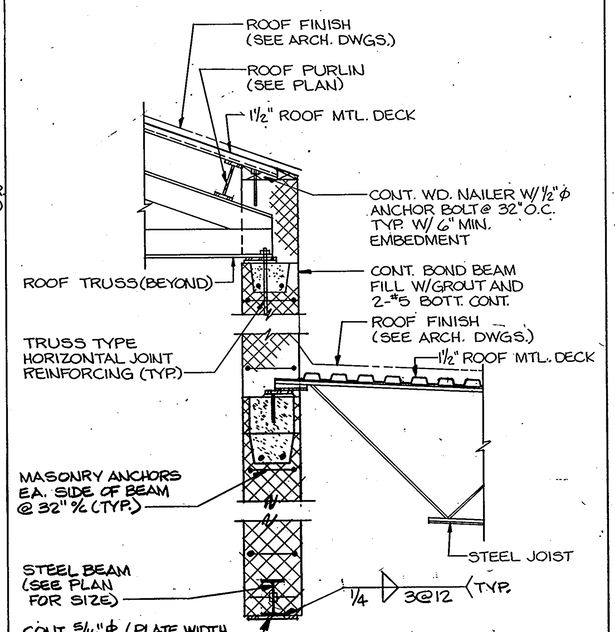

SECTION 7/S-3.4
SCALE: ¾"=1'-0"

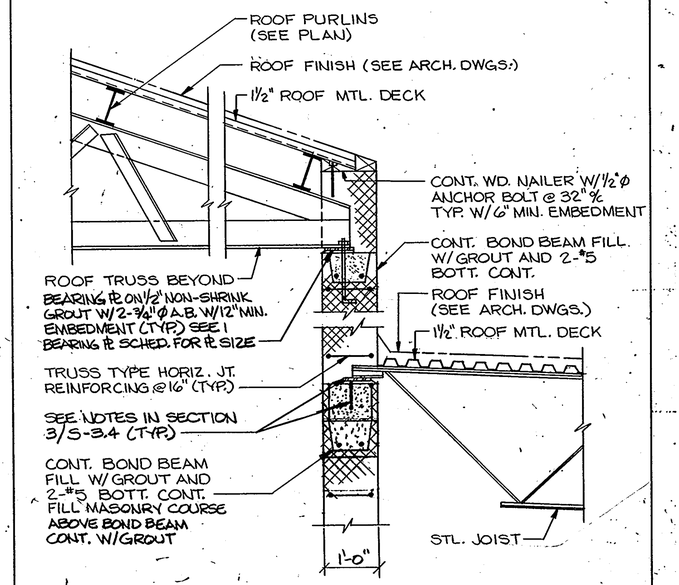

SECTION 8/S-3.4
SCALE: ¾"=1'-0"

1650

ARCHITECTURAL TECHNOLOGIES INC.
Architects and Construction Consultants
9192 Red Branch Rd. Suite 300
Columbia MD. 21045 (301) 995-4067

IN ASSOCIATION WITH:
CIVIL & GEOTECH ENGINEER:
STRUCTURAL ENGINEER:
MECHANICAL & ELECTRICAL ENGINEER:
FIRE PROTECTION ENGINEER:

E B A ENGINEERING, INC.
QODESH ENGINEERING SERVICES, INC.
BHARGAVA INTERNATIONAL, INC.
STANTON ENGINEERING

STATE OF MARYLAND REGISTERED PROFESSIONAL ENGINEER

QODESH ENGINEERING SERVICES, INC.
Mill Centre, Suite 100
5000 Chestnut Avenue
Baltimore, MD 21211
(301) 889-1803

REVISIONS
NO. DATE
1 11/24/92

SECTIONS AND DETAILS

HOWARD COUNTY PUBLIC SAFETY COMPLEX
SCAGGSVILLE ANNEX
11226 ROUTE 216
LAUREL, MD. 20707

48 GF 90
CAPITAL PROJECT NO. C.P. 0227
DATE: 3-25-92
DRAWING NO. S-3.4

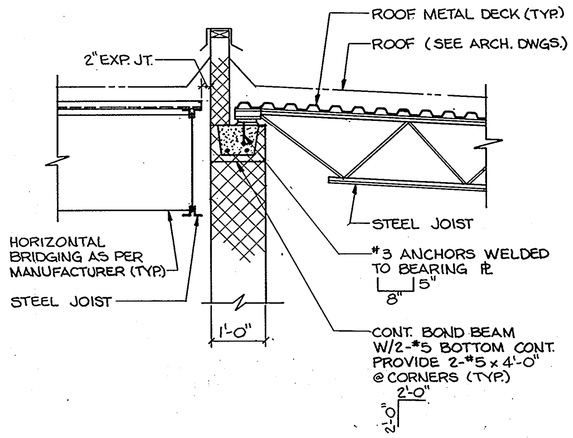

SECTION 1 (S-3.5)
SCALE: 3/4" = 1'-0"

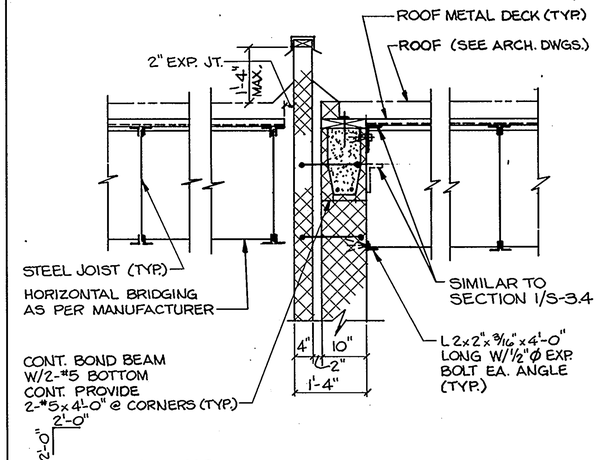

SECTION 2 (S-3.5)
SCALE: 3/4" = 1'-0"

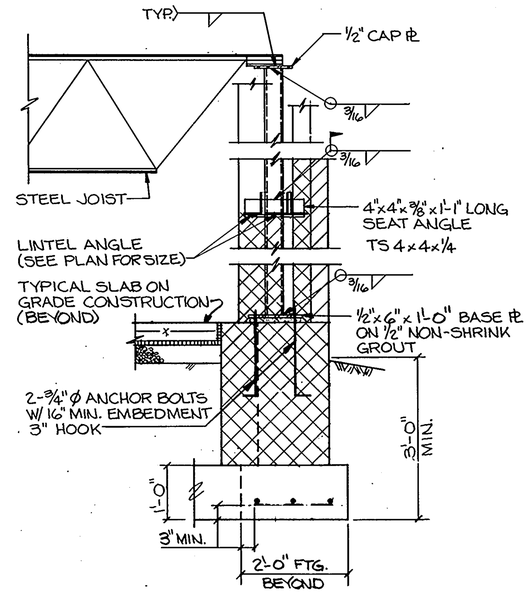

SECTION 3 (S-3.5)
SCALE: 3/4" = 1'-0"

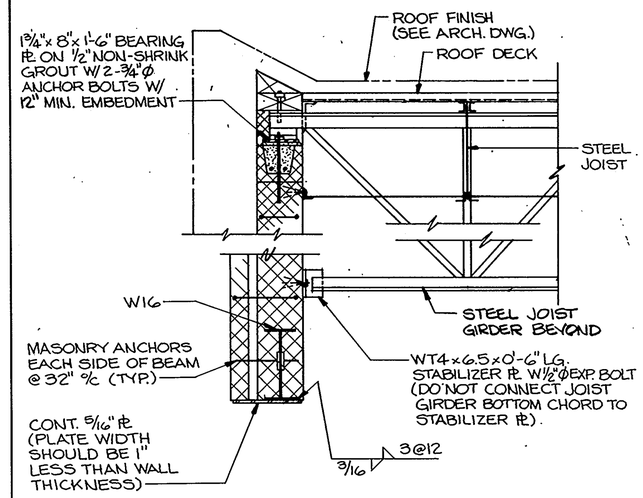

SECTION 4 / 4A (S-3.5 / S-3.5)
SCALE: 3/4" = 1'-0"

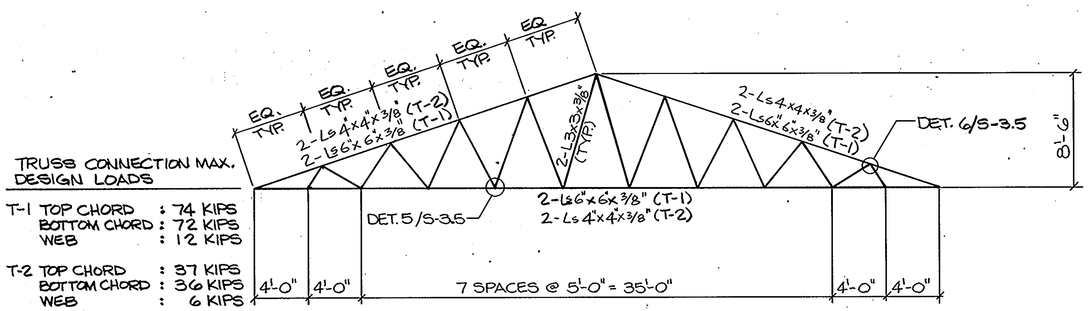

TRUSS ELEVATION
SCALE: 3/16" = 1'-0"

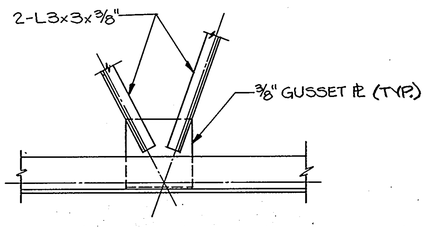

DETAIL 5 (S-3.5)
SCALE: 3/4" = 1'-0"

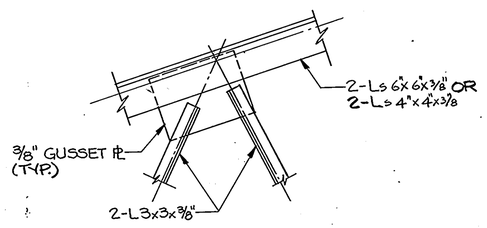

DETAIL 6 (S-3.5)
SCALE: 3/4" = 1'-0"

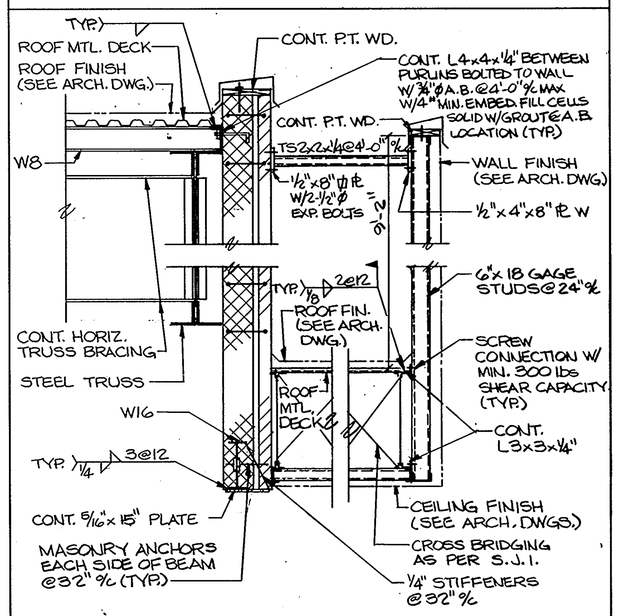

SECTION 7 (S-3.5)
SCALE: 1/2" = 1'-0"

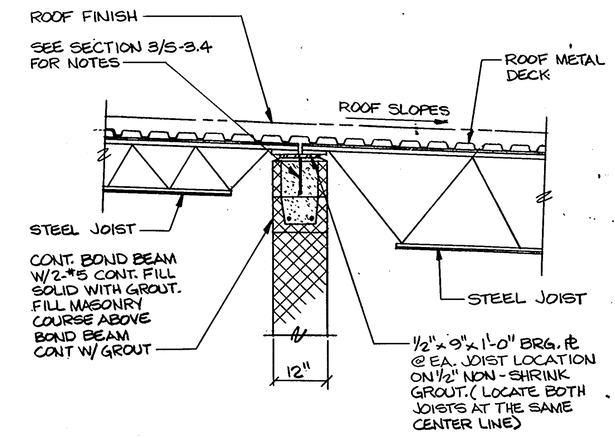

SECTION 8 (S-3.5)
SCALE: 3/4" = 1'-0"

1650

ARCHITECTURAL TECHNOLOGIES INC.
Architects and Construction Consultants
9192 Red Branch Rd. Suite 300
Columbia MD. 21045 (301) 995-4067

IN ASSOCIATION WITH:
CIVIL & GEOTECH ENGINEER: E B A ENGINEERING, INC.
STRUCTURAL ENGINEER: QODESH ENGINEERING SERVICES, INC.
MECHANICAL & ELECTRICAL ENGINEER: BHARGAVA INTERNATIONAL, INC.
FIRE PROTECTION ENGINEER: STANTON ENGINEERING

STATE OF MARYLAND — RICHARD J. SCHUCK — No. 11-7-86 — PROFESSIONAL ENGINEER

QODESH ENGINEERING SERVICES, INC.
Mill Centre, Suite 100
3900 Chestnut Avenue
Baltimore, MD 21211
(301) 889-1303

REVISIONS
AS-BUILT 11/24/94

SECTIONS AND DETAILS

HOWARD COUNTY PUBLIC SAFETY COMPLEX
SCAGGSVILLE ANNEX
11226 ROUTE 216
LAUREL, MD. 20707

49 OF 90

CAPITAL PROJECT NO. C-0227
DATE: 3-25-92
DRAWING NO. S-3.5

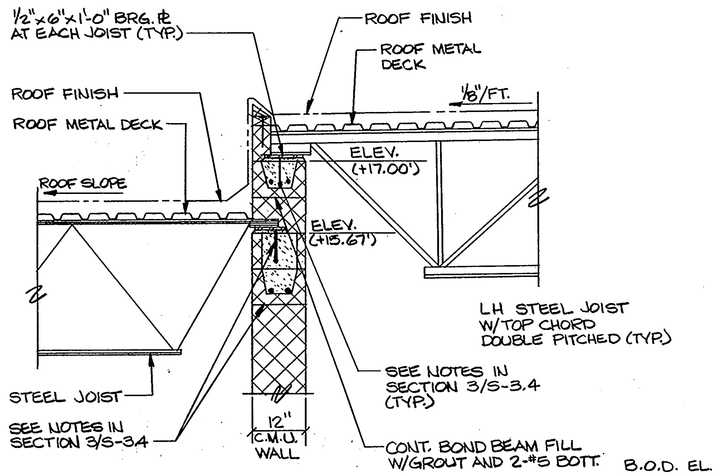

SECTION 1/S-3.6
SCALE: 3/4"=1'-0"

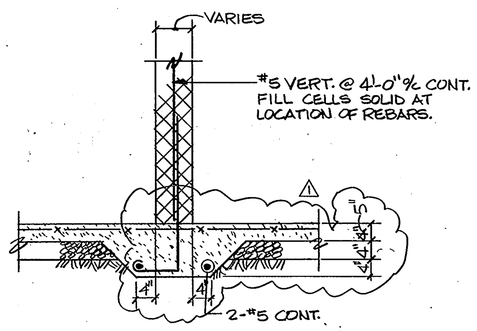

SECTION 2/S-3.6

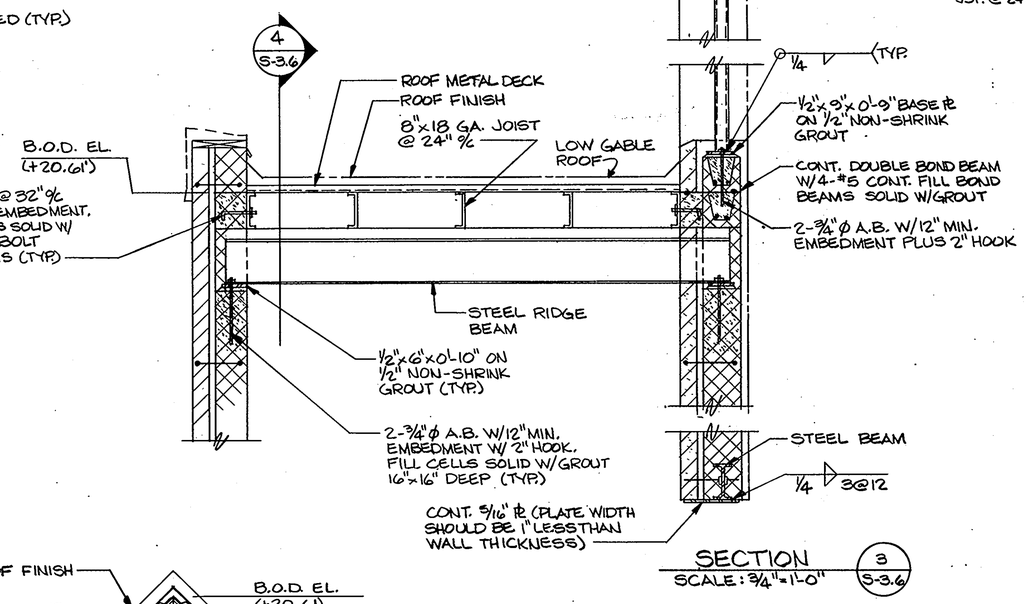

SECTION 3/S-3.6
SCALE: 3/4"=1'-0"

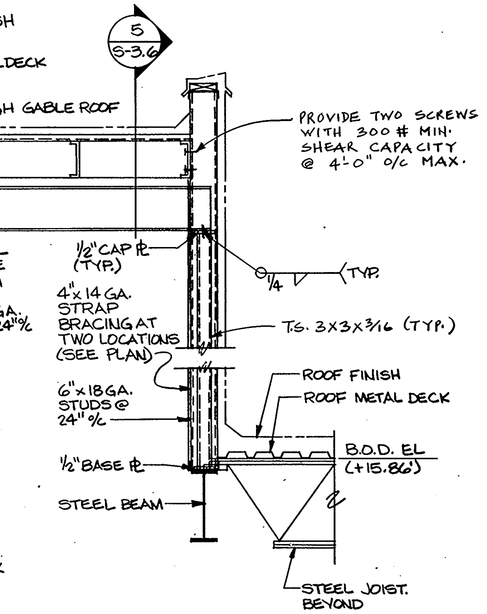

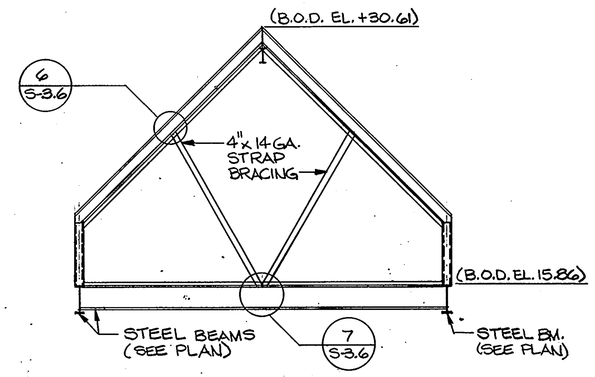

SECTION 5/S-3.6
SCALE: 1/4"=1'-0"

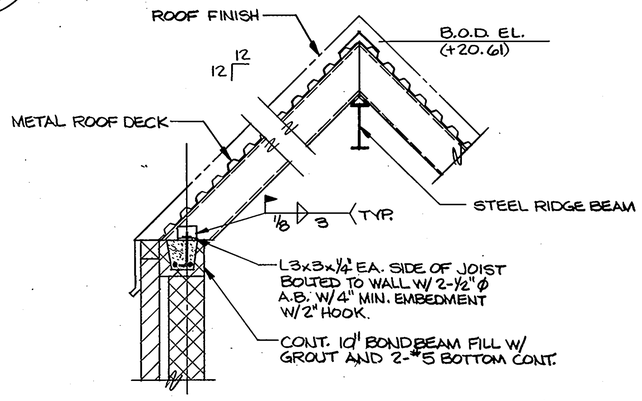

SECTION 4/S-3.6
SCALE: 3/4"=1'-0"

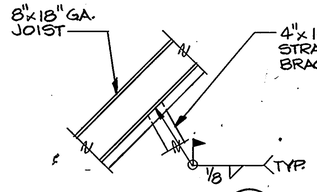

DETAIL 6/S-3.6
SCALE: 3/4"=1'-0"

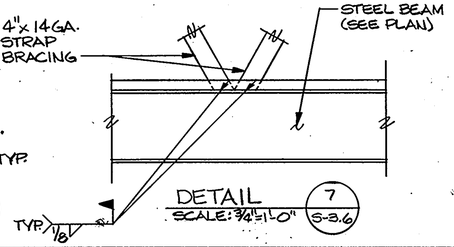

DETAIL 7/S-3.6
SCALE: 3/4"=1'-0"

ARCHITECTURAL TECHNOLOGIES INC.
Architects and Construction Consultants
9192 Red Branch Rd. Suite 300
Columbia MD. 21045 (301) 995-4067

IN ASSOCIATION WITH:
CIVIL & GEOTECH ENGINEER: E B A ENGINEERING, INC.
STRUCTURAL ENGINEER: QODESH ENGINEERING SERVICES, INC.
MECHANICAL & ELECTRICAL ENGINEER: BHARGAVA INTERNATIONAL, INC.
FIRE PROTECTION ENGINEER: STANTON ENGINEERING

STATE OF MARYLAND — MITRA SITAPARA — No. 24,486 — REGISTERED PROFESSIONAL ENGINEER

QODESH ENGINEERING SERVICES, INC.
Mill Centre, Suite 200
2000 Chestnut Avenue
Baltimore, MD 21211
(301) 889-1303

REVISIONS
1 AS BUILT 11/24/94

SECTIONS AND DETAILS

HOWARD COUNTY PUBLIC SAFETY COMPLEX
SCAGGSVILLE ANNEX
11226 ROUTE 216
LAUREL, MD. 20707

50 OF 90

CAPITAL PROJECT NO. C.P. 0227
DATE: 3-25-92
DRAWING NO. S-3.6

1650

MECHANICAL GENERAL NOTES

MGN-1 PROVIDE ACCESS DOORS TO SERVICE DAMPERS, OPERATORS, VALVES, EQUIPMENT ABOVE PLASTER, DRYWALL, AND/OR INACCESSIBLE CEILINGS. REFER TO ARCHITECTURAL DRAWINGS FOR EXTENT AND TYPE OF CEILING CONSTRUCTION.

MGN-2 PROVIDE ACCESS DOORS TO SERVICE DAMPERS, OPERATORS, VALVES, EQUIPMENT BEHIND DRYWALL, PLASTER OR MASONRY WALLS. REFER TO ARCHITECTURAL DRAWINGS FOR EXTENT AND TYPE OF WALLS CONSTRUCTION.

MGN-3 REFER TO ARCHITECTURAL DRAWINGS FOR EXACT LOCATION OF PLUMBING FIXTURES.

MGN-4 REFER TO ARCHITECTURAL DRAWINGS FOR EXACT LOCATION OF AIR DEVICES IN CERTAIN LOCATIONS, AS INDICATED.

MGN-5 REFER TO ARCHITECTURAL AND ELECTRICAL DRAWINGS FOR EXACT LOCATION OF LIGHTING FIXTURES.

MGN-6 ALL CUTTING AND PATCHING SHALL BE DONE IN STRICT ACCORDANCE WITH PROJECT SPECIFICATIONS. SEE ARCHITECTURAL DETAILS FOR OPENINGS AND PENETRATIONS.

MGN-7 REFER TO ARCHITECTURAL AND STRUCTURAL DRAWINGS FOR BUILDING WALL, CEILING, FLOOR AND ROOF CONSTRUCTION.

MGN-8 UNLESS NOTED OTHERWISE, ACCESS DOORS IN FLOORS, WALLS, CEILINGS AND ROOF SHALL BE SIZED AS REQUIRED TO PERMIT FULL ACCESSIBILITY TO VALVES, DAMPERS, ETC. MINIMUM ACCESS DOOR SIZE SHALL BE 18" X 18".

MGN-9 UNLESS NOTED OTHERWISE, ALL WORK SHALL BE EITHER CONCEALED ABOVE CEILING, IN WALLS, CHAISES OR BUILDING STRUCTURE. WORK IN MECHANICAL/ELECTRICAL ROOM SHALL BE EXPOSED.

MGN-10 DUCT SIZES INDICATED ON THE DRAWINGS ARE IN INCHES. DUCT SHALL BE GALVANIZED 24 GAGE MINIMUM WITH TURNING VANES IN ALL ELBOWS.

MGN-11 SUPPLY AIR DUCTWORK SHALL BE PROVIDED WITH MINIMUM 1 INCH SOUND LINING.

MGN-12 ALL RETURN AIR DUCTWORK SHALL BE PROVIDED WITH MINIMUM 1 INCH SOUND LINING.

MGN-13 GENERAL CONTRACTOR SHALL COORDINATE DUCT WORK, FIRE PROTECTION SYSTEMS, PIPING, STRUCTURAL, AND ELECTRICAL WORK. OFFSET IN HORIZONTAL AND VERTICAL DIRECTION DUCT WORK, PIPING AND ELECTRICAL CONDUIT AS REQUIRED FOR INSTALLATION OF ALL SYSTEMS, AT NO ADDITIONAL COST TO THE OWNER.

MGN-14 COORDINATE CEILING AIR DEVICES, SPRINKLERS, LIGHTING FIXTURES, SMOKE DETECTORS, ETC.

MGN-15 SURFACES SURROUNDING THE PENETRATION FOR DUCTS AND PIPES SHALL BE PATCHED AND SEALED IN ACCORDANCE WITH SPECIFICATIONS. SEALANT SHALL BE COMPATIBLE WITH WALL, FLOOR, CEILING, AND ROOF CONSTRUCTION AND/OR THEIR ASSOCIATED FIRE RATINGS. REFER TO ARCHITECTURAL DRAWINGS FOR OF WALL, FLOOR, CEILING AND ROOF

MGN-16 PROVIDE FIRE DAMPERS WHERE INDICATED AND REQUIRED BY NFPA IN ALL DUCTS PENETRATING FIRE RATED WALLS, CEILINGS, ETC. REFER TO ARCHITECTURAL DRAWINGS FOR FIRE RATING, LOCATION, CONSTRUCTION AND EXTENT OF FIRE RATED BUILDING MEMBERS.

MGN-17 PRIOR TO STARTING WORK, CONTRACTOR SHALL VERIFY LOCATION OF EXISTING WORK TO BE REMOVED, RELOCATED OR TO REMAIN. CONNECT. REFER TO PROJECT SPECIFICATIONS AND CIVIL DRAWINGS.

MGN-18 CONTRACTOR SHALL BALANCE HOT WATER GPM AS SHOWN ON DRAWINGS.

MGN-19 CONTRACTOR SHALL BALANCE AIR HANDLING UNIT AND DIFFUSERS TO CFM SHOWN ON DRAWINGS.

MGN-20 CONTRACTOR SHALL BALANCE EXHAUST FANS TO CFM SHOWN ON DRAWINGS. ALL EXHAUST FANS SHALL HAVE BACKDRAFT DAMPERS WITH SEALS AND DISCONNECT SWITCHES. (SEE FAN SCHEDULE).

MGN-21 ALL OUTSIDE AIR LOUVERS SHALL BE SAME STYLE AND TYPE WITH REMOVABLE BIRD INSECT SCREEN, CAULKED AND SEALED.

MGN-22 SANITARY AND STORM WATER DRAIN PIPES SHALL HAVE A MINIMUM SLOPE OF 1/8" PER FOOT. WHERE POSSIBLE, THE SLOPE SHALL BE INCREASED IN COORDINATION WITH OTHER WORK.

MECHANICAL GENERAL NOTES

MGN-23 DRAWINGS ARE DIAGRAMMATIC AND DO NOT SHOW ALL OFFSETS, BENDS, ELBOWS, OR OTHER SPECIFIC ELEMENTS THAT MAY BE REQUIRED FOR PROPER INSTALLATION OF THE WORK. ADDITIONAL BENDS AND OFFSETS AS REQUIRED BY VERTICAL AND HORIZONTAL EQUIPMENT LOCATIONS OR OTHER JOB CONDITIONS SHALL BE PROVIDED TO COMPLETE THE WORK, AT NO ADDITIONAL COST TO THE OWNER.

MGN-24 MECHANICAL EQUIPMENT IS SPECIFIED BY MAKE AND MODEL NUMBER TO ESTABLISH A LEVEL OF QUALITY, DIMENSIONAL LIMITATIONS, AND PERFORMANCE CHARACTERISTICS. PRODUCTS OF OTHER MANUFACTURERS MAY BE FURNISHED, HOWEVER, THE CONTRACTOR IS RESPONSIBLE FOR PROVIDING THE SAME LEVEL OF QUALITY, DIMENSIONAL LIMITATIONS AND PERFORMANCE CHARACTERISTICS, TO THE FULL SATISFACTION OF THE OWNER.

MGN-25 CONTRACTOR SHALL SUPPLY AS-BUILT DRAWINGS FOR ALL MECHANICAL WORK.

MECHANICAL SYMBOLS

SYMBOL	DESCRIPTION
	COLD WATER PIPING – DOMESTIC
	HOT WATER PIPING – DOMESTIC
	HOT WATER PIPING RECIRCULATING
—S—	SAN DRAIN ABV FLOOR OR GRADE
--SG--	SAN DRAIN BLW FLOOR OR GRADE
—SW—	STORM DRAIN ABV FLOOR OR GRADE
--SWG--	STORM DRAIN BLW FLOOR OR GRADE
	VENT PIPE
—CD—	AC COND DRAIN ABV FLOOR OR GRADE
--CD--	AC COND DRAIN BLW FLOOR OR GRADE
	CLEANOUT
	FLOOR CLEANOUT
	AREA DRAIN X DESIGNATE TYPE
	FLOOR DRAIN X DESIGNATE TYPE
	ROOF DRAIN X DESIGNATE TYPE
—A—	COMPRESSED AIR
—CHS—	CHILLED WATER SUPPLY
--CHR--	CHILLED WATER RETURN
	FUEL OIL SUCTION
	FUEL OIL RETURN
—HWS—	HEATING HOT WATER SUPPLY
--HWR--	HEATING HOT WATER RETURN
—HPS—	HEATPUMP WATER SUPPLY
--HPR--	HEATPUMP WATER RETURN
—LPS—	LOW PRESSURE STEAM
--LPR--	LOW PRESSURE STEAM CONDENSATE
A	AUTOMATIC AIR VENT
	ALIGNMENT GUIDE
	AIR SCOOP
	BALL JOINT
BFP	BACK FLOW PREVENTER ASSEMBLY
	ATC VALVE
	BALANCING / SHUT OFF VALVE
	BV WITH FLOW METER FITTING
	CAP OR PLUG PIPE END
S	CEILING SPEAKER
	RECESSED OR SURFACE LIGHTING FIXTURE STATIC
	RECESSED LIGHT FIXTURE RETURN AIR
	UNIT HEATER DOWNFLOW TYPE
	DUCT TO EXHAUST FAN ON ROOF
VD	MANUAL VOLUME DAMPER
	RELIEF AIR VENTILATOR ON ROOF
	FLEXIBLE ROUND DUCT. SIZE EQUAL TO NECK ON AIR DEVICE
DPX YYY	AIR DEVICE TYPE X DESIGNATES NECK SIZE GENERALLY, YYY DESIGNATES CFM
	DUCTWORK WITH INSULATION

MECHANICAL SYMBOLS

SYMBOL	DESCRIPTION
	CHECK VALVE
	EXPANSION JOINT
	EXPANSION LOOP
	FLEXIBLE CONNECTOR
	FLOW METER FITTING
	FLOW SWITCH
	GATE VALVE
	GATE VALVE IN VERTICAL
	GLOBE VALVE
	HOSE END DRAIN
	INCREASER CONCENTRIC
	INCREASER ECCENTRIC
	MANUAL AIR VENT
	PITCH OF PIPE, RISE(R) DROP (D)
	PIPE ELBOW TURNED UP
	PIPE ELBOW TURNED DOWN
	PIPE ANCHOR
	PRESSURE GAUGE WITH COCK
	PRESSURE REDUCING STATION
	PRESSURE RELIEF VALVE
	PRESSURE AND TEMPERATURE PLUG
	PRESSURE SWITCH
	PLUGGED TEST CONN WITH COCK
	PUMP SUCTION DIFFUSER
	REDUCER CONCENTRIC
	REDUCER ECCENTRIC
	STEAM TRAP F&T TYPE
	STEAM TRAP BUCKET TYPE
	THERMOSTAT
	UNION
	UNIT HEATER (INDICATE TYPE)
	AIR FLOW MEASURING STATION
	ATC MOTOR OPERATED DAMPER
R	CHANGE IN DUCT ELEVATION RISE (R) DROP (D) IN DIRECTION AIR FLOW
24X20	DUCTWORK SIZE IN INCHES
	DUCTWORK WITH SOUND LINING
	ELBOW WITH TURNING VANES
	EXHAUST AIR CEILING REGISTER
	EXHAUST AIR DUCT DOWN
	EXHAUST AIR DUCT UP
	FIRE DAMPER
XX	FAN POWER BOX WITH REHEAT COIL XX DESIGNATES INLET SIZE
	FLEXIBLE COONECTION
	RETURN AIR CEILING REGISTER
	RETURN AIR DUCT DOWN
	RETURN AIR DUCT UP
	SOUND ATTENUATOR
	SUPPLY AIR DUCT DOWN
	SUPPLY AIR DUCT UP
	SA CEILING DIFFUSER
	STATIC PRESSURE SENSING STATION
	T- BAR DIFFUSER WITH FLEX DUCT
	MANUAL VOLUME DAMPER

MECHANICAL ABBREVIATIONS

ABBREVIATION	DESCRIPTION
A	COMPRESSED AIR
AAV	AUTOMATIC AIR VENT
ABAN	ABANDON
ABV	ABOVE
AC	AIR CINDITIONING
ACWC	AIR COOLED WATER CHILLER
AD	ACCESS DOOR
ADR	AREA DRAIN
AFF	ABOVE FINISHED FLOOR
AHU	AIR HANDLING UNIT
AMD	AIR MEASURING DEVICE/STATION
APPROX	APPROXIMATE
ARCH	ARCHITECTURAL
AS	AIR SCOOP
ATC	AUTOMATIC TEMPERATURE CONTROL
	ANGLE
	ROUND DUCT
	FLAT OVAL DUCT
BAL	BALANCE
BDD	BACK DRAFT DAMPER
BE	BOTTOM ELEVATION
BFP	BACK FLOW PREVENTER
BHP	BRAKE HORSE POWER
BJ	BALL JOINT
BLDG	BUILDING
BLW	BELOW
BT	BUCKET TRAP
BV	BALANCING VALVE
BVF	BALANCING VALVE WITH FLOWMETER FITTING
C	COMMON
CD	CEILING DIFFUSER
CFM	CUBIC FEET PER MINUTE
CF	CUBIC FEET
CHR	CHILLED WATER RETURN
CHS	CHILLED WATER SUPPLY
CI	CAST IRON
CL OR	CENTER LINE
CLG	CEILING
CO	CLEAN OUT
CONC	CONCRETE
CONN	CONNECTION
CONT	CONTINUATION
CUH	CABINET UNIT HEATER
CW	COLD WATER (DOMESTIC)
CX	CONNECT TO EXISTING
DB	DRY BULB
DEG OR	DEGREE
DF	DRINKING FOUNTAIN
DIA OR	DIAMETER
DL	DOOR LOUVER
DN	DOWN
DPR	DAMPER
DWG	DRAWING
DWH	DOMESTIC WATER HEATER
EA	EXHAUST FAN
EAT	ENTERING AIR TEMPERATURE
EF	EXHAUST FAN
EFR	EXHAUST FAN ON ROOF
EJ	EXPANSION JOINT
ELEC	ELECTRICAL
ELEV	ELEVATION
EMD	END MAIN DRIP
ETR	EXISTING TO REMAIN
EXH	EXHAUST
EXP	EXPANSION
EXT	EXPANSION TANK
EWC	ELECTRICAL WATER COOLER
EWT	ENTERING WATER TEMPERATURE
F	FAHRENHEIT
FC	FLOOR CLEAN OUT
FD	FIRE DAMPER
FDR	FLOOR DRAIN
FDT	FOUNDATION DRAIN TILE
FHC	FIRE HOSE CABINET
FLEX	FLEXIBLE
FLR	FLOOR
FMF	FLOW METER FITTING
FOB	FLAT OR BOTTOM
FOR	FUEL OIL RETURN
FOS	FUEL OIL SUPPLY
FOT	FLAT OR TOP
FPM	FEET PER MINUTE
FPS	FEET PER SECOND
F&T	FLOAT AND THERMOSTATIC TRAP
FT OR '	FEET
FSP	FIRE STAND PIPE

MECHANICAL ABBREVIATIONS

ABBREVIATION	DESCRIPTION
G	GAS
GA	GAUGE
GAL	GALLON
GALV	GALVANIZED
GPH	GALLONS PER HOUR
GPM	GALLONS PER MINUTE
GR	GRILLE
HB	HOSE BIBB
HDR	HEADER
HED	HOSE END DRAIN
HP	HORSE POWER
HPWR	HEAT PUMP WATER SUPPLY
HPWS	HEAT PUMP WATER RETURN
HW	HOT WATER (DOMESTIC)
HWB	HOT WATER BOILER
HWC	HOT WATER RECIRCULATING
HWR	HEATING HOT WATER RETURN
HWS	HEATING HOT WATER SUPPLY
HZ	HERTZ
IMC	INSULATED METAL CASING
IN OR "	INCH
INV	INVERT ELEVATION
LPR	LOW PRESSURE STEAM (CONDENSATE) RETURN
LPS	LOW PRESSURE STEAM SUPPLY
MAV	MANUAL AIR VENT
MH	MAN HOLE
MIX	MIXING
NC	NORMALLY CLOSED
NIC	NOT IN CONTRACT
NO	NORMALLY OPEN
NO. OR #	NUMBER
NTS	NOT TO SCALE
OA	OUTDOOR AIR
OC	ON CENTER
OED	OPEN END DUCT
PD	PRESSURE DROP
PH OR	PHASE
PRES	PRESSURE
PSF	POUNDS PER SQUARE FOOT
PSI	POUNDS PER SQUARE INCH
RA	RETURN AIR
RCCP	REINFORCED CONCRETE CULVERT PIPE
RDR	ROOF DRAIN
REQD	REQUIRED
RET	RETURN
RHC	REHEAT COIL
RL	RAIN LEADER
RX	REMOVE EXISTING
S	SANITARY DRAIN PIPE
SA	SUPPLY AIR
SCHD	SCHEDULE
SD	STORM DRAIN PIPE BELOW GRADE
SDG	STORM DRAIN PIPE BELOW GRADE
SG	SANITARY DRAIN PIPE
SL	DUCT SOUND LINING
SP	STATIC PRESSURE
SPKR	SPRINKLER
SPS	STATIC PRESSURE SENSING STATION
SS	STAINLESS STEEL
TA	TRANSFER AIR
TFR	TRANSFER
TPL	TRAP PRIMING LINE
TRANS	TRANSITION
UC	UNDERCUT DOOR
UH	UNIT HEATER
V	VOLT
VAV	VARIABLE AIR VOLUME
VC	CLEANOUT IN VERTICAL PIPE
VD	MANUAL VOLUME DAMPER
VFC	VARIABLE FREQUENCY CONTROLLER
VIB	VIBRATION ISOLATOR
VTR	VENT THROUGH ROOF
W/	WITH
WB	WET BULB

ARCHITECTURAL TECHNOLOGIES, INC.
Architects and Construction Consultants
9192 Red Branch Road, Suite 300
Columbia, MD 21045 (301)995-4067

IN ASSOCIATION WITH :

CIVIL & GEOTECH ENGINEER:	E B A ENGINEERING, INC.
STRUCTURAL ENGINEER:	QODESH ENGINEERING SERVICES, INC.
MECHANICAL & ELECTRICAL ENGINEER:	BHARGAVA INTERNATIONAL, INC.
FIRE PROTECTION ENGINEER:	STANTON ENGINEERING

SEAL:

REVISIONS
AS-BUILT 11/24/94

MECHANICAL GENERAL NOTES SYMBOLS AND ABBREVIATIONS

HOWARD COUNTY PUBLIC SAFETY COMPLEX

SCAGGSVILLE ANNEX
11226 ROUTE 216
LAUREL, MD 20707

CAPITAL PROJECT NO. C – 0227

DATE: 3/25/92

DRAWING NO. M1.1

1650

DRAWING NOTES:

1. LOCATION OF NEW MECHANICAL AND ELECTRICAL ROOMS.
2. EXISTING UNDER GROUND OIL STORAGE TANK SHALL BE REMOVED AND REINSTALLED IN ACCORDANCE WITH MANUFACTURER'S WRITTEN INSTRUCTIONS. ALL WORK SHALL BE PERFORMED BY OWEN CORNING CERTIFIED CONTRACTORS.
3. THE NEW LOCATION OF RELOCATED UNDER GROUND FUEL OIL STORAGE TANK.
4. NEW EMERGENCY GENERATOR. REFER TO ELECTRICAL DRAWINGS.
5. DISCONNECT AND REMOVE EXISTING MONITORING PANEL FOR EXISTING UNDER GROUND STORAGE TANK. RELOCATE THE PANEL AS SHOWN ON DRAWING M8.1

SPECIAL NOTE
THE RELOCATED UNDERGROUND OIL TANK SHALL BE TESTED AND CERTIFIED SIMILAR TO A NEW TANK INSTALLATION.

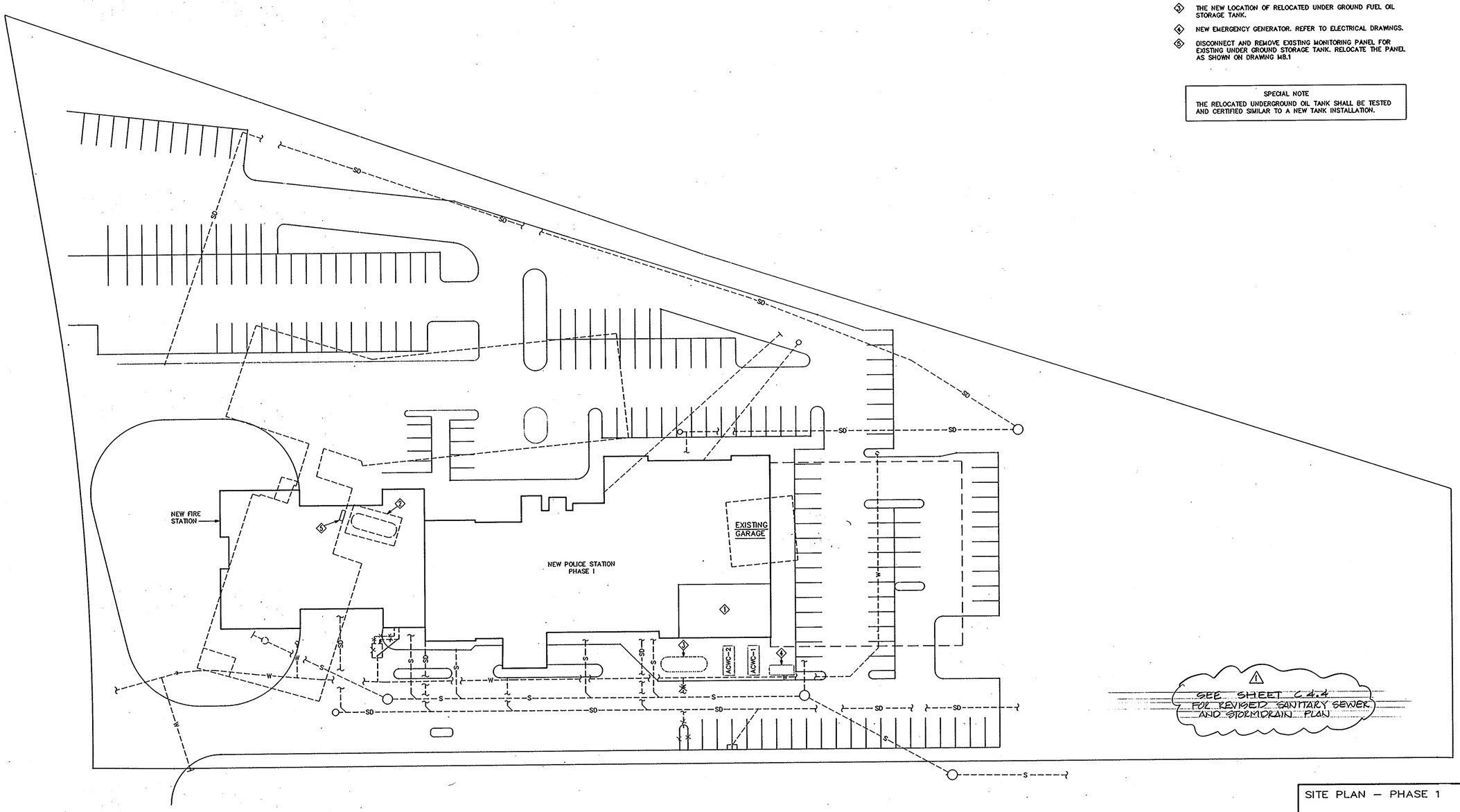

SITE PLAN – PHASE 1

ARCHITECTURAL TECHNOLOGIES, INC.
Architects and Construction Consultants
9192 Red Branch Road, Suite 300
Columbia, MD 21045 (301)995-4067

IN ASSOCIATION WITH :

CIVIL & GEOTECH ENGINEER:	E B A ENGINEERING, INC.
STRUCTURAL ENGINEER:	QODESH ENGINEERING SERVICES, INC.
MECHANICAL & ELECTRICAL ENGINEER:	BHARGAVA INTERNATIONAL, INC.
FIRE PROTECTION ENGINEER:	STANTON ENGINEERING

SEAL:

REVISIONS

1	AS BUILT	11/24/94
2		
3		

HOWARD COUNTY PUBLIC SAFETY COMPLEX

SCAGGSVILLE ANNEX
11226 ROUTE 216
LAUREL, MD 20707

CAPITAL PROJECT NO. C – 0227

DATE: 3/25/92

DRAWING NO. M2.1

1650

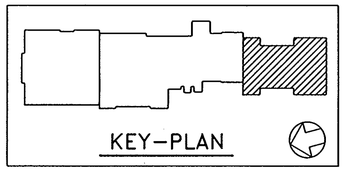

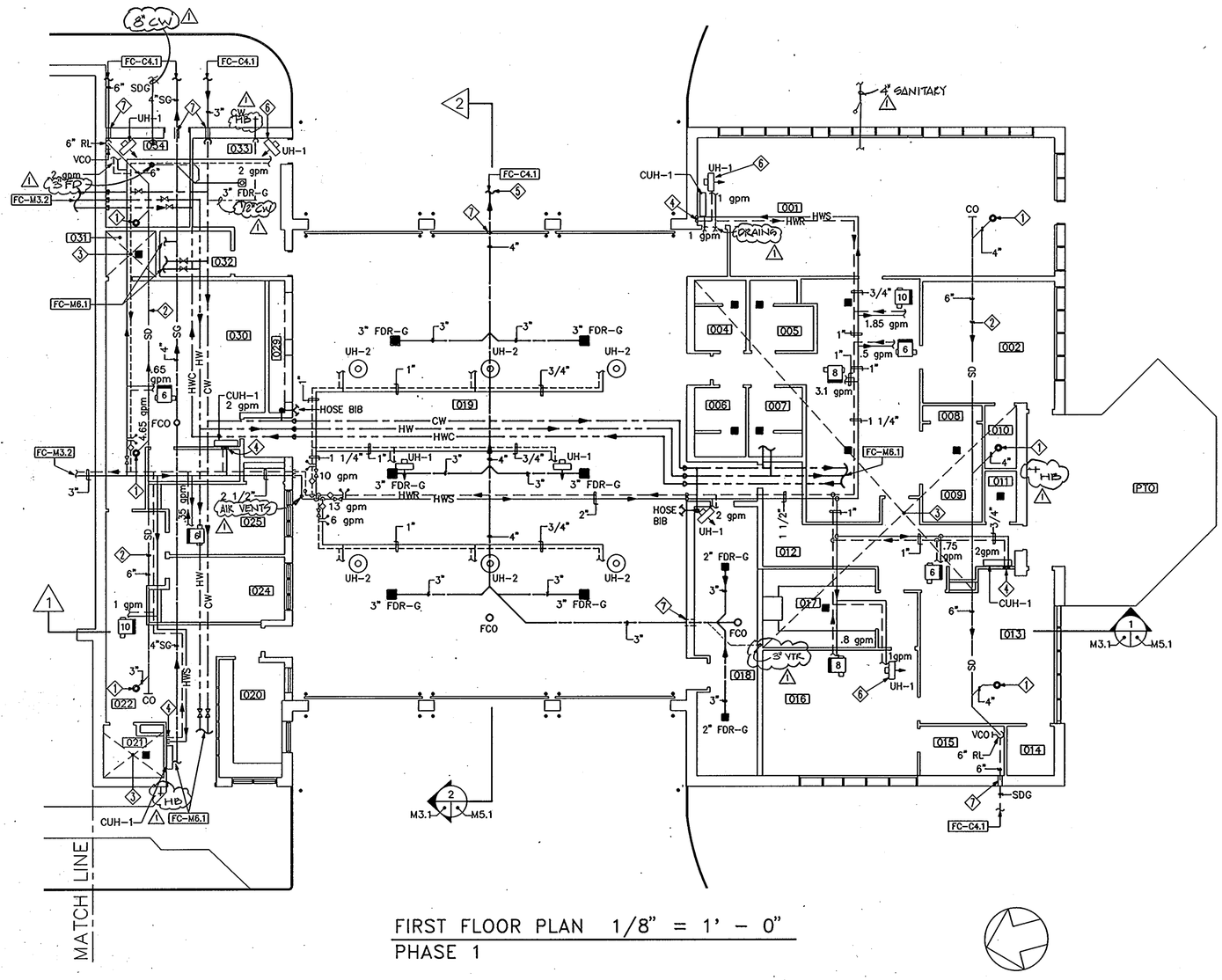

FIRST FLOOR PLAN 1/8" = 1' - 0"
PHASE 1

NOTES:

1. UP TO ROOF DRAIN. REFER TO ARCHITECTURAL DRAWING FOR ROOF DRAIN SIZES.
2. STORM WATER DRAIN BELOW ROOF.
3. FOR DETAILS OF PLUMBING WORK IN THIS AREA REFER TO PART PLAN ON DRAWING M6.1 .
4. DROP PIPES INSIDE THE WALL.
5. CONNECT DRAIN PIPE TO STORM WATER DRAIN. REFER TO CIVIL DRAWINGS.
6. UNIT HEATER LOCATED ABOVE THE CEILING.
7. PROVIDE A WATER TIGHT SLEEVE UNDER GRADE AT PIPE PENETRATION THROUGH WALL FOOTING.

1650

ARCHITECTURAL TECHNOLOGIES, INC.
Architects and Construction Consultants
9192 Red Branch Road, Suite 300
Columbia, MD 21045 (301)995-4067

IN ASSOCIATION WITH :

CIVIL & GEOTECH ENGINEER:	E B A ENGINEERING, INC.
STRUCTURAL ENGINEER:	QODESH ENGINEERING SERVICES, INC.
MECHANICAL & ELECTRICAL ENGINEER:	BHARGAVA INTERNATIONAL, INC.
FIRE PROTECTION ENGINEER:	STANTON ENGINEERING

SEAL

REVISIONS
1 AS BUILT 11/24/94

FIRST FLOOR PLAN - PIPING
FIRE STATION

HOWARD COUNTY
PUBLIC SAFETY COMPLEX

SCAGGSVILLÉ ANNEX
11226 ROUTE 216
LAUREL, MD 20707

CAPITAL PROJECT NO. C - 0227
DATE: 3/25/92
DRAWING NO. M3.1

012EM4.DWG 03/29/92 10:12:03

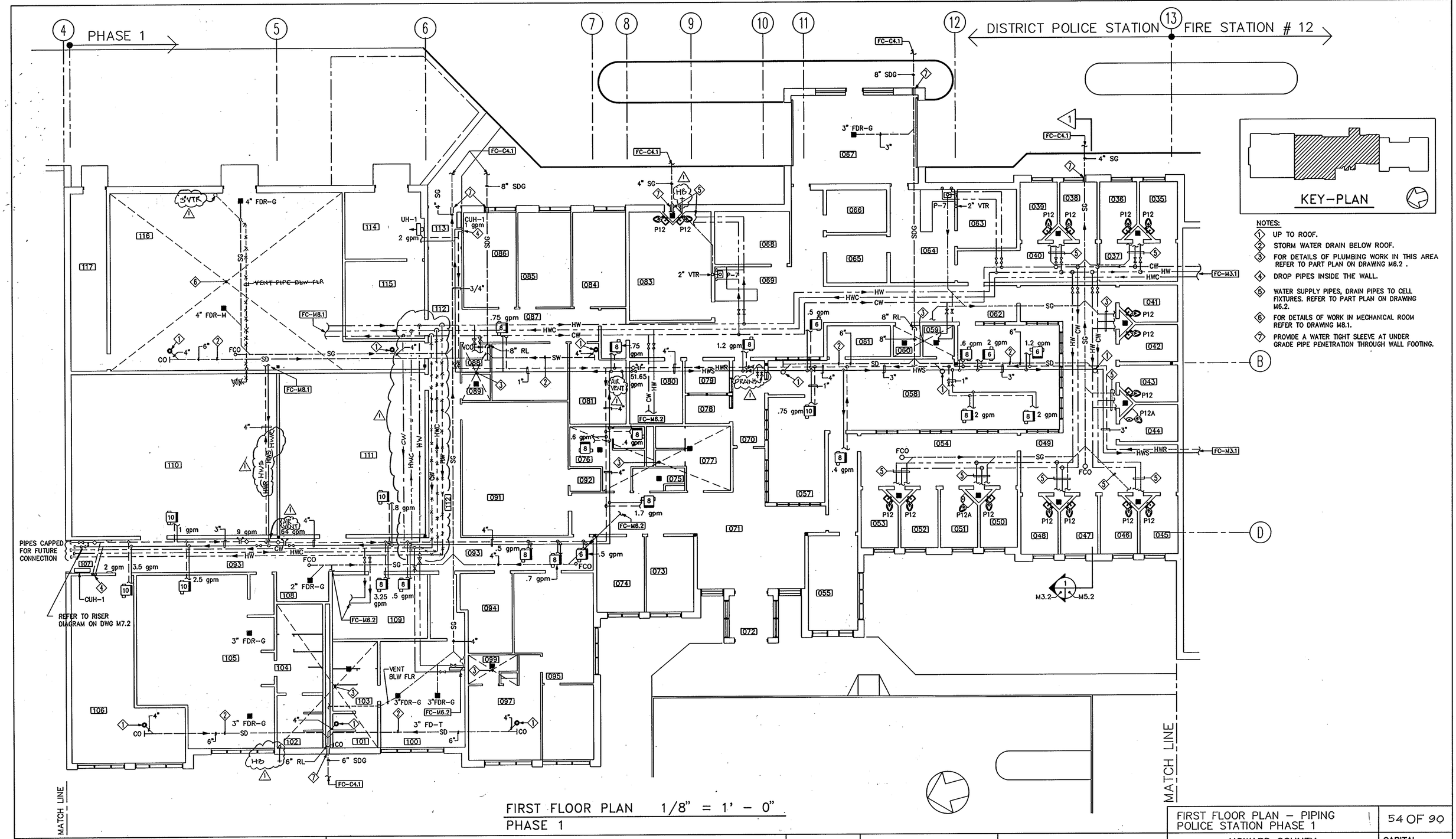

FIRST FLOOR PLAN 1/8" = 1' - 0"
PHASE 1

ARCHITECTURAL TECHNOLOGIES, INC. Architects and Construction Consultants 9192 Red Branch Road, Suite 300 Columbia, MD 21045 (301)995-4067	IN ASSOCIATION WITH : CIVIL & GEOTECH ENGINEER: E B A ENGINEERING, INC. STRUCTURAL ENGINEER: QODESH ENGINEERING SERVICES, INC. MECHANICAL & ELECTRICAL ENGINEER: BHARGAVA INTERNATIONAL, INC. FIRE PROTECTION ENGINEER: STANTON ENGINEERING	SEAL	REVISIONS 1 AS BUILT 11/24/94

FIRST FLOOR PLAN – PIPING POLICE STATION PHASE 1	54 OF 90
HOWARD COUNTY PUBLIC SAFETY COMPLEX	CAPITAL PROJECT NO. C – 0227
SCAGGSVILLE ANNEX 11226 ROUTE 216 LAUREL, MD 20707	DATE: 3/25/92 DRAWING NO. M3.2

1650

012EM6.DWG 03/29/92 09:20:30

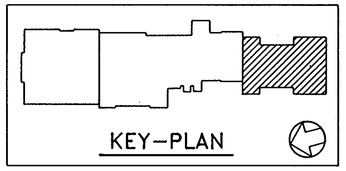

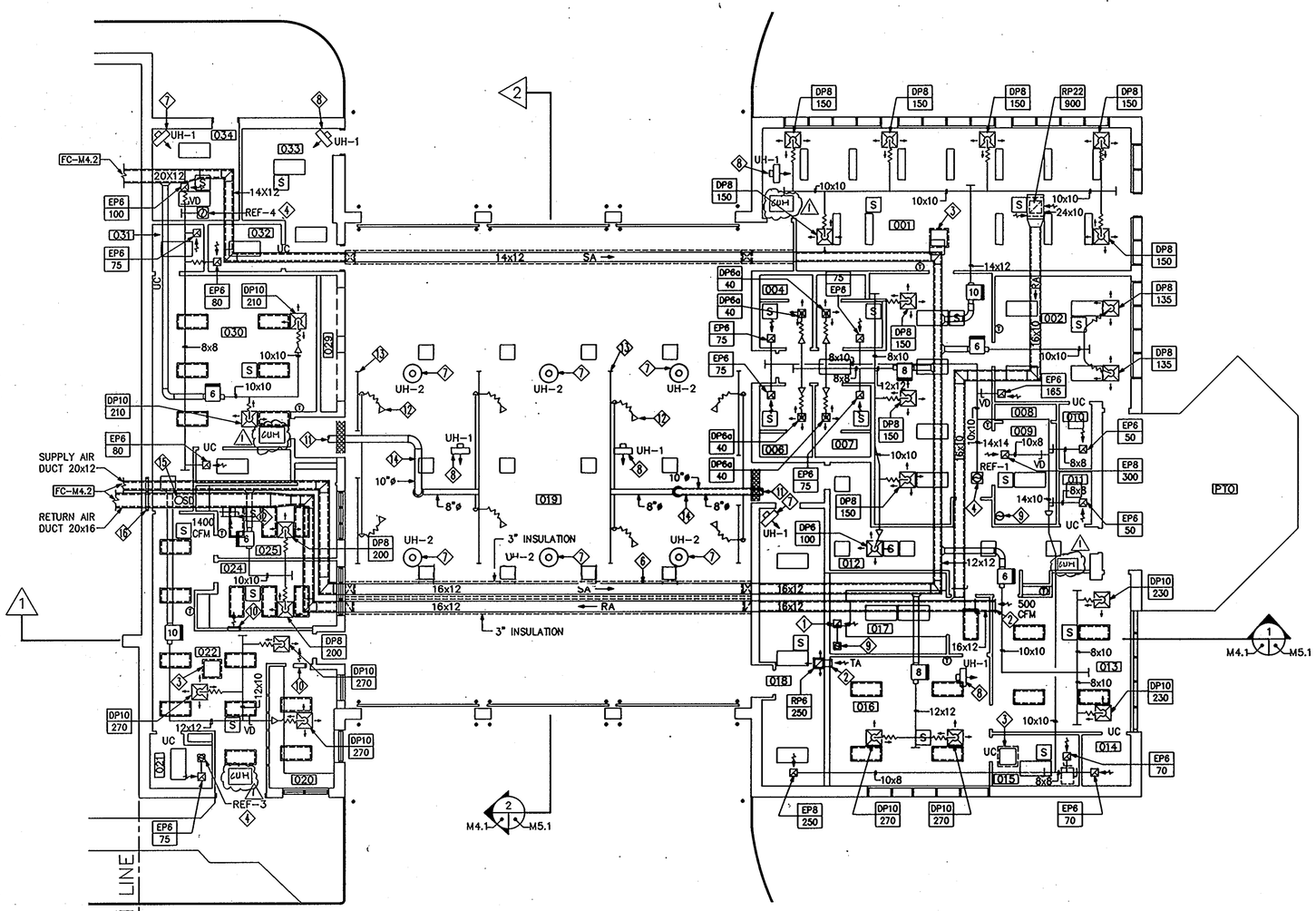

FIRST FLOOR PLAN 1/8" = 1' - 0"
PHASE 1

THE FOLLOWING NOTES ARE IN ◇ ON THE DRAWING

1. NOT USED.
2. OPEN END DUCT.
3. PROVIDE RELIEF AIR VENTILATOR ON THE ROOF WITH MOTORIZED DAMPER BELOW SLAB. FOR ROOF CURB REFER TO ARCHITECTURAL DRAWINGS.
4. EXHAUST FAN ON ROOF. FOR SIZE AND CAPACITY REFER TO EXHAUST FAN SCHEDULE ON DRAWING M11.1. FOR ROOF CURB REFER TO ARCHITECTURAL DRAWINGS.
5. NOT USED.
6. NOT USED.
7. PROVIDE UNIT HEATER SUSPENDED BELOW CEILING. REFER TO SCHEDULE ON DRAWING M11.1.
8. PROVIDE UNIT HEATER ABOVE CEILING IN ATTIC SPACE. REFER TO SCHEDULE ON DRAWING M11.1.
9. PROVIDE EXHAUST AIR VENT THROUGH THE ROOF.
10. PROVIDE FIRE DAMPER (24x24) IN WALL ABOVE CEILING.
11. CONNECT DUCT TO ENGINE BAY EXHAUST FAN ON ROOF. FOR DETAILS REFER TO DRAWING M10.1. ALSO REFER TO ARCHITECTURAL DRAWINGS.
12. EXHAUST EXTRACTION HOSE WITH CRUSH PROOF LOWER END AND AUTO DISCONNECT COUPLING (TYPICAL).
13. PROVIDE STRAIGHT RAIL BELOW CEILING, TIGHT TO UNDERSIDE OF JOISTS.
14. ROUTE EXHAUST DUCT BELOW CEILING.
15. PROVIDE DUCT MOUNTED SMOKE DETECTOR 2 FEET UPSTREAM OF SMOKE DAMPER.
16. PROVIDE MOTORIZED SMOKE DAMPER.

ARCHITECTURAL TECHNOLOGIES, INC.
Architects and Construction Consultants
9192 Red Branch Road, Suite 300
Columbia, MD 21045 (301)995-4067

IN ASSOCIATION WITH :

CIVIL & GEOTECH ENGINEER:	E B A ENGINEERING, INC.
STRUCTURAL ENGINEER:	QODESH ENGINEERING SERVICES, INC.
MECHANICAL & ELECTRICAL ENGINEER:	BHARGAVA INTERNATIONAL, INC.
FIRE PROTECTION ENGINEER:	STANTON ENGINEERING

SEAL:

REVISIONS

1 AS BUILT	11/24/94

FIRST FLOOR PLAN - HVAC
FIRE STATION

HOWARD COUNTY
PUBLIC SAFETY COMPLEX

SCAGGSVILLE ANNEX
11226 ROUTE 216
LAUREL, MD 20707

CAPITAL PROJECT NO. C - 0227

DATE: 3/25/92

DRAWING NO. M4.1

1650

012EM7.DWG 03/29/92 09:58:01

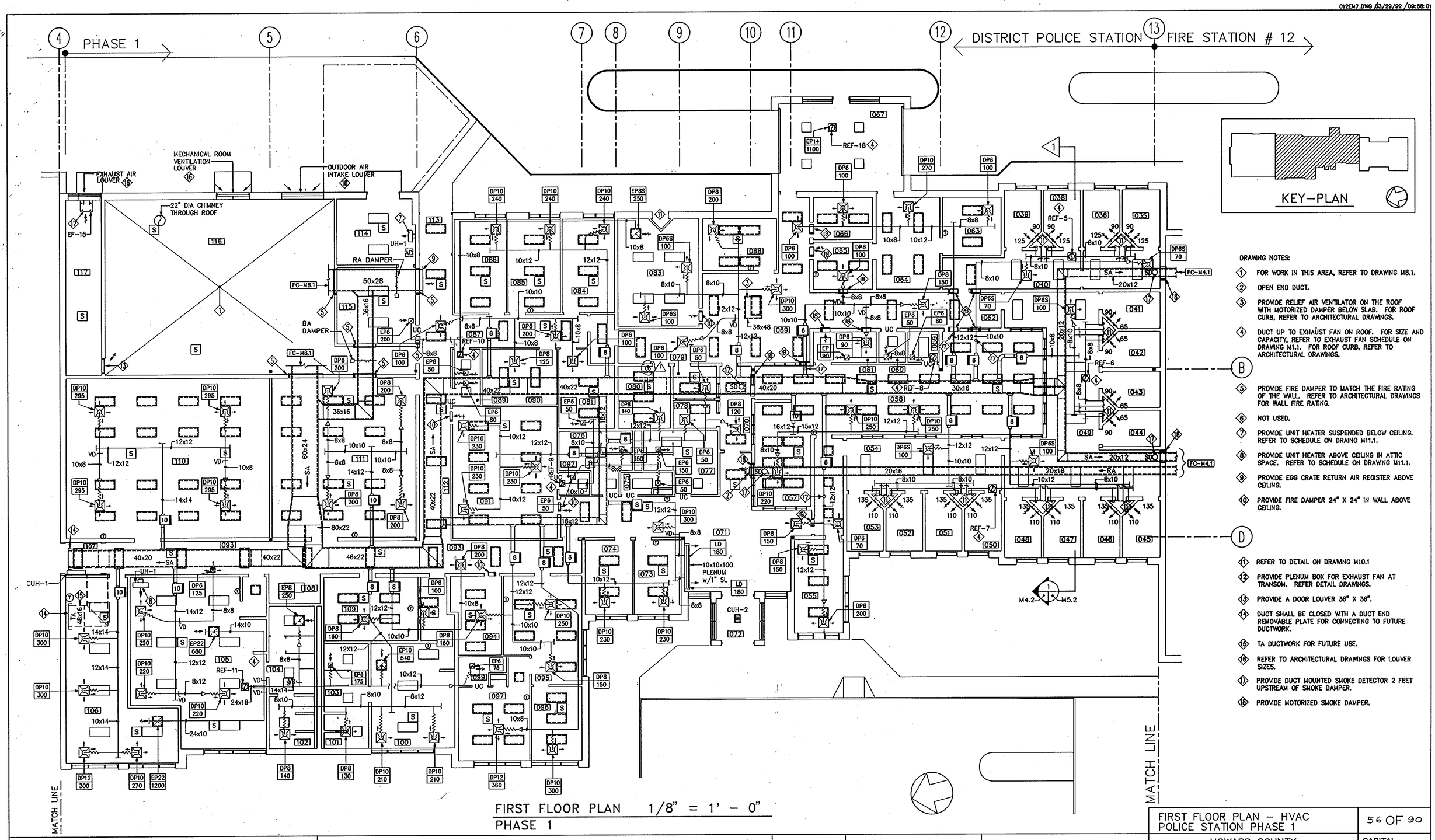

DRAWING NOTES:

1. FOR WORK IN THIS AREA, REFER TO DRAWING M8.1.
2. OPEN END DUCT.
3. PROVIDE RELIEF AIR VENTILATOR ON THE ROOF WITH MOTORIZED DAMPER BELOW SLAB. FOR ROOF CURB, REFER TO ARCHITECTURAL DRAWINGS.
4. DUCT UP TO EXHAUST FAN ON ROOF. FOR SIZE AND CAPACITY, REFER TO EXHAUST FAN SCHEDULE ON DRAWING M1.1. FOR ROOF CURB, REFER TO ARCHITECTURAL DRAWINGS.
5. PROVIDE FIRE DAMPER TO MATCH THE FIRE RATING OF THE WALL. REFER TO ARCHITECTURAL DRAWINGS FOR WALL FIRE RATING.
6. NOT USED.
7. PROVIDE UNIT HEATER SUSPENDED BELOW CEILING. REFER TO SCHEDULE ON DRAING M11.1.
8. PROVIDE UNIT HEATER ABOVE CEILING IN ATTIC SPACE. REFER TO SCHEDULE ON DRAWING M11.1.
9. PROVIDE EGG CRATE RETURN AIR REGISTER ABOVE CEILING.
10. PROVIDE FIRE DAMPER 24" X 24" IN WALL ABOVE CEILING.
11. REFER TO DETAIL ON DRAWING M10.1
12. PROVIDE PLENUM BOX FOR EXHAUST FAN AT TRANSOM. REFER DETAIL DRAWINGS.
13. PROVIDE A DOOR LOUVER 36" X 36".
14. DUCT SHALL BE CLOSED WITH A DUCT END REMOVABLE PLATE FOR CONNECTING TO FUTURE DUCTWORK.
15. TA DUCTWORK FOR FUTURE USE.
16. REFER TO ARCHITECTURAL DRAWINGS FOR LOUVER SIZES.
17. PROVIDE DUCT MOUNTED SMOKE DETECTOR 2 FEET UPSTREAM OF SMOKE DAMPER.
18. PROVIDE MOTORIZED SMOKE DAMPER.

FIRST FLOOR PLAN 1/8" = 1' - 0"
PHASE 1

FIRST FLOOR PLAN - HVAC
POLICE STATION PHASE 1

ARCHITECTURAL TECHNOLOGIES, INC.
Architects and Construction Consultants
9192 Red Branch Road, Suite 300
Columbia, MD 21045 (301)995-4067

IN ASSOCIATION WITH :

CIVIL & GEOTECH ENGINEER:	E B A ENGINEERING, INC.
STRUCTURAL ENGINEER:	QODESH ENGINEERING SERVICES, INC.
MECHANICAL & ELECTRICAL ENGINEER:	BHARGAVA INTERNATIONAL, INC.
FIRE PROTECTION ENGINEER:	STANTON ENGINEERING

REVISIONS

1 AS BUILT 11/24/94

HOWARD COUNTY
PUBLIC SAFETY COMPLEX

SCAGGSVILLE ANNEX
11226 ROUTE 216
LAUREL, MD 20707

CAPITAL PROJECT NO.
C - 0227

DATE: 3/25/92

DRAWING NO.
M4.2

1650

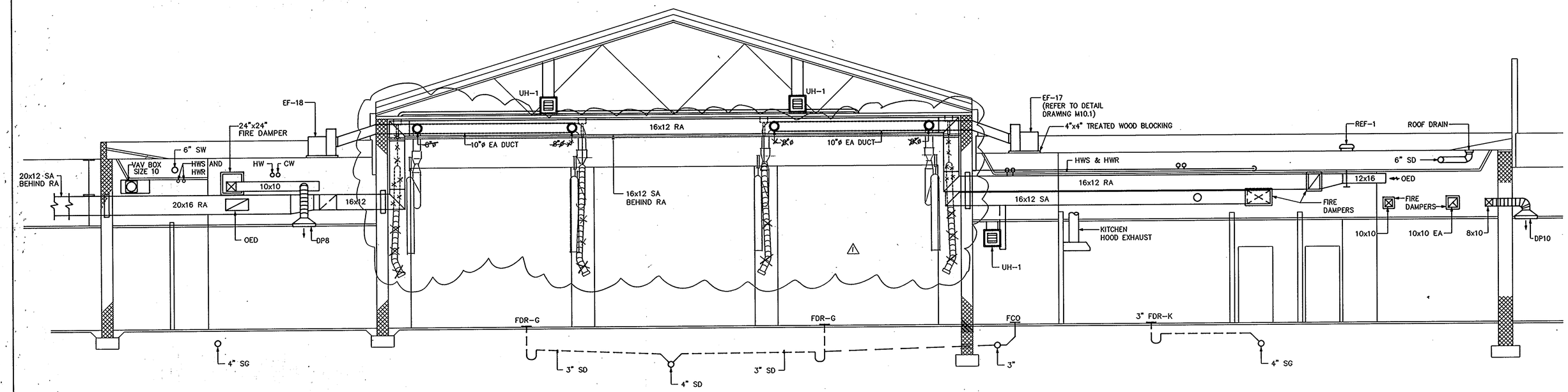

1 SECTION
M3.1,M4.1 M5.1 SCALE: 1/4"=1'-0"

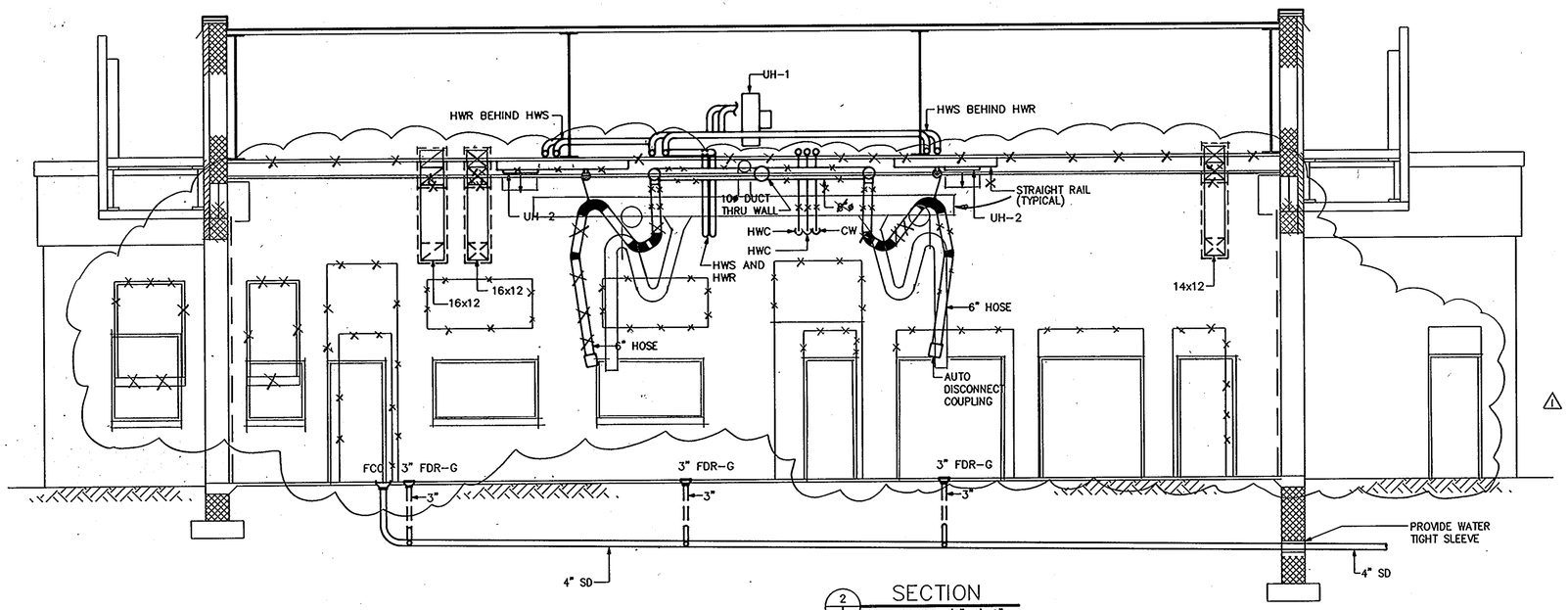

2 SECTION
M3.1,M4.1 M5.1 SCALE: 1/4"=1'-0"

SECTIONS – FIRE STATION

57 OF 90

ARCHITECTURAL TECHNOLOGIES, INC.
Architects and Construction Consultants
9192 Red Branch Road, Suite 300
Columbia, MD 21045 (301)995-4067

IN ASSOCIATION WITH :

CIVIL & GEOTECH ENGINEER:	E B A ENGINEERING, INC.
STRUCTURAL ENGINEER:	QODESH ENGINEERING SERVICES, INC.
MECHANICAL & ELECTRICAL ENGINEER:	BHARGAVA INTERNATIONAL, INC.
FIRE PROTECTION ENGINEER:	STANTON ENGINEERING

REVISIONS
1 AS BUILT 11/24/94

HOWARD COUNTY PUBLIC SAFETY COMPLEX

SCAGGSVILLE ANNEX
11226 ROUTE 216
LAUREL, MD 20707

CAPITAL PROJECT NO. C – 0227

DATE: 3/25/92

DRAWING NO. M5.1

1650

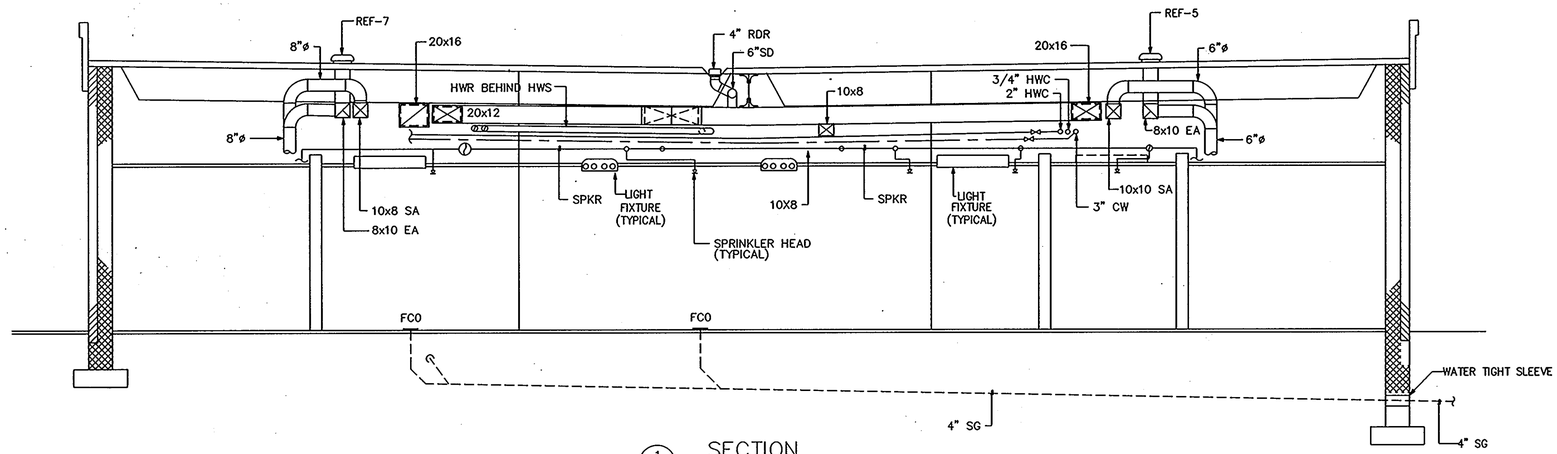

1 SECTION
M3.2,M4.2 M5.2 SCALE: 1/4"=1'-0"

SECTIONS POLICE STATION – PHASE 1	58 OF 90				
ARCHITECTURAL TECHNOLOGIES, INC. Architects and Construction Consultants 9192 Red Branch Road, Suite 300 Columbia, MD 21045 (301)995-4067	IN ASSOCIATION WITH : CIVIL & GEOTECH ENGINEER: E B A ENGINEERING, INC. STRUCTURAL ENGINEER: QODESH ENGINEERING SERVICES, INC. MECHANICAL & ELECTRICAL ENGINEER: BHARGAVA INTERNATIONAL, INC. FIRE PROTECTION ENGINEER: STANTON ENGINEERING	SEAL STATE OF MARYLAND No. 9957 REGISTERED PROFESSIONAL ENGINEER	REVISIONS AS BUILT 11/24/94	HOWARD COUNTY PUBLIC SAFETY COMPLEX SCAGGSVILLE ANNEX 11226 ROUTE 216 LAUREL, MD 20707	CAPITAL PROJECT NO. C – 0227 DATE: 3/25/92 DRAWING NO. M5.2

1650

PLUMBING FIXTURE SCHEDULE

NO	FIXTURE	ROUGH-IN CONNECTION IN INCHES				FIXTURE UNITS			REMARKS
		CW	HW	SAN	VENT	CW	HW	SAN	
P-1	WATER CLOSET	1	–	4	1 1/2	10	–	6	FLOOR MOUNTED
P-1A	WATER CLOSET	1	–	4	1 1/2	10	–	6	FLOOR MOUNTED HANDICAPPED
P-1B	WATER CLOSET	1	–	4	1 1/2	10	–	6	WALL MOUNTED HANDICAPPED
P-2	URINAL	3/4	–	2	1 1/2	5	–	4	WALL MOUNTED
P-3A	LAVATORY	1/2	1/2	1 1/2	1 1/2	1.5	1.5	2	COUNTER TOP
P-3B	LAVATORY	1/2	1/2	1 1/2	1 1/2	1.5	1.5	2	COUNTER TOP HANDICAPPED
P-3C	LAVATORY	1/2	1/2	1 1/2	1 1/2	1.5	1.5	2	REFER ARCH. DRAWINGS
P-4	SERVICE SINK	3/4	3/4	3	1 1/2	2.5	2.5	3	–
P-5	ELECTRIC WATER COOLER	1/2	–	1 1/4	1 1/2	2	–	1/2	WALL MOUNTED
P-5A	ELECTRIC WATER COOLER	1/2	–	1 1/4	1 1/2	2	–	1/2	WALL MOUNTED HANDICAPPED
P-6	SHOWER STALL	1/2	1/2	2	1 1/2	1.5	1.5	2	REFER ARCH. DRAWINGS
P-6A	SHOWER STALL	1/2	1/2	2	1 1/2	1.5	1.5	2	REFER ARCH. DRAWINGS
P-7	SINK,SINGLE-BOWL	1/2	1/2	2	1 1/2	1.5	1.5	2	–
P-8	SINK, DOUBLE BOWL	1/2	1/2	2	1 1/2	1.5	1.5	2	–
P-12	COMBINATION WC-LAV UNIT	1/2	1/2	2	1 1/2	10	1.5	8	SECURITY FIXTURE
P-12A	COMBINATION WC-LAV UNIT	1/2	1/2	2	1 1/2	10	1.5	8	HANDICAPPED SECURITY FIXTURE
P-13	CLOTHES WASHER	1/2	1/2	1 1/2	1 1/2	1.5	1.5	2	REFER ARCH. DRAWINGS
P-14	DISH WASHER	–	1/2	1 1/2	–	–	2	2	REFER ARCH. DRAWINGS

DRAWING NOTES:

1. VENT PIPE BELOW FLOOR.
2. VENT PIPE UP THROUGH FLOOR. ROUTE INSIDE WALL.

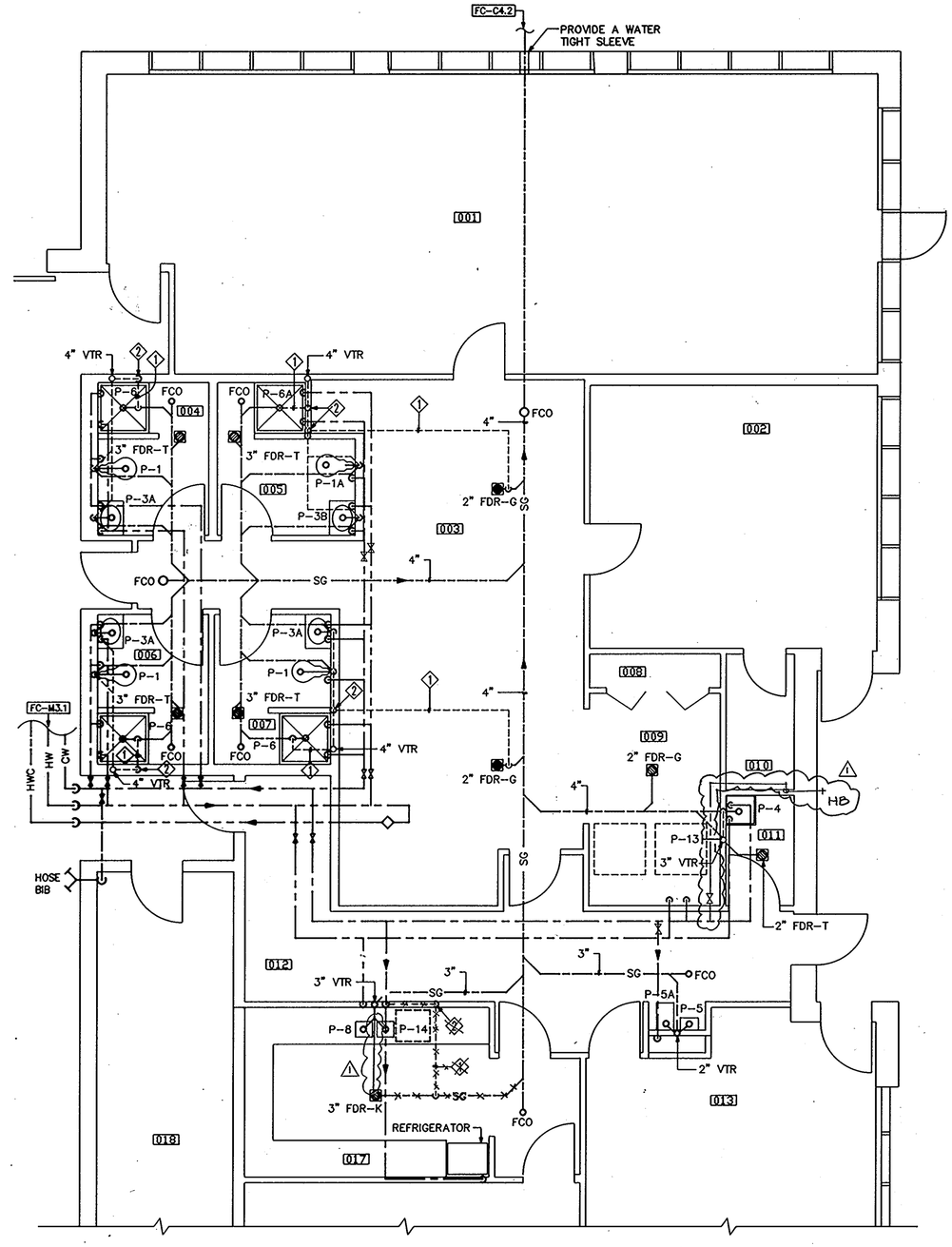

PART PLAN
SCALE: 1/4"=1'-0"

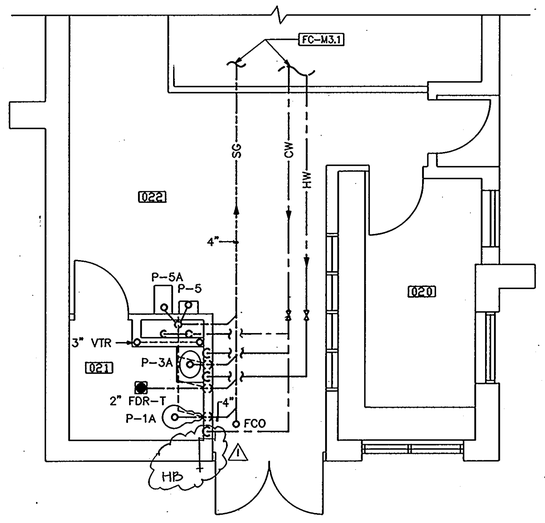

PART PLAN
SCALE: 1/4"=1'-0"

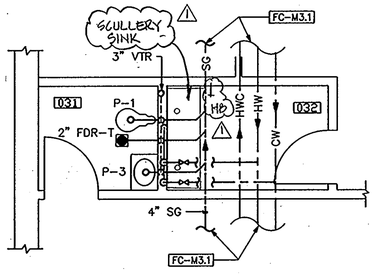

PART PLAN
SCALE: 1/4"=1'-0"

ARCHITECTURAL TECHNOLOGIES, INC. Architects and Construction Consultants 9192 Red Branch Road, Suite 300 Columbia, MD 21045 (301)995-4067	IN ASSOCIATION WITH : CIVIL & GEOTECH ENGINEER: E B A ENGINEERING, INC. STRUCTURAL ENGINEER: QODESH ENGINEERING SERVICES, INC. MECHANICAL & ELECTRICAL ENGINEER: BHARGAVA INTERNATIONAL, INC. FIRE PROTECTION ENGINEER: STANTON ENGINEERING	SEAL: STATE OF MARYLAND, BHARGAVA, No 9997, REGISTERED PROFESSIONAL ENGINEER

REVISIONS
1 AS BUILT 11/24/94

PLUMBING PART PLANS – FIRE STATION AND PLUMBING FIXTURE SCHEDULE

HOWARD COUNTY PUBLIC SAFETY COMPLEX

SCAGGSVILLE ANNEX
11226 ROUTE 216
LAUREL, MD 20707

CAPITAL PROJECT NO. C – 0227

DATE: 3/25/92

DRAWING NO. M6.1

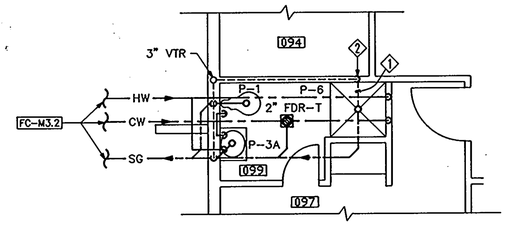

PART PLAN
SCALE" 1/4"=1'-0"

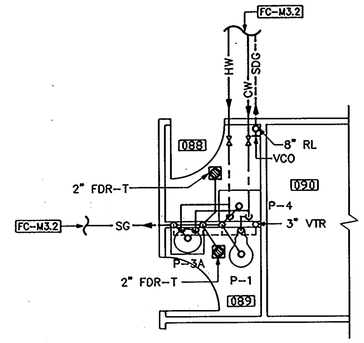

PART PLAN
SCALE" 1/4"=1'-0"

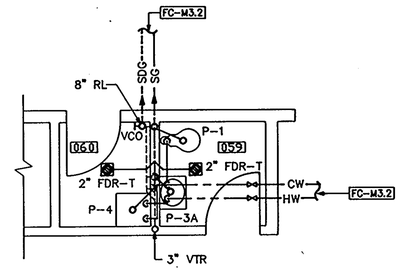

PART PLAN
SCALE" 1/4"=1'-0"

DRAWING NOTES:

1. VENT PIPE BELOW FLOOR.
2. VENT PIPE UP THROUGH FLOOR. ROUTE INSIDE WALL.

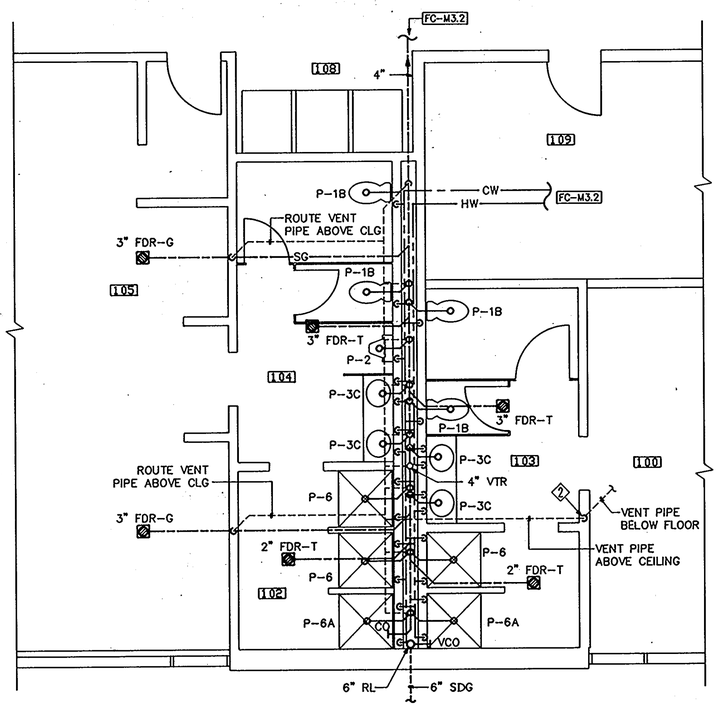

PART PLAN
SCALE" 1/4"=1'-0"

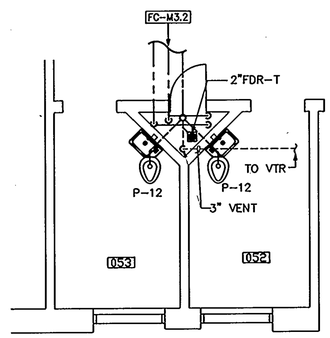

PART PLAN (TYPICAL)
SCALE" 1/4"=1'-0"

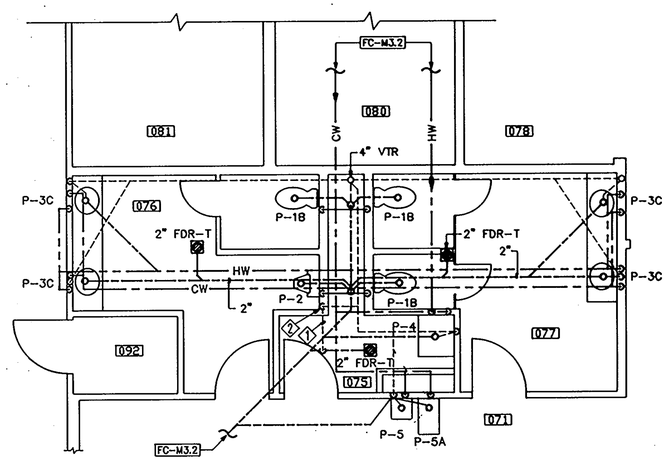

PART PLAN
SCALE" 1/4"=1'-0"

ARCHITECTURAL TECHNOLOGIES, INC. Architects and Construction Consultants 9192 Red Branch Road, Suite 300 Columbia, MD 21045 (301)995-4067	IN ASSOCIATION WITH : CIVIL & GEOTECH ENGINEER: E B A ENGINEERING, INC. STRUCTURAL ENGINEER: QODESH ENGINEERING SERVICES, INC. MECHANICAL & ELECTRICAL ENGINEER: BHARGAVA INTERNATIONAL, INC. FIRE PROTECTION ENGINEER: STANTON ENGINEERING	SEAL	REVISIONS AS BUILT 11/24/04

PLUMBING PART PLANS POLICE STATION PHASE 1	60 OF 90
HOWARD COUNTY PUBLIC SAFETY COMPLEX	CAPITAL PROJECT NO. C - 0227
SCAGGSVILLE ANNEX 11226 ROUTE 216 LAUREL, MD 20707	DATE: 3/25/92 DRAWING NO. M6.2

1650

012EM19.DWG 03/29/92 17:23:08

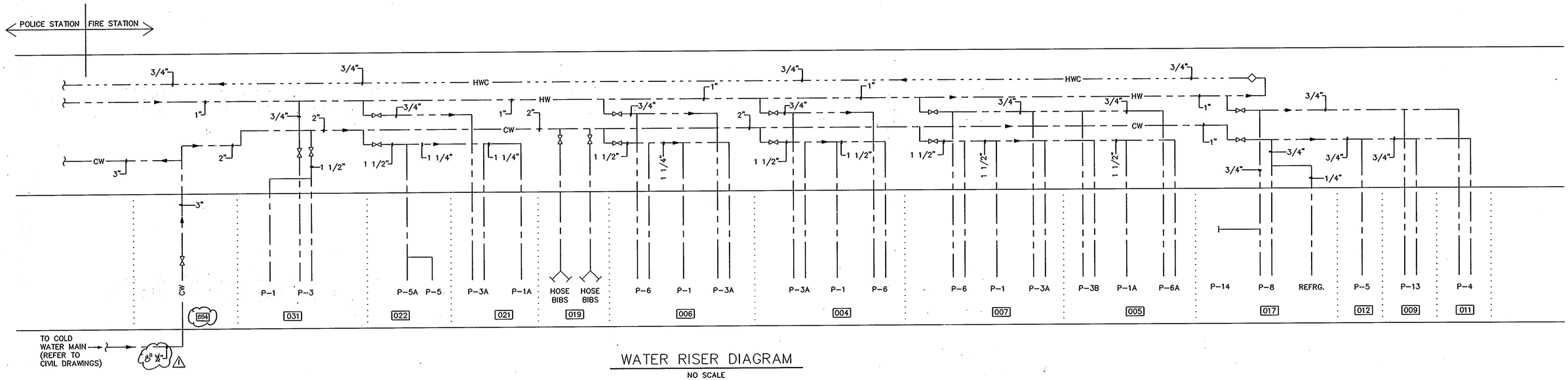

WATER RISER DIAGRAM

NO SCALE

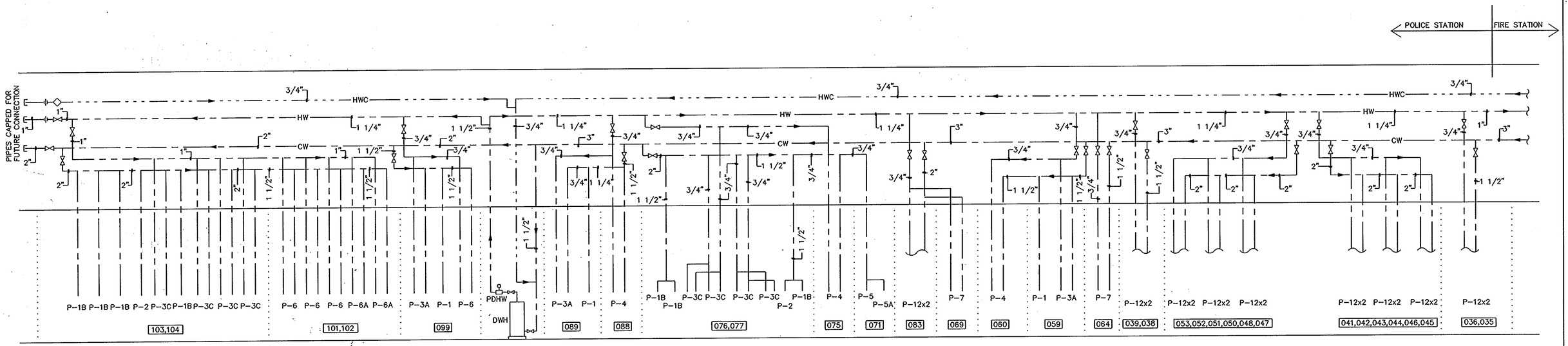

WATER RISER DIAGRAM

NO SCALE

WATER RISER DIAGRAMS, FIRE STATION AND POLICE STATION PHASE 1

61 OF 90

ARCHITECTURAL TECHNOLOGIES, INC.
Architects and Construction Consultants
9192 Red Branch Road, Suite 300
Columbia, MD 21045 (301)995-4067

IN ASSOCIATION WITH :

CIVIL & GEOTECH ENGINEER:	E B A ENGINEERING, INC.
STRUCTURAL ENGINEER:	QODESH ENGINEERING SERVICES, INC.
MECHANICAL & ELECTRICAL ENGINEER:	BHARGAVA INTERNATIONAL, INC.
FIRE PROTECTION ENGINEER:	STANTON ENGINEERING

SEAL

REVISIONS

1 AS BUILT 11/24/94

HOWARD COUNTY PUBLIC SAFETY COMPLEX

SCAGGSVILLE ANNEX
11226 ROUTE 216
LAUREL, MD 20707

CAPITAL PROJECT NO. C - 0227

DATE: 3/25/92

DRAWING NO. M7.1

1650

DRAWING NOTES:

1. CONNECT TO SANITARY MAIN OUTSIDE BUILDING. REFER TO FLOOR PLANS AND CIVIL DRAWINGS.

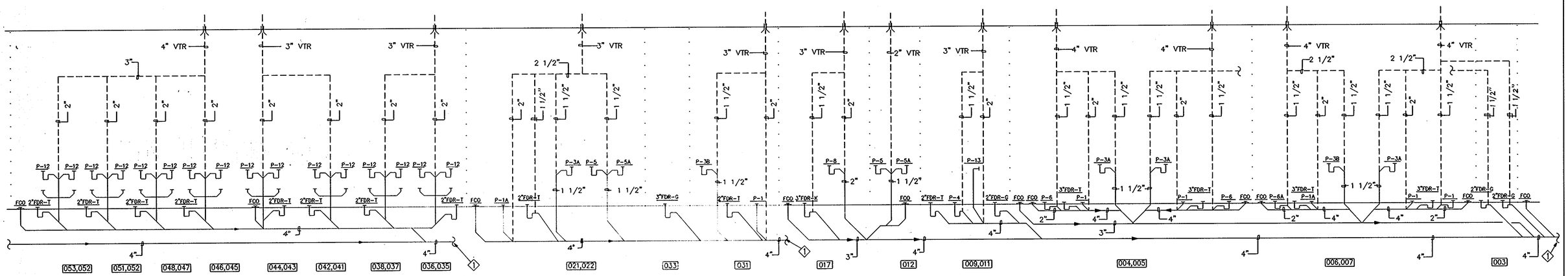

POLICE STATION — PHASE 1

POLICE STATION ⟵ ⟶ FIRE STATION

FIRE STATION

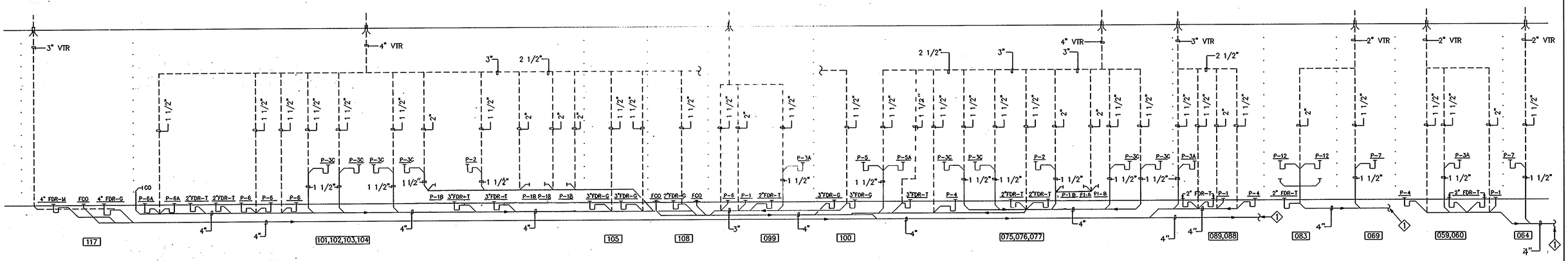

POLICE STATION — PHASE 1

SANITARY RISER DIAGRAM—FIRE STATION AND POLICE STATION PHASE 1

ARCHITECTURAL TECHNOLOGIES, INC.
Architects and Construction Consultants
9192 Red Branch Road, Suite 300
Columbia, MD 21045 (301)995-4067

IN ASSOCIATION WITH :

CIVIL & GEOTECH ENGINEER:	E B A ENGINEERING, INC.
STRUCTURAL ENGINEER:	QODESH ENGINEERING SERVICES, INC.
MECHANICAL & ELECTRICAL ENGINEER:	BHARGAVA INTERNATIONAL, INC.
FIRE PROTECTION ENGINEER:	STANTON ENGINEERING

SEAL:

REVISIONS

AS BUILT	11/24/94

HOWARD COUNTY PUBLIC SAFETY COMPLEX

SCAGGSVILLE ANNEX
11226 ROUTE 216
LAUREL, MD 20707

CAPITAL PROJECT NO. C – 0227

DATE: 3/25/92

DRAWING NO. M7.2

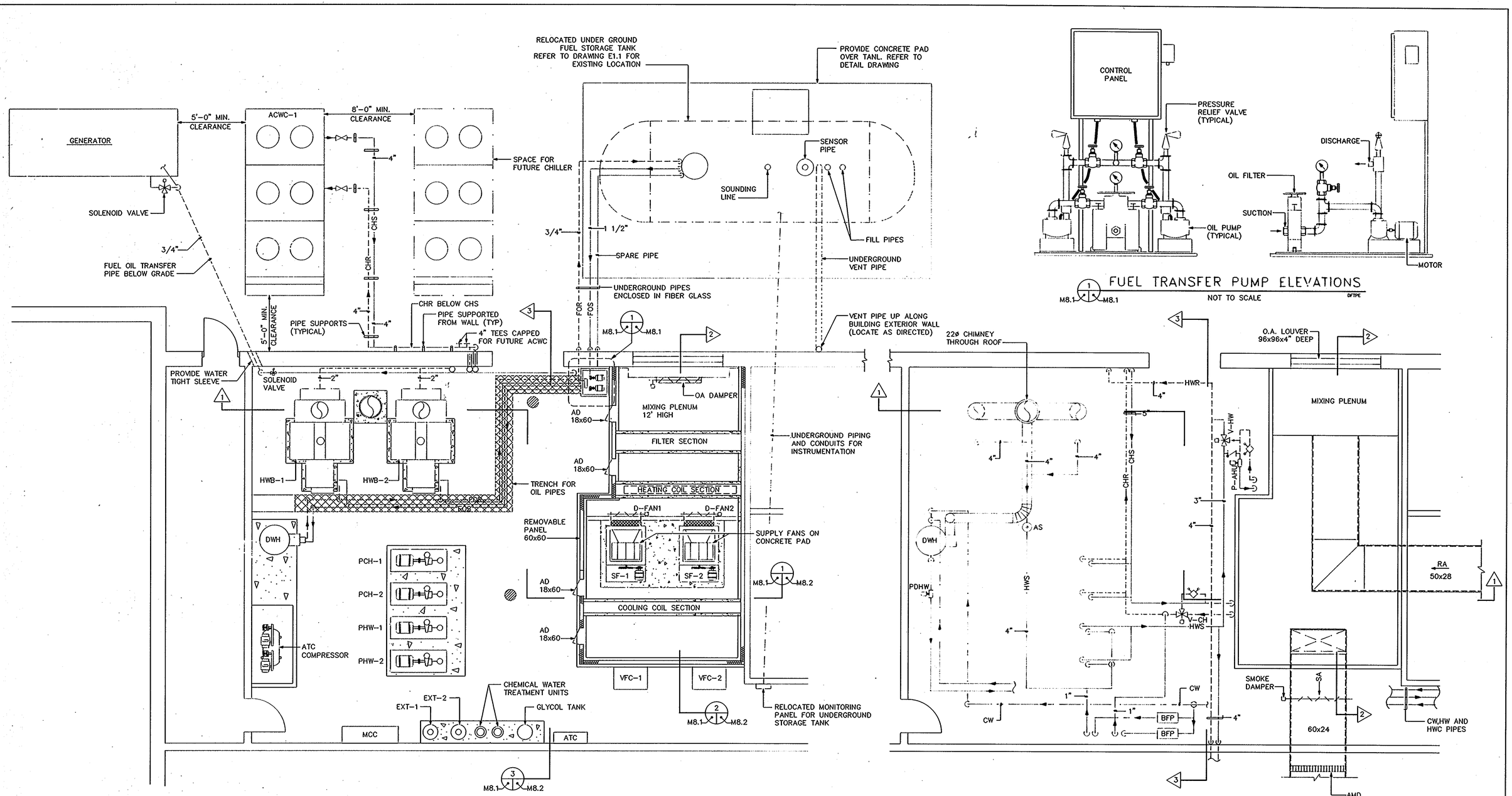

ARCHITECTURAL TECHNOLOGIES, INC.
Architects and Construction Consultants
9192 Red Branch Road, Suite 300
Columbia, MD 21045 (301)995-4067

IN ASSOCIATION WITH :

CIVIL & GEOTECH ENGINEER:	E B A ENGINEERING, INC.
STRUCTURAL ENGINEER:	QODESH ENGINEERING SERVICES, INC.
MECHANICAL & ELECTRICAL ENGINEER:	BHARGAVA INTERNATIONAL, INC.
FIRE PROTECTION ENGINEER:	STANTON ENGINEERING

SEAL

REVISIONS
AS BUILT 11/24/94

PART PLANS (MECHANICAL ROOM)

HOWARD COUNTY PUBLIC SAFETY COMPLEX

SCAGGSVILLE ANNEX
11226 ROUTE 216
LAUREL, MD 20707

CAPITAL PROJECT NO. C - 0227

DATE: 3/25/92

DRAWING NO. M8.1

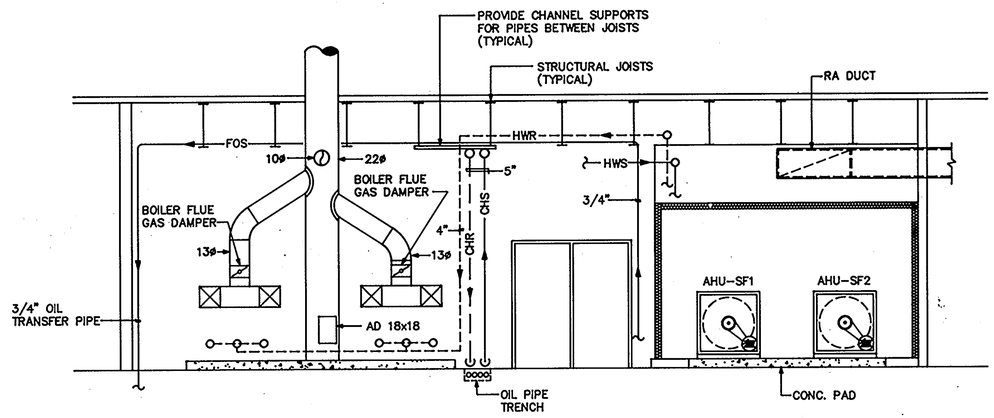

1 SECTION
8.1 8.2 SCALE: 1/4"=1'-0"

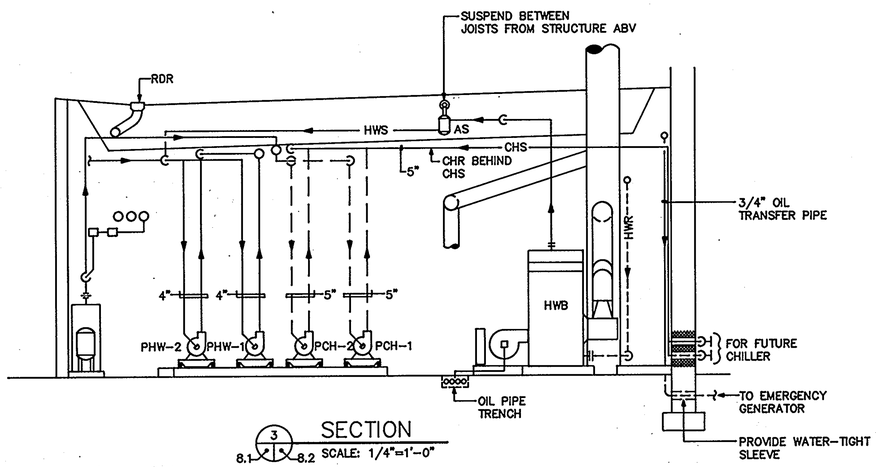

3 SECTION
8.1 8.2 SCALE: 1/4"=1'-0"

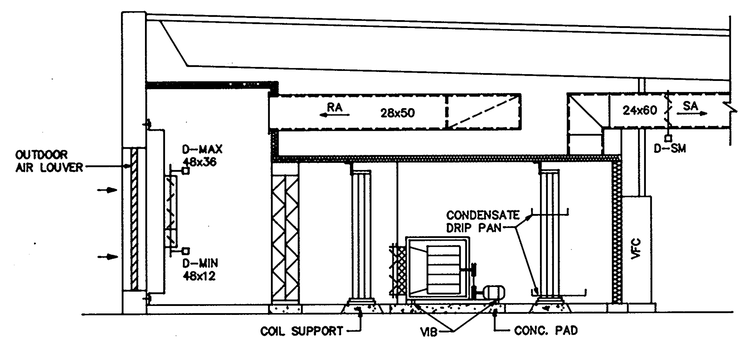

2 SECTION
8.1 8.2 SCALE: 1/4"=1'-0"

ARCHITECTURAL TECHNOLOGIES, INC. Architects and Construction Consultants 9192 Red Branch Road, Suite 300 Columbia, MD 21045 (301)995-4067	IN ASSOCIATION WITH : CIVIL & GEOTECH ENGINEER: E B A ENGINEERING, INC. STRUCTURAL ENGINEER: QODESH ENGINEERING SERVICES, INC. MECHANICAL & ELECTRICAL ENGINEER: BHARGAVA INTERNATIONAL, INC. FIRE PROTECTION ENGINEER: STANTON ENGINEERING	SEAL:		REVISIONS AS BUILT 11/24/94	MECHANICAL ROOM SECTIONS HOWARD COUNTY PUBLIC SAFETY COMPLEX SCAGGSVILLE ANNEX 11226 ROUTE 216 LAUREL, MD 20707	64 OF 90 CAPITAL PROJECT NO. C - 0227 DATE: 3/25/92 DRAWING NO. M8.2

012EM27.DWG 03/28/92 / 13:13:01

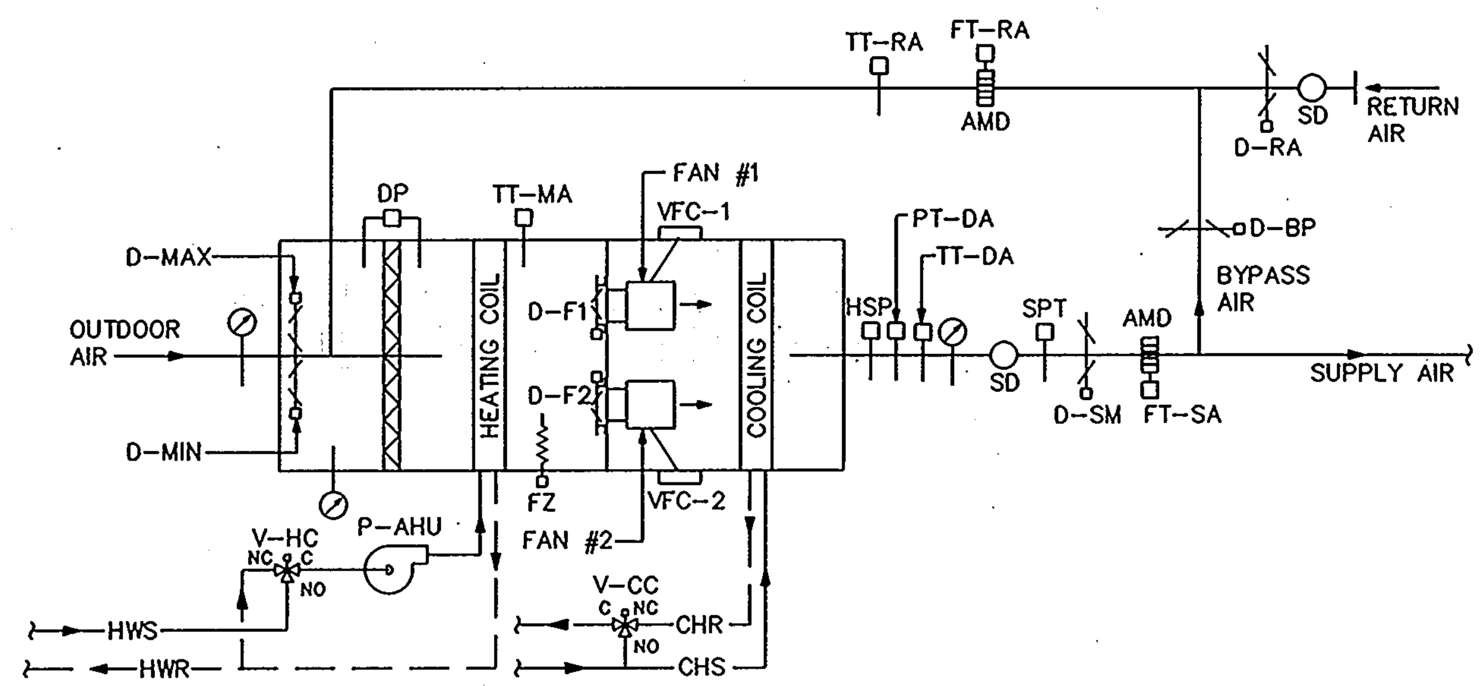

AIR HANDLING UNIT (AHU)

NOT TO SCALE

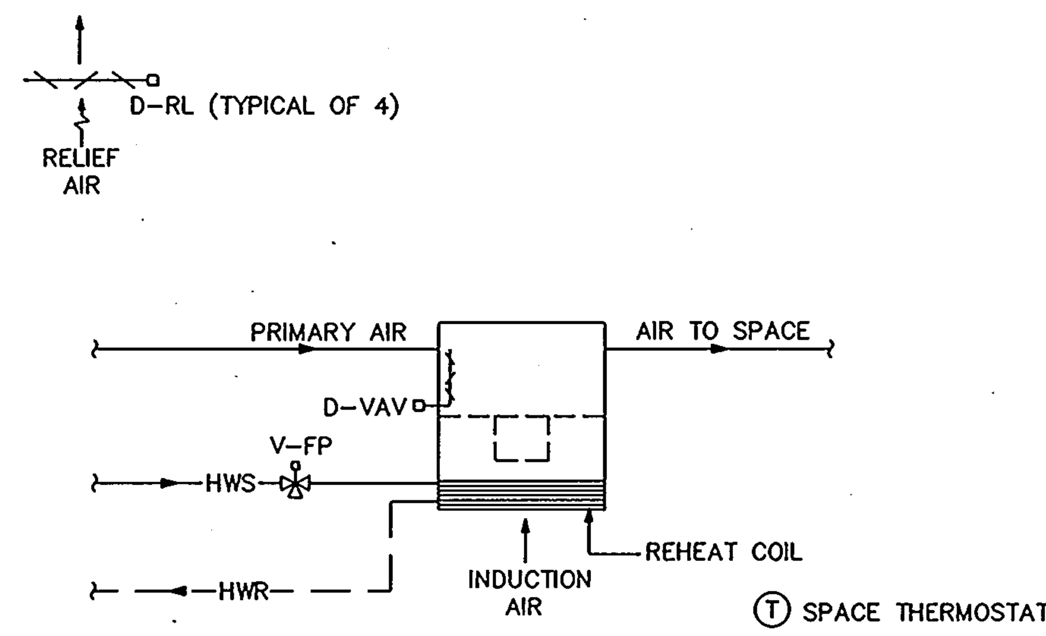

FAN POWERED VAV TERMINAL UNIT

NOT TO SCALE

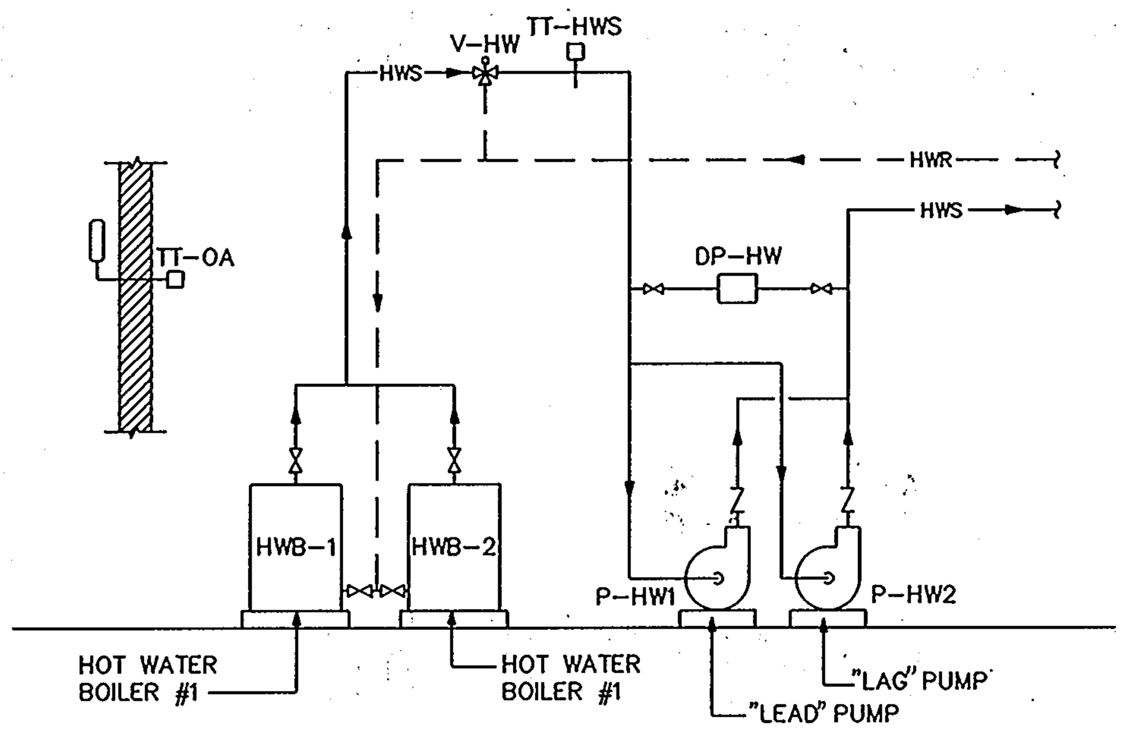

HEATING HOT WATER SYSTEM

NOT TO SCALE

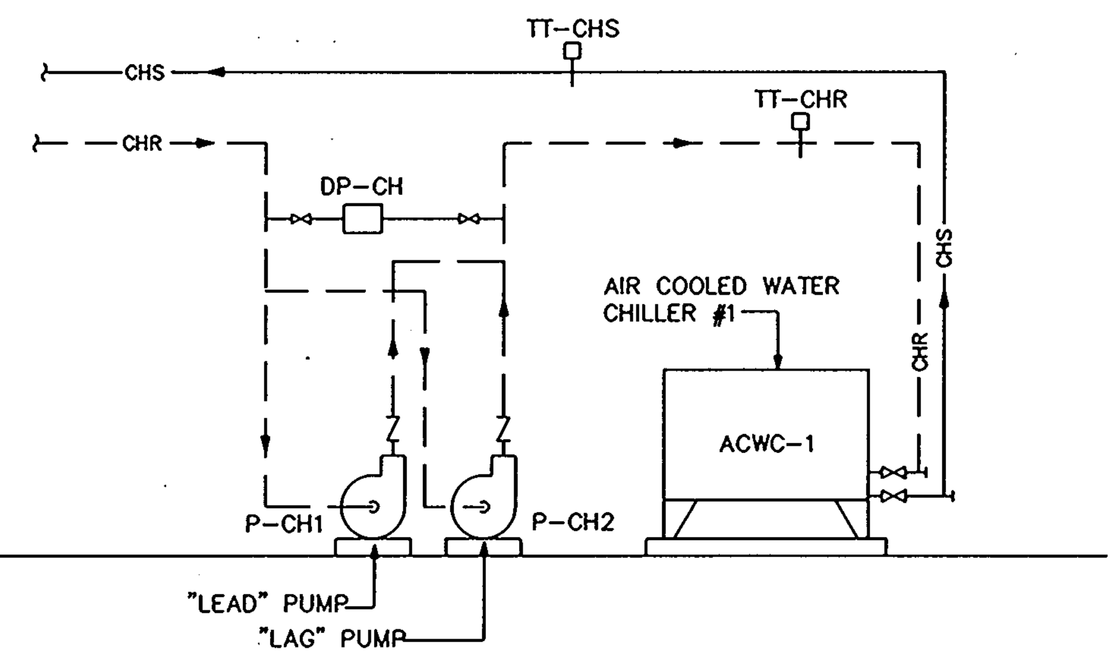

CHILLED WATER SYSTEM

NOT TO SCALE

SYSTEM, APPARATUS, OR AREA POINT DESCRIPTION	INPUTS – ANALOG – MEASURED: TEMPERATURE	PRESSURE	RELATIVE HUMIDITY	AIR FLOW	ANALOG – CALC.: KWH	ENTHALPY	RUN TIME	EFFICIENCY	BINARY: STATUS	FILTER	SMOKE	FREEZE	AIR FLOW	METER	DIFFENTIAL PRESSURE	WATER FLOW	OUTPUTS – DIGITAL: OFF-ON	OFF-AUTO-ON	OFF-HI-LO	OPEN-CLOSE DAMPER	LEAD LAG SWITCH OFF	ANALOG: DAMPER POSITION	VALVE POSITION	SET POINT ADJUSTMENT	PROPORTIONAL	SYSTEM FEATURES – ALARMS: HIGH ANALOG	LOW ANALOG	HIGH BINARY	LOW BINARY	PROOF	PROGRAMS: TIME SCHEDULING	DEMAND LIMITING	DUTY CYCLE	START/STOP OPERATION	ENTHALPY OPERATION	SMOKE CONTROL	TREND	ALARM INSTRUCTION	MAINTENANCE WORK ORDER	DIRECT DIGITAL CONTROL	PNEUMATIC CONTROL	GENERAL: COLOR GRAPHIC	INTEGRAL CONTROL	SUPPLEMENTARY NOTES
AHU										●	●	●			●													●	●													●		
OUTDOOR AIR	●																					●																		●	●			
RETURN AIR	●			●							●											●																		●	●			
BYPASS AIR									●													●																		●	●			
DISCHARGE AIR	●	●		●							●															●	●	●												●				
FAN/VFC															●					●					●					●		●								●				
RELIEF AIR		●																							●															●				
MIXED AIR TEMP	●																																							●	●			
V-HC																							●	●	●																			
P-AHU																	●																											
V-CC																							●	●	●															●	●			
HW SYSTEM																																												
V-HW	●																						●	●	●															●	●			
P-HW1/P-HW-2															●	●					●																							
HWB	●																																										●	
CH SYSTEM																																												
P-CH1/P-CH2															●	●					●																							
ACWC	●																●																										●	

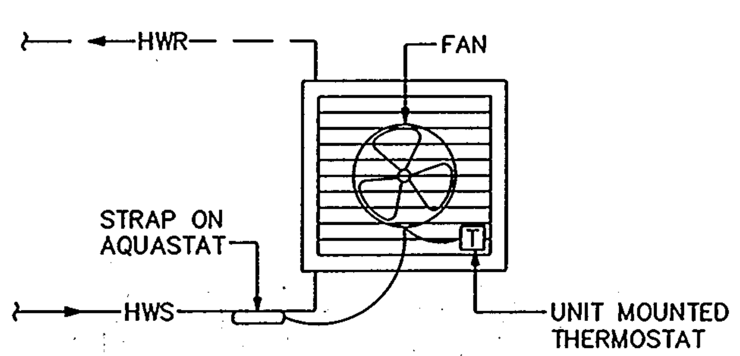

HORIZONTAL UNIT HEATER (UH-1) CONTROL

NOT TO SCALE

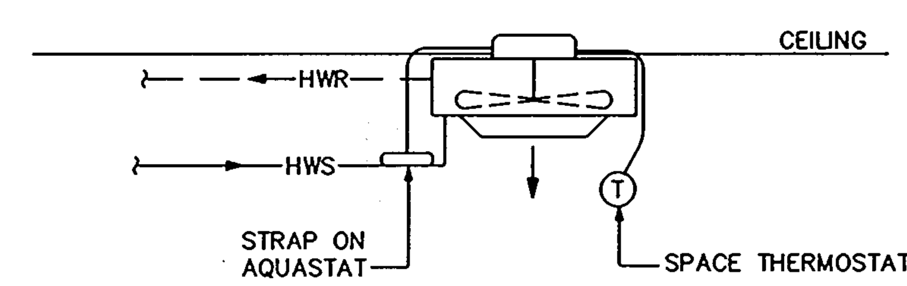

DOWN FLOW UNIT HEATER (UH-2) CONTROL

NOT TO SCALE

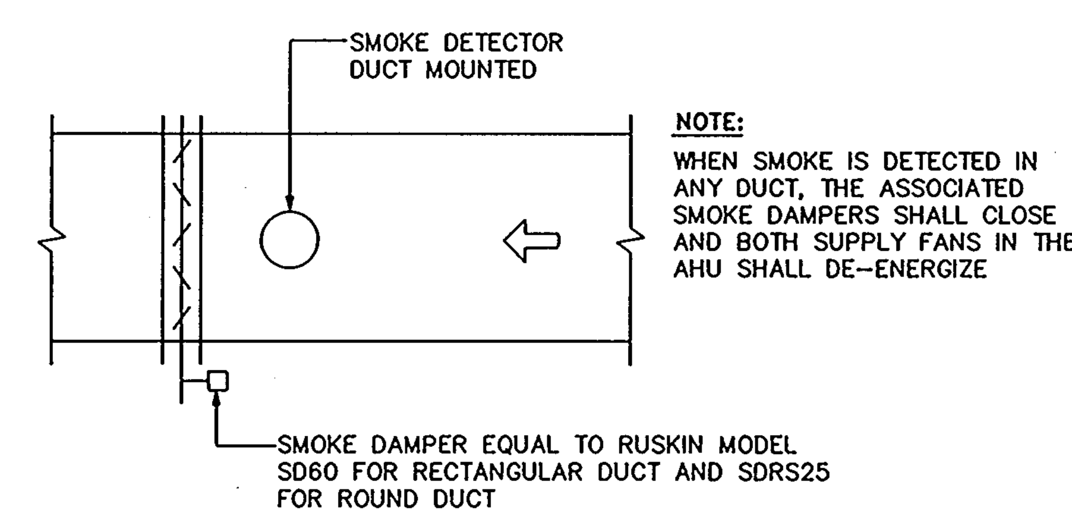

NOTE:
WHEN SMOKE IS DETECTED IN ANY DUCT, THE ASSOCIATED SMOKE DAMPERS SHALL CLOSE AND BOTH SUPPLY FANS IN THE AHU SHALL DE-ENERGIZE

SMOKE DAMPER CONTROL

NOT TO SCALE

ATC LEGEND		
SYMBOL	ABBREVIATION	DESCRIPTION
	FT	FLOW TRANSMITTER
	T-X	THERMOSTAT IN PIPE OR DUCT
	TT-X/PT-X	TEMPERATURE TRANSMITTER/PNEUMATIC
	HSP	HIGH LIMIT STATIC PRESSURE
	SP / SPT	STATIC PRESSURE SENSOR / TRANSMITTER
(T)		ROOM OR SPACE THERMOSTAT
[T]		UNIT MOUNTED THERMOSTAT
		DUCT OR PIPE THERMOSTAT
	SD	SMOKE DETECTOR
	DP-X	DIFFERENTIAL PRESSURE SWITCH
	V-X	MOTOR OPERATED VALVE (2 WAY)
	V-X	MOTOR OPERATED VALVE (3 WAY)
	D-X	MOTOR OPERATED DAMPER
	VFC-X	VARIABLE FREQUENCY CONTROL
	FZ	FREEZESTAT
	HC, CC	HEATING COIL, COOLING COIL
	AMD	AIR FLOW MONITORING DEVICE

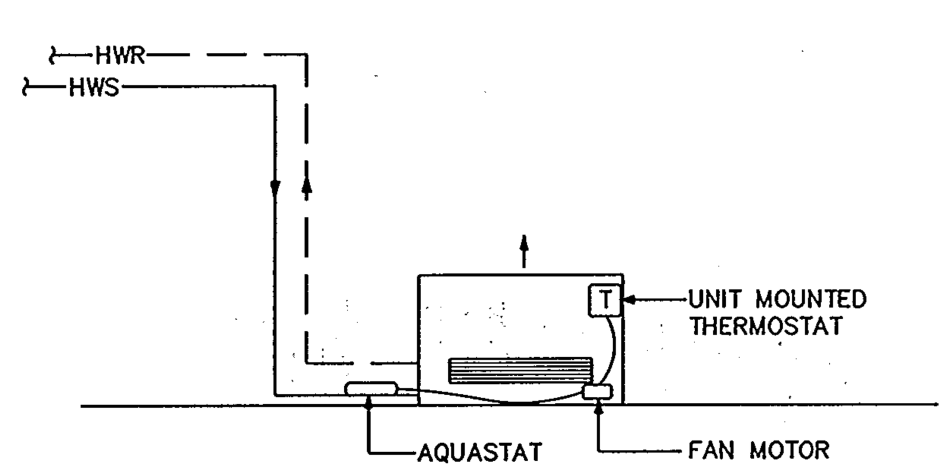

CABINET UNIT HEATER (CUH-1) CONTROL

NOT TO SCALE

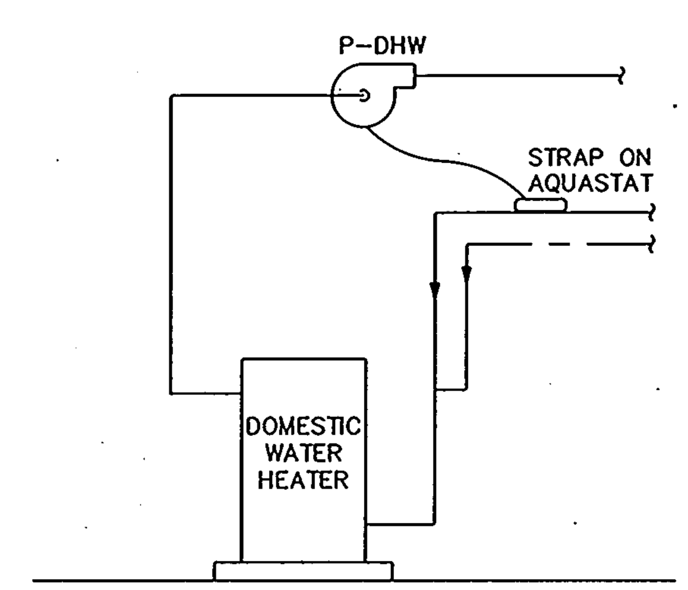

DOMESTIC HOT WATER HEATER

NOT TO SCALE

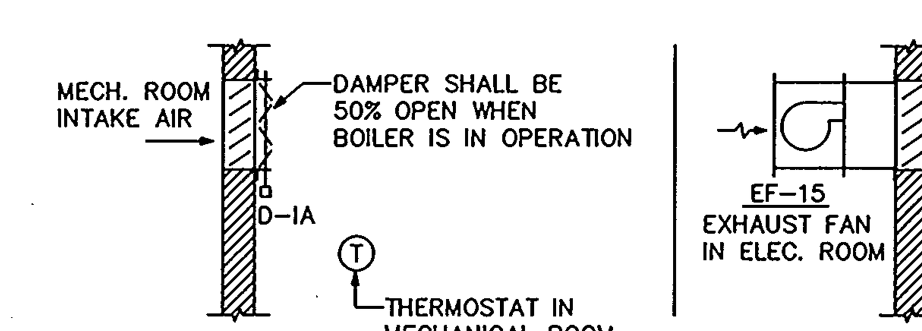

MECHANICAL AND ELECTRICAL ROOM VENTILATION CONTROL

NOT TO SCALE

AUTOMATIC TEMPERATURE CONTROL DIAGRAMS

ARCHITECTURAL TECHNOLOGIES, INC.
Architects and Construction Consultants
9192 Red Branch Road, Suite 300
Columbia, MD 21045 (301)995-4067

IN ASSOCIATION WITH :

CIVIL & GEOTECH ENGINEER: E B A ENGINEERING, INC.
STRUCTURAL ENGINEER: QODESH ENGINEERING SERVICES, INC.
MECHANICAL & ELECTRICAL ENGINEER: BHARGAVA INTERNATIONAL, INC.
FIRE PROTECTION ENGINEER: STANTON ENGINEERING

SEAL:

REVISIONS

AS BUILT 11/24/94

HOWARD COUNTY PUBLIC SAFETY COMPLEX

SCAGGSVILLE ANNEX
11226 ROUTE 216
LAUREL, MD 20707

CAPITAL PROJECT NO. C – 0227

DATE: 3/25/92

DRAWING NO. M9.1

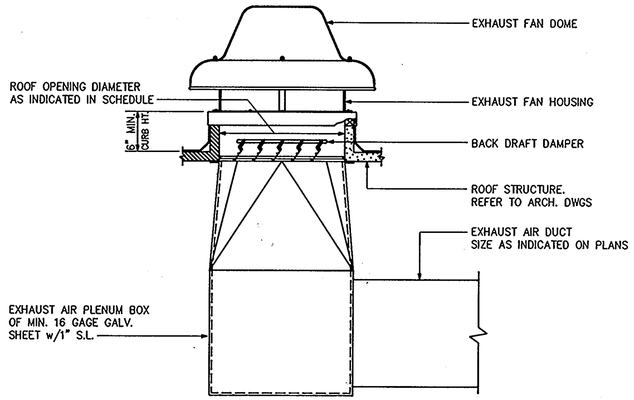

ROOF VENTILATOR TYPE EXHAUST FAN MOUNTING DETAIL

NOT TO SCALE DRVTEFMD

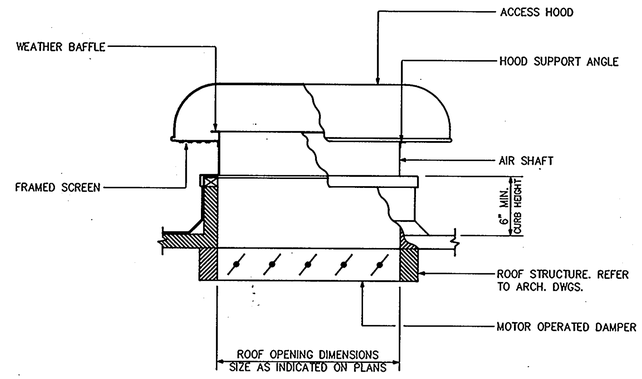

RELIEF AIR VENTILATOR MOUNTING ARRANGEMENT

NOT TO SCALE DRAVMA

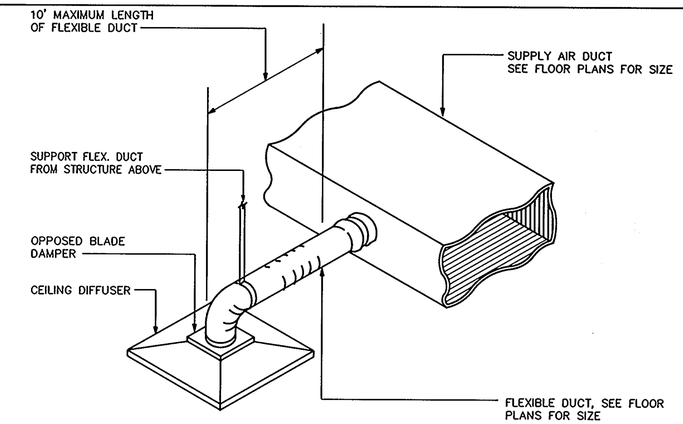

CEILING DIFFUSER HOOK-UP DETAIL

NOT TO SCALE DCDHUD

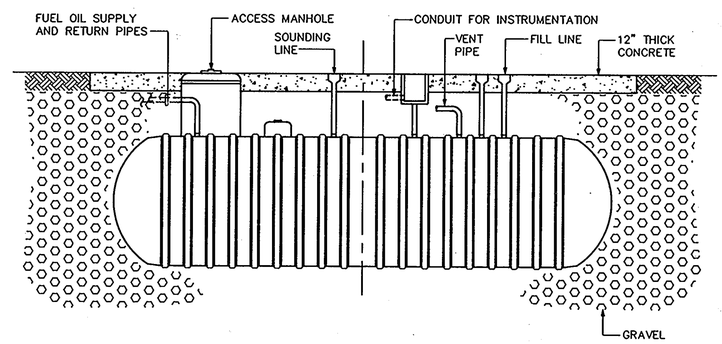

UNDER GROUND FUEL OIL STORAGE TANK

NOT TO SCALE DUFOST

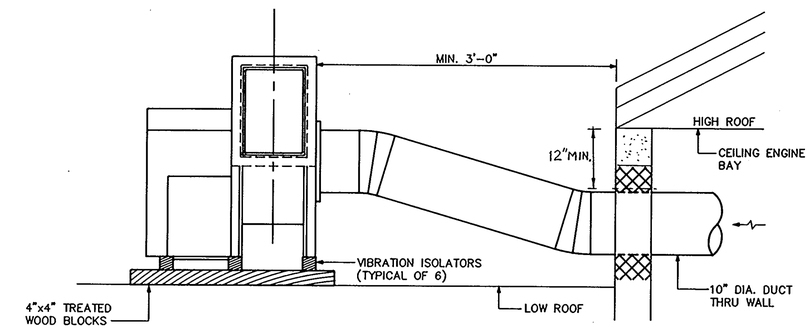

ENGINE BAY EXHAUST FAN DETAIL (TYPICAL OF 2)

NOT TO SCALE

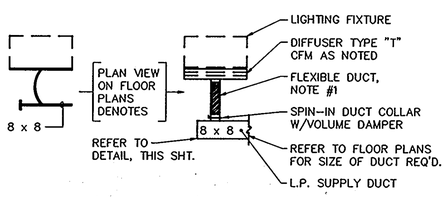

TYPE T DIFFUSER

SEE NOTE #2

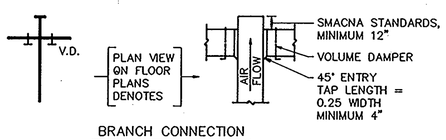

BRANCH CONNECTION

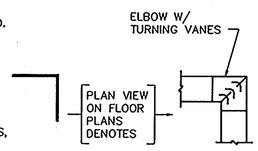

ELBOW – 90°

1. ALL FLEXIBLE DUCT SHALL BE MAX. 8'-0" LENGTH, FREE OF SHARP BENDS & KINKS. REFER TO DETAIL, THIS SHEET FOR SIZE REQUIREMENTS.
2. INSTALLATION OF TYPE "P" DIFFUSERS SIMILIAR. FLEX DUCT SIZE SHALL MATCH NECK SIZE.

DETAIL–LOW PRESSURE DUCT CONSTRUCTION

NO SCALE DLPDUCT

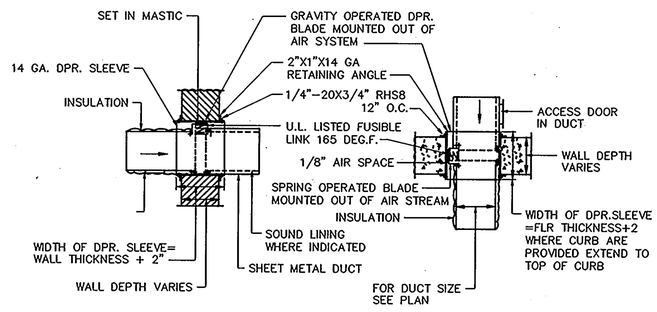

FIRE DAMPER DETAIL

NOT TO SCALE DFDD

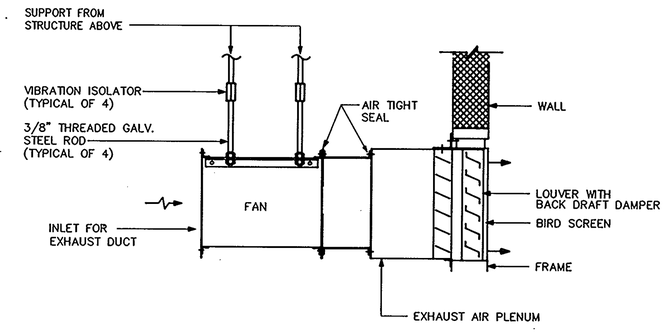

DETAIL – EXHAUST FAN

NOT TO SCALE DEF

ARCHITECTURAL TECHNOLOGIES, INC.
Architects and Construction Consultants
9192 Red Branch Road, Suite 300
Columbia, MD 21045 (301)995–4067

IN ASSOCIATION WITH :

CIVIL & GEOTECH ENGINEER: E B A ENGINEERING, INC.
STRUCTURAL ENGINEER: QODESH ENGINEERING SERVICES, INC.
MECHANICAL & ELECTRICAL ENGINEER: BHARGAVA INTERNATIONAL, INC.
FIRE PROTECTION ENGINEER: STANTON ENGINEERING

SEAL

REVISIONS

AS BUILT 11/24/94

DETAILS

HOWARD COUNTY PUBLIC SAFETY COMPLEX

SCAGGSVILLE ANNEX
11226 ROUTE 216
LAUREL, MD 20707

CAPITAL PROJECT NO. C – 0227

DATE: 3/25/92

DRAWING NO. M10.1

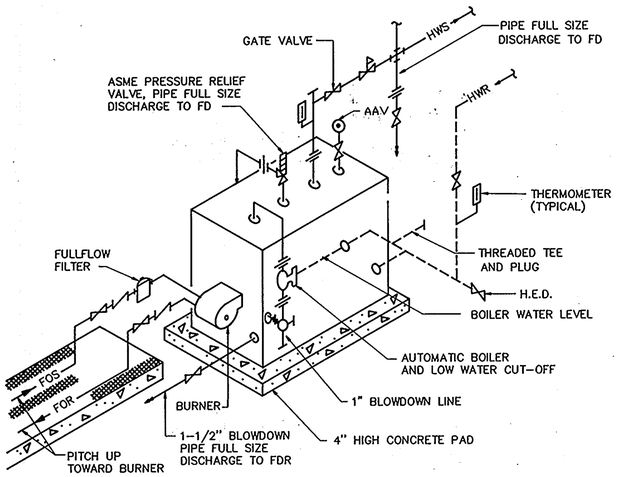

PIPING DETAIL HOT WATER HEATING BOILER
NOT TO SCALE DHWHB

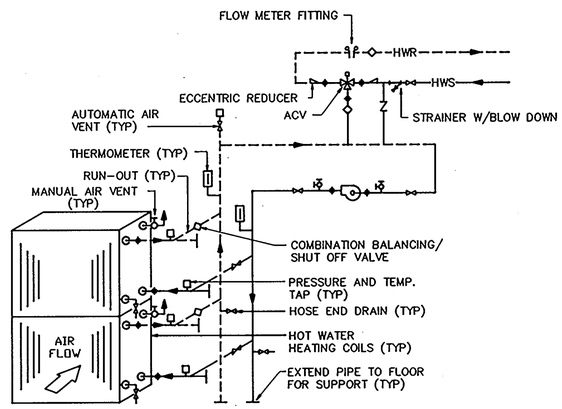

PIPING DETAIL
HOT WATER HEATING COIL
NOT TO SCALE DHWHC

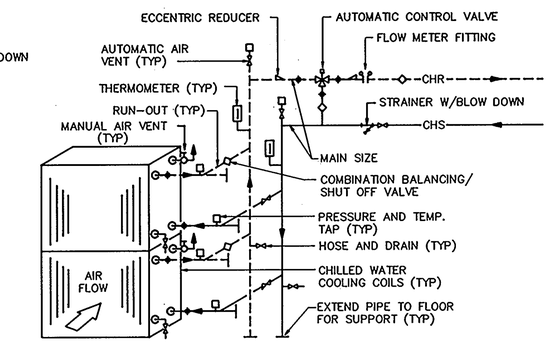

PIPING DETAIL
CHILLED WATER COOLING COIL
NOT TO SCALE DCWCC

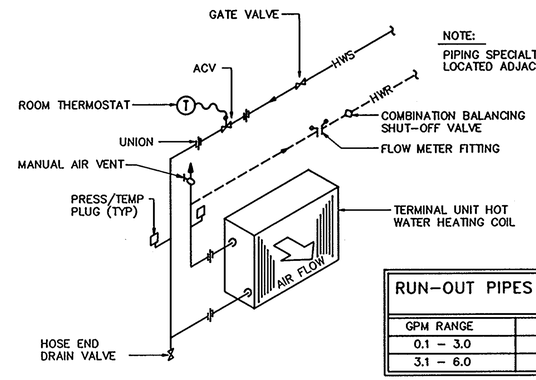

NOTE:
PIPING SPECIALTIES SHALL BE LOCATED ADJACENT TO COIL.

RUN-OUT PIPES SCHEDULE	
GPM RANGE	PIPE SIZE
0.1 – 3.0	3/4 "
3.1 – 6.0	1"

PIPING DETAIL
TERMINAL UNIT HOT WATER HEATING COIL
NOT TO SCALE DTUHWHC

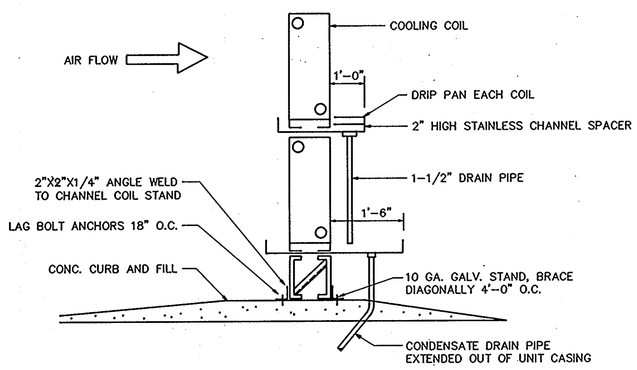

NOTE: ALL DRIP PANS TO BE CONSTRUCTED OF 22 GA. STAINLESS STEEL. (WELDED)

COOLING COIL INSTALLATION
NOT TO SCALE DCCI

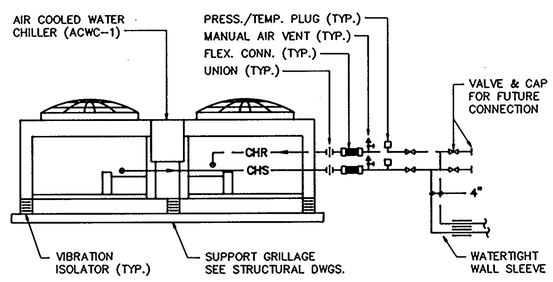

NOTE: ALL PIPING EXPOSED TO ATMOSPHERE SHALL BE INSULATED AND ELECTRICALLY HEAT TRACED HEAT TRACING TO BE UNDER DIVISION 16.

PIPING DETAIL – AIR COOLED WATER CHILLER
NOT TO SCALE DACWALL

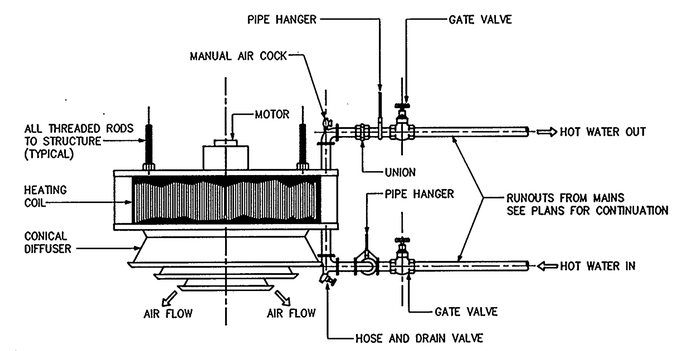

DOWN FLOW UNIT HEATER INSTALLATION DETAIL
NOT TO SCALE DDFUHID

ARCHITECTURAL TECHNOLOGIES, INC.
Architects and Construction Consultants
9192 Red Branch Road, Suite 300
Columbia, MD 21045 (301)995-4067

IN ASSOCIATION WITH :

CIVIL & GEOTECH ENGINEER:	E B A ENGINEERING, INC.
STRUCTURAL ENGINEER:	QODESH ENGINEERING SERVICES, INC.
MECHANICAL & ELECTRICAL ENGINEER:	BHARGAVA INTERNATIONAL, INC.
FIRE PROTECTION ENGINEER:	STANTON ENGINEERING

SEAL:

REVISIONS
AS BUILT 11/24/94

DETAILS

HOWARD COUNTY
PUBLIC SAFETY COMPLEX

SCAGGSVILLE ANNEX
11226 ROUTE 216
LAUREL, MD 20707

CAPITAL PROJECT NO.
C – 0227

DATE: 3/25/92

DRAWING NO.
M10.2

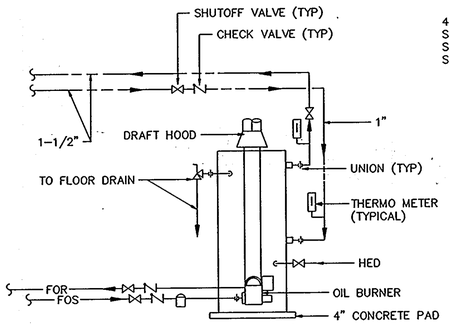

OIL FIRED DOMESTIC WATER HEATER
NOT TO SCALE DOFDWH

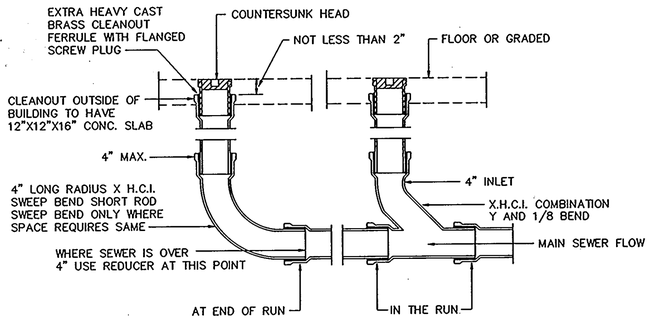

CLEANOUT DETAIL
NOT TO SCALE DCOD

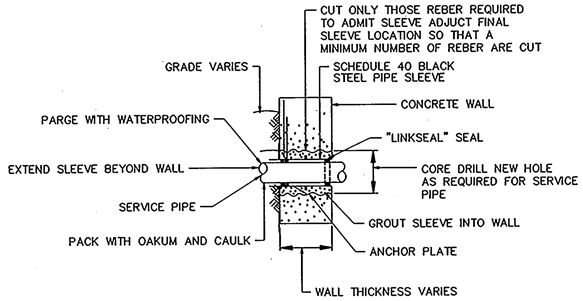

DETAIL – PIPE SLEEVE IN EXTERIOR WALL
NOT TO SCALE DPSIEW

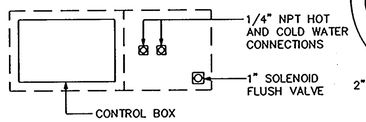

PART REAR VIEW (EACH FIXTURE)

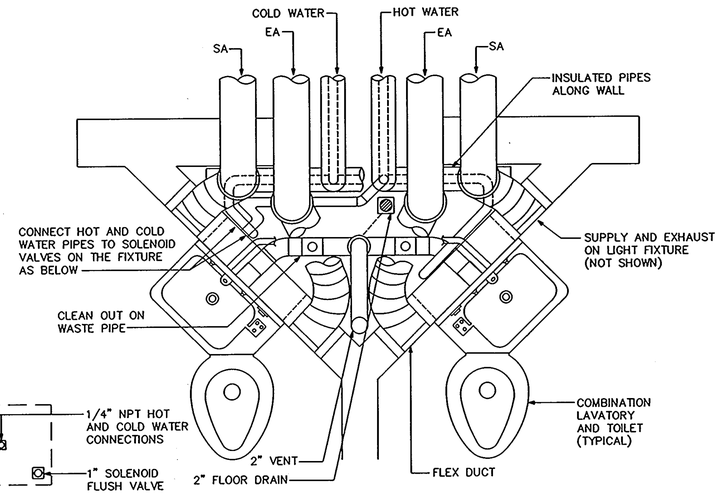

DETAIL AT CELLS CLOSET
NOT TO SCALE 012CELLS

FOR PIPE LINES	DUMMY LEG	BASE PLATE
6" THRU 8"	3" SCH. 40	8"x8"x1/2"
2" THRU 4"	2" SCH. 80	6"x6"x1/2"

NOTE:
DUMMY LEG AND BASE PLATES GALVANIZED AFTER FABRICATION

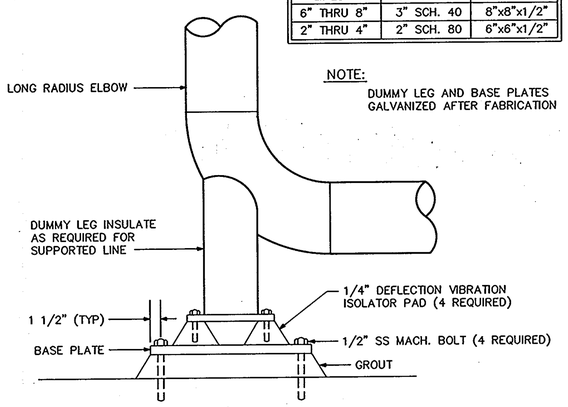

PUMP PIPE FLOOR SUPPORT DETAIL
NOT TO SCALE DPPFSD

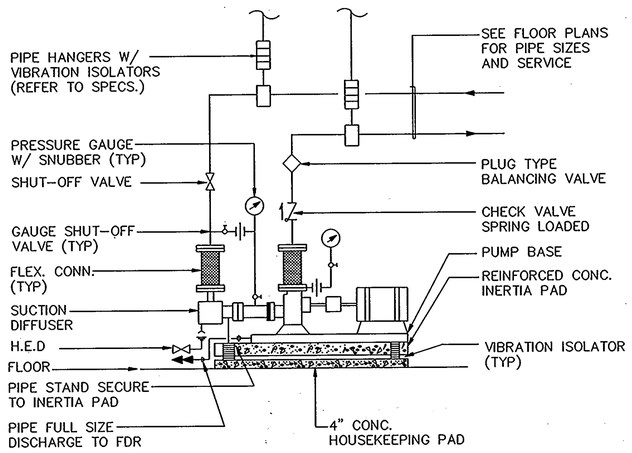

BASE MOUNTED END SUCTION PUMP
NOT TO SCALE DBMESP

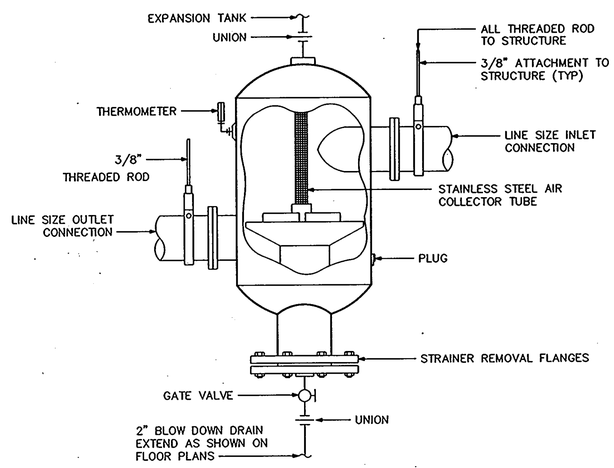

TYPICAL AIR RELEASE TANK DETAIL
NOT TO SCALE DTARTD

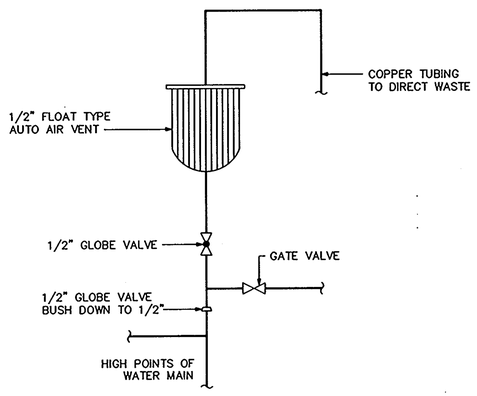

TYPICAL AUTOMATIC AIR VENT DETAIL
NOT TO SCALE DTAAVD

ARCHITECTURAL TECHNOLOGIES, INC.
Architects and Construction Consultants
9192 Red Branch Road, Suite 300
Columbia, MD 21045 (301)995-4067

IN ASSOCIATION WITH :
CIVIL & GEOTECH ENGINEER: E B A ENGINEERING, INC.
STRUCTURAL ENGINEER: QODESH ENGINEERING SERVICES, INC.
MECHANICAL & ELECTRICAL ENGINEER: BHARGAVA INTERNATIONAL, INC.
FIRE PROTECTION ENGINEER: STANTON ENGINEERING

SEAL:

REVISIONS
AS BUILT 11/24/94

DETAILS

HOWARD COUNTY PUBLIC SAFETY COMPLEX

SCAGGSVILLE ANNEX
11226 ROUTE 216
LAUREL, MD 20707

CAPITAL PROJECT NO. C – 0227
DATE: 3/25/92
DRAWING NO. M10.3

AIR COOLED WATER CHILLER DUTY

GENERAL	
DESIGNATION:	ACWC-1
QUANTITY:	1
LOCATION:	OUTSIDE MECH ROOM
SERVICE:	AHU
CAPACITY	
NET COOLING CAPACITY (TONS):	74.6
EVAPORATOR PERFORMANCE	
ENTERING CHR TEMPERATURE (DEG F):	59
LEAVING CHS TEMPERATURE (DEG F):	44
SETPOINT RANGE (DEG F):	42-46 (NOTE E)
CHILLED WATER FLOW RATE (GPM):	137
PRESSURE DROP (FT WG):	–
WORKING PRESSURE (PSI G):	125
FOULING FACTOR:	.0005
CONDENSER PERFORMANCE	
NUMBER OF FANS:	4
AMBIENT AIR FLOW RATE (CFM):	–
AMBIENT OUTSIDE AIR TEMP. (DEG F):	95
CONDENSER COIL SURFACE AREA (SQ. FT):	120
NUMBER OF INDEPENDENT REFRIGRENT CIRCUITS:	–
CONDENSER FAN MOTOR (HP) EACH:	1.5
COMPRESSOR PERFORMANCE	
TYPE:	SEMI-HERMETIC OR SCREW
QUANTITY:	2
REFRIGERANT:	R-22
NUMBER OF INDEPENDENT REFRIGERANT CIRCUITS:	1 PER COMPRESSOR
ENERGY INPUT MAX (KW/TON):	1.1
ELECTRICAL CHARACTERISTICS	
VOLTAGE:	460
PHASE:	3
FREQUENCY (HZ):	60
POWER FACTOR MIN (%):	85
MINIMUM CIRCUIT AMPACITY:	182
PHYSICAL CHARACTERISTICS	
OPERATING WEIGHT (LB):	6900
MAXIMUM OVERALL LENGTH (INCHES):	200
MAXIMUM WIDTH (INCHES):	86
MAXIMUM HEIGHT (INCHES):	66

REMARKS

NOTES:

A. DESIGN BASED ON DUNHAM-BUSH SERIES ACXX.

B. 120V, 1PH, 60HZ CONTROL CIRCUIT POWER SHALL BE SUPPLIED FROM A SEPARATE SOURCE, THROUGH A FIELD SUPPLIED FUSED DISCONNECT.

C. CONTRACTOR SHALL KEEP ADEQUATE CLEARANCES RECOMMENDED BY THE CHILLER MANUFACTURER.

D. CHILLER DUTY SHALL BE BASED ON 40% GLYCOL IN CHILLED WATER SYSTEM.

E. LEAVING CHILLED WATER SHALL BE ADJUSTABLE FROM 42 DEG F TO 46 DEG F. CHILLED WATER TEMPERATURE SHALL BE MAINTAINED ± 1 DEG F OF THE SET POINT.

F. START UP AND WARRANTY SHALL BE PROVIDED BY CHILLER MANUFACTURER'S AUTHORIZED REPRESENTATIVE. CONTRACTOR AUTORIZED BY CHILLER MANUFACTURER'S REPRESENTATIVE SHALL NOT BE ACCEPTABLE. SUBMIT CURRENT AUTHORIZATION BY UNIT MANUFACTURER WITH SUBMISSION.

G. MINIMUM FOLLOWING SHALL BE PROVIDED WITH UNIT:
1. HOT GAS BY-PASS ON ONE COMPRESSOR.
2. CODED ELECTRICAL PANEL IN ACCORDANCE WITH ALL APPLICABLE CODES
3.
4. INDICATOR LIGHT SET TO INDICATE: POWER TO THE UNIT, TRIP ON HIGH DISCHARGE PRESSURE, LOW EVAPORATOR PRESSURE AND LOW OIL PRESSURE.

H. EACH UNIT SHALL BE SUITABLE FOR LOW AMBIENT OPERATION UPTO (–) 20 DEG F.

EXPANSION TANK SCHEDULE

DESIGNATION:	EXT-1	EXT-2
LOCATION:	MECH ROOM	MECH ROOM
SERVICES:	CHILLED WATER SYSTEM	HEATING HOT WATER SYSTEM
TANK VOLUME (GAL):	37	57
ACCEPTANCE VOLUME (GAL):	37	57
FILL PRESSURE (PSIA):	40	55
RELIEF VALVE SET (PSIA):	80	120
ASME PRESSURE RATING (PSIG):	125	125
DIMENSIONS (INCHES)		
DIAMETER:	20	20
HEIGHT:	40	54
OPERATING WEIGHT (LBS):	503	765

AIR HANDLING UNIT DUTY

GENERAL	
DESIGNATION:	AHU
LOCATION:	MECHANICAL ROOM
SERVICE:	FIRE STATION, POLICE STATION
MIN. OUTDOOR AIR (CFM):	9,000
SERVICE:	–
SUPPLY FAN	
NUMBER OF FANS:	2
CAPACITY (CFM):	16,000
EXTERNAL SP (IN WG):	5.0
WHEEL DIAMETER (INCHES):	30
RPM:	1567
BHP:	21
MOTOR HP:	25
VOLTAGE/HERTZ/PHASE:	460/60/3
COOLING COIL	
TOTAL CAPACITY MBH:	1160
MIN. ROWS/FINS PER INCH:	8/10
ENTERING AIR TEMPERATURE:	–
DB DEG F:	85
WB DEG F:	69
LEAVING AIR TEMPERATURE:	–
DB DEG F:	57
WB DEG F:	57
MAX. FACE VELOCITY (FPM):	475
MAX. AIR PD (IN. WG):	1.15
EWT DEG F:	0.44
LWT DEG F:	59
CHILLED WATER (GPM):	165 (SEE NOTE 1)
MAX. H20 PD (FT. WG):	12.16 (SEE NOTE 1)
PREHEAT COIL	
TOTAL CAPACITY MBH:	655
ENTERING AIR TEMP (DEG F):	5
LEAVING AIR TEMP (DEG F):	57
MAX FACE VELOCITY (FPM):	450
MAX AIR PD (IN WG):	0.25
HOT WATER (GPM):	25 (SEE NOTE 2)
FILTERS	
MAX FACE VELOCITY (FPM):	475
EFFICIENCY PERCENT:	80-85
INITIAL PD (IN WG):	0.5
FINAL PD (IN WG):	1.0
APPROX. SIZE (IN):	~~96Lx60Hx120~~
OVERALL DIMENSIONS	
LENGTHxHEIGHTxWIDTH (FT):	23x8.5x12

REMARKS

A. PROVIDE FILTER GAUGE.

B. FAN SOUND POWER LEVELS SHALL NOT EXCEED THE FOLLOWING:
f= 63 125 250 1000 2000 4000 8000
s= 101 99 95 86 82 78 74
WHERE f IS OVTAVE BAND CENTER FREQUENCY (HZ) AND s IS FAN SOUND POWER LEVEL (dB).

NOTES:
1. DUTY SHALL BE BASED ON 40 PERCENT ETHYLENE GLYCOL IN CHILLED WATER.
2. HOT WATER FLOW IS BASED ON WATER TEMPERATURE DIFFERENTIAL OF 25 DEG F.

FILTER AREA, 80 SQUARE FEET MINIMUM
20 FILTER BANK, EACH FILTER 20"Hx24"Wx12" D
⚠1

DOMESTIC WATER HEATER DUTY

GENERAL	
DESIGNATION:	DWH
QUANTITY:	1
LOCATION:	MECH ROOM
SERVICE:	DOMESTIC HOT WATER
FIRING FUEL:	FO NO. 2
PERFORMANCE	
CAPACITY (GALLONS):	225
ENTERING WATER TEMPERATURE (DEG F):	40
LEAVING WATER TEMPERATURE (DEG F):	120
RECOVERY RATE (GPH):	500
INPUT RATE (BTUH):	400,000
FIRING RATE (GPH):	2.8
ELECTRICAL CHARACTERISTICS	
MOTOR HP:	1/4
VOLTAGE:	120
PHASE:	1
HERTZ:	60
OVERALL DIMENSIONS	
SHIPPING WEIGHT (LB):	1400
OVERALL DIAMETER (IN):	35
OVERALL HEIGHT (IN):	81
FLUE OUTLET DIAMETER (IN):	5

REMARKS

NOTE:
1. PROVIDE INTEGRAL THERMOSTAT FOR BURNER CONTROL TO MAINTAIN WATER TEMPERATURE.
2. SELECTION BASED ON POLY-SHIELD SERIES 500P.

HOT WATER BOILER DUTY

GENERAL	
DESIGNATION:	HWB
QUANTITY:	2
LOCATION:	MECHANICAL ROOM
SERVICE:	HEATING HOT WATER
FIRING FUEL:	FO No. 2
FLUID:	HOT WATER
PERFORMANCE	
BOILER HORSEPOWER:	35.8
IBR GROSS OUTPUT (MBH):	1200
NET IBR RATING (MBH):	1043
WORKING PRESSURE (PSIG):	40
BURNER CAPACITY (MBH):	1526
TOTAL DRAFT REQUIRED (IN WG):	0.08
MAX. WATER P.D. (FT WG):	2
HOT WATER SUPPLY SET POINT(DEG F):	180
ELECTRICAL CHARACTERISTICS	
BURNER:	480 V
BURNER MOTOR HP:	3/4
CONTROL CIRCUIT (SEE NOTE 4):	120 V/60 HZ
PHYSICAL CHARACTERISTICS	
HEATING SURFACE (SQ FT):	168.4
FURNACE VOLUME (CU FT):	16.4
WATER CONTENT (GAL):	107
OPERATING WEIGHT (LB):	5540
OVERALL DIMENSIONS (INCHES)	
LENGTH:	122
HEIGHT:	78
WIDTH:	51

REMARKS

1. SELECTION BASED ON H8 SMITH BOILER FITTED WITH POWER FLAME OIL BURNER.
2. STARTUP AND WARRANTY SHALL BE PROVIDED BY THE BOILER MANUFACTURER'S AUTHORIZED REPRESENTATIVE, CONTRACTOR AUTHORIZED BY BOILER MANUFACTURER'S REPRESENTATIVE SHALL NOT BE ACCEPTABLE.
3. HOT WATER SUPPLY TEMPERATURE SHALL BE ADJUSTABLE FROM 140 DEG F TO 210 DEG F. HOT WATER SHALL BE MAINTAINED AT ±5 DEG F OF THE SET POINT.
4. CONTROL CIRCUIT SHALL BE BUILT-IN THE BURNER CONTROL PANEL WITH NECESSARY STEP DOWN TRANSFORMER.

AIR DEVICE SCHEDULE

TYPE	SERVICE	NECK SIZE	FACE SIZE (NOTE 2)	MAX. CFM (NOTE 3)	REMARKS
DP6A	CEILING SUPPLY	6" DIA	12"x12"	100	
DP6	CEILING SUPPLY	6" DIA	24"x24"	100	
DP8	CEILING SUPPLY	8" DIA	24"x24"	200	
DP10	CEILING SUPPLY	10" DIA	24"x24"	300	
DP12	CEILING SUPPLY	12" DIA	24"x24"	400	
DP14	CEILING SUPPLY	14" DIA	24"x24"	500	
RP6	CEILING RETURN	6" DIA	24"x24"	200	
RP8	CEILING RETURN	8" DIA	24"x24"	300	
RP10	CEILING RETURN	10" DIA	24"x24"	400	
RP12	CEILING RETURN	12" DIA	24"x24"	600	
RP22	CEILING RETURN	22"x22"	24"x24"	2000	
EP6	CEILING EXHAUST	6" DIA	12"x12"	200	
EP8	CEILING EXHAUST	8" DIA	12"x12"	300	
EP10	CEILING EXHAUST	10" DIA	24"x24"	400	
EP14	CEILING EXHAUST	14" DIA	24"x24"	1100	
DP6S	CEILING SUPPLY	6" DIA	24"x24"	100	SECURITY DIFFUSER
EP8S	CEILING EXHAUST	8" DIA	24"x24"	300	SECURITY GRILLE
LD	WALL SUPPLY	8" DIA	2"x60"	400	PLENUM MOUNTED

NOTES:
1. REFER TO SPECIFICATION FOR MAKE AND MODEL.
2. AIR FLOW DIRECTION SHALL BE AS INDICATED ON THE PLAN'S.
3. CFM BASED ON MAXIMUM NC 29.

PUMPS SCHEDULE

GENERAL				
DESIGNATION:	PAHU	PCH	PHW	PDHW
QUANTITY:	1	2	2	1
LOCATION:	MECH RM	MECH UP	MECH RM	MECH RM
SERVICE:	PREHEAT COIL WATER RECIRCULATION	CHILLED WATER (SEE NOTE 2)	HEATING HOT WATER SYSTEM	DOMESTIC HOT WATER RECIRCULATION (SEE NOTE 3)
TYPE: (REFER TO SPECS)	IL	ES	ES	IL
FLUID:	WATER	WATER+GLYCOL	WATER	WATER
FLOW RATE GPM:	36	165	100	25
TOTAL HEAD (FT. WG):	25	35	60	25
APPROX. IMPELLER DIAMETER (IN):	5.4	6.3	9.5	5.2
SUCTION DISCHARGE IN X (IN):	1.5x1.5	2.5x2	3x2.5	1.5x1.5
MIN. PUMP EFFICENCY %:	53	72	70	45
PUMP SPEED RPM	1750	1760	1760	1750
PUMP BHP:	0.5	2	6.8	0.33
MOTOR HP:	0.75	3	7.5	0.5
ELECTRICAL SERVICE				
VOLT:	480	480	480	120
PHASE:	3	3	3	1
HERTZ:	60	60	60	60
TACO SERIES:	1615	FM2007	FM2510	1615
OVERALL DIMENSIONS				
LENGTH (IN):	22	42	51	22
WIDTH (IN):	13	13	18	13
HEIGHT (IN):	16	17	22	16
MOTOR WEIGHT (LB):	–	–	–	–

REMARKS

NOTES:
1. PUMPS SHALL BE SUITABLE FOR MINIMUM OPERATING PRESSURE OF 125 PSI.
2. PUMP PERFORMANCE SHALL BE BASED ON 40 PERCENT ETHYLENE GLYCOL IN THE SYSTEM.
3. PUMP PDHW SHALL BE ALL BRONZE CONSTRUCTION.

FAN POWERED VARIABLE AIR VOLUME TERMINAL UNIT SCHEDULE

UNIT SIZE	6	8	10
	CFM RANGE		
LOW	200	500	800
HIGH	500	800	1200
INLET SIZE (INCHES)	6" DIA	8" DIA	8x11 OVAL
APPROX. OUTLET SIZW WxH (INCHES)	6x8	10x8	12x8
HOT WATER COIL			
MBH MINIMUM	6	9	15
NO ROWS	1	1	2
GPM (MAX.)	1	1.5	3.0
MIN. INLET SP (IN WG): SEE NOTE 5	0.2	0.2	0.2
MAX. NC DISCHARGE (dB)	28	33	30
MAX. NC RADIATED (dB)	30	32	14
OVERALL DIMENSIONS (INCHES)			
LENGTH (IN):	24	24	24
WIDTH (IN):	24	28	30
HEIGHT (IN):	14	14	14
ELECTRICAL CHARACTRISTICS			
FAN MOTOR HP	1/6	1/4	1/2
VOLTAGE	277	277	277
PHASE	1	1	1
FREQUENCY (Hz)	60	60	60
	NOTES		

NOTES:
1. HOT WATER HEATING COIL CAPACITIES ARE BASED ON 140 F EWT AND 60 F EAT.
2. WATER PRESSURE DROP THROUGH HOT WATER HEATING COIL SHALL BE 5 FT WG MAX.
3. AIRSIDE PRESSURE DROP THROUGH HOT WATER HEATING COIL SHALL BE 0.1 IN WG MAX.
4. NOISE RATINGS ARE BASED ON 1 IN WG PRESSURE DROP ACROSS THE TERMINAL.
5. MINIMUM INLET STATIC PRESSURE, 0.20 IN WG, MUST BE MAINTAINED TO AVOID MOTOR OVERLOAD.
6. NC Lp=NC Lw-10dB ROOM ABSORPTION. ALL NC RATINGS ARE BASED ON A SINGLE OUTLET AND 10 FEET OF UNLINED DUCT DOWNSTREAM OF THE TERMINAL.
7. MBH IS BASED ON INDUCTION FAN FLOW RATE.

EXHAUST FAN SCHEDULE

DESIGNATION	REF-1	EF-2	REF-3	REF-4	REF-5	REF-6	REF-7	REF-8	REF-9	REF-10	REF-11	EF-15	EF-16	EF-17	REF-18
LOCATION	ROOF ROOM 3	KITCHEN HOOD	ROOF ROOM 21	ROOF ROOM 34	ROOF ROOM 40	ROOF ROOM 49	ROOF ROOM 54	ROOF ROOM 59	ROOF ROOM 92	ROOF ROOM 88	ROOF ROOM 105	TRANSOM ROOM 117	ROOF	ROOF	ROOF ROOM 067
SERVICES	TOILETS, LOCKERS, GEAR RM, EXER. RM	HOOD EXHAUST	TOILET	TOILET, STORAGE, TRAINING ROOM	CELLS	CELLS	CELLS	TOILET, JAN., STORAGE	TOILET, JAN., STORAGE	TOILET, JAN., BULLPEN	TOILETS LOCKERS, EXER. RM	MECH & ELEC ROOMS	ENGINE BAY EXHAUST	ENGINE BAY EXHAUST	SALLY PORT EXHAUST NOTE 5
TYPE (SEE SPEC.)	CRV	NOTE 1	CRV	CRV	CRV	CRV	CRV	CRV	CRV	CRV	CRV	IL	CU	CU	CRV
AIR FLOW RATE CFM	1200	–	75	255	500	360	1080	220	550	615	2900	4450	1500	1500	1080
SP IN WG	0.5	–	0.375	0.5	0.5	0.5	0.5	0.5	0.5	0.5	0.5	0.5	4.0	4.0	0.5
FAN SPEED RPM	860	–	1750	1750	860	1550	860	1750	860	1140	625	1490	2740	2740	860
FAN BHP	–	–	–	–	–	–	–	–	–	–	–	–	1.4	1.4	–
MOTOR HP	1/4	–	1/12	1/12	1/6	1/10	1/4	1/12	1/6	1/8	3/4	1	2	2	1/4
ELECTRICAL DATA															
VOLTS	120	120	120	120	120	120	120	120	120	120	480	480	480	480	120
PHASE	1	1	1	1	1	1	1	1	1	1	3	3	3	3	1
HERTZ	60	60	60	60	60	60	60	60	60	60	60	60	60	60	60
PHYSICAL DATA															
LENGTH x WIDTH (IN)	25x25	–	18x18	18x18	25x25	18x18	25x25	18x18	25x25	21x21	31x31	–	20x29	20x29	25x25
HEIGHT (IN)	25	–	14	14	25	14	25	14	25	18	28	–	28	28	25
WEIGHT (LB)	70	–	25	25	70	25	70	25	70	40	175	–	180	180	70
PENN MODEL (NOTE 2)	BW53	–	XQ60	XQ82	BW45	XR94	BW53	XQ82	BW45	AT24	LB24	NOTE 3	NOTE 3	NOTE 3	BW53
ROOF OPENING DIA. (IN)	16 1/4	–	9	9	16 1/4	9	16 1/4	9	16 1/4	11 1/2	22 1/2	–	–	–	16 1/4

NOTES:
1. THE KITCHEN EXHAUST HOOD HAS A BUILT-IN EXHAUST FAN.
2. SELECTION IS BASED ON PENN VENTILATOR CO. MODELS AS INDICATED.
3. REFER TO SPECIFICATION FOR MANUFACTURE AND MODEL.
4. FANS SHALL HAVE INTEGRAL SPEED CONTROL AND DISCONNECT SWITCHES.
5. 0-15 MIN. ADJUSTABLE "OFF" TIMER, INTER LOCK WITH DOOR SWITCH.

CABINET AND UNIT HEATER SCHEDULE

GENERAL				
DESIGNATION:	UH-1	UH-2	CUH-1	CUH-2
SERVICES:	ROOM/PLENUM	ENGINE BAY	DOORWAYS	VESTIBULE
AIR FLOW RATE:	500	500	250	250
ENTERING AIR TEMP. (DEG F):	60	60	65	65
ENTERING WATER TEMP. (DEG F):	180	180	180	–
LENGTHxWIDTHxDEPTH(IN):	17x20x18	26#x17	36x25x9	19x14x5
HOT WATER MAXIMUM GPM:	2	2	2	2 KW
ELECTRICAL CHARACTERISTICS				
FAN MOTOR HP:	1/20	1/20	1/20	1/20
VOLTAGE:	120	120	120	277
PHASE:	1	1	1	1
HERTZ:	60	60	60	60

REMARKS

UH-1: PROVIDED WITH INTEGRAL THERMOSTAT.

CUH-1: PROVIDED WITH INTEGRAL THERMOSTAT, HIGH LOW HEAT SELECTION SWITCH.

CUH-2: SHALL BE RECESSED CEILING MOUNTED.

SCHEDULES PHASE 1

70 OF 90

ARCHITECTURAL TECHNOLOGIES, INC.
Architects and Construction Consultants
9192 Red Branch Road, Suite 300
Columbia, MD 21045 (301)995-4067

IN ASSOCIATION WITH :
CIVIL & GEOTECH ENGINEER: E B A ENGINEERING, INC.
STRUCTURAL ENGINEER: QODESH ENGINEERING SERVICES, INC.
MECHANICAL & ELECTRICAL ENGINEER: BHARGAVA INTERNATIONAL, INC.
FIRE PROTECTION ENGINEER: STANTON ENGINEERING

SEAL: STATE OF MARYLAND, REGISTERED PROFESSIONAL ENGINEER, NO. 9357

REVISIONS
⚠1 AS BUILT 11/24/94

HOWARD COUNTY PUBLIC SAFETY COMPLEX

SCAGGSVILLE ANNEX
11226 ROUTE 216
LAUREL, MD 20707

CAPITAL PROJECT NO. C – 0227

DATE: 3/25/92

DRAWING NO. M11.1

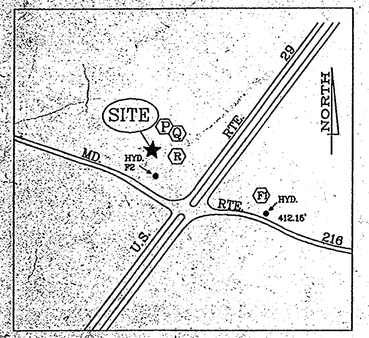

VICINITY MAP
SCALE: 1" = 600'

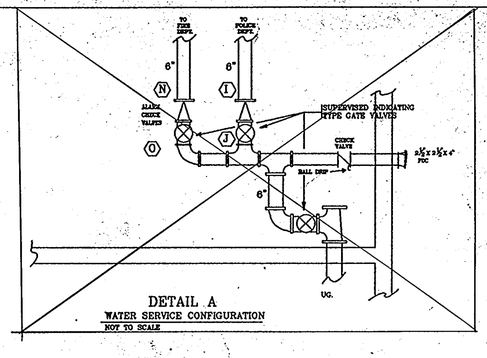

DETAIL A
WATER SERVICE CONFIGURATION
NOT TO SCALE

INSIDE METER CONNECTION
HOWARD COUNTY STANDARD
DETAIL W-344

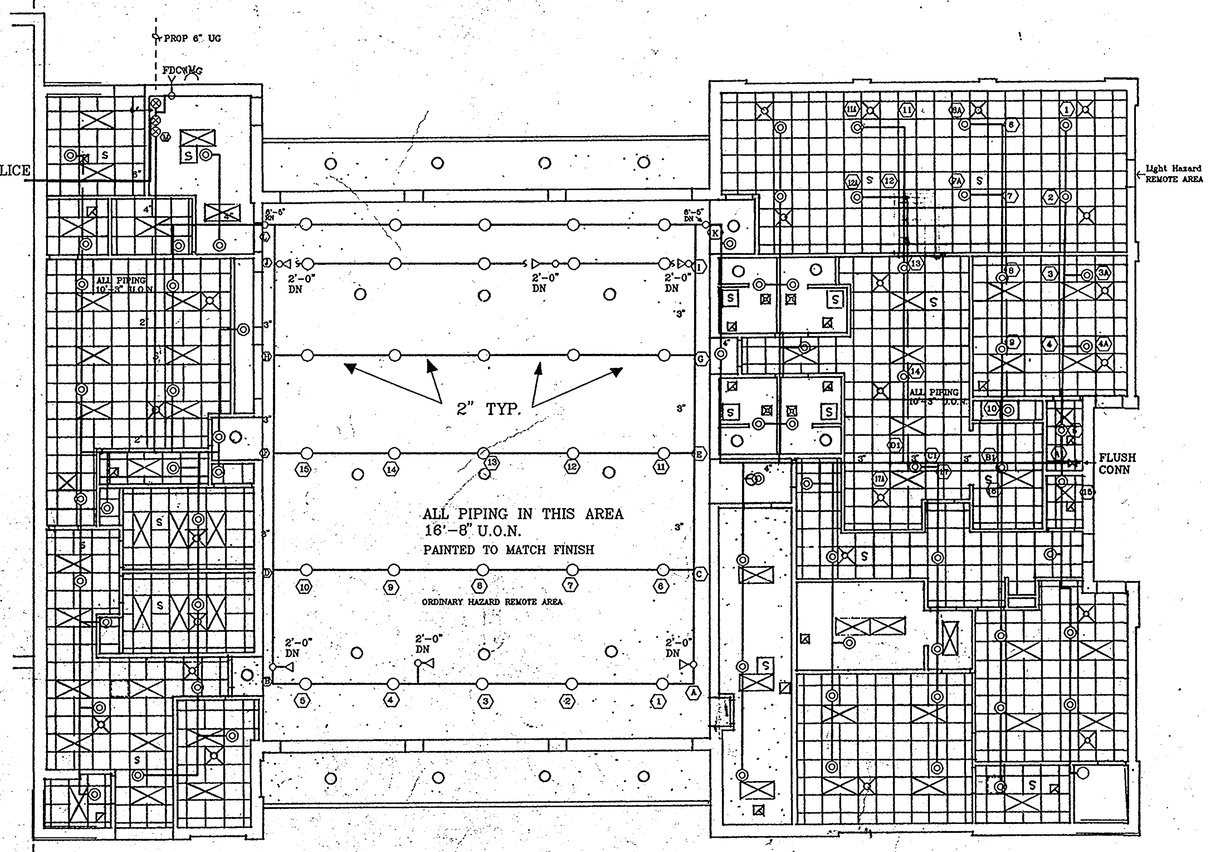

FIRE DEPARTMENT
PHASE 1

SCOPE OF WORK: DESIGN OF TWO HYDRAULICALLY CALCULATED SPRINKLER SYSTEMS AND SUPPLEMENTRY SPRINKLER SYSTEM SPECIFICATIONS. ONE SYSTEM FOR THE FIRE STATION AND ONE SYSTEM FOR THE POLICE STATION. SYSTEM ZONING WILL BE COORDINATED WITH FIRE ALARM SYSTEM ZONING. BOTH OCCUPANCIES HAVE A MIXTURE OF LIGHT AND ORDINARY HAZARD AREAS, THEREFORE, SPACING AND LOCATION OF SPRINKLERS WILL REFLECT LIMITS OF EACH.

BOTH SYSTEMS TO BE INSTALLED IN ACCORDANCE WITH NFPA STANDARD 13 INSTALLATION OF SPRINKLER SYSTEMS AND APPLICABLE HOWARD COUNTY REGULATIONS.

PIPING 1 1/2" AND SMALLER IS TO BE SCHEDULE 40 BLACK STEEL. PIPING 2" AND LARGER TO BE SCHEDULE 10 THINWALL BLACK STEEL. PIPING SHALL MEET OR EXCEED ASTM A53 STANDARDS. ALL PIPE MUST HAVE A MINIMUM OF 175 LBS WWP RATING. ALL SYSTEM PIPING TO BE AT 10'-3" U.O.N.

FITTINGS 1 1/2" AND SMALLER ARE TO BE CAST IRON. FITTINGS 2" AND LARGER TO BE GROOVED MECHANICAL TYPE COUPLINGS WITH FLUSH SEAL GASKETS. ALL FITTINGS TO COMPLY WITH SECTION 3-8.1 OF NFPA STANDARD 13 AND WILL HAVE A MINIMUM OF 175# WWP RATING.

HILTI (OR EQUAL) LISTED HANGERS TO BE USED WITH 3/8" A.T.R. AND TOP BEAM CLAMPS INSTALLED IN ACCORDANCE WITH NFPA STANDARD 13.

SPRINKLERS TO BE CENTRAL MODEL A RECESSED PENDANT, MODEL H SIDEWALL, MODEL A UPRIGHT AS WELL AS OMEGA PROHIBITOR PENDANT AND SIDEWALLS (FOR INSTITUTIONAL AREAS). SPRINKLER SPACING NOT TO EXCEED 130 SQ.FT. PER HEAD IN ORDINARY HAZARD AREAS AND 225 SQ. FT. PER HEAD IN LIGHT HAZARD AREAS.

THE SPRINKLER SYSTEM WILL BE HYDROSTATICALLY TESTED IN ACCORDANCE WITH NFPA STANDARD 13.

IT IS THE OWNERS RESPONSIBILITY TO PROVIDE HEAT THROUGHOUT WET SPRINKLER SYSTEM AREAS.

ALL PIPE DIMENSIONS ARE CENTER TO CENTER.

NEW 6" UNDERGROUND SERVICE TO BE INSTALLED BY OTHERS AND NOT PART OF THIS CONTRACT.

WATER TEST INFORMATION

DATE: 6/21/91 LOCATION: RT. 216 AND 29 DPW ANNEX

MEASURED	ADJUSTED
STATIC = 55 PSI	STATIC = 44 PSI
RESIDUAL = 46 PSI @ 950 GPM	RESIDUAL = 35 PSI

FLOW AT 20 PSI RESIDUAL = 1613 GPM

WATER ZONE = 550 MAIN SIZE = 12 INCH

PIPE SCHEDULE

1 SPRINKLER = 1"
2 SPRINKLERS = 1 1/2"
4 SPRINKLERS = 2"
5 SPRINKLERS = 2 1/2"

LEGEND

- ○ 212° BRASS UPRIGHT
- ◁ 165° STANDARD SIDEWALL
- ◎ 165° CHROME PENDANT (RECESSED)
- ⊗ SYSTEM RISER
- ○ RISER OR DROP NIPPLE
- WG WATER MOTOR GONG
- FDC FIRE DEPARTMENT CONNECTION

1650

ARCHITECTURAL TECHNOLOGIES INC.
Architects and Construction Consultants
9192 Red Branch Rd. Suite 300
Columbia MD. 21045 (301) 995-4067

IN ASSOCIATION WITH:
CIVIL & GEOTECH ENGINEER: E B A ENGINEERING, INC.
STRUCTURAL ENGINEER: GODESH ENGINEERING SERVICES, INC.
MECHANICAL & ELECTRICAL ENGINEER: BHARGAVA INTERNATIONAL, INC.
FIRE PROTECTION ENGINEER: STANTON ENGINEERING

SEAL: STATE OF MARYLAND — REG. 17088 — REGISTERED PROFESSIONAL ENGINEER

REVISIONS
1 AS BUILT 11/24/94

FIRST FLOOR PLAN – SPRINKLER
POLICE STATION PHASE 1

71 OF 90

HOWARD COUNTY
PUBLIC SAFETY COMPLEX

SCAGGSVILLE ANNEX
11226 ROUTE 216
LAUREL, MD 20707

CAPITAL PROJECTS NO: C – 0227
DATE: 3/25/92
DRAWING NO FP 1.1

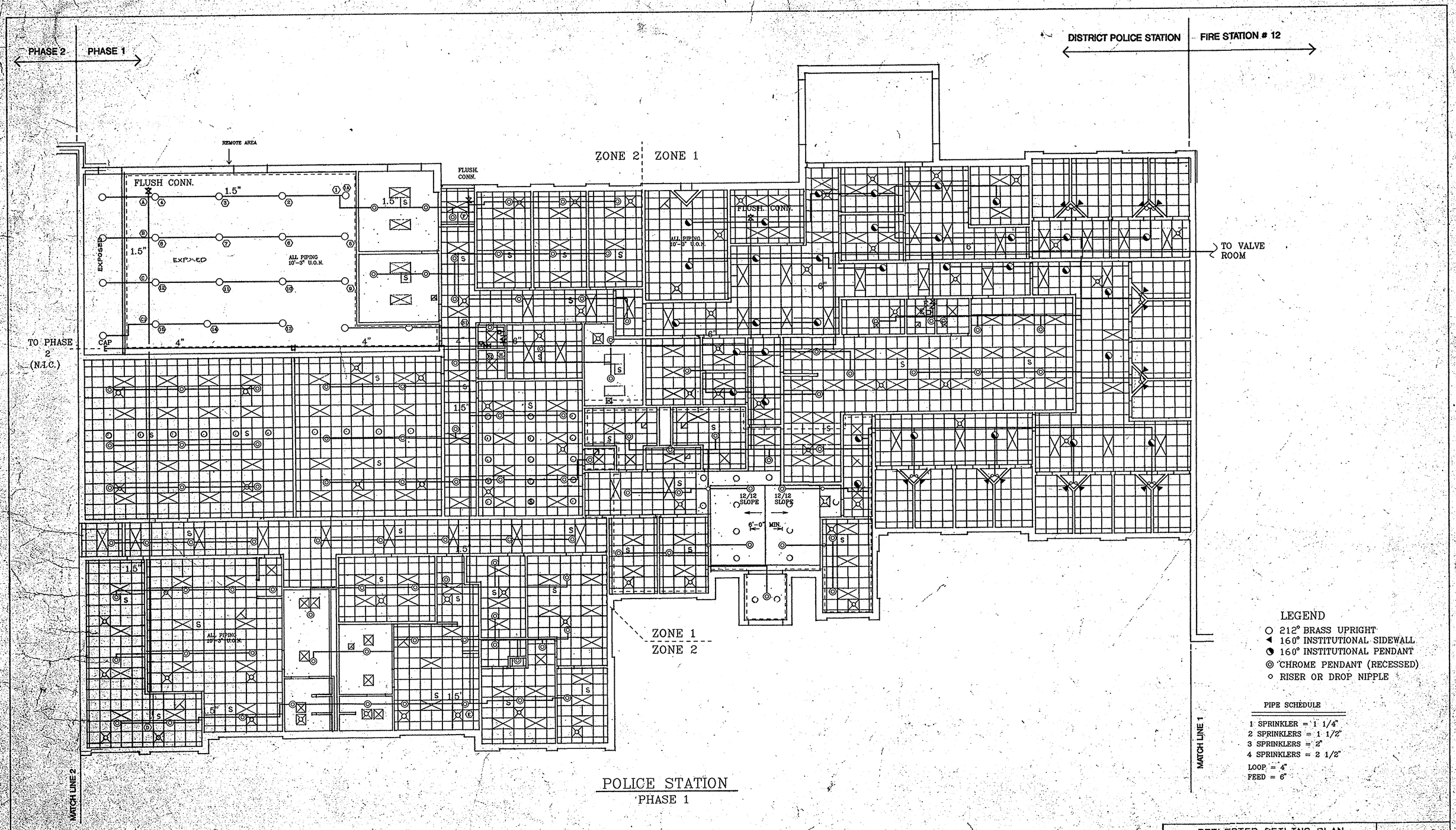

POLICE STATION
PHASE 1

1650

ARCHITECTURAL TECHNOLOGIES INC.
Architects and Construction Consultants
9192 Red Branch Rd. Suite 300
Columbia MD. 21045 (301) 995-4067

IN ASSOCIATION WITH:
CIVIL & GEOTECH ENGINEER: E B A ENGINEERING, INC.
STRUCTURAL ENGINEER: QODESH ENGINEERING SERVICES, INC.
MECHANICAL & ELECTRICAL ENGINEER: BHARGAVA INTERNATIONAL, INC.
FIRE PROTECTION ENGINEER: STANTON ENGINEERING

REVISIONS
AS BUILT 11/24/94

REFLECTED CEILING PLAN
POLICE STATION
HOWARD COUNTY
PUBLIC SAFETY COMPLEX
SCAGGSVILLE ANNEX
11226 ROUTE 216
LAUREL, MD. 20707

72 OF 90
CAPITAL PROJECT NO. C - 0227
DATE: 3/25/92
DRAWING NO. FP 1.2

NOT ALL SYMBOLS INDICATED HERE MAY APPEAR ON THE CONTRACT DRAWINGS

SYMBOL	DESCRIPTION	SYMBOL	DESCRIPTION
S	SINGLE POLE SWITCH		TELEPHONE AND DATA OUTLET
S_3	THREE WAY SWITCH		TELEPHONE OUTLET, FLOOR MOUNTED
S_L	LOW VOLTAGE CONTROL SWITCH		DATA OUTLET, FLOOR MOUNTED
S_F	FLUORESCENT DIMMER SWITCH		TELEPHONE AND DATA OUTLET, FLOOR MOUNTED
S_D	INCANDESCENT DIMMER SWITCH		RACEWAY UP
S_T	TIME SWITCH (MANUAL)		RACEWAY DOWN
S_M	MANUAL MOTOR STARTER WITH THERMAL OVERLOAD		SURFACE METAL RACEWAY TYPE AND SIZE AS INDICATED
S_H	MANUAL MOTOR STARTER WITH THERMAL OVERLOAD AND HOA SELECTOR SWITCH		208Y/120 VOLT PANELBOARD OR 120/240 VOLT PANELBOARD
S_{VS}	VARIABLE SPEED SWITCH		480Y/277 VOLT PANELBOARD
	PANIC STATION AS DEFINED ON DRAWINGS		HORN
	DUPLEX RECEPTACLE	B	BELL
	DUPLEX RECEPTACLES MOUNTED ABOVE COUNTER IN BACKSPLASH	S	SPEAKER, CEILING MOUNTED, SINGLE WAY
	CLOCK RECEPTACLE	S	SPEAKER, CEILING OR WALL MOUNTED (TWO WAY)
	DOUBLE DUPLEX RECEPTACLE	S	SPEAKER, WALL MOUNTED
	SPECIAL RECEPTACLE, AS NOTED	S	HORN SPEAKER
	DUPLEX RECEPTACLE ON EMERGENCY CIRCUIT	T	THERMOSTAT
	DOUBLE DUPLEX RECEPTACLE ON EMERGENCY CIRCUIT	FCU	FAN COIL UNIT
EWC	DUPLEX RECEPTACLE FOR ELECTRIC WATER COOLER	SV	SOLENOID VALVE
	DUPLEX RECEPTACLE, CEILING MOUNTED	BBH	BASEBOARD HEATER
	DUPLEX RECEPTACLE, FLOOR MOUNTED		MOTION DETECTOR
	DOUBLE DUPLEX RECEPTACLE, FLOOR MOUNTED	E	ELECTRIC DOOR LOCK
	FLUORESCENT LIGHTING FIXTURE, CEILING MOUNTED	M	MAGNETIC DOOR HOLDER
	FLUORESCENT LIGHTING FIXTURE, RETURN AIR		CCTV, CAMERA-INDOOR WITH OUTLET AND JB FOR CONTROL WIRES STATIONARY, ROTARY
	FLUORESCENT LIGHTING FIXTURE, WALL MOUNTED		CCTV, CAMERA-OUTDOOR WITH OUTLET AND JB FOR CONTROL WIRES STATIONARY, ROTARY
	INDUSTRIAL TYPE OR BARE LAMP STRIP TYPE FLUORESCENT FIXTURE	D	ELECTRIC HAND DRYER
	INCANDESCENT OR H.I.D. LIGHTING FIXTURE, CEILING MOUNTED		FUSE
D	INCANDESCENT OR H.I.D. LIGHTING FIXTURE, WALL MOUNTED		FUSED SWITCH
	WALL WASHER LIGHTING FIXTURE		SWITCH AND FUSE
	POLE MOUNTED LIGHTING LUMINAIRE (SINGLE)		CIRCUIT BREAKER
	EXIT LIGHT BACK MOUNTED & WITH DIRECTIONAL ARROWS AS INDICATED	J, J	JUNCTION BOX
	EXIT LIGHT TOP OR PENDANT MOUNTED, SINGLE FACE WITH DIRECTIONAL ARROWS AS INDICATED	G	GENERATOR
	EXIT LIGHT TOP OR PENDANT MOUNTED, DOUBLE FACE WITH DIRECTIONAL ARROWS AS INDICATED	S	MOTOR CONNECTION (NUMBER INDICATES HORSEPOWER)
	GROUND ROD		UNIT HEATER CONNECTION
	AIR TERMINAL		SAFETY SWITCH NONFUSED, SIZE AS INDICATED
	BATTERY PACKED EMERGENCY LIGHTING FIXTURE WITH NUMBER OF HEAD AS INDICATED	F	SAFETY SWITCH FUSED, SIZE AS INDICATED
	TRACK LIGHTING FIXTURES		MAGNETIC MOTOR STARTER, SIZE AS INDICATED
	FLUORESCENT LIGHTING FIXTURE, CEILING MOUNTED WITH DARK LAMPS ON NIGHT LIGHT CIRCUIT	F	COMBINATION TYPE MOTOR STARTER, SIZE AS INDICATED (C FOR CIRCUIT BREAKER, F FOR FUSED SWITCH & N FOR NON FUSED DISCONNECT SWITCH)
	FLOOD LIGHT	C	SOUND SYSTEM, CALL SWITCH
P	FIRE ALARM SYSTEM PHOTOELECTRIC SMOKE DETECTOR, CEILING MOUNTED		UNIT CIRCUIT BREAKER, SIZE AS INDICATED
P	FIRE ALARM SYSTEM PHOTOELECTRIC SMOKE DETECTOR, UNDER RAISED FLOOR		TRANSFORMER, SIZE AS INDICATED IN TRANSFORMER SCHEDULE
S	FIRE ALARM SYSTEM IONIZATION SMOKE DETECTOR, CEILING MOUNTED	TC	TIME CLOCK
S	FIRE ALARM SYSTEM IONIZATION SMOKE DETECTOR, UNDER RAISED FLOOR	R	RELAY
D	FIRE ALARM SYSTEM DUCT SMOKE DETECTOR	P	POWER MANHOLE (NEW)
H	FIRE ALARM SYSTEM HEAT DETECTOR, CEILING MOUNTED	T	COMMUNICATION MANHOLE (NEW)
H	FIRE ALARM SYSTEM HEAT DETECTOR, UNDER RAISED FLOOR	H	HAND HOLE (NEW)
F	FIRE ALARM SYSTEM FLAME DETECTOR, CEILING MOUNTED	P	EX POWER MANHOLE
BT	FIRE ALARM SYSTEM BEAM DETECTOR (TRANSMITTER), WALL MOUNTED	T	EX COMMUNICATION MANHOLE
BR	FIRE ALARM SYSTEM BEAM DETECTOR (RECIEVER), WALL MOUNTED	H	EX HANDHOLE
H	FIRE ALARM SYSTEM MAGNETIC DOOR RELEASE	—E—	O/H ELECTRICAL LINES (AS NOTED)
F	FIRE ALARM SYSTEM MANUAL PULL STATION	—T—	O/H TELEPHONE LINES (AS NOTED)
F	FIRE ALARM SYSTEM BELL OR HORN	----E----	UNDERGROUND ELECTRICAL LINES, AS NOTED
F F	FIRE ALARM SYSTEM BELL WITH MANUAL PULL STATION BELOW	----C----	UNDERGROUND COMMUNICATION LINES, AS NOTED
L	FIRE ALARM SYSTEM FLASHING LIGHT		CONDUIT, FLEXIBLE
H/A	FIRE ALARM SYSTEM COMBINATION HORN AND FLASHING LIGHT		CONDUIT, CONCEALED IN CEILING OR WALL OR CHASE UON
FS	FIRE ALARM SYSTEM FLOW SWITCH		CONDUIT CONCEALED IN FLOOR OR UNDERFLOOR OR UNDERGROUND
TS	FIRE ALARM SWITCH TAMPER SWITCH	D	DEVICE, AS NOTED
FACP	FIRE ALARM CONTROL PANEL	P	PHOTOCELL
FAAP	FIRE ALARM ANNUNCIATOR PANEL	T	THERMOSTAT
W	TELEPHONE OUTLET, WALL	H	H-O-A SWITCH
	TELEPHONE OUTLET		CABINET UNIT HEATER
P	TELEPHONE OUTLET (PAY PHONE)		OPEN-STOP-CLOSE SWITCH
W	DATA OUTLET, WALL		OVER HEAD DOOR RED WARNING LIGHT
	DATA OUTLET		IF ANY SUFFIX ADDED; G INDICATES GFCI, D INDICATES DEDICATED AND WP INDICATES WEATHER PROOF

NOT ALL ABBREVIATIONS INDICATED HERE MAY APPEAR ON THE CONTRACT DRAWINGS

ABBREV	DESCRIPTION	ABBREV	DESCRIPTION
A, AMP	AMPERES	NL	NIGHT LIGHT
ABBREV	ABBREVIATIONS	NO	NORMALLY OPEN
AC	ALTERNATING CURRENT	NTS	NOT TO SCALE
ACU	AIR CONDITIONING UNIT	NFSS	NON FUSED SAFETY SWITCH
AF	AMPERE FRAME	OC	ON CENTER
AFF	ABOVE FINISHED FLOOR	OH	OVERHEAD
AFG	ABOVE FINISHED GRADE	OL	OVERLOAD
AHU	AIR HANDLING UNIT	P	POLE OR POLES
AIC	AMPERE INTERRUPTING CAPACITY	PF	POWER FACTOR
ATC	AUTOMATIC TEMPERATURE CONTROL	PH	PHASE
ATS	AUTOMATIC TRANSFER SWITCH	PT	POTENCIAL TRANSFORMER
AUX	AUXILIARY	PL	PILOT LIGHT
AWG	AMERICAN WIRE GAUGE	PNL	PANELBOARD
BES	BLDG ELECTRICAL SYSTEM	PVC	POLYVINYL CHLORIDE
BIL	BASIC IMPLUSE LEVEL	R	RACEWAY
BLDG	BUILDING	RAF	RETURN AIR FAN
BKBD	BACKBOARD	RECEPT	RECEPTACLE
BRKR	BREAKER	REQD	REQUIRED
C	CONDUIT	RGS	RIGID GALVANIZED STEEL
CB	CIRCUIT BREAKER	RMS	ROOT MEAN SQUARE
CCTV	CLOSED CIRCUIT TELEVISION	RS	RAPID START
CKT	CIRCUIT	RVAT	REDUSED VOLTAGE AUTOTRANSFORMER
CR	CARD READER		
CL	CURRENT LIMITING	S/N	SOLID NEUTRAL
CLG	CEILING	SD	SMOKE DETECTOR
CPT	CONTROL POWER TRANSFORMER	SEC	SECONDARY
CT	CURRENT TRANSFORMER	SFA	SPRINKLER FLOW ALARM
CUH	CABINET UNIT HEATER	SMR	SURFACE METAL RACEWAY
CW	COOL WHITE	SPEC	SPECIFICATION
DGS	DIESEL GENERATOR SET	ST	SHUNT TRIP
DIA	DIAMETER	SS	SUB STATION
DISC	DISCONNECT	STR	STARTER
DIST	DISTRIBUTION	SW	SWITCH
DN	DOWN	SWBD	SWITCHBOARD
DP	DISTRIBUTION PANEL	SWGR	SWITCHGEAR
DWG	DRAWING	SYS	SYSTEM
E	EMERGENCY	SYM	SYMMETRICAL
EBH	ELECTRIC BASEBOARD HEATER	SOPN	SPACE OR POLE NUMBER
EC	EMPTY CONDUIT	TA	TRIP AMPERE
EF	EXHAUST FAN	TB	TERMINAL BOX
EGS	ELECTRIC GENERATOR SET	TC	TIME CLOCK
EH	ELECTRIC HEATER	TD	TIME DELAY
ELECT	ELECTRICAL	TTB	TELEPHONE TERMINAL BOARD
EMT	ELECTRICAL METALLIC TUBING	TTC	TELEPHONE TERMINAL CLOSET
ENCL	ENCLOSURE	TYP	TYPICAL
EQUIP	EQUIPMENT	TV	TELEVISION
ER	EXISTING RELOCATED	UC	UNDER COUNTER
ETR	EXISTING-TO-REMAIN	UG	UNDERGROUND
EWC	ELECTRIC WATER COOLER	UH	UNIT HEATER
EWH	ELECTRIC WATER HEATER	UOI	UNLESS OTHERWISE INDICATED
EX	EXISTING	UON	UNLESS OTHERWISE NOTED
EXH	EXHAUST	UL	UNDERWRITER'S LABORATORY
F	FUSED OR FUSIBLE	V	VOLT (S) OR VOLTAGE
FA	FRAME AMPERE	VA	VOLT AMPERE
FAAP	FIRE ALARM ANNUNCIATOR PANEL	W	WIRE
FACP	FIRE ALARM CONTROL PANEL	W/	WITH
FADS	FIRE ALARM AND DETECTION SYSTEM	WP	WEATHER PROOF
FBO	FURNISHED BY OTHERS	WW	WIREWAY
FCU	FAN COIL UNIT	W/O	WITHOUT
FDR	FEEDER	XFMR	TRANSFORMER
FL	FLOOR	ø	PHASE
FLUOR	FLUORESCENT	#	NUMBER
FSS	FUSED SAFETY SWITCH	℄	CENTER LINE
FT	FOOT OR FEET	@	AT
FVNR	FULL VOLTAGE NON REVERSIBLE		
GFCI	GROUND FAULT CURRENT INTERRUPTER		
GRD	GROUND		
GN	GENERAL NOTE		
GRS	GALVANIZED RIGID STEEL		
GWB	GYPSUM WALL BOARD		
GW	GROUND WIRE		
HD	HEAVY DUTY		
HID	HIGH INTENSIFY DISCHARGE		
HOA	HAND-OFF-AUTOMATIC		
HP	HORSE POWER		
HPS	HIGH PRESSURE SODIUM		
HTR	HEATER		
HV	HIGH VOLTAGE		
HVAC	HEATING, VENTILATING AND AIR CONDITIONING		
HZ	HERTZ		
IE	THAT IS		
IMC	INTERMEDIATE METALLIC CONDUIT		
JB	JUNCTION BOX		
KV	KILOVOLT		
KVA	KILOVOLT-AMPERE		
KW	KILOWATT		
KWH	KILOWATT-HOUR		
LA	LIGHTING ARRESTOR		
LS	LIMIT SWITCH		
LTG	LIGHTING		
LV	LOW VOLTAGE		
MAX	MAXIMUM		
MCB	MAIN CIRCUIT BREAKER		
MCC	MOTOR CONTROL CENTER		
MCP	MOTOR CIRCUIT PROTECTOR		
MH	MOUNTING HEIGHT		
MIN	MINIMUM		
MDP	MAIN DISTRIBUTION PANEL		
MCM	THOUSAND CIRCULLAR MILLS		
MTD	MOUNTED		
MLO	MAIN LUGS ONLY		
MTG	MOUNTING		
N	NEUTRAL		
NC	NORMALLY CLOSED		
NEC	NATIONAL ELECTRIC CODE		
NIC	NOT-IN-CONTRACT		

NOTE: UNLESS OTHERWISE INDICATED, STANDARD MOUNTING HEIGHTS FOR OUTLET BOXES FOR THE FOLLOWING EQUIPMENT/DEVICE SHALL BE ABOVE FINISHED FLOOR AND SHALL BE TO THE CENTER LINE OF EQUIPMENT

EQUIPMENT/DEVICE	MOUNTING HEIGHT
SWITCHES	48 INCH
RECEPTACLE-GENERAL	18 INCH
RECEPTACLE-SPECIAL	18 INCH
RECEPTACLE	36 INCH
RECEPTACLE-REST ROOMS	9 INCH ABOVE BASIN
RECEPTACLE-COUNTER	9 INCH ABOVE COUNTER
RECEPTACLE-EXTERIOR	30 INCH
RECEPTACLE-CLOCK	96 INCH
TELEPHONE-GENERAL	18 INCH
TELEPHONE-WALL TYPE	54 INCH, (48 INCH FOR HANDICAPPED)
FIRE ALRAM PULL STATION	48 INCH
FIRE ALARM GONG	96 INCH
CARD READER	42 INCH
THERMOSTATS	60 INCH
EXIT LIGHTS-WALL MOUNTED	MAX 90 INCH
SAFETY SWITCHES	72 INCH TO HANDLE
PANELBOARDS	72 INCH TO TOP CB
MANUAL MOTOR STARTER	48 INCH
PUSH BUTTONS	48 INCH

NOT ALL CONVENTIONS INDICATED HERE MAY APPEAR ON THE CONTRACT DRAWINGS

CONVENTIONS

A INDICATES TYPE OF LIGHTING FIXTURE REFER TO FIXTURE SCHEDULE

a INDICATES CONTROL GROUP

G 3 — 3 INDICATES SOPN NUMBER

G INDICATES PANELBOARD DESIGNATION

INDICATES TWO SWITCHED LEVEL OF ILLUMINATION

CONNECT TWO OTHER LAMPS TO ONE SWITCH

CONNECT REMAINING LAMP (S) TO SECOND SWITCH

S^a_3, S^a — a INDICATES CONTROL GROUP

S, S_3 INDICATES SYMBOL

SYMBOL

R3 — 3 INDICATES SOPN NUMBER

R INDICATES PANELBOARD DESIGNATION

X — INDICATES SPECIAL NOTE. SPECIAL NOTE APPLIES ONLY TO THE DRAWING ON WHICH IT APPEARS, UNLESS OTHERWISE NOTED.

EGN-X — ELECTRICAL GENERAL NOTE APPLY TO ALL DRAWINGS, UNLESS OTHERWISE NOTED.

R2,4 — HOMERUN TO (PANELBOARD, SWITCHBOARD OR MCC ETC.) DISTRIBUTION EQUIPMENT AS INDICATED.

2,4 NUMBERS INDICATE SOPN NUMBER FOR PANEL OR CIRCUIT FOR MCC AND SWTCHBOARDS ETC.

R INDICATES THE PANEL/MCC/SWITCHBOARD.

CROSS HATCH LINES INDICATE THE NUMBER OF CURRENT CARRYING CONDUCTORS (# 12 AWG UON).

CROSS HATCH LINES WITH DOT AT END INDICATES THE EQUIPMENT GROUNDING CONDUCTOR (GREEN WIRE) AND SHALL BE SIZED IN ACCORDANCE WITH NEC ARTICLE 250. GREEN WIRE AND SHALL BE PROVIDED IN EACH RACEWAY.

/, / — 2#12 AWG CURRENT CARRYING CONDUCTORS AND 1#12 GRD WIRE - 3/4" RACEWAY UON.

X, Y, Z — X INDICATES THE DETAIL OR ELEVATION NUMBER. Z INDICATES DRAWING NUMBER ON WHICH THE DETAIL OR ELEVATION APPEARS. Y INDICATES DRAWING NUMBER ON WHICH REFERRED.

ELECTRICAL GENERAL NOTE

EGN-1 REFER TO ARCHITECTURAL DRAWINGS FOR EXACT LOCATIONS OF CEILING MOUNTED LIGHTING FIXTURES, SMOKE DETECTOR AND SPEAKERS ETC.

EGN-2 REFER TO MECHANICAL DRAWINGS FOR EXACT LOCATIONS OF DIVISION-15 EQUIPMENT AND DEVICES.

EGN-3 REFER TO ARCHITECTURAL AND STRUCTURE DRAWINGS FOR BLDG WALL, CEILING, FLOOR AND ROOF CONSTRUCTION.

EGN-4 UNLESS OTHERWISE NOTED, ALL WORK SHALL BE OF FIRST QUALITY MATERIAL AND SHALL BE INSTALLED IN A FIRST CLASS WORKMANSHIP MANNER.

EGN-5 UNLESS OTHERWISE NOTED, ALL WORK IN FINISHED OCCUPIED AREAS SHALL BE CONCEALED ABOVE CEILING, IN WALL AND/OR IN CHASES.

EGN-6 ALL MATERIAL AND EQUIPMENT SHALL BE U.L. LISTED AS SUITABLE FOR THE LOCATION AND ENVIRONMENT FOR WHICH IT IS USED.

EGN-7 ALL WORK SHALL BE DONE IN ACCORDANCE WITH THE PROJECT SPECIFICATIONS, LATEST EDITION OF NEC AND ALL OTHER APPLICABLE CODES, INCLUDING BALTIMORE CITY.

EGN-8 ONLY PLENUM APPROVED WIRING SHALL BE USED FOR RETURN AIR PLENUM.

EGN-9 ALL EQUIPMENT AND WIRING THAT MAY REQUIRE SERVICING SHALL BE COMPLETELY ACCESSIBLE UPON COMPLETION OF PROJECT.

EGN-10 THE CONTRACTOR SHALL BALANCE THE PANELBOARD LOADS ON EACH PHASE AT HIS MAXIMUM EFFORT, UNDER NORMAL OPERATING CONDITIONS.

EGN-11 THE CONTRACTOR SHALL COORDINATE WITH ALL OTHER TRADES/CONTRACTORS FOR A COMPLETE INSTALLATION OF WORK.

EGN-12 THE CONTRACTOR SHALL THOROUGHLY EXAMINE THE PREMISES AND OBSERVE ALL FIELD CONDITIONS UNDER WHICH THE WORK SHALL BE PERFORMED. NO ALLOWANCE SHALL BE MADE OF ANY NEGLIGENCE, WHICH COULD HAVE BEEN OBSERVED AT THE TIME OF FIELD VISIT.

EGN-13 PROVIDE GROUNDING CONNECTIONS FOR ALL ENCLOSURES, DEVICES AND EQUIPMENT PERMANENTLY AND EFFECTIVELY IN ACCORDANCE WITH NEC AND PROJECT SPECIFICATIONS.

EGN-14 EACH PENETRATION THROUGH NEW AND/OR EXISTING WALLS, CEILINGS AND FLOORS SHALL BE SEALED IN ACCORDANCE WITH ALL APPLICABLE CODES, AND PROJECT SPECIFICATIONS. SEALANT SHALL BE COMPATIBLE WITH WALL, FLOOR AND ROOF CONSTRUCTION AND/OR THEIR ASSOCIATED FIRE RATINGS.

EGN-15 PROVIDE PULLING NYLON OR ROPE IN THE RACEWAYS FOR EACH TELEPHONE OPENING AND SPARE RACEWAYS.

EGN-16 FOR EXACT LOCATION OF RECEPTACLE AND TELEPHONE OUTLET, COORDINATE WITH CONSTRUCTION MANAGER AND FURNITURE LAYOUT.

EGN-17 JUNCTION BOXES AND PULL BOXES SHALL BE INSTALLED WHEREVER REQUIRED FOR A COMPLETE INSTALLATION OF THE COMPLETE BUILDING ELECTRICAL SYSTEMS.

EGN-18 UNLESS OTHERWISE NOTED, ALL WIRING SHALL BE COPPER, MINIMUM #12 AWG, TYPE THWN/THW (NEC TYPE INSULATION) AND MINIMUM RACEWAY SIZE SHALL BE 3/4 INCH.

EGN-19 UNLESS OTHERWISE NOTED, WHEREVER DEDICATED RECEPTACLE IS SHOWN ON CONTRACT DRAWINGS, THE CONTRACTOR SHALL PROVIDE BRANCH CIRCUIT WIRING, COMPLETELY ISOLATED FROM OTHER BRANCH CIRCUIT WIRING.

EGN-20 PROVIDE ALL NECESSARY GROUNDING CONNECTIONS FOR ALL LIGHTING POLES TRANSFORMERS AND SEPARATELY DERIVED NEUTRAL SOURCES IN ACCORDANCE WITH NEC, AND CONNECT TO THE GROUNDING GRID.

EGN-21 ELECTRICAL EQUIPMENT IS SPECIFIED BY MAKE AND MODEL NUMBER TO ESTABLISH A LEVEL OF QUALITY, DIMENSIONAL LIMITATIONS, AND PERFORMANCE CHARACTERISTICS UNLESS OTHERWISE NOTED. PRODUCTS OF OTHER MANUFACTURER'S MAY BE FURNISHED (IN ACCORDANCE WITH GENERAL CONDITIONS). HOWEVER THE CONTRACTOR IS RESPONSIBLE FOR PROVIDING THE SAME LEVEL OF QUALITY, DIMENSIONAL LIMITATIONS AND PERFORMANCE CHARACTERISTICS.

EGN-22 DRAWINGS ARE DIAGRAMMATIC AND ARE INTENDED TO INDICATE THE GENERAL ARRANGEMENT. THEY ARE NOT INTENDED TO SHOW ALL DETAILS OF CONSTRUCTION OR EXACT LOACATIONS OF THE WORK.

ARCHITECTURAL TECHNOLOGIES, INC.
Architects and Construction Consultants
9192 Red Branch Road, Suite 300
Columbia, MD 21045 (301)995-4067

IN ASSOCIATION WITH :

CIVIL & GEOTECH ENGINEER: E B A ENGINEERING, INC.
STRUCTURAL ENGINEER: QODESH ENGINEERING SERVICES, INC.
MECHANICAL & ELECTRICAL ENGINEER: BHARGAVA INTERNATIONAL, INC.
FIRE PROTECTION ENGINEER: STANTON ENGINEERING

SEAL:

REVISIONS
AS BUILT 11/24/94

ELECTRICAL GENERAL NOTES AND LEGEND

HOWARD COUNTY
PUBLIC SAFETY COMPLEX

SCAGGSVILLE ANNEX
11226 ROUTE 216
LAUREL, MD 20707

CAPITAL PROJECT NO. C - 0227

DATE: 3/25/92

DRAWING NO. E0

1650

DRAWING NOTES:

1. DISCONNECT AND REMOVE THE EXISTING U/G DIRECT CABLE AND ASSOCIATED RACEWAY AND CONNECTIONS.
2. EXISTING SHED SHALL REMAIN UNDER PHASE 1. PROVIDE TEMPORARY SERVICE TO THE SHED UNTIL A PERMANENT ELECTRICAL POWER CONNECTION IS PROVIDED FROM THE BUILDING. THE ELECTRICAL POWER TO THE SHED SHALL NOT BE DISTURBED.
3. THE CONTRACTOR SHALL NOT REMOVE THE SERVICE TO SHED, UNLESS OTHER TEMPORARY OR/AND PERMANENT POWER IS PROVIDED FOR SHED. THE CONTRACTOR SHALL INCLUDE THE COST OF TEMPORARY EMERGENCY POWER TO THE SHED (MAY BE A PORTABLE GENERATOR) IN HIS BASE BID.
4. DISCONNECT AND REMOVE THE TELEPHONE POLE AND ASSOCIATED WIRING.
5. DISCONNECT AND REMOVE THE EXISTING POLE, LIGHT AND ALL OTHER ASSOCIATED CONDUCTORS AND RACEWAYS.
6. THE CONTRACTOR SHALL COORDINATE WITH UTILITY COMPANIES (BG&E AND C&P) TO DISCONNECT AND REMOVE THE EXISTING SERVICES TO THE BUILDINGS(S).
7. THE CONTRACTOR SHALL COORDINATE WITH UTILITY COMPANIES TO REMOVE POLES 293202, 293203 AND 843037 AND O/H LINES.

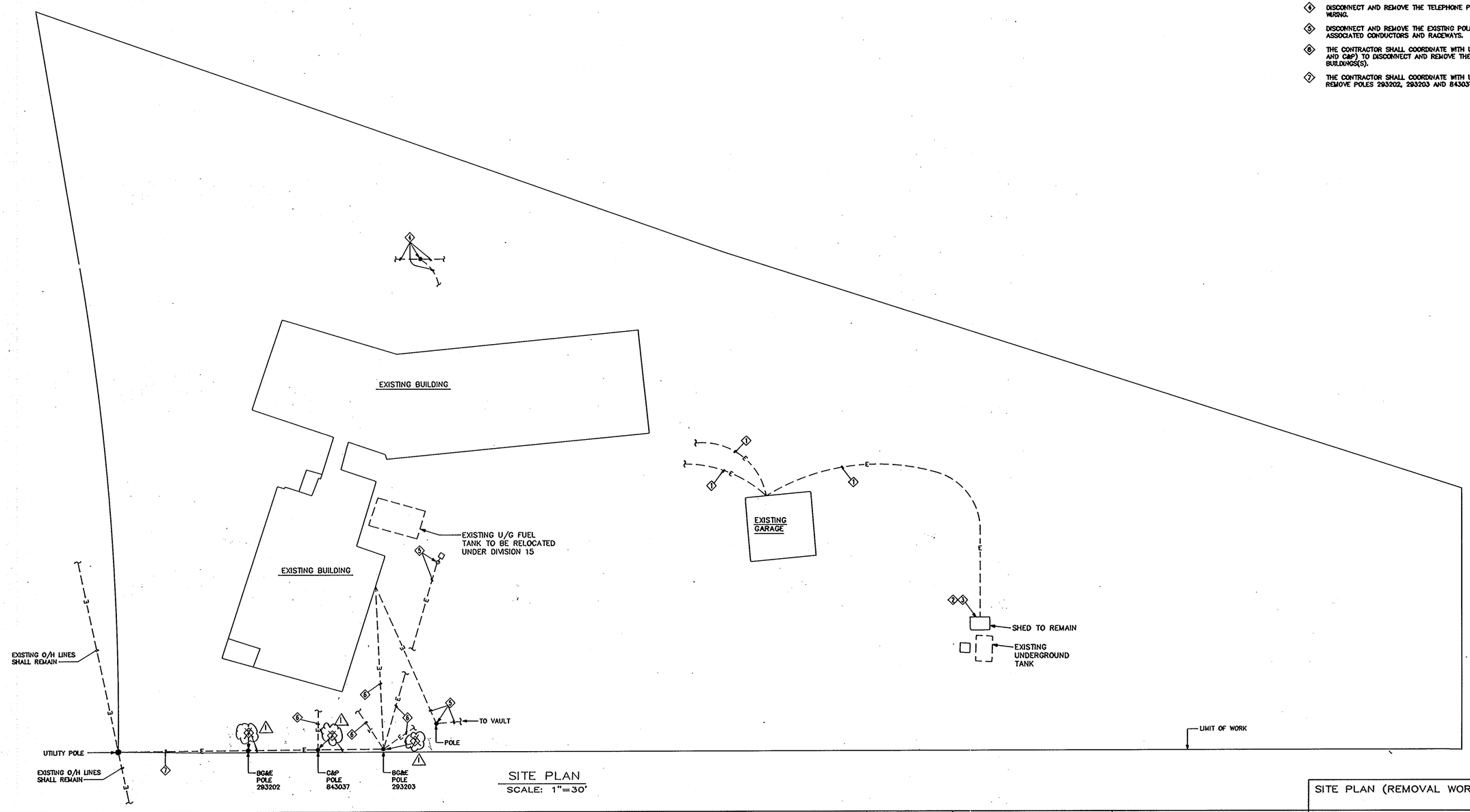

SITE PLAN
SCALE: 1"=30'

1650

ARCHITECTURAL TECHNOLOGIES, INC.
Architects and Construction Consultants
9192 Red Branch Road, Suite 300
Columbia, MD 21045 (301)995-4067

IN ASSOCIATION WITH :

CIVIL & GEOTECH ENGINEER:	E B A ENGINEERING, INC.
STRUCTURAL ENGINEER:	QODESH ENGINEERING SERVICES, INC.
MECHANICAL & ELECTRICAL ENGINEER:	BHARGAVA INTERNATIONAL, INC.
FIRE PROTECTION ENGINEER:	STANTON ENGINEERING

SEAL:

REVISIONS
1 AS BUILT 11/24/94

SITE PLAN (REMOVAL WORK)

HOWARD COUNTY
PUBLIC SAFETY COMPLEX

SCAGGSVILLE ANNEX
11226 ROUTE 216
LAUREL, MD 20707

CAPITAL PROJECT NO. C - 0227

DATE: 3/25/92

DRAWING NO. E1.1

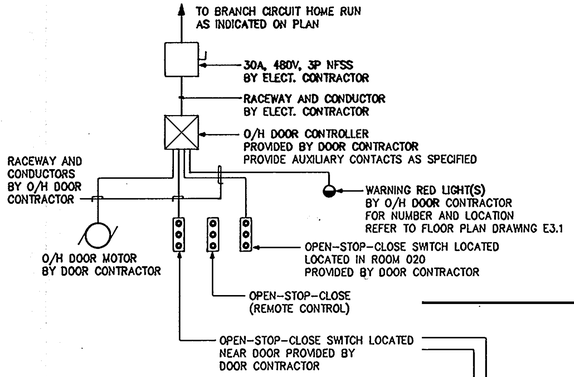

*OVERHEAD DOOR CONTROL DIAGRAM

NO SCALE

* WHEN ANY OVERHEAD DOOR SHALL BE IN OPEN POSITION, THE CONTROLLER SHALL SEND A SIGNAL TO ATC DIVISION 15 CONTROLS TO SHUT DOWN THE FANS OF ALL THE UNIT HEATERS AND BOTH CARBON MONOXIDE EXHAUST FANS SYSTEM SHALL BE "TURNED ON".

* ~~WHEN ANY EMERGENCY CALL SHALL BE RECEIVED AT FIRE STATION, THE OVERHEAD DOORS SHALL OPEN AUTOMATICALLY. THE TELEPHONE CALL SHALL CLOSE A CONTACT, TO SEND A SIGNAL TO O/H DOOR TO OPERATE.~~

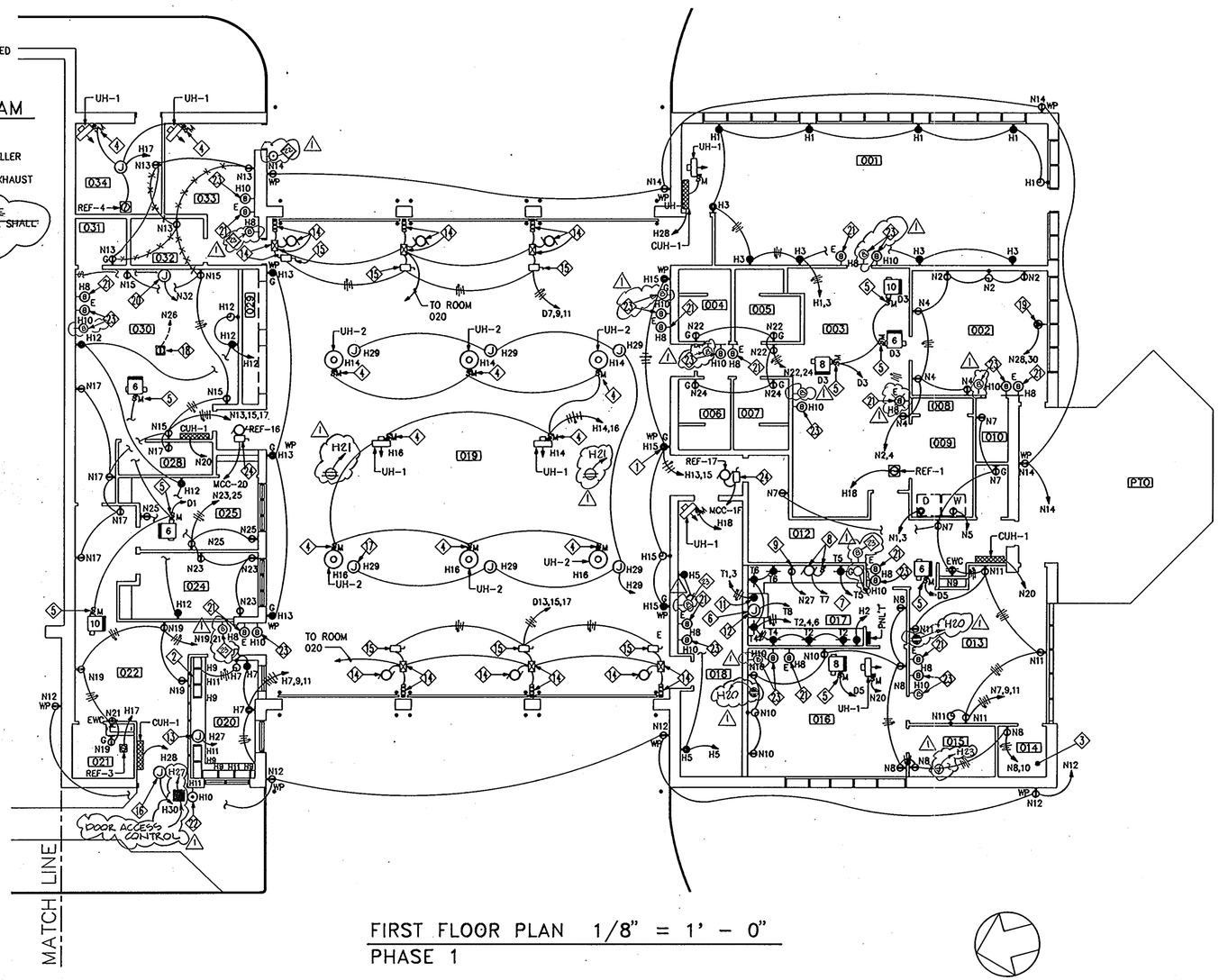

FIRST FLOOR PLAN 1/8" = 1' - 0"

PHASE 1

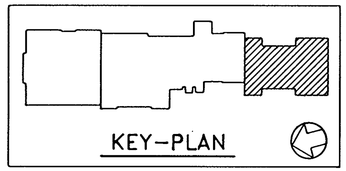

THE FOLLOWING NOTES ARE INDICATED IN ◇ ON THIS DRAWING.

1. RECEPTACLES SHALL BE GFCI TYPE AND MOUNTED AT 36" AFF AS INDICATED (TYPICAL FOR RECEPTACLES IN THIS AREA).
2. PROVIDE WIREMOLD 6000 SERIES WITH RECEPTACLES AT 24 INCH ON-CENTER, AT 2" ABOVE COUNTER BACK SPLASH AND BELOW WINDOWS. COORDINATE THE LAYOUT WITH FURNITURE AND ARCH. LAYOUT OF FIRE CONSOLE AND COUNTER.
3. FOR ELECTRICAL CLOSET LAYOUT, REFER TO DRAWING E7.1.
4. PROVIDE 120 VOLT, 1 PHASE, FRACTIONAL HORSE-POWER MANUAL MOTOR STARTER WITH THERMAL O.L. PROTECTION AND HOA SWITCH. MOUNT STARTER NEAR UNIT ON KINDORF CHANNEL SUPPORT.
5. PROVIDE 277 VOLT, 1 PHASE FRACTIONAL HORSEPOWER MANUAL MOTOR STARTER WITH THERMAL O.L. PROTECTION AND HOA SWITCH. MOUNT THE STARTER NEAR UNIT ON KINDORF CHANNEL SUPPORT.
6. MANUAL MOTOR STARTER FOR HOOD EXHAUST FAN (REF-2) SHALL BE FURNISHED WITH EQUIPMENT. PROVIDE BRANCH CIRCUIT AS INDICATED VIA MANUAL STARTER.
7. ALL THE RECEPTACLES (FOR EQUIPMENT EXCEPT REFRIGERATOR) IN KITCHEN SHALL BE WIRED SUCH THAT IN CASE OF EMERGENCY CALL MAIN CIRCUIT BREAKER IN PANEL 'T' SHALL BE "TRIPPED-OFF". PROVIDE WIRING AND RACEWAYS AS REQUIRED TO ROOM 020.
8. MOTOR AND SWITCH FOR FOOD WASTE DISPOSER. COORDINATE LOCATION WITH EQUIPMENT. PROVIDE HARD WIRE CONNECTIONS.
9. RECEPTACLE FOR DISHWASHWER. COORDINATE LOCATION WITH EQUIPMENT.
10. PROVIDE 50 AMP, 250 VOLT, 3 WIRE GROUNDING TYPE SPECIAL RECEPTACLE. COORDINATE THE RECEPTACLE NEMA CONFIGURATION WITH DRYER MANUFACTURER.
11. PROVIDE 70 AMP, 250 VOLT, 3 WIRE GROUNDING TYPE SPECIAL RECEPTACLE. COORDINATE THE RECEPTACLE NEMA CONFIGURATION WITH ELECTRIC RANGE MANUFACTURER.
12. PROVIDE A JUNCTION BOX WITH BRANCH CIRCUIT WIRING AS INDICATED FOR HOOD CONNECTIONS. FOR THE MOUNTING HEIGHT OF JB, COORDINATE WITH RANGE AND HOOD MANUFACTURER.
13. PROVIDE JUNCTION BOX ON WALL WITH BRANCH CIRCUIT AS INDICATED FOR FIRE CONTROL CONSOLE. COORDINATE THE LOCATION WITH ARCHITECTURAL LAYOUT OF FIRE CONSOL EQUIPMENT.
14. OVERHEAD DOOR MOTOR, CONTROLLER AND OPEN-STOP-CLOSE STATION, PROVIDED UNDER ARCHITECTURAL SECTION 08360.
15. PROVIDE A 30 AMP, 480 VOLT, 3 POLE NFSS AND MOUNT NEAR CONTROLLER. ALSO PROVIDE BRANCH CIRCUIT WIRING AS INDICATED. FOR WIRING OF O/H DOOR, REFER TO DETAIL ON THIS DRAWING.
16. PROVIDE A JUNCTION BOX ABOVE CEILING ON DOOR, AND BRANCH CIRCUIT WIRING AS INDICATED, FOR DOOR CONTROL, LOCK, ETC.
17. CORD REELS SHALL BE POSITIONED OVERHEAD, CLOSEST TO THE FRONT OF VEHICLE ON DRIVER'S SIDE. CORD REEL SHALL BE APPLETON CATALOG #RE-7P2G OR EQUAL. (TYPICAL OF 6). PROVIDE BRANCH CIRCUIT AS INDICATED.
18. PROVIDE FLOOR MOUNTED BOX WITH RECEPTACLE AND PLATE FOR PROJECTOR. PROVIDE BRANCH CIRCUIT WIRING AS INDICATED.
19. PROVIDE 30A, 250 VOLT, 1 PHASE, 3 POLE GROUNDING TYPE SPECIAL RECEPTACLE, AND BRANCH CIRCUIT WIRING AS INDICATED.
20. JUNCTION BOX, ABOVE CEILING, FOR PROJECTOR SCREEN. PROVIDE BRANCH CIRCUIT WIRING AS INDICATED.
21. EMERGENCY RESPONSE SYSTEM HORN MOUNTED AT 78" AFF. THE SYSTEM HORN SHALL RING WHENEVER ANY EMERGENCY CALL IS RECEIVED AT STATION. PROVIDE WIRING AND RACEWAYS AS REQUIRED TO BRANCH CIRCUIT AS INDICATED.
22. DOOR BELL SYSTEM BELL MOUNTED AT 36" AFF.
23. DOOR BELL SYSTEM HORN MOUNTED AT 78" AFF. PROVIDE WIRING AND RACEWAY AS REQUIRED TO BRANCH CIRCUIT AS INDICATED.
24. EXHAUST FAN ON ROOF. PROVIDE 30 AMP, 480 VOLT, 3 POLE NEMA 4x NFSS AND MOUNT ON KINDORF CHANNEL SUPPORTS NEAR FAN. PROVIDE BRANCH CIRCUIT WIRING TO MCC AS INDICATED. RUN RACEWAY ALONG WITH DIVISION 15 PENETRATION OF ROOF.

FIRST FLOOR PLAN - POWER
FIRE STATION

ARCHITECTURAL TECHNOLOGIES, INC.
Architects and Construction Consultants
9192 Red Branch Road, Suite 300
Columbia, MD 21045 (301)995-4067

IN ASSOCIATION WITH :

CIVIL & GEOTECH ENGINEER:	E B A ENGINEERING, INC.
STRUCTURAL ENGINEER:	QODESH ENGINEERING SERVICES, INC.
MECHANICAL & ELECTRICAL ENGINEER:	BHARGAVA INTERNATIONAL, INC.
FIRE PROTECTION ENGINEER:	STANTON ENGINEERING

SEAL:

REVISIONS

1 AS BUILT 11/24/94

HOWARD COUNTY
PUBLIC SAFETY COMPLEX

SCAGGSVILLE ANNEX
11226 ROUTE 216
LAUREL, MD 20707

CAPITAL PROJECT NO. C - 0227

DATE: 3/25/92

DRAWING NO. E2.1

1650

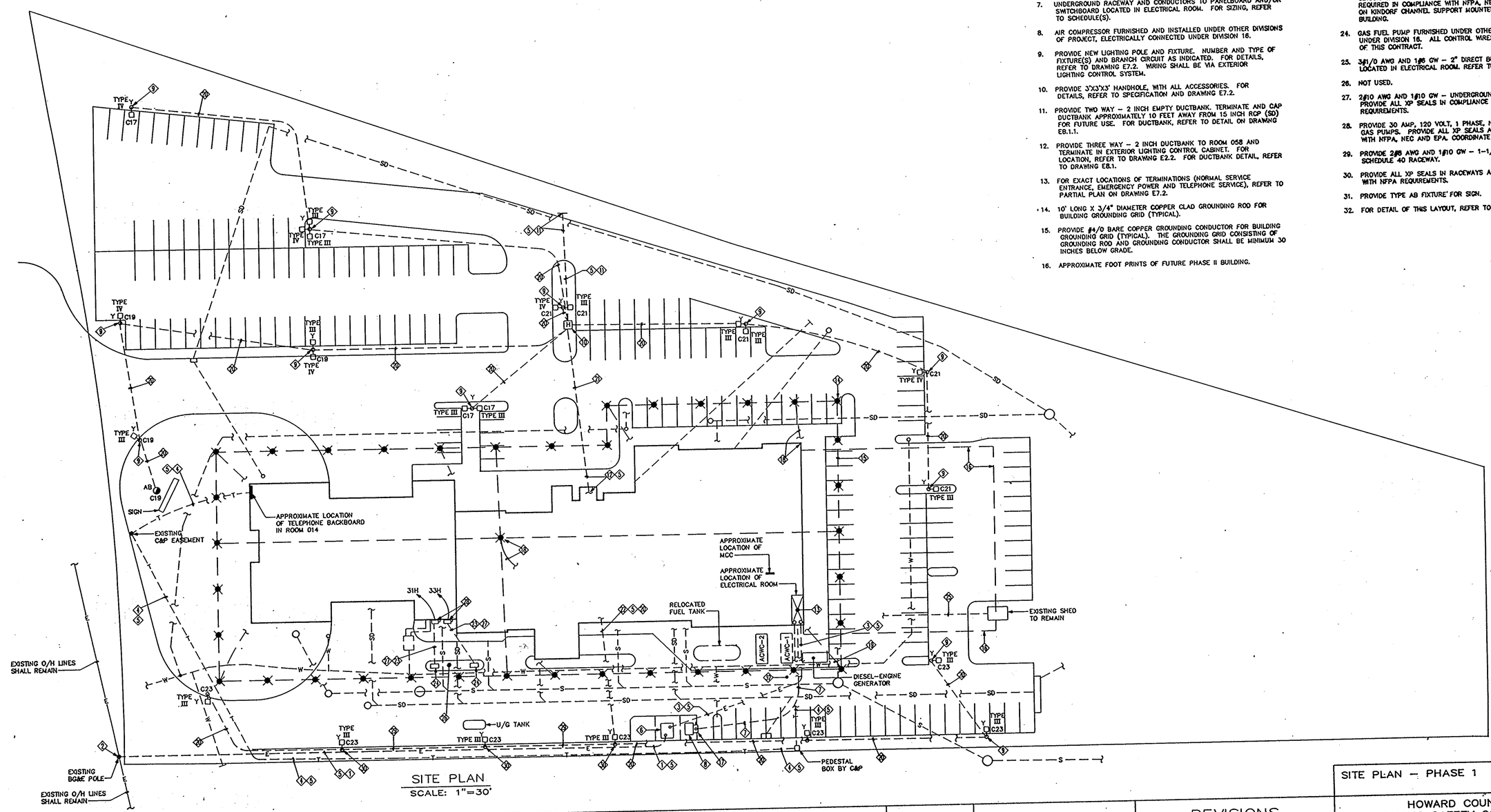

SITE PLAN
SCALE: 1"=30'

THE FOLLOWING NOTES ARE INDICATED IN ◇ ON THIS DRAWING.

1. PROVIDE 2 WAY – 5 INCH DUCTBANK FOR UTILITY MEDIUM VOLTAGE CONDUCTORS. FOR DUCTBANK REFER TO DETAIL ON DRAWING E8.1.
2. OVERHEAD TO UNDERGROUND RISER FOR UTILITY CO. CONDUCTORS. FOR POLE RISE DETAIL, REFER TO DRAWING E7.2.
3. PROVIDE 6 WAY – 4 INCH DUCTBANK FOR LOW VOLTAGE SERVICE CONDUCTORS FOR UTILITY CO. FOR DUCTBANK, REFER TO DETAIL ON DRAWING. E8.1.
4. PROVIDE 2 WAY – 4 INCH DUCTBANK FOR COMMUNICATION CABLES. FOR DUCTBANK, REFER TO DETAIL ON DRAWING E8.1.
5. THE TOP OF DUCTBANK AND/OR CONCRETE ENVELOPE SHALL BE MINIMUM 30 INCHES BELOW GRADE.
6. UTILITY COMPANY TRANSFORMER PAD. FOR PAD DETAIL, REFER TO DETAIL ON DRAWING E8.1. COORDINATE WITH BG&E FOR EXACT SIZE OF PAD AND ANCHORAGE.
7. UNDERGROUND RACEWAY AND CONDUCTORS TO PANELBOARD AND/OR SWITCHBOARD LOCATED IN ELECTRICAL ROOM. FOR SIZING, REFER TO SCHEDULE(S).
8. AIR COMPRESSOR FURNISHED AND INSTALLED UNDER OTHER DIVISIONS OF PROJECT, ELECTRICALLY CONNECTED UNDER DIVISION 16.
9. PROVIDE NEW LIGHTING POLE AND FIXTURE. NUMBER AND TYPE OF FIXTURE(S) AND BRANCH CIRCUIT AS INDICATED. FOR DETAILS, REFER TO DRAWING E7.2. WIRING SHALL BE VIA EXTERIOR LIGHTING CONTROL SYSTEM.
10. PROVIDE 3'X3'X3' HANDHOLE, WITH ALL ACCESSORIES. FOR DETAILS, REFER TO SPECIFICATION AND DRAWING E7.2.
11. PROVIDE TWO WAY – 2 INCH EMPTY DUCTBANK. TERMINATE AND CAP DUCTBANK APPROXIMATELY 10 FEET AWAY FROM 15 INCH RCP (SD) FOR FUTURE USE. FOR DUCTBANK, REFER TO DETAIL ON DRAWING E8.1.1.
12. PROVIDE THREE WAY – 2 INCH DUCTBANK TO ROOM 058 AND TERMINATE IN EXTERIOR LIGHTING CONTROL CABINET. FOR LOCATION, REFER TO DRAWING E2.2. FOR DUCTBANK DETAIL, REFER TO DRAWING E8.1.
13. FOR EXACT LOCATIONS OF TERMINATIONS (NORMAL SERVICE ENTRANCE, EMERGENCY POWER AND TELEPHONE SERVICE), REFER TO PARTIAL PLAN ON DRAWING E7.2.
14. 10' LONG X 3/4" DIAMETER COPPER CLAD GROUNDING ROD FOR BUILDING GROUNDING GRID (TYPICAL).
15. PROVIDE #4/0 BARE COPPER GROUNDING CONDUCTOR FOR BUILDING GROUNDING GRID (TYPICAL). THE GROUNDING GRID CONSISTING OF GROUNDING ROD AND GROUNDING CONDUCTOR SHALL BE MINIMUM 30 INCHES BELOW GRADE.
16. APPROXIMATE FOOT PRINTS OF FUTURE PHASE II BUILDING.
17. PROVIDE 60 AMP, 250V, 2 POLE NFSS IN NEMA 4X ENCLOSURE AND MOUNT ON W.P. KINDORF CHANNEL. SUPPORT AND MOUNT NEAR UNIT.
18. CONNECTED TO BUILDING STEEL STRUCTURE (TYPICAL).
19. TO SERVICE ENTRANCE GROUNDING.
20. 2#8 AWG AND 1#10 GW–1-1/2" DIRECT BURIED P.V.C. SCHEDULE 40 REFER TO DETAIL ON DRAWING E8.1.
21. 6#8 AWG AND 1#10 GW – 2" DUCT. TWO (2) DUCTS SHALL BE SPARE FOR FUTURE USE.
22. PROVIDE 2 WAY–2" DUCTBANK TO ROOM 058 AND TERMINATE IN EXTERIOR LIGHTING CONTROL CABINET. FOR LOCATION, REFER TO DRAWING E2.2. FOR DUCTBANK DETAIL, REFER TO DRAWING E8.1.
23. PROVIDE 2 WAY–2" DIRECT BURIED GALVANIZED RIGID STEEL RACEWAYS AND TERMINATE IN FSS MOUNTED ON EXTERIOR WALL FROM DISCONNECT SWITCH. PROVIDE 1# 1-1/2" (ONE AND ONE HALF INCH) RACEWAY TO ELECTRICAL CLOSET, ROOM 014 FOR BRANCH CIRCUIT WIRING FOR GAS PUMPS. PROVIDE ALL XP SEALS AS REQUIRED IN COMPLIANCE WITH NFPA, NEC AND EPA. SUPPORT FSS ON KINDORF CHANNEL SUPPORT MOUNTED ON EXTERIOR WALL OF BUILDING.
24. GAS FUEL PUMP FURNISHED UNDER OTHER DIVISION AND CONNECTED UNDER DIVISION 16. ALL CONTROL WIRES UNDER OTHER DIVISIONS OF THIS CONTRACT.
25. 3#1/0 AWG AND 1#8 GW – 2" DIRECT BURIED PVC UP TO 3P, FSS LOCATED IN ELECTRICAL ROOM. REFER TO ONE LINE DIAGRAM.
26. NOT USED.
27. 2#10 AWG AND 1#10 GW – UNDERGROUND RACEWAY FOR GAS PUMPS. PROVIDE ALL XP SEALS IN COMPLIANCE WITH NFPA, NEC AND EPA REQUIREMENTS.
28. PROVIDE 30 AMP, 120 VOLT, 1 PHASE, NEMA 4X ENCLOSURE FSS FOR GAS PUMPS. PROVIDE ALL XP SEALS AS REQUIRED IN COMPLIANCE WITH NFPA, NEC AND EPA. COORDINATE WITH DOOR LOCATION.
29. PROVIDE 2#8 AWG AND 1#10 GW – 1-1/2" CONCRETE ENCASED PVC SCHEDULE 40 RACEWAY.
30. PROVIDE ALL XP SEALS IN RACEWAYS AS REQUIRED IN COMPLIANCE WITH NFPA REQUIREMENTS.
31. PROVIDE TYPE AB FIXTURE FOR SIGN.
32. FOR DETAIL OF THIS LAYOUT, REFER TO DRAWING E7.1.

ARCHITECTURAL TECHNOLOGIES, INC.
Architects and Construction Consultants
9192 Red Branch Road, Suite 300
Columbia, MD 21045 (301)995–4067

IN ASSOCIATION WITH :

CIVIL & GEOTECH ENGINEER:	E B A ENGINEERING, INC.
STRUCTURAL ENGINEER:	QODESH ENGINEERING SERVICES, INC.
MECHANICAL & ELECTRICAL ENGINEER:	BHARGAVA INTERNATIONAL, INC.
FIRE PROTECTION ENGINEER:	STANTON ENGINEERING

SEAL:

REVISIONS

SITE PLAN – PHASE 1

HOWARD COUNTY
PUBLIC SAFETY COMPLEX

SCAGGSVILLE ANNEX
11226 ROUTE 216
LAUREL, MD 20707

CAPITAL PROJECT NO. C – 0227

DATE: 3/25/92

DRAWING NO. E1.2

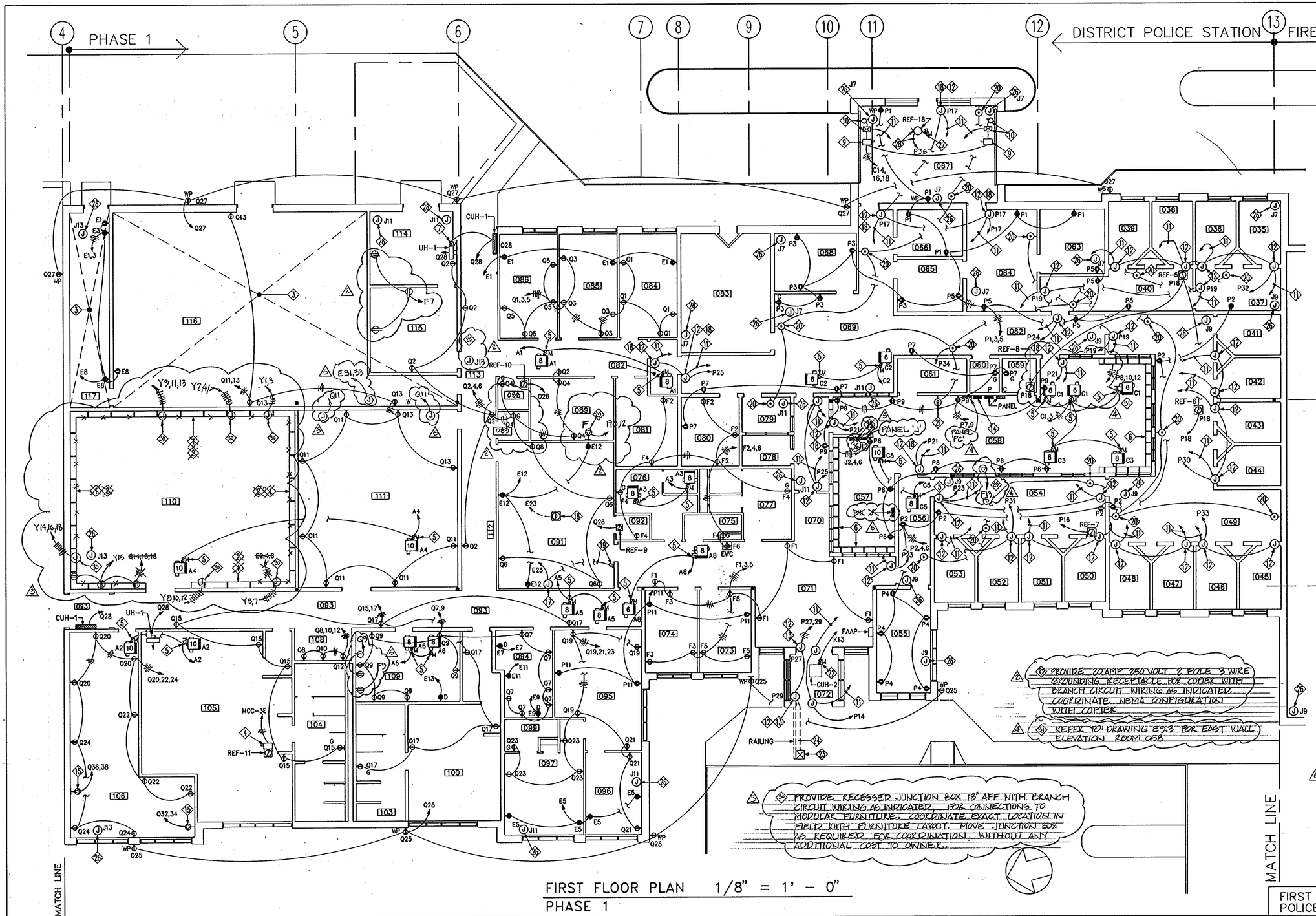

FIRST FLOOR PLAN 1/8" = 1' - 0"
PHASE 1

THE FOLLOWING NOTES ARE INDICATED IN ◇ ON THIS DRAWING

1. ~~PROVIDE WIREMOLD SERIES 6000 WITH THREE SECTIONS FOR NORMAL POWER, EMERGENCY POWER AND COMMUNICATION WIRES. PROVIDE RECEPTACLE AT EVERY 4' ON CENTER. MOUNT WIREMOLD AT 9" ABOVE COUNTER.~~
2. ~~PROVIDE ALTERNATE RECEPTACLE ON DIFFERENCE PHASE AS WELL AS ON DIFFERENT POWER, I.E., PHASE A, B, C AND NORMAL AND EMERGENCY POWER. FOR EXAMPLE, E2, Q14, E4, Q16, E6, Q18, E2, Q14 AND SO ON.~~
3. FOR LAYOUT OF THIS ROOM, REFER TO DRAWING E7.2.
4. PROVIDE 30A, 480V, 3 POLE NFSS AND MOUNT ON WALL NEAR EXHAUST FAN.
5. PROVIDE 277 VOLT, 1 PHASE FRACTIONAL HORSEPOWER MANUAL MOTOR STARTER WITH THERMAL O.L. PROTECTION AND HOA SWITCH AND MOUNT ON KINDORF CHANNEL SUPPORT NEAR UNIT OR MOUNT ON UNIT.
6. PROVIDE WIREMOLD SERIES 6000 WITH TWO SECTIONS FOR POWER AND COMMUNICATION WIRES. PROVIDE RECEPTACLE EVERY TWO FEET. PROVIDE ALTERNATE RECEPTACLE ON DIFFERENT PHASE, I.E. 8, 10, 12, 8, 10, 12 AND SO ON. MOUNT WIREMOLD AT 2" ABOVE COUNTER-BACK SPLASH AND BELOW WINDOW. COORDINATE WITH ARCH. DRAWINGS.
7. PROVIDE 120 VOLT, 1 PHASE, FRACTIONAL HORSEPOWER MANUAL MOTOR STARTER WITH THERMAL O.L. PROTECTION AND HOA SWITCH AND MOUNT ON KINDORF CHANNEL SUPPORT NEAR UNIT OR ON UNIT.
8. NOT USED.
9. PROVIDE 30 AMP, 480 V, 3 POLE NFSS FOR ROLLING DOORS.

(B)

10. ROLLING DOOR CONTROLLER, MOTOR AND REMOTELY LOCATED (OPEN-STOP-CLOSE) STATION AND ASSOCIATED WIRING AND RACEWAY.
11. CONTROL WIRES AND RACEWAYS TO DOOR CONTROL REMOTE STATION LOCATED IN ROOM 057. SEE ARCHITECTURAL DRAWINGS FOR EXACT LOCATIONS OF STATION.
12. PROVIDE JUNCTION BOX ABOVE DOOR ABOVE CEILING WITH BRANCH CIRCUIT WIRING AS INDICATED FOR DOOR HARDWARE.
13. CONNECT POWER CONNECTIONS TO DOOR HEADER (TYPICAL).
14. EXTERIOR LIGHTING CONTROL CABINET.
15. PROVIDE 20A, 250V, 3 WIRE GROUNDING TYPE RECEPTACLE, AND THE BRANCH CIRCUIT WIRING AS INDICATED.
16. PROVIDE FLOOR MOUNTED RECEPTACLE AND COVER AND BRANCH CIRCUIT WIRING AS INDICATED FOR PROJECTOR.
17. PROVIDE JUNCTION BOX ABOVE CEILING FOR PROJECTOR SCREEN. ALSO PROVIDE BRANCH CIRCUIT WIRING AS INDICATED.

(D)

18. SECURITY PUSH BUTTON. SEE ARCHITECTURAL SECTIONS SECTION 08710 AND 11880. PROVIDE CONTROL WIRING TO PUSH BUTTON AS REQUIRED. FOR LOCATIONS OF PUSH BUTTONS, REFER TO ARCH. DRAWINGS.
19. PROVIDE SWITCH FOR PROJECTOR SCREEN AND CONTROL WIRES AND RACEWAYS.
20. PROVIDE PANIC STATION AND ASSOCIATED WIRING AND RACEWAY TO THE BRANCH CIRCUIT AS INDICATED. LOCATE PANIC STATION AT 30" AFF.
21. PROVIDE PANIC HORN AND ASSOCIATED WIRING AND RACEWAYS.
22. PROVIDE 277 VOLT, 1POLE, MANUAL MOTOR STARTER WITH HOA AND THERMAL OVERLOAD PROTECTION, AND MOUNT ON SUPPORTS NEAR CUH. PROVIDE BRANCH CIRCUIT WIRING AS INDICATED.
23. HANDICAP DOOR OPENER DEVICE FURNISHED UNDER ARCHITECTURAL DIVISION.
24. PROVIDE CONTROL WIRES FROM DOOR CONTROL TO EACH DEVICE.
25. ~~PROVIDE PAGING SYSTEM CONTROL PANEL.~~
26. PROVIDE JUNCTION BOX AND BRANCH CIRCUIT WIRING ABOVE CEILING FOR CCTV CAMERAS, AS INDICATED ON DRAWINGS E4.2 SEAL ALL OPENINGS WITH SEALANTS AS SPECIFIED IN ARCHITECTUAL DIVISION.
27. PROVIDE 120V, 1 PHASE, HORSE POWER RATED NEMA 4, MANUAL MOTOR STARTER WITH THERMAL O.L. PROTECTION AND HOA SWITCH AND MOUNT NEAR FAN ON ROOF.
28. THE EXHAUST FAN SHALL TURN ON WHENEVER ANY DOOR IS OPENED OR CLOSED. THE OPENING OR CLOSING OF DOOR SHALL ACTUATE AN ADJUSTABLE TIMER TO TURN THE FAN ON. THE FAN SHALL TURN OFF AFTER PRE SET TIME. LOCATE TIMER IN ROOM 087.

1650

ARCHITECTURAL TECHNOLOGY
Architects and Construction Consultants
9192 Red Branch Road, Suite 300
Columbia, MD 21045 (301)995-4067

IN ASSOCIATION WITH :

CIVIL & GEOTECH ENGINEER:	E B A ENGINEERING, INC.
STRUCTURAL ENGINEER:	QODESH ENGINEERING SERVICES, INC.
MECHANICAL & ELECTRICAL ENGINEER:	BHARGAVA INTERNATIONAL, INC.
FIRE PROTECTION ENGINEER:	STANTON ENGINEERING

SEAL:

REVISIONS

2	CHANGE BULLETIN #2	
3	CHANGE BULLETIN #3	
4	CHANGE BULLETIN #4	
5	AS-BUILT	11/24/94

FIRST FLOOR PLAN - POWER
POLICE STATION PHASE 1

HOWARD COUNTY
PUBLIC SAFETY COMPLEX

SCAGGSVILLE ANNEX
11226 ROUTE 216
LAUREL, MD 20707

CAPITAL PROJECT NO. C - 0227

DATE: 3/25/92

DRAWING NO. E2.2

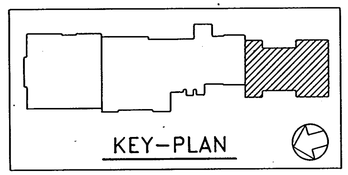

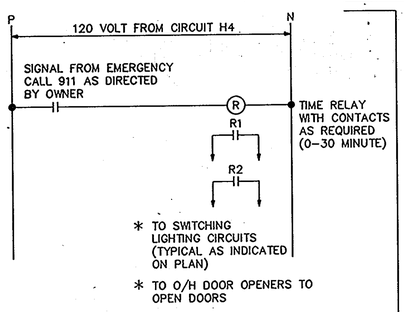

AUTOMATIC LIGHTS ON SYSTEM CONTROL DIAGRAM

NOT TO SCALE

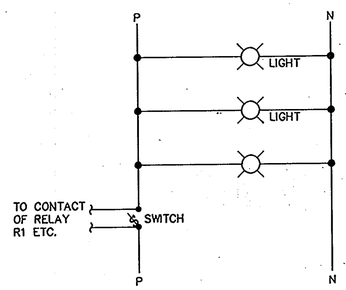

LIGHTING CIRCUIT – TYPICAL

NOT TO SCALE

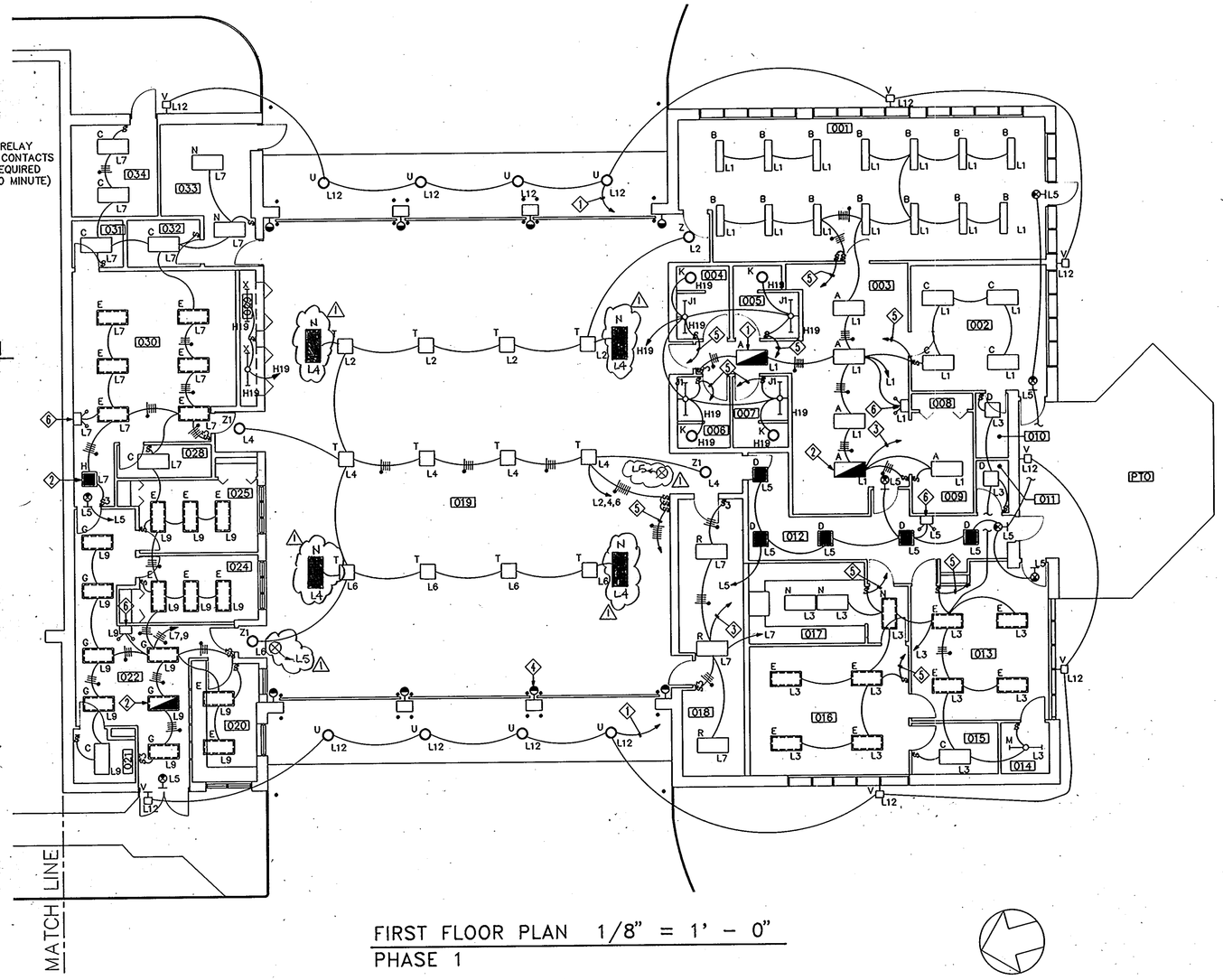

FIRST FLOOR PLAN 1/8" = 1' – 0"

PHASE 1

THE FOLLOWING NOTES ARE INDICATED IN ◇ ON THIS DRAWING

1. TO BRANCH CIRCUIT AS INDICATED VIA EXTERIOR LIGHTING CONTROL PANEL LOCATED IN ROOM 014.
2. NIGHT LIGHT FIXTURE SHALL BE CONNECTED ON BRANCH CIRCUIT AS INDICATED AHEAD OF, ANY SWITCHING (TYPICAL).
3. LIGHTING SYSTEM FOR ROOMS 003, 018, AND OTHERS AS INDICATED UNDER DRAWING NOTE 5, SHALL BE CONNECTED SUCH THAT WHENEVER ANY EMERGENCY CALL (911) SHALL BE RECEIVED AT THE FIRE STATION, A RELAY SHALL BE ENERGIZED AND THE LIGHTING FOR ROOM 003, 019, 018 AND OTHER ROOMS SHALL BE "TURNED ON" IMMEDIATELY, AUTOMATICALLY, WITH A MANUAL OVERRIDE. THE RELAY SHALL BE CONTROLLED ON A TIMER (ADJUSTABLE 0–30 MINUTES, WITH SETTINGS AT EVERY 5 MINUTES) AFTER THE PRE–SET TIME ELAPSED, THE LIGHTS SHALL RETURN TO THE PREVIOUS MODE. CONTROL DIAGRAM INDICATED ON THIS DRAWING FOR GUIDANCE ONLY.
4. OVERHEAD DOOR RED WARNING LIGHT PROVIDED BY OVERHEAD DOOR CONTRACTOR (TYPICAL OF 8). THE RED LIGHT SHALL TURN ON WHENEVER THE O/H DOORS ARE CLOSED.
5. WIRES AS REQUIRED TO THE "AUTOMATIC LIGHTS ON SYSTEM" AS DESCRIBED ABOVE UNDER DRAWING NOTE 3, AND CONTROL DIAGRAM INDICATED ON THIS DRAWING.
6. THE FIXTURE SHALL BE CONNECTED, TO THE BRANCH CIRCUIT AS INDICATED, AHEAD OF ANY SWITCHING IN COMPLIANCE WITH NEC ARTICLE 700–12(f).

ARCHITECTURAL TECHNOLOGIES, INC.
Architects and Construction Consultants
9192 Red Branch Road, Suite 300
Columbia, MD 21045 (301)995–4067

IN ASSOCIATION WITH :

CIVIL & GEOTECH ENGINEER: E B A ENGINEERING, INC.
STRUCTURAL ENGINEER: QODESH ENGINEERING SERVICES, INC.
MECHANICAL & ELECTRICAL ENGINEER: BHARGAVA INTERNATIONAL, INC.
FIRE PROTECTION ENGINEER: STANTON ENGINEERING

SEAL:

REVISIONS

1 AS BUILT 11/24/94

FIRST FLOOR PLAN – LIGHTING
FIRE STATION

HOWARD COUNTY
PUBLIC SAFETY COMPLEX

SCAGGSVILLE ANNEX
11226 ROUTE 216
LAUREL, MD 20707

CAPITAL PROJECT NO. C – 0227

DATE: 3/25/92

DRAWING NO. E3.1

1650

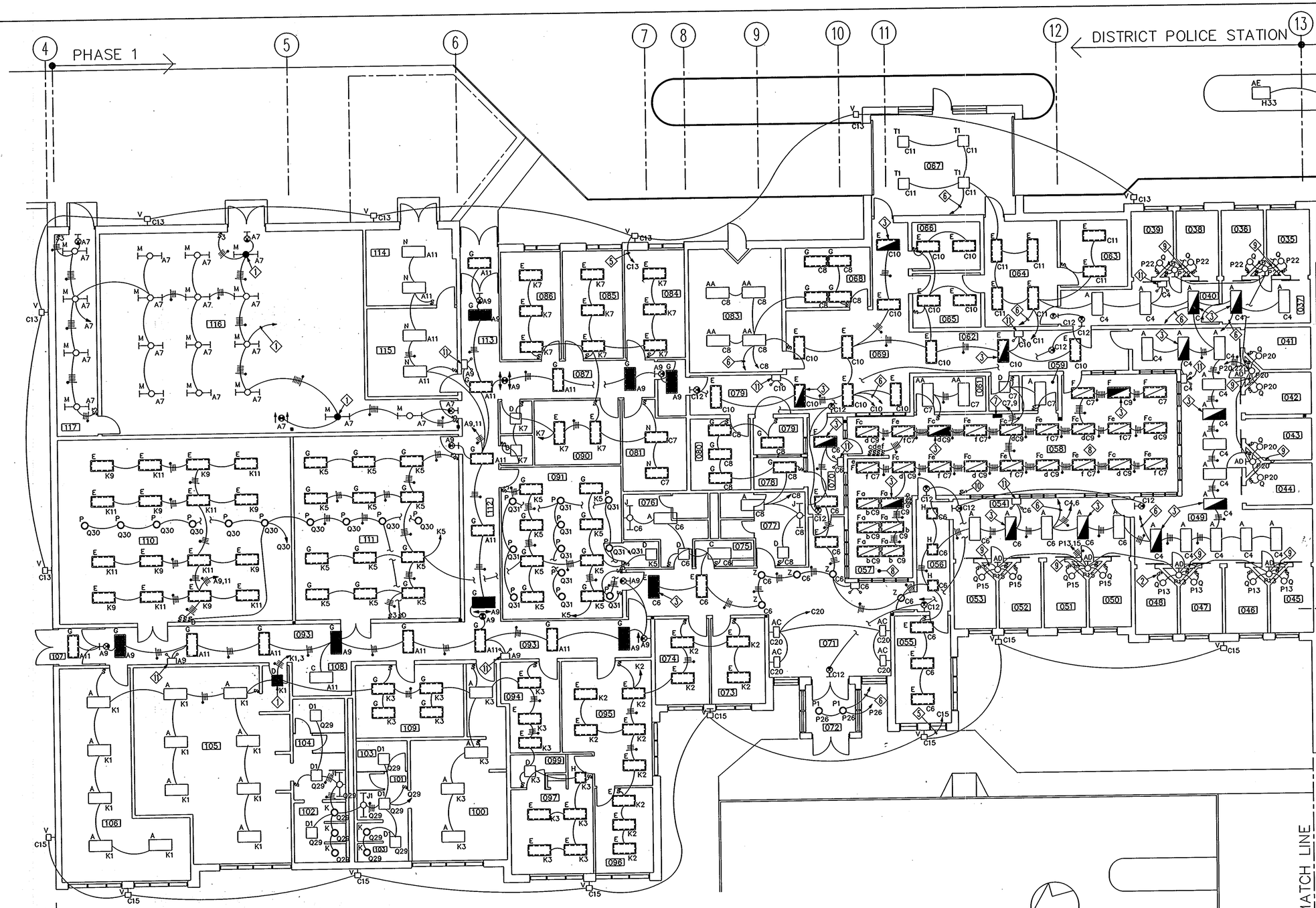

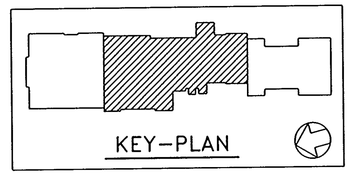

THE FOLLOWING NOTES ARE IN ◇ ON THIS DRAWING

1. TO LIGHTING FIXTURES AND SWITCHES IN AHU. REFER TO DRAWING E-7.2.
2. LIGHTING SWITCH MOUNTED ON FIXTURE. REFER TO DETAIL ON DRAWING E8.2 (TYPICAL FOR ALL CELLS).
3. CONNECT THE FIXTURE ON BRANCH CIRCUIT AS INDICATED, AHEAD OF ANY SWITCHING TO SERVE AS NIGHT LIGHT.
4. FOR MOUNTING OF THE FIXTURE, REFER TO DETAIL ON DRAWING E8.2 (TYPICAL FOR ALL Q TYPE FIXTURES).
5. TO BRANCH CIRCUIT AS INDICATED VIA EXTERIOR LIGHTING CONTROL. LOCATED IN ROOM 058.
6. TO LIGHTING CONTROL SWITCHES LOCATED IN CONTROL ROOM 058. FOR EXACT LOCATION, COORDINATE AS DIRECTED IN FIELD.
7. EXTERIOR LIGHTING CONTROL CABINET.
8. OUTER TWO LAMPS AND INNER ONE LAMP IN ROOM 058 SHALL BE SEPARATELY SWITCHED FOR LOW LEVEL ILLUMINATION ON ALTERNATE CIRCUITS.
9. TO CONTROL TRANSFORMER FOR CONTROL PANEL(S) FOR COMBINATION LAVATORY/TOILET FURNISHED UNDER DIVISION 15, IN CELL CLOSET. FOR EXACT LOCATION OF CONTROL PANEL(S) IN CELL CLOSET, REFER TO DIVISION 15 DRAWINGS.
10. SWITCH GROUP FOR CORRIDOR LIGHTS AND OTHER LIGHTS AS INDICATED ON PLAN. COORDINATE WITH OWNER FOR EXACT LOCATION OF THE SWITCHES IN THE FIELD. THE SWITCHES LOCATIONS SHALL BE SHIFTED AND SHALL BE PROVIDED AT NO ADDITIONAL COST TO THE OWNER.
11. FIXTURE SHALL BE CONNECTED TO BRANCH CIRCUIT AS INDICATED, AHEAD OF ANY SWITCHING IN COMPLIANCE WITH NEC ARTICLE 700-12(f).

FIRST FLOOR PLAN 1/8" = 1' - 0"
PHASE 1

ARCHITECTURAL TECHNOLOGIES, INC. Architects and Construction Consultants 9192 Red Branch Road, Suite 300 Columbia, MD 21045 (301)995-4067	IN ASSOCIATION WITH : CIVIL & GEOTECH ENGINEER: E B A ENGINEERING, INC. STRUCTURAL ENGINEER: QODESH ENGINEERING SERVICES, INC. MECHANICAL & ELECTRICAL ENGINEER: BHARGAVA INTERNATIONAL, INC. FIRE PROTECTION ENGINEER: STANTON ENGINEERING	SEAL:	REVISIONS	FIRST FLOOR PLAN - LIGHTING POLICE STATION PHASE 1 HOWARD COUNTY PUBLIC SAFETY COMPLEX SCAGGSVILLE ANNEX 11226 ROUTE 216 LAUREL, MD 20707	79 OF 90 CAPITAL PROJECT NO. C - 0227 DATE: 3/25/92 DRAWING NO. E3.2

012EE14.DWG /03/29/92 /14:39:10

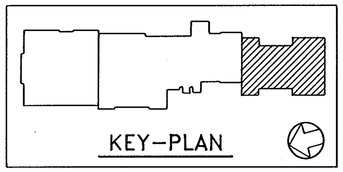

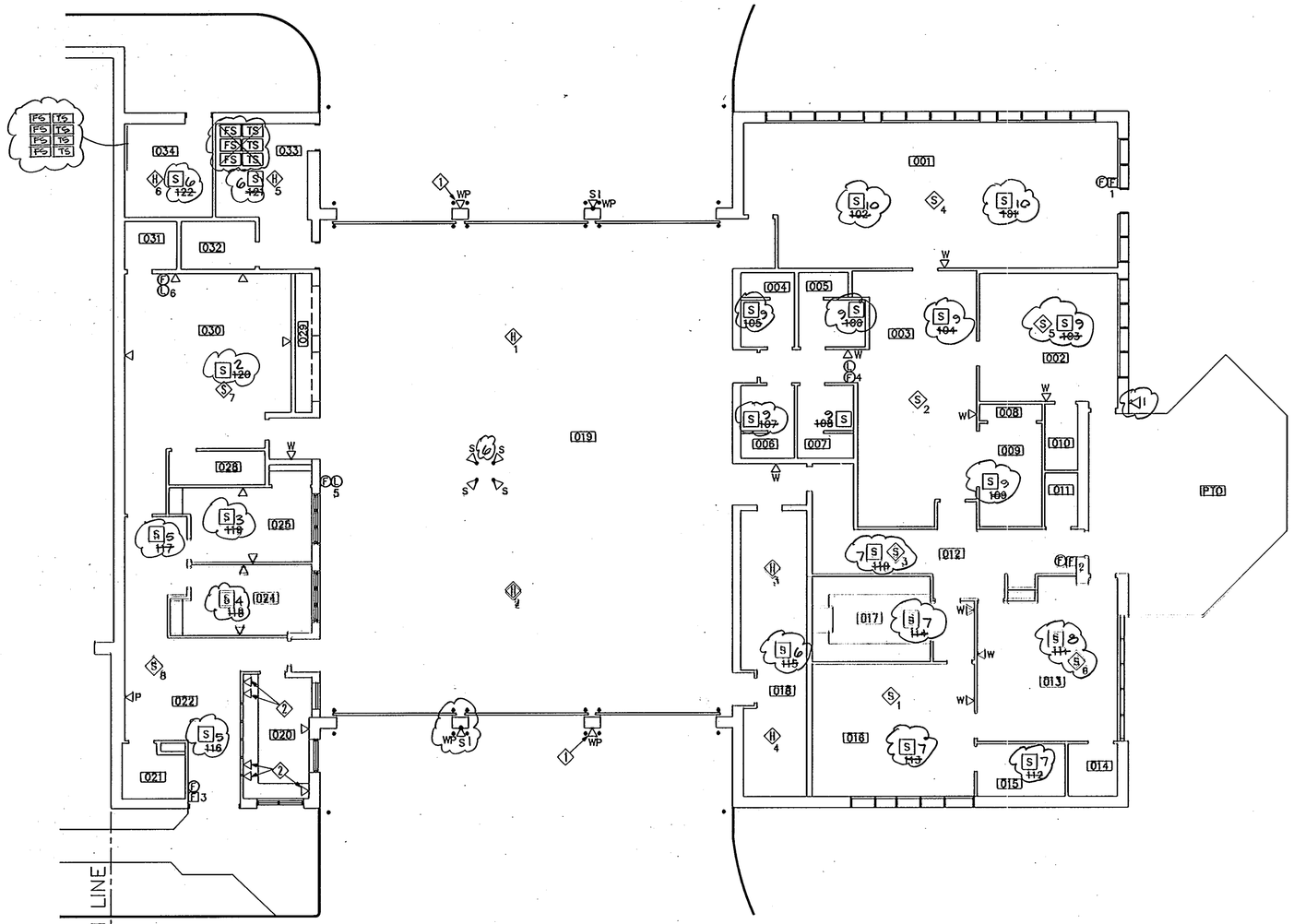

FIRST FLOOR PLAN 1/8" = 1' - 0"
PHASE 1

DRAWING NOTES:

1. MOUNT WEATHER PROOF OUTLET AT 10'-0" AFF.
2. TELEPHONE OUTLETS MOUNTED IN THE WIREMOLD.

SPEAKER ZONES
1 OUTSIDE HORNS
2 TRAINING ROOM
3 ADMIN. OFFICE 1
4 ADMIN. OFFICE 2
5 LOBBY
6 APPARATUS BAY
7 DINING AREA
8 DAY ROOM
9 LOCKER ROOMS
10 BUNK ROOM

ARCHITECTURAL TECHNOLOGIES, INC. Architects and Construction Consultants 9192 Red Branch Road, Suite 300 Columbia, MD 21045 (301)995-4067	IN ASSOCIATION WITH : CIVIL & GEOTECH ENGINEER: E B A ENGINEERING, INC. STRUCTURAL ENGINEER: QODESH ENGINEERING SERVICES, INC. MECHANICAL & ELECTRICAL ENGINEER: BHARGAVA INTERNATIONAL, INC. FIRE PROTECTION ENGINEER: STANTON ENGINEERING	SEAL:	REVISIONS 1 AS BUILT 11/24/94	FIRST FLOOR PLAN-SPECIAL SYSTEMS FIRE STATION HOWARD COUNTY PUBLIC SAFETY COMPLEX SCAGGSVILLE ANNEX 11226 ROUTE 216 LAUREL, MD 20707	80 OF 90 CAPITAL PROJECT NO. C - 0227 DATE: 3/25/92 DRAWING NO. E4.1

1650

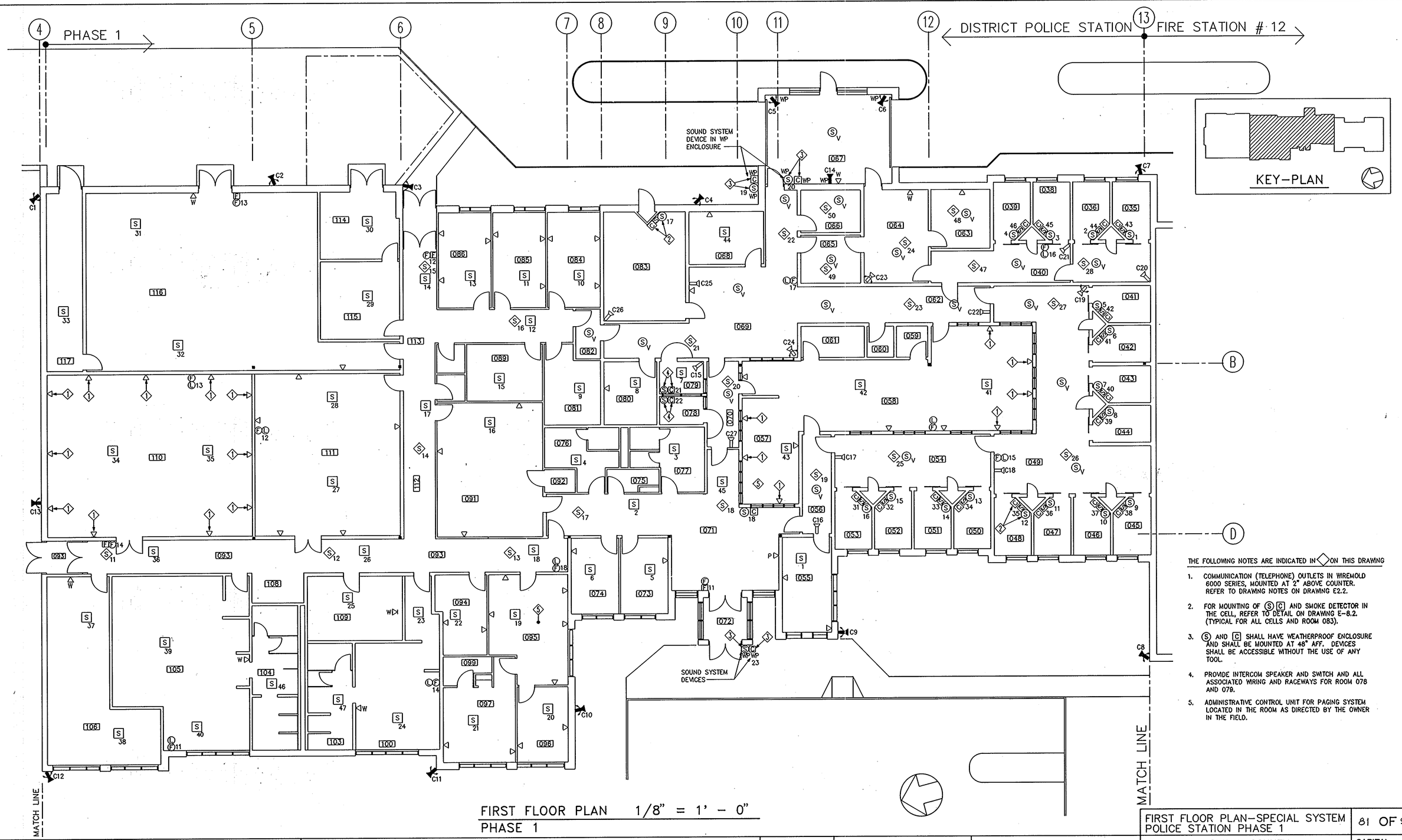

THE FOLLOWING NOTES ARE INDICATED IN ◇ ON THIS DRAWING

1. COMMUNICATION (TELEPHONE) OUTLETS IN WIREMOLD 6000 SERIES, MOUNTED AT 2" ABOVE COUNTER. REFER TO DRAWING NOTES ON DRAWING E2.2.
2. FOR MOUNTING OF (S) (C) AND SMOKE DETECTOR IN THE CELL, REFER TO DETAIL ON DRAWING E-8.2. (TYPICAL FOR ALL CELLS AND ROOM 083).
3. (S) AND (C) SHALL HAVE WEATHERPROOF ENCLOSURE AND SHALL BE MOUNTED AT 48" AFF. DEVICES SHALL BE ACCESSIBLE WITHOUT THE USE OF ANY TOOL.
4. PROVIDE INTERCOM SPEAKER AND SWITCH AND ALL ASSOCIATED WIRING AND RACEWAYS FOR ROOM 078 AND 079.
5. ADMINISTRATIVE CONTROL UNIT FOR PAGING SYSTEM LOCATED IN THE ROOM AS DIRECTED BY THE OWNER IN THE FIELD.

FIRST FLOOR PLAN 1/8" = 1' - 0"
PHASE 1

FIRST FLOOR PLAN-SPECIAL SYSTEM
POLICE STATION PHASE 1

ARCHITECTURAL TECHNOLOGIES, INC.
Architects and Construction Consultants
9192 Red Branch Road, Suite 300
Columbia, MD 21045 (301)995-4067

IN ASSOCIATION WITH :
CIVIL & GEOTECH ENGINEER: E B A ENGINEERING, INC.
STRUCTURAL ENGINEER: QODESH ENGINEERING SERVICES, INC.
MECHANICAL & ELECTRICAL ENGINEER: BHARGAVA INTERNATIONAL, INC.
FIRE PROTECTION ENGINEER: STANTON ENGINEERING

SEAL:

REVISIONS

HOWARD COUNTY
PUBLIC SAFETY COMPLEX

SCAGGSVILLE ANNEX
11226 ROUTE 216
LAUREL, MD 20707

CAPITAL PROJECT NO.
C - 0227

DATE: 3/25/92

DRAWING NO.
E4.2

1650

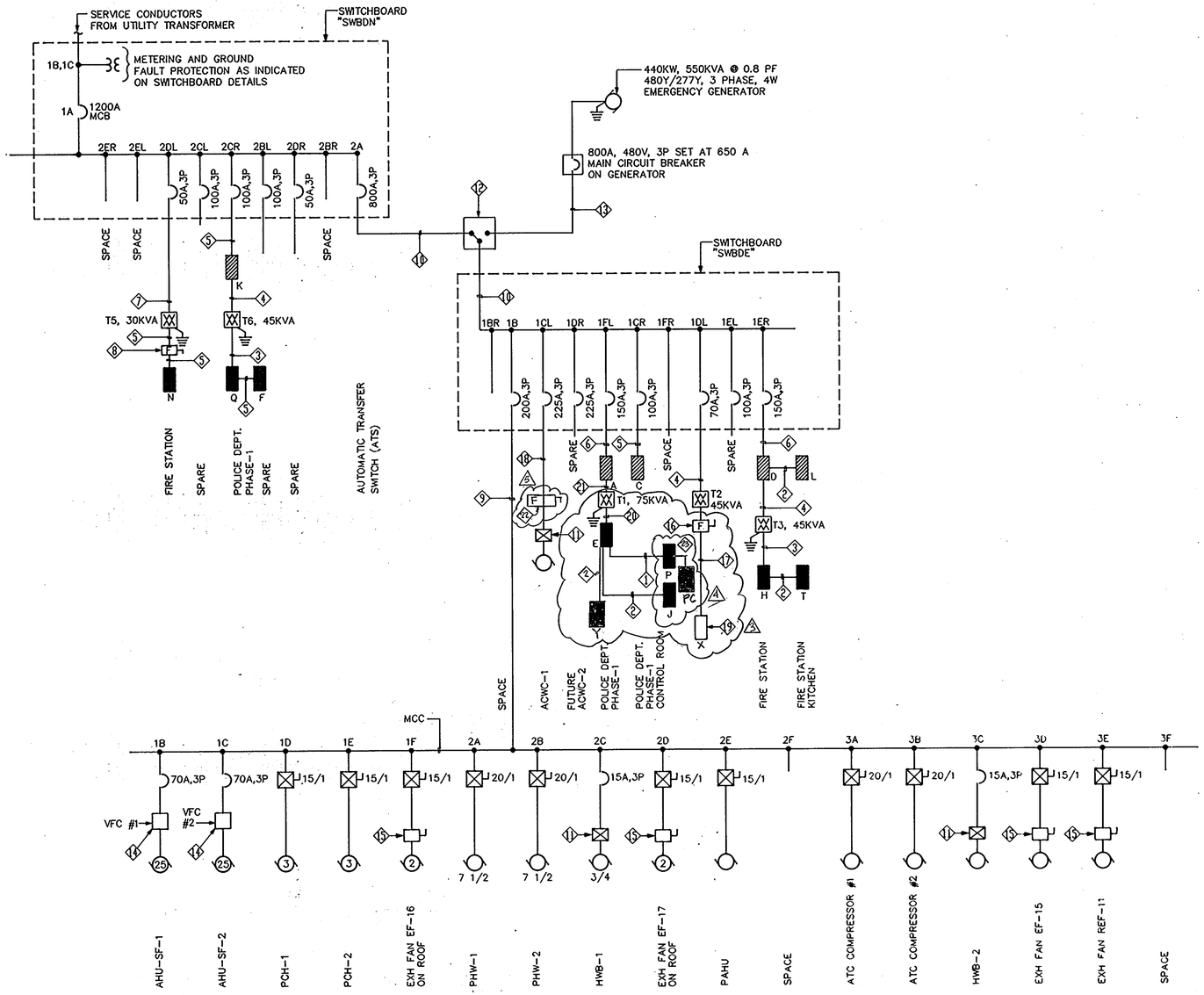

ONE LINE DIAGRAM

NOT TO SCALE

NOTE: FOR WIRING SIZING FOR MCC, REFER TO MCC SCHEDULE

DRAWING NOTES:

1. 4 # 2 AWG AND 1 # 6 GW – 1 1/2" RACEWAY.
2. 4 # 4 AWG AND 1 # 8 GW – 1 1/4" RACEWAY.
3. 4 # 2/0 AWG AND 1 # 6 GW – 2" RACEWAY.
4. 3 # 4 AWG AND 1 # 8 GW – 1" RACEWAY.
5. 4 # 3 AWG AND 1 # 8 GW – 1 1/4" RACEWAY.
6. 4 # 2/0 AWG AND 1 # 6 GW – 2" RACEWAY.
7. 3 # 6 AWG AND 1 # 10 GW – 1" RACEWAY.
8. 100 AMP, 250 V, 3P, FSS, FUSED AT 90 AMP.
9. 3 # 4/0 AWG AND 1 # 4 GW – 2 1/2" RACEWAY.
10. 3 SETS OF 4 #500 MCM AND 1 #2/0 GW – 4" RACEWAY EACH SET.
11. CONTROL DEVICE PROVIDED UNDER DIVISION 15.
12. 800 AMP, 480 VOLT, 4 POLE, AUTOMATIC TRANSFER SWITCH.
13. 3 SETS OF 4 #350 MCM AND 1 #1/0 GW – 3" RACEWAY EACH SET.
14. VFC FURNISHED UNDER DIVISION 15.
15. 30A, 480V, 3P DISCONNECT SWITCH AS INDICATED ON FLOOR PLANS.
16. 100 AMP, 250V, 3P, FSS; FUSED AT 100 AMP.
17. 3 # 1/0 AWG AND 1 # 6 – 2" RACEWAY.
18. 3 # 250 MCM AND 1 # 4 GW – 3" RACEWAY.
19. EXISTING SQUARE-D (Q O C TYPE) 240V, DELTA 3 PHASE PANEL IN SHED.
20. 4 # 4/0 AWG AND 1 # 4 GW – 2 1/2" RACEWAY.
21. 3 # 3 AWG AND 1 # 8 GW – 1 1/4" RACEWAY.
22. 400/6000/3F/3R DISCONNECT FUSE @ 250A (5)
23. REFER TO PANEL SCHEDULE FOR FEEDER SIZE (4)

(5) NOTE
FOR DETAILED LAYOUT OF MCC SEE DWG E 7.2
FOR DETAILED LAYOUT OF SWBD'S SEE DWG E8.2

TRANSFORMER SCHEDULE

XFMR DESIGNATION	SIZE	VOLTAGE AND CONNECTION PRIMARY	VOLTAGE AND CONNECTION SECONDARY	LOCATION	REMARKS
T1	75 KVA	480V, DELTA	208Y/120V, WYE	ROOM 117	
T2	45 KVA	480V, DELTA	240V DELTA	ROOM 117	GROUNDED (5)
T3	45 KVA	480V, DELTA	208Y/120V, WYE	ROOM 014	
T4	–	–	–	–	
T5	30 KVA	480V, DELTA	208Y/120V, WYE	ROOM 117	
T6	45 KVA	480V, DELTA	208Y/120V, WYE	ROOM 117	

ARCHITECTURAL TECHNOLOGIES, INC.
Architects and Construction Consultants
9192 Red Branch Road, Suite 300
Columbia, MD 21045 (301)995-4067

IN ASSOCIATION WITH :

CIVIL & GEOTECH ENGINEER: E B A ENGINEERING, INC.
STRUCTURAL ENGINEER: QODESH ENGINEERING SERVICES, INC.
MECHANICAL & ELECTRICAL ENGINEER: BHARGAVA INTERNATIONAL, INC.
FIRE PROTECTION ENGINEER: STANTON ENGINEERING

SEAL:

REVISIONS
(3) CHANGE BULLETIN - 3
(4) CHANGE BULLETIN - 4
(5) AS BUILT 11/24/94

ONE LINE DIAGRAM – POWER

HOWARD COUNTY PUBLIC SAFETY COMPLEX
SCAGGSVILLE ANNEX
11226 ROUTE 216
LAUREL, MD 20707

CAPITAL PROJECT NO. C – 0227
DATE: 3/25/92
DRAWING NO. E6.1

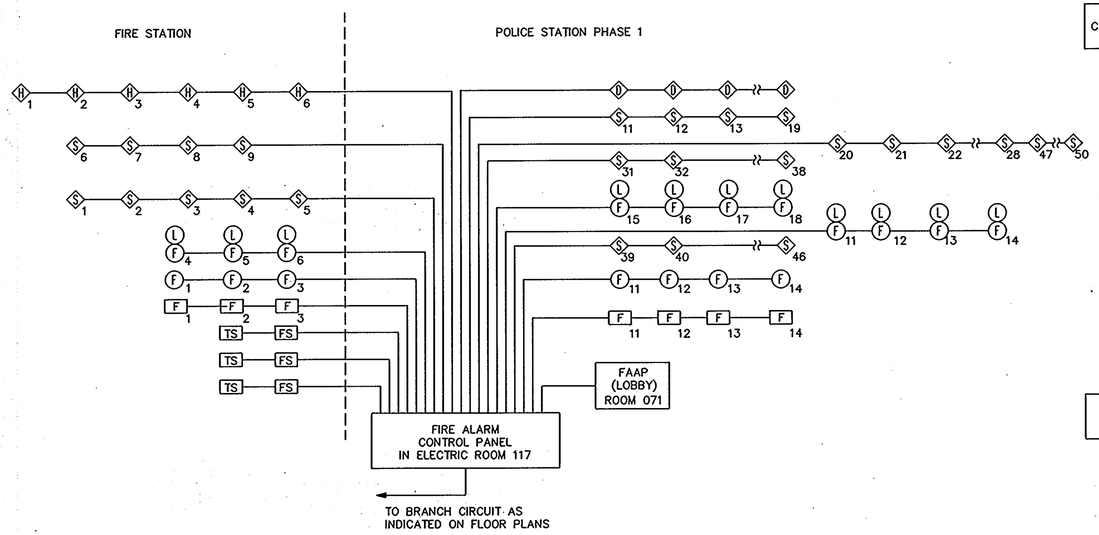

NOTE: REFER TO FLOOR PLAN FOR ACTUAL QUANTITY OF EACH TYPE OF FDAS DEVICE. FOR DUCT HEAT DETECTORS, COORDINATE WITH DIVISION 15 DRAWINGS.

ONE LINE DIAGRAM – FIRE DETECTION AND ALARM SYSTEM

NOT TO SCALE

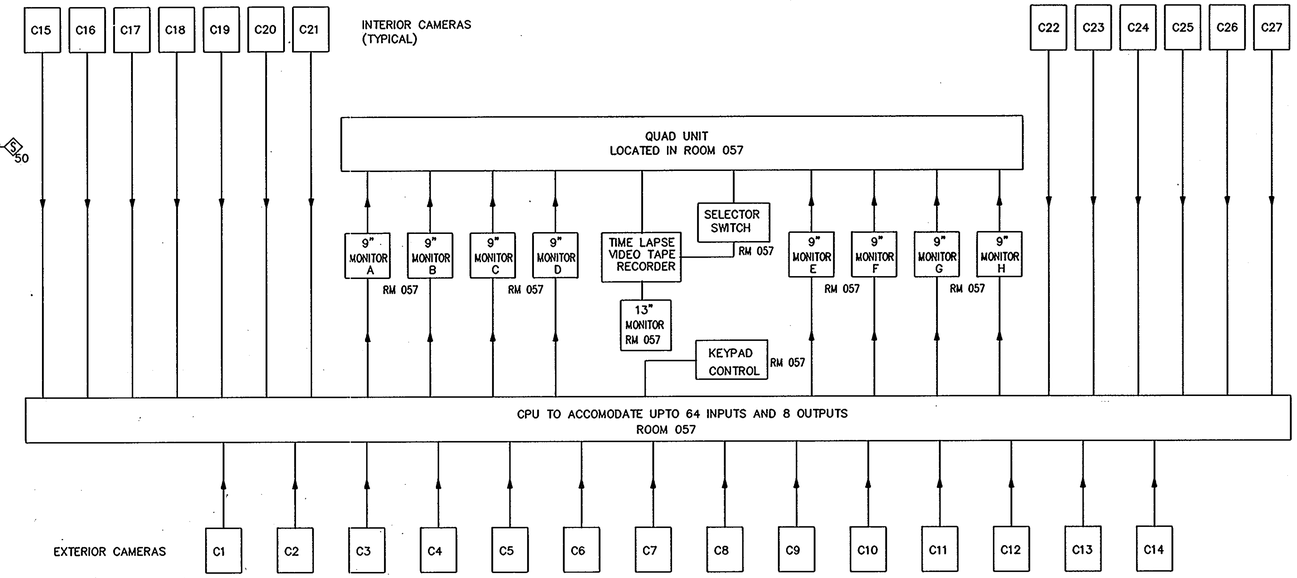

BLOCK DIAGRAM – CCTV SYSTEM

NOT TO SCALE

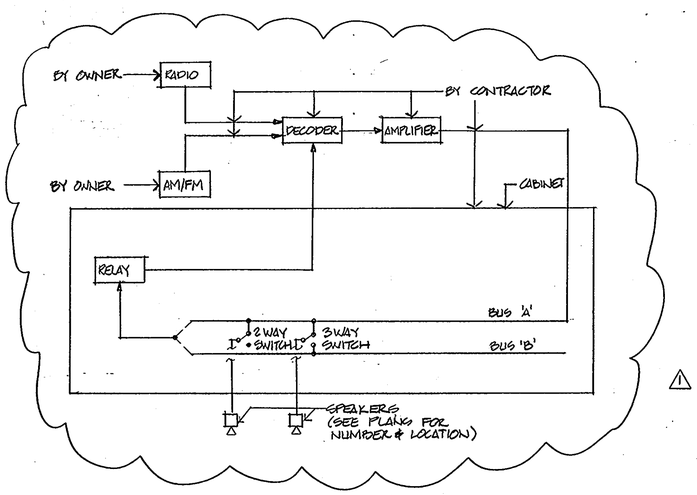

ONE LINE DIAGRAM – INTERCOM AND PAGING (FIRE STATION)

NOT TO SCALE

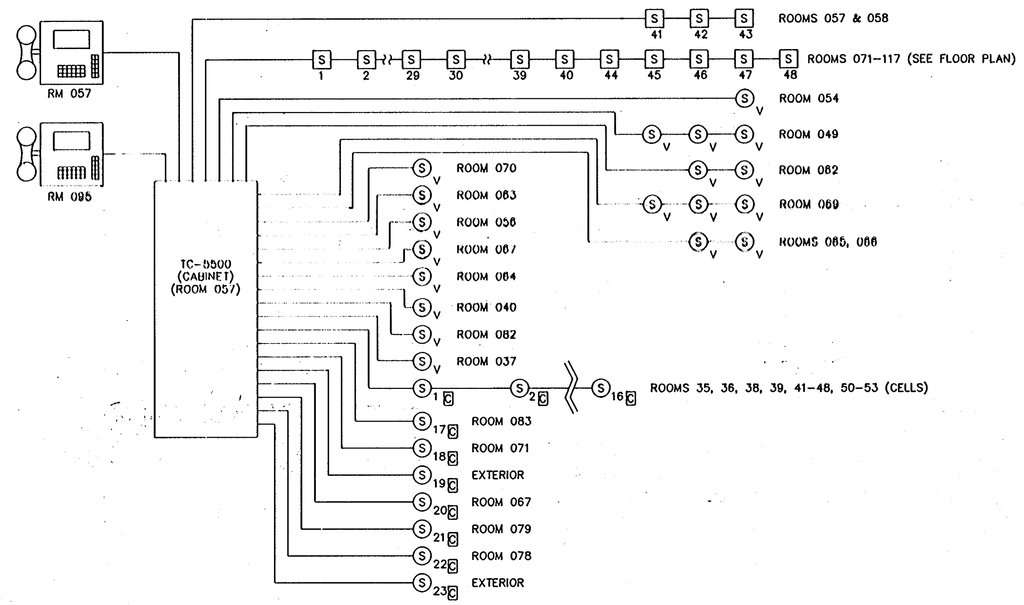

ONE LINE DIAGRAM – PAGING SYSTEM POLICE STATION

NOT TO SCALE

NOTE: EACH CELL SHALL HAVE A CALL SWITCH

ARCHITECTURAL TECHNOLOGIES, INC. Architects and Construction Consultants 9192 Red Branch Road, Suite 300 Columbia, MD 21045 (301)995-4067	IN ASSOCIATION WITH : CIVIL & GEOTECH ENGINEER: E B A ENGINEERING, INC. STRUCTURAL ENGINEER: QODESH ENGINEERING SERVICES, INC. MECHANICAL & ELECTRICAL ENGINEER: BHARGAVA INTERNATIONAL, INC. FIRE PROTECTION ENGINEER: STANTON ENGINEERING	SEAL:	REVISIONS 1 AS BUILT 11/24/94	ONE LINE FDAS, PAGING AND CCTV SYSTEMS HOWARD COUNTY PUBLIC SAFETY COMPLEX SCAGGSVILLE ANNEX 11226 ROUTE 216 LAUREL, MD 20707	83 OF 90 CAPITAL PROJECT NO. C – 0227 DATE: 3/25/92 DRAWING NO. E6.2

1650

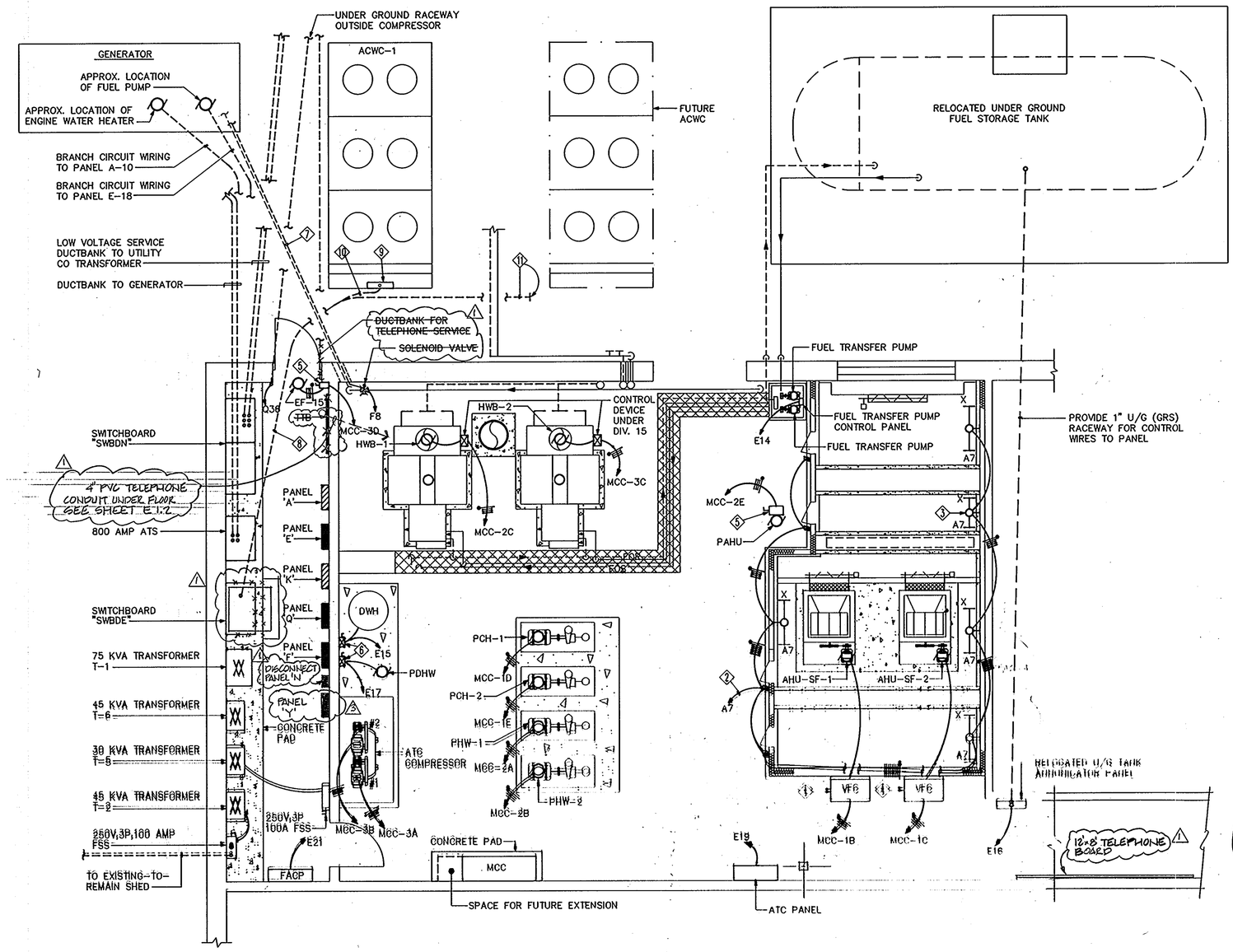

PART PLAN MECHANICAL AND ELECTRICAL ROOM

SCALE: 1/4"=1'-0"

THE FOLLOWING NOTES ARE INDICATED IN◇ON THIS DRAWING

1. REFER TO DIVISION 15 AUTOMATIC TEMPERATURE CONTROL. ONLY ONE ONE SUPPLY AIR FAN AND ACWC SHALL SHALL OPERATE WHEN NORMAL POWER FAILS AND GENERATOR IS STARTING AND/OR OPERATING.
2. TO BRANCH CIRCUIT A7. FOR CONTINUATION REFER TO DRAWING E3.2.
3. FIXTURE MOUNTED VERTICALLY ALONG THE WALL.
4. VFC FURNISHED UNDER DIVISION 15 AND INSTALLED UNDER DIVISION 16.
5. PROVIDE 30A, 480 VOLT, 3 POLE NFSS AND MOUNT ON WALL NEAR EXHAUST FAN.
6. PROVIDE HORSE POWER RATED 120V, 1P, 20 AMP, FSS (FUSED AS RECOMMENDED BY MANUFACTURER.
7. CONTROL WORES FROM IN SKID DAYTANK TO SOLENOID VALVE.
8. PROVIDE 4 WAY- WITH 2-3" AND 2-1" DUCTBANK FOR ACWC-1 AND ACWC-2 (FUTURE) FOR WIRE SIZE REFER TO ONE LINE DIAGRAM ON DRAWING E6.1.
9. ACWC CONTROL PANEL.
10. PROVIDE 3" AND 1" CONCRETE ENCASED RACEWAYS TO ACWC-1 CONTROL PANEL.
11. PROVIDE 3" AND 1" CONCRETE RACEWAYS AND TERMINATE NEAR CONCRETE PAD FOR FUTURE ACWC-2. THE 3" AND 1" CONDUITS SHALL BE CAPPED 6" ABOVE FINSHED CONCRETE.
12. FEEDER WIRING AS INDICATED ON ONE LINE DIAGRAM TO PANEL 'N' LOCATED IN FIRE STATION.

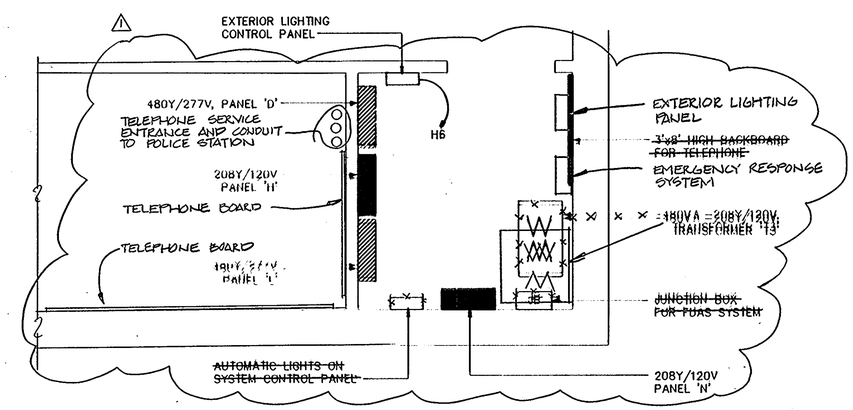

PART PLAN - ELECTRICAL CLOSET (ROOM 14)

SCALE: 1/2"=1'-0"

ARCHITECTURAL TECHNOLOGIES, INC. Architects and Construction Consultants 9192 Red Branch Road, Suite 300 Columbia, MD 21045 (301)995-4067	IN ASSOCIATION WITH : CIVIL & GEOTECH ENGINEER: E B A ENGINEERING, INC. STRUCTURAL ENGINEER: QODESH ENGINEERING SERVICES, INC. MECHANICAL & ELECTRICAL ENGINEER: BHARGAVA INTERNATIONAL, INC. FIRE PROTECTION ENGINEER: STANTON ENGINEERING	SEAL:	REVISIONS: 1 CHANGE BULLETIN - 3; 1 AS BUILT 11/24/94

PART PLANS	84 OF 90
HOWARD COUNTY PUBLIC SAFETY COMPLEX	CAPITAL PROJECT NO. C - 0227
SCAGGSVILLE ANNEX 11226 ROUTE 216 LAUREL, MD 20707	DATE: 3/25/92
	DRAWING NO. E7.1

1650

MOTOR CONTROL CENTER: MCC HORIZONTAL BUS: 400 AMP VERTICAL BUS: 300 AMP
MAIN O.C. DEVICE OR MLO: MLO VOLTS: 480 PHASE (S): 3 WIRES: 3 MIN. AIC: 25,000
LOCATION: MECHANICAL ROOM ENCL. NEMA: 1 NODE #: – NOTES: EMERGENCY POWER

CIRCUIT NO.	SERVES	LOAD		PROTECTION			MOTOR STARTER			CIRCUIT			REMARKS
		HP	FLA	P	SIZE	DEVICE	TYPE	NEMA	CONTROL	WIRE	GRD	C	
1A	MAIN LUGS ONLY	–	–	–	–	–	–	–	–	–	–	–	REFER TO ONE LINE DIAGRAM
1G ~~1B~~	AHU-SF-1	25	34	3	70	CB	–	–	–	3#6	1#8	1"	VFD UNDER DIVISION 15 ①
1V ~~1C~~	AHU-SF-2	25	34	3	70	CB	–	–	–	3#6	1#8	1"	VFD UNDER DIVISION 15 ①
2E ~~1D~~	PCH-1	3	4.8	3	15	CB	FVNR	1	①②③④	3#12	1#12	3/4"	–
2I ~~1E~~	PCH-2	3	4.8	3	15	CB	FVNR	1	①②③④	3#12	1#12	3/4"	STANDBY
3A ~~1F~~	EXH FAN EF-16	2	3.3	3	15	CB	FVNR	1	①②③④	3#10	1#10	3/4"	
1C ~~2A~~	PHW-1	7.5	11	3	20	CB	FVNR	1	①②③④	3#12	1#12	3/4"	
1G ~~2B~~	PHW-2	7.5	11	3	20	CB	FVNR	1	①②③④	3#12	1#12	3/4"	STANDBY
3I ~~2C~~	HWB-1	0.75	1.4	3	15	CB	–	–	–	3#12	1#12	3/4"	
3E ~~2D~~	EXH FAN EF-17	2	3.3	3	15	CB	FVNR	1	①②③④	3#10	1#10	3/4"	
2Q ~~2E~~	PAHU	0.75	1.4	3	15	CB	FVNR	1	①②③④	3#12	1#12	3/4"	
2F	SPACE	–	–	–	–	–	–	–	–	–	–	–	
1K ~~3A~~	ATC COMPRESSOR # 1	7.5	11	3	20	CB	FVNR	1	①②③④	3#12	1#12	3/4"	
1O ~~3B~~	ATC COMPRESSOR # 2	7.5	11	3	20	CB	FVNR	1	①②③④	3#12	1#12	3/4"	
3L ~~3C~~	HWB-2	0.75	1.4	3	15	CB	–	1	–	3#12	1#12	3/4"	
2A ~~3D~~	EXHAUST FAN EF-15	1	1.8	3	15	CB	FVNR	1	①②③④	3#12	1#12	3/4"	
2U ~~3E~~	EXHAUST FAN REF-11	0.75	1.4	3	15	CB	FVNR	1	①②③④	3#12	1#12	3/4"	
3F	SPARE	–	–	3	20	CB	FVNR	1	①②③④	–	–	–	
3G	SPACE	–	–	–	–	–	–	–	–	–	–	–	

① CONTROL TRANSFORMER
② HAND-OFF-AUTOMATIC SWITCH
③ AUXILIARY CONTACTS
④ INDICATING LIGHTS (GREEN, RED, AMBER)

NOTE:
① REFER TO DIVISION 15 CONTROLS. ONLY AHU-SF AND ONE ACWC SHALL RUN. IN CASE NORMAL POWER FAILS EMERGENCY GENERATOR IS ONE STARTING.

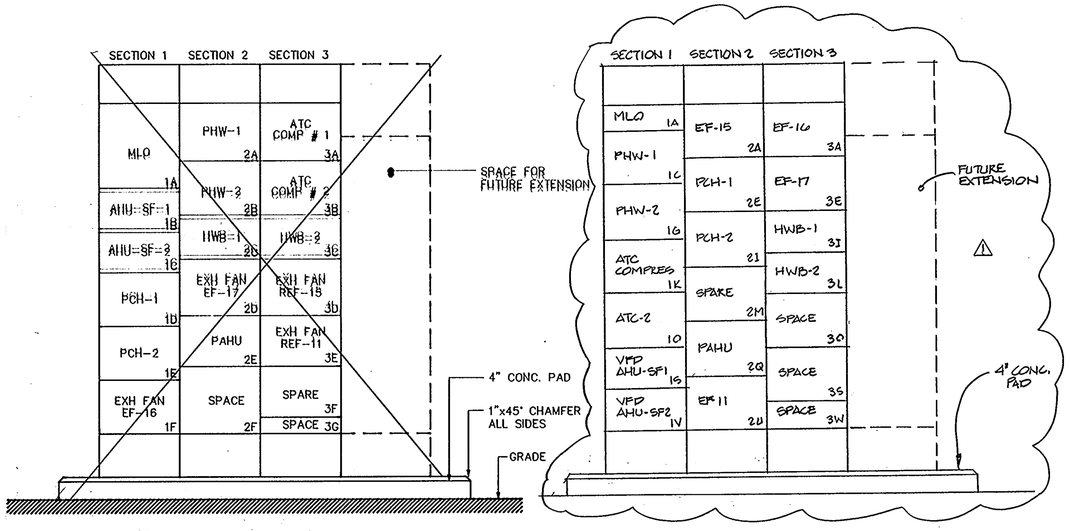

ELEVATION–MOTOR CONTROL CENTER (MCC)

NOT TO SCALE

LIGHTING FIXTURE SCHEDULE

SYMBOL	FIXT TYPE	MANUFACTURER	CATALOG #	LAMPS NO.	LAMPS TYPE	LAMPS WATTS	VOLTS	MOUNTING	LENSE TYPE	REMARKS
	A	LITHONIA OR EQUAL	2SPG432A12.125277SSB	4	32T8/CW/RS	32	277	RECESSED	ACRYLIC	STATIC TROFFER
	B	LITHONIA OR EQUAL	SPG232A12.125277ES	2	32T8/CW/RS	32	277	RECESSED	ACRYLIC	STATIC TROFFER
	C	LITHONIA OR EQUAL	2SPG332A12.125277SSB	3	32T8/CW/RS	32	277	RECESSED	ACRYLIC	STATIC TROFFER
	D	LITHONIA OR EQUAL	2SPG2U32A12.125277SSB	3	32T8/CW/RS	32	277	RECESSED	ACRYLIC	STATIC TROFFER
	D1	LITHONIA OR EQUAL	2SPG2U32A12.125120SSB	3	32T8/CW/RS	32	120	RECESSED	ACRYLIC	STATIC TROFFER
	E	LITHONIA OR EQUAL	2SPGA432A12.125277SSB	4	32T8/CW/RS	32	277	RECESSED	ACRYLIC	RETURN AIR TROFFER
	F	LITHONIA OR EQUAL	2PM3GA33424277ES	3	F40T12/CW/RS	34	277	RECESSED	PARABOLIC	RETURN AIR PARABOLIC TROFFER & ENERGY EFFICIENT BALLAST. DOUBLE SWITCHING
	G	LITHONIA OR EQUAL	2SPGA332A12.125277SSB	3	32T8/CW/RS	32	277	RECESSED	ACRYLIC	RETURN AIR TROFFER
	H	LITHONIA OR EQUAL	2SPGA2U32A12.125277SSB	3	32T8/CW/RS	32	277	RECESSED	ACRYLIC	RETURN AIR TROFFER
	J	LITHONIA OR EQUAL	WC232A277SSB	2	32T8/CW/RS	32	277	WALL	ACRYLIC	–
	J1	LITHONIA OR EQUAL	WC232A120SSB	2	32T8/CW/RS	32	120	WALL	ACRYLIC	SUITABLE FOR DAMP LOCATION
	K	LITHONIA OR EQUAL	RL2S WITH LP	1	A19 75 WATT	75	120	RECESSED	POLY CARBONATE	SHOWER LIGHT, SUITABLE FOR WET LOCATION
	L	LITHONIA OR EQUAL	AF10232277SSB	2	32T8/CW/RS	32	277	PENDANT/ SURFACE	–	INDUSTRIAL TYPE, 10% UPLIGHT
	M	LITHONIA OR EQUAL	AF10332277SSB	3	32T8/CW/RS	32	277	PENDANT/ SURFACE	–	INDUSTRIAL TYPE, 10% UPLIGHT
	N	LITHONIA OR EQUAL	AW332A277SSB	3	32T8/CW/RS	32	277	SURFACE	ACRYLIC	WITH HIGH IMPACT PRISMATIC ACRYLIC
	P	LITHONIA OR EQUAL	A6WB	1	A19 100 WATT	100	120	RECESSED	–	MICROGROOVED MATTE BLACK BAFFLE
	P1	LITHONIA OR EQUAL	A6BC	1	A19 100 WATT	100	120	RECESSED	–	BLACK OPEN BAFFLE, FOR DRYWALL CEILING
	Q	MORLITE EQUIPMENT CO. OR EQUAL	CWX-BS-430-X1-FNL-120	4	F30T12/CW/RS	30	120	WALL MOUNTED	POLY CARBONATE	FIXTURE WITH NIGHT LIGHT
	T	LITHONIA OR EQUAL	F3400MFWC73TAR12-QRS	1	M400/C/U WITH 250W QUARTZ LAMP	400	277	RECESSED	IMPACT RESISTANT	HID FIXTURE WITH MH LAMP, EQUIPPED WITH HOT RESTRIKE LAMP, VANDAL PROOF
	T1	LITHONIA OR EQUAL	F3250MFWC73TAR12-QRS	1	M250/C/U WITH 175W QUARTZ LAMP	250	277	RECESSED	IMPACT RESISTANT	HID FIXTURE WITH MH LAMP, EQUIPPED WITH HOT RESTRIKE LAMP, VANDAL PROOF
	U	MCPHILBEN OR EQUAL	3R4845JB277V	1	MV 100 WATT, A-23	100	277	RECESSED	PRISMATIC	SUITABLE FOR EXTERIOR WET LOCATION
	V	LITHONIA OR EQUAL	TWH250M277QRSCRDMB	1	M250U w/175W QUARTZ LAMP	175	277	WALL	TEMPERED	SUITABLE FOR EXTERIOR WET LOCATION WITH QUARTZ RESTRIKE LAMP, VANDAL PROOF
	X	LITHONIA OR EQUAL	UN132120SSB	1	32T8/CW/RS	32	120	PENDANT/ SURFACE	–	BARE STRIP, GENERAL PURPOSE
	Y	LITHONIA OR EQUAL	KAS2400 MR (TYPE III OR IV) 277QRS-DMB	–	MH 400 WATT WITH 250W QUARTZ LAMP	400	277	POLE MTD	TEMPERED	POLE MTD, POLE 30' LONG, 5" SQUARE STRAIGHT NO. OF LUMINAIRES & DISTRIBUTION TYPE AS INDICATED ON DWG, WITH QUARTZ RESTRIKE
	Z	LITHONIA OR EQUAL	RCIA WITH LQ	2	PL LAMP	13	277	RECESSED	–	SUITABLE FOR GRID CEILING
	Z1	LITHONIA OR EQUAL	RCIA WITH LQ	2	PL LAMP	13	277	RECESSED	–	SUITABLE FOR DRY WALL CEILING & DAMP LOCATION
	AA	FAIL SAFE OR EQUAL	FWR-D21-34027793-ESB-FNL-SF3	4	32T8/CW/RS	32	277	RECESSED	–	VANDAL PROOF & UNBREAKABLE LENS
	AB	BIM OR EQUAL	[illegible]UHPS277	1	70W HPS	70	277	DIRECT BURIAL	TEMPERED GLASS	SIGN LIGHT, VANDAL PROOF HOUSING AND GUARD
	AC	SPI OR EQUAL	E[illegible]	1	250W MH E[illegible]	250	277	WALL	–	①
	AD	FASS AND SETTIGER OR EQUAL	[illegible] WITH GUARD	1	60 WATT A19	60	120	WALL	–	WITH LAMP GUARD
	AE	LITHONIA OR EQUAL	VR4100S12HPSRSPEWL	1	100W HPS	100	120	SURFACE	POLY CARBONATE	WET LOCATION; WEATHER PROOF; VANDEL PROOF
		LITHONIA OR EQUAL	F2EP(1 OR 2) R277ELN	2	F511	–	277	UNIVERSAL	–	SIGNATURE SERIES, NUMBER OF FACES AS INDICATED, WITH BATTERY EMERGENCY PACK
		LITHONIA OR EQUAL	6ELM2277	2	DS N0806	–	277	WALL	–	QUANTUM SERIES,

NOTE:
① INDIRECT LIGHTING. COLOR SHALL BE SELECTED BY ARCHITECT. PROVIDE INFORMATION ABOUT COLORS AVAIBLABLE, WITH SHP DRAWING. NO ADDITIONAL COST SHALL BE ALLOWED FOR COLOR SELECTION

1650

ARCHITECTURAL TECHNOLOGIES, INC.
Architects and Construction Consultants
9192 Red Branch Road, Suite 300
Columbia, MD 21045 (301)995-4067

IN ASSOCIATION WITH :
CIVIL & GEOTECH ENGINEER: E B A ENGINEERING, INC.
STRUCTURAL ENGINEER: QODESH ENGINEERING SERVICES, INC.
MECHANICAL & ELECTRICAL ENGINEER: BHARGAVA INTERNATIONAL, INC.
FIRE PROTECTION ENGINEER: STANTON ENGINEERING

SEAL: Banerjeeta

REVISIONS
1 AS BUILT 11/24/94

SCHEDULES
LIGHTING FIXTURES AND MCC

HOWARD COUNTY
PUBLIC SAFETY COMPLEX

SCAGGSVILLE ANNEX
11226 ROUTE 216
LAUREL, MD 20707

CAPITAL PROJECT NO.
C – 0227

DATE:

DRAWING NO.
E7.2

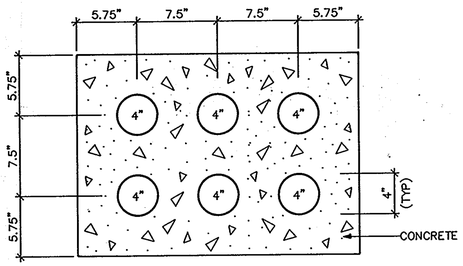

26.5" x 19.0"
SIX WAY – 4" DUCTBANK
NOT TO SCALE

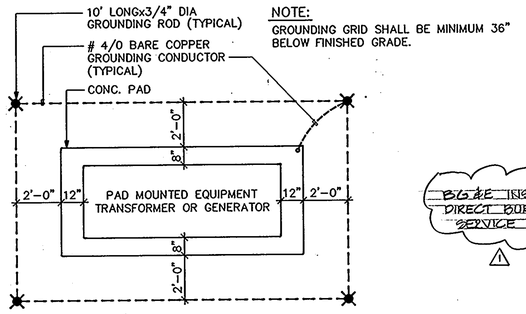

NOTE:
GROUNDING GRID SHALL BE MINIMUM 36" BELOW FINISHED GRADE.

GROUNDING GRID FOR PAD MOUNTED EQUIPMENT
NOT TO SCALE

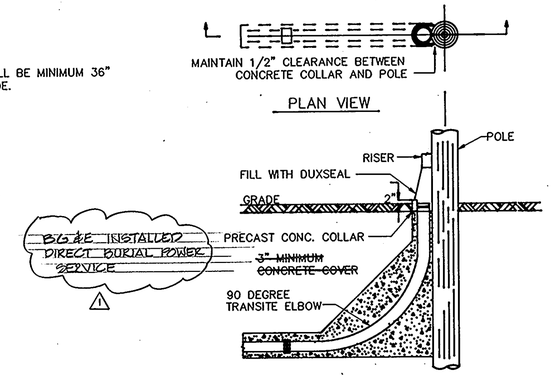

DETAIL–POLE RISER OVERHEAD TO UNDERGROUND CONSTRUCTION
NOT TO SCALE

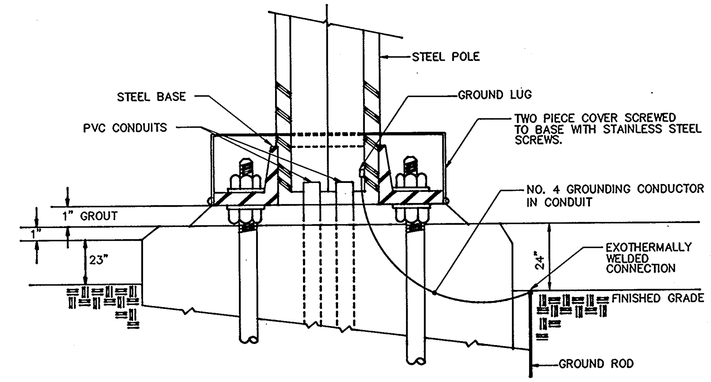

BASE DETAIL (LIGHTING STANDARD)
NOT TO SCALE

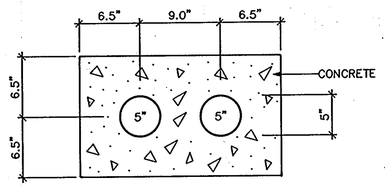

22.0" x 13.0"
TWO WAY – 5" DUCTBANK
NOT TO SCALE

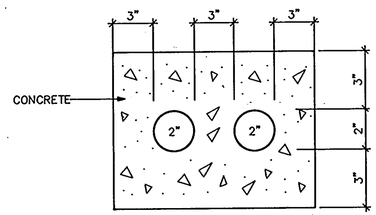

14.0" x 8.5"
TWO WAY – 2" DUCTBANK
NOT TO SCALE

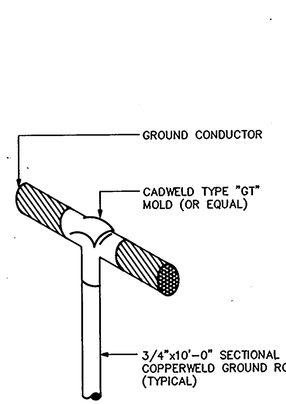

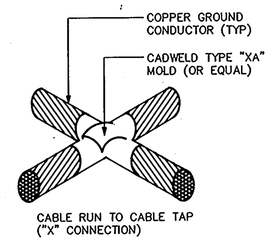

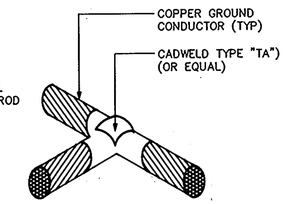

GROUND CONNECTION
NOT TO SCALE

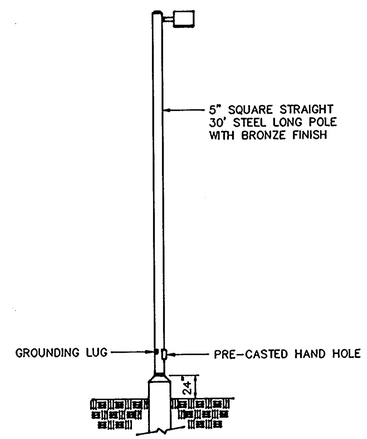

LIGHTING STANDARD
NOT TO SCALE

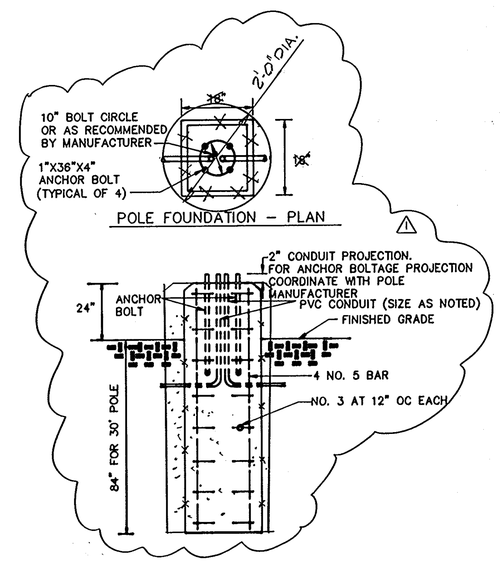

POLE FOUNDATION – ELEVATION
NOT TO SCALE

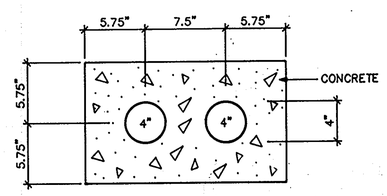

19.0" x 11.5"
TWO WAY – 4" DUCTBANK
NOT TO SCALE

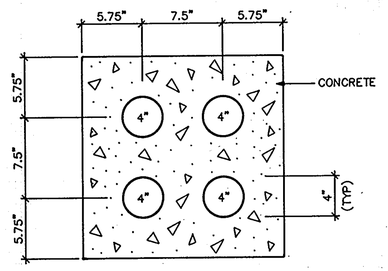

19.0" x 19.0"
FOUR WAY – 4" DUCTBANK
NOT TO SCALE

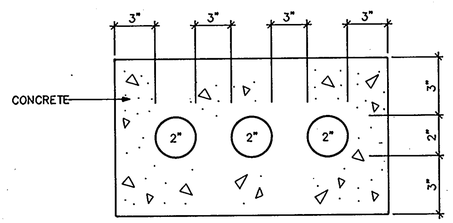

19.5" x 8.5"
THREE WAY – 2" DUCTBANK
NOT TO SCALE

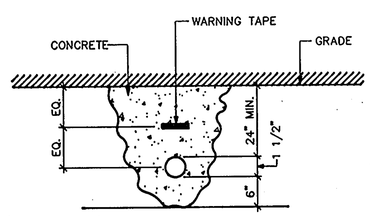

DIRECT BURIED–1 1/2" PVC FOR OUTSIDE LIGHTING
NOT TO SCALE

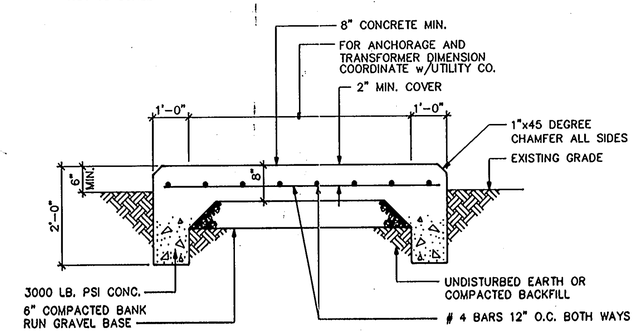

CONCRETE PAD DETAIL
NOT TO SCALE

1650

ARCHITECTURAL TECHNOLOGIES, INC.
Architects and Construction Consultants
9192 Red Branch Road, Suite 300
Columbia, MD 21045 (301)995-4067

IN ASSOCIATION WITH :

CIVIL & GEOTECH ENGINEER:	E B A ENGINEERING, INC.
STRUCTURAL ENGINEER:	QODESH ENGINEERING SERVICES, INC.
MECHANICAL & ELECTRICAL ENGINEER:	BHARGAVA INTERNATIONAL, INC.
FIRE PROTECTION ENGINEER:	STANTON ENGINEERING

SEAL:

REVISIONS
1 AS BUILT 11/24/94

DETAILS

HOWARD COUNTY PUBLIC SAFETY COMPLEX

SCAGGSVILLE ANNEX
11226 ROUTE 216
LAUREL, MD 20707

CAPITAL PROJECT NO. C – 0227

DATE: 3/25/92

DRAWING NO. E8.1

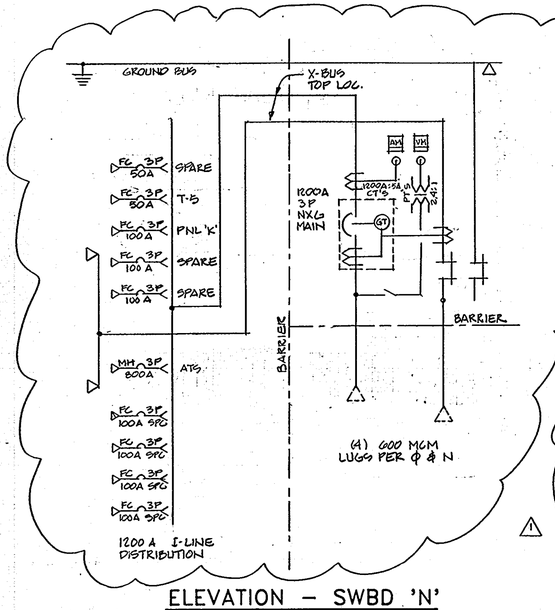

ELEVATION – SWBD 'N'

NOT TO SCALE

SWITCHBOARD: "SWBD 'N' "
MIN. AIC: 42,000
ENCL. NEMA: 1
LOCATION: ELECTRICAL ROOOM 117
BUS RATING: 1200 AMPS.
VOLTS: 480Y/277
MOUNTING: SELF STANDING
NODE#: –
MAIN O.C. DEVICE OR MLO: MCB 1200 AMP
PHASE(S): 3 WIRES: 4 + 1 GW
BRANCH CIRCUIT DEVICES: CIRCUIT BREAKERS
NOTES: 90"H x 78"W x 24"D

CIRCUIT NO.	ITEM SERVED	CIRCUIT BREAKER			CIRCUIT			REMARKS
		AMPERE	TRIP AMPERE	POLE	WIRE	GRD	C	
1A	MAIN CIRCUIT BREAKER	1200	1100 ◇	3	–	–	–	◇
1B	GROUND FAULT PROTECTION	–	–	–	–	–	–	
1C	METERING	–	–	–	–	–	–	–
2A	AUTOMATIC TRANSFORMER SWITCH	800	800	3	–	–	–	◇
2BL	SPARE	100	100	3	–	–	–	–
2BR	SPACE	–	–	3	–	–	–	–
2CL	SPARE	100	100	3	–	–	–	–
2CR	PANELBOARD 'K'	100	100	3	–	–	–	◇
2DL	TRANSFORMER T5	100	50	3	–	–	–	◇
2DR	SPARE	100	50	3	–	–	–	–
2EL	SPACE	–	–	–	–	–	–	–
2ER	SPACE	–	–	–	–	–	–	–

◇ REFER TO ONE LINE DIAGRAM
◇ ASJUSTABLE UPTO 1200 AMP.

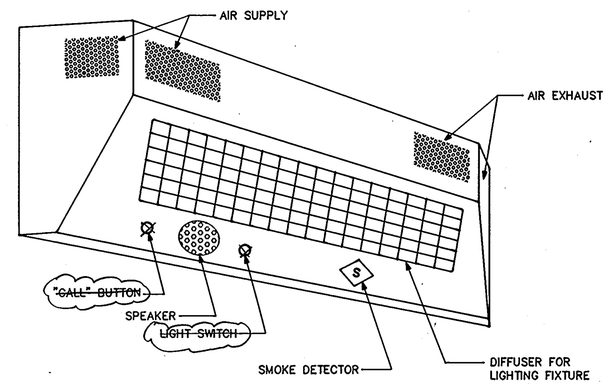

DETAIL – TYPE 'Q' LIGHTING FIXTURE

NOT TO SCALE

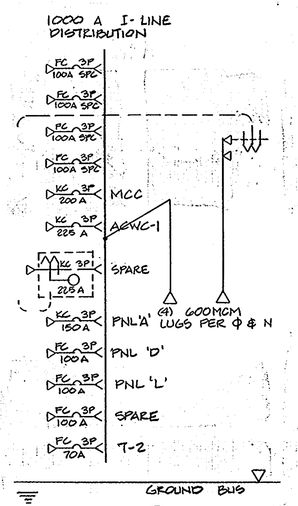

ELEVATION – SWBD 'E'

NOT TO SCALE

SWITCHBOARD: "SWBD 'E' "
MIN. AIC: 42,000
ENCL. NEMA: 1
LOCATION: ELECTRICAL ROOM 117
BUS RATING: 1000 AMPS.
VOLTS: 480Y/277
MOUNTING: SELF STANDING
NODE#: –
MAIN O.C. DEVICE OR MLO: MLO
PHASE(S): 3 WIRES: 4 + 1 GW
BRANCH CIRCUIT DEVICES: CIRCUIT BREAKERS
NOTES: 90"H x 42"W x 24"D

CIRCUIT NO.	ITEM SERVED	CIRCUIT BREAKER			CIRCUIT			REMARKS
		AMPERE	TRIP AMPERE	POLE	WIRE	GRD	C	
1A	MAIN LUGS ONLY	–	–	3	–	–	–	◇
1BL	MOTOR CONTROL CENTER – MCC	200	200	3	–	–	–	◇
1BR	SPACE	–	–	3	–	–	–	–
1CL	ACWC-1	400	225	3	–	–	–	◇
1CR	PANELBOARD 'C'	100	100	3	–	–	–	◇
1DL	TRANSFORMER T-2	100	70	3	–	–	–	◇
1DR	SPARE	400	225	3	–	–	–	–
1EL	SPARE	100	100	3	–	–	–	–
1ER	PANELBOARD 'D'	200	150	3	–	–	–	◇
1FL	PANELBOARD 'A'	100	100	3	–	–	–	◇
1FR	SPACE	–	–	3	–	–	–	–
1GL	SPACE	–	–	3	–	–	–	–
1GR	SPACE	–	–	3	–	–	–	–

◇ REFER TO ONE LINE DIAGRAM

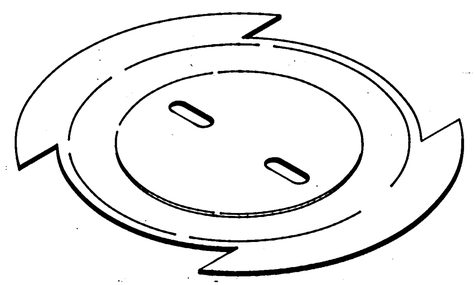

DETAIL – FLOOR BOX COVER PLATE

NOT TO SCALE

1650

ARCHITECTURAL TECHNOLOGIES, INC.
Architects and Construction Consultants
9192 Red Branch Road, Suite 300
Columbia, MD 21045 (301)995-4067

IN ASSOCIATION WITH :
CIVIL & GEOTECH ENGINEER: E B A ENGINEERING, INC.
STRUCTURAL ENGINEER: QODESH ENGINEERING SERVICES, INC.
MECHANICAL & ELECTRICAL ENGINEER: BHARGAVA INTERNATIONAL, INC.
FIRE PROTECTION ENGINEER: STANTON ENGINEERING

SEAL

REVISIONS
1 AS BUILT 11/24/94

DETAILS

HOWARD COUNTY PUBLIC SAFETY COMPLEX

SCAGGSVILLE ANNEX
11226 ROUTE 216
LAUREL, MD 20707

CAPITAL PROJECT NO. C – 0227
DATE: 3/25/92
DRAWING NO. E8.2

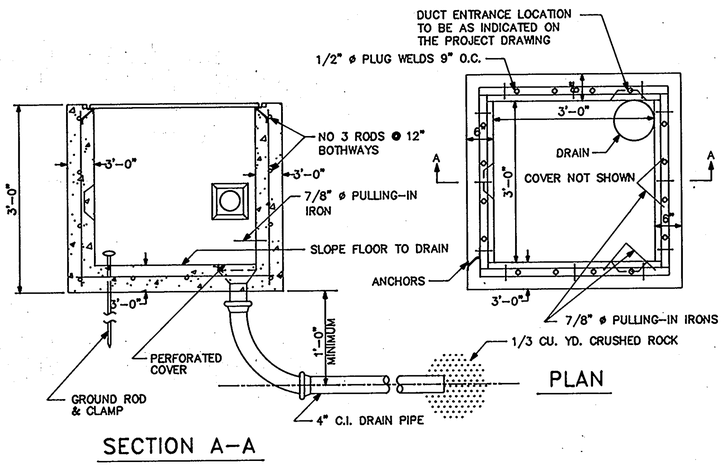

3'x3'x3' HANDHOLE DETAIL
NOT TO SCALE

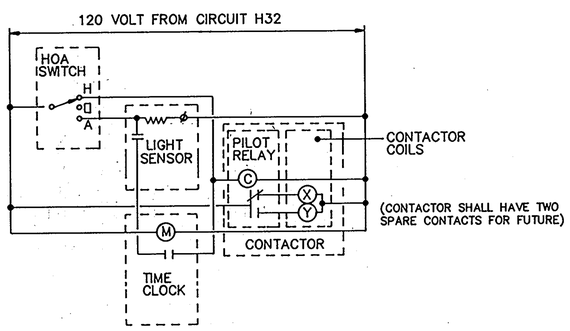

EXTERIOR LIGHTING CONTROL DIAGRAM (FIRE STATION)
NO SCALE E16007

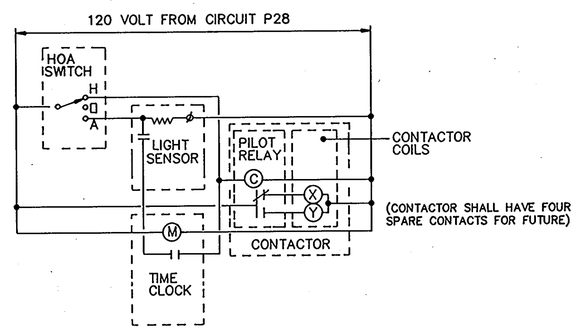

EXTERIOR AND SITE LIGHTING CONTROL DIAGRAM (PHASE -1)
NO SCALE E16007

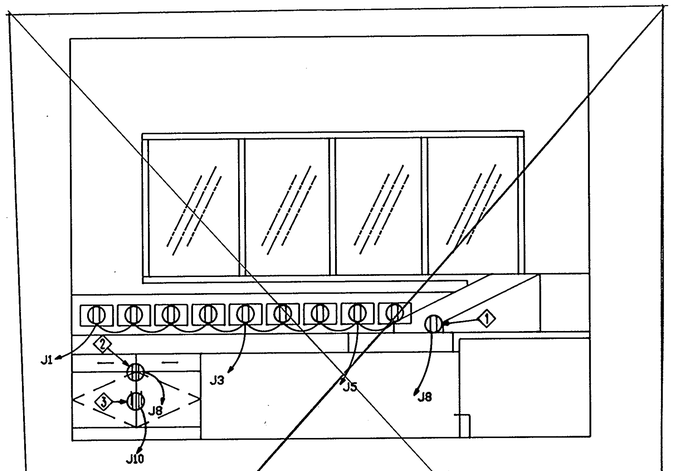

1. PROVIDE RECEPTACLE AND BRANCH CIRCUIT WIRING FOR 14" MONITOR. FOR EXACT LOCATION COORDINATE WITH ARCH. DRAWINGS.
2. PROVIDE RECEPTACLE AND BRANCH CIRCUIT WIRING AS INDICATED FOR VCR. FOR EXACT LOCATION, COORDINATE WITH ARCH. DRAWINGS.
3. PROVIDE RECEPTACLE FOR QUAD AND OTHER CCTV DEVICES AND BRANCH CIRCUIT WIRING AS INDICATED. FOR EXACT LOCATIONS, REFER TO ARCH. DRAWINGS.

COUNTER △1
NO SCALE

1650

ARCHITECTURAL TECHNOLOGIES, INC.
Architects and Construction Consultants
9192 Red Branch Road, Suite 300
Columbia, MD 21045 (301)995-4067

IN ASSOCIATION WITH :

CIVIL & GEOTECH ENGINEER:	E B A ENGINEERING, INC.
STRUCTURAL ENGINEER:	QODESH ENGINEERING SERVICES, INC.
MECHANICAL & ELECTRICAL ENGINEER:	BHARGAVA INTERNATIONAL, INC.
FIRE PROTECTION ENGINEER:	STANTON ENGINEERING

SEAL:

REVISIONS
△1 AS BUILT 11/24/94

DETAILS

HOWARD COUNTY PUBLIC SAFETY COMPLEX

SCAGGSVILLE ANNEX
11226 ROUTE 216
LAUREL, MD 20707

CAPITAL PROJECT NO. C - 0227
DATE: 3/25/92
DRAWING NO. E8.3

PANELBOARD: A | BUS RATING: 225 AMP | MAIN O.C. DEVICE OR MLO: MLO
MINIMUM AIC: 14,000 | VOLTS: 480Y/277 | PHASE (S): 3 | WIRES: 4+1GW
ENCL. NEMA: 1 | MOUNTING: SURFACE | BRANCH CIRCUIT DEVICE: BOLT-ON CB
LOCATION: ROOM 117 | NOTES: EMERGENCY POWER (1)

ITEM DESCRIPTION	WIRES	GRD	C	CB P	CB TA	SOPN	SOPN	CB P	CB TA	WIRES	GRD	C	ITEM DESCRIPTION
VAV BOXES RM 113, 079	-	-	-	1	20	1	2	1	20	-	-	-	VAV BOX RM 105, 106
VAV BOXES RM 092	-	-	-	1	20	3	4	1	20	-	-	-	VAV BOX RM 110, 111
VAV BOXES RM 093	-	-	-	1	20	5	6	1	15	-	-	-	VAV BOX RM 109
LTG RM 116,117	-	-	-	1	20	7	8	1	15	-	-	-	VAV BOX RM 071, 093
LTG NIGHT & EXIT LIGHTS	-	-	-	1	20	9	10	1	20	-	-	-	ENGINE JACKET WATER HEATER
LTG CORRIDOR & RM 114, 115	-	-	-	1	20	11	12	1	20	-	-	-	SPARE
SPARE	-	-	-	1	20	13	14	1	20	-	-	-	SPARE
SPARE	-	-	-	1	20	15	16	1	20	-	-	-	SPARE
SPARE	-	-	-	1	20	17	18	1	20	-	-	-	SPARE
SPACE	-	-	-	1	-	19	20	1	-	-	-	-	SPACE
SPACE	-	-	-	1	-	21	22	1	-	-	-	-	SPACE
SPACE	-	-	-	1	-	23	24	1	-	-	-	-	SPACE
SPACE NOT AVAILABLE				-	-	25	26	-	-	-	-	-	-
				-	-	27	28	3	100	-	-	-	XFMR T1 75 KVA (2)
				-	-	29	30	-	-	-	-	-	-

PANELBOARD: C | BUS RATING: 100 AMP | MAIN O.C. DEVICE OR MLO: MCB 100A
MINIMUM AIC: 14,000 | VOLTS: 480Y/277 | PHASE (S): 3 | WIRES: 4+1GW
ENCL. NEMA: 1 | MOUNTING: RECESSED | BRANCH CIRCUIT DEVICE: BOLT-ON CB
LOCATION: CONTROL ROOM #58 | NOTES: EMEREGENCY POWER (1)

ITEM DESCRIPTION	WIRES	GRD	C	CB P	CB TA	SOPN	SOPN	CB P	CB TA	WIRES	GRD	C	ITEM DESCRIPTION
VAV BOXES RM 058	-	-	-	1	20	1	2	1	20	-	-	-	VAV BOXES RM 069
VAV BOXES RM 058	-	-	-	1	20	3	4	1	20	-	-	-	LTG CORRIDOR 37,40,49,54
VAV BOXES RM 054,057	-	-	-	1	20	5	6	1	20	-	-	-	LTG RM 55,56,70-72,76
LTG RM 058-061	-	-	-	1	20	7	8	1	20	-	-	-	LTG RM 68,83,77,79,80
LTG RM 057, 058	-	-	-	1	20	9	10	1	20	-	-	-	LTG RM 65, 66, 69
LTG RM 063, 064, 067	-	-	-	1	20	11	12	1	20	-	-	-	LTG EXIT
EXTERIOR LTG	-	-	-	1	20	13	14	-	-	-	-	-	-
EXTERIOR LTG	-	-	-	1	20	15	16	3	15	-	-	-	ROLLING DOOR RM 067
EXTERIOR PARKING LTG	-	-	-	1	20	17	18	-	-	-	-	-	-
EXTERIOR PARKING LTG	-	-	-	1	20	19	20	1	20	-	-	-	LTG LOBBY 071
EXTERIOR PARKING LTG	-	-	-	1	20	21	22	1	20	-	-	-	SPARE
EXTERIOR PARKING LTG	-	-	-	1	20	23	24	1	20	-	-	-	SPARE
SPARE	-	-	-	1	20	25	26	1	20	-	-	-	SPARE
SPARE	-	-	-	1	20	27	28	1	20	-	-	-	SPARE
SPARE	-	-	-	1	20	29	30	1	20	-	-	-	SPARE

PANELBOARD: D | BUS RATING: 225 AMP | MAIN O.C. DEVICE OR MLO: MCB 150A
MINIMUM AIC: 14,000 | VOLTS: 480Y/277 | PHASE (S): 3 | WIRES: 4+1GW
ENCL. NEMA: 1 | MOUNTING: SUFACE | BRANCH CIRCUIT DEVICE: BOLT-ON CB
LOCATION: FIRE STATION RM 014 | NOTES: EMERGENCY POWER (1)

ITEM DESCRIPTION	WIRES	GRD	C	CB P	CB TA	SOPN	SOPN	CB P	CB TA	WIRES	GRD	C	ITEM DESCRIPTION
VAV BOXES RM 022,025 & 030	-	-	-	1	20	1	2	-	-	-	-	-	-
VAV BOXES RM 003	-	-	-	1	20	3	4	3	70	-	-	-	PANEL 'L' (2)
VAV BOXES RM 013,016	-	-	-	1	20	5	6	-	-	-	-	-	-
-	-	-	-	-	-	7	8	-	-	-	-	-	-
OVERHEAD DOORS	-	-	-	3	15	9	10	3	70	-	-	-	TRANSFORMER T3, 45KVA (2)
-	-	-	-	-	-	11	12	-	-	-	-	-	-
-	-	-	-	-	-	13	14	-	-	-	-	-	-
OVERHEAD DOORS	-	-	-	3	15	15	16	3	-	-	-	-	SPACE
-	-	-	-	-	-	17	18	-	-	-	-	-	-
SPARE	-	-	-	1	20	19	20	1	20	-	-	-	SPARE
SPARE	-	-	-	1	20	21	22	1	20	-	-	-	SPARE
SPARE	-	-	-	1	20	23	24	1	20	-	-	-	SPARE
SPACE	-	-	-	1	-	25	26	-	-	-	-	-	SPACE
SPACE	-	-	-	1	-	27	28	-	-	-	-	-	SPACE
SPACE	-	-	-	1	-	29	30	-	-	-	-	-	SPACE

PANELBOARD: E | BUS RATING: 225 AMP | MAIN O.C. DEVICE OR MLO: 225 AMP
MINIMUM AIC: 10,000 | VOLTS: 208Y/180 | PHASE (S): 3 | WIRES: 4+1GW
ENCL. NEMA: 1 | MOUNTING: SURFACE | BRANCH CIRCUIT DEVICE: NOLT-ON CB
LOCATION: ROOM 117 | NOTES: EMERGENCY POWER (1)

ITEM DESCRIPTION	WIRES	GRD	C	CB P	CB TA	SOPN	SOPN	CB P	CB TA	WIRES	GRD	C	ITEM DESCRIPTION
RECEPT RM 117	-	-	-	1	20	1	2	1	20	-	-	-	RECEPT WIREMOLD 110
RECEPT TM 117	-	-	-	1	20	3	4	1	20	-	-	-	RECEPT WIREMOLD 110
RECEPT RM 96, 97	-	-	-	1	20	5	6	1	20	-	-	-	RECEPT WIREMOLD 110
DEDICATED RECEPT RM 94	-	-	-	1	20	7	8	1	20	-	-	-	RECEPT RM 116, 117
DEDICATED RECEPT RM 94	-	-	-	1	20	9	10	1	20	-	-	-	RECEPT RM 84-86
DEDICATED RECEPT RM 94	-	-	-	1	20	11	12	1	20	-	-	-	RECEPT RM 091
DEDICATED RECEPT RM 109	-	-	-	1	20	13	14	1	20	-	-	-	FUEL TRANSFER PUMPS CONTROL PANEL
DWH - MECH. ROOM	-	-	-	1	15	15	16	1	20	-	-	-	RELOCATED U/G TANK ANNUNICATOR PANEL
PDHW - MECH. ROOM	-	-	-	1	20	17	18	1	20	-	-	-	FUEL PUMP IN DAY TANK
ATC PANEL (MECH RM)	-	-	-	1	20	19	20	-	-	-	-	-	-
FACP - ELECT. RM	-	-	-	1	20	21	22	3	70	-	-	-	PANEL 'J' (2)
FLOOR RECEPT RM 091	-	-	-	1	20	23	24	-	-	-	-	-	-
PROJECTOR SCREEN RM 091	-	-	-	1	20	25	26	1	20	-	-	-	SPARE
BATTERY CHARGER FOR GENERATOR	-	-	-	1	20	27	28	1	20	-	-	-	SPARE
SPARE	-	-	-	1	20	29	30	1	20	-	-	-	SPARE
SPACE	-	-	-	1	-	31	32	1	20	-	-	-	SPARE
SPACE	-	-	-	1	-	33	34	1	20	-	-	-	SPARE
SPACE	-	-	-	1	-	35	36	1	20	-	-	-	SPARE
SPACE NOT AVAILABLE						37	38	-	-	-	-	-	-
						39	40	3	100	-	-	-	PANEL 'P' (2)
						41	42	-	-	-	-	-	-

PANELBOARD: F | BUS RATING: 100 AMP | MAIN O.C. DEVICE OR MLO: MLO
MINIMUM AIC: 10,000 | VOLTS: 208Y/120 | PHASE (S): 3 | WIRES: 4+1GW
ENCL. NEMA: 1 | MOUNTING: SURFACE | BRANCH CIRCUIT DEVICE: BOLT-ON CB
LOCATION: ELECT. RM 117 | NOTES: NORMAL POWER (1)

ITEM DESCRIPTION	WIRES	GRD	C	CB P	CB TA	SOPN	SOPN	CB P	CB TA	WIRES	GRD	C	ITEM DESCRIPTION
RECEPT RM 071	-	-	-	1	20	1	2	1	20	-	-	-	RECEPT RM 080,081
RECEPT RM 074	-	-	-	1	20	3	4	1	20	-	-	-	RECEPT RM 75-76, 81, 92
RECEPT RM 073	-	-	-	1	20	5	6	1	20	-	-	-	RECEPT EWC RM 71
SPARE	-	-	-	1	20	7	8	1	20	-	-	-	SOLENOID VALVE RM 116
SPARE	-	-	-	1	20	9	10	1	20	-	-	-	SPARE
SPARE	-	-	-	1	20	11	12	1	20	-	-	-	SPARE
SPACE	-	-	-	1	-	13	14	1	20	-	-	-	SPARE
SPACE	-	-	-	1	-	15	16	1	20	-	-	-	SPARE
SPACE	-	-	-	1	-	17	18	1	20	-	-	-	SPARE
SPACE	-	-	-	1	-	19	20	1	20	-	-	-	SPARE
SPACE	-	-	-	1	-	21	22	1	20	-	-	-	SPARE
SPACE	-	-	-	1	-	23	24	1	20	-	-	-	SPARE
SPACE	-	-	-	1	-	25	26	1	-	-	-	-	SPACE
SPACE	-	-	-	1	-	27	28	1	-	-	-	-	SPACE
SPACE	-	-	-	1	-	29	30	1	-	-	-	-	SPACE

PANELBOARD: H | BUS RATING: 225 AMP | MAIN O.C. DEVICE OR MLO: MCB 150A
MINIMUM AIC: 10,000 | VOLTS: 208Y/120V | PHASE (S): 3 | WIRES: 4+1GW
ENCL. NEMA: 1 | MOUNTING: SURFACE | BRANCH CIRCUIT DEVICE: BOLT-ON CB
LOCATION: FIRE STATION ROOM #014 | NOTES: EMERGENCY POWER (1)

ITEM DESCRIPTION	WIRES	GRD	C	CB P	CB TA	SOPN	SOPN	CB P	CB TA	WIRES	GRD	C	ITEM DESCRIPTION
RECEPT RM 001	-	-	-	1	20	1	2	1	20	-	-	-	RECEPT RM 017 REFRIGERATOR
RECEPT RM 001	-	-	-	1	20	3	4	1	20	-	-	-	AUTOMATIC LIGHTS ON SYSTEM CONTROL PANEL
RECEPT RM 018	-	-	-	1	20	5	6	1	20	-	-	-	EXTERIOR TYPE 'Y' FIXTURE CONTROL PANEL
RECEPT RM 020	-	-	-	1	20	7	8	1	20	-	-	-	EMERGENCY RESPONSE SYSTEM HORN
RECEPT RM 020 WIREMOLD	-	-	-	1	20	9	10	1	20	-	-	-	DOOR BELL SYSTEM BELL AND HORN
RECEPT RM 020 WIREMOLD	-	-	-	1	20	11	12	1	20	-	-	-	RECEPT RM 024, 025, P30
RECEPT RM 019	-	-	-	1	20	13	14	1	15	-	-	-	UH-1 AND UH-2 RM 019
RECEPT RM 019	-	-	-	1	20	15	16	1	15	-	-	-	UH-1 AND UH-2 RM 019
UH'S AND REF'S RM 021, 033, 034	-	-	-	1	15	17	18	1	15	-	-	-	UH-1 AND EF-1 RM 018,009
LTG STORE AND SHOWER	-	-	-	1	20	19	20	1	20	-	-	-	SPARE
SPARE	-	-	-	1	20	21	22	1	20	-	-	-	SPARE
SPARE	-	-	-	1	20	23	24	1	20	-	-	-	SPARE
SPARE	-	-	-	1	20	25	26	1	20	-	-	-	SPARE
FIRE CONSOLE	-	-	-	1	20	27	28	1	20	-	-	-	CUH-1 RM 001,022 + UH-1
OVERHEAD CORD REELS	-	-	-	1	20	29	30	1	20	-	-	-	J.B. ABOVE DOOR RM 022
GAS FUEL PUMP	2#10	1#10	1"	1	20	31	32	1	20	-	-	-	SPARE
GAS FUEL PUMP AND LIGHTS	2#10	1#10	1"	1	20	33	34	1	20	-	-	-	SPARE
SPARE	-	-	-	1	20	35	36	-	-	-	-	-	SPARE
SPACE NOT AVAILABLE						37	38	-	-	-	-	-	-
						39	40	3	90	-	-	-	PANEL 'T' (2)
						41	42	-	-	-	-	-	-

DRAWING NOTES:

(1) UNLESS OTHERWISE INDICATED, ALL WIRES FOR BRANCH CIRCUIT WIRING SHALL BE 2#12 AWG AND 1#12 GW -3/4" CONDUIT.

(2) FOR WIRE AND RACEWAY SIZES, REFER TO ONE LINE DIAGRAM ON DRAWING E6.1.

1650

ARCHITECTURAL TECHNOLOGIES, INC.
Architects and Construction Consultants
9192 Red Branch Road, Suite 300
Columbia, MD 21045 (301)995-4067

IN ASSOCIATION WITH :
CIVIL & GEOTECH ENGINEER: E B A ENGINEERING, INC.
STRUCTURAL ENGINEER: QODESH ENGINEERING SERVICES, INC.
MECHANICAL & ELECTRICAL ENGINEER: BHARGAVA INTERNATIONAL, INC.
FIRE PROTECTION ENGINEER: STANTON ENGINEERING

SEAL:

REVISIONS

PANELBOARD SCHEDULES

HOWARD COUNTY
PUBLIC SAFETY COMPLEX

SCAGGSVILLE ANNEX
11226 ROUTE 216
LAUREL, MD 20707

CAPITAL PROJECT NO. C - 0227
DATE: 3/25/92
DRAWING NO. E9.1

PANELBOARD: J | BUS RATING: 100 AMP | MAIN O.C. DEVICE OR MLO: MCB 70A
MINIMUM AIC: 10,000 | VOLTS: 208Y/120 | PHASE (S): 3 | WIRES: 4+1GW
ENCL. NEMA: 1 | MOUNTING: SURFACE | BRANCH CIRCUIT DEVICE: BOLT-ON CB
LOCATION: CONTROL ROOM 057 | NOTES: EMERGENCY POWER (1)

ITEM DESCRIPTION	WIRES	GRD	C	CB P	CB TA	SOPN	SOPN	CB P	CB TA	WIRES	GRD	C	ITEM DESCRIPTION
RECEPT FOR TV'S MONITOR	–	–	–	1	20	1	2	1	20	–	–	–	RECEPT WIREMOLD RM 057
RECEPT FOR TV'S MONITOR	–	–	–	1	20	3	4	1	20	–	–	–	RECEPT WIREMOLD RM 057
RECEPT FOR TV'S MONITOR	–	–	–	1	20	5	6	1	20	–	–	–	RECEPT WIREMOLD RM 057
CCTV CAMERAS	–	–	–	1	20	7	8	1	20	–	–	–	RECEPT FOR TV, 14" MONITOR AND VCR
CCTV CAMERAS	–	–	–	1	20	9	10	1	20	–	–	–	RECEPT FOR QUAD, OTHER DEVICES
CCTV CAMERAS	–	–	–	1	20	11	12	1	20	–	–	–	PAGING SYSTEM PANEL
CCTV CAMERAS	–	–	–	1	20	13	14	1	20	–	–	–	SPARE
SPARE	–	–	–	1	20	15	16	1	20	–	–	–	SPARE
SPARE	–	–	–	1	20	17	18	1	20	–	–	–	SPARE
SPARE	–	–	–	1	20	19	20	1	20	–	–	–	SPARE
SPARE	–	–	–	1	20	21	22	1	20	–	–	–	SPARE
SPARE	–	–	–	1	20	23	24	1	20	–	–	–	SPARE
SPACE	–	–	–	1	–	25	26	1	–	–	–	–	SPACE
SPACE	–	–	–	1	–	27	28	1	–	–	–	–	SPACE
SPACE	–	–	–	1	–	29	30	1	–	–	–	–	SPACE

PANELBOARD: K | BUS RATING: 100 AMP | MAIN O.C. DEVICE OR MLO: MLO
MINIMUM AIC: 14,000 | VOLTS: 480Y/277V | PHASE (S): 3 | WIRES: 4+1GW
ENCL. NEMA: 1 | MOUNTING: SURFACE | BRANCH CIRCUIT DEVICE: BOLT-ON CB
LOCATION: ROOM 117 | NOTES: NORMAL POWER (1)

ITEM DESCRIPTION	WIRES	GRD	C	CB P	CB TA	SOPN	SOPN	CB P	CB TA	WIRES	GRD	C	ITEM DESCRIPTION
LTG RM 105, 106	–	–	–	1	20	1	2	1	20	–	–	–	LTG RM 73, 74, 95, 96
LTG RM 94, 97, 99, 100, 109	–	–	–	1	20	3	4	1	20	–	–	–	SPARE
LTG RM 91, 111	–	–	–	1	20	5	6	1	20	–	–	–	SPARE
LTG RM 81, 84–86, 88–90	–	–	–	1	20	7	8	–	–	–	–	–	SPARE
LTG MEETING RM 110	–	–	–	1	20	9	10	3	70	–	–	–	~~TRANSFORMER T6, 45KVA~~ SPARE (2)
LTG MEETING RM 110	–	–	–	1	20	11	12	–	–	–	–	–	SPARE (1)
CUH-2 RM 072	–	–	–	1	20	13	14	1	20	–	–	–	SPARE
SPARE	–	–	–	1	20	15	16	1	20	–	–	–	SPARE
SPARE	–	–	–	1	20	17	18	1	20	–	–	–	SPARE
SPARE	–	–	–	1	20	19	20	1	20	–	–	–	SPARE
SPARE	–	–	–	1	20	21	22	1	20	–	–	–	SPARE
SPARE	–	–	–	1	20	23	24	1	20	–	–	–	SPARE
~~SPACE~~ XFMR T6 45KVA	–	–	–	1	–	25	26	1	–	–	–	–	SPACE
~~SPACE~~ XFMR T6 45KVA	–	–	–	1	–	27	28	1	–	–	–	–	SPACE
~~SPACE~~ XFMR T6 45KVA	–	–	–	1	–	29	30	1	–	–	–	–	SPACE

(1)

PANELBOARD: L | BUS RATING: 100 AMP | MAIN O.C. DEVICE OR MLO: MLO
MINIMUM AIC: 14,000 | VOLTS: 480Y/277 | PHASE (S): 3 | WIRES: 4+1GW
ENCL. NEMA: 1 | MOUNTING: SURFACE | BRANCH CIRCUIT DEVICE: BOLT-ON CB
LOCATION: ROOM 014 | NOTES: EMERGENCY POWER (1)

ITEM DESCRIPTION	WIRES	GRD	C	CB P	CB TA	SOPN	SOPN	CB P	CB TA	WIRES	GRD	C	ITEM DESCRIPTION
LTG RM 001, 002, 003, 009	–	–	–	1	20	1	2	1	20	–	–	–	LTG ENGINE BAY RM 019
LTG RM 010 – 017	–	–	–	1	20	3	4	1	20	–	–	–	LTG ENGINE BAY RM 019
NIGHT & EXIT LIGHTS	–	–	–	1	20	5	6	1	20	–	–	–	LTG ENGINE BAY RM 019
LTG RM 028, 030–034, 018	–	–	–	1	20	7	8	1	20	–	–	–	SPARE
LTG RM 020–025	–	–	–	1	20	9	10	1	20	–	–	–	SPARE
SPARE	–	–	–	1	20	11	12	1	20	–	–	–	EXTERIOR LIGHTING
SPARE	–	–	–	1	20	13	14	1	20	–	–	–	SPARE
SPARE	–	–	–	1	20	15	16	1	20	–	–	–	SPARE
SPARE	–	–	–	1	20	17	18	1	20	–	–	–	SPARE
SPACE	–	–	–	1	–	19	20	1	–	–	–	–	SPACE
SPACE	–	–	–	1	–	21	22	1	–	–	–	–	SPACE
SPACE	–	–	–	1	–	23	24	1	–	–	–	–	SPACE
SPACE	–	–	–	1	–	25	26	1	–	–	–	–	SPACE
SPACE	–	–	–	1	–	27	28	1	–	–	–	–	SPACE
SPACE	–	–	–	1	–	29	30	1	–	–	–	–	SPACE

PANELBOARD: T | BUS RATING: 100 AMP | MAIN O.C. DEVICE OR MLO: MCB 90 AMP
MINIMUM AIC: 10,000 | VOLTS: 208Y/120 | PHASE (S): 3 | WIRES: 4+1GW
ENCL. NEMA: 1 | MOUNTING: SURFACE | BRANCH CIRCUIT DEVICE: BOLT-ON CB
LOCATION: FRONT OF 017 | NOTES: MAIN CIRCUIT BREAKER WITH SHUNT TRIP (1)

ITEM DESCRIPTION	WIRES	GRD	C	CB P	CB TA	SOPN	SOPN	CB P	CB TA	WIRES	GRD	C	ITEM DESCRIPTION
RECEPT RANGE RM 017	2#4	1#8	1"	2	70	1	2	1	20	–	–	–	RECEPT COUNTER RM 017
–	–	–	–	–	–	3	4	1	20	–	–	–	RECEPT COUNTER RM 017
RECEPT COUNTER RM 017	–	–	–	1	20	5	6	1	20	–	–	–	RECEPT COUNTER RM 017
FOOD WASTE DISPOSER RM 017	–	–	–	1	20	7	8	1	20	–	–	–	HOOD LIGHT + EXH FAN
SPARE	–	–	–	1	20	9	10	1	20	–	–	–	SPARE
SPARE	–	–	–	1	20	11	12	1	20	–	–	–	SPARE
SPACE	–	–	–	1	–	13	14	1	–	–	–	–	SPACE
SPACE	–	–	–	1	–	15	16	1	–	–	–	–	SPACE
SPACE	–	–	–	1	–	17	18	1	–	–	–	–	SPACE
SPACE	–	–	–	1	–	19	20	1	–	–	–	–	SPACE

PANELBOARD: N | BUS RATING: 225 AMP | MAIN O.C. DEVICE OR MLO: MLO
MINIMUM AIC: 10,000 | VOLTS: 208Y/120 | PHASE (S): 3 | WIRES: 4+1GW
ENCL. NEMA: 1 | MOUNTING: SURFACE | BRANCH CIRCUIT DEVICE: BOLT-ON CB
LOCATION: FIRE STATION RM # 014 | NOTES: NORMAL POWER (1)

ITEM DESCRIPTION	WIRES	GRD	C	CB P	CB TA	SOPN	SOPN	CB P	CB TA	WIRES	GRD	C	ITEM DESCRIPTION
RECEPT DRYER	2 #8	1 #10	3/4"	2	45	1	2	1	20	–	–	–	RECEPT RM 022
–	–	–	–	–		3	4	1	20	–	–	–	RECEPT 002, 003
RECEPT WASHER	–	–	–	1	20	5	6	1	20	–	–	–	SPARE
RECEPT RM 010–012	–	–	–	1	20	7	8	1	20	–	–	–	RECEPT RM 014 016
RECEPT EWC RM 012	–	–	–	1	20	9	10	1	20	–	–	–	RECEPT RM 016
RECEPT RM 013	–	–	–	1	20	11	12	1	20	–	–	–	RECEPT EXTERIOR w/GFI
RECEPT RM 031–034	–	–	–	1	20	13	14	1	20	–	–	–	RECEPT EXTERIOR w/GFI
RECEPT RM 030	–	–	–	1	20	15	16	1	20	–	–	–	~~CUH-1~~ SPARE (1)
RECEPT RM 022,028,030	–	–	–	1	20	17	18	1	15	–	–	–	SPARE
RECEPT RM 022	–	–	–	1	20	19	20	1	20	–	–	–	CUH-1 CORRIDOR RM 012, 030 + UH-1 RM 016
RECEPT EWC RM 022	–	–	–	1	20	21	22	1	20	–	–	–	RECEPT RM 004, 005
RECEPT RM 024	–	–	–	1	20	23	24	1	20	–	–	–	RECEPT RM 006, 007
RECEPT RM 025	–	–	–	1	20	25	26	1	20	–	–	–	FLOOR RECEPT RM 030
DISHWASHER RM 017	–	–	–	1	20	27	28	2	30	2#10	1#10	3/4"	SPECIAL RECEPT RM 002
SPARE	–	–	–	1	20	29	30	–	–	–	–	–	–
SPARE	–	–	–	1	20	31	32	1	20	–	–	–	PROJECTOR SCREEN RM 030
SPARE	–	–	–	1	20	33	34	1	20	–	–	–	SPARE
SPARE	–	–	–	1	20	35	36	1	20	–	–	–	SPARE
SPACE	–	–	–	1	–	37	38	1	–	–	–	–	SPACE
SPACE	–	–	–	1	–	39	40	1	–	–	–	–	SPACE
SPACE	–	–	–	1	–	41	42	1	–	–	–	–	SPACE

PANELBOARD: P | BUS RATING: 225 AMP | MAIN O.C. DEVICE OR MLO: MCB 100A
MINIMUM AIC: 10,000 | VOLTS: 208Y/120 | PHASE (S): 3 | WIRES: 4+1GW
ENCL. NEMA: 1 | MOUNTING: * RECESSED | BRANCH CIRCUIT DEVICE: BOLT-ON CB
LOCATION: CONTROL RM #058 | NOTES: EMERGENCY POWER (1)

ITEM DESCRIPTION	WIRES	GRD	C	CB P	CB TA	SOPN	SOPN	CB P	CB TA	WIRES	GRD	C	ITEM DESCRIPTION
RECEPT RM 063,064,066,067	–	–	–	1	20	1	2	1	20	–	–	–	RECEPT RM 037,049,054,056
RECEPT RM 065,068,069	–	–	–	1	20	3	4	1	20	–	–	–	RECEPT RM 055
RECEPT RM 062-065, 040	–	–	–	1	20	5	6	1	20	–	–	–	RECEPT RM 058,057
RECEPT RM 059,060,069,070,080	–	–	–	1	20	7	8	1	20	–	–	–	RECEPT WIREMOLD 058
RECEPT RM 058, 070	–	–	–	1	20	9	10	1	20	–	–	–	RECEPT WIREMOLD 058
RECEPT RM 073, 074, 095	–	–	–	1	20	11	12	1	20	–	–	–	RECEPT WIREMOLD 058 (1)
LTG CELLS 045–048	–	–	–	1	20	13	14	1	20	–	–	–	~~DOOR CONTROLS (VESTIBULE)~~ SPARE
LTG CELLS 050–053 (1)	–	–	–	1	20	15	16	1	15	–	–	–	EXH FAN REF-7 1/4 HP
~~DOOR CONTROL~~ FUEL ISLAND SHUNT TRIP	–	–	–	1	20	17	18	1	15	–	–	–	EXHAUST FAN REF-6 AND REF-8, REF-5
DOOR CONTROL RM 037, 040, 049 DOOR CONTROL TO	–	–	–	1	20	19	20	1	20	–	–	–	LTG CELLS 041-044
DOOR CONTROL	–	–	–	1	20	21	22	1	20	–	–	–	LTG CELLS 035-039 (1)
DOOR CONTROL RM 054, 056 SECURITY PANEL	–	–	–	1	20	23	24	1	20	–	–	–	~~DOOR CONTROL RM 062-064~~ LIGHTS - BULLPEN
~~DOOR CONTROL RM 078, 070~~ DUCT SMOKE DET.	–	–	–	1	20	25	26	1	20	–	–	–	LIGHTING (1) BULL
DOOR CONTROL RM 072	–	–	–	1	20	27	28	1	20	–	–	–	~~EXTERIOR LTG CONTROL~~ SPARE
DOOR CONTROL RM 072	–	–	–	1	20	29	30	1	20	–	–	–	~~SLIDING DOOR CONTROLS RM 34-044~~ SPARE
~~SLIDING DOOR CONTROLS RM 050-053~~ SPARE (1)	–	–	–	1	20	31	32	1	20	–	–	–	~~SLIDING DOOR CONTROLS RM 035,036,038,39~~ SPARE
~~SLIDING DOOR CONTROLS RM 045-048~~ SPARE	–	–	–	1	20	33	34	1	20	–	–	–	PANIC STATION AND HORN
SPARE	–	–	–	1	20	35	36	1	20	–	–	–	EXHAUST FAN REF-18
~~SPARE~~ PNL PC	–	–	–	1	20 (GO)	37	38	1	20	–	–	–	~~SPARE~~ EXTERIOR LIGHT CONTROL
~~SPARE~~ PNL PC	–	–	–	1	20 (GO)	39	40	1	20	–	–	–	~~SPARE~~ EXTERIOR LIGHT CONTROL
~~SPARE~~ PNL PC (3)	–	–	–	1	20 (GO)	41	42	1	20	–	–	–	~~SPARE~~ PHOTOCELL (1)

PANELBOARD: Q | BUS RATING: 225 AMP | MAIN O.C. DEVICE OR MLO: MCB 150A
MINIMUM AIC: 10,000 | VOLTS: 208Y/120 | PHASE (S): 3 | WIRES: 4+1GW
ENCL. NEMA: 1 | MOUNTING: SURFACE | BRANCH CIRCUIT DEVICE: BOLT-ON CB
LOCATION: ROOM 117 | NOTES: NORMAL POWER (1)

ITEM DESCRIPTION	WIRES	GRD	C	CB P	CB TA	SOPN	SOPN	CB P	CB TA	WIRES	GRD	C	ITEM DESCRIPTION
RECEPT RM 084	–	–	–	1	20	1	2	1	20	–	–	–	RECEPT RM 114,115,087,112
RECEPT RM 085	–	–	–	1	20	3	4	1	20	–	–	–	RECEPT RM 088-090
RECEPT RM 086	–	–	–	1	20	5	6	1	20	–	–	–	RECEPT RM 091
RECEPT RM 094	–	–	–	1	20	7	8	1	20	–	–	–	RECEPT VENDING MACHINE
RECEPT RM 109	–	–	–	1	20	9	10	1	20	–	–	–	RECEPT VENDING MACHINE
RECEPT RM 111	–	–	–	1	20	11	12	1	20	–	–	–	RECEPT VENDIG MACHINE
RECEPT RM 111,116	–	–	–	1	20	13	14	1	20	–	–	–	~~RECEPT WIREMOLD RM 110~~ SPARE (2)
RECEPT RM 093,104,105	–	–	–	1	20	15	16	1	20	–	–	–	~~RECEPT WIREMOLD RM 110~~ SPARE
RECEPT 093, 100, 103	–	–	–	1	20	17	18	1	20	–	–	–	~~RECEPT WIREMOLD RM 110~~ SPARE
RECEPT RM 095	–	–	–	1	20	19	20	1	20	–	–	–	RECEPT RM 106
RECEPT RM 095,096	–	–	–	1	20	21	22	1	20	–	–	–	RECEPT RM 106
RECEPT RM 097, 099	–	–	–	1	20	23	24	1	20	–	–	–	RECEPT RM 106
RECEPT EXTERIOR w/GFI	–	–	–	1	20	25	26	1	15	–	–	–	EXHAUST FAN, REF-9,10
RECEPT EXTERIOR w/GFI	–	–	–	1	20	27	28	1	15	–	–	–	CUH-1 & UH-1
LTG REST RM 101-104	–	–	–	1	20	29	30	1	20	–	–	–	LTG MEETING RM 110, 111
LTG CONFERENCE RM	–	–	–	1	20	31	32	2	20	–	–	–	SPECIAL RECEPT RM 106
SPECIAL RECEPT RM 106	–	–	–	2	20	33	34	–	–	–	–	–	–
–	–	–	–	–	–	35	36	1	40	2#6	1#8	1"	OUTSIDE CONPRESSOR UNIT
SPACE NOT AVAILABLE	–	–	–	–	–	37	38	–	–	–	–	–	–
	–	–	–	–	–	39	40	3	100	–	–	–	PANEL 'F' (2)
	–	–	–	–	–	41	42	–	–	–	–	–	–

DRAWING NOTES:

1. UNLESS OTHERWISE INDICATED, ALL WIRES FOR BRANCH CIRCUIT WIRING SHALL BE 2#12 AWG AND 1#12 GW -3/4" CONDUIT.
2. FOR WIRE AND RACEWAY SIZES, REFER TO ONE LINE DIAGRAM ON DRAWING E6.1.

PANELBOARD SCHEDULES | 90 OF 90

ARCHITECTURAL TECHNOLOGIES, INC.
Architects and Construction Consultants
9192 Red Branch Road, Suite 300
Columbia, MD 21045 (301)995-4067

IN ASSOCIATION WITH :
CIVIL & GEOTECH ENGINEER: E B A ENGINEERING, INC.
STRUCTURAL ENGINEER: QODESH ENGINEERING SERVICES, INC.
MECHANICAL & ELECTRICAL ENGINEER: BHARGAVA INTERNATIONAL, INC.
FIRE PROTECTION ENGINEER: STANTON ENGINEERING

SEAL:

REVISIONS
3 CHANGE BULLETIN #3
1 AS BUILT 11/24/94

HOWARD COUNTY PUBLIC SAFETY COMPLEX
SCAGGSVILLE ANNEX
11226 ROUTE 216
LAUREL, MD 20707

CAPITAL PROJECT NO. C – 0227
DATE: 3/25/92
DRAWING NO. E9.2

1650