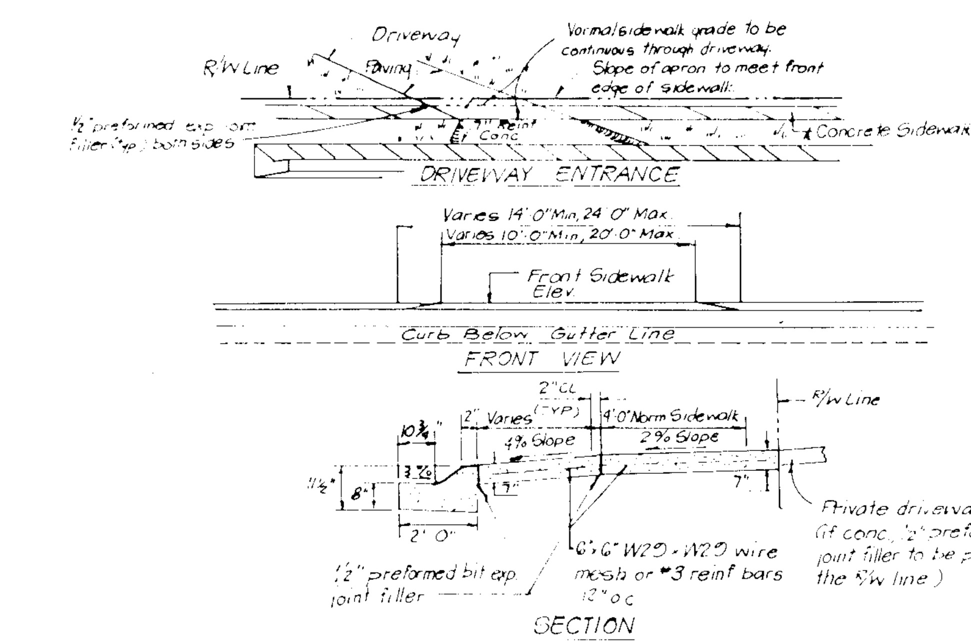

DRIVEWAY ABUTTING CLOSED SECTION WITH MODIFIED COMB. CURB & GUTTER & SIDEWALK

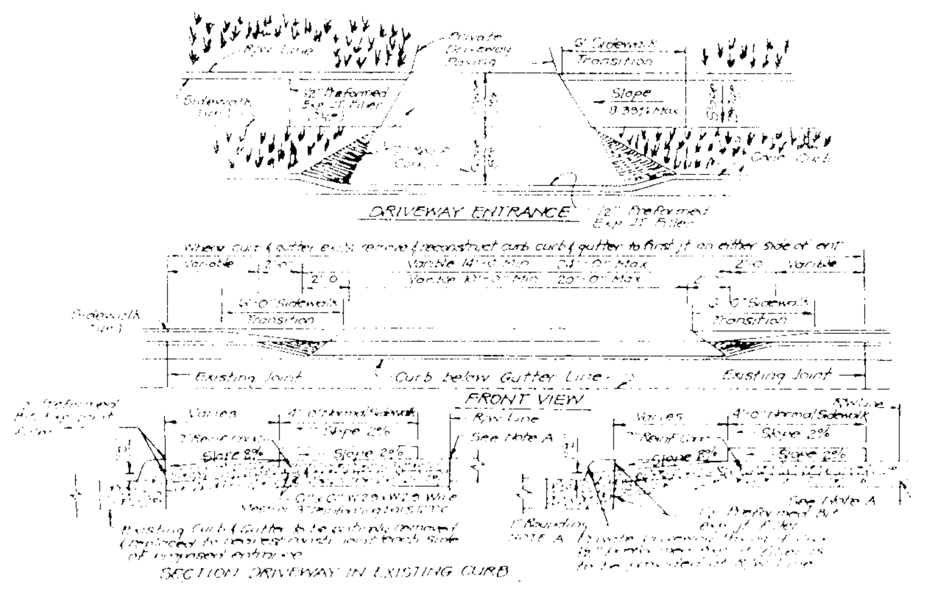

DRIVEWAY ABUTTING CLOSED SECTION WITH STD 7" COMB CURB & GUTTER & SIDEWALK SET BACK FROM CURB

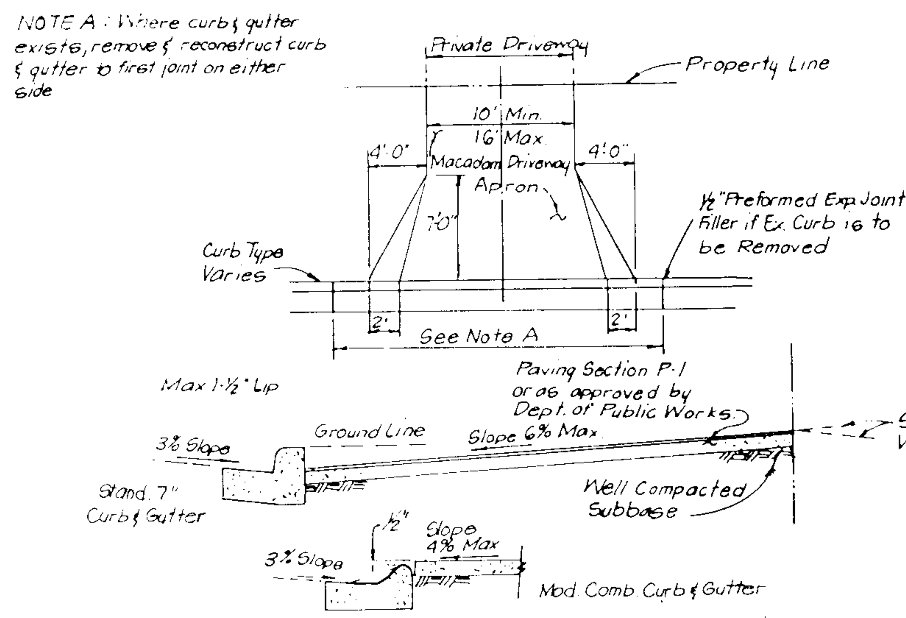

DRIVEWAY ABUTTING CLOSED SECTION WITHOUT CONCRETE SIDEWALK

CONSTRUCTION SEQUENCE:

		No. of Days
A.	Obtain Grading Permit and Install Sediment and Erosion Control Devices and Stabilize.	7
B.	Excavate for foundations and Rough Grade & Temporarily Stabilize.	30
C.	Construct Structures, Sidewalks and Driveways.	120
D.	Final Grade and stabilize in accordance with Stds. & Specs.	30
E.	Upon approval of the sediment control inspector, remove sediment and erosion controls and stabilize.	7

DEVELOPER'S BUILDER'S CERTIFICATE

"I/We certify that all development and construction will be done according to this plan of development and plan for erosion and sediment control and that all responsible personnel involved in the construction project will have a certificate of Attendance at a Dept. of Natural Resources Approved Training Program for the Control of Sediment and Erosion before beginning the project. I also authorize periodic on site inspection by the Howard Soil Conservation District or their authorized agents, as are deemed necessary."

Signature of Developer/Builder — 7-13-89 Date

VED

8-10-89
LS

APPROVED: FOR PUBLIC WATER AND PUBLIC SEWERAGE SYSTEMS, HOWARD COUNTY HEALTH DEPARTMENT

COUNTY HEALTH OFFICER — DATE 7-19-88

APPROVED: HOWARD COUNTY DEPT. OF PLANNING & ZONING

DIRECTOR — DATE 10.3.89

CHIEF DIVISION OF COMMUNITY PLANNING AND LAND DEVELOPMENT — DATE 9/21/89 LS

APPROVED: FOR PUBLIC WATER AND PUBLIC SEWERAGE, STORM DRAINAGE SYSTEMS AND PUBLIC ROADS, HOWARD COUNTY DEPARTMENT OF PUBLIC WORKS

DIRECTOR — DATE 9/15/89

CHIEF BUREAU OF ENGINEERING — DATE 9-15-89

PERMANENT SEEDING NOTES

Apply to graded or cleared areas not subject to immediate further disturbance where a permanent long-lived vegetative cover is needed.

Seedbed Preparation: Loosen upper three inches of soil by raking, discing or other acceptable means before seeding, if not previously loosened.

Soil Amendments: In lieu of soil test recommendations, use one of the following schedules:

1) Preferred - Apply 2 tons per acre dolomitic limestone (92 lbs/1000 square ft) and 600 lbs per acre 10-10-10 fertilizer (14 lbs/1000 sq ft) before seeding. Harrow or disc into upper three inches of soil. At time of seeding, apply 400 lbs per acre 30-0-0 ureaform fertilizer (9 lbs/1000 sq ft).

2) Acceptable - Apply 2 tons per acre dolomitic limestone (92 lbs/1000 sq ft) and 1000 lbs per acre 10-10-10 fertilizer (23 lbs/1000 sq ft) before seeding. Harrow or disc into upper three inches of soil.

Seeding - For the periods March 1 thru April 30, and August 1 thru October 15, seed with 60 lbs per acre (1.4 lbs/1000 sq ft) of Kentucky 31 Tall Fescue. For the period May 1 thru July 31, seed with 60 lbs Kentucky 31 Tall Fescue per acre and 2 lbs per acre (.05 lbs/1000 sq ft) of weeping lovegrass. During the period of October 16 thru February 28, protect site by: Option (1) 2 tons per acre of well anchored straw mulch and seed as soon as possible in the spring. Option (2) Use sod. Option (3) Seed with 60 lbs/acre Kentucky 31 Tall Fescue and mulch with 2 tons/acre well anchored straw.

Mulching - Apply 1½ to 2 tons per acre (70 to 90 lbs/1000 sq ft) of unrotted small grain straw immediately after seeding. Anchor mulch immediately after application using mulch anchoring tool or 218 gallons per acre (5 gal/1000 sq ft) of emulsified asphalt on flat areas. On slopes 8 feet or higher, use 348 gallons per acre (8 gal/1000 sq ft) for anchoring.

Maintenance - Inspect all seeded areas and make needed repairs, replacements and reseedings

TEMPORARY SEEDING NOTES

Apply to graded or cleared areas likely to be redisturbed where a short-term vegetative cover is needed.

Seedbed Preparation: Loosen upper three inches of soil by raking, discing or other acceptable means before seeding, if not previously loosened.

Soil Amendments: Apply 600 lbs per acre 10-10-10 fertilizer (14 lbs/1000 sq ft)

Seeding: For periods March 1 thru April 30 and from August 15 thru November 15, seed with 2½ bushel per acre of annual rye (3.2 lbs/1000 sq ft). For the period May 1 thru August 14, seed with 3 lbs per acre of weeping lovegrass (.07 lbs/1000 sq ft). For the period November 16 thru February 28, protect site by applying 2 tons per acre of well anchored straw mulch and seed as soon as possible in the spring, or use sod.

Mulching: Apply 1½ to 2 tons per acre (70 to 90 lbs/1000 sq ft) of unrotted small grain straw immediately after seeding. Anchor mulch immediately after application using mulch anchoring tool or 218 gal per acre (5 gal/1000 sq ft) of emulsified asphalt on flat areas. On slopes, 8 ft or higher, use 348 gal per acre (8 gal/1000 sq ft) for anchoring.

Refer to the 1983 MARYLAND STANDARDS AND SPECIFICATIONS FOR SOIL EROSION AND SEDIMENT CONTROL for rate and methods not covered.

SEDIMENT CONTROL NOTES

1) A minimum of 24 hours notice must be given to the Howard County Office of Inspection and Permits prior to the start of any construction. (992-2437)

2) All vegetative and structural practices are to be installed according to the provisions of this plan and are to be in conformance with the 1983 MARYLAND STANDARDS AND SPECIFICATIONS FOR SOIL EROSION AND SEDIMENT CONTROL.

3) Following initial soil disturbance or redisturbance, permanent or temporary stabilization shall be completed within: a) 7 calendar days for all perimeter sediment control structures, dikes, perimeter slopes and all slopes greater than 3:1, b) 14 days as to all other disturbed or graded areas on the project site.

4) All sediment traps/basins shown must be fenced and warning signs posted around their perimeter in accordance with Vol. 1, Chaper 12, of the HOWARD COUNTY DESIGN MANUAL, Storm Drainage.

5) All disturbed areas must be stabilized within the time period specified above in accordance with the 1983 MARYLAND STANDARDS AND SPECIFICATIONS FOR SOIL EROSION AND SEDIMENT CONTROL for permanent seedings (Sec. 51) sod (Sec. 54), temporary seeding (Sec. 50) and mulching (Sec. 52.) Temporary stabilization with mulch alone can only be done when recommended seeding dates do not allow for proper germination and establishment of grasses.

6) All sediment control structures are to remain in place and are to be maintained in operative condition until permission for their removal has been obtained from the Howard County Sediment Control Inspector

7) Site Analysis:

Total Area of Site	0.975	Acres
Area Disturbed	0.65	Acres
Area to be roofed or paved	0.23	Acres
Area to be vegetatively stabilized	0.42	Acres
Total Cut	1127	Cu. yds
Total Fill	285	Cu. yds
Offsite waste/borrow area location	undetermined	

8) Any sediment control practice which is disturbed by grading activity for placement of utilities must be repaired on the same day of disturbance.

9) Additional sediment control must be provided, if deemed necessary by the Howard County DPW sediment control inspector.

10) On all sites with disturbed areas in excess of 2 acres, approval of the inspection agency shall be requested upon completion of installation of perimeter erosion and sediment controls, but before proceeding with any other earth disturbance or grading. Other building or grading inspection approvals may not be authorized until this initial approval by the inspection agency is made.

11) If houses are to be constructed on an "As Sold" basis, at random, Single Lot Sediment Control as shown below shall be implemented.

12) All pipes to be blocked at the end of each day (see detail below). N/A

13) The total ... silt fence required: 540 L.F.

Reviewed for HOWARD S.C.D. and meets Technical Requirements

Signature — Date 9/7/89

U.S. Soil Conservation Service

THIS DEVELOPMENT PLAN IS APPROVED FOR SOIL EROSION AND SEDIMENT CONTROL BY THE HOWARD SOIL CONSERVATION DISTRICT.

Approved — Date

OWNER AND DEVELOPER

HOWARD RESEARCH & DEVELOPMENT LAND CO.
10275 LITTLE PATUXENT PARKWAY
COLUMBIA, MARYLAND 21044

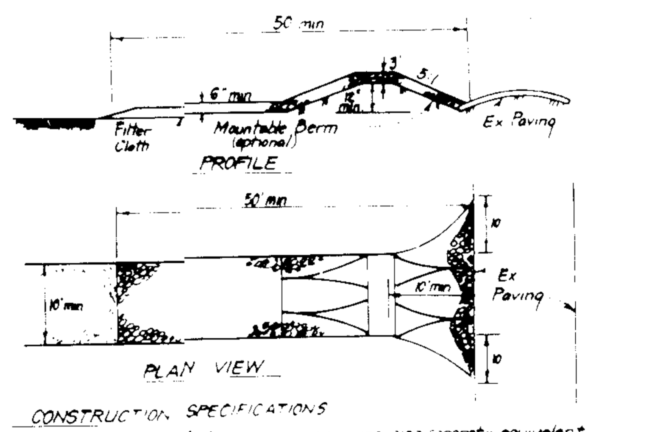

CONSTRUCTION SPECIFICATIONS

1. Stone size - Use 2" stone or reclaimed or recycled concrete equivalent.
2. Length - As required, but not less than 50 feet, except on a single residence lot where a 30 foot minimum length would apply.
3. Thickness - Not less than six (6) inches.
4. Width - Ten (10) foot minimum, but not less than the full width at points where ingress or egress occurs.
5. Filter Cloth - Will be placed over the entire area prior to placing of stone. Filter will not be required on a single family residence lot.
6. Surface Water - All surface water flowing or diverted toward construction entrances shall be piped across the entrance. If piping is impractical, a mountable berm with 5:1 slopes will be permitted.
7. Maintenance - The entrance shall be maintained in a condition which will prevent tracking or flowing of sediment onto public rights-of-way. This may require periodic top dressing with additional stone as conditions demand and repair and/or cleanout of any measures used to trap sediment. All sediment spilled, dropped, washed or tracked onto public rights-of-way must be removed immediately.
8. Washing - Wheels shall be cleaned to remove sediment prior to entrance onto public rights-of-way. When washing is required, it shall be done on an area stabilized with stone and which drains into an approved sediment trapping device.
9. Periodic inspection and needed maintenance shall be provided after each rain.

STABILIZED CONSTRUCTION ENTRANCE (SCE)

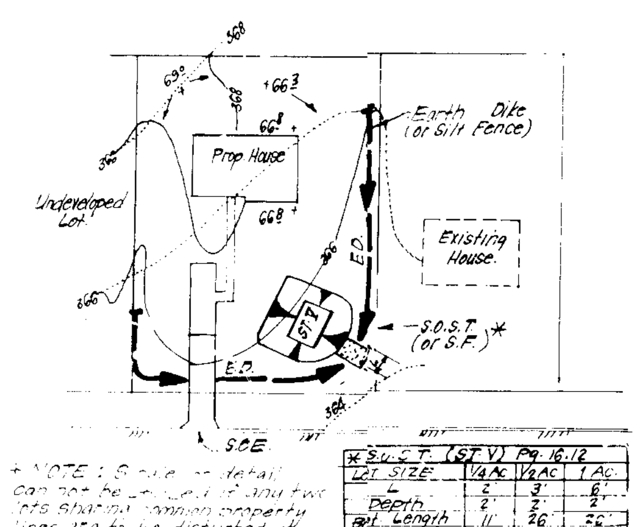

* NOTE: S.O.S.T. or detail can not be used if any two lots sharing common property lines are to be disturbed at the same time or on any lots showing a sediment trap.

* S.O.S.T. (ST V) Pg. 16.12			
LOT SIZE	¼ Ac	½ Ac	1 Ac
L	2'	3'	6'
Depth	2'	2'	2'
Bot. Length	11'	26'	26'
Bot. Width	11'	11'	26'
Bot. Area	121 ft²	286 ft²	676 ft²

+ can be adjusted in field but bottom area must be as given or greater

SINGLE LOT SEDIMENT CONTROL PLAN

NO SCALE

TYPICAL HOUSES

Scale: 1"=30'

NOTE: All units have 1' roof eaves, front & rear.

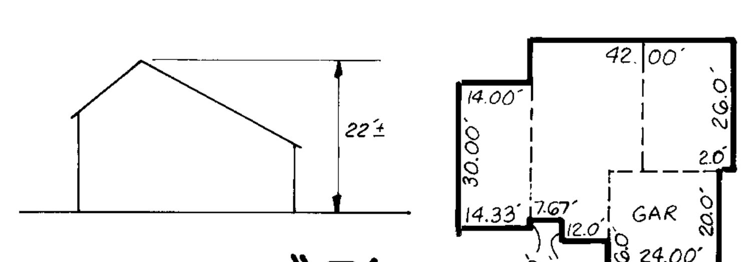

$$\frac{2236.7}{0.3} = 7456 \text{ ft}^2$$ Min. Lot Size

Nº	REVISIONS	Date
1	Rev. hse. & grd. lot 39 from E to I (Rev.)	12-17-91

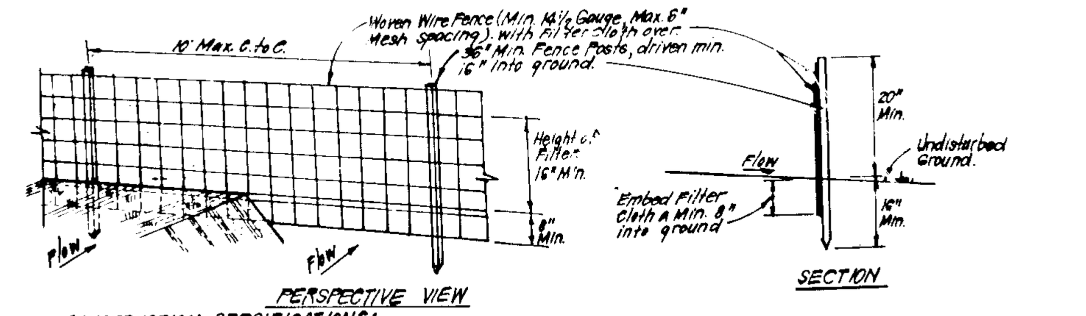

CONSTRUCTION SPECIFICATIONS:

1. Woven wire fence to be fastened securely to fence posts with wire ties or staples.
2. Filter Cloth to be fastened securely to woven wire fence with ties spaced every 24" at top and mid section.
3. When 2 sections of filter cloth adjoin each other they shall be overlapped by 6" and folded.
4. Maintenance shall be performed as needed and material removed when "Bulges" develop in Silt Fence.

POSTS: Steel either T or U Type or 2" Hardwood.
FENCE: Woven Wire, 14½ Gage 6" Max. Mesh Opening.
FILTER CLOTH: FilterX, Mirafi 100X, Stablinka, T140N or Approv. equal.
PREFABRICATED UNIT: Geofab, Envirofence, or Approv. equal.

SILT FENCE DETAIL (9)

NO SCALE

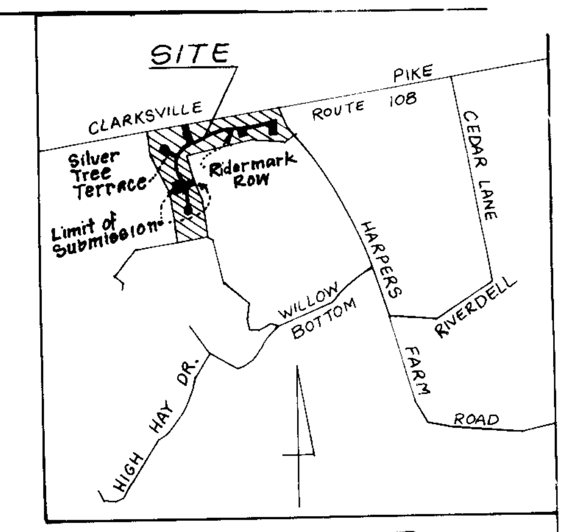

VICINITY MAP

Scale 1" = 2000

LEGEND

Contour Interval	2 FT
Existing Contour	410
Proposed Contour	410
Spot Elevation	+10.3
Direction of Drainage	
Walk out Basement	WOB
Trees to be Saved	
Silt Fence	S
Ex. Silt Fence	Ex. S Silt S Fence
Ex. Earth Dike	Ex. Earth Dike

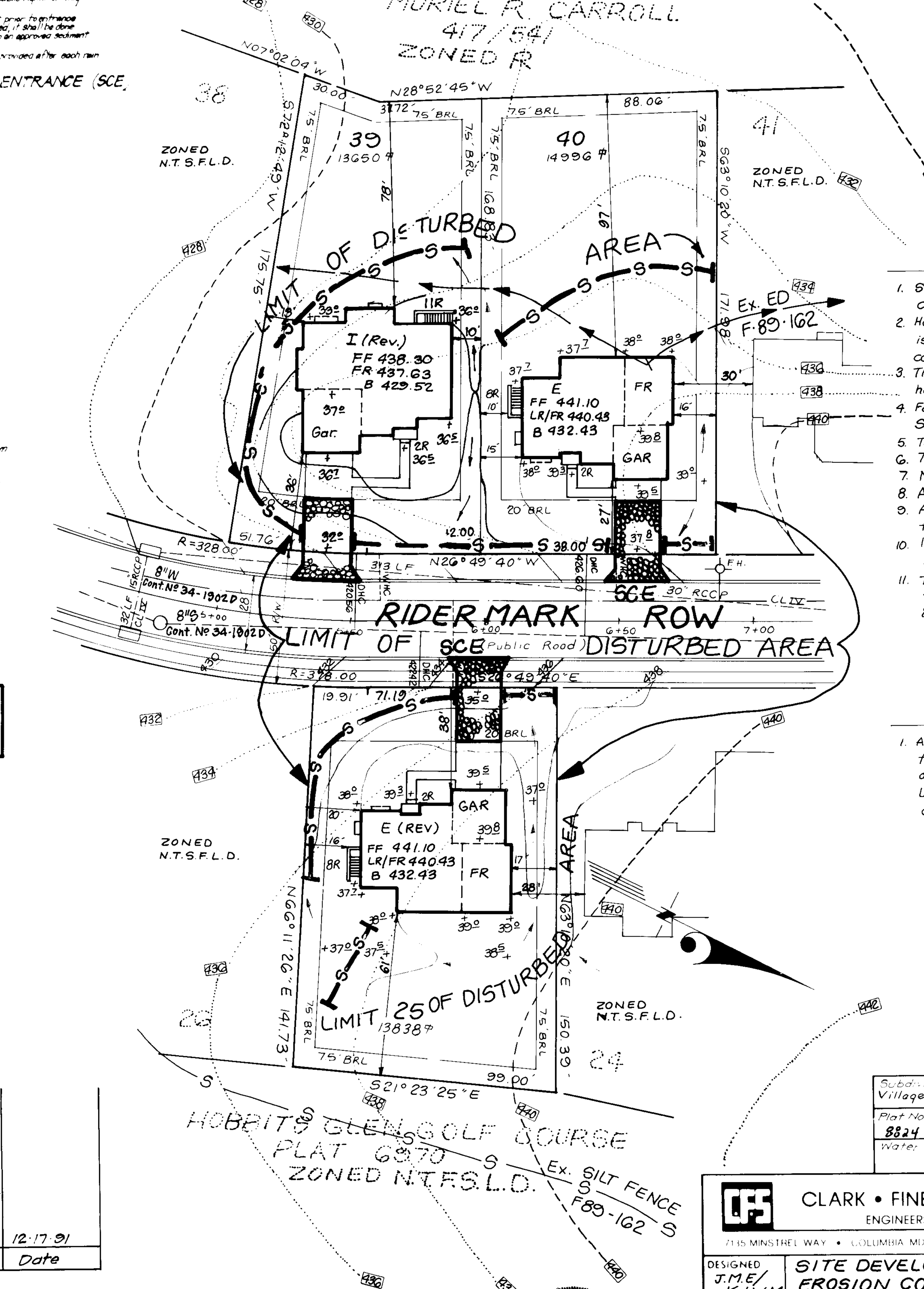

GENERAL NOTES

1. Subject property zoned New Town per 8-2-85 Comprehensive zoning plan.
2. Horizontal and vertical control shown hereon is based upon Howard County Geoditic control stations 2739002 and 2739003.
3. The S.W.M. requirements for subject property have been waived as per D.P.W. action dated 9-6-88.
4. For additional information, see OPZ file nos. S-88-101, P-89-45, WP-89-14, F89-162, FDP-204 approved 9-29-88.
5. Total Number of lots: 3
6. Topography was taken from Road Contruction plans F89-162.
7. Maximum lot coverage is 30%.
8. All roads are public and existing.
9. Any damage to county owned right of ways to be corrected at the Developer's expense.
10. Improvement of property: Single Family Density Units.
11. The contractor or Developer shall contact the construction inspection survey division 24 hours in advance of commencement of work at 792-2630.

SPECIAL NOTES

1. All Road Construction, Storm Drainage facilities and Public water and sewer are shown for reference only. Use approved Ho. Co. plans for all phases of construction.

ADDRESS CHART		
Lot	Street	Address
25	11288	RIDERMARK ROW
39	11297	" "
40	11293	" "

Subdivision Name	Sect./Area	Lots
Village of Harpers Choice	7 3	25, 39 & 40

Plat No	Block No	Zone	Tax/Map No	Elec. Dist.	Census Tr.
8824	16	N.T. S.F.L.D.	29	5	6053.01

Water Code	Sewer Code
I03	6740000

ENGINEER'S CERTIFICATE

I hereby certify that this plan for Erosion and Sediment Control represents a practical and workable plan based on my personal knowledge of the site conditions and that it was prepared in accordance with the requirements of the Howard Soil Conservation District.

Richard J.H. Stepp — 7-13-89 Date

CLARK • FINEFROCK & SACKETT, INC.
ENGINEERS • PLANNERS • SURVEYORS
7135 MINSTREL WAY • COLUMBIA MD 21045

DESIGNED J.M.E./K.I.W.M.	SITE DEVELOPMENT AND SEDIMENT EROSION CONTROL PLAN Lots: 25, 39 & 40	SCALE 1" = 30'
DRAWN BAK	VILLAGE OF HARPER'S CHOICE	DRAWING 1 of 1
CHECKED J.M.E./K.I.W.M.	SECTION 7 AREA 3 5TH ELECTION DISTRICT HOWARD COUNTY, MARYLAND	JOB NO 89-103
DATE July 1989	For: R.C. Goodier Builders, Inc. 11207 McGee Way Ellicott City, Md 21043	FILE NO 89-103X

SDP-90-15