ROUTE 100 BUSINESS PARK
BLOCK A PARCEL B
25/79
Zoned M-2

20' EASEMENT LINES
Exist. Sanit. Esmt. 24/8

RETAINING WALL
See Detail Sht. 4

N 68°08'05" W 428.92

HYDROSEED

Dumpster Pad

Truck Parking Area

190' ±

BITUMINOUS PAVING

conc. conc. conc. conc. conc. conc.

44.50 7.00 319.50

FF 186.5

123.50

120.00

60.00

60.50

157.00

369.65

37.00

87.0

73.7 65.7 73.7

52' 80.7 72.7

29' ±

WHITE GRAVEL

SOD

Exposed Aggregate Conc. 3x4'x6" 4'-0" o.c. Typical

4' WALK

For Visitors Only FRONT PARKING SPACES

Handicap Space

All Parking Spaces are 9' Wide Unless Otherwise Noted

PRIVATE DRIVE

R: 597.98

ROAD RIGHT of WAY LINE

BUILDING RESTRICTION LINE

Water Line Easement

30' Typ 2½" Caliper Malus Radiant

Azalea - Hedge Row Spacing 4 ft. o.c. Limit ≈ 14'

SANTA BARBARA ROAD

Road Recorded - 25/79

L: 380.73

N 81°51'57" E 106.60

S 21°51'57" W

PRIVATE DRIVE Water Line Easement

N 21°51'57" E 237.46

HYDROSEED CENTER LINE of 20' EASEMENT & 8" SAN SEWER

35.917

75.6±

SAN MH #17

SAN MH #18

SAN MH #19

SAN MH #20

SAN MH #16

ROUTE 100 BUSINESS PARK
BLOCK A PARCEL A
24/14
Zoned M-2

KAISER-AETNA
581/281
Zoned M-2

KAISER-AETNA
581/281
Zoned M-2

364'-0"

Roof 204.5
FF 186.5
Ground 186.0
Ground 185.2
2'-0" 18'-0" 8'-0" 18'-4"

BLDG. ELEVATION
Scale: 1" = 20'

Top of curb
Exist. Ground

RETAINING WALL PROFILE
Scale: Horiz. 1" = 40'
Vert. 1" = 4'

DESCRIPTION OF TREES AND SHRUBS						
Symbol	Variety	Caliber	Spread	Height	Spacing	TOTAL
A	Malus Radiant	Min 2½"	Min. 6'	7' to 8'	35'	12
B	Cornus Florida	1"	3'	5'	5'	8
C	Cornus Flor. Rubra	1"	3'	5'	5'	8
G	Pinus Strobus	1½"	4'	6'	8'	18
H	Azalea	—	—	—	4'	23
D	Koelreuteria Paniculi	2½"	5'	6-7'	—	2
E	Cercis Canadensis	1"	5'	5'	—	6
F	Juniper Sabina	—	—	—	4'	40

KAISER-AETNA
581/281
Zoned M-2

NORTH

OWNER:
Rte. 100 Joint Venture Inc.
123 S. Van Buren P.O. Box 364
Rockville, Md. 20850
(301) 279-5910

W.E. Cunningham
12/12/84

ENGINEERS • ARCHITECTS • PLANNERS
GE GREEN, SUITE 207, COLUMBIA, MD 21044 (301) 730-7950

SITE ANALYSIS:

Zoning - M2
Parking Space Reqd. - 24 (based on 2 per loading bay)
Parking Space Provided - 28 (INCLUDING 5 SPS. FOR HANDICAPPED)
No. of Employees - 14
Sq. Ft. Retail Space - 0
Total Area - 2.73 Ac.
Area of Building - 1.01 Ac.
Area Paved - 1.02 Ac.
No Fences on Site
Open Space - 26.37 %
Bldg. Use - Warehouse Only
Bldg. Coverage Percentage - 37 %

Note.
Lighting as shown on sht. 2 of 4 shall Not reflect onto public right-of-way.

Handicap sign to conform to Md. State Std. R7-8

Spaces in enforcement lot.

9' Typ 18' Typ 8' 12' Typ Handicap

PARKING DETAIL

LOCATION MAP:
U.S. ROUTE 1
COLUMBIA MILLS
MD. ROUTE 100
MD. ROUTE 116
HOWARD CO.
ANNE ARUNDEL CO.
NORTH

ADDRESS CHART							
LOT NO	STREET ADDRESS	Plat # or L/F	Block #	Zone	Tax/Zone Map	Elect. Dist.	Census Tr.
D	6650 Santa Barbara Road	26/1	24	M-2	37	1st	6012
		Water Code			Sewer Code		

SUBDIVISION NAME	SECT./AREA	LOT/PARCEL #
Route 100 Business Park	Block A	D

OWNER/DEVELOPER
Rte. 100 Joint Venture Inc
123 S. VAN BUREN
PO Box 364
Rockville, Md. 20850
(301) 279-5910

APPROVED
DIVISION OF LAND DEVELOPMENT & ZONING ADMINISTRATION
HOWARD COUNTY, MARYLAND
DATE [redacted]

APPROVED: For Public Water and Public Sewerage and Storm Drainage Systems and Roads
Howard County Dept. of Public Works
Director — Date 3-8-85
Chief, Bureau of Engineering — Date 3-7-85

APPROVED: For Public Water and Public Sewerage Systems, Howard County Dept. of Health and Mental Hygiene
County Health Officer — Date 3-12-85

APPROVED: Howard County Office of Planning and Zoning
Planning Director — Date 3-14-85
Chief, Division of Land Dev. and Zoning Admin. — Date 3-13-85

Rev. as per Co. comments 12-5-84
Rev. bldg. outline 2-15-85

SITE PLAN

ROUTE ONE HUNDRED BUSINESS PARK
BLOCK A PARCEL D
TAX MAP 37 GRID 4 PARCEL 1
1ST ELECTION DISTRICT
SCALE 1" = 20' DATE 8-31-84

AS-BUILT

SDP-85-45

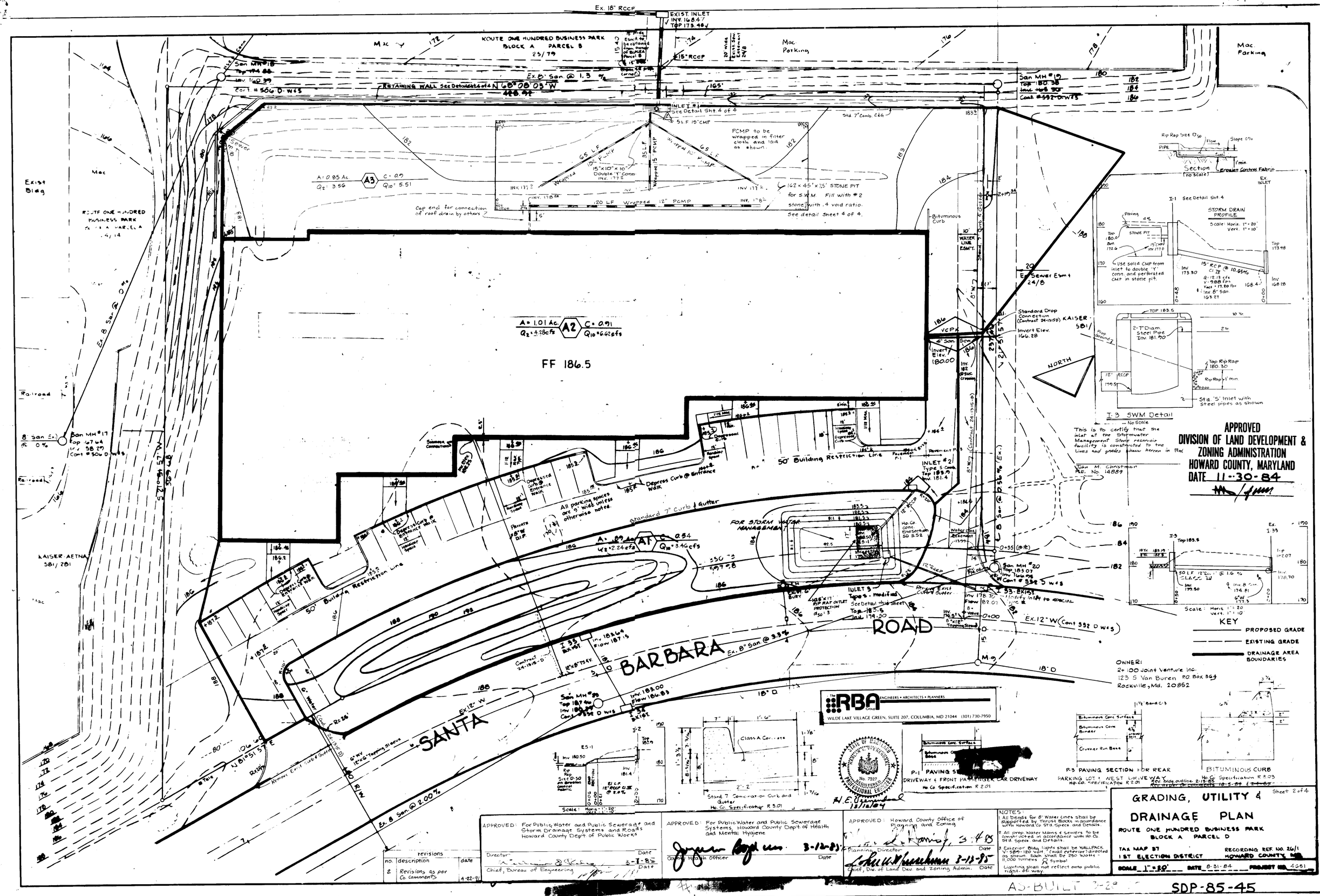

APPROVED: For Public Water and Public Sewerage and Storm Drainage Systems and Roads Howard County Dept of Public Works

Director — Date

Chief, Bureau of Engineering — Date 3-1-85

APPROVED: For Public Water and Public Sewerage Systems, Howard County Dept of Health and Mental Hygiene

Joyce Boyd Lee 3-12-85

County Health Officer — Date

APPROVED: Howard County Office of Planning and Zoning

Planning Director — Date 3-13-85

John W. Wienckman

Chief, Div. of Land Dev. and Zoning Admin. — Date

revisions		
no.	description	date
2	Revisions as per Co. comments	4-22-91

NOTES

All bonds for 8" Water lines shall be supported by Thrust Blocks in accordance with Howard Co. Std. Specs. and Details.

2. All prop. Water Mains & Sewers to be constructed in accordance with Ho. Co. Std. Specs. and Details.

3. Exterior Bldg. lights shall be WALLPACK V-589-120 Watt (wall exterior) directed as shown. Each shall be 250 Watts - 11,000 lumens. R Symbol. Lighting shall not reflect onto public right-of-way.

Sheet 2 of 4

GRADING, UTILITY & DRAINAGE PLAN

ROUTE ONE HUNDRED BUSINESS PARK
BLOCK A PARCEL D

TAX MAP 37
1ST ELECTION DISTRICT

RECORDING REF. NO. 26/1
HOWARD COUNTY, MD.

SCALE 1" = 20' DATE 8-31-84 PROJECT NO. 4251

AS-BUILT

SDP-85-45

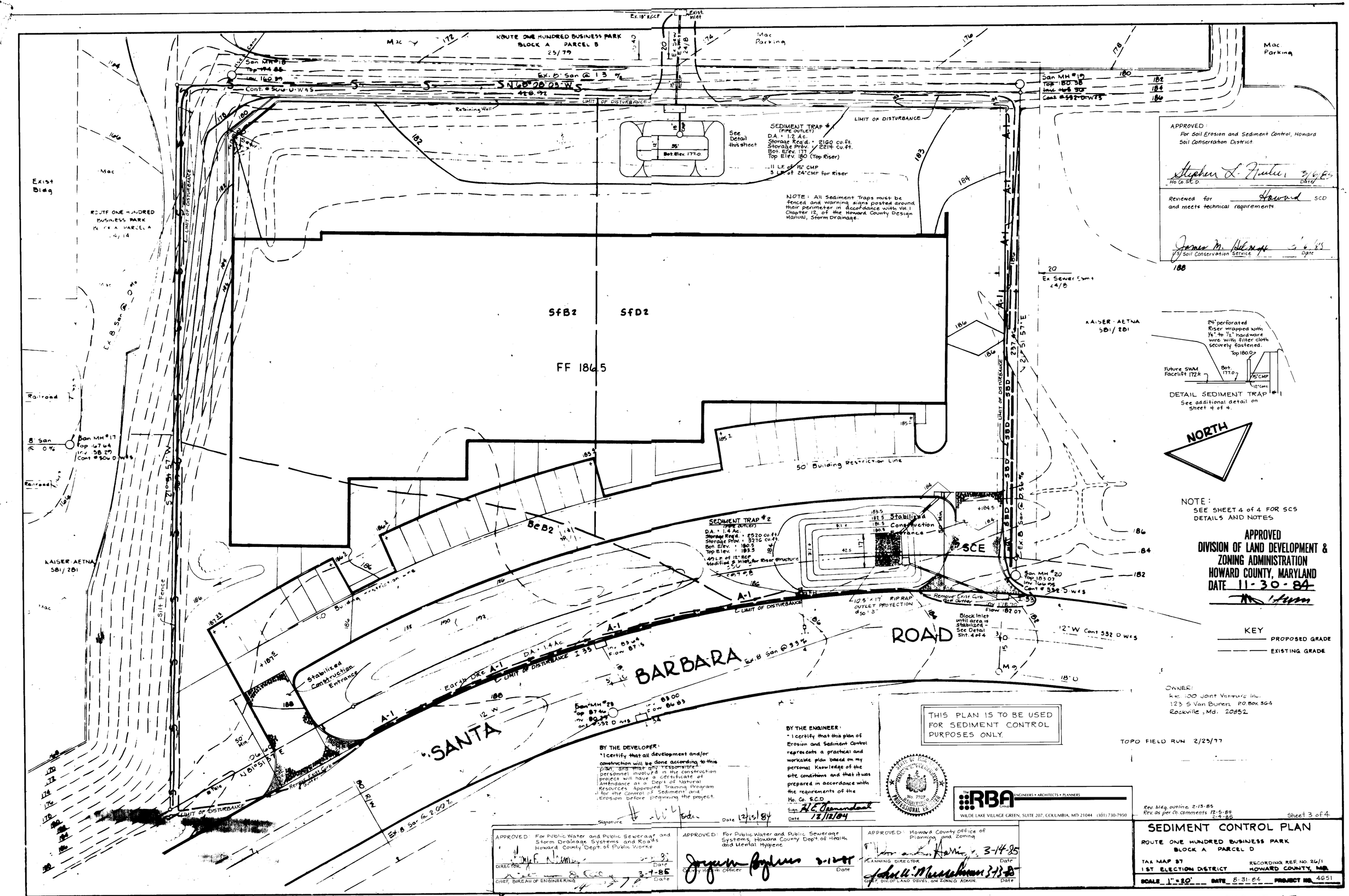

APPROVED:
For Soil Erosion and Sediment Control, Howard Soil Conservation District.
Stephen L. Fletcher 3/6/85
Ho. Co. S.C.D. Date

Reviewed for Howard SCD and meets technical requirements.
James M. Helmuth 3/6/85
U.S. Soil Conservation Service Date

24" perforated Riser wrapped with 1/4" to 1/2" hardware wire with filter cloth securely fastened.
Top 180.0
Future SWM Facelift 172±
Bot. 177.0
15" CMP
12" Conc.
DETAIL SEDIMENT TRAP #1
See additional detail on sheet 4 of 4.

NORTH

NOTE:
SEE SHEET 4 of 4 FOR SCS DETAILS AND NOTES

APPROVED
DIVISION OF LAND DEVELOPMENT & ZONING ADMINISTRATION
HOWARD COUNTY, MARYLAND
DATE 11-30-84

KEY
PROPOSED GRADE
EXISTING GRADE

OWNER:
Rte. 100 Joint Venture Inc.
123 S Van Buren P.O. Box 364
Rockville, Md. 20852

TOPO FIELD RUN 2/23/77

THIS PLAN IS TO BE USED FOR SEDIMENT CONTROL PURPOSES ONLY.

BY THE DEVELOPER:
"I certify that all development and/or construction will be done according to this plan, and that any responsible personnel involved in the construction project will have a certificate of Attendance at a Dept of Natural Resources Approved Training Program for the Control of Sediment and Erosion before beginning the project.
Signature Date 12/15/84

BY THE ENGINEER:
"I certify that this plan of Erosion and Sediment Control represents a practical and workable plan based on my personal knowledge of the site conditions and that it was prepared in accordance with the requirements of the Ho. Co. S.C.D.
Sign H. E. Greenendael
Date 12/12/84

STATE OF MARYLAND
HAROLD E. GREENENDAEL
No. 7927
REGISTERED PROFESSIONAL ENGINEER

The RBA Group ENGINEERS • ARCHITECTS • PLANNERS
WILDE LAKE VILLAGE GREEN, SUITE 207, COLUMBIA, MD 21044 (301) 730-7950

Rev. bldg. outline 2-13-85
Rev. as per Co. comments 12-5-84
2-4-85

Sheet 3 of 4

APPROVED: For Public Water and Public Sewerage and Storm Drainage Systems and Roads Howard County Dept. of Public Works	APPROVED: For Public Water and Public Sewerage Systems, Howard County Dept. of Health and Mental Hygiene	APPROVED: Howard County Office of Planning and Zoning
DIRECTOR Date	County Health Officer 3-12-85 Date	PLANNING DIRECTOR 3-14-85 Date
CHIEF, BUREAU OF ENGINEERING 3-7-85 Date		CHIEF, DIV. OF LAND DEVEL. and ZONING ADMIN. 3-13-85 Date

SEDIMENT CONTROL PLAN

ROUTE ONE HUNDRED BUSINESS PARK
BLOCK A PARCEL D

TAX MAP 37
1ST ELECTION DISTRICT
RECORDING REF. NO. 26/1
HOWARD COUNTY, MD.

SCALE 1"=20' DATE 8-31-84 PROJECT NO. 4651

SDP-85-45

SWALE INLET PROTECTION DETAIL

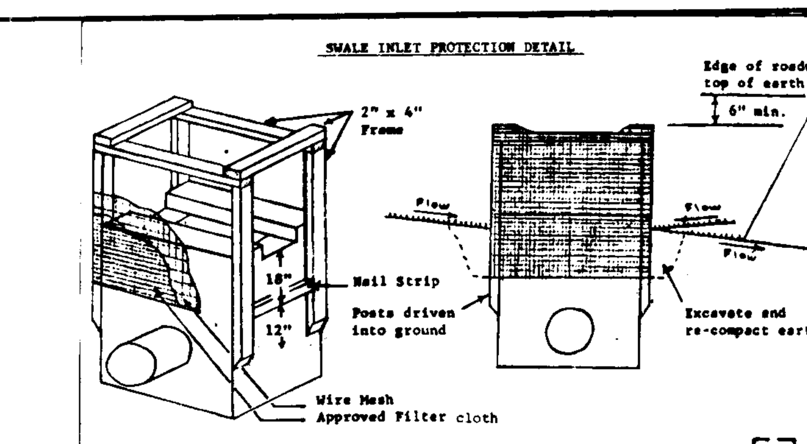

CURB INLET PROTECTION DETAIL

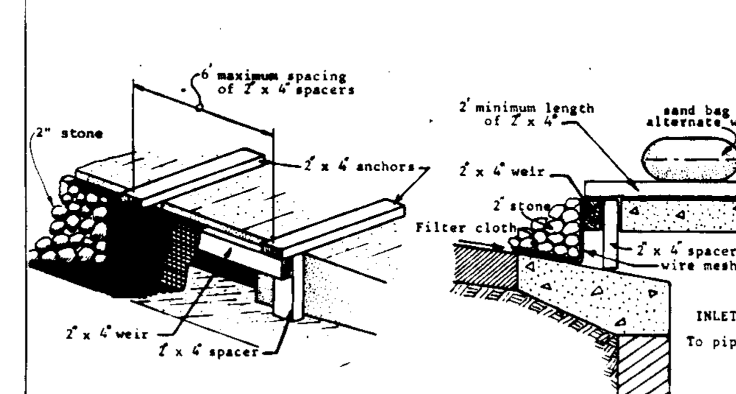

U.S. DEPARTMENT OF AGRICULTURE SOIL CONSERVATION SERVICE COLLEGE PARK, MARYLAND	INLET PROTECTION DETAIL	STANDARD DRAWING IPD-1

STABILIZED CONSTRUCTION ENTRANCE

not to scale

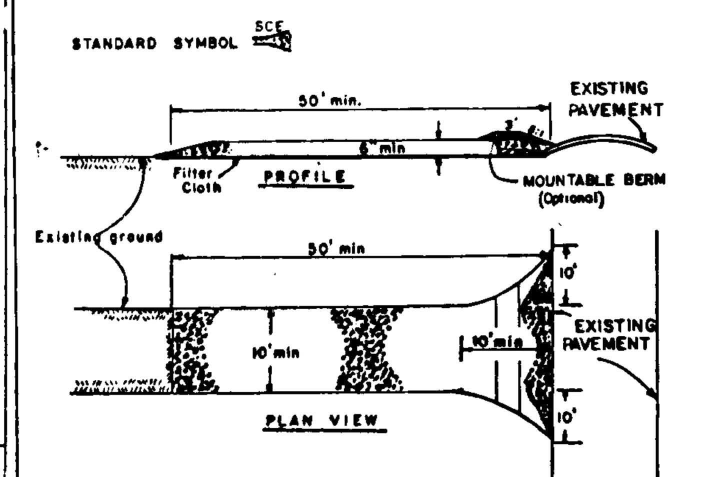

CONSTRUCTION SPECIFICATIONS

1. Stone Size - Use 2" stone, or reclaimed or recycled concrete equivalent.
2. Length - As required, but not less than 50 feet (except on a single residence lot where a 30 foot minimum length would apply).
3. Thickness - Not less than six (6) inches.
4. Width - Ten (10) foot minimum, but not less than the full width at points where ingress or egress occurs.
5. Filter Cloth - Will be placed over the entire area prior to placing of stone. Filter will not be required on a single family residence lot.
6. Surface Water - All surface water flowing or diverted toward construction entrances shall be piped across the entrance. If piping is impractical, a mountable berm with 5:1 slopes will be permitted.
7. Maintenance - The entrance shall be maintained in a condition which will prevent tracking or flowing of sediment onto public rights-of-way. This may require periodic top dressing with additional stone as conditions demand and repair and/or cleanout of any measures used to trap sediment. All sediment spilled, dropped, washed or tracked onto public rights-of-way must be removed immediately.
8. Washing - Wheels shall be cleaned to remove sediment prior to entrance onto public rights-of-way. When washing is required, it shall be done on an area stabilized with stone and which drains into an approved sediment trapping device.
9. Periodic inspection and needed maintenance shall be provided after each rain.

U. S. DEPARTMENT OF AGRICULTURE SOIL CONSERVATION SERVICE College Park, Md.	STABILIZED CONSTRUCTION ENTRANCE	Standard Drawing SCE-1

STRAW BALE DIKE

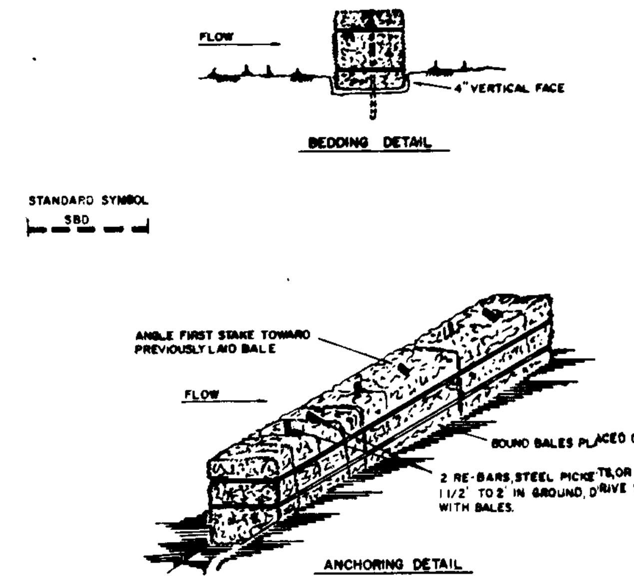

CONSTRUCTION SPECIFICATIONS

1. BALES SHALL BE PLACED AT THE TOE OF A SLOPE OR ON THE CONTOUR AND IN A ROW WITH ENDS TIGHTLY ABUTTING THE ADJACENT BALES.
2. EACH BALE SHALL BE EMBEDDED IN THE SOIL A MINIMUM OF (4) INCHES, AND PLACED SO THE BINDINGS ARE HORIZONTAL.
3. BALES SHALL BE SECURELY ANCHORED IN PLACE BY EITHER TWO STAKES OR RE-BARS DRIVEN THROUGH THE BALE. THE FIRST STAKE IN EACH BALE SHALL BE DRIVEN TOWARD THE PREVIOUSLY LAID BALE AT AN ANGLE TO FORCE THE BALES TOGETHER. STAKES SHALL BE DRIVEN FLUSH WITH THE BALE.
4. INSPECTION SHALL BE FREQUENT AND REPAIR REPLACEMENT SHALL BE MADE PROMPTLY AS NEEDED.
5. BALES SHALL BE REMOVED WHEN THEY HAVE SERVED THEIR USEFULNESS SO AS NOT TO BLOCK OR IMPEDE STORM FLOW OR DRAINAGE.

U.S. DEPARTMENT OF AGRICULTURE SOIL CONSERVATION SERVICE COLLEGE PARK, MARYLAND	STRAW BALE DIKE	STANDARD DRAWING SBD-1

SILT FENCE

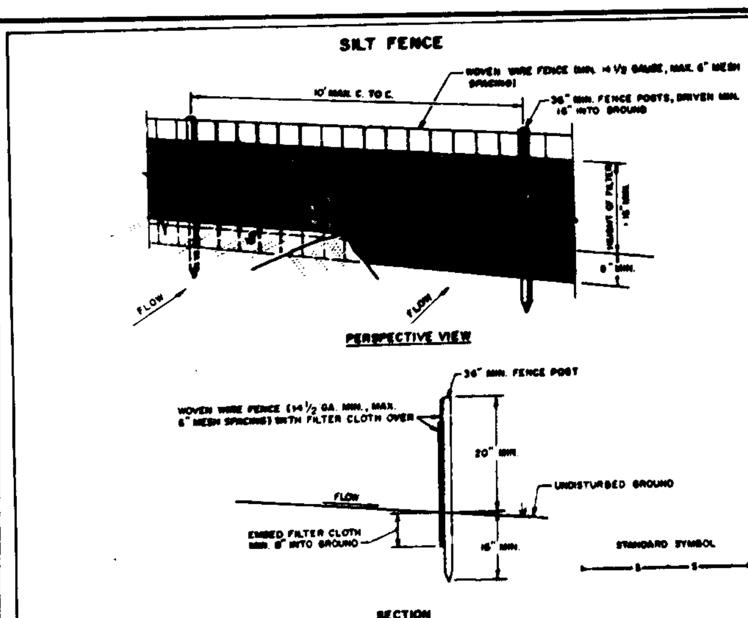

CONSTRUCTION NOTES FOR FABRICATED SILT FENCE

1. WOVEN WIRE FENCE TO BE FASTENED SECURELY TO FENCE POSTS WITH WIRE TIES OR STAPLES.
2. FILTER CLOTH TO BE FASTENED SECURELY TO WOVEN WIRE FENCE WITH TIES SPACED EVERY 24" AT TOP AND MID SECTION.
3. WHEN TWO SECTIONS OF FILTER CLOTH ADJOIN EACH OTHER THEY SHALL BE OVER-LAPPED BY SIX INCHES AND FOLDED.
4. MAINTENANCE SHALL BE PERFORMED AS NEEDED AND MATERIAL REMOVED WHEN "BULGES" DEVELOP IN THE SILT FENCE.

POSTS: STEEL EITHER T OR U TYPE OR 2" HARDWOOD

FENCE: WOVEN WIRE, 14 GA. 6" MAX. MESH OPENING

FILTER CLOTH: FILTER X, MIRAFI 100X, STABILINKA T140N OR APPROVED EQUAL

PREFABRICATED UNIT: GEOFAB, ENVIROFENCE, OR APPROVED EQUAL.

U.S. DEPARTMENT OF AGRICULTURE SOIL CONSERVATION SERVICE COLLEGE PARK, MARYLAND	SILT FENCE	STANDARD DRAWING SF-1

TEMPORARY SWALE

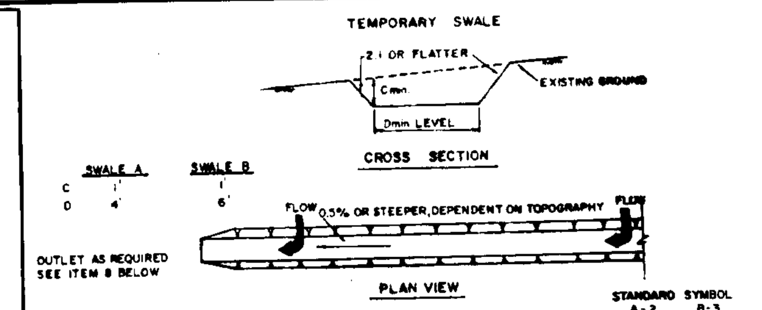

CONSTRUCTION SPECIFICATIONS

1. ALL TEMPORARY SWALES SHALL HAVE UNINTERRUPTED POSITIVE GRADE TO AN OUTLET.
2. DIVERTED RUNOFF FROM A DISTURBED AREA SHALL BE CONVEYED TO A SEDIMENT TRAPPING DEVICE.
3. DIVERTED RUNOFF FROM AN UNDISTURBED AREA SHALL OUTLET DIRECTLY INTO AN UNDISTURBED STABILIZED AREA AT NON-EROSIVE VELOCITY.
4. ALL TREES, BRUSH, STUMPS, OBSTRUCTIONS, AND OTHER OBJECTIONABLE MATERIAL SHALL BE REMOVED AND DISPOSED OF SO AS NOT TO INTERFERE WITH THE PROPER FUNCTIONING OF THE SWALE.
5. THE SWALE SHALL BE EXCAVATED OR SHAPED TO LINE, GRADE, AND CROSS SECTION AS REQUIRED TO MEET THE CRITERIA SPECIFIED HEREIN AND BE FREE OF BANK PROJECTIONS OR OTHER IRREGULARITIES WHICH WILL IMPEDE NORMAL FLOW.
6. FILLS SHALL BE COMPACTED BY EARTH MOVING EQUIPMENT.
7. ALL EARTH REMOVED AND NOT NEEDED ON CONSTRUCTION SHALL BE PLACED SO THAT IT WILL NOT INTERFERE WITH THE FUNCTIONING OF THE SWALE.
8. STABILIZATION SHALL BE AS PER THE CHART BELOW:

FLOW CHANNEL STABILIZATION

TYPE OF TREATMENT	CHANNEL GRADE	A (5 AC OR LESS)	B (5 AC - 10 AC)
1	0.5-3.0%	SEED AND STRAW MULCH	SEED AND STRAW MULCH
2	3.1-5.0%	SEED AND STRAW MULCH	SEED USING JUTE OR EXCELSIOR
3	5.1-8.0%	SEED WITH JUTE OR EXCELSIOR; SOD	LINED RIP-RAP 4-8" RECYCLED CONCRETE EQUIVALENT
4	8.1-20%	LINED 4-8" RIP-RAP	ENGINEERED DESIGN

9. PERIODIC INSPECTION AND REQUIRED MAINTENANCE MUST BE PROVIDED AFTER EACH RAIN EVENT.

U.S. DEPARTMENT OF AGRICULTURE SOIL CONSERVATION SERVICE COLLEGE PARK, MARYLAND	TEMPORARY SWALE	STANDARD DRAWING TS-1

EARTH DIKE

not to scale

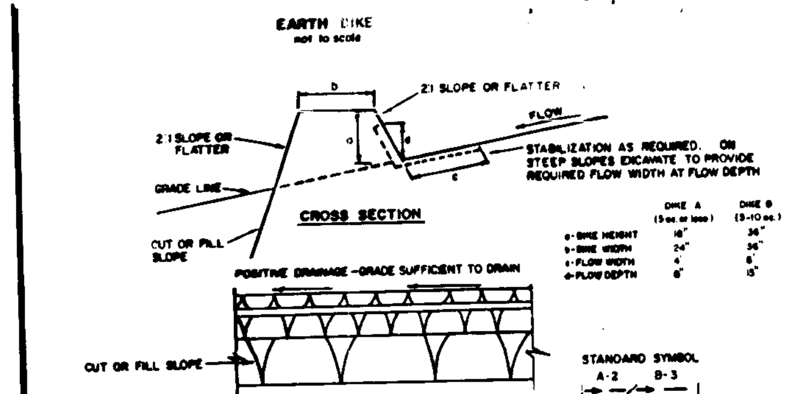

	DIKE A (5 ac or less)	DIKE B (5-10 ac)
a-DIKE HEIGHT	18"	36"
b-DIKE WIDTH	24"	36"
c-FLOW WIDTH	4'	6'
d-FLOW DEPTH	8"	15"

CONSTRUCTION SPECIFICATIONS

1. ALL DIKES SHALL BE COMPACTED BY EARTH-MOVING EQUIPMENT.
2. ALL DIKES SHALL HAVE POSITIVE DRAINAGE TO AN OUTLET.
3. TOP WIDTH MAY BE WIDER AND SIDE SLOPES MAY BE FLATTER IF DESIRED TO FACILITATE CROSSING BY CONSTRUCTION TRAFFIC.
4. FIELD LOCATION SHOULD BE ADJUSTED AS NEEDED TO UTILIZE A STABILIZED SAFE OUTLET.
5. EARTH DIKES SHALL HAVE AN OUTLET THAT FUNCTIONS WITH A MINIMUM OF EROSION. RUNOFF SHALL BE CONVEYED TO A SEDIMENT TRAPPING DEVICE SUCH AS A SEDIMENT TRAP OR SEDIMENT BASIN WHERE EITHER THE DIKE CHANNEL OR THE DRAINAGE AREA ABOVE THE DIKE ARE NOT ADEQUATELY STABILIZED.
6. STABILIZATION SHALL BE: (A) IN ACCORDANCE WITH STANDARD SPECIFICATIONS FOR SEED AND STRAW MULCH OR STRAW MULCH IF NOT IN SEEDING SEASON, (B) FLOW CHANNEL AS PER THE CHART BELOW.

FLOW CHANNEL STABILIZATION

TYPE OF TREATMENT	CHANNEL GRADE	DIKE A	DIKE B
1	.5-3.0%	SEED AND STRAW MULCH	SEED AND STRAW MULCH
2	3.1-5.0%	SEED AND STRAW MULCH	SEED USING JUTE, OR EXCELSIOR; SOD; 2" STONE
3	5.1-8.0%	SEED WITH JUTE, OR SOD; 2" STONE	LINED RIP-RAP 4-8"
4	8.1-20%	LINED RIP-RAP 4-8"	ENGINEERING DESIGN

A. STONE TO BE 2 INCH STONE, OR RECYCLED CONCRETE EQUIVALENT, IN A LAYER AT LEAST 3 INCHES IN THICKNESS AND BE PRESSED INTO THE SOIL WITH CONSTRUCTION EQUIPMENT.
B. RIP-RAP TO BE 4-8 INCHES IN A LAYER AT LEAST 8 INCHES THICKNESS AND PRESSED INTO THE SOIL.
C. APPROVED EQUIVALENTS CAN BE SUBSTITUTED FOR ANY OF THE ABOVE MATERIALS.

7. PERIODIC INSPECTION AND REQUIRED MAINTENANCE MUST BE PROVIDED AFTER EACH RAIN EVENT.

U.S. DEPARTMENT OF AGRICULTURE SOIL CONSERVATION SERVICE COLLEGE PARK, MARYLAND	EARTH DIKE	STANDARD DRAWING ED-1

PIPE OUTLET SEDIMENT TRAP ST-1

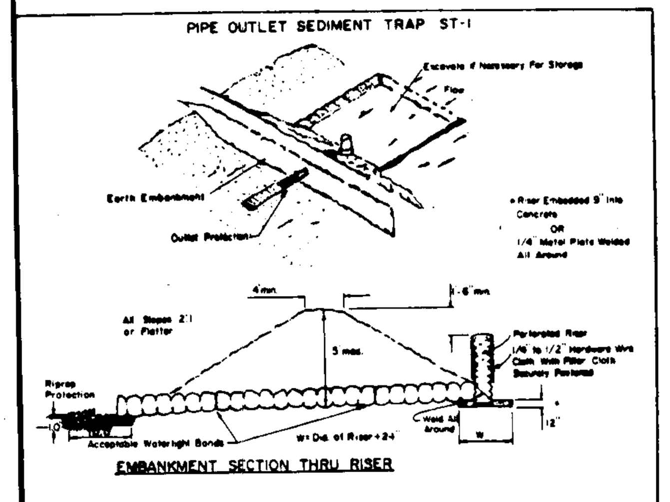

SIZES OF PIPE NEEDED

Barrel Diameter ________

Riser Diameter ________

Note:

For Construction Specification see sheet 16.08

Max. Drainage Area: 5 Acres

U.S. DEPARTMENT OF AGRICULTURE SOIL CONSERVATION SERVICE COLLEGE PARK, MARYLAND	PIPE OUTLET SEDIMENT TRAP	STANDARD DRAWING ST-1

Pipe Outlet Trap
CONSTRUCTION SPECIFICATION FOR ST-1

1. Area under embankment shall be cleared, grubbed and stripped of any vegetation and root mat. The pool area shall be cleared.
2. The fill material for the embankment shall be free of roots or other woody vegetation as well as oversized stones, rocks, organic material, or other objectionable material. The embankment shall be compacted by traversing with equipment while it is being constructed.
3. Volume of sediment storage shall be 1800 cubic feet per acre of contributory drainage.
4. Sediment shall be removed and trap restored to its original dimensions when the sediment has accumulated to 1/2 the design depth of the trap. Removed sediment shall be deposited in a suitable area and in such a manner that it will not erode.
5. The structure shall be inspected after each rain and repairs made as needed.
6. Construction operations shall be carried out in such a manner that erosion and water pollution are minimized.
7. The structure shall be removed and area stabilized when the drainage area has been properly stabilized.
8. All fill slopes shall be 2:1 or flatter; cut slopes 1:1 or flatter.
9. All pipe connections shall be watertight.
10. The top 2/3 of the riser shall be perforated with one (1) inch diameter holes or slits spaced six(6) inches vertically and horizontally and placed in the concave portion of pipe. No holes will be allowed within six(6) inches of the horizontal barrel.
11. The riser shall be wrapped with 1/4 to 1/2 inch hardware cloth wire then wrapped with filter cloth (having an equivalent sieve size of 40 - 80). The filter cloth shall extend six (6) inches above the highest hole and six (6) inches below the lowest hole. Where ends of filter cloth come together, they shall be overlapped, folded and stapled to prevent bypass.
12. Straps or connecting bands shall be used to hold the filter cloth and wire fabric in place. They shall be placed at the top and bottom of the cloth.
13. Fill material around the pipe spillway shall be hand compacted in four(4) inch layers. A minimum of two (2) feet of hand-compacted backfill shall be placed over the pipe spillway before crossing it with construction equipment.
14. The riser shall be anchored with either a concrete base or steel plate base to prevent flotation. For concrete bases the depth shall be 12 inches with the riser embedded nine (9) inches. A 1/4 inch minimum thickness steel plate shall be attached to the riser by a continuous weld around the bottom to form a watertight connection and then place two (2) feet of stone, gravel, or tamped earth on the plate.

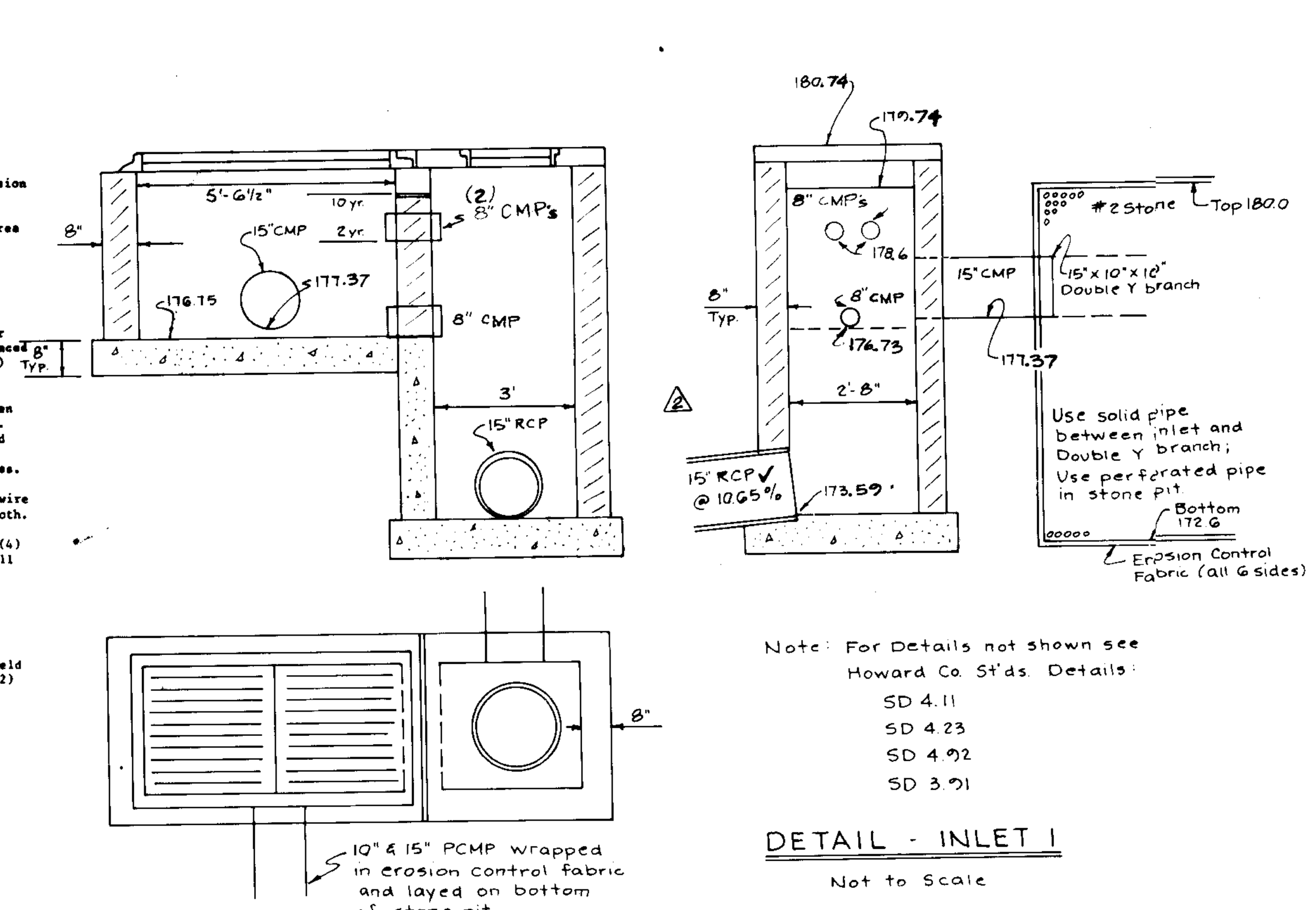

Note: For Details not shown see Howard Co. St'ds. Details:
SD 4.11
SD 4.23
SD 4.92
SD 3.91

DETAIL - INLET 1

Not to Scale

TEMPORARY SEEDING

AREA TO BE SEEDED SHALL BE RECENTLY LOOSENED. IF THE GROUND IS PACKED, CRUSTED OR HARD, THE TOP LAYER OF SOIL SHALL BE LOOSENED BY RACKING OR OTHER ACCEPTABLE MEANS.

A. APPLY 10-20-10 FERTILIZER (OR EQUIVALENT) AT THE RATE OF 15 LBS. PER 1,000 SQUARE FEET.

B. WHERE SOIL IS KNOWN TO BE HIGHLY ACIDIC, APPLY DOLOMITIC LIMESTONE AT THE RATE OF 1 TON PER ACRE.

C. WORK BOTH INTO SOIL AND SEED WITH CYCLONE SEEDER, DRILL, CULTIPAKER SEEDER OR HYDROSEEDER (SLURRY WILL INCLUDE SEED AND FERTILIZER) AT THE RATE OF 40 LBS. PER ACRE OF ITALIAN OR PERENNIAL RYEGRASS.

D. MULCH WITH UNWEATHERED SMALL GRAIN STRAW AT THE RATE OF 1-1/2 TO 2 TONS PER ACRE AND ANCHOR WITH A CUTBACK ASPHALT OR EMULSIFIED ASPHALT AT THE RATE OF 5 GALLONS PER 1,000 SQUARE FEET.

PERMANENT SEEDING

FINAL STABILIZATION WILL TAKE PLACE AS SOON AS POSSIBLE, AS WEATHER CONDITIONS PERMIT, AS FOLLOWS:

A. APPLY DOLOMITIC LIMESTONE AT THE RATE OF 2 TONS PER ACRE (ONE TON PER ACRE IF APPLICATION OF TON PER ACRE WAS MADE FOR TEMPORARY SEEDING).

B. APPLY 0-20-20 FERTILIZER AT THE RATE OF 600 LBS. PER ACRE. HARRROW OR DISC LIME AND 0-20-20 FERTILIZER INTO THE SOIL TO A MINIMUM DEPTH OF 3-INCHES. LAWNS OR HIGH MAINTENANCE AREAS WILL BE DRAGGED AND LEVELED WITH A YORK RAKE. AT THE TIME OF SEEDING, APPLY 400 LBS. OF 38-0-0 UREAFORM FERTILIZER AND 500 LBS. OF 30-20-20 OR EQUIVALENT FERTILIZER PER ACRE.

C. SEED WITH A MIXTURE OF CERTIFIED "MERION" KENTUCKY BLUEGRASS AT 40 LBS. PER ACRE; COMMON KENTUCKY BLUEGRASS AT 40 LBS. PER ACRE; RED FESCUE, PENNLAWN OF JAMESTOWN AT 20 LBS. PER ACRE.

D. MULCH WITH UNFEATHERED SMALL GRAIN STRAW AT THE RATE OF 1-1/2 TO 2 TONS PER ACRE AND ANCHOR WITH A CUTBACK ASPHALT OR EMULSIFIED ASPHALT AT THE RATE OF 5 GALLONS PER 1,000 SQUARE FEET.

E. SEED ALL SLOPES WITH A MIXTURE OF CERTIFIED KENTUCKY 31 TALL FESCUE AT 50 LBS. PER ACRE AND INOCULATED KOREAN LESPEDEZA AT 15 LBS. PER ACRE.

SEQUENCE OF CONSTRUCTION:

1. Grading Permit shall be obtained.
2. The contractor or developer shall contact the Construction Inspection/Survey Division of the Howard Co. Dep't. of Public Works 24 hours prior to commencement of work at 792-7272, and permission to tie into existing storm drain structure must be obtained prior to any earth disturbance.
3. Storm Drains from existing inlets to I-1 and I-3 shall be constructed.
4. Sediment Control devices including traps shall be constructed and/or installed as shown on plans, or as directed by S.C.S. Representative.
5. Retaining Wall to be constructed and rear parking lot brought to grade.
6. Block Existing I-33
7. Proceed with site grading and building construction.
8. Stabilize disturbed areas as soon as possible after final grade has been acheived.
9. Remove rear Sediment Trap and Construct stone storm water management Reservoir. Begin only after approval by S.C.S. Representative.
10. After completion of construction and with the approval of the S.C.S. Representative, all erosion and sediment control devices shall be removed and all disturbed areas stabilized.

This is to certify that the inlet at the Stormwater Management Stone reservoir facility is constructed to the Lines and grades shown hereon in Red.

John M. Christman
P.E. No. 14887

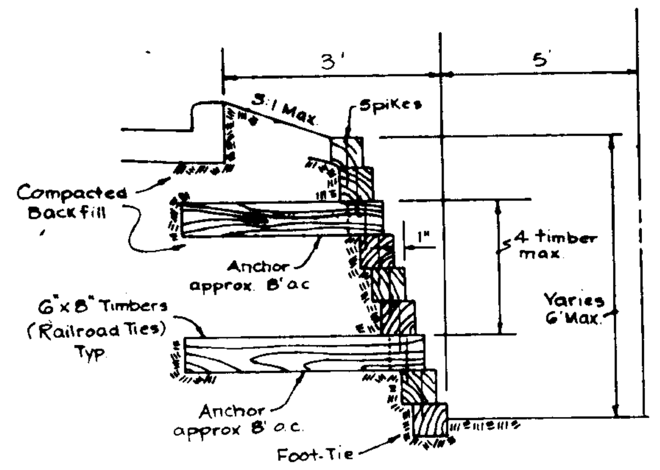

RETAINING WALL

Not to Scale

GENERAL NOTES

1. A MINIMUM OF 24 HOURS NOTICE MUST BE GIVEN TO THE HOWARD COUNTY OFFICE OF INSPECTION AND PERMITS PRIOR TO THE START OF ANY CONSTRUCTION (992-2070).
2. ALL SEDIMENT CONTROL STRUCTURES WILL BE INSTALLED IN ACCORDANCE WITH THE STANDARDS AND SPECIFICATIONS FOR SOIL EROSION AND SEDIMENT CONTROL IN DEVELOPING AREAS AS PREPARED BY THE U.S. DEPARTMENT OF AGRICULTURE, SOIL CONSERVATION SERVICE.
3. SITE GRADING WILL BEGIN ONLY AFTER ALL PERIMETER SEDIMENT CONTROL MEASURES HAVE BEEN INSTALLED AND ARE IN A FUNCTIONING CONDITION.
4. ALL DISTURBED AREAS ARE TO BE DRESSED AND STABILIZED ACCORDING TO THE TEMPORARY OR PERMANENT SEEDING SCHEDULES, AS SOON AS PROPER WEATHER CONDITIONS EXIST FOR THE ESTABLISHMENT OF A PERMANENT VEGETATIVE COVER.
5. SEDIMENT WILL BE REMOVED FROM TRAPS WHEN THE DEPTH REACHES THE CLEANOUT ELEVATION SHOWN ON THE PLANS.
6. FERTILIZER AND LIME RATES MAY BE CHANGED THROUGH AUTHORIZATION BY THE HOWARD SOIL CONSERVATION DISTRICT IF SOIL TESTS DETERMINE A REDUCTION IN THE SPECIFIED RATES IS JUSTIFIED.
7. ALL SEDIMENT CONTROL STRUCTURES ARE TO REMAIN IN PLACE AND ARE TO BE MAINTAINED IN OPERATIVE CONDITION UNTIL PERMISSION FOR THEIR REMOVAL HAS BEEN OBTAINED FROM THE HOWARD COUNTY SEDIMENT CONTROL INSPECTOR.
8. REFERENCES CALLED FOR ON THE SEDIMENT CONTROL CONSTRUCTION PLAN AND DETAILS ARE MADE TO THE STANDARDS AND SPECIFICATIONS FOR SOIL EROSION AND SEDIMENT CONTROL IN DEVELOPING AREAS.

OWNER:
Rte. 100 Joint Venture Inc.
123 S. Van Buren P.O. Box 364
Rockville, Md. 20852

APPROVED
DIVISION OF LAND DEVELOPMENT &
ZONING ADMINISTRATION
HOWARD COUNTY, MARYLAND
DATE 11-30-84

BY THE DEVELOPER:
I certify that all development and/or construction will be done according to this plan, and that any responsible personnel involved in the construction project will have a certificate of Attendance at a Dep't. of Natural Resources Approved Training Program for the control of Sediment and Erosion before beginning this project.

SIGNATURE ____ DATE 12/18/84

BY THE ENGINEER:
I certify that this plan of Erosion and Sediment Control represents a practical and workable plan based on my personal knowledge of the site conditions and that it was prepared in accordance with the requirements of the Howard Co. S.C.D.

H. E. Veenendaal 12/12/84
SIGNATURE DATE

APPROVED: For Soil Erosion and Sediment Control, Howard Soil Conservation District

HOWARD CO. S.C.D. ____ DATE 3/6/85

REVIEWED for Howard S.C.D. and meets technical requirements

James M. Helmer 3/6/85
U.S. SOIL CONSERVATION SERVICE DATE

APPROVED: For Public Water and Public Sewerage and Storm Drainage Systems and Roads. Howard County Dep't. of Public Works.

DIRECTOR ____ DATE 3-8-85

CHIEF, BUREAU OF ENGINEERING ____ DATE 3-7-85

APPROVED: For Public Water and Public Sewerage Systems, Howard County Dep't. of Health and Mental Hygiene.

COUNTY HEALTH OFFICER ____ DATE 3-12-85

APPROVED: Howard County Office of Planning and Zoning.

PLANNING DIRECTOR ____ DATE 3-14-85

CHIEF, DIV. OF LAND DEVEL. and ZONING ADMIN. ____ DATE 3-13-85

H. E. Veenendaal 12/12/84

no.	description	date
1	Revisions as per Co. comments	12-5-84
		2-4-85
2	Revisions As-Built	4-22-91

prepared by
The RBA Group ENGINEERS • ARCHITECTS • PLANNERS
WILDE LAKE VILLAGE GREEN, SUITE 207
COLUMBIA, MARYLAND 21044
301/730-7950 596-3524

DETAIL SHEET
ROUTE ONE HUNDRED BUSINESS PARK
BLOCK A PARCEL D
2.73 Ac.±
TAX MAP 37 RECORDING REF. 26/1
1st ELECTION DIST. HOWARD COUNTY, MD.

SCALE As Shown	
DRAWN MK	CHECKED
PROJ. NO. 4651	DATE
4 SHEET	4 OF

AS-BUILT

SDP-85-45

BRUNING 44-132 58965