SITE ANALYSIS:

1. Zoning: New Town (Employment Center Commercial)
2. Area: 5.425 Acres
3. Number of Parking Spaces Required: 208 (4 per 1000 S.F. of gross leasable area)
4. Number of Parking Spaces Provided: 222
5. Building Coverage shown: (13 % = 30608 ☐')
6. Topography and boundary compiled from actual field survey.
7. Parcel "D-1" is recorded as Plat 4358
8. Parcel "D-1" is located on Tax Map # 30, Parcel # 71.
9. Public Water and Sewer to be utilized.
10. All Building Setback restrictions comply with those set forth in Final Development Plan Phase 43-A-I Recorded as Plat Book 3054A-85 thru 89.
11. All roadways and parking to be privately owned and maintained.
12. Installation of All Traffic Control Devices shall be in accordance with the 1971 Edition of Manual of Uniform Traffic Control Devices.

CURB & GUTTER LEGEND:
Std. 6" Comb. Curb & Gutter:
Reverse 6" Comb. Curb & Gutter:
Std 7" Comb. Curb & Gutter:

GENERAL NOTES:

1. All materials and construction to be in accordance with the Howard County Road Construction Code and Specifications
2. * Water House connection shall be installed in accordance with Contract # 2903-D W&S.
3. Any damage to county owned rights of way shall be corrected at the developers expense.
4. All coordinates are based on the Maryland State Grid System. Elevations on the U.S. Coast and Geodetic Survey Mean Sea Level Datum of 1929.
5. All downspouts drains shall be handled by one of the following methods
   A. Downspout to splash blocks and discharged to ground having good percolation.
   B. Downspout piped to curb.
   C. Down spout connected to storm drain.
6. The developer agrees to work with the Department of Licenses and Inspections to resolve any problems caused by roof water discharge.

* See Sheet 4 of 4 for On-Site Sewer Profile and Notes.

POND CONSTRUCTION SPECIFICATIONS:

I. SITE PREPARATION:
Areas under the embankment and any structural works shall be cleared, grubbed and topsoil stripped to remove all trees, vegetation, roots, or other objectionable material. In order to facilitate clean out and restoration, it is recommended that the pool area be cleared of all brush and trees.

II. EARTH FILL AND STRUCTURAL BACKFILL:
Construction of earth fill and structural backfill shall be in accordance with applicable sections of the Howard County Road Construction Code and Standard Specifications.

III. CONCRETE:
Concrete shall meet minimum requirements set forth in Maryland State Roads Commission Specifications for Materials, Highways, Bridges, and Incidental Structures, Article 20.07 (Portland Cement Concrete Mixtures).

IV. STABILIZATION:
All exposed surfaces of the embankment, spillway and borrow areas shall be stabilized by seeding and straw mulch in accordance with "Standards and Specifications for Soil Erosion and Sediment Control in Developing Areas" immediately after finish grading. All borrow areas shall be graded to provide proper drainage and left in a sightly condition. All slopes exceeding 3:1 shall be stabilized with Crown vetch, applied at a rate of 34 lbs/1000 ☐' and in accordance with the above-mentioned Standards and Specifications.

V. PIPE CONDUITS:
All materials and construction shall be in accordance with the Howard County Road Construction Code and Specifications.

These plans have been reviewed for the Howard Soil Conservation District and meet the technical requirements for small pond construction, soil erosion and sediment control.

James Helan, U.S. Soil Conservation Service — 11-6-79 Date

APPROVED: FOR PUBLIC WATER AND PUBLIC SEWERAGE SYSTEMS, HOWARD COUNTY HEALTH DEPARTMENT
COUNTY HEALTH OFFICER — 4-28-80 DATE

APPROVED: HOWARD COUNTY OFFICE OF PLANNING & ZONING
PLANNING DIRECTOR — 4-30-80 DATE
CHIEF DIVISION OF LAND DEVELOPMENT — 4-30-80 DATE

APPROVED: FOR PUBLIC WATER AND PUBLIC SEWERAGE, STORM DRAINAGE SYSTEMS AND PUBLIC ROADS HOWARD COUNTY DEPARTMENT OF PUBLIC WORKS
DIRECTOR — 4-25-80 DATE
CHIEF BUREAU OF ENGINEERING — 4-25-80 DATE

TYPICAL ENTRY WITH STEPS AND RAMP
No scale

TYPICAL ELEVATION
No scale

LEGEND:

1. Contour Interval — 2 Ft.
2. Existing Contour — 370
3. Prop. contour — 370
4. Spot Elevation — +708
5. Direction of Drainage
6. Ex. Storm Drain
7. Proposed Storm Drain
8. Existing Water Line
9. Existing Sewer Line
10. Retaining Wall
12. Storm Drain (Under Constr.)

VICINITY MAP
Scale: 1"=2000'

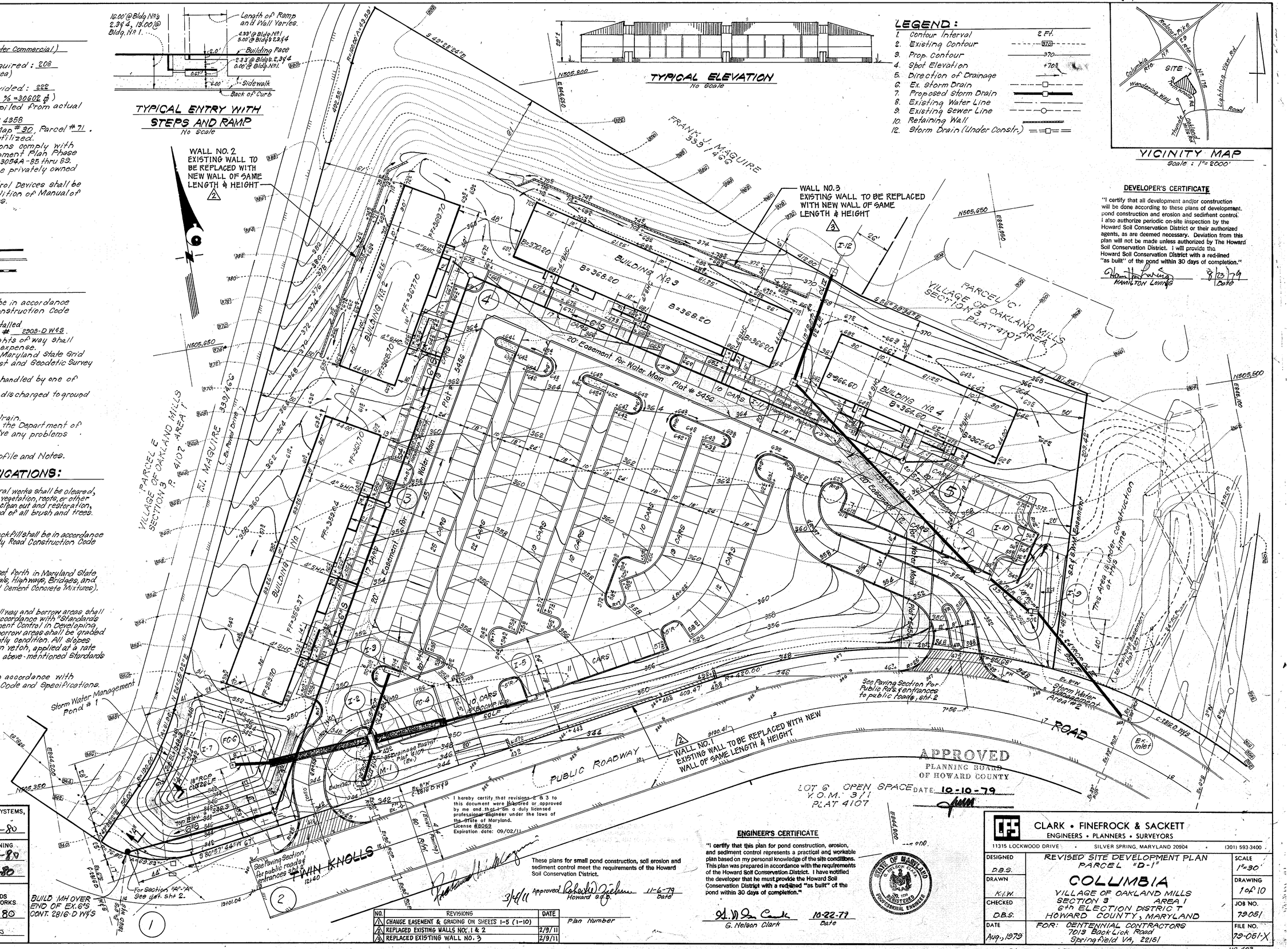

DEVELOPER'S CERTIFICATE

"I certify that all development and/or construction will be done according to these plans of development, pond construction and erosion and sediment control. I also authorize periodic on-site inspection by the Howard Soil Conservation District or their authorized agents, as are deemed necessary. Deviation from this plan will not be made unless authorized by The Howard Soil Conservation District. I will provide the Howard Soil Conservation District with a red-lined "as built" of the pond within 30 days of completion."

Hamilton Lowing — 8/13/79 Date

I hereby certify that revisions 2 & 3 to this document were prepared or approved by me and that I am a duly licensed professional engineer under the laws of the State of Maryland. License #8069 Expiration date: 09/02/11

These plans for small pond construction, soil erosion and sediment control meet the requirements of the Howard Soil Conservation District.

Approved Robert W. Fiedler, Howard S.C.D. — 11-6-79 Date

Plan Number

NO.	REVISIONS	DATE
1	CHANGE EASEMENT & GRADING ON SHEETS 1-5 (1-10)	2/9/11
2	REPLACED EXISTING WALLS NOS. 1 & 2	2/9/11
3	REPLACED EXISTING WALL NO. 3	2/9/11

ENGINEER'S CERTIFICATE

"I certify that this plan for pond construction, erosion, and sediment control represents a practical and workable plan based on my personal knowledge of the site conditions. This plan was prepared in accordance with the requirements of the Howard Soil Conservation District. I have notified the developer that he must provide the Howard Soil Conservation District with a redlined "as built" of the pond within 30 days of completion."

G. Nelson Clark — 10-22-79 Date

STATE OF MARYLAND G. NELSON CLARK No. 7725 REGISTERED PROFESSIONAL ENGINEER

CLARK • FINEFROCK & SACKETT
ENGINEERS • PLANNERS • SURVEYORS
11315 LOCKWOOD DRIVE • SILVER SPRING, MARYLAND 20904 • (301) 593-3400

DESIGNED D.B.S.	REVISED SITE DEVELOPMENT PLAN PARCEL "D-1"	SCALE 1"=30'
DRAWN K.I.W.	COLUMBIA VILLAGE OF OAKLAND MILLS SECTION 3 AREA 1 6th ELECTION DISTRICT HOWARD COUNTY, MARYLAND	DRAWING 10 of 10
CHECKED D.B.S.		JOB NO. 79051
DATE Aug., 1979	FOR: CENTENNIAL CONTRACTORS 7013 Back Lick Road Springfield VA, 22151	FILE NO. 79-051-X

SBP-80-35C

HC-403

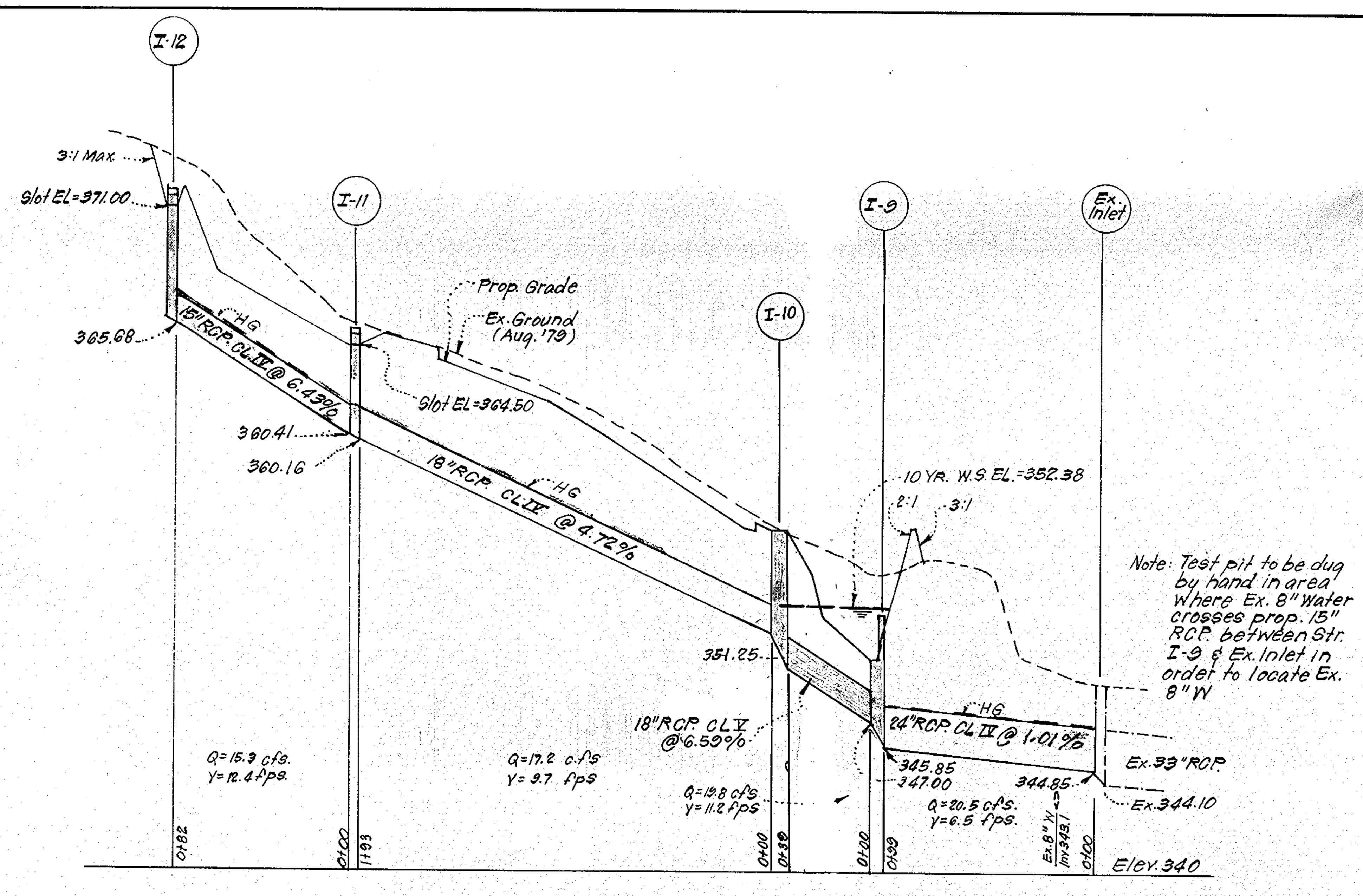

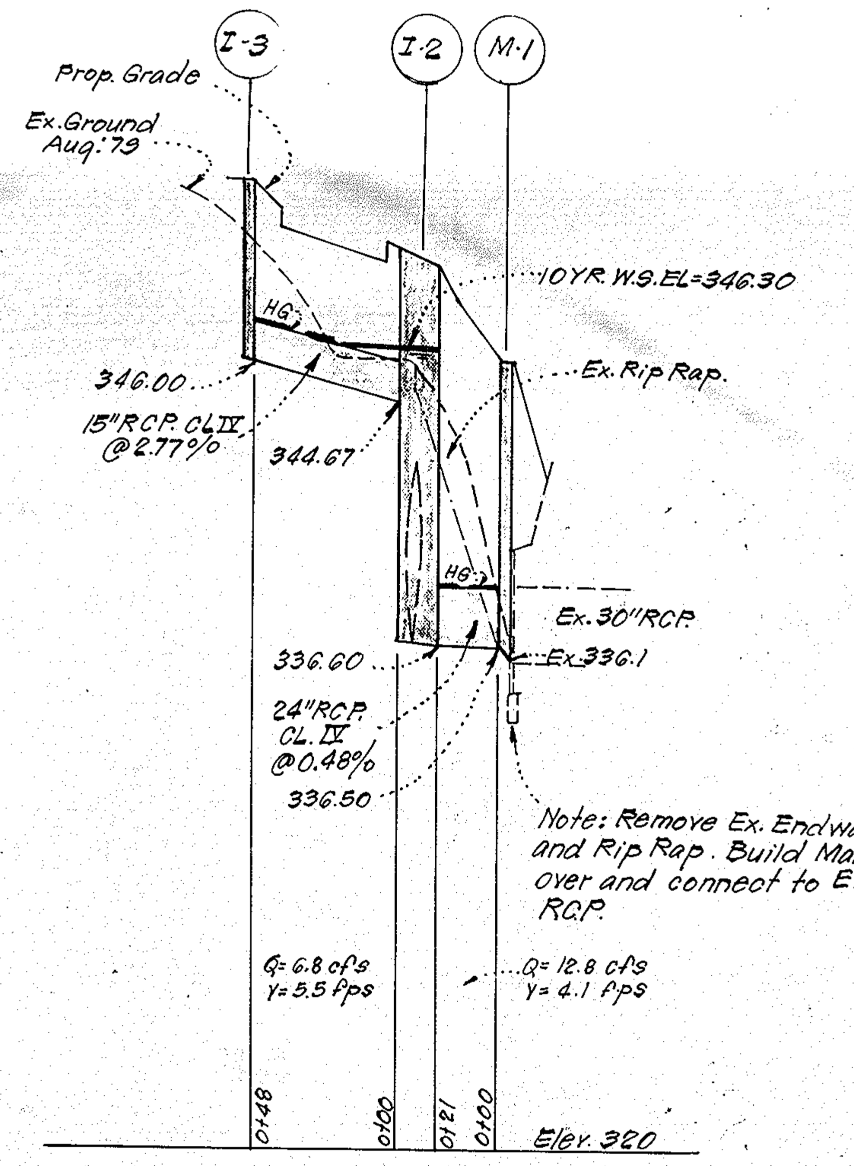

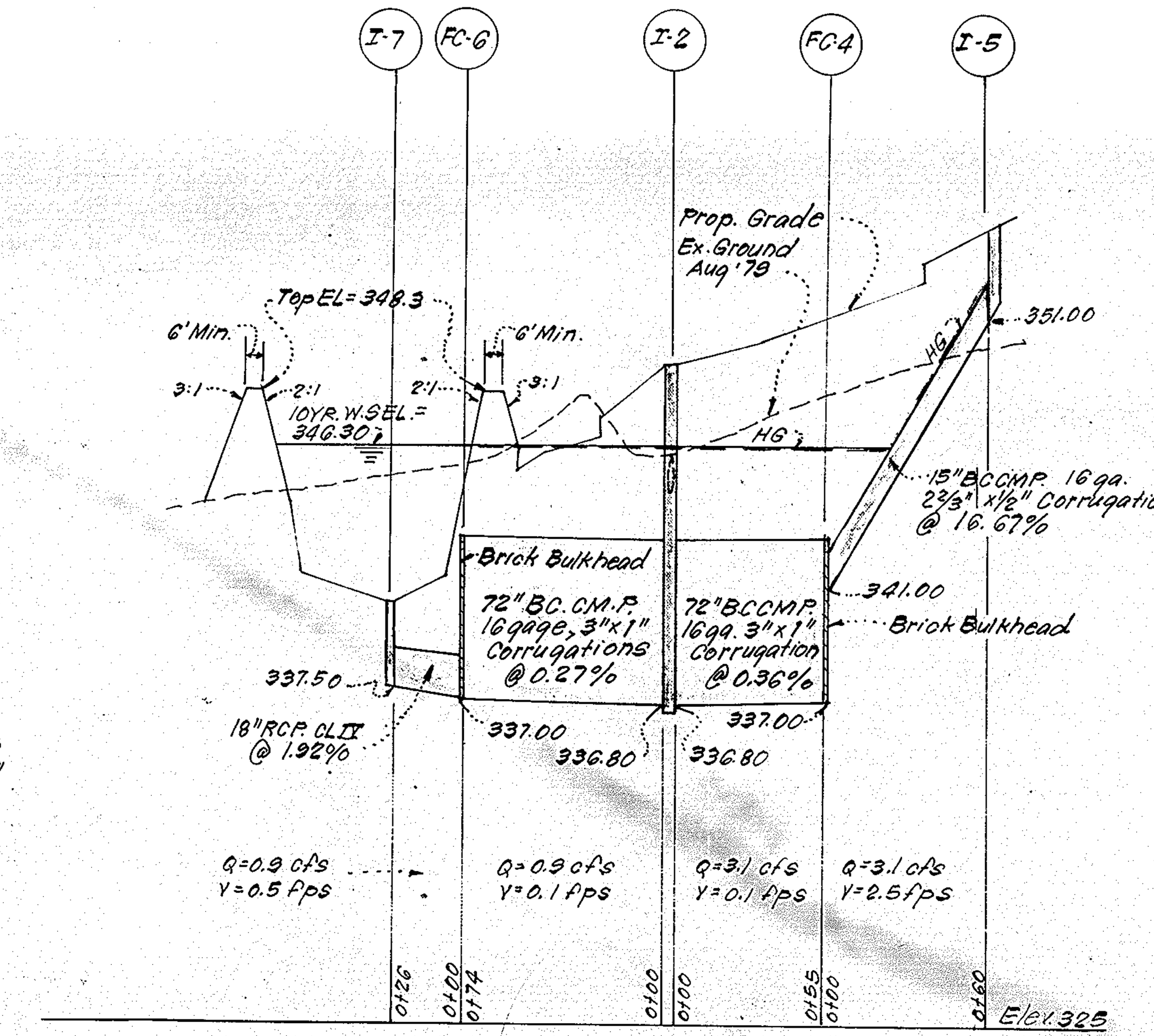

PROFILES

SCALE: Horiz: 1"=50'
Vert: 1"=5'

APPROVED
PLANNING BOARD
OF HOWARD COUNTY
DATE 10-10-79

Note: For details not shown, see S.H.A. Std. Yard Inlet MD# 381.01

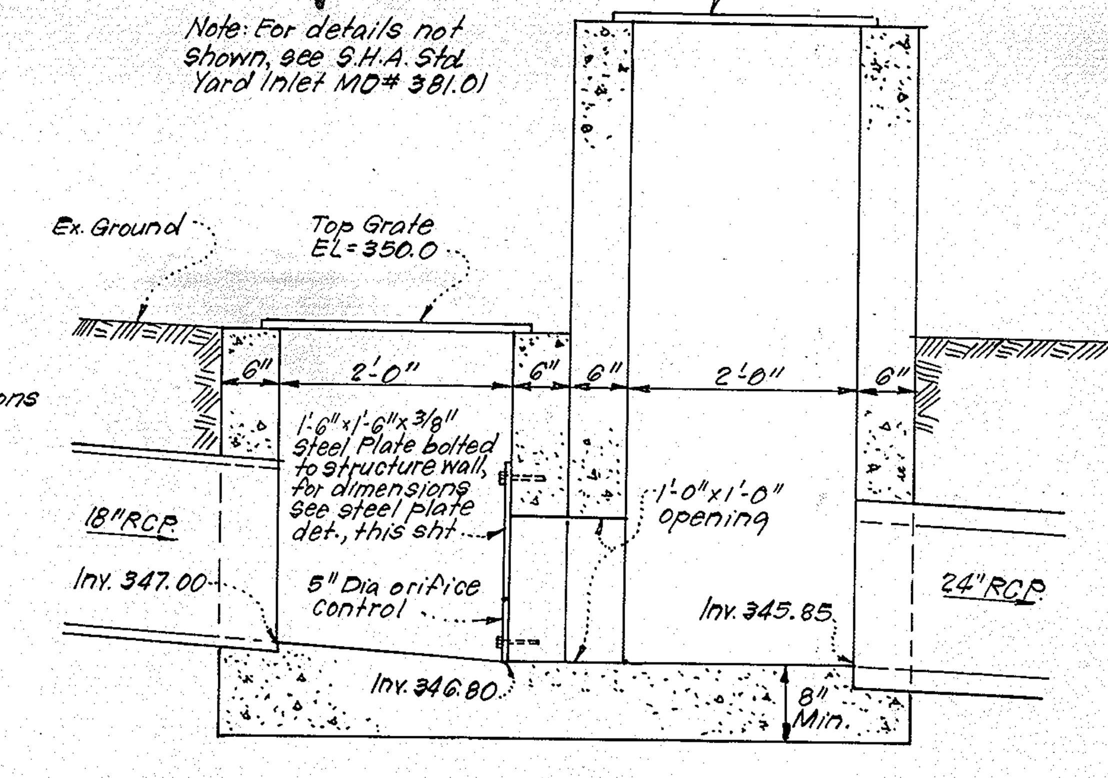

SPECIAL STRUCTURE No. I-9

No SCALE

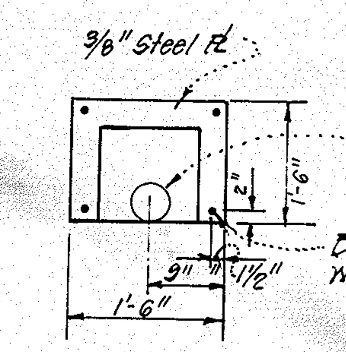

Note: Apply waterproofing to face of steel plate prior to bolting to structure to form water tight connection.

Cut * Ø hole in steel plate for oriface flow control at inv. of outgoing pipe.

Drill 9/16" holes, bolt to structure wall with 1/2" Ø Hex Head Bolts, 4" long.

* 5" Ø hole @ Str. I-9
4" Ø hole @ Str. I-2

STEEL PLATE DETAIL

No SCALE

STRUCTURE SCHEDULE

	NO.	TYPE	INV. IN	INV. OUT	TOP ELEVATION Upper	TOP ELEVATION Lower	REMARKS	LOCATION
	M-1	B-Manhole	336.50	Ex. 336.10	346.00	346.00	Ho.Co.Std. Fig. 3.03 48" Sq.	See Plan
*	I-2	Special	344.67 336.80 336.80	336.60	349.28	349.00	See detail, this sheet.	" "
	I-3	A-10 Inlet	-	346.00	351.90	351.90	Ho.Co.Std. Fig. 4.02 W=2'-6"	" "
	FC-4	Field Connection	341.00	341.00	—		Connect into Brick Bulkhead	" "
	I-5	A-5 Inlet	-	351.00	354.65	354.40	Ho.Co.Std. Fig. 4.01 W=2'-6"	" "
	FC-6	Field Connection	337.00	337.00	—		Connect into Brick Bulkhead	" "
	I-7	Yard Inlet	-	337.50	341.00	341.00	S.H.A. Std. No. MD. 381.01	" "
+	I-9	Special	347.00	345.85	—		See detail, this sheet	" "
	I-10	A-10 Inlet	351.05	349.57	356.00	356.00	Ho.Co.Std. Fig. 4.02 W=2'-6"	" "
□	I-11	D-Inlet	360.41	360.16	364.50	-	Ho.Co.Std. Fig. 4.11 W=2'-6"	" "
△	I-12	D-Inlet	-	365.68	371.00	-	Ho.Co.Std. Fig. 4.11 W=2'-6"	" "

* See detail for Str. I-2, this sheet.

\+ See detail for Str I-9, this sheet.
□ Provide slots in North & South side of Inlet. Top elev = slot elev.
△ Provide slots in all sides of Inlet. Top elev = slot elev.

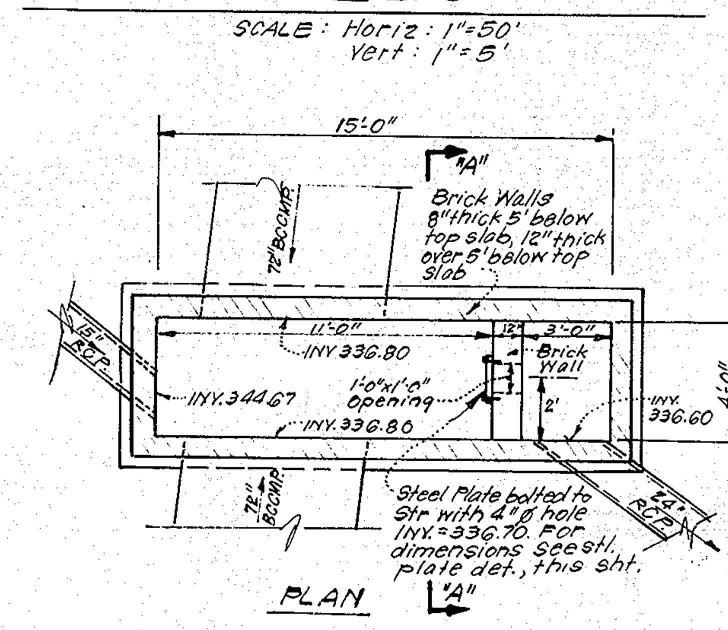

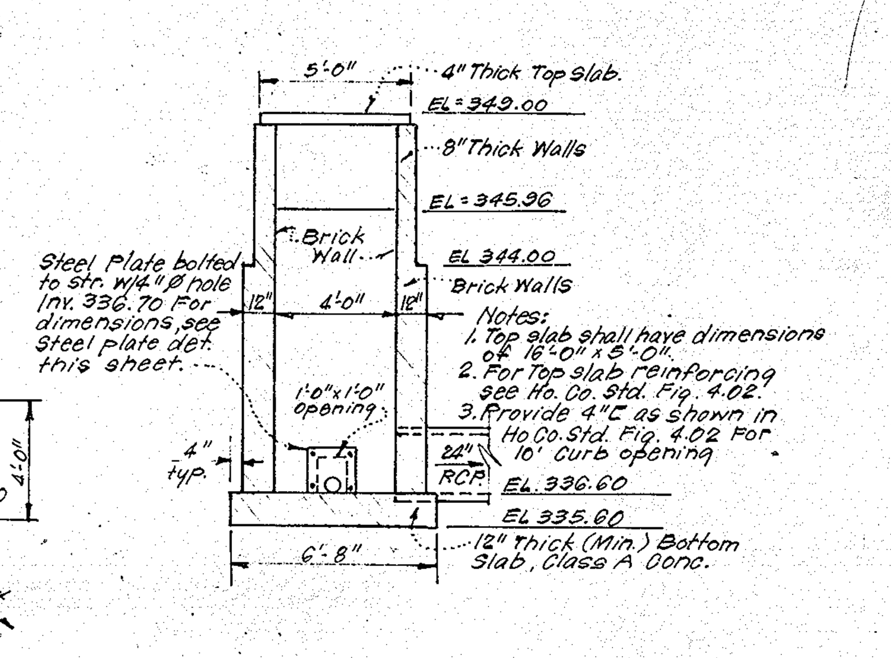

Notes:
1. Top slab shall have dimensions of 16'-0" x 5'-0".
2. For Top slab reinforcing see Ho. Co. Std. Fig. 4.02.
3. Provide 4"C as shown in Ho Co. Std. Fig. 4.02 For 10' Curb opening

SPECIAL STRUCTURE No. I-2

No SCALE

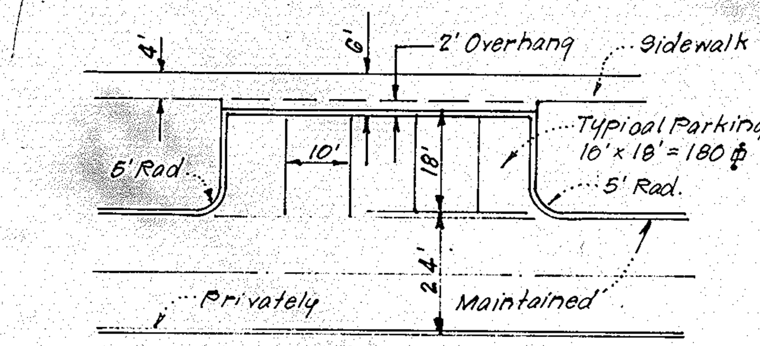

TYPICAL PARKING

No Scale

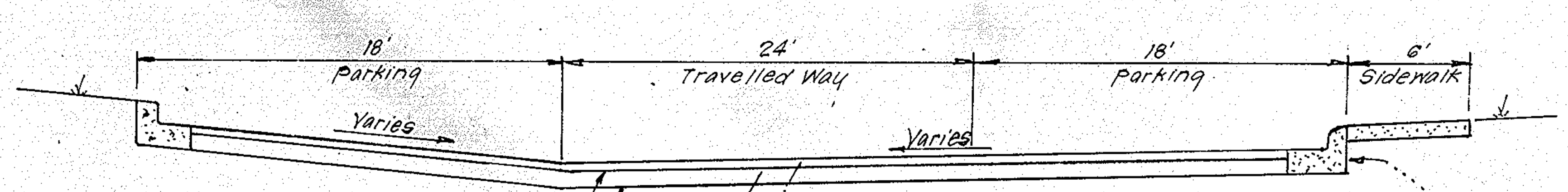

Tack Coat in accordance with Howard Co. Std Spec., C-31-4
Prime Coat in accordance with Howard Co. Std Spec, C-28
1" Bituminous Conc. Surface
4" Bituminous Conc. Base
Std. 6" Comb. Curb & Gutter (typ.*)
* Where flow is away from curb & gutter, use reverse 7" Curb & Gutter.

TYPICAL PAVING SECTION · PRIVATE DRIVE AND PRIVATE PARKING

No Scale

PIPE SCHEDULE

	SIZE	TYPE	LENGTH
	15"	R.C.P. CL. IV	130 LF.
	18"	RCP. CL. V	39 LF.
*	15"	B.C.C.M.P. (16 gage)	60 LF.
	24"	RCP. CL. IV	120 LF.
#	72"	BC. CM.P. (16 gage)	129 LF.
	18"	RCP. CL. IV	219 LF.

\# 3" x 1" Corrugations
* 2 2/3" x 1/2" Corrugations

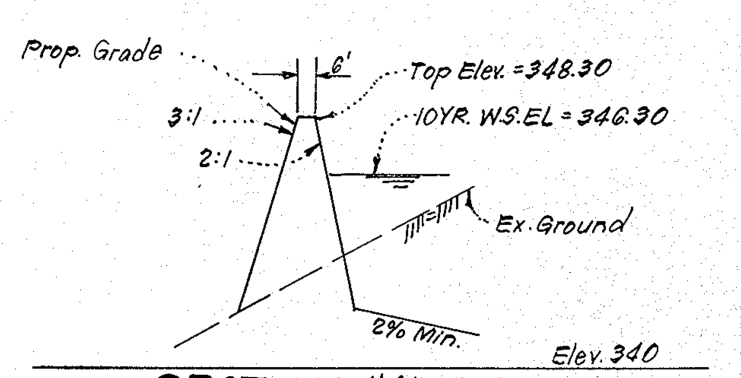

SECTION "A"-"A"

Scale: Horiz: 1"=50'
Vert: 1"=5'

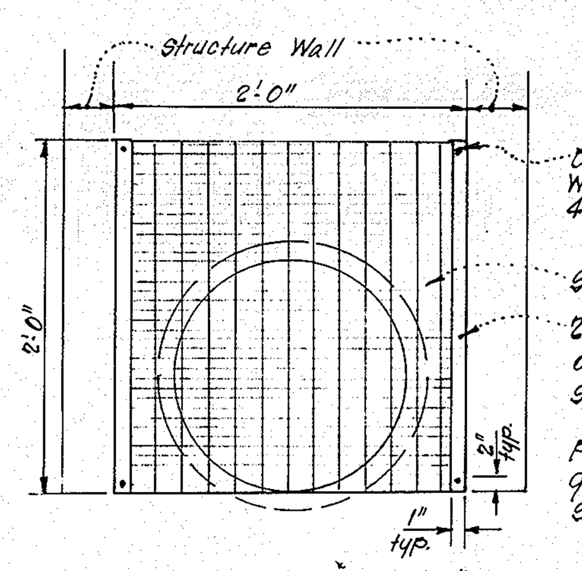

Drill 9/16" holes, bolt to structure wall with 1/2" Ø Hex. Head Bolts, 4" long each corner.

Steel Grating

2 - 3/4" x 3/16" thick, 2'-0" lg. (centered on grate) Grating shall have outside dimensions of 2'-0" x 2'-0"

Provide Grating at the outgoing pipe at the following structures: I-3, I-5 & I-10.

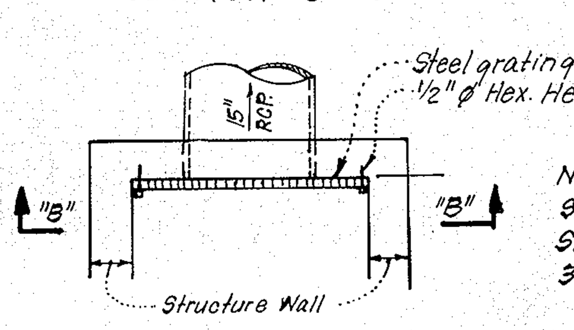

Note: For details not shown, See S.H.A. Std. Yard Inlet MD. 381.01.

STEEL GRATING DETAIL STRUCTURES I-3, I-5 & I-10.

No SCALE

△2 △3 EXISTING TIMBER WALL REPLACED WITH SEGMENTAL CONCRETE BLOCK WALL, SEE DWGS C2-2 & S2-1B.

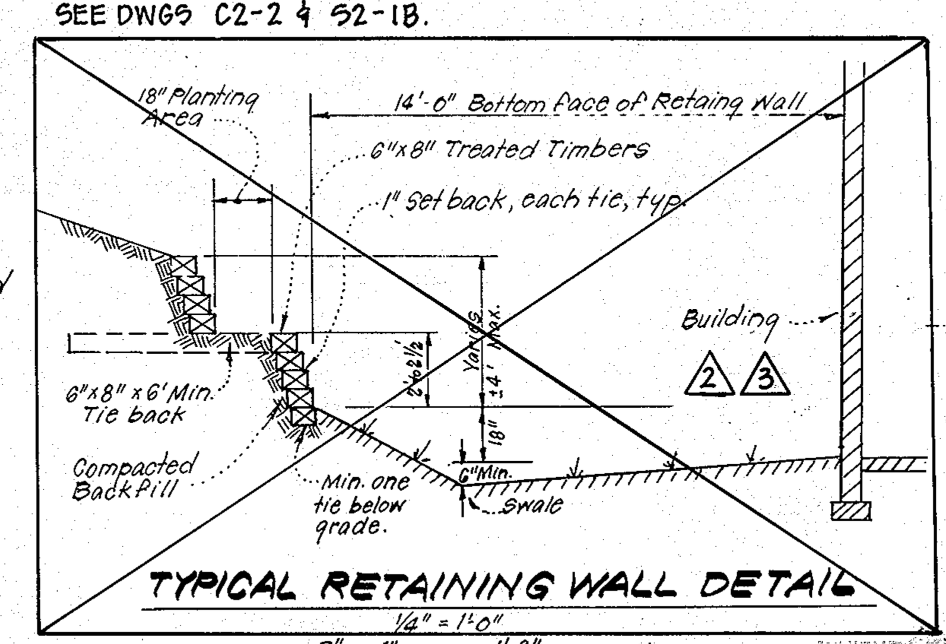

TYPICAL RETAINING WALL DETAIL

1/4" = 1'-0"

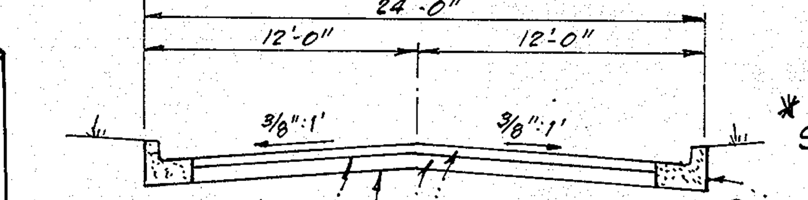

Tack Coat in accordance with Ho. Co. Spec C-31-4
Prime Coat in accordance with Ho. Co. Spec C-28
1 1/2" Bit. Conc. Surface
5" Bit Conc. Base
Std. 6" Comb. Curb & Gutter (typ)
* See Alternate Paving Section, This sheet.

TYPICAL PAVING SECTION · PRIVATE DRIVE

No Scale

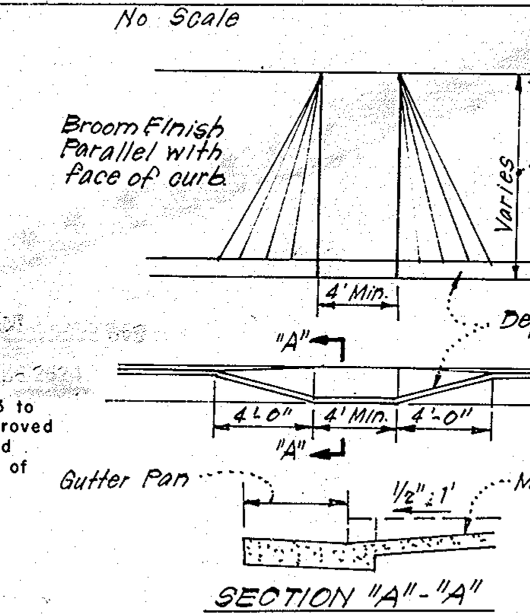

SIDEWALK RAMP DETAILS

No Scale

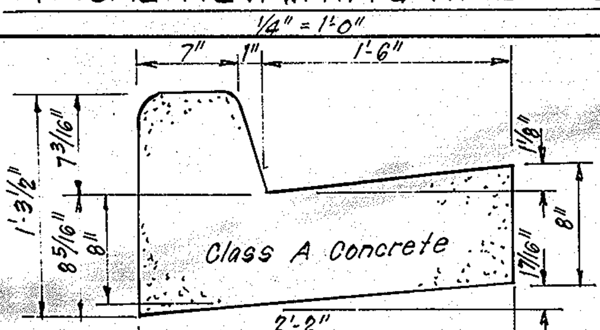

STANDARD 7" COMBINATION CURB & GUTTER DETAILS

No Scale

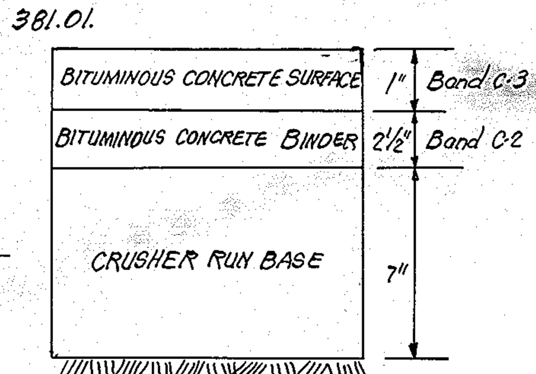

Clearing and Grading Article C-1
Subgrade Article C-2
Base Course Article C-25
Binder Course Article C-31 or C-33
Surface Course Article C-31

ALTERNATE PAVING SECTION

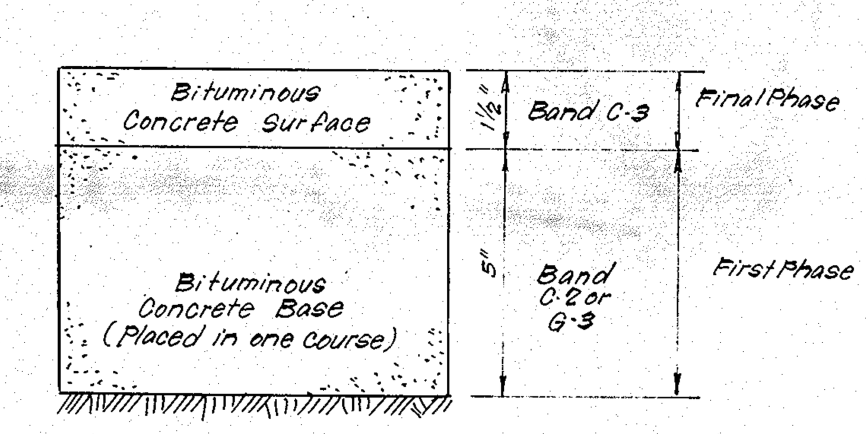

Clearing and Grating Article C-1
Sub grade Article C-2
Base Course Article C-3/ or C-33
Surface Course Article C-31

To be constructed in accordance with the Ho. Co. Road Construction Code and Specifications.
Note: This section to be used at entrances to Twin Knolls Rd. shown thus: ▨

PAVING SECTION FOR PUBLIC ROADS AND ENTRANCES TO PUBLIC ROADS

No Scale

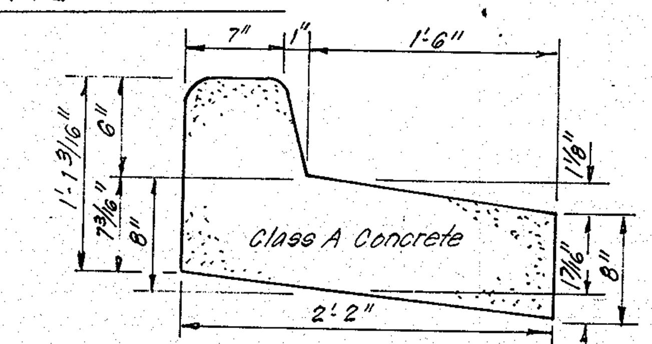

REVERSE 6" COMBINATION

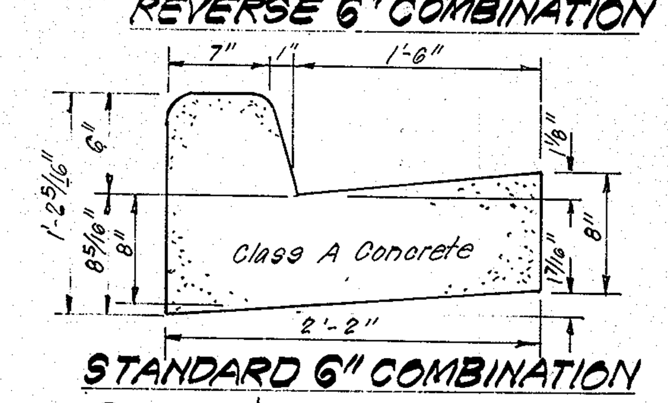

STANDARD 6" COMBINATION CURB & GUTTER DETAILS

No Scale

APPROVED: FOR PUBLIC WATER AND PUBLIC SEWERAGE SYSTEMS, HOWARD COUNTY HEALTH DEPARTMENT
COUNTY HEALTH OFFICER — DATE 4-27-80

APPROVED: HOWARD COUNTY OFFICE OF PLANNING & ZONING
PLANNING DIRECTOR — DATE 4-30-80
CHIEF DIVISION OF LAND DEVELOPMENT — DATE 4-30-80

APPROVED: FOR PUBLIC WATER AND PUBLIC SEWERAGE, STORM DRAINAGE SYSTEMS AND PUBLIC ROADS HOWARD COUNTY DEPARTMENT OF PUBLIC WORKS
DIRECTOR — DATE 4-25-80
CHIEF BUREAU OF ENGINEERING — DATE 4-25-80

... plans have been reviewed for the Howard Soil ... District and meet the technical requirements ... small pond construction, soil erosion and sediment control.

James Helm... U.S. Soil Conservation Service — 11-6-79 Date

These plans for small pond construction, soil erosion and sediment control meet the requirements of the Howard Soil Conservation District.

Approved Roberta J. Zielin... Howard S.C.D. — 11-6-79 Date

I hereby certify that revisions 2 & 3 to this document were prepared or approved by me and that I am a duly licensed professional engineer under the laws of the State of Maryland.
License #8069
Expiration date: 09/02/11
3/4/11

Plan Number

NO.	REVISIONS	DATE
2	REPLACED EXISTING WALLS NO. 1 & 2	2/9/11
3	REPLACED EXISTING WALL NO. 3	2/9/11

DEVELOPER'S CERTIFICATE

"I certify that all development and/or construction will be done according to these plans of development, ... construction and erosion and sediment control. ... authorize periodic on site inspection by the Howard Soil Conservation District or their authorized agents, as are deemed necessary. Deviation from this plan will not be made unless authorized by The Howard Soil Conservation District. I will provide the Howard Soil Conservation District with a red-lined "as built" of the pond within 30 days of completion."

HAMILTON LOVING — 8/23/79

ENGINEER'S CERTIFICATE

"I certify that this plan for pond construction, erosion, and sediment control represents a practical and workable plan based on my personal knowledge of the site conditions. This plan was prepared in accordance with the requirements of the Howard Soil Conservation District. I have notified the developer that he must provide the Howard Soil Conservation District with a red-lined "as built" of the pond within 30 days of completion."

G. Nelson Clark — 10-22-79 Date

CFS CLARK • FINEFROCK & SACKETT
ENGINEERS • PLANNERS • SURVEYORS
11315 LOCKWOOD DRIVE • SILVER SPRING, MARYLAND 20904 • (301) 593-3400

DESIGNED J.L.S.	REVISED SITE DEVELOPMENT PLAN PARCEL "D-1"	SCALE As Shown
DRAWN K.I.W.	COLUMBIA	DRAWING 2 of 10
CHECKED J.L.S.	VILLAGE OF OAKLAND MILLS SECTION 3 AREA 1 6th ELECTION DISTRICT HOWARD COUNTY, MARYLAND	JOB NO. 79-051
DATE Aug., 1979	FOR: CENTENIALL CONTRACTORS 7013 Backlick Road Springfield, VA. 22151	FILE NO. 79-051-X

SDP-80-35c

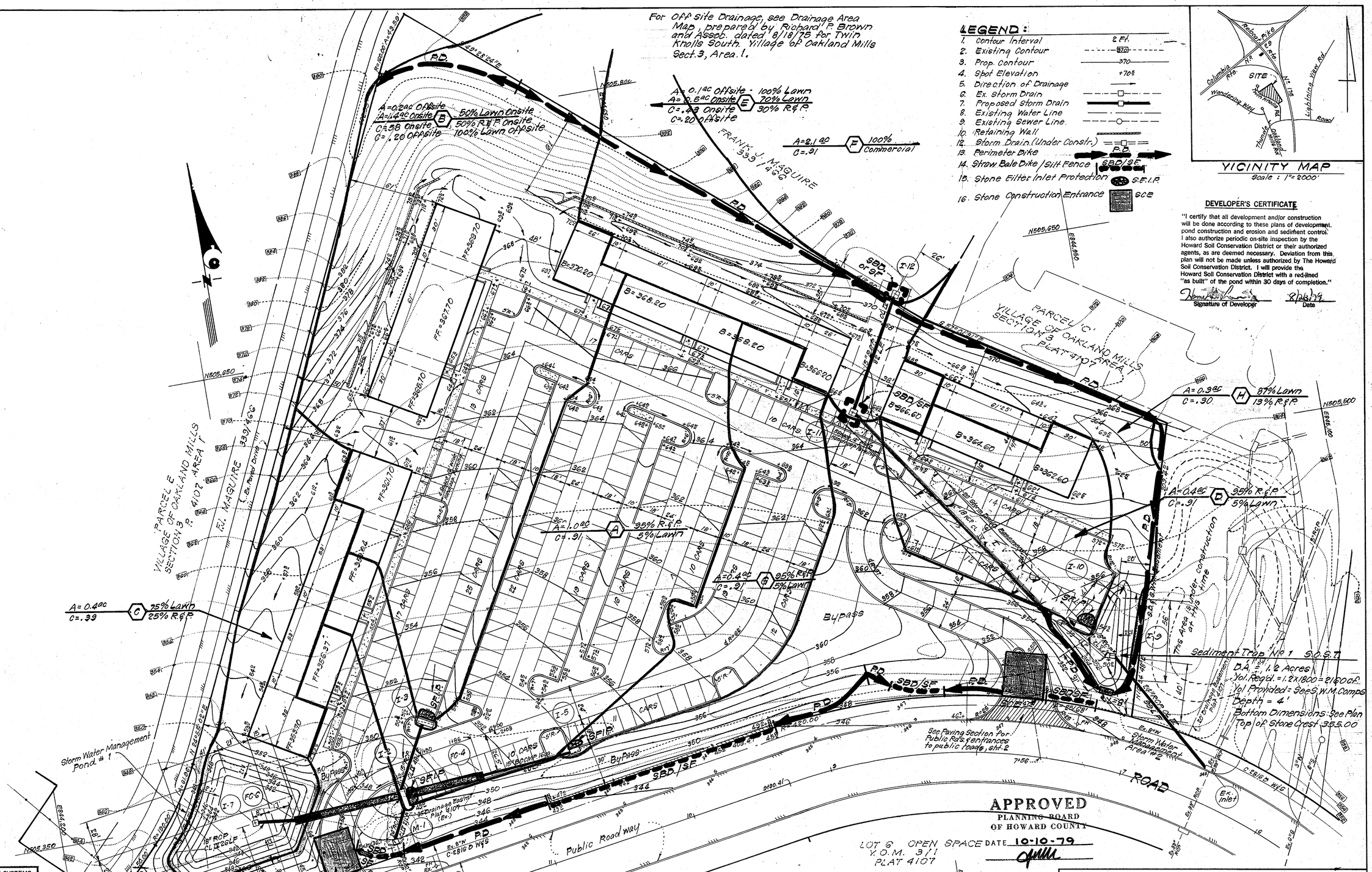

VICINITY MAP
Scale: 1" = 2000'

DEVELOPER'S CERTIFICATE

"I certify that all development and/or construction will be done according to these plans of development, pond construction and erosion and sediment control. I also authorize periodic on-site inspection by the Howard Soil Conservation District or their authorized agents, as are deemed necessary. Deviation from this plan will not be made unless authorized by The Howard Soil Conservation District. I will provide the Howard Soil Conservation District with a red-lined "as built" of the pond within 30 days of completion."

Signature of Developer — Date 8/28/79

These plans have been reviewed for the Howard Soil Conservation District and meet the technical requirements for small pond construction, soil erosion and sediment control.

James Helm — U.S. Soil Conservation Service — Date 11-6-79

APPROVED
PLANNING BOARD
OF HOWARD COUNTY
DATE 10-10-79

LOT 6 OPEN SPACE
V.O.M. 3/1
PLAT 4107

APPROVED: FOR PUBLIC WATER AND PUBLIC SEWERAGE SYSTEMS, HOWARD COUNTY HEALTH DEPARTMENT
COUNTY HEALTH OFFICER — DATE 4-29-80

APPROVED: HOWARD COUNTY OFFICE OF PLANNING & ZONING
PLANNING DIRECTOR — DATE 4-30-80
CHIEF DIVISION OF LAND DEVELOPMENT — DATE 4-30-80

APPROVED: FOR PUBLIC WATER AND PUBLIC SEWERAGE, STORM DRAINAGE SYSTEMS AND PUBLIC ROADS HOWARD COUNTY DEPARTMENT OF PUBLIC WORKS
DIRECTOR — DATE 4-25-80
CHIEF BUREAU OF ENGINEERING — DATE 4-25-80

These plans for small pond construction, soil erosion and sediment control meet the requirements of the Howard Soil Conservation District.

Approved Robert W. Ziehm — Howard S.C.D. — Date

Plan Number

ENGINEER'S CERTIFICATE

"I certify that this plan for pond construction, erosion, and sediment control represents a practical and workable plan based on my personal knowledge of the site conditions. This plan was prepared in accordance with the requirements of the Howard Soil Conservation District. I have notified the developer that he must provide the Howard Soil Conservation District with a red-lined "as built" of the pond within 30 days of completion."

Signature of Engineer — Date 8-23-79
G. Nelson Clark

STATE OF MARYLAND — G. NELSON CLARK — NO. 7738 — REGISTERED PROFESSIONAL ENGINEER

CFS CLARK • FINEFROCK & SACKETT
ENGINEERS • PLANNERS • SURVEYORS
11315 LOCKWOOD DRIVE • SILVER SPRING, MARYLAND 20904 • (301) 593-3400

DESIGNED J.L.S.	SEDIMENT AND EROSION CONTROL PLAN AND DRAINAGE AREA MAP PARCEL "D-1" COLUMBIA	SCALE 1"=30'
DRAWN K.I.W.	VILLAGE OF OAKLAND MILLS SECTION 3 AREA 1 6th ELECTION DISTRICT HOWARD COUNTY, MARYLAND	DRAWING 3 of 10
CHECKED J.L.S.		JOB NO. 79.051
DATE Aug., 1979	FOR: CENTENNIAL CONTRACTORS 7013 Back Lick Road Springfield VA, 22151	FILE NO. 79-051-X

SDP-80-35c

HC 403

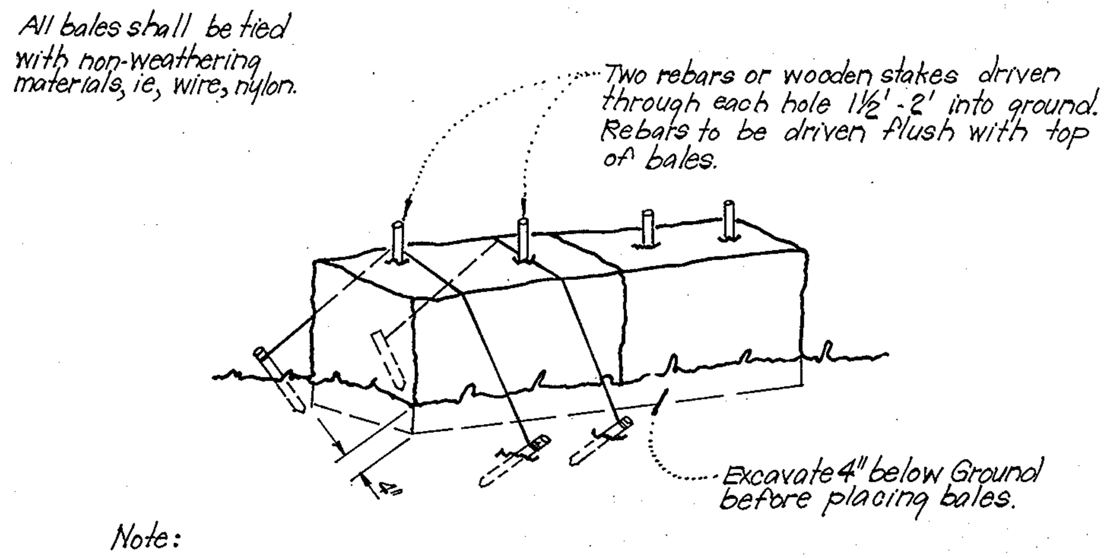

Note:
1. In lieu of the use of rebars each straw bale may be fastened to ground with pegs (4 per bale and wire or nylon as shown above.)

TYPICAL STRAW BALE DIKE DETAIL (S.B.D.)
No Scale

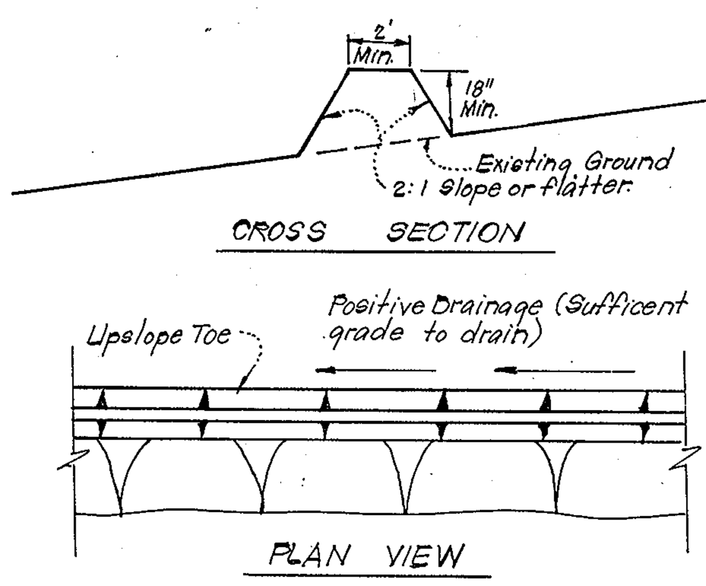

TYPICAL PERIMETER DIKE DETAIL (P.D.)
No Scale

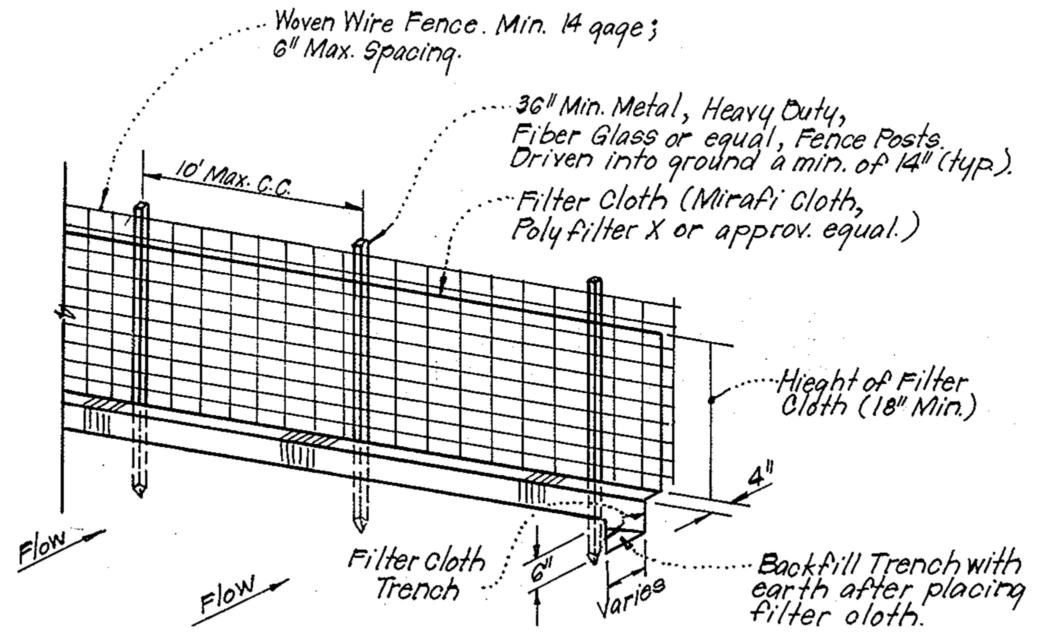

Notes:
1. Woven Wire Fence to be fastened securely to fence posts by use of wire ties.
2. Filter Cloth to be fastened securely to Woven Wire, by use of wire ties spaced every 24"x24".

TYPICAL SILT FENCE DETAIL (S.F.)
No Scale

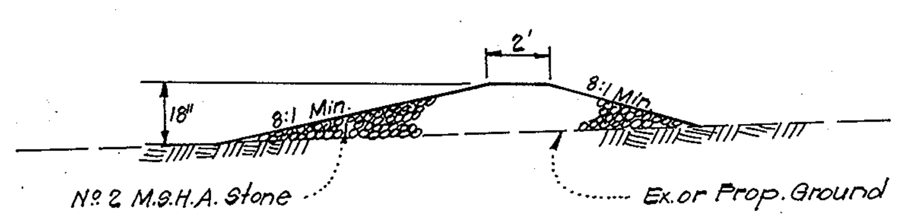

STONE CONSTRUCTION ENTRANCE DETAIL (S.C.E.)
No Scale

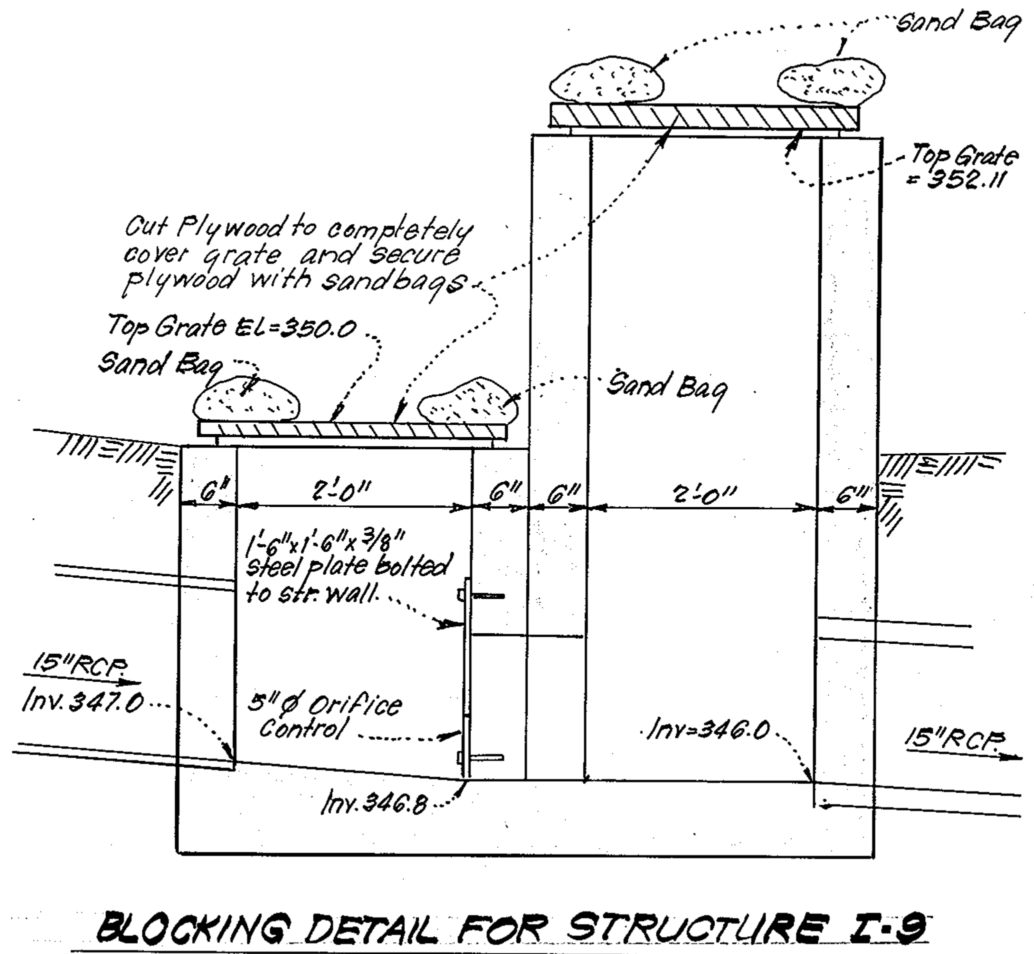

BLOCKING DETAIL FOR STRUCTURE I-9
No Scale

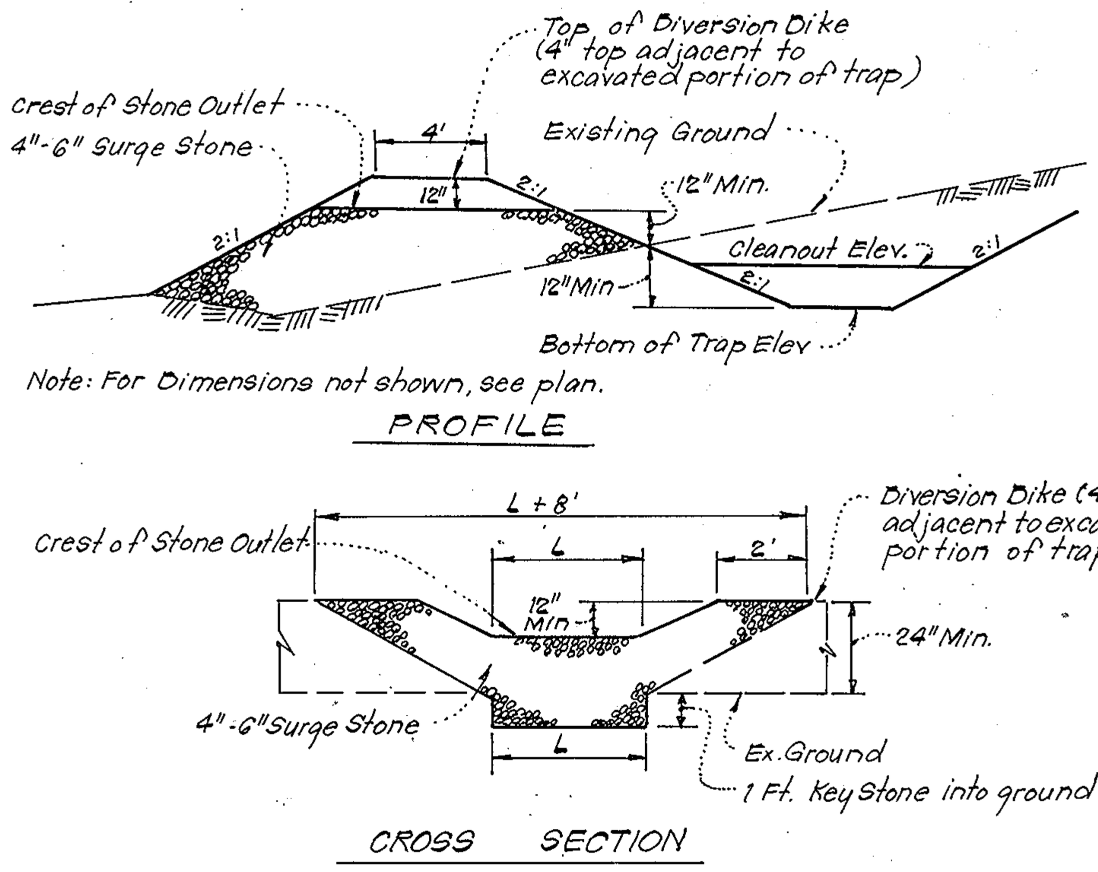

Notes:
1. Sediment Trap to be cleaned out when sediment reaches a level of 1 ft. below crest of stone outlet.
2. Bottom of Sediment Trap to be constructed to the dimensions shown on plan.
3. Stone Outlet to be constructed through diversion dike adjacent to excavated portion of sediment trap.

DETAILS OF STONE FILTER OUTLET (FOR STONE OUTLET SEDIMENT TRAP)
No Scale

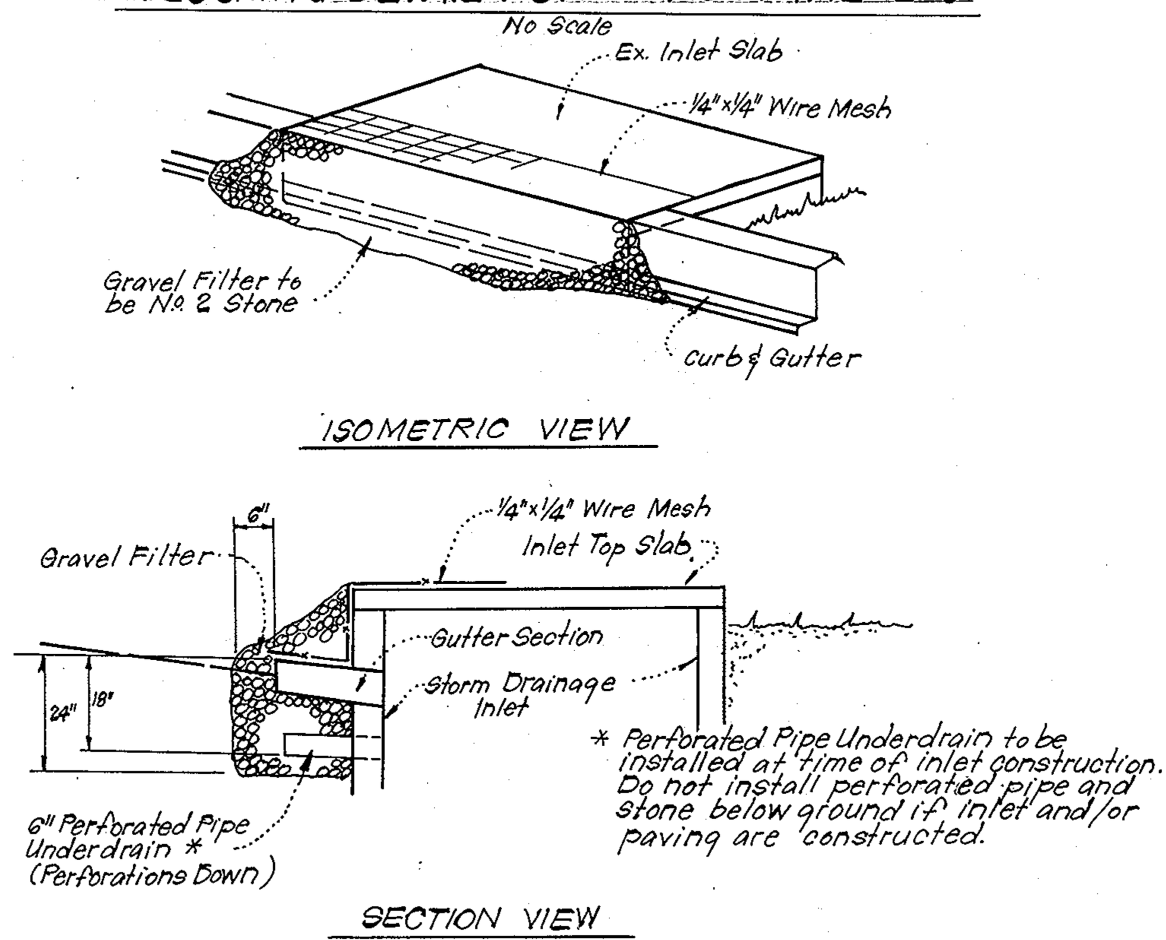

STONE FILTER INLET PROTECTION (S.F.I.P.)
No Scale

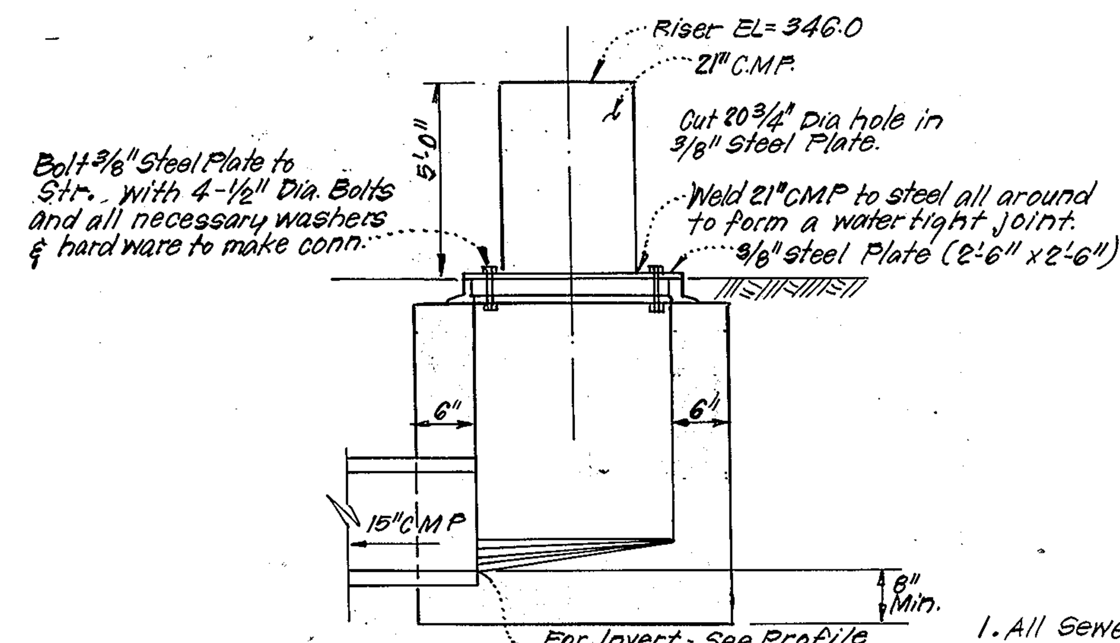

MODIFIED STR. I-7 FOR SEDIMENT TRAP
No Scale

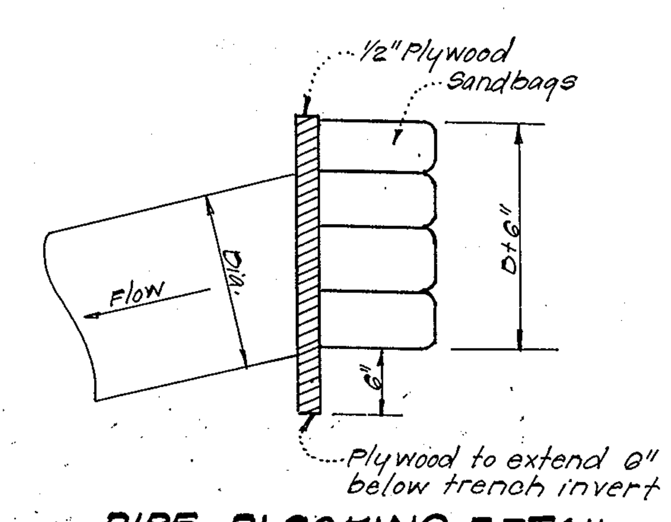

PIPE BLOCKING DETAIL
No Scale

GENERAL NOTES

1. Grading Permits shall be obtained prior to installation of Sediment Control & Grading.
2. All Sediment and Erosion Control Measures will be installed and stabilized according to this plan prior to any other grading, clearing or disturbance of the existing surface of the site. See note #6 for stabilization except that the seed mixture will be annual rye applied at a rate of 1.4 lbs/1000 s.f.
3. Notify the Bureau of Inspections and Permits at least 24 hrs before starting any work.
4. All Sediment Control Practices to conform to the "Standards and Specifications for Soil Erosion and Sediment Control in Developing Areas" and shall be adjusted to meet actual field conditions.
5. Stabilization of Disturbed ground to be done as soon after construction as possible.
6. All grading shall be treated in accordance with the following Specifications:
   A. Seed- certified 85% germination applied at the rate of 3 lbs/1000 s.f. Mixture -40% Kentucky Blue, 20% Chewing Fescue, 20% Kentucky 31 and 20% annual rye.
   B. Fertilizer- 10-10-10 applied at a rate of 23 lbs/1000 s.f. Ground Agricultural Lime or Dolomatic Lime applied at a rate of 46 lbs/1000 s.f.
   C. Mulch- Weed free grain straw applied at a rate of 46 lbs/1000 s.f. Mulch shall be secured to the ground by any approved method ie; asphalt tacks, chemical binder, etc.
   D. All Sod used shall be Maryland State Certified.
7. All Structural Sediment Control Measures are to remain in place until permission for their removal has be obtained from the Bureau of Inspections and Permits.
8. On-Site Inspection and Maintenance of all Sediment Control Measures including clean out of Sediment Traps and dikes, and proper establishment of all planned vegetative measures will be the responsibility of the developer or his representative on the site, on a continuing day to day basis.
9. It will be the developers responsibility to provide additional Sediment & Erosion Control Devices to protect stabilized areas during construction.
10. The Contractor shall keep all public roads free of sediment deposits left from traffic leaving construction site.
11. Stone Construction Entrances shall be placed at all construction entrances.
12. SITE ANALYSIS:

Total Area :	5.425 Acres
Area to be roofed:	0.700 Acres
Area to be paved:	2.699 Acres
Area to be seeded	1.753 Acres
Area Undisturbed:	0.273 Acres

APPROVED
PLANNING BOARD
OF HOWARD COUNTY
DATE 10-10-79

13. CONSTRUCTION SEQUENCE:
   A. Install stone construction entrance
   B. Construct all storm drainage and block all inlets as shown in plan and convert Str. I-7 as per detail, this sheet.
   C. Construct S.W.M. Ponds 1 and 2 and stabilize immediately.
   D. Install remaining sediment and erosion control devices.
   E. Rough grade and excavate for foundations
   F. Erect structures and construct paving & sidewalk.
   G. Fine grade and stabilize in accordance with general note #6.
   H. Flush all storm drains prior to removing riser on Str. I-7 and blocking on Str. I-9.

SEWER NOTES

1. All Sewer Mains shall be C.S.P.X., V.C.P.X. or A.C.P. Class 2400.
2. All materials used for Sewer shall be in accordance with Howard Co. Standards.
3. All Sewer Construction shall be performed in accordance with the 1977 Howard Co. Plumbing Code and How. Co. Stds. & Specs.

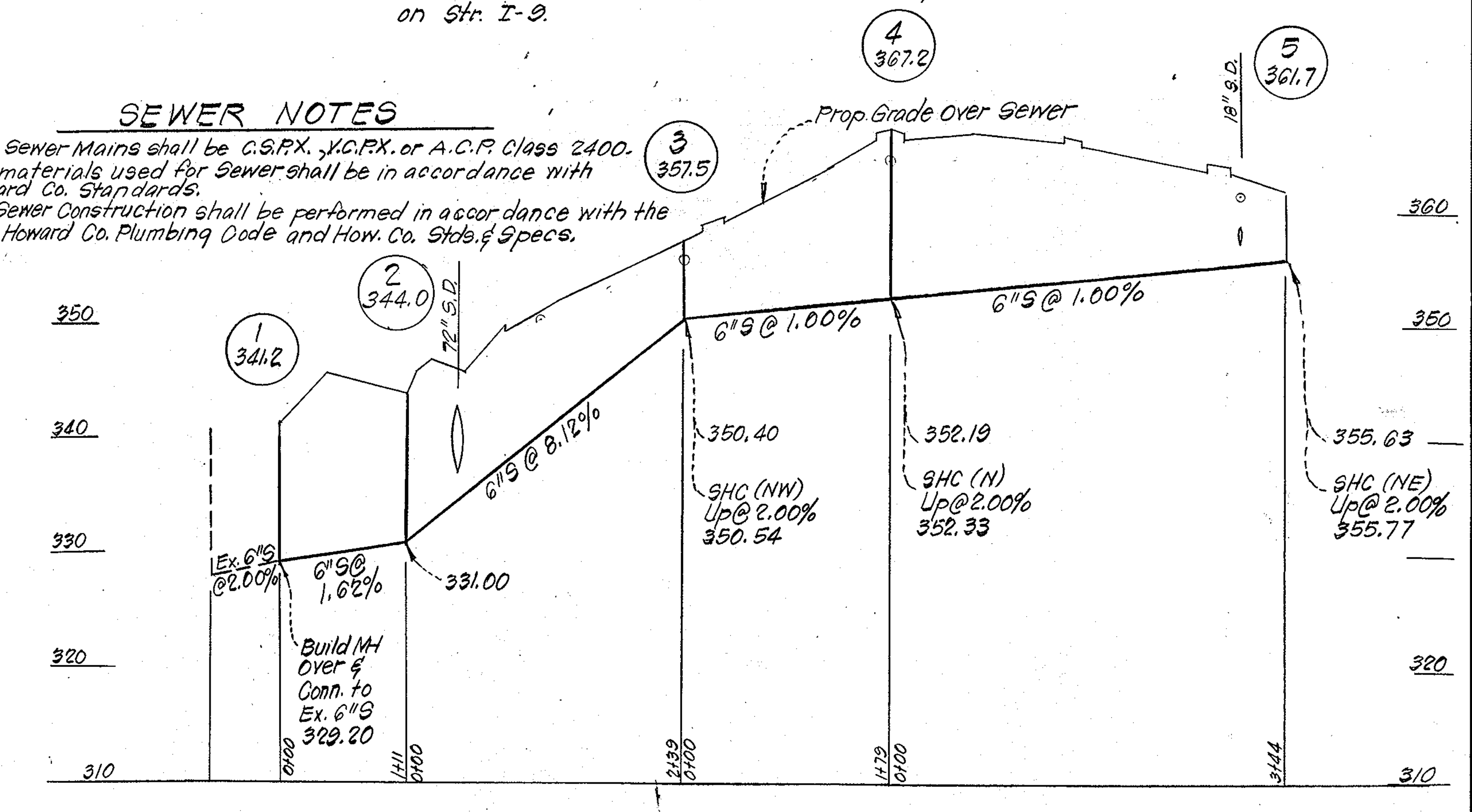

APPROVED: FOR PUBLIC WATER AND PUBLIC SEWERAGE SYSTEMS, HOWARD COUNTY HEALTH DEPARTMENT
COUNTY HEALTH OFFICER — DATE 4-30-80

APPROVED: HOWARD COUNTY OFFICE OF PLANNING & ZONING
PLANNING DIRECTOR — DATE 4-30-80
CHIEF DIVISION OF LAND DEVELOPMENT — DATE

APPROVED: FOR PUBLIC WATER AND PUBLIC SEWERAGE, STORM DRAINAGE SYSTEMS AND PUBLIC ROADS HOWARD COUNTY DEPARTMENT OF PUBLIC WORKS
DIRECTOR — DATE 4-25-80
CHIEF BUREAU OF ENGINEERING — DATE 4-25-80

These plans have been reviewed for the Howard Soil Conservation District and meet the technical requirements for small pond construction, soil erosion and sediment control.

U.S. Soil Conservation Service — 11-6-79 Date

These plans for small pond construction, soil erosion and sediment control meet the requirements of the Howard Soil Conservation District.

Approved — Howard S.C.D. — 11-6-79 Date

Plan Number

DEVELOPER'S CERTIFICATE

"I certify that all development and/or construction will be done according to these plans of development, pond construction and erosion and sediment control. I also authorize periodic on-site inspection by the Howard Soil Conservation District or their authorized agents, as are deemed necessary. Deviation from this plan will not be made unless authorized by The Howard Soil Conservation District. I will provide the Howard Soil Conservation District with a red-lined "as built" of the pond within 30 days of completion."

Signature of Developer — 8/23/79 Date

ENGINEER'S CERTIFICATE

"I certify that this plan for pond construction, erosion, and sediment control represents a practical and workable plan based on my personal knowledge of the site conditions. This plan was prepared in accordance with the requirements of the Howard Soil Conservation District. I have notified the developer that he must provide the Howard Soil Conservation District with a red-lined "as built" of the pond within 30 days of completion."

Signature of Engineer G. Nelson Clark — 8-23-79 Date

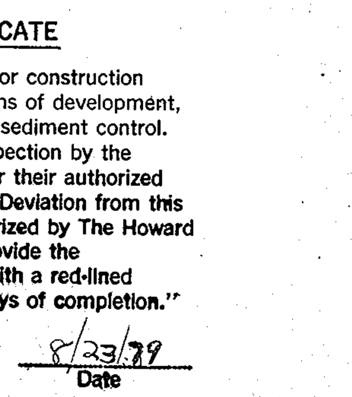

CLARK • FINEFROCK & SACKETT
ENGINEERS • PLANNERS • SURVEYORS
11315 LOCKWOOD DRIVE • SILVER SPRING, MARYLAND 20904 • (301) 593-3400

DESIGNED	SEDIMENT & EROSION CONTROL PLAN PARCEL "D-1"	SCALE
J.L.S.		As Shown
DRAWN	COLUMBIA	DRAWING
K.I.W.	VILLAGE OF OAKLAND MILLS	4 of 10
CHECKED	SECTION 3 AREA 1	JOB NO.
J.L.S.	6th ELECTION DISTRICT HOWARD COUNTY, MARYLAND	79-051
DATE	FOR: CENTENNIAL CONTRACTORS 7013 Backlick Road Springfield VA. 22151	FILE NO.
Aug., 1979		79-051-X

SDP-80-35c

PLANT SCHEDULE

KEY	PLANT NAME	SIZE	QUANT	REMARKS
⊕	ACER RUBRUM OCTOBER GLORY OCTOBER GLORY MAPLE	2½-3" CAL. 12-14' HT.	40	B&B HEAVY HEADS
⊖	QUERCUS PALUSTRIS PIN OAK	2½-3" CAL. 12-14' HT.	23	" " "
⊕	ZELKOVA SERRATA 'VILLAGE GREEN' VILLAGE GREEN ZELKOVA	2½-3" CAL 12-14' HT	18	" " "
⊗	SALIX BABILONICA BABILON WHEEPING WILLOW	2½-3" CAL. 12-14' HT.	3	" " "
⊕	MALUS RADIANT RADIANT CRABAPPLE	2-2½" CAL 8-10' HT.	18	B&B SPECIMEN
⊕	PRUNUS KWANZAN KWANZAN CHERRY	2-2½" CAL. 8-10' HT.	35	" "
⊗	AMELANCHIER CANADENSIS SHADBLOW CLUMP	2-2½" CAL 8-10' HT.	2	B&B SPECIMEN 3-5 STEM CLUMP
⊖	BETULA NIGRA RIVER BIRCH	2-2½" CAL 8-10' HT.	3	B&B SPECIMEN 3-5 STEM CLUMP
W1	PINUS STROBUS WHITE PINE	6-8' HT.	42	B&B. HEAVY
W2	PINUS STROBUS WHITE PINE	8-10' HT.	25	" "
⊛	PINUS THUNBERGI JAPANESE BLACK PINE	6-8' HT.	26	" "
⊛	PINUS THUNBERGI JAPANESE BLACK PINE	8-10' HT.	28	" "
A	TAXUS BACCATA REPANDENSE SPREADING ENGLISH YEW	15-18" SP.	155	B&B HEAVY
B	COTONEASTER DIV. 'HERBSTFEUER' FALLFIRE COTONEASTER	15-18" SP.	835	B&B HEAVY PLANT 24" O.C.
C	JASMINUM NUDIFLORUM WINTER JASMINE	2-3' SP.	435	" " PLANT 4' O.C.
D	JUNIPERUS H. BAR HARBOR BAR HARBOR JUNIPER	15-18" SP	30	B&B HEAVY PLANT 36" O.C.

NOTE: ALL PLANTING SHALL COMPLY WITH STANDARD H.R.D COLUMBIA PLANTING SPECIFICATIONS.
CONTRACTOR SHALL VERIFY LOCATION OF UNDERGROUND UTILITIES BEFORE DIGGING. CALL MISS UTILITY 559-0100.

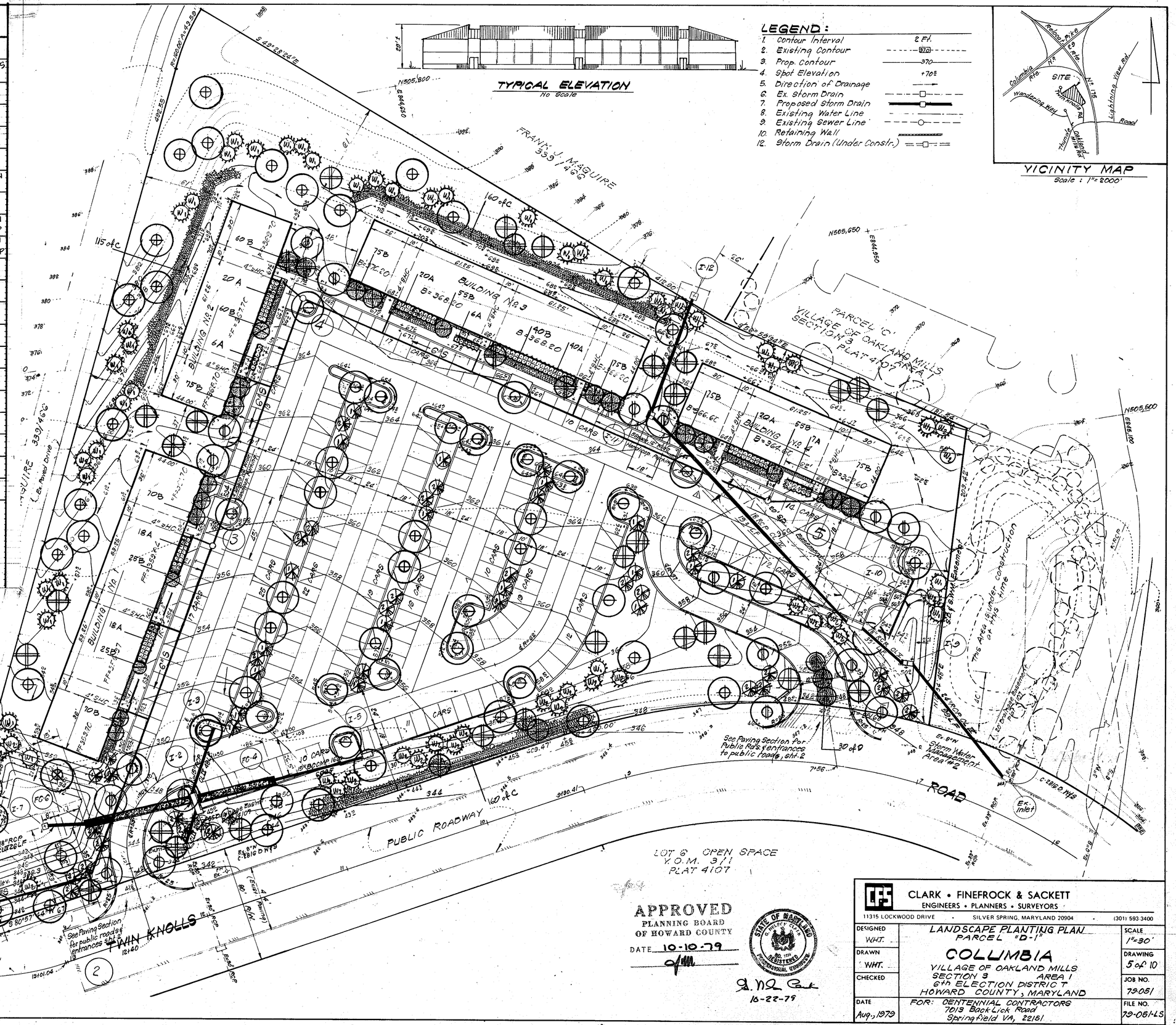

APPROVED: FOR PUBLIC WATER AND PUBLIC SEWERAGE SYSTEMS, HOWARD COUNTY HEALTH DEPARTMENT
COUNTY HEALTH OFFICER — DATE 4-29-80

APPROVED: HOWARD COUNTY OFFICE OF PLANNING & ZONING
PLANNING DIRECTOR — DATE 4-30-80
CHIEF, DIVISION OF LAND DEVELOPMENT — DATE 4-30-80

APPROVED: FOR PUBLIC WATER AND PUBLIC SEWERAGE, STORM DRAINAGE SYSTEMS AND PUBLIC ROADS HOWARD COUNTY DEPARTMENT OF PUBLIC WORKS
DIRECTOR — DATE 4-25-80
CHIEF BUREAU OF ENGINEERING — DATE 4-25-80

CLARK • FINEFROCK & SACKETT
ENGINEERS • PLANNERS • SURVEYORS
11315 LOCKWOOD DRIVE · SILVER SPRING, MARYLAND 20904 · (301) 593-3400

DESIGNED W.H.T.	LANDSCAPE PLANTING PLAN PARCEL "D-1"	SCALE 1"=30'
DRAWN W.H.T.	COLUMBIA VILLAGE OF OAKLAND MILLS SECTION 3 AREA 1	DRAWING 5 of 10
CHECKED	6th ELECTION DISTRICT HOWARD COUNTY, MARYLAND	JOB NO. 79-051
DATE Aug., 1979	FOR: CENTENNIAL CONTRACTORS 7019 Backlick Road Springfield VA, 22151	FILE NO. 79-051-LS

SDP-80-35C
HC. 403

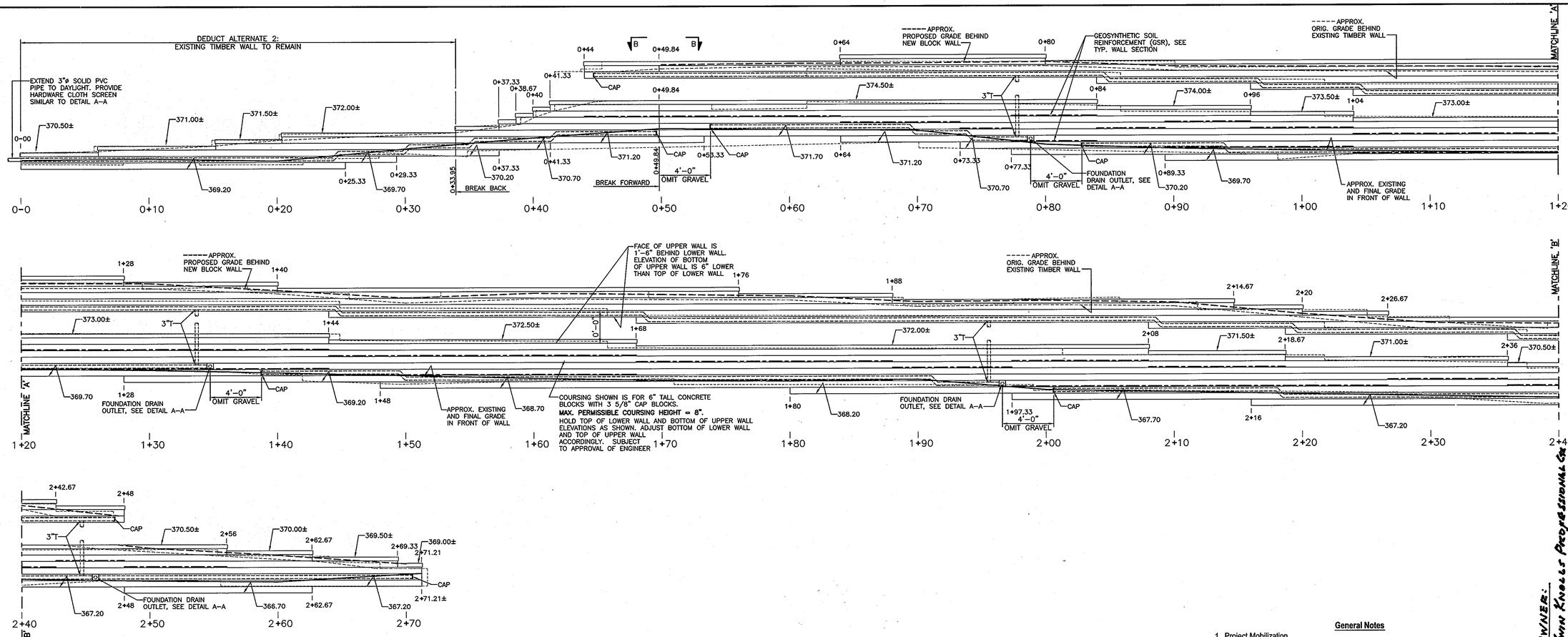

ELEVATION OF WALL 3 – NEW BLOCK WALL BEHIND BUILDING No. 3

SCALE: 1/4"=1'-0"

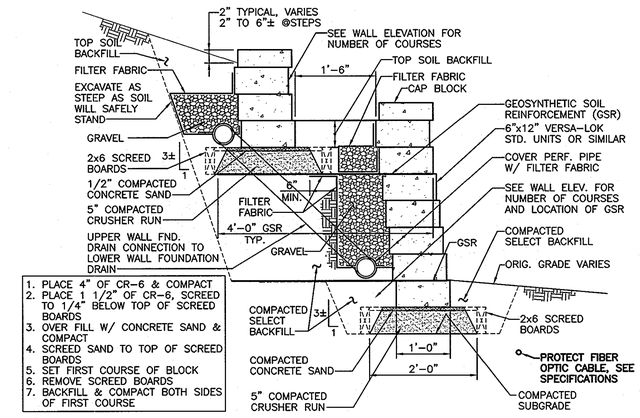

TYP. WALL SECTION

SCALE: 3/4"=1'-0"

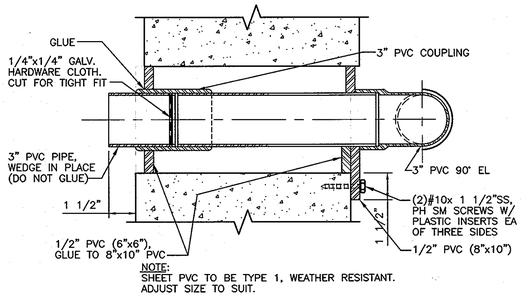

FOUNDATION DRAIN OUTLET DETAIL A–A

SCALE: 3"=1'-0"

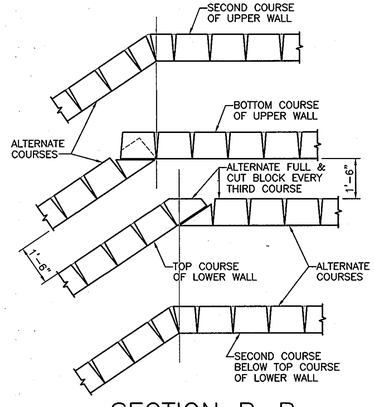

SECTION B–B

SCALE: 3/8"=1'-0"

General Notes

1. Project Mobilization
   a. Contractor's Designated Staging Area
   i. Drawing C-1 shows the areas designated for the use by the Contractor for vehicle and equipment parking, storage of materials and stockpiling of excavated materials and new backfill materials.
   ii. Contractor's Designated Areas shall be cordoned off with easily movable barricades positioned so as to discourage unauthorized entrance into the Areas.
   iii. Protect the existing paving from damage.
   b. Locating Existing Underground Utilities
   i. Prior to any demolition or excavation work, have Miss Utility identify and mark the location of all utilities in the general areas of the work and access areas between Buildings 2 and 3 and between Building 3 and 4.
   ii. Wherever the Fiber Optic Cable, FO, is within three feet of the existing retaining walls, carefully, so as not to damage the Cable, hand dig several test pits along the length of the cable to determine its depth.
2. Demolition
   a. Remove existing timber walls in their entirety, except where noted that portions may be abandoned in place if deduct alternate regarding same is accepted.
   b. All demolished timber shall be removed from the site and disposed of in a legal manner. Existing timber shall not be reused in the new wall.
   c. At all times during demolition, great care shall be exercised so as not to damage any buried or above ground utilities or any other physical assets
3. Excavation
   a. Excavate to lines and grades shown on the drawings. Minimize excavation into the slopes to permit construction of the new wall. Side cuts to be as steep as the unsupported soil will safely stand.
   b. Unusable Excess excavated materials shall be removed from the site and disposed of legally; or stockpiled or distributed on site as directed by Engineer.
   c. **At all times during excavation, great care shall be exercised so as not to damage any buried or above ground utilities or any other physical assets**
   d. At the end of each day, protect all open excavations with 6 mil polyethylene securely anchored in place
4. New Segmental Concrete Block Walls
   i. Construct new Segmental Concrete Block Walls to the profiles shown on the Wall Elevations
   ii. Segmental Concrete Block Walls shall be Versa-Lok Standard (6" height x 16" width x 12" depth), Keystone Compac (8" height x 18" width x 12" depth) or similar units
5. See Specifications for further requirements.

APPROVED: DEPARTMENT OF PLANNING AND ZONING

Chief, Development Engineering Division — Date 3/23/11

Chief, Division of Land Development — Date 3/28/11

Director — Date 3/28/11

OWNER:
TWIN KNOLLS PROFESSIONAL CENTER
5325 TWIN KNOLLS RD STE 326
COLUMBIA, MD 21045

VILLAGE OF OAKLAND MILLS, PARCEL D-1
SECTION 3 AREA 1
6TH ELECTION DISTRICT
HOWARD COUNTY, MARYLAND

NO.	DATE	REVISION	BY

WBCM
ARCHITECTURE ENGINEERING CONSTRUCTION
WHITNEY BAILEY COX & MAGNANI, LLC
849 Fairmount Ave, Suite 100 Baltimore, MD 21286
Tel. 410-512-4500 Fax. 410-324-4100
www.wbcm.com

STATE OF MARYLAND — RICHARD W. MAGNANI — 8069 — PROFESSIONAL ENGINEER

3/4/11

I hereby certify that these documents were prepared or approved by me, and that I am a duly licensed professional engineer under the laws of the State of Maryland.
License #8069
Expiration Date: 09/02/11

ELEVATION & DETAILS OF WALL 3 - NEW BLOCK WALL BEHIND BUILDING No. 3

TWIN KNOLLS PROFESSIONAL CENTER
RETAINING WALL REPLACEMENT
TWIN KNOLLS ROAD - COLUMBIA, MARYLAND

PROJECT:	2010.0135.00.0
DESIGNED:	R.M.
DRAWN:	R.C.W.
CHECKED:	R.M.
DATE:	11/08/2010
SCALE:	AS NOTED
DRAWING:	10 of 10

S3-1B

© WBCM 2009

SDR-80-035

Mar 03, 2011 - 11:43am User: rhwang

P:\2010\10013500\Drawings\03-Struct\10013500-S3-1B.dwg

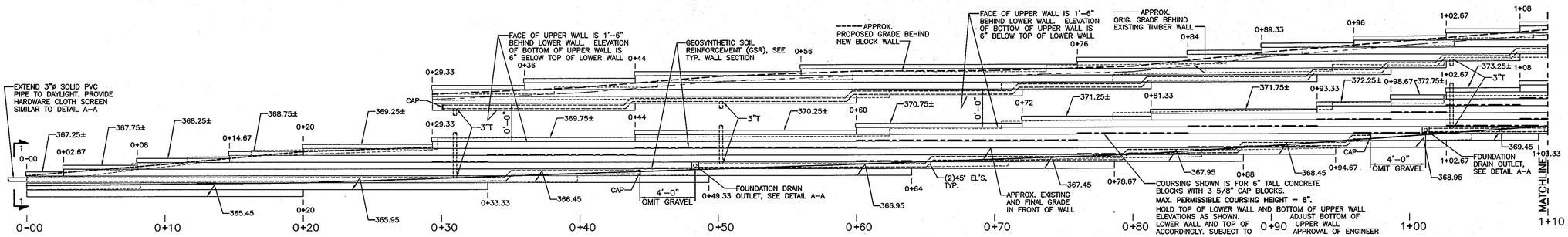

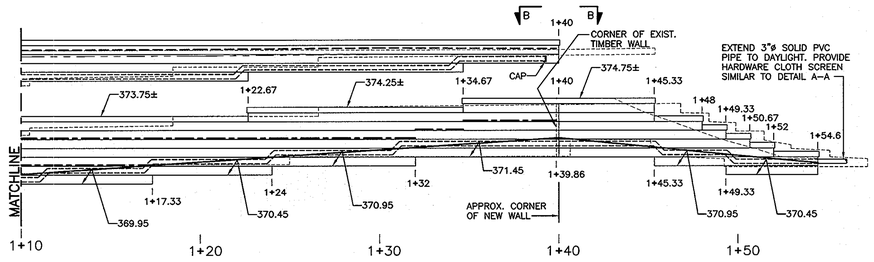

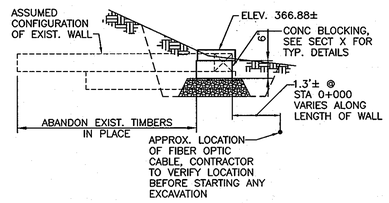

ELEVATION 1–1
SCALE: 1/2"=1'–0"

ELEVATION OF WALL 2 – NEW BLOCK WALL BEHIND BUILDING No. 2
SCALE: 1/4"=1'–0"

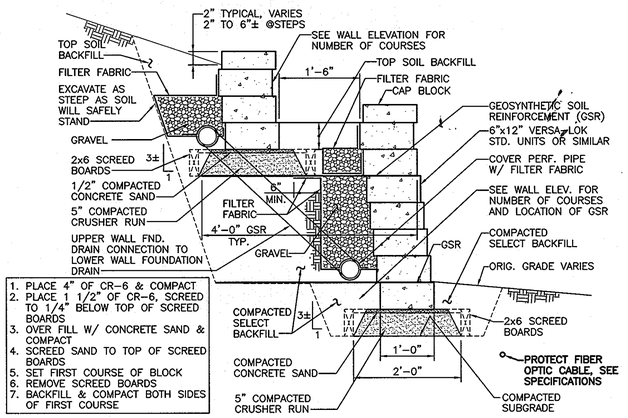

TYP. WALL SECTION
SCALE: 3/4"=1'–0"

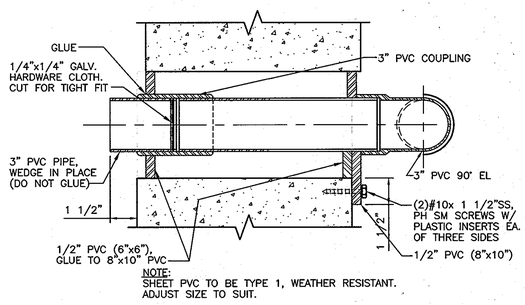

FOUNDATION DRAIN OUTLET DETAIL A–A
SCALE: 3"=1'–0"

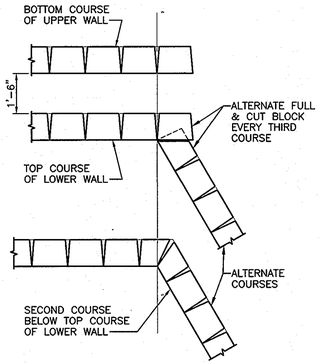

SECTION B–B
SCALE: 3/8"=1'–0"

General Notes

1. Project Mobilization
   a. Contractor's Designated Staging Area
   i. Drawing C-1 shows the areas designated for the use by the Contractor for vehicle and equipment parking, storage of materials and stockpiling of excavated materials and new backfill materials.
   ii. Contractor's Designated Areas shall be cordoned off with easily movable barricades positioned so as to discourage unauthorized entrance into the Areas.
   iii. Protect the existing paving from damage.
   b. Locating Existing Underground Utilities
   i. Prior to any demolition or excavation work, have Miss Utility identify and mark the location of all utilities in the general areas of the work and access areas between Buildings 2 and 3 and between Building 3 and 4.
   ii. Wherever the Fiber Optic Cable, FO, is within three feet of the existing retaining walls, carefully, so as not to damage the Cable, hand dig several test pits along the length of the cable to determine its depth.
2. Demolition
   a. Remove existing timber walls in their entirety, except where noted that portions may be abandoned in place if deduct alternate regarding same is accepted.
   b. All demolished timber shall be removed from the site and disposed of in a legal manner. Existing timber shall not be reused in the new wall.
   c. At all times during demolition, great care shall be exercised so as not to damage any buried or above ground utilities or any other physical assets
3. Excavation
   a. Excavate to lines and grades shown on the drawings. Minimize excavation into the slopes to permit construction of the new wall. Side cuts to be as steep as the unsupported soil will safely stand.
   b. Unusable Excess excavated materials shall be removed from the site and disposed of legally; or stockpiled or distributed on site as directed by Engineer.
   c. **At all times during excavation, great care shall be exercised so as not to damage any buried or above ground utilities or any other physical assets**
   d. At the end of each day, protect all open excavations with 6 mil polyethylene securely anchored in place
4. New Segmental Concrete Block Walls
   i. Construct new Segmental Concrete Block Walls to the profiles shown on the Wall Elevations
   ii. Segmental Concrete Block Walls shall be Versa-Lok Standard (6" height x 16" width x 12" depth), Keystone Compac (8" height x 18" width x 12" depth) or similar units
5. See Specifications for further requirements.

APPROVED: DEPARTMENT OF PLANNING AND ZONING

Chief, Development Engineering Division — Date 3/23/11

Chief, Division of Land Development — Date 3/28/11

Director — Date 3/28/11

OWNER:
TWIN KNOLLS PROFESSIONAL CTR.
5325 TWIN KNOLLS RD. STE 324
COLUMBIA, MD 21045 TEL 410-730-2800

VILLAGE OF OAKLAND MILLS, PARCEL D-1
AREA 1
SECTION 3
6TH ELECTION DISTRICT
HOWARD COUNTY, MARYLAND

NO.	DATE	REVISION	BY

WBCM
ARCHITECTURE ENGINEERING CONSTRUCTION
WHITNEY BAILEY COX & MAGNANI, LLC
849 Fairmount Ave. Suite 100 Baltimore, MD 21286
Tel. 410-832-4500 Fax. 410-324-4100
www.wbcm.com

STATE OF MARYLAND — RICHARD W. MAGNANI — 9089 — REGISTERED PROFESSIONAL ENGINEER

I hereby certify that these documents were prepared or approved by me, and that I am a duly licensed professional engineer under the laws of the State of Maryland. License #9089
Expiration Date: 09/02/11

ELEVATION & DETAILS OF WALL 2 - NEW BLOCK WALL BEHIND BUILDING No. 2

TWIN KNOLLS PROFESSIONAL CENTER
RETAINING WALL REPLACEMENT
TWIN KNOLLS ROAD - COLUMBIA, MARYLAND

PROJECT:	2010.0135.00.0
DESIGNED:	R.M.
DRAWN:	R.C.W.
CHECKED:	R.M.
DATE:	11/08/2010
SCALE:	AS NOTED
DRAWING:	9 of 10

S2-1B

© WBCM 2009

SDP-80-035

Mar 03, 2011 - 12:01pm User: hhwang

P:\2010\10013500\Drawings\03-Struct\10013500-S2-1B.dwg

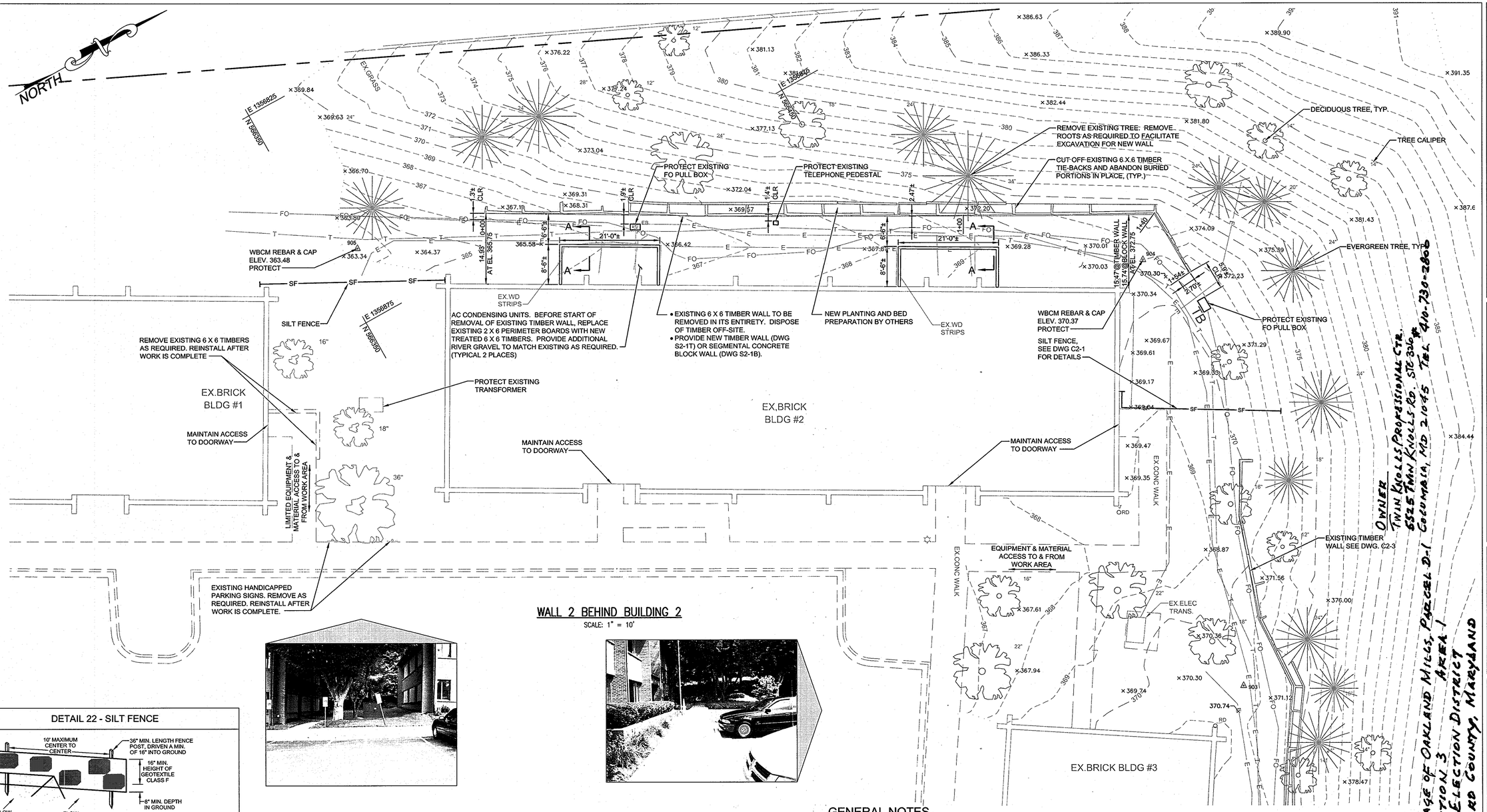

WALL 2 BEHIND BUILDING 2

SCALE: 1" = 10'

DETAIL 22 - SILT FENCE

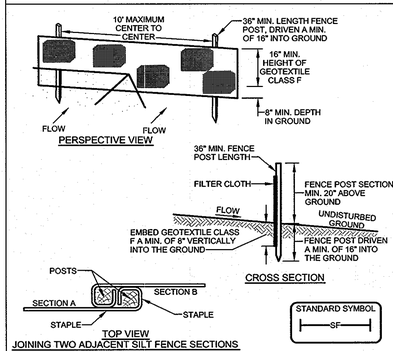

CONSTRUCTION SPECIFICATIONS

1. FENCE POSTS SHALL BE A MINIMUM OF 36" LONG DRIVEN 16" MINIMUM INTO THE GROUND. WOOD POSTS SHALL BE 1½" X 1½" SQUARE (MINIMUM) CUT, OR 1¾" DIAMETER (MINIMUM) ROUND AND SHALL BE OF SOUND QUALITY HARDWOOD. STEEL POSTS WILL BE STANDARD T OR U SECTION WEIGHTING NOT LESS THAN 1.00 POND PER LINEAR FOOT.
2. GEOTEXTILE SHALL BE FASTENED SECURELY TO EACH FENCE POST WITH WIRE TIES OR STAPLES AT TOP AND MID-SECTION AND SHALL MEET THE FOLLOWING REQUIREMENTS FOR GEOTEXTILE CLASS F:

TENSILE STRENGTH	50 LBS/IN (MIN.)	TEST: MSMT 509
TENSILE MODULUS	20 LBS/IN (MIN.)	TEST: MSMT 509
FLOW RATE	0.3 GAL FT / MINUTE (MAX.)	TEST: MSMT 322
FILTERING EFFICIENCY	75% (MIN.)	TEST: MSMT 322

3. WHERE ENDS OF GEOTEXTILE FABRIC COME TOGETHER, THEY SHALL BE OVERLAPPED, FOLDED AND STAPLED TO PREVENT SEDIMENT BYPASS.
4. SILT FENCE SHALL BE INSPECTED AFTER EACH RAINFALL EVENT AND MAINTAINED WHEN BULGES OCCUR OR WHEN SEDIMENT ACCUMULATION REACHED 50% OF THE FABRIC HEIGHT.

U.S. DEPARTMENT OF AGRICULTURE SOIL CONSERVATION SERVICE	PAGE C - 15 - 3	MARYLAND DEPARTMENT OF ENVIRONMENT WATER MANAGEMENT ADMINISTRATION

SILT FENCE (continued)

SILT FENCE DESIGN CRITERIA

SLOPE STEEPNESS	SLOPE LENGTH (MAXIMUM)	SILT FENCE LENGTH (MAXIMUM)
FLATTER THAN 50:1	UNLIMITED	UNLIMITED
50:1 TO 10:1	125 FEET	1,000 FEET
10:1 TO 5:1	100 FEET	750 FEET
5:1 TO 3:1	60 FEET	500 FEET
3:1 TO 2:1	40 FEET	250 FEET
2:1 AND STEEPER	20 FEET	125 FEET

NOTE: IN AREAS OF LESS THAN 2% SLOPE AND SANDY SOILS (USDA GENERAL CLASSIFICATION SYSTEM, SOIL CLASS A) MAXIMUM SLOPE LENGTH AND SILT FENCE LENGTH WILL BE UNLIMITED. IN THESE AREAS A SILT FENCE MAY BE THE ONLY PERIMETER CONTROL REQUIRED.

U.S. DEPARTMENT OF AGRICULTURE SOIL CONSERVATION SERVICE	PAGE C - 15 - 3A	MARYLAND DEPARTMENT OF ENVIRONMENT WATER MANAGEMENT ADMINISTRATION

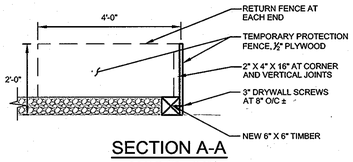

SECTION A-A

SCALE: ¼" = 1'-0"

GENERAL NOTES

1. ALL POINTS OF INGRESS AND EGRESS TO AND FROM THE WORK SITE SHALL BE PROTECTED TO PREVENT TRACKING OF MUD ON TO PUBLIC RIGHT-OF-WAYS OR PRIVATE PARKING LOTS.
2. ALL EXCAVATED MATERIAL SHALL BE PLACED ON THE HIGH SIDE OF THE WORK AREA AND CONFINED TO AN AREA WHERE IT WILL NOT OBSTRUCT THE NORMAL COURSE OF DRAINAGE.
3. ANY EARTH, GRAVEL, AND/OR OTHER MATERIAL TRACKED, SPILLED, OR WASHED ON TO ADJACENT PARKING LOT AND ROADS MUST BE IMMEDIATELY REMOVED AND DISPOSED OF IN A PROPER MANNER. FLUSHING WILL NOT BE PERMITTED. ALL MATERIAL MUST BE REMOVED BY MEANS OF SHOVELING & SWEEPING.
4. THE CONTRACTOR SHALL APPLY SOD OR SEED AND ANCHORED STRAW MULCH OR OTHER STABILIZATION MEASURES TO ALL DISTURBED AREAS AND STOCKPILES WITHIN (7) SEVEN CALENDAR DAYS AFTER STRIPPING AND GRADING ACTIVITIES OR OTHER ACTIVITIES THAT DISTURB EXISTING NON-PAVED AREAS HAVE CEASED IN THE AREA. MAINTENANCE SHALL BE PERFORMED AS NECESSARY TO ENSURE CONTINUED STABILIZATION.
5. PERMANENT SWALES OR OTHER POINTS OF CONCENTRATED WATER FLOW SHALL BE STABILIZED WITH SOD OR SEED WITH EROSION CONTROL MATTING, PER THE ENGINEER'S DIRECTION.
6. ALL SEDIMENT & EROSION CONTROL DEVICES ARE TO BE CHECKED AND REPAIRS MADE FOLLOWING A RAIN EVENT.
7. CONTRACTOR'S VEHICLES AND EQUIPMENT CAN NOT BE STORED WITHIN THE PUBLIC RIGHT OF WAY. DESIGNATED AREA WILL BE ASSIGNED BY OWNER, SEE OVERALL SITE PLAN. CONTRACTOR TO PROVIDE BARRICADE AROUND THE DESIGNATED AREAS.
8. BEFORE BEGINNING DEMOLITION OF THE EXISTING WALL OR ANY EXCAVATION, HAVE MISS UTILITY LOCATE ALL UTILITIES IN THE VICINITY OF THE WORK. WHEREVER THE FIBER OPTICAL CABLE IS WITHIN 3 FEET OF THE EXISTING WALL, CAREFULLY HAND DIG, SO AS TO NOT DAMAGE THE CABLE, TEST PITS TO DETERMINE THE DEPTH OF THE CABLE.
9. UTILITY LEGEND:
   - W = WATERLINE
   - E = ELECTRIC
   - T = TELEPHONE
   - FO = FIBER OPTIC CABLE
10. SEE PROJECT MANUAL FOR ADDITIONAL SPECIFICATIONS.

WALL 2 SHEET INDEX

C1	OVERALL SITE PLAN (MARKED-UP ORIGINAL DATED AUG. 1979)
C2-2	PARTIAL SITE PLAN WALL BEHIND BUILDING 2
S2-1T	ELEVATION AND DETAILS OF WALL 2
	NEW TIMBER WALL BEHIND BUILDING 2
S2-1B	ELEVATION AND DETAILS OF WALL 2
	NEW CONCRETE BLOCK WALL BEHIND BUILDING 2

APPROVED: DEPARTMENT OF PLANNING AND ZONING

Chief, Development Engineering Division — Date 3/23/11

Chief, Division of Land Development — Date 3/28/11

Director — Date 3/28/11

GRAPHIC SCALE

10 0 5 10 20 40

(IN FEET)
1 inch = 10 ft.

OWNER
TWIN KNOLLS PROFESSIONAL CTR.
6525 TWIN KNOLLS RD. STE 330
COLUMBIA, MD 21045 TEL. 410-730-2800

VILLAGE OF OAKLAND MILLS, PARCEL D-1
SECTION 3 AREA 1
6TH ELECTION DISTRICT
HOWARD COUNTY, MARYLAND

NO.	DATE	REVISION	BY

WBCM
ARCHITECTURE ENGINEERING CONSTRUCTION
WHITNEY BAILEY COX & MAGNANI, LLC
849 Fairmount Ave., Suite 100, Baltimore, MD 21286
Tel. 410-512-4500 Fax. 410-324-4100
www.wbcm.com

STATE OF MARYLAND — RICHARD W. GRAHAM — No. 9949 — REGISTERED PROFESSIONAL ENGINEER

3/4/11

I hereby certify that these documents were prepared or approved by me, and that I am a duly licensed professional engineer under the laws of the State of Maryland.
License #9949
Expiration Date: 09/02/11

PARTIAL SITE PLAN
WALL BEHIND BUILDING 2

TWIN KNOLLS PROFESSIONAL CENTER
RETAINING WALL REPLACEMENT
TWIN KNOLLS ROAD - COLUMBIA, MARYLAND

PROJECT:	2010.0135.00.0
DESIGNED:	R.M.
DRAWN:	J.A.B.
CHECKED:	R.M.
DATE:	11/08/2010
SCALE:	1"=10'
DRAWING:	8 of 10

C2-2

© WBCM 2010

SDP-80-035

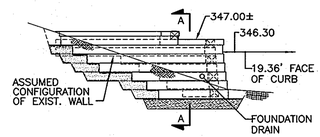

ELEVATION 1–1
CONCRETE BLOCK WALL
SCALE: 1/4"=1'–0"

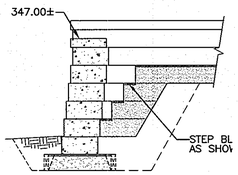

SECTION A–A
SCALE: 1/2"=1'–0"

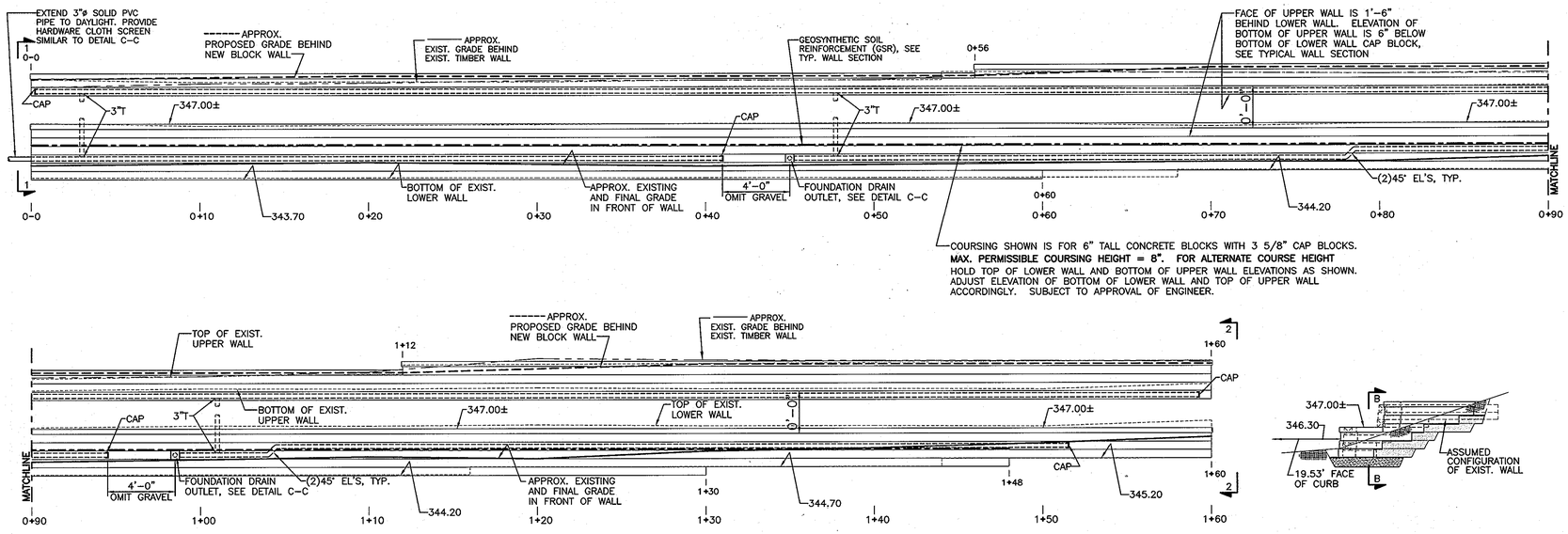

ELEVATION OF WALL 1 – NEW BLOCK WALL ALONG TWIN KNOLLS ROAD
SCALE: 1/4"=1'–0"

ELEVATION 2–2
CONCRETE BLOCK WALL
SCALE: 1/4"=1'–0"

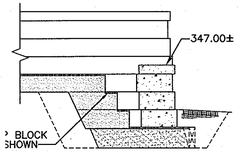

SECTION B–B
SCALE: 1/2"=1'–0"

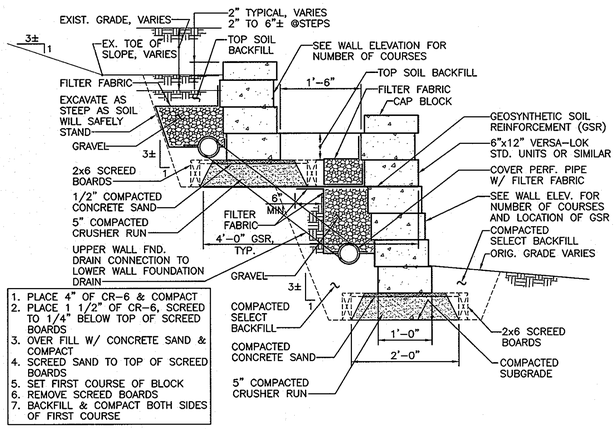

TYP. WALL SECTION
SCALE: 3/4"=1'–0"

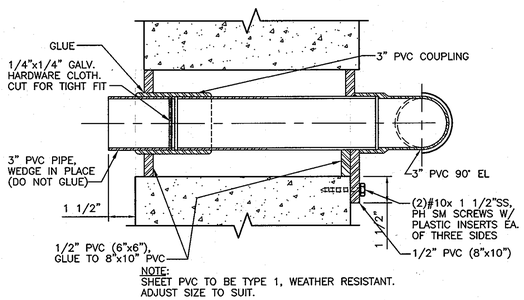

FOUNDATION
DRAIN OUTLET DETAIL C–C
SCALE: 3"=1'–0"

General Notes

1. Project Mobilization
   a. Contractor's Designated Staging Area
   i. Drawing C-1 shows the areas designated for the use by the Contractor for vehicle and equipment parking, storage of materials and stockpiling of excavated materials and new backfill materials.
   ii. Contractor's Designated Areas shall be cordoned off with easily movable barricades positioned so as to discourage unauthorized entrance into the Areas.
   iii. Protect the existing paving from damage.
   b. Locating Existing Underground Utilities
   i. Prior to any demolition or excavation work, have Miss Utility identify and mark the location of all utilities in the general areas of the work and access areas between Buildings 2 and 3 and between Building 3 and 4.
   ii. Wherever the Fiber Optic Cable, FO, is within three feet of the existing retaining walls, carefully, so as not to damage the Cable, hand dig several test pits along the length of the cable to determine its depth.
2. Demolition
   a. Remove existing timber walls in their entirety, except where noted that portions may be abandoned in place if deduct alternate regarding same is accepted.
   b. All demolished timber shall be removed from the site and disposed of in a legal manner. Existing timber shall not be reused in the new wall.
   c. At all times during demolition, great care shall be exercised so as not to damage any buried or above ground utilities or any other physical assets
3. Excavation
   a. Excavate to lines and grades shown on the drawings. Minimize excavation into the slopes to permit construction of the new wall. Side cuts to be as steep as the unsupported soil will safely stand.
   b. Unusable Excess excavated materials shall be removed from the site and disposed of legally; or stockpiled or distributed on site as directed by Engineer.
   c. At all times during excavation, great care shall be exercised so as not to damage any buried or above ground utilities or any other physical assets
   d. At the end of each day, protect all open excavations with 6 mil polyethylene securely anchored in place
4. New Segmental Concrete Block Walls
   i. Construct new Segmental Concrete Block Walls to the profiles shown on the Wall Elevations
   ii. Segmental Concrete Block Walls shall be Versa-Lok Standard (6" height x 16" width x 12" depth), Keystone Compac (8" height x 18" width x 12" depth) or similar units
5. See Specifications for further requirements.

APPROVED: DEPARTMENT OF PLANNING AND ZONING

Chief, Development Engineering Division — Date 3/23/11

Chief, Division of Land Development — Date 3/28/11

Director — Date 3/28/11

OWNER:
TWIN KNOLLS PROFESSIONAL CTR.
5535 TWIN KNOLLS RD. STE 324
COLUMBIA, MD 21045 TEL #410-730-2800

VILLAGE OF OAKLAND MILLS, PARCEL D-1
AREA 1
SECTION 3
6TH ELECTION DISTRICT
HOWARD COUNTY, MARYLAND

NO.	DATE	REVISION	BY

WBCM
ARCHITECTURE ENGINEERING CONSTRUCTION
WHITNEY BAILEY COX & MAGNANI, LLC
849 Fairmount Ave. Suite 100 Baltimore, MD 21286
Tel. 410-510-4500 Fax. 410-324-4100
www.wbcm.com

STATE OF MARYLAND — RICHARD W. JANUSZ — 20649 — REGISTERED PROFESSIONAL ENGINEER

3/4/11

I hereby certify that these documents were prepared or approved by me, and that I am a duly licensed professional engineer under the laws of the State of Maryland. License #20649, Expiration Date: 09/02/11

ELEVATION & DETAILS OF WALL 1 - NEW BLOCK WALL ALONG TWIN KNOLLS ROAD

TWIN KNOLLS PROFESSIONAL CENTER
RETAINING WALL REPLACEMENT
TWIN KNOLLS ROAD - COLUMBIA, MARYLAND

PROJECT:	2010.0135.00.0
DESIGNED:	R.M.
DRAWN:	R.C.W.
CHECKED:	R.M.
DATE:	11/08/2010
SCALE:	AS NOTED
DRAWING:	7 of 10

S1-1B

© WBCM 2009

SDP-80-035

Mar 03, 2011 - 12:05pm User: rhwang

P:\2010\10013500\Drawings\03-Struct\10013500-S1-1B.dwg

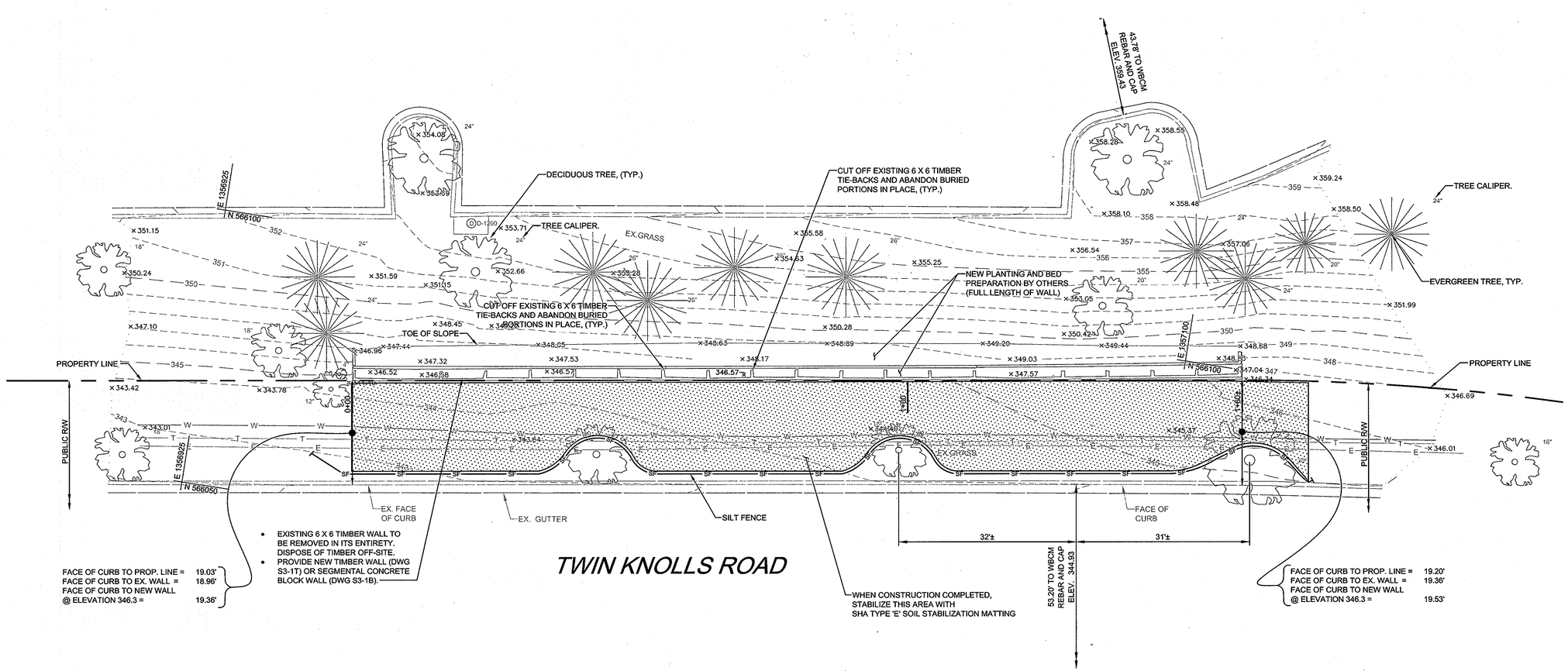

WALL 1 – ALONG TWIN KNOLLS ROAD

SCALE: 1" = 10'

DETAIL 22 - SILT FENCE

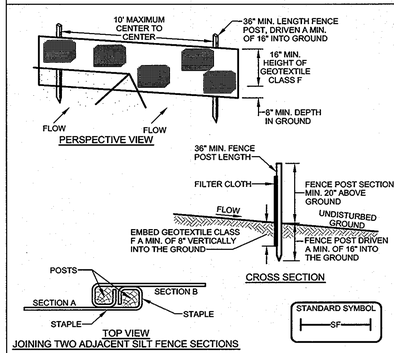

CONSTRUCTION SPECIFICATIONS

1. FENCE POSTS SHALL BE A MINIMUM OF 36" LONG DRIVEN 16" MINIMUM INTO THE GROUND. WOOD POSTS SHALL BE 1½" X 1½" SQUARE (MINIMUM) CUT, OR 1¾" DIAMETER (MINIMUM) ROUND AND SHALL BE OF SOUND QUALITY HARDWOOD. STEEL POSTS WILL BE STANDARD T OR U SECTION WEIGHTING NOT LESS THAN 1.00 POND PER LINEAR FOOT.
2. GEOTEXTILE SHALL BE FASTENED SECURELY TO EACH FENCE POST WITH WIRE TIES OR STAPLES AT TOP AND MID-SECTION AND SHALL MEET THE FOLLOWING REQUIREMENTS FOR GEOTEXTILE CLASS F:

TENSILE STRENGTH	50 LBS/IN (MIN.)	TEST: MSMT 509
TENSILE MODULUS	20 LBS/IN (MIN.)	TEST: MSMT 509
FLOW RATE	0.3 GAL FT / MINUTE (MAX.)	TEST: MSMT 322
FILTERING EFFICIENCY	75% (MIN.)	TEST: MSMT 322

3. WHERE ENDS OF GEOTEXTILE FABRIC COME TOGETHER, THEY SHALL BE OVERLAPPED, FOLDED AND STAPLED TO PREVENT SEDIMENT BYPASS.
4. SILT FENCE SHALL BE INSPECTED AFTER EACH RAINFALL EVENT AND MAINTAINED WHEN BULGES OCCUR OR WHEN SEDIMENT ACCUMULATION REACHED 50% OF THE FABRIC HEIGHT.

U.S. DEPARTMENT OF AGRICULTURE SOIL CONSERVATION SERVICE	PAGE C - 15 - 3	MARYLAND DEPARTMENT OF ENVIRONMENT WATER MANAGEMENT ADMINISTRATION

SILT FENCE (continued)

SILT FENCE DESIGN CRITERIA

SLOPE STEEPNESS	SLOPE LENGTH (MAXIMUM)	SILT FENCE LENGTH (MAXIMUM)
FLATTER THAN 50:1	UNLIMITED	UNLIMITED
50:1 TO 10:1	125 FEET	1,000 FEET
10:1 TO 5:1	100 FEET	750 FEET
5:1 TO 3:1	60 FEET	500 FEET
3:1 TO 2:1	40 FEET	250 FEET
2:1 AND STEEPER	20 FEET	125 FEET

NOTE: IN AREAS OF LESS THAN 2% SLOPE AND SANDY SOILS (USDA GENERAL CLASSIFICATION SYSTEM, SOIL CLASS A) MAXIMUM SLOPE LENGTH AND SILT FENCE LENGTH WILL BE UNLIMITED. IN THESE AREAS A SILT FENCE MAY BE THE ONLY PERIMETER CONTROL REQUIRED.

U.S. DEPARTMENT OF AGRICULTURE SOIL CONSERVATION SERVICE	PAGE C - 15 - 3A	MARYLAND DEPARTMENT OF ENVIRONMENT WATER MANAGEMENT ADMINISTRATION

GENERAL NOTES

1. ALL POINTS OF INGRESS AND EGRESS TO AND FROM THE WORK SITE SHALL BE PROTECTED TO PREVENT TRACKING OF MUD ON TO PUBLIC RIGHT-OF-WAYS OR PRIVATE PARKING LOTS.
2. ALL EXCAVATED MATERIAL SHALL BE PLACED ON THE HIGH SIDE OF THE WORK AREA AND CONFINED TO AN AREA WHERE IT WILL NOT OBSTRUCT THE NORMAL COURSE OF DRAINAGE.
3. ANY EARTH, GRAVEL, AND/OR OTHER MATERIAL TRACKED, SPILLED, OR WASHED ON TO ADJACENT PARKING LOT AND ROADS MUST BE IMMEDIATELY REMOVED AND DISPOSED OF IN A PROPER MANNER. FLUSHING WILL NOT BE PERMITTED. ALL MATERIAL MUST BE REMOVED BY MEANS OF SHOVELING & SWEEPING.
4. THE CONTRACTOR SHALL APPLY SOD OR SEED AND ANCHORED STRAW MULCH OR OTHER STABILIZATION MEASURES TO ALL DISTURBED AREAS AND STOCKPILES WITHIN (7) SEVEN CALENDAR DAYS AFTER STRIPPING AND GRADING ACTIVITIES OR OTHER ACTIVITIES THAT DISTURB EXISTING NON-PAVED AREAS HAVE CEASED IN THE AREA. MAINTENANCE SHALL BE PERFORMED AS NECESSARY TO ENSURE CONTINUED STABILIZATION.
5. ALL SEDIMENT & EROSION CONTROL DEVICES ARE TO BE CHECKED AND REPAIRS MADE FOLLOWING A RAIN EVENT.
6. CONTRACTOR'S VEHICLES AND EQUIPMENT CAN NOT BE STORED WITHIN THE PUBLIC RIGHT OF WAY. DESIGNATED AREA WILL BE ASSIGNED BY OWNER, SEE OVERALL SITE PLAN. CONTRACTOR TO PROVIDE BARRICADE AROUND THE DESIGNATED AREAS.
7. BEFORE BEGINNING DEMOLITION OF THE EXISTING WALL OR ANY EXCAVATION, HAVE MISS UTILITY LOCATE ALL UTILITIES IN THE VICINITY OF THE WORK. WHEREVER THE FIBER OPTICAL CABLE IS WITHIN 3 FEET OF THE EXISTING WALL, CAREFULLY HAND DIG, SO AS TO NOT DAMAGE THE CABLE, TEST PITS TO DETERMINE THE DEPTH OF THE CABLE.
8. UTILITY LEGEND:
   - W = WATERLINE
   - E = ELECTRIC
   - T = TELEPHONE
   - FO = FIBER OPTIC CABLE
9. SEE PROJECT MANUAL FOR ADDITIONAL SPECIFICATIONS.

WALL 1 SHEET INDEX

C1	OVERALL SITE PLAN (MARKED-UP ORIGINAL DATED AUG. 1979)
C2-1	PARTIAL SITE PLAN - WALL ALONG TWIN KNOLLS ROAD
S1-1T	ELEVATION AND DETAILS OF WALL 1 NEW TIMBER WALL ALONG TWIN KNOLLS ROAD
S1-1B	ELEVATION AND DETAILS OF WALL 1 NEW CONCRETE BLOCK WALL ALONG TWIN KNOLLS ROAD

APPROVED: DEPARTMENT OF PLANNING AND ZONING

Chief, Development Engineering Division — Date 3/23/11

Chief, Division of Land Development — Date 3/28/11

Director — Date 3/28/11

GRAPHIC SCALE

10 0 5 10 20 40

(IN FEET)
1 inch = 10 ft.

OWNER
TWIN KNOLLS LLC
5525 TWIN KNOLLS RD
COLUMBIA, MD 21045

VILLAGE OF OAKLAND MILLS, PARCEL D-1
AREA 1
6TH ELECTION DISTRICT
HOWARD COUNTY, MARYLAND

NO.	DATE	REVISION	BY

WBCM
ARCHITECTURE ENGINEERING CONSTRUCTION
WHITNEY BAILEY COX & MAGNANI, LLC
849 Fairmount Ave., Suite 100, Towson, MD 21286
Tel. 410-510-4500 Fax. 410-324-4100
www.wbcm.com

STATE OF MARYLAND — RICHARD W. MAGNANI — No. 9069 — REGISTERED PROFESSIONAL ENGINEER

I hereby certify that these documents were prepared or approved by me, and that I am a duly licensed professional engineer under the laws of the State of Maryland.
License #9069
Expiration Date: 09/02/11

3/4/11

PARTIAL SITE PLAN
WALL ALONG TWIN KNOLLS ROAD

TWIN KNOLLS PROFESSIONAL CENTER
RETAINING WALL REPLACEMENT
TWIN KNOLLS ROAD - COLUMBIA, MARYLAND

PROJECT:	2010.0135.00.0
DESIGNED:	R.M.
DRAWN:	J.A.B.
CHECKED:	R.M.
DATE:	11/08/2010
SCALE:	1"=10'
DRAWING:	6 of 10

C2-1

SDP-80-035

© WBCM 2010