SEE SHEETS 3 & 4 OF 4 FOR PLAN & DETAILS

⑥ • ADD NEW FRONT ENTRY SIDEWALKS, H.C. RAMPS STEPS, NEW PARKING AREA
• REMOVE DIESEL FUEL TANK INSTALL STANDBY GENERATOR
• INSTALL NEW SEWER (DOMESTIC AND PRODUCTION) TO EX. SEWER
• ADD NEW ENT. DOORS EAST SIDE.
• ADD CONC. LANDING GEAR PAD

"Professional Certification. I hereby certify that these documents were prepared or approved by me, and that I am a duly licensed professional engineer under the laws of the State of Maryland, License No.# 13741 Expiration Date: 12-08-13

④ FSH	Added 67 parking spaces, stormdrain, stormceptor and landscaping. 05-28-04
⑤ FSH	Added 2 Mezzanine Level additions 06-02-04

NO	REVISION
①	ADDED HDCP RAMP FOR BLDG #2 3-11-92 V.Z.
② K.E.	ADDED 6,000 GAL. DIESEL FUEL TANK FOR BLDG. #2 9-1-95
③ GL.W	Add driveway entrance

HOWARD SOIL CONSERVATION DISTRICT

This development plan is approved for soil erosion and sediment control by the Howard Soil Conservation District

Approved: Robert W. Zuehm 6/20/73
Howard Soil Conservation District — Date

Reviewed For Howard S.C.D.
Name
and meets technical requirements.

Charles E. Null, Jr. 6/30/73
Signature U.S. Soil Conservation Service — Date

APPROVED: For Public Water And Public Sewerage Systems, Howard Co. Health Dept.
County Health Officer 6/29/73 — Date

APPROVED: Howard Co. Office Planning & Zoning.
Thomas G. Harrington 6-29-73
Planning Director — Date
Chief, Div. Of Land Dev. 6/29/73 — Date

APPROVED: For Public Water, Public Sewerage And Storm Drainage Systems And Roads. Howard Co. Department Of Public Works.
William W. Alten 6/26/73
Director — Date
W O Gilbert 6-26-73
Chief, Bureau Of Highways — Date

Charles E. Fick
Professional Engineer
5048 — MAY 15, 1973
Reg. No. — Date

ENGINEERS
GEORGE W. STEPHENS, JR. & ASSOCIATES, INC.
303 ALLEGHENY AVE.
TOWSON, MARYLAND
21204

OWNER
DISTRIBUTION CENTERS, INC.
1300 DUBLIN ROAD
COLUMBUS, OHIO 43215

DEVELOPER
GREATER BALTIMORE
CONSOLIDATED WHOLESALE
FOOD MARKET AUTHORITY
1115 ONE CHARLES CTR.
BALTIMORE, MARYLAND
21201

Zachary Yosef Fisch 5/28/04 (FSH Associates) 6/29/04

APPROVED
DIVISION OF LAND DEVELOPMENT
AND TRANSPORTATION PLANNING
HOWARD COUNTY, MARYLAND
DATE

SITE DEVELOPMENT PLAN

PARCEL "A & B" PLAT BOOK 24 FOLIO 17 Sec 2 Block "A"

DISTRIBUTION CENTERS INC.

HOWARD COUNTY, MD. — ELECTION DIST. NO. 6
SCALE: 1" = 50' — MAY 15, 1973

⑥ 4 ~~3~~
Sheet 1 of ~~2~~

SDP 73-93

P.L., P.N. 2878

SITE DATA

Total Area Of Tract	11.01 Ac.
Existing Zoning	M-2
Total Floor Area (2 Bldgs)	249,232 sq.ft. △5
Tax Map No.	43
Total Parking Spaces Provided Including	
Customer & Visitor Parking	7
Employee Parking @ 2 empl./space (40 employees)	87
Total Sales Area	0
ADT Peak Hour	8 a.m.
ADT Employees	10 trips
ADT Trucks	40 trips

INLET SCHEDULE

NO.	TYPE	Q = cfs.	INV. OUT	TOP ELEV.
I-1	'S' combination *	4.4	230.14	232.0
I-2	double 'S' combination*	7.6	226.86	231.7
I-3	"	9.5	224.13	228.3
I-4	"	9.1	222.65	228.3
I-5	double 'S' combination*	[illegible] (present) / 9.1 (ultimate)	224.[illegible]	229.0 (present) / 229.5 (ultimate)
I-6	double throat "K" *	35.4	227.75	231.0
I-7	'S' Combination*	4.8	230.24	235.43
I-8 △4	Single 'S'*	4.8	232.24	237.65
I-9	Single 'S'*	2.2	232.98	236.90

(I-1 to I-5: depressed)
* See Ho. Co. Details

MANHOLE SCHEDULE

NO.	TYPE	SIZE	INV. OUT	TOP ELEV.
M-1	"B"	48"	213.32	219.5
M-2	"B"	48"	221.01	228.2
M-3	"B"	48"	223.05	228.2
△4 SC-1	Stormceptor	STC-1200	231.46	239.97

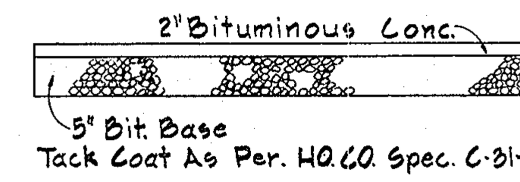

ONSITE PAV. SECT.
No Scale

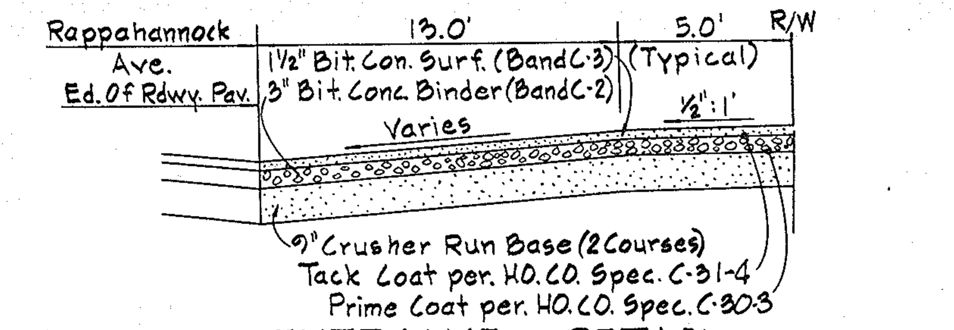

ENTRANCE DETAIL
No Scale

GENERAL NOTES

1) All disturbed areas to be seeded in conjunction with the Howard Soil Conservation District and in accordance with the approved Soil Erosion & Sediment Control Plan for this subject site.
2) All slopes disturbed during utility construction shall be sodded and pegged immediately upon completion of work.
3) Contractor to remove existing bulkheads & headwalls before Tying into existing storm Drains.
4) All R.R. Construction to be done in accordance with B&O-C&O Standards.
5) Subgrade Cross-slope on railroad embankment shall have a 3" Crown in the center.

△4 STC 1200 PRECAST CONCRETE STORMCEPTOR

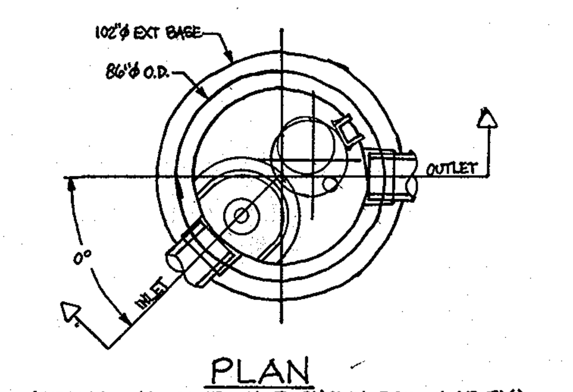

PLAN
(FRAME AND COVER NOT SHOWN FOR CLARITY)

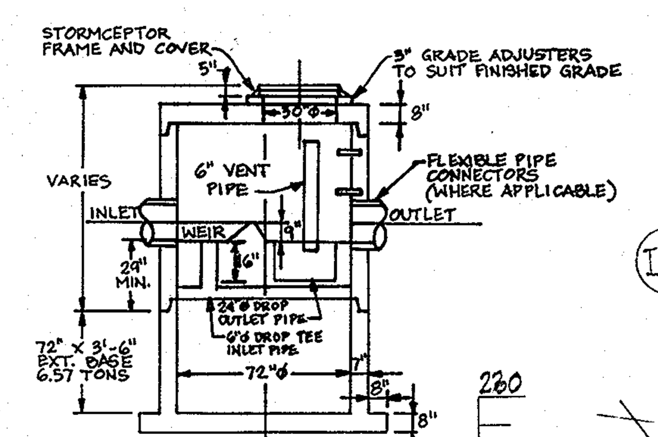

SECTION

GENERAL NOTES

1. STORMCEPTOR SECTIONS SHALL CONFORM TO ASTM C 478, PROFILE GASKETED JOINTS CONFORMING TO ASTM C 443.
2. MANHOLE STEPS PROVIDED ABOVE INSERT @ 12" O.C. AND SHALL BE COPOLYMER POLYPROPYLENE PLASTIC ENCAPSULATED GR. 60 STEEL.
3. MINIMUM CONCRETE STRENGTH f'c = 4,000 PSI MINIMUM STEEL STRENGTH fy = 60,000 PSI
4. REINFORCEMENT DESIGN SHALL MEET ASTM C 478.
5. FLEXIBLE PIPE CONNECTORS SHALL MEET ASTM C 923.
6. HANDLING:
   A. ALL RISERS SHALL HAVE 2 EA. 1 1/2"Ø HOLES FOR LIFTING @ 1/3 WAY DOWN FROM SPIGOT.
   B. ALL LG. DIAM. BASE SECTIONS FLATTOPS, AND REDUCERS TO HAVE LIFT HOOKS.
7. DESIGNED FOR AASHTO H-20 LOADING.
8. FIBERGLASS STORMCEPTOR INSERT REFERENCE DRAWING # CA-0225-01

NOTES:

1. SEE "LANDSCAPE SPECIFICATION GUIDELINES FOR BALTIMORE-WASHINGTON METROPOLITAN AREAS" FOR ALL MATERIAL, PRODUCT, AND PROCEDURE SPECIFICATIONS.
2. SEE "LANDSCAPE GUIDELINES" FOR SUPPORTING TREES LARGER THAN 2-1/2" CALIPER.
3. PLACE UPRIGHT STAKES PARALLEL TO WALKS & BUILDINGS.
4. KEEP MULCH 1" FROM TRUNK.
5. SEE ARCHITECTURAL PLANS FOR ADDITIONAL PLANTINGS WHICH EXCEED HOWARD COUNTY MINIMUM REQUIREMENTS.
6. TREES ARE NOT TO BE PLANTED OVER PRIVATE SEWAGE EASEMENT.

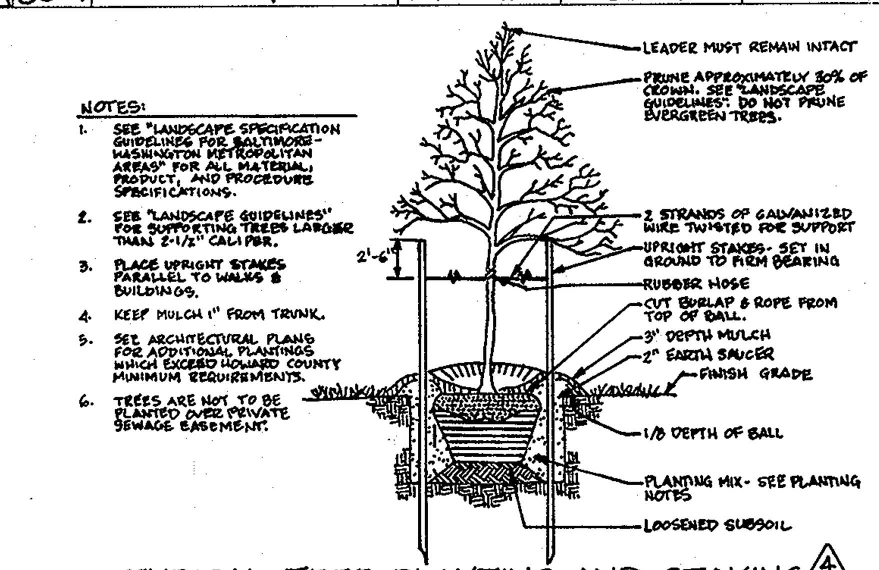

TYPICAL TREE PLANTING AND STAKING △4
DECIDUOUS TREES UP TO 2-1/2" CALIPER — NOT TO SCALE

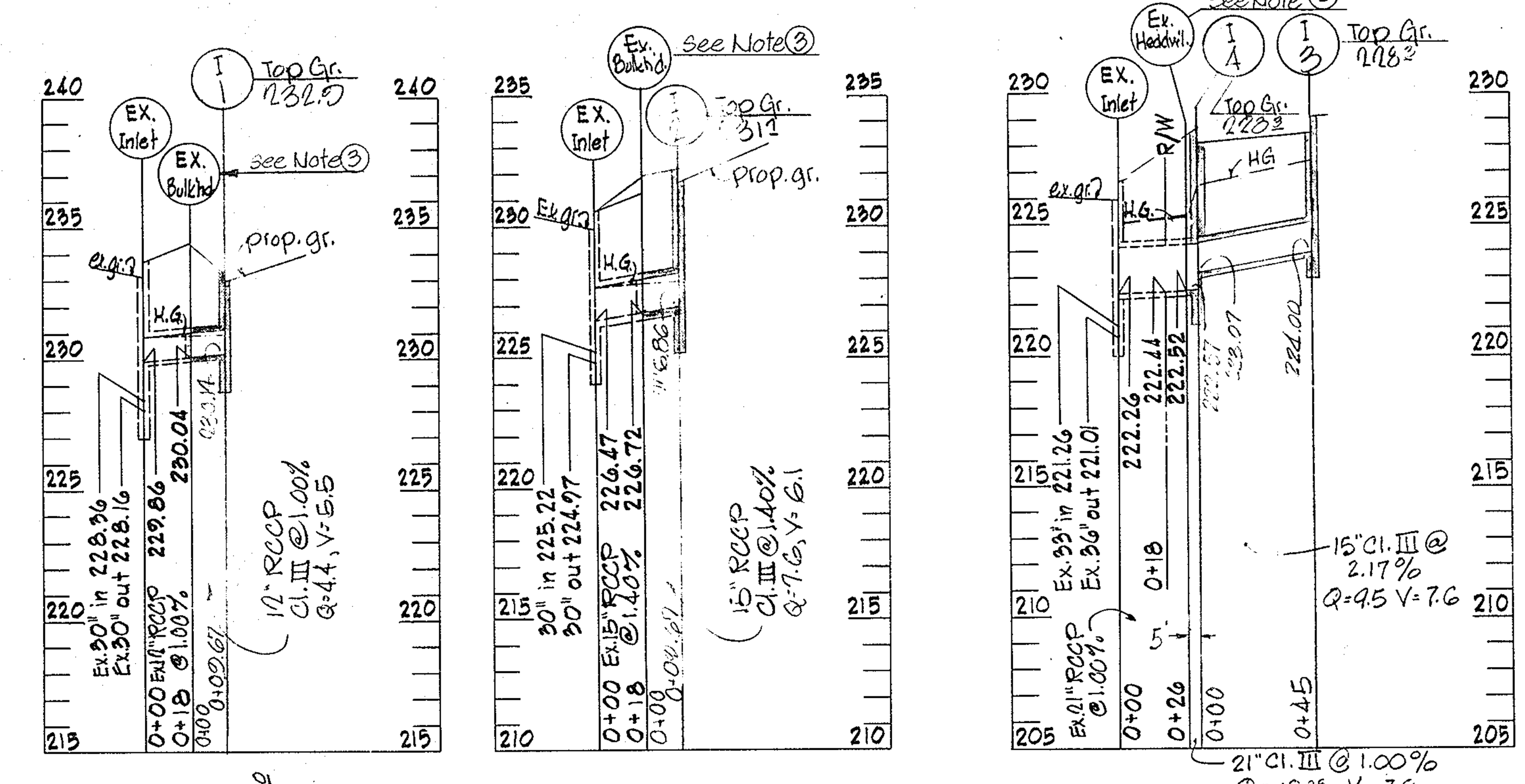

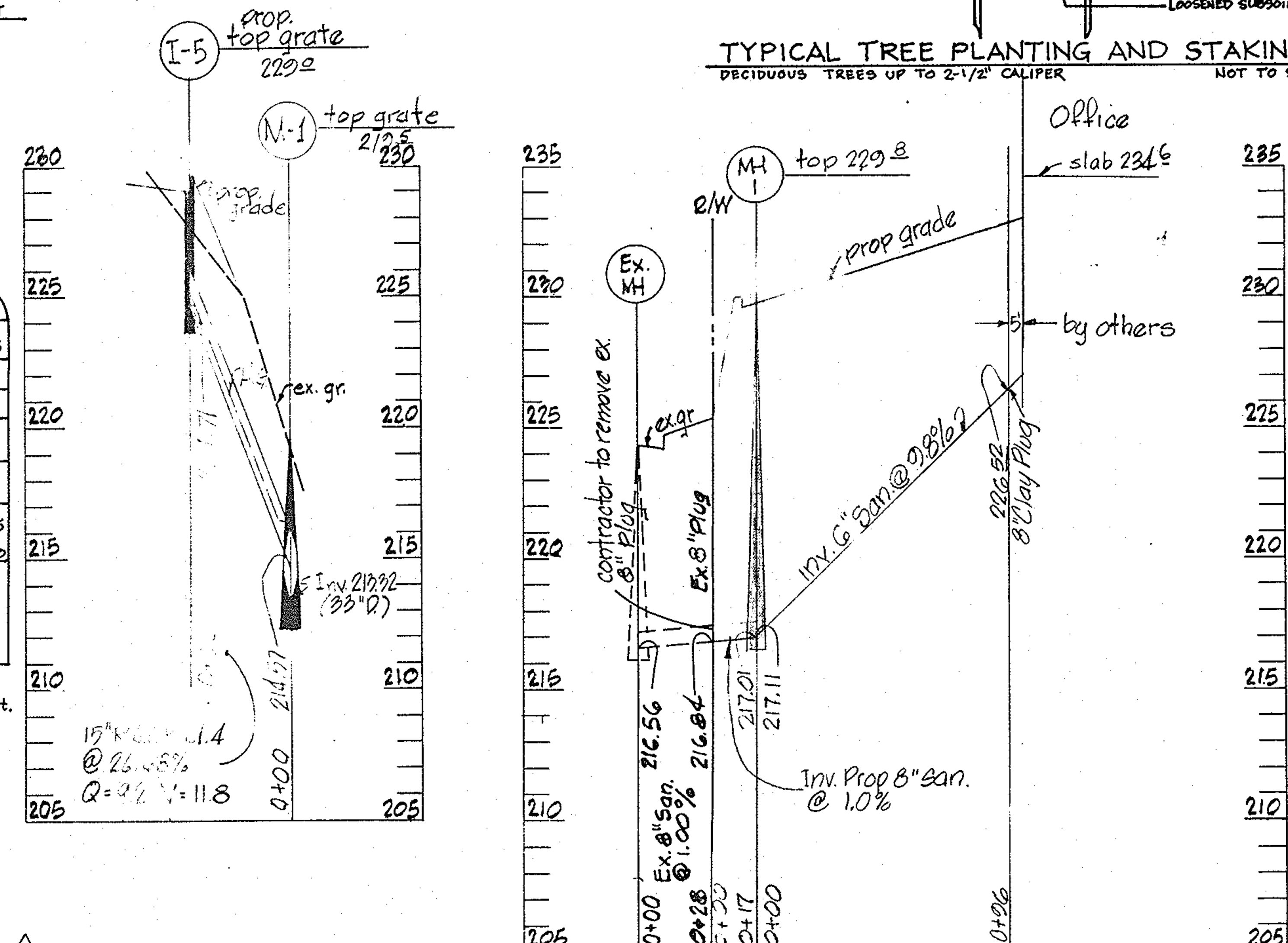

SANITARY PROFILES
SCALE: HORIZ.- 1" = 50' VERT.- 1" = 5'

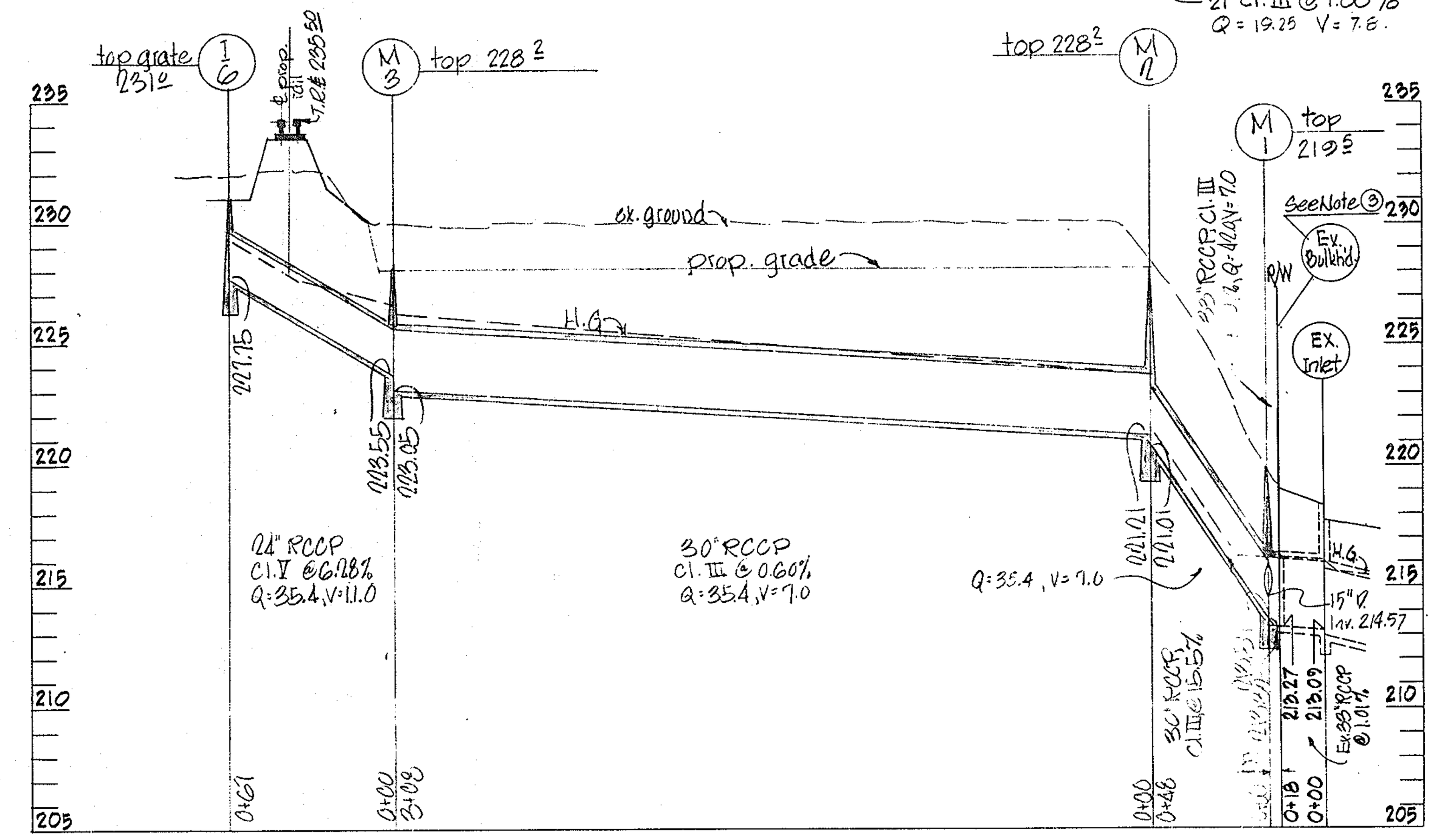

STORM DRAIN PROFILES
SCALE: HORIZ. - 1" = 50' VERT. - 1" = 5'

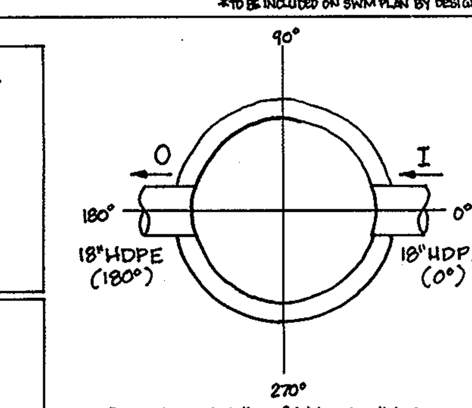

Precast Concrete Stormceptor® Order Request Form
*TO BE INCLUDED ON SWM PLAN BY DESIGNER

CONTRACTOR INFORMATION
Name ____
Address ____
City ____
State ____
Zip Code ____
Contact ____
Phone ____
Fax ____

OWNER INFORMATION
Name Lancaster Foods
Phone 410.799.0010
Fax 410.799.0023

Please draw orientation of inlet and outlet pipes on diagram along with the pipe inside diameter (in), and invert elevation (ft). Clearly mark inlet pipes with an "I" and outlet pipes with an "O". Please provide the inlet/outlet pipe angle in degrees.

IMPERVIOUS DRAINAGE AREA FOR THIS UNIT 0.64 Ac.

Stormceptor® Model: STC 900 ☐, 1200 ■, 1800 ☐, 2400 ☐, 3600 ☐, 4800 ☐, 6000 ☐, 7200 ☐

Insert Size: SINGLE INLET DISC ■; MULTIPLE INLET DISC ☐; CUSTOM ____

Manhole Number	SC-1
Top Elevation (ft)	239.97
Inlet Pipe Invert (ft)	231.56
Outlet Pipe Invert (ft)	231.46
Pipe Type	HDPE
Inlet Pipe Inside Diameter (ID)	18"
Inlet Pipe Outside Diameter (OD)	
Outlet Pipe Inside Diameter (ID)	18"
Outlet Pipe Outside Diameter (OD)	

Project Name Lancaster Foods
Approximate time frame of delivery (weeks) ____
Delivery Address: Street 7855 Rappahannock Ave.
City: Jessup State: Maryland Zip Code: 20794
Designer Company FSH Associates
Designer Contact Zach Fisch Phone 410.750.2251 Fax 410.750.7350

PLEASE FILL OUT COMPLETELY AND FAX TO: CSR* Hydro Conduit
ATTN: ED O'MALLEY FAX: (703)922-3659, PHONE: (703)313-6389
FOR TECHNICAL ASSISTANCE PLEASE CALL MIKE BARG, PHONE (703)313-6399
△4

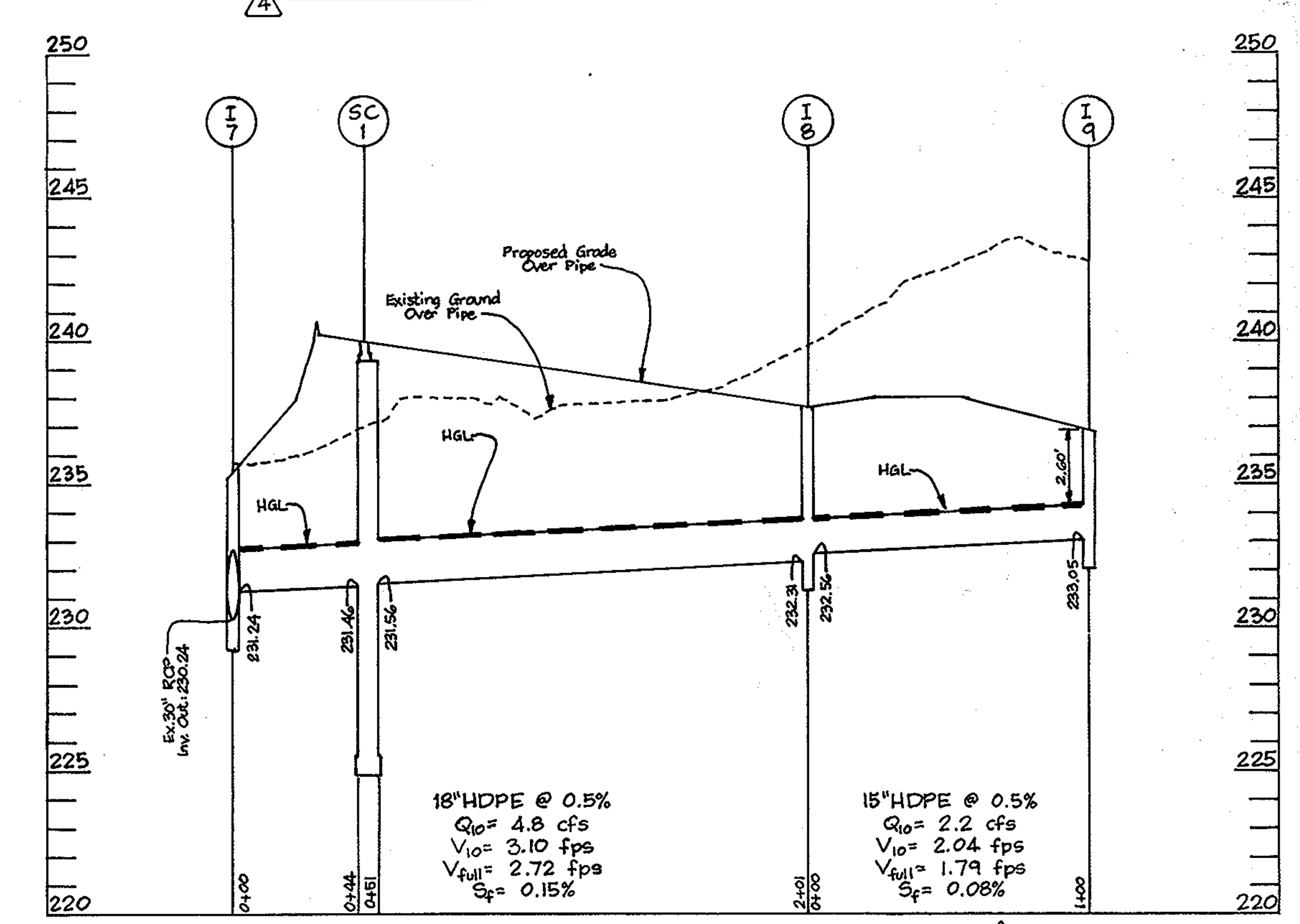

18"HDPE @ 0.5%: Q_{10} = 4.8 cfs, V_{10} = 3.10 fps, V_{full} = 2.72 fps, S_f = 0.15%

15"HDPE @ 0.5%: Q_{10} = 2.2 cfs, V_{10} = 2.04 fps, V_{full} = 1.79 fps, S_f = 0.08%

STORM DRAIN PROFILE △4
SCALE: Hor.: 1"=50' Vert.: 1"=5'

SCHEDULE A PERIMETER LANDSCAPE EDGE △4

CATEGORY	ADJ. TO ROADWAYS	
Perimeter/Frontage Designation Landscape Type	1 E	2 E
Linear Feet of Roadway Frontage/Perimeter	214	200
Credit for Existing Vegetation (Yes, No, Linear Feet Describe below if needed)	No	No
Credit for Wall, Fence or Berm (Yes, No, Linear Feet Describe below if needed)	Yes 186*	No
Number of Plants Required: Shade Trees / Evergreen Trees / Shrubs	1:40 1 / – / 1:4 7	1:40 5 / – / 1:4 50
Number of Plants Provided: Shade Trees / Evergreen Trees / Other Trees (2:1 Substitution) / Shrubs (10:1 Substitution) / Describe Plant Substitution Credits Below if needed)	1 / – / – / 7	5 / – / – / 50

* Minimum 3' elevation difference in location shown on plan for full shrub credit.

(Seal: State of Maryland, Zacharia Yosef Fisch, 22418, Professional Engineer) △4
Zacharia Y. Fisch
5/28/04 (FSH Associates) 6/29/04 △5

HOWARD SOIL CONSERVATION DISTRICT

This development plan is approved for soil erosion and sediment control by the Howard Soil Conservation District

Approved: Robert W. Zechman [signature] 6/20/73
Howard Soil Conservation District — Date

Reviewed For HOWARD S.C.D.
Name
and meets technical requirements.

Charles E. Nell Jr. [signature] 6/20/73
Signature U.S. Soil Conserservation Service — Date

APPROVED: For Public Water And Public Sewerage Systems, Howard Co. Health Dept.
[signature] 6/29/73
County Health Officer — Date

APPROVED: Howard Co. Office Planning & Zoning
Thomas G. Harris, Jr. 6-29-73
Planning Director — Date
[signature] 6/29/73
Chief, Div. Of Land Dev. — Date

APPROVED: For Public Water, Public Sewerage And Storm Drainage Systems And Roads. Howard Co. Department Of Public Works.
[signature] 6/26/73
Director — Date
W O Filbert 6-26-73
Chief, Bureau Of Highways — Date

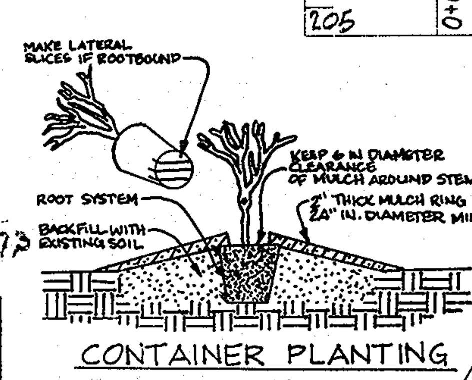

CONTAINER PLANTING
NOT TO SCALE △4

PLANTING PROCEDURE FOR CONTAINER GROWN PLANTS

1. Remove the plant either by cutting or inverting the container.
2. Use a knife to cut through bottom half of the root ball.
3. Plant shrubs on formed up mounds 4" above the existing grade when high water table conditions exist, otherwise plant flush with existing grade.
4. Planting hole to be 2-3 times the diameter of the container.
5. Insert fertilizer tablet, backfill 2/3 of the root ball and water.
6. After water percolates, backfill hole to top of root ball and gently tamp soil to firm contact with plant.
7. Apply mulch ring around plant keeping a 6" clearance from stem.

LANDSCAPE SCHEDULE

KEY	QUAN.	BOTANICAL NAME	SIZE	NOTE
AR	9	Acer rubrum (Shade Trees) 'October Glory Red Maple'	2 1/2"-3" Cal.	B & B
IG	27	Ilex glabra 'Compacta' Compact Inkberry	2 1/2'-3' ht.	Cont.
ND	30	Nandina domestico Heavenly Bamboo	2'-2 1/2' ht.	Cont.

NOTES:

1. At the time of plant installation, all shrubs and trees listed and approved on the Landscape Plan shall comply with the proper height requirements in accordance with the Howard County Landscape Manual. In addition, no substitutions or relocations of the required plantings may be made without prior review and approval from the Department of Planning and Zoning. Any deviation from the approved Landscape Plan may result in denial or delay in the release of Landscape Surety until such time as all required materials are planted and/or revision are made to the applicable plans.
2. Financial Surety for the required parking lot internal landscaping shall be posted as part of the Developer's Agreement in the amount of $900.00 (3 shade trees @ $300.00 each).

△4

SCHEDULE B PARKING LOT INTERNAL LANDSCAPING

Number of Parking Spaces	67
Number of Trees Required (1 per 20 spaces)	3
Number of Trees Provided: Shade Trees / Other Trees (2:1 Substitution)	3 / –

(Seal: State of Maryland, Charles E. Fick, No. 5048, Registered Professional Engineer)
Charles E. Fick
Professional Engineer
5048 — MAY 15, 1973
Reg. No. — Date

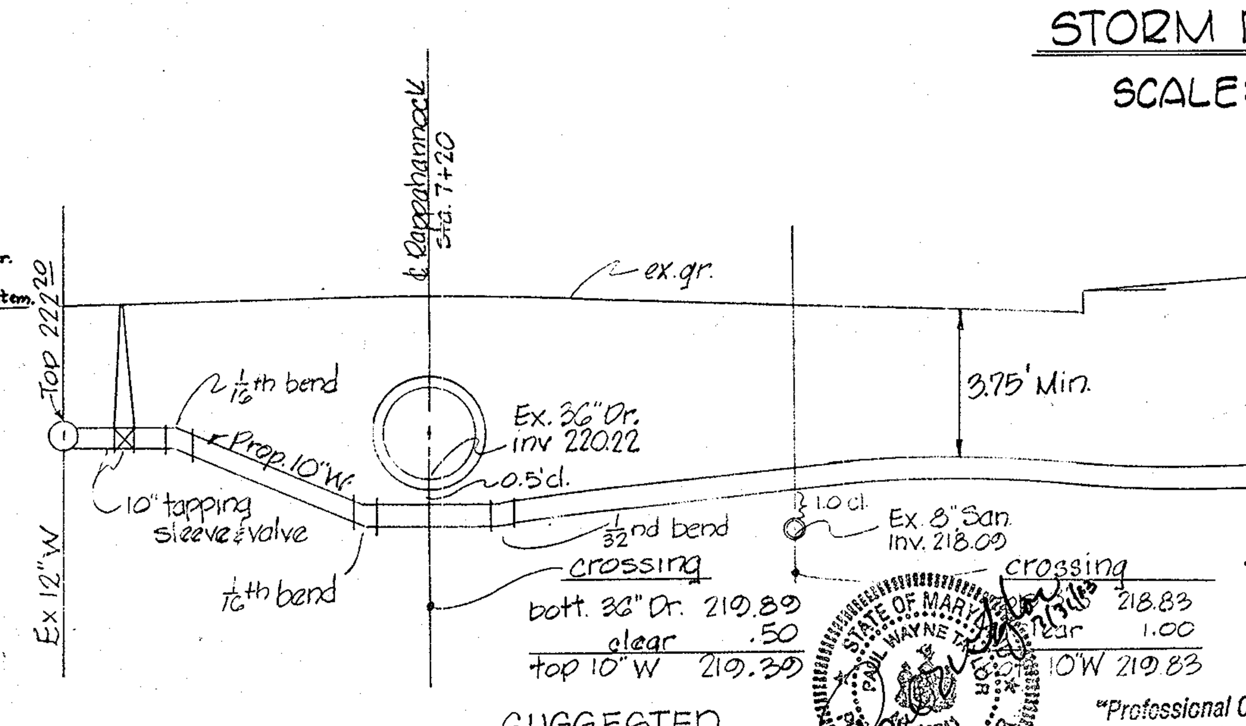

SUGGESTED
10" WATER CROSSINGS STA. 7+20 RAPPAHANNOCK AVE.
(no scale)

No.	REVISION
△4 FSH	Added 67 parking spaces, stormdrain, stormceptor and landscaping. 05-28-04
△5 FSH	Added 2 Mezzanine Level additions 06-02-04

No.	REVISION
△6 GWS	SEE SHT 3 OF 3 FOR PLANS & DETAILS

"Professional Certification. I hereby certify that these documents were prepared or approved by me, and that I am a duly licensed professional engineer under the laws of the State of Maryland, License No.# 13741 Expiration Date: 12-08-13
(Seal: State of Maryland, Paul Wayne Taylor, 13741, Professional Engineer)

GEORGE WILLIAM STEPHENS, JR. AND ASSOCIATES, INC.
303 ALLEGHENY AVE.-TOWSON, MD, 21204

OPERATION AND MAINTENANCE SCHEDULE FOR STORMCEPTOR WATER QUALITY STRUCTURE

A. The Stormcepter Water Quality structure shall be periodically inspected and cleaned to maintain operation and function. The owner shall inspect the Stormcepter unit yearly at a minimum, utilizing the Stormcepter inspection/monitoring form. Inspections shall be done by using a clear Plexiglass tube ("sludge/judge") to extract a water column sample. When the sediment depths exceed the level specified in table 6 of the Stormcepter Technical Manual, the unit must be cleaned.
B. The Stormcepter water quality structure shall be checked and cleaned immediately after petroleum spills. The owner shall contact the appropriate regulatory agencies.
C. The maintenance of the Stormcepter unit shall be done using a vacuum truck which will remove the the water, sediment, debris, floating hydrocarbons and other materials in the unit. Proper cleaning and disposal of the removed materials and liquid must be followed by the owner.
D. The inlet and outlet pipes shall be checked for any obstructions at least once every six months. If obstructions are found the owner shall have them removed. Structural parts of the Stormcepter unit shall be repaired as needed.
E. The owner shall retain and make the Stormcepter inspection/Monitoring Forms available to the Howard County officials upon their request.

△4

STORMCEPTOR ORDER INFORMATION

STORMCEPTOR MODEL	1200
STRUCTURE	SC-1
TOP ELEVATION	239.97
INLET PIPE INVERT	231.56
OUTLET PIPE INVERT	231.46
PIPE SIZE	18" HDPE

NOTE:
SEE DRAINAGE AREA MAP FOR CONTRIBUTING IMPERVIOUS AREA TO STORMCEPTOR.
AREAS: .... 0.64 Acres

APPROVED
DIVISION OF LAND DEVELOPMENT AND TRANSPORTATION PLANNING
HOWARD COUNTY, MARYLAND
DATE

SITE DEVELOPMENT PLAN

Parcel "A&B" Plat Book 24, Folio 17 Sec 2 Block "A"

DISTRIBUTION CENTERS, INC.

Howard Co., Md. — Election Dist. No. 6
Scale: As Shown — May 15, 1973

△6
4 3
2 of 2

SDP73-93

PLAN

SCALE 1" = 30'

UTILITY LEGEND

Symbol	Description	Symbol	Description
TV	CATV BOX		STORM DRAIN CLEANOUT
	CATV HANDBOX		STORM DRAIN DOWNSPOUT
	CATV PEDESTAL	SD	STORM DRAIN MANHOLE
E	ELECTRIC BOX	T	TELEPHONE BOX
	ELECTRIC HANDBOX		TELEPHONE HANDBOX
E	ELECTRIC PEDESTAL	T	TELEPHONE MANHOLE
E	ELECTRIC MANHOLE		TELEPHONE PEDESTAL
	ELECTRIC SWITCHGEAR		CALL BOX
	ELECTRIC TRANSFORMER		CARD READER
	STREET LIGHT	U	UNKNOWN MANHOLE
	LANDSCAPE LIGHT		UNKNOWN CLEANOUT
	TRAFFIC CONTROL HANDBOX		UTILITY POLE
FO	FIBER OPTIC BOX		VENT PIPE
	FIBER OPTIC HANDBOX		FIRE HYDRANT
FO	FIBER OPTIC MANHOLE	W	WATER MANHOLE
	FILL CAP		WATER METER
F	FUEL TANK MANHOLE		WATER VALVE
G	GAS MANHOLE		WATER WELL
	GAS METER		IRRIGATION CONTROL VALVE
	GAS VALVE	ABAND	ABANDONED UTILITY
	MONITORING WELL	CMP	CORRUGATED METAL PIPE
	SANITARY CLEANOUT	EOI	END OF ELECTRONIC INFORMATION
SS	SANITARY MANHOLE	NAU	NO ASSOCIATED UTILITY DETECTED
ST	STEAM MANHOLE	NFL	NOT FIELD LOCATABLE

Line	Description
——CW——CW——	CHILLED WATER LINE (QL-B)
– – CW – – CW – –	CHILLED WATER LINE (QL-C OR QL-D)
——TV——TV——	CABLE TV LINE (QL-B)
– – TV – – TV – –	CABLE TV LINE (QL-C OR QL-D)
——E——E——	ELECTRIC LINE (QL-B)
– – E – – E – –	ELECTRIC LINE (QL-C OR QL-D)
——FO——FO——	FIBER OPTIC LINE (QL-B)
– – FO – – FO – –	FIBER OPTIC LINE (QL-C OR QL-D)
——G——G——	GAS LINE (QL-B)
– – G – – G – –	GAS LINE (QL-C OR QL-D)
——HW——HW——	HOT WATER LINE (QL-B)
– – HW – – HW – –	HOT WATER LINE (QL-C OR QL-D)
——SS——SS——	SANITARY SEWER LINE (QL-B)
– – SS – – SS – –	SANITARY SEWER LINE (QL-C OR QL-D)
——SD——SD——	STORM DRAIN LINE (QL-B)
– – SD – – SD – –	STORM DRAIN LINE (QL-C OR QL-D)
——ST——ST——	STEAM LINE (QL-B)
– – ST – – ST – –	STEAM LINE (QL-C OR QL-D)
——T——T——	TELECOMMUNICATIONS LINE (QL-B)
– – T – – T – –	TELECOMMUNICATIONS LINE (QL-C OR QL-D)
——UK——UK——	UNKNOWN DETECTED UTILITY/ CONDUCTOR (QL-B)
——W——W——	WATER LINE (QL-B)
– – W – – W – –	WATER LINE (QL-C OR QL-D)

NAU

UTILITY DESIGNATING NOTES

- UTILITY DEPICTIONS CONFORM TO CI/ ASCE STANDARD 38-02.
- UTILITY QUALITY LEVELS DEFINED AS FOLLOWS"
  - QUALITY LEVEL "D" (QL-D)
    INFORMATION COMES SOLELY FROM EXISTING UTILITY RECORDS.
  - QUALITY LEVEL "C" (QL-C)
    INVOLVES SURVEYING VISIBLE ABOVEGROUND UTILITY FACILITIES, SUCH AS MANHOLES, VALVE BOXES, POSTS, ETC., AND CORRELATING THIS INFORMATION WITH EXISTING UTILITY RECORDS.
  - QUALITY LEVEL "B" (QL-B) – DESIGNATING
    INVOLVES THE USE OF SURFACE GEOPHYSICAL TECHNIQUES TO DETERMINE THE EXISTENCE AND APPROXIMATE HORIZONTAL POSITION OF UNDERGROUND UTILITIES.
  - QUALITY LEVEL "A" (QL-A) – LOCATING
    INVOLVES THE USE OF NONDESTRUCTIVE DIGGING EQUIPMENT AT CRITICAL POINTS TO DETERMINE THE PRECISE HORIZONTAL AND VERTICAL POSITION OF UNDERGROUND UTILITIES, AS WELL AS THE TYPE, SIZE, CONDITION, MATERIAL, AND OTHER CHARACTERISTICS.
- THE SUBSURFACE UTILITIES DEPICTED HEREON AT QUALITY LEVEL "B" REPRESENT THE REMOTELY SENSED INDICATION OF THE SUBSURFACE UTILITY. UTILITY PIPE SIZES AND CONFIGURATIONS HAVE BEEN TAKEN FROM RECORD DRAWINGS AND ACCESSIBLE FIELD EVIDENCE. THE ACTUAL LOCATION, SIZE AND EXTENT OF ALL SUBSURFACE UTILITIES MUST BE DETERMINED THROUGH TEST HOLE OR OTHER QUALITY LEVEL "A" INVESTIGATION METHODS.
- AN EFFORT HAS BEEN MADE TO DEPICT UTILITIES AT QL "B". SOME UTILITIES ARE SHOWN AT QL "C" OR QL "D" AS NECESSARY.
- ALL GRAVITY SYSTEMS REPRESENTED AT QUALITY LEVEL "C" (QL-C) UNLESS OTHERWISE INDICATED.
- UTILITY SURFACE FEATURES, E.G. VALVES, MANHOLES AND VAULTS, ARE SHOWN SYMBOLICALLY AND THEIR SIZE AND SHAPE ARE SCHEMATIC AND NOT TO SCALE. EXCEPT AS SPECIFICALLY STATED HEREON, SUBSURFACE CONDITIONS SUCH AS SIZE AND ORIENTATION OF ANY ASSOCIATED STRUCTURE HAVE NOT BEEN DETERMINED. ACTUAL DIMENSIONS AND POSITIONS MUST BE DETERMINED THROUGH ADDITIONAL SUBSURFACE UTILITY INVESTIGATION.
- THE UNDERGROUND UTILITY LOCATIONS SHOWN HEREON REPRESENT A PROFESSIONAL OPINION AND INTERPRETATION BASED ON RECORD INDICATIONS AND FIELD EVIDENCE INCLUDING THE USE OF ELECTRONIC UTILITY DETECTION EQUIPMENT. THE RESULTS OF THIS UTILITY INVESTIGATION MAY BE AFFECTED BY THE AVAILABILITY OF UTILITY RECORD INFORMATION AND A VARIETY OF EXISTING SITE CONDITIONS. SITE CONDITIONS THAT MAY AFFECT THE RELIABILITY OF DETECTED UTILITY LOCATIONS INCLUDE SOIL CONTENT, DEPTH OF UTILITY, DENSITY OF UTILITY CLUSTERS, AND ELECTROMAGNETIC CHARACTERISTICS OF THE TARGET UTILITIES.
- AUTOCAD REFERENCE FILES USED IN THIS DRAWING:
  "11424topo2013.dwg" & "11424cogo.dwg" PROVIDED BY GEORGE WILLIAM STEPHENS, JR. AND ASSOCIATES, INC. FOR BASE MAP/ PLANIMETRIC FEATURES.

SURVEY REFERENCE NOTES

ALL HORIZONTAL SURVEY DATA CONTAINED IN UTILITY MAPPING FILE "11424_SDP73-93_9-20-13_Sht3.dwg" ARE REFERENCED TO TRAVERSE POINTS PROVIDED BY GEORGE WILLIAM STEPHENS, JR. AND ASSOCIATES, INC., INCLUDING:

POINT#	NORTHING	EASTING	DESCRIPTION
1	544020.37	1374204.65	PIN & CAP
2	543884.45	1373633.38	PIN & CAP

REMOVE EXISTING PAVEMENT. FILL AND INSTALL 2" TOPSOIL SEED & MULCH.

AREA TO BE FILLED AND INSTALL 2" TOPSOIL SEED & MULCH TO MEET PROPOSED SIDEWALK.

CONTRACTOR TO REPAVE HATCHED AREA TO MEET SPOT ELEVATIONS.

CONTRACTOR TO CUT OUT EXISTING MACADAM AND BASE AND INSTALL NEW CONCRETE LANDING-GEAR PAD.

PAVEMENT PATCHING NOTES:

1. AT THE OWNERS REQUEST, THE CONTRACTOR MAY BE ASK TO PROVIDE ADDITIONAL CUT AND PATCHING OF SELECTED AREAS IN THE PARKING LOT AND LOADING AREA WHERE PAVEMENT IS FALLING. THE CONTRACTOR SHALL BE PAID ON A SQUARE YARD UNIT PRICE BASIS FOR CUTTING EXISTING MATERIAL, REMOVING FROM SITE, AND PATCHING IN ACCORDANCE WITH THE "UTILITY TRENCH ROADWAY PATCH" DETAIL G-4.01 AS SHOWN ON SHEET 4 OF 4. OWNER'S REPRESENTATIVE AND CONTRACTOR SHALL MARK, MEASURE AND DETERMINE QUANTITY PRIOR TO THIS WORK BEING PERFORMED.

2. PATCH AND PAVING AS THE RESULT OF INSTALLATION OF THE PROPOSED SEWER LINES SHALL BE CONSIDERED INCIDENTAIL TO THE CONSTRUCTION OF THE SEWER AND INCLUDED IN THE PRICE OF THE SEWER LINE CONSTRUCTION.

"PROFESSION CERTIFICATION:
I HEREBY CERTIFY THAT THESE DOCUMENTS WERE PREPARED OR APPROVED BY ME, AND THAT I AM A DULY LICENSED PROFESSIONAL ENGINEER UNDER THE LAWS OF THE STATE OF MARYLAND LICENSE # 13741 EXPIRATION DATE 12-08-2015

STATE OF MARYLAND PAUL WAYNE TAYLOR No. 13741 REGISTERED PROFESSIONAL ENGINEER 3/10/14

⚠1 REV. SAN. SEWER SERVICE PIPE GRADES 2-24-14 PWT

⚠2 ADD NEW DOMESTIC WATER SERVICE 4-26-14 PWT

STATE OF MARYLAND PAUL WAYNE TAYLOR No. 13741 REGISTERED PROFESSIONAL ENGINEER 4/26/14

BEFORE YOU DIG CALL "811"
MISS UTILITY CALL BEFORE YOU DIG
811 Know what's below. Call before you dig.

APPROVED: HOWARD COUNTY
DEPARTMENT OF PLANNING AND ZONNING

DIRECTOR	DATE 10/17/13
CHIEF, DIV. OF LAND DEVELOPMENT	DATE 10/10/13
CHIEF, DIV. OF ~~ENGINEERING~~ DEVELOPMENT ENGG. J.P.	DATE 10/9/13

BALODEMAS ARCHITECTS CHARTERED
4301 Connecticut Ave NW
Suite 149
Washington, DC 20008
202-363-4820
Fax 4821

CIVIL ENGINEER:
GWS
George W. Stephens, Jr. & Associates, Inc.
4692 Millennium Drive
Suite 100
Belcamp, Maryland 21017
410-297-2340
Fax 2345

MECH/ELEC ENGINEER:
CS Consulting Engineers, Inc.
CS Consulting Engineers, Inc.
1300 Piccard Drive
Suite 104
Rockville, MD 20850
301-977-7644
Fax 7643

STRUCTURAL ENGINEER:
MCC 1200 ARCHITECTURAL ENGINEERS, PLLC
210 N Lee Street
Suite 210
Alexandria, VA 22314
703-350-4151

OWNER:
PETE PAPPAS & SONS, INC.
1401 Okie St NE
Washington, DC 20002
202-526-2929
www.petepappasinc.com

PROJECT:
RENOVATION
7825A
RAPPAHANNOCK AVE
JESSUP, MD 20794

DRAWING:

SEAL:
STATE OF MARYLAND PAUL WAYNE TAYLOR No. 13741 REGISTERED PROFESSIONAL ENGINEER 9/20/13

Professional Certification:
I certify that these documents were prepared or approved by me, and that I am a duly licensed architect under the laws of the State of Maryland, license number 13741, expiration date 12/08/13.

JULY 31, 2013

DWG. No.

SDP 73-93
SHEET 3 OF 4

© 2013 BALODEMAS ARCHITECTS CHTD.

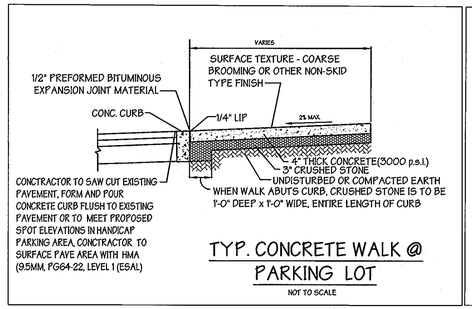

TYP. CONCRETE WALK @ PARKING LOT

NOT TO SCALE

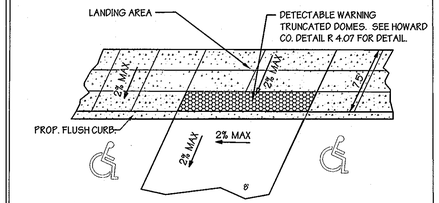

HANDICAP RAMP DETAIL

NOT TO SCALE

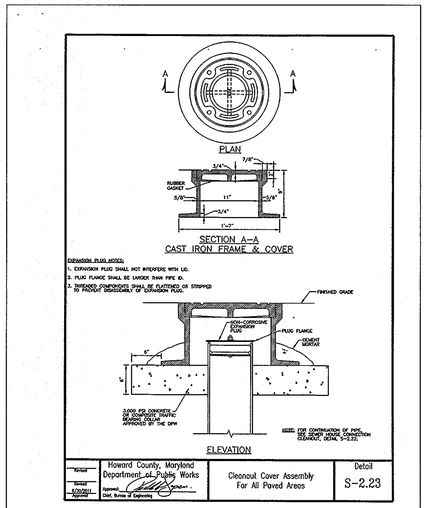

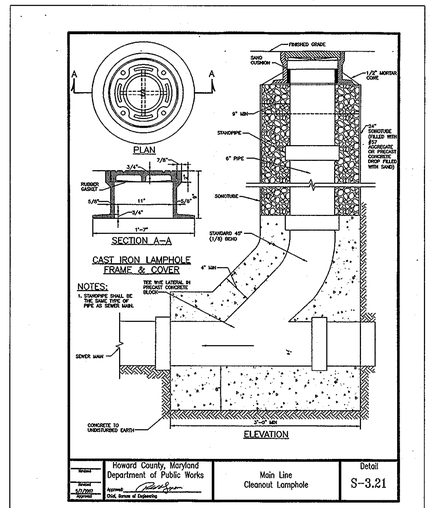

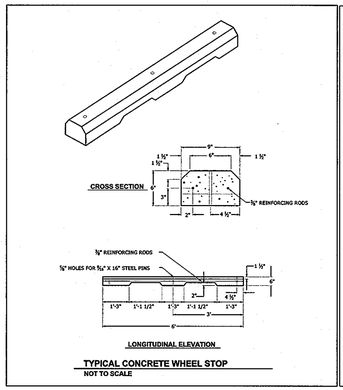

TYPICAL CONCRETE WHEEL STOP

NOT TO SCALE

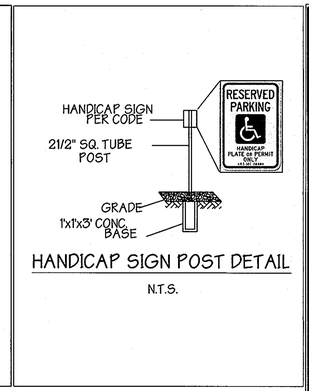

HANDICAP SIGN POST DETAIL

N.T.S.

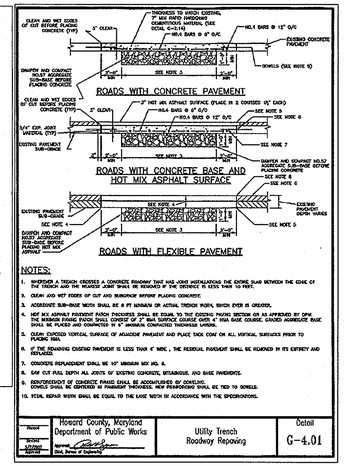

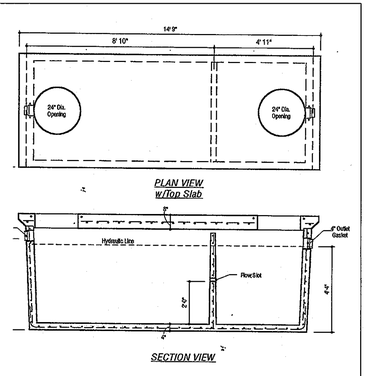

N.DATA & GENERAL NOTES:
NORM STRENGTH 7C = 4,000 p.s.i. @ 28 days. Density = 150 pcf.
MORT - Portland Type VII per ASTM C 150-92.
REINFORCING & STIRRUPS per ASTM C 920-84 & C 494-92.
All design per AASHTO M-170, Grade 60, Concrete. Min. 1-1/2" cover.
Slab design for HS-20 standard for HS-20 loading.
Slab should be both ways reinforced.
Allow 3'-0" earth cover over top slab.

2000 GALLON TANK HEAVY DUTY RATED SOLID COLLECTOR

* OWNER MAY REQUIRE CONCRETE TO BE A HIGH EARLY STRENGTH CONCRETE BE SUBSTITUPED IN ORDER TO MAINTAIN WAREHOUSE OPERATIONS.

CONCTRACTOR TO FORM AND POUR CONCRETE PAD FLUSH TO EXISTING PAVEMENT. IF NOT ABLE TO FORM SMOOTH CONTINUOUS GRADE THE MEET EXISTING PAVEMENT ELEVATION, CONTRACTOR TO SURFACE PAVE AREA WITH HMA (9.5MM, PG64-22, LEVEL 1 (ESAL)

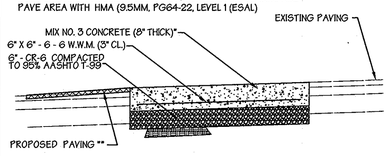

CONCRETE LANDING GEAR PAD DETAIL

NOT TO SCALE

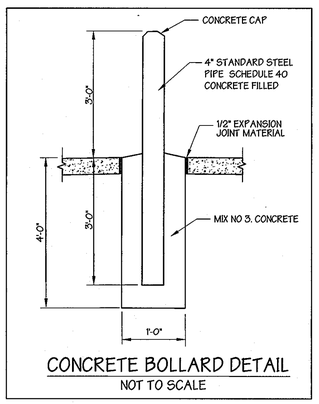

CONCRETE BOLLARD DETAIL

NOT TO SCALE

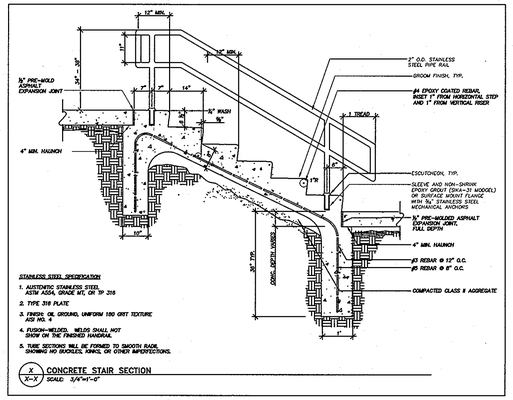

BEFORE YOU DIG CALL "811"
MISS UTILITY
DIG SAFE. DIG RIGHT. DIG BEFORE YOU DIG
811
Know what's below. Call before you dig.

APPROVED: HOWARD COUNTY DEPARTMENT OF PLANNING AND ZONNING

DIRECTOR — DATE 10/7/13

CHIEF, DIV. OF LAND DEVELOPMENT — DATE 10/9/13

CHIEF, DIV. OF ~~ENGINEERING~~ DEVELOPMENT ENGR. — DATE 10/9/13

BALODEMAS ARCHITECTS
CHARTERED
4301 Connecticut Ave NW
Suite 149
Washington, DC 20008
202-363-4820
Fax 4821

CIVIL ENGINEER:
George W. Stephens, Jr. & Associates, Inc.
4692 Millennium Drive
Suite 100
Belcamp, Maryland 21017
410-297-2340
Fax 2345

MECH/ELEC ENGINEER:
CS Consulting Engineers, Inc.
CS Consulting Engineers, Inc.
1300 Piccard Drive
Suite 104
Rockville, MD 20850
301-977-7644
Fax 7643

STRUCTURAL ENGINEER:
MCCE1200 ARCHITECTURAL ENGINEERS, PLLC
210 N Lee Street
Suite 210
Alexandria, VA 22314
703-350-4151

OWNER:
PETE PAPPAS & SONS, INC.
1401 Okie St NE
Washington, DC 20002
202-526-2929
www.petepappasinc.com

PROJECT:
RENOVATION
7825A
RAPPAHANNOCK AVE
JESSUP, MD 20794

DRAWING:

SEAL:
STATE OF MARYLAND — JAMES MICHAEL TAYLOR — No. 13741 — REGISTERED PROFESSIONAL ENGINEER
9/20/13

Professional Certification:
I certify that these documents were prepared or approved by me, and that I am a duly licensed architect under the laws of the State of Maryland, license number 13741, expiration date 12/08/13.

JULY 31, 2013

DWG. No.

SDP 73-93
SHEET 4 OF 4

© 2013 BALODEMAS ARCHITECTS CHTD.