# SITE DEVELOPMENT PLAN
# FOR
# THE ROUSE BUILDING RENOVATION

10275 LITTLE PATUXENT PARKWAY COLUMBIA, MARYLAND 21044

## PART OF PARCEL 321 LOT 18

HOWARD COUNTY MARYLAND

## GENERAL NOTES

1. ALL CONSTRUCTION SHALL BE IN ACCORDANCE WITH THE LATEST STANDARDS AND SPECIFICATIONS OF HOWARD COUNTY PLUS MSHA STANDARDS AND SPECIFICATIONS IF APPLICABLE.
2. THE CONTRACTOR SHALL NOTIFY THE DEPARTMENT OF PUBLIC WORKS/BUREAU OF ENGINEERING/CONSTRUCTION INSPECTION DIVISION AT (410) 313-1880 AT LEAST FIVE (5) WORKING DAYS PRIOR TO THE START OF WORK.
3. THE CONTRACTOR SHALL NOTIFY "MISS UTILITY" AT 1-800-257-7777 AT LEAST 48 HOURS PRIOR TO ANY EXCAVATION WORK BEING DONE.
4. TRAFFIC CONTROL DEVICES, MARKINGS AND SIGNING SHALL BE IN ACCORDANCE WITH THE LATEST EDITION OF THE MANUAL OF UNIFORM TRAFFIC CONTROL DEVICES (MUTCD). ALL STREET AND REGULATORY SIGNS SHALL BE IN PLACE PRIOR TO THE PLACEMENT OF ANY ASPHALT.
5. ALL PLAN DIMENSIONS ARE TO FACE OF CURB UNLESS OTHERWISE NOTED.
6. EXISTING TOPOGRAPHIC INFORMATION SHOWN HEREON REFLECTS THE TOPOGRAPHIC SURVEY PERFORMED BY DMW, INC. ON JULY 24, 2012. THE EXISTING TOPOGRAPHY IS TAKEN FROM FIELD RUN SURVEY WITH ONE FOOT CONTOUR INTERVALS PREPARED BY DMW,INC. ON JULY 24, 2012.
7. THE COORDINATES SHOWN HEREON ARE BASED UPON THE HOWARD COUNTY GEODETIC CONTROL WHICH IS BASED UP ON THE MARYLAND STATE PLANE COORDINATE SYSTEM. HOWARD COUNTY MONUMENT NO'S 36AA, 30GA, 36DB & 30G4.
8. WATER IS PUBLIC . CONTRACT NO. 167-W. TOWN CENTER ZONE I.
9. SEWER IS PUBLIC . CONTRACT NO. C-169-S.
10. PROPOSED STORMWATER MANAGEMENT BY MEANS OF MICRO-BIORETENTION WILL BE PRIVATE AND THE MAINTENANCE RESPONSIBILITY WILL BE THE OWNERS. STORMWATER MANAGEMENT IS PROVIDED IN ACCORDANCE WITH THE HOWARD COUNTY DESIGN MANUAL VOLUME I, STORM DRAINAGE, AND REVISED MAY 3, 2010. THIS REVISION TO THE DESIGN MANUAL (CHAPTER 5 - STORM WATER MANAGEMENT) AMENDS HOWARD COUNTY'S STANDARD FOR DESIGN AND CONSTRUCTION OF STORMWATER MANAGEMENT FACILITIES IN ACCORDANCE WITH THE STATE'S STORMWATER MANAGEMENT ACT OF 2007.
11. EXISTING UTILITIES ARE BASED ON FIELD LOCATIONS BY EDWARDS UTILITY MAPPING AND SUPPLEMENTED WITH OBSERVABLE EVIDENCE DMW, INC. FIELD CREWS.
12. THE FLOODPLAIN STUDY FOR THIS PROJECT IS ON FILE AT HOWARD COUNTY DPW STORMWATER MANAGEMENT DIVISION. FOR FLOOD INSURANCE REQUIREMENTS, CONTACT THE BUREAU OF ENVIRONMENTAL SERVICES AT (410) 313-6444.
13. THERE ARE NO WETLANDS ON THIS SITE.
14. THE COUNTY APPROVED THE TRAFFIC SIGNAL WARRANT STUDY THAT CONCLUDED A TRAFFIC SIGNAL SHALL BE INSTALLED. AT THE TIME OF THE PROPOSED IMPROVEMENTS SIGNAL PLANS AND A DEVELOPER'S AGREEMENT SHALL BE SUBMITTED FOR COUNTY APPROVAL.
15. THE CONTRACTOR SHALL MAINTAIN A MINIMUM OF A 2.0 FOOT PROTECTIVE COVER OVER ALL UTILITIES DURING CONSTRUCTION.
16. ALL OUTDOOR LIGHTING SHALL COMPLY WITH THE REQUIREMENTS OF ZONING SECTION 134. ALL EXTERIOR LIGHT FIXTURES SHALL BE ORIENTED TO DIRECT LIGHT INWARD AND DOWNWARD AND AWAY FROM ALL ADJOINING RESIDENTIAL PROPERTIES AND PUBLIC ROADS IN ACCORDANCE WITH SECTION 134 OF THE HOWARD COUNTY ZONING REGULATIONS.
17. THE SITE HAS BEEN DESIGNED TO BE IN CONFORMNACE WITH ADA REGULATIONS 28 CFR PART 36, REVISED SEPTEMBER 15, 2010. HANDICAP PARKING DETAILS AND SIGNAGE SHALL BE IN ACCORDANCE WITH ADAAG (AMERICANS WITH DISABILITIES ACT ACCESSIBILITY GUIDELINES) AND COMAR (CODE OF MARYLAND REGULATIONS) SECTION 5.02.02.
18. ANY DAMAGE TO THE COUNTY OWNED RIGHT-OF-WAY SHALL BE CORRECTED AT THE CONTRACTOR'S EXPENSE.
19. ALL SIDEWALKS SHALL BE CROSS SLOPED AT 1/4 INCH PER FOOT.
20. TRENCH BEDDING FOR STORM DRAINAGE STRUCTURES SHALL BE IN ACCORDANCE WITH HOWARD COUNTY STANDARD G2.01.
21. ALL INLETS SHALL BE CONSTRUCTED IN ACCORDANCE WITH HOWARD COUNTY STANDARDS OR MDSHA STANDARDS AS SPECIFIED ON THE STRUCTURE.
22. ALL MATERIALS AND CONSTRUCTION SHALL BE IN STRICT ACCORDANCE WITH THE HOWARD COUNTY DESIGN MANUAL, VOLUME IV.
23. THE CONTRACTOR SHALL BE RESPONSIBLE FOR ANY DAMAGE TO EXISTING PROPERTY WHICH MAY OCCUR AS A RESULT OF NEGLIGENCE DURING THE EXECUTION OF WORK.
24. ELECTRIC, GAS, CABLE, TELEPHONE AND LIGHTING LINES ARE DESIGNED BY OTHERS.
25. THIS PLAN HAS BEEN PREPARED IN ACCORDANCE WITH THE PROVISIONS OF SECTION 16.124 OF THE HOWARD COUNTY CODE AND THE LANDSCAPE MANUAL.
26. FINANCIAL SURETY FOR THE REQUIRED LANDSCAPING HAS BEEN POSTED AS PART OF THE DPW DEVELOPER'S AGREEMENT IN THE AMOUNT OF $6,600.00 FOR 22 SHADE TREES.
27. THE SUBJECT PROPERTY IS ZONED NT PER THE 02/02/2004 COMPREHENSIVE ZONING PLAN AND THE COMP LITE ZONING REGULATION AMENDMENTS EFFECTIVE ON 07/28/2006.
28. NO GRADING, REMOVAL OF VEGETATIVE COVER OR TREES, PAVING AND NEW STRUCTURES SHALL BE PERMITTED WITHIN THE REQUIRED WETLANDS, STREAM(S) OR THEIR BUFFERS, FOREST CONSERVATION EASEMENT AREA AND 100-YEAR FLOODPLAIN.
29. THIS PROJECT IS EXEMPT FROM FOREST CONSERVATION IN ACCORDANCE WITH SECTION 16.1202(B)(1)(IV) OF THE HOWARD COUNTY CODE AND FOREST CONSERVATION MANUAL SINCE IT IS PLANNED UNIT. DEVELOPMENT WHICH HAS PRELIMINARY DEVELOPMENT PLAN APPROVAL AND 50% OR MORE OF THE LAND IS RECORDED AND SUBSTANTIALLY DEVELOPED BEFORE DECEMBER 31, 1992.
30. THE SETBACKS SHALL BE IN ACCORDANCE WITH APPROVED FDP-95 AND FDP-4-V
31. REFER TO TRAFFIC SIGNAL MODIFICATION PLANS FOR TIE-IN OF PROPOSED SIDEWALK TO EXISTING SIDEWALK FOR THE INTERSECTION OF LITTLE PATUXENT PARKWAY AND SOUTHERN SITE DRIVEWAY (MOORE ROAD).
32. DISTURBANCE WITHIN THE STEEP SLOPES HAS BEEN ACCEPTED AS NECESSARY IN ACCORDANCE WITH SECTION 16.116(C) OF THE SUBDIVISION AND LAND DEVELOPMENT REGULATIONS DUE TO REGRADING AND REPLACING THE EXISTING CURB AND GUTTER TO REVERSE THE DRAINAGE CROSS SLOPE OF THE EXISTING DRIVE AISLE AWAY FROM AN EXISTING RETAINING WALL TO PROTECT IT'S INTEGRITY .

AS-BUILT CERTIFICATION FOR PSWM

NOTE: THERE IS NO "AS-BUILT" INFORMATION SHOWN ON THIS SHEET

SIGNED: [signature] P.E.# 26569
GERALD D. TURNBAUGH AS-BUILT DATE: 9-2014

A:\11133\11133.A0\ENGR\CAD FILES\SHEET FILES\11133_COV.DWG MON, MAR 18, 2013

AS-BUILT NOT REQUIRED

SIGNED [signature]
DAFT McCUNE WALKER, INC.
BY: MICHAEL D. MARTIN
P.L.S. 21234

PROFESSIONAL CERTIFICATION

I HEREBY CERTIFY THAT THESE DOCUMENTS WERE PREPARED OR APPROVED BY ME, AND THAT I AM A DULY LICENSED PROFESSIONAL ENGINEER UNDER THE LAWS OF THE STATE OF MARYLAND. LICENSE NO. 26569 EXPIRATION DATE: 7-18-15

FOR REVISION NO.2 ONLY

10-22-14
Date
Professional Engr. No. 26569

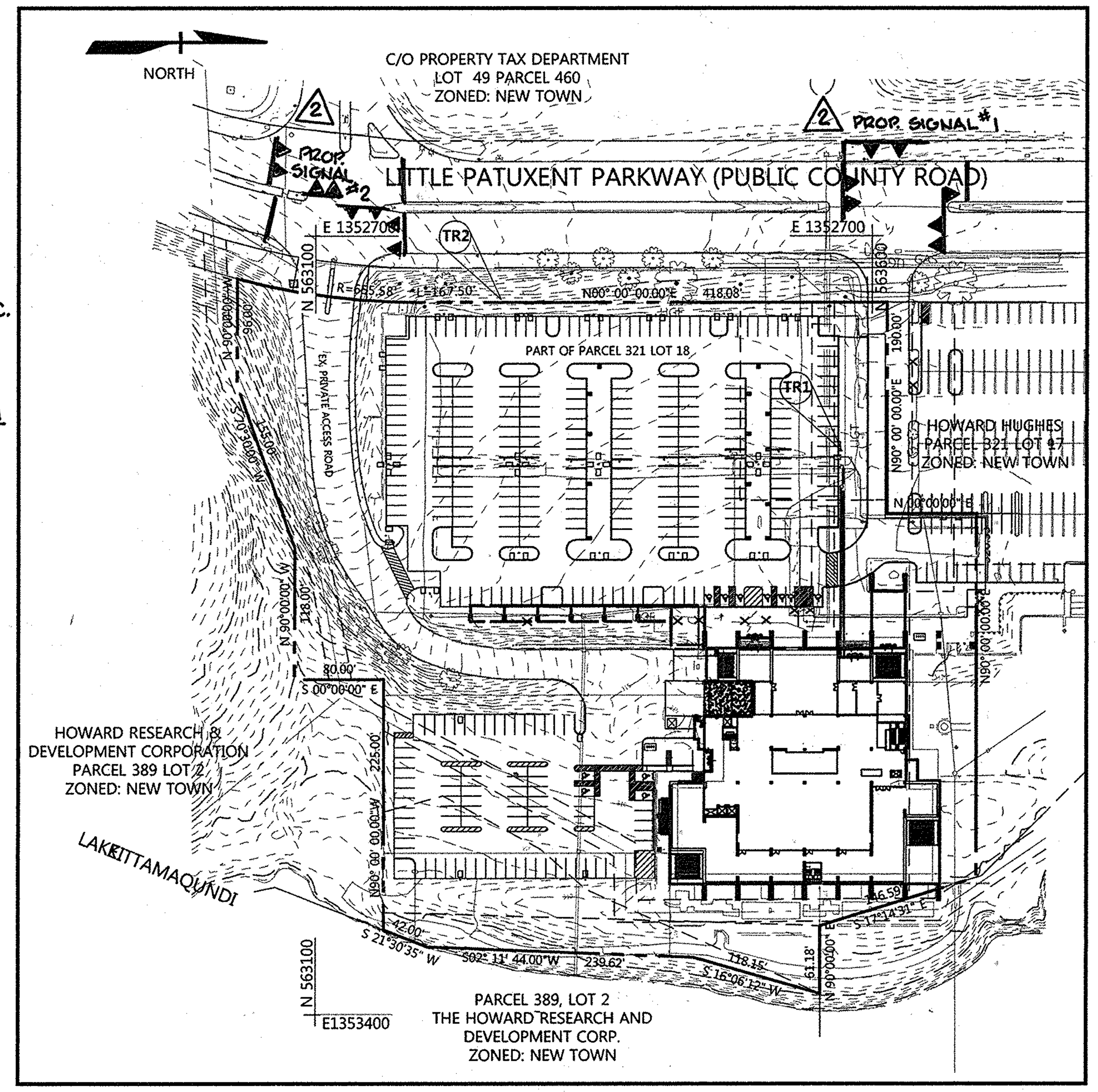


SITE PLAN
SCALE: 1"=100'

## LEGEND

| | |
|---|---|
| PROPERTY BOUNDARY |
| ADJACENT PROPERTY BOUNDARY |
| EX. RIGHT OF WAY |
| EX. EASEMENT |
| 320 | EX. MAJOR CONTOURS |
| 319 | EX. MINOR CONTOURS |
| (2) | EX. BUILDING |

## PURPOSE STATEMENT:

THIS SITE DEVELOPMENT PLAN WAS REVISED TO:

1. ADD THE TRAFFIC SIGNAL PLANS AS PART OF THIS SDP SET.

Revision No.2 Purpose Statement

Note: This revision No.2 replaces revision no.1 changes.

This SDP plan set was revised to:

1. Add As-built LLP traffic signal and sidewalk ramp plan sheets to SDP-73-23C plan sheet set.
2. Show revised storm drain layout on plan sheets, as well as, add replacement profile sheet.
3. Show additional cart ramps on landscape islands along super market store frontage sidewalk.
4. Show expanded limit of disturbance in rear of lower parking lot for replacement of three existing retaining walls.
5. Show concrete monumental signs at site entrance.
6. Update "Shared Parking Analysis Summary" on cover sheet, as well as, update Final Traffic Impact Study report.
7. Show roofdrain/chain drain detail.
8. Show re-alignment of sanitary sewer in lower level parking lot.

(2) (1) SHEET INDEX (CONTINUED)

| SHEET | DESCRIPTION |
|---|---|
| 22 | EX. RAMP REHABILITATION |
| 23 | TRAFFIC SIGNAL - WHOLE FOODS ENTRANCE AS-BUILT |
| ~~24~~ | ~~EQUIPMENT LIST - WHOLE FOODS ENTRANCE~~ |
| 24 ~~25~~ | TRAFFIC SIGNAL - MOORE CIRCLE AS-BUILT |
| ~~26~~ | ~~EQUIPMENT LIST - MOORE CIRCLE~~ |

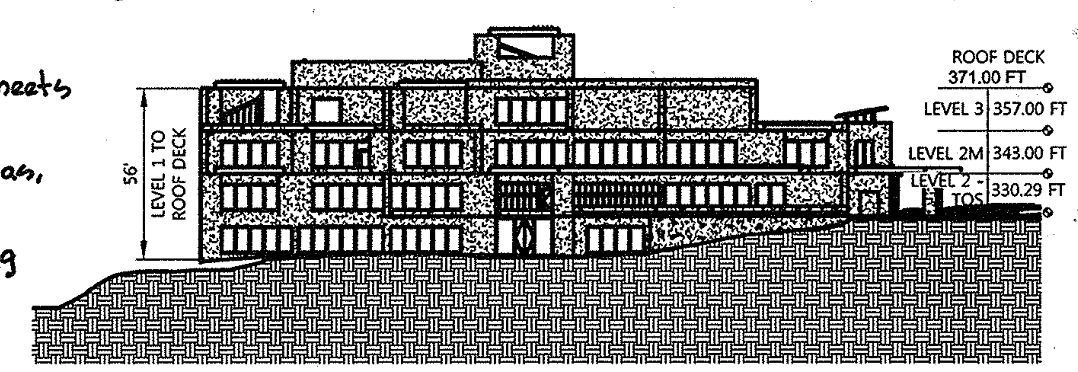


BUILDING ELEVATION
SCALE: 1"=50'

## SITE ANALYSIS DATA CHART

1. GENERAL SITE DATA
   a. PRESENT ZONING: NT
   b. APPLICABLE DPZ FILE REFERENCES: SDP-73-23C, F-72-107, FDP-4-A-V, FDP-095, PB23-086
   c. PROPOSED USE: ~~HEALTH CLUB~~ (28,385 SF), GROCERY MERCHANT (46,720 SF), OFFICE (19,008 SF)
   d. EXISTING USE: OFFICE (133,380± SF) DAY SPA
   e. PROPOSED WATER: PUBLIC
   f. PROPOSED SEWER: PUBLIC
   g. ANY OTHER RELEVANT INFORMATION: N/A
   h. AREA OF STEEP SLOPES: 0 ACRES
   i. AREA OF FLOODPLAIN: PLAT C.M.P. 23/862. 0.56 A.C.
2. AREA TABULATION
   a. TOTAL SITE AREA: 7.504 AC.+/- 119,837 S.F. OR 2.75 AC.± (2)
   b. LIMIT OF DISTURBED AREA: ~~100,471 S.F. OR 2.31 AC.+~~/-
   c. TOTAL IMPERVIOUS AREA: 70,000 S.F. OR 1.61 AC.+/-
   d. BUILDING COVERAGE OF SITE: N/A
3. PARKING SPACE DATA
   a. DOWNTOWN REVITALIZATION SHARED PARKING REDUCTION:

SHARED PARKING ANALYSIS SUMMARY ~~(1)~~ (2)

| | WEEKDAY | WEEKEND |
|---|---|---|
| PARKING REQUIRED | 341 ~~353~~ SPACES | 336 ~~353~~ SPACES |
| ~~MAX. PARKING REQUIRED~~ | ~~353 SPACES~~ | ~~353 SPACES~~ |
| TOTAL PARKING PROVIDED | 355 ~~356~~ SPACES | 355 ~~356~~ SPACES |
| DIFFERENCE (REQ. VS. PROV.) | 14 ~~3~~ SPACES | 19 ~~3~~ SPACES |
| PERCENT DIFFERENCE | 4 ~~1~~% | 5% |

b. NUMBER OF PARKING SPACES PROVIDED:
UPPER LEVEL PARKING LOT:
REGULAR (9'X18') - 273 SPACES
HANDICAPPED - 7 SPACES (INCLUDED)
LOWER LEVEL PARKING SPACES PROVIDED:
REGULAR (9'X18') - ~~83~~ 82 SPACES
HANDICAPPED - 4 SPACES (INCLUDED)

TOTAL SPACES PROVIDED: ~~356~~ 355 SPACES* ~~(2)~~

~~(1) SEE TRAFFIC IMPACT STUDY SECTION 8 - SHARED PARKING ANALYSIS FOR DETAILED CALCULATIONS. THE PARKING STUDY WAS APPROVED BY DPZ ON FEBRUARY 8, 2013.~~
~~(2) SHARED PARKING AGREEMENT BETWEEN WINOCOPIN II, INC. (NOW COLUMBIAN MALL, INC.) RECORDED IN LIBER CMP NO. 526, FOLIO 136.~~

NOTES: (2)

(1) SEE SUPLEMENTAL TRAFFIC IMPACT STUDY SECTION 8 - REVISED SHARED PARKING ANALYSIS FOR DETAILED CALCULATIONS, DATED SEPT. 15, 2014. THE ORIGINAL PARKING STUDY WAS APPROVED ON FEBRUARY 8, 2013.

(2) RECIPROCAL PARKING AND ACCESS EASEMENT AGREEMENT DATED OCTOBER 15, 1997 RECORDED AT LIBER 4118 FOLIO 27 BETWEEN HRD, TIAA, AS GROUND LESSOR, COLUMBIA MALL, INC. ("CMI"), AS GROUND LESSEE, AND EQUITABLE, AS OWNER OF LOT 31 ("REA") AS THEREAFTER AMENDED BY FIRST AMENDMENT TO REA DATED MAY 27, 1999 RECORDED AT LIBER 4875 FOLIO 195.

| ADDRESS CHART | |
|---|---|
| LOT NUMBER | STREET ADDRESS |
| 18 | 10275 LITTLE PATUXENT PARKWAY COLUMBIA, MARYLAND 21044 |

SHEET INDEX

| | SHEET | DESCRIPTION |
|---|---|---|
| (2) | 1 | COVER SHEET |
| (2) | 2 | EXISTING CONDITIONS |
| (2) | 3 | DEMOLITION PLAN |
| (2) | 4 | DEMOLITION PLAN AT ENTRANCE AND LOADING DOCK |
| (2) | 5 | SITE PLAN |
| (2) | 6 | SITE DETAILS |
| (2) | 7 | STORM DRAIN DRAINAGE AREAS AND SOILS MAP |
| (2) | 8 | GRADING AND UTILITY PLAN |
| (2) | 9 | GRADING AND UTILITY PLAN AT ENTRANCE AND LOADING DOCK |
| (2) | 10 | UTILITY PROFILES |
| (2) | 11 | EXISTING CONDITONS SEDIMENT AND EROSION CONTROL PLAN |
| (2) | 12 | PROPOSED CONDITIONS SEDIMENT AND EROSION CONTROL PLAN |
| (2) | 13 | SEDIMENT AND EROSION CONTROL DRAINAGE AREA MAPS |
| (2) | 14 | SEDIMENT AND EROSION CONTROL NOTES AND SEQUENCE OF CONSTRUCTION |
| | 15 | SEDIMENT AND EROSION CONTROL DETAILS |
| (2) | 16 | MICRO-BIORETENTION PROFILES AND DETAILS |
| | 17 | ESD PLANTING PLAN & GENERAL & SOIL BORINGS |
| (2) | 18 | PROPOSED ESD DRAINAGE AREA MAP |
| | 19 | PLANTING PLAN |
| | ~~20~~ | ~~TERRACE PLANTING PLAN~~ |
| | 20 | PLANTING DETAILS |
| | 21 | SITE LIGHTING |

| Date | No. | Revision Description Continued |
|---|---|---|
| 10-22-14 | (2) | Red Rev. Add shts 22-24; Update 1-21 per site changes |

PURPOSE STATEMENT:

THIS SITE DEVELOPMENT PLAN WAS REVISED TO:

1. RENOVATE THE EXISTING BUILDING TO ACCOMMODATE A GROCERY STORE, OFFICE SPACE, AND AN ATHLETIC FACILITY.

2. MODIFY EXISTING PARKING LOTS, LANDSCAPING, AND UTILITY INFRASTRUCTURE TO APPROPRIATELY SERVE NEW RENOVATION.

3. PROVIDE NEW STORMWATER MANAGEMENT ESD'S TO TREAT REQUIRED STROMWATER RUNOFF.

CONTRACT NUMBERS:
EX. WATER: 167-W
EX. SEWER: C-2485-D-S, 2485-D-W&S

PROFESSIONAL CERTIFICATION

I HEREBY CERTIFY THAT THESE DOCUMENTS WERE PREPARED OR APPROVED BY ME, AND THAT I AM A DULY LICENSED PROFESSIONAL ENGINEER UNDER THE LAWS OF THE STATE OF MARYLAND. LICENSE NO. 16928 EXPIRATION DATE: 5/13/14

3/21/13
Date
Professional Engr. No. 16928

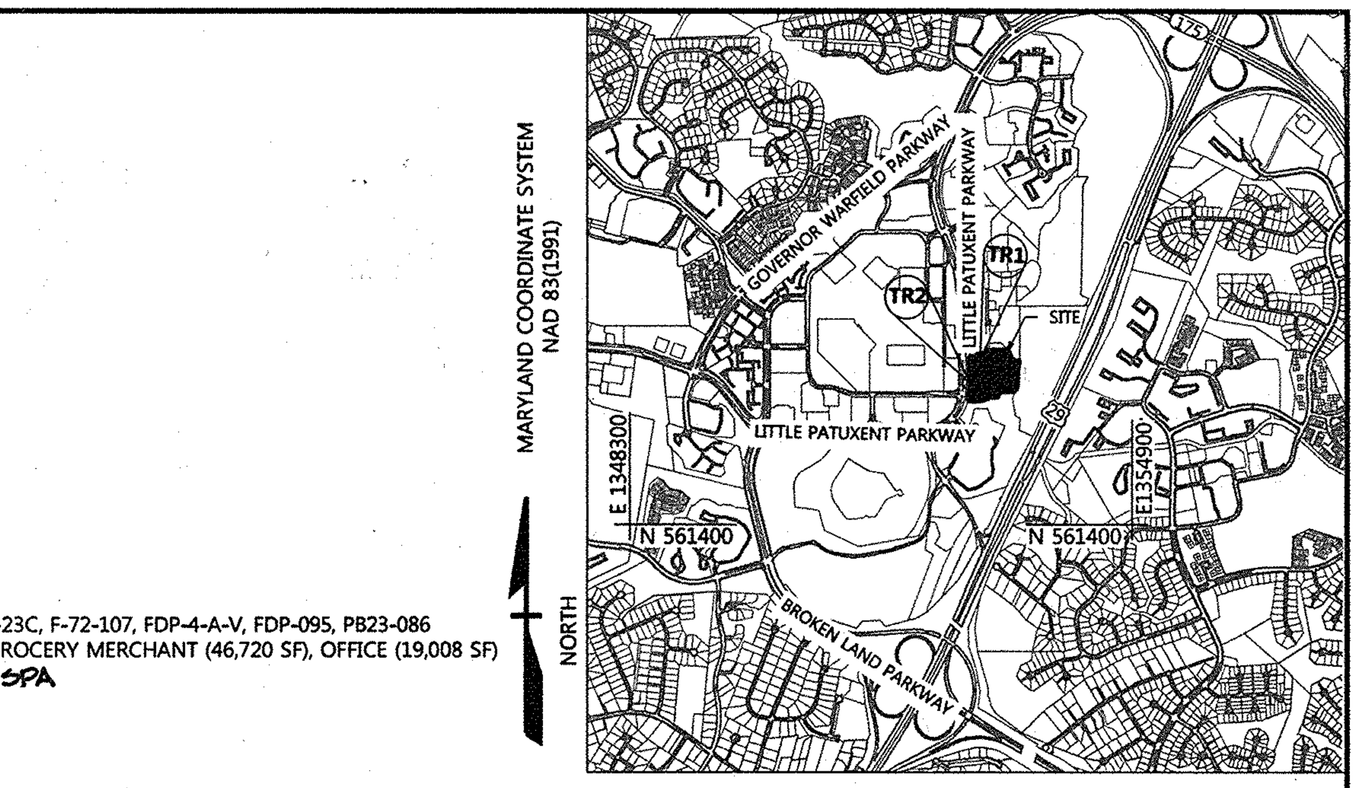


## VICINITY MAP

SCALE: 1"=2000'
HOWARD COUNTY ADC MAP NUMBER 4935, GRID NO. D6

## BENCHMARK

DESCRIPTION

TR1
N: 563575.1160
E: 1352898.1210
ELEV=331.740

TR2
N: 563266.5240
E: 1352763.6090
ELEV=336.40

## DATA SOURCES:

1. EXISTING TOPOGRAPHIC INFORMATION SHOWN HEREON REFLECTS THE RESULT A TOPOGRAPHIC SURVEY PERFORMED BY DMW, INC. ON JULY 24, 2012.
2. PROPERTY LINES SHOWN HEREON ARE BASED UPON THE RESULTS OF ALTA SURVEY DATED 08/31/12.
3. ADJOINING PROPERTY INFORMATION REFERENCED FROM HOWARD COUNTY, MARYLAND PROPERTY FINDER DATED 2010.

| PERMIT INFORMATION CHART | | | | | |
|---|---|---|---|---|---|
| SUBDIVISION NAME: COLUMBIA, TOWN CENTER | | | SECTION/AREA: 1 | | LOT/PARCEL NO.: PARCEL 321, LOT 18 |
| PLAT # OR L/F: PB.23, P.86 | GRID #: 2 | ZONING: NT | TAX MAP NO.: 36 | ELECT DISTR: 5TH | CENSUS TRACT: 6054.02 |

APPROVED PLANNING BOARD OF HOWARD COUNTY

DATE MARCH 7, 2013

APPROVED: HOWARD COUNTY DEPT. OF PLANNING AND ZONING

[signature] CHIEF, DIVISION OF LAND DEVELOPMENT — DATE 4/26/13

[signature] CHIEF, DEVELOPMENT ENGINEERING DIVISION — DATE 4/18/13

[signature] DIRECTOR — DATE 4/26/13

| Date | No. | Revision Description |
|---|---|---|
| 11-20-13 | (1) | REDLINE REVISION - ADD SHEETS 22-26 |
| 11-28-12 | | REPLACES ALL SHEETS OF ORIGINAL SDP 73-23C |

REVISED SITE DEVELOPMENT PLAN

THE ROUSE BUILDING RENOVATION

OWNER/DEVELOPER:
CLOVER ACQUISTIONS LLC
C/O THE HOWARD HUGHES CORPORATION
P.O. BOX 833 COLUMBIA, MD 21044-0833

DMW
DAFT McCUNE WALKER INC
200 EAST PENNSYLVANIA TOWSON, MD 21286
P: 410 296 3333 F: 410 296 4705 WWW.DMW.COM
A TEAM OF LAND PLANNERS, LANDSCAPE ARCHITECTS, ENGINEERS, SURVEYORS & ENVIRONMENTAL PROFESSIONALS

AREA
TAX MAP 36 GRID 2 PART OF PARCEL 321, LOT 18
ELECTION DISTRICT 5TH ZONE NT

TITLE
COVER SHEET
AS BUILT

| | | |
|---|---|---|
| Des. By GDT/MCB | Scale AS SHOWN | Proj. No. 11133.A |
| Drn. By RLV | Date 3/18/13 | 1 of 24 ~~26~~ |
| Chk. By GDT/MCB | Approved | |

SDP 73-23C

## ACRONYMS

CIP - CAPITAL IMPROVEMENT PROJECT
CO - COUNTY
EOP - EDGE OF PAVING
EX. - EXISTING
ELEV - ELEVATION
PROP. - PROPOSED
S.F. - SQUARE FEET
TYP. - TYPICAL

TOTAL ON-SITE <25% STEEP SLOPES AREA =56438± S.F.

TOTAL OFF-SITE <25% STEEP SLOPES AREA =87621± S.F.

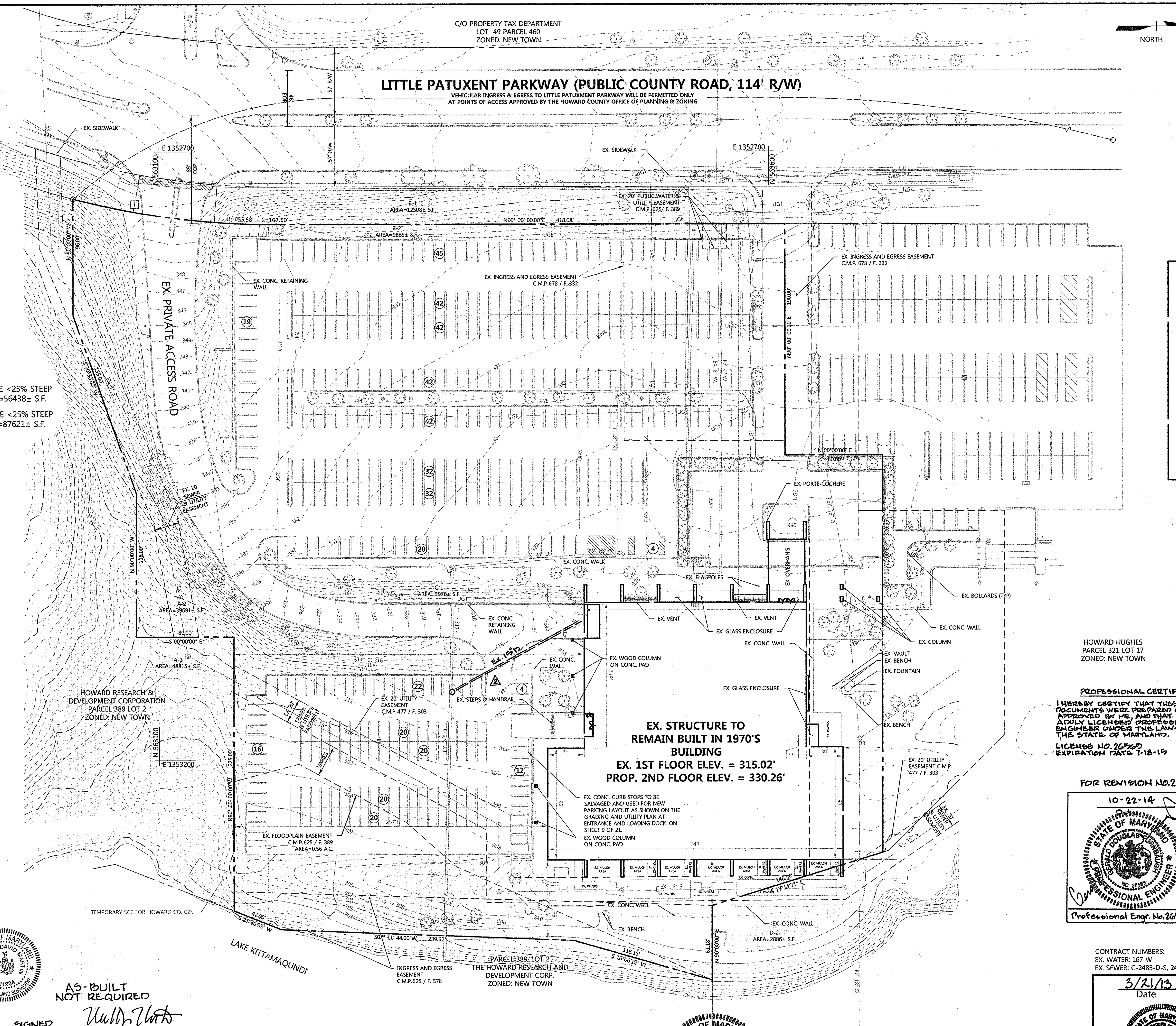


## LEGEND

- PROPERTY BOUNDARY
- EX. RIGHT OF WAY
- ADJACENT PROPERTY BOUNDARY
- EX. EASEMENT
- EX. ROADS AND WALKS
- EX. MAJOR CONTOURS (330)
- EX. MINOR CONTOURS (329)
- EX. BUILDING
- EX. TREE
- EX. GROUP LIGHT
- EX. STORM DRAIN (EX. 18" D.)
- EX. SANITARY SEWER
- EX. WATER (EX. 6" W.)
- EX. UNDERGROUND ELECTRIC (EX. UGE)
- STEEP SLOPE GREATER THAN 25% (A-1 AREA=1234 SF)

TOTAL EX. PARKING = 460

AS-BUILT NOT REQUIRED

SIGNED [signature]
DAFT McCUNE WALKER, INC.
BY: MICHAEL D. MARTIN, P.L.S.# 21234

STATE OF MARYLAND — MICHAEL DAVID MARTIN — No. 21234 — PROFESSIONAL LAND SURVEYOR

AS-BUILT CERTIFICATION FOR PSWM

NOTE: THERE IS NO "AS-BUILT" INFORMATION PROVIDED ON THIS SHEET

SIGNED [signature] P.E.#26569
GERALD D. TURNBAUGH AS-BUILT DATE

STATE OF MARYLAND — GERALD DOUGLAS TURNBAUGH — NO. 26569 — PROFESSIONAL ENGINEER

PROFESSIONAL CERTIFICATION

I HEREBY CERTIFY THAT THESE DOCUMENTS WERE PREPARED OR APPROVED BY ME, AND THAT I AM A DULY LICENSED PROFESSIONAL ENGINEER UNDER THE LAWS OF THE STATE OF MARYLAND.

LICENSE NO. 26569
EXPIRATION DATE 7-18-15

FOR REVISION NO.2 ONLY

10-22-14
Date

STATE OF MARYLAND — GERALD DOUGLAS TURNBAUGH — NO. 26569 — PROFESSIONAL ENGINEER

Professional Engr. No. 26569

CONTRACT NUMBERS:
EX. WATER: 167-W
EX. SEWER: C-2485-D-S, 2485-D-W&S

3/21/13
Date

STATE OF MARYLAND — PROFESSIONAL ENGINEER — No. 16928

Professional Engr. No. 16928

PROFESSIONAL CERTIFICATION

I HEREBY CERTIFY THAT THESE DOCUMENTS WERE PREPARED OR APPROVED BY ME, AND THAT I AM A DULY LICENSED PROFESSIONAL ENGINEER UNDER THE LAWS OF THE STATE OF MARYLAND.
LICENSE NO. 16928 EXPIRATION DATE: 5/13/14

APPROVED PLANNING BOARD OF HOWARD COUNTY

DATE MARCH 7, 2013

APPROVED: HOWARD COUNTY DEPT. OF PLANNING AND ZONING

| | |
|---|---|
| CHIEF, DIVISION OF LAND DEVELOPMENT [signature] | DATE 4/26/13 |
| CHIEF, DEVELOPMENT ENGINEERING DIVISION [signature] | DATE 4/18/13 |
| DIRECTOR [signature] | DATE 4/26/13 |

| Date | No. | Revision Description |
|---|---|---|
| 10-22-14 | 2 | SHOW EX. DRAIN MH & PIPE, UPDATE SHEET # |
| 11-28-12 | | REPLACES ALL SHEETS OF ORIGINAL SDP 73-23C |

REVISED SITE DEVELOPMENT PLAN

# THE ROUSE BUILDING RENOVATION

OWNER/DEVELOPER:
CLOVER ACQUISTIONS LLC
C/O THE HOWARD HUGHES CORPORATION
P.O. BOX 833 COLUMBIA, MD 21044-0833

DMW
DAFT McCUNE WALKER INC
200 EAST PENNSYLVANIA TOWSON, MD 21286
P: 410 296 3333 F: 410 296 4705 WWW.DMW.COM
A TEAM OF LAND PLANNERS, LANDSCAPE ARCHITECTS, ENGINEERS, SURVEYORS & ENVIRONMENTAL PROFESSIONALS

AREA
TAX MAP 36 GRID 2 PART OF PARCEL 321, LOT 18
ELECTION DISTRICT 5TH ZONE NT

TITLE
EXISTING CONDITIONS
AS-BUILT

| | | | | |
|---|---|---|---|---|
| Des. By | GDT/MCB | Scale | 1"=40' | Proj. No. 11133.A |
| Drn. By | RLV | Date | 3/19/13 | 2 of 24 |
| Chk. By | GDT/MCB | Approved | | |

SDP 73-23C

A:\11133\11133.A0\ENGR\CAD FILES\SHEET FILES\11133_SP04.DWG Tue, Mar 19, 2013

# LITTLE PATUXENT PARKWAY (PUBLIC COUNTY ROAD, 114' R/W)

VEHICULAR INGRESS & EGRESS TO LITTLE PATUXMENT PARKWAY WILL BE PERMITTED ONLY AT POINTS OF ACCESS APPROVED BY THE HOWARD COUNTY OFFICE OF PLANNING & ZONING

NORTH

EX. SIDEWALK

EX. PRIVATE ACCESS ROAD

CONC. RETAINING WALL TO REMAIN

REMOVE CURB, GUTTER & VEGETATION

REMOVE GROUP LIGHT

RELOCATE ELEC. HAND BOX SEE NOTE 1

REMOVE CURB, GUTTER AND VEGETATION

REMOVE CURB, GUTTER & VEGETATION

REMOVE CURB, GUTTER, & VEGETATION

EX. 20' PUBLIC WATER & UTILITY EASEMENT C.M.P. 625/ F. 389

INGRESS AND EGRESS EASEMENT C.M.P.678 / F. 332

REMOVE "NO PARKING" AND STOP SIGN

REMOVE CURB, GUTTER AND VEGETATION

REMOVE PAVERS

REMOVE GROUP LIGHT, STOP SIGN, AND BOLLARD

REMOVE VISITOR PARKING SIGNS (TYP)

REFER TO ARCHITECTURAL PLANS FOR REMOVAL

EX. FIRE HYDRANT TO REMAIN

EX. FLAGPOLES

EX. COLUMN

HOWARD HUGHES PARCEL 321 LOT 17 ZONED: NEW TOWN

EX. CONC. SIDEWALK

EX. CONC. RETAINING WALL TO REMAIN

REMOVE CURB

EX. CB 13 & 15 DRAIN PIPE TO REMAIN FOR MODIFICATION

EX. VENT

EX. GLASS ENCLOSURE

EX. CONC. WALL

EX. VAULT

EX. BENCH

EX. FOUNTAIN

EX. WOOD COLUMN ON CONC. PAD

EX. CONC. WALL

EX. STEPS & HANDRAIL

EX. 20' UTILITY EASEMENT C.M.P. 477 / F. 303

EX. FLOODPLAIN EASEMENT C.M.P.625 / F. 389

EX. CONC. WALL TO REMAIN

EX. WOOD COLUMN ON CONC. PAD

**BUILDING**
**EX. 1ST FLOOR ELEV. = 315.02'**
**PROP. 2ND FLOOR ELEV. = 330.26'**

EX. MULCH AREA

EX. PAVERS

EX. 16" S.

EX. CONC. WALL

EX. BENCH

HOWARD RESEARCH & DEVELOPMENT CORPORATION PARCEL: 389 LOT 2 ZONED: NEW TOWN

TEMPORARY SCE FOR HOWARD CO. CIP.

LAKE KITTAMAQUNDI

INGRESS AND EGRESS EASEMENT C.M.P.625 / F. 578

PARCEL 389, LOT 2 THE HOWARD RESEARCH AND DEVELOPMENT CORP. ZONED: NEW TOWN

## LEGEND

- PROPERTY BOUNDARY
- EX. RIGHT OF WAY
- ADJACENT PROPERTY BOUNDARY
- EX. EASEMENT
- EX. ROADS AND WALKS
- EX. MAJOR CONTOURS
- EX. MINOR CONTOURS
- EX. BUILDING
- REMOVAL LIMITS
- EX. TREE
- EX. GROUP LIGHT
- EX. STORM DRAIN
- EX. SANITARY SEWER
- EX. WATER
- EX. UNDERGROUND ELECTRIC
- EX. STORM DRAIN
- EX. UNDERGROUND GAS
- EX. UNDERGROUND TELEPHONE

## ACRONYMS

CIP - CAPITAL IMPROVEMENT PROJECT
CO - COUNTY
EX. - EXISTING
TYP. - TYPICAL

AS-BUILT NOT REQUIRED

SIGNED _____
DAFT McCUNE WALKER, INC.
BY: MICHAEL D. MARTIN P.L.S.# 21234

NOTES:
1. RELOCATE ELECTRICAL HAND BOXES PER LIGHTING PLAN SHEET 21 OF 21.

AS-BUILT CERTIFICATION FOR DSWM

NOTE: THERE IS NO "AS-BUILT" INFORMATION PROVIDED ON THIS SHEET.

SIGNED _____ PE# 26560
GERALD D. TURNBAUGH AS-BUILT DATE: 2-2014

PROFESSIONAL CERTIFICATION

I HEREBY CERTIFY THAT THESE DOCUMENTS WERE PREPARED OR APPROVED BY ME, AND THAT I AM A DULY LICENSED PROFESSIONAL ENGINEER UNDER THE LAWS OF THE STATE OF MARYLAND, LICENSE NO. 26560 EXPIRATION DATE: 5/13/14

3/21/13
Date

Professional Engr No. 26560

PROFESSIONAL CERTIFICATION

I HEREBY CERTIFY THAT THESE DOCUMENTS WERE PREPARED OR APPROVED BY ME, AND THAT I AM A DULY LICENSED PROFESSIONAL ENGINEER UNDER THE LAWS OF THE STATE OF MARYLAND. LICENSE NO. 26560 EXPIRATION DATE 7-18-15

FOR REVISION NO 2 ONLY
10-22-14

Professional Engr No. 26560

CONTRACT NUMBERS:
EX. WATER: 167-W
EX. SEWER: C-2485-D-S, 2485-D-W&S

APPROVED PLANNING BOARD OF HOWARD COUNTY
DATE MARCH 7, 2013

APPROVED: HOWARD COUNTY DEPT. OF PLANNING AND ZONING

CHIEF, DIVISION OF LAND DEVELOPMENT — DATE 4/22/13
CHIEF, DEVELOPMENT ENGINEERING DIVISION — DATE 4/18/13
DIRECTOR — DATE 4/22/13

| Date | No. | Revision Description |
|---|---|---|
| 10-22-14 | 2 | SHOW EX CB-13 INLET & 15" PIPE TO REMAIN |
| 11-28-12 | | REPLACES ALL SHEETS OF ORIGINAL SDP 73-23C |

REVISED SITE DEVELOPMENT PLAN

# THE ROUSE BUILDING RENOVATION

OWNER/DEVELOPER:
CLOVER ACQUISTIONS LLC
C/O THE HOWARD HUGHES CORPORATION
P.O. BOX 833 COLUMBIA, MD 21044-0833


DMW
DAFT McCUNE WALKER INC
200 EAST PENNSYLVANIA TOWSON, MD 21286
P: 410 296 3333 F: 410 296 4705 WWW.DMW.COM
A TEAM OF LAND PLANNERS, LANDSCAPE ARCHITECTS, ENGINEERS, SURVEYORS & ENVIRONMENTAL PROFESSIONALS


AREA
TAX MAP 36 GRID 2 PART OF PARCEL 321, LOT 18
ELECTION DISTRICT 5TH — ZONE NT

TITLE
**DEMOLITION PLAN**
AS-BUILT

| | | | |
|---|---|---|---|
| Des. By GDT/MCB | Scale 1"=30' | | Proj. No. 11133.A |
| Drn. By RLV | Date 3/19/13 | | 3 of 24 |
| Chk. By GDT/MCB | Approved | | |

SDP 73-23C

A:\11133\03-ADMIN\CAD FILES\SHEET FILES\11133_SHT2.DWG TUE, MAR 19, 2013

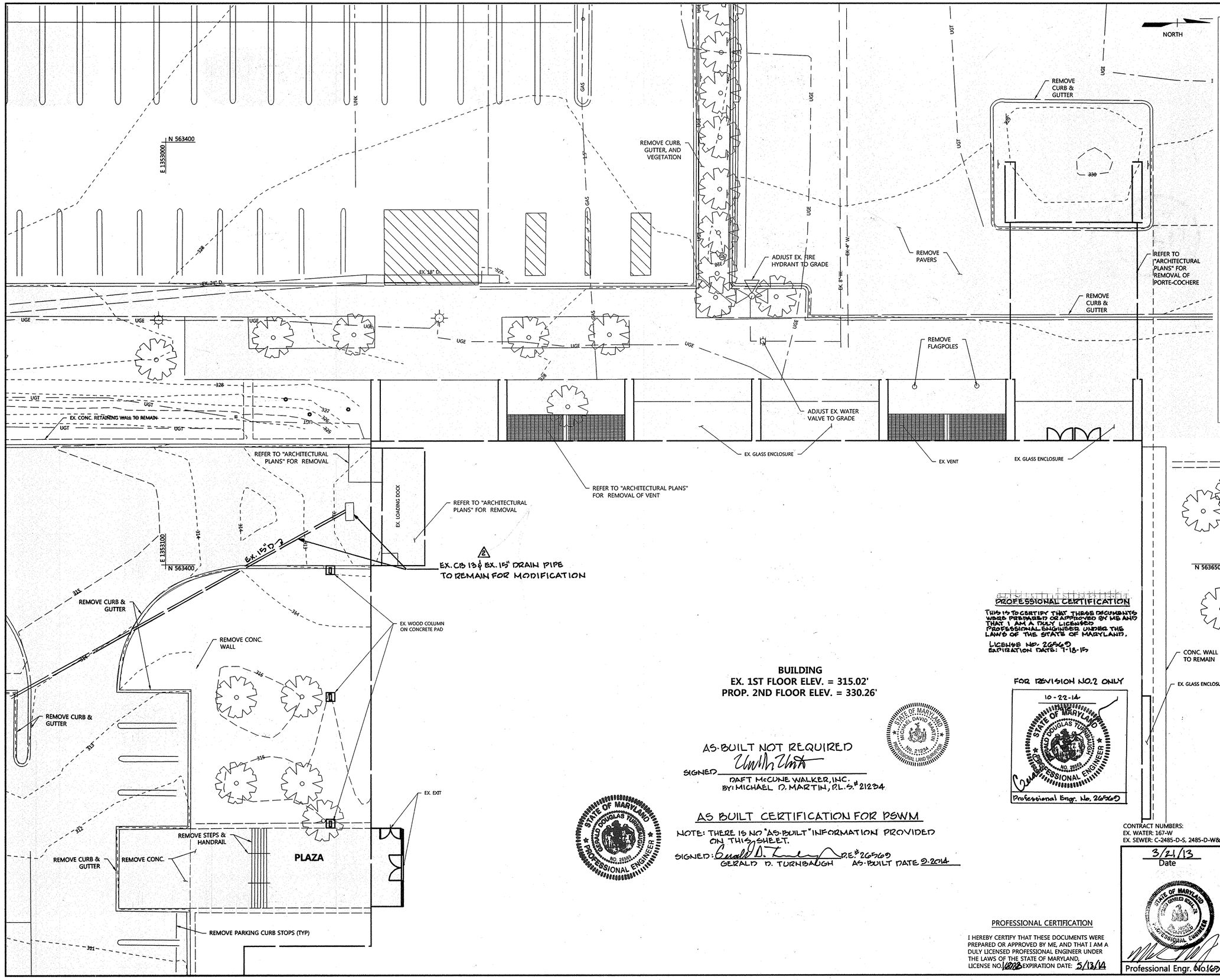


## LEGEND

- PROPERTY BOUNDARY
- EX. RIGHT OF WAY
- ADJACENT PROPERTY BOUNDARY
- EX. EASEMENT
- EX. ROADS AND WALKS
- EX. MAJOR CONTOURS
- EX. MINOR CONTOURS
- EX. BUILDING
- EX. TREE
- EX. GROUP LIGHT
- EX. WATER
- EX. UGE — EX. UNDERGROUND ELECTRIC
- UNK — EX. UNDERGROUND UNKNOWN
- EX. 18" D. — EX. STORM DRAIN
- EX. GAS — EX. GAS
- EX. UGT — EX. UNDERGROUND TELEPHONE
- REMOVAL LIMITS

## ACRONYMS

| | |
|---|---|
| CIP | - CAPITAL IMPROVEMENT PROJECT |
| CO | - COUNTY |
| EX. | - EXISTING |
| TYP. | - TYPICAL |

**BUILDING**
**EX. 1ST FLOOR ELEV. = 315.02'**
**PROP. 2ND FLOOR ELEV. = 330.26'**

AS-BUILT NOT REQUIRED
SIGNED _____
DAFT MCCUNE WALKER, INC.
BY: MICHAEL D. MARTIN, P.L.S.# 21234

AS BUILT CERTIFICATION FOR DSWM

NOTE: THERE IS NO "AS-BUILT" INFORMATION PROVIDED ON THIS SHEET.

SIGNED: _____ P.E.# 26569
GERALD D. TURNBAUGH AS-BUILT DATE 9-2014

PROFESSIONAL CERTIFICATION

THIS IS TO CERTIFY THAT THESE DOCUMENTS WERE PREPARED OR APPROVED BY ME AND THAT I AM A DULY LICENSED PROFESSIONAL ENGINEER UNDER THE LAWS OF THE STATE OF MARYLAND.

LICENSE NO. 26569
EXPIRATION DATE: 7-18-15

FOR REVISION NO.2 ONLY

10-22-14

Professional Engr. No. 26569

PROFESSIONAL CERTIFICATION

I HEREBY CERTIFY THAT THESE DOCUMENTS WERE PREPARED OR APPROVED BY ME, AND THAT I AM A DULY LICENSED PROFESSIONAL ENGINEER UNDER THE LAWS OF THE STATE OF MARYLAND, LICENSE NO. 16928 EXPIRATION DATE: 5/13/14

3/21/13
Date

Professional Engr. No. 16928

APPROVED PLANNING BOARD OF HOWARD COUNTY
DATE MARCH 7, 2013

APPROVED: HOWARD COUNTY DEPT. OF PLANNING AND ZONING

CHIEF, DIVISION OF LAND DEVELOPMENT — DATE 4/26/13
CHIEF, DEVELOPMENT ENGINEERING DIVISION — DATE 4/18/13
DIRECTOR — DATE 4/24/13

| Date | No. | Revision Description |
|---|---|---|
| 10-22-14 | 2 | SHOW EX. CB#3 INLET & 15" PIPE TO REMAIN |
| 11-28-12 | | REPLACES ALL SHEETS OF ORIGINAL SDP 73-23C |

REVISED SITE DEVELOPMENT PLAN

# THE ROUSE BUILDING RENOVATION

OWNER/DEVELOPER:
CLOVER ACQUISTIONS LLC
C/O THE HOWARD HUGHES CORPORATION
P.O. BOX 833 COLUMBIA, MD 21044-0833


DMW
DAFT MCCUNE WALKER INC
200 EAST PENNSYLVANIA TOWSON, MD 21286
P: 410 296 3333 F: 410 296 4705 WWW.DMW.COM
A TEAM OF LAND PLANNERS, LANDSCAPE ARCHITECTS, ENGINEERS, SURVEYORS & ENVIRONMENTAL PROFESSIONALS


CONTRACT NUMBERS:
EX. WATER: 167-W
EX. SEWER: C-2485-D-S, 2485-D-W&S

AREA
TAX MAP 36 GRID 2 PART OF PARCEL 321, LOT 18
ELECTION DISTRICT 5TH — ZONE NT

TITLE
**DEMOLITION PLAN AT ENTRANCE AND LOADING DOCK**
AS BUILT

| | | | |
|---|---|---|---|
| Des. By GDT/MCB | Scale 1"=10' | | Proj. No. 11133.A |
| Drn. By RLV | Date 3/19/13 | | 4 of 2~~8~~4 |
| Chk. By GDT/MCB | Approved | | |

SDP 73-23C

A:\11133\11133_A0\ENGR\CAD FILES\SHEET FILES\11133_SP05.DWG Tue, Mar 19, 2013

# LITTLE PATUXENT PARKWAY (PUBLIC COUNTY ROAD, 114' R/W)

VEHICULAR INGRESS & EGRESS TO LITTLE PATUXMENT PARKWAY WILL BE PERMITTED ONLY AT POINTS OF ACCESS APPROVED BY THE HOWARD COUNTY OFFICE OF PLANNING & ZONING

REFER TO TRAFFIC SIGNAL MODIFICATION PLANS FOR TIE-IN OF PROPOSED SIDEWALK TO EXISTING SIDEWALK

E 1352700 N 563500

EX. SIDEWALK

PROP. SIDEWALK

EX. PRIVATE ACCESS ROAD

EX. INGRESS AND EGRESS EASEMENT C.M.P. 678 / F. 332

EX. 20' PUBLIC WATER & UTILITY EASEMENT C.M.P. 625/ F. 389

PROP. CONC. MEDIAN (TYP)

PROP. STRIPING (TYP)

PROP. 20' PUBLIC WATER & GAS UTILITY EASEMENT

PROP. GAS BY OTHERS

CURB OPENING (TYP.)

MICRO-BIORETENTION ESD#1

MICRO-BIORETENTION ESD#2

MICRO-BIORETENTION ESD#3

MICRO-BIORETENTION ESD#4

TIE-IN PROP. CURB TO EXST. CURB

PROPOSED CURB (TYP)

PROPOSED CANOPY

PROP. TRASH COMPACTOR CONC. PAD

PROP. DUMPSTER

PROP. CONC. LOADING DOCK

PROP. HANDI-CAP RAMP

PROP. STEPS AND HANDRAIL

PROP. BIKE RACK

EX. 20' UTILITY EASEMENT C.M.P. 477 / F. 303

EX. FLOODPLAIN EASEMENT C.M.P. 625 / F. 389

EX. 20' SEWER & UTILITY EASEMENT

INGRESS AND EGRESS EASEMENT C.M.P. 625 / F. 578

PROP. 6" SIAMESE CONNECTION

PROP. ENTRANCE

PROP. EXIT

EX. COLUMN

EX. CONC. WALL

EX. VAULT

EX. GLASS ENCLOSURE

EX. BENCH

EX. FOUNTAIN

EX. CONC. WALK

EX. WOOD COLUMN ON CONC. PAD

EX. STEPS & HANDRAIL

EX. PAVERS

EX. CONC.

EX. MULCH AREA

FUTURE VEHICLE CHARGING STATIONS

PROP. SIDEWALK

1" CONDUIT

PLANT AREA TO REMAIN

**BUILDING**
**EX. 1ST FLOOR ELEV. = 315.02'**
**PROP. 2ND FLOOR ELEV. =330.26'**

N 90°00'00" E 360.00'

S 00°00'00" E 80.00'

N 90°00'00" W 363.52'

N 00°00'00" E 418.08'

N 90°00'00" E 118.80'

N 00°00'00" E 225.00'

N 27°50'35" E 42.00'

N 02°11'44" E 239.62'

S 16°06'12" W 118.35'

N 63°19'37" W 65.99'

N 90°00'00" W 61.18'

N 563100 E 1353200

## LEGEND

- PROPERTY BOUNDARY
- EX. RIGHT OF WAY
- ADJACENT PROPERTY BOUNDARY
- EX. EASEMENT
- EX. ROADS AND WALKS
- 330 EX. MAJOR CONTOURS
- 329 EX. MINOR CONTOURS
- GuB MaC EX. SOILS
- EX. BUILDING
- EX. GRAVEL
- EX. TREE
- EX. GROUP LIGHT
- EX. 18" D. EX. STORM DRAIN
- S EX. SANITARY SEWER
- EX. 6" W EX. WATER
- EX. UGE EX. UNDERGROUND ELECTRIC
- EX. 18" D. EX. STORM DRAIN
- UNK EX. UNDERGROUND UNKOWN
- EX. GAS EX. UNDERGROUND GAS
- EX. UGT EX. UNDERGROUND TELEPHONE
- 330 PROP. MAJOR CONTOURS
- 330 PROP. MINOR CONTOURS
- PROP. CURB/EDGE OF PAVING
- PROP. DEPRESSED CURB
- PROP. REVERSE SLOPE CURB
- 18" D. PROP. STORM DRAIN
- 6" S. PROP. SEWER
- GAS PROP. UNDERGROUND GAS
- 19 PROP. PARKING SPACE COUNT
- PROP. HEAVY DUTY PAVING
- PROP. PARKING AREA PAVING
- CC CART CORRAL
- PROP. LIGHT LUMINARIES REFER TO SITE LIGHTING ON SHEET 21 OF 21

## ACRONYMS

| | |
|---|---|
| CC | - CART CORRAL |
| CIP | - CAPITAL IMPROVEMENT PROJECT |
| CO | - COUNTY |
| EX. | - EXISTING |
| ELEV | - ELEVATION |
| INV. | - INVERT |
| NTS | - NOT TO SCALE |
| PROP. | - PROPOSED |
| SCE | - STABILIZED CONSTRUCTION ENTRANCE |
| STD | - STANDARD |
| SWM | - STORMWATER MANAGEMENT |
| TYP. | - TYPICAL |

TEMPORARY SCE FOR HOWARD CO. CIP.

NOTES:
1. UNLESS LABELED OTHERWISE ALL CURB RADII ARE FIVE (5) FOOT.
2. SEE ARCHITECTURAL PLANS FOR EXACT BUILDING DIMENSIONS.
3. FOR LOCATION OF PAVING TYPES SEE SHEET 6 OF 21.
4. PROPOSED ISLAND CURB AND GUTTER ADJACENT TO EXISTING PAVEMENT TO REMAIN IS INTENDED TO HAVE GUTTER SET 1.5" ABOVE EXISTING PAVEMENT TO ACCOMMODATE FUTURE PAVEMENT OVERLAY
5. EXISTING ITEMS REMOVED ON DEMOLITION SHEET ARE NOT SHOWN FOR CLARITY PURPOSES.

APPROVED PLANNING BOARD OF HOWARD COUNTY
DATE MARCH 7, 2013

AS-BUILT CERTIFICATION FOR PSWM

NOTE: THERE IS NO "AS-BUILT" INFORMATION PROVIDED ON THIS SHEET.

SIGNED Gerald D. Turnbaugh PE# 26560
GERALD D. TURNBAUGH
AS-BUILT DATE 9-2014

AS-BUILT NOT REQUIRED

SIGNED
DAFT McCUNE WALKER, INC.
BY: MICHAEL D. MARTIN PE.S.# 21224

STATE OF MARYLAND GERALD DOUGLAS TURNBAUGH NO. 26560 PROFESSIONAL ENGINEER

STATE OF MARYLAND MICHAEL DAVID MARTIN NO. 21224 PROFESSIONAL LAND SURVEYOR

PROFESSIONAL CERTIFICATION

I HEREBY CERTIFY THAT THESE DOCUMENTS WERE PREPARED OR APPROVED BY ME AND THAT I AM A DULY LICENSED PROFESSIONAL ENGINEER UNDER THE LAWS OF THE STATE OF MARYLAND.
LICENSE NO. 26560
EXPIRATION DATE: 7-18-15

FOR REVISION NO.2 ONLY
10-22-14

STATE OF MARYLAND GERALD DOUGLAS TURNBAUGH NO. 26560 PROFESSIONAL ENGINEER

Professional Engr. No. 26560

PROFESSIONAL CERTIFICATION

I HEREBY CERTIFY THAT THESE DOCUMENTS WERE PREPARED OR APPROVED BY ME, AND THAT I AM A DULY LICENSED PROFESSIONAL ENGINEER UNDER THE LAWS OF THE STATE OF MARYLAND, LICENSE NO. 16928 EXPIRATION DATE: 5/13/14.

3/21/13
Date

STATE OF MARYLAND JOHN WILLIAM WELLS III NO. 16928 PROFESSIONAL ENGINEER

Professional Engr. No. 16928

| Date | No. | Revision Description |
|---|---|---|
| 10-22-14 | 2 | Also Show Revised Cart Corrals, Ent. Signs & Parking Spaces |
| 11-28-12 | | REPLACES ALL SHEETS OF ORIGINAL SDP 73-23C |
| 10-22-14 | 2 | SHOW REVISED DRAINS, SANITARY SEWER |

APPROVED: HOWARD COUNTY DEPT. OF PLANNING AND ZONING

CHIEF, DIVISION OF LAND DEVELOPMENT — DATE 4/26/13
CHIEF, DEVELOPMENT ENGINEERING DIVISION — DATE 4/18/13
DIRECTOR — DATE 4/26/13

REVISED SITE DEVELOPMENT PLAN

# THE ROUSE BUILDING RENOVATION

OWNER/DEVELOPER:
CLOVER ACQUISTIONS LLC
C/O THE HOWARD HUGHES CORPORATION
P.O. BOX 833 COLUMBIA, MD 21044-0833

CONTRACT NUMBERS:
EX. WATER: 167-W
EX. SEWER: C-2485-D-S, 2485-D-W&S

DMW
DAFT McCUNE WALKER INC
200 EAST PENNSYLVANIA TOWSON, MD 21286
P: 410 296 3333 F: 410 296 4705 WWW.DMW.COM
A TEAM OF LAND PLANNERS, LANDSCAPE ARCHITECTS, ENGINEERS, SURVEYORS & ENVIRONMENTAL PROFESSIONALS

AREA
TAX MAP 36 GRID 2 PART OF PARCEL 321, LOT 18
ELECTION DISTRICT 5TH — ZONE NT

TITLE
SITE PLAN
AS-BUILT

| | | | |
|---|---|---|---|
| Des. By GDT/MCB | Scale 1"=30' | Proj. No. 11133.A | |
| Drn. By RLV | Date 3/19/13 | | 5 of 24 |
| Chk. By GDT/MCB | Approved | | |

SDP 73-23C

A:\11133\11133_AD\ENGR\CAD FILES\SHEET FILES\11133_SP01.DWG Tue, Mar 19, 2013

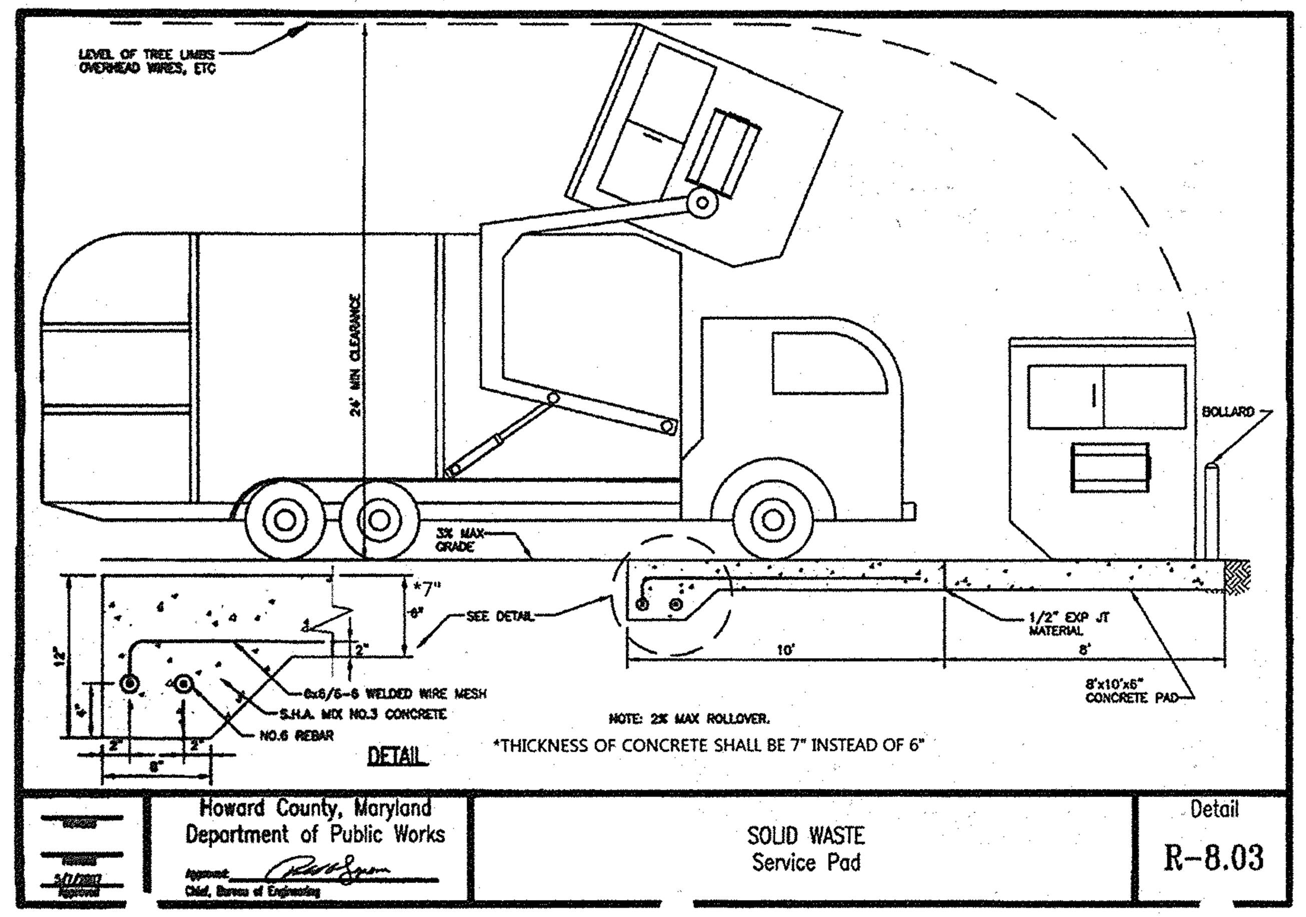


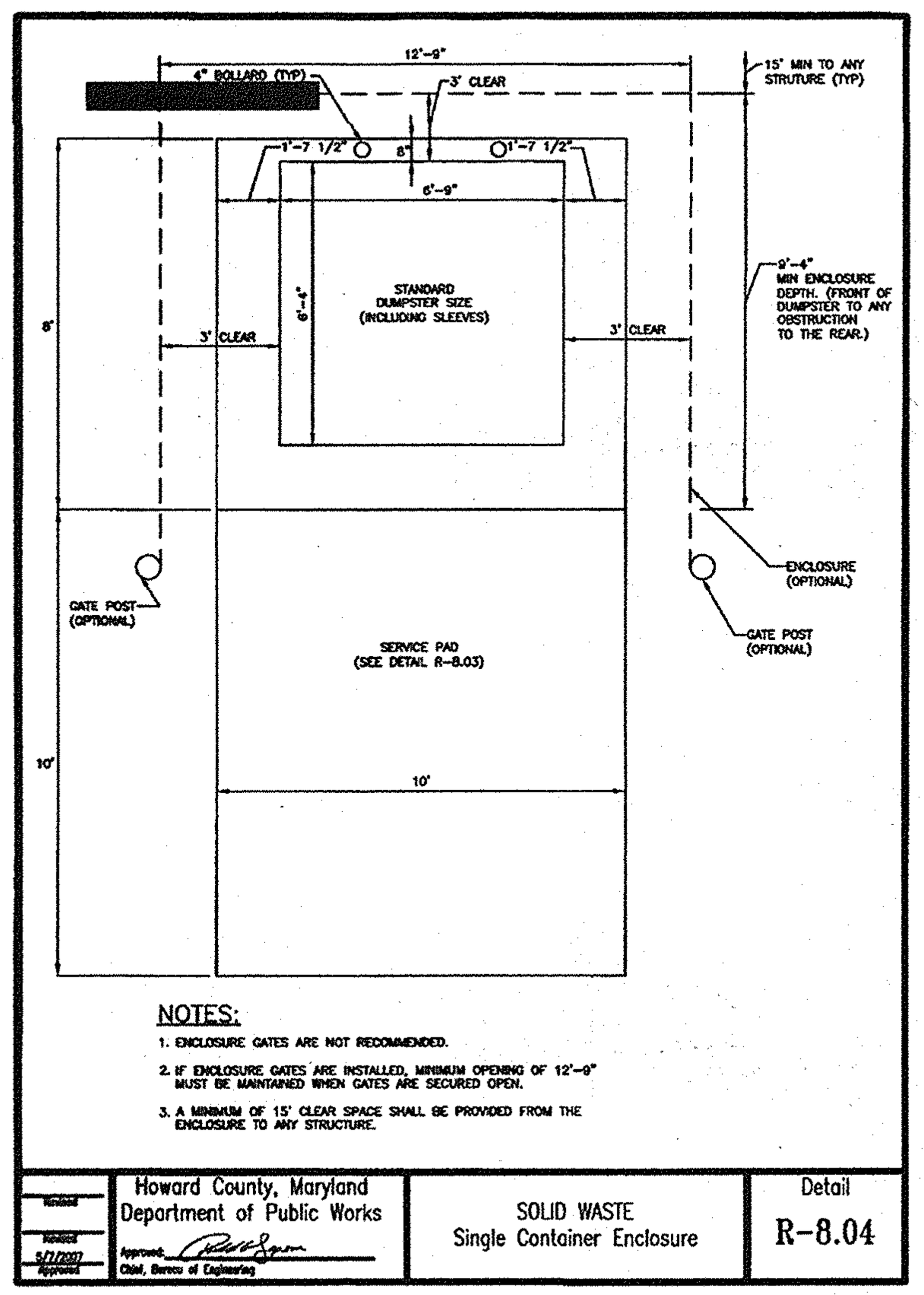


## (A/6) LOADING DOCK, SERVICE PAD AND DUMPSTER BIN
NOT TO SCALE

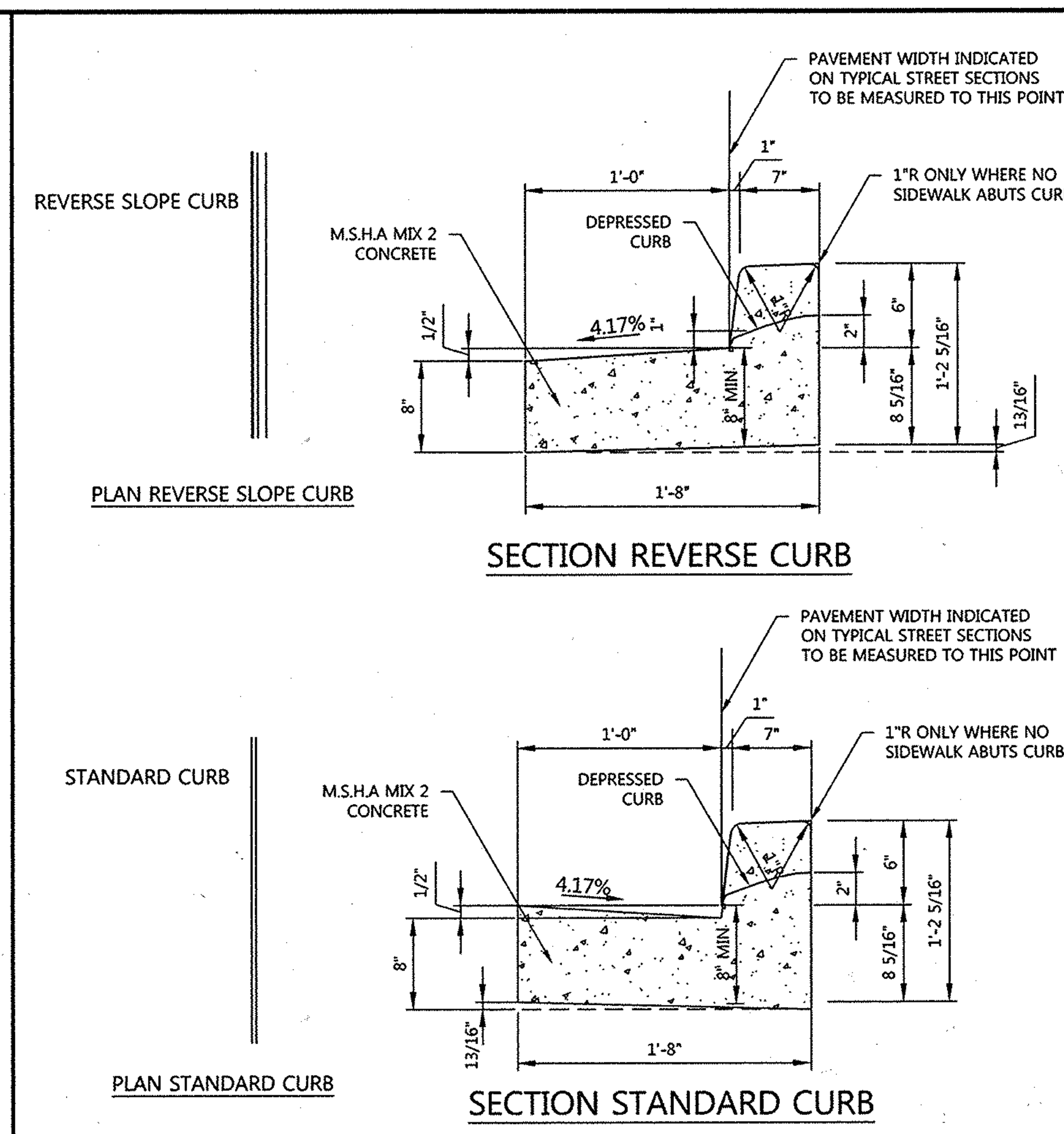


## (B/6) 6" COMBINATION CURB & GUTTER
NOT TO SCALE

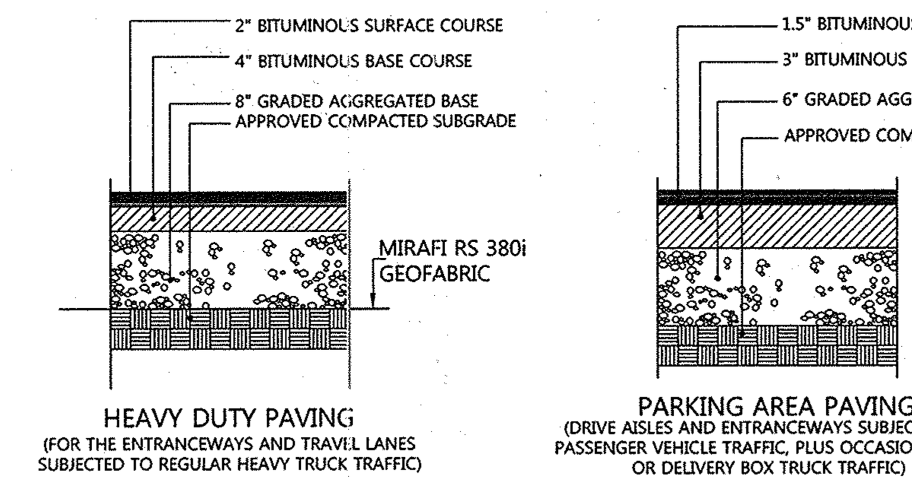


NOTE:
1. PAVING SECTIONS WHERE DESIGNED BY CTI CONSULTING, INC., 7605-D AIRPARK ROAD, GATHERSBURG, MD. 20879
2. CONTRACTOR TO VERIFY WITH GEOTECHNICAL ENGINEER ON-SITE PRIOR TO PAVING.
3. FOR LOCATION OF PAVING TYPES SEE SITE PLAN.

## (C/6) PAVING DETAILS
NOT TO SCALE

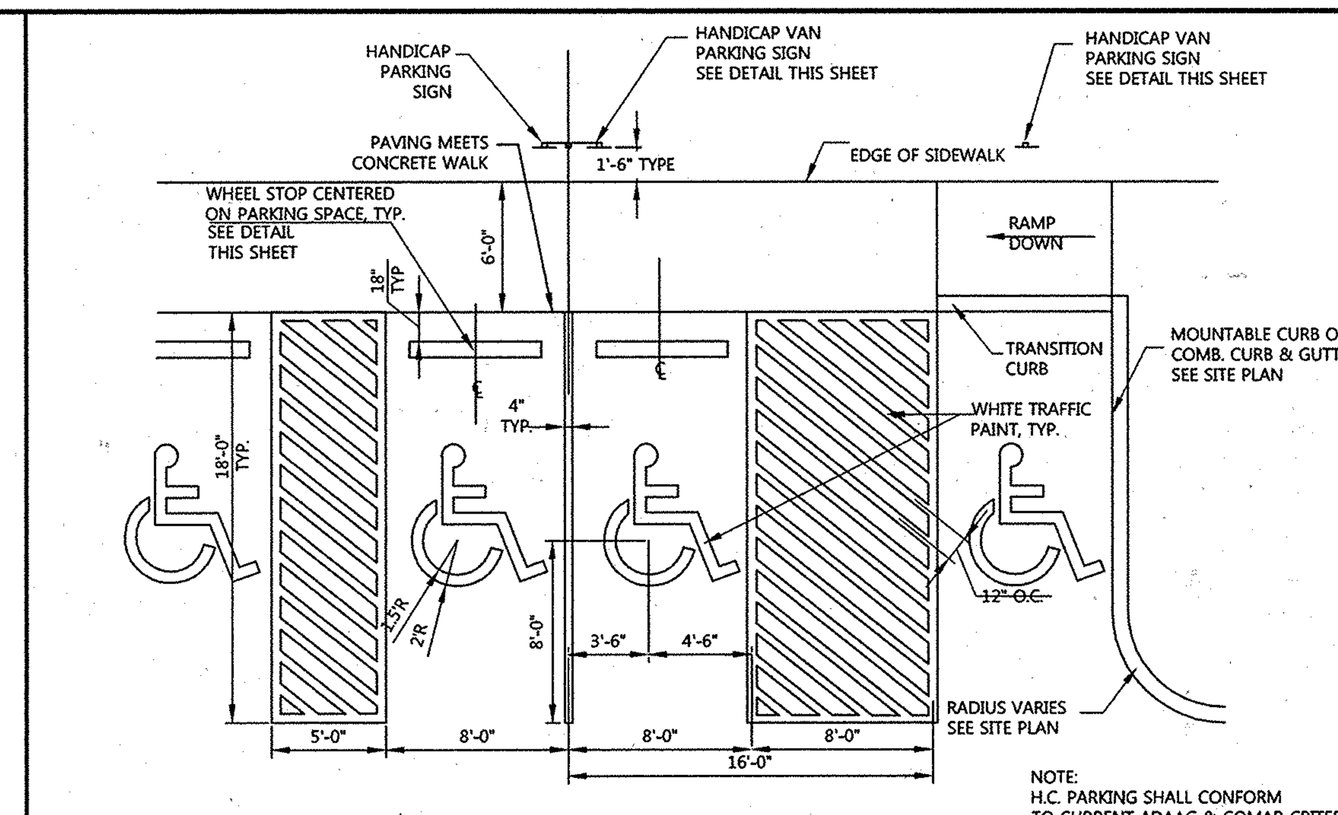


NOTE:
H.C. PARKING SHALL CONFORM TO CURRENT ADAAG & COMAR CRITERIA

## (D/6) HANDICAP PARKING: VAN & STANDARD
NOT TO SCALE

ADA REG. RAILING

AS-BUILT CERTIFICATION FOR PSWM

NOTE: THERE IS NO "AS-BUILT" INFORMATION PROVIDED ON THIS SHEET.

SIGNED *[signature]* P.E.# 26569
GERALD D. TURNBAUGH AS-BUILT DATE 9-2014

STATE OF MARYLAND — GERALD DOUGLAS TURNBAUGH — NO. 26569 — PROFESSIONAL ENGINEER

## (E/6) HANDI-CAP RAMP LOWER ENTRANCE
NOT TO SCALE

△2

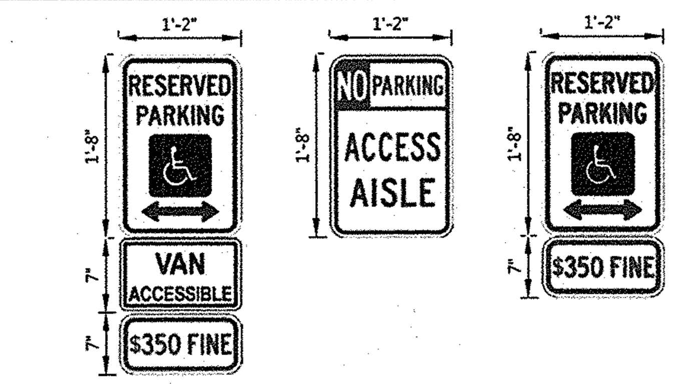


## (F/6) HANDICAP PARKING SIGN DETAILS
NOT TO SCALE

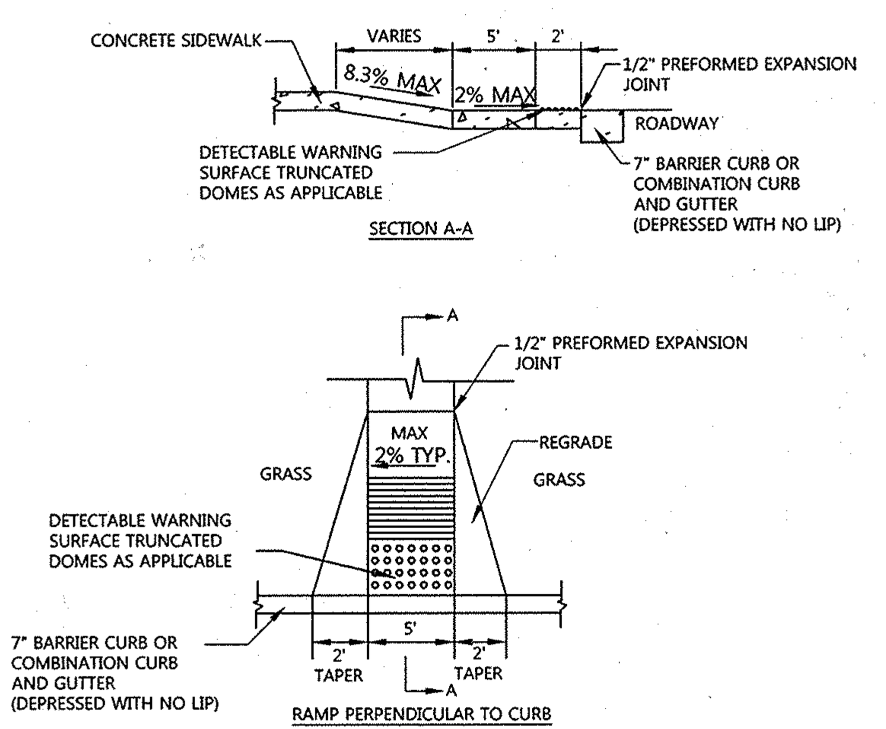


NOTES:
1. ALL RAMPS SHALL HAVE A WARNING TEXTURE EXTENDING THE FULL WIDTH AND DEPTH OF RAMP (SEE HO. CO. STD. DETAIL R-4.07).
2. GRASS AREA ADJACENT TO SIDEWALK MUST BE SLOPED TO MEET RAMP.
3. 4' SIDEWALK REQUIRES PASSING AREA (SEE HO. CO. STD. DETAIL R-4.07).
4. SEE PLAN FOR SPECIFIC SPOT GRADES.

## (G/6) SIDEWALK RAMP - TYPE 'A'
NOT TO SCALE

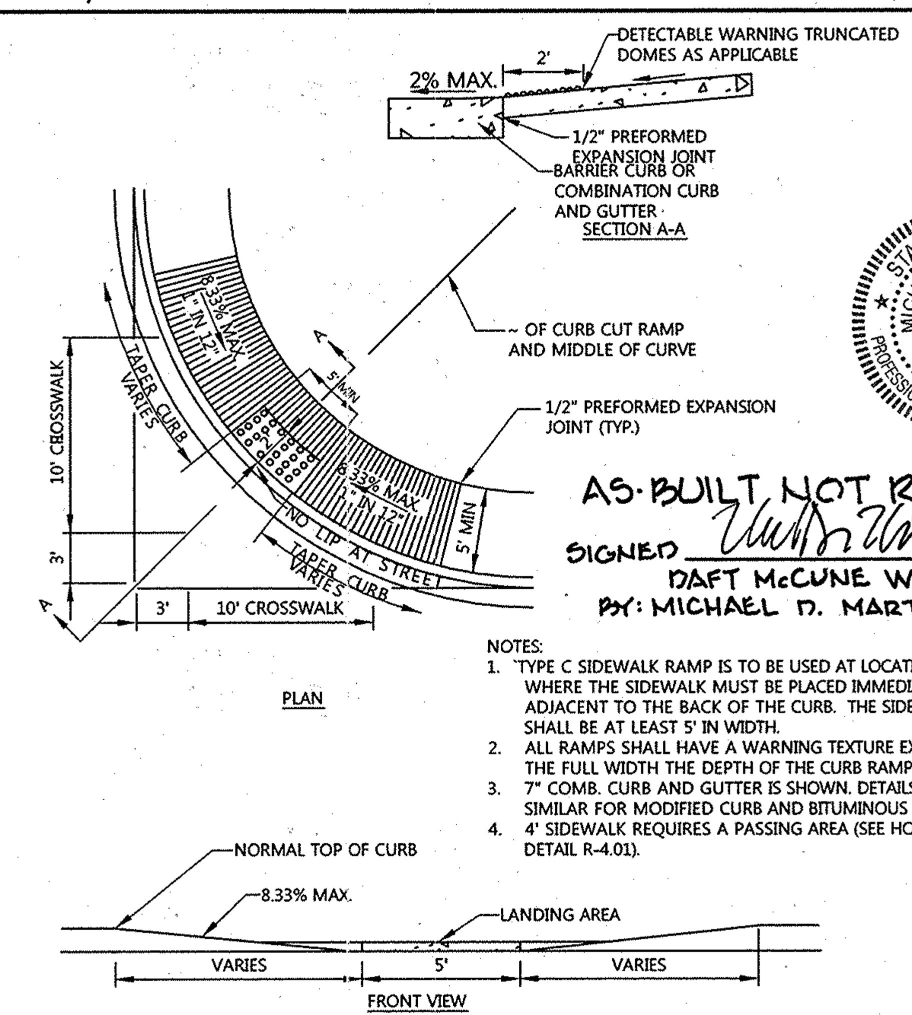


STATE OF MARYLAND — MICHAEL DAVID MARTIN — No. 21234 — PROFESSIONAL LAND SURVEYOR

AS-BUILT NOT REQUIRED

SIGNED *[signature]*
DAFT McCUNE WALKER, INC.
BY: MICHAEL D. MARTIN P.L.S.# 21234

NOTES:
1. TYPE C SIDEWALK RAMP IS TO BE USED AT LOCATIONS WHERE THE SIDEWALK MUST BE PLACED IMMEDIATELY ADJACENT TO THE BACK OF THE CURB. THE SIDEWALK SHALL BE AT LEAST 5' IN WIDTH.
2. ALL RAMPS SHALL HAVE A WARNING TEXTURE EXTENDING THE FULL WIDTH THE DEPTH OF THE CURB RAMP.
3. 7" COMB. CURB AND GUTTER IS SHOWN. DETAILS TO BE SIMILAR FOR MODIFIED CURB AND BITUMINOUS CURB.
4. 4' SIDEWALK REQUIRES A PASSING AREA (SEE HO. CO. STD. DETAIL R-4.01).

## (H/6) SIDEWALK RAMP - TYPE 'C'
NOT TO SCALE

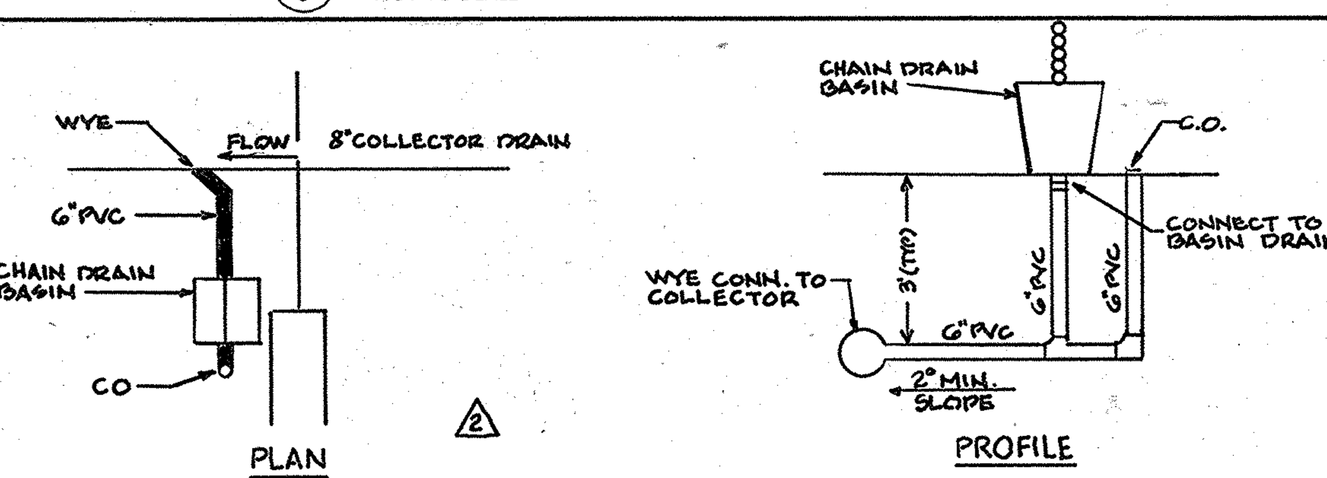


△2

## (N/6) ROOFDRAIN CHAIN DRAIN DETAIL
NOT TO SCALE

PROFESSIONAL CERTIFICATION

I HEREBY CERTIFY THAT THESE DOCUMENTS WERE PREPARED OR APPROVED BY ME AND THAT I AM A DULY LICENSED PROFESSIONAL ENGINEER UNDER THE LAWS OF THE STATE OF MARYLAND.

LICENSE NO. 26569

EXPIRATION DATE: 7-18-15

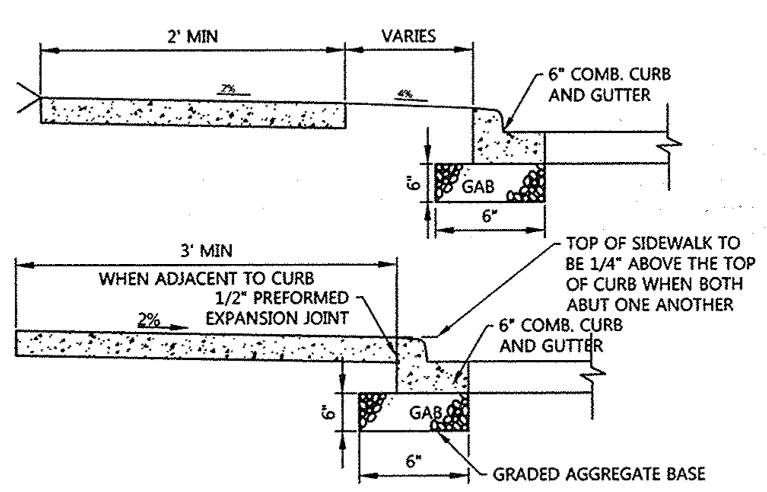


NOTES:
1. SIDEWALK TO BE SCRIBED IN 5'-0" MAXIMUM SQUARES.
2. EXPANSION JOINTS ACROSS SIDEWALK NOT TO BE MORE THAN 15' APART.
3. ½" PREFORMED EXPANSION MATERIAL IN EXPANSION JOINTS TO BE KEPT ¼" BELOW SURFACE OF SIDEWALK.
4. CONCRETE TO BE MIX NO.3.
5. WHEN SIDEWALK ABUTS CURB, SIDEWALK SHALL BE ¼" ABOVE CURB WITH ½" PERFORMED EXPANSION JOINT BETWEEN SIDEWALK AND CURB.
6. ON LONGITUDINAL SIDEWALK GRADES OF 5% OR GREATER, A CONCRETE HEADER, 6" THICK AND 6" DEEP BELOW THE NORMAL 4" SIDEWALK THICKNESS SHALL BE CONSTRUCTED FOR THE FULL WIDTH OF THE SIDEWALK AT INTERVALS OF 48 FEET. THE HEADERS SHALL BE PLACED AT THE EXPANSION JOINT LOCATIONS AND SHALL BE MONOLITHIC WITH THE SIDEWALK.
7. 4' SIDEWALK REQUIRES A PASSING AREA (SEE HO.CO.STD. DETAIL R-4.01)
8. SEE SITE PLAN FOR PROPOSED SIDEWALK WIDTHS.

## (I/6) CONCRETE SIDEWALK
NOT TO SCALE

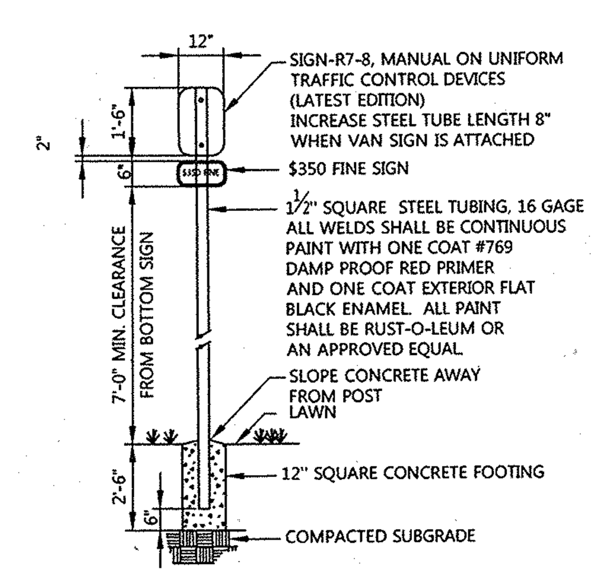


NOTES:
1. DISTANCE FROM GROUND TO BOTTOM OF SIGN SHALL BE 7'-0".
2. SEE HANDICAPPED PARKING SPACE DETAIL THIS SHEET FOR LOCATION OF HANDICAPPED SIGN.
3. SIGNS SHALL CONFORM TO CURRENT ADAAG & COMAR CRITERIA.

SIGN COLORS:
LETTERS AND BORDER - GREEN
WHITE H.C. SYMBOLS ON BLUE BACKGROUND
BACKGROUND - WHITE

## (J/6) HANDICAP PARKING SIGN
NOT TO SCALE

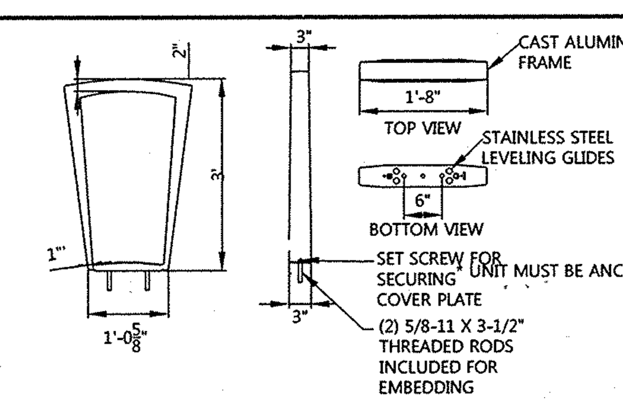


CONFIDENTIAL DRAWING INFORMATION CONTAINED HEREIN IS THE PROPERTY OF LANDSCAPE FORMS, INC. INTENDED USE IS LIMITED TO DESIGN PROFESSIONALS SPECIFYING LANDSCAPE FORMS, INC. PRODUCTS AND THEIR DIRECT CLIENTS. DRAWING IS NOT TO BE COPIED OR DISCLOSED TO OTHERS WITHOUT THE CONSENT OF LANDSCAPE FORMS, INC.
© 2010 LANDSCAPE FORMS, INC. ALL RIGHTS RESERVED.

## (K/6) EMERSON BIKE RACK, EMBEDDED
NOT TO SCALE

COMPANY: LANDSCAPE FORMS
WEBSITE: WWW.LANDSCAPEFORMS.COM
PHONE: 800.521.2546
U.S. Patent No. D648,658

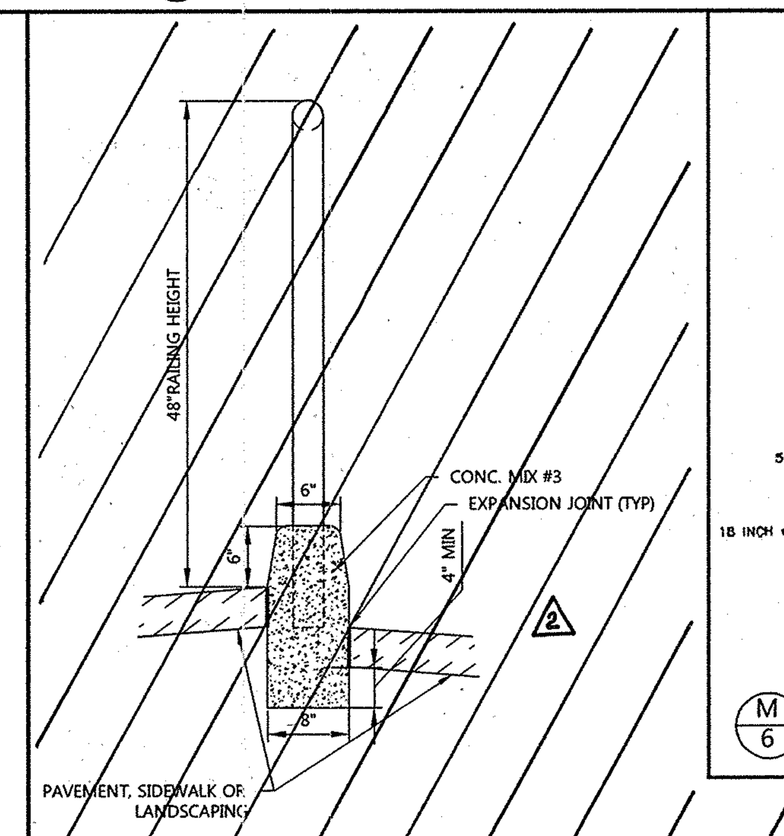


△2

## (L/6) 6" CONCRETE PARTITION CURB
NOT TO SCALE

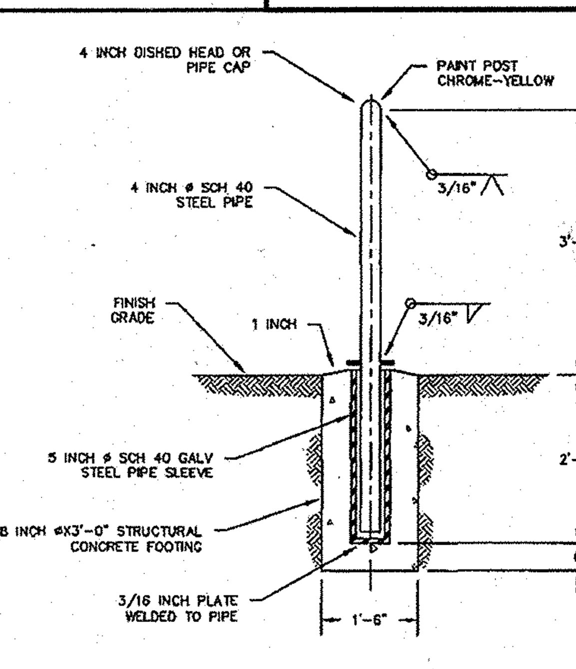


## (M/6) REMOVABLE BOLLARD
NOT TO SCALE

PROFESSIONAL CERTIFICATION

I HEREBY CERTIFY THAT THESE DOCUMENTS WERE PREPARED OR APPROVED BY ME, AND THAT I AM A DULY LICENSED PROFESSIONAL ENGINEER UNDER THE LAWS OF THE STATE OF MARYLAND, LICENSE NO. 16928 EXPIRATION DATE: 5/13/14

FOR REVISION NO.2 ONLY

10-22-14
Date

STATE OF MARYLAND — GERALD DOUGLAS TURNBAUGH — NO. 26569 — PROFESSIONAL ENGINEER

Professional Engr. No. 26569

CONTRACT NUMBERS:
EX. WATER: 167-W
EX. SEWER: C-2485-D-S, 2485-D-W&S

3/21/13
Date

STATE OF MARYLAND — REGISTERED PROFESSIONAL ENGINEER

Professional Engr. No. 16928

APPROVED PLANNING BOARD OF HOWARD COUNTY

DATE MARCH 7, 2013

APPROVED: HOWARD COUNTY DEPT. OF PLANNING AND ZONING

| | |
|---|---|
| CHIEF, DIVISION OF LAND DEVELOPMENT | DATE 4/26/13 |
| CHIEF, DEVELOPMENT ENGINEERING DIVISION | DATE 4/18/13 |
| DIRECTOR | DATE 4/26/13 |

| Date | No. | Revision Description |
|---|---|---|
| 10-22-14 | 2 | DELETE DETAILS, ADD CHAIN DRAIN DETAIL |
| 11-28-12 | | REPLACES ALL SHEETS OF ORIGINAL SDP 73-23C |

REVISED SITE DEVELOPMENT PLAN

# THE ROUSE BUILDING RENOVATION

OWNER/DEVELOPER:
CLOVER ACQUISTIONS LLC
C/O THE HOWARD HUGHES CORPORATION
P.O. BOX 833 COLUMBIA, MD 21044-0833

DMW
DAFT McCUNE WALKER INC
200 EAST PENNSYLVANIA TOWSON, MD 21286
P: 410 296 3333 F: 410 296 4705 WWW.DMW.COM
A TEAM OF LAND PLANNERS, LANDSCAPE ARCHITECTS, ENGINEERS, SURVEYORS & ENVIRONMENTAL PROFESSIONALS

AREA
TAX MAP 36 GRID 2 PART OF PARCEL 321, LOT 18
ELECTION DISTRICT 5TH ZONE NT

TITLE
SITE DETAILS
AS-BUILT

| | | |
|---|---|---|
| Des. By GDT/MCB | Scale NTS | Proj. No. 11133.A |
| Drn. By RLV | Date 3/21/13 | 6 of 24 |
| Chk. By GDT/MCB | Approved | |

SDP 73-23C

A:\11133\11133.A0\ENGR\CAD FILES\SHEET FILES\11133_DT01.DWG Thu, Mar 21, 2013

# LITTLE PATUXENT PARKWAY (PUBLIC COUNTY ROAD, 114' R/W)

VEHICULAR INGRESS & EGRESS TO LITTLE PATUXMENT PARKWAY WILL BE PERMITTED ONLY AT POINTS OF ACCESS APPROVED BY THE HOWARD COUNTY OFFICE OF PLANNING & ZONING

PLAT 12 / 61

NORTH

## LEGEND

- EX. ROADS AND WALKS
- 330 EX. MAJOR CONTOURS
- 329 EX. MINOR CONTOURS
- EX. BUILDING
- EX. TREE
- EX. 18" D. EX. STORM DRAIN
- EX. 6" W. EX. WATER
- EX. UNDERGROUND ELECTRIC
- EX. 18" D EX. STORM DRAIN
- EX. UNDERGROUND GAS
- EX. UNDERGROUND TELEPHONE
- 330 PROP. MAJOR CONTOURS
- 329 PROP. MINOR CONTOURS
- PROP. CURB/EDGE OF PAVING
- PROP. DEPRESSED CURB
- PROP. REVERSE CURB
- 18" D. PROP. STORM DRAIN
- 6" S. PROP. SEWER
- PROP. UNDERGROUND GAS
- DRAINAGE DIVIDES
- DF DF PROP. DIVERSION FENCE
- SFOP SFOP PROP. SILT FENCE ON PAVEMENT
- LIMIT OF DISTURBANCE
- EX. SOILS
- PROP. INLET PROTECTION
- OR PROP. LIGHT LUMINARIES REFER TO SITE LIGHTING ON SHEET 21 OF 21

### SOILS CLASSIFICATION

| Symbol | Soil Type | Slope | Hydraulic Group |
|---|---|---|---|
| UuB | Urban land | 0-8% | D |

### DRAINAGE AREAS

| D.A. LABEL | D.A. SIZE (AC.) | COEFF. C | IMP. (%) |
|---|---|---|---|
| A | 0.55 | 0.53 | 47% |
| B | 0.51 | 0.73 | 78% |
| C | 0.89 | 0.76 | 83% |
| D | 0.48 | 0.57 | 46% |
| E | 0.56 | 0.70 | 75% |
| F | 0.51 | 0.72 | 76% |
| G | 0.10 | 0.86 | 95% |
| H | 0.15 | 0.86 | 95% |
| I | 0.10 | 0.24 | 0% |
| J | 0.20 | 0.79 | 86% |
| K | 0.03 | 0.86 | 95% |
| L | 0.03 | 0.86 | 95% |
| M | 0.03 | 0.86 | 95% |
| N | 0.18 | 0.75 | 85% |
| O | 0.01 | 0.86 | 95% |
| P | 0.57 | 0.86 | 95% |

HOWARD HUGHES
PARCEL 321 LOT 17
ZONED: NEW TOWN

## ACRONYMS

- CC - CART CORRAL
- CIP - CAPITAL IMPROVEMENT PROJ.
- CO - COUNTY
- EX. - EXISTING
- ELEV - ELEVATION
- INV - INVERT
- NTS - NOT TO SCALE
- PROP. - PROPOSED
- SCE - STABILIZED CONSTRUCTION ENTRANCE
- STD - STANDARD
- SWM - STORMWATER MANAGEMENT
- TYP. - TYPICAL

STATE OF MARYLAND · GERALD DOUGLAS TURNBAUGH · No. 26560 · PROFESSIONAL ENGINEER

## AS BUILT CERTIFICATION FOR DSWM

NOTE: THERE IS NO "AS-BUILT" INFORMATION PROVIDED ON THIS SHEET

SIGNED Gerald D. Turnbaugh PE.# 26560
GERALD D. TURNBAUGH AS BUILT DATE 5-2014

APPROVED PLANNING BOARD OF HOWARD COUNTY
DATE MARCH 7, 2013

APPROVED: HOWARD COUNTY DEPT. OF PLANNING AND ZONING

CHIEF, DIVISION OF LAND DEVELOPMENT — DATE 4/26/13
CHIEF, DEVELOPMENT ENGINEERING DIVISION — DATE 4/18/13
DIRECTOR — DATE 4/26/13

| Date | No. | Revision Description |
|---|---|---|
| 10-22-14 | 2 | SHOW REVISED DRAIN SYSTEM |
| 11-28-12 | | REPLACES ALL SHEETS OF ORIGINAL SDP 73-23C |

REVISED SITE DEVELOPMENT PLAN

# THE ROUSE BUILDING RENOVATION

OWNER/DEVELOPER:
CLOVER ACQUISTIONS LLC
C/O THE HOWARD HUGHES CORPORATION
P.O. BOX 833 COLUMBIA, MD 21044-0833

## PROFESSIONAL CERTIFICATION

I HEREBY CERTIFY THAT THESE DOCUMENTS WERE PREPARED OR APPROVED BY ME, AND THAT I AM A DULY LICENSED PROFESSIONAL ENGINEER UNDER THE LAWS OF THE STATE OF MARYLAND, LICENSE NO. 26560 EXPIRATION DATE: 7-18-15

FOR REVISION NO. 2 ONLY
10-22-14
STATE OF MARYLAND · GERALD DOUGLAS TURNBAUGH · No. 26560 · PROFESSIONAL ENGINEER
Professional Engr. No. 26560

AS BUILT
NOT REQUIRED
SIGNED
DAFT McCUNE WALKER, INC.
BY: MICHAEL D. MARTIN, P.L.S. # 21234

STATE OF MARYLAND · MICHAEL DAVID MARTIN · No. 21234 · PROFESSIONAL LAND SURVEYOR

## PROFESSIONAL CERTIFICATION

I HEREBY CERTIFY THAT THESE DOCUMENTS WERE PREPARED OR APPROVED BY ME, AND THAT I AM A DULY LICENSED PROFESSIONAL ENGINEER UNDER THE LAWS OF THE STATE OF MARYLAND, LICENSE NO. 16928 EXPIRATION DATE: 5/13/14.

3/21/13
Date
STATE OF MARYLAND · WILLIAM CHARLES MILLER · No. 16928 · PROFESSIONAL ENGINEER
Professional Engr. No. 16928

CONTRACT NUMBERS:
EX. WATER: 167-W
EX. SEWER: C-2485-D-S, 2485-D-W&S


DMW
DAFT McCUNE WALKER INC
200 EAST PENNSYLVANIA TOWSON, MD 21286
P: 410 296 3333 F: 410 296 4705 WWW.DMW.COM
A TEAM OF LAND PLANNERS, LANDSCAPE ARCHITECTS, ENGINEERS, SURVEYORS & ENVIRONMENTAL PROFESSIONALS


AREA
TAX MAP 36 GRID 2 PART OF PARCEL 321, LOT 18
ELECTION DISTRICT 5TH — ZONE NT

TITLE **STORM DRAIN DRAINAGE AREAS AND SOILS MAP**
**AS BUILT**

| | | | |
|---|---|---|---|
| Des. By GDT/MCB | Scale 1"=30' | Proj. No. 11133.A | |
| Drn. By RLV | Date 3/19/13 | 7 of 28 | 4 |
| Chk. By GDT/MCB | Approved | | |

SDP 73-23C

A:\11133\11133.A01\ENGR\CAD FILES\SHEET FILES\11133_SWM02.DWG Tue, Mar 18, 2013

# LITTLE PATUXENT PARKWAY (PUBLIC COUNTY ROAD, 114' R/W)

VEHICULAR INGRESS & EGRESS TO LITTLE PATUXMENT PARKWAY WILL BE PERMITTED ONLY AT POINTS OF ACCESS APPROVED BY THE HOWARD COUNTY OFFICE OF PLANNING & ZONING

E 1352700 | N 563300 | E 1352700 | N 563500

NORTH

EX. SIDEWALK

EX. PRIVATE ACCESS ROAD

R=655.58' L=167.50'

N00° 00' 00.00"E 418.08'

N 80°00'00" W 155.00'

PROPOSED FIRE HYDRANT

EX. 20' PUBLIC WATER & UTILITY EASEMENT C.M.P. 625/ F. 389

EX. INGRESS AND EGRESS EASEMENT C.M.P. 678 / F. 332

PROP. 20' PUBLIC WATER & UTILITY EASEMENT

CURB OPENING (TYP)

MICRO-BIORETENTION SEE DETAIL ON SHEET 16

MICRO-BIORETENTION SEE DETAIL ON SHEET 16

FUTURE VEHICLE CHARGING STATIONS

OFFSET MANHOLE CONE & COVER TO REMAIN IN WALK

1" CONDUIT

327.50 INLET

HOWARD HUGHES PARCEL 321 LOT 17 ZONED: NEW TOWN

EX. INV. 322.80

12" RD

8" RD

8" RD

RD 1

RD 2

RD 3

EX. BOLLARDS (TYP)

REMOVE INLET GRATE AND CONVERT TO MANHOLE. SET MANHOLE TOP TO GRADE

EX. CONC. WALL

EX. GLASS ENCLOSURE

PROP. ENTRANCE

PROP. EXIT

EX. WOOD COLUMN ON CONC. PAD

PROP. CONC. LOADING DOCK

EX. VAULT

EX. COLUMN

PROP. BIKE RACK

EX. BENCH

EX. FOUNTAIN

EX. BENCH

EX. CONC. WALK

EX. GLASS ENCLOSURE

REFER TO GRADING AND UTILITY PLAN AT ENTRANCE AND LOADING DOCK SHEET 9 OF 21.

EX. FIRST FLOOR ENTRANCE

PROP. 3000 GALLON GREASE INTERCEPTORS

EX. STEPS & HANDRAIL

PROP. HANDI-CAP RAMP

PROP. BIKE RACK

**BUILDING**
**EX. 1ST FLOOR ELEV. = 315.02'**
**PROP. 2ND FLOOR ELEV. = 330.26'**

EX. WOOD COLUMN ON CONC. PAD

ADJUST TOP TO GRADE

EX. 20' UTILITY EASEMENT C.M.P. 477 / F. 303

EX. 20' SEWER & UTILITY EASEMENT

PROP. CANOPY

EX. 20' SEWER & UTILITY EASEMENT

EX. 20' UTILITY EASEMENT C.M.P. 477 / F. 303

EX. INGRESS AND EGRESS EASEMENT C.M.P. 678 / F. 332

EX. FLOODPLAIN EASEMENT C.M.P. 625 / F. 389

HOWARD RESEARCH & DEVELOPMENT CORPORATION PARCEL 389 LOT 2 ZONED: NEW TOWN

N 563300 E 1353200

N 90°00'00" W 225.00'

S 00°00'00" E 80.00'

S 02° 11' 44.00" W 239.62'

S 81°30'35" W 42.00'

LAKE KITTAMAQUNDI

PARCEL 389, LOT 2 THE HOWARD RESEARCH AND DEVELOPMENT CORP. ZONED: NEW TOWN

EX. INGRESS AND EGRESS EASEMENT C.M.P. 625 / F. 578

S 14°14'31" E 146.59'

S 16°06'12" W 118.15'

N 90°00'00" E 61.18'

S 00°00'00" E 80.00'

N90° 00' 00.00"E 190.00'

## ACRONYMS

| | |
|---|---|
| CC | - CART CORRAL |
| CIP | - CAPITAL IMPROVEMENT PROJECT |
| CO | - COUNTY |
| EX. | - EXISTING |
| ELEV | - ELEVATION |
| INV | - INVERT |
| NTS | - NOT TO SCALE |
| PROP. | - PROPOSED |
| SCE | - STABILIZED CONSTRUCTION ENTRANCE |
| STD | - STANDARD |
| SWM | - STORMWATER MANAGEMENT |
| TYP. | - TYPICAL |

TEMPORARY SCE FOR HOWARD CO. CIP.

## AS-BUILT CERTIFICATION FOR PSWM

I HEREBY CERTIFY THAT THE FACILITY SHOWN ON THE PLAN WAS CONSTRUCTED AS SHOWN ON THE "AS-BUILT PLANS AND COMPLIES WITH THE APPROVED PLANS AND SPECIFICATIONS, I HAVE VERIFIED THAT THE CONTRIBUTING DRAINAGE AREA IS SUFFICIENTLY STABILIZED TO PREVENT CLOGGING OF THE UNDERGROUND SWM FACILITY.

SIGNED: Gerald D. Turnbaugh P.E. No. 26569

GERALD D. TURNBAUGH AS-BUILT DATE 2-2014

GERALD DOUGLAS TURNBAUGH No. 26569 STATE OF MARYLAND PROFESSIONAL ENGINEER

## AS BUILT REQUIRED

SEE REDLINES SHOWN HEREON

SIGNED: Michael D. Martin

DAFT McCUNE WALKER, INC.

BY: MICHAEL D. MARTIN, P.L.S. # 21234

MICHAEL DAVID MARTIN No. 21234 STATE OF MARYLAND PROFESSIONAL LAND SURVEYOR

## PROFESSIONAL CERTIFICATION

I HEREBY CERTIFY THAT THESE DOCUMENTS WERE PREPARED OR APPROVED BY ME, AND THAT I AM A DULY LICENSED PROFESSIONAL ENGINEER UNDER THE LAWS OF THE STATE OF MARYLAND, LICENSE NO. 26569 EXPIRATION DATE: 7-18-15

10-22-14

GERALD DOUGLAS TURNBAUGH No. 26569 STATE OF MARYLAND PROFESSIONAL ENGINEER

Professional Engr. No. 26569

## PROFESSIONAL CERTIFICATION

I HEREBY CERTIFY THAT THESE DOCUMENTS WERE PREPARED OR APPROVED BY ME, AND THAT I AM A DULY LICENSED PROFESSIONAL ENGINEER UNDER THE LAWS OF THE STATE OF MARYLAND, LICENSE NO. 16928 EXPIRATION DATE: 5/12/14.

3/21/13 Date

KEVIN DOUGLAS MOSS No. 16928 STATE OF MARYLAND PROFESSIONAL ENGINEER

Professional Engr. No. 16928

## LEGEND

- PROPERTY BOUNDARY
- EX. RIGHT OF WAY
- ADJACENT PROPERTY BOUNDARY
- EX. EASEMENT
- EX. ROADS AND WALKS
- 330 EX. MAJOR CONTOURS
- 329 EX. MINOR CONTOURS
- EX. BUILDING
- EX. GRAVEL
- EX. TREE
- EX. GROUP LIGHT
- EX. 18" D. EX. STORM DRAIN
- EX. SANITARY SEWER
- EX. 6" W. EX. WATER
- EX. UGE EX. UNDERGROUND ELECTRIC
- EX. 18" D. EX. STORM DRAIN
- EX. GAS EX. UNDERGROUND GAS
- EX. UGT EX. UNDERGROUND TELEPHONE
- PROP. MAJOR CONTOURS
- 330 PROP. MINOR CONTOURS
- 329 PROP. CURB/EDGE OF PAVING
- PROP. DEPRESSED CURB
- PROP. REVERSE CURB
- PROP. STORM DRAIN
- PROP. SEWER
- GAS PROP. UNDERGROUND GAS
- PROP. LIGHT LUMINARIES REFER TO SITE LIGHTING ON SHEET 21 OF 21

NOTES:
REFER TO SHEET 10 OF 21 FOR UTILITY PROFILES

APPROVED PLANNING BOARD OF HOWARD COUNTY

DATE MARCH 7, 2013

APPROVED: HOWARD COUNTY DEPT. OF PLANNING AND ZONING

| | |
|---|---|
| CHIEF, DIVISION OF LAND DEVELOPMENT | DATE 4/26/13 |
| CHIEF, DEVELOPMENT ENGINEERING DIVISION | DATE 4/18/13 |
| DIRECTOR | DATE 4/26/13 |

| Date | No. | Revision Description |
|---|---|---|
| 10-22-14 | 4 | SHOW REVISED DRAIN SYSTEM |
| 11-28-12 | | REPLACES ALL SHEETS OF ORIGINAL SDP 73-23C |

REVISED SITE DEVELOPMENT PLAN

# THE ROUSE BUILDING RENOVATION

OWNER/DEVELOPER:
CLOVER ACQUISTIONS LLC
C/O THE HOWARD HUGHES CORPORATION
P.O. BOX 833 COLUMBIA, MD 21044-0833


DMW
DAFT McCUNE WALKER INC
200 EAST PENNSYLVANIA TOWSON, MD 21286
P: 410 296 3333 F: 410 296 4705 WWW.DMW.COM
A TEAM OF LAND PLANNERS, LANDSCAPE ARCHITECTS, ENGINEERS, SURVEYORS & ENVIRONMENTAL PROFESSIONALS


CONTRACT NUMBERS:
EX. WATER: 167-W
EX. SEWER: C-2485-D-S, 2485-D-W&S

AREA
TAX MAP 36 GRID 2 PART OF PARCEL 321, LOT 18
ELECTION DISTRICT 5TH ZONE NT

TITLE
**GRADING AND UTILITY PLAN**
**AS BUILT**

| | | | |
|---|---|---|---|
| Des. By GDT/MCB | Scale 1"=30' | | Proj. No. 11133.A |
| Drn. By RLV | Date 3/19/13 | | 8 of 24 |
| Chk. By GDT/MCB | Approved | | |

SDP 73-23C

A:\11133\11133_AO\ENGR\CAD FILES\SHEET FILES\11133_G01.DWG Tue, Mar 19, 2013

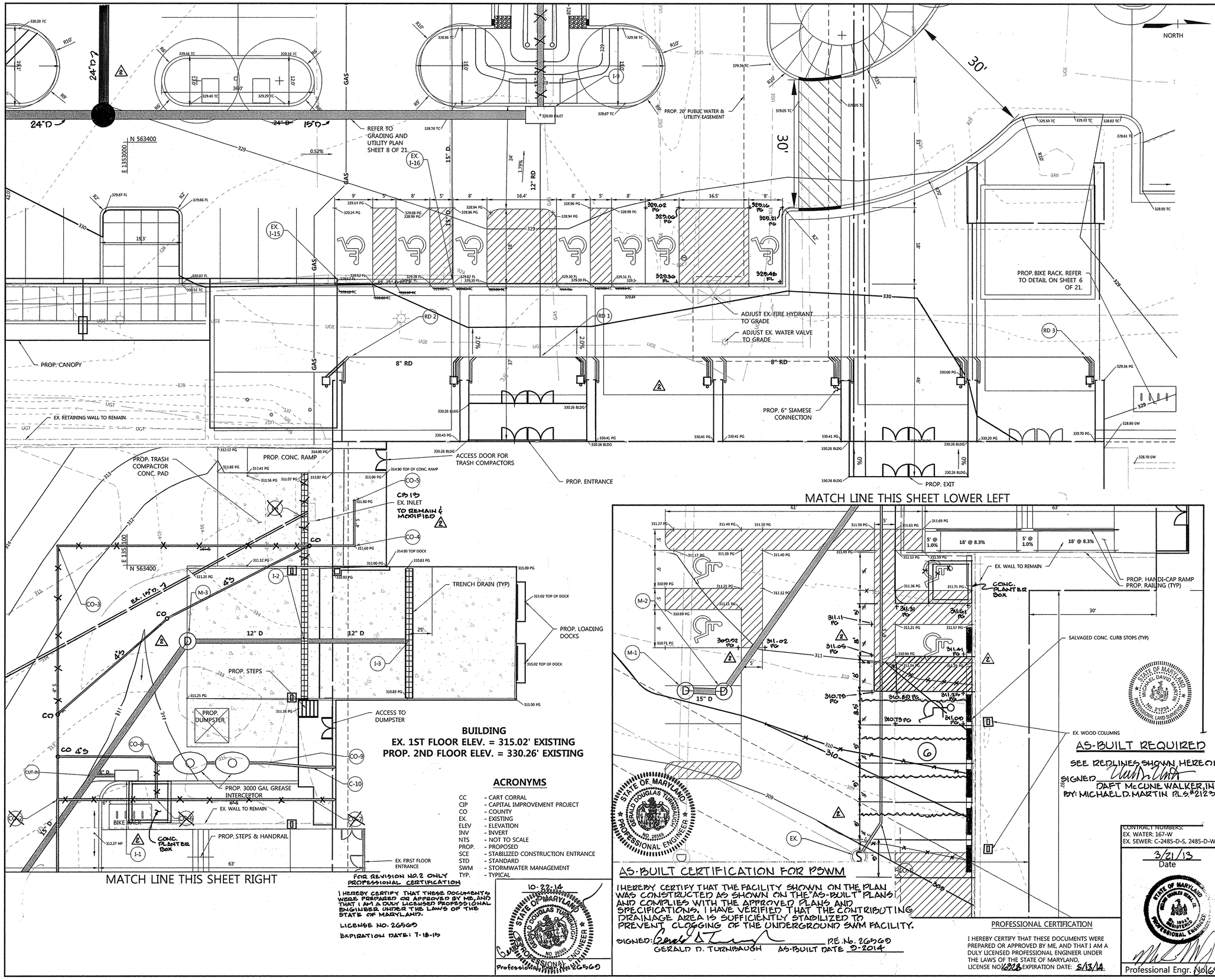


MATCH LINE THIS SHEET RIGHT

MATCH LINE THIS SHEET LOWER LEFT

## LEGEND

- PROPERTY BOUNDARY
- EX. RIGHT OF WAY
- ADJACENT PROPERTY BOUNDARY
- EX. EASEMENT
- EX. MAJOR CONTOURS
- EX. MINOR CONTOURS
- EX. BUILDING
- EX. WATER
- EX. UGE — EX. UNDERGROUND ELECTRIC
- EX. GAS — EX. UNDERGROUND GAS
- EX. UGT — EX. UNDERGROUND TELEPHONE
- PROP. CURB/EDGE OF PAVING
- PROP. DEPRESSED CURB
- PROP. REVERSED SLOPE CURB
- D — PROP. STORM DRAIN
- S — PROP. SEWER
- GAS — PROP. UNDERGROUND GAS
- PROP. LIGHT LUMINARIES REFER TO SITE LIGHTING ON SHEET 21 OF 21

NOTE:
REFER TO SHEET 10 OF 21 FOR UTILITY PROFILES.

**BUILDING**
**EX. 1ST FLOOR ELEV. = 315.02' EXISTING**
**PROP. 2ND FLOOR ELEV. = 330.26' EXISTING**

## ACRONYMS

| | |
|---|---|
| CC | - CART CORRAL |
| CIP | - CAPITAL IMPROVEMENT PROJECT |
| CO | - COUNTY |
| EX. | - EXISTING |
| ELEV | - ELEVATION |
| INV | - INVERT |
| NTS | - NOT TO SCALE |
| PROP. | - PROPOSED |
| SCE | - STABILIZED CONSTRUCTION ENTRANCE |
| STD | - STANDARD |
| SWM | - STORMWATER MANAGEMENT |
| TYP. | - TYPICAL |

FOR REVISION NO.2 ONLY
PROFESSIONAL CERTIFICATION

I HEREBY CERTIFY THAT THESE DOCUMENTS WERE PREPARED OR APPROVED BY ME, AND THAT I AM A DULY LICENSED PROFESSIONAL ENGINEER UNDER THE LAWS OF THE STATE OF MARYLAND.

LICENSE NO. 26560

EXPIRATION DATE: 7-18-15

10-22-14
GERALD DOUGLAS TURNBAUGH — STATE OF MARYLAND — NO. 26560 — PROFESSIONAL ENGINEER

Professional Engr. No. 26560

AS-BUILT CERTIFICATION FOR PSWM

I HEREBY CERTIFY THAT THE FACILITY SHOWN ON THE PLAN WAS CONSTRUCTED AS SHOWN ON THE "AS-BUILT" PLANS AND COMPLIES WITH THE APPROVED PLANS AND SPECIFICATIONS. I HAVE VERIFIED THAT THE CONTRIBUTING DRAINAGE AREA IS SUFFICIENTLY STABILIZED TO PREVENT CLOGGING OF THE UNDERGROUND SWM FACILITY.

SIGNED: _____ PE No. 26560
GERALD D. TURNBAUGH AS-BUILT DATE 5-2014

GERALD DOUGLAS TURNBAUGH — STATE OF MARYLAND — NO. 26560 — PROFESSIONAL ENGINEER

AS-BUILT REQUIRED
SEE REDLINES SHOWN HEREON
SIGNED _____
DAFT McCUNE WALKER, INC.
BY: MICHAEL D. MARTIN P.L.S. #21234

MICHAEL DAVID MARTIN — STATE OF MARYLAND — No. 21234 — PROFESSIONAL LAND SURVEYOR

PROFESSIONAL CERTIFICATION

I HEREBY CERTIFY THAT THESE DOCUMENTS WERE PREPARED OR APPROVED BY ME, AND THAT I AM A DULY LICENSED PROFESSIONAL ENGINEER UNDER THE LAWS OF THE STATE OF MARYLAND, LICENSE NO. 16928 EXPIRATION DATE: 5/13/14

CONTRACT NUMBERS:
EX. WATER: 167-W
EX. SEWER: C-2485-D-S, 2485-D-W&S

3/21/13
Date

MICHAEL DAVID MARTIN — STATE OF MARYLAND — No. 21234 — PROFESSIONAL ENGINEER

Professional Engr. No. 16928

APPROVED PLANNING BOARD OF HOWARD COUNTY
DATE MARCH 7, 2013

APPROVED: HOWARD COUNTY DEPT. OF PLANNING AND ZONING

CHIEF, DIVISION OF LAND DEVELOPMENT — DATE 4/26/13
CHIEF, DEVELOPMENT ENGINEERING DIVISION — DATE 4/10/13
DIRECTOR — DATE 4/26/13

| Date | No. | Revision Description |
|---|---|---|
| 10-22-14 | 2 | SHOW REVISED PARKING & DRAINS & SAN. |
| 11-28-12 | | REPLACES ALL SHEETS OF ORIGINAL SDP 73-23C |

REVISED SITE DEVELOPMENT PLAN

# THE ROUSE BUILDING RENOVATION

OWNER/DEVELOPER:
CLOVER ACQUISTIONS LLC
C/O THE HOWARD HUGHES CORPORATION
P.O. BOX 833 COLUMBIA, MD 21044-0833


DMW
DAFT McCUNE WALKER INC
200 EAST PENNSYLVANIA TOWSON, MD 21286
P: 410 296 3333 F: 410 296 4705 WWW.DMW.COM
A TEAM OF LAND PLANNERS, LANDSCAPE ARCHITECTS, ENGINEERS, SURVEYORS & ENVIRONMENTAL PROFESSIONALS


AREA
TAX MAP 36 GRID 2 PART OF PARCEL 321, LOT 18
ELECTION DISTRICT 5TH — ZONE NT

TITLE
**GRADING AND UTILITY PLAN AT ENTRANCE AND LOADING DOCK**
AS BUILT

| | | | |
|---|---|---|---|
| Des. By GDT/MCB | Scale 1"=10' | Proj. No. 11133.A | |
| Drn. By RLV | Date 3/19/13 | | 9 of 24 |
| Chk. By GDT/MCB | Approved | | |

SDP 73-23C

A:\11133\11133.AO\ENGR\CAD FILES\SHEET FILES\11133_SP03.DWG Tue, Mar 19, 2013

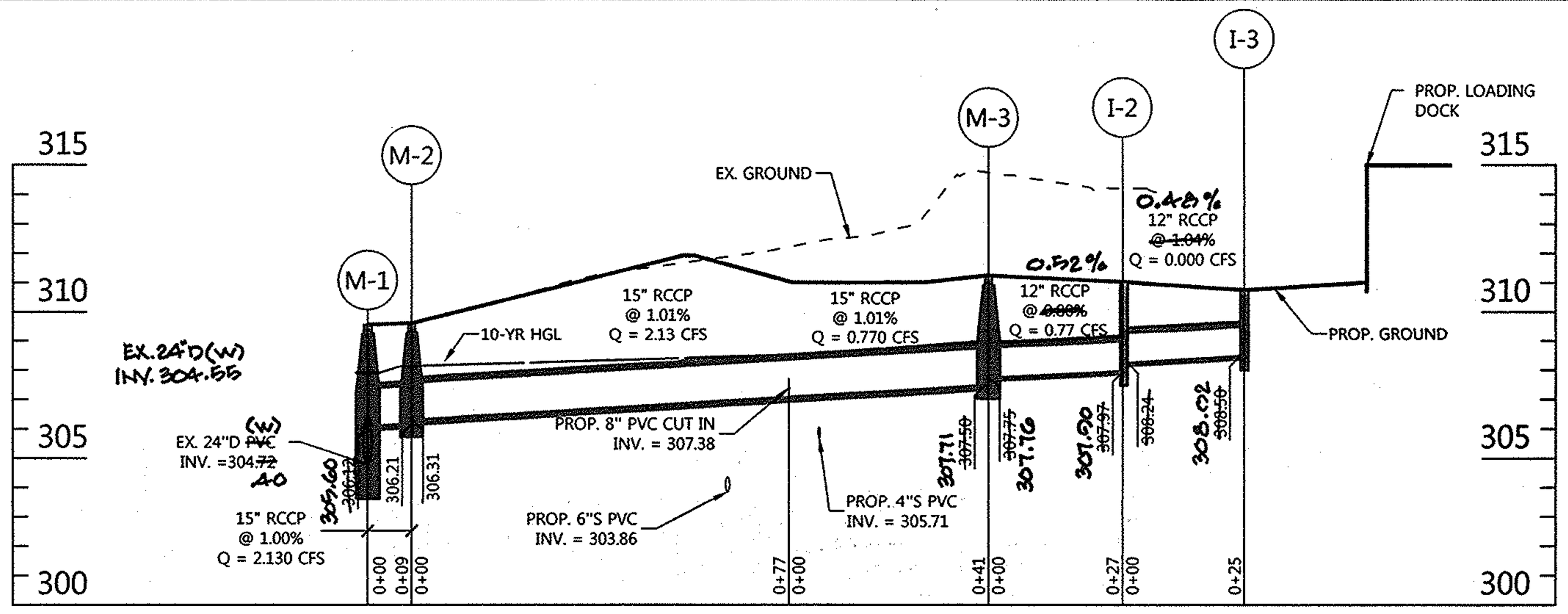


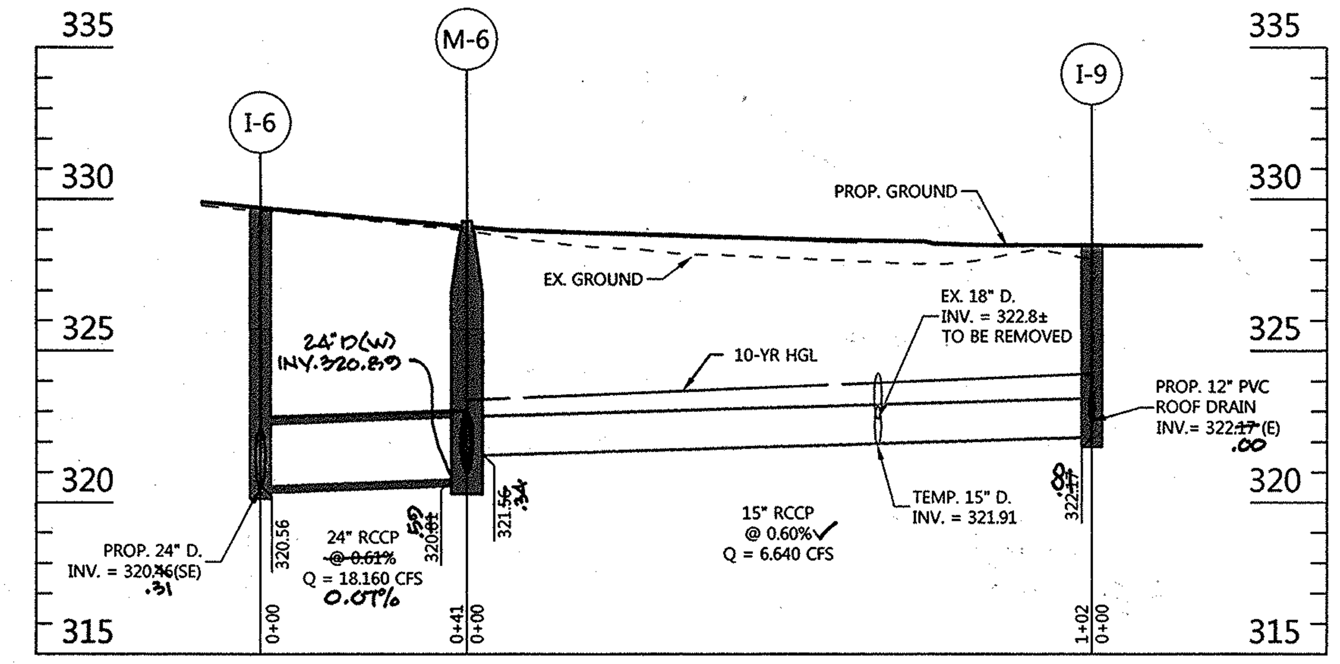


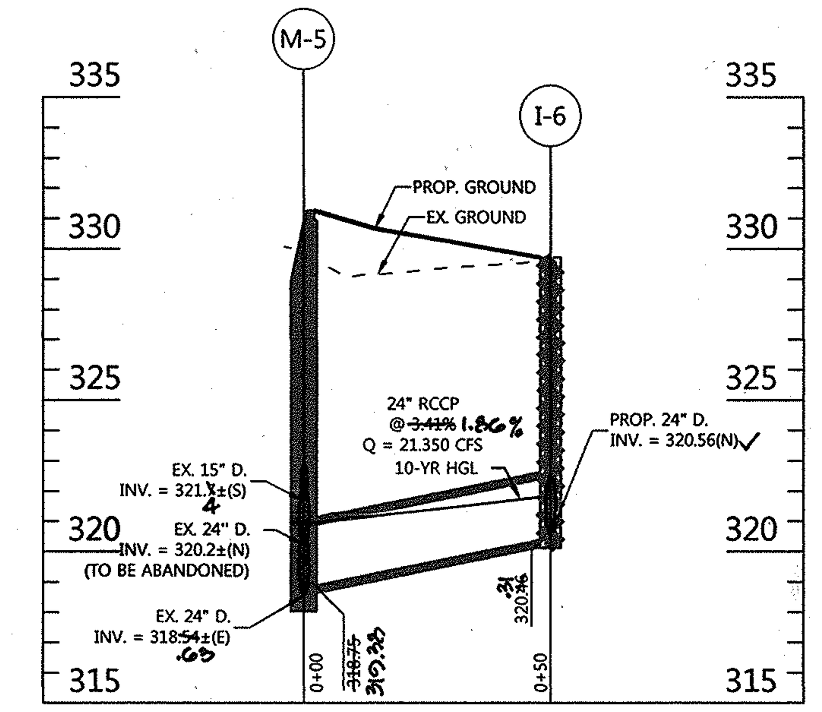


| INLET SCHEDULE | | | | | |
|---|---|---|---|---|---|
| NO. | TYPE | INV. IN | INV. OUT | GRATE/THROAT ELEV. | REMARKS |
| I-1 | TYPE 'S' | | 307.~~86~~ .49 | 310.~~83~~ .69 | HOWARD CO. STD DTL D4.22 |
| I-2 | TRENCH DRAIN | 308.24 307.97✓ | | 310.99 ✓ | ACO DRAIN-POWER S300K (SLOTTED DUCTILE IRON-CLASS F) |
| I-3 | TRENCH DRAIN | | 308.~~50~~ .02 | 310.75 ✓ | ACO DRAIN-POWER S300K (SLOTTED DUCTILE IRON-CLASS F) |
| I-5 | TYPE 'S' COMB. | | 313.~~50~~ .20 | 318.~~60~~ .15 | HOWARD CO. STD DTL D.4.32 |
| I-6 | DOUBLE 'WR' | ~~322.60~~ .31 320.56 | 320.46 | 329.~~72~~ .61 | HOWARD CO. STD DTL D.4.35 |
| I-7 | TYPE 'D' | ~~323.30~~ | 324.63 ~~323.20~~ | 329.~~50~~ .40 | HOWARD CO. STD DTL D.4.10 |
| I-8 | TYPE 'D' | | 325.05 ~~324.80~~ | 330.~~75~~ .66 | HOWARD CO. STD DTL D.4.10 |
| I-9 | DOUBLE 'WR' | 322.~~17~~ .00 | 322.00 ~~321.42~~ | 327.75 ~~328.00~~ | HOWARD CO. STD DTL D.4.35 |
| I-10 | TYPE 'D' | 322.84 | 322.~~74~~ .95 | 328.00✓ | HOWARD CO. STD DTL D.4.10 |
| I-11 | TYPE 'D' | | 324.29 ~~323.80~~ | 329.~~75~~ .65 | HOWARD CO. STD DTL D.4.10 |
| CUT IN | CUT-IN | 307.38 | N/A | N/A | FIELD CONNECTION CUT-IN |
| I-12 | DOUBLE 'WR' | 322.~~80~~ .87 | 322.82 | 327.~~50~~ .37 | HOWARD CO. STD. DTL. D.4.35 |
| EX. CB13 | EX. TYPE 'E' | | EX. 308.~~10~~ .41 | 310.91 ~~311.00~~ | EX. HOWARD CO. STD. DTL. D.4.21 (TO BE MODIFIED) |

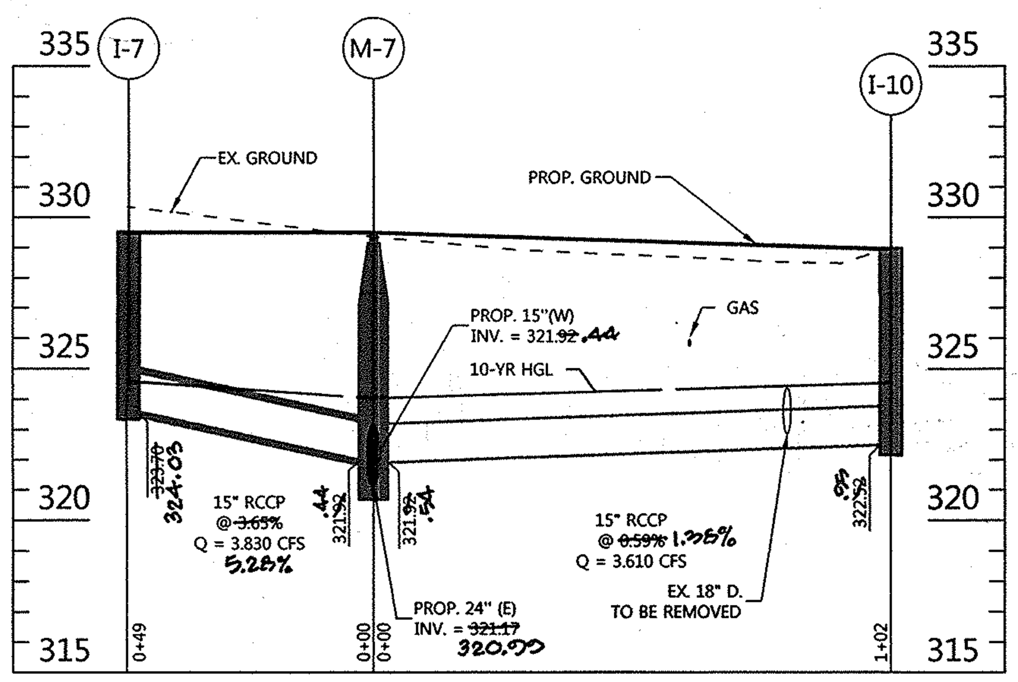


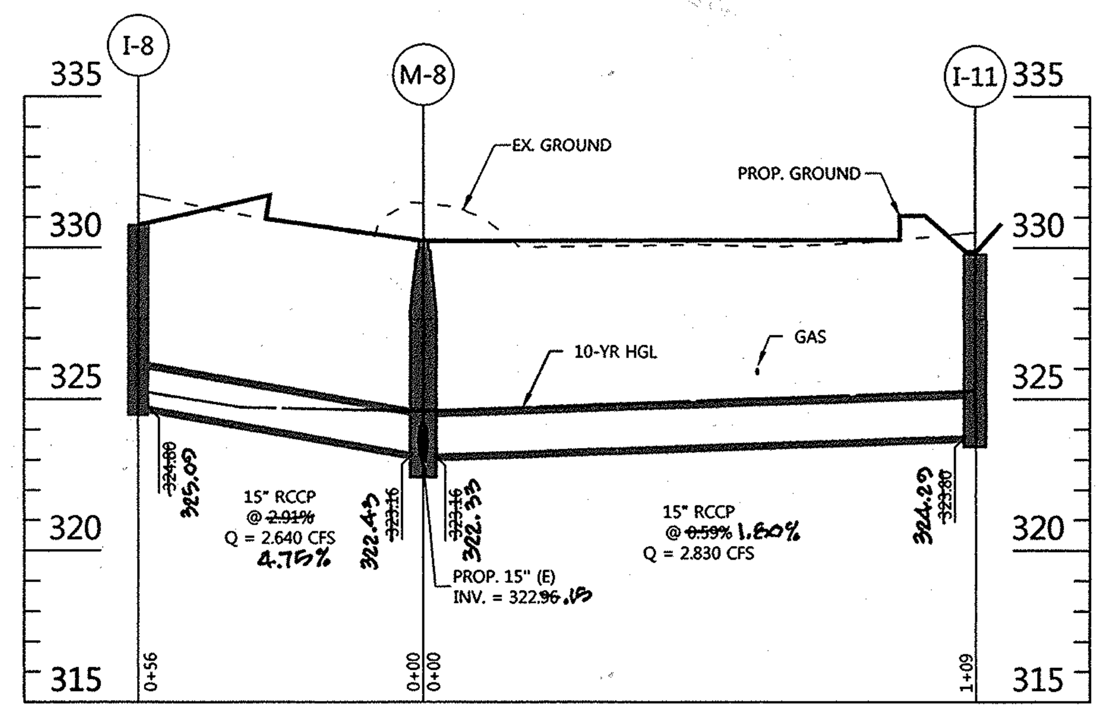


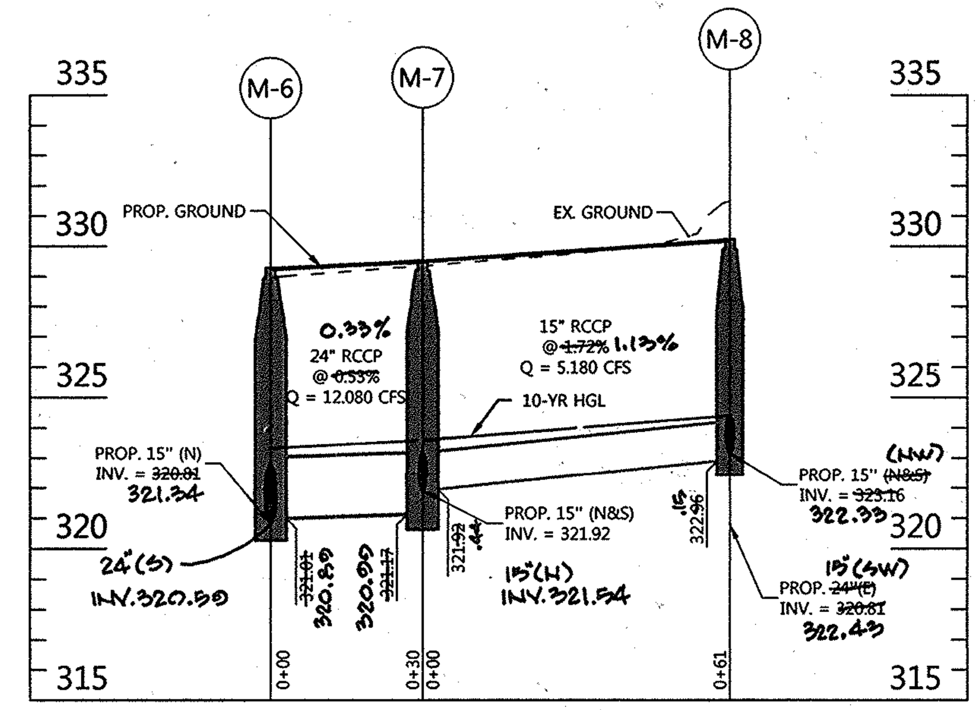


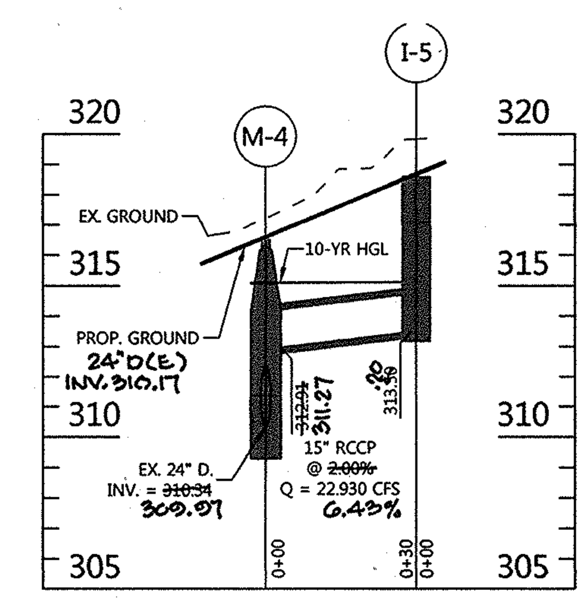


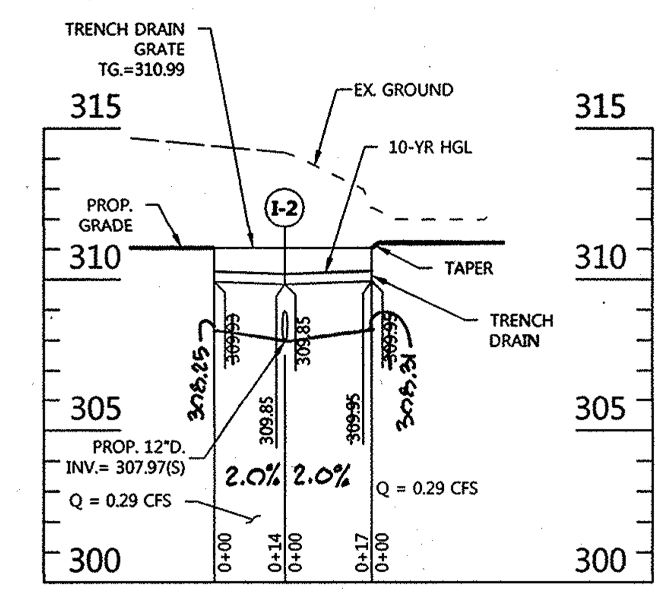


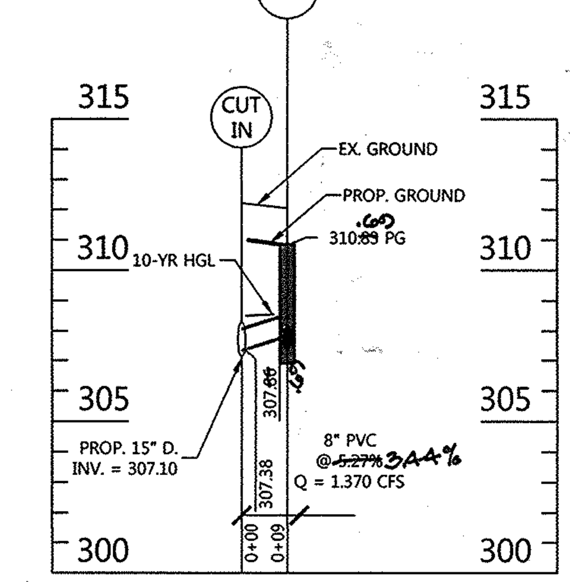


## STORM DRAIN PROFILE

SCALE: HORIZ. 1"=30'
VERT. 1"=5'

(15") 311.27
(24") 309.97
(24") 310.17

| MANHOLE SCHEDULE | | | | | | |
|---|---|---|---|---|---|---|
| NO. | TYPE | INTERNAL DIAMETER | INV. IN | INV. OUT | RIM. ELEV. | REMARKS |
| M-1 | DOG HOUSE MANHOLE | 48" | 305.6 ~~306.12~~ | | 309.65 ~~310.20~~ | HOWARD CO. STD. DETAIL PLATE G-5.14 |
| M-2 | STD. MANHOLE | 48" | 306.31 | 306.21 | 310.25 | HOWARD CO. STD. DETAIL PLATE G-5.12 |
| M-3 | STD. MANHOLE | 48" | 307.76 | 307.~~75~~ .71 ~~307.50~~ | 311.~~25~~ .11 | HOWARD CO. STD. DETAIL PLATE G-5.12 |
| M-4 | DOG HOUSE MANHOLE | 60" | ~~312.81~~ ~~312.91~~ | 309.97 | 316.~~51~~ .17 | HOWARD CO. STD. DETAIL PLATE G-5.14 |
| M-5 | STD. MANHOLE | 48" | (24") 319.38 ~~318.75~~ ~~320.20~~ (15") 321.43 | 318.63 ~~321.70~~ ~~318.54~~ | 331.~~26~~ .58 | HOWARD CO. STD. DETAIL PLATE G-5.13 CONICAL TOP SECTION TO BE ROTATED SO MANHOLE FRAME AND COVER IS WHOLLY WITHIN SIDEWALK |
| EX M-33 | STD. MANHOLE | 48" | (15") 321.34 | | 314.40✓ | ADJUST TOP TO PROPOSED GRADING |
| M-6 | STD. MANHOLE | 60" | ~~321.01~~ ~~321.56~~ (24") 320.89 | 320.~~81~~ .59 | 329.~~25~~ .39 | HOWARD CO. STD. DETAIL PLATE G-5.12 |
| M-7 | STD. MANHOLE | 60" | ~~321.92~~ | ~~321.17~~ 320.99 | 329.50✓ | HOWARD CO. STD. DETAIL PLATE G-5.12 |
| M-8 | STD. MANHOLE | 48" | ~~323.16~~ 322.43 322.33 | 322.~~96~~ .13 | 330.~~20~~ .43 | HOWARD CO. STD. DETAIL PLATE G-5.12 |

(15")
321.54
321.44
321.44

PROVIDE REMOVABLE CAPS FOR TRASH COMPACTOR WASHDOWN FOR C.O. 4 & C.O. 5

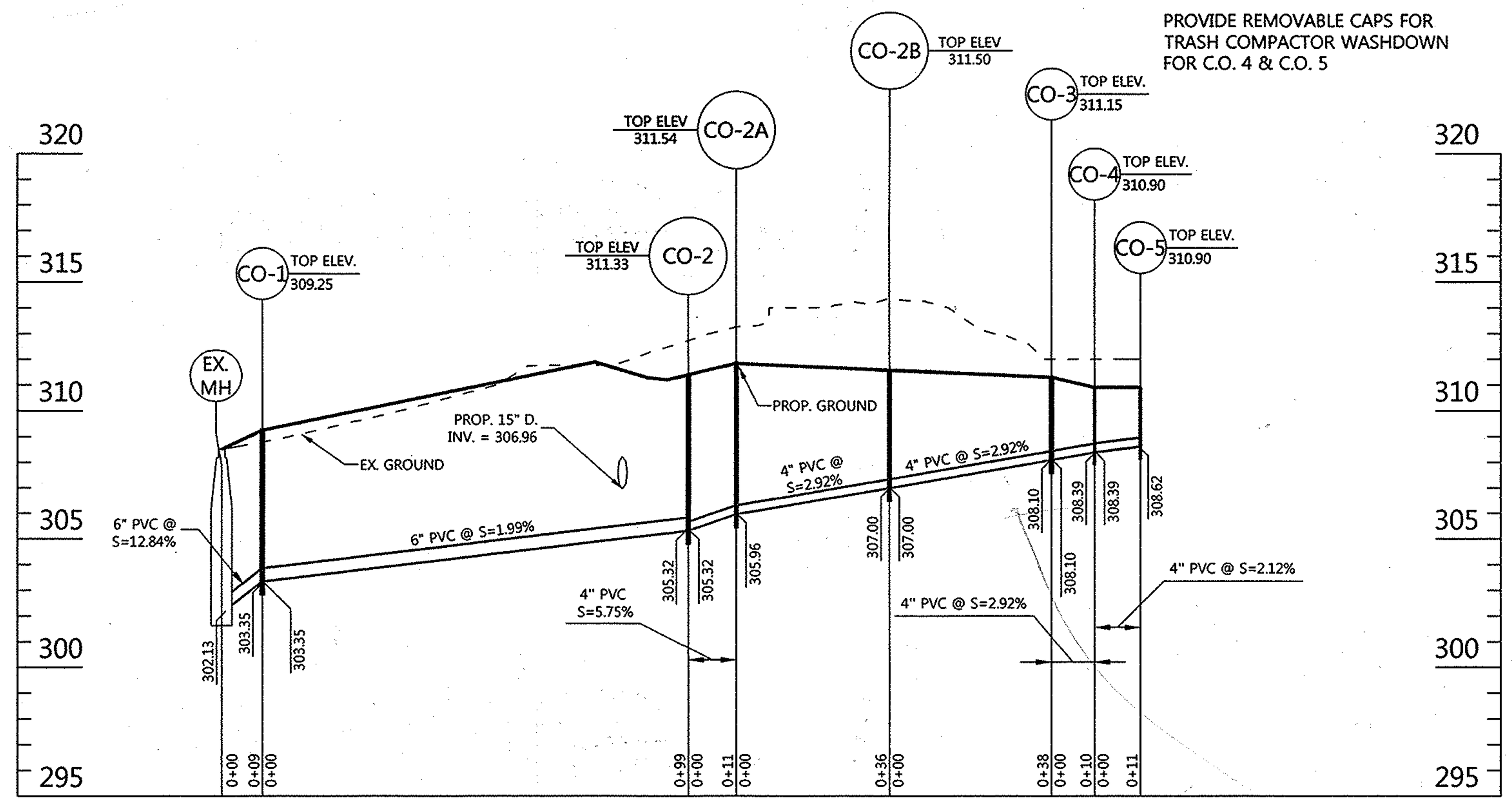


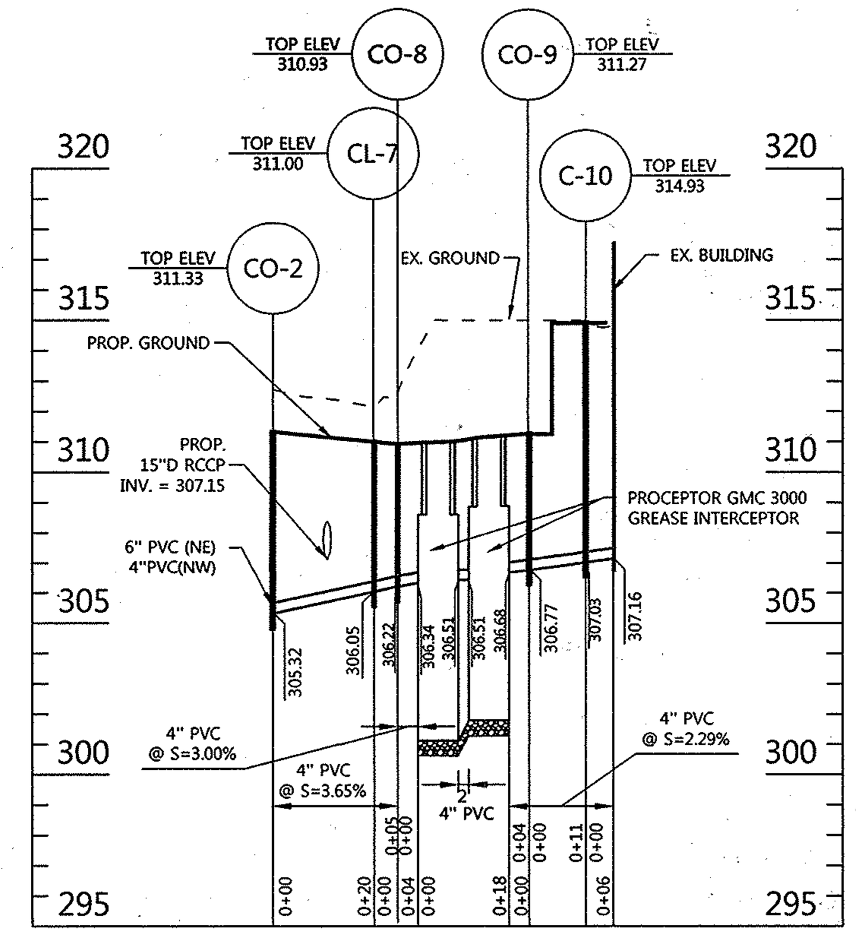


## SANITARY SEWER PROFILE

SCALE: HORIZ. 1"=30'
VERT. 1"=5'

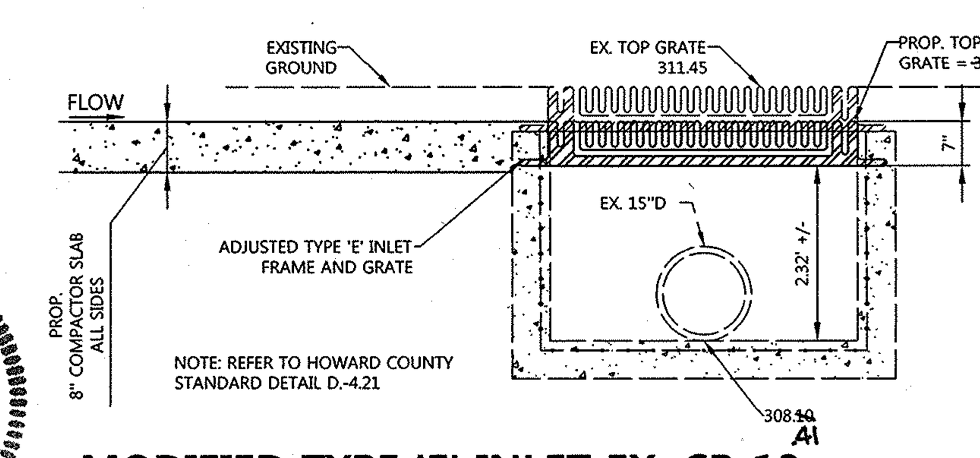


## MODIFIED TYPE 'E' INLET EX. CB-13

SCALE: 1"=2'

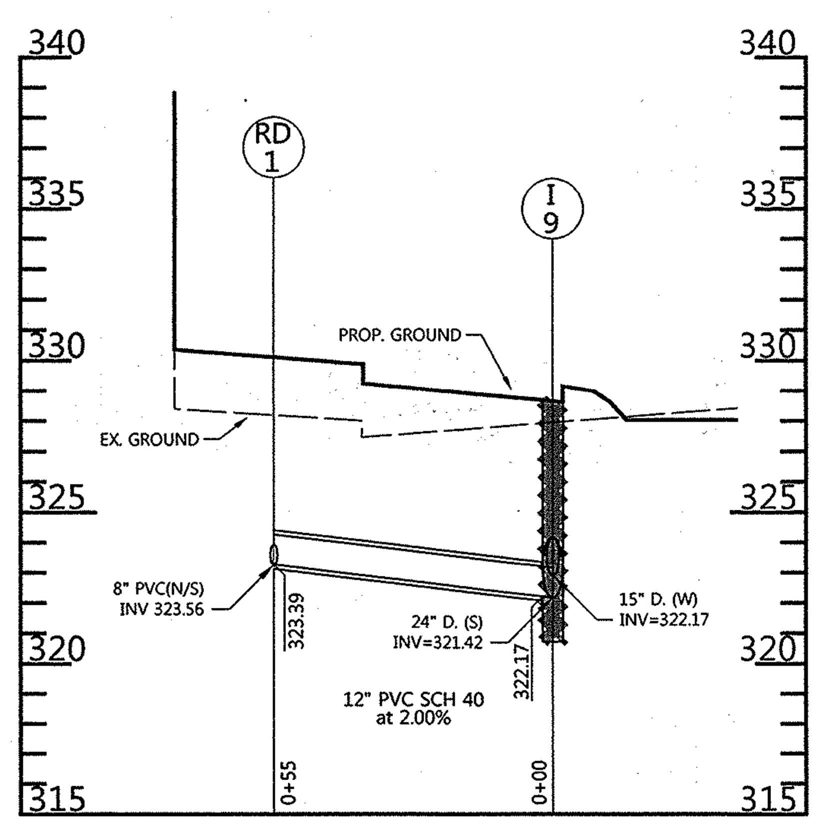


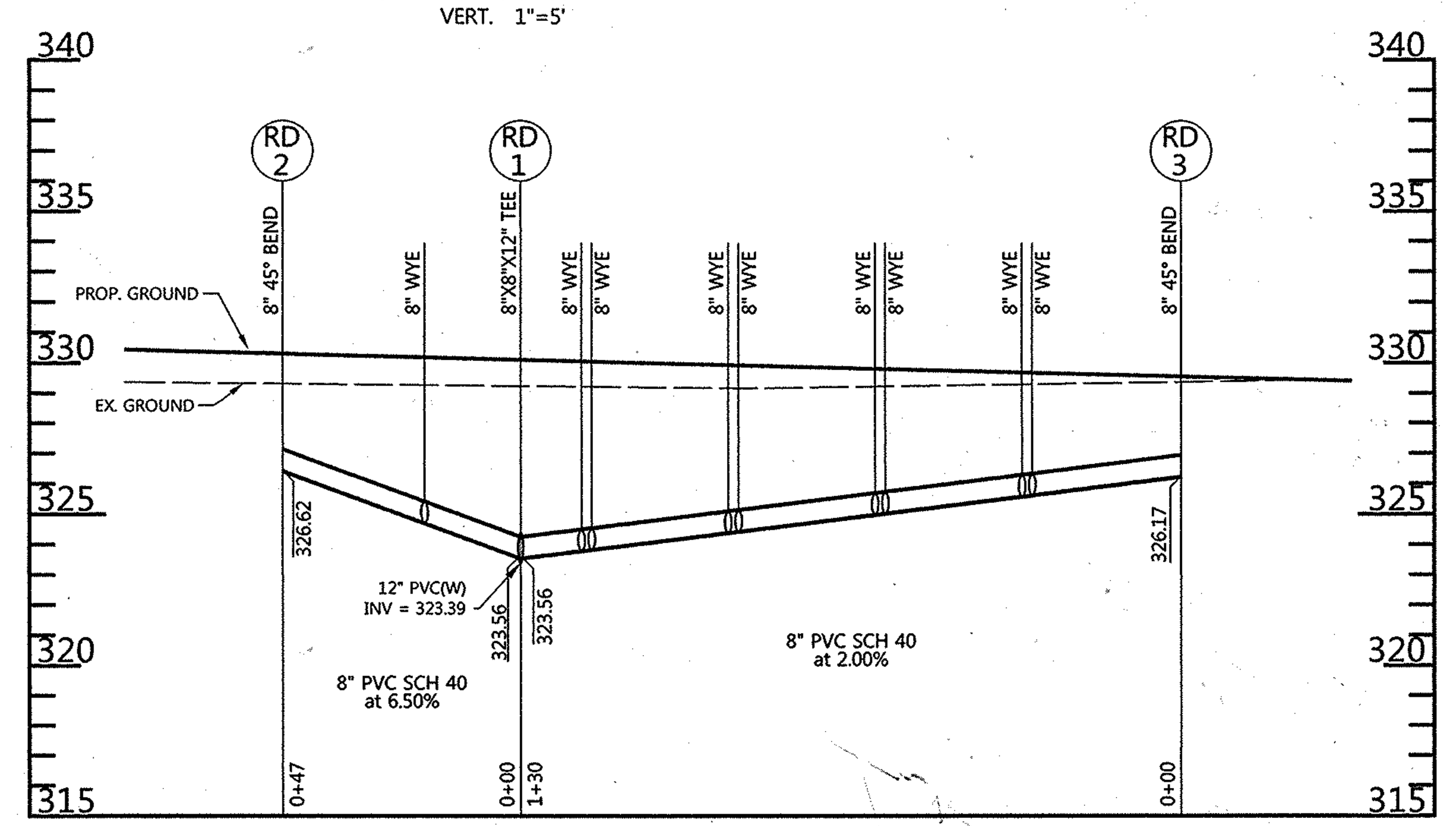


## WESTERN ROOF DRAIN

SCALE: HORIZ. 1"=30'
VERT. 1"=5'

STATE OF MARYLAND — GERALD DOUGLAS TURNBAUGH — PROFESSIONAL ENGINEER — NO. 26569

## AS BUILT CERTIFICATION FOR PSWM

I HEREBY CERTIFY THAT THE FACILITY SHOWN ON THE PLAN WAS CONSTRUCTED AS SHOWN ON THE "AS-BUILT" PLANS AND COMPLIES WITH THE APPROVED PLANS AND SPECIFICATIONS. I HAVE VERIFIED THAT THE CONTRIBUTING DRAINAGE AREA IS SUFFICIENTLY STABILIZED TO PREVENT CLOGGING OF THE UNDERGROUND SWM FACILITY

SIGNED [signature] P.E. No. 26569
GERALD D. TURNBAUGH AS BUILT DATE: 9-2014

PROFESSIONAL CERTIFICATION

I HEREBY CERTIFY THAT THESE DOCUMENTS WERE PREPARED OR APPROVED BY ME, AND THAT I AM A DULY LICENSED PROFESSIONAL ENGINEER UNDER THE LAWS OF THE STATE OF MARYLAND, LICENSE NO 26569, EXPIRATION DATE: 7-18-15

CONTRACT NUMBERS:
EX. WATER: 167-W
EX. SEWER: C-2485-D-S, 2485-D-W&S

12-11-14
Date

STATE OF MARYLAND — GERALD DOUGLAS TURNBAUGH — PROFESSIONAL ENGINEER — NO. 26569

Professional Engr. No. 26569

STATE OF MARYLAND — MICHAEL DAVID MARTIN — PROFESSIONAL LAND SURVEYOR — No. 21234

NOTE: MAINTAIN MINIMUM 2' COVER OVER ALL PIPES DURING CONSTRUCTION.

AS-BUILT REQUIRED

SEE REDLINES SHOWN HEREON

SIGNED [signature]
DAFT McCUNE WALKER, INC.
BY: MICHAEL D. MARTIN P.L.S. # 21234

APPROVED PLANNING BOARD OF HOWARD COUNTY

DATE MARCH 7, 2013

APPROVED: HOWARD COUNTY DEPT. OF PLANNING AND ZONING

| | |
|---|---|
| [signature] CHIEF, DIVISION OF LAND DEVELOPMENT | 1-05-15 DATE |
| [signature] CHIEF, DEVELOPMENT ENGINEERING DIVISION | 12-24-14 DATE |
| [signature] DIRECTOR | 1/5/15 DATE |

ADDED REMOVABLE CLEANOUT NOTE FOR WASHDOWN

| Date | No. | Revision Description |
|---|---|---|
| 10-22-14 | 2 | REVISED PROFILE REPLACEMENT SHEET |
| 11-28-12 | | REPLACES ALL SHEETS OF ORIGINAL SDP 73-23C |

REVISED SITE DEVELOPMENT PLAN

# THE ROUSE BUILDING RENOVATION

OWNER/DEVELOPER:

CLOVER ACQUISTIONS LLC
C/O THE HOWARD HUGHES CORPORATION
P.O. BOX 833 COLUMBIA, MD 21044-0833


DMW
DAFT McCUNE WALKER INC
200 EAST PENNSYLVANIA TOWSON, MD 21286
P: 410 296 3333 F: 410 296 4705 WWW.DMW.COM
A TEAM OF LAND PLANNERS, LANDSCAPE ARCHITECTS, ENGINEERS, SURVEYORS & ENVIRONMENTAL PROFESSIONALS


AREA
TAX MAP 36 GRID 2 PART OF PARCEL 321, LOT 18
ELECTION DISTRICT 5TH ZONE NT

TITLE
UTILITY PROFILES
AS BUILT

| | | |
|---|---|---|
| Des. By GDT/MCB | Scale AS SHOWN | Proj. No. 11133.A |
| Drn. By RLV | Date 12/5/14 | 10 of 24 |
| Chk. By GDT/MCB | Approved | |

SDP 73-23C

# LITTLE PATUXENT PARKWAY (PUBLIC COUNTY ROAD, 114' R/W)

VEHICULAR INGRESS & EGRESS TO LITTLE PATUXENT PARKWAY WILL BE PERMITTED ONLY AT POINTS OF ACCESS APPROVED BY THE HOWARD COUNTY OFFICE OF PLANNING & ZONING

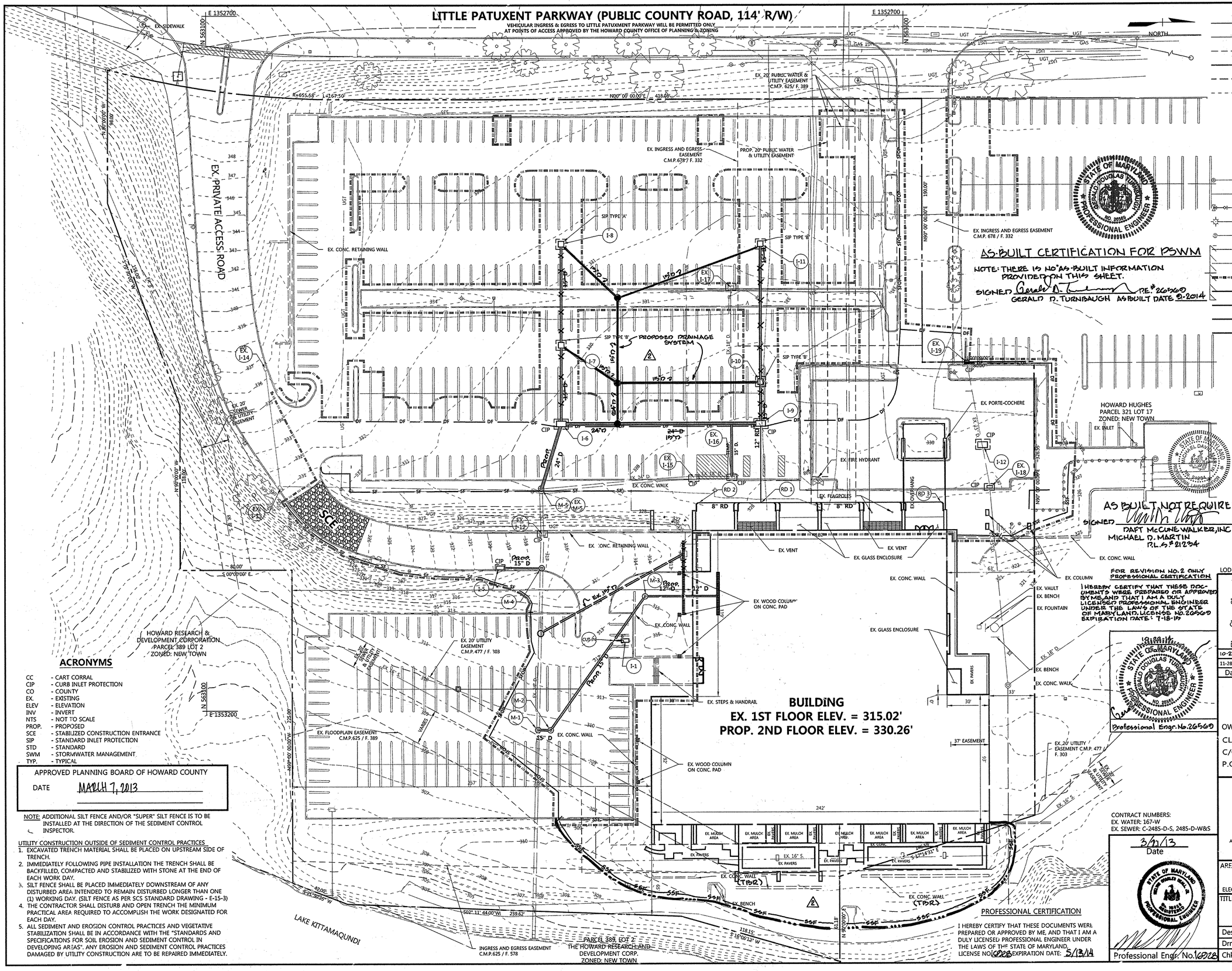


## LEGEND

- PROPERTY BOUNDARY
- EX. RIGHT OF WAY
- EX. EASEMENT
- EX. ROADS AND WALKS
- EX. MAJOR CONTOURS
- EX. MINOR CONTOURS
- EX. BUILDING
- EX. GRAVEL
- EX. TREE
- EX. GROUP LIGHT
- EX. STORM DRAIN
- EX. SANITARY SEWER
- EX. WATER
- EX. UNDERGROUND ELECTRIC
- EX. STORM DRAIN
- EX. GAS — EX. UNDERGROUND GAS
- EX. UGT — EX. UNDERGROUND TELEPHONE
- LIMIT OF DISTURBANCE
- SF — SILT FENCE
- SSF — SUPER SILT FENCE
- DF — DIVERSION FENCE
- SFOP — SILT FENCE ON PAVEMENT
- INLET PROTECTION

## ACRONYMS

| | |
|---|---|
| CC | - CART CORRAL |
| CIP | - CURB INLET PROTECTION |
| CO | - COUNTY |
| EX. | - EXISTING |
| ELEV | - ELEVATION |
| INV | - INVERT |
| NTS | - NOT TO SCALE |
| PROP. | - PROPOSED |
| SCE | - STABILIZED CONSTRUCTION ENTRANCE |
| SIP | - STANDARD INLET PROTECTION |
| STD | - STANDARD |
| SWM | - STORMWATER MANAGEMENT |
| TYP. | - TYPICAL |

APPROVED PLANNING BOARD OF HOWARD COUNTY

DATE MARCH 7, 2013

NOTE: ADDITIONAL SILT FENCE AND/OR "SUPER" SILT FENCE IS TO BE INSTALLED AT THE DIRECTION OF THE SEDIMENT CONTROL INSPECTOR.

UTILITY CONSTRUCTION OUTSIDE OF SEDIMENT CONTROL PRACTICES

1. EXCAVATED TRENCH MATERIAL SHALL BE PLACED ON UPSTREAM SIDE OF TRENCH.
2. IMMEDIATELY FOLLOWING PIPE INSTALLATION THE TRENCH SHALL BE BACKFILLED, COMPACTED AND STABILIZED WITH STONE AT THE END OF EACH WORK DAY.
3. SILT FENCE SHALL BE PLACED IMMEDIATELY DOWNSTREAM OF ANY DISTURBED AREA INTENDED TO REMAIN DISTURBED LONGER THAN ONE (1) WORKING DAY. (SILT FENCE AS PER SCS STANDARD DRAWING - E-15-3)
4. THE CONTRACTOR SHALL DISTURB AND OPEN TRENCH THE MINIMUM PRACTICAL AREA REQUIRED TO ACCOMPLISH THE WORK DESIGNATED FOR EACH DAY.
5. ALL SEDIMENT AND EROSION CONTROL PRACTICES AND VEGETATIVE STABILIZATION SHALL BE IN ACCORDANCE WITH THE "STANDARDS AND SPECIFICATIONS FOR SOIL EROSION AND SEDIMENT CONTROL IN DEVELOPING AREAS". ANY EROSION AND SEDIMENT CONTROL PRACTICES DAMAGED BY UTILITY CONSTRUCTION ARE TO BE REPAIRED IMMEDIATELY.

AS-BUILT CERTIFICATION FOR PSWM

NOTE: THERE IS NO AS-BUILT INFORMATION PROVIDED ON THIS SHEET.

SIGNED Gerald D. Turnbaugh PE.# 26760

GERALD D. TURNBAUGH AS-BUILT DATE 2-2014

AS BUILT NOT REQUIRED

SIGNED

DAFT McCUNE WALKER, INC.
MICHAEL D. MARTIN
P.L.S.# 21234

FOR REVISION NO. 2 ONLY PROFESSIONAL CERTIFICATION

I HEREBY CERTIFY THAT THESE DOCUMENTS WERE PREPARED OR APPROVED BY ME, AND THAT I AM A DULY LICENSED PROFESSIONAL ENGINEER UNDER THE LAWS OF THE STATE OF MARYLAND, LICENSE NO. 26760 EXPIRATION DATE: 7-18-15

Professional Engr. No. 26760

PROFESSIONAL CERTIFICATION

I HEREBY CERTIFY THAT THESE DOCUMENTS WERE PREPARED OR APPROVED BY ME, AND THAT I AM A DULY LICENSED PROFESSIONAL ENGINEER UNDER THE LAWS OF THE STATE OF MARYLAND, LICENSE NO. 16928 EXPIRATION DATE: 5/13/14

Professional Engr. No. 16928

DEVELOPERS CERTIFICATION:

"I/WE CERTIFY THAT ALL DEVELOPMENT AND CONSTRUCTION WILL BE DONE ACCORDING TO THIS PLAN, AND THAT ANY RESPONSIBLE PERSONNEL INVOLVED IN THE CONSTRUCTION PROJECT WILL HAVE A CERTIFICATE OF ATTENDANCE AT A DEPARTMENT OF THE ENVIRONMENT APPROVED TRAINING PROGRAM FOR THE CONTROL OF SEDIMENT AND EROSION BEFORE BEGINNING THE PROJECT. I ALSO AUTHORIZE PERIODIC ON-SITE INSPECTION BY THE HOWARD SOIL CONSERVATION DISTRICT."

Robert Jenkins — 3/14/13
SIGNATURE OF DEVELOPER — DATE
Robert Jenkins
PRINT NAME

ENGINEER'S CERTIFICATION:

"I CERTIFY THAT THIS PLAN FOR EROSION AND SEDIMENT CONTROL REPRESENTS A PRACTICAL AND WORKABLE PLAN BASED ON MY PERSONAL KNOWLEDGE OF THE SITE CONDITIONS AND THAT IT WAS PREPARED IN ACCORDANCE WITH THE REQUIREMENTS OF THE HOWARD SOIL CONSERVATION DISTRICT."

3/21/13
SIGNATURE OF ENGINEER — DATE
Melvin C. Bealle, Jr., P.E.
PRINT NAME

THIS DEVELOPMENT PLAN IS APPROVED FOR SOIL EROSION AND SEDIMENT CONTROL BY THE HOWARD SOIL CONSERVATION DISTRICT

4/9/13
HOWARD SOIL CONSERVATION DISTRICT — DATE

LOD = 103,977 SF OR 2.39 AC ±

APPROVED: HOWARD COUNTY DEPT. OF PLANNING AND ZONING

| | |
|---|---|
| CHIEF, DIVISION OF LAND DEVELOPMENT | DATE 4/26/13 |
| CHIEF, DEVELOPMENT ENGINEERING DIVISION | DATE 4/8/13 |
| DIRECTOR | DATE 4/26/13 |

| Date | No. | Revision Description |
|---|---|---|
| 10-22-14 | 2 | SHOW ADDITIONAL SSF/LOD & REVISED DRAINS |
| 11-28-12 | | REPLACES ALL SHEETS OF ORIGINAL SDP 73-23C |

REVISED SITE DEVELOPMENT PLAN

# THE ROUSE BUILDING RENOVATION

OWNER/DEVELOPER:
CLOVER ACQUISTIONS LLC
C/O THE HOWARD HUGHES CORPORATION
P.O. BOX 833 COLUMBIA, MD 21044-0833


DMW
DAFT McCUNE WALKER INC
200 EAST PENNSYLVANIA TOWSON, MD 21286
P: 410 296 3333 F: 410 296 4705 WWW.DMW.COM
A TEAM OF LAND PLANNERS, LANDSCAPE ARCHITECTS, ENGINEERS, SURVEYORS & ENVIRONMENTAL PROFESSIONALS


CONTRACT NUMBERS:
EX. WATER: 167-W
EX. SEWER: C-2485-D-S, 2485-D-W&S

3/21/13
Date

AREA
TAX MAP 36 GRID 2 PART OF PARCEL 321, LOT 18
ELECTION DISTRICT 5TH — ZONE NT

TITLE
EXISTING CONDITONS SEDIMENT AND EROSION CONTROL PLAN
AS-BUILT

| | | | |
|---|---|---|---|
| Des. By GDT/MCB | Scale 1"=30' | | Proj. No. 11133.A |
| Drn. By RLV | Date 3/14/13 | | 11 of 24 |
| Chk. By GDT/MCB | Approved | | |

GP-13-040 SDP 73-23C

A:\11133\11133_AO\ENGR\CAD FILES\SHEET FILES\11133_SEC03.DWG Thu, Mar 14, 2013

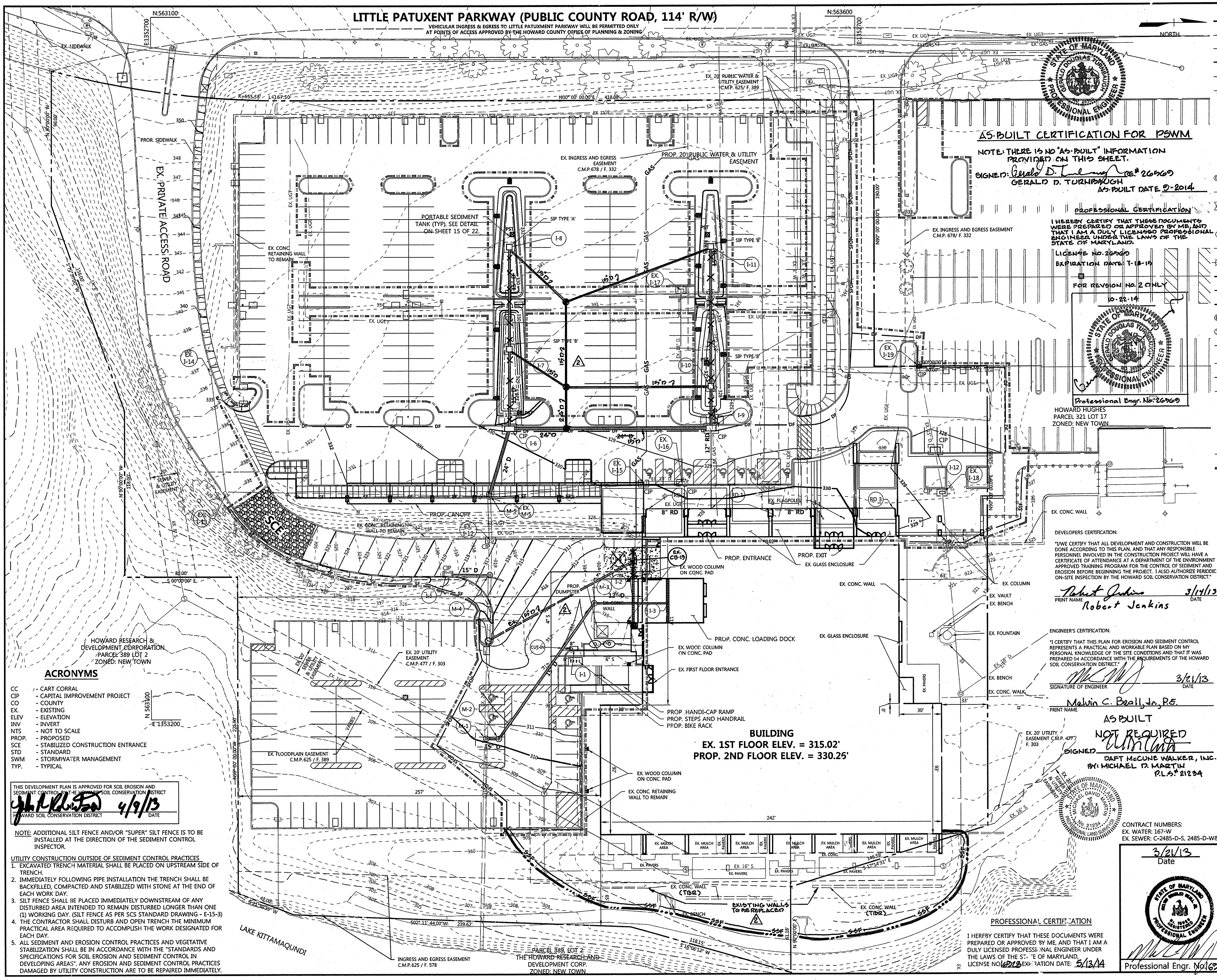


## LEGEND

| | |
|---|---|
| | PROPERTY BOUNDARY |
| | EX. RIGHT OF WAY |
| | EX. EASEMENT |
| | EX. ROADS AND WALKS |
| 329 | EX. MAJOR CONTOURS |
| 330 | EX. MINOR CONTOURS |
| | EX. BUILDING |
| | EX. GRAVEL |
| | EX. TREE |
| | EX. GROUP LIGHT |
| EX. 18" D. | EX. STORM DRAIN |
| | EX. SANITARY SEWER |
| EX. 6" W. | EX. WATER |
| EX. UGE | EX. UNDERGROUND ELECTRIC |
| EX. 18" D. | EX. STORM DRAIN |
| EX. GAS | EX. UNDERGROUND GAS |
| EX. UGT | EX. UNDERGROUND TELEPHONE |
| 330 | PROP. MAJOR CONTOURS |
| 329 | PROP. MINOR CONTOURS |
| | PROP. CURB/EDGE OF PAVING |
| 18" D. | PROP. STORM DRAIN |
| 6" S. | PROP. SEWER |
| GAS | PROP. UNDERGROUND GAS |
| SF SF | SILT FENCE |
| SSF SSF | SUPER SILT FENCE |
| DF DF | DIVERSION FENCE |
| SCE | PROP. STABILIZED CONSTRUCTION ENTRANCE |
| | INLET PROTECTION |
| SFOP SFOP | SILT FENCE ON PAVEMENT |
| | LIMIT OF DISTURBANCE |
| OR | PROP. LIGHT LUMINARIES |

STATE OF MARYLAND GERALD DOUGLAS TURNBAUGH PROFESSIONAL ENGINEER

AS-BUILT CERTIFICATION FOR PSWM

NOTE: THERE IS NO "AS-BUILT" INFORMATION PROVIDED ON THIS SHEET.

SIGNED: Gerald D. Turnbaugh PE# 26569
GERALD D. TURNBAUGH
AS-BUILT DATE 9-2014

PROFESSIONAL CERTIFICATION

I HEREBY CERTIFY THAT THESE DOCUMENTS WERE PREPARED OR APPROVED BY ME, AND THAT I AM A DULY LICENSED PROFESSIONAL ENGINEER UNDER THE LAWS OF THE STATE OF MARYLAND.

LICENSE NO. 26569
EXPIRATION DATE: 7-18-15

FOR REVISION NO. 2 ONLY

10-22-14

STATE OF MARYLAND GERALD DOUGLAS TURNBAUGH NO. 26569 PROFESSIONAL ENGINEER

Professional Engr. No. 26569

## ACRONYMS

| | |
|---|---|
| CC | - CART CORRAL |
| CIP | - CAPITAL IMPROVEMENT PROJECT |
| CO | - COUNTY |
| EX. | - EXISTING |
| ELEV | - ELEVATION |
| INV | - INVERT |
| NTS | - NOT TO SCALE |
| PROP. | - PROPOSED |
| SCE | - STABILIZED CONSTRUCTION ENTRANCE |
| STD | - STANDARD |
| SWM | - STORMWATER MANAGEMENT |
| TYP. | - TYPICAL |

THIS DEVELOPMENT PLAN IS APPROVED FOR SOIL EROSION AND SEDIMENT CONTROL BY THE HOWARD SOIL CONSERVATION DISTRICT

[signature] 4/9/13
HOWARD SOIL CONSERVATION DISTRICT DATE

NOTE: ADDITIONAL SILT FENCE AND/OR "SUPER" SILT FENCE IS TO BE INSTALLED AT THE DIRECTION OF THE SEDIMENT CONTROL INSPECTOR.

UTILITY CONSTRUCTION OUTSIDE OF SEDIMENT CONTROL PRACTICES

1. EXCAVATED TRENCH MATERIAL SHALL BE PLACED ON UPSTREAM SIDE OF TRENCH.
2. IMMEDIATELY FOLLOWING PIPE INSTALLATION THE TRENCH SHALL BE BACKFILLED, COMPACTED AND STABILIZED WITH STONE AT THE END OF EACH WORK DAY.
3. SILT FENCE SHALL BE PLACED IMMEDIATELY DOWNSTREAM OF ANY DISTURBED AREA INTENDED TO REMAIN DISTURBED LONGER THAN ONE (1) WORKING DAY. (SILT FENCE AS PER SCS STANDARD DRAWING - E-15-3)
4. THE CONTRACTOR SHALL DISTURB AND OPEN TRENCH THE MINIMUM PRACTICAL AREA REQUIRED TO ACCOMPLISH THE WORK DESIGNATED FOR EACH DAY.
5. ALL SEDIMENT AND EROSION CONTROL PRACTICES AND VEGETATIVE STABILIZATION SHALL BE IN ACCORDANCE WITH THE "STANDARDS AND SPECIFICATIONS FOR SOIL EROSION AND SEDIMENT CONTROL IN DEVELOPING AREAS". ANY EROSION AND SEDIMENT CONTROL PRACTICES DAMAGED BY UTILITY CONSTRUCTION ARE TO BE REPAIRED IMMEDIATELY.

A:\11133\11133.A0\ENGR\CAD FILES\SHEET FILES\11133_SEC01.DWG Wed, Mar 13, 2013

DEVELOPERS CERTIFICATION:

"I/WE CERTIFY THAT ALL DEVELOPMENT AND CONSTRUCTION WILL BE DONE ACCORDING TO THIS PLAN, AND THAT ANY RESPONSIBLE PERSONNEL INVOLVED IN THE CONSTRUCTION PROJECT WILL HAVE A CERTIFICATE OF ATTENDANCE AT A DEPARTMENT OF THE ENVIRONMENT APPROVED TRAINING PROGRAM FOR THE CONTROL OF SEDIMENT AND EROSION BEFORE BEGINNING THE PROJECT. I ALSO AUTHORIZE PERIODIC ON-SITE INSPECTION BY THE HOWARD SOIL CONSERVATION DISTRICT."

[signature] 3/14/13
PRINT NAME Robert Jenkins DATE

ENGINEER'S CERTIFICATION:

"I CERTIFY THAT THIS PLAN FOR EROSION AND SEDIMENT CONTROL REPRESENTS A PRACTICAL AND WORKABLE PLAN BASED ON MY PERSONAL KNOWLEDGE OF THE SITE CONDITIONS AND THAT IT WAS PREPARED IN ACCORDANCE WITH THE REQUIREMENTS OF THE HOWARD SOIL CONSERVATION DISTRICT."

[signature] 3/21/13
SIGNATURE OF ENGINEER DATE

Melvin C. Beall, Jr., P.E.
PRINT NAME

AS BUILT
NOT REQUIRED
SIGNED [signature]
DAFT McCUNE WALKER, INC.
BY: MICHAEL D. MARTIN
P.L.S.# 21234

STATE OF MARYLAND MICHAEL DAVID MARTIN No. 21234 PROFESSIONAL LAND SURVEYOR

CONTRACT NUMBERS:
EX. WATER: 167-W
EX. SEWER: C-2485-D-S, 2485-D-W&S

3/21/13
Date

STATE OF MARYLAND MELVIN CHARLES BEALL JR. No. 16928 REGISTERED PROFESSIONAL ENGINEER

Professional Engr. No. 16928

PROFESSIONAL CERTIFICATION

I HEREBY CERTIFY THAT THESE DOCUMENTS WERE PREPARED OR APPROVED BY ME, AND THAT I AM A DULY LICENSED PROFESSIONAL ENGINEER UNDER THE LAWS OF THE STATE OF MARYLAND, LICENSE NO. 16928 EXPIRATION DATE: 5/13/14

APPROVED PLANNING BOARD OF HOWARD COUNTY
DATE MARCH 7, 2013

APPROVED: HOWARD COUNTY DEPT. OF PLANNING AND ZONING

[signature] 4/26/13
CHIEF, DIVISION OF LAND DEVELOPMENT DATE

[signature] 4/18/13
CHIEF, DEVELOPMENT ENGINEERING DIVISION DATE

[signature] 4/26/13
DIRECTOR DATE

| Date | No. | Revision Description |
|---|---|---|
| 10-22-14 | 2 | SHOW ADDITIONAL SSF/LOD & REVISED DRAINS |
| 11-28-12 | | REPLACES ALL SHEETS OF ORIGINAL SDP 73-23C |

REVISED SITE DEVELOPMENT PLAN

# THE ROUSE BUILDING RENOVATION

OWNER/DEVELOPER:
CLOVER ACQUISTIONS LLC
C/O THE HOWARD HUGHES CORPORATION
P.O. BOX 833 COLUMBIA, MD 21044-0833

DMW
DAFT McCUNE WALKER INC
200 EAST PENNSYLVANIA TOWSON, MD 21286
P: 410 296 3333 F: 410 296 4705 WWW.DMW.COM
A TEAM OF LAND PLANNERS, LANDSCAPE ARCHITECTS, ENGINEERS, SURVEYORS & ENVIRONMENTAL PROFESSIONALS

AREA
TAX MAP 36 GRID 2 PART OF PARCEL 321, LOT 18
ELECTION DISTRICT 5TH ZONE NT

TITLE
PROPOSED CONDITIONS SEDIMENT AND EROSION CONTROL PLAN
AS BUILT

| | | | | |
|---|---|---|---|---|
| Des. By | GDT/MCB | Scale | 1"=30' | Proj. No. 11133.A |
| Drn. By | RLV | Date | 3/13/13 | 12 of 24 |
| Chk. By | GDT/MCB | Approved | | |

GP-13-040 SDP 73-23C

| EX. DRAINAGE AREA | | |
|---|---|---|
| DA NO. | SF | AC |
| 1 | 24,308 | 0.5580 |
| 2 | 6,340 | 0.1456 |
| 3 | 24,014 | 0.5513 |
| 4 | 33,411 | 0.7670 |
| 5 | 20,177 | 0.4632 |
| 6 | 12,581 | 0.2888 |
| 7 | 22,510 | 0.5168 |
| 8 | 16,283 | 0.3738 |
| 9 | 11,461 | 0.2631 |
| 10 | 2,448 | 0.0562 |
| 11 | 1,891 | 0.0434 |
| 12 | 3,770 | 0.0865 |
| 13 | 874 | 0.0201 |
| 14 | 12,732 | 0.2923 |
| 2 19 | 20,150 | 0.4625 |

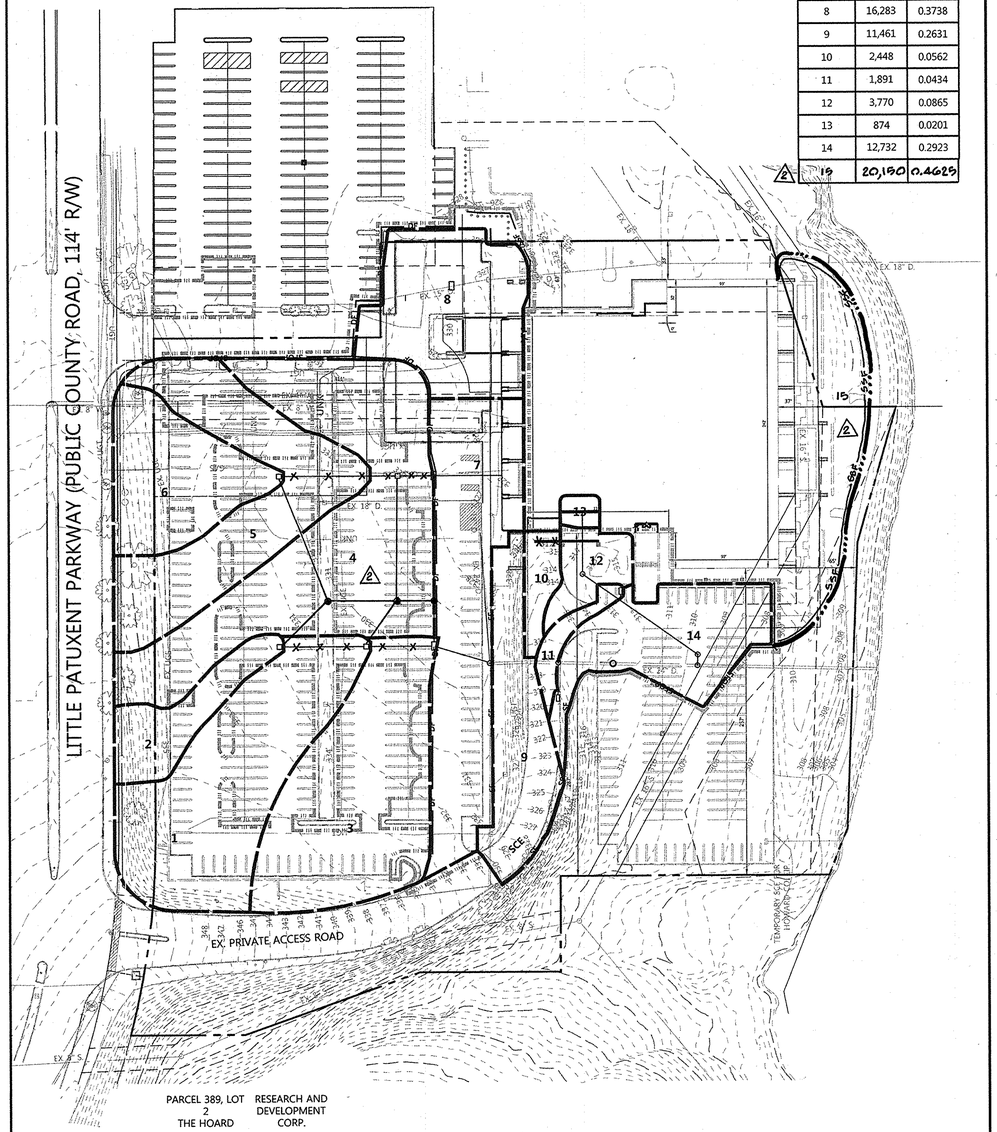


EXISTING DRAINAGE AREAS
SCALE: 1"=60'

| PR. DRAINAGE AREA | | |
|---|---|---|
| DA NO. | SF | AC |
| 1 | 27,864 | 0.6397 |
| 2 | 12,581 | 0.2888 |
| 3 | 25,987 | 0.5966 |
| 4 | 42,202 | 0.9688 |
| 5 | 19,328 | 0.4437 |
| 6 | 19,935 | 0.4576 |
| 7 | 6,280 | 0.1442 |
| 8 | 6,890 | 0.1582 |
| 9 | 9,344 | 0.2145 |
| 10 | 3,223 | 0.0740 |
| 11 | 1,547 | 0.0355 |
| 12 | 2,420 | 0.0556 |
| 13 | 11,222 | 0.2576 |
| 2 14 | 20,150 | 0.4625 |

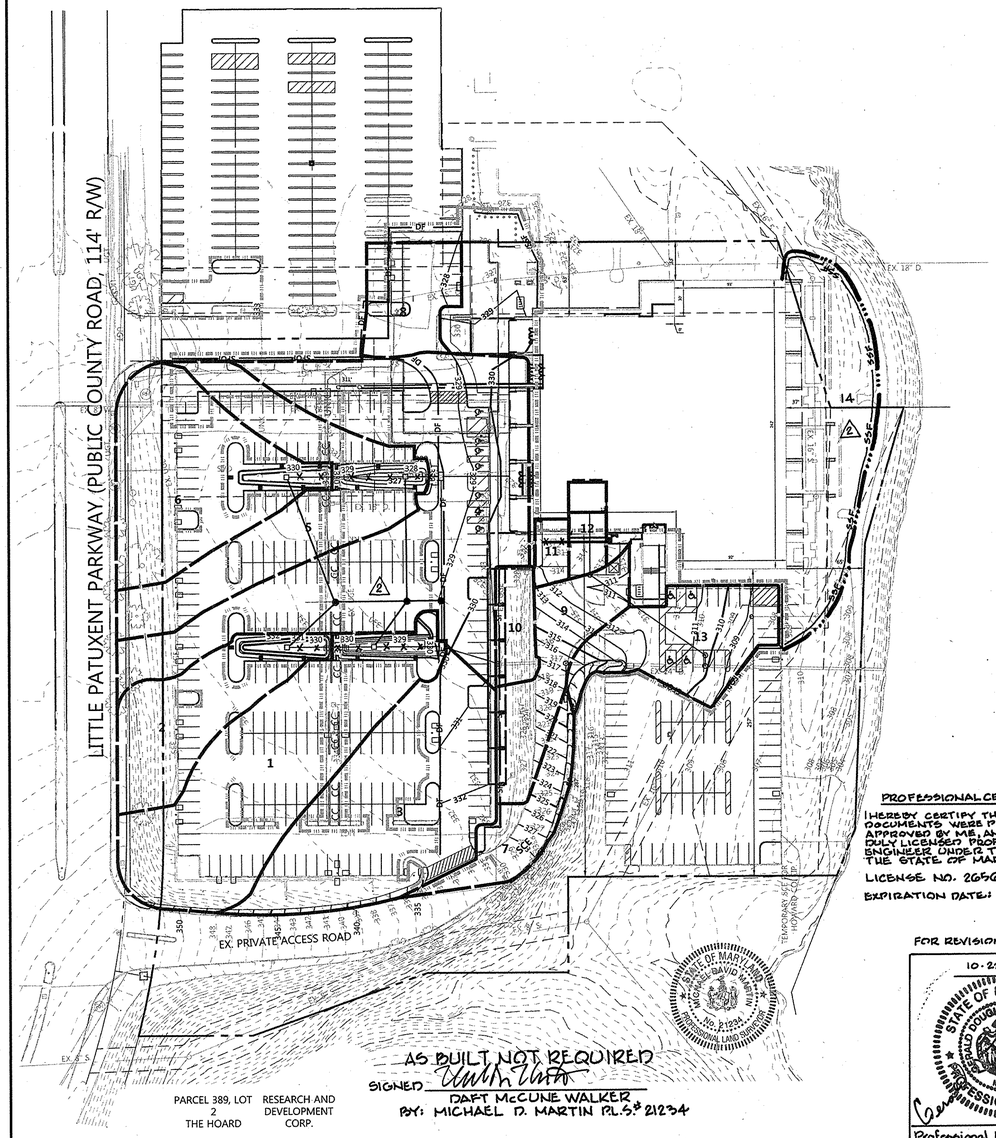


AS BUILT NOT REQUIRED
SIGNED _____
DAFT McCUNE WALKER
BY: MICHAEL D. MARTIN P.E.'S # 21234

AS BUILT CERTIFICATION FOR PSWM
NOTE: THERE IS NO "AS-BUILT" INFORMATION PROVIDED ON THIS SHEET.
SIGNED: _____ P.E.# 26569
GERALD D. TURNBAUGH AS-BUILT DATE 9-2014

PROPOSED DRAINAGE AREAS
SCALE: 1"=60'

PROFESSIONAL CERTIFICATION

I HEREBY CERTIFY THAT THESE DOCUMENTS WERE PREPARED OR APPROVED BY ME, AND THAT I AM A DULY LICENSED PROFESSIONAL ENGINEER UNDER THE LAWS OF THE STATE OF MARYLAND. LICENSE NO. 26569 EXPIRATION DATE: 7-18-15

FOR REVISION NO. 2 ONLY
10-22-14
STATE OF MARYLAND GERALD DOUGLAS TURNBAUGH NO. 26569 PROFESSIONAL ENGINEER
Professional Engr. No. 26569

CONTRACT NUMBERS:
EX. WATER: 167-W
EX. SEWER: C-2485-D-S, 2485-D-W&S

3/21/13
Date
STATE OF MARYLAND GERALD DOUGLAS TURNBAUGH NO. 19931 PROFESSIONAL ENGINEER
Professional Engr. No. 19931

PROFESSIONAL CERTIFICATION

I HEREBY CERTIFY THAT THESE DOCUMENTS WERE PREPARED OR APPROVED BY ME, AND THAT I AM A DULY LICENSED PROFESSIONAL ENGINEER UNDER THE LAWS OF THE STATE OF MARYLAND LICENSE NO. 19931 EXPIRATION DATE: 5/13/14

THIS DEVELOPMENT PLAN IS APPROVED FOR SOIL EROSION AND SEDIMENT CONTROL BY THE HOWARD SOIL CONSERVATION DISTRICT
HOWARD SOIL CONSERVATION DISTRICT 4/9/13 DATE

APPROVED PLANNING BOARD OF HOWARD COUNTY
DATE MARCH 7, 2013

APPROVED: HOWARD COUNTY DEPT. OF PLANNING AND ZONING
CHIEF, DIVISION OF LAND DEVELOPMENT 4/26/13 DATE
CHIEF, DEVELOPMENT ENGINEERING DIVISION 4/18/13 DATE
DIRECTOR 4/26/13 DATE

| Date | No. | Revision Description |
|---|---|---|
| 10-22-14 | 2 | ADD SSF/LOD & SHOW REVISED GRADING |
| 11-28-12 | | REPLACES ALL SHEETS OF ORIGINAL SDP 73-23C |

REVISED SITE DEVELOPMENT PLAN

# THE ROUSE BUILDING RENOVATION

OWNER/DEVELOPER:
CLOVER ACQUISTIONS LLC
C/O THE HOWARD HUGHES CORPORATION
P.O. BOX 833 COLUMBIA, MD 21044-0833

DMW
DAFT McCUNE WALKER INC
200 EAST PENNSYLVANIA TOWSON, MD 21286
P: 410 296 3333 F: 410 296 4705 WWW.DMW.COM
A TEAM OF LAND PLANNERS, LANDSCAPE ARCHITECTS, ENGINEERS, SURVEYORS & ENVIRONMENTAL PROFESSIONALS

AREA
TAX MAP 36 GRID 2 PART OF PARCEL 321, LOT 18
ELECTION DISTRICT 5TH ZONE NT

TITLE
SEDIMENT AND EROSION CONTROL
DRAINAGE AREA MAPS
AS BUILT

| | | | |
|---|---|---|---|
| Des. By GDT/MCB | Scale 1"=60' | | Proj. No. 11133.A |
| Drn. By RLV | Date 3/19/13 | | 13 of 24 |
| Chk. By GDT/MCB | Approved | | |

GP-13-040 SDP 73-23C

A:\11133\11133_AO\ENGR\CAD FILES\SHEET FILES\11133_SEC05.DWG Tue, Mar 19, 2013

STANDARD SEDIMENT CONTROL NOTES

1. A MINIMUM OF 48 HOURS NOTICE MUST BE GIVEN TO THE HOWARD COUNTY DEPARTMENT OF INSPECTIONS, AND PERMITS, SEDIMENT CONTROL DIVISION PRIOR TO THE START OF ANY CONSTRUCTION (410-313-1855).
2. ALL VEGETATIVE AND STRUCTURAL PRACTICES ARE TO BE INSTALLED ACCORDING TO THE PROVISIONS OF THIS PLAN AND ARE TO BE IN CONFORMANCE WITH THE MOST CURRENT "MARYLAND STANDARDS AND SPECIFICATIONS FOR SOIL EROSION AND SEDIMENT CONTROL" AND REVISIONS THERETO.
3. FOLLOWING INITIAL SOIL DISTURBANCE OR RE-DISTURBANCE, PERMANENT OR TEMPORARY STABILIZATION SHALL BE COMPLETED WITHIN:
   A. SEVEN (7) CALENDAR DAYS FOR ALL PERIMETER SEDIMENT CONTROL STRUCTURES, DIKES, PERIMETER SLOPES AND ALL SLOPES GREATER THAN 3:1.
   B. FOURTEEN (14) DAYS AS TO ALL OTHER DISTURBED OF GRADED AREAS ON THE PROJECT SITE.
4. ALL SEDIMENT TRAPS/BASIN SHOWN MUST BE FENCED AND WARNING SIGNS POSTED AROUND THEIR PERIMETER IN ACCORDANCE WITH VOL. 1, CHAPTER 12 OF THE "HOWARD COUNTY DESIGN MANUAL", STORM DRAINAGE.
5. ALL DISTURBED AREAS MUST BE STABILIZED WITHIN THE TIME PERIOD SPECIFIED ABOVE IN ACCORDANCE WITH THE "1994 MARYLAND STANDARDS AND SPECIFICATIONS FOR SOIL EROSION AND SEDIMENT CONTROL" FOR PERMANENT SEEDING (SEC. 51), SOD (SEC. 54), TEMPORARY SEEDING (SEC. 50), AND MULCHING (SEC. 52). TEMPORARY STABILIZATION WITH MULCH ALONE CAN ONLY BE DONE WHEN RECOMMENDED SEEDING DATES DO NOT ALLOW FOR PROPER GERMINATION AND ESTABLISHMENT OF GRASSES.
6. ALL SEDIMENT CONTROL STRUCTURES ARE TO REMAIN IN PLACE AND ARE TO BE MAINTAINED IN OPERATIVE CONDITION UNTIL PERMISSION FOR THEIR REMOVAL HAS BEEN OBTAINED FROM THE HOWARD COUNTY SEDIMENT CONTROL INSPECTOR.
7. SITE ANALYSIS:
   TOTAL AREA OF SITE: 7.504 ACRES +/- 119,837 SF or 2.75 Ac. +/-
   TOTAL AREA DISTURBED: ~~100,471 S.F. OR 2.31 ACRES +/-~~ 2
   AREA TO BE ROOFED OR PAVED: 70,000 S.F. OR 1.61 ACRES +/-
   AREA TO BE VEGETATIVELY STABILIZED: ~~30,471 S.F. OR 0.6995 ACRES +/-~~ 49,837 SF or 1.14 Ac. +/-
   TOTAL CUT: N/A
   TOTAL FILL: N/A
   OFF-SITE WASTE/BORROW AREA LOCATION:
8. ANY SEDIMENT CONTROL PRACTICE WHICH IS DISTURBED BY GRADING ACTIVITY FOR PLACEMENT OF UTILITIES MUST BE REPAIRED ON THE SAME DAY OF DISTURBANCE.
9. ADDITIONAL SEDIMENT CONTROLS MUST BE PROVIDED, IF DEEMED NECESSARY BY THE HOWARD COUNTY SEDIMENT CONTROL INSPECTOR.
10. ON ALL SITES WITH DISTURBED AREAS IN EXCESS OF 2 ACRES, APPROVAL OF THE INSPECTION AGENCY SHALL BE REQUESTED UPON COMPLETION OF INSTALLATION OF PERIMETER EROSION AND SEDIMENT CONTROLS, BUT BEFORE PROCEEDING WITH ANY OTHER EARTH DISTURBANCE OR GRADING. OTHER BUILDING OR GRADING INSPECTION APPROVALS MAY NOT BE AUTHORIZED UNTIL THIS INITIAL APPROVAL BY THE INSPECTION AGENCY IS MADE.
11. TRENCHING FOR THE CONSTRUCTION OF UTILITIES IS LIMITED TO THREE PIPE LENGTHS OR THAT WHICH SHALL BE BACK-FILLED AND STABILIZED WITHIN ONE WORKING DAY, WHICHEVER IS SHORTER.

SEQUENCE OF CONSTRUCTION

1. OBTAIN A GRADING PERMIT FOR THE PROPOSED WORK. NOTIFY THE HOWARD COUNTY DEPARTMENT OF PERMITS AND LICENSES (DILP) AT LEAST 48 HOURS PRIOR TO BEGINNING WORK. (2 DAYS)
2. INSTALL THE STABILIZED CONSTRUCTION ENTRANCE (SCE) AND PERIMETER CONTROLS; SUPER SILT FENCE (SSF) AND DIVERSION FENCE (DF) AND INLET PROTECTION ON EXISTING INLETS AS SHOWN ON THE PLANS. (5 DAYS)

2.A. IF NECESSARY, AN ONSITE STOCKPILE AREA WILL BE LOCATED WITHIN THE LIMIT OF DISTURBANCE WITH THE COORDINATION AND DISCRETION OF THE HOWARD COUNTY SEDIMENT CONTROL INSPECTOR AND THE GENERAL CONTRACTOR.

3.A. WITH PERMISSION FROM THE SEDIMENT CONTROL INSPECTOR, INSTALL PROPOSED STORM DRAIN SYSTEM IN UPPER LEVEL PARKING LOT FROM PROPOSED M-5, I-6, I-7, I-8, I-9, I-10 & I-11. DO NOT INSTALL M-5 AT THIS TIME BUT RATHER START PROPOSED PIPE SHORT OF EXISTING MANHOLE (EX. M-5) ALLOWING EXISTING STORM DRAIN SYSTEM TO REMAIN ACTIVE. ALSO, WHILE INSTALLING PIPE BETWEEN I-6 & I-9, LEAVE A GAP WHERE PIPE CROSSES EXISTING 18" STORM DRAIN ALLOWING IT TO REMAIN ACTIVE. REFER TO UTILITY PLAN & PROFILE DRAWINGS FOR THIS CONSTRUCTION. ALSO, REFER TO "UTILITY CONSTRUCTION OUTSIDE SEDIMENT CONTROL PRACTICES" NOTE FOR TEMPORARY STABILIZATION ON EXISTING CONDITIONS SEDIMENT AND EROSION CONTROL PLAN DRAWING. ONCE ABOVE NOTED STORM DRAIN IS COMPLETED INSTALL INLET PROTECTION AROUND NEWLY CONSTRUCTED INLETS AND REMOVE EX.-M5 AND INSTALL PROPOSED M-5 AND CONNECT TO NEWLY INSTALLED 24"DRAIN PIPE ABANDONING ORIGINAL EXISTING 24" PIPE UP TO EX. I-16. AT THE SAME TIME, BETWEEN I-6 & I-9 REMOVE THE ORIGINAL EXISTING 18" PIPE CROSSING AND COMPLETE THE PROPOSED PIPE CONNECTION TO I-9. REMOVE THE EXISTING 18" PIPE TO EX. I-16 AND REINSTALL A 15" TEMPORARY PIPE FROM EX. I-16 TO PROPOSED 18" PIPE WITH A FIELD CONNECTION (SEE PROFILE ON SHEET 10 OF 21). IMMEDIATELY REMOVE EX. I-17 AND DIRECT ITS RUNOFF TO I-10. IMMEDIATELY INSTALL DIVERSION FENCE TO I-6 & I-9 AS SHOWN ON PLAN VIEW OF DRAWING. (8 DAYS)

3.B. INSTALL PROPOSED STORM DRAIN SYSTEM IN LOWER LEVEL LOADING DOCK AREA FROM M-1, M-2, WYE-1, I-1, M-3, M-4, I-5. REFER TO UTILITY PLAN & PROFILE DRAWINGS FOR THIS CONSTRUCTION. ALSO, REFER TO "UTILITY CONSTRUCTION OUTSIDE SEDIMENT CONTROL PRACTICES" NOTE FOR TEMPORARY STABILIZATION ON EXISTING CONDITIONS SEDIMENT AND EROSION CONTROL PLAN DRAWING. INSTALL INLET PROTECTION AROUND NEWLY CONSTRUCTED INLETS. ALSO, INSTALL PROPOSED SANITARY SYSTEM FROM EX. SMH-1THROUGH CO-10, AS WELL AS, PROPOSED PROCEPTOR GREASE INTERCEPTOR SYSTEM. EXCAVATE LOWER LEVEL LOADING DOCK AREA WITHIN LIMIT OF DISTURBANCE TO PROPOSED SUBGRADE AND IMMEDIATELY STABILIZE WITH STONE SUB-BASE MATERIAL. (4 WEEKS)

4. UPON COMPLETION OF THE UPPER LEVEL STORM DRAIN CONSTRUCTION AND ASSOCIATED CONTROL PRACTICES AND WITH THE PERMISSION OF THE SEDIMENT CONTROL INSPECTOR, BEGIN SAW-CUTTING OPERATIONS AND EXCAVATION OF RECONFIGURED LANDSCAPE ISLANDS IN UPPER PARKING ABOVE THE NEWLY INSTALLED SUPER FENCE DIVERSIONS TO I-6 & I-9. CLEAR, REMOVE AND EXCAVATE TO SUBGRADE THE EXISTING LANDSCAPE I ISLANDS & ASSOCIATED EXISTING CURB & GUTTER AND IMMEDIATELY STABILIZE WITH STONE SUB-BASE MATERIAL. INSTALL NEW CURB & GUTTER AROUND LANDSCAPE ISLANDS AND MICRO-BIORETENTION FACILITIES. INSTALL CURB OPENINGS AROUND MICRO-BIORENTENTION FACILITIES AS SHOWN ON APPROVED STORMWATER MANAGEMENT PLANS. (2 WEEKS)
5. BRING BUILDING FRONTAGE, PARKING, AND PRIMARY DRIVE ISLE TO GRADE. DURING THIS GRADING OPERATION PROVIDE POSITIVE DRAINAGE TO EX. I-16 & EX. I-18 UNTIL RUNOFF CAN BE REDIRECTED TO I-6, I-9 & I-12. INSTALL I-12 AND PROVIDE INLET PROTECTION. ONCE RUNOFF IS DIRECTED TO I-6, I-9 & I-12 AND PRIOR TO THE PLACEMENT OF STONE SUB-BASE IN THIS AREA, CONVERT EX. I-18 TOP GRATE TO A MANHOLE FRAME & COVER. ALSO, REMOVE/ABANDONED EX. I-16 AND TEMPORARY 15" PIPE. REMOVE SUPER FENCE DIVERSION CONVEYING RUNOFF TO I-6 & I-9. (2 WEEKS)
6. BEGIN FINAL PAVING WITHIN THE UPPER PARKING LOT AREA. (4 DAYS)
7. INSTALL NEW CURB AND GUTTER, AS WELL AS, LOADING DOCK AND DUMPSTER PAD CONCRETE SLABS. FINALIZE TRENCH DRAIN GRATE INSTALLATION , INLETS I-2, I-3 AND I-4. REFER TO STORM DRAIN PROFILE SHEET 10 OF 21. (1 WEEK)
8. BEGIN FINAL PAVING OPERATIONS IN LOWER LEVEL AREAS WITHIN LIMIT OF DISTURBANCE. FINE GRADE OVERALL SITE AND INSTALL PERMANENT SEED AND MULCH ON LAWN AND LANDSCAPE ISLAND AREAS. (1 WEEK)
9. INSTALL BIO-RETENTION FACILITIES. REFER TO APPROVED STORMWATER MANAGEMENT PLANS AND ESD SPECIFIC CONSTRUCTION SEQUENCE . PRIOR TO BECOMING ACTIVE, IT MAY BE NECESSARY TO DEWATER SEDIMENT LADEN PONDING AREAS. UTILIZE PORTABLE SEDIMENT TANK AND DISCHARGE TO A STABILIZED OUTLET IN A NON-EROSIVE MANNER. REMOVE ANY ACCUMULATED SEDIMENT (SPOIL) AND TAKE TO A SITE WITH AN APPROVED OPEN GRADING PERMIT AND AN APPROVED SEDIMENT CONTROL PLAN (2 WEEKS).
10. INSTALL PARKING SPACE STRIPING (2 DAYS)
11. UPON STABILIZATION OF THE SITE AND WITH PERMISSION OF THE SEDIMENT CONTROL INSPECTOR REMOVE ALL REMAINING SEDIMENT CONTROL DEVICES AND STABILIZE THOSE AREAS DISTURBED BY THIS PRACTICE. (2 DAYS)

B-4 STANDARDS AND SPECIFICATIONS FOR VEGETATIVE STABILIZATION

DEFINITION
USING VEGETATION AS COVER TO PROTECT EXPOSED SOIL FROM EROSION.

PURPOSE
TO PROMOTE THE ESTABLISHMENT OF VEGETATION ON EXPOSED SOIL.

CONDITIONS WHERE PRACTICE APPLIES
ON ALL DISTURBED AREAS NOT STABILIZED BY OTHER METHODS. THIS SPECIFICATION IS DIVIDED INTO SECTIONS ON INCREMENTAL STABILIZATION; SOIL PREPARATION, SOIL AMENDMENTS AND TOPSOILING; SEEDING AND MULCHING; TEMPORARY STABILIZATION; AND PERMANENT STABILIZATION.

EFFECTS ON WATER QUALITY AND QUANTITY
STABILIZATION PRACTICES ARE USED TO PROMOTE THE ESTABLISHMENT OF VEGETATION ON EXPOSED SOIL. WHEN SOIL IS STABILIZED WITH VEGETATION, THE SOIL IS LESS LIKELY TO ERODE AND MORE LIKELY TO ALLOW INFILTRATION OF RAINFALL, THEREBY REDUCING SEDIMENT LOADS AND RUNOFF TO DOWNSTREAM AREAS. PLANTING VEGETATION IN DISTURBED AREAS WILL HAVE AN EFFECT ON THE WATER BUDGET, ESPECIALLY ON VOLUMES AND RATES OF RUNOFF, INFILTRATION, EVAPORATION, TRANSPIRATION, PERCOLATION, AND GROUNDWATER RECHARGE. OVER TIME, VEGETATION WILL INCREASE ORGANIC MATTER CONTENT AND IMPROVE THE WATER HOLDING CAPACITY OF THE SOIL AND SUBSEQUENT PLANT GROWTH. VEGETATION WILL HELP REDUCE THE MOVEMENT OF SEDIMENT, NUTRIENTS, AND OTHER CHEMICALS CARRIED BY RUNOFF TO RECEIVING WATERS. PLANTS WILL ALSO HELP PROTECT GROUNDWATER SUPPLIES BY ASSIMILATING THOSE SUBSTANCES PRESENT WITHIN THE ROOT ZONE.
SEDIMENT CONTROL PRACTICES MUST REMAIN IN PLACE DURING GRADING, SEEDBED PREPARATION, SEEDING, MULCHING, AND VEGETATIVE ESTABLISHMENT.

ADEQUATE VEGETATIVE ESTABLISHMENT
INSPECT SEEDED AREAS FOR VEGETATIVE ESTABLISHMENT AND MAKE NECESSARY REPAIRS, REPLACEMENTS, AND RESEEDINGS WITHIN THE PLANTING SEASON.

1. ADEQUATE VEGETATIVE STABILIZATION REQUIRES 95 PERCENT GROUNDCOVER.
2. IF AN AREA HAS LESS THAN 40 PERCENT GROUNDCOVER, RESTABILIZE FOLLOWING THE ORIGINAL RECOMMENDATIONS FOR LIME, FERTILIZER, SEEDBED PREPARATION, AND SEEDING.
3. IF AN AREA HAS BETWEEN 40 AND 94 PERCENT GROUNDCOVER, OVER-SEED AND FERTILIZE USING HALF OF THE RATES ORIGINALLY SPECIFIED.
4. MAINTENANCE FERTILIZER RATES FOR PERMANENT SEEDING ARE SHOWN IN TABLE B.6.

TABLE B.6: MAINTENANCE FERTILIZATION FOR PERMANENT SEEDING

| SEEDING MIXTURE | TYPE | LB/AC | LB/1000 SF | TIME | MOWING |
|---|---|---|---|---|---|
| TALL FESCUE MAKES UP 70 PERCENT OR MORE OF COVER | 10-10-10 OR 30-10-10 | 500<br>400 | 11.5<br>9.2 | YEARLY OR AS NEEDED. FALL | NOT CLOSER THAN 3 INCHES, IF OCCASIONAL MOWING IS DESIRED. |
| BIRDSFOOT TREFOIL | 0-20-0 | 400 | 9.2 | SPRING, THE YEAR FOLLOWING ESTABLISHMENT, AND EVERY 4 TO 5 YEARS, THEREAFTER | MOW NO CLOSER THAN 2 INCHES. |
| FAIRLY UNIFRM STAND OF TALL FESCUE OR BIRDSFOOT TREFOIL | 5-10-10 | 500 | 11.5 | FALL, THE YEAR FOLLOWING ESTABLISHEMENT, AND EVERY 4 TO 5 YEARS, THEREAFTER | NOT REQUIRED, NO CLOSER THAN 4 INCHES IN THE FALL AFTER SEED HAS MATURED. |
| WEEPING LOVEGRASS FAIRLY UNIFORMA PLANT DISTRIBUTION | 5-10-10 | 500 | 11 | SPRING, THE YEAR FOLLOWING ESTABLISHMENT, AND EVERY 3 TO 4 YEARS, THEREAFTER. | NOT REQUIRED, NOT CLOSER THAN 4 INCHES IN FALL AFTER SEED HAS MATURED. |
| RED & CHEWINGS FESCUE, KENTUCKY BLUEGRASS, HARD FESCUE MIXTURES | 10/10/2020 | 250<br>100 | 5.8<br>2.3 | SEPTEMBER, 30 DAYS LATER. DECEMBER, MAY 20, JUNE 30, IF NEEDED. | MOW NO CLOSER THAN 2 INCHES FOR RED FESCUE AND KENTUCKY BLUEGRASS, 3 INCHES FOR FESCUE. |

B-4-2 STANDARDS AND SPECIFICATIONS FOR SOIL PREPARATION, TOPSOILING, AND SOIL AMENDMENTS

DEFINITION
THE PROCESS OF PREPARING THE SOILS TO SUSTAIN ADEQUATE VEGETATIVE STABILIZATION.

PURPOSE
TO PROVIDE A SUITABLE SOIL MEDIUM FOR VEGETATIVE GROWTH.

CONDITIONS WHERE PRACTICE APPLIES
WHERE VEGETATIVE STABILIZATION IS TO BE ESTABLISHED.

CRITERIA
A. SOIL PREPARATION
1. TEMPORARY STABILIZATION
   A. SEEDBED PREPARATION CONSISTS OF LOOSENING SOIL TO A DEPTH OF 3 TO 5 INCHES BY MEANS OF SUITABLE AGRICULTURAL OR CONSTRUCTION EQUIPMENT, SUCH AS DISC HARROWS OR CHISEL PLOWS OR RIPPERS MOUNTED ON CONSTRUCTION EQUIPMENT. AFTER THE SOIL IS LOOSENED, IT MUST NOT BE ROLLED OR DRAGGED SMOOTH BUT LEFT IN THE ROUGHENED CONDITION. SLOPES 3:1 OR FLATTER ARE TO BE TRACKED WITH RIDGES RUNNING PARALLEL TO THE CONTOUR OF THE SLOPE.
   B. APPLY FERTILIZER AND LIME AS PRESCRIBED ON THE PLANS.
   C. INCORPORATE LIME AND FERTILIZER INTO THE TOP 3 TO 5 INCHES OF SOIL BY DISKING OR OTHER SUITABLE MEANS.
2. PERMANENT STABILIZATION
   A. A SOIL TEST IS REQUIRED FOR ANY EARTH DISTURBANCE OF 5 ACRES OR MORE. THE MINIMUM SOIL CONDITIONS REQUIRED FOR PERMANENT VEGETATIVE ESTABLISHMENT ARE:
      I. SOIL PH BETWEEN 6.0 AND 7.0.
      II. SOLUBLE SALTS LESS THAN 500 PARTS PER MILLION (PPM).
      III. SOIL CONTAINS LESS THAN 40 PERCENT CLAY BUT ENOUGH FINE GRAINED MATERIAL (GREATER THAN 30 PERCENT SILT PLUS CLAY) TO PROVIDE THE CAPACITY TO HOLD A MODERATE AMOUNT OF MOISTURE. AN EXCEPTION: IF LOVEGRASS WILL BE PLANTED, THEN A SANDY SOIL (LESS THAN 30 PERCENT SILT PLUS CLAY) WOULD BE ACCEPTABLE.
      IV. SOIL CONTAINS 1.5 PERCENT MINIMUM ORGANIC MATTER BY WEIGHT.
      V. SOIL CONTAINS SUFFICIENT PORE SPACE TO PERMIT ADEQUATE ROOT PENETRATION.
   B. APPLICATION OF AMENDMENTS OR TOPSOIL IS REQUIRED IF ON-SITE SOILS DO NOT MEET THE ABOVE CONDITIONS.
   C. GRADED AREAS MUST BE MAINTAINED IN A TRUE AND EVEN GRADE AS SPECIFIED ON THE APPROVED PLAN, THEN SCARIFIED OR OTHERWISE LOOSENED TO A DEPTH OF 3 TO 5 INCHES.
   D. APPLY SOIL AMENDMENTS AS SPECIFIED ON THE APPROVED PLAN OR AS INDICATED BY THE RESULTS OF A SOIL TEST.
   E. MIX SOIL AMENDMENTS INTO THE TOP 3 TO 5 INCHES OF SOIL BY DISKING OR OTHER SUITABLE MEANS. RAKE LAWN AREAS TO SMOOTH THE SURFACE, REMOVE LARGE OBJECTS LIKE STONES AND BRANCHES, AND READY THE AREA FOR SEED APPLICATION. LOOSEN SURFACE SOIL BY DRAGGING WITH A HEAVY CHAIN OR OTHER EQUIPMENT TO ROUGHEN THE SURFACE WHERE SITE CONDITIONS WILL NOT PERMIT NORMAL SEEDBED PREPARATION. TRACK SLOPES 3:1 OR FLATTER WITH TRACKED EQUIPMENT LEAVING THE SOIL IN AN IRREGULAR CONDITION WITH RIDGES RUNNING PARALLEL TO THE CONTOUR OF THE SLOPE. LEAVE THE TOP 1 TO 3 INCHES OF SOIL LOOSE AND FRIABLE. SEEDBED LOOSENING MAY BE UNNECESSARY ON NEWLY DISTURBED AREAS.

B. TOPSOILING
1. TOPSOIL IS PLACED OVER PREPARED SUBSOIL PRIOR TO ESTABLISHMENT OF PERMANENT VEGETATION. THE PURPOSE IS TO PROVIDE A SUITABLE SOIL MEDIUM FOR VEGETATIVE GROWTH. SOILS OF CONCERN HAVE LOW MOISTURE CONTENT, LOW NUTRIENT LEVELS, LOW PH, MATERIALS TOXIC TO PLANTS, AND/OR UNACCEPTABLE SOIL GRADATION.
2. TOPSOIL SALVAGED FROM AN EXISTING SITE MAY BE USED PROVIDED IT MEETS THE STANDARDS AS SET FORTH IN THESE SPECIFICATIONS. TYPICALLY, THE DEPTH OF TOPSOIL TO BE SALVAGED FOR A GIVEN SOIL TYPE CAN BE FOUND IN THE REPRESENTATIVE SOIL PROFILE SECTION IN THE SOIL SURVEY PUBLISHED BY USDA-NRCS.
3. TOPSOILING IS LIMITED TO AREAS HAVING 2:1 OR FLATTER SLOPES WHERE:
   A. THE TEXTURE OF THE EXPOSED SUBSOIL/PARENT MATERIAL IS NOT ADEQUATE TO PRODUCE VEGETATIVE GROWTH.
   B. THE SOIL MATERIAL IS SO SHALLOW THAT THE ROOTING ZONE IS NOT DEEP ENOUGH TO SUPPORT PLANTS OR FURNISH CONTINUING SUPPLIES OF MOISTURE AND PLANT NUTRIENTS.
   C. THE ORIGINAL SOIL TO BE VEGETATED CONTAINS MATERIAL TOXIC TO PLANT GROWTH.
   D. THE SOIL IS SO ACIDIC THAT TREATMENT WITH LIMESTONE IS NOT FEASIBLE.
4. AREAS HAVING SLOPES STEEPER THAN 2:1 REQUIRE SPECIAL CONSIDERATION AND DESIGN.
5. TOPSOIL SPECIFICATIONS: SOIL TO BE USED AS TOPSOIL MUST MEET THE FOLLOWING CRITERIA:
   A. TOPSOIL MUST BE A LOAM, SANDY LOAM, CLAY LOAM, SILT LOAM, SANDY CLAY LOAM, OR LOAMY SAND. OTHER SOILS MAY BE USED IF RECOMMENDED BY AN AGRONOMIST OR SOIL SCIENTIST AND APPROVED BY THE APPROPRIATE APPROVAL AUTHORITY. TOPSOIL MUST NOT BE A MIXTURE OF CONTRASTING TEXTURED SUBSOILS AND MUST CONTAIN LESS THAN 5 PERCENT BY VOLUME OF CINDERS, STONES, SLAG, COARSE FRAGMENTS, GRAVEL, STICKS, ROOTS, TRASH, OR OTHER MATERIALS LARGER THAN 1½ INCHES IN DIAMETER.
   B. TOPSOIL MUST BE FREE OF NOXIOUS PLANTS OR PLANT PARTS SUCH AS BERMUDA GRASS, QUACK GRASS, JOHNSON GRASS, NUT SEDGE, POISON IVY, THISTLE, OR OTHERS AS SPECIFIED.
   C. TOPSOIL SUBSTITUTES OR AMENDMENTS, AS RECOMMENDED BY A QUALIFIED AGRONOMIST OR SOIL SCIENTIST AND APPROVED BY THE APPROPRIATE APPROVAL AUTHORITY, MAY BE USED IN LIEU OF NATURAL TOPSOIL.
6. TOPSOIL APPLICATION
   A. EROSION AND SEDIMENT CONTROL PRACTICES MUST BE MAINTAINED WHEN APPLYING TOPSOIL.
   B. UNIFORMLY DISTRIBUTE TOPSOIL IN A 5 TO 8 INCH LAYER AND LIGHTLY COMPACT TO A MINIMUM THICKNESS OF 4 INCHES. SPREADING IS TO BE PERFORMED IN SUCH A MANNER THAT SODDING OR SEEDING CAN PROCEED WITH A MINIMUM OF ADDITIONAL SOIL PREPARATION AND TILLAGE. ANY IRREGULARITIES IN THE SURFACE RESULTING FROM TOPSOILING OR OTHER OPERATIONS MUST BE CORRECTED IN ORDER TO PREVENT THE FORMATION OF DEPRESSIONS OR WATER POCKETS.
   C. TOPSOIL MUST NOT BE PLACED IF THE TOPSOIL OR SUBSOIL IS IN A FROZEN OR MUDDY CONDITION, WHEN THE SUBSOIL IS EXCESSIVELY WET OR IN A CONDITION THAT MAY OTHERWISE BE DETRIMENTAL TO PROPER GRADING AND SEEDBED PREPARATION.

C. SOIL AMENDMENTS (FERTILIZER AND LIME SPECIFICATIONS)
1. SOIL TESTS MUST BE PERFORMED TO DETERMINE THE EXACT RATIOS AND APPLICATION RATES FOR BOTH LIME AND FERTILIZER ON SITES HAVING DISTURBED AREAS OF 5 ACRES OR MORE. SOIL ANALYSIS MAY BE PERFORMED BY A RECOGNIZED PRIVATE OR COMMERCIAL LABORATORY. SOIL SAMPLES TAKEN FOR ENGINEERING PURPOSES MAY ALSO BE USED FOR CHEMICAL ANALYSES.
2. FERTILIZERS MUST BE UNIFORM IN COMPOSITION, FREE FLOWING AND SUITABLE FOR ACCURATE APPLICATION BY APPROPRIATE EQUIPMENT. MANURE MAY BE SUBSTITUTED FOR FERTILIZER WITH PRIOR APPROVAL FROM THE APPROPRIATE APPROVAL AUTHORITY. FERTILIZERS MUST ALL BE DELIVERED TO THE SITE FULLY LABELED ACCORDING TO THE APPLICABLE LAWS AND MUST BEAR THE NAME, TRADE NAME OR TRADEMARK AND WARRANTY OF THE PRODUCER.
3. LIME MATERIALS MUST BE GROUND LIMESTONE (HYDRATED OR BURNT LIME MAY BE SUBSTITUTED EXCEPT WHEN HYDROSEEDING) WHICH CONTAINS AT LEAST 50 PERCENT TOTAL OXIDES (CALCIUM OXIDE PLUS MAGNESIUM OXIDE). LIMESTONE MUST BE GROUND TO SUCH FINENESS THAT AT LEAST 50 PERCENT WILL PASS THROUGH A #100 MESH SIEVE AND 98 TO 100 PERCENT WILL PASS THROUGH A #20 MESH SIEVE.
4. LIME AND FERTILIZER ARE TO BE EVENLY DISTRIBUTED AND INCORPORATED INTO THE TOP 3 TO 5 INCHES OF SOIL BY DISKING OR OTHER SUITABLE MEANS.
5. WHERE THE SUBSOIL IS EITHER HIGHLY ACIDIC OR COMPOSED OF HEAVY CLAYS, SPREAD GROUND LIMESTONE AT THE RATE OF 4 TO 8 TONS/ACRE (200-400 POUNDS PER 1,000 SQUARE FEET) PRIOR TO THE PLACEMENT OF TOPSOIL.

B-4-3 STANDARDS AND SPECIFICATIONS FOR SEEDING AND MULCHING

DEFINITION
THE APPLICATION OF SEED AND MULCH TO ESTABLISH VEGETATIVE COVER.

PURPOSE
TO PROTECT DISTURBED SOILS FROM EROSION DURING AND AT THE END OF CONSTRUCTION.

CONDITIONS WHERE PRACTICE APPLIES
TO THE SURFACE OF ALL PERIMETER CONTROLS, SLOPES, AND ANY DISTURBED AREA NOT UNDER ACTIVE GRADING.

CRITERIA
A. SEEDING
1. SPECIFICATIONS
   A. ALL SEED MUST MEET THE REQUIREMENTS OF THE MARYLAND STATE SEED LAW. ALL SEED MUST BE SUBJECT TO RE-TESTING BY A RECOGNIZED SEED LABORATORY. ALL SEED USED MUST HAVE BEEN TESTED WITHIN THE 6 MONTHS IMMEDIATELY PRECEDING THE DATE OF SOWING SUCH MATERIAL ON ANY PROJECT. REFER TO TABLE B.4 REGARDING THE QUALITY OF SEED. SEED TAGS MUST BE AVAILABLE UPON REQUEST TO THE INSPECTOR TO VERIFY TYPE OF SEED AND SEEDING RATE.
   B. MULCH ALONE MAY BE APPLIED BETWEEN THE FALL AND SPRING SEEDING DATES ONLY IF THE GROUND IS FROZEN. THE APPROPRIATE SEEDING MIXTURE MUST BE APPLIED WHEN THE GROUND THAWS.
   C. INOCULANTS: THE INOCULANT FOR TREATING LEGUME SEED IN THE SEED MIXTURES MUST BE A PURE CULTURE OF NITROGEN FIXING BACTERIA PREPARED SPECIFICALLY FOR THE SPECIES. INOCULANTS MUST NOT BE USED LATER THAN THE DATE INDICATED ON THE CONTAINER. ADD FRESH INOCULANTS AS DIRECTED ON THE PACKAGE. USE FOUR TIMES THE RECOMMENDED RATE WHEN HYDROSEEDING. NOTE: IT IS VERY IMPORTANT TO KEEP INOCULANT AS COOL AS POSSIBLE UNTIL USED. TEMPERATURES ABOVE 75 TO 80 DEGREES FAHRENHEIT CAN WEAKEN BACTERIA AND MAKE THE INOCULANT LESS EFFECTIVE.
   D. SOD OR SEED MUST NOT BE PLACED ON SOIL WHICH HAS BEEN TREATED WITH SOIL STERILANTS OR CHEMICALS USED FOR WEED CONTROL UNTIL SUFFICIENT TIME HAS ELAPSED (14 DAYS MIN.) TO PERMIT DISSIPATION OF PHYTO-TOXIC MATERIALS.
2. APPLICATION
   A. DRY SEEDING: THIS INCLUDES USE OF CONVENTIONAL DROP OR BROADCAST SPREADERS.
      I. INCORPORATE SEED INTO THE SUBSOIL AT THE RATES PRESCRIBED ON TEMPORARY SEEDING TABLE B.1, PERMANENT SEEDING TABLE B.3, OR SITE-SPECIFIC SEEDING SUMMARIES.
      II. APPLY SEED IN TWO DIRECTIONS, PERPENDICULAR TO EACH OTHER. APPLY HALF THE SEEDING RATE IN EACH DIRECTION. ROLL THE SEEDED AREA WITH A WEIGHTED ROLLER TO PROVIDE GOOD SEED TO SOIL CONTACT.
   B. DRILL OR CULTIPACKER SEEDING: MECHANIZED SEEDERS THAT APPLY AND COVER SEED WITH SOIL.
      I. CULTIPACKING SEEDERS ARE REQUIRED TO BURY THE SEED IN SUCH A FASHION AS TO PROVIDE AT LEAST 1/4 INCH OF SOIL COVERING. SEEDBED MUST BE FIRM AFTER PLANTING.
      II. APPLY SEED IN TWO DIRECTIONS, PERPENDICULAR TO EACH OTHER. APPLY HALF THE SEEDING RATE IN EACH DIRECTION.
   C. HYDROSEEDING: APPLY SEED UNIFORMLY WITH HYDROSEEDER (SLURRY INCLUDES SEED AND FERTILIZER).
      I. IF FERTILIZER IS BEING APPLIED AT THE TIME OF SEEDING, THE APPLICATION RATES SHOULD NOT E EXCEED THE FOLLOWING: NITROGEN, 100 POUNDS PER ACRE TOTAL OF SOLUBLE NITROGEN; P2O5 (PHOSPHOROUS), 200 POUNDS PER ACRE; K2O (POTASSIUM), 200 POUNDS PER ACRE.
      II. LIME: USE ONLY GROUND AGRICULTURAL LIMESTONE (UP TO 3 TONS PER ACRE MAY BE APPLIED BY HYDROSEEDING). NORMALLY, NOT MORE THAN 2 TONS ARE APPLIED BY HYDROSEEDING AT ANY ONE TIME. DO NOT USE BURNT OR HYDRATED LIME WHEN HYDROSEEDING.
      III. MIX SEED AND FERTILIZER ON SITE AND SEED IMMEDIATELY AND WITHOUT INTERRUPTION.
      IV. WHEN HYDROSEEDING DO NOT INCORPORATE SEED INTO THE SOIL.

B. MULCHING
1. MULCH MATERIALS (IN ORDER OF PREFERENCE)
   A. STRAW CONSISTING OF THOROUGHLY THRESHED WHEAT, RYE, OAT, OR BARLEY AND REASONABLY BRIGHT IN COLOR. STRAW IS TO BE FREE OF NOXIOUS WEED SEEDS AS SPECIFIED IN THE MARYLAND SEED LAW AND NOT MUSTY, MOLDY, CAKED, DECAYED, OR EXCESSIVELY DUSTY. NOTE: USE ONLY STERILE STRAW MULCH IN AREAS WHERE ONE SPECIES OF GRASS IS DESIRED.
   B. WOOD CELLULOSE FIBER MULCH (WCFM) CONSISTING OF SPECIALLY PREPARED WOOD CELLULOSE PROCESSED INTO A UNIFORM FIBROUS PHYSICAL STATE.
      I. WCFM IS TO BE DYED GREEN OR CONTAIN A GREEN DYE IN THE PACKAGE THAT WILL PROVIDE AN APPROPRIATE COLOR TO FACILITATE VISUAL INSPECTION OF THE UNIFORMLY SPREAD SLURRY.
      II. WCFM, INCLUDING DYE, MUST CONTAIN NO GERMINATION OR GROWTH INHIBITING FACTORS.
      III. WCFM MATERIALS ARE TO BE MANUFACTURED AND PROCESSED IN SUCH A MANNER THAT THE WOOD CELLULOSE FIBER MULCH WILL REMAIN IN UNIFORM SUSPENSION IN WATER UNDER AGITATION AND WILL BLEND WITH SEED, FERTILIZER AND OTHER ADDITIVES TO FORM A HOMOGENEOUS SLURRY. THE MULCH MATERIAL MUST FORM A BLOTTER-LIKE GROUND COVER, ON APPLICATION, HAVING MOISTURE ABSORPTION AND PERCOLATION PROPERTIES AND MUST COVER AND HOLD GRASS SEED IN CONTACT WITH THE SOIL WITHOUT INHIBITING THE GROWTH OF THE GRASS SEEDLINGS.
      IV. WCFM MATERIAL MUST NOT CONTAIN ELEMENTS OR COMPOUNDS AT CONCENTRATION LEVELS THAT WILL BE PHYTO-TOXIC.
      V. WCFM MUST CONFORM TO THE FOLLOWING PHYSICAL REQUIREMENTS: FIBER LENGTH OF APPROXIMATELY 10 MILLIMETERS, DIAMETER APPROXIMATELY 1 MILLIMETER, PH RANGE OF 4.0 TO 8.5, ASH CONTENT OF 1.6 PERCENT MAXIMUM AND WATER HOLDING CAPACITY OF 90 PERCENT MINIMUM.
2. APPLICATION
   A. APPLY MULCH TO ALL SEEDED AREAS IMMEDIATELY AFTER SEEDING.
   B. WHEN STRAW MULCH IS USED, SPREAD IT OVER ALL SEEDED AREAS AT THE RATE OF 2 TONS PER ACRE TO A UNIFORM LOOSE DEPTH OF 1 TO 2 INCHES. APPLY MULCH TO ACHIEVE A UNIFORM DISTRIBUTION AND DEPTH SO THAT THE SOIL SURFACE IS NOT EXPOSED. WHEN USING A MULCH ANCHORING TOOL, INCREASE THE APPLICATION RATE TO 2.5 TONS PER ACRE.
   C. WOOD CELLULOSE FIBER USED AS MULCH MUST BE APPLIED AT A NET DRY WEIGHT OF 1500 POUNDS PER ACRE. MIX THE WOOD CELLULOSE FIBER WITH WATER TO ATTAIN A MIXTURE WITH A MAXIMUM OF 50 POUNDS OF WOOD CELLULOSE FIBER PER 100 GALLONS OF WATER.
3. ANCHORING
   A. PERFORM MULCH ANCHORING IMMEDIATELY FOLLOWING APPLICATION OF MULCH TO MINIMIZE LOSS BY WIND OR WATER. THIS MAY BE DONE BY ONE OF THE FOLLOWING METHODS (LISTED BY PREFERENCE), DEPENDING UPON THE SIZE OF THE AREA AND EROSION HAZARD:
      I. A MULCH ANCHORING TOOL IS A TRACTOR DRAWN IMPLEMENT DESIGNED TO PUNCH AND ANCHOR MULCH INTO THE SOIL SURFACE A MINIMUM OF 2 INCHES. THIS PRACTICE IS MOST EFFECTIVE ON LARGE AREAS, BUT IS LIMITED TO FLATTER SLOPES WHERE EQUIPMENT CAN OPERATE SAFELY. IF USED ON SLOPING LAND, THIS PRACTICE SHOULD FOLLOW THE CONTOUR.
      II. WOOD CELLULOSE FIBER MAY BE USED FOR ANCHORING STRAW. APPLY THE FIBER BINDER AT A NET DRY WEIGHT OF 750 POUNDS PER ACRE. MIX THE WOOD CELLULOSE FIBER WITH WATER AT A MAXIMUM OF 50 POUNDS OF WOOD CELLULOSE FIBER PER 100 GALLONS OF WATER.
      III. SYNTHETIC BINDERS SUCH AS ACRYLIC DLR (AGRO-TACK), DCA-70, PETROSET, TERRA TAX II, TERRA TACK AR OR OTHER APPROVED EQUAL MAY BE USED. FOLLOW APPLICATION RATES AS SPECIFIED BY THE MANUFACTURER. APPLICATION OF LIQUID BINDERS NEEDS TO BE HEAVIER AT THE EDGES WHERE WIND CATCHES MULCH, SUCH AS IN VALLEYS AND ON CRESTS OF BANKS. USE OF ASPHALT BINDERS IS STRICTLY PROHIBITED.
      IV. LIGHTWEIGHT PLASTIC NETTING MAY BE STAPLED OVER THE MULCH ACCORDING TO MANUFACTURER RECOMMENDATIONS. NETTING IS USUALLY AVAILABLE IN ROLLS 4 TO 15 FEET WIDE AND 300 TO 3,000 FEET LONG.

B-4-4 STANDARDS AND SPECIFICATIONS FOR TEMPORARY STABILIZATION

DEFINITION
TO STABILIZE DISTURBED SOILS WITH VEGETATION FOR UP TO 6 MONTHS.

PURPOSE
TO USE FAST GROWING VEGETATION THAT PROVIDES COVER ON DISTURBED SOILS.

CONDITIONS WHERE PRACTICE APPLIES
EXPOSED SOILS WHERE GROUND COVER IS NEEDED FOR A PERIOD OF 6 MONTHS OR LESS. FOR LONGER DURATION OF TIME, PERMANENT STABILIZATION PRACTICES ARE REQUIRED.

CRITERIA

1. SELECT ONE OR MORE OF THE SPECIES OR SEED MIXTURES LISTED IN TABLE B.1 FOR THE APPROPRIATE PLANT HARDINESS ZONE (FROM FIGURE B.3), AND ENTER THEM IN THE TEMPORARY SEEDING SUMMARY BELOW ALONG WITH APPLICATION RATES, SEEDING DATES AND SEEDING DEPTHS. IF THIS SUMMARY IS NOT PUT ON THE PLAN AND COMPLETED, THEN TABLE B.1 PLUS FERTILIZER AND LIME RATES MUST BE PUT ON THE PLAN.
2. FOR SITES HAVING SOIL TESTS PERFORMED, USE AND SHOW THE RECOMMENDED RATES BY THE TESTING AGENCY. SOIL TESTS ARE NOT REQUIRED FOR TEMPORARY SEEDING.
3. WHEN STABILIZATION IS REQUIRED OUTSIDE OF A SEEDING SEASON, APPLY SEED AND MULCH OR STRAW MULCH ALONE AS PRESCRIBED IN SECTION B-4-3.A.1.B AND MAINTAIN UNTIL THE NEXT SEEDING SEASON.

TEMPORARY SEEDING SUMMARY

| HARDINESS ZONE (FROM FIGURE B.3): 6B<br>SEED MIXTURE (FROM TABLE B.1): | | | | | FERTILIZER RATE (10-20-20) | LIME RATE |
|---|---|---|---|---|---|---|
| NO. | SPECIES | APPLICATION RATE (LB/AC) | SEEDING DATES | SEEDING-DEPTHS | | |
| | ANNUAL RYEGRASS | 40 | MAR. 1 TO MAY 15 AUG. 1 TO OCT. 15 | 0.50" | 436 LB/AC (10 LB/1000 SF) | 2 TONS/AC (90 LB/1000 SF) |
| | FOXTAIL MILLET | 30 | MAY 16 TO JUL 31 | 0.50" | | |

B-4-5 STANDARDS AND SPECIFICATIONS FOR PERMANENT STABILIZATION

DEFINITION
TO STABILIZE DISTURBED SOILS WITH PERMANENT VEGETATION.

PURPOSE
TO USE LONG-LIVED PERENNIAL GRASSES AND LEGUMES TO ESTABLISH PERMANENT GROUND COVER ON DISTURBED SOILS.

CONDITIONS WHERE PRACTICE APPLIES
EXPOSED SOILS WHERE GROUND COVER IS NEEDED FOR 6 MONTHS OR MORE.

CRITERIA
A. SEED MIXTURES
1. GENERAL USE
   A. SELECT ONE OR MORE OF THE SPECIES OR MIXTURES LISTED IN TABLE B.3 FOR THE APPROPRIATE PLANT HARDINESS ZONE (FROM FIGURE B.3) AND BASED ON THE SITE CONDITION OR PURPOSE FOUND ON TABLE B.2. ENTER SELECTED MIXTURE(S), APPLICATION RATES, AND SEEDING DATES IN THE PERMANENT SEEDING SUMMARY. THE SUMMARY IS TO BE PLACED ON THE PLAN.
   B. ADDITIONAL PLANTING SPECIFICATIONS FOR EXCEPTIONAL SITES SUCH AS SHORELINES, STREAM BANKS, OR DUNES OR FOR SPECIAL PURPOSES SUCH AS WILDLIFE OR AESTHETIC TREATMENT MAY BE FOUND IN USDA-NRCS TECHNICAL FIELD OFFICE GUIDE, SECTION 342 - CRITICAL AREA PLANTING.
   C. FOR SITES HAVING DISTURBED AREA OVER 5 ACRES, USE AND SHOW THE RATES RECOMMENDED BY THE SOIL TESTING AGENCY.
   D. FOR AREAS RECEIVING LOW MAINTENANCE, APPLY UREA FORM FERTILIZER (46-0-0) AT 3 ½ POUNDS PER 1000 SQUARE FEET (150 POUNDS PER ACRE) AT THE TIME OF SEEDING IN ADDITION TO THE SOIL AMENDMENTS SHOWN IN THE PERMANENT SEEDING SUMMARY.
2. TURFGRASS MIXTURES
   A. AREAS WHERE TURFGRASS MAY BE DESIRED INCLUDE LAWNS, PARKS, PLAYGROUNDS, AND COMMERCIAL SITES WHICH WILL RECEIVE A MEDIUM TO HIGH LEVEL OF MAINTENANCE.
   B. SELECT ONE OR MORE OF THE SPECIES OR MIXTURES LISTED BELOW BASED ON THE SITE CONDITIONS OR PURPOSE. ENTER SELECTED MIXTURE(S), APPLICATION RATES, AND SEEDING DATES IN THE PERMANENT SEEDING SUMMARY. THE SUMMARY IS TO BE PLACED ON THE PLAN.
      I. KENTUCKY BLUEGRASS: FULL SUN MIXTURE: FOR USE IN AREAS THAT RECEIVE INTENSIVE MANAGEMENT. IRRIGATION REQUIRED IN THE AREAS OF CENTRAL MARYLAND AND EASTERN SHORE. RECOMMENDED CERTIFIED KENTUCKY BLUEGRASS CULTIVARS SEEDING RATE: 1.5 TO 2.0 POUNDS PER 1000 SQUARE FEET. CHOOSE A MINIMUM OF THREE KENTUCKY BLUEGRASS CULTIVARS WITH EACH RANGING FROM 10 TO 35 PERCENT OF THE TOTAL MIXTURE BY WEIGHT.
      II. KENTUCKY BLUEGRASS/PERENNIAL RYE: FULL SUN MIXTURE: FOR USE IN FULL SUN AREAS WHERE RAPID ESTABLISHMENT IS NECESSARY AND WHEN TURF WILL RECEIVE MEDIUM TO INTENSIVE MANAGEMENT. CERTIFIED PERENNIAL RYEGRASS CULTIVARS/CERTIFIED KENTUCKY BLUEGRASS SEEDING RATE: 2 POUNDS MIXTURE PER 1000 SQUARE FEET. CHOOSE A MINIMUM OF THREE KENTUCKY BLUEGRASS CULTIVARS WITH EACH RANGING FROM 10 TO 35 PERCENT OF THE TOTAL MIXTURE BY WEIGHT.
      III. TALL FESCUE/KENTUCKY BLUEGRASS: FULL SUN MIXTURE: FOR USE IN DROUGHT PRONE AREAS AND/OR FOR AREAS RECEIVING LOW TO MEDIUM MANAGEMENT IN FULL SUN TO MEDIUM SHADE. RECOMMENDED MIXTURE INCLUDES; CERTIFIED TALL FESCUE CULTIVARS 95 TO 100 PERCENT, CERTIFIED KENTUCKY BLUEGRASS CULTIVARS 0 TO 5 PERCENT. SEEDING RATE: 5 TO 8 POUNDS PER 1000 SQUARE FEET. ONE OR MORE CULTIVARS MAY BE BLENDED.
      IV. KENTUCKY BLUEGRASS/FINE FESCUE: SHADE MIXTURE: FOR USE IN AREAS WITH SHADE IN BLUEGRASS LAWNS. FOR ESTABLISHMENT IN HIGH QUALITY, INTENSIVELY MANAGED TURF AREA. MIXTURE INCLUDES; CERTIFIED KENTUCKY BLUEGRASS CULTIVARS 30 TO 40 PERCENT AND CERTIFIED FINE FESCUE AND 60 TO 70 PERCENT. SEEDING RATE: 1½ TO 3 POUNDS PER 1000 SQUARE FEET.
      NOTES:
      SELECT TURFGRASS VARIETIES FROM THOSE LISTED IN THE MOST CURRENT UNIVERSITY OF MARYLAND PUBLICATION, AGRONOMY MEMO #77, "TURFGRASS CULTIVAR RECOMMENDATIONS FOR MARYLAND" CHOOSE CERTIFIED MATERIAL. CERTIFIED MATERIAL IS THE BEST GUARANTEE OF CULTIVAR PURITY. THE CERTIFICATION PROGRAM OF THE MARYLAND DEPARTMENT OF AGRICULTURE, TURF AND SEED SECTION, PROVIDES A RELIABLE MEANS OF CONSUMER PROTECTION AND ASSURES A PURE GENETIC LINE
   C. IDEAL TIMES OF SEEDING FOR TURF GRASS MIXTURES
      WESTERN MD: MARCH 15 TO JUNE 1, AUGUST 1 TO OCTOBER 1 (HARDINESS ZONES: 5B, 6A)
      CENTRAL MD: MARCH 1 TO MAY 15, AUGUST 15 TO OCTOBER 15 (HARDINESS ZONE: 6B)
      SOUTHERN MD, EASTERN SHORE: MARCH 1 TO MAY 15, AUGUST 15 TO OCTOBER 15 (HARDINESS ZONES: 7A, 7B)
   D. TILL AREAS TO RECEIVE SEED BY DISKING OR OTHER APPROVED METHODS TO A DEPTH OF 2 TO 4 INCHES, LEVEL AND RAKE THE AREAS TO PREPARE A PROPER SEEDBED. REMOVE STONES AND DEBRIS OVER 1½ INCHES IN DIAMETER. THE RESULTING SEEDBED MUST BE IN SUCH CONDITION THAT FUTURE MOWING OF GRASSES WILL POSE NO DIFFICULTY.
   E. IF SOIL MOISTURE IS DEFICIENT, SUPPLY NEW SEEDINGS WITH ADEQUATE WATER FOR PLANT GROWTH (½ TO 1 INCH EVERY 3 TO 4 DAYS DEPENDING ON SOIL TEXTURE) UNTIL THEY ARE FIRMLY ESTABLISHED. THIS IS ESPECIALLY TRUE WHEN SEEDINGS ARE MADE LATE IN THE PLANTING SEASON, IN ABNORMALLY DRY OR HOT SEASONS, OR ON ADVERSE SITES.

PERMANENT SEEDING SUMMARY

| HARDINESS ZONE (FROM FIGURE B.3): 6B<br>SEED MIXTURE (FROM TABLE B.1): 9 | | | | | FERTILIZER RATE (10-20-20) | | | LIME RATE |
|---|---|---|---|---|---|---|---|---|
| NO. | SPECIES | APPLICATION RATE (LB/AC) | SEEDING DATES | SEEDING DEPTHS | N | P2O5 | K2O | |
| | TALL FESCUE | 60 | MAR 1 TO MAY 15 AUG 15 TO OCT 15 | 1/4-1/2 IN | 45 POUNDS PER ACRE (1.0 LB/1000 SF) | 90 LB/AC (2 LB/1000 SF) | 90 LB/AC (2 LB/1000 SF) | 2 TONS/AC (90 LB/1000 SF) |
| | KENTUCKY BLUEGRASS | 40 | MAR 1 TO MAY 15 AUG 15 TO OCT 15 | 1/4-1/2 IN | | | | |
| | PERENNIAL RYEGRASS | 20 | MAR 1 TO MAY 15 AUG 15 TO OCT 15 | 1/4-1/2 IN | | | | |

B. SOD: TO PROVIDE QUICK COVER ON DISTURBED AREAS (2:1 GRADE OR FLATTER).
1. GENERAL SPECIFICATIONS
   A. CLASS OF TURFGRASS SOD MUST BE MARYLAND STATE CERTIFIED. SOD LABELS MUST BE MADE AVAILABLE TO THE JOB FOREMAN AND INSPECTOR.
   B. SOD MUST BE MACHINE CUT AT A UNIFORM SOIL THICKNESS OF ¾ INCH, PLUS OR MINUS ¼INCH, AT THE TIME OF CUTTING. MEASUREMENT FOR THICKNESS MUST EXCLUDE TOP GROWTH AND THATCH. BROKEN PADS AND TORN OR UNEVEN ENDS WILL NOT BE ACCEPTABLE.
   C. STANDARD SIZE SECTIONS OF SOD MUST BE STRONG ENOUGH TO SUPPORT THEIR OWN WEIGHT AND RETAIN THEIR SIZE AND SHAPE WHEN SUSPENDED VERTICALLY WITH A FIRM GRASP ON THE UPPER 10 PERCENT OF THE SECTION.
   D. SOD MUST NOT BE HARVESTED OR TRANSPLANTED WHEN MOISTURE CONTENT (EXCESSIVELY DRY OR WET) MAY ADVERSELY AFFECT ITS SURVIVAL.
   E. SOD MUST BE HARVESTED, DELIVERED, AND INSTALLED WITHIN A PERIOD OF 36 HOURS. SOD NOT TRANSPLANTED WITHIN THIS PERIOD MUST BE APPROVED BY AN AGRONOMIST OR SOIL SCIENTIST PRIOR TO ITS INSTALLATION.
2. SOD INSTALLATION
   A. DURING PERIODS OF EXCESSIVELY HIGH TEMPERATURE OR IN AREAS HAVING DRY SUBSOIL, LIGHTLY IRRIGATE THE SUBSOIL IMMEDIATELY PRIOR TO LAYING THE SOD.
   B. LAY THE FIRST ROW OF SOD IN A STRAIGHT LINE WITH SUBSEQUENT ROWS PLACED PARALLEL TO IT AND TIGHTLY WEDGED AGAINST EACH OTHER. STAGGER LATERAL JOINTS TO PROMOTE MORE UNIFORM GROWTH AND STRENGTH. ENSURE THAT SOD IS NOT STRETCHED OR OVERLAPPED AND THAT ALL JOINTS ARE BUTTED TIGHT IN ORDER TO PREVENT VOIDS WHICH WOULD CAUSE AIR DRYING OF THE ROOTS.
   C. WHEREVER POSSIBLE, LAY SOD WITH THE LONG EDGES PARALLEL TO THE CONTOUR AND WITH TAGGERING JOINTS. ROLL AND TAMP, PEG OR OTHERWISE SECURE THE SOD TO PREVENT SLIPPAGE ON SLOPES. ENSURE SOLID CONTACT EXISTS BETWEEN SOD ROOTS AND THE UNDERLYING SOIL SURFACE.
   D. WATER THE SOD IMMEDIATELY FOLLOWING ROLLING AND TAMPING UNTIL THE UNDERSIDE OF THE NEW SOD PAD AND SOIL SURFACE BELOW THE SOD ARE THOROUGHLY WET. COMPLETE THE OPERATIONS OF LAYING, TAMPING AND IRRIGATING FOR ANY PIECE OF SOD WITHIN EIGHT HOURS.
3. SOD MAINTENANCE
   A. IN THE ABSENCE OF ADEQUATE RAINFALL, WATER DAILY DURING THE FIRST WEEK OR AS OFTEN AND SUFFICIENTLY AS NECESSARY TO MAINTAIN MOIST SOIL TO A DEPTH OF 4 INCHES. WATER SOD DURING THE HEAT OF THE DAY TO PREVENT WILTING.
   B. AFTER THE FIRST WEEK, SOD WATERING IS REQUIRED AS NECESSARY TO MAINTAIN ADEQUATE MOISTURE CONTENT.
   C. DO NOT MOW UNTIL THE SOD IS FIRMLY ROOTED. NO MORE THAN ⅓ OF THE GRASS LEAF MUST BE REMOVED BY THE INITIAL CUTTING OR SUBSEQUENT CUTTINGS. MAINTAIN A GRASS HEIGHT OF AT LEAST 3 INCHES UNLESS OTHERWISE SPECIFIED.

AS BUILT CERTIFICATION FOR PSWM

NOTE: THERE IS NO "AS-BUILT INFORMATION PROVIDED ON THIS SHEET,
SIGNED [signature] P.E.# 26569
GERALD D. TURNBAUGH
AS-BUILT DATE 9-2014

THIS DEVELOPMENT PLAN IS APPROVED FOR SOIL EROSION AND SEDIMENT CONTROL BY THE HOWARD SOIL CONSERVATION DISTRICT
[signature] 4/9/13
HOWARD SOIL CONSERVATION DISTRICT DATE

AS BUILT
NOT REQUIRED
SIGNED: [signature]
DAFT McCUNE WALKER, INC.
BY: MICHAEL D. MARTIN
P.L.S. 21234

PROFESSIONAL CERTIFICATION

THIS IS TO CERTIFY THAT THESE DOCUMENTS WERE PREPARED OR APPROVED BY ME, AND THAT I AM A DULY LICENSED PROFESSIONAL ENGINEER UNDER THE LAWS OF THE STATE OF MARYLAND.
LICENSE NO. 26569
EXPIRATION DATE: 7-18-15

FOR REVISION NO. 2 ONLY
10-22-14
Date
Professional Engr. No. 26569

CONTRACT NUMBERS:
EX. WATER: 167-W
EX. SEWER: C-2485-D-S, 2485-D-W&S

3/21/13
Date

PROFESSIONAL CERTIFICATION

I HEREBY CERTIFY THAT THESE DOCUMENTS WERE PREPARED OR APPROVED BY ME, AND THAT I AM A DULY LICENSED PROFESSIONAL ENGINEER UNDER THE LAWS OF THE STATE OF MARYLAND,
LICENSE NO 16928 EXPIRATION DATE: 6-5/13/14

Professional Engr. No. 16928

APPROVED PLANNING BOARD OF HOWARD COUNTY
DATE MARCH 7, 2013

APPROVED: HOWARD COUNTY DEPT. OF PLANNING AND ZONING
[signature] 4/26/13
CHIEF, DIVISION OF LAND DEVELOPMENT DATE
[signature] 4/18/13
CHIEF, DEVELOPMENT ENGINEERING DIVISION DATE
[signature] 5/24/13
DIRECTOR DATE

| Date | No. | Revision Description |
|---|---|---|
| 10-22-14 | 2 | UPDATE SITE ANALYSIS DATA / LOD |
| 11-28-12 | | REPLACES ALL SHEETS OF ORIGINAL SDP 73-23C |

REVISED SITE DEVELOPMENT PLAN
# THE ROUSE BUILDING RENOVATION

OWNER/DEVELOPER:
CLOVER ACQUISTIONS LLC
C/O THE HOWARD HUGHES CORPORATION
P.O. BOX 833 COLUMBIA, MD 21044-0833


DMW
DAFT McCUNE WALKER INC
200 EAST PENNSYLVANIA TOWSON, MD 21286
P: 410 296 3333 F: 410 296 4705 WWW.DMW.COM
A TEAM OF LAND PLANNERS, LANDSCAPE ARCHITECTS, ENGINEERS, SURVEYORS & ENVIRONMENTAL PROFESSIONALS


AREA
TAX MAP 36 GRID 2 PART OF PARCEL 321, LOT 18
ELECTION DISTRICT 5TH ZONE NT

TITLE
**SEDIMENT AND EROSION CONTROL NOTES AND SEQUENCE OF CONSTRUCTION**
AS BUILT

| Des. By GDT/MCB | Scale N.T.S. | Proj. No. 11133.A |
|---|---|---|
| Drn. By RLV | Date 3/19/13 | |
| Chk. By GDT/MCB | Approved | 14 of 24 |

GP-13-040 SDP 73-23C

## DETAIL E-3 SUPER SILT FENCE

STANDARD SYMBOL
——SSF——

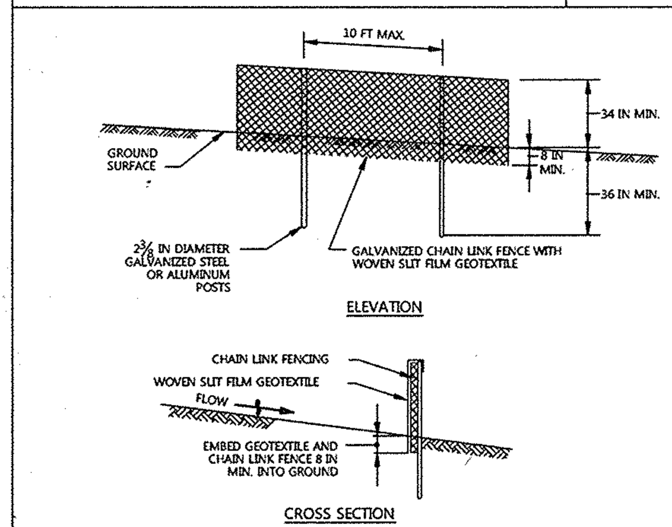


CONSTRUCTION SPECIFICATIONS

1. INSTALL 2⅜ INCH DIAMETER GALVANIZED STEEL POSTS OF 0.095 INCH WALL THICKNESS AND SIX FOOT LENGTH SPACED NO FURTHER THAN 10 FEET APART. DRIVE THE POSTS A MINIMUM OF 36 INCHES INTO THE GROUND.
2. FASTEN 9 GAUGE OR HEAVIER GALVANIZED CHAIN LINK FENCE (2 ⅜ INCH MAXIMUM OPENING) 42 INCHES IN HEIGHT SECURELY TO THE FENCE POSTS WITH WIRE TIES OR HUG RINGS.
3. FASTEN WOVEN SLIT FILM GEOTEXTILE AS SPECIFIED IN SECTION H-1 MATERIALS, SECURELY TO THE UPSLOPE SIDE OF CHAIN LINK FENCE WITH TIES SPACED EVERY 24 INCHES AT THE TOP AND MID SECTION. EMBED GEOTEXTILE AND CHAIN LINK FENCE A MINIMUM OF 8 INCHES INTO THE GROUND.
4. WHERE ENDS OF THE GEOTEXTILE COME TOGETHER, THE ENDS SHALL BE OVERLAPPED BY 6 INCHES, FOLDED, AND STAPLED TO PREVENT SEDIMENT BY PASS.
5. EXTEND BOTH ENDS OF THE SUPER SILT FENCE A MINIMUM OF FIVE HORIZONTAL FEET UPSLOPE AT 45 DEGREES TO THE MAIN FENCE ALIGNMENT TO PREVENT RUNOFF FROM GOING AROUND THE ENDS OF THE SUPER SILT FENCE.
6. PROVIDE MANUFACTURER CERTIFICATION TO THE INSPECTION/ENFORCEMENT AUTHORITY SHOWING THAT GEOTEXTILE USED MEETS THE REQUIREMENTS IN SECTION H-1 MATERIALS.
7. REMOVE ACCUMULATED SEDIMENT AND DEBRIS WHEN BULGES DEVELOP IN FENCE OR WHEN SEDIMENT REACHES 25% OF FENCE HEIGHT. REPLACE GEOTEXTILE IF TORN. IF UNDERMINING OCCURS, REINSTALL CHAIN LINK FENCING AND GEOTEXTILE.

MARYLAND STANDARDS AND SPECIFICATIONS FOR SOIL EROSION AND SEDIMENT CONTROL
U.S. DEPARTMENT OF AGRICULTURE NATURAL RESOURCES CONSERVATION SERVICE | 2011 | MARYLAND DEPARTMENT OF ENVIRONMENT WATER MANAGEMENT ADMINISTRATION

## DETAIL E-9-2 AT-GRADE INLET PROTECTION

STANDARD SYMBOL
AGIP

MAXIMUM DRAINAGE AREA = 1 ACRE

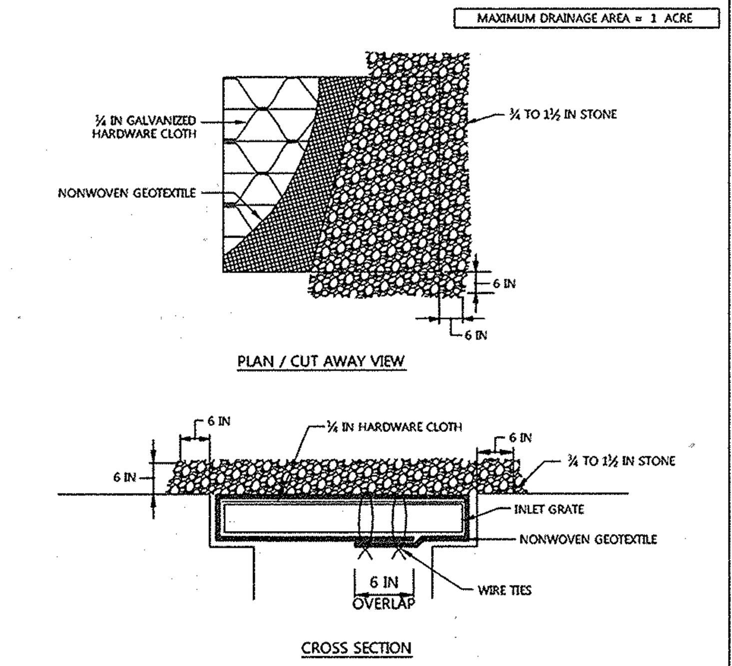


CONSTRUCTION SPECIFICATIONS

1. USE NONWOVEN GEOTEXTILE AS SPECIFIED IN SECTION H-1 MATERIALS.
2. LIFT GRATE AND WRAP WITH NONWOVEN GEOTEXTILE TO COMPLETELY COVER ALL OPENINGS. SECURE WITH WIRE TIES AND SET GRATE BACK IN PLACE.
3. PLACE CLEAN ¾ TO 1½ INCH STONE OR EQUIVALENT RECYCLED CONCRETE 6 INCHES THICK ON THE GRATE.
4. STORM DRAIN INLET PROTECTION REQUIRES FREQUENT MAINTENANCE. REMOVE ACCUMULATED SEDIMENT AFTER EACH RAIN EVENT TO MAINTAIN FUNCTION AND AVOID PREMATURE CLOGGING. IF INLET PROTECTION DOES NOT COMPLETELY DRAIN WITHIN 24 HOURS AFTER A STORM EVENT, IT IS CLOGGED. WHEN THIS OCCURS, REMOVE ACCUMULATED SEDIMENT AND CLEAN, OR REPLACE GEOTEXTILE AND STONE.

MARYLAND STANDARDS AND SPECIFICATIONS FOR SOIL EROSION AND SEDIMENT CONTROL
U.S. DEPARTMENT OF AGRICULTURE NATURAL RESOURCES CONSERVATION SERVICE | 2011 | MARYLAND DEPARTMENT OF ENVIRONMENT WATER MANAGEMENT ADMINISTRATION

## DETAIL E-2 SILT FENCE ON PAVEMENT

STANDARD SYMBOL
——SFOP——

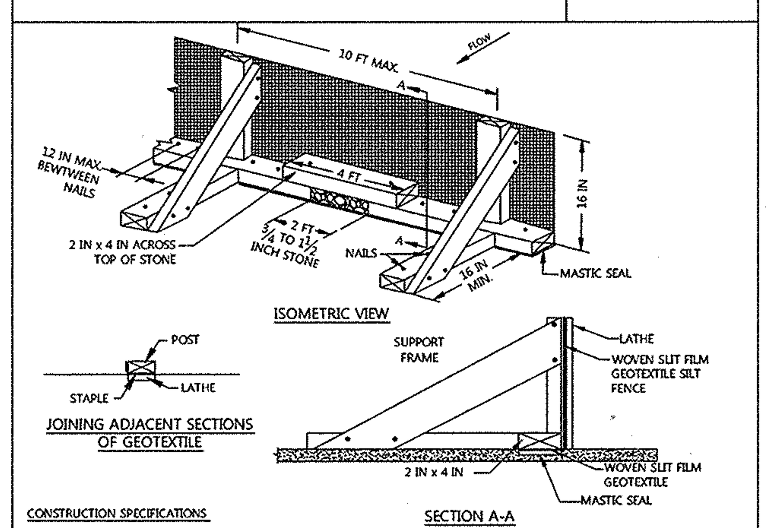


CONSTRUCTION SPECIFICATIONS

1. USE NOMINAL 2 INCH X 4 INCH LUMBER.
2. USE WOVEN SLIT FILM GEOTEXTILE, AS SPECIFIED IN SECTION H-1 MATERIALS.
3. PROVIDE MANUFACTURER CERTIFICATION TO THE AUTHORIZED REPRESENTATIVE OF THE INSPECTION/ENFORCEMENT AUTHORITY SHOWING THAT THE GEOTEXTILE USED MEETS THE REQUIREMENTS IN SECTION H-1 MATERIALS.
4. SPACE UPRIGHT SUPPORTS NO MORE THAN 10 FEET APART.
5. PROVIDE A TWO FOOT OPENING BETWEEN EVERY SET OF SUPPORTS AND PLACE STONE IN THE OPENING OVER GEOTEXTILE.
6. KEEP SILT FENCE TAUT AND SECURELY STAPLE TO THE UPSLOPE SIDE OF UPRIGHT SUPPORTS. EXTEND GEOTEXTILE UNDER 2x4.
7. WHERE TWO SECTIONS OF GEOTEXTILE ADJOIN: OVERLAP, FOLD, AND STAPLE TO POST IN ACCORDANCE WITH THIS DETAIL. ATTACH LATHE.
8. PROVIDE A MASTIC SEAL BETWEEN PAVEMENT, GEOTEXTILE, AND 2x4 TO PREVENT SEDIMENT-LADEN WATER FROM ESCAPING BENEATH SILT FENCE INSTALLATION.
9. SECURE BOARDS TO PAVEMENT WITH 40D 5 INCH MINIMUM LENGTH NAILS.
10. REMOVE ACCUMULATED SEDIMENT AND DEBRIS WHEN BULGES DEVELOP IN SILT FENCE OR WHEN SEDIMENT REACHES 25% OF FENCE HEIGHT. REPLACE GEOTEXTILE IF TORN. MAINTAIN WATER TIGHT SEAL ALONG BOTTOM. REPLACE STONE IF DISPLACED.

MARYLAND STANDARDS AND SPECIFICATIONS FOR SOIL EROSION AND SEDIMENT CONTROL
U.S. DEPARTMENT OF AGRICULTURE NATURAL RESOURCES CONSERVATION SERVICE | 2011 | MARYLAND DEPARTMENT OF ENVIRONMENT WATER MANAGEMENT ADMINISTRATION

## DETAIL E-9-1 STANDARD INLET PROTECTION

STANDARD SYMBOL
SIP

TYPE A MAXIMUM DRAINAGE AREA = ¼ ACRE
TYPE B MAXIMUM DRAINAGE AREA = 1 ACRE

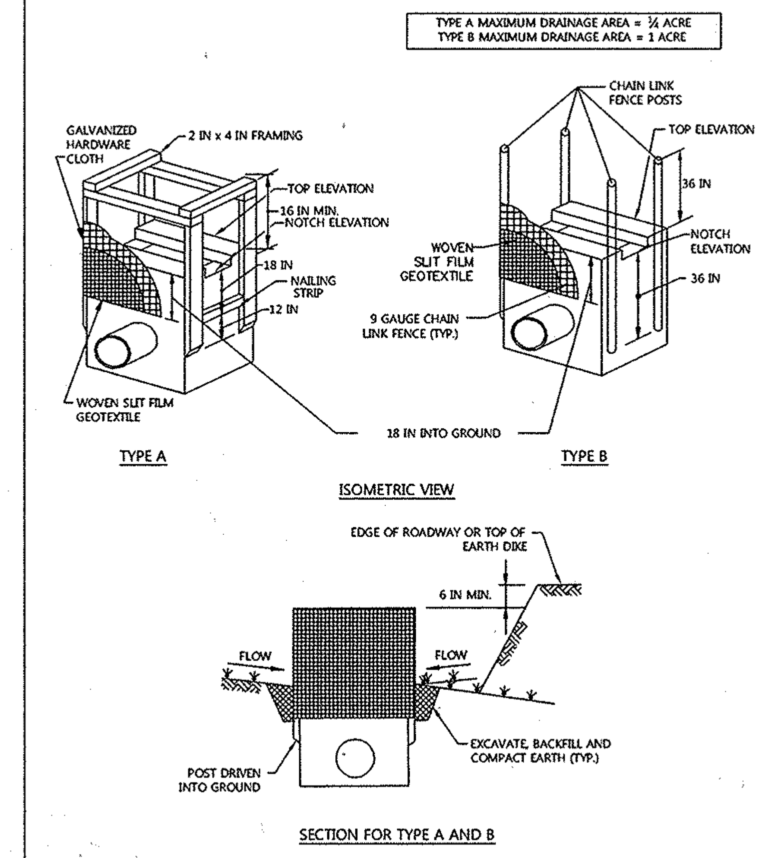


1 OF 2

MARYLAND STANDARDS AND SPECIFICATIONS FOR SOIL EROSION AND SEDIMENT CONTROL
U.S. DEPARTMENT OF AGRICULTURE NATURAL RESOURCES CONSERVATION SERVICE | 2011 | MARYLAND DEPARTMENT OF ENVIRONMENT WATER MANAGEMENT ADMINISTRATION

## DETAIL E-9-1STANDARD INLET PROTECTION

STANDARD SYMBOL
SIP

CONSTRUCTION SPECIFICATIONS

1. USE WOVEN SLIT FILM GEOTEXTILE AS SPECIFIED IN SECTION H-1 MATERIALS.
2. EXCAVATE COMPLETELY AROUND THE INLET TO A DEPTH OF 18 INCHES BELOW THE NOTCH ELEVATION.
3. FOR TYPE A, USE NOMINAL 2 INCH X 4 INCH CONSTRUCTION GRADE LUMBER POSTS, DRIVEN 1 FOOT INTO THE GROUND AT EACH CORNER OF THE INLET. PLACE NAIL STRIPS BETWEEN THE POSTS ON THE ENDS OF THE INLET. ASSEMBLE THE TOP PORTION OF THE 2X4 FRAME AS SHOWN. STRETCH ½ INCH GALVANIZED HARDWARE CLOTH TIGHTLY AROUND THE FRAME AND FASTEN SECURELY. FASTEN GEOTEXTILE SECURELY TO THE HARDWARE CLOTH WITH TIES SPACED EVERY 24 INCHES AT THE TOP AND MID SECTION. EMBED GEOTEXTILE AND HARDWARE CLOTH A MINIMUM OF 18 INCHES BELOW THE WEIR CREST. THE ENDS OF THE GEOTEXTILE MUST MEET AT A POST, BE OVERLAPPED AND FOLDED, THEN FASTENED TO THE POST.

   FOR TYPE B, USE 2⅜ INCH DIAMETER GALVANIZED STEEL POSTS OF 0.095 INCH WALL THICKNESS AND 6 FOOT LENGTH, DRIVEN A MINIMUM OF 36 INCHES BELOW THE WEIR CREST AT EACH CORNER OF THE STRUCTURE. FASTEN 9 GAUGE OR HEAVIER CHAIN LINK FENCE, 42 INCHES IN HEIGHT, SECURELY TO THE FENCE POSTS WITH WIRE TIES. FASTEN GEOTEXTILE SECURELY TO THE CHAIN LINK FENCE WITH TIES SPACED EVERY 24 INCHES AT THE TOP AND MID SECTION. EMBED GEOTEXTILE AND CHAIN LINK FENCE A MINIMUM OF 18 INCHES BELOW THE WEIR CREST.
4. BACKFILL AROUND THE INLET IN LOOSE 4 INCH LIFTS AND COMPACT UNTIL SOIL IS LEVEL WITH THE NOTCH ELEVATION ON THE ENDS AND TOP ELEVATION ON THE SIDES.
5. STORM DRAIN INLET PROTECTION REQUIRES FREQUENT MAINTENANCE. REMOVE ACCUMULATED SEDIMENT AFTER EACH RAIN EVENT TO MAINTAIN FUNCTION AND AVOID PREMATURE CLOGGING. IF INLET PROTECTION DOES NOT COMPLETELY DRAIN WITHIN 24 HOURS AFTER A STORM EVENT, IT IS CLOGGED. WHEN THIS OCCURS, REMOVE ACCUMULATED SEDIMENT AND CLEAN, OR REPLACE GEOTEXTILE AND STONE.

2 OF 2

MARYLAND STANDARDS AND SPECIFICATIONS FOR SOIL EROSION AND SEDIMENT CONTROL
U.S. DEPARTMENT OF AGRICULTURE NATURAL RESOURCES CONSERVATION SERVICE | 2011 | MARYLAND DEPARTMENT OF ENVIRONMENT WATER MANAGEMENT ADMINISTRATION

## DETAIL B-1 STABILIZED CONSTRUCTION ENTRANCE

STANDARD SYMBOL
SCE

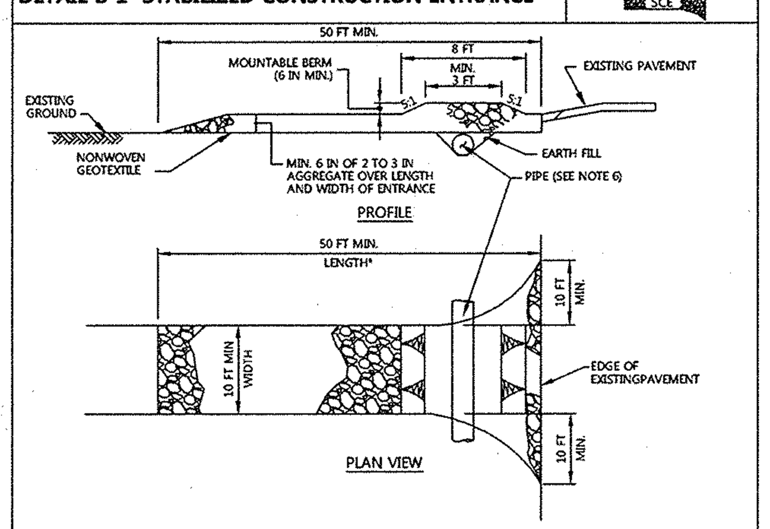


CONSTRUCTION SPECIFICATIONS

1. PLACE STABILIZED CONSTRUCTION ENTRANCE IN ACCORDANCE WITH THE APPROVED PLAN. VEHICLES MUST TRAVEL OVER THE ENTIRE LENGTH OF THE SCE. USE MINIMUM LENGTH OF 50 FEET (*30 FEET FOR SINGLE RESIDENCE LOT). USE MINIMUM WIDTH OF 10 FEET. FLARE SCE 10 FEET MINIMUM AT THE EXISTING ROAD TO PROVIDE A TURNING RADIUS.
2. PIPE ALL SURFACE WATER FLOWING TO OR DIVERTED TOWARD THE SCE UNDER THE ENTRANCE, MAINTAINING POSITIVE DRAINAGE. PROTECT PIPE INSTALLED THROUGH THE SCE WITH A MOUNTABLE BERM WITH 5:1 SLOPES AND A MINIMUM OF 12 INCHES OF STONE OVER THE PIPE. PROVIDE PIPE AS SPECIFIED ON APPROVED PLAN. WHEN THE SCE IS LOCATED AT A HIGH SPOT AND HAS NO DRAINAGE TO CONVEY, A PIPE IS NOT NECESSARY. A MOUNTABLE BERM IS REQUIRED WHEN SCE IS NOT LOCATED AT A HIGH SPOT.
3. PREPARE SUBGRADE AND PLACE NONWOVEN GEOTEXTILE, AS SPECIFIED IN SECTION H-1 MATERIALS.
4. PLACE CRUSHED AGGREGATE (2 TO 3 INCHES IN SIZE) OR EQUIVALENT RECYCLED CONCRETE (WITHOUT REBAR) AT LEAST 6 INCHES DEEP OVER THE LENGTH AND WIDTH OF THE SCE.
5. MAINTAIN ENTRANCE IN A CONDITION THAT MINIMIZES TRACKING OF SEDIMENT. ADD STONE OR MAKE OTHER REPAIRS AS CONDITIONS DEMAND TO MAINTAIN CLEAN SURFACE, MOUNTABLE BERM, AND SPECIFIED DIMENSIONS. IMMEDIATELY REMOVE STONE AND/OR SEDIMENT SPILLED, DROPPED, OR TRACKED ONTO ADJACENT ROADWAY BY VACUUMING, SCRAPING, AND/OR SWEEPING. WASHING ROADWAY TO REMOVE MUD TRACKED ONTO PAVEMENT IS NOT ACCEPTABLE UNLESS WASH WATER IS DIRECTED TO AN APPROVED SEDIMENT CONTROL PRACTICE.

MARYLAND STANDARDS AND SPECIFICATIONS FOR SOIL EROSION AND SEDIMENT CONTROL
U.S. DEPARTMENT OF AGRICULTURE NATURAL RESOURCES CONSERVATION SERVICE | 2011 | MARYLAND DEPARTMENT OF ENVIRONMENT WATER MANAGEMENT ADMINISTRATION

## DETAIL E-9-3 CURB INLET PROTECTION

STANDARD SYMBOL
CIP

MAXIMUM DRAINAGE AREA = ¼ ACRE

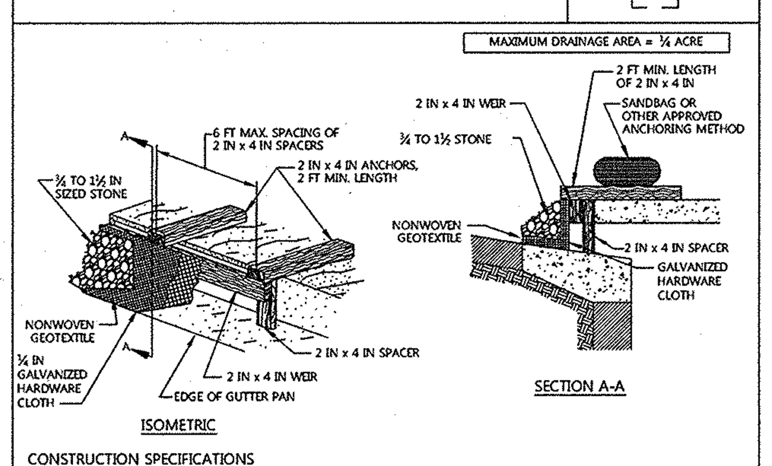


CONSTRUCTION SPECIFICATIONS

1. USE NOMINAL 2 INCH x 4 INCH LUMBER
2. USE NONWOVEN GEOTEXTILE AS SPECIFIED IN SECTION H-1 MATERIALS.
3. NAIL THE 2x4 WEIR TO 9 INCH LONG VERTICAL SPACERS (MAXIMUM 6 FEET APART).
4. ATTACH A CONTINUOUS PIECE OF ¼ INCH GALVANIZED HARDWARE CLOTH, WITH A MINIMUM WIDTH OF 30 INCHES AND A MINIMUM LENGTH OF 4 FEET LONGER THAN THE THROAT OPENING, TO THE 2x4 WEIR, EXTENDING IT 2 FEET BEYOND THROAT ON EACH SIDE.
5. PLACE A CONTINUOUS PIECE OF NONWOVEN GEOTEXTILE OF THE SAME DIMENSIONS AS THE HARDWARE CLOTH OVER THE HARDWARE CLOTH AND SECURELY ATTACH TO THE 2x4 WEIR.
6. PLACE THE ASSEMBLY AGAINST THE INLET THROAT AND NAIL TO 2x4 ANCHORS (MINIMUM 2 FEET LENGTH). EXTEND THE ANCHORS ACROSS THE INLET TOP AND HOLD IN PLACE BY SANDBAGS OR OTHER APPROVED ANCHORING METHOD.
7. INSTALL END SPACERS A MINIMUM OF 1 FOOT BEYOND THE ENDS OF THE THROAT OPENING.
8. FORM THE HARDWARE CLOTH AND THE GEOTEXTILE TO THE CONCRETE GUTTER AND FACE OF CURB TO SPAN THE INLET OPENING. COVER THE HARDWARE CLOTH AND GEOTEXTILE WITH CLEAN ¾ TO 1½ INCH STONE OR EQUIVALENT RECYCLED CONCRETE.
9. AT NON-SUMP LOCATIONS, INSTALL A TEMPORARY SANDBAG OR ASPHALT BERM TO PREVENT INLET BYPASS.
10. STORM DRAIN INLET PROTECTION REQUIRES FREQUENT MAINTENANCE. REMOVE ACCUMULATED SEDIMENT AFTER EACH RAIN EVENT TO MAINTAIN FUNCTION AND AVOID PREMATURE CLOGGING. IF INLET PROTECTION DOES NOT COMPLETELY DRAIN WITHIN 24 HOURS AFTER A STORM EVENT, IT IS CLOGGED. WHEN THIS OCCURS, REMOVE ACCUMULATED SEDIMENT AND CLEAN, OR REPLACE GEOTEXTILE AND STONE.

MARYLAND STANDARDS AND SPECIFICATIONS FOR SOIL EROSION AND SEDIMENT CONTROL
U.S. DEPARTMENT OF AGRICULTURE NATURAL RESOURCES CONSERVATION SERVICE | 2011 | MARYLAND DEPARTMENT OF ENVIRONMENT WATER MANAGEMENT ADMINISTRATION

## DETAIL E-1 SILT FENCE

STANDARD SYMBOL
——SF——

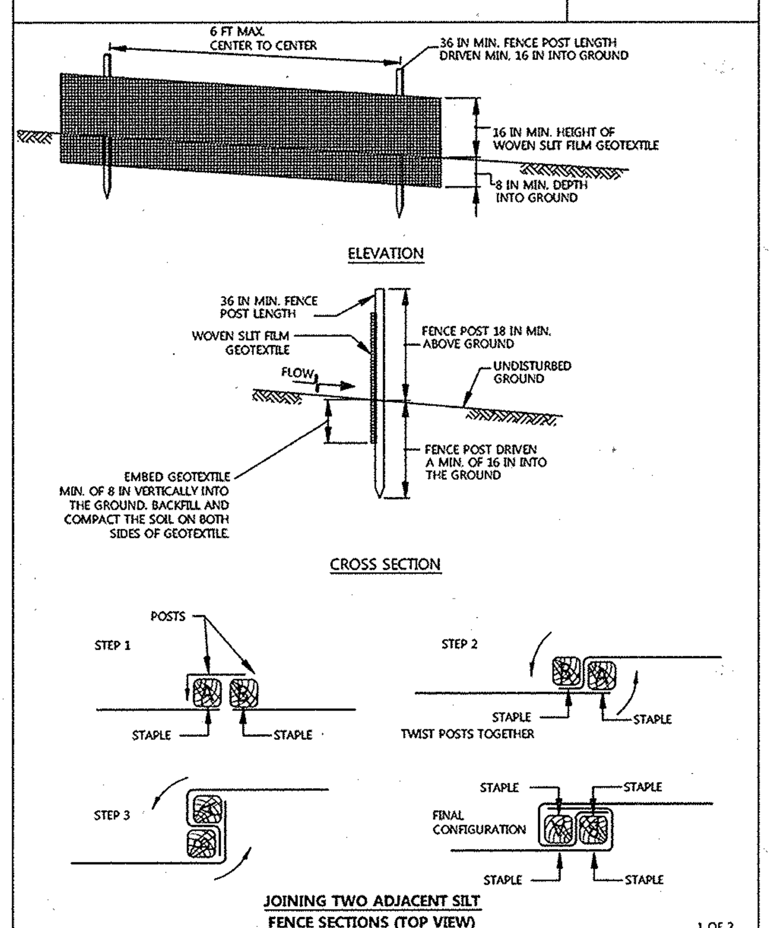


1 OF 2

MARYLAND STANDARDS AND SPECIFICATIONS FOR SOIL EROSION AND SEDIMENT CONTROL
U.S. DEPARTMENT OF AGRICULTURE NATURAL RESOURCES CONSERVATION SERVICE | 2011 | MARYLAND DEPARTMENT OF ENVIRONMENT WATER MANAGEMENT ADMINISTRATION

## DETAIL E-1 SILT FENCE

STANDARD SYMBOL
——SF——

CONSTRUCTION SPECIFICATIONS

1. USE WOOD POSTS 1¾ X 1¾ ± 1⁄16 INCH (MINIMUM) SQUARE CUT OF SOUND QUALITY HARDWOOD. AS AN ALTERNATIVE TO WOODEN POST USE STANDARD "T" OR "U" SECTION STEEL POSTS WEIGHING NOT LESS THAN 1 POUND PER LINEAR FOOT.
2. USE 36 INCH MINIMUM POSTS DRIVEN 16 INCH MINIMUM INTO GROUND NO MORE THAN 6 FEET APART.
3. USE WOVEN SLIT FILM GEOTEXTILE AS SPECIFIED IN SECTION H-1 MATERIALS AND FASTEN GEOTEXTILE SECURELY TO UPSLOPE SIDE OF FENCE POSTS WITH WIRE TIES OR STAPLES AT TOP AND MID-SECTION.
4. PROVIDE MANUFACTURER CERTIFICATION TO THE AUTHORIZED REPRESENTATIVE OF THE INSPECTION/ENFORCEMENT AUTHORITY SHOWING THAT THE GEOTEXTILE USED MEETS THE REQUIREMENTS IN SECTION H-1 MATERIALS.
5. EMBED GEOTEXTILE A MINIMUM OF 8 INCHES VERTICALLY INTO THE GROUND. BACKFILL AND COMPACT THE SOIL ON BOTH SIDES OF FABRIC.
6. WHERE TWO SECTIONS OF GEOTEXTILE ADJOIN: OVERLAP, TWIST, AND STAPLE TO POST IN ACCORDANCE WITH THIS DETAIL.
7. EXTEND BOTH ENDS OF THE SILT FENCE A MINIMUM OF FIVE HORIZONTAL FEET UPSLOPE AT 45 DEGREES TO THE MAIN FENCE ALIGNMENT TO PREVENT RUNOFF FROM GOING AROUND THE ENDS OF THE SILT FENCE.
8. REMOVE ACCUMULATED SEDIMENT AND DEBRIS WHEN BULGES DEVELOP IN SILT FENCE OR WHEN SEDIMENT REACHES 25% OF FENCE HEIGHT. REPLACE GEOTEXTILE IF TORN. IF UNDERMINING OCCURS, REINSTALL FENCE.

2 OF 2

MARYLAND STANDARDS AND SPECIFICATIONS FOR SOIL EROSION AND SEDIMENT CONTROL
U.S. DEPARTMENT OF AGRICULTURE NATURAL RESOURCES CONSERVATION SERVICE | 2011 | MARYLAND DEPARTMENT OF ENVIRONMENT WATER MANAGEMENT ADMINISTRATION

## DETAIL C-9 DIVERSION FENCE

STANDARD SYMBOL
—— DF ——

MAXIMUM DRAINAGE AREA = 2 ACRES

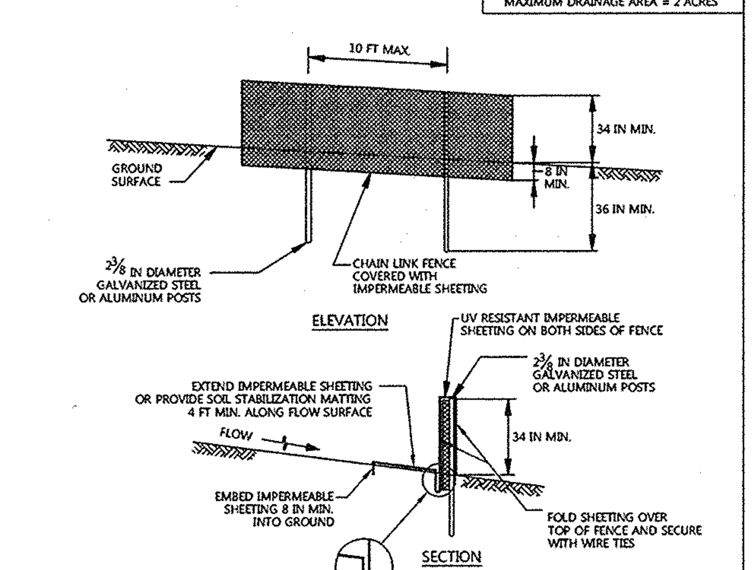


CONSTRUCTION SPECIFICATIONS

1. USE 42 INCH HIGH, 9 GAUGE OR THICKER CHAIN LINK FENCING (2 ⅜ INCH MAXIMUM OPENING).
2. USE 2⅜ INCH DIAMETER GALVANIZED STEEL POSTS OF 0.095 INCH WALL THICKNESS AND SIX FOOT LENGTH SPACED NO FURTHER THAN 10 FEET APART. THE POSTS DO NOT NEED TO BE SET IN CONCRETE.
3. FASTEN CHAIN LINK FENCE SECURELY TO THE FENCE POSTS WITH WIRE TIES.
4. SECURE 10 MIL OR THICKER UV RESISTANT, IMPERMEABLE SHEETING TO CHAIN LINK FENCE WITH TIES SPACED EVERY 24 INCHES AT TOP, MID SECTION, AND BELOW GROUND SURFACE.
5. EXTEND SHEETING A MINIMUM OF 4 FEET ALONG FLOW SURFACE AND EMBED END A MINIMUM OF 8 INCHES INTO GROUND. SOIL STABILIZATION MATTING MAY BE USED IN LIEU OF IMPERMEABLE SHEETING ALONG FLOW SURFACE.
6. WHEN TWO SECTIONS OF SHEETING ADJOIN EACH OTHER, OVERLAP BY 6 INCHES AND FOLD WITH SEAM FACING DOWNGRADE.
7. KEEP FLOW SURFACE ALONG DIVERSION FENCE AND POINT OF DISCHARGE FREE OF EROSION. REMOVE ACCUMULATED SEDIMENT AND DEBRIS. MAINTAIN POSITIVE DRAINAGE. REPLACE IMPERMEABLE SHEETING IF TORN. IF UNDERMINING OCCURS, REINSTALL FENCE.

MARYLAND STANDARDS AND SPECIFICATIONS FOR SOIL EROSION AND SEDIMENT CONTROL
U.S. DEPARTMENT OF AGRICULTURE NATURAL RESOURCES CONSERVATION SERVICE | 2011 | MARYLAND DEPARTMENT OF ENVIRONMENT WATER MANAGEMENT ADMINISTRATION

## DETAIL F-3 PORTABLE SEDIMENT TANK

STANDARD SYMBOL
PST

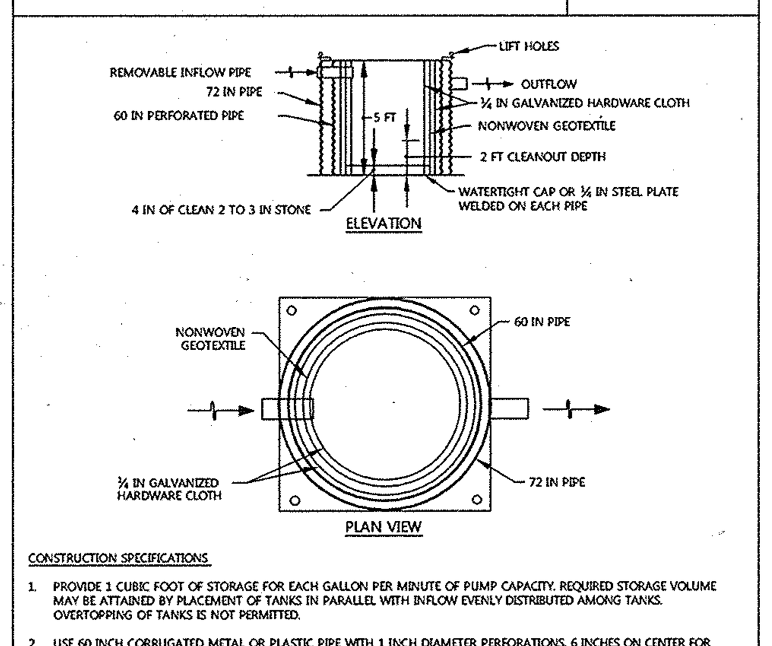


CONSTRUCTION SPECIFICATIONS

1. PROVIDE 1 CUBIC FOOT OF STORAGE FOR EACH GALLON PER MINUTE OF PUMP CAPACITY. REQUIRED STORAGE VOLUME MAY BE ATTAINED BY PLACEMENT OF TANKS IN PARALLEL WITH INFLOW EVENLY DISTRIBUTED AMONG TANKS. OVERTOPPING OF TANKS IS NOT PERMITTED.
2. USE 60 INCH CORRUGATED METAL OR PLASTIC PIPE WITH 1 INCH DIAMETER PERFORATIONS, 6 INCHES ON CENTER FOR THE INNER PIPE. LINE PIPE WITH NONWOVEN GEOTEXTILE, AS SPECIFIED IN SECTION H-1 MATERIALS, SANDWICHED BETWEEN, AND ATTACHED TO, ¼ INCH HARDWARE CLOTH.
3. OVERLAP GEOTEXTILE 8 INCHES MINIMUM AT VERTICAL SEAM AND AT THE BOTTOM PLATE.
4. ANCHOR GEOTEXTILE AT BOTTOM OF TANK WITH 4 INCHES OF 2 TO 3 INCH CLEAN STONE OR EQUIVALENT RECYCLED CONCRETE.
5. USE 72 INCH CORRUGATED METAL OR PLASTIC OUTER PIPE WITH PERMANENT OUTFLOW PIPE WITH INVERT LOWER THAN INFLOW PIPE
6. INFLOW PIPE MUST DISCHARGE INTO INNER PIPE AND BE REMOVABLE.
7. PLACE TANK ON LEVEL SURFACE AND DISCHARGE TO A STABLE AREA AT A NONEROSIVE RATE.
8. A PORTABLE SEDIMENT TANK REQUIRES FREQUENT MAINTENANCE. REMOVE ACCUMULATED SEDIMENT FROM INNER PIPE WHEN IT REACHES TWO FEET IN DEPTH. IF SYSTEM CLOGS, PULL OUT INNER PIPE, REMOVE ACCUMULATED SEDIMENT, AND REPLACE GEOTEXTILE. KEEP POINT OF DISCHARGE FREE OF EROSION.

MARYLAND STANDARDS AND SPECIFICATIONS FOR SOIL EROSION AND SEDIMENT CONTROL
U.S. DEPARTMENT OF AGRICULTURE NATURAL RESOURCES CONSERVATION SERVICE | 2011 | MARYLAND DEPARTMENT OF ENVIRONMENT WATER MANAGEMENT ADMINISTRATION

**(NOTES CONT.)**
**B-4-8 STANDARDS AND SPECIFICATIONS FOR STOCKPILE AREA**

DEFINITION
A MOUND OR PILE OF SOIL PROTECTED BY APPROPRIATELY DESIGNED EROSION AND SEDIMENT CONTROL MEASURES.

PURPOSE
TO PROVIDE A DESIGNATED LOCATION FOR THE TEMPORARY STORAGE OF SOIL THAT CONTROLS THE POTENTIAL FOR EROSION, SEDIMENTATION, AND CHANGES TO DRAINAGE PATTERNS.

CONDITIONS WHERE PRACTICE APPLIES
STOCKPILE AREAS ARE UTILIZED WHEN IT IS NECESSARY TO SALVAGE AND STORE SOIL FOR LATER USE.

CRITERIA
1. THE STOCKPILE LOCATION AND ALL RELATED SEDIMENT CONTROL PRACTICES MUST BE CLEARLY INDICATED ON THE EROSION AND SEDIMENT CONTROL PLAN.
2. THE FOOTPRINT OF THE STOCKPILE MUST BE SIZED TO ACCOMMODATE THE ANTICIPATED VOLUME OF MATERIAL AND BASED ON A SIDE SLOPE RATIO NO STEEPER THAN 2:1. BENCHING MUST BE PROVIDED IN ACCORDANCE WITH SECTION B-3 LAND GRADING.
3. RUNOFF FROM THE STOCKPILE AREA MUST DRAIN TO A SUITABLE SEDIMENT CONTROL PRACTICE.
4. ACCESS THE STOCKPILE AREA FROM THE UPGRADE SIDE.
5. CLEAR WATER RUNOFF INTO THE STOCKPILE AREA MUST BE MINIMIZED BY USE OF A DIVERSION DEVICE SUCH AS AN EARTH DIKE, TEMPORARY SWALE OR DIVERSION FENCE. PROVISIONS MUST BE MADE FOR DISCHARGING CONCENTRATED FLOW IN A NON-EROSIVE MANNER.
6. WHERE RUNOFF CONCENTRATES ALONG THE TOE OF THE STOCKPILE FILL, AN APPROPRIATE E ROSION/SEDIMENT CONTROL PRACTICE MUST BE USED TO INTERCEPT THE DISCHARGE.
7. STOCKPILES MUST BE STABILIZED IN ACCORDANCE WITH THE 3/7 DAY STABILIZATION REQUIREMENT AS WELL AS STANDARD B-4-1 INCREMENTAL STABILIZATION AND STANDARD B-4-4 TEMPORARY STABILIZATION.
8. IF THE STOCKPILE IS LOCATED ON AN IMPERVIOUS SURFACE, A LINER SHOULD BE PROVIDED BELOW THE STOCKPILE TO FACILITATE CLEANUP. STOCKPILES CONTAINING CONTAMINATED MATERIAL MUST BE COVERED WITH IMPERMEABLE SHEETING.

MAINTENANCE
THE STOCKPILE AREA MUST CONTINUOUSLY MEET THE REQUIREMENTS FOR ADEQUATE VEGETATIVE ESTABLISHMENT IN ACCORDANCE WITH SECTION B-4 VEGETATIVE STABILIZATION. SIDE SLOPES MUST BE MAINTAINED AT NO STEEPER THAN A 2:1 RATIO. THE STOCKPILE AREA MUST BE KEPT FREE OF EROSION. IF THE VERTICAL HEIGHT OF A STOCKPILE EXCEEDS 20 FEET FOR 2:1 SLOPES, 30 FEET FOR 3:1 SLOPES, OR 40 FEET FOR 4:1 SLOPES, BENCHING MUST BE PROVIDED IN ACCORDANCE WITH SECTION B-3 LAND GRADING.

**H-5 STANDARDS AND SPECIFICATIONS FOR DUST CONTROL**

DEFINITION
CONTROLLING THE SUSPENSION OF DUST PARTICLES FROM CONSTRUCTION ACTIVITIES.

PURPOSE
TO PREVENT BLOWING AND MOVEMENT OF DUST FROM EXPOSED SOIL SURFACES TO REDUCE ON AND OFF-SITE DAMAGE INCLUDING HEALTH AND TRAFFIC HAZARDS.

CONDITIONS WHERE PRACTICE APPLIES
AREAS SUBJECT TO DUST BLOWING AND MOVEMENT WHERE ON AND OFF-SITE DAMAGE IS LIKELY WITHOUT TREATMENT.

SPECIFICATIONS
1. MULCHES: SEE SECTION B-4-2 SOIL PREPARATION, TOPSOILING, AND SOIL AMENDMENTS, SECTION B-4-3 SEEDING AND MULCHING, AND SECTION B-4-4 TEMPORARY STABILIZATION. MULCH MUST BE ANCHORED TO PREVENT BLOWING.
2. VEGETATIVE COVER: SEE SECTION B-4-4 TEMPORARY STABILIZATION.
3. TILLAGE: TILL TO ROUGHEN SURFACE AND BRING CLODS TO THE SURFACE. BEGIN PLOWING ON WINDWARD SIDE OF SITE. CHISEL-TYPE PLOWS SPACED ABOUT 12 INCHES APART, SPRING-TOOTHED HARROWS, AND SIMILAR PLOWS ARE EXAMPLES OF EQUIPMENT THAT MAY PRODUCE THE DESIRED EFFECT.
4. IRRIGATION: SPRINKLE SITE WITH WATER UNTIL THE SURFACE IS MOIST. REPEAT AS NEEDED. THE SITE MUST NOT BE IRRIGATED TO THE POINT THAT RUNOFF OCCURS.
5. BARRIERS: SOLID BOARD FENCES, SILT FENCES, SNOW FENCES, BURLAP FENCES, STRAW BALES, AND SIMILAR MATERIAL CAN BE USED TO CONTROL AIR CURRENTS AND SOIL BLOWING.
6. CHEMICAL TREATMENT: USE OF CHEMICAL TREATMENT REQUIRES APPROVAL BY THE APPROPRIATE PLAN REVIEW AUTHORITY.

AS BUILT
NOT REQUIRED
SIGNED: [signature]
DAFT McCUNE WALKER, INC.
BY: MICHAEL D. MARTIN, P.L.S.# 21234

AS BUILT CERTIFICATION FOR PSWM
NOTE: THERE IS NO "AS-BUILT INFORMATION PROVIDED ON THIS SHEET.
SIGNED: [signature] P.E.# 26569
GERALD D. TURNBAUGH AS BUILT DATE 9-2014

THIS DEVELOPMENT PLAN IS APPROVED FOR SOIL EROSION AND SEDIMENT CONTROL BY THE HOWARD SOIL CONSERVATION DISTRICT
[signature] 4/9/13
HOWARD SOIL CONSERVATION DISTRICT — DATE

APPROVED PLANNING BOARD OF HOWARD COUNTY
DATE MARCH 7, 2013

APPROVED: HOWARD COUNTY DEPT. OF PLANNING AND ZONING
CHIEF, DIVISION OF LAND DEVELOPMENT — DATE 4/26/13
CHIEF, DEVELOPMENT ENGINEERING DIVISION — DATE 4/8/13
DIRECTOR — DATE 4/26/13

| Date | No. | Revision Description |
|---|---|---|
| 11-28-12 | | REPLACES ALL SHEETS OF ORIGINAL SDP 73-23C |

REVISED SITE DEVELOPMENT PLAN
# THE ROUSE BUILDING RENOVATION

OWNER/DEVELOPER:
CLOVER ACQUISTIONS LLC
C/O THE HOWARD HUGHES CORPORATION
P.O. BOX 833 COLUMBIA, MD 21044-0833

DMW
DAFT McCUNE WALKER INC
200 EAST PENNSYLVANIA TOWSON, MD 21286
P: 410 296 3333 F: 410 296 4705 WWW.DMW.COM
A TEAM OF LAND PLANNERS, LANDSCAPE ARCHITECTS, ENGINEERS, SURVEYORS & ENVIRONMENTAL PROFESSIONALS

CONTRACT NUMBERS:
EX. WATER: 167-W
EX. SEWER: C-2485-D-S, 2485-D-W&S

3/21/13
Date

PROFESSIONAL CERTIFICATION
I HEREBY CERTIFY THAT THESE DOCUMENTS WERE PREPARED OR APPROVED BY ME, AND THAT I AM A DULY LICENSED PROFESSIONAL ENGINEER UNDER THE LAWS OF THE STATE OF MARYLAND, LICENSE NO 16928 EXPIRATION DATE: 5/13/14

Professional Engr No 16928

AREA
TAX MAP 36 GRID 2 PART OF PARCEL 321, LOT 18
ELECTION DISTRICT 5TH — ZONE NT

TITLE
**SEDIMENT AND EROSION CONTROL NOTES & DETAILS**
AS BUILT

| Des. By GDT/MCB | Scale N.T.S | Proj. No. 11133.A |
|---|---|---|
| Drn. By RLV | Date 3/19/13 | |
| Chk. By GDT/MCB | Approved | 15 of 24 |

GP-13-040 SDP 73-23C

A:\11133\11133.A0\ENGR\CAD FILES\SHEET FILES\11133_SEC04.DWG Tue, Mar 19, 2013

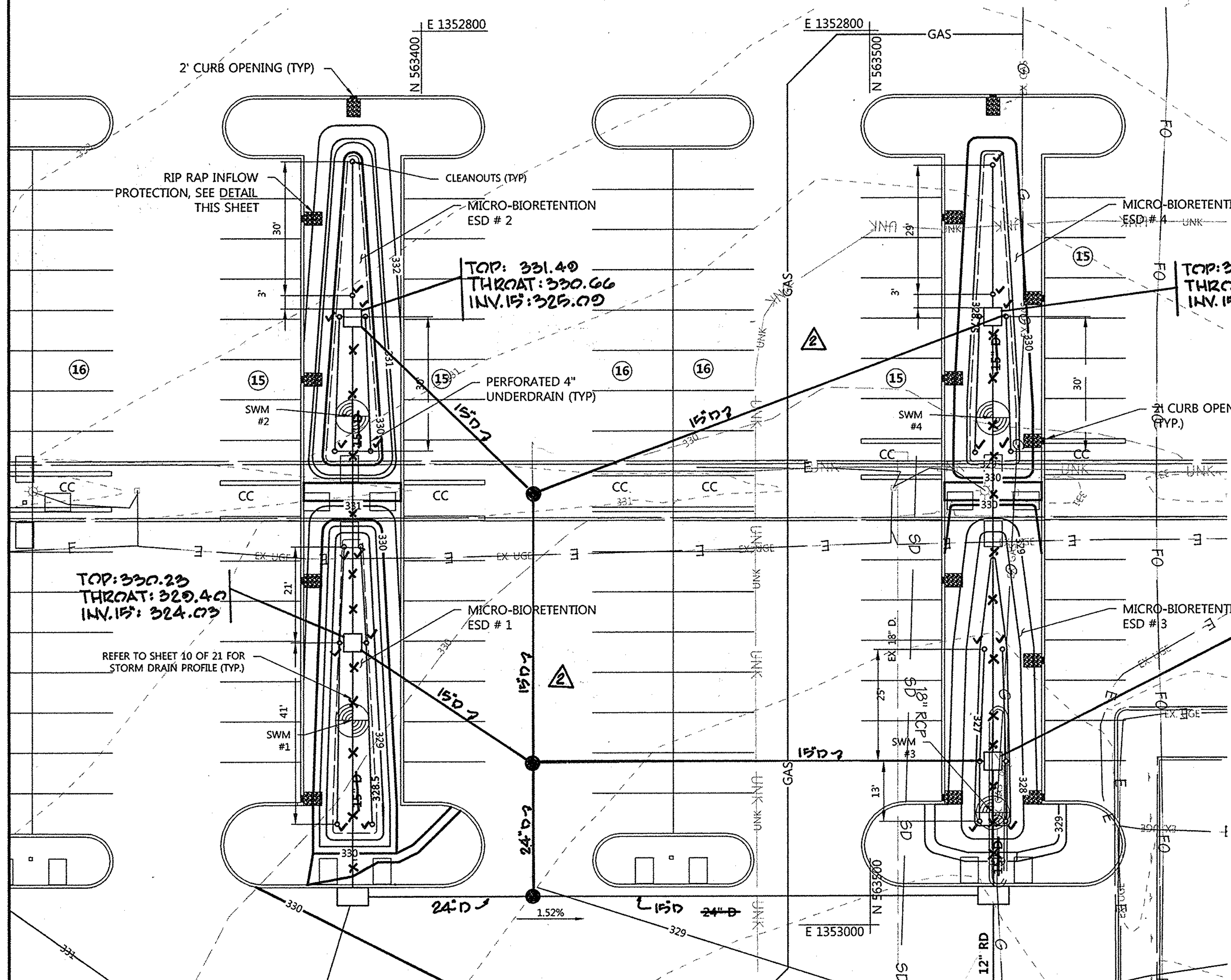


**MICRO-BIORETENTION PLAN**
SCALE: 1"=20'

NORTH

## ACRONYMS

| | |
|---|---|
| CC | - CART CORRAL |
| CIP | - CAPITAL IMPROVEMENT PROJECT |
| CO | - COUNTY |
| EX. | - EXISTING |
| ELEV | - ELEVATION |
| INV | - INVERT |
| NTS | - NOT TO SCALE |
| PROP. | - PROPOSED |
| SCE | - STABILIZED CONSTRUCTION ENTRANCE |
| STD | - STANDARD |
| SWM | - STORMWATER MANAGEMENT |
| TYP. | - TYPICAL |

## AS BUILT CERTIFICATION FOR PSWM

I HEREBY CERTIFY THAT THE FACILITY SHOWN ON THE PLAN WAS CONSTRUCTED AS SHOWN ON THE "AS-BUILT" PLANS AND COMPLIES WITH THE APPROVED PLANS AND SPECIFICATIONS. I HAVE VERIFIED THAT THE CONTRIBUTING DRAINAGE AREA IS SUFFICIENTLY STABILIZED TO PREVENT CLOGGING OF THE UNDERGROUND SWM FACILITY.

SIGNED Gerald D. Turnbaugh P.E. No. 26569
GERALD D. TURNBAUGH AS-BUILT DATE: 9-2014

OPERATION AND MAINTENANCE SCHEDULE FOR LANDSCAPE INFILTRATION (M-3) MICRO-BIORETENTION (M-6), RAIN GARDENS (M-7), BIORETENTION SWALE (M-8), ENHANCED FILTERS (M-9)

a. THE OWNER SHALL MAINTAIN THE PLANT MATERIAL, MULCH LAYER AND SOIL LAYER ANNUALLY. MAINTENANCE OF MULCH AND SOIL IS LIMITED TO CORRECTING AREAS OF EROSION OR WASH OUT. ANY MULCH REPLACEMENT SHALL BE DONE IN THE SPRING. PLANT MATERIAL SHALL BE CHECKED FOR DISEASE AND INSECT INFESTATION AND MAINTENANCE WILL ADDRESS DEAD MATERIAL AND PRUNING. ACCEPTABLE REPLACEMENT PLANT MATERIAL IS LIMITED TO THE FOLLOWING: 2000 MARYLAND STORMWATER DESIGN MANUAL VOLUME II, TABLE A.4.1 AND 2.

b. THE OWNER SHALL PERFORM A PLANT IN THE SPRING AND IN THE FALL OF EACH YEAR. DURING THE INSPECTION, THE OWNER SHALL REMOVE DEAD AND DISEASED VEGETATION CONSIDERED BEYOND TREATMENT, REPLACE DEAD PLANT MATERIAL WITH ACCEPTABLE REPLACEMENT PLANT MATERIAL, TREAT DISEASED TREES AND SHRUBS, AND REPLACE ALL DEFICIENT STAKES AND WIRES.

c. THE OWNER SHALL INSPECT THE MULCH EACH SPRING. THE MULCH SHALL BE REPLACED EVERY TWO TO THREE YEARS. THE PREVIOUS MULCH LAYER SHALL BE REMOVED BEFORE THE NEW LAYER IS APPLIED.

d. THE OWNER SHALL CORRECT SOIL EROSION ON AN AS NEEDED BASIS, WITH A MINIMUM OF ONCE PER MONTH AND AFTER EACH HEAVY STORM.

MICRO-BIORETENTION SEQUENCE OF CONSTRUCTION

1. ONCE CONTRIBUTING DRAINAGE AREAS TO FACILITIES HAVE BEEN STABILIZED, EXCAVATE TO SUB-GRADE. SPECIAL CARE SHOULD BE TAKEN NOT TO DAMAGE THE NEWLY CONSTRUCTED STORM DRAIN INLETS I-7, I-8, I-10 & I-11 AND ASSOCIATED PIPES. ✓
2. ONCE VERIFIED SUB-GRADES HAVE BEEN ESTABLISHED, PLACE 3" OF THE 10" GRAVEL JACKET OF NO.57 OR NO. 6 AGGREGATE IN BOTTOM OF EXCAVATION. ✓
3. PLACE 3' WIDE STRIPS OF FILTER FABRIC DOWN ON 3" GRAVEL LAYER TO SUPPORT UNDERDRAIN SYSTEM. PLACE UNDERDRAINS IN CENTER OF FABRIC & TIE PIPES TO INLET WALLS AT THEIR PRESCRIBED INVERT ELEVATIONS. ✓
4. PLACE REMAINDER (7") OF THE 10" GRAVEL JACKET. CHECK FOR LEVELNESS. ✓
5. PLACE 2" PEA GRAVEL LAYER OVER GRAVEL JACKET. ✓
6. BACKFILL TOPSOIL FILTER MEDIA IN LIFTS OF 12" TO 18". DO NOT COMPACT. INSTALL LANDSCAPE PLANTINGS. ✓
7. INSTALL RIP RAP INFLOW PROTECTION AT ALL CURB OPENING INFLOW POINTS. ✓
8. SEED OR SOD 3:1 SIDE SLOPES. ADD 3" MULCH LAYER. ✓

## LEGEND

| | |
|---|---|
| 330 | EX. MAJOR CONTOURS |
| 329 | EX. MINOR CONTOURS |
| | EX. BUILDING |
| EX. 18" D. | EX. STORM DRAIN |
| EX. 6" W. EX. 6" W. | EX. WATER |
| EX. UGE | EX. UNDERGROUND ELECTRIC |
| EX. 18" D. | EX. STORM DRAIN |
| EX. GAS | EX. UNDERGROUND GAS |
| EX. UGT | EX. UNDERGROUND TELEPHONE |
| 330 | PROP. MAJOR CONTOURS |
| 329 | PROP. MINOR CONTOURS |
| | PROP. CURB/EDGE OF PAVING |
| 18" D. 18" D. | PROP. STORM DRAIN |
| 6" S. | PROP. SEWER |
| GAS | PROP. UNDERGROUND GAS |
| SWM #2 | BORING LOCATION (SEE SHEET 17 OF 21 FOR LOGS) |
| | PROP. LIGHT LUMINARIES REFER TO SITE LIGHTING ON SHEET 21 OF 21 |

| | ESD-1 | ESD-2 | ESD-3 | ESD-4 |
|---|---|---|---|---|
| 10 YR WSE | 329.85 | 331.02 | 328.34 | 330.04 |

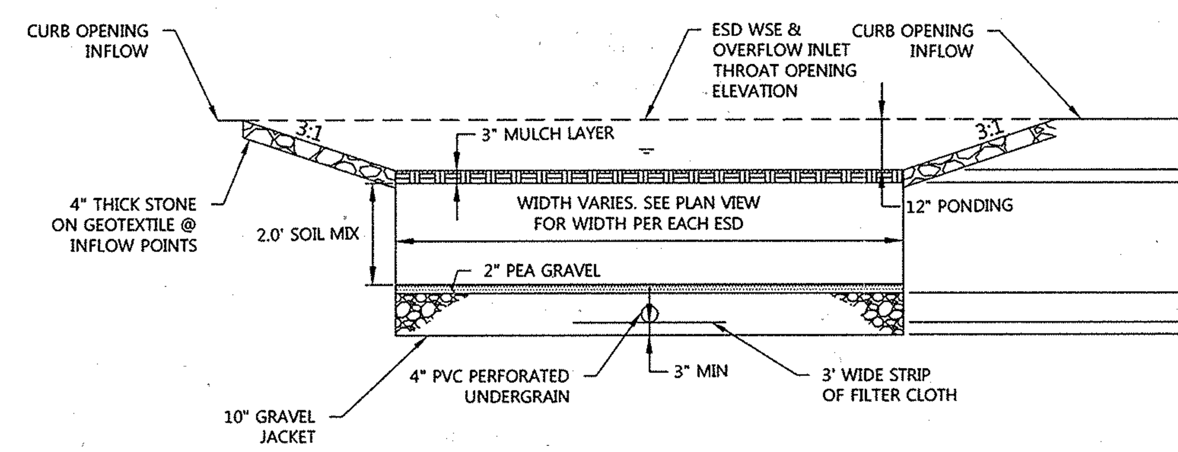


ELEVATIONS

| ESD-1 | ESD-2 | ESD-3 | ESD-4 |
|---|---|---|---|
| 329.~~50~~ 40 | 330.~~75~~ 66 | ~~328.00~~ 327.96 | 329.~~75~~ 65 |
| 328.50 ✓ | 329.75 ✓ | 327.00 ✓ | 328.75 ✓ |
| 328.25 | 329.50 | 326.75 | 328.50 |
| 326.08 | 327.33 | 324.58 | 326.33 |
| 325.~~50~~ 48 | 326.~~75~~ | 324.~~00~~ | 325.~~75~~ |
| 325.25 | 326.50 | 323.75 | 325.50 |

**TYPICAL CROSS-SECTION OF MICRO-BIORETENTION**
SCALE: 1"=3'

AS-BUILT REQUIRED
SEE REDLINES SHOWN HEREON
SIGNED: Michael D. Martin
DAFT McCUNE WALKER, INC.
BY: MICHAEL D. MARTIN, P.L.S. #21234

PROFESSIONAL CERTIFICATION
I HEREBY CERTIFY THAT THESE DOCUMENTS WERE PREPARED OR APPROVED BY ME, AND THAT I AM A DULY LICENSED PROFESSIONAL ENGINEER UNDER THE LAWS OF THE STATE OF MARYLAND.
LICENSE NO. 26569
EXPIRATION DATE: 7-18-15

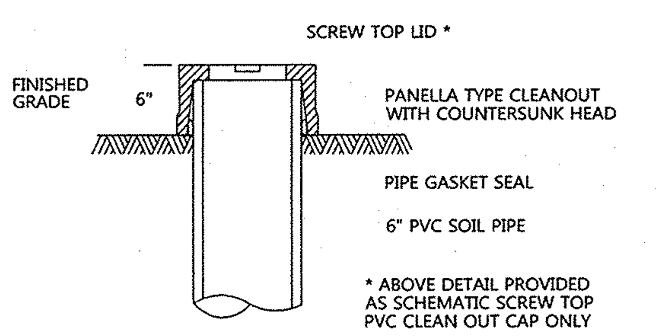


* ABOVE DETAIL PROVIDED AS SCHEMATIC SCREW TOP PVC CLEAN OUT CAP ONLY

EACH CLEANOUT SHALL INCLUDE THE FOLLOWING

1. FOR AN UNDERGROUND FLUSH MOUNTED CLEANOUT, PROVIDE A TUBE MADE OF NON-CORROSIVE MATERIAL, SCHEDULE 40 OR EQUAL, AT LEAST 3-FEET LONG WITH AN INSIDE DIAMETER OF AT LEAST 6-INCHES.
2. THE TUBE SHALL HAVE A FACTORY ATTACHED CAST IRON OR HIGH IMPACT PLASTIC COLLAR WITH RIBS TO PREVENT ROTATION WHEN REMOVING SCREW TOP LID. THE SCREW TOP LID SHALL BE CAST IRON OR HIGH IMPACT PLASTIC THAT WILL WITHSTAND ULTRA-VIOLET RAYS.

**CLEAN OUT DETAIL**
NOT TO SCALE

**DETAIL D-3-1 MODIFIED RIPRAP INFLOW PROTECTION**

STANDARD SYMBOL RRP

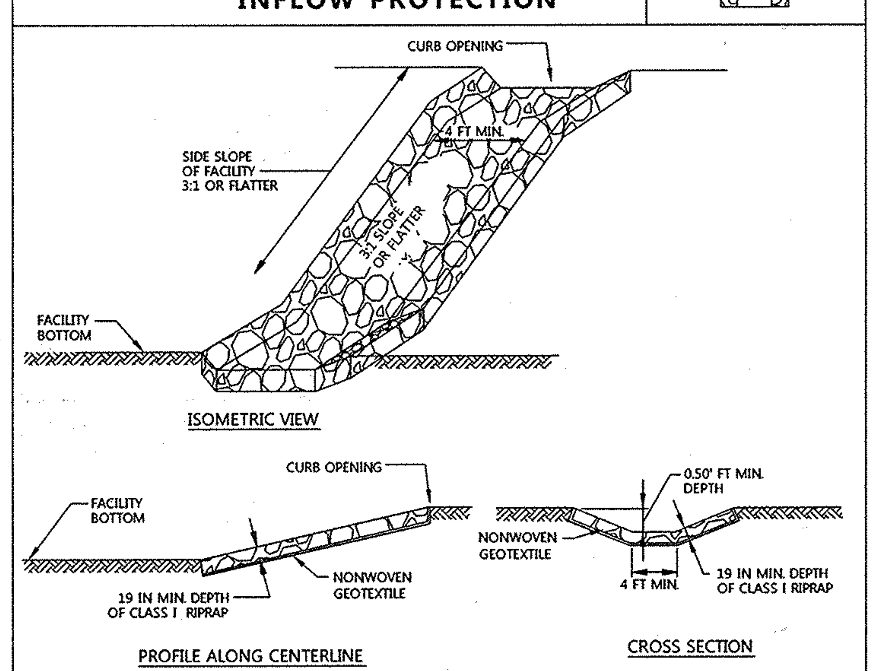


CONSTRUCTION SPECIFICATIONS

1. PROVIDE NONWOVEN GEOTEXTILE, AS SPECIFIED IN SECTION H-1 MATERIALS, UNDER THE BOTTOM AND ALONG SIDES OF ALL RIPRAP.
2. CONSTRUCT INFLOW CHANNEL WITH CLASS I RIPRAP OR EQUIVALENT RECYCLED CONCRETE LINING TO A MINIMUM DEPTH OF 19 INCHES ($2 \times D_{50}$) AND A 0.50' FOOT DEEP FLOW CHANNEL. INFLOW RIPRAP PROTECTION CHANNEL MUST HAVE A TRAPEZOIDAL CROSS SECTION WITH 3:1 OR FLATTER SIDE SLOPES AND A 4 FOOT MINIMUM BOTTOM WIDTH.
3. INSTALL ENTRANCE AND EXIT SECTIONS AS SHOWN ON THE PROFILE.
4. BLEND RIPRAP INTO EXISTING GROUND.
5. MAINTAIN LINE, GRADE, AND CROSS SECTION. REMOVE ACCUMULATED SEDIMENT AND DEBRIS. KEEP POINTS OF INFLOW AND OUTFLOW FREE OF EROSION.

MARYLAND STANDARDS AND SPECIFICATIONS FOR SOIL EROSION AND SEDIMENT CONTROL

| U.S. DEPARTMENT OF AGRICULTURE NATURAL RESOURCES CONSERVATION SERVICE | 2011 | MARYLAND DEPARTMENT OF ENVIRONMENT WATER MANAGEMENT ADMINISTRATION |
|---|---|---|

**TABLE B.4.1 MATERIALS SPECIFICATIONS FOR MICRO-BIORENTENTION, RAIN GARDENS & LANDSCAPE INFILTRATION**

| MATERIAL | SPECIFICATION | SIZE | NOTES |
|---|---|---|---|
| PLANTINGS | SEE APPENDIX A, TABLE A.4 | N/A | PLANTINGS ARE SITE-SPECIFIC |
| PLANTING SOIL [2' TO 4'' DEEP] ✓ | LOAMY SAND (60 - 65%) & COMPOST (35 – 40%) OR SANDY LOAM (30%), COARSE SAND (30%) & COMPOST (40%) | N/A | |
| ORGANIC CONTENT ✓ | MIN. 10% BY DRY WEIGHT (ASTM D 2974) | | |
| MULCH ✓ | SHREDDED HARDWOOD ✓ | | AGED 6 MONTHS, MINIMUM; NO PINE OR WOOD CHIPS |
| PEA GRAVEL DIAPHRAGM | PEA GRAVEL: ASTM-D-448 | NO. 8 OR NO. 9 (1/8" TO 3/8") | |
| CURTAIN DRAIN | ORNAMENTAL STONE: WASHED COBBLES | STONE: 2" TO 5" | |
| GEOTEXTILE | | N/A | PE TYPE 1 NONWOVEN |
| GRAVEL (UNDERDRAINS AND INFILTRATION BERMS) | AASHTO M-43 | NO. 57 OR NO. 6 AGGREGATE (3/8" TO 3/4") | |
| UNDERDRAIN PIPING ✓ | F 758, TYPE PS 28 OR AASHTO M-278 | ✓ 4" TO 6" RIGID SCHEDULE 40 PVC OR SDR35 | SLOTTED OR PERFORATED PIPE; 3/8" PERF. @ 6" ON CENTER, 4 HOLES PER ROW; MINIMUM OF 3" OF GRAVEL OVER PIPES; NOT NECESSARY UNDERNEATH PIPES. PERFORATED PIPE SHALL BE WRAPPED WITH ¼-INCH GALVANIZED HARDWARE CLOTH |
| POURED IN PLACE CONCRETE (IF REQUIRED) | MSHA MIX NO. 3; F'c = 3500 PSI @ 28 DAYS, NORMAL WEIGHT, AIR-ENTRAINED; REINFORCING TO MEET ASTM-615-60 | N/A | ON-SITE TESTING OF POURED-IN-PLACE CONCRETE REQUIRED: 28 DAY STRENGTH AND SLUMP TEST; ALL CONCRETE DESIGN (CAST-IN-PLACE OR PRE-CAST) NOT USING PREVIOUSLY APPROVED STATE OR LOCAL STANDARDS REQUIRES DESIGN DRAWINGS SEALED AND APPROVED BY A PROFESSIONAL STRUCTURAL ENGINEER LICENSED IN THE STATE OF MARYLAND - DESIGN TO INCLUDE MEETING ACI CODE 350.R/89; VERTICAL LOADING [H-10 OR H-20]; ALLOWABLE HORIZONTAL LOADING (BASED ON SOIL PRESSURES); AND ANALYSIS OF POTENTIAL CRACKING |
| SAND | AASHTO-M-6 OR ASTM-C-33 | 0.02" TO 0.04" | SAND SUBSTITUTIONS SUCH AS DIABASE AND GRAYSTONE (AASHTO) #10 ARE NOT ACCEPTABLE. NO CALCIUM CARBONATED OR DOLOMITIC SAND SUBSTITUTIONS ARE ACCEPTABLE. NO "ROCK DUST" CAN BE USED FOR SAND. |

FOR REVISION NO. 2 ONLY
10-22-14
PROFESSIONAL ENGR. No. 26569

MAINTENANCE CRITERIA

1. PERIODICALLY REMOVE TRASH & DEBRIS AS IT ACCUMULATES.
2. REMOVE AND REPLACE TOP FEW INCHES OF FILTER MEDIA WHEN WATER PONDS FOR MORE THAN 48 HRS.
3. PRUNE AND REPLACE DEAD VEGETATION AS NECESSARY.
4. WATER VEGETATION DURING DRY PERIODS

CONTRACT NUMBERS:
EX. WATER: 167-W
EX. SEWER: C-2485-D-S, 2485-D-W&S

PROFESSIONAL CERTIFICATION

I HEREBY CERTIFY THAT THESE DOCUMENTS WERE PREPARED OR APPROVED BY ME, AND THAT I AM A DULY LICENSED PROFESSIONAL ENGINEER UNDER THE LAWS OF THE STATE OF MARYLAND, LICENSE NO. 16928 EXPIRATION DATE: 5/13/14

3/21/13
Date

Professional Engr. No. 16928

APPROVED PLANNING BOARD OF HOWARD COUNTY
DATE MARCH 7, 2013

APPROVED: HOWARD COUNTY DEPT. OF PLANNING AND ZONING
CHIEF, DIVISION OF LAND DEVELOPMENT — DATE 4/26/13
CHIEF, DEVELOPMENT ENGINEERING DIVISION — DATE 4/18/13
DIRECTOR — DATE 4/26/13

| Date | No. | Revision Description |
|---|---|---|
| 10-22-14 | 2 | SHOW REVISED DRAIN SYSTEM |
| 11-28-12 | | REPLACES ALL SHEETS OF ORIGINAL SDP 73-23C |

REVISED SITE DEVELOPMENT PLAN
# THE ROUSE BUILDING RENOVATION

OWNER/DEVELOPER:
CLOVER ACQUISTIONS LLC
C/O THE HOWARD HUGHES CORPORATION
P.O. BOX 833 COLUMBIA, MD 21044-0833

DMW
DAFT McCUNE WALKER INC
200 EAST PENNSYLVANIA TOWSON, MD 21286
P: 410 296 3333 F: 410 296 4705 WWW.DMW.COM
A TEAM OF LAND PLANNERS, LANDSCAPE ARCHITECTS, ENGINEERS, SURVEYORS & ENVIRONMENTAL PROFESSIONALS

AREA
TAX MAP 36 GRID 2 PART OF PARCEL 321, LOT 18
ELECTION DISTRICT 5TH ZONE NT

TITLE **MICRO-BIORETENTION PROFILES AND DETAILS**
AS BUILT

| Des. By GDT/MCB | Scale AS SHOWN | Proj. No. 11133.A |
|---|---|---|
| Drn. By RLV | Date 3/21/13 | 16 of 24 |
| Chk. By GDT/MCB | Approved | |

SDP 73-23C

A:\11133\11133.A0\ENGR\CAD FILES\SHEET FILES\11133_SWM01.DWG Thu, Mar 21, 2013

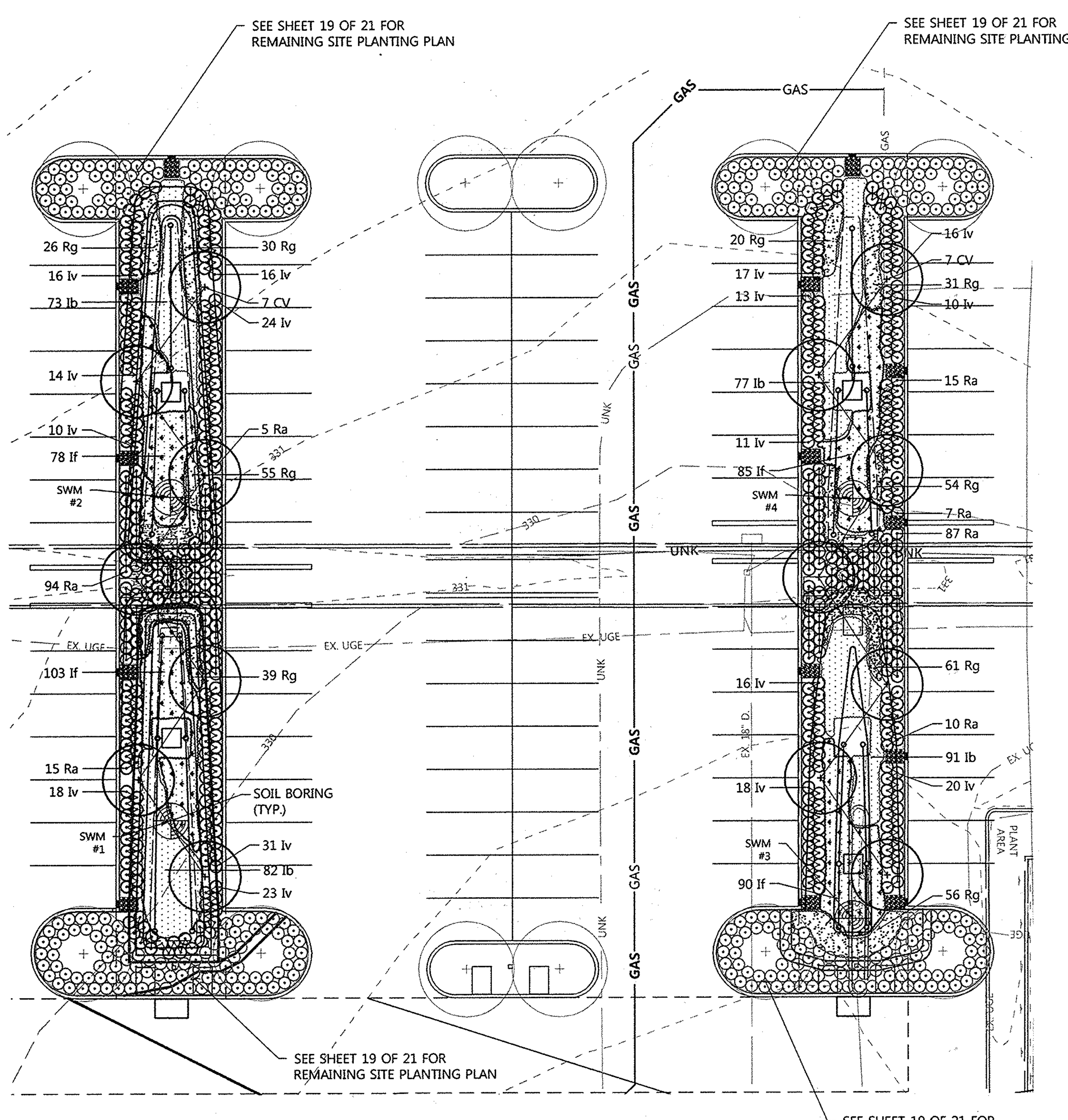


**MICRO-BIORETENTION PLANTING PLAN**

SCALE: 1"=20'

B.4.C SPECIFICATIONS FOR MICRO-BIORETENTION. RAIN GARDENS, LANDSCAPE INFILTRATION & INFILTRATION BERMS

1. MATERIAL SPECIFICATIONS

THE ALLOWABLE MATERIALS TO BE USED IN THESE PRACTICES ARE DETAILED IN TABLE B.4.1. SHOWN ON SHEET 16 OF 21.

✓2. FILTERING MEDIA OR PLANTING SOIL

THE SOIL SHALL BE A UNIFORM MIX, FREE OF STONES, STUMPS, ROOTS OR OTHER SIMILAR OBJECTS LARGER THAN TWO INCHES. NO OTHER MATERIALS OR SUBSTANCES SHALL BE MIXED OR DUMPED WITHIN THE MICRO-BIORETENTION PRACTICE THAT MAY BE HARMFUL TO PLANT GROWTH, OR PROVE A HINDRANCE TO THE PLANTING OR MAINTENANCE OPERATIONS. THE PLANTING SOIL SHALL BE FREE OF BERMUDA GRASS, QUACKGRASS, JOHNSON GRASS, OR OTHER NOXIOUS WEEDS AS SPECIFIED UNDER COMAR 15.08.01.05.

THE PLANTING SOIL SHALL BE TESTED AND SHALL MEET THE FOLLOWING CRITERIA:

- SOIL COMPONENT - LOAMY SAND OR SANDY LOAM (USDA SOIL TEXTURAL CLASSIFICATION)
- ORGANIC CONTENT - MINIMUM 10% BY DRY WEIGHT (ASTM D 2974). IN GENERAL, THIS CAN BE MET WITH A MIXTURE OF LOAMY SAND (60%-65%) AND COMPOST (35% TO 40%) OR SANDY LOAM (30%), COARSE SAND (30%), AND COMPOST (40%).
- CLAY CONTENT - MEDIA SHALL HAVE A CLAY CONTENT OF LESS THAN 5%.
- PH RANGE - SHOULD BE BETWEEN 5.5 - 7.0. AMENDMENTS (E.G., LIME, IRON SULFATE PLUS SULFUR) MAY BE MIXED INTO THE SOIL TO INCREASE OR DECREASE PH.

THERE SHALL BE AT LEAST ONE SOIL TEST PER PROJECT. EACH TEST SHALL CONSIST OF BOTH THE STANDARD SOIL TEST FOR PH, AND ADDITIONAL TESTS OF ORGANIC MATTER, AND SOLUBLE SALTS. A TEXTURAL ANALYSIS IS REQUIRED FROM THE SITE STOCKPILED TOPSOIL. IF TOPSOIL IS IMPORTED, THEN A TEXTURE ANALYSIS SHALL BE PERFORMED FOR EACH LOCATION WHERE THE TOPSOIL WAS EXCAVATED.

✓3. COMPACTION

IT IS VERY IMPORTANT TO MINIMIZE COMPACTION OF BOTH THE BASE OF BIORETENTION PRACTICES AND THE REQUIRED BACKFILL. WHEN POSSIBLE, USE EXCAVATION HOES TO REMOVE ORIGINAL SOIL. IF PRACTICES ARE EXCAVATED USING A LOADER, THE CONTRACTOR SHOULD USE WIDE TRACK OR MARSH TRACK EQUIPMENT, OR LIGHT EQUIPMENT WITH TURF TYPE TIRES. USE OF EQUIPMENT WITH NARROW TRACKS OR NARROW TIRES, RUBBER TIRES WITH LARGE LUGS, OR HIGH-PRESSURE TIRES WILL CAUSE EXCESSIVE COMPACTION RESULTING IN REDUCED INFILTRATION RATES AND IS NOT ACCEPTABLE. COMPACTION WILL SIGNIFICANTLY CONTRIBUTE TO DESIGN FAILURE.

COMPACTION CAN BE ALLEVIATED AT THE BASE OF THE BIORETENTION FACILITY BY USING A PRIMARY TILLING OPERATION SUCH AS A CHISEL PLOW, RIPPER, OR SUBSOILER. THESE TILLING OPERATIONS ARE TO REFRACTURE THE SOIL PROFILE THROUGH THE 12 INCH COMPACTION ZONE. SUBSTITUTE METHODS MUST BE APPROVED BY THE ENGINEER. ROTOTILLERS TYPICALLY DO NOT TILL DEEP ENOUGH TO REDUCE THE EFFECTS OF COMPACTION FROM HEAVY EQUIPMENT.

ROTOTILL 2 TO 3 INCHES OF SAND INTO THE BASE OF THE BIORETENTION FACILITY BEFORE BACKFILLING THE OPTIONAL SAND LAYER. PUMP ANY PONDED WATER BEFORE PREPARING (ROTOTILLING) BASE.

WHEN BACKFILLING THE TOPSOIL OVER THE SAND LAYER, FIRST PLACE 3 TO 4 INCHES OF TOPSOIL OVER THE SAND, THEN ROTOTILL THE SAND/TOPSOIL TO CREATE A GRADATION ZONE. BACKFILL THE REMAINDER OF THE TOPSOIL TO FINAL GRADE.
WHEN BACKFILLING THE BIORETENTION FACILITY, PLACE SOIL IN LIFTS 12" TO 18". DO NOT USE HEAVY EQUIPMENT WITHIN THE BIORETENTION BASIN. HEAVY EQUIPMENT CAN BE USED AROUND THE PERIMETER OF THE BASIN TO SUPPLY SOILS AND SAND. GRADE BIORETENTION MATERIALS WITH LIGHT EQUIPMENT SUCH AS A COMPACT LOADER OR A DOZER/LOADER WITH MARSH TRACKS.

4. PLANT MATERIAL

SEE THIS SHEET FOR REQUIRED PLANTINGS.

✓5. PLANT INSTALLATION

COMPOST IS A BETTER ORGANIC MATERIAL SOURCE, IS LESS LIKELY TO FLOAT, AND SHOULD BE PLACED IN THE INVERT AND OTHER LOW AREAS. MULCH SHOULD BE PLACED IN SURROUNDING TO A UNIFORM THICKNESS OF 2" TO 3". SHREDDED OR CHIPPED HARDWOOD MULCH IS THE ONLY ACCEPTED MULCH. PINE MULCH AND WOOD CHIPS WILL FLOAT AND MOVE TO THE PERIMETER OF THE BIORETENTION AREA DURING A STORM EVENT AND ARE NOT ACCEPTABLE. SHREDDED MULCH MUST BE WELL AGED (6 TO 12 MONTHS) FOR ACCEPTANCE.

ROOTSTOCK OF THE PLANT MATERIAL SHALL BE KEPT MOIST DURING TRANSPORT AND ON-SITE STORAGE. THE PLANT ROOT BALL SHOULD BE PLANTED SO 1/8TH OF THE BALL IS ABOVE FINAL GRADE SURFACE. THE DIAMETER OF THE PLANTING PIT SHALL BE AT LEAST SIX INCHES LARGER THAN THE DIAMETER OF THE PLANTING BALL. SET AND MAINTAIN THE PLANT STRAIGHT DURING THE ENTIRE PLANTING PROCESS. THOROUGHLY WATER GROUND BED COVER AFTER INSTALLATION.
TREES SHALL BE BRACED USING 2" BY 2" STAKES ONLY AS NECESSARY AND FOR THE FIRST GROWING SEASON ONLY. STAKES ARE TO BE EQUALLY SPACED ON THE OUTSIDE OF THE TREE BALL.

GRASSES AND LEGUME SEED SHOULD BE DRILLED INTO THE SOIL TO A DEPTH OF AT LEAST ONE INCH. GRASS AND LEGUME PLUGS SHALL BE PLANTED FOLLOWING THE NON-GRASS GROUND COVER PLANTING SPECIFICATIONS.
THE TOPSOIL SPECIFICATIONS PROVIDE ENOUGH ORGANIC MATERIAL TO ADEQUATELY SUPPLY NUTRIENTS FROM NATURAL CYCLING. THE PRIMARY FUNCTION OF THE BIORETENTION STRUCTURE IS TO IMPROVE WATER QUALITY. ADDING FERTILIZERS DEFEATS, OR AT A MINIMUM, IMPEDES THIS GOAL. ONLY ADD FERTILIZER IF WOOD CHIPS OR MULCH ARE USED TO AMEND THE SOIL. ROTOTILL UREA FERTILIZER AT A RATE OF 2 POUNDS PER 1000 SQUARE FEET.

✓6. UNDERDRAINS

UNDERDRAINS SHOULD MEET THE FOLLOWING CRITERIA:

- PIPE- SHOULD BE 4" TO 6" DIAMETER, SLOTTED OR PERFORATED RIGID PLASTIC PIPE (ASTMF 758, TYPE PS 28, OR AASHTO-M-278) IN A GRAVEL LAYER. THE PREFERRED MATERIAL IS SLOTTED, 4" RIGID PIPE (E.G., PVC OR HDPE).
- PERFORATIONS - IF PERFORATED PIPE IS USED, PERFORATIONS SHOULD BE ⅜" DIAMETER LOCATED 6" ON CENTER WITH A MINIMUM OF FOUR HOLES PER ROW. PIPE SHALL BE WRAPPED WITH A ¼" (NO. 4 OR 4X4) GALVANIZED HARDWARE CLOTH.
- GRAVEL - THE GRAVEL LAYER (NO. 57 STONE PREFERRED) SHALL BE AT LEAST 3" THICK ABOVE AND BELOW THE UNDERDRAIN.
- THE MAIN COLLECTOR PIPE SHALL BE AT A MINIMUM 0.5% SLOPE.
- A RIGID, NON-PERFORATED OBSERVATION WELL MUST BE PROVIDED (ONE PER EVERY 1,0000 SQUARE FEET) TO PROVIDE A CLEAN-OUT PORT AND MONITOR PERFORMANCE OF THE FILTER.
- A 4" LAYER OF PEA GRAVEL (⅛" TO ⅜" STONE) SHALL BE LOCATED BETWEEN THE FILTER MEDIA AND UNDERDRAIN TO PREVENT MIGRATION OF FINES INTO THE UNDERDRAIN. THIS LAYER MAY BE CONSIDERED PART OF THE FILTER BED WHEN BED THICKNESS EXCEEDS 24".

THE MAIN COLLECTOR PIPE FOR UNDERDRAIN SYSTEMS SHALL BE CONSTRUCTED AT A MINIMUM SLOPE OF 0.5%. OBSERVATION WELLS AND/OR CLEAN-OUT PIPES MUST BE PROVIDED (ONE MINIMUM PER EVERY 1000 SQUARE FEET OF SURFACE AREA).

✓7. MISCELLANEOUS

THESE PRACTICES MAY NOT BE CONSTRUCTED UNTIL ALL CONTRIBUTING DRAINAGE AREA HAS BEEN STABILIZED

**Microbioretention Plant Schedule ✓**
**Refer to DMW Sheets 17 of 21**

| KEY | QTY | BOTANICAL NAME | COMMON NAME | SIZE | REMARKS |
|---|---|---|---|---|---|
| **TREES -ORNAMENTAL** | | | | | |
| CV | 14 | Crataegus viridis 'Winter King' | Winter King Hawthorne | 2"-2.5" cal. 10-12' ht. | B&B , Full |
| **SHRUBS** | | | | | |
| **DECIDUOUS** | | | | | |
| Iv | 270 | Itea virginica | Virginia Sweetspire | 18-24" ht | Full , 30" o.c. |
| Ra | 228 | Rhus aromatica 'Gro-low' | Fragrant Sumac | 18-24" ht | Full , 30" o.c. |
| **GROUNDCOVERS/PERENNIALS/GRASSES** | | | | | |
| Ib | 323 | Iris versicolor | Blue Flag Iris | 1 gal. container | 24" o.c. |
| If | 356 | Iris fulva 'Lois Yellow' | Copper Iris | 1 gal. container | 24" o.c. |
| Rg | 372 | Rudbeckia fulgida 'Goldsturm' | Perennial Black-eyed Susan | 2 qt. container | 18" o.c. |

STATE OF MARYLAND GERALD DOUGLAS TURNBAUGH NO. 26569 PROFESSIONAL ENGINEER

AS BUILT CERTIFICATION FOR PSWM

I HEREBY CERTIFY THAT THE FACILITY SHOWN ON THE PLAN WAS CONSTRUCTED AS SHOWN ON THE "AS-BUILT" PLANS AND COMPLIES WITH THE APPROVED PLANS AND SPECIFICATIONS. I HAVE VERIFIED THAT THE CONTRIBUTING DRAINAGE AREA IS SUFFICIENTLY STABILIZED TO PREVENT CLOGGING OF THE UNDERGROUND SWM FACILITY.

SIGNED: [signature] P.E. No. 26569
GERALD D. TURNBAUGH AS-BUILT DATE: 9-2014

**CTI** CONSULTANTS INC
14221-B Willard Road #100 (703) 803-8411
Chantilly, Virginia 20151 fax (703) 803-8085

**SOIL BORING LOG: SWM-1** (1 OF 1)

Project Number: 2G-1053 | Client: | Boring Contractor: Recon Drilling | Project Name: Howard Hughes Rouse Building | Foreman: | Project Location: 10275 Little Patuxent Parkway | Boring Method: | Boring Location: See Boring Location Plan | Inspector: MC | Total Depth 15.00 ft 4.57 m | Elev.: ft m | Referenced Datum: Sea Level | Completion Date: October 24, 2012

| Depth (ft) | DESCRIPTION OF MATERIALS | Stratum Depth(ft) | Sample Number | Sample Blows | N Value | REMARKS |
|---|---|---|---|---|---|---|
| | 7" ASPHALT | 0.7 | | | | No base aggregate encountered below the asphalt |
| | Brown poorly graded SAND, no plasticity, medium dense, slightly moist | | S-1 | 6-8-8 | 16 | |
| | | | S-2 | 5-5-6 | 11 | |
| 5 | -gray, mottled | | S-3 | 5-6-10 | 16 | |
| 10 | | | S-4 | 7-10-13 | 23 | |
| | -orange-brown | 15.0 | S-5 | 8-10-11 | 21 | |
| 15 | BORING TERMINATED AT 15.0 FEET | | | | | Groundwater not encountered during or upon completion of drilling. Boring was backfilled upon completion and cold patched with asphalt |

WATER LEVEL OBSERVATIONS
Noted on Rods: ft
On Completion: ft

**CTI** CONSULTANTS INC
14221-B Willard Road #100 (703) 803-8411
Chantilly, Virginia 20151 fax (703) 803-8085

**SOIL BORING LOG: SWM-2** (1 OF 1)

Project Number: 2G-1053 | Client: | Boring Contractor: Recon Drilling | Project Name: Howard Hughes Rouse Building | Foreman: | Project Location: 10275 Little Patuxent Parkway | Boring Method: | Boring Location: See Boring Location Plan | Inspector: MC | Total Depth 6.00 ft 1.83 m | Elev.: ft m | Referenced Datum: Sea Level | Completion Date: October 24, 2012

| Depth (ft) | DESCRIPTION OF MATERIALS | Stratum Depth(ft) | Sample Number | Sample Blows | N Value | REMARKS |
|---|---|---|---|---|---|---|
| | 6" ASPHALT | 0.5 | | | | No base aggregate encountered below the asphalt |
| | Mottled brown, poorly graded SAND, no plasticity, medium dense, moist | | S-1 | 5-7-10 | 17 | |
| | | | S-2 | 9-50/4" | 74 | |
| 5 | -gray | 4.5 | | | | |
| | Gray weathered rock | 6.0 | S-3 | 50/1" | 600 | |
| | AUGER REFUSAL AT 6.0 FEET | | | | | No groundwater encountered during or upon completion of drilling. Boring was backfilled upon completion and cold patched with aspalt |

WATER LEVEL OBSERVATIONS
Noted on Rods: ft
On Completion: ft

**CTI** CONSULTANTS INC
14221-B Willard Road #100 (703) 803-8411
Chantilly, Virginia 20151 fax (703) 803-8085

**SOIL BORING LOG: SWM-3** (1 OF 1)

Project Number: 2G-1053 | Client: | Boring Contractor: Recon Drilling | Project Name: Howard Hughes Rouse Building | Foreman: | Project Location: 10275 Little Patuxent Parkway | Boring Method: | Boring Location: See Boring Location Plan | Inspector: MC | Total Depth 14.00 ft 4.27 m | Elev.: ft m | Referenced Datum: Sea Level | Completion Date: October 24, 2012

| Depth (ft) | DESCRIPTION OF MATERIALS | Stratum Depth(ft) | Sample Number | Sample Blows | N Value | REMARKS |
|---|---|---|---|---|---|---|
| | 7" ASPHALT | 0.5 | | | | No base aggregate encountered below the asphalt |
| | Mottled gray, poorly graded SAND, no plasticity, medium dense, slightly moist | | S-1 | 7-5-8 | 13 | |
| | | | S-2 | 6-5-8 | 13 | |
| 5 | | | S-3 | 9-9-5 | 14 | |
| | | | S-4 | 3-4-4 | 8 | |
| | | 13.5 | | | | |
| | Gray weathered rock | 14.0 | S-5 | 50/6" | 100 | |
| 15 | AUGER REFUSAL AT 14.0 FEET | | | | | No groundwater encountered during or upon completion of drilling. Boring was backfilled upon completion and cold patched with asphalt |

WATER LEVEL OBSERVATIONS
Noted on Rods: ft
On Completion: ft

**CTI** CONSULTANTS INC
14221-B Willard Road #100 (703) 803-8411
Chantilly, Virginia 20151 fax (703) 803-8085

**SOIL BORING LOG: SWM-4** (1 OF 1)

Project Number: 2G-1053 | Client: | Boring Contractor: Recon Drilling | Project Name: Howard Hughes Rouse Building | Foreman: | Project Location: 10275 Little Patuxent Parkway | Boring Method: | Boring Location: See Boring Location Plan | Inspector: MC | Total Depth 6.00 ft 1.83 m | Elev.: ft m | Referenced Datum: Sea Level | Completion Date: October 24, 2012

| Depth (ft) | DESCRIPTION OF MATERIALS | Stratum Depth(ft) | Sample Number | Sample Blows | N Value | REMARKS |
|---|---|---|---|---|---|---|
| | 6" ASPHALT | 0.5 | | | | No base aggregate encountered below the asphalt |
| | Gray -brown, poorly graded SAND, no plasticity, medium dense, moist | | S-1 | 6-8-11 | 19 | |
| | | | S-2 | 8-12-11 | 23 | |
| 5 | | 6.0 | S-3 | 50/1" | 0 | |
| | AUGER REFUSAL AT 6.0 FEET | | | | | No groundwater encountered during or upon completion of drilling. Boring was backfilled upon completion and cold patched with asphalt |

WATER LEVEL OBSERVATIONS
Noted on Rods: ft
On Completion: ft

STATE OF MARYLAND MICHAEL DAVID MARTIN No. 21234 PROFESSIONAL LAND SURVEYOR

AS-BUILT REQUIRED

SEE REDLINES SHOWN HEREON
SIGNED: [signature]
DAFT McCUNE WALKER, INC.
BY: MICHAEL D.MARTIN P.L.S.#21234

CONTRACT NUMBERS:
EX. WATER: 167-W
EX. SEWER: C-2485-D-S, 2485-D-W&S

PROFESSIONAL CERTIFICATION

I HEREBY CERTIFY THAT THESE DOCUMENTS WERE PREPARED OR APPROVED BY ME, AND THAT I AM A DULY LICENSED PROFESSIONAL ENGINEER UNDER THE LAWS OF THE STATE OF MARYLAND, LICENSE NO. 16928 EXPIRATION DATE: 5/13/14

3/21/13
Date

Professional Engr. No. 16928

APPROVED PLANNING BOARD OF HOWARD COUNTY
DATE MARCH 7, 2013

APPROVED: HOWARD COUNTY DEPT. OF PLANNING AND ZONING
[signature] CHIEF, DIVISION OF LAND DEVELOPMENT — DATE 4/26/13
[signature] CHIEF, DEVELOPMENT ENGINEERING DIVISION — DATE 4/18/13
[signature] DIRECTOR — DATE 4/26/13

| Date | No. | Revision Description |
|---|---|---|
| 11-28-12 | | REPLACES ALL SHEETS OF ORIGINAL SDP 73-23C |

REVISED SITE DEVELOPMENT PLAN

# THE ROUSE BUILDING RENOVATION

OWNER/DEVELOPER:
CLOVER ACQUISTIONS LLC
C/O THE HOWARD HUGHES CORPORATION
P.O. BOX 833 COLUMBIA, MD 21044-0833

DMW
DAFT McCUNE WALKER INC
200 EAST PENNSYLVANIA TOWSON, MD 21286
P: 410 296 3333 F: 410 296 4705 WWW.DMW.COM
A TEAM OF LAND PLANNERS, LANDSCAPE ARCHITECTS, ENGINEERS, SURVEYORS & ENVIRONMENTAL PROFESSIONALS

AREA
TAX MAP 36 GRID 2 PART OF PARCEL 321, LOT 18
ELECTION DISTRICT 5TH ZONE NT

TITLE
**ESD PLANTING PLAN & GENERAL & SOIL BORINGS**
AS BUILT

| Des. By GDT/MCB | Scale 1"=20' | Proj. No. 11133.A |
|---|---|---|
| Drn. By RLV | Date 3/19/13 | 17 of 24 |
| Chk. By GDT/MCB | Approved | |

SDP 73-23C

A:\11133\11133.A0\ENGR\CAD FILES\SHEET FILES\11133_SWM03.DWG Tue, Mar 19, 2013

# LITTLE PATUXENT PARKWAY (PUBLIC COUNTY ROAD, 114' R/W)

VEHICULAR INGRESS & EGRESS TO LITTLE PATUXMENT PARKWAY WILL BE PERMITTED ONLY AT POINTS OF ACCESS APPROVED BY THE HOWARD COUNTY OFFICE OF PLANNING & ZONING

N 563100 E 1352700 — N 563600 E 1352700

EX. SIDEWALK

EX. PRIVATE ACCESS ROAD

EX. INGRESS AND EGRESS EASEMENT C.M.P. 678 / F. 332

EX. 20' PUBLIC WATER & UTILITY EASEMENT C.M.P. 625/ F. 389

PROP. 20' PUBLIC WATER & UTILITY EASEMENT

D.A. - 20,836.94 S.F.
IMP - 9,693.24 S.F.

D.A. - 23,852.47 S.F.
IMP - 11,320.98 S.F.

D.A. - 24,511.78 S.F.
IMP - 18,234.17 S.F.

D.A. - 22,148.76 S.F.
IMP - 17,395.19 S.F.

MICRO-BIORETENTION ESD #1

MICRO-BIORETENTION ESD #2

MICRO-BIORETENTION ESD #3

MICRO-BIORETENTION ESD #4

EX. 20' SEWER & UTILITY EASEMENT

PROP. CANOPY

EXIST. RETAINING WALL

EX. FLAGPOLES

PROP. ENTRANCE

PROP. EXIT
EX. GLASS ENCLOSURE

EX. CONC. WALL

EX. COLUMN

EX. VAULT

EX. BENCH

EX. FOUNTAIN

EX. WOOD COLUMN ON CONC. PAD

EX. GLASS ENCLOSURE

PROP. DUMPSTER

EX. STEPS & HANDRAIL

EX. 20' UTILITY EASEMENT C.M.P. 477 / F. 303

EX. FLOODPLAIN EASEMENT C.M.P. 625 / F. 389

EX. INGRESS AND EGRESS EASEMENT C.M.P. 678 / F. 332

EX. PAVERS

EX. MULCH AREA

EX. CONC.

**BUILDING**
**EX. 1ST FLOOR ELEV. = 315.02'**
**PROP. 2ND FLOOR ELEV. = 330.26'**

HOWARD HUGHES PARCEL 321 LOT 17 ZONED: NEW TOWN

LAKE KITTAMAQUNDI

PARCEL 389, LOT 2
THE HOWARD RESEARCH AND DEVELOPMENT CORP.
ZONED: NEW TOWN

EX. INGRESS AND EGRESS EASEMENT C.M.P. 625 / F. 578

NORTH

## LEGEND

- PROPERTY BOUNDARY
- EX. RIGHT OF WAY
- ADJACENT PROPERTY BOUNDARY
- EX. EASEMENT
- EX. ROADS AND WALKS
- EX. MAJOR CONTOURS
- EX. MINOR CONTOURS
- EX. BUILDING
- EX. GRAVEL
- EX. TREE
- EX. TREE TO BE REMOVED
- EX. GROUP LIGHT
- EX. STORM DRAIN
- EX. SANITARY SEWER
- EX. WATER
- EX. UNDERGROUND ELECTRIC
- PROP. CURB/EDGE OF PAVING
- PROP. DEPRESSED CURB
- LIMIT OF DISTURBANCE
- DRAINAGE DIVIDES
- PROP. LIGHT LUMINARIES REFER TO SITE LIGHTING ON SHEET 21 OF 21

AS-BUILT REQUIRED
SEE REDLINES SHOWN HEREON
SIGNED: DAFT McCUNE WALKER, INC.
MICHAEL D. MARTIN PLS. 21234

STATE OF MARYLAND — MICHAEL DAVID MARTIN — No. 21234 — PROFESSIONAL LAND SURVEYOR

| GENERAL INFORMATION | DA: A, B, C & D |
|---|---|
| WATERSHED | LITTLE PATUXENT |
| STREAM CLASSIFICATION | USE P-1 |
| STRUCTURE LOCATION | VEGETATED ISLAND |
| STRUCTURE CLASSIFICATION | MICRO-SCALE PRACTICE (M-6): MICRO-BIORETENTION |
| LEVEL OF MANAGEMENT REQUIRED | ESDv |
| LEVEL OF MANAGEMENT PROVIDED | ESDv |
| WATER QUALITY METHOD | MICRO-BIORETENTION |

STATE OF MARYLAND — GERALD DOUGLAS TURNBAUGH — No. 26960 — PROFESSIONAL ENGINEER

## AS BUILT CERTIFICATION FOR PSWM

I HEREBY CERTIFY THAT THE FACILITY SHOWN ON THE PLAN WAS CONSTRUCTED AS SHOWN ON THE "AS-BUILT" PLANS AND COMPLIES WITH THE APPROVED PLANS AND SPECIFICATIONS. I HAVE VERIFIED THAT THE CONTRIBUTING DRAINAGE AREA IS SUFFICIENTLY STABILIZED TO PREVENT CLOGGING OF THE UNDERGROUND SWM FACILITY.

SIGNED: Gerald D. Turnbaugh PE.No.26960
GERALD D. TURNBAUGH AS BUILT DATE: 9-2014

## ACRONYMS

| | |
|---|---|
| CC | - CART CORRAL |
| CIP | - CAPITAL IMPROVEMENT PROJECT |
| CO | - COUNTY |
| EX. | - EXISTING |
| ELEV | - ELEVATION |
| INV | - INVERT |
| NTS | - NOT TO SCALE |
| PROP. | - PROPOSED |
| SCE | - STABILIZED CONSTRUCTION ENTRANCE |
| STD | - STANDARD |
| SWM | - STORMWATER MANAGEMENT |
| TYP. | - TYPICAL |

UNIFIED STORMWATER SIZING CRITERIA

| SIZING CRITERIA | Required | Provided |
|---|---|---|
| WATER QUALITY VOLUME (WQv) (CF) | 3,864 CF TO BE WAIVED MET | *2,916 CF |
| RECHARGE VOLUME (REV) (CFT) | | |
| CHANNEL PROTECTION VOLUME (CPv) | | |
| OVERBANK FLOOD PROTECTION VOLUME (QP) | N/A | N/A |
| EXTREME FLOOD VOLUME (QR) | N/A | N/A |

* ESDv REQUIRED ACCOUNTS FOR 75% OF NEW TREATMENT ESDv FOR MICRO-BIORETENTION

| PRACTICE | SITE DEVELOPMENT SUMMARY TABLE DIMENSIONS | DRAINAGE AREA (SF) | VOLUME (ESDv) CAPTURED (CF) |
|---|---|---|---|
| MICRO-BIORETENTION 1 (DA A) | AREA = 2.3' MEDIA, 0.5' PONDING | 24,511.78 | 696 |
| MICRO-BIORETENTION 2 (DA B) | AREA = 2.3' MEDIA, 0.5' PONDING | 20,836.94 | 699 |
| MICRO-BIORETENTION 3 (DA C) | AREA = 2.3' MEDIA, 0.5' PONDING | 22,148.76 | 797 |
| MICRO-BIORETENTION 4 (DA D) | AREA = 2.3' MEDIA, 0.5' PONDING | 23,852.47 | 724 |
| | | TOTAL | 2,916 CF |
| | | 75% TOTAL ESDv REQ'D | 2,898 CF |

## PROFESSIONAL CERTIFICATION

I HEREBY CERTIFY THAT THESE DOCUMENTS WERE PREPARED OR APPROVED BY ME, AND THAT I AM A DULY LICENSED PROFESSIONAL ENGINEER UNDER THE LAWS OF THE STATE OF MARYLAND, LICENSE NO. 16928 EXPIRATION DATE: 5/13/14

## PROFESSIONAL CERTIFICATION

I HEREBY CERTIFY THAT THESE DOCUMENTS WERE PREPARED OR APPROVED BY ME, AND THAT I AM A DULY LICENSED PROFESSIONAL ENGINEER UNDER THE LAWS OF THE STATE OF MARYLAND.
LICENSE NO. 26960
EXPIRATION DATE: 7-18-15
FOR REVISION NO. 2 ONLY
10-22-14

STATE OF MARYLAND — GERALD DOUGLAS TURNBAUGH — No. 26960 — PROFESSIONAL ENGINEER
Professional Engr. No. 26960

3/21/13
Date

STATE OF MARYLAND — ROBERT LEE VOGEL — No. 16928 — PROFESSIONAL ENGINEER
Professional Engr. No. 16928

CONTRACT NUMBERS:
EX. WATER: 167-W
EX. SEWER: C-2485-D-S, 2485-D-W&S

APPROVED PLANNING BOARD OF HOWARD COUNTY
DATE MARCH 7, 2013

APPROVED: HOWARD COUNTY DEPT. OF PLANNING AND ZONING

CHIEF, DIVISION OF LAND DEVELOPMENT — DATE 4/26/13
CHIEF, DEVELOPMENT ENGINEERING DIVISION — DATE 4/18/13
DIRECTOR — DATE 4/24/13

| Date | No. | Revision Description |
|---|---|---|
| 10-22-14 | 2 | SHOW REVISED DRAIN SYSTEM |
| 11-28-12 | | REPLACES ALL SHEETS OF ORIGINAL SDP 73-23C |

REVISED SITE DEVELOPMENT PLAN

# THE ROUSE BUILDING RENOVATION

OWNER/DEVELOPER:
CLOVER ACQUISTIONS LLC
C/O THE HOWARD HUGHES CORPORATION
P.O. BOX 833 COLUMBIA, MD 21044-0833


DMW
DAFT McCUNE WALKER INC
200 EAST PENNSYLVANIA TOWSON, MD 21286
P: 410 296 3333 F: 410 296 4705 WWW.DMW.COM
A TEAM OF LAND PLANNERS, LANDSCAPE ARCHITECTS, ENGINEERS, SURVEYORS & ENVIRONMENTAL PROFESSIONALS


AREA
TAX MAP 36 GRID 2 PART OF PARCEL 321, LOT 18
ELECTION DISTRICT 5TH — ZONE NT

TITLE
**PROPOSED ESD DRAINAGE AREA MAP**
**AS BUILT**

| | | | |
|---|---|---|---|
| Des. By GDT/MCB | Scale 1"=30' | Proj. No. 11133.A | |
| Drn. By RLV | Date 3/19/13 | | |
| Chk. By GDT/MCB | Approved | 18 of 264 | |

SDP 73-23C

A:\11133\11133_A01ENDR\CAD FILES\SHEET FILES\11133_DA01.DWG Tue, Mar 19, 2013

# LITTLE PATUXENT PARKWAY (PUBLIC)

VEHICULAR INGRESS & EGRESS TO LITTLE PATUXENT PARKWAY WILL BE PERMITTED ONLY AT POINTS OF ACCESS APPROVED BY THE HOWARD COUNTY OFFICE OF PLANNING & ZONING

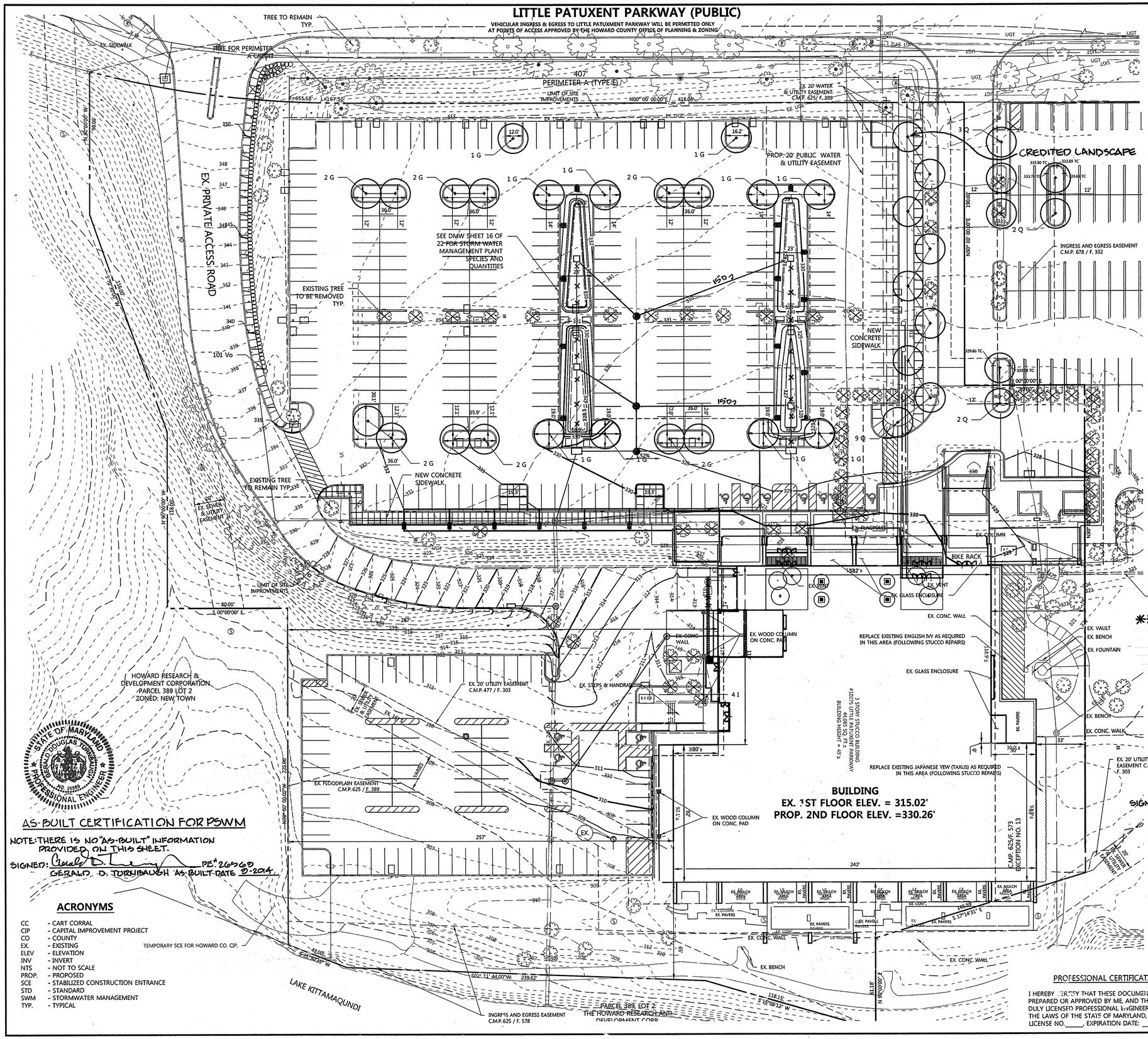


NORTH

## Plant Schedule

| KEY | QTY | BOTANICAL NAME | COMMON NAME | SIZE | REMARKS |
|---|---|---|---|---|---|
| TREES - DECIDUOUS SHADE | | | | | |
| G | 22 | Gleditsia triacanthos var. inermis | Thornless Honey Locust | 2.5"-3" Cal 12'-14' ht. | B&B , Full |
| Q | 16 | Quercus phellos | Willow Oak | 2.5"-3" Cal 12'-14' ht. | B&B , Full |
| SHRUBS | | | | | |
| Vo | 101 | Viburnum opulus var. Americanum | American Cranberry Bush | 24"-30" ht. | Full , 30" o.c. |
| Tw | TBD | Taxus media ' Wardi' | Ward's Yew | 30" ht., Full , 30" o.c. | Replace damaged plants |
| GROUNDCOVERS/PERENNIALS/GRASSES | | | | | |
| Hx | TBD | Hedera helix | English Ivy | 4" Peat Pot | Replace damaged plants |

| Schedule A<br>Perimeter Landscape Edge Adjacent to Roadway | |
|---|---|
| **Landscape Type** | E |
| Linear Feet of Roadway Frontage/Perimeter | 407 LF. |
| Credit for Existing Vegetation (Yes, No, Linear Feet) (Describe Below if Needed) | Yes |
| Credit for Wall, Fence, or Berm (Yes, No, Linear Feet) (Describe Below if Needed) | No |
| **Number of Plants Required** | |
| Shade Trees | 407/40=11 |
| Evergreen Trees | 0 |
| Shrubs | 407/4=101 ** |
| **Number of Plants Provided** | |
| Shade Trees | 7 (Existing)* +1 NEW |
| Evergreen Trees | 6 (Existing)* |
| Other Trees (2:1 Substitution) | 0 |
| Shrubs (10:1 Substitution) | 0 |
| Total- Per Howard County Landscape Manual | 11 ~~13~~ Trees<br>10 (Existing)* +1 NEW |

* 7 SHADE TREES AND 6 EVERGREEN TREES TO REMAIN ALONG LITTLE PATUXENT PARKWAY AND FULFILL THE SCHEDULE A REQUIREMENT IN THE HOWARD COUNTY LANDSCAPE MANUAL

| Schedule B<br>Parking Lot Internal Landscaping | |
|---|---|
| Number of Parking Spaces | 356 |
| Number of Trees Required (1sh/20sp.) | 18 |
| **Number of Plants Provided** | |
| Shade Trees | 22 |
| Evergreen Trees | 0 |
| Other Trees (2:1 Substitution) | 0 |
| Shrubs (10:1 Substitution) | 0 |
| Total- Per Howard County Landscape Manual | 22 |

LEGEND

EXISTING TREE (TO REMAIN)

NEW EXISTING TREE (PERIMETER A CREDIT)

EXISTING TREE (TO BE REMOVED)

NEW PROPOSED SHADE TREE

PROPOSED SHRUB

NOTES:

1. SEE DMW SHEET 16 OF 22 (MICRO-BIORETENTION PROFILES AND DETAILS) FOR STORM WATER MANAGEMENT PLANT SPECIES & QUANTITIES.
2. DEVELOPER'S/BUILDER'S CERTIFICATE
   I/WE CERTIFY THAT THE LANDSCAPING SHOWN ON THIS PLAN WILL BE DONE ACCORDING TO THE PLAN, SECTION 16.124 OF THE HOWARD COUNTY SUBDIVISION AND LAND DEVELOPMENT REGULATIONS AND THE LANDSCAPE MANUAL. I/WE FURTHER CERTIFY THAT UPON COMPLETION, A LETTER OF NOTICE, ACCOMPANIED BY AN EXECUTED ONE GUARANTEE OF PLANT MATERIALS WILL BE SUBMITTED TO THE DEPARTMENT OF PLANNING AND ZONING.

DEVELOPER _____ DATE 3/14/13

** DUE TO THE TOPOGRAPHY ALONG LITTLE PATUXENT PARKWAY, DPZ HAS DETERMINED THAT SHRUB PLANTINGS SHOULD BE RELOCATED TO THE SOUTHERN ACCESS DRIVE TO PROVIDE THE INTENDED BUFFER.

AS BUILT
NOT REQUIRED
SIGNED: DAFT McCUNE WALKER, INC.
BY: MICHAEL D. MARTIN, P.L.S. #21234

AS-BUILT CERTIFICATION FOR PSWM

NOTE: THERE IS NO "AS-BUILT" INFORMATION PROVIDED ON THIS SHEET.

SIGNED: _____ PE# 26960
GERALD D. TORNIBAUGH AS-BUILT DATE 3-2014

## ACRONYMS

| | |
|---|---|
| CC | - CART CORRAL |
| CIP | - CAPITAL IMPROVEMENT PROJECT |
| CO | - COUNTY |
| EX. | - EXISTING |
| ELEV | - ELEVATION |
| INV | - INVERT |
| NTS | - NOT TO SCALE |
| PROP. | - PROPOSED |
| SCE | - STABILIZED CONSTRUCTION ENTRANCE |
| STD | - STANDARD |
| SWM | - STORMWATER MANAGEMENT |
| TYP. | - TYPICAL |

TEMPORARY SCE FOR HOWARD CO. CIP.

PROFESSIONAL CERTIFICATION

I HEREBY CERTIFY THAT THESE DOCUMENTS WERE PREPARED OR APPROVED BY ME, AND THAT I AM A DULY LICENSED PROFESSIONAL ENGINEER UNDER THE LAWS OF THE STATE OF MARYLAND, LICENSE NO. _____, EXPIRATION DATE: _____.

CONTRACT NUMBERS:
EX. WATER: 167-W
EX. SEWER: C-2485-D-S, 2485-D-W&S

3/20/13
Date

Professional Engr. No. 905

APPROVED PLANNING BOARD OF HOWARD COUNTY
DATE MARCH 7, 2013

APPROVED: HOWARD COUNTY DEPT. OF PLANNING AND ZONING

CHIEF, DIVISION OF LAND DEVELOPMENT _____ DATE 4/26/13

CHIEF, DEVELOPMENT ENGINEERING DIVISION _____ DATE 4/18/13

DIRECTOR _____ DATE 4/26/13

| Date | No. | Revision Description |
|---|---|---|
| 11-28-12 | | REPLACES ALL SHEETS OF ORIGINAL SDP 73-23C |

REVISED SITE DEVELOPMENT PLAN

# THE ROUSE BUILDING RENOVATION

OWNER/DEVELOPER:
CLOVER ACQUISTIONS LLC
C/O THE HOWARD HUGHES CORPORATION
P.O. BOX 833 COLUMBIA, MD 21044-0833


DMW
DAFT McCUNE WALKER INC
200 EAST PENNSYLVANIA TOWSON, MD 21286
P: 410 296 3333 F: 410 296 4705 WWW.DMW.COM
A TEAM OF LAND PLANNERS, LANDSCAPE ARCHITECTS, ENGINEERS, SURVEYORS & ENVIRONMENTAL PROFESSIONALS


AREA
TAX MAP 36 GRID 2 PART OF PARCEL 321, LOT 18
ELECTION DISTRICT 5TH ZONE NT

TITLE
PLANTING PLAN
AS BUILT

| | | | |
|---|---|---|---|
| Des. By HWA | Scale 1"=30' | Proj. No. 11133.A | |
| Drn. By ZL | Date 3/14/13 | 19 of 2~~8~~4 | |
| Chk. By HWA | Approved | | |

SDP 73-23C

A:\11133\11133_AO\ENGR\CAD FILES\SHEET FILES\11133_LA01.DWG - Thu, Mar 14, 2013

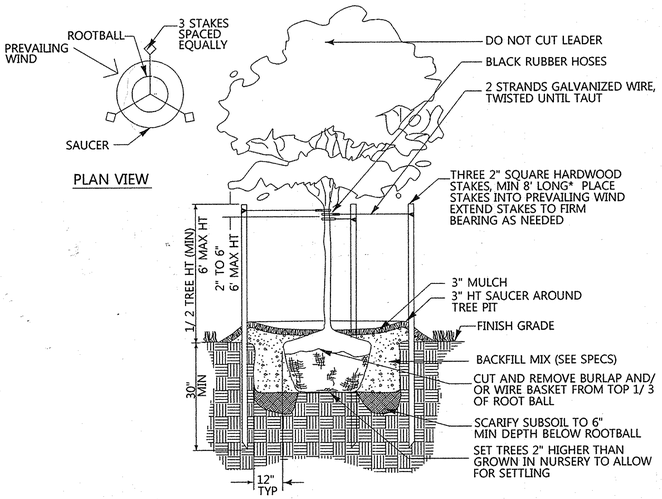


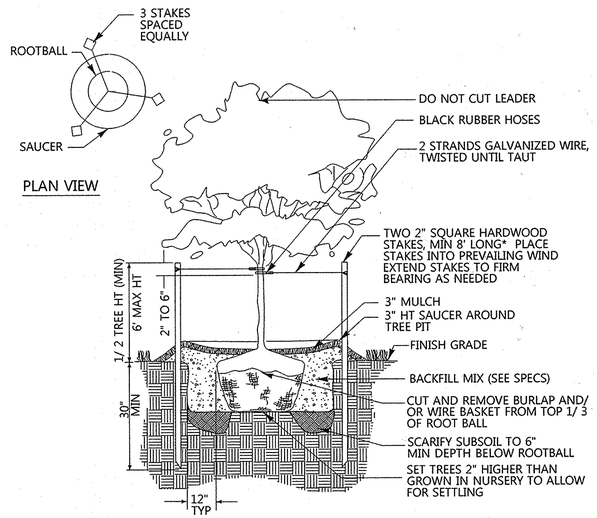


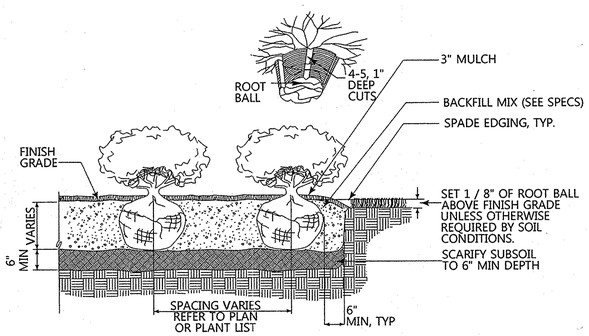


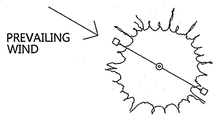


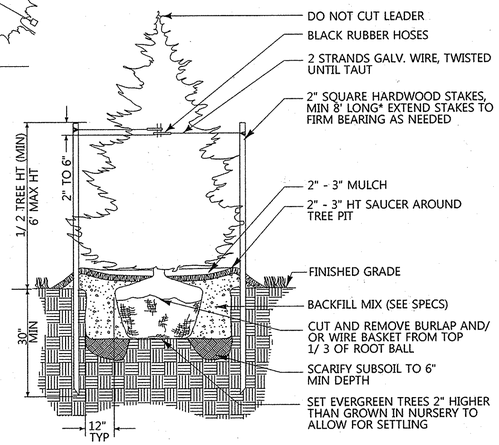


NOTES:

1. FOR CONTAINER SHRUBS, COMPLETELY REMOVE ALL NON-BIODEGRADABLE CONTAINERS AND SCARIFY ROOTBALL BY USING A SHARP BLADE AND MAKING 4 TO 5 ONE INCH CUTS THE LENGTH OF THE ROOTBALL.
2. FOR B&B SHRUBS, CUT AND REMOVE BURLAP FROM TOP 1/ 3 OF ROOT BALL

# PLANTING SPECIFICATIONS

1. MAINTAIN POSITIVE DRAINAGE OUT OF PLANTING BEDS AT A MINIMUM 2% SLOPE. ALL GRADES, DIMENSIONS, AND EXISTING CONDITIONS SHALL BE VERIFIED BY THE CONTRACTOR ON SITE BEFORECONSTRUCTION BEGINS. ANY DISCREPANCIES SHALL BE BROUGHT TO THE ATTENTION OF THE LANDSCAPE ARCHITECT OR OWNER.
2. THE CONTRACTOR SHALL NOTIFY MISS UTILITY (800-257-7777) A MINIMUM OF THREE WORKING DAYS PRIOR TO PLANTING AND CONSTRUCTION.
3. THE CONTRACTOR IS ADVISED OF THE EXISTENCE OF UNDERGROUND UTILITIES ON THE SITE. THEIR EXACT LOCATION SHALL BE VERIFIED IN THE FIELD WITH THE OWNER OR GENERAL CONTRACTOR PRIOR TO THE COMMENCEMENT OF ANY DIGGING OPERATIONS. IN THE EVENT THEY ARE UNCOVERED, THE CONTRACTOR SHALL BE HELD RESPONSIBLE FOR ALL DAMAGE TO UTILITIES AND SUCH DAMAGE SHALL NOT RESULT IN ANY ADDITIONAL EXPENSES TO THE OWNER.
4. IF UTILITY LINES ARE ENCOUNTERED IN EXCAVATION OF TREE PITS, OTHER LOCATIONS FOR TREES SHALL BE MADE BY THE CONTRACTOR WITHOUT ADDITIONAL COMPENSATION. NO CHANGES OF LOCATION SHALL BE MADE WITHOUT APPROVAL OF THE LANDSCAPE ARCHITECT.
5. PLANT MATERIAL SUBSTITUTIONS WILL NOT BE ACCEPTED WITHOUT WRITTEN CONSENT OF THE OWNER OR LANDSCAPE ARCHITECT.
6. PLANT QUANTITIES ARE PROVIDED FOR THE CONVENIENCE OF THE CONTRACTOR. IN THE EVENT OF VARIATION BETWEEN QUANTITIES SHOWN ON THE PLANT LIST AND THE PLANS, THE PLANS SHALL CONTROL. THE CONTRACTOR IS RESPONSIBLE FOR VERIFYING ALL PLANT QUANTITIES PRIOR TO THE COMMENCEMENT OF WORK. SOD QUANTITY TAKE-OFFS ARE THE RESPONSIBILITY OF THE CONTRACTOR. ALL DISCREPANCIES SHALL BE REPORTED TO THE LANDSCAPE ARCHITECT FOR CLARIFICATION PRIOR TO BIDDING. THE CONTRACTOR SHALL FURNISH PLANT MATERIAL IN SIZES AS SPECIFIED IN PLANT LIST.
7. ALL PLANTS (B&B OR CONTAINER) SHALL BE PROPERLY IDENTIFIED BY WEATHER-PROOF LABELS SECURELY ATTACHED THERETO BEFORE DELIVERY TO PROJECT SITE. LABELS SHALL IDENTIFY PLANTS BY NAME, SPECIES, AND SIZE. LABELS SHALL NOT BE REMOVED UNTIL THE FINAL INSPECTION BY THE LANDSCAPE ARCHITECT OR AGENT IN CHARGE.
8. ANY MATERIAL AND/OR WORK MAY BE REJECTED BY THE LANDSCAPE ARCHITECT IF IT DOES NOT MEET THE REQUIREMENTS OF THE SPECIFICATIONS. ALL REJECTED MATERIALS SHALL BE REMOVED FROM THE SITE BY THE CONTRACTOR.
9. THE LANDSCAPE CONTRACTOR SHALL STAKE ALL MATERIAL LOCATED ON THE SITE FOR REVIEW AND POSSIBLE ADJUSTMENTS BY THE LANDSCAPE ARCHITECT PRIOR TO PLANTING.ALL LOCATIONS ARE TO BE APPROVED BY THE LANDSCAPE ARCHITECT BEFORE EXCAVATION.
10. THE LANDSCAPE ARCHITECT OR OWNER SHALL HAVE THE RIGHT, AT ANY STAGE OF THE OPERATIONS, TO REJECT ANY AND ALL WORK AND MATERIAL WHICH, IN HIS OPINION, DOES NOT MEET THE REQUIREMENTS OF THESE PLANS AND SPECIFICATIONS.
11. THE CONTRACTOR SHALL BE WHOLLY RESPONSIBLE FOR STABILITY AND CONDITIONS OF ALL TREES AND SHRUBS AND SHALL BE LEGALLY LIABLE FOR ANY DAMAGE CAUSED BY INSTABILITY OF ANY PLANT MATERIALS.
12. ALL PROPOSED TREES TO BE INSTALLED EITHER ENTIRELY IN OR ENTIRELY OUT OF PLANTING BEDS. PLANTING BED LINES ARE NOT TO BE OBSTRUCTED. ALL SHRUBS AND GROUND COVER AREAS SHALL BE PLANTED IN CONTINUOUS PREPARED BED AND TOP DRESSED WITH 3-INCH SHREDDED HARDWOOD MULCH. MULCH SHALL HAVE BEEN SHREDDED WITHIN THE LAST SIX MONTHS.
13. ALL PLANTING BEDS ADJACENT TO LAWN, SOD, OR SEEDED AREAS SHALL BE SPADE EDGED.
14. ALL SOD SHALL BE OBTAINED FROM AREAS HAVING GROWING CONDITIONS FAMILIAR TO AREAS TO BE COVERED. AREAS TO BE SODDED SHALL BE RAKED OF STONES AND DEBRIS. DEBRIS AND STONES OVER 1 INCH IN DIAMETER SHALL BE REMOVED FROM THE SITE. ALL DAMAGED SOD WILL BE REJECTED. ALL SOD MUST BE PLACED WITH STAGGERED JOINTS, TIGHTLY BUTTED, WITH NO INEQUALITIES IN GRADE. PLACE ALL SOD IN ROWS AT RIGHT ANGLES TO SLOPES (WHERE APPLICABLE).
15. MAINTENANCE SHALL BEGIN AFTER EACH PLANT HAS BEEN INSTALLED AND SHALL CONTINUE UNTIL 90 DAYS AFTER FINAL ACCEPTANCE BY THE ARCHITECT OR OWNER REPRESENTATIVE. MAINTENANCE INCLUDES MOWING OF TURF, WATERING, PRUNING, WEEDING, FERTILIZING, MULCHING, REPLACEMENT OF SICK OR DEAD PLANTS, AND ANY OTHER CARE NECESSARY FOR THE PROPER GROWTH OF THE PLANT MATERIAL. THE CONTRACTOR MUST BE ABLE TO PROVIDE CONTINUED MAINTENANCE IF REQUESTED BY THE OWNER.
16. UPON COMPLETION OF ALL LANDSCAPING, AN ACCEPTANCE OF THE WORK SHALL BE HELD. THE CONTRACTOR SHALL NOTIFY THE LANDSCAPE ARCHITECT OR OWNER FOR SCHEDULING THE INSPECTION AT LEAST SEVEN (7) DAYS PRIOR TO THE ANTICIPATED INSPECTION DATE.
17. THE LIFE AND ROBUST HEALTH OF ALL TREES, SHRUBS AND GROUND COVER SHALL BE GUARANTEED FOR 12 MONTHS FROM THE DATE OF ACCEPTANCE.
18. MAINTAIN POSITIVE DRAINAGE OUT OF PLANTING BEDS AT A MINIMUM 2% SLOPE. ALL GRADES, DIMENSIONS, AND EXISTING CONDITIONS SHALL BE VERIFIED BY THE CONTRACTOR ON SITE BEFORECONSTRUCTION BEGINS. ANY DISCREPANCIES SHALL BE BROUGHT TO THE ATTENTION OF THE LANDSCAPE ARCHITECT OR OWNER.
19. THE CONTRACTOR SHALL INSURE THAT HIS WORK DOES NOT INTERRUPT ESTABLISHED OR PROJECTED DRAINAGE PATTERNS.
20. THE CONTRACTOR SHALL INSURE ADEQUATE VERTICAL DRAINAGE IN ALL PLANT BEDS AND PLANTERS.
21. THE CONTRACTOR SHALL REVIEW ARCHITECTURAL/ENGINEERING PLANS TO BECOME THOROUGHLY FAMILIAR WITH GRADING AND SURFACE UTILITIES.
22. ALL EQUIPMENT AND TOOLS SHALL BE PLACED SO AS NOT TO INTERFERE OR HINDER THE PEDESTRIAN AND VEHICULAR TRAFFIC FLOW.
23. THE CONTRACTOR SHALL COORDINATE WITH LIGHTING AND IRRIGATION CONTRACTORS REGARDING TIMING OF INSTALLATION OF PLANT MATERIAL.
24. DURING PLANTING OPERATIONS, EXCESS WASTE MATERIALS SHALL BE PROMPTLY AND FREQUENTLY REMOVED FROM THE SITE.
25. THE CONTRACTOR SHALL DISPOSE OF STUMPS AND MAJOR ROOTS OF ALL PLANTS TO BE REMOVED. ANY DEPRESSIONS CAUSED BY REMOVAL OPERATIONS SHALL BE REFILLED WITH FERTILE, FRIABLE SOIL PLACED AND COMPACTED SO AS TO REESTABLISH PROPER GRADE FOR NEW PLANTING AND/OR LAWN AREAS.
26. ALL AREAS WITHIN CONTRACT LIMITS DISTURBED DURING OR PRIOR TO CONSTRUCTION NOT DESIGNATED TO RECEIVE PLANTINGS AND MULCH SHALL BE FINE GRADED AND SEEDED IN ACCORDANCE WITH PLANTING AND CONSTRUCTION SPECIFICATIONS.
27. EVERY POSSIBLE SAFEGUARD SHALL BE TAKEN TO PROTECT BUILDING SURFACES, EQUIPMENT, AND FURNISHING. THE CONTRACTOR SHALL BE RESPONSIBLE FOR ANY DAMAGE OR INJURY TO PERSON OR PROPERTY WHICH MAY OCCUR AS A RESULT OF HIS NEGLIGENCE IN THE EXECUTION OF THE WORK.
28. THE CONTRACTOR IS RESPONSIBLE FOR TESTING PROJECT SOILS. THE CONTRACTOR IS TO PROVIDE A CERTIFIED SOILS REPORT TO THE OWNER. THE CONTRACTOR SHALL VERIFY THAT THE SOILS ON SITE ARE ACCEPTABLE FOR THE PROPER GROWTH OF THE PROPOSED PLANT MATERIAL. SHOULD THE CONTRACTOR FIND POOR SOIL CONDITIONS, THE CONTRACTOR SHALL BE REQUIRED TO PROVIDE SOIL AMENDMENTS AS NECESSARY. THESE AMENDMENTS SHALL INCLUDE, BUT NOT BE LIMITED TO, FERTILIZERS, LIME, AND TOPSOIL. PROPER PLANTING SOILS MUST BE VERIFIED PRIOR TO PLANTING OF MATERIALS.
29. PLANTING MIX:
    A) PLANTING MIX SHALL BE PREPARED AT APPROVED ON-SITE STAGING AREA USING APPROVED ON-SITE EXISTING SOIL. MIX MINIMUM QUANTITIES OF 20 CUBIC YARDS OR SUFFICIENT MIX FOR ENTIRE JOB IF LESS THAN 20 CUBIC YARDS IS REQUIRED.

    B) THOROUGHLY MIXED IN THE FOLLOWING PROPORTIONS FOR TREE AND SHRUB PLANTING MIX:
    .5 CY EXISTING SOIL
    .2 CY SHARP SAND
    .3 CY WOOD RESIDUALS
    4.5 LBS TREBLE SUPERPHOSPHATE
    5 LBS DOLMONITE LIMESTONE (ELIMINATE FOR ACID LOVING PLANTS)

    C) FOR BED PLANTING, SHRUBS AND GROUNDCOVER SPACES 24 INCHES OR CLOSER, INCORPORATE THE FOLLOWING INGREDIENTS PER 20 SF AND INCORPORATE INTO TOP 8 INCHES OF EXISTING SOILS BY ROTOTILLING OR SIMILAR METHOD OF INCORPORATION.
    .2 CY SHARP SAND
    .3 CY ORGANIC MATERIAL
    4.5 LBS TREBLE SUPERPHOSPHATE
    5 LBS DOLMONITE LIMESTONE (ELIMINATE FOR ACID LOVING PLANTS)
30. PLANTS SHALL CONFORM TO CURRENT "AMERICAN STANDARDS FOR NURSERY STOCK" BY AMERICAN ASSOCIATION OF NURSERYMEN (AAN), PARTICULARLY WITH REGARD TO SIZE, GROWTH, SIZE OF BALL, AND DENSITY OF BRANCH STRUCTURE. PLANT MATERIAL SHALL BE TAGGED AT THE SOURCE BY THE LANDSCAPE ARCHITECT WHEN SO NOTED.
31. ALL PLANTING PROCEDURES SHALL CONFORM TO LANDSCAPE CONTRACTORS ASSOCIATION (LCA) SPECIFICATION GUIDELINES FOR BALTIMORE / WASHINGTON METROPOLITAN AREA (LATEST EDITION). LCA LANDSCAPE SPECIFICATION GUIDELINES (4TH ED.) SECTION 1.16, REPLACEMENT AND CONDITIONS, "ITEM F. PLANT LOSSES DUE TO ABNORMAL WEATHER" DOES NOT APPLY.
32. ALL PLANTING PROCEDURES SHALL CONFORM TO DAFT MCCUNE WALKER INC. SPECIFICATIONS.
33. IN ORDER FOR PLANT MATERIAL TO THRIVE, SOIL TESTING SHOULD ADDRESS MICRO- AND MACRO- NUTRIENT LEVELS, SOIL PH, AND A USDA SOIL TEXTURE CLASSIFICATION. FURTHER, UNDERLYING SOIL CONDITIONS IN AREAS THAT HAVE BEEN DISTURBED BY CONSTRUCTION MAY CONTAIN COMPRESSED AND POORLY DRAINED SOIL, AND THEY MAY LACK ORGANIC MATERIAL OR MICRO-ORGANISMS NECESSARY FOR SUCCESSFUL PLANT GROWTH.

    IF THESE CONDITIONS APPEAR TO THE CONTRACTOR TO BE A LIMITATION TO PLANT GROWTH, THE CONTRACTOR IS ENCOURAGED TO MAKE RECOMMENDATIONS FOR A SOIL AMENDMENT PROGRAM SUBJECT TO THE APPROVAL OF THE OWNER AND THE LANDSCAPE ARCHITECT.

    SUCCESS OF THE LANDSCAPE PLANTING WILL DEPEND UPON A COMBINATION OF NATURAL RAINFALL AND SUPPLEMENTAL IRRIGATION. IT SHOULD BE NOTED THAT IRRIGATION SHOULD BE APPLIED CAUTIOUSLY, AS NEW PLANTINGS ARE PARTICULARLY VULNERABLE TO OVER-WATERING. WATER CONDITIONS SHOULD BE MONITORED SIX INCHES BELOW THE SURFACE. AND POCKET PLANTED PLANT MATERIAL SHOULD BE CAREFULLY INVESTIGATED FOR ACCUMULATION OF WATER IN THE PLANTING PITS.

    ANOTHER KEY INGREDIENT TO SUCCESSFUL PLANTING IS THE USE OF PLANT MATERIAL THAT HAS BEEN GROWN IN SIMILAR LIGHT AND WATER CONDITIONS TO THOSE PROPOSED. IN PARTICULAR, GROUNDCOVERS, ANNUALS, AND PERENNIALS -- WHICH MAY HAVE BEEN GROWN UNDER PROTECTED SHADING OR COVER AND ARE THEN SUBJECTED TO FULL WEATHER CONDITIONS -- MAY NEED CONDITIONS PRIOR TO INSTALLATION.
34. AT THE TIME OF PLANT INSTALLATION ALL SHRUBS AND TREES LISTED AND APPROVED ON THE LANDSCAPE PLAN SHALL COMPLY WITH THE PROPER HEIGHT REQUIREMENTS IN ACCORDANCE WITH THE HOWARD COUNTY LANDSCAPE MANUAL. IN ADDITION, NO SUBSTITUTIONS OR APPROVAL FROM THE DEPARTMENT OF PLANNING AND ZONING.
35. THE OWNER, TENANT, AND/OR THEIR AGENTS SHALL BE RESPONSIBLE FOR MAINTENANCE OF THE REQUIRED LANDSCAPING INCLUDING BOTH PLANT MATERIALS AND BERMS, FENCES, AND WALLS. ALL PLANT MATERIALS SHALL BE MAINTAINED IN GOOD GROWING CONDITION, AND WHEN NECESSARY, REPLACED WITH NEW MATERIALS TO ENSURE CONTINUED COMPLIANCE WITH APPLICABLE REGULATIONS.

STATE OF MARYLAND MICHAEL DAVID MARTIN No. 21234 PROFESSIONAL LAND SURVEYOR

AS BUILT
NOT REQUIRED
SIGNED _____
DAFT McCUNE WALKER, INC.
BY: MICHAEL D. MARTIN P.L.S.# 21234

AS-BUILT CERTIFICATION FOR DSWM

NOTE: THERE IS NO "AS-BUILT" INFORMATION PROVIDED ON THIS SHEET.

SIGNED: _____ PE# 26969
GERALD D. TURNBAUGH AS-BUILT DATE 9-2014

STATE OF MARYLAND GERALD DOUGLAS TURNBAUGH No. 26969 PROFESSIONAL ENGINEER

PROFESSIONAL CERTIFICATION

I HEREBY CERTIFY THAT THESE DOCUMENTS WERE PREPARED OR APPROVED BY ME, AND THAT I AM A DULY LICENSED PROFESSIONAL ENGINEER UNDER THE LAWS OF THE STATE OF MARYLAND, LICENSE NO. 26969 EXPIRATION DATE: 7-18-15

CONTRACT NUMBERS:
EX. WATER: 167-W
EX. SEWER: C-2485-D-S, 2485-D-W&S

3/20/13
Date

STATE OF MARYLAND MARY M. ALEXANDER No. 505 REGISTERED LANDSCAPE ARCHITECT

Professional Engr. No. 505

APPROVED PLANNING BOARD OF HOWARD COUNTY
DATE MARCH 7, 2013

APPROVED: HOWARD COUNTY DEPT. OF PLANNING AND ZONING

| | |
|---|---|
| CHIEF, DIVISION OF LAND DEVELOPMENT | DATE 4/26/13 |
| CHIEF, DEVELOPMENT ENGINEERING DIVISION | DATE 4/18/13 |
| DIRECTOR | DATE 4/26/13 |

| Date | No. | Revision Description |
|---|---|---|
| 11-28-12 | | REPLACES ALL SHEETS OF ORIGINAL SDP 73-23C |

REVISED SITE DEVELOPMENT PLAN

# THE ROUSE BUILDING RENOVATION

OWNER/DEVELOPER:
CLOVER ACQUISTIONS LLC
C/O THE HOWARD HUGHES CORPORATION
P.O. BOX 833 COLUMBIA, MD 21044-0833


DMW
DAFT McCUNE WALKER INC
200 EAST PENNSYLVANIA TOWSON, MD 21286
P: 410 296 3333 F: 410 296 4705 WWW.DMW.COM
A TEAM OF LAND PLANNERS, LANDSCAPE ARCHITECTS, ENGINEERS, SURVEYORS & ENVIRONMENTAL PROFESSIONALS


AREA
TAX MAP 36 GRID 2 PART OF PARCEL 321, LOT 18
ELECTION DISTRICT 5TH ZONE NT

TITLE
**PLANTING DETAILS**
AS BUILT

| | | | |
|---|---|---|---|
| Des. By HWA | Scale N.T.S. | Proj. No. 11133.A |
| Drn. By ZL | Date 3/19/13 | 20 of 284 |
| Chk. By HWA | Approved | |

SDP 73-23C

A:\11133\11133.A0\ENGR\CAD FILES\SHEET FILES\11133_LA03.DWG Tue, Mar 19, 2013

## GENERAL NOTES:

1. IN ACCORDANCE WITH SECTION B4.D.3 OF THE ZONING REGULATIONS THE LIGHT TRESPASS LIMITS SHALL NOT APPLY TO LAND WITHIN A PUBLIC STREET RIGHT-OF-WAY OR DEVELOPED FOR NON-RESIDENTIAL USES.

### STATISTICS

| Description | Symbol | Avg | Max | Min | Max/Min | Avg/Min |
|---|---|---|---|---|---|---|
| Main Entrance | + | 2.0 fc | 4.0 fc | 0.7 fc | 5.7:1 | 2.9:1 |
| Moore Road | + | 2.3 fc | 6.2 fc | 0.1 fc | 62.0:1 | 23.0:1 |
| Large Front Parking Area | + | 5.4 fc | 26.0 fc | 1.5 fc | 17.3:1 | 3.6:1 |
| Main Roadway | + | 0.0 fc | 0.2 fc | 0.0 fc | N / A | N / A |
| South Parking Area | + | 1.5 fc | 6.8 fc | 0.2 fc | 34.0:1 | 7.5:1 |

### LUMINAIRE SCHEDULE

| Symbol | Label | Qty | Catalog Number | Description | Lamp | File | Lumens | Light Loss Factor | Watts |
|---|---|---|---|---|---|---|---|---|---|
| | LF10 | 4 | AR44400PMH-ED28 | ARCHETYPE FULL CUTOFF LUMINAIRE DIE CAST ALUM. REFLECTOR SYSTEM WITH HIGH SPECULAR PANELS DIE CAST ALUM. HOUSING AND LENS FRAME CLEAR FLAT GLASS LENS | 400 WATT CLEAR, PMH ED28 LAMP, HORIZONTAL POSITION, RATED AT 40000 INITIAL LUMENS | ar4-400p.ies | 40000 | 0.76 | 1600 |
| | LF11 | 6 | AR44400PMH-ED28 | ARCHETYPE FULL CUTOFF LUMINAIRE DIE CAST ALUM. REFLECTOR SYSTEM WITH HIGH SPECULAR PANELS DIE CAST ALUM. HOUSING AND LENS FRAME CLEAR FLAT GLASS LENS | 400 WATT CLEAR, PMH ED28 LAMP, HORIZONTAL POSITION, RATED AT 40000 INITIAL LUMENS | ar4-400p.ies | 40000 | 0.76 | 800 |
| | LF11A | 7 | AR44400PMH-ED28/HS | ARCHETYPE FULL CUTOFF LUMINAIRE DIE CAST ALUM. REFLECTOR SYSTEM WITH HIGH SPECULAR PANELS DIE CAST ALUM. HOUSING AND LENS FRAME CLEAR FLAT GLASS LENS AND HOUSESIDE SHIELD | 400 WATT CLEAR, PMH ED28 LAMP, HORIZONTAL POSITION, RATED AT 40000 INITIAL LUMENS | ar4-400p-hs.ies | 40000 | 0.76 | 800 |
| | LF12 | 2 | AR44400PMH-ED28 | ARCHETYPE FULL CUTOFF LUMINAIRE DIE CAST ALUM. REFLECTOR SYSTEM WITH HIGH SPECULAR PANELS DIE CAST ALUM. HOUSING AND LENS FRAME CLEAR FLAT GLASS LENS | 400 WATT CLEAR, PMH ED28 LAMP, HORIZONTAL POSITION, RATED AT 40000 INITIAL LUMENS | ar4-400p.ies | 40000 | 0.76 | 400 |
| | LF12A | 2 | AR44400PMH-ED28/HS | ARCHETYPE FULL CUTOFF LUMINAIRE DIE CAST ALUM. REFLECTOR SYSTEM WITH HIGH SPECULAR PANELS DIE CAST ALUM. HOUSING AND LENS FRAME CLEAR FLAT GLASS LENS AND HOUSESIDE SHIELD | 400 WATT CLEAR, PMH ED28 LAMP, HORIZONTAL POSITION, RATED AT 40000 INITIAL LUMENS | ar4-400p-hs.ies | 40000 | 0.76 | 400 |
| | LF13 | 10 | GL18-2-130LA-CW | LED GULLWING | (1) LIGHT ARRAY OF 56 LEDs DRIVEN AT 700mA | GL18-2-130LA-CW.IES | Absolute | 0.76 | 126.5 |

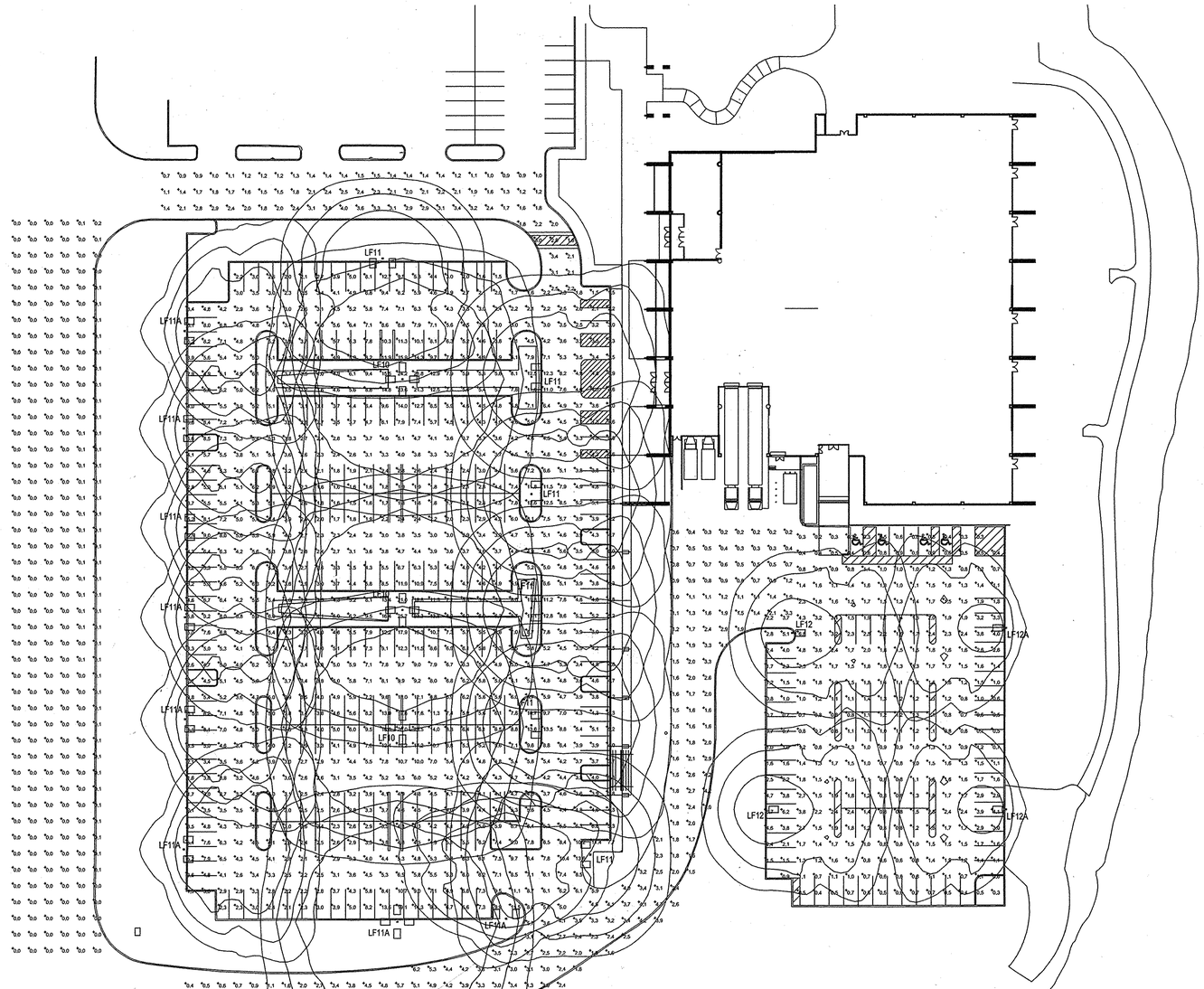


## ELECTRICAL SITE PLAN - SITE LIGHTING

SCALE: 1"=40'-0"

AS-BUILT NOT REQUIRED
SIGNED _____
DAFT McCUNE WALKER, INC.
BY: MICHAEL D. MARTIN PL.S.#21234

STATE OF MARYLAND · MICHAEL DAVID MARTIN · No. 21234 · PROFESSIONAL LAND SURVEYOR

### AS-BUILT CERTIFICATION FOR PSWM

NOTE: THERE IS NO "AS-BUILT" INFORMATION PROVIDED ON THIS SHEET.

SIGNED: _____ RE.# 26560
GERALD D. TURNBAUGH AS-BUILT DATE 9-2014

STATE OF MARYLAND · GERALD DOUGLAS TURNBAUGH · No. 26560 · PROFESSIONAL ENGINEER

### PROFESSIONAL CERTIFICATION

I HEREBY CERTIFY THAT THESE DOCUMENTS WERE PREPARED OR APPROVED BY ME, AND THAT I AM A DULY LICENSED PROFESSIONAL ENGINEER UNDER THE LAWS OF THE STATE OF MARYLAND, LICENSE NO. _____, EXPIRATION DATE: _____.

Professional Engr. No.

CONTRACT NUMBERS:
EX. WATER: 167-W
EX. SEWER: C-2485-D-S, 2485-D-W&S

3/18/13
Date

STATE OF MARYLAND · JOSEPH BONDURA · 19995 · REGISTERED PROFESSIONAL ENGINEER


TAI ENGINEERS · MANAGERS · TECHNICAL SERVICES
11155 Dolfield Boulevard, Suite 210
Owings Mills, Maryland 21117
tel: 410 356-3108 · fax: 410 356-3109


APPROVED PLANNING BOARD OF HOWARD COUNTY
DATE MARCH 7, 2013

APPROVED: HOWARD COUNTY DEPT. OF PLANNING AND ZONING

| | |
|---|---|
| CHIEF, DIVISION OF LAND DEVELOPMENT | DATE 4-26-13 |
| CHIEF, DEVELOPMENT ENGINEERING DIVISION | DATE 4/18/13 |
| DIRECTOR | DATE 4/26/13 |

| Date | No. | Revision Description |
|---|---|---|
| 11-28-12 | | REPLACES ALL SHEETS OF ORIGINAL SDP 73-23C |

REVISED SITE DEVELOPMENT PLAN

# THE ROUSE BUILDING RENOVATION

OWNER/DEVELOPER:
CLOVER ACQUISTIONS LLC
C/O THE HOWARD HUGHES CORPORATION
P.O. BOX 833 COLUMBIA, MD 21044-0833


DMW
DAFT McCUNE WALKER INC
200 EAST PENNSYLVANIA TOWSON, MD 21286
P: 410 296 3333 F: 410 296 4705 WWW.DMW.COM
A TEAM OF LAND PLANNERS, LANDSCAPE ARCHITECTS, ENGINEERS, SURVEYORS & ENVIRONMENTAL PROFESSIONALS


AREA
TAX MAP 36 GRID 2 PART OF PARCEL 321, LOT 18
ELECTION DISTRICT 5TH ZONE NT

TITLE
SITE LIGHTING
AS BUILT

| | | |
|---|---|---|
| Des. By | Scale AS SHOWN | Proj. No. 11133.A |
| Drn. By | Date 3/19/13 | 21 OF 264 |
| Chk. By | Approved | |

SDP 73-23C

A:\11133\11133_AO\ENGR\CAD FILES\SHEET FILES\11133_LA04.DWG Tue, Mar 19, 2013

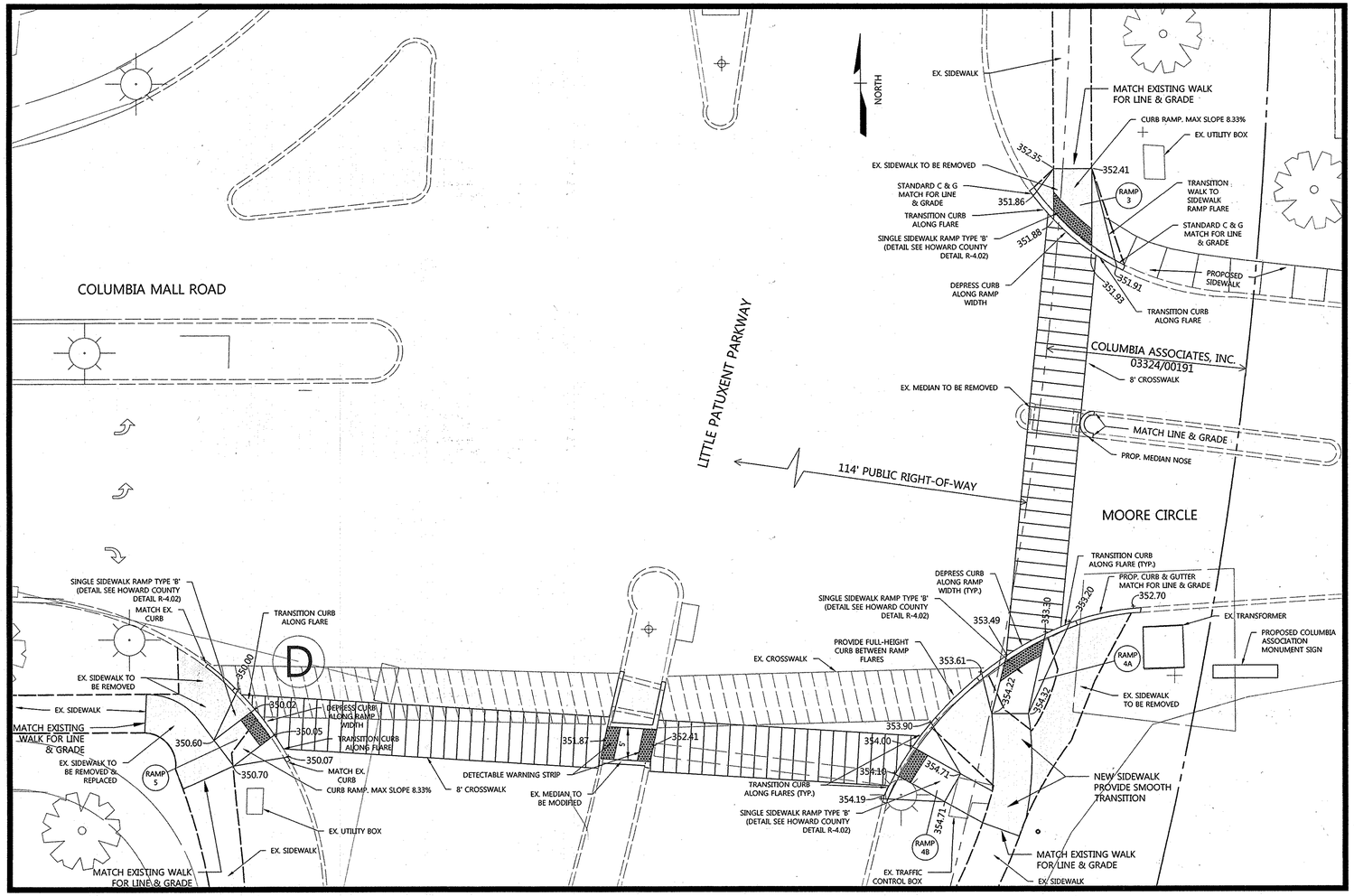


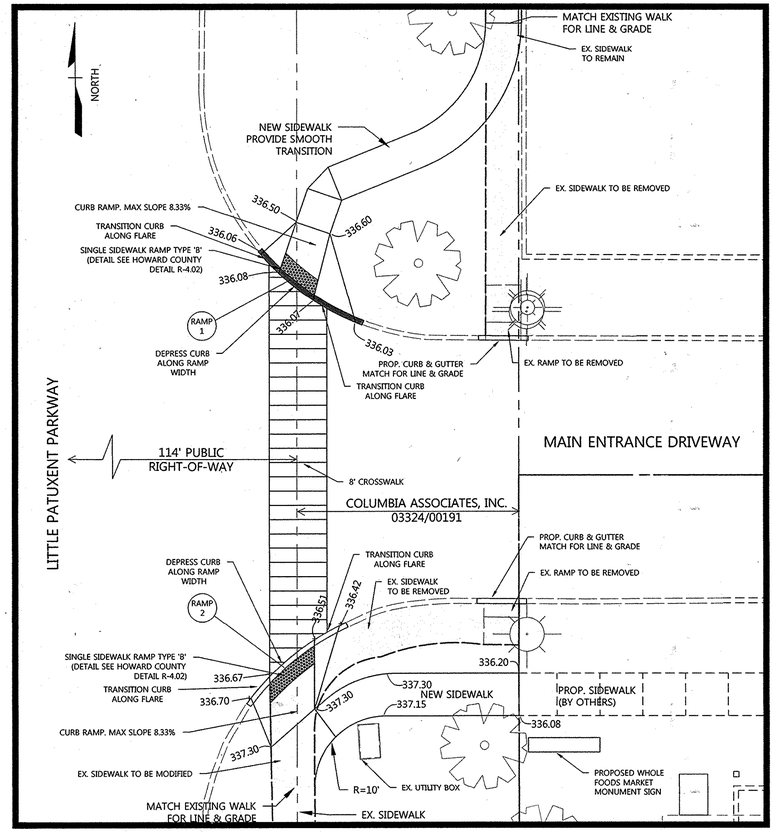


## EX. RAMP REHABILITATION - MOORE CIRCLE
1" = 10'

## EX. RAMP REHABILITATION - MAIN ENTRANCE
1" = 10'

NOTE:

THE CONTRACTOR WILL USE EXTREME CAUTION DURING EXCAVATION AND/OR INSTALLATION OF ALL WORK SHOWN ON THESE PLANS. ALL UTILITIES WILL BE FULLY PROTECTED FROM DAMAGE OR INTERRUPTION.

AS BUILT NOT REQUIRED
SIGNED: _____
DAFT McCUNE WALKER, INC.
BY: MICHAEL D. MARTIN PE.S.# 21234

STATE OF MARYLAND · MICHAEL DAVID MARTIN · No. 21234 · PROFESSIONAL ENGINEER

## LEGEND

- EX. STORM DRAIN
- PROP. CURB & GUTTER
- EX. CURB & GUTTER
- EX. LIGHT POLE
- EX. SIGN
- EX. TREE
- DETECTABLE WARNING STRIP
- AREA TO BE REMOVED

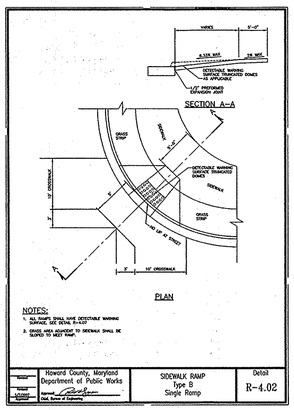


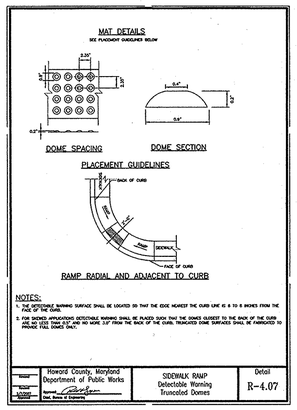


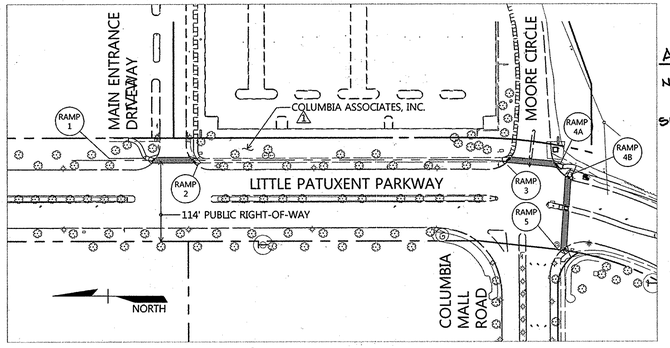


## EX. RAMP REHABILITATION - OVERALL MAP
1" = 100'

AS-BUILT CERTIFICATION FOR PSWM

NOTE: THERE IS NO "AS-BUILT" INFORMATION PROVIDED ON THIS SHEET.

SIGNED: _____ P.E.# 26569
GERALD D. TURNBAUGH AS-BUILT DATE 9-2014

STATE OF MARYLAND · GERALD DOUGLAS TURNBAUGH · NO. 26569 · PROFESSIONAL ENGINEER

PROFESSIONAL CERTIFICATION

I HEREBY CERTIFY THAT THESE DOCUMENTS WERE PREPARED OR APPROVED BY ME, AND THAT I AM A DULY LICENSED PROFESSIONAL ENGINEER UNDER THE LAWS OF THE STATE OF MARYLAND LICENSE NO. 26569 EXPIRATION DATE: 7-18-15

For Revision No. 2 Only.

12-11-14
Date

STATE OF MARYLAND · GERALD DOUGLAS TURNBAUGH · NO. 26569 · PROFESSIONAL ENGINEER

Professional Engr. No. 26569

APPROVED: HOWARD COUNTY DEPT. OF PLANNING AND ZONING

| | |
|---|---|
| CHIEF, DIVISION OF LAND DEVELOPMENT | DATE 1-05-15 |
| CHIEF, DEVELOPMENT ENGINEERING DIVISION | DATE 12-24-14 |
| DIRECTOR | DATE 1/15/15 |

| Date | No. | Revision Description |
|---|---|---|
| 10/22/14 | 1 | Redline Revision - Add this sheet |

REVISED SITE DEVELOPMENT PLAN

# THE ROUSE BUILDING RENOVATION

OWNER/DEVELOPER:
CLOVER ACQUISTIONS LLC
C/O THE HOWARD HUGHES CORPORATION
P.O. BOX 833 COLUMBIA, MD 21044-0833


DMW
DAFT McCUNE WALKER INC
200 EAST PENNSYLVANIA TOWSON, MD 21286
P: 410 296 3333 F: 410 296 4705 WWW.DMW.COM
A TEAM OF LAND PLANNERS, LANDSCAPE ARCHITECTS, ENGINEERS, SURVEYORS & ENVIRONMENTAL PROFESSIONALS


AREA
TAX MAP 36 GRID 2 PART OF PARCEL 321, LOT 18
ELECTION DISTRICT 5TH ZONE NT

TITLE
Ex. Ramp Rehabilitation AS BUILT

| | | | |
|---|---|---|---|
| Des. By | GDT/CZ | Scale | AS SHOWN |
| Drn. By | CZ | Date | 10-20-14 |
| Chk. By | MCB | Approved | |

Proj. No. 11133.A0

22 of 24

DEPARTMENT OF PUBLIC WORKS
HOWARD COUNTY, MARYLAND

DIRECTOR OF PUBLIC WORKS — 12/24/14
CHIEF, BUREAU OF HIGHWAYS — 12-24-2014 DATE
CHIEF, TRAFFIC ENGINEER DIVISION — 12/23/2014
1/5/15


WELLS + ASSOCIATES, INC
1420 Spring Hill Road, Suite 600, McLean, Virginia 22102
Phone: 703/917-6620 Facsimile: 703/917-0739


SDP 73-23C

LITTLE PATUXENT PKWY IS ASSUMED TO RUN IN A NORTH-SOUTH DIRECTION.

## EXISTING SIGNALS

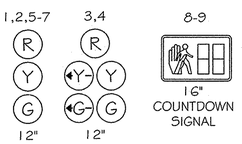


EXISTING VIDEO DETECTION

## EXISTING SIGNS

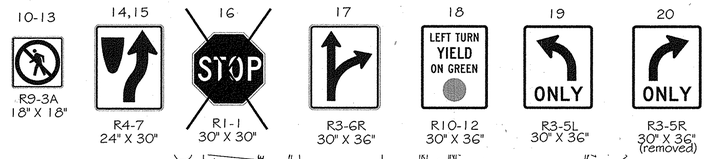


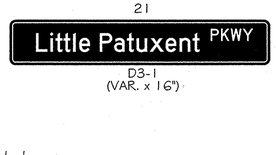


## SIGNAL EQUIPMENT

(A) BASE MOUNTED CABINET AND CONTROLLER, CONCRETE FOUNDATION, GROUND RODS AND ALL NECESSARY EQUIPMENT FOR AN ELECTRICAL SERVICE, TWO 30 AMP DISCONNECT SWITCH. (TWO 2" AND TWO 4" P.V.C. SCHEDULE 80 CONDUIT BENDS)

(B) CONCRETE FOUNDATION WITH 27' STEEL TRAFFIC SIGNAL TWIN POLE PAINTED FEDERAL BROWN WITH 70' & 30' MAST ARMS, TRAFFIC SIGNAL HEADS AND SIGN. INSTALL VIDEO DETECTION CAMERAS. (2-3" SCHEDULE 80, 90 DEGREE, 1-3" P.V.C. ELECTRICAL CONDUIT BENDS (1 SPARE)).

(C) CONCRETE FOUNDATION WITH 27' STEEL TRAFFIC SIGNAL POLE PAINTED FEDERAL BROWN WITH 60' MAST ARM, 20' LIGHTING ARM, 250 WATT HPS LUMINAIRE, TRAFFIC SIGNAL HEADS AND SIGN (2-3" SCHEDULE 80, 90 DEGREE, 1-3" P.V.C. ELECTRICAL CONDUIT BENDS (1 SPARE)).

(D) 8' PEDESTAL POLE PAINTED FEDERAL BROWN COMPLETE WITH FOUNDATION, PEDESTRIAN SIGNAL HEAD, APS BUTTON AND SIGN.

(E) 4" P.V.C. (SCHEDULE 80) ELECTRICAL CONDUIT (BORED).

(F) 3" P.V.C. (SCHEDULE 80) ELECTRICAL CONDUIT (TRENCHED).

(J) HANDBOX.

## WIRING DIAGRAM

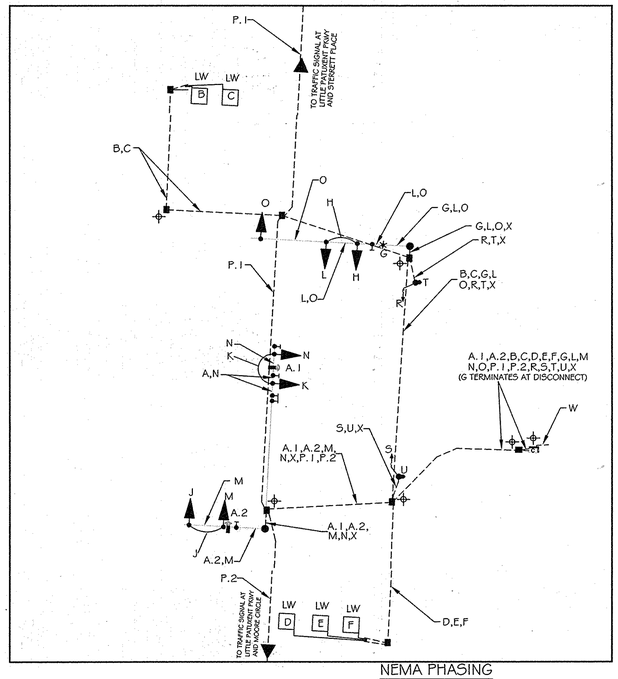


## KEY

| | |
|---|---|
| A.1 A.2 | VIDEO DETECTOR CABLE |
| B C D E F | 2- CONDUCTOR CABLE (ALUMINUM SHIELDED) |
| G | 2- CONDUCTOR TRAY CABLE (NO. 12 A.W.G.) |
| H J K R S | 5- CONDUCTOR CABLE (NO. 14 A.W.G.) |
| L M N O | 7- CONDUCTOR CABLE (NO. 14 A.W.G.) |
| T U | 2- CONDUCTOR CABLE (NO. 14 A.W.G.) |
| W | 1- CONDUCTOR ELECTRICAL CABLE, NO. 2 A.W.G. |
| X | NO. 6 AWG STRANDED BARE COPPER GROUND WIRE |
| P.1 | 12-PAIR INTERCONNECT CABLE & 7-CONDUCTOR (NO. 14 A.W.G.) (EXISTING TO BE REUSED) |
| P.2 | 12-PAIR INTERCONNECT CABLE & 7-CONDUCTOR (NO. 14 A.W.G.) |

LW - LOOP WIRE

GROUND ROD

## LEGEND

**Existing**

- MAST ARM
- TRAFFIC SIGNAL HEAD
- PROPOSED VIDEO DETECTION
- HAND BOX
- SIGN
- CONDUIT
- LOOP DETECTOR
- VIDEO DETECTION ZONE
- C: CONTROLLER WITH PAD
- PED POLE/PED HEAD
- PROPOSED MAST ARM LUMINAIRE

## UTILITY LEGEND

| | |
|---|---|
| G — G | GAS MAIN |
| W — W | WATER MAIN |
| S — S | SEWER MAIN |
| D — D | STORM DRAIN |
| E — E | ELECTRIC CABLE |
| FO — FO | FIBER-OPTIC CABLE |
| T — T | COMMUNICATION CABLE |

APPROVED: HOWARD COUNTY DEPT. OF PLANNING AND ZONING

CHIEF, DIVISION OF LAND DEVELOPMENT — DATE 1-05-15

CHIEF, DEVELOPMENT ENGINEERING DIVISION — DATE 12-24-14

DIRECTOR — DATE

| DATE | No. | REVISION DESCRIPTION |
|---|---|---|
| | | |

## NEMA PHASING

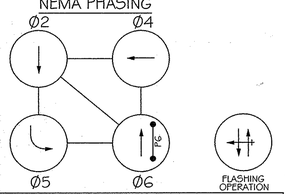


PHASING NOTES:
1. PHASES ASSOCIATED BY A LINE WILL NOT OPERATE CONCURRENTLY.
2. PHASES ASSOCIATED BY A DASHED LINE WILL OPERATE CONCURRENTLY.

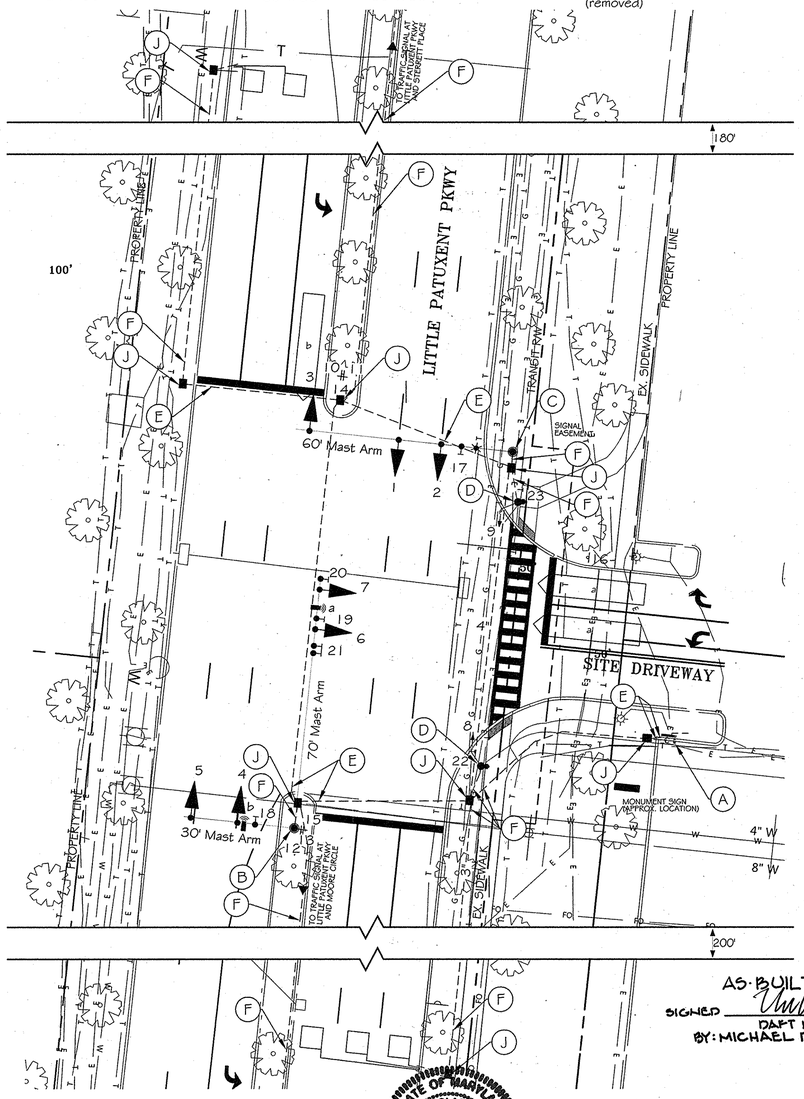


## SIGNAL AND SIGN DIMENSIONS

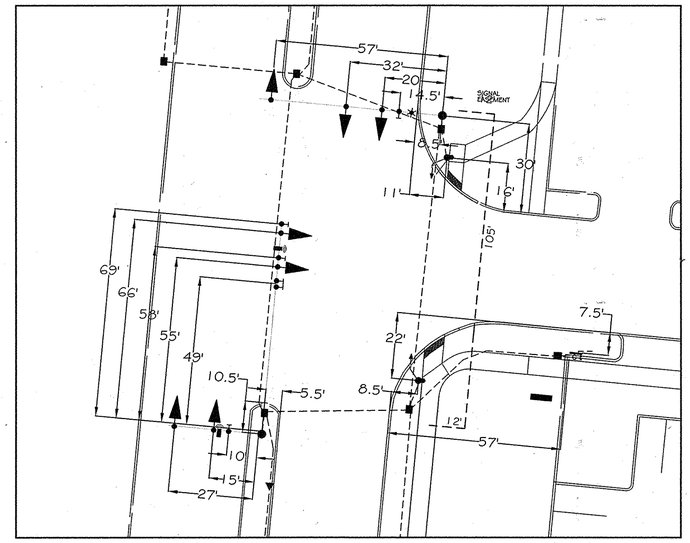


AS-BUILT NOT REQUIRED

SIGNED _____

DAFT McCUNE WALKER, INC.

BY: MICHAEL D. MARTIN P.L.S. #21234

## AS-BUILT CERTIFICATION FOR PSWM

NOTE: THERE IS NO "AS-BUILT" INFORMATION PROVIDED ON THIS SHEET.

SIGNED _____ P.E.# 26560

GERALD D. TURNBAUGH AS-BUILT DATE: 9-2014

FOR REVISION No. 2 ONLY

| PHASE AND SEQUENCE DIAGRAM | | SIGNAL HEADS 1 | 2 | 3 | 4 | 5 | 6 | 7 | 8 | 9 |
|---|---|---|---|---|---|---|---|---|---|---|
| | | R Y G | R Y G | R Y ←G | R Y ←G | R Y G | R Y G | R Y G | | |
| | PHASE 2+5 | R | R | ←G | ←G | G | R | R | | |
| | PHASE 2+5 CHANGE | R | R | ←Y | ←Y | G | R | R | | |
| | PHASE 2+6 | G | G | G | G | G | R | R | | |
| | PED CLEAR | G | G | G | G | G | R | R | | |
| | PHASE 2+6 CHANGE | Y | Y | Y | Y | Y | R | R | | |
| | PHASE 4 | R | R | R | R | R | G | G | | |
| | PHASE 4 CHANGE | R | R | R | R | R | Y | Y | | |
| | FLASH OPER. | FL Y | FL Y | FL Y | FL Y | FL Y | FL R | FL R | DARK | DARK |

AS-BUILT 8/20/2014

DEPARTMENT OF PUBLIC WORKS
HOWARD COUNTY, MARYLAND

DIRECTOR OF PUBLIC WORKS — 12/24/14

CHIEF, BUREAU OF HIGHWAYS — 12-24-2014 DATE

CHIEF, TRAFFIC ENGINEERING DIVISION — 12/23/2014

12/24/2014 — 1/5/15


WELLS + ASSOCIATES, INC

■ 1420 Spring Hill Road, Suite 610, Tysons, Virginia 22102
Phone: 703/917-6620 Facsimile: 703/917-0739

□ 210 Wirt Street, SW, Suite 201, Leesburg, Virginia 20175
Phone: 703/443-1442 Facsimile: 703/443-1225


PROFESSIONAL CERTIFICATION

I HEREBY CERTIFY THAT THESE PLANS WERE PREPARED OR APPROVED BY ME, AND THAT I AM A DULY LICENSED PROFESSIONAL ENGINEER UNDER THE LAWS OF THE STATE OF MARYLAND, LICENSE NO. 42720 EXPIRATION DATE: 11/19/2016

12/11/2014

| | |
|---|---|
| SCALE: | 1" = 20' |
| DATE: | 11 DEC 14 |
| DESIGNED BY: | RAR |
| DRAWN BY: | RAR |
| CHECKED BY: | LES |
| PROJECT NO: | 6273 |

| BY | NO. | REVISIONS: | DATE |
|---|---|---|---|
| | 3 | REDLINE REVISION#2 - ADD THIS SHEET TO SDP-73-23C | 12/11/14 |
| | 2 | AS-BUILT PLAN | 8/20/14 |
| | 1 | SIGNAL PLAN APPROVED | 11/8/13 |

TITLE:
Traffic Signal As-Built
Little Patuxent Pkwy/
Whole Foods Entrance

AS BUILT

LOCATION/DESCRIPTION:
Howard County, Maryland

SHEET: 23 OF 24

O:\PROJECTS\5001-5500\5336 TRC PARKING STUDY\SIGNAL\AS-BUILT\WHOLE FOODS COLUMBIA AS-BUILT.DWG

## EXISTING SIGNALS

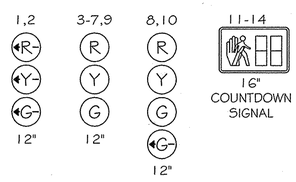


## EXISTING SIGNS

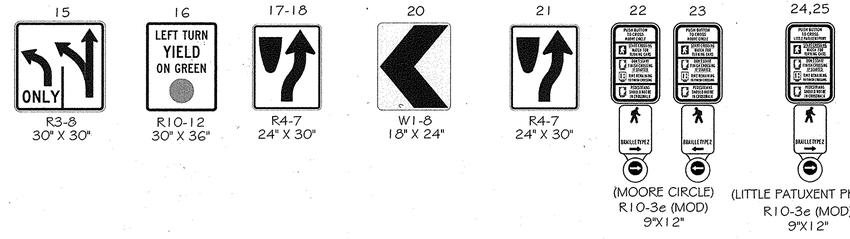


## NEMA PHASING

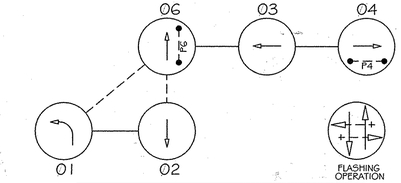


PHASING NOTES:
1. PHASES ASSOCIATED BY A LINE WILL NOT OPERATE CONCURENTLY.
2. PHASES ASSOCIATED BY A DASHED LINE WILL OPERATE CONCURENTLY.

## WIRING DIAGRAM

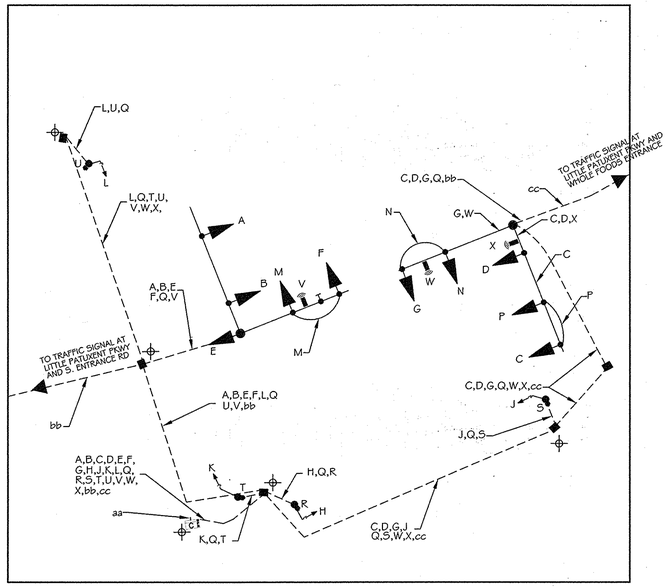


## KEY

- A B C D E F G H J K L — 7- CONDUCTOR CABLE (NO. 14 A.W.G.)
- M N T — 5- CONDUCTOR CABLE (NO. 14 A.W.G.)
- Q — NO. 6 AWG STRANDED BARE COPPER GROUND WIRE
- R S T U — 2- CONDUCTOR CABLE (NO. 14 A.W.G.)
- V W X — VIDEO DETECTOR CABLE
- aa — 1- CONDUCTOR ELECTRICAL CABLE, NO. 2 A.W.G.
- bb — 12-PAIR INTERCONNECT CABLE & 7-CONDUCTOR (NO. 14 A.W.G.) (EXISTING TO BE REUSED)
- cc — 12-PAIR INTERCONNECT CABLE & 7-CONDUCTOR (NO. 14 A.W.G.) (INSTALLED PER APPROVED LITTLE PATUXENT PKWY AT WHOLE FOODS ENTRANCE SIGNAL PLAN)
- GROUND ROD

## UTILITY LEGEND

| | |
|---|---|
| G — G | GAS MAIN |
| W — W | WATER MAIN |
| S — S | SEWER MAIN |
| D — D | STORM DRAIN |
| E — E | ELECTRIC CABLE |
| FO — FO | FIBER–OPTIC CABLE |
| T — T | COMMUNICATION CABLE |

## LEGEND

- MAST ARM
- TRAFFIC SIGNAL HEAD
- HAND BOX
- SIGN
- CONDUIT
- PROPOSED VIDEO DETECTION
- C — CONTROLLER WITH PAD
- APS BUTTON
- PED POLE/PED HEAD

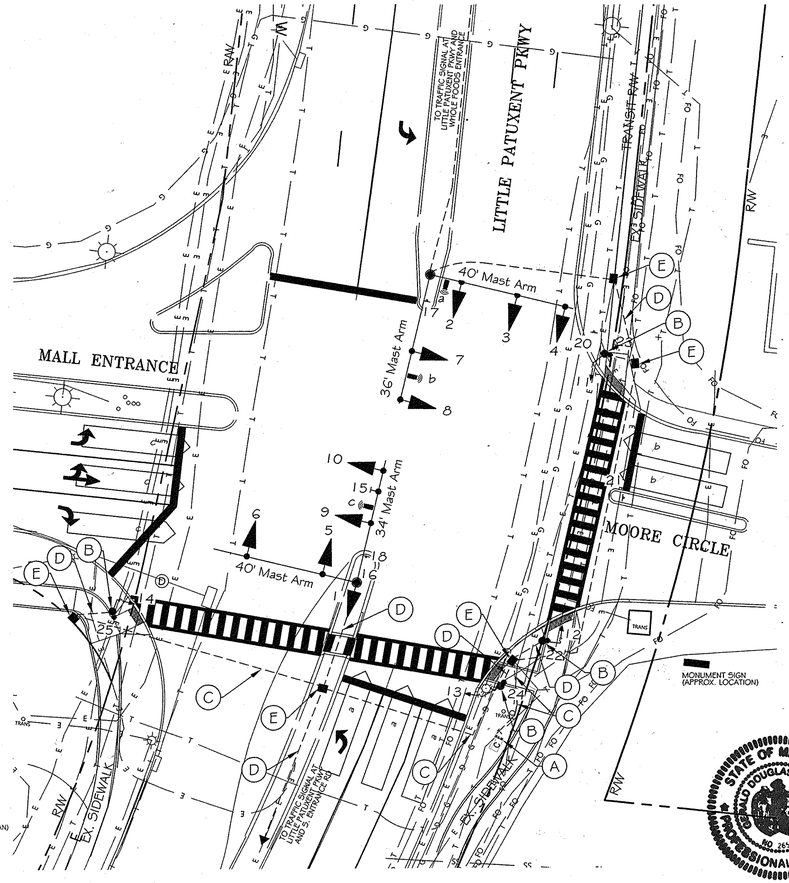


## SIGNAL AND SIGN DIMENSIONS

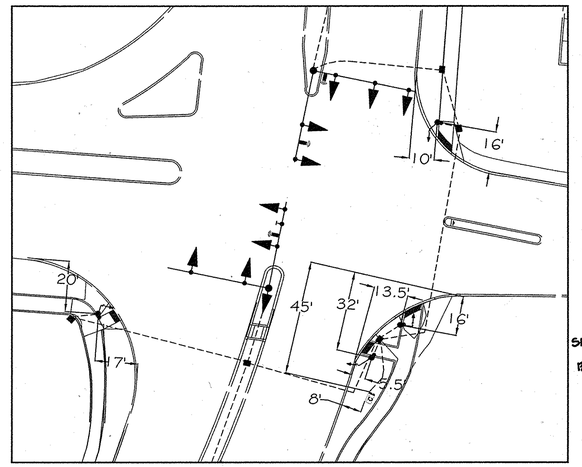

LITTLE PATUXENT PKWY IS ASSUMED TO RUN IN A NORTH-SOUTH DIRECTION.

AS-BUILT
NOT REQUIRED
SIGNED: _____
DAFT McCUNE WALKER, INC.
BY: MICHAEL D. MARTIN PLS. 21234

STATE OF MARYLAND — MICHAEL DAVID MARTIN — NO. 21234 — PROFESSIONAL LAND SURVEYOR

## SIGNAL EQUIPMENT

- (A) BASE MOUNTED CABINET AND CONTROLLER, CONCRETE FOUNDATION, GROUND RODS AND ALL NECESSARY EQUIPMENT FOR AN ELECTRICAL SERVICE, TWO 30 AMP DISCONNECT SWITCH. (TWO 2" AND TWO 4" P.V.C. SCHEDULE 80 CONDUIT BENDS)
- (B) 8' PEDESTAL POLE PAINTED FEDERAL BROWN COMPLETE WITH FOUNDATION, PEDESTRIAN SIGNAL HEAD, APS BUTTON AND SIGN.
- (C) 4" P.V.C. (SCHEDULE 80) ELECTRICAL CONDUIT (BORED).
- (D) 3" P.V.C. (SCHEDULE 80) ELECTRICAL CONDUIT (TRENCHED).
- (E) HANDBOX.

AS BUILT CERTIFICATION FOR PSWM
NOTE: THERE IS NO "AS-BUILT" INFORMATION PROVIDED ON THIS SHEET
SIGNED: Gerald D. Turnbaugh PE# 26560
GERALD D. TURNBAUGH AS-BUILT DATE 9-2014

STATE OF MARYLAND — GERALD DOUGLAS TURNBAUGH — NO. 26560 — PROFESSIONAL ENGINEER

AS-BUILT 10/9/2014

FOR REVISION No. 2 ONLY

## SIGNAL HEADS

| PHASE AND SEQUENCE DIAGRAM | 1 | 2 | 3 | 4 | 5 | 6 | 7 | 8 | 9 | 10 | 11 | 12 | 13 | 14 |
|---|---|---|---|---|---|---|---|---|---|---|---|---|---|---|
| | (R)(Y)(G) | (R)(Y)(G) | (R)(Y)(G) | (R)(Y)(G) | (R)(Y)(G) | (R)(Y)(G) | (R)(Y)(G) | (R)(Y)(G)(Ped) | (R)(Y)(G) | (R)(Y)(G)(Ped) | Ped | Ped | Hand | Hand |
| PHASE 1+6 | G | G | G | G | R | R | R | R | R | R | Ped | Ped | Hand | Hand |
| PHASE 1+6 CHANGE | Y | Y | G | G | R | R | R | R | R | R | Ped | Ped | Hand | Hand |
| PHASE 2+6 | R | R | G | G | G | G | R | R | R | R | Ped | Ped | Hand | Hand |
| PED CLEAR | R | R | G | G | G | G | R | R | R | R | Dark | Dark | Hand | Hand |
| PHASE 2+6 CHANGE | R | R | Y | Y | Y | Y | R | R | R | R | Ped | Ped | Hand | Hand |
| PHASE 3 | R | R | R | R | R | R | G | G / G | R | R | Ped | Ped | Hand | Hand |
| PHASE 3 CHANGE | R | R | R | R | R | R | Y | Y | R | R | Ped | Ped | Hand | Hand |
| PHASE 4 | R | R | R | R | R | R | R | R | G | G / G | Ped | Ped | Ped | Ped |
| PED CLEAR | R | R | R | R | R | R | R | R | G | G / G | Dark | Dark | Dark | Dark |
| PHASE 4 CHANGE | R | R | R | R | R | R | R | R | Y | Y | Ped | Ped | Hand | Hand |
| FLASH OPER. | FL R | FL R | FL Y | FL Y | FL Y | FL Y | FL R | FL R | FL R | FL R | DARK | DARK | DARK | DARK |

APPROVED: HOWARD COUNTY DEPT. OF PLANNING AND ZONING

| | |
|---|---|
| CHIEF, DIVISION OF LAND DEVELOPMENT | 1-05-15 DATE |
| CHIEF, DEVELOPMENT ENGINEERING DIVISION | 12-24-14 DATE |
| DIRECTOR | DATE |

| DATE | No. | REVISION DESCRIPTION |
|---|---|---|
| | | |

DEPARTMENT OF PUBLIC WORKS
HOWARD COUNTY, MARYLAND

| | |
|---|---|
| DIRECTOR OF PUBLIC WORKS | 12/24/14 DATE |
| CHIEF, BUREAU OF HIGHWAYS | 12-24-2014 DATE |
| CHIEF, TRAFFIC ENGINEERING DIVISION | 12/23/2014 |
| | 1/5/15 |


WELLS + ASSOCIATES, INC
■ 1420 Spring Hill Road, Suite 610, Tysons, Virginia 22102 Phone: 703/917-6620 Facsimile: 703/917-0739
□ 210 Wirt Street, SW, Suite 201, Leesburg, Virginia 20175 Phone: 703/443-1442 Facsimile: 703/443-1225


PROFESSIONAL CERTIFICATION

I HEREBY CERTIFY THAT THESE PLANS WERE PREPARED OR APPROVED BY ME, AND THAT I AM A DULY LICENSED PROFESSIONAL ENGINEER UNDER THE LAWS OF THE STATE OF MARYLAND, LICENSE NO. 42720 EXPIRATION DATE: 11/14/2016

STATE OF MARYLAND — JOHN EDWARD SAVAGE IV — NO. 42720 — PROFESSIONAL ENGINEER

12/11/2014

0 20' 40'

| | |
|---|---|
| SCALE: | 1" = 20' |
| DATE: | 11 DEC 14 |
| DESIGNED BY: | RAR |
| DRAWN BY: | RAR |
| CHECKED BY: | LES |
| PROJECT NO: | 6273 |

| BY | NO. | REVISIONS: | DATE |
|---|---|---|---|
| | 3 | REDLINE REVISION#2 – ADD THIS SHEET TO SDP-73-23C | 12/11/14 |
| | 2 | AS-BUILT PLAN | 10/9/14 |
| | 1 | SIGNAL PLAN APPROVED | 11/8/13 |

TITLE:
Signal Modification Plan
Little Patuxent Pkwy/
Moore Circle
AS BUILT

LOCATION/DESCRIPTION:
Howard County, Maryland

SHEET: 24 OF 24

O:\PROJECTS\5001-5500\5336 TRC PARKING STUDY\SIGNAL\AS-BUILT\WHOLE FOODS COLUMBIA AS-BUILT.DWG