STANDARD DRAWING LEGEND

FOR ENTIRE PLAN SET
(NOT TO SCALE)

EXISTING NOTE	TYPICAL NOTE TEXT	PROPOSED NOTE
	ONSITE PROPERTY LINE / R.O.W. LINE	
	NEIGHBORING PROPERTY LINE / INTERIOR PARCEL LINE	
	EASEMENT LINE	
	SETBACK LINE	
	CONCRETE CURB & GUTTER	CURB AND GUTTER; SPILL CURB; TRANSITION CURB; DEPRESSED CURB AND GUTTER
	UTILITY POLE WITH LIGHT	
	POLE LIGHT	
	TRAFFIC LIGHT	
	UTILITY POLE	
	TYPICAL LIGHT	
	ACORN LIGHT	
	TYPICAL SIGN	
X	PARKING COUNTS	X
170 / 169	CONTOUR LINE	190 / 187
TC 516.4 OR 516.4	SPOT ELEVATIONS	TC516.00; TC 516.00 BC 515.55
SAN #	SANITARY LABEL	SAN #
X #	STORM LABEL	X #
FP	FLOOD PLAIN LINE	
W	UNDERGROUND WATER LINE	
E	UNDERGROUND ELECTRIC LINE	E
G	UNDERGROUND GAS LINE	G
OH	OVERHEAD WIRE	OH
T	UNDERGROUND TELEPHONE LINE	T
C	UNDERGROUND CABLE LINE	C
	STORM SEWER	
S	SANITARY SEWER MAIN	
	HYDRANT	
S	SANITARY MANHOLE	
D	STORM MANHOLE	
WM	WATER METER	
WV	WATER VALVE	
	GAS VALVE	
	GAS METER	
	TYPICAL END SECTION	
OR	HEADWALL OR ENDWALL	OR
	YARD INLET	
	CURB INLET	
	CLEAN OUT	
E	ELECTRIC MANHOLE	E
T	TELEPHONE MANHOLE	T
EB	ELECTRIC BOX	EB
EP	ELECTRIC PEDESTAL	EP
	MONITORING WELL	
	TEST PIT	
	BENCHMARK	
	BORING	
	STEEP SLOPES (>25%)	

APPROVED: DEPARTMENT OF PLANNING AND ZONING

[signature] 8-26-16
CHIEF, DIVISION OF LAND DEVELOPMENT — DATE

[signature] 8.24.16
CHIEF, DEVELOPMENT ENGINEERING DIVISION — DATE

[signature] 8-26-16
DIRECTOR - DEPARTMENT OF PLANNING AND ZONING — DATE

GENERAL NOTE:
IT IS THE RESPONSIBILITY OF THE CONTRACTOR TO REVIEW ALL OF THE DRAWINGS AND SPECIFICATIONS ASSOCIATED WITH THIS PROJECT WORK SCOPE PRIOR TO THE INITIATION OF CONSTRUCTION. SHOULD THE CONTRACTOR FIND A CONFLICT WITH THE DOCUMENTS RELATIVE TO THE SPECIFICATIONS OR APPLICABLE CODES, IT IS THE CONTRACTOR'S RESPONSIBILITY TO NOTIFY THE PROJECT ENGINEER OF RECORD IN WRITING PRIOR TO THE START OF CONSTRUCTION. FAILURE BY THE CONTRACTOR TO NOTIFY THE PROJECT ENGINEER SHALL CONSTITUTE ACCEPTANCE OF FULL RESPONSIBILITY BY THE CONTRACTOR TO COMPLETE THE SCOPE OF THE WORK AS DEFINED BY THE DRAWINGS AND IN FULL CONFORMANCE WITH LOCAL REGULATIONS AND CODES.

H:\2015\MD152013\DRAWINGS\PLAN SETS\SITE DEVELOPMENT PLANS - PHASE-II\MD152013CV2.DWG PRINTED BY: RBOWEN 6.28.16 @ 11:16 AM LAST SAVED BY: RBOWEN

ADDRESS CHART/STORMWATER MANAGEMENT PRACTICES

LOT	ADDRESS	FACILITY TYPE & NUMBER
203	9803 SOAPSTONE TRAIL	DRYWELLS (MDE M-5)
204	9807 SOAPSTONE TRAIL	DRYWELLS (MDE M-5)
205	9811 SOAPSTONE TRAIL	DRYWELLS (MDE M-5)
208	9818 SOAPSTONE TRAIL	DRYWELLS (MDE M-5)
209	9814 SOAPSTONE TRAIL	DRYWELLS (MDE M-5)
210	9810 SOAPSTONE TRAIL	DRYWELLS (MDE M-5)
213	2419 VALLEY VIEW TRAIL	DRYWELLS (MDE M-5)
214	9801 MORNING CHOICE CT.	DRYWELLS (MDE M-5)
215	9805 MORNING CHOICE CT.	DRYWELLS (MDE M-5)
216	9809 MORNING CHOICE CT.	DRYWELLS (MDE M-5)
217	9812 MORNING CHOICE CT.	DRYWELLS (MDE M-5)
218	9808 MORNING CHOICE CT.	DRYWELLS (MDE M-5)
219	9804 MORNING CHOICE CT.	DRYWELLS (MDE M-5)
220	9800 MORNING CHOICE CT.	DRYWELLS (MDE M-5)
221	2433 VALLEY VIEW WAY	DRYWELLS (MDE M-5)
222	2437 VALLEY VIEW WAY	DRYWELLS (MDE M-5)
223	2441 VALLEY VIEW WAY	DRYWELLS (MDE M-5)
224	2445 VALLEY VIEW WAY	DRYWELLS (MDE M-5)
225	2449 VALLEY VIEW WAY	DRYWELLS (MDE M-5)
226	2453 VALLEY VIEW WAY	DRYWELLS (MDE M-5)
227	2457 VALLEY VIEW WAY	DRYWELLS (MDE M-5)
228	2461 VALLEY VIEW WAY	DRYWELLS (MDE M-5)
229	2465 VALLEY VIEW WAY	DRYWELLS (MDE M-5)
230	2469 VALLEY VIEW WAY	DRYWELLS (MDE M-5)
231	2473 VALLEY VIEW WAY	DRYWELLS (MDE M-5)
232	2477 VALLEY VIEW WAY	DRYWELLS (MDE M-5)
233	2481 VALLEY VIEW WAY	DRYWELLS (MDE M-5)
234	2485 VALLEY VIEW WAY	DRYWELLS (MDE M-5)
235	2489 VALLEY VIEW WAY	DRYWELLS (MDE M-5)
236	2493 VALLEY VIEW WAY	DRYWELLS (MDE M-5)
237	2497 VALLEY VIEW WAY	DRYWELLS (MDE M-5)
238	2501 VALLEY VIEW WAY	DRYWELLS (MDE M-5)
239	2496 VALLEY VIEW WAY	DRYWELLS (MDE M-5)
240	2492 VALLEY VIEW WAY	DRYWELLS (MDE M-5)
241	2488 VALLEY VIEW WAY	DRYWELLS (MDE M-5)
242	2484 VALLEY VIEW WAY	DRYWELLS (MDE M-5)
243	2480 VALLEY VIEW WAY	DRYWELLS (MDE M-5)
244	2476 VALLEY VIEW WAY	DRYWELLS (MDE M-5)
245	2472 VALLEY VIEW WAY	DRYWELLS (MDE M-5)
246	2468 VALLEY VIEW WAY	DRYWELLS (MDE M-5)
247	2464 VALLEY VIEW WAY	DRYWELLS (MDE M-5)
248	2460 VALLEY VIEW WAY	DRYWELLS (MDE M-5)
373	2410 VALLEY VIEW WAY	DRYWELLS (MDE M-5)
374	2414 VALLEY VIEW WAY	DRYWELLS (MDE M-5)
375	2418 VALLEY VIEW WAY	DRYWELLS (MDE M-5)
376	2422 VALLEY VIEW WAY	DRYWELLS (MDE M-5)
377	2426 VALLEY VIEW WAY	DRYWELLS (MDE M-5)
378	2430 VALLEY VIEW WAY	DRYWELLS (MDE M-5)
379	2434 VALLEY VIEW WAY	DRYWELLS (MDE M-5)
380	2438 VALLEY VIEW WAY	DRYWELLS (MDE M-5)
381	2442 VALLEY VIEW WAY	DRYWELLS (MDE M-5)
382	2446 VALLEY VIEW WAY	DRYWELLS (MDE M-5)
383	2450 VALLEY VIEW WAY	DRYWELLS (MDE M-5)
384	2454 VALLEY VIEW WAY	DRYWELLS (MDE M-5)
385	2458 VALLEY VIEW WAY	DRYWELLS (MDE M-5)

UTILITIES:

THE FOLLOWING COMPANIES WERE NOTIFIED BY DELMARVA MISS UTILITY SYSTEM (1-800-257-7777) AND REQUESTED TO MARK OUT UNDERGROUND FACILITIES AFFECTING AND SERVICING THIS SITE. THE UNDERGROUND UTILITY INFORMATION SHOWN HEREON IS BASED UPON THE UTILITY COMPANIES RESPONSE TO THIS REQUEST. SERIAL NUMBER(S): 12499659

UTILITY COMPANY	PHONE NUMBER
VERIZON - LAMBERT CABLE	(410) 536-0070
BGE ELECTRIC-USIC	(800) 778-9140
BGE GAS-USIC	(800) 778-9140
COMCAST- FIBER/UTILIQUEST	(410) 536-0070
HOWARD COUNTY WATER/SEWER	(410) 313-4982
COMCAST/UTILIQUEST	(410) 536-0070
COLONIAL PIPELINE	(678) 762-2403
AT&T TRANSMISSION	(800) 252-1133
QWEST GOVERNMENT SERVICES	(703) 464-7592

OPEN SPACE CHART

LOT No.	OWNER	PURPOSE
196	HOWARD COUNTY DEPARTMENT OF RECREATION AND PARKS	OPEN SPACE*
197	HOWARD COUNTY DEPARTMENT OF RECREATION AND PARKS	OPEN SPACE*
198	HOWARD COUNTY DEPARTMENT OF RECREATION AND PARKS	OPEN SPACE*
199	HOWARD COUNTY DEPARTMENT OF RECREATION AND PARKS	OPEN SPACE*
200	HOWARD COUNTY DEPARTMENT OF RECREATION AND PARKS	OPEN SPACE*
201	HOWARD COUNTY DEPARTMENT OF RECREATION AND PARKS	OPEN SPACE*
202	HOWARD COUNTY DEPARTMENT OF RECREATION AND PARKS	OPEN SPACE*

FOR THE CREATION OF FOREST CONSERVATION EASEMENTS, THE PROTECTION OF STEEP SLOPES, STREAMS, WETLAND, STORMWATER MANAGEMENT, AND THEIR ASSOCIATED BUFFERS, AND THE CREATION OF RECREATIONAL OPEN SPACE.

LOT INFORMATION

LOT TYPE	LOTS	MINIMUM LOT SIZE	MIN. LOT WIDTH AT FRONT BRL
SINGLE FAMILY DETACHED	203-205, 208-210, 213-248, & 373-385	6,000 SQUARE FEET	50'

SINGLE FAMILY DETACHED PARKING ANALYSIS

NUMBER OF SINGLE DETACHED LOTS FOR THIS SDP = 55

REQUIRED PARKING (@ 2.5 SPACES PER SFD LOT) = 138
PER SECTION 133.0 D.2.A OF THE ZONING REGULATIONS

TOTAL REQUIRED SPACES = 138 SPACES

PARKING PROVIDED

55 SPACES/UNIT (2 GARAGE & 2 DRIVEWAY SPACES) = 220 SPACES

PHASE II
SITE DEVELOPMENT PLANS
FOR
ESTATES AT PATAPSCO PARK
BUILDABLE LOTS 203-205, 208-210, 213-248 & 373-385

LOCATION OF SITE

ROGERS AVENUE
ZONING: R-ED AND R-20, 2ND ELECTION DISTRICT
TAX MAP 17, GRID 5, 6, 11 & 12
HOWARD COUNTY, MARYLAND

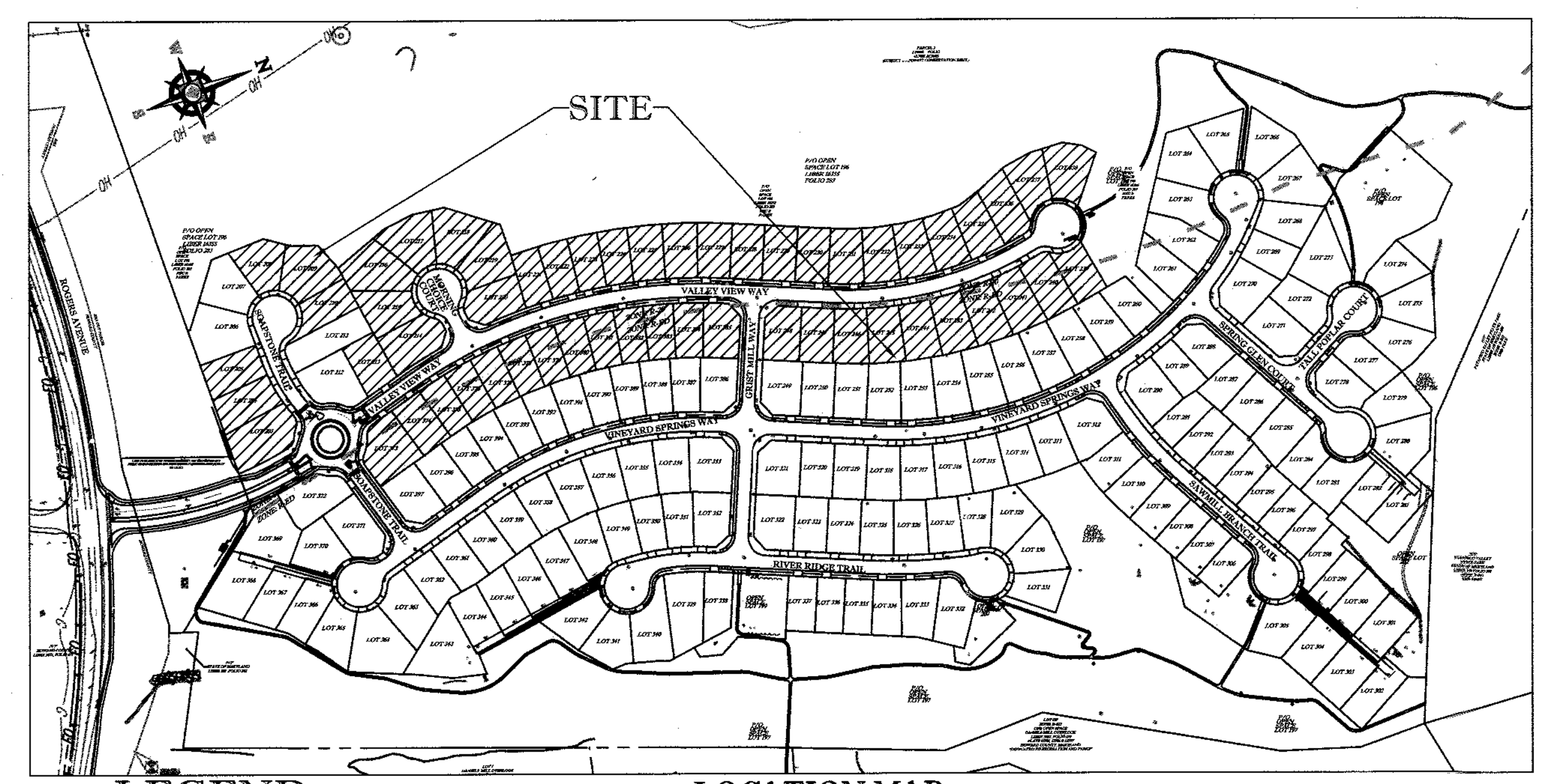

LEGEND

PHASE II LOTS

LOCATION MAP
SCALE: 1"=300'

BENCHMARK

GEODETIC SURVEY CONTROL -17FA
ELEV. 476.721'
N 594,948.426
E 1,364,626.770

GEODETIC SURVEY CONTROL - 17F7
ELEV. 469.399'
N 595,829.688
E 1,363,088.330

GENERAL NOTES (cont.)

47. TRASH PAD MAINTENANCE AND LANDSCAPE SCREENING SHALL BE THE RESPONSIBILITY OF THE LOT OWNERS WHICH ACCESS ONTO THE APPLICABLE SHARED DRIVEWAYS AND SHALL BE MADE A PART OF THE USE-IN-COMMON MAINTENANCE AGREEMENTS. HOWARD COUNTY DEPARTMENT OF PUBLIC WORKS WILL NOT BE RESPONSIBLE FOR UPKEEP.
48. IMPACT TO THE STREAM, WETLANDS AND THE WETLAND BUFFER IN THE VICINITY OF LOTS 308 & 309 WAS DETERMINED TO BE A NECESSARY DISTURBANCE BY THE DIVISION LAND DEVELOPMENT ON SEPTEMBER 23, 2014.
49. THE DEVELOPER AND THE DEPARTMENT OF PUBLIC WORKS HAVE REACHED AN AGREEMENT TO COMPLETE AN UPGRADE TO THE PUMP STATION. A DEVELOPER'S AGREEMENT WILL BE REQUIRED FOR THE PUMP STATION UPGRADE TO THE OFFSITE PUMP STATION LOCATED AT 8516 DORSEY SPRING COURT.
50. HOWARD COUNTY DEPARTMENT OF PUBLIC WORKS, IN A LETTER DATED JANUARY 21, 2015, APPROVED A WAIVER REQUEST OF THE REQUIREMENTS OF SECTION 4.3.B.3.B AND 4.5.E FOR LOTS 263 THROUGH 268, LOTS 273 THROUGH 276, 300, AND 304 (NO BASEMENT GRAVITY SERVICE). AS A RESULT OF TOPOGRAPHY CAUSING DEPTHS OF SEWER IN EXCESS OF 20 FEET, BASEMENT SEWER SERVICE CANNOT BE PROVIDED TO THESE PROPOSED LOTS. FOR THESE LOTS: GRAVITY SEWER SERVICE TO BE PROVIDED TO FIRST FLOOR ONLY; BASEMENT SERVICE TO BE PROVIDED BY PRIVATE ON-SITE PUMP. THE APPROVAL AND INSPECTION OF ON-SITE PUMPING UNITS INCLUDES THE DEPARTMENT OF INSPECTION, LICENSES AND PERMITS (DILP).
51. HOWARD COUNTY DEPARTMENT OF PUBLIC WORKS, IN A LETTER DATED JANUARY 21, 2015, APPROVED A WAIVER REQUEST OF THE REQUIREMENTS OF SECTION 3.3.B.5 (DEPTH OF COVER OVER WATER MAINS). THE WAIVER REQUEST TO ALLOW AN INCREASED DEPTH OF COVER OVER THE WATER MAIN CROSSING IN THE FOREST CONSERVATION EASEMENT, BETWEEN STATION 12+23 AND STATION 14+00 OF WATERLINE 'E', TO TEN (10) FEET IS APPROVED WITH THE FOLLOWING LIMITATIONS:
   - DR-14, C-900 PVC PIPE, WITH RESTRAINED JOINTS, SHALL BE USED BETWEEN STATION 13+06 AND STATION 14+20.
   - THE MAXIMUM COVER WITHIN THE LIMITS DESCRIBED ABOVE SHALL NOT EXCEED TEN (10) FEET.
53. ANY DAMAGE TO THE ADJACENT COUNTY-OWNED RIGHT-OF-WAY AND PROPERTY SHALL BE CORRECTED AT THE CONTRACTOR'S EXPENSE.
54. IN ACCORDANCE WITH SECTION 128 OF THE HOWARD COUNTY ZONING REGULATIONS, BAY WINDOWS, CHIMNEYS OR EXTERIOR STAIRWAYS NOT MORE THAN 16 FEET IN WIDTH MAY PROJECT NOT MORE THAN 4 FEET INTO ANY SETBACKS. PORCHES, OR DECKS, OPEN OR ENCLOSED MAY PROJECT NOT MORE THAN 10 FEET INTO THE FRONT OR REAR YARD SETBACK.
55. WATER METERS ARE TO BE PROVIDED IN OUTSIDE VAULTS.
56. ANY FURTHER DEVELOPMENT WILL REQUIRE THE UPGRADES TO THE OLD FREDERICK ROAD PUMP STATION OR APPROVAL FROM HOWARD COUNTY TO PROVIDE WITH DEVELOPMENT.
57. FOREST CONSERVATION REQUIREMENTS PER SECTION 16.1200 OF THE HOWARD COUNTY CODE AND THE FOREST CONSERVATION MANUAL FOR THIS SUBDIVISION HAVE BEEN FULFILLED BY RETENTION OF EXISTING FOREST IN THE AMOUNT OF 12.8 ACRES, 1.8 ACRES FOR REFORESTATION FOR A TOTAL CONSERVATION EASEMENT AREA OF 14.6 ACRES. THE TOTAL SURETY AMOUNT FOR ONSITE REFORESTATION IS $39,204.00 FOR A TOTAL SURETY AMOUNT OF $39,204.00 (78,408 X .50) WHICH IS PART OF THE DEVELOPER'S AGREEMENT FOR THIS FINAL PLAN, F-14-124. THE REMAINING FOREST CONSERVATION REQUIREMENT OF 10.2 ACRES HAS BEEN MET BY PAYMENT OF FEE-IN-LIEU TO THE FOREST CONSERVATION FUND IN THE AMOUNT OF $333,234.00 (444,312 X .75). THE AREA OF SHA FOREST CONSERVATION EASEMENT IS NOT UTILIZED IN FULFILLMENT OF FOREST CONSERVATION OBLIGATION FOR THIS SUBDIVISION.

GENERAL NOTES (cont.)

36. RESERVATION OF PUBLIC UTILITY AND FOREST CONSERVATION EASEMENTS
    DEVELOPER RESERVES UNTO ITSELF, ITS SUCCESSORS AND ASSIGNS, ALL EASEMENTS SHOWN ON THIS PLAN FOR WATER, SEWER, STORM DRAINAGE, OTHER PUBLIC UTILITIES AND FOREST CONSERVATION (DESIGNATED AS "FOREST CONSERVATION AREA"), LOCATED IN, ON, OVER AND THROUGH LOTS/PARCELS, ANY CONVEYANCES OF THE AFORESAID LOTS/PARCELS SHALL BE SUBJECT TO THE EASEMENTS HEREIN RESERVED, WHETHER OR NOT EXPRESSLY STATED IN THE DEED(S) CONVEYING SAID LOT(S)/PARCELS. DEVELOPER SHALL EXECUTE AND DELIVER DEEDS FOR THE EASEMENTS HEREIN RESERVED TO HOWARD COUNTY WITH A METES AND BOUNDS DESCRIPTION OF THE FOREST CONSERVATION AREA. UPON COMPLETION OF THE PUBLIC UTILITIES AND THEIR ACCEPTANCE BY HOWARD COUNTY, AND IN THE CASE OF THE FOREST CONSERVATION EASEMENT(S), UPON COMPLETION OF THE DEVELOPER'S OBLIGATIONS UNDER THE FOREST CONSERVATION INSTALLATION AND MAINTENANCE AGREEMENT EXECUTED BY THE DEVELOPER AND THE COUNTY, AND THE RELEASE OF DEVELOPER'S SURETY POSTED WITH SAID AGREEMENT. THE COUNTY SHALL ACCEPT THE EASEMENTS AND RECORD THE DEED(S) OF EASEMENT IN THE LAND RECORDS OF HOWARD COUNTY.
37. GRADING AND DISTURBANCE OF ENVIRONMENTAL FEATURES AS APPLICABLE FOR OUTFALL LOCATIONS AND/OR UTILITY CONSTRUCTION IS CONSIDERED ESSENTIAL DISTURBANCE. NO OTHER GRADING, DISTURBANCE OR VEGETATIVE REMOVAL IS PERMITTED IN WETLANDS, STREAMS, THEIR BUFFERS, FLOOD PLAIN OR FOREST CONSERVATION EASEMENT AREAS.
38. THIS PROJECT IS SUBJECT TO PLANNING BOARD CASE NO. 403, WHICH WAS APPROVED ON FEBRUARY 28, 2014.
39. A PRE-SUBMISSION COMMUNITY MEETING WAS HELD ON OCTOBER 2, 2012.
40. LANDSCAPING FOR THIS DEVELOPMENT HAS BEEN PROVIDED IN ACCORDANCE WITH SECTION 16.124 OF THE HOWARD COUNTY CODE AND THE LANDSCAPE MANUAL. PERIMETER LANDSCAPE SURETY HAS BEEN POSTED BY THE DEVELOPER AS PART OF THE DPW DEVELOPER'S AGREEMENT, F-14-124. PERIMETER STREET SIDE AND TRASH PAD SCREENING SHALL BE AS SHOWN ON LANDSCAPE PLAN SHEETS OF THE ROAD CONSTRUCTION DRAWINGS FOR F-14-124.
41. ALL FILL AREAS WITHIN ROADWAYS AND UNDER STRUCTURES SHALL BE COMPACTED TO A MINIMUM OF 95% COMPACTION OF AASHTO T-180.
42. A HOMEOWNERS ASSOCIATION HAS BEEN ESTABLISHED FOR THE RESIDENTS OF THIS SUBDIVISION AND PROTECTIVE COVENANTS AND COVENANTS GOVERNING THE MAINTENANCE OF THE COMMUNITY OWNED OPEN SPACE LOTS ARE RECORDED IN THE LAND RECORDS OF HOWARD COUNTY, IN LIBER 16344 FOLIO 467.
43. THE SHARED DRIVEWAY ACCESS AND MAINTENANCE OBLIGATION AGREEMENTS FOR THE 16' DRIVEWAYS WHICH SERVE LOTS 281 & 282, 299 - 304, 343 - 348, AND 366 - 369 WAS RECORDED IN THE LAND RECORDS OF HOWARD COUNTY SIMULTANEOUSLY WITH THE SUBDIVISION PLAT (F-14-124).
44. RETAINING WALLS LOCATED IN SETBACK AREAS ON INDIVIDUAL LOTS WHERE APPLICABLE WILL NOT EXCEED 3' IN HEIGHT AND WILL BE CONSTRUCTED UNDER THE SITE DEVELOPMENT PLANS. RETAINING WALLS SHALL BE CONSTRUCTED UNDER THESE FINAL ROAD CONSTRUCTION DRAWINGS IF LOCATED ON OPEN SPACE LOTS (F-14-124).
45. THE MARYLAND DEPARTMENT OF ENVIRONMENT, WATER MANAGEMENT ADMINISTRATION HAS ISSUED A LETTER OF AUTHORIZATION (TRACKING NO. 13-NT-3155/201360766) FOR NON-TIDAL WETLANDS DISTURBANCE ASSOCIATED WITH THE PROPOSED STREAM CROSSING WITHIN THESE PLANS.
46. USE-IN-COMMON AGREEMENT(S) ARE REQUIRED BETWEEN THE OWNERS OF LOTS 281 & 282, 299 - 304, 343 - 348, AND 366 - 369 RESPECTIVELY, COVERING THE MAINTENANCE OF TRASH PADS AND ASSOCIATED LANDSCAPE SCREENING RECORDED UNDER F-14-124.

BOHLER ENGINEERING

901 DULANEY VALLEY ROAD, SUITE 801
TOWSON, MARYLAND 21204
Phone: (410) 821-7900
Fax: (410) 821-7987
MD@BohlerEng.com
CONTACT: BRANDON ROWE, P.E.

SHEET INDEX

SHEET TITLE	SHEET NUMBER
TITLE SHEET	1
GENERAL NOTES	2
HOUSE TYPES	3 - 4
OVERALL PLAN	5
SITE DEVELOPMENT PLAN	6 - 8
EROSION AND SEDIMENT CONTROL PLAN	9 - 11
SEDIMENT CONTROL NOTES & DETAILS	12 - 13
STORM DRAIN AND STORMWATER MANAGEMENT DRAINAGE AREA MAP	14- 16
STORMWATER MANAGEMENT DRAINAGE AREA SUMMARY	17
STORMWATER MANAGEMENT NOTES & DETAILS	18
TEMPORARY EROSION & SEDIMENT CONTROL/STORMWATER MANAGEMENT OVERALL PLAN	19

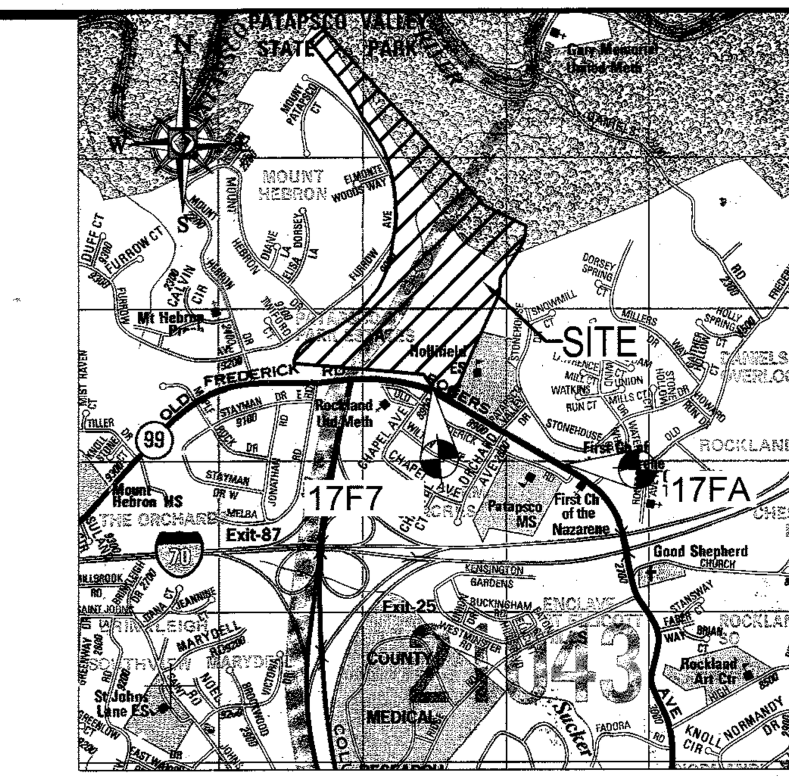

VICINITY MAP
COPYRIGHT ADC THE MAP PEOPLE
PERMIT USE NO. 20602153-5
SCALE: 1"=2000'
ADC MAP COORDINATES: 5052/H8

GENERAL NOTES

1. ALL CONSTRUCTION SHALL BE IN ACCORDANCE WITH THE LATEST STANDARDS AND SPECIFICATIONS OF HOWARD COUNTY PLUS MSHA STANDARDS AND SPECIFICATIONS IF APPLICABLE.
2. THE CONTRACTOR SHALL NOTIFY THE DEPARTMENT OF PUBLIC WORKS / BUREAU OF ENGINEERING / CONSTRUCTION INSPECTION DIVISION AT 410-313-1880 AT LEAST FIVE (5) WORKING DAYS PRIOR TO THE START OF WORK.
3. THE CONTRACTOR SHALL NOTIFY "MISS UTILITY" AT 1-800-257-7777 AT LEAST 48 HOURS PRIOR TO ANY EXCAVATION WORK BEING DONE.
4. ALL TRAFFIC CONTROL SIGNS SHALL BE PLACED IN FRONT OF TREE LOCATIONS FOR MAXIMUM SIGHT VISIBILITY. NO TREE CAN BE INSTALLED WITHIN 30' OF ANY STOP SIGN (APPROACH DIRECTION). WHERE SIGNS NEED TO BE PLACED BEHIND THE SIDEWALK, ADDITIONAL SPACING BETWEEN TREES MAY BE REQUIRED AT THOSE LOCATIONS.
5. NO STRUCTURES INCLUDING BUT NOT LIMITED TO DECKS AND THEIR SUPPORTS SHALL BE LOCATED WITHIN DRAINAGE EASEMENTS AND/OR DRYWELLS. NO STRUCTURES CAN BE LOCATED WITHIN 10' OF THE A PUBLIC WATER/SEWER.
6. EXISTING TOPOGRAPHIC CONTOURS BASED ON BOUNDARY BY BEN DYER & TOPOGRAPHIC SURVEY PERFORMED BY AERO-METRIC, DATED 1/25/09.
7. THE COORDINATES SHOWN HEREON ARE BASED UPON THE HOWARD COUNTY GEODETIC CONTROL WHICH IS BASED UPON THE MARYLAND STATE PLAN COORDINATE SYSTEM. HORIZONTAL AND VERTICAL CONTROL DATUM ARE BASED ON HOWARD COUNTY MONUMENT NOS. 17FA AND 17F7 WHICH WERE USED FOR THIS PROJECT.
   HOWARD COUNTY MONUMENT NO: 17FA ELEV. = 476.72
   HOWARD COUNTY MONUMENT NO: 17F7 ELEV. = 469.40
8. WATER IS PUBLIC (CONTRACT NO. 14-4803-D)
9. SEWER IS PUBLIC (CONTRACT NO. 14-4803-D)
10. STORMWATER MANAGEMENT WILL BE PROVIDED IN ACCORDANCE WITH HOWARD COUNTY SPECIFICATIONS. WATER QUALITY AND RECHARGE VOLUMES WILL BE PROVIDED BY MICRO-BIORETENTION FACILITIES, BIORETENTION FACILITIES, INFILTRATION FACILITIES, AND DRY WELLS (ON LOT) TO MEET MDE REQUIREMENTS. FACILITIES TREATING ONLY AREAS FROM PRIVATE PROPERTY WILL BE OWNED AND MAINTAINED BY PROPERTY OWNERS AND HOA. FACILITIES TREATING AREAS WITHIN PUBLIC R/W WILL BE PLACED IN EASEMENTS AND WILL BE MAINTAINED BY BOTH HOWARD COUNTY AND PROPERTY OWNERS/HOA. HOWARD COUNTY WILL MAINTAIN PIPES AND PROPERTY OWNERS/HOA WILL MAINTAIN FACILITY SURFACES. THE HOA WILL BE RESPONSIBLE TO MAINTAIN THE TWO (2) INFILTRATION FACILITES.
11. EXISTING UTILITIES ARE BASED ON THE AERIAL SURVEY AND FIELD SURVEY BY BEN DYER ASSOCIATES.
12. THE FLOODPLAIN STUDY FOR THIS PROJECT WAS PREPARED BY BEN DYER ASSOCIATES, DATED FEBRUARY 2012, AND MEETS THE REQUIREMENTS FOR "OBVIOUSLY NOT CRITICAL STUDY".
13. THE WETLANDS DELINEATION STUDY FOR THIS PROJECT WAS PREPARED BY BEN DYER ASSOCIATES, DATED DECEMBER, 2012.
14. THE TRAFFIC STUDY FOR THIS PROJECT WAS PREPARED BY THE TRAFFIC GROUP, DATED APRIL 23, 2013.
15. THE NOISE STUDY FOR THIS PROJECT WAS PREPARED BY MARS GROUP, DATED SEPTEMBER 24, 2012.
16. A FOREST STAND DELINEATION REPORT WAS COMPLETED BY BEN DYER ASSOCIATES, INC., DATED DECEMBER 2011.
17. THE SUBSURFACE EXPLORATION REPORT FOR THIS PROJECT WAS PREPARED BY HILLIS-CARNES ENGINEERING ASSOCIATES, INC. DATED 12/16/12.
18. THE SUBJECT PROPERTY IS ZONED R-20 & R-ED PER THE FEBRUARY 4, 2004 COMPREHENSIVE ZONING PLAN. AND THE JULY 28, 2006 COMPREHENSIVE LITE ZONING REGULATION. THE SUBJECT LOTS ARE LOCATED IN THE R-20 ZONED PORTION OF THIS SUBDIVISION.
19. THE R-20 ZONED PORTION OF THE SITE WILL BE DEVELOPED IN ACCORDANCE WITH "R-ED" ZONING REGULATIONS PER SECTION 108.G.3 TO RECEIVE AT LEAST ONE DENSITY SENDING UNIT TO QUALIFY TO USE THE "R-ED" REGULATIONS.
20. IN ACCORDANCE WITH SECTION 108.0.G.2 OF THE HOWARD COUNTY ZONING REGULATIONS, THE APPLICANT HAS TRANSFERRED ONE DEVELOPMENT RIGHT FROM A SENDING PARCEL IN ORDER TO DEVELOP THE ENTIRE R-20 ZONING PORTION UNDER THE R-ED BULK REGULATIONS AS WELL AS TO GAIN ONE ADDITIONAL DEVELOPMENT LOT. THE DEVELOPMENT RIGHT WAS SENT BY PLAT #23420 (DPZ FILE No. F-14-124S1) FROM THE CURTIS PROPERTY.
21. SITE DATA (OVERALL SUBDIVISION):
   A. GROSS AREA OF TRACT = 122.79 AC.
   B. AREA OF FLOODPLAIN = 7.18 AC. (INCLUDES FP IN SHA FC EASEMENT (3.93 ACRES OUTSIDE OF SHA FC EASEMENT))
   C. AREA OF 25% OR GREATER SLOPES OUTSIDE FLOODPLAIN = 16.07 AC.
   D. NET AREA OF TRACT = 99.54 AC.
   E. NUMBER OF LOTS PERMITTED: 199 LOTS (NET ACREAGE X 2)
   F. NUMBER OF LOTS IMPORTED: 1 LOT
   G. TOTAL NUMBER OF LOTS PERMITTED: 200 LOTS
   H. REQUIRED OPEN SPACE = 50% OF GROSS AREA (BASED ON 6,000 S.F. LOTS) = 61.40 AC.
   I. PROVIDED OPEN SPACE = 77.415 AC. (LOTS 196-202)
   J. REQUIRED RECREATIONAL OPEN SPACE = 300 S.F./ 195 LOTS = 58,500 S.F. (1.34 AC.)
   K. PROVIDED RECREATIONAL OPEN SPACE = 70,550 S.F.
   L. ONSITE DISTURBANCE = 50.69 AC.
   M. OFFSITE DISTURBANCE = 4.74 AC.
22. AREA OF PROPOSED BUILDABLE LOTS = 35.813 AC. AREA OF PROPOSED BUILDING LOTS FOR THIS SUBMISSION = 9.75 AC.
23. NUMBER OF LOTS: 55 (THIS PHASE)
   A. BUILDABLE = 55
   B. OPEN SPACE = 0
24. PRIOR CASE NUMBERS ASSOCIATED WITH THIS PROJECT INCLUDE ECP-13-029, SP-13-012, WP13-165, PB 403, F-14-124, F-16-051, AND F-14-124S1.
25. THIS PROPERTY IS LOCATED INSIDE OF THE METROPOLITAN DISTRICT.
26. NO CEMETERIES, GRAVE SITES, OR HISTORIC STRUCTURES EXIST WITHIN THIS SUBDIVISION.
27. THE FOLLOWING DESIGN MANUAL WAIVERS HAVE BEEN APPROVED FOR THIS PROPERTY:
   - VOL III SECTION 2.5.B.10 INTERSECTION VERTICAL ALIGNMENT. WAIVER OF MAXIMUM ALLOWABLE LANDING GRADE AT THE SITE ENTRANCE TO ALLOW ROAD A TO DROP QUICKLY AND MATCH ONSITE GRADES. APPROVED MAY 30, 2013.
   - VOL III SECTION 2.5.B.10 INTERSECTION VERTICAL ALIGNMENT. WAIVER OF MAXIMUM ALLOWABLE LANDING GRADE FOR ROAD F AT INTERSECTIONS WITH ROAD A AND ROAD B. STEEPENING THE ROAD GRADE SHORTENS THE LENGTH AND THEREBY AVOIDS EXTENDING THE ROAD INTO ENVIRONMENTALLY SENSITIVE AREAS. APPROVED MAY 30, 2013.
28. THIS PLAN IS SUBJECT TO THE AMENDED FIFTH EDITION OF THE SUBDIVISION AND LAND DEVELOPMENT REGULATIONS PER COUNCIL BILL NO. 45-2003 AND THE AMENDED ZONING REGULATIONS PER COUNCIL BILL NO. 75-2003. DEVELOPMENT OR CONSTRUCTION ON THIS PROPERTY MUST COMPLY WITH SETBACK AND BUFFER REGULATIONS IN EFFECT AT THE TIME OF SUBMISSION OF THE SITE DEVELOPMENT PLAN, WAIVER PETITION APPLICATION OR BUILDING/GRADING PERMIT APPLICATIONS.
29. WAIVER REQUEST WP-13-165 WAS APPROVED SEPTEMBER 16, 2013 FOR THE FOLLOWING;
   - THE REMOVAL OF 35 OUT OF 146 SPECIMEN TREES (SECTION 16.1205.(A)(4-5&7)
   - IMPACTS TO FLOODPLAINS (SECTION 16 115)
30. PRELIMINARY EQUIVALENT SKETCH PLAN (SP-13-012) APPROVAL DATE: FEBRUARY 28, 2014 (PLANNING BOARD DECISION)
31. DRIVEWAYS SHALL BE PROVIDED PRIOR TO RESIDENTIAL OCCUPANCY TO ENSURE SAFE ACCESS FOR FIRE AND EMERGENCY VEHICLES PER THE FOLLOWING (MINIMUM) REQUIREMENTS:
   a. WIDTH - 12 FEET (16 FEET SERVING MORE THAN ONE RESIDENCE)
   b. SURFACE - SIX (6") INCHES OF COMPACTED CRUSHER RUN BASE WITH TAR AND CHIP COATING
   c. GEOMETRY - MAXIMUM 15% GRADE, MAXIMUM 10% GRADE CHANGE AND MINIMUM OF 45 TURNING RADIUS
   d. STRUCTURES (CULVERTS/BRIDGES) CAPABLE OF SUPPORTING 25 GROSS TONS (H 25 LOADING)
   e. DRAINAGE ELEMENTS - CAPABLE OF SAFELY PASSING 100 YEAR FLOOD WITH NO MORE THAN 1 FOOT DEPTH OVER DRIVEWAY SURFACE.
   f. STRUCTURE CLEARANCES - MINIMUM 12 FEET
   g. MAINTENANCE - SUFFICIENT TO INSURE ALL WEATHER USE
32. NO GRADING, REMOVAL OF VEGETATIVE COVER OR TREES, PAVING AND NEW STRUCTURES SHALL BE PERMITTED WITHIN THE LIMITS OF WETLANDS, STREAMS OR THEIR REQUIRED BUFFERS, FLOODPLAIN AND FOREST CONSERVATION EASEMENT AREA EXCEPT AS APPROVED BY THE DEPARTMENT OF PLANNING AND ZONING AS SHOWN ON THIS PLAN.
33. FOR FLAG OR PIPESTEM LOTS, REFUSE COLLECTION, SNOW REMOVAL AND ROAD MAINTENANCE ARE PROVIDED TO THE JUNCTION OF THE FLAG OR PIPESTEM AND ROAD RIGHT-OF-WAY LINE AND NOT ONTO THE PIPESTEM LOT DRIVEWAY.
34. WATER AND SEWER SERVICE TO THESE LOTS WILL BE GRANTED UNDER THE PROVISIONS OF SECTION 18.122.B OF THE HOWARD COUNTY CODE.
35. THE FOREST CONSERVATION EASEMENT HAS BEEN ESTABLISHED TO FULFILL THE REQUIREMENTS OF SECTION 16.1200 OF THE HOWARD COUNTY CODE AND FOREST CONSERVATION ACT. NO CLEARING, GRADING OR CONSTRUCTION IS PERMITTED WITHIN THE FOREST CONSERVATION EASEMENT; HOWEVER, FOREST MANAGEMENT PRACTICES AS DEFINED IN THE DEED OF FOREST CONSERVATION EASEMENT ARE ALLOWED. (SEE NOTE 57 FOR ADDITIONAL INFORMATION.)

NOTE:
THIS DEVELOPMENT IS EXEMPT FROM THE MIHU REQUIREMENTS BECAUSE A TECHNICALLY COMPLETE LETTER FOR THE ESTATES AT PATAPSCO PARK, PRELIMINARY EQUIVALENT SKETCH PLAN " WAS ISSUED ON SEPTEMBER 16, 2013.

OWNER:	DEVELOPER:
ESTATES AT PATAPSCO PARK, LLC 24012 FREDERICK ROAD CLARKSBURG, MD 20861 CONTACT: MR. DAN SNYDER PHONE: (301) 674-8509	ESTATES AT PATAPSCO PARK, LLC 24012 FREDERICK ROAD CLARKSBURG, MD 20861 CONTACT: MR. DAN SNYDER PHONE: (301) 674-8509

PERMIT INFORMATION CHART

SUBDIVISION NAME: ESTATES AT PATAPSCO PARK	SECTION/AREA: N/A	LOT/PARCEL NO.: 203-205, 208-210, 213-248, & 373-385	
PLAT # OR L/F: #23421	GRID #: 5, 6, 11, 12	ZONING: R-20 & R-ED	TAX MAP NO.: 17
ELECT DISTR: 2ND	CENSUS TRACT: 602100		

PREVIOUS FILE No. : SP-13-012, ECP-13-029, WP-13-165, PB CASE NO. 403, F-14-124, PLATS 23421 TO 23436, F-16-051, PLATS 23596 - 23609, SDP-16-019, CONT.# 10-3500 (FORCE MAIN)

PROFESSIONAL CERTIFICATION
I, BRANDON R. ROWE, HEREBY CERTIFY THAT THESE DOCUMENTS WERE PREPARED OR APPROVED BY ME, AND THAT I AM A DULY LICENSED PROFESSIONAL ENGINEER UNDER THE LAWS OF THE STATE OF MARYLAND, LICENSE NO. 40808, EXPIRATION DATE: 7/3/2017

BOHLER ENGINEERING
CIVIL & CONSULTING ENGINEERS
SURVEYORS
PROJECT MANAGERS
ENVIRONMENTAL CONSULTANTS
LANDSCAPE ARCHITECTS
CORPORATE OFFICE: WARREN, NJ
OFFICES: SOUTHBOROUGH, MA; ALBANY, NY; RONKONKOMA, NY; CHALFONT, PA; CENTER VALLEY, PA; TAMPA, FL; BOWIE, MD; TOWSON, MD; STERLING, VA; WARRENTON, VA; FORT LAUDERDALE, FL; PHILADELPHIA, PA

THE INFORMATION, DESIGN AND CONTENT OF THIS PLAN ARE PROPRIETARY AND SHALL NOT BE COPIED OR USED FOR ANY PURPOSE WITHOUT PRIOR WRITTEN AUTHORIZATION FROM BOHLER ENGINEERING. ONLY APPROVED, SIGNED AND SEALED PLANS SHALL BE UTILIZED FOR CONSTRUCTION PURPOSES. © 2008 BOHLER ENGINEERING.

REVISIONS

REV	DATE	COMMENT	BY

DIG WITH CARE — CALL BEFORE YOU DIG

THE FOLLOWING STATES REQUIRE NOTIFICATION BY EXCAVATORS, DESIGNERS, OR ANY PERSON PREPARING TO DISTURB THE EARTH'S SURFACE ANYWHERE IN THE STATE. IN VIRGINIA, MARYLAND, THE DISTRICT OF COLUMBIA, AND DELAWARE CALL - 811
(WV 1-800-245-4848) (PA 1-800-242-1776) (DC 1-800-257-7777)
(VA 1-800-552-7001) (MD 1-800-257-7777) (DE 1-800-282-8555)

PROJECT No.:	MD152013
DRAWN BY:	AVG
CHECKED BY:	JMA
DATE:	6/24/16
SCALE:	AS SHOWN
CAD I.D.:	CV2

PROJECT: SITE DEVELOPMENT PLANS (PHASE II) FOR ESTATES AT PATAPSCO PARK

SINGLE FAMILY DETACH UNITS
BUILDABLE LOTS 203-205, 208-210, 213-248 & 373-385
PLAT NOs. 23596 - 23609

LOCATION OF SITE
ROGERS AVENUE
HOWARD COUNTY

BOHLER ENGINEERING
901 DULANEY VALLEY ROAD, SUITE 801
TOWSON, MARYLAND 21204
Phone: (410) 821-7900
Fax: (410) 821-7987
www.BohlerEngineering.com

B.R. ROWE
STATE OF MARYLAND — BRANDON R. ROWE — PROFESSIONAL ENGINEER — No. 40808

SHEET TITLE:
TITLE SHEET

SHEET NUMBER:

SDP-16-050

GENERAL NOTES:

CONTRACTOR IS RESPONSIBLE FOR COMPLIANCE WITH THE NOTES AND SPECIFICATIONS CONTAINED HEREIN. CONTRACTOR IS RESPONSIBLE TO ENSURE THAT ALL SUBCONTRACTORS FULLY AND COMPLETELY CONFORM TO AND COMPLY WITH THESE REQUIREMENTS.

1. THE FOLLOWING DOCUMENTS ARE INCORPORATED BY REFERENCE AS PART OF THIS SITE PLAN:
   - SURVEY - BOUNDARY & TOPOGRAPHIC SURVEY PERFORMED BY AERO-METRIC, DATED 1/25/09. EXISTING UTILITIES ARE BASED ON THE AERIAL SURVEY BY AERO-METRIC AND FIELD SURVEY BY BEN DYER ASSOCIATES.
   - FINAL ROAD CONSTRUCTION PLANS - PREPARED BY BOHLER ENGINEERING, TITLED "FINAL ROAD CONSTRUCTION PLANS FOR ESTATES AT PATAPSCO PARK BUILDABLE LOTS 203-397 OPEN SPACES LOTS 196-202, RODGERS AVENUE, ZONING: R-ED AND R-20, 2ND ELECTION DISTRICT, TAX MAP 17, GRID 5, 6, 11 & 12, HOWARD COUNTY, MARYLAND" DATED 9/9/15, JOB NUMBER MD152013.
   - PUBLIC WATER AND SEWER FINAL CONSTRUCTION PLANS - PREPARED BY BOHLER ENGINEERING, TITLED "PUBLIC WATER AND SEWER FINAL CONSTRUCTION PLANS FOR ESTATES AT PATAPSCO PARK, ROGERS AVENUE, TAX MAP 17, GRID 5, 6, 11 & 12, HOWARD COUNTY, MARYLAND, ZONING: R-ED AND R-20, 2ND ELECTION DISTRICT, " DATED 9/8/15, JOB NUMBER MD152013

   PRIOR TO THE START OF CONSTRUCTION, THE CONTRACTOR MUST VERIFY THAT HE/SHE HAS THE LATEST EDITION OF THE DOCUMENTS REFERENCED ABOVE. THIS IS CONTRACTOR'S RESPONSIBILITY.
2. ALL ACCESSIBLE (AKA ADA) PARKING SPACES MUST BE CONSTRUCTED TO MEET, AT A MINIMUM, THE MORE STRINGENT OF THE REQUIREMENTS OF THE "AMERICANS WITH DISABILITIES ACT" (ADA) CODE (42 U.S.C. § 12101 et. seq. AND 42 U.S.C. § 4151 et seq.) OR THE REQUIREMENTS OF THE JURISDICTION WHERE THE PROJECT IS TO BE CONSTRUCTED, AND ANY AND ALL AMENDMENTS TO BOTH WHICH ARE IN EFFECT WHEN THESE PLANS ARE COMPLETED.
3. PRIOR TO STARTING CONSTRUCTION, THE CONTRACTOR IS RESPONSIBLE TO ENSURE THAT ALL REQUIRED PERMITS AND APPROVALS HAVE BEEN OBTAINED. NO CONSTRUCTION OR FABRICATION SHALL BEGIN UNTIL THE CONTRACTOR HAS RECEIVED AND THOROUGHLY REVIEWED THE COMMENTS TO ALL PLANS AND OTHER DOCUMENTS REVIEWED AND APPROVED BY THE PERMITTING AUTHORITIES AND CONFIRMED THAT ALL NECESSARY OR REQUIRED PERMITS HAVE BEEN OBTAINED. CONTRACTOR MUST HAVE COPIES OF ALL PERMITS AND APPROVALS ON SITE AT ALL TIMES.
4. THE OWNER/CONTRACTOR MUST BE FAMILIAR WITH AND RESPONSIBLE FOR THE PROCUREMENT OF ANY AND ALL CERTIFICATIONS REQUIRED FOR THE ISSUANCE OF A CERTIFICATE OF OCCUPANCY.
5. ALL WORK MUST BE PERFORMED IN ACCORDANCE WITH THESE PLANS,, SPECIFICATIONS AND CONDITIONS OF APPROVAL, AND ALL APPLICABLE REGULATIONS, AGREEMENTS, RULES, REGULATIONS, STATUTORY REQUIREMENTS, CODES, LAWS AND STANDARDS OF ALL GOVERNMENTAL ENTITIES WITH JURISDICTION OVER THIS PROJECT.
6. THE GEOTECHNICAL REPORT AND RECOMMENDATIONS SET FORTH HEREIN ARE A PART OF THE REQUIRED CONSTRUCTION DOCUMENTS AND, IN CASE OF CONFLICT, DISCREPANCY OR AMBIGUITY, THE MORE STRINGENT REQUIREMENTS AND/OR RECOMMENDATIONS CONTAINED IN THE PLANS AND THE GEOTECHNICAL REPORT AND RECOMMENDATIONS SHALL TAKE PRECEDENCE UNLESS SPECIFICALLY NOTED OTHERWISE ON THE PLANS. THE CONTRACTOR MUST NOTIFY THE ENGINEER, IN WRITING, OF ANY SUCH CONFLICT, DISCREPANCY OR AMBIGUITY BETWEEN THE GEOTECHNICAL REPORTS AND PLANS AND SPECIFICATIONS PRIOR TO PROCEEDING WITH ANY FURTHER WORK.
7. THESE PLANS ARE BASED ON INFORMATION PROVIDED TO BOHLER ENGINEERING BY THE OWNER AND OTHERS PRIOR TO THE TIME OF PLAN PREPARATION. CONTRACTOR MUST FIELD VERIFY EXISTING CONDITIONS AND NOTIFY BOHLER ENGINEERING, IN WRITING, IMMEDIATELY IF ACTUAL SITE CONDITIONS DIFFER FROM THOSE SHOWN ON THE PLAN, OR IF THE PROPOSED WORK CONFLICTS WITH ANY OTHER SITE FEATURES.
8. ALL DIMENSIONS SHOWN ON THE PLANS MUST BE FIELD VERIFIED BY THE CONTRACTOR PRIOR TO THE START OF CONSTRUCTION. CONTRACTOR MUST NOTIFY ENGINEER, IN WRITING, IF ANY CONFLICTS, DISCREPANCIES, OR AMBIGUITIES EXIST PRIOR TO PROCEEDING WITH CONSTRUCTION. NO EXTRA COMPENSATION WILL BE PAID TO THE CONTRACTOR FOR WORK WHICH HAS TO BE REDONE OR REPAIRED DUE TO DIMENSIONS OR GRADES SHOWN INCORRECTLY ON THESE PLANS PRIOR TO CONTRACTOR GIVING ENGINEER WRITTEN NOTIFICATION OF SAME AND ENGINEER, THEREAFTER, PROVIDING CONTRACTOR WITH WRITTEN AUTHORIZATION TO PROCEED WITH SUCH ADDITIONAL WORK.
9. CONTRACTOR MUST REFER TO THE ARCHITECTURAL/BUILDING PLANS "OF RECORD" FOR EXACT LOCATIONS AND DIMENSIONS OF ENTRY/EXIT POINTS, ELEVATIONS, PRECISE BUILDING DIMENSIONS, AND EXACT BUILDING UTILITY LOCATIONS.
10. PRIOR TO THE START OF CONSTRUCTION, THE CONTRACTOR MUST COORDINATE THE BUILDING LAYOUT BY CAREFUL REVIEW OF THE ENTIRE SITE PLAN AND THE LATEST ARCHITECTURAL PLANS (INCLUDING, BUT NOT LIMITED TO, STRUCTURAL, MECHANICAL, ELECTRICAL, PLUMBING AND FIRE SUPPRESSION PLAN, WHERE APPLICABLE). CONTRACTOR MUST IMMEDIATELY NOTIFY OWNER, ARCHITECT AND SITE ENGINEER, IN WRITING, OF ANY CONFLICTS, DISCREPANCIES OR AMBIGUITIES WHICH EXIST.
11. DEBRIS MUST NOT BE BURIED ON THE SUBJECT SITE AND ALL UNSUITABLE EXCAVATED MATERIAL AND DEBRIS (SOLID WASTE) MUST BE DISPOSED OF IN ACCORDANCE WITH THE REQUIREMENTS OF ANY AND ALL GOVERNMENTAL AUTHORITIES WHICH HAVE JURISDICTION OVER THIS PROJECT OR OVER CONTRACTOR.
12. THE CONTRACTOR IS RESPONSIBLE FOR IDENTIFYING WHEN SHORING IS REQUIRED AND FOR INSTALLING ALL SHORING REQUIRED DURING EXCAVATION (TO BE PERFORMED IN ACCORDANCE WITH CURRENT OSHA STANDARDS) AND ANY ADDITIONAL PRECAUTIONS TO BE TAKEN TO ASSURE THE STABILITY OF ADJACENT, NEARBY AND CONTIGUOUS STRUCTURES AND PROPERTIES.
13. THE CONTRACTOR IS TO EXERCISE EXTREME CARE WHEN PERFORMING ANY WORK ACTIVITIES ADJACENT TO PAVEMENT, STRUCTURES, ETC. WHICH ARE TO REMAIN EITHER FOR AN INITIAL PHASE OF THE PROJECT OR AS PART OF THE FINAL CONDITION. CONTRACTOR IS RESPONSIBLE FOR TAKING ALL APPROPRIATE MEASURES REQUIRED TO ENSURE THE STRUCTURAL STABILITY OF SIDEWALKS AND PAVEMENT, UTILITIES, BUILDINGS, AND INFRASTRUCTURE WHICH ARE TO REMAIN, AND TO PROVIDE A SAFE WORK AREA FOR THIRD PARTIES, PEDESTRIANS AND ANYONE INVOLVED WITH THE PROJECT.
14. THE CONTRACTOR IS RESPONSIBLE FOR REPAIRING ANY DAMAGE DONE TO ANY NEW OR EXISTING CONSTRUCTION OR PROPERTY DURING THE COURSE OF CONSTRUCTION, INCLUDING BUT NOT LIMITED TO DRAINAGE, UTILITIES, PAVEMENT, STRIPING, CURB, ETC. AND SHALL BEAR ALL COSTS ASSOCIATED WITH SAME TO INCLUDE, BUT NOT BE LIMITED TO, REDESIGN, RE-SURVEY, RE-PERMITTING AND CONSTRUCTION. THE CONTRACTOR IS RESPONSIBLE FOR AND MUST REPLACE ALL SIGNAL INTERCONNECTION CABLE, WIRING CONDUITS, AND ANY UNDERGROUND ACCESSORY EQUIPMENT DAMAGED DURING CONSTRUCTION AND MUST BEAR ALL COSTS ASSOCIATED WITH SAME. THE REPAIR OF ANY SUCH NEW OR EXISTING CONSTRUCTION OR PROPERTY MUST RESTORE SUCH CONSTRUCTION OR PROPERTY TO A CONDITION EQUIVALENT TO OR BETTER THAN THE CONDITIONS PRIOR TO COMMENCEMENT OF THE CONSTRUCTION, AND IN CONFORMANCE WITH APPLICABLE CODES, LAWS RULES, REGULATIONS, STATUTORY REQUIREMENTS AND STATUTES. CONTRACTOR MUST BEAR ALL COSTS ASSOCIATED WITH SAME. CONTRACTOR IS RESPONSIBLE TO DOCUMENT ALL EXISTING DAMAGE AND TO NOTIFY THE OWNER AND THE CONSTRUCTION MANAGER PRIOR TO THE START OF CONSTRUCTION.
15. ALL CONCRETE MUST BE AIR ENTRAINED AND HAVE THE MINIMUM COMPRESSIVE STRENGTH OF 4,000 PSI AT 28 DAYS UNLESS OTHERWISE NOTED ON THE PLANS, DETAILS AND/OR GEOTECHNICAL REPORT.
16. THE ENGINEER IS NOT RESPONSIBLE FOR CONSTRUCTION METHODS, MEANS, TECHNIQUES OR PROCEDURES, GENERALLY OR FOR THE CONSTRUCTION MEAN, METHODS, TECHNIQUES OR PROCEDURES FOR COMPLETION OF THE WORK DEPICTED BOTH ON THESE PLANS, AND FOR ANY CONFLICTS/SCOPE REVISIONS WHICH RESULT FROM SAME. CONTRACTOR IS RESPONSIBLE FOR DETERMINING THE METHODS/MEANS FOR COMPLETION OF THE WORK PRIOR TO THE COMMENCEMENT OF CONSTRUCTION.
17. THE ENGINEER OF RECORD IS NOT RESPONSIBLE FOR JOB SITE SAFETY. THE ENGINEER OF RECORD HAS NOT BEEN RETAINED TO PERFORM OR BE RESPONSIBLE FOR JOB SITE SAFETY, SAME BEING WHOLLY OUTSIDE OF ENGINEER'S SERVICES AS RELATED TO THE PROJECT. THE ENGINEER OF RECORD IS NOT RESPONSIBLE TO IDENTIFY OR REPORT ANY JOB SITE SAFETY ISSUES, AT ANY TIME.
18. ALL CONTRACTORS MUST CARRY THE SPECIFIED STATUTORY WORKER'S COMPENSATION INSURANCE, EMPLOYER'S LIABILITY INSURANCE AND LIMITS OF COMMERCIAL GENERAL LIABILITY INSURANCE (CGL). ALL CONTRACTORS MUST HAVE THEIR CGL POLICIES ENDORSED TO NAME BOHLER ENGINEERING, AND ITS PAST, PRESENT AND FUTURE OWNERS, OFFICERS, DIRECTORS, PARTNERS, SHAREHOLDERS, MEMBERS, PRINCIPALS, COMMISSIONERS, AGENTS, SERVANTS, EMPLOYEES, AFFILIATES, SUBSIDIARIES, AND RELATED ENTITIES, AND ITS SUBCONTRACTORS AND SUBCONSULTANTS AS ADDITIONAL NAMED INSURED AND TO PROVIDE CONTRACTUAL LIABILITY COVERAGE SUFFICIENT TO INSURE THIS HOLD HARMLESS AND INDEMNITY OBLIGATIONS ASSUMED BY THE CONTRACTORS. ALL CONTRACTORS MUST FURNISH BOHLER ENGINEERING WITH CERTIFICATIONS OF INSURANCE AS EVIDENCE OF THE REQUIRED INSURANCE PRIOR TO COMMENCING WORK AND UPON RENEWAL OF EACH POLICY DURING THE ENTIRE PERIOD OF CONSTRUCTION AND FOR ONE YEAR AFTER THE COMPLETION OF CONSTRUCTION. IN ADDITION, ALL CONTRACTORS WILL, TO THE FULLEST EXTENT PERMITTED UNDER THE LAW, INDEMNIFY, DEFEND AND HOLD HARMLESS BOHLER ENGINEERING AND ITS PAST, PRESENT AND FUTURE OWNERS, OFFICERS, DIRECTORS, PARTNERS, SHAREHOLDERS, MEMBERS, PRINCIPALS, COMMISSIONERS, AGENTS, SERVANTS, EMPLOYEES, AFFILIATES, SUBSIDIARIES, AND RELATED ENTITIES, AND ITS SUBCONTRACTORS AND SUBCONSULTANTS FROM AND AGAINST ANY DAMAGES, INJURIES, CLAIMS, ACTIONS, PENALTIES, EXPENSES, PUNITIVE DAMAGES, TORT DAMAGES, STATUTORY CLAIMS, STATUTORY CAUSES OF ACTION, LOSSES, CAUSES OF ACTION, LIABILITIES OR COSTS, INCLUDING, BUT NOT LIMITED TO, REASONABLE ATTORNEYS' FEES AND DEFENSE COSTS, ARISING OUT OF OR IN ANY WAY CONNECTED WITH OR TO THE PROJECT, INCLUDING ALL CLAIMS BY EMPLOYEES OF THE CONTRACTORS, ALL CLAIMS BY THIRD PARTIES AND ALL CLAIMS RELATED TO THE PROJECT. CONTRACTOR MUST NOTIFY ENGINEER, IN WRITING, AT LEAST THIRTY (30) DAYS PRIOR TO ANY TERMINATION, SUSPENSION OR CHANGE OF ITS INSURANCE HEREUNDER.
19. BOHLER ENGINEERING WILL REVIEW OR TAKE OTHER APPROPRIATE ACTION ON THE CONTRACTOR SUBMITTALS, SUCH AS SHOP DRAWINGS, PRODUCT DATA, SAMPLES, AND OTHER DATA, WHICH THE CONTRACTOR IS REQUIRED TO SUBMIT, BUT ONLY FOR THE LIMITED PURPOSE OF CHECKING FOR CONFORMANCE WITH THE DESIGN INTENT AND THE INFORMATION SHOWN IN THE CONSTRUCTION CONTRACT DOCUMENTS. CONSTRUCTION MEANS AND/OR METHODS AND/OR TECHNIQUES OR PROCEDURES, COORDINATION OF THE WORK WITH OTHER TRADES, AND CONSTRUCTION SAFETY PRECAUTIONS ARE THE SOLE RESPONSIBILITY OF THE CONTRACTOR AND BOHLER HAS NO RESPONSIBILITY OR LIABILITY FOR SAME HEREUNDER. BOHLER ENGINEERING'S SHOP DRAWING REVIEW WILL BE CONDUCTED WITH REASONABLE PROMPTNESS WHILE ALLOWING SUFFICIENT TIME TO PERMIT ADEQUATE REVIEW. REVIEW OF A SPECIFIC ITEM MUST NOT INDICATE THAT BOHLER ENGINEERING HAS REVIEWED THE ENTIRE ASSEMBLY OF WHICH THE ITEM IS A COMPONENT. BOHLER ENGINEERING WILL NOT BE RESPONSIBLE FOR ANY DEVIATIONS FROM THE CONSTRUCTION DOCUMENTS NOT PROMPTLY AND IMMEDIATELY BROUGHT TO ITS ATTENTION, IN WRITING, BY THE CONTRACTOR. BOHLER ENGINEERING WILL NOT BE REQUIRED TO REVIEW PARTIAL SUBMISSIONS OR THOSE FOR WHICH SUBMISSIONS OF CORRELATED ITEMS HAVE NOT BEEN RECEIVED.
20. NEITHER THE PROFESSIONAL ACTIVITIES OF BOHLER ENGINEERING, NOR THE PRESENCE OF BOHLER ENGINEERING AND/OR ITS PAST, PRESENT AND FUTURE OWNERS, OFFICERS, DIRECTORS, PARTNERS, SHAREHOLDERS, MEMBERS, PRINCIPALS, COMMISSIONERS, AGENTS, SERVANTS, EMPLOYEES, AFFILIATES, SUBSIDIARIES, AND RELATED ENTITIES, AND ITS SUBCONTRACTORS AND SUBCONSULTANTS AT A CONSTRUCTION/PROJECT SITE, SHALL RELIEVE THE GENERAL CONTRACTOR OF ITS OBLIGATIONS, DUTIES AND RESPONSIBILITIES INCLUDING, BUT NOT LIMITED TO, CONSTRUCTION MEANS, METHODS, SEQUENCE, TECHNIQUES OR PROCEDURES NECESSARY FOR PERFORMING, OVERSEEING, SUPERINTENDING AND COORDINATING THE WORK IN ACCORDANCE WITH THE CONTRACT DOCUMENTS AND COMPLIANCE ANY HEALTH OR SAFETY PRECAUTIONS REQUIRED BY ANY REGULATORY AGENCIES WITH JURISDICTION OVER THE PROJECT AND/OR PROPERTY. BOHLER ENGINEERING AND ITS PERSONNEL HAVE NO AUTHORITY TO EXERCISE ANY CONTROL OVER ANY CONSTRUCTION CONTRACTOR OR ITS EMPLOYEES IN CONNECTION WITH THEIR WORK OR ANY HEALTH OR SAFETY PROGRAMS OR PROCEDURES. THE GENERAL CONTRACTOR IS SOLELY RESPONSIBLE FOR JOB SITE SAFETY. BOHLER ENGINEERING SHALL BE INDEMNIFIED BY THE GENERAL CONTRACTOR AND MUST BE NAMED AN ADDITIONAL INSURED UNDER THE GENERAL CONTRACTOR'S POLICIES OF GENERAL LIABILITY INSURANCE AS DESCRIBED ABOVE IN NOTE 19 FOR JOB SITE SAFETY.
21. IF THE CONTRACTOR DEVIATES FROM THE PLANS AND SPECIFICATIONS, INCLUDING THE NOTES CONTAINED HEREIN, WITHOUT FIRST OBTAINING THE PRIOR WRITTEN AUTHORIZATION OF THE ENGINEER FOR SUCH DEVIATIONS, THE CONTRACTOR IS SOLELY RESPONSIBLE FOR THE PAYMENT OF ALL COSTS INCURRED IN CORRECTING ANY WORK DONE WHICH DEVIATES FROM THE PLANS, ALL FINES AND/OR PENALTIES ASSESSED WITH RESPECT THERETO AND ALL COMPENSATORY OR PUNITIVE DAMAGES RESULTING THEREFROM AND, FURTHER, SHALL DEFEND, INDEMNIFY AND HOLD HARMLESS THE ENGINEER, TO THE FULLEST EXTENT PERMITTED UNDER THE LAW, IN ACCORDANCE WITH PARAGRAPH 19 HEREIN, FOR AND FROM ALL FEES, ATTORNEYS' FEES, DAMAGES, COSTS, JUDGMENTS, PENALTIES AND THE LIKE RELATED TO SAME.
22. CONTRACTOR IS RESPONSIBLE FOR MAINTENANCE AND PROTECTION OF TRAFFIC PLAN FOR ALL WORK THAT AFFECTS PUBLIC TRAVEL EITHER IN THE R.O.W. OR ON SITE. THE COST FOR THIS ITEM MUST BE INCLUDED IN THE CONTRACTOR'S PRICE.
23. ALL SIGNING AND PAVEMENT STRIPING MUST CONFORM TO MANUAL ON UNIFORM TRAFFIC CONTROL DEVICES OR LOCALLY APPROVED SUPPLEMENT.
24. ENGINEER IS NOT RESPONSIBLE FOR ANY INJURY OR DAMAGES RESULTING FROM CONTRACTOR'S FAILURE TO BUILD OR CONSTRUCT IN STRICT ACCORDANCE WITH THE APPROVED PLANS. IF CONTRACTOR AND/OR OWNER FAIL BUILD OR CONSTRUCT IN STRICT ACCORDANCE WITH APPROVED PLANS, THEY AGREE TO JOINTLY AND SEVERALLY INDEMNIFY AND HOLD ENGINEER HARMLESS FOR ALL INJURIES AND DAMAGES THAT ENGINEER SUFFERS AND COSTS THAT ENGINEER INCURS.
25. OWNER MUST MAINTAIN AND PRESERVE ALL PHYSICAL SITE FEATURES AND DESIGN FEATURES DEPICTED ON THE PLANS AND RELATED DOCUMENTS, IN STRICT ACCORDANCE WITH THE APPROVED PLAN(S) AND DESIGN AND, FURTHER ENGINEER IS NOT RESPONSIBLE FOR ANY FAILURE TO SO MAINTAIN OR PRESERVE SITE AND/OR DESIGN FEATURES. IF OWNER FAILS TO MAINTAIN AND/OR PRESERVE ALL PHYSICAL SITE FEATURES AND/OR DESIGN FEATURES SPECIFICATIONS ON THE PLANS AND RELATED DOCUMENTS, OWNER AGREES TO INDEMNIFY AND HOLD ENGINEER HARMLESS FOR ALL INJURIES AND DAMAGES THAT ENGINEER SUFFERS AND COSTS THAT ENGINEER INCURS AS A RESULT OF SAID FAILURE.
26. ALL DIMENSIONS MUST BE TO FACE OF CURB, EDGE OF PAVEMENT, OR EDGE OF BUILDING, UNLESS NOTED OTHERWISE.
27. ALL CONSTRUCTION AND MATERIALS MUST COMPLY WITH AND CONFORM TO APPLICABLE FEDERAL, STATE AND LOCAL REGULATIONS, LAWS, ORDINANCES, RULES AND CODES, AND ALL APPLICABLE OSHA REQUIREMENTS.
28. CONTRACTOR AND OWNER MUST INSTALL ALL ELEMENTS AND COMPONENTS IN STRICT COMPLIANCE WITH AND ACCORDANCE WITH MANUFACTURER'S STANDARDS AND RECOMMENDED INSTALLATION CRITERIA AND SPECIFICATIONS. IF CONTRACTOR AND/OR OWNER FAIL TO DO SO, THEY AGREE TO JOINTLY AND SEVERALLY INDEMNIFY AND HOLD ENGINEER HARMLESS FOR ALL INJURIES AND DAMAGES THAT ENGINEER SUFFERS AND COSTS THAT ENGINEER INCURS AS A RESULT OF SAID FAILURE.
29. CONTRACTOR IS RESPONSIBLE TO MAINTAIN ON-SITE STORMWATER POLLUTION PREVENTION PLAN (SWPPP) IN COMPLIANCE WITH EPA REQUIREMENTS FOR SITES WHERE ONE (1) ACRE OR MORE (UNLESS THE LOCAL JURISDICTION REQUIRES FEWER) IS DISTURBED BY CONSTRUCTION ACTIVITIES. CONTRACTOR IS RESPONSIBLE TO ENSURE THAT ALL ACTIVITIES, INCLUDING THOSE OF SUBCONTRACTORS, ARE IN COMPLIANCE WITH THE SWPPP, INCLUDING BUT NOT LIMITED TO LOGGING ACTIVITIES (MINIMUM ONCE PER WEEK AND AFTER RAINFALL EVENTS) AND CORRECTIVE MEASURES, AS APPROPRIATE.
30. AS CONTAINED IN THESE DRAWINGS AND ASSOCIATED APPLICATION DOCUMENTS PREPARED BY THE SIGNATORY PROFESSIONAL ENGINEER, THE USE OF THE WORDS CERTIFY OR CERTIFICATION CONSTITUTES AN EXPRESSION OF "PROFESSIONAL OPINION" REGARDING THE INFORMATION WHICH IS THE SUBJECT OF THE UNDERSIGNED PROFESSIONAL KNOWLEDGE OR BELIEF AND IN ACCORDANCE WITH COMMON ACCEPTED PROCEDURE CONSISTENT WITH THE APPLICABLE STANDARDS OF PRACTICE, AND DOES NOT CONSTITUTE A WARRANTY OR GUARANTEE, EITHER EXPRESSED OR IMPLIED.

GENERAL DEMOLITION NOTES:

1. THIS PLAN REFERENCES DOCUMENTS AND INFORMATION IDENTIFIED IN GENERAL NOTE 1 ON THIS SHEET (SHEET 2).
2. CONTRACTOR SHALL PERFORM ALL WORK IN ACCORDANCE WITH THE REQUIREMENTS OF THE OCCUPATIONAL SAFETY AND HEALTH ACT OF 1970, (29 U.S.C. 651 et seq.), AS AMENDED AND ANY MODIFICATIONS, AMENDMENTS OR REVISIONS TO SAME.
3. BOHLER ENGINEERING HAS NO CONTRACTUAL, LEGAL, OR OTHER RESPONSIBILITY FOR JOB SITE SAFETY OR JOB SITE SUPERVISION, OR ANYTHING RELATED TO SAME.
4. THE DEMOLITION PLAN IS INTENDED TO PROVIDE GENERAL INFORMATION, ONLY, REGARDING ITEMS TO BE DEMOLISHED AND/OR REMOVED. THE CONTRACTOR MUST ALSO REVIEW THE OTHER SITE PLAN DRAWINGS AND INCLUDE IN DEMOLITION ACTIVITIES ALL INCIDENTAL WORK NECESSARY FOR THE CONSTRUCTION OF THE NEW SITE IMPROVEMENTS.
5. CONTRACTOR MUST RAISE ANY QUESTIONS CONCERNING THE ACCURACY OR INTENT OF THESE PLANS OR SPECIFICATIONS, CONCERNS REGARDING THE APPLICABLE SAFETY STANDARDS, OR THE SAFETY OF THE CONTRACTOR OR THIRD PARTIES IN PERFORMING THE WORK ON THIS PROJECT, WITH BOHLER ENGINEERING, IN WRITING, AND RESPONDED TO BY BOHLER, IN WRITING, PRIOR TO THE INITIATION OF ANY SITE ACTIVITY AND ANY DEMOLITION ACTIVITY. ALL DEMOLITION ACTIVITIES MUST BE PERFORMED IN ACCORDANCE WITH THE REQUIREMENTS OF THESE PLANS AND SPECIFICATIONS AND ALL APPLICABLE FEDERAL, STATE AND LOCAL REGULATIONS, RULES, REQUIREMENTS, STATUTES, ORDINANCES AND CODES.
6. PRIOR TO STARTING ANY DEMOLITION, CONTRACTOR IS RESPONSIBLE FOR/TO:
   A. OBTAINING ALL REQUIRED PERMITS AND MAINTAINING THE SAME ON SITE FOR REVIEW BY THE ENGINEER AND OTHER PUBLIC AGENCIES HAVING JURISDICTION THROUGHOUT THE DURATION OF THE PROJECT, SITE WORK AND DEMOLITION WORK.

ADA INSTRUCTIONS TO CONTRACTOR

CONTRACTORS MUST EXERCISE APPROPRIATE CARE AND PRECISION IN CONSTRUCTION OF ADA (HANDICAP) ACCESSIBLE COMPONENTS AND ACCESS ROUTES FOR THE SITE. THESE COMPONENTS, AS CONSTRUCTED, MUST COMPLY WITH THE CURRENT ADA STANDARDS AND REGULATIONS' BARRIER FREE ACCESS AND ANY MODIFICATIONS, REVISIONS OR UPDATES TO SAME. FINISHED SURFACES ALONG THE ACCESSIBLE ROUTE OF TRAVEL FROM PARKING SPACE, PUBLIC TRANSPORTATION, PEDESTRIAN ACCESS, INTER-BUILDING ACCESS, TO POINTS OF ACCESSIBLE BUILDING ENTRANCE/EXIT, MUST COMPLY WITH THESE ADA CODE REQUIREMENTS. THESE INCLUDE, BUT ARE NOT LIMITED TO THE FOLLOWING:

- PARKING SPACES AND PARKING AISLES - SLOPE SHALL NOT EXCEED 1:50 (1/4" PER FOOT OR NOMINALLY 2.0%) IN ANY DIRECTION.
- CURB RAMPS - SLOPE MUST NOT EXCEED 1:12 (8.3%) FOR A MAXIMUM OF SIX (6) FEET.
- LANDINGS - MUST BE PROVIDED AT EACH END OF RAMPS, MUST PROVIDE POSITIVE DRAINAGE, AND MUST NOT EXCEED 1:50 (1/4" PER FOOT OR NOMINALLY 2.0%) IN ANY DIRECTION.
- PATH OF TRAVEL ALONG ACCESSIBLE ROUTE - MUST PROVIDE A 36-INCH OR GREATER UNOBSTRUCTED WIDTH OF TRAVEL (CAR OVERHANGS AND/OR HANDRAILS CANNOT REDUCE THIS MINIMUM WIDTH). THE SLOPE MUST BE NO GREATER THAN 1:20 (5.0%) IN THE DIRECTION OF TRAVEL, AND MUST NOT EXCEED 1:50 (1/4" PER FOOT OR NOMINALLY 2.0%) IN CROSS SLOPE. WHERE PATH OF TRAVEL WILL BE GREATER THAN 1:20 (5.0%), ADA RAMP MUST BE ADHERED TO. A MAXIMUM SLOPE OF 1:12 (8.3%), FOR A MAXIMUM RISE OF 2.5 FEET, MUST BE PROVIDED. THE RAMP MUST HAVE ADA HAND RAILS AND "LEVEL" LANDINGS ON EACH END THAT ARE CROSS SLOPED NO MORE THAN 1:50 IN ANY DIRECTION (1/4" PER FOOT OR NOMINALLY 2.0%) FOR POSITIVE DRAINAGE.
- DOORWAYS - MUST HAVE A "LEVEL" LANDING AREA ON THE EXTERIOR SIDE OF THE DOOR THAT IS SLOPED AWAY FROM THE DOOR NO MORE THAN 1:50 (1/4" PER FOOT OR NOMINALLY 2.0%) FOR POSITIVE DRAINAGE. THIS LANDING AREA MUST BE NO LESS THAN 60 INCHES (5 FEET) LONG, EXCEPT WHERE OTHERWISE PERMITTED BY ADA STANDARDS FOR ALTERNATIVE DOORWAY OPENING CONDITIONS. (SEE ICC/ANSI A117.1-2003 AND OTHER REFERENCED INCORPORATED BY COD.)
- WHEN THE PROPOSED CONSTRUCTION INVOLVES RECONSTRUCTION, MODIFICATION, REVISION OR EXTENSION OF OR TO ADA COMPONENTS FROM EXISTING DOORWAYS OR SURFACES, CONTRACTOR MUST VERIFY EXISTING ELEVATIONS SHOWN ON THE PLAN. NOTE THAT TABLE 405.2 OF THE DEPARTMENT OF JUSTICE'S ADA STANDARDS FOR ACCESSIBLE DESIGN ALLOWS FOR STEEPER RAMP SLOPES, IN RARE CIRCUMSTANCES. THE CONTRACTOR MUST IMMEDIATELY NOTIFY THE DESIGN ENGINEER OF ANY DISCREPANCIES AND/OR FIELD CONDITIONS THAT DIFFER IN ANY WAY OR ANY RESPECT FROM WHAT IS SHOWN ON THE PLANS, IN WRITING, BEFORE COMMENCEMENT OF WORK. CONSTRUCTED IMPROVEMENTS MUST FALL WITHIN THE MAXIMUM AND MINIMUM LIMITATIONS IMPOSED BY THE BARRIER FREE REGULATIONS AND THE ADA REQUIREMENTS.
- THE CONTRACTOR MUST VERIFY THE SLOPES OF CONTRACTOR'S FORMS PRIOR TO POURING CONCRETE. IF ANY NON-CONFORMANCE IS OBSERVED OR EXISTS, CONTRACTOR MUST IMMEDIATELY NOTIFY THE ENGINEER PRIOR TO POURING CONCRETE. CONTRACTOR IS RESPONSIBLE FOR ALL COSTS TO REMOVE, REPAIR AND REPLACE NON-CONFORMING CONCRETE.

IT IS STRONGLY RECOMMENDED THAT THE CONTRACTOR REVIEW THE INTENDED CONSTRUCTION WITH THE LOCAL BUILDING CODE PRIOR TO COMMENCEMENT OF CONSTRUCTION.

GENERAL GRADING & UTILITY NOTES

1. LOCATIONS OF ALL EXISTING AND PROPOSED SERVICES ARE APPROXIMATE AND MUST BE INDEPENDENTLY CONFIRMED WITH LOCAL UTILITY COMPANIES PRIOR TO COMMENCEMENT OF ANY CONSTRUCTION OR EXCAVATION. SANITARY SEWER AND ALL OTHER UTILITY SERVICE CONNECTION POINTS MUST BE INDEPENDENTLY CONFIRMED BY THE CONTRACTOR IN THE FIELD PRIOR TO THE COMMENCEMENT OF CONSTRUCTION. ALL DISCREPANCIES MUST IMMEDIATELY BE REPORTED, IN WRITING, TO THE ENGINEER. CONSTRUCTION MUST COMMENCE BEGINNING AT THE LOWEST INVERT (POINT OF CONNECTION) AND PROGRESS UP GRADIENT. PROPOSED INTERFACE POINTS (CROSSINGS) WITH EXISTING UNDERGROUND UTILITIES SHALL BE FIELD VERIFIED BY TEST PIT PRIOR TO COMMENCEMENT OF CONSTRUCTION.
2. CONTRACTOR MUST VERTICALLY AND HORIZONTALLY LOCATE ALL UTILITIES AND SERVICES INCLUDING, BUT NOT LIMITED TO, GAS, WATER, ELECTRIC, SANITARY AND STORM SEWER, TELEPHONE, CABLE, FIBER OPTIC CABLE, ETC. WITHIN THE LIMITS OF DISTURBANCE OR WORK SPACE, WHICHEVER IS GREATER. THE CONTRACTOR MUST USE, REFER TO, AND COMPLY WITH THE REQUIREMENTS OF THE APPLICABLE UTILITY NOTIFICATION SYSTEM TO LOCATE ALL THE UNDERGROUND UTILITIES. THE CONTRACTOR IS RESPONSIBLE FOR REPAIRING ALL DAMAGE TO ANY EXISTING UTILITIES DURING CONSTRUCTION, AT NO COST TO THE OWNER. CONTRACTOR SHALL BEAR ALL COSTS ASSOCIATED WITH DAMAGE TO ANY EXISTING UTILITIES DURING CONSTRUCTION.
3. IT IS THE CONTRACTOR'S RESPONSIBILITY TO REVIEW ALL CONSTRUCTION CONTRACT DOCUMENTS INCLUDING, BUT NOT LIMITED TO, ALL OF THE DRAWINGS AND SPECIFICATIONS ASSOCIATED WITH THE PROJECT WORK SCOPE PRIOR TO THE INITIATION AND COMMENCEMENT OF CONSTRUCTION. SHOULD THE CONTRACTOR FIND A CONFLICT AND/OR DISCREPANCY BETWEEN THE DOCUMENTS RELATIVE TO THE SPECIFICATIONS OR THE RELATIVE OR APPLICABLE CODES, REGULATIONS, LAWS, RULES, STATUTES AND/OR ORDINANCES, IT IS THE CONTRACTOR'S SOLE RESPONSIBILITY TO NOTIFY THE PROJECT ENGINEER OF RECORD, IN WRITING, OF SAID CONFLICT AND/OR DISCREPANCY PRIOR TO THE START OF CONSTRUCTION. CONTRACTOR'S FAILURE TO NOTIFY THE PROJECT ENGINEER SHALL CONSTITUTE CONTRACTOR'S FULL AND COMPLETE ACCEPTANCE OF ALL RESPONSIBILITY TO COMPLETE THE SCOPE OF WORK AS DEFINED BY THE DRAWINGS AND IN FULL COMPLIANCE WITH ALL FEDERAL, STATE AND LOCAL REGULATIONS, LAWS, STATUTES, ORDINANCES AND CODES AND, FURTHER, CONTRACTOR SHALL BE RESPONSIBLE FOR ALL COSTS ASSOCIATED WITH SAME.
4. THE CONTRACTOR MUST LOCATE AND CLEARLY AND UNAMBIGUOUSLY DEFINE VERTICALLY AND HORIZONTALLY ALL ACTIVE AND INACTIVE UTILITY AND/OR SERVICE SYSTEMS THAT ARE TO BE REMOVED. THE CONTRACTO

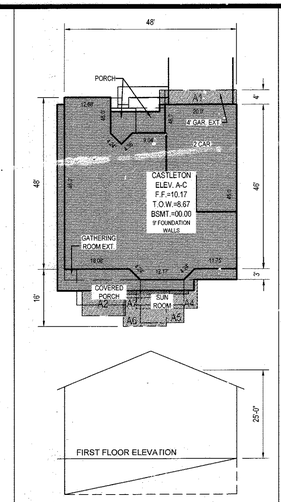

CASTLETON

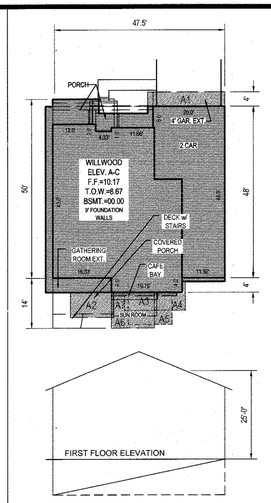

WILLWOOD

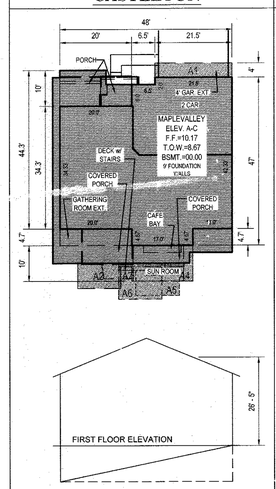

MAPLEVALLEY

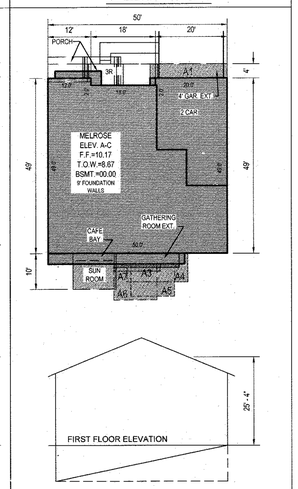

MELROSE

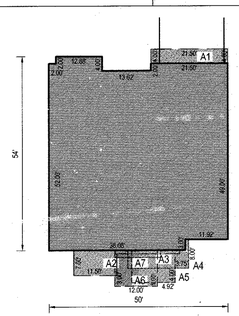

GENERIC BOX A
PULTE HOMES

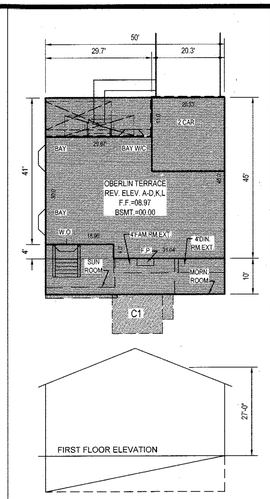

OBERLIN TERRACE

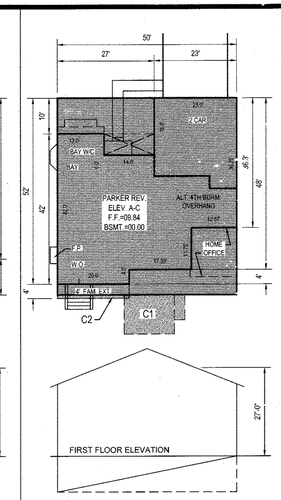

PARKER

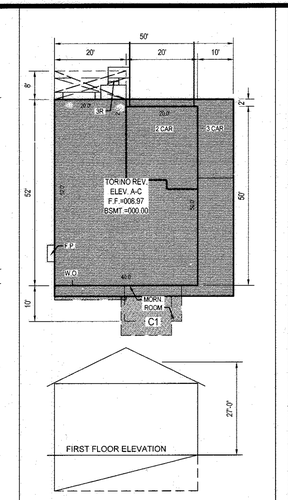

TORINO W/ 3 CAR GAR.

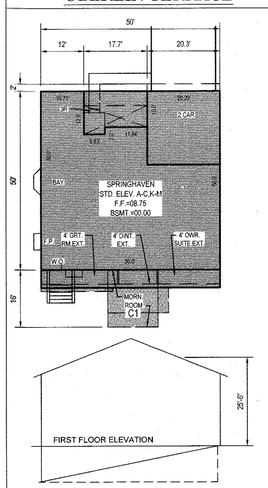

SPRINGHAVEN

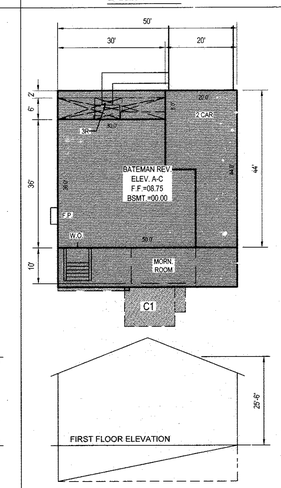

BATEMAN

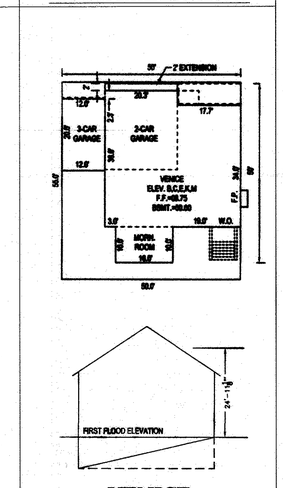

VENICE

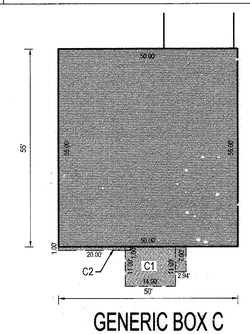

GENERIC BOX C
RYAN HOMES

APPROVED: DEPARTMENT OF PLANNING AND ZONING

CHIEF, DIVISION OF LAND DEVELOPMENT	DATE 8-26-16
CHIEF, DEVELOPMENT ENGINEERING DIVISION	DATE 8-24-16
DIRECTOR - DEPARTMENT OF PLANNING AND ZONING	DATE 8-26-16

GENERAL NOTE:
IT IS THE RESPONSIBILITY OF THE CONTRACTOR TO REVIEW ALL OF THE DRAWINGS AND SPECIFICATIONS ASSOCIATED WITH I THIS PROJECT WORK SCOPE PRIOR TO THE INITIATION OF CONSTRUCTION. SHOULD THE CONTRACTOR FIND A CONFLICT WITH THE DOCUMENTS RELATIVE TO THE SPECIFICATIONS OR APPLICABLE CODES, IT IS THE CONTRACTOR'S RESPONSIBILITY TO NOTIFY THE PROJECT ENGINEER OF RECORD IN WRITING PRIOR TO THE START OF CONSTRUCTION. FAILURE BY THE CONTRACTOR TO NOTIFY THE PROJECT ENGINEER SHALL CONSTITUTE ACCEPTANCE OF FULL RESPONSIBILITY BY THE CONTRACTOR TO COMPLETE THE SCOPE OF THE WORK AS DEFINED BY THE DRAWINGS AND IN FULL CONFORMANCE WITH LOCAL REGULATIONS AND CODES.

20 10 5 0 20
1"= 20'

NOTE:
PER SECTION 128.0.A.J OF THIS ZONING REGULATIONS FOR R-ED LOTS RECORDED AFTER MAY 13, 2012, SUNROOMS AND ROOM EXTENSIONS MAY ENCROACH INTO THE REAR SETBACK UP TO 10 FEET, ALONG NOT MORE THAN 60 PERCENT OF THE REAR OF A DWELLING ON A LOT WHICH ADJOINTS OPEN SPACE ALONG A MAJORITY OF THE REAR LOT LINE.

OWNER: ESTATES AT PATAPSCO PARK, LLC 24012 FREDERICK ROAD CLARKSBURG, MD 20861 CONTACT: MR. DAN SNYDER PHONE: (301) 674-8509	DEVELOPER: ESTATES AT PATAPSCO PARK, LLC 24012 FREDERICK ROAD CLARKSBURG, MD 20861 CONTACT: MR. DAN SNYDER PHONE: (301) 674-8509

PERMIT INFORMATION CHART

SUBDIVISION NAME: ESTATES AT PATAPSCO PARK		SECT/AREA: N/A	LOT/PARCEL NO.: 203-205, 208-210, 213-248, & 373-385	
PLAT # OR L/F: #23421	GRID #: 5, 6, 11, 12	ZONING: R-20 & R-ED / TAX MAP NO.: 17	ELECT DISTR: 2ND	CENSUS TRACT: 602100

PREVIOUS FILE No. : SP-13-012, ECP-13-029, WP-13-165, PB CASE NO. 403, F-14-124, CONT.# 10-3500 (FORCE MAIN), PLATS 23421 TO 23436, F-16-051, PLATS 23596 - 23609, SDP-16-019

PROFESSIONAL CERTIFICATION
I, BRANDON R. ROWE, HEREBY CERTIFY THAT THESE DOCUMENTS WERE PREPARED OR APPROVED BY ME, AND THAT I AM A DULY LICENSED PROFESSIONAL ENGINEER UNDER THE LAWS OF THE STATE OF MARYLAND, LICENSE NO. 40808, EXPIRATION DATE: 7/3/2017

BOHLER ENGINEERING

CORPORATE OFFICE: WARREN, NJ
OFFICES: SOUTHBOROUGH, MA · ALBANY, NY · PENNSYLVANIA, PA · CENTER VALLEY, PA · ORLANDO, FL · ROME, MD · TOWSON, MD · STERLING, VA · WOODBRIDGE, VA · FORT LAUDERDALE, FL · PORTLAND, ME

CIVIL & CONSULTING ENGINEERS
SURVEYORS
PROJECT MANAGERS
ENVIRONMENTAL CONSULTANTS
LANDSCAPE ARCHITECTS

THE INFORMATION, DESIGNS AND DATA CONTAINED IN THESE PLANS AND SPECIFICATIONS ARE PROPRIETARY AND SHALL NOT BE COPIED OR USED FOR ANY PURPOSE WITHOUT PRIOR WRITTEN AUTHORIZATION FROM BOHLER ENGINEERING. ONLY APPROVED, SIGNED AND SEALED PLANS SHALL BE UTILIZED FOR CONSTRUCTION PURPOSES.©2008 BOHLER ENGINEERING

REVISIONS

REV	DATE	COMMENT	BY
1	8/22/16	ADD VENICE HOUSE TYPE	RVE

THE FOLLOWING STATES REQUIRE NOTIFICATION BY EXCAVATORS, DESIGNERS, OR ANY PERSON PREPARING TO DISTURB THE EARTH'S SURFACE ANYWHERE IN THE STATE IN VIRGINIA, MARYLAND, THE DISTRICT OF COLUMBIA, AND DELAWARE CALL - 811
(WV 1-800-245-4848) (PA 1-800-242-1776) (DC 1-800-257-7777) (VA 1-800-552-7001) (MD 1-800-257-7777) (DE 1-800-282-8555)

PROJECT No.:	MD152013
DRAWN BY:	AVG
CHECKED BY:	JMA
DATE:	6/24/16
SCALE:	AS SHOWN
CAD I.D.:	CV2

PROJECT: SITE DEVELOPMENT PLANS (PHASE II) FOR

ESTATES AT PATAPSCO PARK

SINGLE FAMILY DETACH UNITS BUILDABLE LOTS 203-205, 208-210, 213-248 & 373-385 PLAT NOs. 23596 - 23609

LOCATION OF SITE
ROGERS AVENUE
HOWARD COUNTY

BOHLER ENGINEERING
901 DULANEY VALLEY ROAD, SUITE 801
TOWSON, MARYLAND 21204
Phone: (410) 821-7900
Fax: (410) 821-7987
www.BohlerEngineering.com

B.R. ROWE
PROFESSIONAL ENGINEER
LICENSE NO. 40808

SHEET TITLE:
HOUSE TYPES

SHEET NUMBER:
3 of 19

SDP-16-050

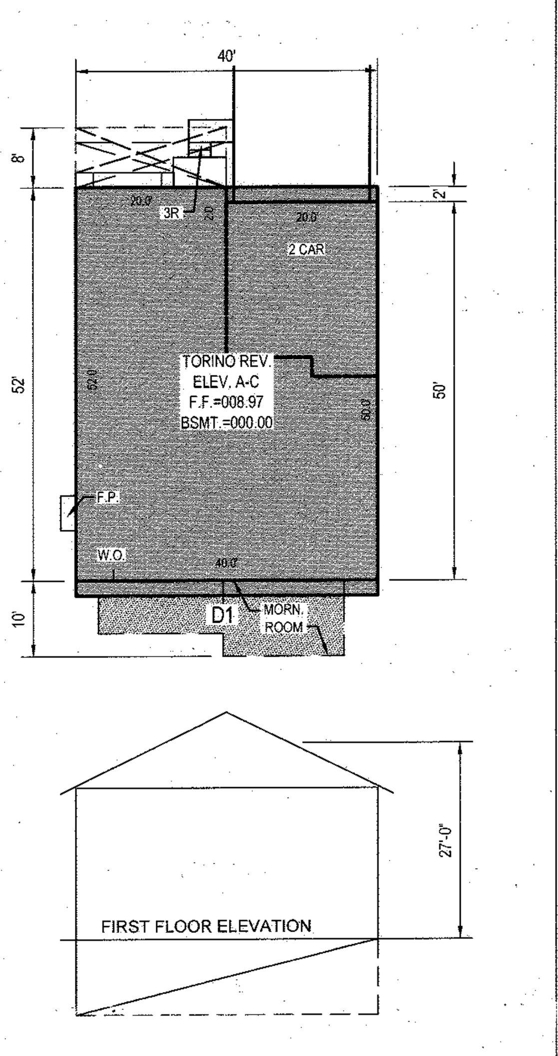

TORINO

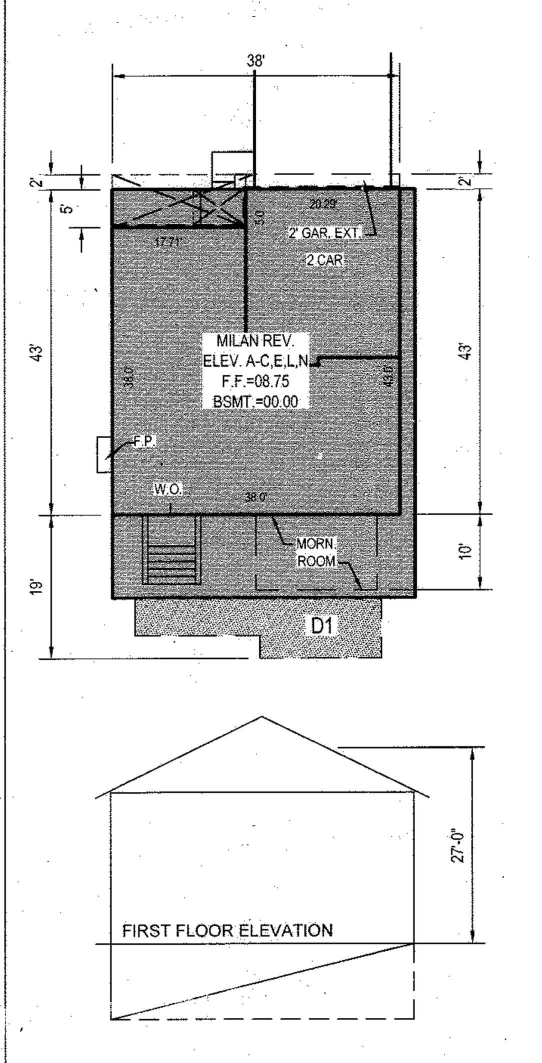

MILAN

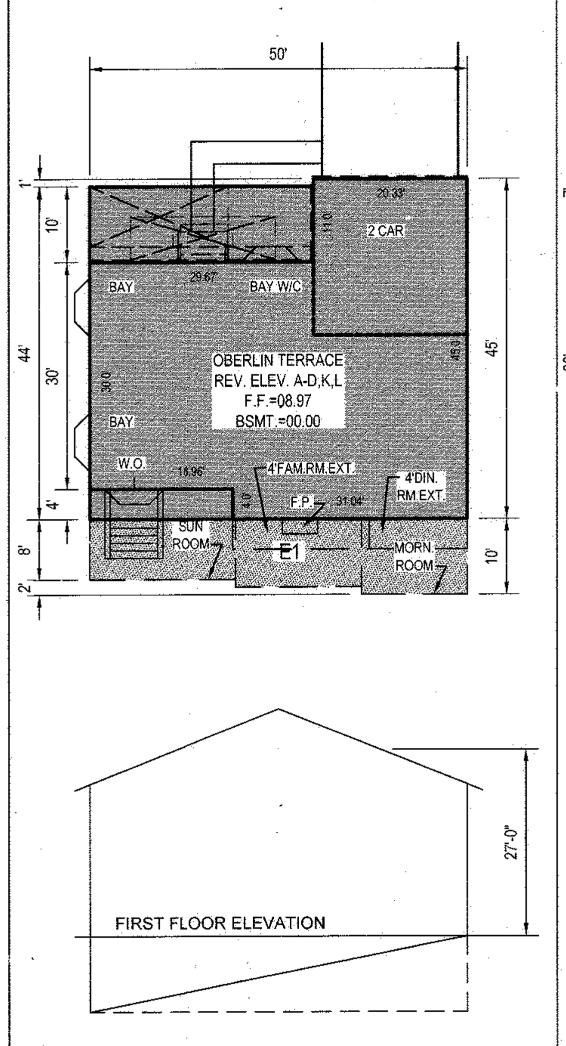

OBERLIN TERRACE

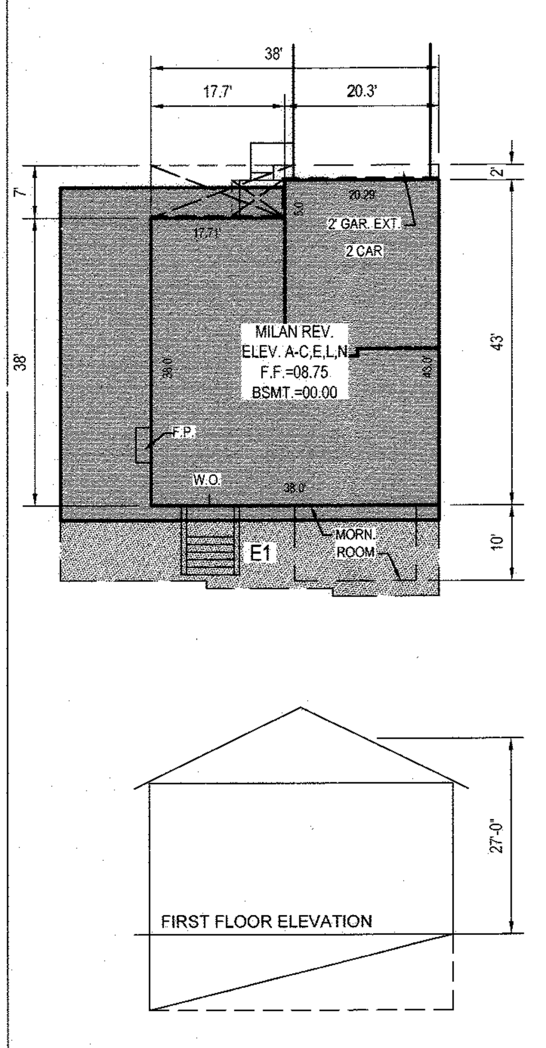

MILAN

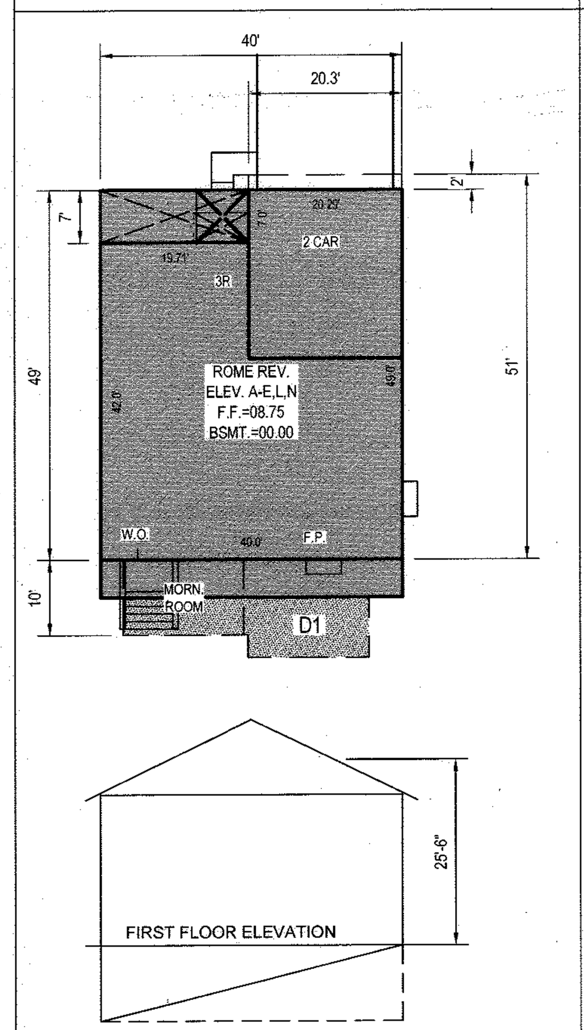

ROME

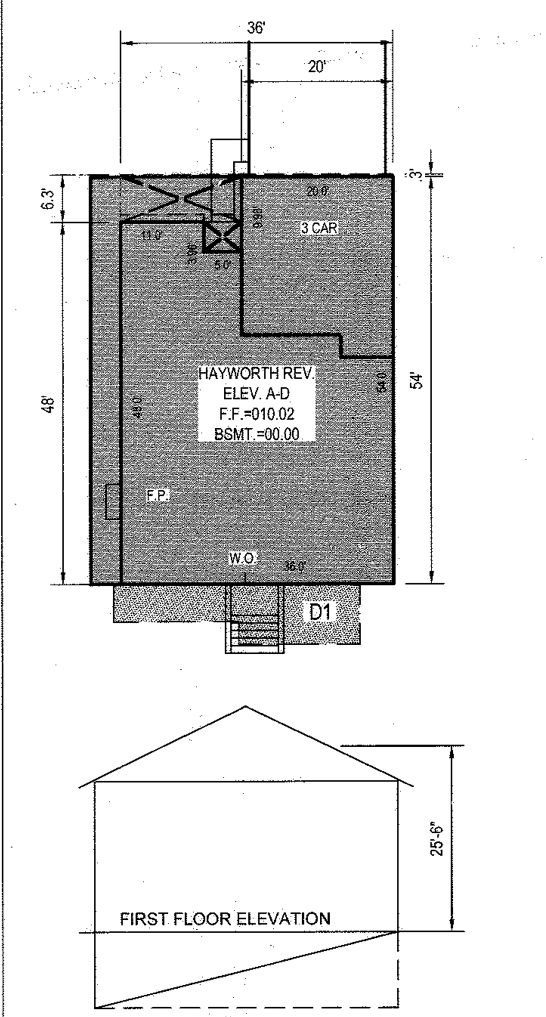

HAYWORTH

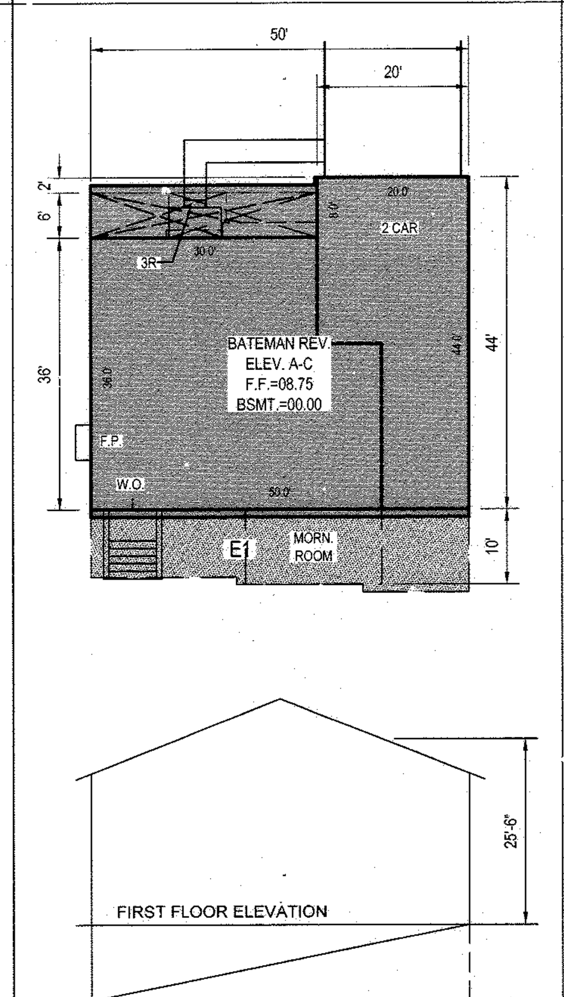

BATEMAN

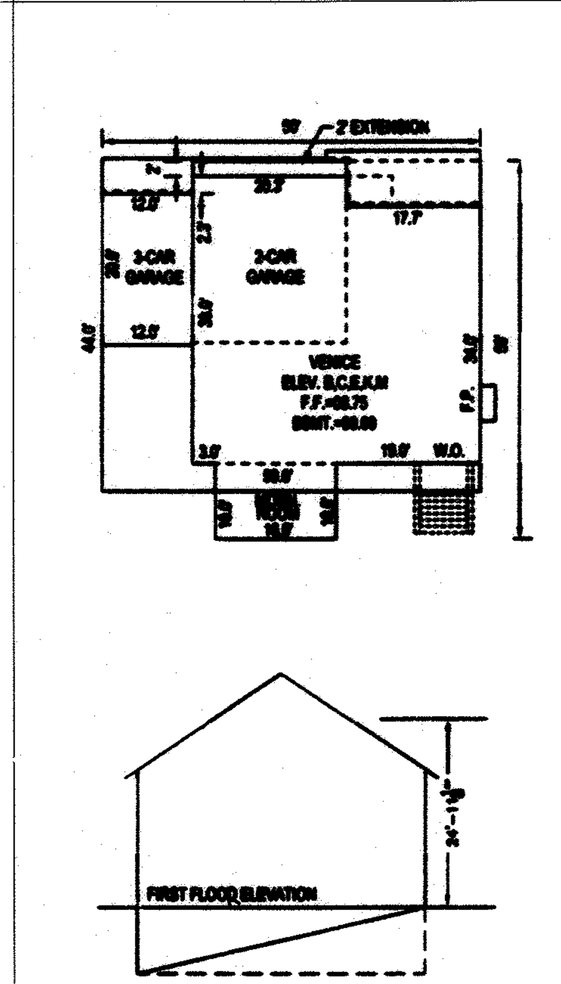

VENICE

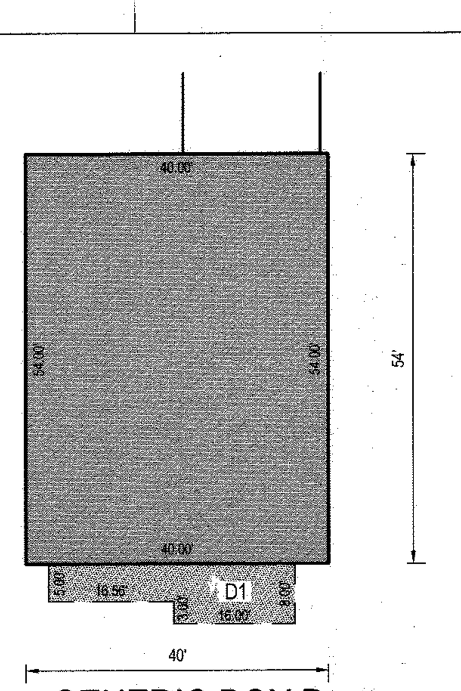

GENERIC BOX D
RYAN HOMES

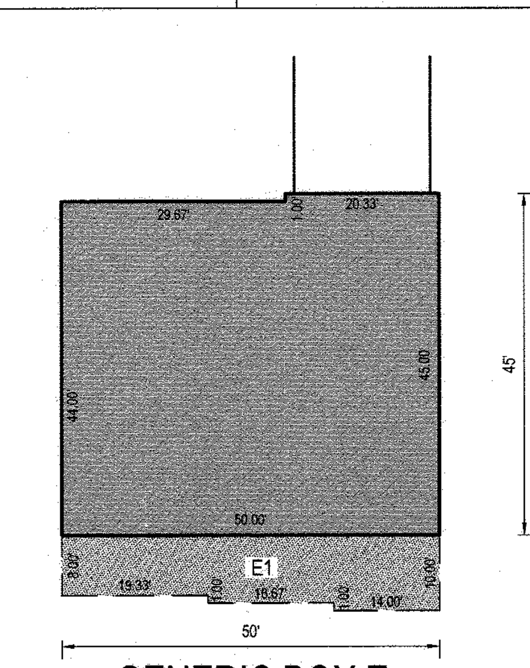

GENERIC BOX E
RYAN HOMES

ESTATES AT PATAPSCO PARK PHASE II LOT MATRIX															
LOT NO.	GENERIC FOOTPRINT "A" (INCLUDES: CASTLETON, WILLWOOD, MAPLEVALLEY, AND MELROSE)								GENERIC FOOTPRINT "C" (INCLUDES: OBERLIN TERRACE, PARKER, SPRINGHAVEN, BATEMAN AND VENICE (W/ 3 CAR GARAGE))			GENERIC FOOTPRINT "D" (TORINO, MILAN, ROME, AND VENICE HAYWORTH)		GENERIC FOOTPRINT "E" (OBERLIN TERRACE, VENICE (W/ 3 CAR GARAGE)N)	
	BASE	A1 GAR. EXT	A2 SUN RM	A3 GATH EXT.	A4 SUN RM	A5 SUN RM	A6 SUN RM	A7 CAFÉ BAY	BASE	C1 SUN / MORNING RM	C2 4' FAMILY RM EXT.	BASE	D1 SUN / MORNING RM	BASE	E1 SUN / MORNING RM
203									Y	Y	Y				
204									Y	Y	Y				
205									Y	Y	Y				
208														Y	*Y*
209									Y	*Y*	Y		(Y)		
210												Y	(N)		
213												Y	N		
214									Y	N	N				
215									Y	N	N				
216									Y	*Y*	*Y*				
217									Y	*Y*	*Y*				
218									Y	*Y*	*Y*				
219									Y	*Y*	*Y*				
220												Y	Y		
221												Y	Y		
222												Y	Y		
223												Y	Y		
224												Y	Y		
225	Y	Y	*Y*	Y	*Y*	*Y*	*Y*	Y							
226	Y	Y	*Y*	Y	*Y*	*Y*	*Y*	Y							
227	Y	Y	*Y*	Y	*Y*	*Y*	*Y*	Y							
228	Y	Y	Y	Y	Y	*Y*	*Y*	Y							
229	Y	Y	Y	Y	Y	*Y*	*Y*	Y							
230	Y	Y	Y	Y	Y	*Y*	*Y*	Y							
231	Y	Y	Y	Y	Y	*Y*	*Y*	Y							
232	Y	Y	Y	Y	Y	*Y*	*Y*	Y							
233	Y	Y	Y	Y	Y	*Y*	*Y*	Y							
234	Y	Y	Y	Y	Y	*Y*	*Y*	Y							
235	Y	Y	Y	Y	Y	*Y*	Y	Y							
236	Y	Y	*Y*	Y	Y	Y	*Y*	Y							
237	Y	Y	*Y*	*Y*	*Y*	*Y*	*Y*	*Y*							
238	Y	Y	Y	Y	Y	Y	Y	Y							
239	Y	Y	N	N	N	N	N	N							
240									Y	Y	Y				
241									Y	Y	Y				
242									Y	Y	Y				
243									Y	Y	Y				
244									Y	Y	Y				
245									Y	Y	Y				
246									Y	N	Y				
247									Y	N	Y				
248												Y	N		
373	Y	Y	N	N	N	N	N	N							
374	Y	[Y]	Y	Y	Y	[Y]	[Y]	Y							
375												Y	Y		
376												Y	Y		
377												Y	Y		
378												Y	Y		
379												Y	Y		
380												Y	Y		
381												Y	Y		
382												Y	Y		
383												Y	Y		
384												Y	Y		
385												Y	N		

GENERIC BOX "A" INCLUDES THE FOLLOWING PULTE FLOOR PLANS: **CASTLETON, WILLWOOD, MAPLEVALLEY, AND MELROSE.**
GENERIC BOX "B" INCLUDES THE FOLLOWING PULTE FLOOR PLANS: **CASTLETON, WILLWOOD, AND MAPLEVALLEY.**
GENERIC BOX "C" INCLUDES THE FOLLOWING RYAN HOMES FLOOR PLANS: **OBERLIN TERRACE, PARKER, SPRINGHAVEN, BATEMAN AND TORINO** (w/ 3 CAR GARAGE). **VENICE (W/ 3 CAR GARAGE)**
GENERIC BOX "D" INCLUDES THE FOLLOWING RYAN HOMES FLOOR PLANS: **TORINO, MILAN, ROME, AND HAYWORTH VENICE (W/ 3 CAR GARAGE)**
GENERIC BOX "E" INCLUDES THE FOLLOWING RYAN HOMES FLOOR PLANS: **OBERLIN TERRACE, MILAN, AND BATEMAN.**

LEGEND:

OPTIONAL	OPTIONAL BUILDING EXTENSION
A1	4-FT GARAGE EXTENSION (ALL PULTE MODEL HOMES)
A2	10-FT SUNROOM EXTENSION - MELROSE MODEL
A3	4-FT GATHERING ROOM EXTENSION - MELROSE MODEL
A4	10-FT SUNROOM EXTENSION - MAPLEVALLEY MODEL
A5	12-FT SUNROOM EXTENSION - CASTLETON MODEL
A6	10-FT SUNROOM EXTENSION - WILLWOOD MODEL
A7	2-FT CAFÉ ROOM EXTENSION - WILLWOOD MODEL
C1	10-FT SUNROOM EXTENSION - SPRINGHAVEN & TORINO MODELS
C2	4-FT FAMILY EXTENSTION - PARKER MODEL
D1	MORNING ROOM EXTENSION - ROME OR TORINO MODELS

NOTE:
PER SECTION 128.0.A.J OF THE ZONING REGULATIONS, FOR R-ED LOTS RECORDED AFTER MAY 13, 2012, SUNROOMS AND ROOM EXTENSIONS MAY ENCROACH INTO THE REAR SETBACK UP TO 10 FEET, ALONG NOT MORE THAN 60 PERCENT OF THE REAR FACE OF A DWELLING ON A LOT WHICH ADJOINS OPEN SPACE ALONG A MAJORITY OF THE REAR LOT LINE.

[Y]	If Optional 4' Garage Ext. is selected, Optional Sunroom or Optional Gathering Room Ext. is not possible.
Y	Indicates option would work per Section 128.0.A.1.j of the Zoning

(Y) VENICE MORNING ROOM EXTENSION

SHC TABLE											
LOT	FF ELEV.	CELLAR ELEV.	INV. @ MAIN	SHC LENGTH TO ROW (FT)	SHC SLOPE WITHIN ROW	INVERT @ ROW	SHC SLOPE WITHIN LOT	MAX. SHC LENGTH (FT)	2.50 FT BELOW CELLAR	MIN. CELLAR ELEV. (MCE)	CONNECTION TYPE
203	456.50	446.66	437.19	30.26	4.0%	438.40	4.0%	116.60	2.50	445.56	STD SHC
204	456.50	446.66	437.75	30.28	4.0%	438.96	4.0%	100.34	2.50	445.47	STD SHC
205	456.50	446.66	438.57	31.67	3.0%	439.52	3.5%	88.30	2.50	445.11	STD SHC
208	457.30	447.46	439.52	66.30	2.0%	440.85	2.5%	78.50	2.50	445.31	STD SHC
209	457.01	447.17	439.52	74.83	2.0%	441.02	2.0%	86.50	2.50	445.25	STD SHC
210	457.14	447.30	439.23	81.11	2.0%	440.85	2.0%	83.80	2.50	445.03	STD SHC
213	449.49	439.65	431.21	28.71	4.0%	432.36	4.0%	82.60	2.50	438.16	STD SHC
214	447.39	437.55	427.39	32.00	4.0%	428.67	4.0%	104.00	2.50	435.33	STD SHC
215	447.00	437.16	427.64	57.94	4.0%	429.96	4.0%	78.50	2.50	435.60	STD SHC
216	448.38	438.54	427.90	55.60	4.0%	430.12	4.0%	104.30	2.50	436.80	STD SHC
217	447.84	438.00	427.90	47.80	4.0%	429.81	4.0%	81.00	2.50	435.55	STD SHC
218	447.75	437.91	427.90	44.70	4.5%	429.91	4.5%	82.00	2.50	436.10	STD SHC
219	446.77	436.93	427.75	48.32	4.0%	429.68	5.0%	79.40	2.50	436.15	STD SHC
220	446.77	436.93	427.44	18.90	4.5%	428.29	5.0%	100.00	2.50	435.79	STD SHC
221	443.97	434.13	425.16	27.40	3.5%	426.12	4.0%	84.80	2.50	432.01	STD SHC
222	443.57	433.73	424.80	31.70	4.0%	426.07	4.0%	84.80	2.50	431.96	STD SHC
223	443.66	433.82	424.42	32.06	4.0%	425.70	4.0%	84.80	2.50	431.59	STD SHC
224	442.85	433.01	423.92	30.49	4.0%	425.14	4.0%	84.80	2.50	431.03	STD SHC
225	441.57	431.73	422.57	33.50	4.0%	423.91	4.0%	84.80	2.50	429.80	STD SHC
226	440.00	430.16	421.06	33.00	3.5%	422.22	3.5%	84.80	2.50	427.68	STD SHC
227	439.49	429.65	419.87	31.16	3.0%	420.80	5.0%	84.80	2.50	427.54	STD SHC
228	437.04	427.20	418.55	34.50	2.0%	419.24	3.5%	84.80	2.50	424.71	STD SHC
229	437.04	427.20	414.90	34.30	5.0%	416.62	5.0%	84.80	2.50	423.36	DROP TYPE A
230	437.60	427.76	415.23	31.50	5.0%	416.81	5.0%	84.80	2.50	423.55	DROP TYPE A
231	438.41	428.57	415.62	28.90	5.0%	417.07	5.0%	85.00	2.50	423.82	DROP TYPE A
232	439.12	429.28	415.97	32.17	5.0%	417.58	5.0%	84.80	2.50	424.32	DROP TYPE A
233	439.17	429.33	416.56	28.00	5.0%	417.96	5.0%	85.70	2.50	424.75	DROP TYPE A
234	438.48	428.64	417.07	31.90	5.0%	418.67	5.0%	85.50	2.50	425.44	DROP TYPE A
235	437.97	428.13	417.39	28.80	5.0%	418.83	5.0%	88.50	2.50	425.76	STD SHC
236	436.82	426.98	417.67	31.00	3.0%	418.60	3.5%	100.00	2.50	424.60	STD SHC
237	435.51	425.67	417.97	65.40	2.0%	419.28	2.0%	83.00	2.50	423.44	STD SHC
238	434.93	425.09	418.24	71.80	2.0%	419.68	2.0%	88.40	2.50	423.94	STD SHC
239	435.00	425.16	418.09	37.30	2.5%	419.02	2.5%	75.80	2.50	423.42	STD SHC
240	436.68	426.84	417.75	19.40	4.0%	418.53	4.0%	99.00	2.50	424.99	STD SHC
241	437.50	427.66	417.44	22.80	4.5%	418.47	4.5%	97.00	2.50	425.33	STD SHC
242	438.23	428.39	417.13	20.90	5.0%	418.18	5.0%	93.80	2.50	425.37	DROP TYPE A
243	438.87	429.03	416.72	22.40	5.0%	417.84	5.0%	91.40	2.50	424.91	DROP TYPE A
244	439.09	429.25	416.41	23.20	5.0%	417.57	5.0%	89.50	2.50	424.55	DROP TYPE A
245	438.88	429.04	415.99	19.30	5.0%	416.96	5.0%	87.10	2.50	423.81	DROP TYPE A
246	438.58	428.74	415.67	22.70	5.0%	416.81	5.0%	84.90	2.50	423.55	DROP TYPE A
247	437.96	428.12	415.35	21.10	5.0%	416.41	5.0%	84.90	2.50	423.15	DROP TYPE A
248	437.45	427.61	415.01	18.40	5.0%	415.93	5.0%	84.70	2.50	422.67	DROP TYPE A
373	450.69	440.85	431.75	23.50	3.0%	432.46	4.0%	85.00	2.50	438.35	STD SHC
374	448.71	438.87	430.42	20.20	3.5%	431.13	3.5%	85.00	2.50	436.60	STD SHC
375	447.18	437.34	429.26	18.10	2.5%	429.71	3.5%	85.00	2.50	435.19	STD SHC
376	445.97	436.13	428.08	19.60	3.5%	428.77	3.5%	85.80	2.50	434.27	STD SHC
377	444.62	434.78	426.66	21.80	4.0%	427.53	4.0%	85.80	2.50	433.46	STD SHC
378	443.35	433.51	425.92	20.60	3.5%	426.64	3.5%	85.60	2.50	432.14	STD SHC
379	442.95	433.11	425.31	22.50	3.5%	426.10	3.5%	85.00	2.50	431.57	STD SHC
380	443.53	433.69	424.88	20.90	4.5%	425.82	4.5%	85.00	2.50	432.15	STD SHC
381	443.72	433.88	424.45	19.40	5.0%	425.42	5.0%	85.00	2.50	432.17	STD SHC
382	442.72	432.88	423.74	20.70	5.0%	424.78	5.0%	85.00	2.50	431.53	STD SHC
383	440.89	431.05	422.15	17.80	4.5%	422.95	4.5%	85.00	2.50	429.28	STD SHC
384	438.96	429.12	420.70	19.20	4.0%	421.47	4.0%	85.00	2.50	427.37	STD SHC
385	437.91	428.07	413.28	33.00	5.0%	414.93	5.0%	65.00	2.50	420.68	DROP TYPE A

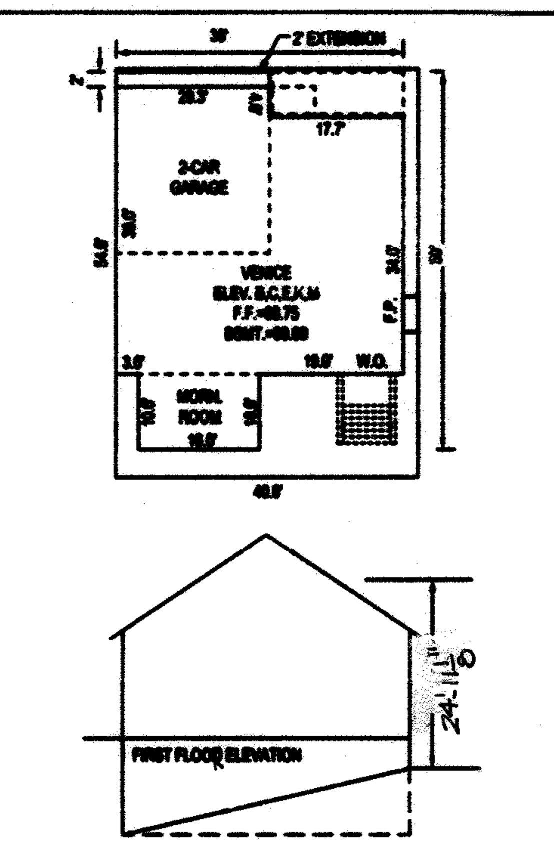

VENICE
GENERIC BOX D
RYAN HOMES

APPROVED: DEPARTMENT OF PLANNING AND ZONING

CHIEF, DIVISION OF LAND DEVELOPMENT — DATE 8-26-16
CHIEF, DEVELOPMENT ENGINEERING DIVISION — DATE 8-24-16
DIRECTOR - DEPARTMENT OF PLANNING AND ZONING — DATE 8-26-16

GENERAL NOTE:
IT IS THE RESPONSIBILITY OF THE CONTRACTOR TO REVIEW ALL OF THE DRAWINGS AND SPECIFICATIONS ASSOCIATED WITH THIS PROJECT WORK SCOPE PRIOR TO THE INITIATION OF CONSTRUCTION. SHOULD THE CONTRACTOR FIND A CONFLICT WITH THE DOCUMENTS RELATIVE TO THE SPECIFICATIONS OR APPLICABLE CODES, IT IS THE CONTRACTOR'S RESPONSIBILITY TO NOTIFY THE PROJECT ENGINEER OF RECORD IN WRITING PRIOR TO THE START OF CONSTRUCTION. FAILURE BY THE CONTRACTOR TO NOTIFY THE PROJECT ENGINEER SHALL CONSTITUTE ACCEPTANCE OF FULL RESPONSIBILITY BY THE CONTRACTOR TO COMPLETE THE SCOPE OF THE WORK AS DEFINED BY THE DRAWINGS AND IN FULL CONFORMANCE WITH LOCAL REGULATIONS AND CODES.

20 10 5 0 20
1"= 20'

NOTE:
PER SECTION 128.0.A.J OF THIS ZONING REGULATIONS FOR R-ED LOTS RECORDED AFTER MAY 13, 2012, SUNROOMS AND ROOM. EXTENSIONS MAY ENCROACH INTO THE REAR SETBACK UP TO 10 FEET, ALONG NOT MORE THAN 60 PERCENT OF THE REAR OF A DWELLING ON A LOT WHICH ADJOINS OPEN SPACE ALONG A MAJORITY OF THE REAR LOT LINE.

OWNER: ESTATES AT PATAPSCO PARK, LLC 24012 FREDERICK ROAD CLARKSBURG, MD 20861 CONTACT: MR. DAN SNYDER PHONE: (301) 674-8509	DEVELOPER: ESTATES AT PATAPSCO PARK, LLC 24012 FREDERICK ROAD CLARKSBURG, MD 20861 CONTACT: MR. DAN SNYDER PHONE: (301) 674-8509

PERMIT INFORMATION CHART

SUBDIVISION NAME: ESTATES AT PATAPSCO PARK		SECTION/AREA: N/A		LOT/PARCEL NO.: 203-205, 208-210, 213-248, & 373-385	
PLAT # OR L/F: #23421	GRID #: 5, 6, 11, 12	ZONING: R-20 & R-ED	TAX MAP NO.: 17	ELECT DISTR: 2ND	CENSUS TRACT: 602100

PREVIOUS FILE No. : SP-13-012, ECP-13-029, WP-13-165, PB CASE NO. 403, F-14-124, CONT.# 10-3500 (FORCE MAIN), PLATS 23421 TO 23436, F-16-051, PLATS 23596 - 23609, SDP-16-019

PROFESSIONAL CERTIFICATION
I, BRANDON R. ROWE, HEREBY CERTIFY THAT THESE DOCUMENTS WERE PREPARED OR APPROVED BY ME, AND THAT I AM A DULY LICENSED PROFESSIONAL ENGINEER UNDER THE LAWS OF THE STATE OF MARYLAND, LICENSE NO. 40808, EXPIRATION DATE: 7/3/2017

BOHLER ENGINEERING
CIVIL & CONSULTING ENGINEERS
SURVEYORS
PROJECT MANAGERS
ENVIRONMENTAL CONSULTANTS
LANDSCAPE ARCHITECTS
CORPORATE OFFICE: WARREN, NJ
OFFICES: SOUTHBOROUGH, MA; ALBANY, NY; RONKONKOMA, NY; CHALFONT, PA; CENTER VALLEY, PA; PHILADELPHIA, PA; BOWIE, MD; TOWSON, MD; STERLING, VA; WARRENTON, VA; FORT LAUDERDALE, FL; TAMPA, FL

THE INFORMATION, DESIGN AND CONTENT OF THIS PLAN ARE PROPRIETARY AND SHALL NOT BE COPIED OR USED FOR ANY PURPOSE WITHOUT PRIOR WRITTEN AUTHORIZATION FROM BOHLER ENGINEERING. ONLY APPROVED, SIGNED AND SEALED PLANS SHALL BE UTILIZED FOR CONSTRUCTION PURPOSES © 2008 BOHLER ENGINEERING.

REVISIONS

REV	DATE	COMMENT	BY
1	8/22/16	ADD VENICE HOUSE TYPE	RAE

THE FOLLOWING STATES REQUIRE NOTIFICATION BY EXCAVATORS, DESIGNERS, OR ANY PERSON PREPARING TO DISTURB THE EARTH'S SURFACE ANYWHERE IN THE STATE. IN VIRGINIA, MARYLAND, THE DISTRICT OF COLUMBIA, AND DELAWARE CALL - 811
(WV 1-800-245-4848) (PA 1-800-242-1776) (DC 1-800-257-7777) (VA 1-800-552-7001) (MD 1-800-257-7777) (DE 1-800-282-8555)

PROJECT No.:	MD152013
DRAWN BY:	AVG
CHECKED BY:	JMA
DATE:	6/24/16
SCALE:	AS SHOWN
CAD I.D.:	CV2

PROJECT: SITE DEVELOPMENT PLANS (PHASE II) FOR

ESTATES AT PATAPSCO PARK

SINGLE FAMILY DETACH UNITS
BUILDABLE LOTS 203-205, 208-210, 213-248 & 373-385
PLAT NOs. 23596 - 23609

LOCATION OF SITE
ROGERS AVENUE
HOWARD COUNTY

BOHLER ENGINEERING
901 DULANEY VALLEY ROAD, SUITE 801
TOWSON, MARYLAND 21204
Phone: (410) 821-7900
Fax: (410) 821-7987
www.BohlerEngineering.com

B.R. ROWE
STATE OF MARYLAND BRANDON R. ROWE PROFESSIONAL ENGINEER No. 40808
PROFESSIONAL ENGINEER
6/24/16

SHEET TITLE:
HOUSE TYPES

SHEET NUMBER:

SDP-16-050

H:\2015\MD152013\DRAWINGS\PLAN SETS\SITE DEVELOPMENT PLANS - PHASE-II\MD152013CV2.DWG PRINTED BY: RBOWEN 6.28.16 @ 11:17 AM LAST SAVED BY: RBOWEN

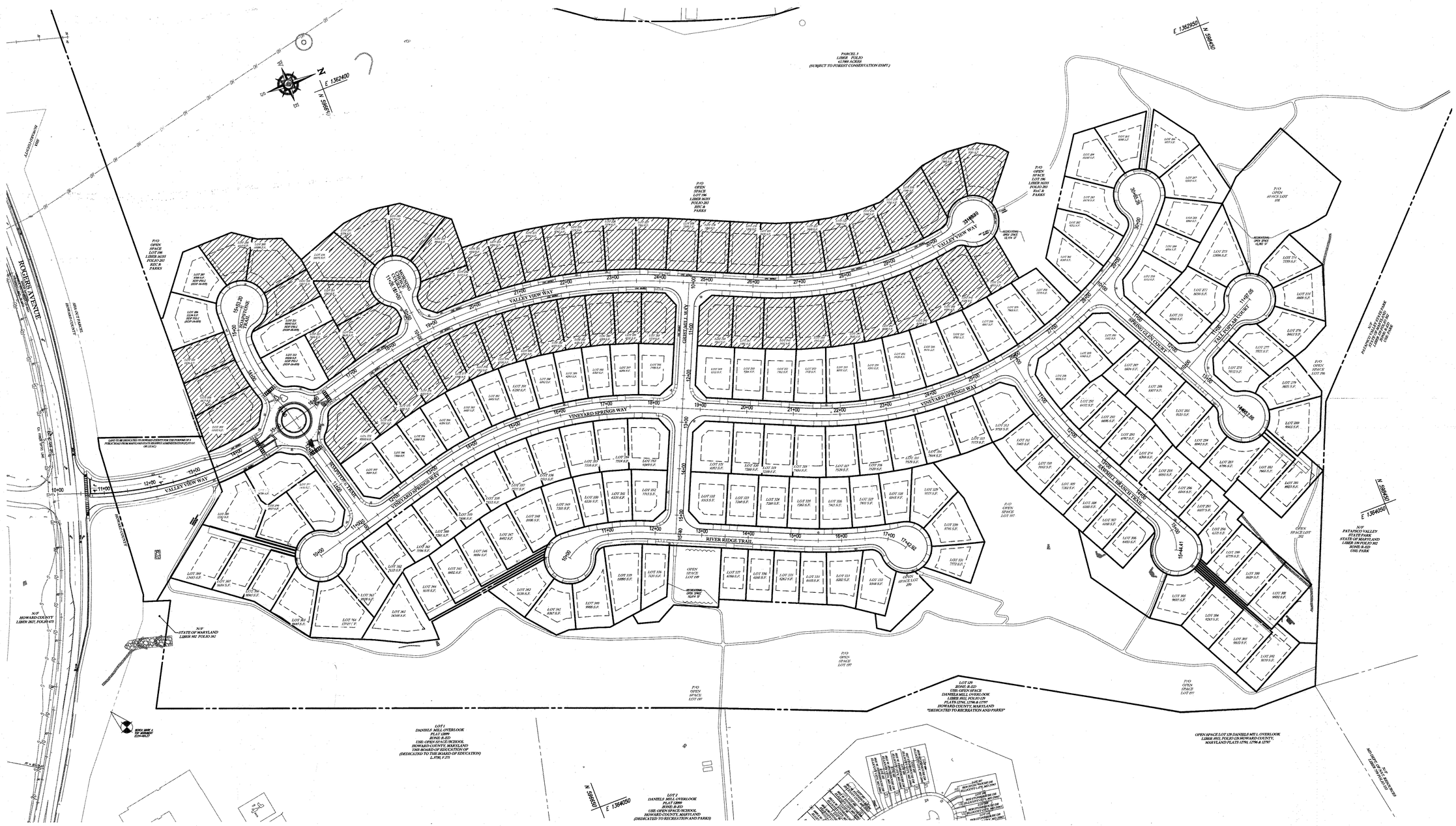

LEGEND

PHASE II LOTS

1"= 100'

APPROVED: DEPARTMENT OF PLANNING AND ZONING	
CHIEF, DIVISION OF LAND DEVELOPMENT	DATE 8-26-16
CHIEF, DEVELOPMENT ENGINEERING DIVISION	DATE 8-24-16
DIRECTOR - DEPARTMENT OF PLANNING AND ZONING	DATE 8-26-16

GENERAL NOTE
IT IS THE RESPONSIBILITY OF THE CONTRACTOR TO REVIEW ALL OF THE DRAWINGS AND SPECIFICATIONS ASSOCIATED WITH THIS PROJECT WORK SCOPE PRIOR TO THE INITIATION OF CONSTRUCTION. SHOULD THE CONTRACTOR FIND A CONFLICT WITH THE DOCUMENTS RELATIVE TO THE SPECIFICATIONS OR APPLICABLE CODES, IT IS THE CONTRACTOR'S RESPONSIBILITY TO NOTIFY THE PROJECT ENGINEER OF RECORD IN WRITING PRIOR TO THE START OF CONSTRUCTION. FAILURE BY THE CONTRACTOR TO NOTIFY THE PROJECT ENGINEER SHALL CONSTITUTE ACCEPTANCE OF FULL RESPONSIBILITY BY THE CONTRACTOR TO COMPLETE THE SCOPE OF THE WORK AS DEFINED BY THE DRAWINGS AND IN FULL CONFORMANCE WITH LOCAL REGULATIONS AND CODES.

OWNER:	DEVELOPER:
ESTATES AT PATAPSCO PARK, LLC 24012 FREDERICK ROAD CLARKSBURG, MD 20861 CONTACT: MR. DAN SNYDER PHONE: (301) 674-8509	ESTATES AT PATAPSCO PARK, LLC 24012 FREDERICK ROAD CLARKSBURG, MD 20861 CONTACT: MR. DAN SNYDER PHONE: (301) 674-8509

PERMIT INFORMATION CHART

SUBDIVISION NAME: ESTATES AT PATAPSCO PARK		SECTION/AREA: N/A		LOT/PARCEL NO.: 203-205, 208-210, 213-248, & 373-385
PLAT # OR L/F: #23421	GRID #: 5, 6, 11, 12	ZONING: R-20 & R-ED	TAX MAP NO.: 17	ELECT DISTR: 2ND / CENSUS TRACT: 602100

PREVIOUS FILE No. : SP-13-012, ECP-13-029, WP-13-165, PB CASE NO. 403, F-14-124, CONT. # 10-3500 (FORCE MAIN), PLATS 23421 TO 23436, F-16-051, PLATS 23596 - 23609, SDP-16-019

PROFESSIONAL CERTIFICATION
I, BRANDON R. ROWE, HEREBY CERTIFY THAT THESE DOCUMENTS WERE PREPARED OR APPROVED BY ME, AND THAT I AM A DULY LICENSED PROFESSIONAL ENGINEER UNDER THE LAWS OF THE STATE OF MARYLAND, LICENSE NO. 40809, EXPIRATION DATE: 7/3/2017

BOHLER ENGINEERING
CORPORATE OFFICE: WARREN, NJ
OFFICES: SOUTHBOROUGH, MA · ALBANY, NY · POUGHKEEPSIE, NY · CENTER VALLEY, PA · ROWE, MD · TOWSON, MD · STERLING, VA · WILLIAMSBURG, VA · FORT LAUDERDALE, FL · LAS VEGAS, NV · ATLANTA, GA
CIVIL & CONSULTING ENGINEERS · SURVEYORS · PROJECT MANAGERS · ENVIRONMENTAL CONSULTANTS · LANDSCAPE ARCHITECTS

THE INFORMATION, DESIGNS, DATA AND REPORTS CONTAINED HEREIN ARE THE PROPERTY OF BOHLER ENGINEERING AND MAY NOT BE COPIED OR USED FOR ANY PURPOSE BEYOND THE SCOPE OF THE WORK WITHOUT THE WRITTEN CONSENT OF BOHLER ENGINEERING.

REVISIONS

REV	DATE	COMMENT	BY

THE FOLLOWING STATES REQUIRE NOTIFICATION BY EXCAVATORS, DESIGNERS, OR ANY PERSON PREPARING TO DISTURB THE EARTH'S SURFACE ANYWHERE IN THE STATE: IN VIRGINIA, MARYLAND, THE DISTRICT OF COLUMBIA, AND DELAWARE CALL - 811
(VV 1-800-245-4848) (PA 1-800-242-1776) (DC 1-800-257-7777) (VA 1-800-552-7001) (MD 1-800-257-7777) (DE 1-800-282-8555)

PROJECT No.:	MD152013
DRAWN BY:	AVG
CHECKED BY:	JMA
DATE:	6/24/16
SCALE:	1"=100'
CAD I.D.:	OV2

PROJECT: SITE DEVELOPMENT PLANS (PHASE II) FOR

ESTATES AT PATAPSCO PARK

SINGLE FAMILY DETACH UNITS
BUILDABLE LOTS 203-205, 208-210, 213-248 & 373-385
PLAT NOs. 23596 - 23609

LOCATION OF SITE
ROGERS AVENUE
HOWARD COUNTY

BOHLER ENGINEERING
901 DULANEY VALLEY ROAD, SUITE 801
TOWSON, MARYLAND 21204
Phone: (410) 821-7900
Fax: (410) 821-7987
www.BohlerEngineering.com

B.R. ROWE
BRANDON R. ROWE
STATE OF MARYLAND
PROFESSIONAL ENGINEER
No. 40809
7/3/2017

SHEET TITLE:

OVERALL PLAN

SHEET NUMBER:

5 of 19

SDP-16-050

H:\2015\MD152013\DRAWINGS\PLAN SETS\SITE DEVELOPMENT PLANS - PHASE-II\MD152013OV2.DWG PLOTTED BY: RBOWEN 6.28.16 @ 11:19 AM LAST SAVED BY: RBOWEN

APPROVED: DEPARTMENT OF PLANNING AND ZONING	
CHIEF, DIVISION OF LAND DEVELOPMENT	DATE 8-26-16
CHIEF, DEVELOPMENT ENGINEERING DIVISION	DATE 8-24-16
DIRECTOR - DEPARTMENT OF PLANNING AND ZONING	DATE 8-26-16

GENERAL NOTE
IT IS THE RESPONSIBILITY OF THE CONTRACTOR TO REVIEW ALL OF THE DRAWINGS AND SPECIFICATIONS ASSOCIATED WITH THIS PROJECT WORK SCOPE PRIOR TO THE INITIATION OF CONSTRUCTION. SHOULD THE CONTRACTOR FIND A CONFLICT WITH THE DOCUMENTS RELATIVE TO THE SPECIFICATIONS OR APPLICABLE CODES, IT IS THE CONTRACTORS RESPONSIBILITY TO NOTIFY THE PROJECT ENGINEER OF RECORD IN WRITING PRIOR TO THE START OF CONSTRUCTION. FAILURE BY THE CONTRACTOR TO NOTIFY THE PROJECT ENGINEER SHALL CONSTITUTE ACCEPTANCE OF FULL RESPONSIBILITY BY THE CONTRACTOR TO COMPLETE THE SCOPE OF THE WORK AS DEFINED BY THE DRAWINGS AND IN FULL CONFORMANCE WITH LOCAL REGULATIONS AND CODES.

NOTE: FOR GENERIC BOX FORMATS, SEE "HOUSE TYPES" ON SHEET 3 AND 4.

OWNER:	DEVELOPER:
ESTATES AT PATAPSCO PARK, LLC 24012 FREDERICK ROAD CLARKSBURG, MD 20861 CONTACT: MR. DAN SNYDER PHONE: (301) 674-8509	ESTATES AT PATAPSCO PARK, LLC 24012 FREDERICK ROAD CLARKSBURG, MD 20861 CONTACT: MR. DAN SNYDER PHONE: (301) 674-8509

PERMIT INFORMATION CHART

SUBDIVISION NAME: ESTATES AT PATAPSCO PARK		SECTION/AREA: N/A		LOT/PARCEL NO.: 203-205, 208-210, 213-248, & 373-385	
PLAT # OR L/F: #23421	GRID #: 5, 6, 11, 12	ZONING: R-20 & R-ED	TAX MAP NO.: 17	ELECT DISTR: 2ND	CENSUS TRACT: 602100

PREVIOUS FILE No. : SP-13-012, ECP-13-029, WP-13-165, PB CASE NO. 403, F-14-124, CONT. # 10-3500 (FORCE MAIN), PLATS 23421 TO 23436, F-16-051, PLATS 23596 - 23609, SDP-16-019

PROFESSIONAL CERTIFICATION
I, BRANDON R. ROWE, HEREBY CERTIFY THAT THESE DOCUMENTS WERE PREPARED OR APPROVED BY ME, AND THAT I AM A DULY LICENSED PROFESSIONAL ENGINEER UNDER THE LAWS OF THE STATE OF MARYLAND, LICENSE NO. 40808, EXPIRATION DATE: 7/3/2017

30 15 7.5 0 30
1"= 30'

BOHLER ENGINEERING

CIVIL & CONSULTING ENGINEERS
SURVEYORS
PROJECT MANAGERS
ENVIRONMENTAL CONSULTANTS
LANDSCAPE ARCHITECTS

CORPORATE OFFICE:
◆ WARREN, NJ

OFFICES:
◆ SOUTHBOROUGH, MA
◆ ROCKVILLE, MD
◆ ROANOKE/NOKA, NY
◆ CHARLOTTESVILLE, VA
◆ CENTER VALLEY, PA
◆ TAMPA, FL
◆ BOWIE, MD
◆ STERLING, VA
◆ FORT LAUDERDALE, FL
◆ PHILADELPHIA, PA

THE INFORMATION CONTAINED HEREIN IS THE PROPERTY OF BOHLER ENGINEERING AND SHALL NOT BE USED FOR CONSTRUCTION PURPOSES UNLESS AUTHORIZED BY BOHLER ENGINEERING. ONLY APPROVED, SIGNED AND SEALED PLANS SHALL BE UTILIZED FOR CONSTRUCTION PURPOSES.

REVISIONS

REV	DATE	COMMENT	BY

THE FOLLOWING STATES REQUIRE NOTIFICATION BY EXCAVATORS, DESIGNERS, OR ANY PERSON PREPARING TO DISTURB THE EARTH'S SURFACE ANYWHERE IN THE STATE: IN VIRGINIA, MARYLAND, THE DISTRICT OF COLUMBIA, AND DELAWARE CALL - 811
(WV 1-800-245-4848) (PA 1-800-242-1776) (DC 1-800-257-7777)
(VA 1-800-552-7001) (MD 1-800-257-7777) (DE 1-800-282-8555)

PROJECT No.:	MD152013
DRAWN BY:	AVG
CHECKED BY:	JMA
DATE:	6/24/16
SCALE:	1" = 30'
CAD I.D.:	SS2

PROJECT: SITE DEVELOPMENT PLANS (PHASE II)
FOR
ESTATES AT PATAPSCO PARK
SINGLE FAMILY DETACH UNITS
BUILDABLE LOTS 203-205, 208-210, 213-248 & 373-385
PLAT NOs. 23596 - 23609
LOCATION OF SITE
ROGERS AVENUE
HOWARD COUNTY

BOHLER ENGINEERING
901 DULANEY VALLEY ROAD, SUITE 801
TOWSON, MARYLAND 21204
Phone: (410) 821-7900
Fax: (410) 821-7987
www.BohlerEngineering.com

B.R. ROWE
PROFESSIONAL ENGINEER
No. 40808

SHEET TITLE:
SITE DEVELOPMENT PLAN

SHEET NUMBER:
6 of 19

SDP-16-050

H:\2013\MD152013\PLANNING\PLAN SETS\SITE DEVELOPMENT PLANS - PHASE-II\MD152013SDP2.DWG PRINTED BY: RDOWER 6.28.16 @ 11:22 AM LAST SAVED BY: RDOWER

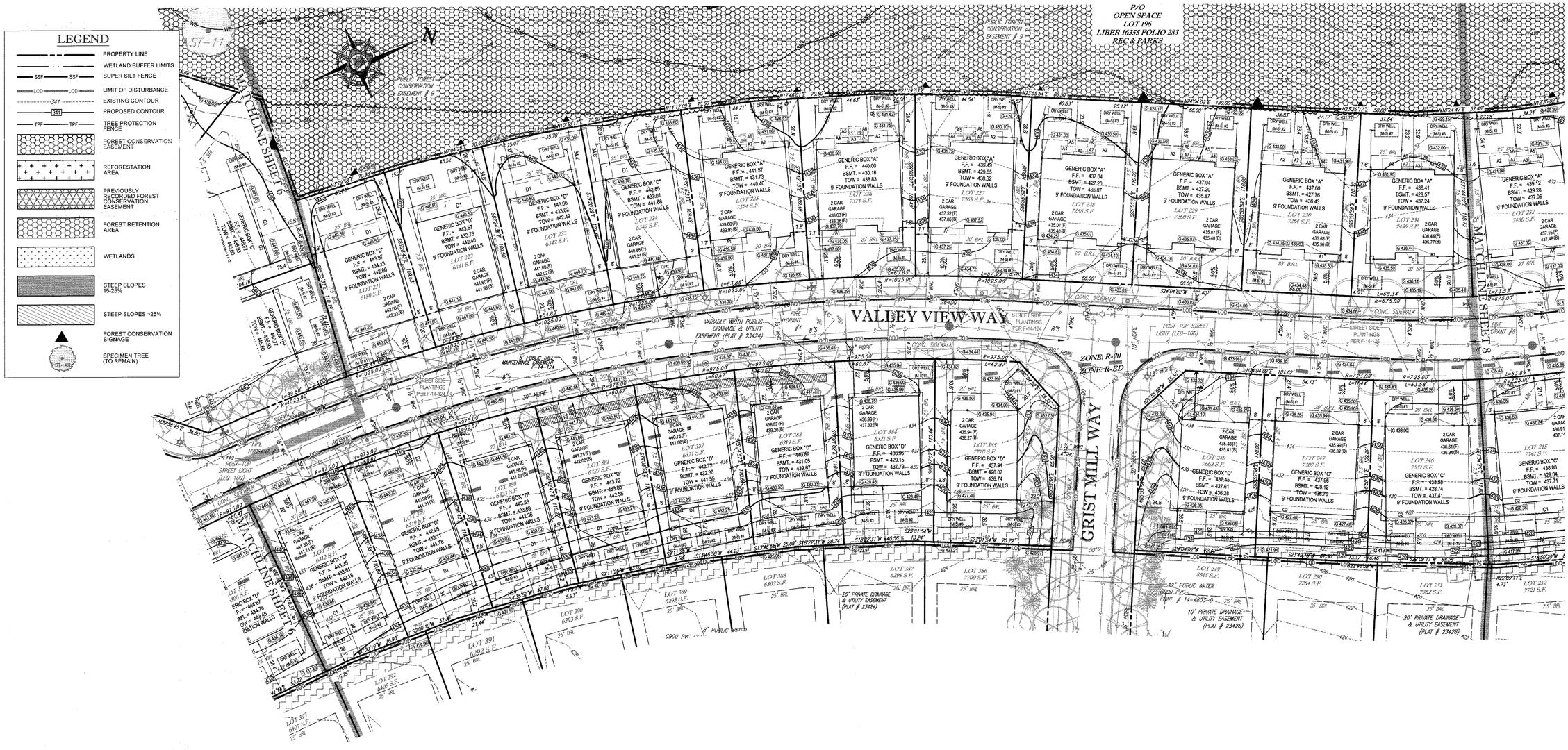

NOTE: FOR GENERIC BOX FORMATS, SEE "HOUSE TYPES" ON SHEET 3 AND 4.

30 15 7.5 0 30
1"= 30'

OWNER:	DEVELOPER:
ESTATES AT PATAPSCO PARK, LLC 24012 FREDERICK ROAD CLARKSBURG, MD 20861 CONTACT: MR. DAN SNYDER PHONE: (301) 674-8509	ESTATES AT PATAPSCO PARK, LLC 24012 FREDERICK ROAD CLARKSBURG, MD 20861 CONTACT: MR. DAN SNYDER PHONE: (301) 674-8509

PERMIT INFORMATION CHART

SUBDIVISION NAME: ESTATES AT PATAPSCO PARK		SECTION/AREA: N/A		LOT/PARCEL NO.: 203-205, 208-210, 213-248, & 373-385	
PLAT # OR L/F: #23421	GRID #: 5, 6, 11, 12	ZONING: R-20 & R-ED	TAX MAP NO.: 17	ELECT DISTR: 2ND	CENSUS TRACT: 602100

PREVIOUS FILE No.: SP-13-012, ECP-13-029, WP-13-165, PB CASE NO. 403, F-14-124, CONT. # 10-3500 (FORCE MAIN), PLATS 23421 TO 23436, F-16-051, PLATS 23596 - 23609, SDP-16-019

PROFESSIONAL CERTIFICATION
I, BRANDON R. ROWE, HEREBY CERTIFY THAT THESE DOCUMENTS WERE PREPARED OR APPROVED BY ME, AND THAT I AM A DULY LICENSED PROFESSIONAL ENGINEER UNDER THE LAWS OF THE STATE OF MARYLAND, LICENSE NO. 40808, EXPIRATION DATE: 7/3/2017

APPROVED: DEPARTMENT OF PLANNING AND ZONING

CHIEF, DIVISION OF LAND DEVELOPMENT	DATE 8-26-16
CHIEF, DEVELOPMENT ENGINEERING DIVISION	DATE 8-24-16
DIRECTOR - DEPARTMENT OF PLANNING AND ZONING	DATE 8-26-16

GENERAL NOTE:
IT IS THE RESPONSIBILITY OF THE CONTRACTOR TO REVIEW ALL OF THE DRAWINGS AND SPECIFICATIONS ASSOCIATED WITH THIS PROJECT WORK SCOPE PRIOR TO THE INITIATION OF CONSTRUCTION. SHOULD THE CONTRACTOR FIND A CONFLICT WITH THE DOCUMENTS RELATIVE TO THE SPECIFICATIONS OR APPLICABLE CODES, IT IS THE CONTRACTOR'S RESPONSIBILITY TO NOTIFY THE PROJECT ENGINEER OF RECORD IN WRITING PRIOR TO THE START OF CONSTRUCTION. FAILURE BY THE CONTRACTOR TO NOTIFY THE PROJECT ENGINEER SHALL CONSTITUTE ACCEPTANCE OF FULL RESPONSIBILITY BY THE CONTRACTOR TO COMPLETE THE SCOPE OF THE WORK AS DEFINED BY THE DRAWINGS AND IN FULL CONFORMANCE WITH LOCAL REGULATIONS AND CODES.

H:\2015\MD152013\DRAWINGS\PLAN SETS\SITE DEVELOPMENT PLANS - PHASE-II\MD152013SD22.DWG PRINTED BY: RROWE 6.28.16 @ 11:22 AM LAST SAVED BY: RROWE

BOHLER ENGINEERING

CIVIL & CONSULTING ENGINEERS
SURVEYORS
PROJECT MANAGERS
ENVIRONMENTAL CONSULTANTS
LANDSCAPE ARCHITECTS

CORPORATE OFFICE: WARREN, NJ
OFFICES: BOWIE, MD; CHARLOTTESVILLE, VA; STERLING, VA; WILMINGTON, DE; FORT LAUDERDALE, FL; PHILADELPHIA, PA; SOUTHBOROUGH, MA; ALBANY, NY; RONKONKOMA, NY; CENTER VALLEY, PA; TAMPA, FL

THE INFORMATION, DESIGNS, DRAWINGS, AND SPECIFICATIONS CONTAINED HEREIN ARE THE PROPERTY OF BOHLER ENGINEERING AND SHALL NOT BE USED FOR OTHER PROJECTS OR EXTENSIONS OF THIS PROJECT EXCEPT BY AGREEMENT IN WRITING BY BOHLER ENGINEERING. ONLY PRINTS BEARING THE SEAL OF BOHLER ENGINEERING SHALL BE USED FOR CONSTRUCTION PURPOSES. © 2006 BOHLER ENGINEERING

REVISIONS

REV	DATE	COMMENT	BY

THE FOLLOWING STATES REQUIRE NOTIFICATION BY EXCAVATORS, DESIGNERS, OR ANY PERSON PREPARING TO DISTURB THE EARTH'S SURFACE ANYWHERE IN THE STATE IN VIRGINIA, MARYLAND, THE DISTRICT OF COLUMBIA, AND DELAWARE CALL - 811
(WV: 1-800-245-4848) (PA: 1-800-242-1776) (DC: 1-800-257-7777) (VA: 1-800-552-7001) (MD: 1-800-257-7777) (DE: 1-800-282-8555)

PROJECT No.:	MD152013
DRAWN BY:	AVG
CHECKED BY:	JMA
DATE:	6/24/16
SCALE:	1" = 30'
CAD I.D.:	SS2

PROJECT: SITE DEVELOPMENT PLANS (PHASE II) FOR

ESTATES AT PATAPSCO PARK

SINGLE FAMILY DETACH UNITS BUILDABLE LOTS 203-205, 208-210, 213-248 & 373-385 PLAT NOs. 23596 - 23609

LOCATION OF SITE

ROGERS AVENUE
HOWARD COUNTY

BOHLER ENGINEERING
901 DULANEY VALLEY ROAD, SUITE 801
TOWSON, MARYLAND 21204
Phone: (410) 821-7900
Fax: (410) 821-7987
www.BohlerEngineering.com

B.R. ROWE
PROFESSIONAL ENGINEER

SHEET TITLE: SITE DEVELOPMENT PLAN

SHEET NUMBER: 7 of 19

SDP-16-050

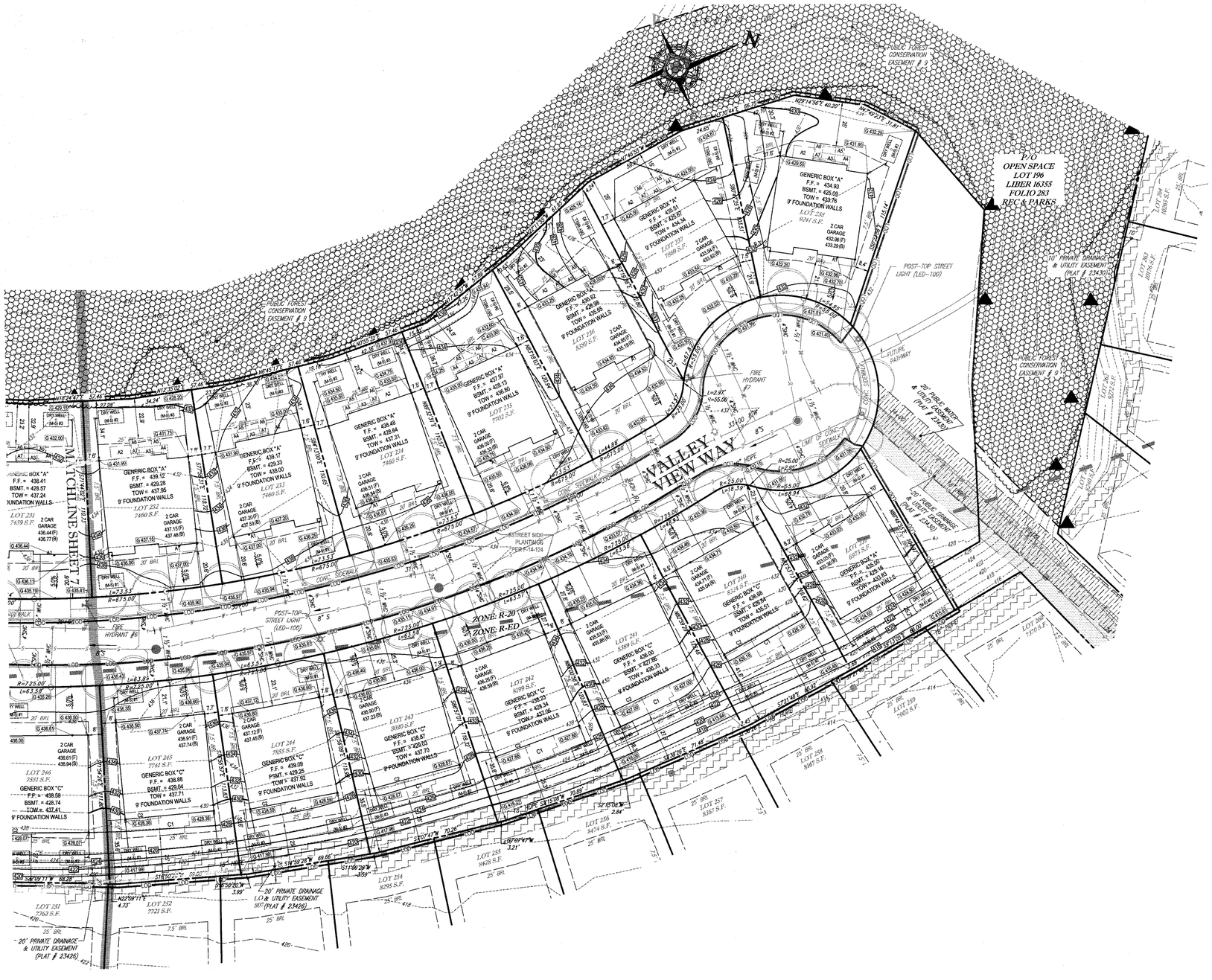

LEGEND

- PROPERTY LINE
- WETLAND BUFFER LIMITS
- SUPER SILT FENCE
- LIMIT OF DISTURBANCE
- EXISTING CONTOUR
- PROPOSED CONTOUR
- TREE PROTECTION FENCE
- FOREST CONSERVATION EASEMENT
- REFORESTATION AREA
- PREVIOUSLY RECORDED FOREST CONSERVATION EASEMENT
- FOREST RETENTION AREA
- WETLANDS
- STEEP SLOPES 15-25%
- STEEP SLOPES >25%
- FOREST CONSERVATION SIGNAGE
- SPECIMEN TREE (TO REMAIN)

30 15 7.5 0 30

1"= 30'

OWNER:	DEVELOPER:
ESTATES AT PATAPSCO PARK, LLC 24012 FREDERICK ROAD CLARKSBURG, MD 20861 CONTACT: MR. DAN SNYDER PHONE: (301) 674-8509	ESTATES AT PATAPSCO PARK, LLC 24012 FREDERICK ROAD CLARKSBURG, MD 20861 CONTACT: MR. DAN SNYDER PHONE: (301) 674-8509

PERMIT INFORMATION CHART

SUBDIVISION NAME: ESTATES AT PATAPSCO PARK		SECTION/AREA: N/A		LOT/PARCEL NO.: 203-205, 208-210, 213-248, & 373-385
PLAT # OR L/F: #23421	GRID #: 5, 6, 11, 12	ZONING: R-20 & R-ED	TAX MAP NO.: 17	ELECT DISTR: 2ND	CENSUS TRACT: 602100
PREVIOUS FILE No. : SP-13-012 ECP-13-029 WP-13-155 PB CASE NO. 403 F-14-124 CONT # 10-3500 (FOR CE MAIN)		PLATS 23421 TO 23436 F-16-051 PLATS 23596 - 23609 SDP-16-019		

PROFESSIONAL CERTIFICATION
I, BRANDON R. ROWE, HEREBY CERTIFY THAT THESE DOCUMENTS WERE PREPARED OR APPROVED BY ME, AND THAT I AM A DULY LICENSED PROFESSIONAL ENGINEER UNDER THE LAWS OF THE STATE OF MARYLAND, LICENSE NO. 40808, EXPIRATION DATE: 7/3/2017

NOTE: FOR GENERIC BOX FORMATS, SEE "HOUSE TYPES" ON SHEET 3 AND 4.

APPROVED: DEPARTMENT OF PLANNING AND ZONING

CHIEF, DIVISION OF LAND DEVELOPMENT	DATE 8-26-16
CHIEF, DEVELOPMENT ENGINEERING DIVISION	DATE 8-24-16
DIRECTOR - DEPARTMENT OF PLANNING AND ZONING	DATE 8-26-16

GENERAL NOTE
IT IS THE RESPONSIBILITY OF THE CONTRACTOR TO REVIEW ALL OF THE DRAWINGS AND SPECIFICATIONS ASSOCIATED WITH THIS PROJECT WORK SCOPE PRIOR TO THE INITIATION OF CONSTRUCTION. SHOULD THE CONTRACTOR FIND A CONFLICT WITH THE DOCUMENTS RELATIVE TO THE SPECIFICATIONS OR APPLICABLE CODES, IT IS THE CONTRACTOR'S RESPONSIBILITY TO NOTIFY THE PROJECT ENGINEER OF RECORD IN WRITING PRIOR TO THE START OF CONSTRUCTION. FAILURE BY THE CONTRACTOR TO NOTIFY THE PROJECT ENGINEER SHALL CONSTITUTE ACCEPTANCE OF FULL RESPONSIBILITY BY THE CONTRACTOR TO COMPLETE THE SCOPE OF THE WORK AS DEFINED BY THE DRAWINGS AND IN FULL CONFORMANCE WITH LOCAL REGULATIONS AND CODES.

BOHLER ENGINEERING

CIVIL & CONSULTING ENGINEERS
SURVEYORS
PROJECT MANAGERS
ENVIRONMENTAL CONSULTANTS
LANDSCAPE ARCHITECTS

CORPORATE OFFICE:
◆ WARREN, NJ

OFFICES:
◆ SOUTHBOROUGH, MA
◆ ALBANY, NY
◆ RONKONKOMA, NY
◆ HAMILTON, NJ
◆ CENTER VALLEY, PA
◆ TAMPA, FL
◆ BOWIE, MD
◆ COLUMBIA, MD
◆ STERLING, VA
◆ WILLIAMSBURG, VA
◆ FORT LAUDERDALE, FL
◆ PHILADELPHIA, PA

THIS PLAN IS THE PROPERTY OF BOHLER ENGINEERING AND MAY NOT BE REPRODUCED OR USED FOR OTHER PROJECTS WITHOUT WRITTEN AUTHORIZATION FROM BOHLER ENGINEERING. ONLY APPROVED, SIGNED AND SEALED PLANS SHALL BE UTILIZED FOR CONSTRUCTION PURPOSES.©BOHLER ENGINEERING

REVISIONS

REV	DATE	COMMENT	BY

THE FOLLOWING STATES REQUIRE NOTIFICATION BY EXCAVATORS, DESIGNERS, OR ANY PERSON PREPARING TO DISTURB THE EARTH'S SURFACE ANYWHERE IN THE STATE IN VIRGINIA, MARYLAND, THE DISTRICT OF COLUMBIA, AND DELAWARE CALL - 811
(WV 1-800-245-4848) (PA 1-800-242-1776) (DC 1-800-257-7777)
(VA 1-800-552-7001) (MD 1-800-257-7777) (DE 1-800-282-8555)

PROJECT No.:	MD152013
DRAWN BY:	AVG
CHECKED BY:	JMA
DATE:	6/24/16
SCALE:	1" = 30'
CAD I.D.:	SS2

PROJECT: SITE DEVELOPMENT PLANS (PHASE II) FOR

ESTATES AT PATAPSCO PARK

SINGLE FAMILY DETACH UNITS
BUILDABLE LOTS 203-205, 208-210, 213-248 & 373-385
PLAT NOs. 23596 - 23609

LOCATION OF SITE

ROGERS AVENUE
HOWARD COUNTY

BOHLER ENGINEERING
901 DULANEY VALLEY ROAD, SUITE 801
TOWSON, MARYLAND 21204
Phone: (410) 821-7900
Fax: (410) 821-7987
www.BohlerEngineering.com

B.R. ROWE
PROFESSIONAL ENGINEER

SHEET TITLE:

SITE DEVELOPMENT PLAN

SHEET NUMBER:

8 of 19

SDP-16-050

EROSION AND SEDIMENT CONTROL LEGEND

- STABILIZED CONSTRUCTION ENTRANCE
- SF — SILT FENCE
- SSF — SUPER SILT FENCE
- LOD — LIMIT OF DISTURBANCE (EACH LOT)
- SOIL DIVIDE
- MaB — SOIL LABEL
- FOREST CONSERVATION SIGNAGE
- ST-XX — SPECIMEN TREE (TO REMAIN)

EROSION AND SEDIMENT CONTROL NOTES:

1. CONTRACTOR TO ACCOUNT FOR BASEMENT CUT BY LOWERING ELEVATIONS OF LOTS AS REQUIRED. GENERAL GRADING DESIGN SHOULD REMAIN THE SAME. LOTS SHOULD BE BROUGHT TO FINAL GRADE AFTER SDP APPROVAL WHEN HOUSES ARE BUILT AND CUT IN BASEMENTS IS AVAILABLE.
2. REFER TO SHEETS 12 & 13 FOR SEQUENCE OF CONSTRUCTION, SEDIMENT CONTROL NOTES, AND SEDIMENT CONTROL DETAILS.
3. ALL PROPOSED WORK OUTSIDE OF PERIMETER CONTROLS SHALL BE PERMANENTLY STABILIZED AT THE END OF EACH WORK DAY.
4. PROPOSED SILT FENCE IS TO BE CHANGED TO SUPER SILT FENCE AT THE DIRECTION OF THE SEDIMENT CONTROL INSPECTOR.
5. EITHER TEMPORARY OR PERMANENT SEEDING IS TO BE PERFORMED AT THE DIRECTION OF THE SEDIMENT CONTROL INSPECTOR OR AT THE TIME FRAMES REQUIRED BY THE 2011 MARYLAND STANDARDS AND SPECIFICATIONS FOR SOIL EROSION AND SEDIMENT CONTROL, WHICHEVER IS MORE RESTRICTIVE.
6. CONTRACTOR TO INSTALL STABILIZATION MATTING IN ALL SWALES AND ON ALL SLOPES 3:1 OR GREATER.
7. SHOULD THE STOCKPILE EXCEED 15 FT. IN HEIGHT, IT MUST BE BENCHED.
8. LOTS SHALL BE PERMANENTLY STABILIZED AS SOON AS REASONABLY POSSIBLE TO HELP PREVENT SEDIMENTATION TO SWM FACILITIES.

SOILS

SYMBOL	DESCRIPTION	K-FACTOR	HYDRIC	HYDROLOGIC GROUP
GbB	GLENELG LOAM, 3 TO 8 PERCENT SLOPES	0.37	YES	C
GnB	GLENVILLE-BAILE SILT LOAM, 0 TO 8 PERCENT SLOPES	0.37	YES	C
MaC	MANOR SILT LOAM, 8 TO 15 PERCENT SLOPES	0.24	NO	B

BENCHMARK NOTE:

THE COORDINATES SHOWN HEREON ARE BASED UPON THE HOWARD COUNTY GEODETIC CONTROL WHICH IS BASED UPON THE MARYLAND STATE PLAN COORDINATE SYSTEM. HORIZONTAL AND VERTICAL CONTROL DATUM ARE BASED ON HOWARD COUNTY MONUMENT NOS. 17-F7 AND 17-F9 WHICH WERE USED FOR THIS PROJECT.

HOWARD COUNTY MONUMENT NO. 17-F7 ELEV. = 469.399
HOWARD COUNTY MONUMENT NO. 17-F9 ELEV. = 476.721

EROSION AND SEDIMENT CONTROL QUANTITIES:

TOTAL FOR ALL 55 LOTS

LIMIT OF DISTURBANCE:	9.0 AC.
SILT FENCE:	8,770 LF
SUPER SILT FENCE:	4,901 LF
EARTHWORK:	43,000 CY CUT
	44,000 CY FILL
	0 CY EXPORT
EXCESS SOIL MATERIAL WILL BE STOCKPILED ONSITE	
STABILIZED CONSTRUCTION ENTRANCE:	55 EA

SPOIL MATERIAL SHALL BE DISCARDED AT A SITE WITH AN ACTIVE GRADING PERMIT AND APPROVED SEDIMENT CONTROL PLAN. BORROW MATERIAL SHALL BE OBTAINED FROM AN APPROVED SITE WITH AN ACTIVE GRADING PERMIT AND AN APPROVED SEDIMENT CONTROL PLAN.

EARTH QUANTITIES LISTED ABOVE ARE FOR SEDIMENT CONTROL USE ONLY. CONTRACTOR SHALL NOT RELY ON THESE FIGURES FOR ESTIMATING AND BONDING PURPOSES.

EROSION AND SEDIMENT CONTROL UTILITY INSTALLATION NOTES:

1. CONTRACTOR SHALL OPEN ONLY THAT SECTION OF TRENCH THAT CAN BE BACKFILLED AND STABILIZED EACH DAY. IF TRENCH MUST REMAIN OPEN LONGER THAN ONE DAY, SILT FENCE SHALL BE PLACED BELOW (DOWNSLOPE OF) TRENCH.
2. PLACE ALL EXCAVATED MATERIAL ON UPHILL SIDE OF TRENCH.
3. ANY SEDIMENT CONTROLS DISTURBED BY UTILITY CONSTRUCTION ARE TO BE REPAIRED IMMEDIATELY.
4. THE CONTRACTOR SHALL TAKE APPROPRIATE MEASURES TO PROTECT PEDESTRIANS AT ALL TIMES DURING UNDERGROUND UTILITY CONSTRUCTION.

NOTE: SEE SHEETS 14 - 18 FOR STORMWATER MANAGEMENT FACILITIES THAT WILL SERVE INDIVIDUAL LOTS.

NOTES:

1. TEMPORARY SWM IS PROVIDED UNDER F-14-124.
2. IF HOUSE CONSTRUCTION IS CONCURRENT WITH ROAD CONSTRUCTION, COORDINATE THE WORK ON THESE PLANS WITH F-14-124.
3. NO STOCKPILE WILL BE PERMITTED ON LOTS BEING DEVELOPED UNDER THIS SITE DEVELOPMENT PLAN.
4. SEEDING AND STABILIZATION IS TO BE PERFORMED AT THE DIRECTION OF THE SEDIMENT CONTROL INSPECTOR OR IN COMPLIANCE WITH THE STANDARD SEEDING AND STABILIZATION NOTES WHICHEVER IS MORE RESTRICTIVE.
5. FOR SEQUENCE OF CONSTRUCTION FOR EACH LOT, SEE SHEET 13, EROSION AND SEDIMENT CONTROL NOTES & DETAILS.
6. CONTRACTOR SHALL MAINTAIN PERIMETER SEDIMENT CONTROL AT ALL TIMES AND IN THE EVENT OF SEDIMENT/DEBRIS LEAVING A DISTURBED BUILDING SITE, THE CONTRACTOR SHALL BE RESPONSIBLE FOR THE FLUSHING/CLEANING OF STORM DRAIN SYSTEM OF SEDIMENT/DEBRIS AND AT THE REQUEST OF THE SEDIMENT CONTROL INSPECTOR.

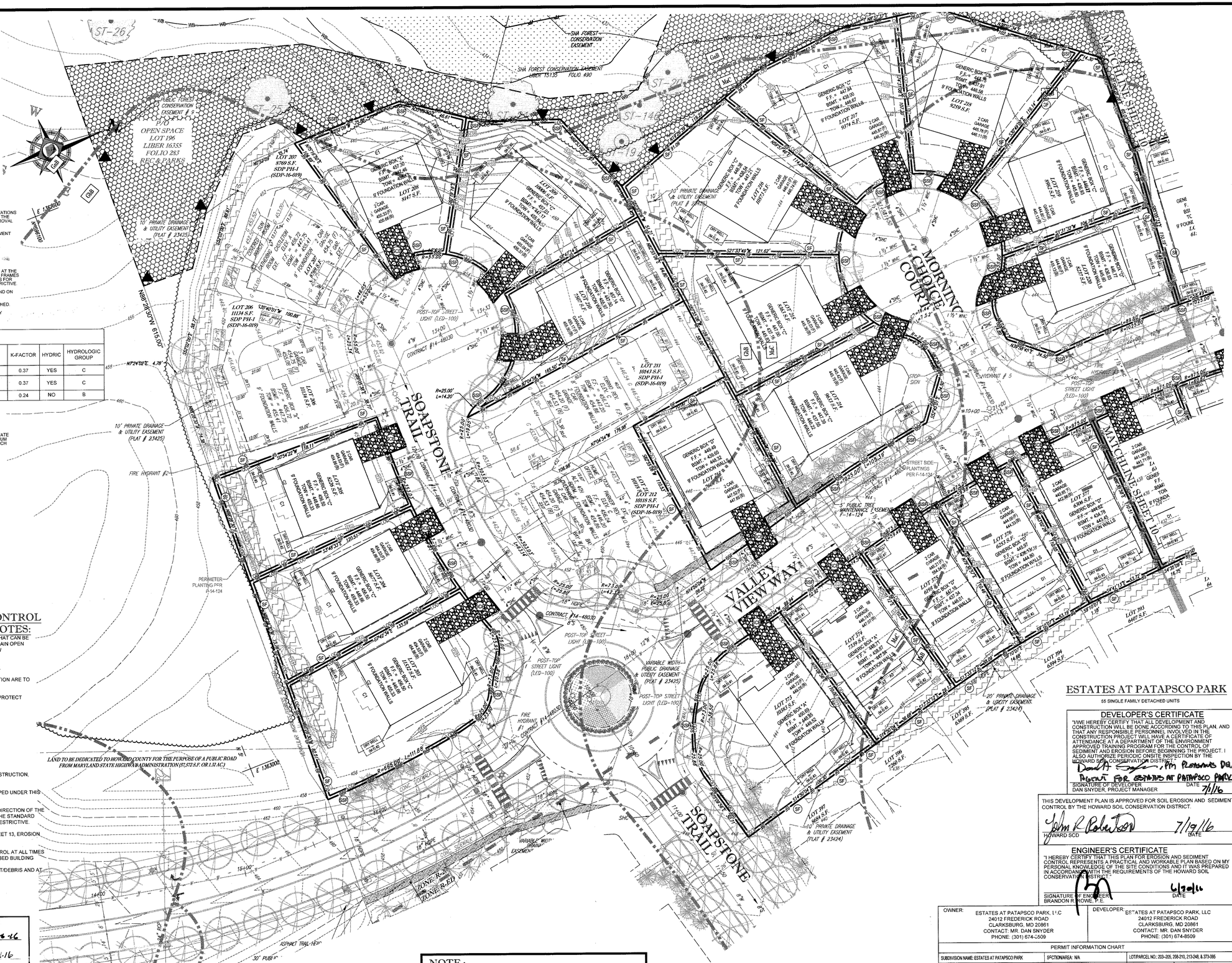

ESTATES AT PATAPSCO PARK

55 SINGLE FAMILY DETACHED UNITS

DEVELOPER'S CERTIFICATE

"I/WE HEREBY CERTIFY THAT ALL DEVELOPMENT AND CONSTRUCTION WILL BE DONE ACCORDING TO THIS PLAN, AND THAT ANY RESPONSIBLE PERSONNEL INVOLVED IN THE CONSTRUCTION PROJECT WILL HAVE A CERTIFICATE OF ATTENDANCE AT A DEPARTMENT OF THE ENVIRONMENT APPROVED TRAINING PROGRAM FOR THE CONTROL OF SEDIMENT AND EROSION BEFORE BEGINNING THE PROJECT. I ALSO AUTHORIZE PERIODIC ONSITE INSPECTION BY THE HOWARD SOIL CONSERVATION DISTRICT."

SIGNATURE OF DEVELOPER — DATE 7/1/16
DAN SNYDER, PROJECT MANAGER

THIS DEVELOPMENT PLAN IS APPROVED FOR SOIL EROSION AND SEDIMENT CONTROL BY THE HOWARD SOIL CONSERVATION DISTRICT.

HOWARD SCD — DATE 7/19/16

ENGINEER'S CERTIFICATE

"I HEREBY CERTIFY THAT THIS PLAN FOR EROSION AND SEDIMENT CONTROL REPRESENTS A PRACTICAL AND WORKABLE PLAN BASED ON MY PERSONAL KNOWLEDGE OF THE SITE CONDITIONS AND IT WAS PREPARED IN ACCORDANCE WITH THE REQUIREMENTS OF THE HOWARD SOIL CONSERVATION DISTRICT."

SIGNATURE OF ENGINEER — DATE 6/30/16
BRANDON R. ROWE, P.E.

OWNER: ESTATES AT PATAPSCO PARK, LLC
24012 FREDERICK ROAD
CLARKSBURG, MD 20861
CONTACT: MR. DAN SNYDER
PHONE: (301) 674-0509

DEVELOPER: ESTATES AT PATAPSCO PARK, LLC
24012 FREDERICK ROAD
CLARKSBURG, MD 20861
CONTACT: MR. DAN SNYDER
PHONE: (301) 674-8509

PERMIT INFORMATION CHART

SUBDIVISION NAME: ESTATES AT PATAPSCO PARK		SF/CTIONAR/EA: N/A		LOT/PARCEL NO.: 203-205, 208-210, 213-248, & 373-385	
PLAT # OR L/F: #23421	GRID #: 5, 6, 11, 12	ZONING: R-20 & R-ED	TAX MAP NO.: 17	ELECT DISTR: 2ND	CENSUS TRACT: 602100

PREVIOUS FILE No.: SP-13-012, ECP-13-029, WP-13-165, PB CASE NO. 402, F-14-124, CONT.# 10-3509 (FORCE MAIN), PLATS 23421 TO 23436, F-16-051, PLATS 23596 - 23609, SDP-16-019

PROFESSIONAL CERTIFICATION
I, BRANDON R. ROWE, HEREBY CERTIFY THAT THESE DOCUMENTS WERE PREPARED OR APPROVED BY ME, AND THAT I AM A DULY LICENSED PROFESSIONAL ENGINEER UNDER THE LAWS OF THE STATE OF MARYLAND, LICENSE NO. 40809, EXPIRATION DATE: 7/3/2017.

APPROVED: DEPARTMENT OF PLANNING AND ZONING

CHIEF, DIVISION OF LAND DEVELOPMENT	DATE 8-26-16
CHIEF, DEVELOPMENT ENGINEERING DIVISION	DATE 8-24-16
DIRECTOR - DEPARTMENT OF PLANNING AND ZONING	DATE 8-26-16

GENERAL NOTES
IT IS THE RESPONSIBILITY OF THE CONTRACTOR TO REVIEW ALL OF THE DRAWINGS AND SPECIFICATIONS ASSOCIATED WITH THIS PROJECT WORK SCOPE PRIOR TO THE INITIATION OF CONSTRUCTION. SHOULD THE CONTRACTOR FIND A CONFLICT WITH THE DOCUMENTS RELATIVE TO THE SPECIFICATIONS OR APPLICABLE CODES, IT IS THE CONTRACTOR'S RESPONSIBILITY TO NOTIFY THE PROJECT ENGINEER OF RECORD IN WRITING PRIOR TO THE START OF CONSTRUCTION. FAILURE BY THE CONTRACTOR TO NOTIFY THE PROJECT ENGINEER SHALL CONSTITUTE ACCEPTANCE OF FULL RESPONSIBILITY BY THE CONTRACTOR TO COMPLETE THE SCOPE OF THE WORK AS DEFINED BY THE DRAWINGS AND IN FULL CONFORMANCE WITH LOCAL REGULATIONS AND CODES.

NOTE:
SEE SHEET 19 OF 19 FOR ADDITIONAL INFORMATION ON SEDIMENT CONTROL AND TEMPORARY STORMWATER MANAGEMENT MEASURES FROM FINAL ROAD CONSTRUCTION PLANS (F-14-124).

30 15 7.5 0 30
1"= 30'

BOHLER ENGINEERING
CIVIL & CONSULTING ENGINEERS
SURVEYORS
PROJECT MANAGERS
ENVIRONMENTAL CONSULTANTS
LANDSCAPE ARCHITECTS
CORPORATE OFFICE: WARREN, NJ
OFFICES: SOUTHBOROUGH, MA; ALBANY, NY; ROANOKE/CHESAPEAKE, VA; CENTER VALLEY, PA; BOWIE, MD; TOWSON, MD; STERLING, VA; FORT LAUDERDALE, FL

THE INFORMATION, DESIGNS, DRAWINGS, AND SPECIFICATIONS CONTAINED HEREIN ARE THE PROPERTY OF BOHLER ENGINEERING AND SHALL NOT BE USED FOR ANY PURPOSE, NOR REPRODUCED IN WHOLE OR IN PART, WITHOUT PRIOR WRITTEN AUTHORIZATION FROM BOHLER ENGINEERING, CNY, CAPITAL DISTRICT AND ISLAND OFFICES. NO CONSTRUCTION IS APPROVED UNLESS SIGNED AND SEALED.

REVISIONS

REV.	DATE	COMMENT	BY

THE FOLLOWING STATES REQUIRE NOTIFICATION BY EXCAVATORS, DESIGNERS, OR ANY PERSON PREPARING TO DISTURB THE EARTH'S SURFACE ANYWHERE IN THE STATE IN VIRGINIA, MARYLAND, THE DISTRICT OF COLUMBIA, AND DELAWARE CALL - 811.
(WV: 1-800-245-4848) (PA: 1-800-242-1776) (DC: 1-800-257-7777) (VA: 1-800-552-7001) (MD: 1-800-257-7777) (DE: 1-800-282-8555)

PROJECT No.:	MD152013
DRAWN BY:	AVG
CHECKED BY:	JMA
DATE:	6/24/16
SCALE:	1" = 30'
CAD I.D.:	SS2

PROJECT: SITE DEVELOPMENT PLANS (PHASE II) FOR
ESTATES AT PATAPSCO PARK
SINGLE FAMILY DETACH UNITS BUILDABLE LOTS 203-205, 208-210, 213-248 & 373-385 PLAT NOs. 23596 - 23609

LOCATION OF SITE
ROGERS AVENUE
HOWARD COUNTY

BOHLER ENGINEERING
901 DULANEY VALLEY ROAD, SUITE 801
TOWSON, MARYLAND 21204
Phone: (410) 821-7900
Fax: (410) 821-7987
www.BohlerEngineering.com

B.R. ROWE — PROFESSIONAL ENGINEER — 40809 — 6/30/16

SHEET TITLE:
EROSION AND SEDIMENT CONTROL PLAN

SHEET NUMBER:
9 of 19

SDP-16-050

EROSION AND SEDIMENT CONTROL LEGEND

SCE	STABILIZED CONSTRUCTION ENTRANCE
—SF—SF—	SILT FENCE
—SSF—SSF—	SUPER SILT FENCE
—LOD—LOD—	LIMIT OF DISTURBANCE (EACH LOT)
- - -	SOIL DIVIDE
MaB	SOIL LABEL
▲	FOREST CONSERVATION SIGNAGE
ST-XX	SPECIMEN TREE (TO REMAIN)

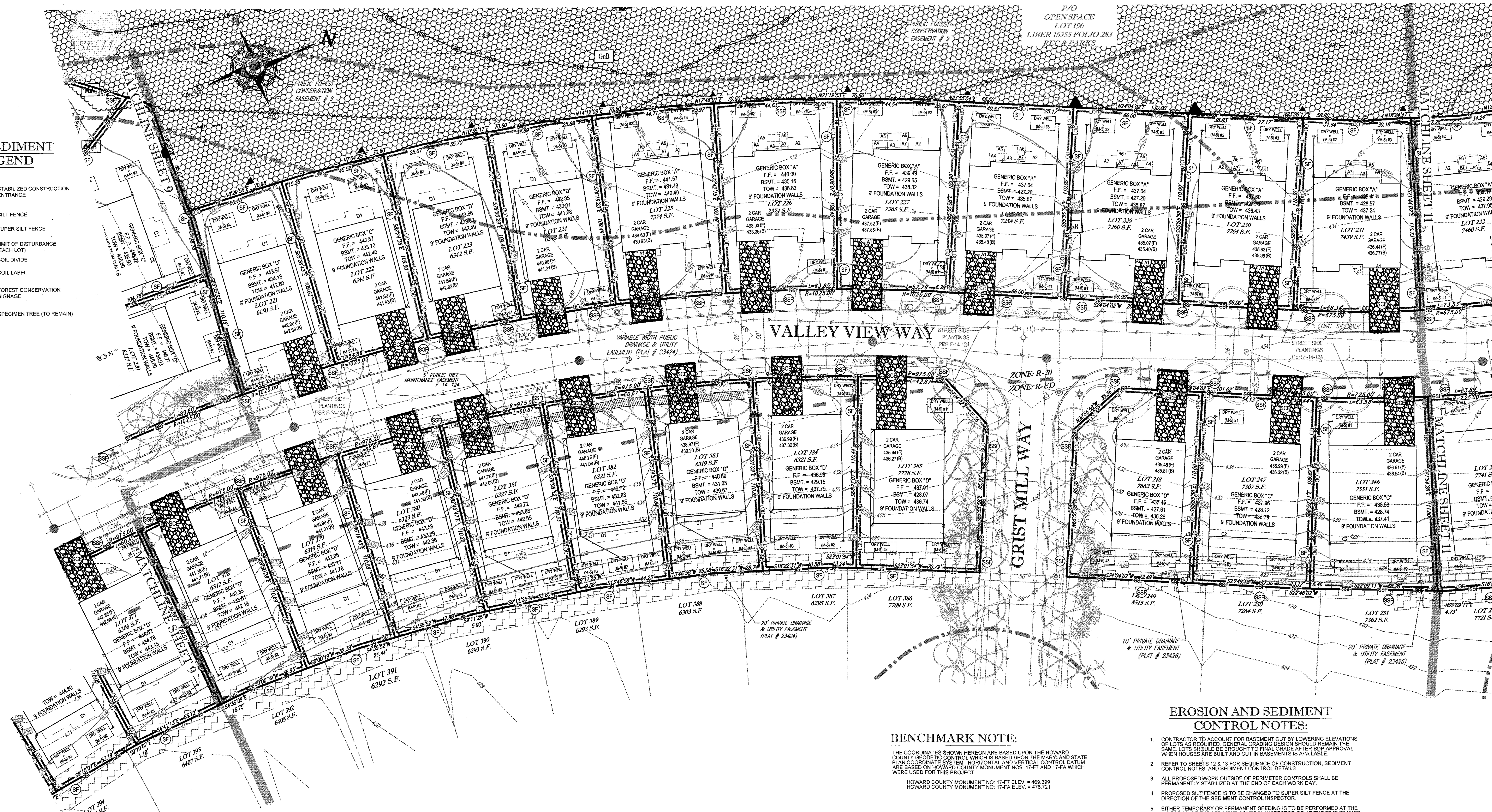

NOTE :

SEE SHEET 19 OF 19 FOR ADDITIONAL INFORMATION ON SEDIMENT CONTROL AND TEMPORARY STORMWATER MANAGEMENT MEASURES FROM FINAL ROAD CONSTRUCTION PLANS (F-14-124).

NOTE: SEE SHEETS 14-18 FOR STORMWATER MANAGEMENT FACILITIES THAT WILL SERVE INDIVIDUAL LOTS.

BENCHMARK NOTE:

THE COORDINATES SHOWN HEREON ARE BASED UPON THE HOWARD COUNTY GEODETIC CONTROL WHICH IS BASED UPON THE MARYLAND STATE PLAN COORDINATE SYSTEM. HORIZONTAL AND VERTICAL CONTROL DATUM ARE BASED ON HOWARD COUNTY MONUMENT NOS. 17-F7 AND 17-FA WHICH WERE USED FOR THIS PROJECT.

HOWARD COUNTY MONUMENT NO: 17-F7 ELEV. = 469.399
HOWARD COUNTY MONUMENT NO: 17-FA ELEV. = 476.721

EROSION AND SEDIMENT CONTROL QUANTITIES:

TOTAL FOR ALL 55 LOTS

LIMIT OF DISTURBANCE:	9.0 AC.
SILT FENCE:	8,770 LF
SUPER SILT FENCE:	4,901 LF
EARTHWORK:	43,000 CY CUT 44,000 CY FILL 0 CY EXPORT
EXCESS SOIL MATERIAL WILL BE STOCKPILED ONSITE	
STABILIZED CONSTRUCTION ENTRANCE:	55 EA

SPOIL MATERIAL SHALL BE DISCARDED AT A SITE WITH AN ACTIVE GRADING PERMIT AND APPROVED SEDIMENT CONTROL PLAN. BORROW MATERIAL SHALL BE OBTAINED FROM AN APPROVED SITE WITH AN ACTIVE GRADING PERMIT AND AN APPROVED SEDIMENT CONTROL PLAN.

EARTH QUANTITIES LISTED ABOVE ARE FOR SEDIMENT CONTROL USE ONLY. CONTRACTOR SHALL NOT RELY ON THESE FIGURES FOR ESTIMATING AND BONDING PURPOSES.

EROSION AND SEDIMENT CONTROL NOTES:

1. CONTRACTOR TO ACCOUNT FOR BASEMENT CUT BY LOWERING ELEVATIONS OF LOTS AS REQUIRED. GENERAL GRADING DESIGN SHOULD REMAIN THE SAME. LOTS SHOULD BE BROUGHT TO FINAL GRADE AFTER SDP APPROVAL WHEN HOUSES ARE BUILT AND CUT IN BASEMENTS IS AVAILABLE.
2. REFER TO SHEETS 12 & 13 FOR SEQUENCE OF CONSTRUCTION, SEDIMENT CONTROL NOTES, AND SEDIMENT CONTROL DETAILS.
3. ALL PROPOSED WORK OUTSIDE OF PERIMETER CONTROLS SHALL BE PERMANENTLY STABILIZED AT THE END OF EACH WORK DAY.
4. PROPOSED SILT FENCE IS TO BE CHANGED TO SUPER SILT FENCE AT THE DIRECTION OF THE SEDIMENT CONTROL INSPECTOR.
5. EITHER TEMPORARY OR PERMANENT SEEDING IS TO BE PERFORMED AT THE DIRECTION OF THE SEDIMENT CONTROL INSPECTOR OR AT THE TIME FRAMES REQUIRED BY THE 2011 MARYLAND STANDARDS AND SPECIFICATIONS FOR SOIL EROSION AND SEDIMENT CONTROL, WHICHEVER IS MORE RESTRICTIVE.
6. CONTRACTOR TO INSTALL STABILIZATION MATTING IN ALL SWALES AND ON ALL SLOPES 3:1 OR GREATER.
7. SHOULD THE STOCKPILE EXCEED 15 FT. IN HEIGHT, IT MUST BE BENCHED.
8. LOTS SHALL BE PERMANENTLY STABILIZED AS SOON AS REASONABLY POSSIBLE TO HELP PREVENT SEDIMENTATION TO SWM FACILITIES.

SOILS

SYMBOL	DESCRIPTION	K-FACTOR	HYDRIC	HYDROLOGIC GROUP
GbB	GLENELG LOAM, 3 TO 8 PERCENT SLOPES	0.37	YES	C
GnB	GLENVILLE-BAILE SILT LOAM, 0 TO 8 PERCENT SLOPES	0.37	YES	C
MaC	MANOR SILT LOAM, 8 TO 15 PERCENT SLOPES	0.24	NO	B

30 15 7.5 0 30
1"= 30'

EROSION AND SEDIMENT CONTROL UTILITY INSTALLATION NOTES:

1. CONTRACTOR SHALL OPEN ONLY THAT SECTION OF TRENCH THAT CAN BE BACKFILLED AND STABILIZED EACH DAY. IF TRENCH MUST REMAIN OPEN LONGER THAN ONE DAY, SILT FENCE SHALL BE PLACED BELOW (DOWNSLOPE OF) TRENCH.
2. PLACE ALL EXCAVATED MATERIAL ON UPHILL SIDE OF TRENCH.
3. ANY SEDIMENT CONTROLS DISTURBED BY UTILITY CONSTRUCTION ARE TO BE REPAIRED IMMEDIATELY.
4. THE CONTRACTOR SHALL TAKE APPROPRIATE MEASURES TO PROTECT PEDESTRIANS AT ALL TIMES DURING UNDERGROUND UTILITY CONSTRUCTION.

NOTES:

1. TEMPORARY SWM IS PROVIDED UNDER F-14-124.
2. IF HOUSE CONSTRUCTION IS CONCURRENT WITH ROAD CONSTRUCTION, COORDINATE THE WORK ON THESE PLANS WITH F-14-124.
3. NO STOCKPILE WILL BE PERMITTED ON LOTS BEING DEVELOPED UNDER THIS SITE DEVELOPMENT PLAN.
4. SEEDING AND STABILIZATION IS TO BE PERFORMED AT THE DIRECTION OF THE SEDIMENT CONTROL INSPECTOR OR IN COMPLIANCE WITH THE STANDARD SEEDING AND STABILIZATION NOTES WHICHEVER IS MORE RESTRICTIVE.
5. FOR SEQUENCE OF CONSTRUCTION FOR EACH LOT, SEE SHEET 13, EROSION AND SEDIMENT CONTROL NOTES & DETAILS.
6. CONTRACTOR SHALL MAINTAIN PERIMETER SEDIMENT CONTROL AT ALL TIMES AND IN THE EVENT OF SEDIMENT/DEBRIS LEAVING A DISTURBED BUILDING SITE, THE CONTRACTOR SHALL BE RESPONSIBLE FOR THE FLUSHING/CLEANING OF STORM DRAIN SYSTEM OF SEDIMENT/DEBRIS AND AT THE REQUEST OF THE SEDIMENT CONTROL INSPECTOR.

APPROVED: DEPARTMENT OF PLANNING AND ZONING

CHIEF, DIVISION OF LAND DEVELOPMENT	DATE 8-26-16
CHIEF, DEVELOPMENT ENGINEERING DIVISION	DATE 8-24-16
DIRECTOR - DEPARTMENT OF PLANNING AND ZONING	DATE 8-26-16

GENERAL NOTE:
IT IS THE RESPONSIBILITY OF THE CONTRACTOR TO REVIEW ALL OF THE DRAWINGS AND SPECIFICATIONS ASSOCIATED WITH THIS PROJECT WORK SCOPE PRIOR TO THE INITIATION OF CONSTRUCTION. SHOULD THE CONTRACTOR FIND A CONFLICT WITH THE DOCUMENTS RELATIVE TO THE SPECIFICATIONS OR APPLICABLE CODES, IT IS THE CONTRACTOR'S RESPONSIBILITY TO NOTIFY THE PROJECT ENGINEER OF RECORD IN WRITING PRIOR TO THE START OF CONSTRUCTION. FAILURE BY THE CONTRACTOR TO NOTIFY THE PROJECT ENGINEER SHALL CONSTITUTE ACCEPTANCE OF FULL RESPONSIBILITY BY THE CONTRACTOR TO COMPLETE THE SCOPE OF THE WORK AS DEFINED BY THE DRAWINGS AND IN FULL CONFORMANCE WITH LOCAL REGULATIONS AND CODES.

THIS DEVELOPMENT PLAN IS APPROVED FOR SOIL EROSION AND SEDIMENT CONTROL BY THE HOWARD SOIL CONSERVATION DISTRICT.

HOWARD SCD — DATE 7/19/16

ENGINEER'S CERTIFICATE

"I HEREBY CERTIFY THAT THIS PLAN FOR EROSION AND SEDIMENT CONTROL REPRESENTS A PRACTICAL AND WORKABLE PLAN BASED ON MY PERSONAL KNOWLEDGE OF THE SITE CONDITIONS AND IT WAS PREPARED IN ACCORDANCE WITH THE REQUIREMENTS OF THE HOWARD SOIL CONSERVATION DISTRICT."

SIGNATURE OF ENGINEER — DATE 6/30/16
BRANDON R. ROWE, P.E.

ESTATES AT PATAPSCO PARK

55 SINGLE FAMILY DETACHED UNITS

DEVELOPER'S CERTIFICATE

"I/WE HEREBY CERTIFY THAT ALL DEVELOPMENT AND CONSTRUCTION WILL BE DONE ACCORDING TO THIS PLAN, AND THAT ANY RESPONSIBLE PERSONNEL INVOLVED IN THE CONSTRUCTION PROJECT WILL HAVE A CERTIFICATE OF ATTENDANCE AT A DEPARTMENT OF THE ENVIRONMENT APPROVED TRAINING PROGRAM FOR THE CONTROL OF SEDIMENT AND EROSION BEFORE BEGINNING THE PROJECT. I ALSO AUTHORIZE PERIODIC ONSITE INSPECTION BY THE HOWARD SOIL CONSERVATION DISTRICT."

PROJ MAN. PLEASANTS DEV. LLC AGENT FOR ESTATES AT PATAPSCO PARK LLC
SIGNATURE OF DEVELOPER — DATE 7/1/16
DAN SNYDER, PROJECT MANAGER

OWNER:	DEVELOPER:
ESTATES AT PATAPSCO PARK, LLC 24012 FREDERICK ROAD CLARKSBURG, MD 20861 CONTACT: MR. DAN SNYDER PHONE: (301) 674-8509	ESTATES AT PATAPSCO PARK, LLC 24012 FREDERICK ROAD CLARKSBURG, MD 20861 CONTACT: MR. DAN SNYDER PHONE: (301) 674-8509

PERMIT INFORMATION CHART

SUBDIVISION NAME: ESTATES AT PATAPSCO PARK		SECTION/AREA: N/A		LOT/PARCEL NO.: 203-205, 208-210, 213-248, & 373-385	
PLAT # OR L/F: #23421	GRID #: 5, 6, 11, 12	ZONING: R-20 & R-ED	TAX MAP NO.: 17	ELECT DISTR: 2ND	CENSUS TRACT: 602100

PREVIOUS FILE No. : SP-13-012, ECP-13-029, WP-13-165, PB CASE NO. 403, F-14-124, PLATS 23421 TO 23436, F-16-051, PLATS 23596 - 23609, SDP-16-019, CONT.# 10-3500 (FORCE MAIN)

PROFESSIONAL CERTIFICATION
I, BRANDON R. ROWE, HEREBY CERTIFY THAT THESE DOCUMENTS WERE PREPARED OR APPROVED BY ME, AND THAT I AM A DULY LICENSED PROFESSIONAL ENGINEER UNDER THE LAWS OF THE STATE OF MARYLAND, LICENSE NO. 40808, EXPIRATION DATE: 7/3/2017

BOHLER ENGINEERING
CIVIL & CONSULTING ENGINEERS
SURVEYORS
PROJECT MANAGERS
ENVIRONMENTAL CONSULTANTS
LANDSCAPE ARCHITECTS
CORPORATE OFFICE: ◆ WARREN, NJ
OFFICES: ◆ SOUTHBOROUGH, MA ◆ ALBANY, NY ◆ RONKONKOMA, NY ◆ CHALFONT, PA ◆ CENTER VALLEY, PA ◆ TAMPA, FL ◆ BOWIE, MD ◆ TOWSON, MD ◆ STERLING, VA ◆ WARRENTON, VA ◆ FORT LAUDERDALE, FL ◆ PHILADELPHIA, PA

THE INFORMATION, DESIGN AND CONTENT OF THIS PLAN ARE PROPRIETARY AND SHALL NOT BE COPIED OR USED FOR ANY PURPOSE WITHOUT PRIOR WRITTEN AUTHORIZATION FROM BOHLER ENGINEERING. ONLY APPROVED, SIGNED AND SEALED PLANS SHALL BE UTILIZED FOR CONSTRUCTION PURPOSES © 2008 BOHLER ENGINEERING

REVISIONS

REV	DATE	COMMENT	BY

DIG WITH CARE — CALL BEFORE YOU DIG

THE FOLLOWING STATES REQUIRE NOTIFICATION BY EXCAVATORS, DESIGNERS, OR ANY PERSON PREPARING TO DISTURB THE EARTH'S SURFACE ANYWHERE IN THE STATE. IN VIRGINIA, MARYLAND, THE DISTRICT OF COLUMBIA, AND DELAWARE CALL - 811
(WV 1-800-245-4848) (PA 1-800-242-1776) (DC 1-800-257-7777) (VA 1-800-552-7001) (MD 1-800-257-7777) (DE 1-800-282-8555)

PROJECT No.:	MD152013
DRAWN BY:	AVG
CHECKED BY:	JMA
DATE:	6/24/16
SCALE:	1" = 30'
CAD I.D.:	SS2

PROJECT: SITE DEVELOPMENT PLANS (PHASE II) FOR

ESTATES AT PATAPSCO PARK

SINGLE FAMILY DETACH UNITS
BUILDABLE LOTS 203-205, 208-210, 213-248 & 373-385
PLAT NOs. 23596 - 23609

LOCATION OF SITE
ROGERS AVENUE
HOWARD COUNTY

BOHLER ENGINEERING
901 DULANEY VALLEY ROAD, SUITE 801
TOWSON, MARYLAND 21204
Phone: (410) 821-7900
Fax: (410) 821-7987
www.BohlerEngineering.com

B.R. ROWE
STATE OF MARYLAND — BRANDON R. ROWE — PROFESSIONAL ENGINEER — No. 40808

SHEET TITLE:
EROSION AND SEDIMENT CONTROL PLAN

SHEET NUMBER:

SDP-16-050

H:\2015\MD152013\DRAWINGS\PLAN SETS\SITE DEVELOPMENT PLANS - PHASE-II\MD152013SS2.DWG PRINTED BY: RBOWEN 6.28.16 @ 11:23 AM LAST SAVED BY: RBOWEN

EROSION AND SEDIMENT CONTROL LEGEND

Symbol	Meaning
SCE	STABILIZED CONSTRUCTION ENTRANCE
—SF—	SILT FENCE
—SSF—	SUPER SILT FENCE
LOD	LIMIT OF DISTURBANCE (EACH LOT)
- - -	SOIL DIVIDE
MaB	SOIL LABEL
▲	FOREST CONSERVATION SIGNAGE
ST-XX	SPECIMEN TREE (TO REMAIN)

SOILS

SYMBOL	DESCRIPTION	K-FACTOR	HYDRIC	HYDROLOGIC GROUP
GbB	GLENELG LOAM, 3 TO 8 PERCENT SLOPES	0.37	YES	C
GnB	GLENVILLE-BAILE SILT LOAM, 0 TO 8 PERCENT SLOPES	0.37	YES	C
MaC	MANOR SILT LOAM, 8 TO 15 PERCENT SLOPES	0.24	NO	B

EROSION AND SEDIMENT CONTROL NOTES:

1. CONTRACTOR TO ACCOUNT FOR BASEMENT CUT BY LOWERING ELEVATIONS OF LOTS AS REQUIRED. GENERAL GRADING DESIGN SHOULD REMAIN THE SAME. LOTS SHOULD BE BROUGHT TO FINAL GRADE AFTER SDP APPROVAL WHEN HOUSES ARE BUILT AND CUT IN BASEMENTS IS AVAILABLE.
2. REFER TO SHEETS 12 & 13 FOR SEQUENCE OF CONSTRUCTION, SEDIMENT CONTROL NOTES, AND SEDIMENT CONTROL DETAILS.
3. ALL PROPOSED WORK OUTSIDE OF PERIMETER CONTROLS SHALL BE PERMANENTLY STABILIZED AT THE END OF EACH WORK DAY.
4. PROPOSED SILT FENCE IS TO BE CHANGED TO SUPER SILT FENCE AT THE DIRECTION OF THE SEDIMENT CONTROL INSPECTOR.
5. EITHER TEMPORARY OR PERMANENT SEEDING IS TO BE PERFORMED AT THE DIRECTION OF THE SEDIMENT CONTROL INSPECTOR OR AT THE TIME FRAMES REQUIRED BY THE 2011 MARYLAND STANDARDS AND SPECIFICATIONS FOR SOIL EROSION AND SEDIMENT CONTROL, WHICHEVER IS MORE RESTRICTIVE.
6. CONTRACTOR TO INSTALL STABILIZATION MATTING IN ALL SWALES AND ON ALL SLOPES 3:1 OR GREATER.
7. SHOULD THE STOCKPILE EXCEED 15 FT. IN HEIGHT, IT MUST BE BENCHED.
8. LOTS SHALL BE PERMANENTLY STABILIZED AS SOON AS REASONABLY POSSIBLE TO HELP PREVENT SEDIMENTATION TO SWM FACILITIES.

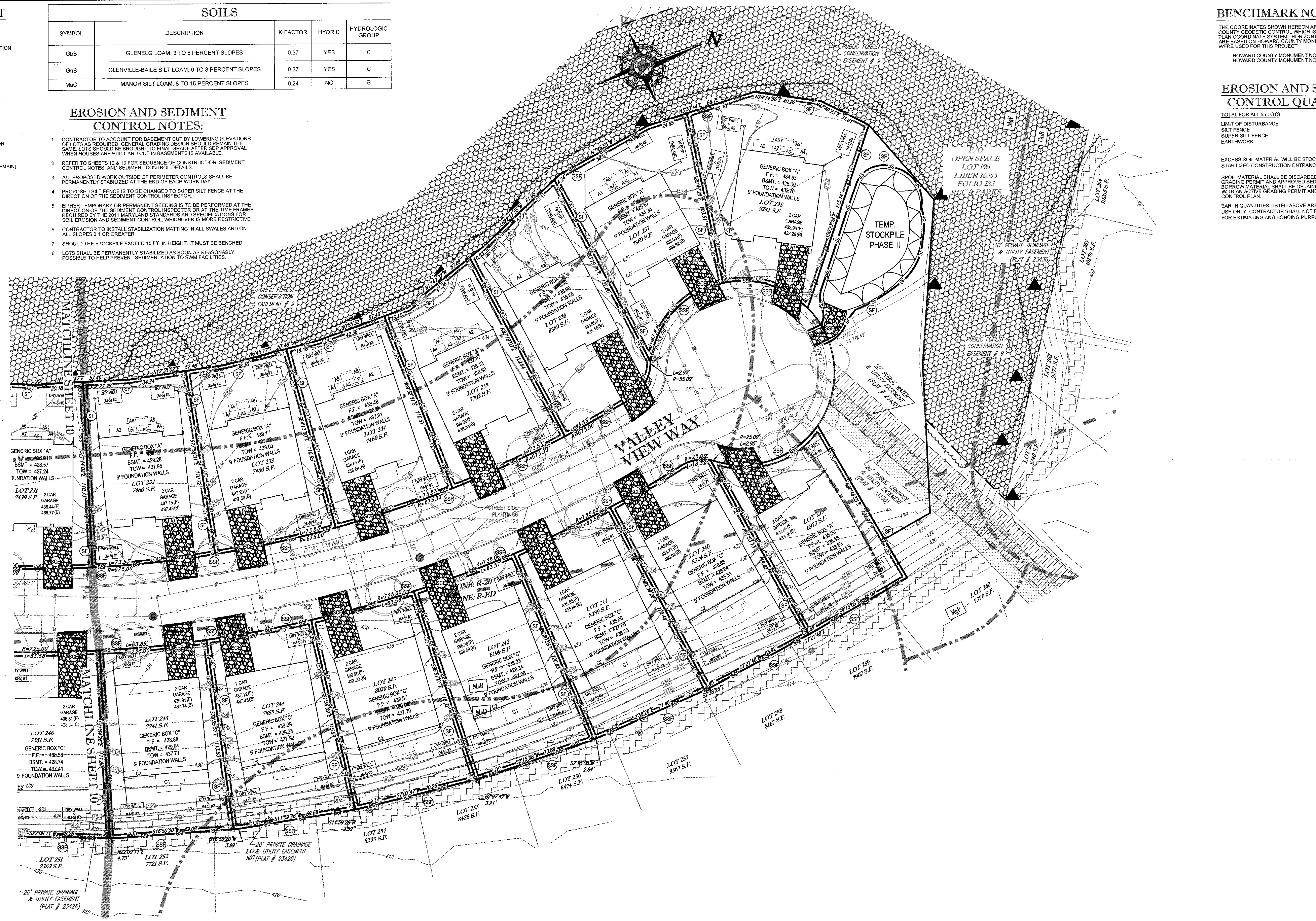

BENCHMARK NOTE:

THE COORDINATES SHOWN HEREON ARE BASED UPON THE HOWARD COUNTY GEODETIC CONTROL WHICH IS BASED UPON THE MARYLAND STATE PLAN COORDINATE SYSTEM. HORIZONTAL AND VERTICAL CONTROL DATUM ARE BASED ON HOWARD COUNTY MONUMENT NOS. 17-F7 AND 17-FA WHICH WERE USED FOR THIS PROJECT.

HOWARD COUNTY MONUMENT NO: 17-F7 ELEV. = 469.399
HOWARD COUNTY MONUMENT NO: 17-FA ELEV. = 476.721

EROSION AND SEDIMENT CONTROL QUANTITIES:

TOTAL FOR ALL 55 LOTS

LIMIT OF DISTURBANCE:	9.0 AC.
SILT FENCE:	8,770 LF
SUPER SILT FENCE:	4,901 LF
EARTHWORK:	43,000 CY CUT 44,000 CY FILL 0 CY EXPORT
EXCESS SOIL MATERIAL WILL BE STOCKPILED	ONSITE
STABILIZED CONSTRUCTION ENTRANCE:	55 EA

SPOIL MATERIAL SHALL BE DISCARDED AT A SITE WITH AN ACTIVE GRADING PERMIT AND APPROVED SEDIMENT CONTROL PLAN. BORROW MATERIAL SHALL BE OBTAINED FROM AN APPROVED SITE WITH AN ACTIVE GRADING PERMIT AND AN APPROVED SEDIMENT CONTROL PLAN.

EARTH QUANTITIES LISTED ABOVE ARE FOR SEDIMENT CONTROL USE ONLY. CONTRACTOR SHALL NOT RELY ON THESE FIGURES FOR ESTIMATING AND BONDING PURPOSES.

NOTE:

SEE SHEET 19 OF 19 FOR ADDITIONAL INFORMATION ON SEDIMENT CONTROL AND TEMPORARY STORMWATER MANAGEMENT MEASURES FROM FINAL ROAD CONSTRUCTION PLANS (F-14-124).

NOTE: SEE SHEETS 14-18 FOR STORMWATER MANAGEMENT FACILITIES THAT WILL SERVE INDIVIDUAL LOTS.

NOTES:

1. TEMPORARY SWM IS PROVIDED UNDER F-14-124.
2. IF HOUSE CONSTRUCTION IS CONCURRENT WITH ROAD CONSTRUCTION, COORDINATE THE WORK ON THESE PLANS WITH F-14-124.
3. NO STOCKPILE WILL BE PERMITTED ON LOTS BEING DEVELOPED UNDER THIS SITE DEVELOPMENT PLAN.
4. SEEDING AND STABILIZATION IS TO BE PERFORMED AT THE DIRECTION OF THE SEDIMENT CONTROL INSPECTOR OR IN COMPLIANCE WITH THE STANDARD SEEDING AND STABILIZATION NOTES WHICHEVER IS MORE RESTRICTIVE.
5. FOR SEQUENCE OF CONSTRUCTION FOR EACH LOT, SEE SHEET 13, EROSION AND SEDIMENT CONTROL NOTES & DETAILS.
6. CONTRACTOR SHALL MAINTAIN PERIMETER SEDIMENT CONTROL AT ALL TIMES AND IN THE EVENT OF SEDIMENT/DEBRIS LEAVING A DISTURBED BUILDING SITE, THE CONTRACTOR SHALL BE RESPONSIBLE FOR THE FLUSHING/CLEANING OF STORM DRAIN SYSTEM OF SEDIMENT/DEBRIS AND AT THE REQUEST OF THE SEDIMENT CONTROL INSPECTOR.

EROSION AND SEDIMENT CONTROL UTILITY INSTALLATION NOTES:

1. CONTRACTOR SHALL OPEN ONLY THAT SECTION OF TRENCH THAT CAN BE BACKFILLED AND STABILIZED EACH DAY. IF TRENCH MUST REMAIN OPEN LONGER THAN ONE DAY, SILT FENCE SHALL BE PLACED BELOW (DOWNSLOPE OF) TRENCH.
2. PLACE ALL EXCAVATED MATERIAL ON UPHILL SIDE OF TRENCH.
3. ANY SEDIMENT CONTROLS DISTURBED BY UTILITY CONSTRUCTION ARE TO BE REPAIRED IMMEDIATELY.
4. THE CONTRACTOR SHALL TAKE APPROPRIATE MEASURES TO PROTECT PEDESTRIANS AT ALL TIMES DURING UNDERGROUND UTILITY CONSTRUCTION.

APPROVED: DEPARTMENT OF PLANNING AND ZONING

Signature	Title	Date
Kent Sheubrooks (signed)	CHIEF, DIVISION OF LAND DEVELOPMENT	8-26-16
Chad Edmondson (signed)	CHIEF, DEVELOPMENT ENGINEERING DIVISION	8-24-16
Valdis Lazdins (signed)	DIRECTOR - DEPARTMENT OF PLANNING AND ZONING	8-26-16

GENERAL NOTE:
IT IS THE RESPONSIBILITY OF THE CONTRACTOR TO REVIEW ALL OF THE DRAWINGS AND SPECIFICATIONS ASSOCIATED WITH THIS PROJECT WORK SCOPE PRIOR TO THE INITIATION OF CONSTRUCTION. SHOULD THE CONTRACTOR FIND A CONFLICT WITH THE DOCUMENTS RELATIVE TO THE SPECIFICATIONS OR APPLICABLE CODES, IT IS THE CONTRACTOR'S RESPONSIBILITY TO NOTIFY THE PROJECT ENGINEER OF RECORD IN WRITING PRIOR TO THE START OF CONSTRUCTION. FAILURE BY THE CONTRACTOR TO NOTIFY THE PROJECT ENGINEER SHALL CONSTITUTE ACCEPTANCE OF FULL RESPONSIBILITY BY THE CONTRACTOR TO COMPLETE THE SCOPE OF THE WORK AS DEFINED BY THE DRAWINGS AND IN FULL CONFORMANCE WITH LOCAL REGULATIONS AND CODES.

THIS DEVELOPMENT PLAN IS APPROVED FOR SOIL EROSION AND SEDIMENT CONTROL BY THE HOWARD SOIL CONSERVATION DISTRICT.

John R. Robertson (signed) — HOWARD SCD — DATE: 7/19/16

ENGINEER'S CERTIFICATE

"I HEREBY CERTIFY THAT THIS PLAN FOR EROSION AND SEDIMENT CONTROL REPRESENTS A PRACTICAL AND WORKABLE PLAN BASED ON MY PERSONAL KNOWLEDGE OF THE SITE CONDITIONS AND IT WAS PREPARED IN ACCORDANCE WITH THE REQUIREMENTS OF THE HOWARD SOIL CONSERVATION DISTRICT."

SIGNATURE OF ENGINEER — BRANDON R. ROWE, P.E. — DATE: 6/30/16

ESTATES AT PATAPSCO PARK

55 SINGLE FAMILY DETACHED UNITS

DEVELOPER'S CERTIFICATE

"I/WE HEREBY CERTIFY THAT ALL DEVELOPMENT AND CONSTRUCTION WILL BE DONE ACCORDING TO THIS PLAN, AND THAT ANY RESPONSIBLE PERSONNEL INVOLVED IN THE CONSTRUCTION PROJECT WILL HAVE A CERTIFICATE OF ATTENDANCE AT A DEPARTMENT OF THE ENVIRONMENT APPROVED TRAINING PROGRAM FOR THE CONTROL OF SEDIMENT AND EROSION BEFORE BEGINNING THE PROJECT. I ALSO AUTHORIZE PERIODIC ONSITE INSPECTION BY THE HOWARD SOIL CONSERVATION DISTRICT."

(signed) PROJ. MAN. PLEASANT DEV. LLC, AGENT FOR ESTATES AT PATAPSCO PARK LLC
SIGNATURE OF DEVELOPER — DAN SNYDER, PROJECT MANAGER — DATE: 7/1/16

OWNER:	DEVELOPER:
ESTATES AT PATAPSCO PARK, LLC 24012 FREDERICK ROAD CLARKSBURG, MD 20861 CONTACT: MR. DAN SNYDER PHONE: (301) 674-8509	ESTATES AT PATAPSCO PARK, LLC 24012 FREDERICK ROAD CLARKSBURG, MD 20861 CONTACT: MR. DAN SNYDER PHONE: (301) 674-8509

PERMIT INFORMATION CHART

SUBDIVISION NAME: ESTATES AT PATAPSCO PARK		SECTION/AREA: N/A		LOT/PARCEL NO.: 203-205, 208-210, 213-248, & 373-385	
PLAT # OR L/F: #23421	GRID #: 5, 6, 11, 12	ZONING: R-20 & R-ED	TAX MAP NO.: 17	ELECT DISTR: 2ND	CENSUS TRACT: 602100

PREVIOUS FILE No. : SP-13-012, ECP-13-029, WP-13-165, PB CASE NO. 403, F-14-124, PLATS 23421 TO 23436, F-16-051, PLATS 23596 - 23609, SDP-16-019, CONT.# 10-3500 (FORCE MAIN)

PROFESSIONAL CERTIFICATION
I, BRANDON R. ROWE, HEREBY CERTIFY THAT THESE DOCUMENTS WERE PREPARED OR APPROVED BY ME, AND THAT I AM A DULY LICENSED PROFESSIONAL ENGINEER UNDER THE LAWS OF THE STATE OF MARYLAND, LICENSE NO. 40808, EXPIRATION DATE: 7/3/2017

1" = 30'

BOHLER ENGINEERING
CIVIL & CONSULTING ENGINEERS
SURVEYORS
PROJECT MANAGERS
ENVIRONMENTAL CONSULTANTS
LANDSCAPE ARCHITECTS
CORPORATE OFFICE: WARREN, NJ
OFFICES: SOUTHBOROUGH, MA; ALBANY, NY; RONKONKOMA, NY; CHALFONT, PA; CENTER VALLEY, PA; TAMPA, FL; BOWIE, MD; TOWSON, MD; STERLING, VA; WARRENTON, VA; FORT LAUDERDALE, FL; PHILADELPHIA, PA

THE INFORMATION, DESIGN AND CONTENT OF THIS PLAN ARE PROPRIETARY AND SHALL NOT BE COPIED OR USED FOR ANY PURPOSE WITHOUT PRIOR WRITTEN AUTHORIZATION FROM BOHLER ENGINEERING. ONLY APPROVED, SIGNED AND SEALED PLANS SHALL BE UTILIZED FOR CONSTRUCTION PURPOSES. © 2008 BOHLER ENGINEERING.

REVISIONS

REV	DATE	COMMENT	BY

THE FOLLOWING STATES REQUIRE NOTIFICATION BY EXCAVATORS, DESIGNERS, OR ANY PERSON PREPARING TO DISTURB THE EARTH'S SURFACE ANYWHERE IN THE STATE. IN VIRGINIA, MARYLAND, THE DISTRICT OF COLUMBIA, AND DELAWARE CALL - 811
(WV 1-800-245-4848) (PA 1-800-242-1776) (DC 1-800-257-7777) (VA 1-800-552-7001) (MD 1-800-257-7777) (DE 1-800-282-8555)

PROJECT No.:	MD152013
DRAWN BY:	AVG
CHECKED BY:	JMA
DATE:	6/24/16
SCALE:	1" = 30'
CAD I.D.:	SS2

PROJECT: SITE DEVELOPMENT PLANS (PHASE II) FOR

ESTATES AT PATAPSCO PARK

SINGLE FAMILY DETACH UNITS
BUILDABLE LOTS 203-205, 208-210, 213-248 & 373-385
PLAT NOs. 23596 - 23609

LOCATION OF SITE
ROGERS AVENUE
HOWARD COUNTY

BOHLER ENGINEERING
901 DULANEY VALLEY ROAD, SUITE 801
TOWSON, MARYLAND 21204
Phone: (410) 821-7900
Fax: (410) 821-7987
www.BohlerEngineering.com

B.R. ROWE
STATE OF MARYLAND — BRANDON R. ROWE — PROFESSIONAL ENGINEER — No. 40808 — 6/30/16

SHEET TITLE:
EROSION AND SEDIMENT CONTROL PLAN

SHEET NUMBER:

SDP-16-050

H:\2015\MD152013\DRAWINGS\PLAN SETS\SITE DEVELOPMENT PLANS - PHASE-II\MD152013SS2.DWG PRINTED BY: RBOWEN 6.28.16 @ 11:23 AM LAST SAVED BY: RBOWEN

B-4 STANDARDS AND SPECIFICATIONS FOR VEGETATIVE STABILIZATION

DEFINITION
USING VEGETATION AS COVER TO PROTECT EXPOSED SOIL FROM EROSION.

PURPOSE
TO PROMOTE THE ESTABLISHMENT OF VEGETATION ON EXPOSED SOIL.

CONDITIONS WHERE PRACTICE APPLIES
ON ALL DISTURBED AREAS NOT STABILIZED BY OTHER METHODS. THIS SPECIFICATION IS DIVIDED INTO SECTIONS ON INCREMENTAL STABILIZATION; SOIL PREPARATION, SOIL AMENDMENTS AND TOPSOILING; SEEDING AND MULCHING; TEMPORARY STABILIZATION; AND PERMANENT STABILIZATION.

EFFECTS ON WATER QUALITY AND QUANTITY
STABILIZATION PRACTICES ARE USED TO PROMOTE THE ESTABLISHMENT OF VEGETATION ON EXPOSED SOIL. WHEN SOIL IS STABILIZED WITH VEGETATION, THE SOIL IS LESS LIKELY TO ERODE AND MORE LIKELY TO ALLOW INFILTRATION OF RAINFALL, THEREBY REDUCING SEDIMENT LOADS AND RUNOFF TO DOWNSTREAM AREAS.
PLANTING VEGETATION IN DISTURBED AREAS WILL HAVE AN EFFECT ON THE WATER BUDGET, ESPECIALLY ON VOLUMES AND RATES OF RUNOFF, INFILTRATION, EVAPORATION, TRANSPIRATION, PERCOLATION, AND GROUNDWATER RECHARGE. OVER TIME, VEGETATION WILL INCREASE ORGANIC MATTER CONTENT AND IMPROVE THE WATER HOLDING CAPACITY OF THE SOIL AND SUBSEQUENT PLANT GROWTH.
VEGETATION WILL HELP REDUCE THE MOVEMENT OF SEDIMENT, NUTRIENTS, AND OTHER CHEMICALS CARRIED BY RUNOFF TO RECEIVING WATERS. PLANTS WILL ALSO HELP PROTECT GROUNDWATER SUPPLIES BY ASSIMILATING THOSE SUBSTANCES PRESENT WITHIN THE ROOT ZONE.
SEDIMENT CONTROL PRACTICES MUST REMAIN IN PLACE DURING GRADING, SEEDBED PREPARATION, SEEDING, MULCHING, AND VEGETATIVE ESTABLISHMENT.

ADEQUATE VEGETATIVE ESTABLISHMENT
INSPECT SEEDED AREAS FOR VEGETATIVE ESTABLISHMENT AND MAKE NECESSARY REPAIRS, REPLACEMENTS, AND RESEEDINGS WITHIN THE PLANTING SEASON.
1. ADEQUATE VEGETATIVE STABILIZATION REQUIRES 95 PERCENT GROUNDCOVER.
2. IF AN AREA HAS LESS THAN 40 PERCENT GROUNDCOVER, RESTABILIZE FOLLOWING THE ORIGINAL RECOMMENDATIONS FOR LIME, FERTILIZER, SEEDBED PREPARATION, AND SEEDING.
3. IF AN AREA HAS BETWEEN 40 AND 94 PERCENT GROUNDCOVER, OVER-SEED AND FERTILIZE USING HALF OF THE RATES ORIGINALLY SPECIFIED.
4. MAINTENANCE FERTILIZER RATES FOR PERMANENT SEEDING ARE SHOWN IN TABLE B.6.

B-4-1 STANDARDS AND SPECIFICATIONS FOR INCREMENTAL STABILIZATION

DEFINITION
ESTABLISHMENT OF VEGETATIVE COVER ON CUT AND FILL SLOPES.

PURPOSE
TO PROVIDE TIMELY VEGETATIVE COVER ON CUT AND FILL SLOPES AS WORK PROGRESSES.

CONDITIONS WHERE PRACTICE APPLIES
ANY CUT OR FILL SLOPE GREATER THAN 15 FEET IN HEIGHT. THIS PRACTICE ALSO APPLIES TO STOCKPILES.

CRITERIA
A. INCREMENTAL STABILIZATION - CUT SLOPES
1. EXCAVATE AND STABILIZE CUT SLOPES IN INCREMENTS NOT TO EXCEED 15 FEET IN HEIGHT. PREPARE SEEDBED AND APPLY SEED AND MULCH ON ALL CUT SLOPES AS THE WORK PROGRESSES.
2. CONSTRUCTION SEQUENCE EXAMPLE (REFER TO FIGURE B.1):
   a. CONSTRUCT AND STABILIZE ALL TEMPORARY SWALES OR DIKES THAT WILL BE USED TO CONVEY RUNOFF AROUND THE EXCAVATION.
   b. PERFORM PHASE 1 EXCAVATION, PREPARE SEEDBED, AND STABILIZE.
   c. PERFORM PHASE 2 EXCAVATION, PREPARE SEEDBED, AND STABILIZE. OVERSEED PHASE 1 AREAS AS NECESSARY.
   d. PERFORM FINAL PHASE EXCAVATION, PREPARE SEEDBED, AND STABILIZE. OVERSEED PREVIOUSLY SEEDED AREAS AS NECESSARY.

NOTE: ONCE EXCAVATION HAS BEGUN THE OPERATION SHOULD BE CONTINUOUS FROM GRUBBING THROUGH THE COMPLETION OF GRADING AND PLACEMENT OF TOPSOIL (IF REQUIRED) AND PERMANENT SEED AND MULCH. ANY INTERRUPTIONS IN THE OPERATION OR COMPLETING THE OPERATION OUT OF THE SEEDING SEASON WILL NECESSITATE THE APPLICATION OF TEMPORARY STABILIZATION.

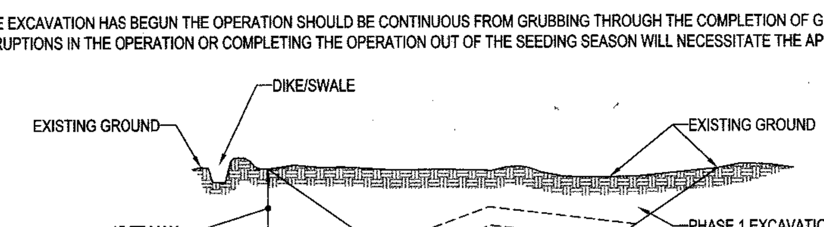

FIGURE B.1: INCREMENTAL STABILIZATION - CUT

B. INCREMENTAL STABILIZATION - FILL SLOPES
1. CONSTRUCT AND STABILIZE FILL SLOPES IN INCREMENTS NOT TO EXCEED 15 FEET IN HEIGHT. PREPARE SEEDBED AND APPLY SEED AND MULCH ON ALL SLOPES AS THE WORK PROGRESSES.
2. STABILIZE SLOPES IMMEDIATELY WHEN THE VERTICAL HEIGHT OF A LIFT REACHES 15 FEET, OR WHEN THE GRADING OPERATION CEASES AS PRESCRIBED IN THE PLANS.
3. AT THE END OF EACH DAY, INSTALL TEMPORARY WATER CONVEYANCE PRACTICE(S), AS NECESSARY, TO INTERCEPT SURFACE RUNOFF AND CONVEY IT DOWN THE SLOPE IN A NON-EROSIVE MANNER.
4. CONSTRUCTION SEQUENCE EXAMPLE (REFER TO FIGURE B.2):
   a. CONSTRUCT AND STABILIZE ALL TEMPORARY SWALES OR DIKES THAT WILL BE USED TO DIVERT RUNOFF AROUND THE FILL. CONSTRUCT SILT FENCE ON LOW SIDE OF FILL UNLESS OTHER METHODS SHOWN ON THE PLANS ADDRESS THIS AREA.
   b. AT THE END OF EACH DAY, INSTALL TEMPORARY WATER CONVEYANCE PRACTICE(S), AS NECESSARY, TO INTERCEPT SURFACE RUNOFF AND CONVEY IT DOWN THE SLOPE IN A NON-EROSIVE MANNER.
   c PLACE PHASE 1 FILL, PREPARE SEEDBED, AND STABILIZE.
   d. PLACE PHASE 2 FILL, PREPARE SEEDBED, AND STABILIZE.
   e. PLACE FINAL PHASE FILL, PREPARE SEEDBED, AND STABILIZE. OVERSEED PREVIOUSLY SEEDED AREAS AS NECESSARY.

NOTE: ONCE THE PLACEMENT OF FILL HAS BEGUN THE OPERATION SHOULD BE CONTINUOUS FROM GRUBBING THROUGH THE COMPLETION OF GRADING AND PLACEMENT OF TOPSOIL (IF REQUIRED) AND PERMANENT SEED AND MULCH. ANY INTERRUPTIONS IN THE OPERATION OR COMPLETING THE OPERATION OUT OF THE SEEDING SEASON WILL NECESSITATE THE APPLICATION OF TEMPORARY STABILIZATION.

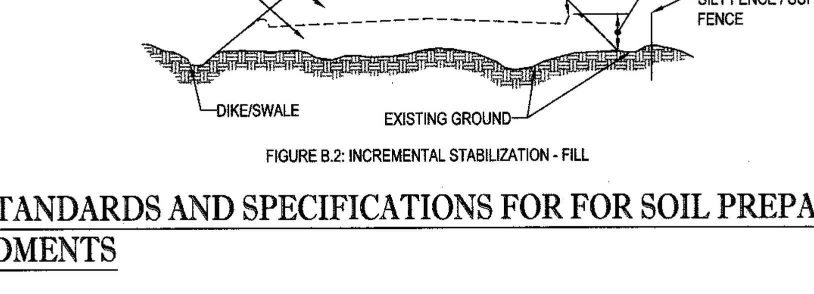

FIGURE B.2: INCREMENTAL STABILIZATION - FILL

B-4-2 STANDARDS AND SPECIFICATIONS FOR FOR SOIL PREPARATION, TOPSOILING, AND SOIL AMENDMENTS

DEFINITION
THE PROCESS OF PREPARING THE SOILS TO SUSTAIN ADEQUATE VEGETATIVE STABILIZATION.

PURPOSE
TO PROVIDE A SUITABLE SOIL MEDIUM FOR VEGETATIVE GROWTH.

CONDITIONS WHERE PRACTICE APPLIES
WHERE VEGETATIVE STABILIZATION IS TO BE ESTABLISHED.

CRITERIA
A. SOIL PREPARATION
1. TEMPORARY STABILIZATION
   a. SEEDBED PREPARATION CONSISTS OF LOOSENING SOIL TO A DEPTH OF 3 TO 5 INCHES BY MEANS OF SUITABLE AGRICULTURAL OR CONSTRUCTION EQUIPMENT, SUCH AS DISC HARROWS OR CHISEL PLOWS OR RIPPERS MOUNTED ON CONSTRUCTION EQUIPMENT. AFTER THE SOIL IS LOOSENED, IT MUST NOT BE ROLLED OR DRAGGED SMOOTH BUT LEFT IN THE ROUGHENED CONDITION. SLOPES 3:1 OR FLATTER ARE TO BE TRACKED WITH RIDGES RUNNING PARALLEL TO THE CONTOUR OF THE SLOPE.
   b. APPLY FERTILIZER AND LIME AS PRESCRIBED ON THE PLANS.
   c. INCORPORATE LIME AND FERTILIZER INTO THE TOP 3 TO 5 INCHES OF SOIL BY DISKING OR OTHER SUITABLE MEANS.
2. PERMANENT STABILIZATION
   a. A SOIL TEST IS REQUIRED FOR ANY EARTH DISTURBANCE OF 5 ACRES OR MORE. THE MINIMUM SOIL CONDITIONS REQUIRED FOR PERMANENT VEGETATIVE ESTABLISHMENT ARE:
      i. SOIL PH BETWEEN 6.0 AND 7.0.
      ii. SOLUBLE SALTS LESS THAN 500 PARTS PER MILLION (PPM).
      iii. SOIL CONTAINS LESS THAN 40 PERCENT CLAY BUT ENOUGH FINE GRAINED MATERIAL (GREATER THAN 30 PERCENT SILT PLUS CLAY) TO PROVIDE THE CAPACITY TO HOLD A MODERATE AMOUNT OF MOISTURE. AN EXCEPTION: IF LOVEGRASS WILL BE PLANTED, THEN A SANDY SOIL (LESS THAN 30 PERCENT SILT PLUS CLAY) WOULD BE ACCEPTABLE.
      iv. SOIL CONTAINS 1.5 PERCENT MINIMUM ORGANIC MATTER BY WEIGHT.
      v. SOIL CONTAINS SUFFICIENT PORE SPACE TO PERMIT ADEQUATE ROOT PENETRATION.
   b. APPLICATION OF AMENDMENTS OR TOPSOIL IS REQUIRED IF ON-SITE SOILS DO NOT MEET THE ABOVE CONDITIONS.
   c. GRADED AREAS MUST BE MAINTAINED IN A TRUE AND EVEN GRADE AS SPECIFIED ON THE APPROVED PLAN, THEN SCARIFIED OR OTHERWISE LOOSENED TO A DEPTH OF 3 TO 5 INCHES.
   d. APPLY SOIL AMENDMENTS AS SPECIFIED ON THE APPROVED PLAN OR AS INDICATED BY THE RESULTS OF A SOIL TEST.
   e. MIX SOIL AMENDMENTS INTO THE TOP 3 TO 5 INCHES OF SOIL BY DISKING OR OTHER SUITABLE MEANS. RAKE LAWN AREAS TO SMOOTH THE SURFACE, REMOVE LARGE OBJECTS LIKE STONES AND BRANCHES, AND READY THE AREA FOR SEED APPLICATION. LOOSEN SURFACE SOIL BY DRAGGING WITH A HEAVY CHAIN OR OTHER EQUIPMENT TO ROUGHEN THE SURFACE WHERE SITE CONDITIONS WILL NOT PERMIT NORMAL SEEDBED PREPARATION. TRACK SLOPES 3:1 OR FLATTER WITH TRACKED EQUIPMENT LEAVING THE SOIL IN AN IRREGULAR CONDITION WITH RIDGES RUNNING PARALLEL TO THE CONTOUR OF THE SLOPE. LEAVE THE TOP 1 TO 3 INCHES OF SOIL LOOSE AND FRIABLE. SEEDBED LOOSENING MAY BE UNNECESSARY ON NEWLY DISTURBED AREAS.

B. TOPSOILING
1. TOPSOIL IS PLACED OVER PREPARED SUBSOIL PRIOR TO ESTABLISHMENT OF PERMANENT VEGETATION. THE PURPOSE IS TO PROVIDE A SUITABLE SOIL MEDIUM FOR VEGETATIVE GROWTH. SOILS OF CONCERN HAVE LOW MOISTURE CONTENT, LOW NUTRIENT LEVELS, LOW PH, MATERIALS TOXIC TO PLANTS, AND/OR UNACCEPTABLE SOIL GRADATION.
2. TOPSOIL SALVAGED FROM AN EXISTING SITE MAY BE USED PROVIDED IT MEETS THE STANDARDS AS SET FORTH IN THESE SPECIFICATIONS. TYPICALLY, THE DEPTH OF TOPSOIL TO BE SALVAGED FOR A GIVEN SOIL TYPE CAN BE FOUND IN THE REPRESENTATIVE SOIL PROFILE SECTION IN THE SOIL SURVEY PUBLISHED BY USDA-NRCS.
3. TOPSOILING IS LIMITED TO AREAS HAVING 2:1 OR FLATTER SLOPES WHERE:
   a. THE TEXTURE OF THE EXPOSED SUBSOIL/PARENT MATERIAL IS NOT ADEQUATE TO PRODUCE VEGETATIVE GROWTH.
   b. THE SOIL MATERIAL IS SO SHALLOW THAT THE ROOTING ZONE IS NOT DEEP ENOUGH TO SUPPORT PLANTS OR FURNISH CONTINUING SUPPLIES OF MOISTURE AND PLANT NUTRIENTS.
   c. THE ORIGINAL SOIL TO BE VEGETATED CONTAINS MATERIAL TOXIC TO PLANT GROWTH.
   d. THE SOIL IS SO ACIDIC THAT TREATMENT WITH LIMESTONE IS NOT FEASIBLE.
4. AREAS HAVING SLOPES STEEPER THAN 2:1 REQUIRE SPECIAL CONSIDERATION AND DESIGN.
5. TOPSOIL SPECIFICATIONS: SOIL TO BE USED AS TOPSOIL MUST MEET THE FOLLOWING CRITERIA:
   a. TOPSOIL MUST BE A LOAM, SANDY LOAM, CLAY LOAM, SILT LOAM, SANDY CLAY LOAM, OR LOAMY SAND. OTHER SOILS MAY BE USED IF RECOMMENDED BY AN AGRONOMIST OR SOIL SCIENTIST AND APPROVED BY THE APPROPRIATE APPROVAL AUTHORITY. TOPSOIL MUST NOT BE A MIXTURE OF CONTRASTING TEXTURED SUBSOILS AND MUST CONTAIN LESS THAN 5 PERCENT BY VOLUME OF CINDERS, STONES, SLAG, COARSE FRAGMENTS, GRAVEL, STICKS, ROOTS, TRASH, OR OTHER MATERIALS LARGER THAN 1½ INCHES IN DIAMETER.
   b. TOPSOIL MUST BE FREE OF NOXIOUS PLANTS OR PLANT PARTS SUCH AS BERMUDA GRASS, QUACK GRASS, JOHNSON GRASS, NUT SEDGE, POISON IVY, THISTLE, OR OTHERS AS SPECIFIED.
   c. TOPSOIL SUBSTITUTES OR AMENDMENTS, AS RECOMMENDED BY A QUALIFIED AGRONOMIST OR SOIL SCIENTIST AND APPROVED BY THE APPROPRIATE APPROVAL AUTHORITY, MAY BE USED IN LIEU OF NATURAL TOPSOIL.
6. TOPSOIL APPLICATION
   a. EROSION AND SEDIMENT CONTROL PRACTICES MUST BE MAINTAINED WHEN APPLYING TOPSOIL.
   b. UNIFORMLY DISTRIBUTE TOPSOIL IN A 5 TO 8 INCH LAYER AND LIGHTLY COMPACT TO A MINIMUM THICKNESS OF 4 INCHES. SPREADING IS TO BE PERFORMED IN SUCH A MANNER THAT SODDING OR SEEDING CAN PROCEED WITH A MINIMUM OF ADDITIONAL SOIL PREPARATION AND TILLAGE. ANY IRREGULARITIES IN THE SURFACE RESULTING FROM TOPSOILING OR OTHER OPERATIONS MUST BE CORRECTED IN ORDER TO PREVENT THE FORMATION OF DEPRESSIONS OR WATER POCKETS.
   c. TOPSOIL MUST NOT BE PLACED IF THE TOPSOIL OR SUBSOIL IS IN A FROZEN OR MUDDY CONDITION, WHEN THE SUBSOIL IS EXCESSIVELY WET OR IN A CONDITION THAT MAY OTHERWISE BE DETRIMENTAL TO PROPER GRADING AND SEEDBED PREPARATION.

C. SOIL AMENDMENTS (FERTILIZER AND LIME SPECIFICATIONS)
1. SOIL TESTS MUST BE PERFORMED TO DETERMINE THE EXACT RATIOS AND APPLICATION RATES FOR BOTH LIME AND FERTILIZER ON SITES HAVING DISTURBED AREAS OF 5 ACRES OR MORE. SOIL ANALYSIS MAY BE PERFORMED BY A RECOGNIZED PRIVATE OR COMMERCIAL LABORATORY. SOIL SAMPLES TAKEN FOR ENGINEERING PURPOSES MAY ALSO BE USED FOR CHEMICAL ANALYSES.
2. FERTILIZERS MUST BE UNIFORM IN COMPOSITION, FREE FLOWING AND SUITABLE FOR ACCURATE APPLICATION BY APPROPRIATE EQUIPMENT. MANURE MAY BE SUBSTITUTED FOR FERTILIZER WITH PRIOR APPROVAL FROM THE APPROPRIATE APPROVAL AUTHORITY. FERTILIZERS MUST ALL BE DELIVERED TO THE SITE FULLY LABELED ACCORDING TO THE APPLICABLE LAWS AND MUST BEAR THE NAME, TRADE NAME OR TRADEMARK AND WARRANTY OF THE PRODUCER.
3. LIME MATERIALS MUST BE GROUND LIMESTONE (HYDRATED OR BURNT LIME MAY BE SUBSTITUTED EXCEPT WHEN HYDROSEEDING) WHICH CONTAINS AT LEAST 50 PERCENT TOTAL OXIDES (CALCIUM OXIDE PLUS MAGNESIUM OXIDE). LIMESTONE MUST BE GROUND TO SUCH FINENESS THAT AT LEAST 50 PERCENT WILL PASS THROUGH A #100 MESH SIEVE AND 98 TO 100 PERCENT WILL PASS THROUGH A #20 MESH SIEVE.
4. LIME AND FERTILIZER ARE TO BE EVENLY DISTRIBUTED AND INCORPORATED INTO THE TOP 3 TO 5 INCHES OF SOIL BY DISKING OR OTHER SUITABLE MEANS.
5. WHERE THE SUBSOIL IS EITHER HIGHLY ACIDIC OR COMPOSED OF HEAVY CLAYS, SPREAD GROUND LIMESTONE AT THE RATE OF 4 TO 8 TONS/ACRE (200-400 POUNDS PER 1,000 SQUARE FEET) PRIOR TO THE PLACEMENT OF TOPSOIL.

B-4-3 STANDARDS AND SPECIFICATIONS FOR SEEDING AND MULCHING

DEFINITION
THE APPLICATION OF SEED AND MULCH TO ESTABLISH VEGETATIVE COVER.

PURPOSE
TO PROTECT DISTURBED SOILS FROM EROSION DURING AND AT THE END OF CONSTRUCTION.

CONDITIONS WHERE PRACTICE APPLIES
TO THE SURFACE OF ALL PERIMETER CONTROLS, SLOPES, AND ANY DISTURBED AREA NOT UNDER ACTIVE GRADING.

CRITERIA
A. SEEDING
1. SPECIFICATIONS
   a. ALL SEED MUST MEET THE REQUIREMENTS OF THE MARYLAND STATE SEED LAW. ALL SEED MUST BE SUBJECT TO RE-TESTING BY A RECOGNIZED SEED LABORATORY. ALL SEED USED MUST HAVE BEEN TESTED WITHIN THE 6 MONTHS IMMEDIATELY PRECEDING THE DATE OF SOWING SUCH MATERIAL ON ANY PROJECT. REFER TO TABLE B.4 REGARDING THE QUALITY OF SEED. SEED TAGS MUST BE AVAILABLE UPON REQUEST TO THE INSPECTOR TO VERIFY TYPE OF SEED AND SEEDING RATE.
   b. MULCH ALONE MAY BE APPLIED BETWEEN THE FALL AND SPRING SEEDING DATES ONLY IF THE GROUND IS FROZEN. THE APPROPRIATE SEEDING MIXTURE MUST BE APPLIED WHEN THE GROUND THAWS.
   c. INOCULANTS: THE INOCULANT FOR TREATING LEGUME SEED IN THE SEED MIXTURES MUST BE A PURE CULTURE OF NITROGEN FIXING BACTERIA PREPARED SPECIFICALLY FOR THE SPECIES. INOCULANTS MUST NOT BE USED LATER THAN THE DATE INDICATED ON THE CONTAINER. ADD FRESH INOCULANTS AS DIRECTED ON THE PACKAGE. USE FOUR TIMES THE RECOMMENDED RATE WHEN HYDROSEEDING. NOTE: IT IS VERY IMPORTANT TO KEEP INOCULANT AS COOL AS POSSIBLE UNTIL USED. TEMPERATURES ABOVE 75 TO 80 DEGREES FAHRENHEIT CAN WEAKEN BACTERIA AND MAKE THE INOCULANT LESS EFFECTIVE.
   d. SOD OR SEED MUST NOT BE PLACED ON SOIL WHICH HAS BEEN TREATED WITH SOIL STERILANTS OR CHEMICALS USED FOR WEED CONTROL UNTIL SUFFICIENT TIME HAS ELAPSED (14 DAYS MIN.) TO PERMIT DISSIPATION OF PHYTO-TOXIC MATERIALS.
2. APPLICATION
   a. DRY SEEDING: THIS INCLUDES USE OF CONVENTIONAL DROP OR BROADCAST SPREADERS.
      i. INCORPORATE SEED INTO THE SUBSOIL AT THE RATES PRESCRIBED ON TEMPORARY SEEDING TABLE B.1, PERMANENT SEEDING TABLE B.3, OR SITE-SPECIFIC SEEDING SUMMARIES.
      ii. APPLY SEED IN TWO DIRECTIONS, PERPENDICULAR TO EACH OTHER. APPLY HALF THE SEEDING RATE IN EACH DIRECTION. ROLL THE SEEDED AREA WITH A WEIGHTED ROLLER TO PROVIDE GOOD SEED TO SOIL CONTACT.
   b. DRILL OR CULTIPACKER SEEDING: MECHANIZED SEEDERS THAT APPLY AND COVER SEED WITH SOIL.
      i. CULTIPACKING SEEDERS ARE REQUIRED TO BURY THE SEED IN SUCH A FASHION AS TO PROVIDE AT LEAST 1/4 INCH OF SOIL COVERING. SEEDBED MUST BE FIRM AFTER PLANTING.
      ii. APPLY SEED IN TWO DIRECTIONS, PERPENDICULAR TO EACH OTHER. APPLY HALF THE SEEDING RATE IN EACH DIRECTION.
   c. HYDROSEEDING: APPLY SEED UNIFORMLY WITH HYDROSEEDER (SLURRY INCLUDES SEED AND FERTILIZER).
      i. IF FERTILIZER IS BEING APPLIED AT THE TIME OF SEEDING, THE APPLICATION RATES SHOULD NOT EXCEED THE FOLLOWING: NITROGEN, 100 POUNDS PER ACRE TOTAL OF SOLUBLE NITROGEN; P2O5 (PHOSPHOROUS), 200 POUNDS PER ACRE; K2O (POTASSIUM), 200 POUNDS PER ACRE.
      ii. LIME: USE ONLY GROUND AGRICULTURAL LIMESTONE (UP TO 3 TONS PER ACRE MAY BE APPLIED BY HYDROSEEDING). NORMALLY, NOT MORE THAN 2 TONS ARE APPLIED BY HYDROSEEDING AT ANY ONE TIME. DO NOT USE BURNT OR HYDRATED LIME WHEN HYDROSEEDING.
      iii. MIX SEED AND FERTILIZER ON SITE AND SEED IMMEDIATELY AND WITHOUT INTERRUPTION.
      iv. WHEN HYDROSEEDING DO NOT INCORPORATE SEED INTO THE SOIL.

B. MULCHING
1. MULCH MATERIALS (IN ORDER OF PREFERENCE)
   a. STRAW CONSISTING OF THOROUGHLY THRESHED WHEAT, RYE, OAT, OR BARLEY AND REASONABLY BRIGHT IN COLOR. STRAW IS TO BE FREE OF NOXIOUS WEED SEEDS AS SPECIFIED IN THE MARYLAND SEED LAW AND NOT MUSTY, MOLDY, CAKED, DECAYED, OR EXCESSIVELY DUSTY. NOTE: USE ONLY STERILE STRAW MULCH IN AREAS WHERE ONE SPECIES OF GRASS IS DESIRED.
   b. WOOD CELLULOSE FIBER MULCH (WFCM) CONSISTING OF SPECIALLY PREPARED WOOD CELLULOSE PROCESSED INTO A UNIFORM FIBROUS PHYSICAL STATE.
      i. WCFM IS TO BE DYED GREEN OR CONTAIN A GREEN DYE IN THE PACKAGE THAT WILL PROVIDE AN APPROPRIATE COLOR TO FACILITATE VISUAL INSPECTION OF THE UNIFORMLY SPREAD SLURRY.
      ii. WCFM, INCLUDING DYE, MUST CONTAIN NO GERMINATION OR GROWTH INHIBITING FACTORS.
      iii. WCFM MATERIALS ARE TO BE MANUFACTURED AND PROCESSED IN SUCH A MANNER THAT THE WOOD CELLULOSE FIBER MULCH WILL REMAIN IN UNIFORM SUSPENSION IN WATER UNDER AGITATION AND WILL BLEND WITH SEED, FERTILIZER AND OTHER ADDITIVES TO FORM A HOMOGENEOUS SLURRY. THE MULCH MATERIAL MUST FORM A BLOTTER-LIKE GROUND COVER, ON APPLICATION, HAVING MOISTURE ABSORPTION AND PERCOLATION PROPERTIES AND MUST COVER AND HOLD GRASS SEED IN CONTACT WITH THE SOIL WITHOUT INHIBITING THE GROWTH OF THE GRASS SEEDLINGS.
      iv. WCFM MATERIAL MUST NOT CONTAIN ELEMENTS OR COMPOUNDS AT CONCENTRATION LEVELS THAT WILL BE PHYTO-TOXIC.
      v. WCFM MUST CONFORM TO THE FOLLOWING PHYSICAL REQUIREMENTS: FIBER LENGTH OF APPROXIMATELY 10 MILLIMETERS, DIAMETER APPROXIMATELY 1 MILLIMETER, PH RANGE OF 4.0 TO 8.5, ASH CONTENT OF 1.6 PERCENT MAXIMUM AND WATER HOLDING CAPACITY OF 90 PERCENT MINIMUM.
2. APPLICATION
   a. APPLY MULCH TO ALL SEEDED AREAS IMMEDIATELY AFTER SEEDING.
   b. WHEN STRAW MULCH IS USED, SPREAD IT OVER ALL SEEDED AREAS AT THE RATE OF 2 TONS PER ACRE TO A UNIFORM LOOSE DEPTH OF 1 TO 2 INCHES. APPLY MULCH TO ACHIEVE A UNIFORM DISTRIBUTION AND DEPTH SO THAT THE SOIL SURFACE IS NOT EXPOSED. WHEN USING A MULCH ANCHORING TOOL, INCREASE THE APPLICATION RATE TO 2.5 TONS PER ACRE.
   c. WOOD CELLULOSE FIBER USED AS MULCH MUST BE APPLIED AT A NET DRY WEIGHT OF 1500 POUNDS PER ACRE. MIX THE WOOD CELLULOSE FIBER WITH WATER TO ATTAIN A MIXTURE WITH A MAXIMUM OF 50 POUNDS OF WOOD CELLULOSE FIBER PER 100 GALLONS OF WATER.
3. ANCHORING
   a. PERFORM MULCH ANCHORING IMMEDIATELY FOLLOWING APPLICATION OF MULCH TO MINIMIZE LOSS BY WIND OR WATER. THIS MAY BE DONE BY ONE OF THE FOLLOWING METHODS (LISTED BY PREFERENCE), DEPENDING UPON THE SIZE OF THE AREA AND EROSION HAZARD:
      i. A MULCH ANCHORING TOOL IS A TRACTOR DRAWN IMPLEMENT DESIGNED TO PUNCH AND ANCHOR MULCH INTO THE SOIL SURFACE A MINIMUM OF 2 INCHES. THIS PRACTICE IS MOST EFFECTIVE ON LARGE AREAS, BUT IS LIMITED TO FLATTER SLOPES WHERE EQUIPMENT CAN OPERATE SAFELY. IF USED ON SLOPING LAND, THIS PRACTICE SHOULD FOLLOW THE CONTOUR.
      ii. WOOD CELLULOSE FIBER MAY BE USED FOR ANCHORING STRAW. APPLY THE FIBER BINDER AT A NET DRY WEIGHT OF 750 POUNDS PER ACRE. MIX THE WOOD CELLULOSE FIBER WITH WATER AT A MAXIMUM OF 50 POUNDS OF WOOD CELLULOSE FIBER PER 100 GALLONS OF WATER.
      iii. SYNTHETIC BINDERS SUCH AS ACRYLIC DLR (AGRO-TACK), DCA-70, PETROSET, TERRA TAX II, TERRA TACK AR OR OTHER APPROVED EQUAL MAY BE USED. FOLLOW APPLICATION RATES AS SPECIFIED BY THE MANUFACTURER. APPLICATION OF LIQUID BINDERS NEEDS TO BE HEAVIER AT THE EDGES WHERE WIND CATCHES MULCH, SUCH AS IN VALLEYS AND ON CRESTS OF BANKS. USE OF ASPHALT BINDERS IS STRICTLY PROHIBITED.
      iv. LIGHTWEIGHT PLASTIC NETTING MAY BE STAPLED OVER THE MULCH ACCORDING TO MANUFACTURER RECOMMENDATIONS. NETTING IS USUALLY AVAILABLE IN ROLLS 4 TO 15 FEET WIDE AND 300 TO 3,000 FEET LONG.

TEMPORARY SEEDING SUMMARY

HARDINESS ZONE (from Figure B.3): ZONE 6B SEED MIXTURE (from Table B.1)					FERTILIZER RATE (10-20-20)	LIME RATE
NO.	SPECIES	APPLICATION RATE (LB/AC)	SEEDING DATES	SEEDING DEPTHS		
COOL SEASON GRASSES						
1	ANNUAL RYEGRASS	40	3/1 - 5/15 8/1 - 10/15	0.5"	436 LB/AC (10 LB/1000 SF)	2 TONS/AC (90 LB/1000 SF)
2	BARLEY	96	3/1 - 5/15 8/1 - 10/15	1"		
3	OATS	72	3/1 - 5/15 8/1 - 10/15	1"		
4	WHEAT	120	3/1 - 5/15 8/1 - 10/15	1"		
5	CEREAL RYE	112	3/1 - 5/15 8/1 - 11/15	1"		
WARM SEASON GRASSES						
6	FOXTAIL MILLET	30	5/16 - 7/31	0.5"	436 LB/AC (10 LB/1000 SF)	2 TONS/AC (90 LB/1000 SF)
7	PEARL MILLET	20	5/16 - 7/31	0.5"		

1. SEEDING RATES FOR THE WARM-SEASON GRASSES ARE IN POUNDS OF PURE LIVE SEED (PLS). ACTUAL PLANTING RATES SHALL BE ADJUSTED TO REFLECT PERCENT SEED GERMINATION AND PURITY, AS TESTED. ADJUSTMENTS ARE USUALLY NOT NEEDED FOR THE COOL-SEASON GRASSES.

   SEEDING RATES LISTED ABOVE ARE FOR TEMPORARY SEEDINGS, WHEN PLANTED ALONE. WHEN PLANTED AS A NURSE CROP WITH PERMANENT SEED MIXES, USE 1/3 OF THE SEEDING RATE LISTED ABOVE
   FOR BARLEY, OATS, AND WHEAT. FOR SMALLER-SEEDED GRASSES (ANNUAL RYEGRASS, PEARL MILLET, FOXTAIL MILLET), DO NOT EXCEED MORE THAN 5% (BY WEIGHT) OF THE OVERALL PERMANENT
   SEEDING MIX. CEREAL RYE GENERALLY SHOULD NOT BE USED AS A NURSE CROP, UNLESS PLANTING WILL OCCUR IN VERY LATE FALL BEYOND THE SEEDING DATES FOR OTHER TEMPORARY SEEDINGS.
   CEREAL RYE HAS ALLELOPATHIC PROPERTIES THAT INHIBIT THE GERMINATION AND GROWTH OF OTHER PLANTS. IF IT MUST BE USED AS A NURSE CROP, SEED AT 1/3 OF THE RATE LISTED ABOVE.

   OATS ARE THE RECOMMENDED NURSE CROP FOR WARM-SEASON GRASSES.

2. FOR SANDY SOILS, PLANT SEEDS AT TWICE THE DEPTH LISTED ABOVE.
3. THE PLANTING DATES LISTED ARE AVERAGES FOR EACH ZONE AND MAY REQUIRE ADJUSTMENT TO REFLECT LOCAL CONDITIONS, ESPECIALLY NEAR THE BOUNDARIES OF THE ZONE.

B-4-4 STANDARDS AND SPECIFICATIONS FOR TEMPORARY STABILIZATION

DEFINITION
TO STABILIZE DISTURBED SOILS WITH VEGETATION FOR UP TO 6 MONTHS.

PURPOSE
TO USE FAST GROWING VEGETATION THAT PROVIDES COVER ON DISTURBED SOILS.

CONDITIONS WHERE PRACTICE APPLIES
EXPOSED SOILS WHERE GROUND COVER IS NEEDED FOR A PERIOD OF 6 MONTHS OR LESS. FOR LONGER DURATION OF TIME, PERMANENT STABILIZATION PRACTICES ARE REQUIRED.

CRITERIA
1. SELECT ONE OR MORE OF THE SPECIES OR SEED MIXTURES LISTED IN TABLE B.1 FOR THE APPROPRIATE PLANT HARDINESS ZONE (FROM FIGURE B.3), AND ENTER THEM IN THE TEMPORARY SEEDING SUMMARY BELOW ALONG WITH APPLICATION RATES, SEEDING DATES AND SEEDING DEPTHS. IF THIS SUMMARY IS NOT PUT ON THE PLAN AND COMPLETED, THEN TABLE B.1 PLUS FERTILIZER AND LIME RATES MUST BE PUT ON THE PLAN.
2. FOR SITES HAVING SOIL TESTS PERFORMED, USE AND SHOW THE RECOMMENDED RATES BY THE TESTING AGENCY. SOIL TESTS ARE NOT REQUIRED FOR TEMPORARY SEEDING.
3. WHEN STABILIZATION IS REQUIRED OUTSIDE OF A SEEDING SEASON, APPLY SEED AND MULCH OR STRAW MULCH ALONE AS PRESCRIBED IN SECTION B-4-3.A.1.B AND MAINTAIN UNTIL THE NEXT SEEDING SEASON.

B-4-5 STANDARDS AND SPECIFICATIONS FOR PERMANENT STABILIZATION

DEFINITION
TO STABILIZE DISTURBED SOILS WITH PERMANENT VEGETATION.

PURPOSE
TO USE LONG-LIVED PERENNIAL GRASSES AND LEGUMES TO ESTABLISH PERMANENT GROUND COVER ON DISTURBED SOILS.

CONDITIONS WHERE PRACTICE APPLIES
EXPOSED SOILS WHERE GROUND COVER IS NEEDED FOR 6 MONTHS OR MORE.

CRITERIA
A. SEED MIXTURES
1. GENERAL USE
   a. SELECT ONE OR MORE OF THE SPECIES OR MIXTURES LISTED IN TABLE B.3 FOR THE APPROPRIATE PLANT HARDINESS ZONE (FROM FIGURE B.3) AND BASED ON THE SITE CONDITION OR PURPOSE FOUND ON TABLE B.2. ENTER SELECTED MIXTURE(S), APPLICATION RATES, AND SEEDING DATES IN THE PERMANENT SEEDING SUMMARY. THE SUMMARY IS TO BE PLACED ON THE PLAN.
   b. ADDITIONAL PLANTING SPECIFICATIONS FOR EXCEPTIONAL SITES SUCH AS SHORELINES, STREAM BANKS, OR DUNES OR FOR SPECIAL PURPOSES SUCH AS WILDLIFE OR AESTHETIC TREATMENT MAY BE FOUND IN USDA-NRCS TECHNICAL FIELD OFFICE GUIDE, SECTION 342 - CRITICAL AREA PLANTING.
   c. FOR SITES HAVING DISTURBED AREA OVER 5 ACRES, USE AND SHOW THE RATES RECOMMENDED BY THE SOIL TESTING AGENCY.
   d. FOR AREAS RECEIVING LOW MAINTENANCE, APPLY UREA FORM FERTILIZER (46-0-0) AT 3 ½ POUNDS PER 1000 SQUARE FEET (150 POUNDS PER ACRE) AT THE TIME OF SEEDING IN ADDITION TO THE SOIL AMENDMENTS SHOWN IN THE PERMANENT SEEDING SUMMARY.
2. TURFGRASS MIXTURES
   a. AREAS WHERE TURFGRASS MAY BE DESIRED INCLUDE LAWNS, PARKS, PLAYGROUNDS, AND COMMERCIAL SITES WHICH WILL RECEIVE A MEDIUM TO HIGH LEVEL OF MAINTENANCE.
   b. SELECT ONE OR MORE OF THE SPECIES OR MIXTURES LISTED BELOW BASED ON THE SITE CONDITIONS OR PURPOSE. ENTER SELECTED MIXTURE(S), APPLICATION RATES, AND SEEDING DATES IN THE PERMANENT SEEDING SUMMARY. THE SUMMARY IS TO BE PLACED ON THE PLAN.
      i. KENTUCKY BLUEGRASS: FULL SUN MIXTURE: FOR USE IN AREAS THAT RECEIVE INTENSIVE MANAGEMENT. IRRIGATION REQUIRED IN THE AREAS OF CENTRAL MARYLAND AND EASTERN SHORE. RECOMMENDED CERTIFIED KENTUCKY BLUEGRASS CULTIVARS SEEDING RATE: 1.5 TO 2.0 POUNDS PER 1000 SQUARE FEET. CHOOSE A MINIMUM OF THREE KENTUCKY BLUEGRASS CULTIVARS WITH EACH RANGING FROM 10 TO 35 PERCENT OF THE TOTAL MIXTURE BY WEIGHT.
      ii. KENTUCKY BLUEGRASS/PERENNIAL RYE: FULL SUN MIXTURE: FOR USE IN FULL SUN AREAS WHERE RAPID ESTABLISHMENT IS NECESSARY AND WHEN TURF WILL RECEIVE MEDIUM TO INTENSIVE MANAGEMENT. CERTIFIED PERENNIAL RYEGRASS CULTIVARS/CERTIFIED KENTUCKY BLUEGRASS SEEDING RATE: 2 POUNDS MIXTURE PER 1000 SQUARE FEET. CHOOSE A MINIMUM OF THREE KENTUCKY BLUEGRASS CULTIVARS WITH EACH RANGING FROM 10 TO 35 PERCENT OF THE TOTAL MIXTURE BY WEIGHT.
      iii. TALL FESCUE/KENTUCKY BLUEGRASS: FULL SUN MIXTURE: FOR USE IN DROUGHT PRONE AREAS AND/OR FOR AREAS RECEIVING LOW TO MEDIUM MANAGEMENT IN FULL SUN TO MEDIUM SHADE. RECOMMENDED MIXTURE INCLUDES; CERTIFIED TALL FESCUE CULTIVARS 95 TO 100 PERCENT, CERTIFIED KENTUCKY BLUEGRASS CULTIVARS 0 TO 5 PERCENT. SEEDING RATE: 5 TO 8 POUNDS PER 1000 SQUARE FEET. ONE OR MORE CULTIVARS MAY BE BLENDED.
      iv. KENTUCKY BLUEGRASS/FINE FESCUE: SHADE MIXTURE: FOR USE IN AREAS WITH SHADE IN BLUEGRASS LAWNS. FOR ESTABLISHMENT IN HIGH QUALITY, INTENSIVELY MANAGED TURF AREA. MIXTURE INCLUDES; CERTIFIED KENTUCKY BLUEGRASS CULTIVARS 30 TO 40 PERCENT AND CERTIFIED FINE FESCUE AND 60 TO 70 PERCENT. SEEDING RATE: 1½ TO 3 POUNDS PER 1000 SQUARE FEET.

      NOTES:
      SELECT TURFGRASS VARIETIES FROM THOSE LISTED IN THE MOST CURRENT UNIVERSITY OF MARYLAND PUBLICATION, AGRONOMY MEMO #77, "TURFGRASS CULTIVAR RECOMMENDATIONS FOR MARYLAND" CHOOSE CERTIFIED MATERIAL. CERTIFIED MATERIAL IS THE BEST GUARANTEE OF CULTIVAR PURITY. THE CERTIFICATION PROGRAM OF THE MARYLAND DEPARTMENT OF AGRICULTURE, TURF AND SEED SECTION, PROVIDES A RELIABLE MEANS OF CONSUMER PROTECTION AND ASSURES A PURE GENETIC LINE
   c. IDEAL TIMES OF SEEDING FOR TURF GRASS MIXTURES
      WESTERN MD: MARCH 15 TO JUNE 1, AUGUST 1 TO OCTOBER 1 (HARDINESS ZONES: 5B, 6A)
      CENTRAL MD: MARCH 1 TO MAY 15, AUGUST 15 TO OCTOBER 15 (HARDINESS ZONE: 6B)
      SOUTHERN MD, EASTERN SHORE: MARCH 1 TO MAY 15, AUGUST 15 TO OCTOBER 15 (HARDINESS ZONES: 7A, 7B)
   d. TILL AREAS TO RECEIVE SEED BY DISKING OR OTHER APPROVED METHODS TO A DEPTH OF 2 TO 4 INCHES, LEVEL AND RAKE THE AREAS TO PREPARE A PROPER SEEDBED. REMOVE STONES AND DEBRIS OVER 1½ INCHES IN DIAMETER. THE RESULTING SEEDBED MUST BE IN SUCH CONDITION THAT FUTURE MOWING OF GRASSES WILL POSE NO DIFFICULTY.
   e. IF SOIL MOISTURE IS DEFICIENT, SUPPLY NEW SEEDINGS WITH ADEQUATE WATER FOR PLANT GROWTH (½ TO 1 INCH EVERY 3 TO 4 DAYS DEPENDING ON SOIL TEXTURE) UNTIL THEY ARE FIRMLY ESTABLISHED. THIS IS ESPECIALLY TRUE WHEN SEEDINGS ARE MADE LATE IN THE PLANTING SEASON, IN ABNORMALLY DRY OR HOT SEASONS, OR ON ADVERSE SITES.

PERMANENT SEEDING SUMMARY

HARDINESS ZONE (from Figure B.3): ZONE 6B SEED MIXTURE (from Table B.3)					FERTILIZER RATE (10-20-20)			LIME RATE
NO.	SPECIES	APPLICATION RATE (LB/AC)	*SEEDING DATES	SEEDING DEPTHS	N	P2O5	K2O	
9	TALL FESCUE KENTUCKY BLUEGRASS PERENNIAL RYE GRASS	60 40 20	3/1 - 5/15 8/15 - 10/31	1/4" - 1/2"	45 LB/AC (1.0 LB/1000 SF)	90 LB/AC (2 LB/1000 SF)	90 LB/AC (2 LB/1000 SF)	2 TONS/AC (90 LB/1000 SF)
5	HARD FESCUE PERENNIAL RYE GRASS FLAT PEA	20 10 15	3/1 - 5/15 8/1 - 10/15	1/4" - 1/2"				
1	SWITCH GRASS CREEPING RED FESCUE PARTRIDGE PEA	10 15 4	3/1 - 5/15	1/4" - 1/2"				

NOTES:
1. THE PLANTING DATES LISTED ARE AVERAGES FOR EACH ZONE. THESE DATES MAY REQUIRE ADJUSTMENT TO REFLECT LOCAL CONDITIONS, ESPECIALLY NEAR THE BOUNDARIES OF THE ZONES. WHEN SEEDING TOWARD THE END OF THE LISTED PLANTING DATES, OR WHEN CONDITIONS ARE EXPECTED TO BE LESS THAN OPTIMAL, SELECT AN APPROPRIATE NURSE CROP FROM TABLE B.1 TEMPORARY SEEDING FOR SITE STABILIZATION AND PLANT TOGETHER WITH THE PERMANENT SEEDING MIX.
2. WHEN PLANTED DURING THE GROWING SEASON, MOST OF THESE MATERIALS MUST BE PURCHASED AND KEPT IN A DORMANT CONDITION UNTIL PLANTING. BARE-ROOT GRASSES ARE THE EXCEPTION—THEY MAY BE SUPPLIED AS GROWING (NON-DORMANT) PLANTS.
♦ ADDITIONAL PLANTING DATES FOR THE LOWER COASTAL PLAIN, DEPENDENT ON ANNUAL RAINFALL AND TEMPERATURE TRENDS. RECOMMEND ADDING A NURSE CROP, AS NOTED ABOVE, IF PLANTING DURING THIS PERIOD.
♦♦WARM-SEASON GRASSES NEED A SOIL TEMPERATURE OF AT LEAST 50 DEGREES F IN ORDER TO GERMINATE. IF SOIL TEMPERATURES ARE COLDER THAN 50 DEGREES, OR MOISTURE IS NOT ADEQUATE, THE SEEDS WILL REMAIN DORMANT UNTIL CONDITIONS ARE FAVORABLE. IN GENERAL, PLANTING DURING THE LATTER PORTION OF THIS PERIOD ALLOWS MORE TIME FOR WEED EMERGENCE AND WEED CONTROL PRIOR TO PLANTING. WHEN SELECTING A PLANTING DATE, CONSIDER THE NEED FOR WEED CONTROL VS. THE LIKELIHOOD OF HAVING SUFFICIENT MOISTURE FOR LATER PLANTINGS, ESPECIALLY ON DROUGHTY SITES.
* ADDITIONAL PLANTING DATES DURING WHICH SUPPLEMENTAL WATERING MAY BE NEEDED TO ENSURE PLANT ESTABLISHMENT.
FREQUENT FREEZING AND THAWING OF WET SOILS MAY RESULT IN FROST-HEAVING OF MATERIALS PLANTED IN LATE FALL, IF PLANTS HAVE NOT SUFFICIENTLY ROOTED IN PLACE.
SOD USUALLY NEEDS 4 TO 6 WEEKS TO BECOME SUFFICIENTLY ROOTED. LARGE CONTAINERIZED AND BALLED-AND-BURLAPPED STOCK MAY BE PLANTED INTO THE WINTER MONTHS AS LONG AS THE GROUND IS NOT FROZEN AND SOIL MOISTURE IS ADEQUATE.
** FOR THE PERIOD 5/1 - 8/14 ADD EITHER FOXTAIL OR PEARL MILLET - 6 LBS/AC. TO MIX NO. 9, 2.25 LBS/AC. TO MIX NO. 5

B. SOD: TO PROVIDE QUICK COVER ON DISTURBED AREAS (2:1 GRADE OR FLATTER).
1. GENERAL SPECIFICATIONS
   a. CLASS OF TURFGRASS SOD MUST BE MARYLAND STATE CERTIFIED. SOD LABELS MUST BE MADE AVAILABLE TO THE JOB FOREMAN AND INSPECTOR.
   b. SOD MUST BE MACHINE CUT AT A UNIFORM SOIL THICKNESS OF ¾ INCH, PLUS OR MINUS ¼ INCH, AT THE TIME OF CUTTING. MEASUREMENT FOR THICKNESS MUST EXCLUDE TOP GROWTH AND THATCH. BROKEN PADS AND TORN OR UNEVEN ENDS WILL NOT BE ACCEPTABLE.
   c. STANDARD SIZE SECTIONS OF SOD MUST BE STRONG ENOUGH TO SUPPORT THEIR OWN WEIGHT AND RETAIN THEIR SIZE AND SHAPE WHEN SUSPENDED VERTICALLY WITH A FIRM GRASP ON THE UPPER 10 PERCENT OF THE SECTION.
   d. SOD MUST NOT BE HARVESTED OR TRANSPLANTED WHEN MOISTURE CONTENT (EXCESSIVELY DRY OR WET) MAY ADVERSELY AFFECT ITS SURVIVAL.
   e. SOD MUST BE HARVESTED, DELIVERED, AND INSTALLED WITHIN A PERIOD OF 36 HOURS. SOD NOT TRANSPLANTED WITHIN THIS PERIOD MUST BE APPROVED BY AN AGRONOMIST OR SOIL SCIENTIST PRIOR TO ITS INSTALLATION.
2. SOD INSTALLATION
   a. DURING PERIODS OF EXCESSIVELY HIGH TEMPERATURE OR IN AREAS HAVING DRY SUBSOIL, LIGHTLY IRRIGATE THE SUBSOIL IMMEDIATELY PRIOR TO LAYING THE SOD.
   b. LAY THE FIRST ROW OF SOD IN A STRAIGHT LINE WITH SUBSEQUENT ROWS PLACED PARALLEL TO IT AND TIGHTLY WEDGED AGAINST EACH OTHER. STAGGER LATERAL JOINTS TO PROMOTE MORE UNIFORM GROWTH AND STRENGTH. ENSURE THAT SOD IS NOT STRETCHED OR OVERLAPPED AND THAT ALL JOINTS ARE BUTTED TIGHT IN ORDER TO PREVENT VOIDS WHICH WOULD CAUSE AIR DRYING OF THE ROOTS.
   c. WHEREVER POSSIBLE, LAY SOD WITH THE LONG EDGES PARALLEL TO THE CONTOUR AND WITH STAGGERING JOINTS. ROLL AND TAMP, PEG OR OTHERWISE SECURE THE SOD TO PREVENT SLIPPAGE ON SLOPES. ENSURE SOLID CONTACT EXISTS BETWEEN SOD ROOTS AND THE UNDERLYING SOIL SURFACE.
   d. WATER THE SOD IMMEDIATELY FOLLOWING ROLLING AND TAMPING UNTIL THE UNDERSIDE OF THE NEW SOD PAD AND SOIL SURFACE BELOW THE SOD ARE THOROUGHLY WET. COMPLETE THE OPERATIONS OF LAYING, TAMPING AND IRRIGATING FOR ANY PIECE OF SOD WITHIN EIGHT HOURS.
3. SOD MAINTENANCE
   a. IN THE ABSENCE OF ADEQUATE RAINFALL, WATER DAILY DURING THE FIRST WEEK OR AS OFTEN AND SUFFICIENTLY AS NECESSARY TO MAINTAIN MOIST SOIL TO A DEPTH OF 4 INCHES. WATER SOD DURING THE HEAT OF THE DAY TO PREVENT WILTING.
   b. AFTER THE FIRST WEEK, SOD WATERING IS REQUIRED AS NECESSARY TO MAINTAIN ADEQUATE MOISTURE CONTENT.
   c. DO NOT MOW UNTIL THE SOD IS FIRMLY ROOTED. NO MORE THAN ⅓ OF THE GRASS LEAF MUST BE REMOVED BY THE INITIAL CUTTING OR SUBSEQUENT CUTTINGS. MAINTAIN A GRASS HEIGHT OF AT LEAST 3 INCHES UNLESS OTHERWISE SPECIFIED.

B-4-6 STANDARDS AND SPECIFICATIONS FOR SOIL STABILIZATION MATTING

DEFINITION
MATERIAL USED TO TEMPORARILY OR PERMANENTLY STABILIZE CHANNELS OR STEEP SLOPES UNTIL GROUNDCOVER IS ESTABLISHED.

PURPOSE
TO PROTECT THE SOILS UNTIL VEGETATION IS ESTABLISHED.

CONDITIONS WHERE PRACTICE APPLIES
ON NEWLY SEEDED SURFACES TO PREVENT THE APPLIED SEED FROM WASHING OUT; IN CHANNELS AND ON STEEP SLOPES WHERE THE FLOW HAS EROSIVE VELOCITIES OR CONVEYS CLEAR WATER; ON TEMPORARY SWALES, EARTH DIKES, AND PERIMETER DIKE SWALES AS REQUIRED BY THE RESPECTIVE DESIGN STANDARD; AND, ON STREAM BANKS WHERE MOVING WATER IS LIKELY TO WASH OUT NEW VEGETATIVE PLANTINGS.

MAINTENANCE
VEGETATION MUST BE ESTABLISHED AND MAINTAINED SO THAT THE REQUIREMENTS FOR ADEQUATE VEGETATIVE ESTABLISHMENT ARE CONTINUOUSLY MET IN ACCORDANCE WITH SECTION B-4 VEGETATIVE STABILIZATION.

GENERAL NOTE:
IT IS THE RESPONSIBILITY OF THE CONTRACTOR TO REVIEW ALL OF THE DRAWINGS AND SPECIFICATIONS ASSOCIATED WITH THIS PROJECT WORK SCOPE PRIOR TO THE INITIATION OF CONSTRUCTION. SHOULD THE CONTRACTOR FIND A CONFLICT WITH THE DOCUMENTS RELATIVE TO THE SPECIFICATIONS OR APPLICABLE CODES, IT IS THE CONTRACTOR'S RESPONSIBILITY TO NOTIFY THE PROJECT ENGINEER OF RECORD IN WRITING PRIOR TO THE START OF CONSTRUCTION. FAILURE BY THE CONTRACTOR TO NOTIFY THE PROJECT ENGINEER SHALL CONSTITUTE ACCEPTANCE OF FULL RESPONSIBILITY BY THE CONTRACTOR TO COMPLETE THE SCOPE OF THE WORK AS DEFINED BY THE DRAWINGS AND IN FULL CONFORMANCE WITH LOCAL REGULATIONS AND CODES.

APPROVED: DEPARTMENT OF PLANNING AND ZONING

[signature]	8-26-16
CHIEF, DIVISION OF LAND DEVELOPMENT	DATE
[signature]	8-24-16
CHIEF, DEVELOPMENT ENGINEERING DIVISION	DATE
[signature]	8-26-16
DIRECTOR - DEPARTMENT OF PLANNING AND ZONING	DATE

THIS DEVELOPMENT PLAN IS APPROVED FOR SOIL EROSION AND SEDIMENT CONTROL BY THE HOWARD SOIL CONSERVATION DISTRICT.
[signature] HOWARD SCD 7/19/16 DATE

OWNER:	DEVELOPER:
ESTATES AT PATAPSCO PARK, LLC 24012 FREDERICK ROAD CLARKSBURG, MD 20861 CONTACT: MR. DAN SNYDER PHONE: (301) 674-8509	ESTATES AT PATAPSCO PARK, LLC 24012 FREDERICK ROAD CLARKSBURG, MD 20861 CONTACT: MR. DAN SNYDER PHONE: (301) 674-8509

PERMIT INFORMATION CHART

SUBDIVISION NAME: ESTATES AT PATAPSCO PARK		SECTION/AREA: N/A		LOT/PARCEL NO.: 203–205, 208-210, 213-248, & 373-385	
PLAT # OR L/F: #23421	GRID #: 5, 6, 11, 12	ZONING: R-20 & R-ED	TAX MAP NO.: 17	ELECT DISTR: 2ND	CENSUS TRACT: 602100

PREVIOUS FILE No. : SP-13-012, ECP-13-029, WP-13-165, PB CASE NO. 403, F-14-124, PLATS 23421 TO 23436, F-16-051, PLATS 23596 - 23609, SDP-16-019, CONT.# 10-3500 (FORCE MAIN)

PROFESSIONAL CERTIFICATION
I, BRANDON R. ROWE, HEREBY CERTIFY THAT THESE DOCUMENTS WERE PREPARED OR APPROVED BY ME, AND THAT I AM A DULY LICENSED PROFESSIONAL ENGINEER UNDER THE LAWS OF THE STATE OF MARYLAND, LICENSE NO. 40808, EXPIRATION DATE: 7/3/2017

BOHLER ENGINEERING
CIVIL & CONSULTING ENGINEERS
SURVEYORS
PROJECT MANAGERS
ENVIRONMENTAL CONSULTANTS
LANDSCAPE ARCHITECTS
CORPORATE OFFICE: ♦ WARREN, NJ
OFFICES: ♦ SOUTHBOROUGH, MA ♦ ALBANY, NY ♦ RONKONKOMA, NY ♦ CHALFONT, PA ♦ CENTER VALLEY, PA ♦ TAMPA, FL ♦ BOWIE, MD ♦ TOWSON, MD ♦ STERLING, VA ♦ WARRENTON, VA ♦ FORT LAUDERDALE, FL ♦ PHILADELPHIA, PA

THE INFORMATION, DESIGN AND CONTENT OF THIS PLAN ARE PROPRIETARY AND SHALL NOT BE COPIED OR USED FOR ANY PURPOSE WITHOUT PRIOR WRITTEN AUTHORIZATION FROM BOHLER ENGINEERING. ONLY APPROVED, SIGNED AND SEALED PLANS SHALL BE UTILIZED FOR CONSTRUCTION PURPOSES © 2008 BOHLER ENGINEERING.

REVISIONS

REV	DATE	COMMENT	BY

THE FOLLOWING STATES REQUIRE NOTIFICATION BY EXCAVATORS, DESIGNERS, OR ANY PERSON PREPARING TO DISTURB THE EARTH'S SURFACE ANYWHERE IN THE STATE. IN VIRGINIA, MARYLAND, THE DISTRICT OF COLUMBIA, AND DELAWARE CALL - 811
(WV 1-800-245-4848) (PA 1-800-242-1776) (DC 1-800-257-7777) (VA 1-800-552-7001) (MD 1-800-257-7777) (DE 1-800-282-8555)

PROJECT No.:	MD152013
DRAWN BY:	AVG
CHECKED BY:	JMA
DATE:	6/24/16
SCALE:	AS SHOWN
CAD I.D.:	CV2

PROJECT: SITE DEVELOPMENT PLANS (PHASE II) FOR ESTATES AT PATAPSCO PARK
SINGLE FAMILY DETACH UNITS BUILDABLE LOTS 203-205, 208-210, 213-248 & 373-385 PLAT NOs. 23596 - 23609

LOCATION OF SITE
ROGERS AVENUE
HOWARD COUNTY

BOHLER ENGINEERING
901 DULANEY VALLEY ROAD, SUITE 801
TOWSON, MARYLAND 21204
Phone: (410) 821-7900
Fax: (410) 821-7987
www.BohlerEngineering.com

B.R. ROWE
STATE OF MARYLAND, BRANDON R. ROWE, PROFESSIONAL ENGINEER, No. 40808

SHEET TITLE: SEDIMENT CONTROL NOTES & DETAILS

SHEET NUMBER:
12 of 19

SDP-16-050

HOWARD SOIL CONSERVATION DISTRICT
STANDARD SEDIMENT CONTROL NOTES

1. A PRE-CONSTRUCTION MEETING MUST OCCUR WITH THE HOWARD COUNTY DEPARTMENT OF PUBLIC WORKS, CONSTRUCTION INSPECTION DIVISION (CID), 410-313-1855 AFTER THE FUTURE LOD AND PROTECTED AREAS ARE MARKED CLEARLY IN THE FIELD. A MINIMUM OF 48 HOUR NOTICE TO CID MUST BE GIVEN AT THE FOLLOWING STAGES:
   A. PRIOR TO THE START OF EARTH DISTURBANCE,
   B. UPON COMPLETION OF THE INSTALLATION OF PERIMETER EROSION AND SEDIMENT CONTROLS, BUT BEFORE PROCEEDING WITH ANY OTHER EARTH DISTURBANCE OR GRADING,
   C. PRIOR TO THE START OF ANOTHER PHASE OF CONSTRUCTION OR OPENING OF ANOTHER GRADING UNIT,
   D. PRIOR TO THE REMOVAL OR MODIFICATION OF SEDIMENT CONTROL PRACTICES. OTHER BUILDING OR GRADING INSPECTION APPROVALS MAY NOT BE AUTHORIZED UNTIL THIS INITIAL APPROVAL BY THE INSPECTION AGENCY IS MADE. OTHER RELATED STATE AND FEDERAL PERMITS SHALL BE REFERENCED, TO ENSURE COORDINATION AND TO AVOID CONFLICTS WITH THIS PLAN.
2. ALL VEGETATIVE AND STRUCTURAL PRACTICES ARE TO BE INSTALLED ACCORDING TO THE PROVISIONS OF THIS PLAN AND ARE TO BE IN CONFORMANCE WITH THE 2011 MARYLAND STANDARDS AND SPECIFICATIONS FOR SOIL EROSION AND SEDIMENT CONTROL, AND REVISIONS THERETO.
3. FOLLOWING INITIAL SOIL DISTURBANCE OR RE-DISTURBANCE, PERMANENT OR TEMPORARY STABILIZATION IS REQUIRED WITHIN THREE (3) CALENDAR DAYS AS TO THE SURFACE OF ALL PERIMETER CONTROLS, DIKES, SWALES, DITCHES, PERIMETER SLOPES, AND ALL SLOPES STEEPER THAN 3 HORIZONTAL TO 1 VERTICAL (3:1); AND SEVEN (7) CALENDAR DAYS AS TO ALL OTHER DISTURBED AREAS ON THE PROJECT SITE EXCEPT FOR THOSE AREAS UNDER ACTIVE GRADING.
4. ALL DISTURBED AREAS MUST BE STABILIZED WITHIN THE TIME PERIOD SPECIFIED ABOVE IN ACCORDANCE WITH THE 2011 MARYLAND STANDARDS AND SPECIFICATIONS FOR SOIL EROSION AND SEDIMENT CONTROL FOR TOPSOIL (SEC. B-4-2), PERMANENT SEEDING (SEC. B-4-5), TEMPORARY SEEDING (SEC. B-4-4) AND MULCHING (SEC. B-4-3). TEMPORARY STABILIZATION WITH MULCH ALONE CAN ONLY BE APPLIED BETWEEN THE FALL AND SPRING SEEDING DATES IF THE GROUND IS FROZEN. INCREMENTAL STABILIZATION (SEC. B-4-1) SPECIFICATIONS SHALL BE ENFORCED IN AREAS WITH >15' OF CUT AND/OR FILL. STOCKPILES (SEC. B-4-8) IN EXCESS OF 20 FT. MUST BE BENCHED WITH STABLE OUTLET. ALL CONCENTRATED FLOW, STEEP SLOPE, AND HIGHLY ERODIBLE AREAS SHALL RECEIVE SOIL STABILIZATION MATTING (SEC. B-4-6).
5. ALL SEDIMENT CONTROL STRUCTURES ARE TO REMAIN IN PLACE, AND ARE TO BE MAINTAINED IN OPERATIVE CONDITION UNTIL PERMISSION FOR THEIR REMOVAL HAS BEEN OBTAINED FROM THE CID.
6. SITE ANALYSIS:

TOTAL AREA OF SITE:	9.3 ~~8.92~~ ACRES
AREA DISTURBED:	12.5 ~~1.63~~ ACRES
AREA TO BE ROOFED OR PAVED:	0.30 ACRES
AREA TO BE VEGETATIVELY STABILIZED:	1.01 ACRES
TOTAL CUT:	3,125 CU. YDS. (INCLUDES GRADING FOR 4 LOTS)
TOTAL FILL:	3,125 CU. YDS. (INCLUDES GRADING FOR 4 LOTS) (EXCESS SOIL REMAINING WILL BE STOCKPILED)
OFFSITE WASTE/BORROW AREA LOCATION:	N/A

7. ANY SEDIMENT CONTROL PRACTICE WHICH IS DISTURBED BY GRADING ACTIVITY FOR PLACEMENT OF UTILITIES MUST BE REPAIRED ON THE SAME DAY OF DISTURBANCE.
8. ADDITIONAL SEDIMENT CONTROL MUST BE PROVIDED, IF DEEMED NECESSARY BY THE CID. THE SITE AND ALL CONTROLS SHALL BE INSPECTED BY THE CONTRACTOR WEEKLY; AND THE NEXT DAY AFTER EACH RAIN EVENT. A WRITTEN REPORT BY THE CONTRACTOR, MADE AVAILABLE UPON REQUEST, IS PART OF EVERY INSPECTION AND SHOULD INCLUDE:
   - INSPECTION DATE
   - INSPECTION TYPE (ROUTINE, PRE-STORM EVENT, DURING RAIN EVENT)
   - NAME AND TITLE OF INSPECTOR
   - WEATHER INFORMATION (CURRENT CONDITIONS AS WELL AS TIME AND AMOUNT OF LAST RECORDED PRECIPITATION)
   - BRIEF DESCRIPTION OF PROJECT'S STATUS (E.G., PERCENT COMPLETE) AND/OR CURRENT ACTIVITIES
   - EVIDENCE OF SEDIMENT DISCHARGES
   - IDENTIFICATION OF PLAN DEFICIENCIES
   - IDENTIFICATION OF SEDIMENT CONTROLS THAT REQUIRE MAINTENANCE
   - IDENTIFICATION OF MISSING OR IMPROPERLY INSTALLED SEDIMENT CONTROLS
   - COMPLIANCE STATUS REGARDING THE SEQUENCE OF CONSTRUCTION AND STABILIZATION REQUIREMENTS
   - PHOTOGRAPHS
   - MONITORING/SAMPLING
   - MAINTENANCE AND/OR CORRECTIVE ACTION PERFORMED
   - OTHER INSPECTION ITEMS AS REQUIRED BY THE GENERAL PERMIT FOR STORMWATER ASSOCIATED WITH CONSTRUCTION ACTIVITIES (NPDES, MDE).
9. TRENCHES FOR THE CONSTRUCTION OF UTILITIES IS LIMITED TO THREE PIPE LENGTHS OR THAT WHICH CAN AND SHALL BE BACK-FILLED AND STABILIZED BY THE END OF EACH WORKDAY, WHICHEVER IS SHORTER.
10. ANY MAJOR CHANGES OR REVISIONS TO THE PLAN OR SEQUENCE OF CONSTRUCTION MUST BE REVIEWED AND APPROVED BY THE HSCD PRIOR TO PROCEEDING WITH CONSTRUCTION. MINOR REVISIONS MAY ALLOWED BY THE CID PER THE LIST OF HSCD-APPROVED FIELD CHANGES.
11. DISTURBANCE SHALL NOT OCCUR OUTSIDE THE L.O.D. A PROJECT IS TO BE SEQUENCED SO THAT GRADING ACTIVITIES BEGIN ON ONE GRADING UNIT (MAXIMUM ACREAGE OF 20 AC. PER GRADING UNIT) AT A TIME. WORK MAY PROCEED TO A SUBSEQUENT GRADING UNIT WHEN AT LEAST 50 PERCENT OF THE DISTURBED AREA IN THE PRECEDING GRADING UNIT HAS BEEN STABILIZED AND APPROVED BY THE CID. UNLESS OTHERWISE SPECIFIED AND APPROVED BY THE CID, NO MORE THAN 30 ACRES CUMULATIVELY MAY BE DISTURBED AT A GIVEN TIME.
12. WASH WATER FROM ANY EQUIPMENT, VEHICLES, WHEELS, PAVEMENT, AND OTHER SOURCES MUST BE TREATED IN A SEDIMENT BASIN OR OTHER APPROVED WASHOUT STRUCTURE.
13. TOPSOIL SHALL BE STOCKPILED AND PRESERVED ON-SITE FOR REDISTRIBUTION ONTO FINAL GRADE.
14. ALL SILT FENCE AND SUPER SILT FENCE SHALL BE PLACED ON-THE-CONTOUR, AND BE IMBRICATED AT 25' MINIMUM INTERVALS, WITH LOWER ENDS CURLED UPHILL BY 2' IN ELEVATION.
15. STREAM CHANNELS MUST NOT BE DISTURBED DURING THE FOLLOWING RESTRICTED TIME PERIODS (INCLUSIVE):
   - USE I AND IP MARCH 1 - JUNE 15
   - USE III AND IIIP OCTOBER 1 - APRIL 30
   - USE IV MARCH 1 - MAY 31
16. A COPY OF THIS PLAN, THE 2011 MARYLAND STANDARDS AND SPECIFICATIONS FOR SOIL EROSION AND SEDIMENT AND ASSOCIATED PERMITS SHALL BE ON-SITE AND AVAILABLE WHEN THE SITE IS ACTIVE

APPROVED: DEPARTMENT OF PLANNING AND ZONING

CHIEF, DIVISION OF LAND DEVELOPMENT — DATE 8-26-16

CHIEF, DEVELOPMENT ENGINEERING DIVISION — DATE 8-24-16

DIRECTOR - DEPARTMENT OF PLANNING AND ZONING — DATE 8-26-16

GENERAL NOTE:
IT IS THE RESPONSIBILITY OF THE CONTRACTOR TO REVIEW ALL OF THE DRAWINGS AND SPECIFICATIONS ASSOCIATED WITH THIS PROJECT WORK SCOPE PRIOR TO THE INITIATION OF CONSTRUCTION. SHOULD THE CONTRACTOR FIND A CONFLICT WITH THE DOCUMENTS RELATIVE TO THE SPECIFICATIONS OR APPLICABLE CODES, IT IS THE CONTRACTOR'S RESPONSIBILITY TO NOTIFY THE PROJECT ENGINEER OF RECORD IN WRITING PRIOR TO THE START OF CONSTRUCTION. FAILURE BY THE CONTRACTOR TO NOTIFY THE PROJECT ENGINEER SHALL CONSTITUTE ACCEPTANCE OF FULL RESPONSIBILITY BY THE CONTRACTOR TO COMPLETE THE SCOPE OF THE WORK AS DEFINED BY THE DRAWINGS AND IN FULL CONFORMANCE WITH LOCAL REGULATIONS AND CODES.

DETAIL B-1 STABILIZED CONSTRUCTION ENTRANCE

STANDARD SYMBOL: SCE

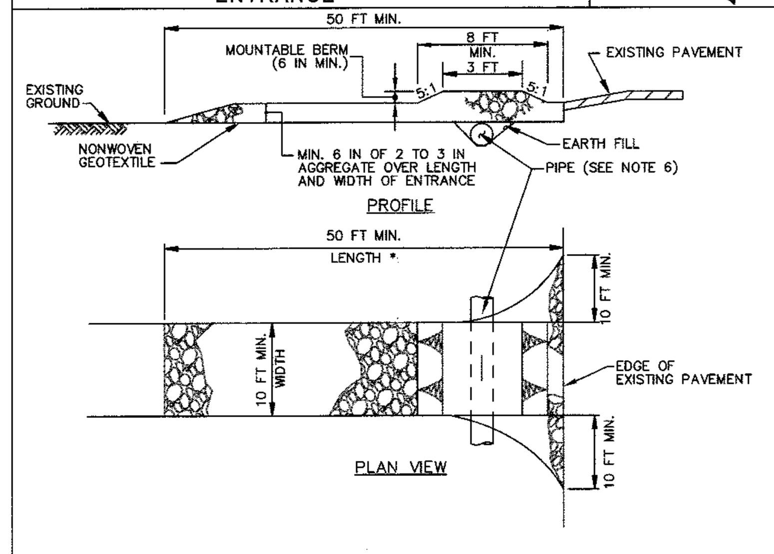

CONSTRUCTION SPECIFICATIONS

1. PLACE STABILIZED CONSTRUCTION ENTRANCE IN ACCORDANCE WITH THE APPROVED PLAN. VEHICLES MUST TRAVEL OVER THE ENTIRE LENGTH OF THE SCE. USE MINIMUM LENGTH OF 50 FEET (*30 FEET FOR SINGLE RESIDENCE LOT). USE MINIMUM WIDTH OF 10 FEET. FLARE SCE 10 FEET MINIMUM AT THE EXISTING ROAD TO PROVIDE A TURNING RADIUS.
2. PIPE ALL SURFACE WATER FLOWING TO OR DIVERTED TOWARD THE SCE UNDER THE ENTRANCE, MAINTAINING POSITIVE DRAINAGE. PROTECT PIPE INSTALLED THROUGH THE SCE WITH A MOUNTABLE BERM WITH 5:1 SLOPES AND A MINIMUM OF 12 INCHES OF STONE OVER THE PIPE. PROVIDE PIPE AS SPECIFIED ON APPROVED PLAN. WHEN THE SCE IS LOCATED AT A HIGH SPOT AND HAS NO DRAINAGE TO CONVEY, A PIPE IS NOT NECESSARY. A MOUNTABLE BERM IS REQUIRED WHEN SCE IS NOT LOCATED AT A HIGH SPOT.
3. PREPARE SUBGRADE AND PLACE NONWOVEN GEOTEXTILE, AS SPECIFIED IN SECTION H-1 MATERIALS.
4. PLACE CRUSHED AGGREGATE (2 TO 3 INCHES IN SIZE) OR EQUIVALENT RECYCLED CONCRETE (WITHOUT REBAR) AT LEAST 6 INCHES DEEP OVER THE LENGTH AND WIDTH OF THE SCE.
5. MAINTAIN ENTRANCE IN A CONDITION THAT MINIMIZES TRACKING OF SEDIMENT. ADD STONE OR MAKE OTHER REPAIRS AS CONDITIONS DEMAND TO MAINTAIN CLEAN SURFACE, MOUNTABLE BERM, AND SPECIFIED DIMENSIONS. IMMEDIATELY REMOVE STONE AND/OR SEDIMENT SPILLED, DROPPED, OR TRACKED ONTO ADJACENT ROADWAY BY VACUUMING, SCRAPING, AND/OR SWEEPING. WASHING ROADWAY TO REMOVE MUD TRACKED ONTO PAVEMENT IS NOT ACCEPTABLE UNLESS WASH WATER IS DIRECTED TO AN APPROVED SEDIMENT CONTROL PRACTICE.

MARYLAND STANDARDS AND SPECIFICATIONS FOR SOIL EROSION AND SEDIMENT CONTROL		
U.S. DEPARTMENT OF AGRICULTURE NATURAL RESOURCES CONSERVATION SERVICE	2011	MARYLAND DEPARTMENT OF ENVIRONMENT WATER MANAGEMENT ADMINISTRATION

DETAIL E-1 SILT FENCE

STANDARD SYMBOL: SF

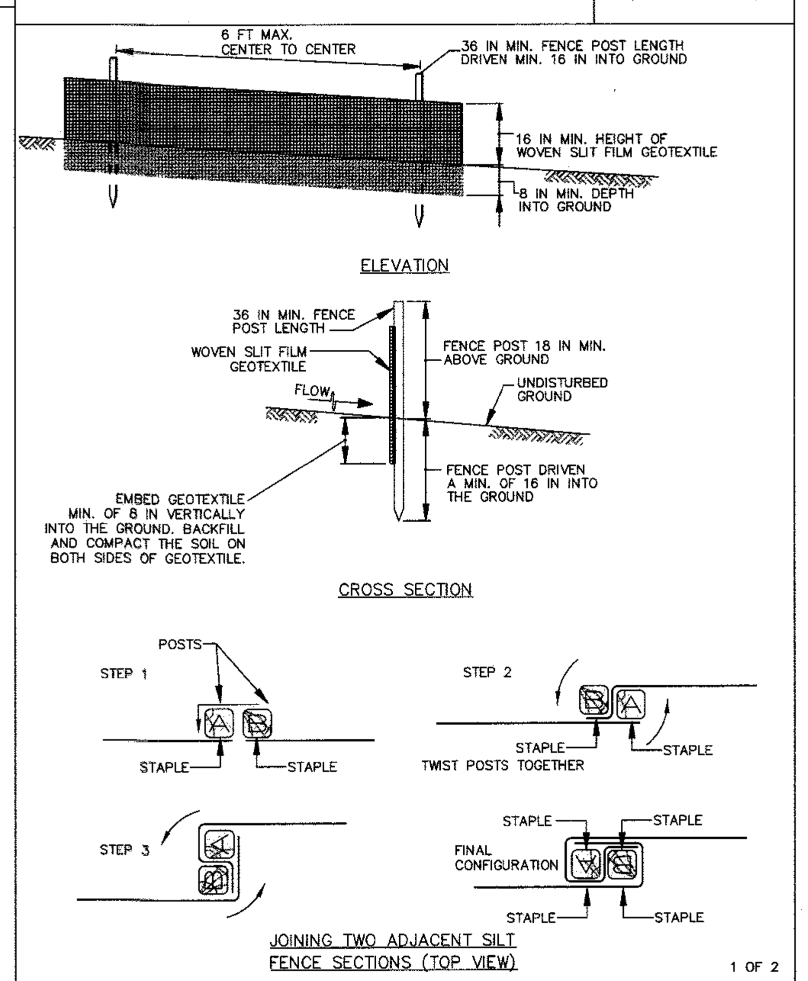

1 OF 2

MARYLAND STANDARDS AND SPECIFICATIONS FOR SOIL EROSION AND SEDIMENT CONTROL		
U.S. DEPARTMENT OF AGRICULTURE NATURAL RESOURCES CONSERVATION SERVICE	2011	MARYLAND DEPARTMENT OF ENVIRONMENT WATER MANAGEMENT ADMINISTRATION

DETAIL E-3 SUPER SILT FENCE

STANDARD SYMBOL: SSF

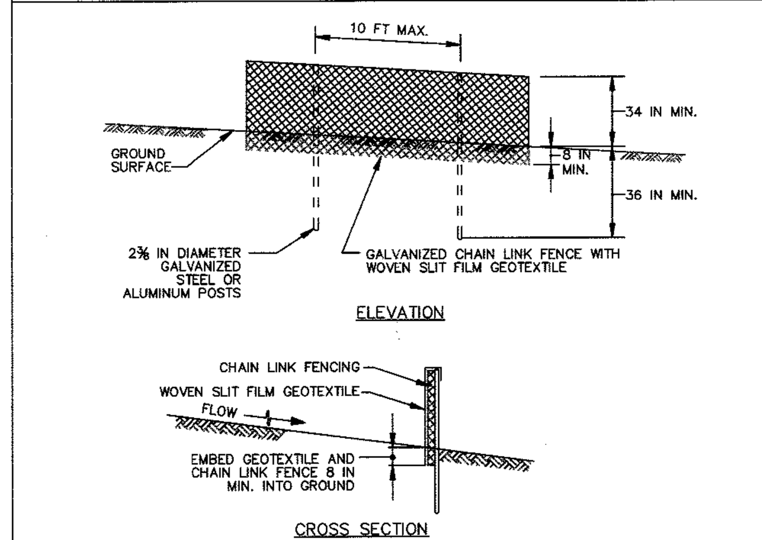

CONSTRUCTION SPECIFICATIONS

1. INSTALL 2⅜ INCH DIAMETER GALVANIZED STEEL POSTS OF 0.095 INCH WALL THICKNESS AND SIX FOOT LENGTH SPACED NO FURTHER THAN 10 FEET APART. DRIVE THE POSTS A MINIMUM OF 36 INCHES INTO THE GROUND.
2. FASTEN 9 GAUGE OR HEAVIER GALVANIZED CHAIN LINK FENCE (2⅜ INCH MAXIMUM OPENING) 42 INCHES IN HEIGHT SECURELY TO THE FENCE POSTS WITH WIRE TIES OR HUG RINGS.
3. FASTEN WOVEN SLIT FILM GEOTEXTILE AS SPECIFIED IN SECTION H-1 MATERIALS, SECURELY TO THE UPSLOPE SIDE OF CHAIN LINK FENCE WITH TIES SPACED EVERY 24 INCHES AT THE TOP AND MID SECTION. EMBED GEOTEXTILE AND CHAIN LINK FENCE A MINIMUM OF 8 INCHES INTO THE GROUND.
4. WHERE ENDS OF THE GEOTEXTILE COME TOGETHER, THE ENDS SHALL BE OVERLAPPED BY 6 INCHES, FOLDED, AND STAPLED TO PREVENT SEDIMENT BY PASS.
5. EXTEND BOTH ENDS OF THE SUPER SILT FENCE A MINIMUM OF FIVE HORIZONTAL FEET UPSLOPE AT 45 DEGREES TO THE MAIN FENCE ALIGNMENT TO PREVENT RUNOFF FROM GOING AROUND THE ENDS OF THE SUPER SILT FENCE.
6. PROVIDE MANUFACTURER CERTIFICATION TO THE INSPECTION/ENFORCEMENT AUTHORITY SHOWING THAT GEOTEXTILE USED MEETS THE REQUIREMENTS IN SECTION H-1 MATERIALS.
7. REMOVE ACCUMULATED SEDIMENT AND DEBRIS WHEN BULGES DEVELOP IN FENCE OR WHEN SEDIMENT REACHES 25% OF FENCE HEIGHT. REPLACE GEOTEXTILE IF TORN. IF UNDERMINING OCCURS, REINSTALL CHAIN LINK FENCING AND GEOTEXTILE.

MARYLAND STANDARDS AND SPECIFICATIONS FOR SOIL EROSION AND SEDIMENT CONTROL		
U.S. DEPARTMENT OF AGRICULTURE NATURAL RESOURCES CONSERVATION SERVICE	2011	MARYLAND DEPARTMENT OF ENVIRONMENT WATER MANAGEMENT ADMINISTRATION

DETAIL E-1 SILT FENCE

STANDARD SYMBOL: SF

CONSTRUCTION SPECIFICATIONS

1. USE WOOD POSTS 1¾ X 1¾ ± 1/16 INCH (MINIMUM) SQUARE CUT OF SOUND QUALITY HARDWOOD. AS AN ALTERNATIVE TO WOODEN POST USE STANDARD "T" OR "U" SECTION STEEL POSTS WEIGHING NOT LESS THAN 1 POUND PER LINEAR FOOT.
2. USE 36 INCH MINIMUM POSTS DRIVEN 16 INCH MINIMUM INTO GROUND NO MORE THAN 6 FEET APART.
3. USE WOVEN SLIT FILM GEOTEXTILE AS SPECIFIED IN SECTION H-1 MATERIALS AND FASTEN GEOTEXTILE SECURELY TO UPSLOPE SIDE OF FENCE POSTS WITH WIRE TIES OR STAPLES AT TOP AND MID-SECTION.
4. PROVIDE MANUFACTURER CERTIFICATION TO THE AUTHORIZED REPRESENTATIVE OF THE INSPECTION/ENFORCEMENT AUTHORITY SHOWING THAT THE GEOTEXTILE USED MEETS THE REQUIREMENTS IN SECTION H-1 MATERIALS.
5. EMBED GEOTEXTILE A MINIMUM OF 8 INCHES VERTICALLY INTO THE GROUND. BACKFILL AND COMPACT THE SOIL ON BOTH SIDES OF FABRIC.
6. WHERE TWO SECTIONS OF GEOTEXTILE ADJOIN: OVERLAP, TWIST, AND STAPLE TO POST IN ACCORDANCE WITH THIS DETAIL.
7. EXTEND BOTH ENDS OF THE SILT FENCE A MINIMUM OF FIVE HORIZONTAL FEET UPSLOPE AT 45 DEGREES TO THE MAIN FENCE ALIGNMENT TO PREVENT RUNOFF FROM GOING AROUND THE ENDS OF THE SILT FENCE.
8. REMOVE ACCUMULATED SEDIMENT AND DEBRIS WHEN BULGES DEVELOP IN SILT FENCE OR WHEN SEDIMENT REACHES 25% OF FENCE HEIGHT. REPLACE GEOTEXTILE IF TORN. IF UNDERMINING OCCURS, REINSTALL FENCE.

2 OF 2

MARYLAND STANDARDS AND SPECIFICATIONS FOR SOIL EROSION AND SEDIMENT CONTROL		
U.S. DEPARTMENT OF AGRICULTURE NATURAL RESOURCES CONSERVATION SERVICE	2011	MARYLAND DEPARTMENT OF ENVIRONMENT WATER MANAGEMENT ADMINISTRATION

SEQUENCE OF CONSTRUCTION

1. NOTIFY HOWARD COUNTY'S SEDIMENT CONTROL INSPECTOR AT 410-313-1855 AT LEAST 48 HOURS PRIOR TO THE START OF CONSTRUCTION. (1 DAY)
2. APPLY FOR A GRADING PERMIT AND SCHEDULE A PRE-CONSTRUCTION MEETING WITH THE HOWARD COUNTY SEDIMENT CONTROL INSPECTOR. OBTAIN GRADING PERMIT FROM THE HOWARD COUNTY SEDIMENT CONTROL INSPECTOR AT THE MEETING. (1 DAY)
3. FOR EACH LOT UNDER GOING CONSTRUCTION, INSTALL THE STABILIZED CONSTRUCTION ENTRANCE, SILT FENCE AND SUPER SILT FENCE. UPGRADE OR INSTALL ADDITIONAL SEDIMENT CONTROL MEASURES AS DIRECTED BY THE HOWARD COUNTY SEDIMENT CONTROL INSPECTOR. (1 DAY)
4. EXCAVATE AND GRADE THE SITE FOR HOUSE CONSTRUCTION. PROVIDE DUST CONTROL AS NECESSARY. (2 DAYS)
5. CONSTRUCT FOUNDATION, INSTALL UTILITY CONNECTIONS, BUILD THE HOUSE AND INSTALL THE DRYWELLS. (3-4 MONTHS)

   NOTE: ONCE THE ROOF GUTTER AND DOWNSPOUTS ARE INSTALLED, PIPE THEM TO THE DRYWELLS. A REGULAR IMPERVIOUS, (NON-POROUS) DRIVEWAY MAY BE INSTALLED AT ANY TIME DURING HOUSE CONSTRUCTION.
6. AS EACH HOUSE NEARS COMPLETION, FINE GRADE THE LOT, INSTALL PLANT MATERIALS AND STABILIZE ALL BARE DIRT AREA WITH PERMANENT SEEDING OR WITH SOD.
7. ONCE THE AREA DRAINING TO THE SEDIMENT CONTROL MEASURES HAVE BEEN STABILIZED, OBTAIN PERMISSION FROM THE HOWARD COUNTY SEDIMENT CONTROL INSPECTOR TO REMOVE THE SEDIMENT CONTROL ITEMS. (1/2 DAY)
8. OBTAIN INSPECTION FOR RELEASE OF SURETY (FOR GRADING AND LANDSCAPING). (1/2 DAY)
9. OBTAIN USE AND OCCUPANCY PERMIT FOR SETTLEMENT.

NOTE:

TEMPORARY SWM IS PROVIDED UNDER F-14-124.

B-4-7 STANDARDS AND SPECIFICATIONS FOR HEAVY USE AREA PROTECTION

DEFINITION

THE STABILIZATION OF AREAS FREQUENTLY AND INTENSIVELY USED BY SURFACING WITH SUITABLE MATERIALS (E.G., MULCH AND AGGREGATE).

PURPOSE

TO PROVIDE A STABLE, NON-ERODING SURFACE FOR AREAS FREQUENTLY USED AND TO IMPROVE THE WATER QUALITY FROM THE RUNOFF OF THESE AREAS.

CONDITIONS WHERE PRACTICE APPLIES

THIS PRACTICE APPLIES TO INTENSIVELY USED AREAS (E.G., EQUIPMENT AND MATERIAL STORAGE, STAGING AREAS, HEAVILY USED TRAVEL LANES).

CRITERIA

1. A MINIMUM 4-INCH BASE COURSE OF CRUSHED STONE OR OTHER SUITABLE MATERIALS INCLUDING WOOD CHIPS OVER NONWOVEN GEOTEXTILE SHOULD BE PROVIDED AS SPECIFIED IN SECTION H-1 MATERIALS.
2. SELECT THE STABILIZING MATERIAL BASED ON THE INTENDED USE, DESIRED MAINTENANCE FREQUENCY, AND RUNOFF CONTROL.
3. THE TRANSPORT OF SEDIMENTS, NUTRIENTS, OILS, CHEMICALS, PARTICULATE MATTER ASSOCIATED WITH VEHICULAR TRAFFIC AND EQUIPMENT, AND MATERIAL STORAGE NEEDS TO BE CONSIDERED IN THE SELECTION OF MATERIAL. ADDITIONAL CONTROL MEASURES MAY BE NECESSARY TO CONTROL SOME OF THESE POTENTIAL POLLUTANTS.
4. SURFACE EROSION CAN BE A PROBLEM ON LARGE HEAVY USE AREAS. IN THESE SITUATIONS, MEASURES TO REDUCE THE FLOW LENGTH OF RUNOFF OR EROSIVE VELOCITIES NEED TO BE CONSIDERED.

MAINTENANCE

THE HEAVY USE AREAS MUST BE MAINTAINED IN A CONDITION THAT MINIMIZES EROSION. THIS MAY REQUIRE ADDING SUITABLE MATERIAL, AS SPECIFIED ON THE APPROVED PLANS, TO MAINTAIN A CLEAN SURFACE.

B-4-8 STANDARDS AND SPECIFICATIONS FOR STOCKPILE AREA

DEFINITION

A MOUND OR PILE OF SOIL PROTECTED BY APPROPRIATELY DESIGNED EROSION AND SEDIMENT CONTROL MEASURES.

PURPOSE

TO PROVIDE A DESIGNATED LOCATION FOR THE TEMPORARY STORAGE OF SOIL THAT CONTROLS THE POTENTIAL FOR EROSION, SEDIMENTATION, AND CHANGES TO DRAINAGE PATTERNS.

CONDITIONS WHERE PRACTICE APPLIES

STOCKPILE AREAS ARE UTILIZED WHEN IT IS NECESSARY TO SALVAGE AND STORE SOIL FOR LATER USE.

CRITERIA

1. THE STOCKPILE LOCATION AND ALL RELATED SEDIMENT CONTROL PRACTICES MUST BE CLEARLY INDICATED ON THE EROSION AND SEDIMENT CONTROL PLAN.
2. THE FOOTPRINT OF THE STOCKPILE MUST BE SIZED TO ACCOMMODATE THE ANTICIPATED VOLUME OF MATERIAL AND BASED ON A SIDE SLOPE RATIO NO STEEPER THAN 2:1. BENCHING MUST BE PROVIDED IN ACCORDANCE WITH SECTION B-3 LAND GRADING.
3. RUNOFF FROM THE STOCKPILE AREA MUST DRAIN TO A SUITABLE SEDIMENT CONTROL PRACTICE.
4. ACCESS THE STOCKPILE AREA FROM THE UPGRADE SIDE.
5. CLEAR WATER RUNOFF INTO THE STOCKPILE AREA MUST BE MINIMIZED BY USE OF A DIVERSION DEVICE SUCH AS AN EARTH DIKE, TEMPORARY SWALE OR DIVERSION FENCE. PROVISIONS MUST BE MADE FOR DISCHARGING CONCENTRATED FLOW IN A NON-EROSIVE MANNER.
6. WHERE RUNOFF CONCENTRATES ALONG THE TOE OF THE STOCKPILE FILL, AN APPROPRIATE EROSION/SEDIMENT CONTROL PRACTICE MUST BE USED TO INTERCEPT THE DISCHARGE.
7. STOCKPILES MUST BE STABILIZED IN ACCORDANCE WITH THE 3/7 DAY STABILIZATION REQUIREMENT AS WELL AS STANDARD B-4-1 INCREMENTAL STABILIZATION AND STANDARD B-4-4 TEMPORARY STABILIZATION.
8. IF THE STOCKPILE IS LOCATED ON AN IMPERVIOUS SURFACE, A LINER SHOULD BE PROVIDED BELOW THE STOCKPILE TO FACILITATE CLEANUP. STOCKPILES CONTAINING CONTAMINATED MATERIAL MUST BE COVERED WITH IMPERMEABLE SHEETING.

MAINTENANCE

THE STOCKPILE AREA MUST CONTINUOUSLY MEET THE REQUIREMENTS FOR ADEQUATE VEGETATIVE ESTABLISHMENT IN ACCORDANCE WITH SECTION B-4 VEGETATIVE STABILIZATION. SIDE SLOPES MUST BE MAINTAINED AT NO STEEPER THAN A 2:1 RATIO. THE STOCKPILE AREA MUST BE KEPT FREE OF EROSION. IF THE VERTICAL HEIGHT OF A STOCKPILE EXCEEDS 20 FEET FOR 2:1 SLOPES, 30 FEET FOR 3:1 SLOPES, OR 40 FEET FOR 4:1 SLOPES, BENCHING MUST BE PROVIDED IN ACCORDANCE WITH SECTION B-3 LAND GRADING.

THIS DEVELOPMENT PLAN IS APPROVED FOR SOIL EROSION AND SEDIMENT CONTROL BY THE HOWARD SOIL CONSERVATION DISTRICT.

HOWARD SCD — DATE 7/19/16

OWNER:	DEVELOPER:
ESTATES AT PATAPSCO PARK, LLC 24012 FREDERICK ROAD CLARKSBURG, MD 20861 CONTACT: MR. DAN SNYDER PHONE: (301) 674-8509	ESTATES AT PATAPSCO PARK, LLC 24012 FREDERICK ROAD CLARKSBURG, MD 20861 CONTACT: MR. DAN SNYDER PHONE: (301) 674-8509

PERMIT INFORMATION CHART

SUBDIVISION NAME: ESTATES AT PATAPSCO PARK		SECTION/AREA: N/A		LOT/PARCEL NO.: 203-205, 208-210, 213-248, & 373-385	
PLAT # OR L/F: #23421	GRID #: 5, 6, 11, 12	ZONING: R-20 & R-ED	TAX MAP NO.: 17	ELECT DISTR: 2ND	CENSUS TRACT: 602100

PREVIOUS FILE No. : SP-13-012, ECP-13-029, WP-13-165, PB CASE NO. 403, F-14-124, CONT.# 10-3500 (FORCE MAIN), PLATS 23421 TO 23436, F-16-051, PLATS 23596 - 23609, SDP-16-019

PROFESSIONAL CERTIFICATION
I, BRANDON R. ROWE, HEREBY CERTIFY THAT THESE DOCUMENTS WERE PREPARED OR APPROVED BY ME, AND THAT I AM A DULY LICENSED PROFESSIONAL ENGINEER UNDER THE LAWS OF THE STATE OF MARYLAND, LICENSE NO. 40808, EXPIRATION DATE: 7/3/2017

BOHLER ENGINEERING
CIVIL & CONSULTING ENGINEERS
SURVEYORS
PROJECT MANAGERS
ENVIRONMENTAL CONSULTANTS
LANDSCAPE ARCHITECTS
CORPORATE OFFICE: ◆ WARREN, NJ
OFFICES: ◆ SOUTHBOROUGH, MA ◆ ALBANY, NY ◆ RONKONKOMA, NY ◆ CHALFONT, PA ◆ CENTER VALLEY, PA ◆ TAMPA, FL ◆ BOWIE, MD ◆ TOWSON, MD ◆ STERLING, VA ◆ WARRENTON, VA ◆ FORT LAUDERDALE, FL ◆ PHILADELPHIA, PA

THE INFORMATION, DESIGN AND CONTENT OF THIS PLAN ARE PROPRIETARY AND SHALL NOT BE COPIED OR USED FOR ANY PURPOSE WITHOUT PRIOR WRITTEN AUTHORIZATION FROM BOHLER ENGINEERING. ONLY APPROVED, SIGNED AND SEALED PLANS SHALL BE UTILIZED FOR CONSTRUCTION PURPOSES © 2008 BOHLER ENGINEERING.

REVISIONS

REV	DATE	COMMENT	BY

THE FOLLOWING STATES REQUIRE NOTIFICATION BY EXCAVATORS, DESIGNERS, OR ANY PERSON PREPARING TO DISTURB THE EARTH'S SURFACE ANYWHERE IN THE STATE. IN VIRGINIA, MARYLAND, THE DISTRICT OF COLUMBIA, AND DELAWARE CALL - 811
(WV 1-800-245-4848) (PA 1-800-242-1776) (DC 1-800-257-7777)
(VA 1-800-552-7001) (MD 1-800-257-7777) (DE 1-800-282-8555)

PROJECT No.:	MD152013
DRAWN BY:	AVG
CHECKED BY:	JMA
DATE:	6/24/16
SCALE:	AS SHOWN
CAD I.D.:	CV2

PROJECT: SITE DEVELOPMENT PLANS (PHASE II) FOR

ESTATES AT PATAPSCO PARK

SINGLE FAMILY DETACH UNITS
BUILDABLE LOTS 203-205, 208-210, 213-248 & 373-385
PLAT NOs. 23596 - 23609

LOCATION OF SITE
ROGERS AVENUE
HOWARD COUNTY

BOHLER ENGINEERING
901 DULANEY VALLEY ROAD, SUITE 801
TOWSON, MARYLAND 21204
Phone: (410) 821-7900
Fax: (410) 821-7987
www.BohlerEngineering.com

B.R. ROWE
STATE OF MARYLAND BRANDON R. ROWE PROFESSIONAL ENGINEER No. 40808

SHEET TITLE: SEDIMENT CONTROL NOTES & DETAILS

SHEET NUMBER:

SDP-16-050

H:\2015\MD152013\DRAWINGS\PLAN SETS\SITE DEVELOPMENT PLANS - PHASE-II\MD152013CV2.DWG PRINTED BY: RBOWEN 6.28.16 @ 11:25 AM LAST SAVED BY: RBOWEN

SOILS

SYMBOL	DESCRIPTION	K-FACTOR	HYDRIC	HYDROLOGIC GROUP
GbB	GLENELG LOAM, 3 TO 8 PERCENT SLOPES	0.37	YES	C
GnB	GLENVILLE-BAILE SILT LOAM, 0 TO 8 PERCENT SLOPES	0.37	YES	C
MaC	MANOR SILT LOAM, 8 TO 15 PERCENT SLOPES	0.24	NO	B

30 15 7.5 0 30
1"= 30'

OWNER:	DEVELOPER:
ESTATES AT PATAPSCO PARK, LLC 24012 FREDERICK ROAD CLARKSBURG, MD 20861 CONTACT: MR. DAN SNYDER PHONE: (301) 674-8509	ESTATES AT PATAPSCO PARK, LLC 24012 FREDERICK ROAD CLARKSBURG, MD 20861 CONTACT: MR. DAN SNYDER PHONE: (301) 674-8509

PERMIT INFORMATION CHART

SUBDIVISION NAME: ESTATES AT PATAPSCO PARK		SECTION/AREA: N/A		LOT/PARCEL NO.: 203-205, 208-210, 213-248, & 373-385
PLAT # OR L/F: #23421	GRID # 5, 6, 11, 12	ZONING: R-20 & R-ED	TAX MAP NO.: 17	ELECT DISTR: 2ND / CENSUS TRACT: 602100

PREVIOUS FILE No. - SP-13-012, ECP-13-029, WP-13-165, PB CASE NO. 403, F-14-124, CONT.# 10-3500 (FOYCE MAIN), PLATS 23421 TO 23436, F-16-051, PLATS 23596 - 23609, SDP-16-019

PROFESSIONAL CERTIFICATION
I, BRANDON R. ROWE, HEREBY CERTIFY THAT THESE DOCUMENTS WERE PREPARED OR APPROVED BY ME, AND THAT I AM A DULY LICENSED PROFESSIONAL ENGINEER UNDER THE LAWS OF THE STATE OF MARYLAND, LICENSE NO. 40998, EXPIRATION DATE: 7/3/2017.

APPROVED: DEPARTMENT OF PLANNING AND ZONING

CHIEF, DIVISION OF LAND DEVELOPMENT	DATE 8-26-16
CHIEF, DEVELOPMENT ENGINEERING DIVISION	DATE 8-24-16
DIRECTOR - DEPARTMENT OF PLANNING AND ZONING	DATE 8-26-16

GENERAL NOTE:
IT IS THE RESPONSIBILITY OF THE CONTRACTOR TO REVIEW ALL OF THE DRAWINGS AND SPECIFICATIONS ASSOCIATED WITH THIS PROJECT WORK SCOPE PRIOR TO THE INITIATION OF CONSTRUCTION. SHOULD THE CONTRACTOR FIND A CONFLICT WITH THE DOCUMENTS RELATIVE TO THE SPECIFICATIONS OR APPLICABLE CODES, IT IS THE CONTRACTOR'S RESPONSIBILITY TO NOTIFY THE PROJECT ENGINEER OF RECORD IN WRITING PRIOR TO THE START OF CONSTRUCTION. FAILURE BY THE CONTRACTOR TO NOTIFY THE PROJECT ENGINEER SHALL CONSTITUTE ACCEPTANCE OF FULL RESPONSIBILITY BY THE CONTRACTOR TO COMPLETE THE SCOPE OF THE WORK AS DEFINED BY THE DRAWINGS AND IN FULL CONFORMANCE WITH LOCAL REGULATIONS AND CODES.

SITE AREA (LOD) = 9.00 AC.
TARGET Pe = 1.80"
% IMPERVIOUS = 29.6% AVG.
TARGET ESDv = 33,962.5 CU. FT.
PROVIDED ESDv: 34,520.6 CU. FT.

NOTE :

SWM FOR DRIVEWAYS FOR LOTS 203-232, 245-248, AND 373-385 WILL BE PROVIDED IN UNDERGROUND INFILTRATION FACILITY # 1 ON LOT 199. THIS FACILITY WAS BUILT UNDER F-14-124.

BOHLER ENGINEERING

CORPORATE OFFICE: WARREN, NJ
OFFICES: SOUTHBOROUGH, MA; ROANOKE, VA; CENTER VALLEY, PA; TAMPA, FL; BOWIE, MD; STERLING, VA; FORT LAUDERDALE, FL; PHILADELPHIA, PA

CIVIL & CONSULTING ENGINEERS
SURVEYORS
PROJECT MANAGERS
ENVIRONMENTAL CONSULTANTS
LANDSCAPE ARCHITECTS

THE INFORMATION AND DESIGN CONCEPTS CONTAINED IN THESE DOCUMENTS ARE THE PROPERTY OF BOHLER ENGINEERING. ANY REPRODUCTION, IN WHOLE OR IN PART, OR USE OF THE DESIGNS AND CONCEPTS CONTAINED HEREIN WITHOUT WRITTEN CONSENT OF BOHLER ENGINEERING IS PROHIBITED.

REVISIONS

REV	DATE	COMMENT	BY

THE FOLLOWING STATES REQUIRE NOTIFICATION BY EXCAVATORS, DESIGNERS, OR ANY PERSON PREPARING TO DISTURB THE EARTH'S SURFACE ANYWHERE IN THE STATE IN VIRGINIA, MARYLAND, THE DISTRICT OF COLUMBIA, AND DELAWARE CALL - 811
(WV 1-800-245-4848) (PA 1-800-242-1776) (DC 1-800-257-7777) (VA 1-800-552-7001) (MD 1-800-257-7777) (DE 1-800-282-8555)

PROJECT No.:	MD152013
DRAWN BY:	AVG
CHECKED BY:	JMA
DATE:	6/24/16
SCALE:	1" = 30'
CAD I.D.:	DA2

PROJECT: SITE DEVELOPMENT PLANS (PHASE II) FOR

ESTATES AT PATAPSCO PARK

SINGLE FAMILY DETACH UNITS BUILDABLE LOTS 203-205, 208-210, 213-248 & 373-385
PLAT NOs. 23596 - 23609

LOCATION OF SITE
ROGERS AVENUE
HOWARD COUNTY

BOHLER ENGINEERING
901 DULANEY VALLEY ROAD, SUITE 801
TOWSON, MARYLAND 21204
Phone: (410) 821-7900
Fax: (410) 821-7987
www.BohlerEngineering.com

B.R. ROWE
STATE OF MARYLAND BRANDON R. ROWE No. 40998 PROFESSIONAL ENGINEER
PROFESSIONAL ENGINEER
No. 40998

SHEET TITLE:
STORM DRAIN AND STORMWATER MANAGEMENT DRAINAGE AREA MAP

SHEET NUMBER:
14 of 19

SDP-16-050

H:\2015\MD152013\DRAWINGS\PLAN SET\SITE DEVELOPMENT PLANS - PHASE-II\MD152013DA2.DWG PRINTED BY: RROWEN 6:38:16 @ 11:28 AM LAST SAVED BY: RROWEN

SOILS

SYMBOL	DESCRIPTION	K-FACTOR	HYDRIC	HYDROLOGIC GROUP
GbB	GLENELG LOAM, 3 TO 8 PERCENT SLOPES	0.37	YES	C
GnB	GLENVILLE-BAILE SILT LOAM, 0 TO 8 PERCENT SLOPES	0.37	YES	C
MaC	MANOR SILT LOAM, 8 TO 15 PERCENT SLOPES	0.24	NO	B

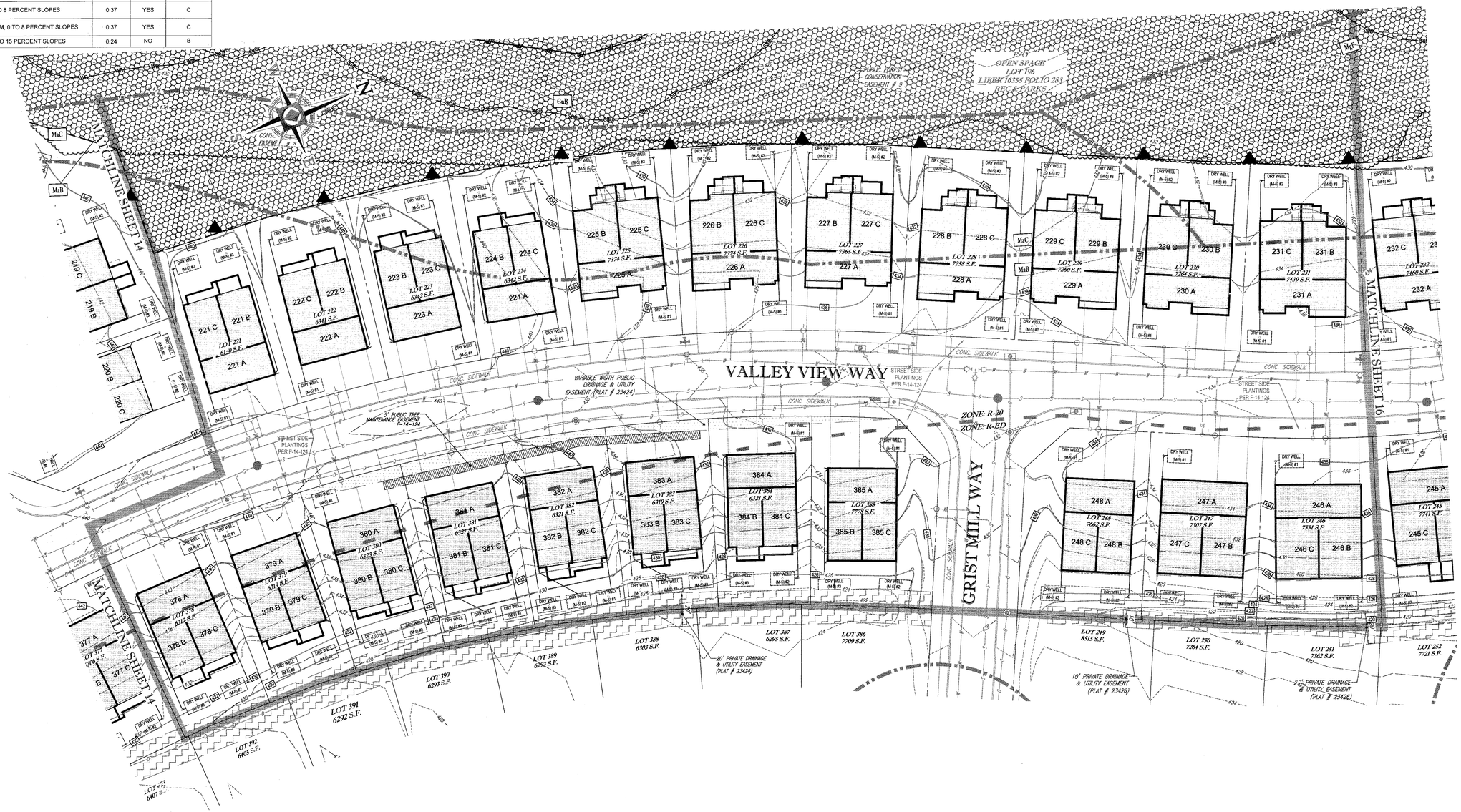

LEGEND

- IMPERVIOUS AREA
- PERVIOUS AREA
- DRAINAGE AREA DIVIDE
- 206 A — DRAINAGE AREA LABEL
- SOIL DIVIDE
- MaB — SOIL LABEL

30 15 7.5 0 30
1"= 30'

APPROVED: DEPARTMENT OF PLANNING AND ZONING

CHIEF, DIVISION OF LAND DEVELOPMENT	DATE 8-24-16
CHIEF, DEVELOPMENT ENGINEERING DIVISION	DATE 8-24-16
DIRECTOR - DEPARTMENT OF PLANNING AND ZONING	DATE 8-26-16

GENERAL NOTE
IT IS THE RESPONSIBILITY OF THE CONTRACTOR TO REVIEW ALL OF THE DRAWINGS AND SPECIFICATIONS ASSOCIATED WITH THIS PROJECT WORK SCOPE PRIOR TO THE INITIATION OF CONSTRUCTION. SHOULD THE CONTRACTOR FIND A CONFLICT WITH THE DOCUMENTS RELATIVE TO THE SPECIFICATIONS OR APPLICABLE CODES, IT IS THE CONTRACTOR'S RESPONSIBILITY TO NOTIFY THE PROJECT ENGINEER OF RECORD IN WRITING PRIOR TO THE START OF CONSTRUCTION. FAILURE BY THE CONTRACTOR TO NOTIFY THE PROJECT ENGINEER SHALL CONSTITUTE ACCEPTANCE OF FULL RESPONSIBILITY BY THE CONTRACTOR TO COMPLETE THE SCOPE OF THE WORK AS DEFINED BY THE DRAWINGS AND IN FULL CONFORMANCE WITH LOCAL REGULATIONS AND CODES.

SITE AREA (LOD) = 9.00 AC.
TARGET Pe = 1.80"
% IMPERVIOUS = 29.8% AVG.
TARGET ESDv = 33,962.5 CU. FT.
PROVIDED ESDv: 34,520.5 CU. FT.

NOTE :

SWM FOR DRIVEWAYS FOR LOTS 203-232, 245-248, AND 373-385 WILL BE PROVIDED IN UNDERGROUND INFILTRATION FACILITY # 1 ON LOT 199. THIS FACILITY WAS BUILT UNDER F-14-124.

OWNER:	DEVELOPER:
ESTATES AT PATAPSCO PARK, LLC 24012 FREDERICK ROAD CLARKSBURG, MD 20851 CONTACT: MR. DAN SNYDER PHONE: (301) 674-8509	ESTATES AT PATAPSCO PARK, LLC 24012 FREDERICK ROAD CLARKSBURG, MD 20851 CONTACT: MR. DAN SNYDER PHONE: (301) 674-8509

PERMIT INFORMATION CHART

SUBDIVISION NAME: ESTATES AT PATAPSCO PARK		SECTION/AREA: N/A	LOT/PARCEL NO.: 203-205, 208-210, 213-248, & 373-385
PLAT # OR L/F: #23421	GRID #: 5, 6, 11, 12	ZONING: R-20 & R-ED	TAX MAP NO.: 17	ELECT DISTR: 2ND	CENSUS TRACT: 602100

PREVIOUS FILE No.: SP-13-012, ECP-13-029, WP-13-165, PB CASE NO. 403, F-14-124, CONT # 10-3500 (FORCE MAIN), PLATS 23421 TO 23436, F-16-051, PLATS 23596 - 23609, SDP-16-019

PROFESSIONAL CERTIFICATION
I, BRANDON R. ROWE, HEREBY CERTIFY THAT THESE DOCUMENTS WERE PREPARED OR APPROVED BY ME, AND THAT I AM A DULY LICENSED PROFESSIONAL ENGINEER UNDER THE LAWS OF THE STATE OF MARYLAND, LICENSE NO. 40808, EXPIRATION DATE: 7/3/2017

BOHLER ENGINEERING
CORPORATE OFFICE: WARREN, NJ
OFFICES: SOUTHBOROUGH, MA; ROANOKE, VA; CENTER VALLEY, PA; TAMPA, FL; BOWIE, MD; COLUMBIA, MD; STERLING, VA; WILKES-BARRE, PA; FORT LAUDERDALE, FL; PHILADELPHIA, PA
CIVIL & CONSULTING ENGINEERS
SURVEYORS
PROJECT MANAGERS
ENVIRONMENTAL CONSULTANTS
LANDSCAPE ARCHITECTS

THIS PLAN, TOGETHER WITH THE TECHNICAL DATA ENVELOPED HEREWITH, IS FURNISHED AND THE CONTENTS THEREOF ARE TO BE USED SOLELY FOR THE PROJECT SPECIFIED HEREIN. THE PROJECT SPECIFICATIONS AND THE OBLIGATIONS OF THE PARTIES THERETO. THIS PLAN IS TO BE RETURNED UPON REQUEST.

REVISIONS

REV	DATE	COMMENT	BY

THE FOLLOWING STATES REQUIRE NOTIFICATION BY EXCAVATORS, DESIGNERS, OR ANY PERSON PREPARING TO DISTURB THE EARTH'S SURFACE ANYWHERE IN THE STATE. IN VIRGINIA, MARYLAND, THE DISTRICT OF COLUMBIA, AND DELAWARE CALL - 811
(WV 1-800-245-4848) (PA 1-800-242-1776) (DC 1-800-257-7777) (VA 1-800-552-7001) (MD 1-800-257-7777) (DE 1-800-282-8555)

PROJECT No.:	MD152013
DRAWN BY:	AVG
CHECKED BY:	JMA
DATE:	6/24/16
SCALE:	1" = 30'
CAD I.D.:	DA2

PROJECT: SITE DEVELOPMENT PLANS (PHASE II)
FOR
ESTATES AT PATAPSCO PARK
SINGLE FAMILY DETACH UNITS
BUILDABLE LOTS 203-205, 208-210, 213-248 & 373-385
PLAT NOs. 23596 - 23609
LOCATION OF SITE
ROGERS AVENUE
HOWARD COUNTY

BOHLER ENGINEERING
901 DULANEY VALLEY ROAD, SUITE 801
TOWSON, MARYLAND 21204
Phone: (410) 821-7900
Fax: (410) 821-7987
www.BohlerEngineering.com

B.R. ROWE
BRANDON R. ROWE
STATE OF MARYLAND
PROFESSIONAL ENGINEER
No. 40808

SHEET TITLE:
STORM DRAIN AND STORMWATER MANAGEMENT DRAINAGE AREA MAP

SHEET NUMBER:
15 of 19

SDP-16-050

SOILS

SYMBOL	DESCRIPTION	K-FACTOR	HYDRIC	HYDROLOGIC GROUP
GbB	GLENELG LOAM, 3 TO 8 PERCENT SLOPES	0.37	YES	C
GnB	GLENVILLE-BAILE SILT LOAM, 0 TO 8 PERCENT SLOPES	0.37	YES	C
MaC	MANOR SILT LOAM, 8 TO 15 PERCENT SLOPES	0.24	NO	B

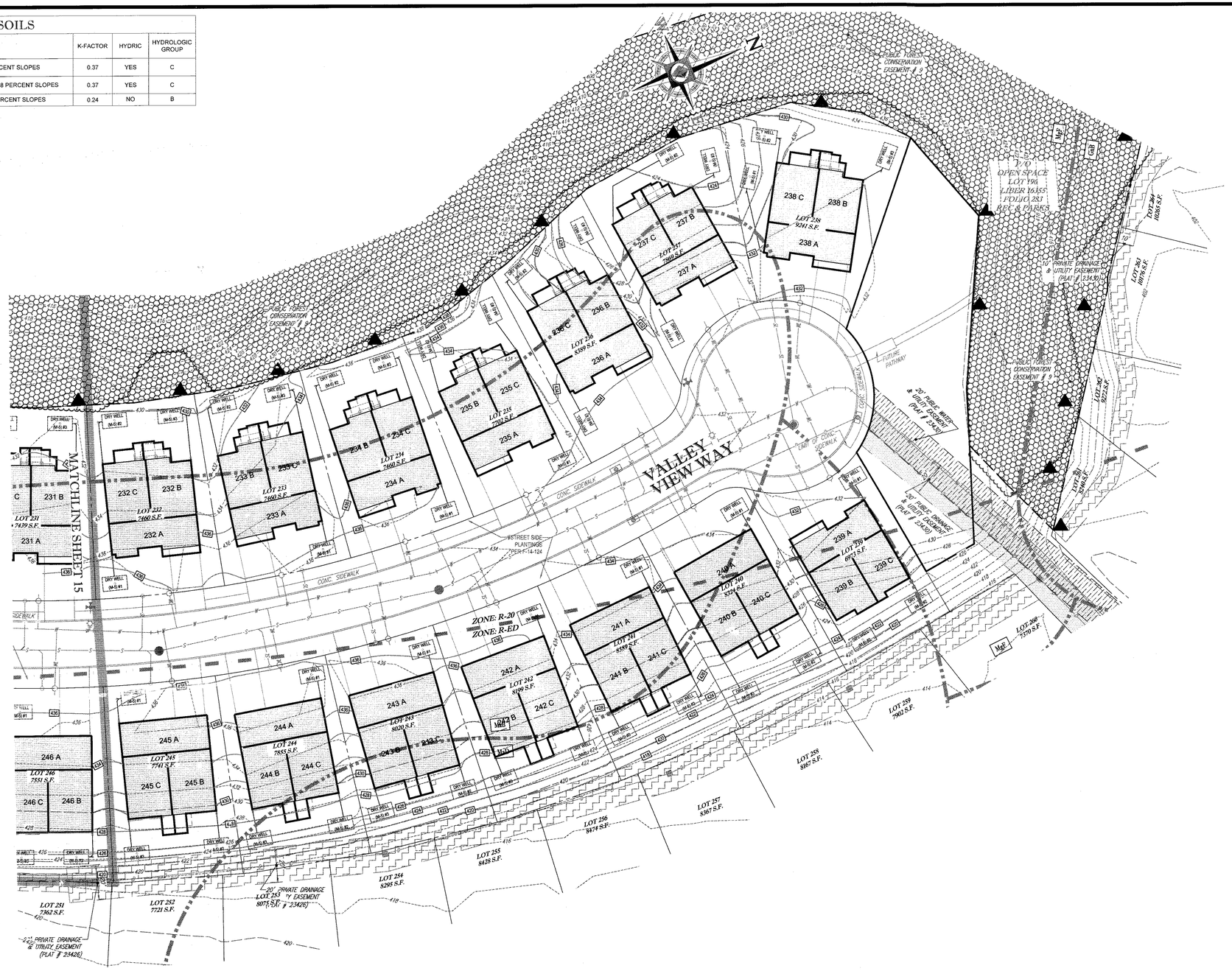

LEGEND

	IMPERVIOUS AREA
	PERVIOUS AREA
	DRAINAGE AREA DIVIDE
206 A	DRAINAGE AREA LABEL
	SOIL DIVIDE
MaB	SOIL LABEL

30 15 7.5 0 30
1"= 30'

APPROVED: DEPARTMENT OF PLANNING AND ZONING

CHIEF, DIVISION OF LAND DEVELOPMENT	DATE 8-26-16
CHIEF, DEVELOPMENT ENGINEERING DIVISION	DATE 8-24-16
DIRECTOR - DEPARTMENT OF PLANNING AND ZONING	DATE 8-26-16

GENERAL NOTE
IT IS THE RESPONSIBILITY OF THE CONTRACTOR TO REVIEW ALL OF THE DRAWINGS AND SPECIFICATIONS ASSOCIATED WITH THIS PROJECT WORK SCOPE PRIOR TO THE INITIATION OF CONSTRUCTION. SHOULD THE CONTRACTOR FIND A CONFLICT WITH THE DOCUMENTS RELATIVE TO THE SPECIFICATIONS OR APPLICABLE CODES, IT IS THE CONTRACTOR'S RESPONSIBILITY TO NOTIFY THE PROJECT ENGINEER OF RECORD IN WRITING PRIOR TO THE START OF CONSTRUCTION. FAILURE BY THE CONTRACTOR TO NOTIFY THE PROJECT ENGINEER SHALL CONSTITUTE ACCEPTANCE OF FULL RESPONSIBILITY BY THE CONTRACTOR TO COMPLETE THE SCOPE OF THE WORK AS DEFINED BY THE DRAWINGS AND IN FULL CONFORMANCE WITH LOCAL REGULATIONS AND CODES.

SITE AREA (LOD) = 9.00 AC.
TARGET Pe = 1.80"
% IMPERVIOUS = 29.6% AVG.
TARGET ESDv = 33,962.5 CU. FT.
PROVIDED ESDv: 34,520.6 CU. FT.

NOTE :

1. SWM FOR DRIVEWAYS FOR LOTS 233-244 WILL BE PROVIDED IN UNDERGROUND INFILTRATION FACILITY # 2 ON LOT 198. THIS FACILITY WAS BUILT UNDER F-14-124.
2. SWM FOR DRIVEWAYS FOR LOTS 232 & 245 WILL BE PROVIDED IN UNDERGROUND INFILTRATION FACILITY # 1 ON LOT 199. THIS FACILITY WAS BUILT UNDER F-14-124.

OWNER: ESTATES AT PATAPSCO PARK, LLC 24012 FREDERICK ROAD CLARKSBURG, MD 20861 CONTACT: MR. DAN SNYDER PHONE: (301) 674-8509	DEVELOPER: ESTATES AT PATAPSCO PARK, LLC 24012 FREDERICK ROAD CLARKSBURG, MD 20861 CONTACT: MR. DAN SNYDER PHONE: (301) 674-8509

PERMIT INFORMATION CHART

SUBDIVISION NAME: ESTATES AT PATAPSCO PARK		SECTION/AREA: N/A		LOT/PARCEL NO.: 203-205, 208-210, 213-248, & 373-385
PLAT # OR L/F: #23421	GRID #: 5, 6, 11, 12	ZONING: R-20 & R-ED	TAX MAP NO.: 17	ELECT DISTR: 2ND / CENSUS TRACT: 602100

PREVIOUS FILE No. : SP-13-012, ECP-13-029, WP-13-156, PB CASE NO. 403, F-14-124, CONT. # 10-3201 (FORCE MAIN), PLATS 23421 TO 23436, F-16-051, PLATS 23596 - 23609, SDP-16-019

PROFESSIONAL CERTIFICATION
I, BRANDON R. ROWE, HEREBY CERTIFY THAT THESE DOCUMENTS WERE PREPARED OR APPROVED BY ME, AND THAT I AM A DULY LICENSED PROFESSIONAL ENGINEER UNDER THE LAWS OF THE STATE OF MARYLAND, LICENSE NO. 40808, EXPIRATION DATE: 7/3/2017

BOHLER ENGINEERING
CIVIL & CONSULTING ENGINEERS
SURVEYORS
PROJECT MANAGERS
ENVIRONMENTAL CONSULTANTS
LANDSCAPE ARCHITECTS
CORPORATE OFFICE: WARREN, NJ
OFFICES: SOUTHBOROUGH, MA; ALBANY, NY; ROANOKE, VA; CHARLOTTE, NC; CENTER VALLEY, PA; TAMPA, FL; BOWIE, MD; STERLING, VA; FORT LAUDERDALE, FL; PHILADELPHIA, PA

THE PRINTED REPRODUCTION OF THESE DRAWINGS AND SPECIFICATIONS FROM PDF FILES ISSUED FOR PERMIT, BID OR CONSTRUCTION IS UNCONTROLLED. ONLY THE SEALED, SIGNED AND DATED HARD COPY PLANS AND SPECIFICATIONS ARE CONSIDERED TRUE COPIES.

REVISIONS

REV.	DATE	COMMENT	BY

THE FOLLOWING STATES REQUIRE NOTIFICATION BY EXCAVATORS, DESIGNERS, OR ANY PERSON PREPARING TO DISTURB THE EARTH'S SURFACE ANYWHERE IN THE STATE IN VIRGINIA, MARYLAND, THE DISTRICT OF COLUMBIA, AND DELAWARE CALL - 811
(WV 1-800-245-4848) (PA 1-800-242-1776) (DC 1-800-257-7777) (VA 1-800-552-7001) (MD 1-800-257-7777) (DE 1-800-282-8555)

PROJECT No.:	MD152013
DRAWN BY:	AVG
CHECKED BY:	JMA
DATE:	6/24/16
SCALE:	1" = 30'
CAD I.D.:	DA2

PROJECT: SITE DEVELOPMENT PLANS (PHASE II) FOR

ESTATES AT PATAPSCO PARK

SINGLE FAMILY DETACH UNITS BUILDABLE LOTS 203-205, 208-210, 213-248 & 373-385 PLAT NOs. 23596 - 23609

LOCATION OF SITE
ROGERS AVENUE
HOWARD COUNTY

BOHLER ENGINEERING
901 DULANEY VALLEY ROAD, SUITE 801
TOWSON, MARYLAND 21204
Phone: (410) 821-7900
Fax: (410) 821-7987
www.BohlerEngineering.com

B.R. ROWE
PROFESSIONAL ENGINEER
No. 40808

SHEET TITLE:
STORM DRAIN AND STORMWATER MANAGEMENT DRAINAGE AREA MAP

SHEET NUMBER:
16 of 19

SDP-16-050

SUMMARY TABLE

Required Pe = 1.80 inches Provided Pe = 2.60 inches

DRAINAGE AREA	MDE TYPE	TOTAL DA S.F.	IMPERVIOUS AREA S.F.	IMPERVIOUSNESS %	Qe	Af REQUIRED	Af PROVIDED	Af 2% DA	Af PONDING DEPTH	Af MEDIA DEPTH	ESDv REQUIRED	ESDv PROVIDED	PONDING REQUIRED (75%)	PONDING PROVIDED	75% ESDv PROVIDED	"Pe PROVIDED"	Rev REQUIRED	Rev PROVIDED
Dwelling - Lot 203 (DA: 203A)	M-5	1,000	1,000	100%	2.47	NA	NA	NA	NA	NA	205.8	209.2	NA	NA	NA	2.60"	Rev REQUIREMENT CALCULATION BASED ON ENTIRE SITE AND IS PROVIDED VIA DRYWELLS AND INFILTRATION FACILITIES THROUGHOUT THE SITE.	209.2
Dwelling - Lot 203 (DA: 203B)	M-5	1,000	1,000	100%	2.47	NA	NA	NA	NA	NA	205.8	209.2	NA	NA	NA	2.60"		209.2
Dwelling - Lot 203 (DA: 203C)	M-5	1,000	1,000	100%	2.47	NA	NA	NA	NA	NA	205.8	209.2	NA	NA	NA	2.60"		209.2
Dwelling - Lot 204 (DA: 204A)	M-5	1,000	1,000	100%	2.47	NA	NA	NA	NA	NA	205.8	209.2	NA	NA	NA	2.60"		209.2
Dwelling - Lot 204 (DA: 204B)	M-5	1,000	1,000	100%	2.47	NA	NA	NA	NA	NA	205.8	209.2	NA	NA	NA	2.60"		209.2
Dwelling - Lot 204 (DA: 204C)	M-5	1,000	1,000	100%	2.47	NA	NA	NA	NA	NA	205.8	209.2	NA	NA	NA	2.60"		209.2
Dwelling - Lot 205 (DA: 205A)	M-5	1,000	1,000	100%	2.47	NA	NA	NA	NA	NA	205.8	209.2	NA	NA	NA	2.60"		209.2
Dwelling - Lot 205 (DA: 205B)	M-5	1,000	1,000	100%	2.47	NA	NA	NA	NA	NA	205.8	209.2	NA	NA	NA	2.60"		209.2
Dwelling - Lot 205 (DA: 205C)	M-5	1,000	1,000	100%	2.47	NA	NA	NA	NA	NA	205.8	209.2	NA	NA	NA	2.60"		209.2
Dwelling - Lot 208 (DA: 208A)	M-5	1,000	1,000	100%	2.47	NA	NA	NA	NA	NA	205.8	209.2	NA	NA	NA	2.60"		209.2
Dwelling - Lot 208 (DA: 208B)	M-5	1,000	1,000	100%	2.47	NA	NA	NA	NA	NA	205.8	209.2	NA	NA	NA	2.60"		209.2
Dwelling - Lot 208 (DA: 208C)	M-5	1,000	1,000	100%	2.47	NA	NA	NA	NA	NA	205.8	209.2	NA	NA	NA	2.60"		209.2
Dwelling - Lot 209 (DA: 209A)	M-5	1,000	1,000	100%	2.47	NA	NA	NA	NA	NA	205.8	209.2	NA	NA	NA	2.60"		209.2
Dwelling - Lot 209 (DA: 209B)	M-5	1,000	1,000	100%	2.47	NA	NA	NA	NA	NA	205.8	209.2	NA	NA	NA	2.60"		209.2
Dwelling - Lot 209 (DA: 209C)	M-5	1,000	1,000	100%	2.47	NA	NA	NA	NA	NA	205.8	209.2	NA	NA	NA	2.60"		209.2
Dwelling - Lot 210 (DA: 210A)	M-5	1,000	1,000	100%	2.47	NA	NA	NA	NA	NA	205.8	209.2	NA	NA	NA	2.60"		209.2
Dwelling - Lot 210 (DA: 210B)	M-5	1,000	1,000	100%	2.47	NA	NA	NA	NA	NA	205.8	209.2	NA	NA	NA	2.60"		209.2
Dwelling - Lot 210 (DA: 210C)	M-5	1,000	1,000	100%	2.47	NA	NA	NA	NA	NA	205.8	209.2	NA	NA	NA	2.60"		209.2
Dwelling - Lot 213 (DA: 213A)	M-5	1,000	1,000	100%	2.47	NA	NA	NA	NA	NA	205.8	209.2	NA	NA	NA	2.60"		209.2
Dwelling - Lot 213 (DA: 213B)	M-5	1,000	1,000	100%	2.47	NA	NA	NA	NA	NA	205.8	209.2	NA	NA	NA	2.60"		209.2
Dwelling - Lot 213 (DA: 213C)	M-5	1,000	1,000	100%	2.47	NA	NA	NA	NA	NA	205.8	209.2	NA	NA	NA	2.60"		209.2
Dwelling - Lot 214 (DA: 214A)	M-5	1,000	1,000	100%	2.47	NA	NA	NA	NA	NA	205.8	209.2	NA	NA	NA	2.60"		209.2
Dwelling - Lot 214 (DA: 214B)	M-5	1,000	1,000	100%	2.47	NA	NA	NA	NA	NA	205.8	209.2	NA	NA	NA	2.60"		209.2
Dwelling - Lot 214 (DA: 214C)	M-5	1,000	1,000	100%	2.47	NA	NA	NA	NA	NA	205.8	209.2	NA	NA	NA	2.60"		209.2
Dwelling - Lot 215 (DA: 215A)	M-5	1,000	1,000	100%	2.47	NA	NA	NA	NA	NA	205.8	209.2	NA	NA	NA	2.60"		209.2
Dwelling - Lot 215 (DA: 215B)	M-5	1,000	1,000	100%	2.47	NA	NA	NA	NA	NA	205.8	209.2	NA	NA	NA	2.60"		209.2
Dwelling - Lot 215 (DA: 215C)	M-5	1,000	1,000	100%	2.47	NA	NA	NA	NA	NA	205.8	209.2	NA	NA	NA	2.60"		209.2
Dwelling - Lot 216 (DA: 216A)	M-5	1,000	1,000	100%	2.47	NA	NA	NA	NA	NA	205.8	209.2	NA	NA	NA	2.60"		209.2
Dwelling - Lot 216 (DA: 216B)	M-5	1,000	1,000	100%	2.47	NA	NA	NA	NA	NA	205.8	209.2	NA	NA	NA	2.60"		209.2
Dwelling - Lot 216 (DA: 216C)	M-5	1,000	1,000	100%	2.47	NA	NA	NA	NA	NA	205.8	209.2	NA	NA	NA	2.60"		209.2
Dwelling - Lot 217 (DA: 217A)	M-5	1,000	1,000	100%	2.47	NA	NA	NA	NA	NA	205.8	209.2	NA	NA	NA	2.60"		209.2
Dwelling - Lot 217 (DA: 217B)	M-5	1,000	1,000	100%	2.47	NA	NA	NA	NA	NA	205.8	209.2	NA	NA	NA	2.60"		209.2
Dwelling - Lot 217 (DA: 217C)	M-5	1,000	1,000	100%	2.47	NA	NA	NA	NA	NA	205.8	209.2	NA	NA	NA	2.60"		209.2
Dwelling - Lot 218 (DA: 218A)	M-5	1,000	1,000	100%	2.47	NA	NA	NA	NA	NA	205.8	209.2	NA	NA	NA	2.60"		209.2
Dwelling - Lot 218 (DA: 218B)	M-5	1,000	1,000	100%	2.47	NA	NA	NA	NA	NA	205.8	209.2	NA	NA	NA	2.60"		209.2
Dwelling - Lot 218 (DA: 218C)	M-5	1,000	1,000	100%	2.47	NA	NA	NA	NA	NA	205.8	209.2	NA	NA	NA	2.60"		209.2
Dwelling - Lot 219 (DA: 219A)	M-5	1,000	1,000	100%	2.47	NA	NA	NA	NA	NA	205.8	209.2	NA	NA	NA	2.60"		209.2
Dwelling - Lot 219 (DA: 219B)	M-5	1,000	1,000	100%	2.47	NA	NA	NA	NA	NA	205.8	209.2	NA	NA	NA	2.60"		209.2
Dwelling - Lot 219 (DA: 219C)	M-5	1,000	1,000	100%	2.47	NA	NA	NA	NA	NA	205.8	209.2	NA	NA	NA	2.60"		209.2
Dwelling - Lot 220 (DA: 220A)	M-5	1,000	1,000	100%	2.47	NA	NA	NA	NA	NA	205.8	209.2	NA	NA	NA	2.60"		209.2
Dwelling - Lot 220 (DA: 220B)	M-5	1,000	1,000	100%	2.47	NA	NA	NA	NA	NA	205.8	209.2	NA	NA	NA	2.60"		209.2
Dwelling - Lot 220 (DA: 220C)	M-5	1,000	1,000	100%	2.47	NA	NA	NA	NA	NA	205.8	209.2	NA	NA	NA	2.60"		209.2
Dwelling - Lot 221 (DA: 221A)	M-5	1,000	1,000	100%	2.47	NA	NA	NA	NA	NA	205.8	209.2	NA	NA	NA	2.60"		209.2
Dwelling - Lot 221 (DA: 221B)	M-5	1,000	1,000	100%	2.47	NA	NA	NA	NA	NA	205.8	209.2	NA	NA	NA	2.60"		209.2
Dwelling - Lot 221 (DA: 221C)	M-5	1,000	1,000	100%	2.47	NA	NA	NA	NA	NA	205.8	209.2	NA	NA	NA	2.60"		209.2
Dwelling - Lot 222 (DA: 222A)	M-5	1,000	1,000	100%	2.47	NA	NA	NA	NA	NA	205.8	209.2	NA	NA	NA	2.60"		209.2
Dwelling - Lot 222 (DA: 222B)	M-5	1,000	1,000	100%	2.47	NA	NA	NA	NA	NA	205.8	209.2	NA	NA	NA	2.60"		209.2
Dwelling - Lot 222 (DA: 222C)	M-5	1,000	1,000	100%	2.47	NA	NA	NA	NA	NA	205.8	209.2	NA	NA	NA	2.60"		209.2
Dwelling - Lot 223 (DA: 223A)	M-5	1,000	1,000	100%	2.47	NA	NA	NA	NA	NA	205.8	209.2	NA	NA	NA	2.60"		209.2
Dwelling - Lot 223 (DA: 223B)	M-5	1,000	1,000	100%	2.47	NA	NA	NA	NA	NA	205.8	209.2	NA	NA	NA	2.60"		209.2
Dwelling - Lot 223 (DA: 223C)	M-5	1,000	1,000	100%	2.47	NA	NA	NA	NA	NA	205.8	209.2	NA	NA	NA	2.60"		209.2
Dwelling - Lot 224 (DA: 224A)	M-5	1,000	1,000	100%	2.47	NA	NA	NA	NA	NA	205.8	209.2	NA	NA	NA	2.60"		209.2
Dwelling - Lot 224 (DA: 224B)	M-5	1,000	1,000	100%	2.47	NA	NA	NA	NA	NA	205.8	209.2	NA	NA	NA	2.60"		209.2
Dwelling - Lot 224 (DA: 224C)	M-5	1,000	1,000	100%	2.47	NA	NA	NA	NA	NA	205.8	209.2	NA	NA	NA	2.60"		209.2
Dwelling - Lot 225 (DA: 225A)	M-5	1,000	1,000	100%	2.47	NA	NA	NA	NA	NA	205.8	209.2	NA	NA	NA	2.60"		209.2
Dwelling - Lot 225 (DA: 225B)	M-5	1,000	1,000	100%	2.47	NA	NA	NA	NA	NA	205.8	209.2	NA	NA	NA	2.60"		209.2
Dwelling - Lot 225 (DA: 225C)	M-5	1,000	1,000	100%	2.47	NA	NA	NA	NA	NA	205.8	209.2	NA	NA	NA	2.60"		209.2
Dwelling - Lot 226 (DA: 226A)	M-5	1,000	1,000	100%	2.47	NA	NA	NA	NA	NA	205.8	209.2	NA	NA	NA	2.60"		209.2
Dwelling - Lot 226 (DA: 226B)	M-5	1,000	1,000	100%	2.47	NA	NA	NA	NA	NA	205.8	209.2	NA	NA	NA	2.60"		209.2
Dwelling - Lot 226 (DA: 226C)	M-5	1,000	1,000	100%	2.47	NA	NA	NA	NA	NA	205.8	209.2	NA	NA	NA	2.60"		209.2
Dwelling - Lot 227 (DA: 227A)	M-5	1,000	1,000	100%	2.47	NA	NA	NA	NA	NA	205.8	209.2	NA	NA	NA	2.60"		209.2
Dwelling - Lot 227 (DA: 227B)	M-5	1,000	1,000	100%	2.47	NA	NA	NA	NA	NA	205.8	209.2	NA	NA	NA	2.60"		209.2
Dwelling - Lot 227 (DA: 227C)	M-5	1,000	1,000	100%	2.47	NA	NA	NA	NA	NA	205.8	209.2	NA	NA	NA	2.60"		209.2
Dwelling - Lot 228 (DA: 228A)	M-5	1,000	1,000	100%	2.47	NA	NA	NA	NA	NA	205.8	209.2	NA	NA	NA	2.60"		209.2
Dwelling - Lot 228 (DA: 228B)	M-5	1,000	1,000	100%	2.47	NA	NA	NA	NA	NA	205.8	209.2	NA	NA	NA	2.60"		209.2
Dwelling - Lot 228 (DA: 228C)	M-5	1,000	1,000	100%	2.47	NA	NA	NA	NA	NA	205.8	209.2	NA	NA	NA	2.60"		209.2
Dwelling - Lot 229 (DA: 229A)	M-5	1,000	1,000	100%	2.47	NA	NA	NA	NA	NA	205.8	209.2	NA	NA	NA	2.60"		209.2
Dwelling - Lot 229 (DA: 229B)	M-5	1,000	1,000	100%	2.47	NA	NA	NA	NA	NA	205.8	209.2	NA	NA	NA	2.60"		209.2
Dwelling - Lot 229 (DA: 229C)	M-5	1,000	1,000	100%	2.47	NA	NA	NA	NA	NA	205.8	209.2	NA	NA	NA	2.60"		209.2
Dwelling - Lot 230 (DA: 230A)	M-5	1,000	1,000	100%	2.47	NA	NA	NA	NA	NA	205.8	209.2	NA	NA	NA	2.60"		209.2
Dwelling - Lot 230 (DA: 230B)	M-5	1,000	1,000	100%	2.47	NA	NA	NA	NA	NA	205.8	209.2	NA	NA	NA	2.60"		209.2
Dwelling - Lot 230 (DA: 230C)	M-5	1,000	1,000	100%	2.47	NA	NA	NA	NA	NA	205.8	209.2	NA	NA	NA	2.60"		209.2
Dwelling - Lot 231 (DA: 231A)	M-5	1,000	1,000	100%	2.47	NA	NA	NA	NA	NA	205.8	209.2	NA	NA	NA	2.60"		209.2
Dwelling - Lot 231 (DA: 231B)	M-5	1,000	1,000	100%	2.47	NA	NA	NA	NA	NA	205.8	209.2	NA	NA	NA	2.60"		209.2
Dwelling - Lot 231 (DA: 231C)	M-5	1,000	1,000	100%	2.47	NA	NA	NA	NA	NA	205.8	209.2	NA	NA	NA	2.60"		209.2
Dwelling - Lot 232 (DA: 232A)	M-5	1,000	1,000	100%	2.47	NA	NA	NA	NA	NA	205.8	209.2	NA	NA	NA	2.60"		209.2
Dwelling - Lot 232 (DA: 232B)	M-5	1,000	1,000	100%	2.47	NA	NA	NA	NA	NA	205.8	209.2	NA	NA	NA	2.60"		209.2
Dwelling - Lot 232 (DA: 232C)	M-5	1,000	1,000	100%	2.47	NA	NA	NA	NA	NA	205.8	209.2	NA	NA	NA	2.60"		209.2
Dwelling - Lot 233 (DA: 233A)	M-5	1,000	1,000	100%	2.47	NA	NA	NA	NA	NA	205.8	209.2	NA	NA	NA	2.60"		209.2
Dwelling - Lot 233 (DA: 233B)	M-5	1,000	1,000	100%	2.47	NA	NA	NA	NA	NA	205.8	209.2	NA	NA	NA	2.60"		209.2
Dwelling - Lot 233 (DA: 233C)	M-5	1,000	1,000	100%	2.47	NA	NA	NA	NA	NA	205.8	209.2	NA	NA	NA	2.60"		209.2
Dwelling - Lot 234 (DA: 234A)	M-5	1,000	1,000	100%	2.47	NA	NA	NA	NA	NA	205.8	209.2	NA	NA	NA	2.60"		209.2
Dwelling - Lot 234 (DA: 234B)	M-5	1,000	1,000	100%	2.47	NA	NA	NA	NA	NA	205.8	209.2	NA	NA	NA	2.60"		209.2
Dwelling - Lot 234 (DA: 234C)	M-5	1,000	1,000	100%	2.47	NA	NA	NA	NA	NA	205.8	209.2	NA	NA	NA	2.60"		209.2
Dwelling - Lot 235 (DA: 235A)	M-5	1,000	1,000	100%	2.47	NA	NA	NA	NA	NA	205.8	209.2	NA	NA	NA	2.60"		209.2
Dwelling - Lot 235 (DA: 235B)	M-5	1,000	1,000	100%	2.47	NA	NA	NA	NA	NA	205.8	209.2	NA	NA	NA	2.60"		209.2
Dwelling - Lot 235 (DA: 235C)	M-5	1,000	1,000	100%	2.47	NA	NA	NA	NA	NA	205.8	209.2	NA	NA	NA	2.60"		209.2
Dwelling - Lot 236 (DA: 236A)	M-5	1,000	1,000	100%	2.47	NA	NA	NA	NA	NA	205.8	209.2	NA	NA	NA	2.60"		209.2
Dwelling - Lot 236 (DA: 236B)	M-5	1,000	1,000	100%	2.47	NA	NA	NA	NA	NA	205.8	209.2	NA	NA	NA	2.60"		209.2
Dwelling - Lot 236 (DA: 236C)	M-5	1,000	1,000	100%	2.47	NA	NA	NA	NA	NA	205.8	209.2	NA	NA	NA	2.60"		209.2
Dwelling - Lot 237 (DA: 237A)	M-5	1,000	1,000	100%	2.47	NA	NA	NA	NA	NA	205.8	209.2	NA	NA	NA	2.60"		209.2
Dwelling - Lot 237 (DA: 237B)	M-5	1,000	1,000	100%	2.47	NA	NA	NA	NA	NA	205.8	209.2	NA	NA	NA	2.60"		209.2
Dwelling - Lot 237 (DA: 237C)	M-5	1,000	1,000	100%	2.47	NA	NA	NA	NA	NA	205.8	209.2	NA	NA	NA	2.60"		209.2
Dwelling - Lot 238 (DA: 238A)	M-5	1,000	1,000	100%	2.47	NA	NA	NA	NA	NA	205.8	209.2	NA	NA	NA	2.60"		209.2
Dwelling - Lot 238 (DA: 238B)	M-5	1,000	1,000	100%	2.47	NA	NA	NA	NA	NA	205.8	209.2	NA	NA	NA	2.60"		209.2
Dwelling - Lot 238 (DA: 238C)	M-5	1,000	1,000	100%	2.47	NA	NA	NA	NA	NA	205.8	209.2	NA	NA	NA	2.60"		209.2
Dwelling - Lot 239 (DA: 239A)	M-5	1,000	1,000	100%	2.47	NA	NA	NA	NA	NA	205.8	209.2	NA	NA	NA	2.60"		209.2
Dwelling - Lot 239 (DA: 239B)	M-5	1,000	1,000	100%	2.47	NA	NA	NA	NA	NA	205.8	209.2	NA	NA	NA	2.60"		209.2
Dwelling - Lot 239 (DA: 239C)	M-5	1,000	1,000	100%	2.47	NA	NA	NA	NA	NA	205.8	209.2	NA	NA	NA	2.60"		209.2
Dwelling - Lot 240 (DA: 240A)	M-5	1,000	1,000	100%	2.47	NA	NA	NA	NA	NA	205.8	209.2	NA	NA	NA	2.60"		209.2
Dwelling - Lot 240 (DA: 240B)	M-5	1,000	1,000	100%	2.47	NA	NA	NA	NA	NA	205.8	209.2	NA	NA	NA	2.60"		209.2
Dwelling - Lot 240 (DA: 240C)	M-5	1,000	1,000	100%	2.47	NA	NA	NA	NA	NA	205.8	209.2	NA	NA	NA	2.60"		209.2
Dwelling - Lot 241 (DA: 241A)	M-5	1,000	1,000	100%	2.47	NA	NA	NA	NA	NA	205.8	209.2	NA	NA	NA	2.60"		209.2
Dwelling - Lot 241 (DA: 241B)	M-5	1,000	1,000	100%	2.47	NA	NA	NA	NA	NA	205.8	209.2	NA	NA	NA	2.60"		209.2
Dwelling - Lot 241 (DA: 241C)	M-5	1,000	1,000	100%	2.47	NA	NA	NA	NA	NA	205.8	209.2	NA	NA	NA	2.60"		209.2
Dwelling - Lot 242 (DA: 242A)	M-5	1,000	1,000	100%	2.47	NA	NA	NA	NA	NA	205.8	209.2	NA	NA	NA	2.60"		209.2
Dwelling - Lot 242 (DA: 242B)	M-5	1,000	1,000	100%	2.47	NA	NA	NA	NA	NA	205.8	209.2	NA	NA	NA	2.60"		209.2
Dwelling - Lot 242 (DA: 242C)	M-5	1,000	1,000	100%	2.47	NA	NA	NA	NA	NA	205.8	209.2	NA	NA	NA	2.60"		209.2
Dwelling - Lot 243 (DA: 243A)	M-5	1,000	1,000	100%	2.47	NA	NA	NA	NA	NA	205.8	209.2	NA	NA	NA	2.60"		209.2
Dwelling - Lot 243 (DA: 243B)	M-5	1,000	1,000	100%	2.47	NA	NA	NA	NA	NA	205.8	209.2	NA	NA	NA	2.60"		209.2
Dwelling - Lot 243 (DA: 243C)	M-5	1,000	1,000	100%	2.47	NA	NA	NA	NA	NA	205.8	209.2	NA	NA	NA	2.60"		209.2
Dwelling - Lot 244 (DA: 244A)	M-5	1,000	1,000	100%	2.47	NA	NA	NA	NA	NA	205.8	209.2	NA	NA	NA	2.60"		209.2
Dwelling - Lot 244 (DA: 244B)	M-5	1,000	1,000	100%	2.47	NA	NA	NA	NA	NA	205.8	209.2	NA	NA	NA	2.60"		209.2
Dwelling - Lot 244 (DA: 244C)	M-5	1,000	1,000	100%	2.47	NA	NA	NA	NA	NA	205.8	209.2	NA	NA	NA	2.60"		209.2
Dwelling - Lot 245 (DA: 245A)	M-5	1,000	1,000	100%	2.47	NA	NA	NA	NA	NA	205.8	209.2	NA	NA	NA	2.60"		209.2
Dwelling - Lot 245 (DA: 245B)	M-5	1,000	1,000	100%	2.47	NA	NA	NA	NA	NA	205.8	209.2	NA	NA	NA	2.60"		209.2
Dwelling - Lot 245 (DA: 245C)	M-5	1,000	1,000	100%	2.47	NA	NA	NA	NA	NA	205.8	209.2	NA	NA	NA	2.60"		209.2

SUMMARY TABLE

Required Pe = 1.80 inches Provided Pe = 2.60 inches

DRAINAGE AREA	MDE TYPE	TOTAL DA S.F.	IMPERVIOUS AREA S.F.	IMPERVIOUSNESS %	Qe	Af REQUIRED	Af PROVIDED	Af 2% DA	Af PONDING DEPTH	Af MEDIA DEPTH	ESDv REQUIRED	ESDv PROVIDED	PONDING REQUIRED (75%)	PONDING PROVIDED	75% ESDv PROVIDED	"Pe PROVIDED"	Rev REQUIRED	Rev PROVIDED
Dwelling - Lot 246 (DA: 246A)	M-5	1,000	1,000	100%	2.47	NA	NA	NA	NA	NA	205.8	209.2	NA	NA	NA	2.60"		209.2
Dwelling - Lot 246 (DA: 246B)	M-5	1,000	1,000	100%	2.47	NA	NA	NA	NA	NA	205.8	209.2	NA	NA	NA	2.60"		209.2
Dwelling - Lot 246 (DA: 246C)	M-5	1,000	1,000	100%	2.47	NA	NA	NA	NA	NA	205.8	209.2	NA	NA	NA	2.60"		209.2
Dwelling - Lot 247(DA: 247A)	M-5	1,000	1,000	100%	2.47	NA	NA	NA	NA	NA	205.8	209.2	NA	NA	NA	2.60"		209.2
Dwelling - Lot 247 (DA: 247B)	M-5	1,000	1,000	100%	2.47	NA	NA	NA	NA	NA	205.8	209.2	NA	NA	NA	2.60"		209.2
Dwelling - Lot 247 (DA: 247C)	M-5	1,000	1,000	100%	2.47	NA	NA	NA	NA	NA	205.8	209.2	NA	NA	NA	2.60"		209.2
Dwelling - Lot 248 (DA: 248A)	M-5	1,000	1,000	100%	2.47	NA	NA	NA	NA	NA	205.8	209.2	NA	NA	NA	2.60"		209.2
Dwelling - Lot 248 (DA: 248B)	M-5	1,000	1,000	100%	2.47	NA	NA	NA	NA	NA	205.8	209.2	NA	NA	NA	2.60"		209.2
Dwelling - Lot 248 (DA: 248C)	M-5	1,000	1,000	100%	2.47	NA	NA	NA	NA	NA	205.8	209.2	NA	NA	NA	2.60"		209.2
Dwelling - Lot 373 (DA: 373A)	M-5	1,000	1,000	100%	2.47	NA	NA	NA	NA	NA	205.8	209.2	NA	NA	NA	2.60"		209.2
Dwelling - Lot 373 (DA: 373B)	M-5	1,000	1,000	100%	2.47	NA	NA	NA	NA	NA	205.8	209.2	NA	NA	NA	2.60"		209.2
Dwelling - Lot 373 (DA: 373C)	M-5	1,000	1,000	100%	2.47	NA	NA	NA	NA	NA	205.8	209.2	NA	NA	NA	2.60"		209.2
Dwelling - Lot 374 (DA: 374A)	M-5	1,000	1,000	100%	2.47	NA	NA	NA	NA	NA	205.8	209.2	NA	NA	NA	2.60"		209.2
Dwelling - Lot 374 (DA: 374B)	M-5	1,000	1,000	100%	2.47	NA	NA	NA	NA	NA	205.8	209.2	NA	NA	NA	2.60"		209.2
Dwelling - Lot 374 (DA: 374C)	M-5	1,000	1,000	100%	2.47	NA	NA	NA	NA	NA	205.8	209.2	NA	NA	NA	2.60"		209.2
Dwelling - Lot 375 (DA: 375A)	M-5	1,000	1,000	100%	2.47	NA	NA	NA	NA	NA	205.8	209.2	NA	NA	NA	2.60"		209.2
Dwelling - Lot 375 (DA: 375B)	M-5	1,000	1,000	100%	2.47	NA	NA	NA	NA	NA	205.8	209.2	NA	NA	NA	2.60"		209.2
Dwelling - Lot 375 (DA: 375C)	M-5	1,000	1,000	100%	2.47	NA	NA	NA	NA	NA	205.8	209.2	NA	NA	NA	2.60"		209.2
Dwelling - Lot 376 (DA: 376A)	M-5	1,000	1,000	100%	2.47	NA	NA	NA	NA	NA	205.8	209.2	NA	NA	NA	2.60"		209.2
Dwelling - Lot 376 (DA: 376B)	M-5	1,000	1,000	100%	2.47	NA	NA	NA	NA	NA	205.8	209.2	NA	NA	NA	2.60"		209.2
Dwelling - Lot 376 (DA: 376C)	M-5	1,000	1,000	100%	2.47	NA	NA	NA	NA	NA	205.8	209.2	NA	NA	NA	2.60"		209.2
Dwelling - Lot 377 (DA: 377A)	M-5	1,000	1,000	100%	2.47	NA	NA	NA	NA	NA	205.8	209.2	NA	NA	NA	2.60"		209.2
Dwelling - Lot 377 (DA: 377B)	M-5	1,000	1,000	100%	2.47	NA	NA	NA	NA	NA	205.8	209.2	NA	NA	NA	2.60"		209.2
Dwelling - Lot 377 (DA: 377C)	M-5	1,000	1,000	100%	2.47	NA	NA	NA	NA	NA	205.8	209.2	NA	NA	NA	2.60"		209.2
Dwelling - Lot 378 (DA: 378A)	M-5	1,000	1,000	100%	2.47	NA	NA	NA	NA	NA	205.8	209.2	NA	NA	NA	2.60"		209.2
Dwelling - Lot 378 (DA: 378B)	M-5	1,000	1,000	100%	2.47	NA	NA	NA	NA	NA	205.8	209.2	NA	NA	NA	2.60"		209.2
Dwelling - Lot 378 (DA: 378C)	M-5	1,000	1,000	100%	2.47	NA	NA	NA	NA	NA	205.8	209.2	NA	NA	NA	2.60"		209.2
Dwelling - Lot 379 (DA: 379A)	M-5	1,000	1,000	100%	2.47	NA	NA	NA	NA	NA	205.8	209.2	NA	NA	NA	2.60"		209.2
Dwelling - Lot 379 (DA: 379B)	M-5	1,000	1,000	100%	2.47	NA	NA	NA	NA	NA	205.8	209.2	NA	NA	NA	2.60"		209.2
Dwelling - Lot 379 (DA: 379C)	M-5	1,000	1,000	100%	2.47	NA	NA	NA	NA	NA	205.8	209.2	NA	NA	NA	2.60"		209.2
Dwelling - Lot 380 (DA: 380A)	M-5	1,000	1,000	100%	2.47	NA	NA	NA	NA	NA	205.8	209.2	NA	NA	NA	2.60"		209.2
Dwelling - Lot 380 (DA: 380B)	M-5	1,000	1,000	100%	2.47	NA	NA	NA	NA	NA	205.8	209.2	NA	NA	NA	2.60"		209.2
Dwelling - Lot 380 (DA: 380C)	M-5	1,000	1,000	100%	2.47	NA	NA	NA	NA	NA	205.8	209.2	NA	NA	NA	2.60"		209.2
Dwelling - Lot 381 (DA: 381A)	M-5	1,000	1,000	100%	2.47	NA	NA	NA	NA	NA	205.8	209.2	NA	NA	NA	2.60"		209.2
Dwelling - Lot 381 (DA: 381B)	M-5	1,000	1,000	100%	2.47	NA	NA	NA	NA	NA	205.8	209.2	NA	NA	NA	2.60"		209.2
Dwelling - Lot 381 (DA: 381C)	M-5	1,000	1,000	100%	2.47	NA	NA	NA	NA	NA	205.8	209.2	NA	NA	NA	2.60"		209.2
Dwelling - Lot 382 (DA: 382A)	M-5	1,000	1,000	100%	2.47	NA	NA	NA	NA	NA	205.8	209.2	NA	NA	NA	2.60"		209.2
Dwelling - Lot 382 (DA: 382B)	M-5	1,000	1,000	100%	2.47	NA	NA	NA	NA	NA	205.8	209.2	NA	NA	NA	2.60"		209.2
Dwelling - Lot 382 (DA: 382C)	M-5	1,000	1,000	100%	2.47	NA	NA	NA	NA	NA	205.8	209.2	NA	NA	NA	2.60"		209.2
Dwelling - Lot 383 (DA: 383A)	M-5	1,000	1,000	100%	2.47	NA	NA	NA	NA	NA	205.8	209.2	NA	NA	NA	2.60"		209.2
Dwelling - Lot 383 (DA: 383B)	M-5	1,000	1,000	100%	2.47	NA	NA	NA	NA	NA	205.8	209.2	NA	NA	NA	2.60"		209.2
Dwelling - Lot 383 (DA: 383C)	M-5	1,000	1,000	100%	2.47	NA	NA	NA	NA	NA	205.8	209.2	NA	NA	NA	2.60"		209.2
Dwelling - Lot 384 (DA: 384A)	M-5	1,000	1,000	100%	2.47	NA	NA	NA	NA	NA	205.8	209.2	NA	NA	NA	2.60"		209.2
Dwelling - Lot 384 (DA: 384B)	M-5	1,000	1,000	100%	2.47	NA	NA	NA	NA	NA	205.8	209.2	NA	NA	NA	2.60"		209.2
Dwelling - Lot 384 (DA: 384C)	M-5	1,000	1,000	100%	2.47	NA	NA	NA	NA	NA	205.8	209.2	NA	NA	NA	2.60"		209.2
Dwelling - Lot 385 (DA: 385A)	M-5	1,000	1,000	100%	2.47	NA	NA	NA	NA	NA	205.8	209.2	NA	NA	NA	2.60"		209.2
Dwelling - Lot 385 (DA: 385B)	M-5	1,000	1,000	100%	2.47	NA	NA	NA	NA	NA	205.8	209.2	NA	NA	NA	2.60"		209.2
Dwelling - Lot 385 (DA: 385C)	M-5	1,000	1,000	100%	2.47	NA	NA	NA	NA	NA	205.8	209.2	NA	NA	NA	2.60"		209.2
TOTALS		165000	165000								33,962.5	34,520.6						34520.6

30 15 7.5 0 30

1"= 30'

APPROVED: DEPARTMENT OF PLANNING AND ZONING

CHIEF, DIVISION OF LAND DEVELOPMENT — DATE 8-26-16

CHIEF, DEVELOPMENT ENGINEERING DIVISION — DATE 8-24-16

DIRECTOR - DEPARTMENT OF PLANNING AND ZONING — DATE 8-26-16

GENERAL NOTE:
IT IS THE RESPONSIBILITY OF THE CONTRACTOR TO REVIEW ALL OF THE DRAWINGS AND SPECIFICATIONS ASSOCIATED WITH THIS PROJECT WORK SCOPE PRIOR TO THE INITIATION OF CONSTRUCTION. SHOULD THE CONTRACTOR FIND A CONFLICT WITH THE DOCUMENTS RELATIVE TO THE SPECIFICATIONS OR APPLICABLE CODES, IT IS THE CONTRACTOR'S RESPONSIBILITY TO NOTIFY THE PROJECT ENGINEER OF RECORD IN WRITING PRIOR TO THE START OF CONSTRUCTION. FAILURE BY THE CONTRACTOR TO NOTIFY THE PROJECT ENGINEER SHALL CONSTITUTE ACCEPTANCE OF FULL RESPONSIBILITY BY THE CONTRACTOR TO COMPLETE THE SCOPE OF THE WORK AS DEFINED BY THE DRAWINGS AND IN FULL CONFORMANCE WITH LOCAL REGULATIONS AND CODES.

H:\2015\MD152013\DRAWINGS\PLAN SETS\SITE DEVELOPMENT PLANS - PHASE-II\MD152013DA2.DWG PRINTED BY: RBOWEN 6.28.16 @ 11:29 AM LAST SAVED BY: RBOWEN

OWNER: ESTATES AT PATAPSCO PARK, LLC
24012 FREDERICK ROAD
CLARKSBURG, MD 20861
CONTACT: MR. DAN SNYDER
PHONE: (301) 674-8509

DEVELOPER: ESTATES AT PATAPSCO PARK, LLC
24012 FREDERICK ROAD
CLARKSBURG, MD 20861
CONTACT: MR. DAN SNYDER
PHONE: (301) 674-8509

PERMIT INFORMATION CHART

SUBDIVISION NAME: ESTATES AT PATAPSCO PARK		SECTION/AREA: N/A		LOT/PARCEL NO.: 203-205, 208-210, 213-248, & 373-385	
PLAT # OR L/F: #23421	GRID #: 5, 6, 11, 12	ZONING: R-20 & R-ED	TAX MAP NO.: 17	ELECT DISTR: 2ND	CENSUS TRACT: 602100

PREVIOUS FILE No. : SP-13-012, ECP-13-029, WP-13-165, PB CASE NO. 403, F-14-124, CONT.# 10-3500 (FORCE MAIN), PLATS 23421 TO 23436, F-16-051, PLATS 23596 - 23609, SDP-16-019

PROFESSIONAL CERTIFICATION
I, BRANDON R. ROWE, HEREBY CERTIFY THAT THESE DOCUMENTS WERE PREPARED OR APPROVED BY ME, AND THAT I AM A DULY LICENSED PROFESSIONAL ENGINEER UNDER THE LAWS OF THE STATE OF MARYLAND, LICENSE NO. 40808, EXPIRATION DATE: 7/3/2017

BOHLER ENGINEERING
CIVIL & CONSULTING ENGINEERS
SURVEYORS
PROJECT MANAGERS
ENVIRONMENTAL CONSULTANTS
LANDSCAPE ARCHITECTS
CORPORATE OFFICE: ♦ WARREN, NJ
OFFICES: ♦ SOUTHBOROUGH, MA ♦ ALBANY, NY ♦ RONKONKOMA, NY ♦ CHALFONT, PA ♦ CENTER VALLEY, PA ♦ TAMPA, FL ♦ BOWIE, MD ♦ TOWSON, MD ♦ STERLING, VA ♦ WARRENTON, VA ♦ FORT LAUDERDALE, FL ♦ PHILADELPHIA, PA

THE INFORMATION, DESIGN AND CONTENT OF THIS PLAN ARE PROPRIETARY AND SHALL NOT BE COPIED OR USED FOR ANY PURPOSE WITHOUT PRIOR WRITTEN AUTHORIZATION FROM BOHLER ENGINEERING. ONLY APPROVED, SIGNED AND SEALED PLANS SHALL BE UTILIZED FOR CONSTRUCTION PURPOSES.@ 2008 BOHLER ENGINEERING.

REVISIONS

REV	DATE	COMMENT	BY

DIG WITH CARE — CALL BEFORE YOU DIG

THE FOLLOWING STATES REQUIRE NOTIFICATION BY EXCAVATORS, DESIGNERS, OR ANY PERSON PREPARING TO DISTURB THE EARTH'S SURFACE ANYWHERE IN THE STATE. IN VIRGINIA, MARYLAND, THE DISTRICT OF COLUMBIA, AND DELAWARE CALL - 811
(WV 1-800-245-4848) (PA 1-800-242-1776) (DC 1-800-257-7777) (VA 1-800-552-7001) (MD 1-800-257-7777) (DE 1-800-282-8555)

PROJECT No.: MD152013
DRAWN BY: AVG
CHECKED BY: JMA
DATE: 6/24/16
SCALE: AS SHOWN
CAD I.D.: DA2

PROJECT: SITE DEVELOPMENT PLANS (PHASE II)
FOR
ESTATES AT PATAPSCO PARK

SINGLE FAMILY DETACH UNITS
BUILDABLE LOTS 203-205, 208-210, 213-248 & 373-385
PLAT NOs. 23596 - 23609

LOCATION OF SITE
ROGERS AVENUE
HOWARD COUNTY

BOHLER ENGINEERING
901 DULANEY VALLEY ROAD, SUITE 801
TOWSON, MARYLAND 21204
Phone: (410) 821-7900
Fax: (410) 821-7987
www.BohlerEngineering.com

B.R. ROWE
STATE OF MARYLAND — BRANDON R. ROWE — No. 40808 — PROFESSIONAL ENGINEER
PROFESSIONAL ENGINEER MARYLAND LICENSE No. 40808
4/30/16

SHEET TITLE:
STORMWATER MANAGEMENT DRAINAGE AREA SUMMARY

SHEET NUMBER:

SDP-16-050

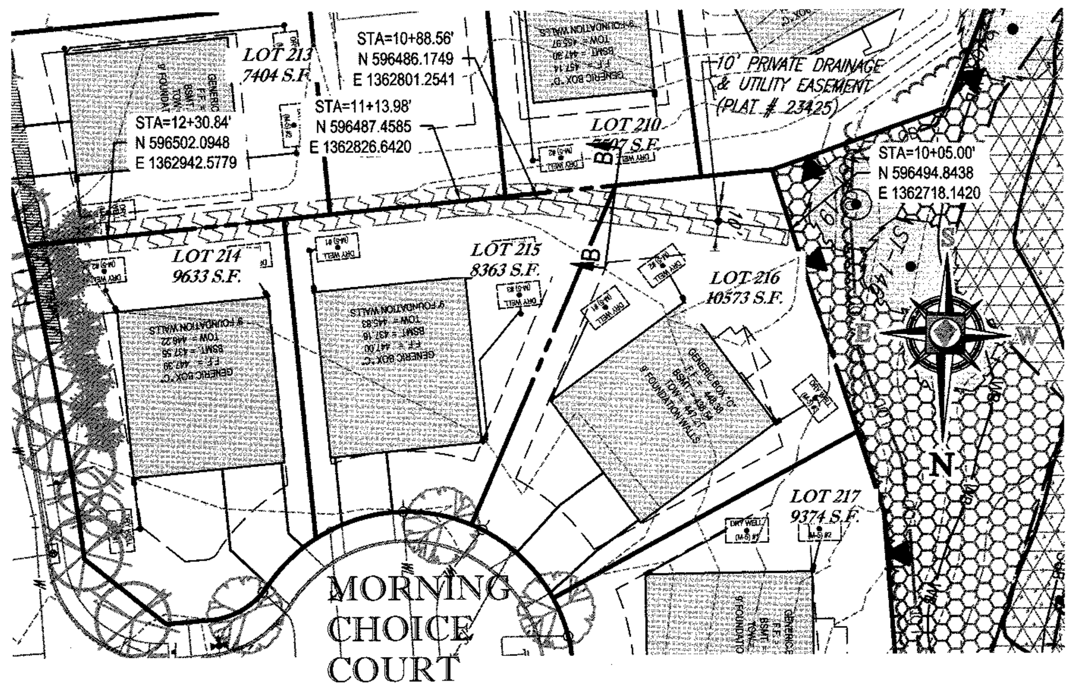

SWALE No. 2 - PLAN

SCALE: 1" = 50'

DRY WELL CONSTRUCTION SPECIFICATIONS

REGULAR INSPECTIONS SHALL BE DURING THE FOLLOWING STAGES OF CONSTRUCTION:

- DURING EXCAVATION TO SUBGRADE
- DURING PLACEMENT OF BACKFILL AND PERFORATED INLET PIPE AND OBSERVATION WELL
- DURING PLACEMENT OF GEOTEXTILES AND ALL FILTER MEDIA
- DURING CONSTRUCTION OF THE APPURTENANT CONVEYANCE
- UPON COMPLETION OF FINAL GRADING AND ESTABLISHMENT OF PERMANENT STABILIZATION.

OPERATION AND MAINTENANCE SCHEDULE FOR PRIVATELY OWNED DRY WELLS

1. PRIVATELY OWNED PRACTICES SHALL HAVE A MAINTENANCE PLAN AND SHALL BE PROTECTED BY EASEMENT, DEED RESTRICTION, ORDINANCE, OR OTHER LEGAL MEASURES PREVENTING ITS NEGLECT, ADVERSE ALTERATION, AND REMOVAL.
2. DRY WELLS SHALL BE INSPECTED AND CLEANED ANNUALLY BY THE OWNER. THIS INCLUDES GUTTERS, DOWNSPOUTS, AND ALL FILTERS.
3. PONDING, STANDING WATER, OR ALGAL GROWTH ON THE TOP OF A DRY WELL MAY INDICATE FAILURE DUE TO SEDIMENTATION IN THE GRAVEL MEDIA. IF WATER PONDS FOR MORE THAN 48 HOURS AFTER A MAJOR STORM OR MORE THAN SIX INCHES OF SEDIMENT HAS ACCUMULATED, THE GRAVEL MEDIA SHOULD BE EXCAVATED AND REPLACED.

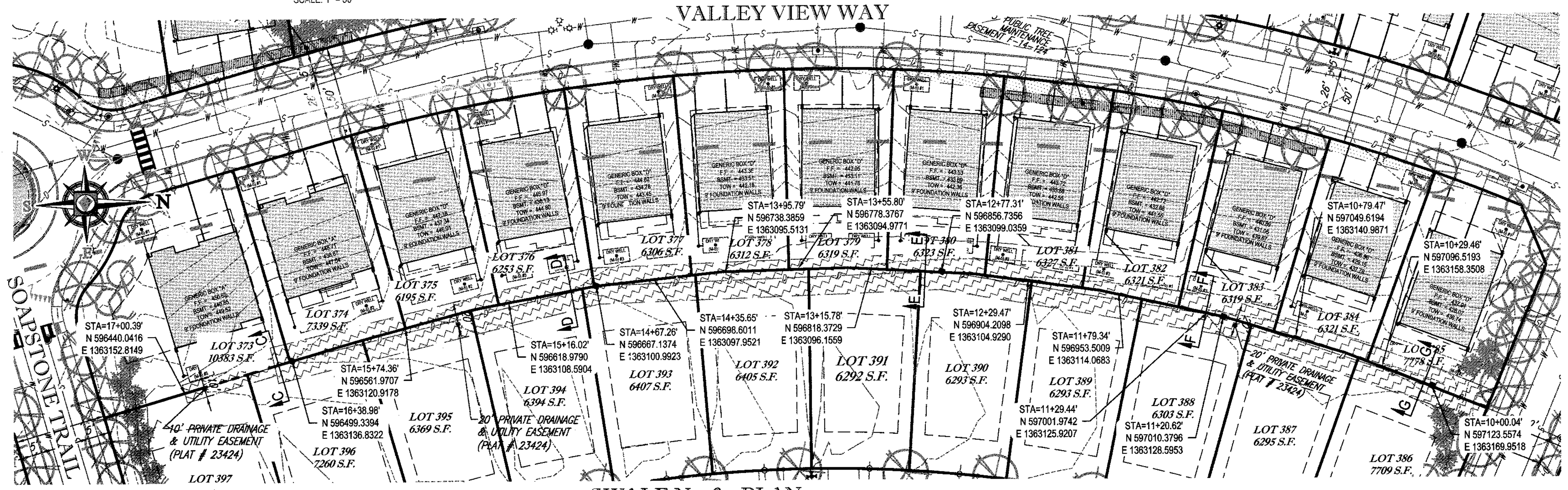

SWALE No. 3 - PLAN

SCALE: 1" = 50'

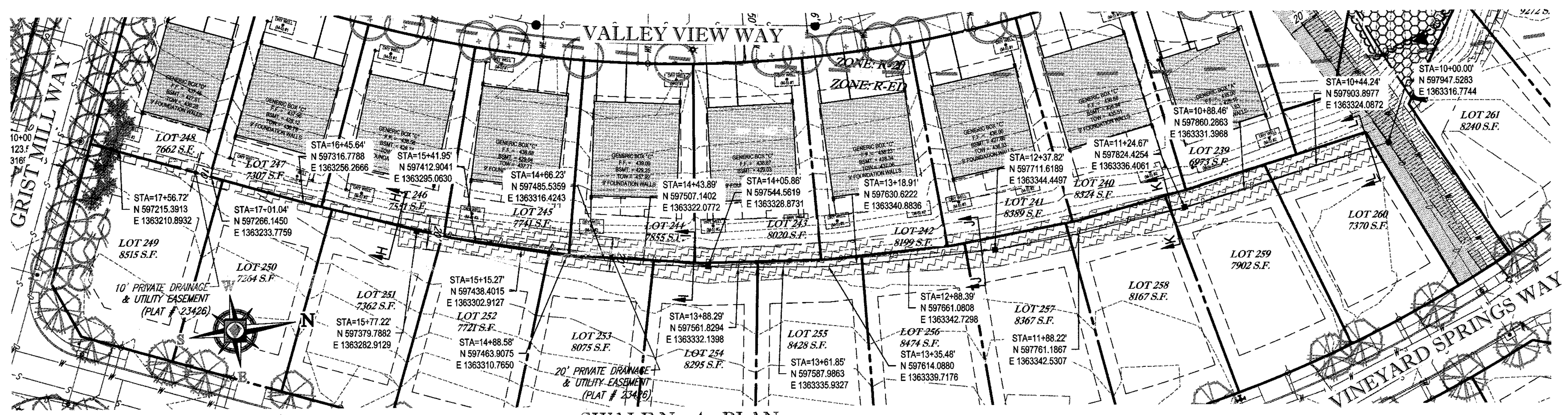

SWALE No. 4 - PLAN

SCALE: 1" = 50'

NOTES:

1. FROM THE DOWNSPOUT TO THE DRYWELL THE DRAIN PIPE MUST BE AT LEAST 6" BELOW GRADE.
2. NONWOVEN GEOTEXTILE FABRIC TO BE INSTALLED ON TOP AND SIDES ONLY. THESE GEOTEXTILES ARE AVAILABLE IN FINKSBURG @ ES&G DISTRIBUTORS 2601 EMORY RD. BLDG 8. 866-744-5001, ANY EQUIVALENT GEOTEXTILE IS ACCEPTABLE.
3. DRYWELL BOTTOM TO BE INSTALLED AS LEVEL AS POSSIBLE AND IN UNDISTURBED SOILS.
4. WHEN TOP OF DRYWELL IS PLACED IN FILL WITHIN 100' OF SLOPES 15% OR GREATER, AN IMPERMEABLE LINER SHALL BE PROVIDED ON THE STEEP SLOPE SIDE OF THE FACILITY AS SHOWN ABOVE.
5. ALL ROOF DRAINS LEADING TO A DRYWELL FACILITY SHALL HAVE A GUTTER DRAIN FILTER.
6. CONSTRUCTION OF A DRYWELL SHALL BE PERFORMED WITH A LIGHTWEIGHT WIDE-TRACKED EQUIPMENT TO MINIMIZE DISTURBANCE AND COMPACTION.
7. TEMPORARY SWM IS PROVIDED UNDER F-14-124.

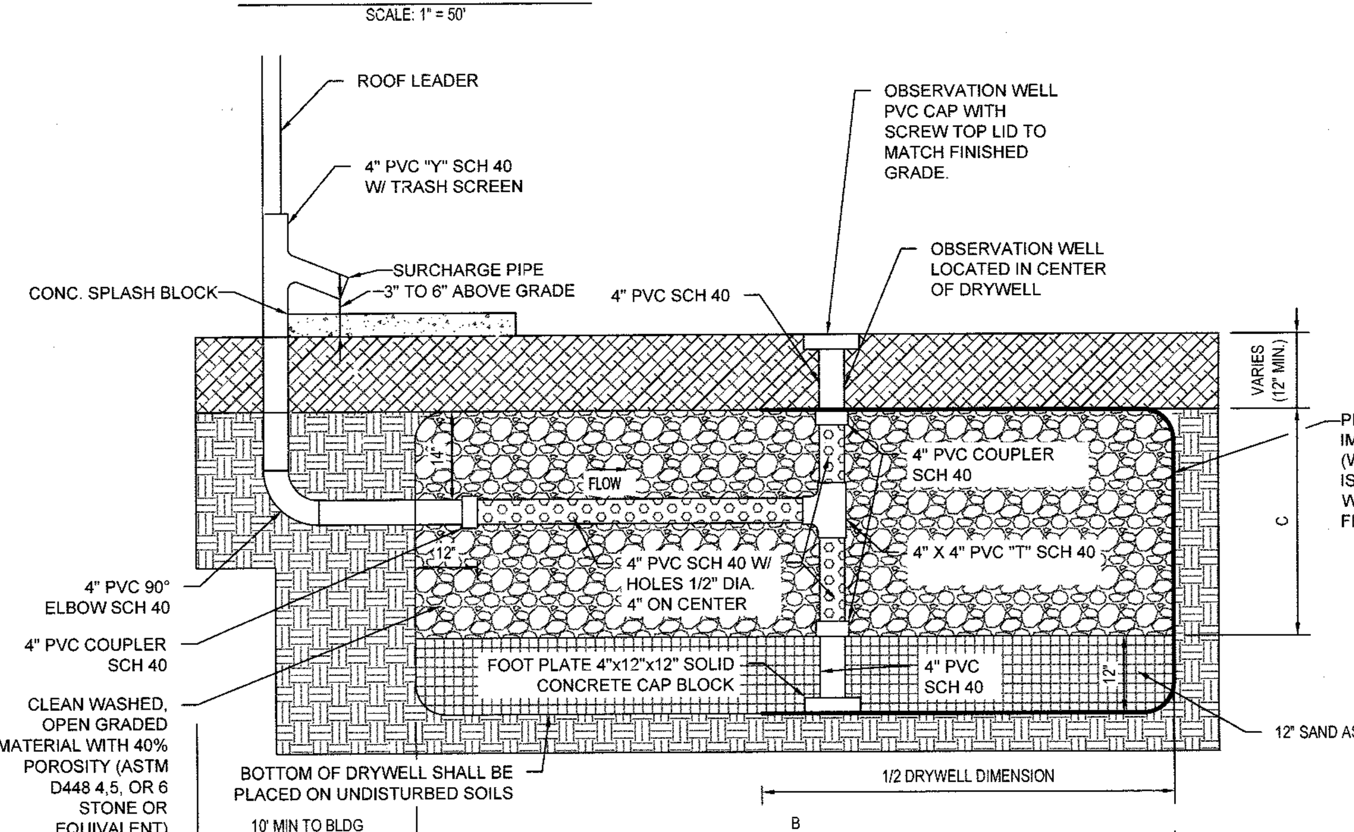

SECTION VIEW

STANDARD DRYWELL SECTION

NOT TO SCALE

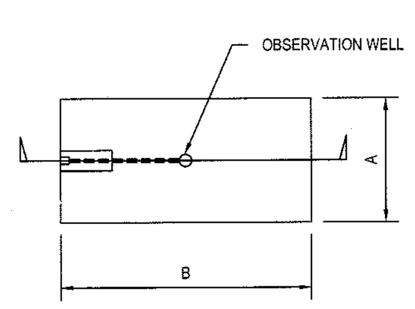

PLAN VIEW

DRYWELL NO.	DRYWELL DIMENSIONS A	B	C	DRYWELL ESDv STORAGE PROVIDED (CUBIC FOOT)
#1	8.00'	14.00'	4.67'	209.20
* #2	8.00'	14.00'	4.67'	209.20
* #3	8.00'	14.00'	4.67'	209.20
* LOT # 385	6.00'	18.00'	4.67'	209.20

DRYWELL SIZE TABLE — GENERIC BOXES : A, B, C, D, E

* DRYWELLS #2 & #3 FOR LOT # 385 HAVE DIFFERENT DIMENSIONS DUE TO THE PROXIMITY OF THE 20' PRIVATE DRAINAGE & UTILITY EASEMENT.

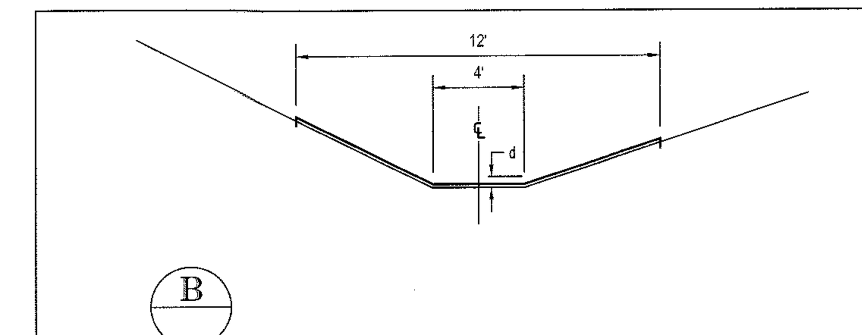

Q_{10} = 2.94 CFS
V_{10} = 1.64 FPS
d_{10} = 0.23'
LINING = SOIL STABILIZATION MATTING OVER SEED & MULCH

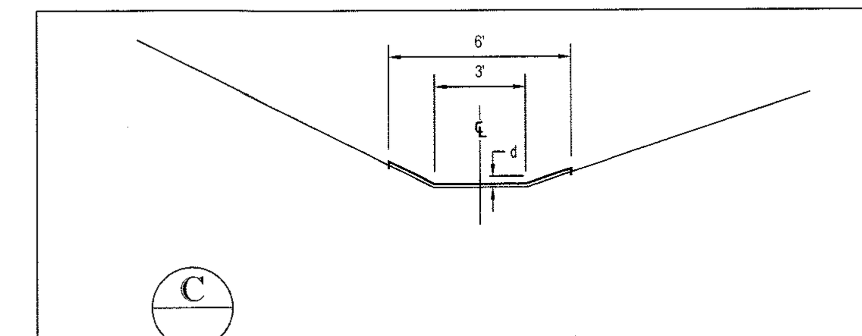

Q_{10} = 1.37 CFS
V_{10} = 2.01 FPS
d_{10} = 0.15'
LINING = SOIL STABILIZATION MATTING OVER SEED & MULCH

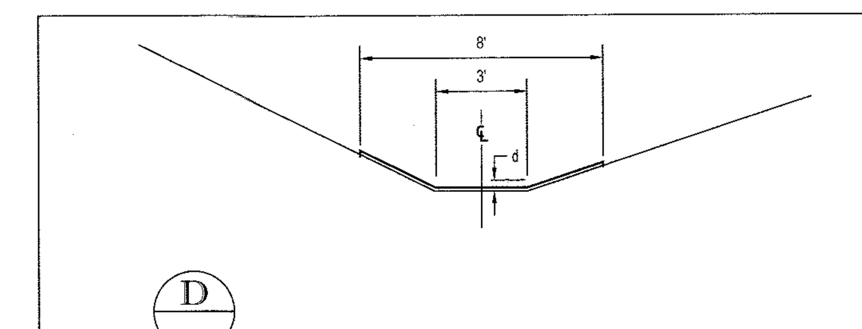

Q_{10} = 2.46 CFS
V_{10} = 2.22 FPS
d_{10} = 0.21'
LINING = SOIL STABILIZATION MATTING OVER SEED & MULCH

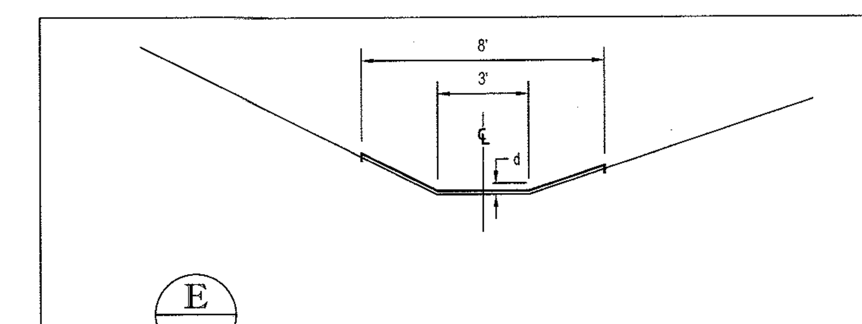

Q_{10} = 2.38 CFS
V_{10} = 2.32 FPS
d_{10} = 0.22'
LINING = SOIL STABILIZATION MATTING OVER SEED & MULCH

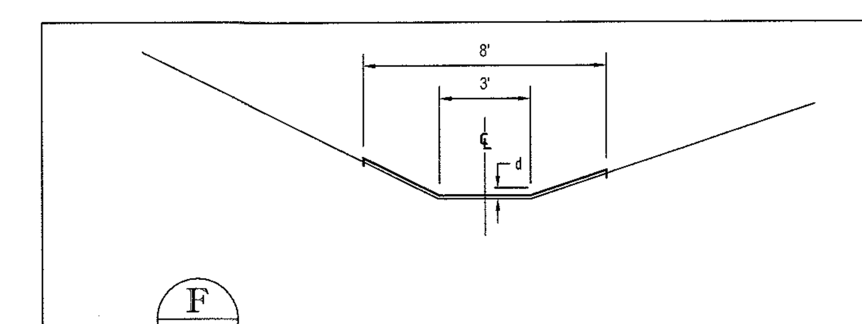

Q_{10} = 2.26 CFS
V_{10} = 2.17 FPS
d_{10} = 0.23'
LINING = SOIL STABILIZATION MATTING OVER SEED & MULCH

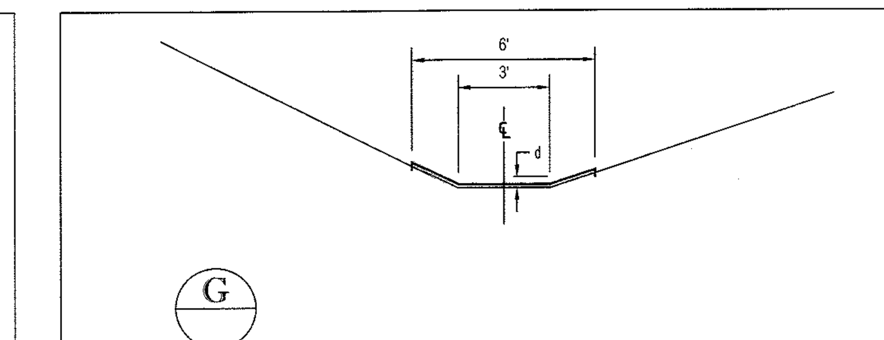

Q_{10} = 1.92 CFS
V_{10} = 2.67 FPS
d_{10} = 0.19'
LINING = SOIL STABILIZATION MATTING OVER SEED & MULCH

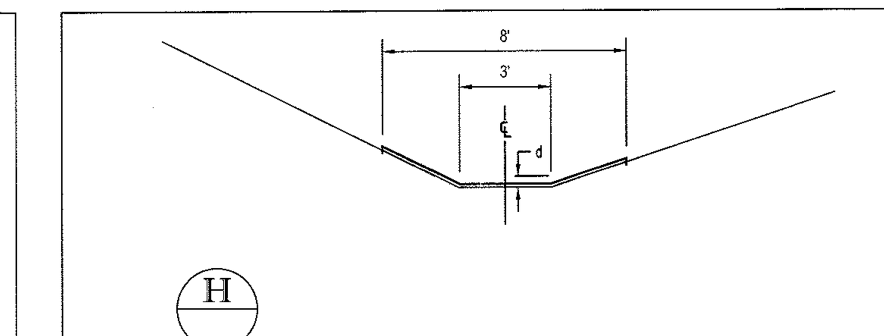

Q_{10} = 2.77 CFS
V_{10} = 2.93 FPS
d_{10} = 0.23'
LINING = SOIL STABILIZATION MATTING OVER SEED & MULCH

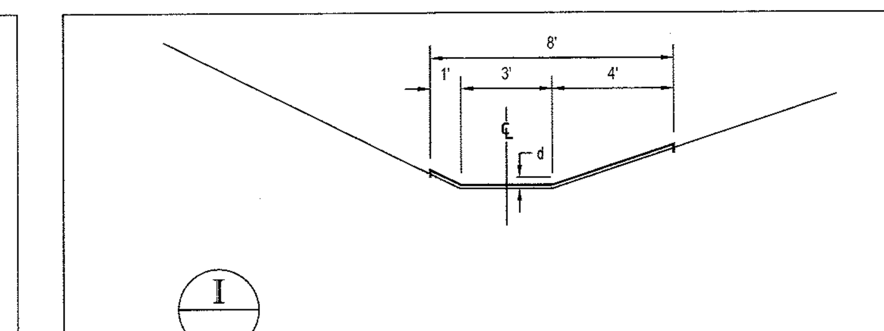

Q_{10} = 2.51 CFS
V_{10} = 1.69 FPS
d_{10} = 0.29'
LINING = SOIL STABILIZATION MATTING OVER SEED & MULCH

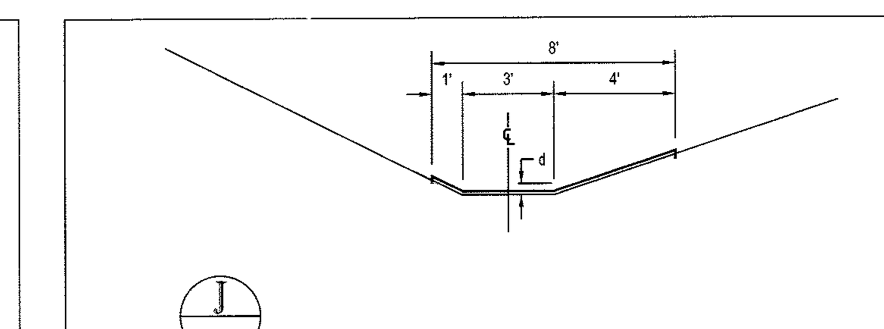

Q_{10} = 2.62 CFS
V_{10} = 1.73 FPS
d_{10} = 0.29'
LINING = SOIL STABILIZATION MATTING OVER SEED & MULCH

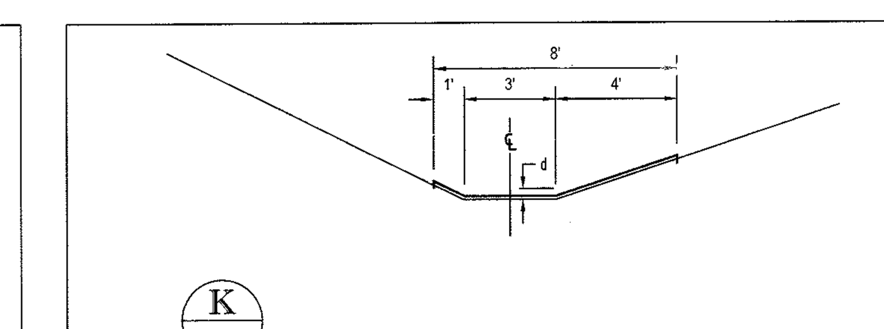

Q_{10} = 2.03 CFS
V_{10} = 1.55 FPS
d_{10} = 0.25'
LINING = SOIL STABILIZATION MATTING OVER SEED & MULCH

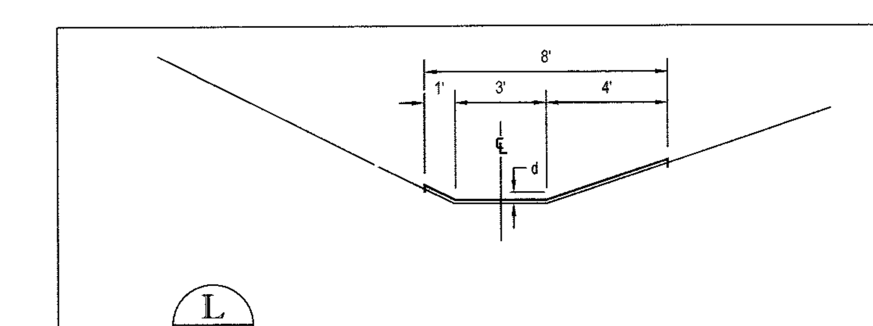

Q_{10} = 1.50 CFS
V_{10} = 1.52 FPS
d_{10} = 0.21'
LINING = SOIL STABILIZATION MATTING OVER SEED & MULCH

APPROVED: DEPARTMENT OF PLANNING AND ZONING

(signature) 8-26-16
CHIEF, DIVISION OF LAND DEVELOPMENT — DATE

(signature) 8-24-16
CHIEF, DEVELOPMENT ENGINEERING DIVISION — DATE

(signature) 8-26-16
DIRECTOR - DEPARTMENT OF PLANNING AND ZONING — DATE

GENERAL NOTE:
IT IS THE RESPONSIBILITY OF THE CONTRACTOR TO REVIEW ALL OF THE DRAWINGS AND SPECIFICATIONS ASSOCIATED WITH THIS PROJECT WORK SCOPE PRIOR TO THE INITIATION OF CONSTRUCTION. SHOULD THE CONTRACTOR FIND A CONFLICT WITH THE DOCUMENTS RELATIVE TO THE SPECIFICATIONS OR APPLICABLE CODES, IT IS THE CONTRACTOR'S RESPONSIBILITY TO NOTIFY THE PROJECT ENGINEER OF RECORD IN WRITING PRIOR TO THE START OF CONSTRUCTION. FAILURE BY THE CONTRACTOR TO NOTIFY THE PROJECT ENGINEER SHALL CONSTITUTE ACCEPTANCE OF FULL RESPONSIBILITY BY THE CONTRACTOR TO COMPLETE THE SCOPE OF THE WORK AS DEFINED BY THE DRAWINGS AND IN FULL CONFORMANCE WITH LOCAL REGULATIONS AND CODES.

ENGINEER'S CERTIFICATE

"I HEREBY CERTIFY THAT THIS PLAN FOR EROSION AND SEDIMENT CONTROL REPRESENTS A PRACTICAL AND WORKABLE PLAN BASED ON MY PERSONAL KNOWLEDGE OF THE SITE CONDITIONS AND IT WAS PREPARED IN ACCORDANCE WITH THE REQUIREMENTS OF THE HOWARD SOIL CONSERVATION DISTRICT."

SIGNATURE OF ENGINEER — BRANDON R. ROWE, P.E. — DATE 6/30/16

DEVELOPER'S CERTIFICATE

"I/WE HEREBY CERTIFY THAT ALL DEVELOPMENT AND CONSTRUCTION WILL BE DONE ACCORDING TO THIS PLAN, AND THAT ANY RESPONSIBLE PERSONNEL INVOLVED IN THE CONSTRUCTION PROJECT WILL HAVE A CERTIFICATE OF ATTENDANCE AT A DEPARTMENT OF THE ENVIRONMENT APPROVED TRAINING PROGRAM FOR THE CONTROL OF SEDIMENT AND EROSION BEFORE BEGINNING THE PROJECT. I ALSO AUTHORIZE PERIODIC ONSITE INSPECTION BY THE HOWARD SOIL CONSERVATION DISTRICT."

(signature) PROD. MAN PECHASALIS DEV. LLC
AGENT FOR ESTATES AT PATAPSCO PARK LLC
NAME: DAN SNYDER — DATE 7/1/16
TITLE: PROJECT MANAGER

OWNER: ESTATES AT PATAPSCO PARK, LLC
24012 FREDERICK ROAD
CLARKSBURG, MD 20861
CONTACT: MR. DAN SNYDER
PHONE: (301) 674-8509

DEVELOPER: ESTATES AT PATAPSCO PARK, LLC
24012 FREDERICK ROAD
CLARKSBURG, MD 20861
CONTACT: MR. DAN SNYDER
PHONE: (301) 674-8509

PERMIT INFORMATION CHART

SUBDIVISION NAME: ESTATES AT PATAPSCO PARK		SECTION/AREA: N/A		LOT/PARCEL NO.: 203-205, 208-210, 213-248, & 373-385	
PLAT # OR L/F: #23421	GRID #: 5, 6, 11, 12	ZONING: R-20 & R-ED	TAX MAP NO.: 17	ELECT DISTR: 2ND	CENSUS TRACT: 602100

PREVIOUS FILE No. : SP-13-012, ECP-13-029, WP-13-165, PB CASE NO. 403, F-14-124, CONT.# 10-3500 (FORCE MAIN)
PLATS 23421 TO 23436, F-16-051, PLATS 23596 - 23609, SDP-16-019

PROFESSIONAL CERTIFICATION
I, BRANDON R. ROWE, HEREBY CERTIFY THAT THESE DOCUMENTS WERE PREPARED OR APPROVED BY ME, AND THAT I AM A DULY LICENSED PROFESSIONAL ENGINEER UNDER THE LAWS OF THE STATE OF MARYLAND, LICENSE NO. 40808, EXPIRATION DATE: 7/3/2017

BOHLER ENGINEERING
CIVIL & CONSULTING ENGINEERS
SURVEYORS
PROJECT MANAGERS
ENVIRONMENTAL CONSULTANTS
LANDSCAPE ARCHITECTS
CORPORATE OFFICE: WARREN, NJ
OFFICES: SOUTHBOROUGH, MA; ALBANY, NY; RONKONKOMA, NY; CHALFONT, PA; CENTER VALLEY, PA; TAMPA, FL; BOWIE, MD; TOWSON, MD; STERLING, VA; WARRENTON, VA; FORT LAUDERDALE, FL; PHILADELPHIA, PA

THE INFORMATION, DESIGN AND CONTENT OF THIS PLAN ARE PROPRIETARY AND SHALL NOT BE COPIED OR USED FOR ANY PURPOSE WITHOUT PRIOR WRITTEN AUTHORIZATION FROM BOHLER ENGINEERING. ONLY APPROVED, SIGNED AND SEALED PLANS SHALL BE UTILIZED FOR CONSTRUCTION PURPOSES. © 2008 BOHLER ENGINEERING.

REVISIONS

REV	DATE	COMMENT	BY

THE FOLLOWING STATES REQUIRE NOTIFICATION BY EXCAVATORS, DESIGNERS, OR ANY PERSON PREPARING TO DISTURB THE EARTH'S SURFACE ANYWHERE IN THE STATE. IN VIRGINIA, MARYLAND, THE DISTRICT OF COLUMBIA, AND DELAWARE CALL - 811
(WV 1-800-245-4848) (PA 1-800-242-1776) (DC 1-800-257-7777) (VA 1-800-552-7001) (MD 1-800-257-7777) (DE 1-800-282-8555)

PROJECT No.:	MD152013
DRAWN BY:	AVG
CHECKED BY:	JMA
DATE:	6/24/16
SCALE:	AS SHOWN
CAD I.D.:	SM2

PROJECT: SITE DEVELOPMENT PLANS (PHASE II) FOR

ESTATES AT PATAPSCO PARK

SINGLE FAMILY DETACH UNITS
BUILDABLE LOTS 203-205, 208-210, 213-248 & 373-385
PLAT NOs. 23596 - 23609

LOCATION OF SITE
ROGERS AVENUE
HOWARD COUNTY

BOHLER ENGINEERING
901 DULANEY VALLEY ROAD, SUITE 801
TOWSON, MARYLAND 21204
Phone: (410) 821-7900
Fax: (410) 821-7987
www.BohlerEngineering.com

B.R. ROWE
STATE OF MARYLAND — BRANDON R. ROWE — PROFESSIONAL ENGINEER — No. 40808 — 6/30/16

SHEET TITLE:
STORMWATER MANAGEMENT NOTES & DETAILS

SHEET NUMBER:

SDP-16-050

H:\2015\MD152013\DRAWINGS\PLAN SETS\SITE DEVELOPMENT PLANS - PHASE-II\MD152013SM2.DWG PRINTED BY: RBOWEN 6.28.16 @ 11:32 AM LAST SAVED BY: RBOWEN

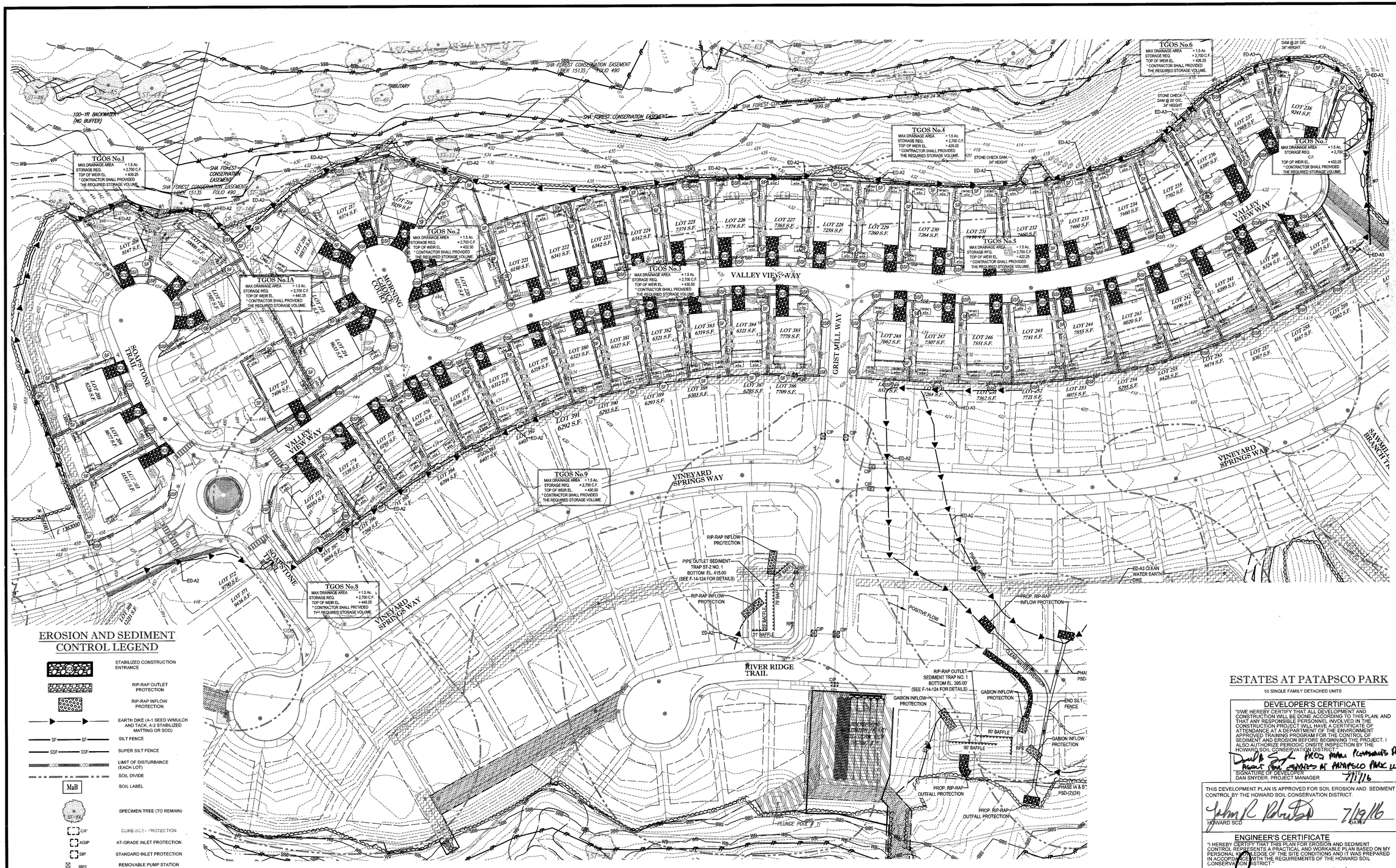

EROSION AND SEDIMENT CONTROL LEGEND

- STABILIZED CONSTRUCTION ENTRANCE
- RIP-RAP OUTLET PROTECTION
- RIP-RAP INFLOW PROTECTION
- EARTH DIKE (A-1 SEED W/MULCH AND TACK, A-2 SEED W/MULCH MATTING OR SOD)
- SF — SILT FENCE
- SSF — SUPER SILT FENCE
- LOD — LIMIT OF DISTURBANCE (EACH LOT)
- SOIL DIVIDE
- MaB — SOIL LABEL
- ST-100 — SPECIMEN TREE (TO REMAIN)
- CIP — CURB INLET PROTECTION
- AGIP — AT-GRADE INLET PROTECTION
- SIP — STANDARD INLET PROTECTION
- RPS — REMOVABLE PUMP STATION
- PSD — PIPE SLOPE DRAIN (CLEAR WATER DIVERSION)
- TGOS — TEMPORARY GABION OUTLET STRUCTURE

NOTES:

1. SEE FINAL ROAD CONSTRUCTION, GRADING AND STORMWATER MANAGEMENT PLANS FOR ESTATES AT PATAPSCO PARK (F-14-124) FOR MORE INFORMATION ON THE OVERALL PHASED EROSION AND SEDIMENT CONTROL MEASURES, INCLUDING PIPE OUTLET SEDIMENT TRAP No.1, RIPRAP OUTLET SEDIMENT TRAP No. 1, AND TEMPORARY GABION OUTLET STRUCTURES 1 THROUGH 9.
2. THE CONTRACTOR, AT THE DIRECTION OF THE SEDIMENT CONTROL INSPECTOR, MAY RELOCATE PHASE ONE PERIMETER SEDIMENT CONTROL MEASURES (EARTH DIKES AND/OR TEMP. GABION OUTLET STRUCTURES) TO ALLOW FOR THE INDIVIDUAL LOT SEDIMENT CONTROL MEASURES TO BE INSTALLED.
3. TEMPORARY STORMWATER MANAGEMENT IS PROVIDED UNDER THE FINAL ROAD CONSTRUCTION PLAN (F-14-124). PIPE OUTLET SEDIMENT TRAP No.1, RIPRAP OUTLET SEDIMENT TRAP No. 1, TEMPORARY GABION OUTLET STRUCTURES 1 THROUGH 9. THE SITE DEVELOPMENT PLAN PHASE II PLANS ALSO PROVIDE PERIMETER SEDIMENT CONTROL MEASURES FOR EACH LOT.

THIS PLAN IS FOR INFORMATION PURPOSES ONLY

1"= 60'

APPROVED: DEPARTMENT OF PLANNING AND ZONING

CHIEF, DIVISION OF LAND DEVELOPMENT	DATE 8-26-16
CHIEF, DEVELOPMENT ENGINEERING DIVISION	DATE 8-24-16
DIRECTOR - DEPARTMENT OF PLANNING AND ZONING	DATE 8-26-16

GENERAL NOTE
IT IS THE RESPONSIBILITY OF THE CONTRACTOR TO REVIEW ALL OF THE DRAWINGS AND SPECIFICATIONS ASSOCIATED WITH THIS PROJECT WORK SCOPE PRIOR TO THE INITIATION OF CONSTRUCTION. SHOULD THE CONTRACTOR FIND A CONFLICT WITH THE DOCUMENTS RELATIVE TO THE SPECIFICATIONS OR APPLICABLE CODES, IT IS THE CONTRACTOR'S RESPONSIBILITY TO NOTIFY THE PROJECT ENGINEER OF RECORD IN WRITING PRIOR TO THE START OF CONSTRUCTION. FAILURE BY THE CONTRACTOR TO NOTIFY THE PROJECT ENGINEER SHALL CONSTITUTE ACCEPTANCE OF FULL RESPONSIBILITY BY THE CONTRACTOR TO COMPLETE THE SCOPE OF THE WORK AS DEFINED BY THE DRAWINGS AND IN FULL CONFORMANCE WITH LOCAL REGULATIONS AND CODES.

H:\2015\MD150013\DRAWINGS\PLAN SETS\SITE DEVELOPMENT PLANS - PHASE-II.MD150013-SITEDEVPLANS PRINTED BY: BROWEN 6.30.16 @ 11:36 AM LAST SAVED BY: BROWEN

BOHLER ENGINEERING
CIVIL & CONSULTING ENGINEERS
SURVEYORS
PROJECT MANAGERS
ENVIRONMENTAL CONSULTANTS
LANDSCAPE ARCHITECTS
CORPORATE OFFICE: WARREN, NJ
SOUTHBOROUGH, MA • ALBANY, NY • ROCHESTER HILLS, MI • CHALFONT, PA • CENTER VALLEY, PA • DOVER, DE
BOWIE, MD • TOWSON, MD • MANASSAS, VA • WARRENTON, VA • FORT LAUDERDALE, FL • TAMPA, FL

THE INFORMATION, DESIGN AND CONTENT OF THIS PLAN ARE PROPRIETARY AND SHALL NOT BE COPIED OR USED FOR ANY PURPOSE WITHOUT PRIOR WRITTEN AUTHORIZATION FROM BOHLER ENGINEERING, OR, IF APPROVED, COPIED AND USED BY OTHERS FOR CONSTRUCTION PURPOSES ONLY.

REVISIONS

REV	DATE	COMMENT	BY

THE FOLLOWING STATES REQUIRE NOTIFICATION BY EXCAVATORS, DESIGNERS, OR ANY PERSON PREPARING TO DISTURB THE EARTH'S SURFACE ANYWHERE IN THE STATE: IN VIRGINIA, MARYLAND, THE DISTRICT OF COLUMBIA, AND DELAWARE CALL 811.
(WV 1-800-245-4848) (PA 1-800-242-1776) (DC 1-800-257-7777) (VA 1-800-552-7001) (MD 1-800-257-7777) (DE 1-800-282-8555)

PROJECT No.:	MD152013
DRAWN BY:	AVG
CHECKED BY:	JMA
DATE:	6/24/16
SCALE:	1" = 60'
CAD I.D.:	EA2

PROJECT: SITE DEVELOPMENT PLANS (PHASE II) FOR

ESTATES AT PATAPSCO PARK

SINGLE FAMILY DETACH UNITS
BUILDABLE LOTS 203-205, 208-210, 213-248 & 373-385
PLAT NOs. 23596 - 23609

LOCATION OF SITE
ROGERS AVENUE
HOWARD COUNTY

BOHLER ENGINEERING
901 DULANEY VALLEY ROAD, SUITE 901
TOWSON, MARYLAND 21204
Phone: (410) 821-7900
Fax: (410) 821-7987
www.BohlerEngineering.com

B.R. ROWE — PROFESSIONAL ENGINEER — No. 49908 — 6/30/16

SHEET TITLE:
PHASE I - EROSION & SEDIMENT CONTROL (F-14-124) / TEMPORARY STORMWATER MANAGEMENT OVERALL PLAN

SHEET NUMBER:
19 of 19

SDP-16-050

ESTATES AT PATAPSCO PARK

55 SINGLE FAMILY DETACHED UNITS

DEVELOPER'S CERTIFICATE

"I/WE HEREBY CERTIFY THAT ALL DEVELOPMENT AND CONSTRUCTION WILL BE DONE ACCORDING TO THIS PLAN, AND THAT ANY RESPONSIBLE PERSONNEL INVOLVED IN THE CONSTRUCTION PROJECT WILL HAVE A CERTIFICATE OF ATTENDANCE AT A DEPARTMENT OF THE ENVIRONMENT APPROVED TRAINING PROGRAM FOR THE CONTROL OF SEDIMENT AND EROSION BEFORE BEGINNING THE PROJECT. I ALSO AUTHORIZE PERIODIC ONSITE INSPECTION BY THE HOWARD SOIL CONSERVATION DISTRICT."

SIGNATURE OF DEVELOPER — DATE 7/1/16
DAN SNYDER, PROJECT MANAGER

THIS DEVELOPMENT PLAN IS APPROVED FOR SOIL EROSION AND SEDIMENT CONTROL BY THE HOWARD SOIL CONSERVATION DISTRICT.

HOWARD SCD — DATE 7/19/16

ENGINEER'S CERTIFICATE

"I HEREBY CERTIFY THAT THIS PLAN FOR EROSION AND SEDIMENT CONTROL REPRESENTS A PRACTICAL AND WORKABLE PLAN BASED ON MY PERSONAL KNOWLEDGE OF THE SITE CONDITIONS AND IT WAS PREPARED IN ACCORDANCE WITH THE REQUIREMENTS OF THE HOWARD SOIL CONSERVATION DISTRICT."

SIGNATURE OF ENGINEER — DATE 6/30/16
BRANDON R. ROWE, P.E.

OWNER:	DEVELOPER:
ESTATES AT PATAPSCO PARK, LLC 24012 FREDERICK ROAD CLARKSBURG, MD 20861 CONTACT: MR. DAN SNYDER PHONE: (301) 074-8509	ESTATES AT PATAPSCO PARK, LLC 24012 FREDERICK ROAD CLARKSBURG, MD 20861 CONTACT: MR. DAN SNYDER PHONE: (301) 674-8509

PERMIT INFORMATION CHART

SUBDIVISION NAME: ESTATES AT PATAPSCO PARK		SECTION/AREA: N/A	LOT/PARCEL NO.: 203–205, 208-210, 213-248, & 373-385
PLAT # OR LIF: #23421	GRID #: 5, 6, 11, 12	ZONING: R-20 & R-ED	TAX MAP NO.: 17	ELECT DISTR: 2ND	CENSUS TRACT: 602100

PREVIOUS FILE No.: SP-13-012, ECP-13-029, WP-13-165, PB CASE NO. 403, F-14-124, CONT. # 10-3500 (FORCE MAIN), PLATS 23421 TO 23436, F-16-051, PLAT'S 23596 - 23609, SDP-16-019

PROFESSIONAL CERTIFICATION
I, BRANDON R. ROWE, HEREBY CERTIFY THAT THESE DOCUMENTS WERE PREPARED OR APPROVED BY ME, AND THAT I AM A DULY LICENSED PROFESSIONAL ENGINEER UNDER THE LAWS OF THE STATE OF MARYLAND, LICENSE NO. 49908, EXPIRATION DATE: 7/3/2017