SITE DEVELOPMENT PLAN
HCLS ELKRIDGE BRANCH AND 50+ CENTER
6540 WASHINGTON BOULEVARD
PARCEL 'A'
1ST ELECTION DISTRICT
HOWARD COUNTY, MARYLAND

SHEET INDEX

NO	DESCRIPTION	NO	DESCRIPTION
1	COVER SHEET	25	SOIL BORING LOGS
2	OVERALL PLAN	26	SITE DETAILS AND SOIL BORING LOGS
3	EXISTING CONDITIONS AND DEMOLITION PLAN	27	ARCHITECTURAL ELEVATIONS
4	SITE DEVELOPMENT PLAN	28	RETAINING WALL PLAN
5	GRADING AND SEDIMENT CONTROL PLAN - PH I	29	RETAINING WALL GENERAL NOTES
6	GRADING AND SEDIMENT CONTROL PLAN - PH II	30	RETAINING WALL TYPICAL SECTIONS AND DETAILS
7	SEDIMENT CONTROL NOTES	31	RETAINING WALL ELEVATION
8	SEDIMENT CONTROL DETAILS	32	ELECTRICAL LEGEND, SCHEDULES, & ABBREVIATIONS
9	SEDIMENT CONTROL DETAILS	33	ELECTRICAL SITE PLAN
10	SEDIMENT CONTROL DETAILS	34	SITE PHOTOMETRIC PLAN
11	STORM DRAIN PLAN	35	MATERIALS PLAN
12	STORM DRAIN DRAINAGE AREA MAP	36	SOILS PLAN
13	STORM DRAIN DRAINAGE AREA MAP	37	OVERALL PLANTING PLAN - SDP
14	STORM DRAIN PROFILES AND SCHEDULES	38	PLANTING PLAN - I - SDP
15	STORMWATER MANAGEMENT PLAN	39	PLANTING PLAN - II - SDP
16	DETAILED STORMWATER MANAGEMENT PLAN	40	PLANTING DETAILS - SDP
17	STORMWATER MANAGEMENT DETAILS	41	PLANTING SCHEDULE & REQUIREMENTS - SDP
18	STORMWATER MANAGEMENT DETAILS	42	SITE FURNITURE DETAILS
19	PAVING, STRIPING , AND SIGNAGE PLAN	43	CONSTRUCTION DETAILS
20	SITE DETAILS	44	CONSTRUCTION DETAILS
21	ADA/PEDESTRIAN ACCESS PLAN	45	OVERALL PLANTING PLAN - SWM
22	TREE PROTECTION PLAN	46	PLANTING PLAN - I - SWM
23	FOREST CONSERVATION PLAN	47	PLANTING PLAN - II - SWM
24	FOREST CONSERVATION NOTES AND DETAILS/	48	PLANTING DETAILS - SWM
	TRAFFIC CONTROL DETAILS	49	PLANTING SCHEDULE & REQUIREMENTS - SWM
		50	CONSTRUCTION DETAILS & SEDIMENT CONTROL DA MAP

SITE ANALYSIS DATA

AREA OF SITE:

PARCEL 'A'	6.32 ACRES (275,208 SF)
LIMIT OF DISTURBANCE:	4.99 ACRES (217,263 SF)
PRESENT ZONING:	B-1 (BUSINESS: LOCAL) R-12 (RESIDENTIAL: SINGLE)
EXISTING USES:	LIBRARY, SENIOR CENTER AND PARKING LOT
PROPOSED USES:	LIBRARY, SENIOR CENTER AND PARKING LOT
EXISTING FLOOR AREA:	±17,872 SF
PROPOSED FLOOR AREA:	±44,085 SF
MAXIMUM # OF EMPLOYEES:	33
PARKING REQUIRED:	166 SPACES*
PARKING PROPOSED:	166 SPACES
AREA OF WETLANDS:	0.11 ACRES (4,943 SF)
AREA OF WETLAND BUFFERS:	0.31 ACRES (13,287 SF)
AREA OF FLOODPLAIN:	0.00 ACRES (0.00 SF)
FOREST AREA:	1.71 ACRES (74,515 SF)
AREA OF FOREST WITHIN LOD:	0.76 ACRES (33,358 SF)
AREA OF STEEP SLOPES:	
15%-25%:	±0.26 ACRES (±11,204 SF)
25%+:	±0.46 ACRES (±20,078 SF)
AREA OF ERODIBLE SOILS:	±0.00 ACRES (±0 SF)
IMPERVIOUS AREA:	
EXISTING:	±106,867 SF
PROPOSED:	±158,908 SF

ZONE B-1 STRUCTURE AND USE SETBACKS:

PUBLIC RIGHT-OF-WAY: 30 FEET
RESIDENTIAL DISTRICTS: 30 FEET
MAX. BUILDING HEIGHT: 40 FEET
PARKING USES FROM PUBLIC RIGHT-OF-WAY: 10'

ZONE R-12 STRUCTURE AND USE SETBACKS:

FROM COLLECTOR PUBLIC STREET RIGHT-OF-WAY:
STRUCTURES FRONT OR SIDE: 30 FEET
USES: 20 FEET

FROM LOT LINES:
STRUCTURES FRONT: 20 FEET
STRUCTURES SIDE: 7.5 FEET
USES: 20 FEET

*SEE PARKING NEEDS ANALYSIS SUBMITTED WITH SITE DEVELOPMENT PLAN.

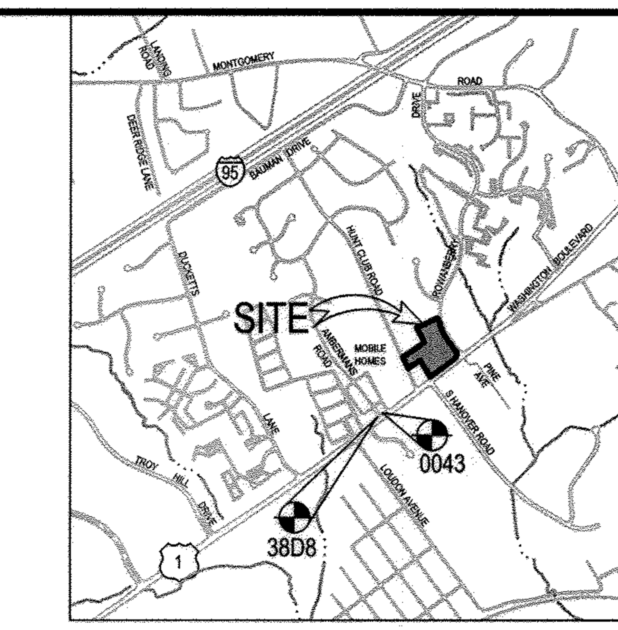

VICINITY MAP

SCALE: 1"=2,000'
HOWARD COUNTY
ADC MAP/GRID NO. 35/D3
ADC MAP USE LICENSE #3652

BENCHMARKS

HOWARD COUNTY SURVEY CONTROL: 0043
ELEVATION 189.491
N 558,479.001 E 1,386,642.122
LOCATION IS 14.8' FROM THE CENTERLINE OF AMBERMANS ROAD AND 7.8' FROM THE SIDEWALK ALONG ROUTE 1.

HOWARD COUNTY SURVEY CONTROL: 38D8
ELEVATION 192.132
N 558,427.282 E 1,386,582.476
LOCATION 46.8' SOUTH OF BGE POLE #235170 AND 3.5' FROM THE SIDEWALK ALONG ROUTE 1.

GENERAL NOTES

1. ALL CONSTRUCTION SHALL BE IN ACCORDANCE WITH THE LATEST STANDARDS AND SPECIFICATIONS OF HOWARD COUNTY PLUS MSHA STANDARDS AND SPECIFICATIONS, IF APPLICABLE.
2. THE CONTRACTOR SHALL NOTIFY "MISS UTILITY" AT 1-800-257-7777 AT LEAST 48 HOURS PRIOR TO ANY EXCAVATION WORK BEING DONE.
3. ALL PLAN DIMENSIONS ARE TO FACE OF CURB UNLESS OTHERWISE NOTED.
4. THE EXISTING TOPOGRAPHY IS PROVIDED BY PENNONI ASSOCIATES, INC., DATED JUNE 25, 2015, VIRGINIA RESOURCE MAPPING DATED JULY 5, 2014, AND HAS BEEN SUPPLEMENTED BY HOWARD COUNTY GIS INFORMATION.
5. THE BOUNDARY SURVEY IS PROVIDED BY PENNONI ASSOCIATES, INC., DATED JUNE 25, 2015 AND HAS BEEN SUPPLEMENTED BY COUNTY GIS INFORMATION.
6. THE COORDINATES SHOWN HEREON ARE BASED UPON THE HOWARD COUNTY GEODETIC CONTROL WHICH IS BASED UPON THE MARYLAND STATE PLANE COORDINATE SYSTEM NAD 83/91. HOWARD COUNTY MONUMENT NOS. 0043 AND 38D8 WERE USED FOR THIS PROJECT.
7. WATER IS PUBLIC, CONTRACTS 14-3171-D, 348 AND 14-4953-D.
8. SEWER IS PUBLIC, CONTRACT 14-317-D, 348-S AND 14-4953-D.
9. APPROXIMATE LOCATION OF EXISTING UTILITIES ARE SHOWN. THE CONTRACTOR SHALL TAKE ALL NECESSARY PRECAUTIONS TO PROTECT THE EXISTING UTILITIES AND MAINTAIN UNINTERRUPTED SERVICE. ANY DAMAGE INCURRED DUE TO CONTRACTOR'S OPERATION SHALL BE REPAIRED IMMEDIATELY AT THE CONTRACTOR'S EXPENSE. EXISTING UTILITIES ARE SHOWN BASED ON THE BEST AVAILABLE INFORMATION.
10. THERE IS NO FLOODPLAIN PRESENT ON THE PROPERTY.
11. EXISTING WETLANDS ARE LOCATED ON THE PROPERTY. A WETLAND REPORT FOR THIS PROPERTY WAS COMPLETED BY BRAY HILL, LLC DATED NOVEMBER 2014. A WETLAND REPORT FOR THE VERIZON PROPERTY WAS COMPLETED BY PENNONI ASSOCIATES ON MARCH, 16, 2016. THERE ARE NO WETLANDS ON THE VERIZON PROPERTY.
12. ON DECEMBER 15, 2015 THE STATE OF MARYLAND DEPARTMENT OF THE ENVIRONMENT WATER MANAGEMENT DIVISION ISSUED A LETTER OF AUTHORIZATION TO ALLOW GRADING PRACTICES TO OCCUR WITHIN THE EXISTING WETLANDS LOCATED ON THE SITE. AUTHORIZATION NUMBER: 15-NT-3327/201561799.
13. SUBJECT PROPERTY ZONED B-1 AND R-12 PER THE OCTOBER 6, 2013 COMPREHENSIVE ZONING PLAN.
14. ALL ELEVATIONS SHOWN ARE BASED NAVD88.
15. ALL LIGHTING IS TO BE DIRECTED/REFLECTED DOWNWARD AWAY FROM ADJACENT PUBLIC ROADS AND RESIDENTIALLY ZONED PROPERTIES IN ACCORDANCE WITH SECTION 134.0 OF THE HOWARD COUNTY ZONING REGULATIONS. LIGHT TRESPASS ONTO ANY PROPERTY ZONED R-12 SHALL BE LIMITED TO 0.1 FOOT CANDLES.
16. AN EXISTING LIBRARY BUILDING EXISTS ON THE PROPERTY.
17. BASED ON AVAILABLE COUNTY MAPS AND RECORDS, THERE ARE NO HISTORIC STRUCTURES OR KNOWN CEMETERIES LOCATED ON THE SUBJECT PROPERTY.
18. APPLICABLE DPZ FILE REFERENCES: SDP-91-083, ECP-16-015, F-16-080, WP-16-094, PLAT NOS. 23869 · 23870
19. NO GRADING, REMOVAL OF VEGETATIVE COVER OR TREES, PAVING AND NEW STRUCTURES SHALL BE PERMITTED WITHIN THE LIMITS OF WETLANDS, STREAMS, OR THEIR REQUIRED BUFFERS, FLOODPLAIN AND FOREST CONSERVATION AREAS, EXCEPT AS SHOWN ON THIS PLAN AND APPROVED BY HOWARD COUNTY AND MDE.
20. FOREST CONSERVATION FOR THIS PROJECT HAS BEEN PROVIDED THROUGH THE RETENTION OF 0.63 ACRES OF ON-SITE FOREST AND PAYMENT OF A FEE-IN-LIEU OF $24,503 FOR 0.75 ACRES OF FOREST. THE FOREST CONSERVATION EASEMENT HAS BEEN ESTABLISHED TO FULFILL THE REQUIREMENTS OF SECTION 16.1200 OF THE HOWARD COUNTY CODE AND FOREST CONSERVATION ACT. NO CLEARING, GRADING, OR CONSTRUCTION IS PERMITTED WITHIN THE FOREST CONSERVATION EASEMENT, HOWEVER FOREST MANAGEMENT PRACTICES AS DEFINED IN THE DEED OF FOREST CONSERVATION EASEMENT ARE ALLOWED.
21. THIS PLAN HAS BEEN PREPARED IN ACCORDANCE WITH THE PROVISIONS OF SECTION 16.124 OF THE HOWARD COUNTY CODE AND LANDSCAPE MANUAL. LANDSCAPE PLANTINGS FOR 46 SHADE TREES, 16 ORNAMENTAL TREES, 56 EVERGREEN TREES, AND 325 SHRUBS HAVE BEEN PROVIDED UNDER THIS PLAN. FINANCIAL SURETY IS NOT REQUIRED FOR THIS PLAN AS THIS PROJECT IS A COUNTY CAPITAL PROJECT.
22. STORMWATER MANAGEMENT FOR THIS PROJECT WILL BE PROVIDED BY AN EXISTING SWM FACILITY, PERMEABLE PAVEMENT, AND THREE (3) MICRO-BIORETENTION FACILITIES.
23. A NOISE STUDY IS NOT REQUIRED FOR THIS PROJECT.
24. A DUMPSTER IS SHOWN ON THIS PLAN. TRASH REMOVAL WILL OCCUR REGULARLY.
25. A FOREST STAND DELINEATION FOR THIS PROPERTY WAS COMPLETED BY PENNONI ASSOCIATES, INC. DATED SEPTEMBER 3, 2015.
26. THE CONTRACTOR SHALL TEST PIT EXISTING UTILITIES AT LEAST (5) DAYS BEFORE STARTING WORK SHOWN ON THESE DRAWINGS.
27. CONTRACTOR IS SOLELY RESPONSIBLE FOR CONSTRUCTION MEANS, METHODS, TECHNIQUES, SEQUENCES, PROCEDURES, AND SAFETY PRECAUTIONS AND PROGRAMS. THE CONTRACTOR SHALL FOLLOW THE SEQUENCE OF CONSTRUCTION OUTLINED IN THESE PLANS.
28. PIPE SHALL NOT BE INSTALLED BY THE CONTRACTOR UNTIL THE LENGTH CALLED FOR AT EACH STATION HAS BEEN APPROVED BY THE ENGINEER IN THE FIELD.
29. NO PIPE SHALL BE LAID UNTIL LINES OF EXCAVATION HAVE BEEN BROUGHT WITHIN 6" OF FINISHED GRADE
30. ALL PIPE ELEVATIONS SHOWN ARE INVERT ELEVATIONS.
31. PROFILE STATIONS SHALL BE ADJUSTED AS NECESSARY TO CONFORM TO PLAN DIMENSIONS.
32. ALL FILL AREAS WITHIN ROADWAY AND UNDER STRUCTURES TO BE COMPACTED TO A MINIMUM OF 95% COMPACTION OF AASHTO T180.
33. AN ACCESSIBLE ROUTE SHALL BE PROVIDED BETWEEN HANDICAPPED PARKING OR PUBLIC RIGHT OF WAYS TO THE MAIN BUILDING ENTRANCE IN ACCORDANCE WITH CURRENT ADA AND LOCAL STANDARDS. ALL HANDICAPPED RAMPS SHALL BE CONSTRUCTED ACCORDING TO CURRENT ADA AND LOCAL STANDARDS. EXCEPT AS SUPERSEDED IN CURRENT ADA AND LOCAL STANDARDS THE FOLLOWING SHALL APPLY:
A) MAXIMUM SIDEWALK CROSS SLOPES SHALL BE 2%,
B) A MINIMUM 5'X 5' LANDING AREA WITH A MAXIMUM SLOPE IN ANY DIRECTION OF 2% SHALL BE PROVIDED AT ALL CHANGES IN DIRECTION, TOPS AND BOTTOMS OF RAMPS, AND BUILDING EGRESS POINTS
C) ALL HANDICAPPED PARKING SHALL BE SLOPED NO GREATER THAN 2% IN ANY DIRECTION, INCLUDING A 5' WIDE AREA BEHIND THE PARKING SPACES.
D) AN ACCESS ROUTE FROM THE PARKING SPACE(S) TO THE MAIN BUILDING ENTRANCE SHALL BE PROVIDED. ALL SLOPES ALONG THE DIRECTION OF TRAVEL SHALL NOT EXCEED 1:20 UNLESS THEY FALL UNDER CONDITION B) ABOVE. SLOPES IN EXCESS OF 1:20 EXCEPT FOR CURB RAMPS, REQUIRE A HANDRAIL MEETING ADA REQUIREMENTS. SEE SHEET 38 FOR DETAIL OF HANDICAPPED PARKING.
34. WP-16-038 TO WAIVE SECTION 16.1205(a)(7) TO REMOVE SPECIMEN TREES AND SECTION 16.116(a)(1) TO DISTURB WETLAND BUFFERS WAS APPROVED ON APRIL 21, 2016.

CONDITIONS OF APPROVAL:
1) APPROVAL IS FOR THE REMOVAL OF TWO (2) SPECIMEN TREES IDENTIFIED AS SPECIMEN TREES #3 & #4 ON THE WAIVER PETITION EXHIBIT AND SITE DEVELOPMENT PLAN. NO OTHER SPECIMEN TREES MAY BE REMOVED. REMOVAL OF THE TWO SPECIMEN TREES WILL REQUIRE MITIGATION OF TWO (2) 3-4" CALIPER SHADE TREES. IF THE SITE DESIGN ALLOWS, THESE MITIGATION TREES SHOULD BE PLANTED ALONG THE PERIMETER OF THE PROJECT IN ORDER TO PROVIDE ENHANCED SCREENING FOR THE EXISTING ADJACENT DEVELOPED PROPERTIES. REVIEW FOR COMPLIANCE WITH THIS MITIGATION REQUIREMENT WILL BE CONDUCTED WITH THE REVIEW OF THE LANDSCAPE PLAN FOR THE SITE DEVELOPMENT PLAN.

2) IMPACT IS RESTRICTED TO WETLAND BUFFER AS SHOWN AND INDICATED ON THE WAIVER EXHIBIT. ANY PROPOSAL TO INCREASE THE IMPACT TO THE WETLAND BUFFER WILL REQUIRE AN ADDITIONAL WAIVER PETITION TO BE SUBMITTED OR A RECONSIDERATION OF THIS WAIVER PETITION FILE. BEST MANAGEMENT PRACTICES FOR WORKING WITHIN THE WETLAND BUFFER SHALL BE USED BY ALL CONTRACTORS DURING CONSTRUCTION OF THE PARKING AREA AND PATHWAY.

3) THE PROPOSED WETLAND BUFFER DISTURBANCES ARE SUBJECT TO OBTAINING ALL NECESSARY PERMITS FROM THE MARYLAND DEPARTMENT OF THE ENVIRONMENT AND THE U.S. ARMY CORPS OF ENGINEERS, AS REQUIRED.

35. THIS PROJECT IS SUBJECT TO COMPLIANCE WITH THE AMENDED FIFTH EDITION OF THE SUBDIVISION AND LAND DEVELOPMENT REGULATIONS. DEVELOPMENT OR CONSTRUCTION ON THIS PROPERTY MUST COMPLY WITH SETBACK AND BUFFER REGULATIONS IN EFFECT AT THE TIME OF SUBMISSION OF THE SITE DEVELOPMENT PLAN, WAIVER PETITION APPLICATION OR BUILDING/GRADING PERMIT APPLICATIONS.
36. THIS SITE COMPLIES WITH THE HOWARD COUNTY GREEN BUILDINGS LAW SET FORTH UNDER TITLE 3, SUBTITLE 10 OF THE HOWARD COUNTY CODE AND SECTION 3.1005(A) OF THE CODE. REGISTRATION WITH THE GREEN BUILDING COUNCIL AND THE APPLICABLE LEED REGISTRATION FEE WAS PAID ON 12/2/2015. THE LEED NEW CONSTRUCTION CHECKLIST WAS PREPARED, SIGNED AND DATED BY THE PROJECT LEED ACCREDITED PROFESSIONAL AND WAS RECEIVED BY DPZ ON MARCH 18, 2016. THE PROPOSED BUILDING IS TENTATIVELY CREDITED BY THE GREEN BUILDING COUNCIL AT A GOLD LEVEL.
37. A PRE-SUBMISSION COMMUNITY MEETING WAS HELD ON FEBRUARY 4, 2016.
38. A VARIANCE FROM SECTION 109.0.D.4.c.(3) OF THE HOWARD COUNTY ZONING REGULATIONS TO REDUCE A 20' USE SETBACK TO 3' AND FROM SECTION 118.0.D.2.b OF THE HOWARD COUNTY ZONING REGULATIONS TO REDUCE A 30' USE SETBACK TO 3' WAS APPROVED BY THE HOWARD COUNTY COUNCIL ON MAY 2, 2016, AS COUNCIL RESOLUTION 52-2016 (CR52-2016).
39. THE FOLLOWING STANDARDS (CONSTRUCTION AND TEMPORARY TRAFFIC CONTROL) ARE REQUIRED FOR THIS PROJECT
    a. MD-620.02 - STANDARD TYPES A & B CONCRETE CURB AND COMBINATION CONCRETE CURB & GUTTER
    b. MD-655.13 - SIDEWALK RAMPS COMBINATION
    c. MD-655.40 - DETECTABLE WARNING SURFACES
    d. MD-104.06-09B - PED AND CURB LANE CONTROL (AS APPLICABLE)

    FOR ALL STANDARDS REFERRED TO ON THE PLANS THE CONTRACTOR MUST GO TO THE BOOK OF STANDARDS WHICH WILL HAVE THE MOST CURRENT VERSION. THE BOOK OF STANDARDS CAN BE ACCESSED AT: http://apps.roads.maryland.gov/businesswithsha/bizStdsSpecs/desManualStdPub/publicationsonline/ohd/bookstd/index.asp
    ALL ITEMS ARE TO BE CONSTRUCTED IN ACCORDANCE WITH THE CURRENT VERSION OF THE REFERENCED STANDARD AT THE TIME OF CONSTRUCTION.
40. A TRAFFIC STUDY FOR THIS PROJECT WAS PREPARED BY PENNONI ASSOCIATES. THE STUDY WAS APPROVED BY THE COUNTY ON APRIL 7, 2016, AND BY THE STATE HIGHWAY ADMINISTRATION ON MARCH 8, 2016.
41. A 16' X 12' CONCRETE PAD FOR A FUTURE, COUNTY PROVIDED, BUS SHELTER WILL BE PROVIDED AS PART OF THIS PROJECT. THE EXACT LOCATION OF THE SHELTER, ALONG U.S. ROUTE 1 OR ROWANBERRY DRIVE WILL BE DETERMINED BY THE COUNTY'S OFFICE OF TRANSPORTATION DURING THE CONSTRUCTION PHASE OF THE PROJECT.
42. IN ACCORDANCE WITH SECTION 128.0.A(1)(A) OF THE ZONING REGULATIONS CORNICES, EAVES AND CANTILEVERED BUILDING FEATURES WHICH DO NOT CONTAIN FLOOR AREA OR EXTENSION OF INTERIOR LIVING SPACE MAY ENCROACH 3 FEET INTO ANY SETBACK.

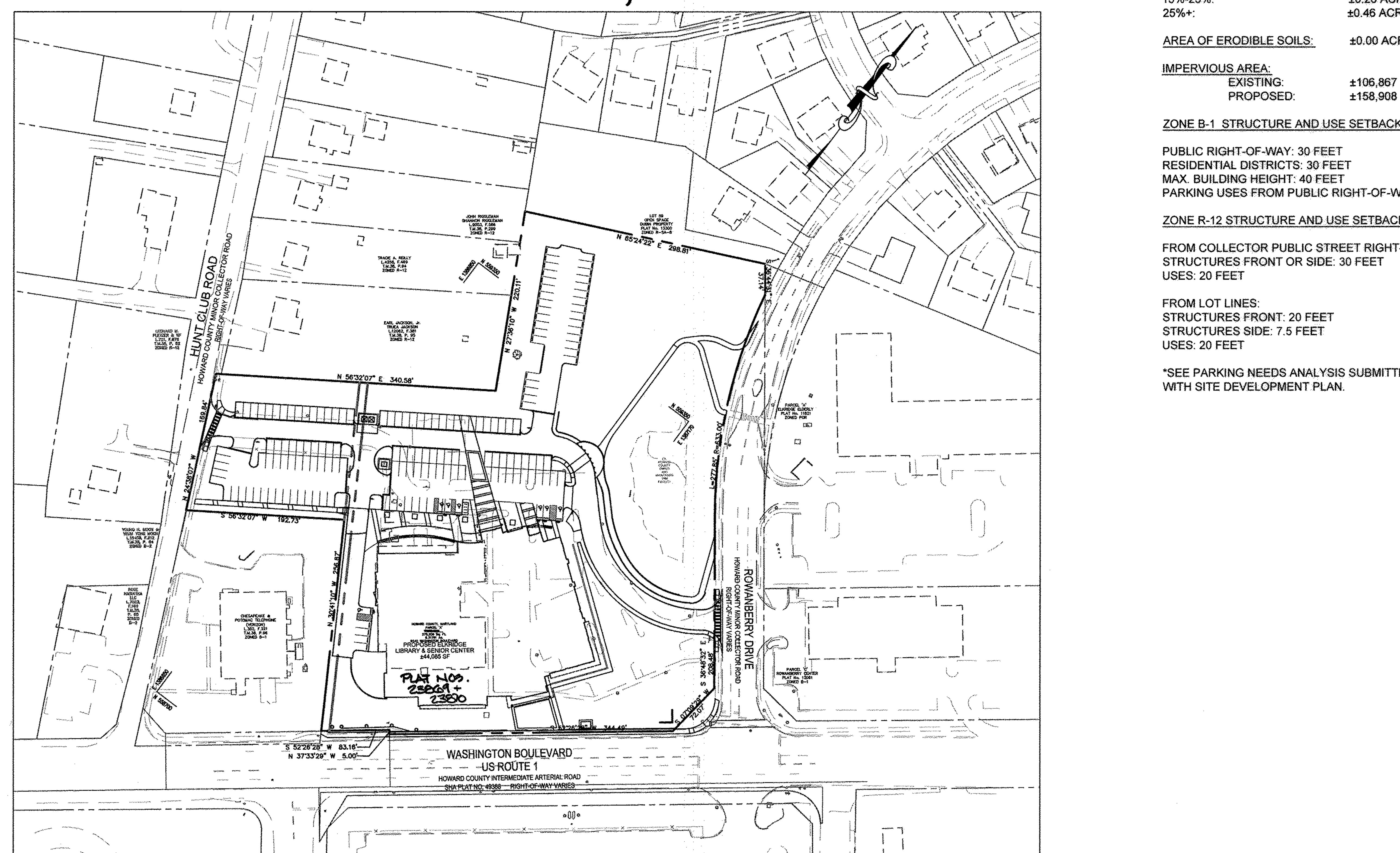

LOCATION PLAN

SCALE: 1" = 100'

GRAPHIC SCALE 1"=100'
50' 0' 100' 200'

ADDRESS CHART

PARCEL NUMBER	STREET ADDRESS
'A'	6540 WASHINGTON BOULEVARD

SUBDIVISION NAME	SECT./AREA	PARCEL
PARCEL 'A'	-	'A'

PLAT NO. OR L/F	GRID #	ZONING	TAX MAP NO.	ELECT. DIST.	CENSUS TRACT
~~PLAT F-16-080~~ 23869 23870	7	B-1 & R-12	38	1	601201

APPROVED : DEPARTMENT OF PLANNING AND ZONING

CHIEF, DEVELOPMENT ENGINEERING DIVISION	DATE 7.19.16
CHIEF, DIVISION OF LAND DEVELOPMENT	DATE 8-16-16
DIRECTOR	DATE 8-16-16

DATE	NO.	REVISION	BY

DEVELOPER
HOWARD COUNTY
DEPARTMENT OF PUBLIC WORKS
BUREAU OF FACILITIES
9250 BENDIX ROAD
COLUMBIA, MARYLAND 21045
ATTN: MARK STROMDAHL
PHONE: 410-313-5757

OWNER
HOWARD COUNTY
DEPARTMENT OF PUBLIC WORKS
BUREAU OF FACILITIES
9250 BENDIX ROAD
COLUMBIA, MARYLAND 21045
ATTN: MARK STROMDAHL
PHONE: 410-313-5757

PROJECT
GREEN BUILDING
HCLS ELKRIDGE BRANCH
AND 50+ CENTER

AREA
TAX MAP 38, PARCEL 'A' PLAT 23869 23870 ZONED B-1 & R-12
GRID NO. 7 1st ELECTION DISTRICT
6540 WASHINGTON BOULEVARD
ELKRIDGE, MARYLAND 21075-0000
HOWARD COUNTY, MARYLAND

TITLE
COVER SHEET

Pennoni Associates Inc.
Engineers • Surveyors • Planners
Landscape Architects
8818 Centre Park Drive, Suite 200 Columbia, MD 21045
T 410.997.8900 F 410.997.9282

SEAL
STATE OF MARYLAND SHARON K. CRUZ No. 36896 REGISTERED PROFESSIONAL ENGINEER
BY: 6-29-16
"PROFESSIONAL CERTIFICATION. I HEREBY CERTIFY THAT THESE DOCUMENTS WERE PREPARED OR APPROVED BY ME, AND THAT I AM A DULY LICENSED PROFESSIONAL ENGINEER UNDER THE LAWS OF THE STATE OF MARYLAND, LICENSE NO. 36896, EXPIRATION DATE: 2-15-2017"

DESIGNED BY : PJS/JSN
DRAWN BY: PJS/JSN
PROJECT NO : GRIM1402
DATE : JUNE 20,2016
SCALE : 1" = 100'
DRAWING NO. 1 OF 50

SDP-16-038

I:\PROJECTS\GRIM\GRIM1402-ELKRIDGE LIBRARY\DESIGN_PUBLISH\SITE DEVELOPMENT PLAN\GRIM1402-SDP01

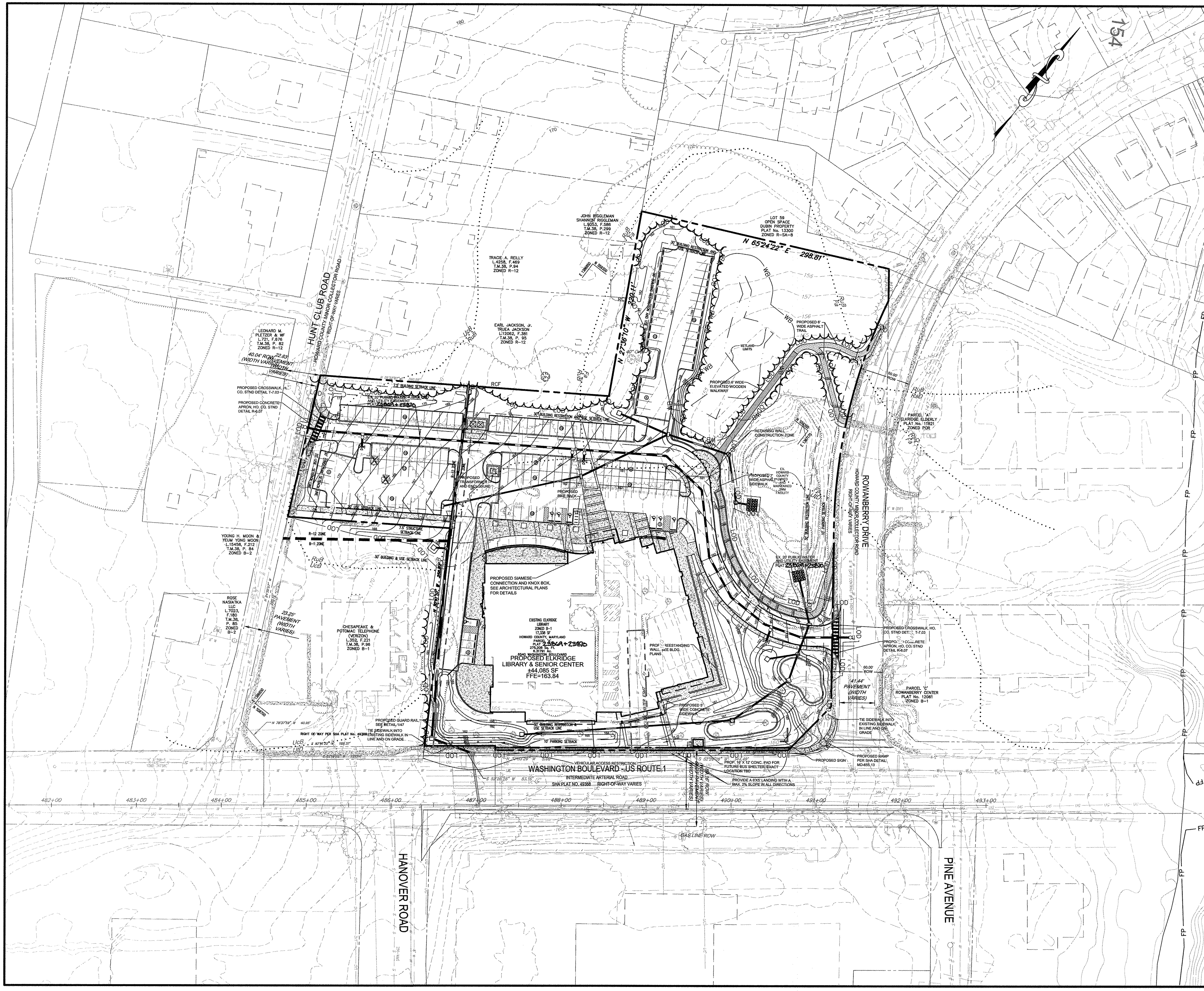

LEGEND

PROPERTY LINE AND RIGHT-OF-WAY	
EXISTING BUILDING	
EXISTING 1' CONTOUR	154
EXISTING 5' CONTOUR	155
EXISTING TREE LINE	
EXISTING SOILS	RuB
EXISTING WETLANDS	
EXISTING WETLAND BUFFER	
EXISTING ZONING LINE	
EXISTING WATER	W
EXISTING SEWER	S
EXISTING COMMUNICATIONS	UC
EXISTING ELECTRICAL	E
EXISTING GAS	G
EXISTING STORM DRAIN	
PROPOSED 1' CONTOUR	164
PROPOSED 5' CONTOUR	165
PROPOSED STORM DRAIN	
PROP. CONCRETE SIDEWALK	

APPROVED : DEPARTMENT OF PLANNING AND ZONING

CHIEF, DEVELOPMENT ENGINEERING DIVISION	DATE 7.19.16
CHIEF, DIVISION OF LAND DEVELOPMENT	DATE 8-16-16
DIRECTOR	DATE 8-16-16

DATE	NO.	REVISION	BY

DEVELOPER
HOWARD COUNTY
DEPARTMENT OF PUBLIC WORKS
BUREAU OF FACILITIES
9250 BENDIX ROAD
COLUMBIA, MARYLAND 21045
ATTN: MARK STROMDAHL
PHONE: 410-313-5757

OWNER
HOWARD COUNTY
DEPARTMENT OF PUBLIC WORKS
BUREAU OF FACILITIES
9250 BENDIX ROAD
COLUMBIA, MARYLAND 21045
ATTN: MARK STROMDAHL
PHONE: 410-313-5757

PROJECT
GREEN BUILDING
HCLS ELKRIDGE BRANCH AND 50+ CENTER

AREA
TAX MAP 38, PARCEL 'A' PLAT 23869 23870 ZONED B-1 & R-12
GRID NO. 7 1st ELECTION DISTRICT
6540 WASHINGTON BOULEVARD
ELKRIDGE, MARYLAND 21075-0000
HOWARD COUNTY, MARYLAND

TITLE
OVERALL PLAN

Pennoni
Pennoni Associates Inc.
Engineers • Surveyors • Planners
Landscape Architects
8818 Centre Park Drive, Suite 200 Columbia, MD 21045
T 410.997.8900 F 410.997.9282

SEAL
STATE OF MARYLAND SHARON K. CRUZ No. 36896 REGISTERED PROFESSIONAL ENGINEER
BY: 6-29-16
"PROFESSIONAL CERTIFICATION. I HEREBY CERTIFY THAT THESE DOCUMENTS WERE PREPARED OR APPROVED BY ME, AND THAT I AM A DULY LICENSED PROFESSIONAL ENGINEER UNDER THE LAWS OF THE STATE OF MARYLAND, LICENSE NO. 36896, EXPIRATION DATE: 2-15-2017"

DESIGNED BY : PJS/JSN
DRAWN BY: PJS/JSN
PROJECT NO : GRIM1402
DATE : JUNE 20,2016
SCALE : 1" = 50'
DRAWING NO. 2 OF 50

SDP-16-038

SITE DEMOLITION NOTES

1. ALL CONSTRUCTION DEBRIS (THIS INCLUDES RECYCLABLE AND NON-RECYCLABLE) SHALL BE DISPOSED OF IN ACCORDANCE WITH LOCAL JURISDICTION.
2. DISPOSE OF ALL DEBRIS OFF-SITE UNLESS INDICATED TO BE SALVAGED.
3. NO SLAB OR LAND DISTURBANCE IS PERMITTED WITHOUT APPROVAL OF SEDIMENT CONTROL, AS SHOWN ON DRAWINGS.
4. CONTRACTOR SHALL COORDINATE WITH APPROPRIATE UTILITY COMPANY PRIOR TO REMOVAL OR RELOCATION OF ANY EXISTING UTILITIES.
5. EXISTING UTILITY LINES HAVE BEEN SHOWN USING THE BEST AVAILABLE RECORDS OBTAINED FROM UTILITY COMPANIES AND FIELD EVIDENCE. PRIOR TO COMMENCEMENT OF WORK, CONTRACTOR SHALL ENGAGE A PRIVATE UTILITY LOCATING COMPANY (AT CONTRACTORS EXPENSE) TO ENSURE THAT ALL EXISTING UTILITIES HAVE BEEN MARKED.
6. ONCE DEMOLITION IS COMPLETED, ALL AREAS OF EXPOSED EARTH SHALL BE STABILIZED WITH HYDRO-SEED AND MULCH.
7. FOR ALL BUILDING DEMOLITION, REFER TO ARCHITECTURAL PLANS.
8. FOR ALL UTILITY DEMOLITION, INCLUDING TRANSFORMER, COORDINATE WITH APPLICABLE UTILITY PROVIDER.
9. EXISTING FIRE HYDRANTS AND WATER METERS SHALL BE RETURNED TO HOWARD COUNTY DEPARTMENT OF PUBLIC WORKS.

LEGEND

PROPERTY LINE AND RIGHT-OF-WAY	
EXISTING BUILDING	
EXISTING 1' CONTOUR	154
EXISTING 5' CONTOUR	155
EXISTING TREE LINE	
EXISTING SOILS	RuB
EXISTING WETLANDS	
EXISTING WETLAND BUFFER	WB
EXISTING ZONING LINE	
EXISTING WATER	W
EXISTING SEWER	S
EXISTING COMMUNICATIONS	UC
EXISTING ELECTRICAL	E
EXISTING GAS	G
REMOVE EX. UNDERGROUND UTILITIES	
DEMOLISH EX. FENCE	
DEMOLISH EX. WALL	
REMOVE EX. CURB & GUTTER	
DEMOLISH EX. BUILDING	
REMOVE EX. ASPHALT	
REMOVE EX. CONCRETE	

DEMOLITION KEY

1. DEMOLISH EX. BUILDINGS
2. REMOVE EX. ASPHALT
3. REMOVE EX. CONCRETE
4. DEMOLISH EX. WALL
5. REMOVE EX. UNDERGROUND UTILITIES (WATER, SEWER, STORM DRAIN)
6. REMOVE EX. ELECTRICAL TRANSFORMER
7. REMOVE EX. LIGHT POLES
8. REMOVE EX. SIGNS
9. SALVAGE EX. FLAGPOLES
10. REMOVE EX. BOLLARDS
11. REMOVE EX. FENCE

BEFORE BEGINNING CONSTRUCTION CONTACT "MISS UTILITY" AT 1-800-257-7777 AT LEAST 48 HOURS PRIOR TO EXCAVATION

APPROVED : DEPARTMENT OF PLANNING AND ZONING

CHIEF, DEVELOPMENT ENGINEERING DIVISION JP	DATE 7.19.16
CHIEF, DIVISION OF LAND DEVELOPMENT	DATE 8-16-16
DIRECTOR	DATE 8-16-16

DATE	NO.	REVISION	BY

DEVELOPER: HOWARD COUNTY, DEPARTMENT OF PUBLIC WORKS, BUREAU OF FACILITIES, 9250 BENDIX ROAD, COLUMBIA, MARYLAND 21045, ATTN: MARK STROMDAHL, PHONE: 410-313-5757

OWNER: HOWARD COUNTY, DEPARTMENT OF PUBLIC WORKS, BUREAU OF FACILITIES, 9250 BENDIX ROAD, COLUMBIA, MARYLAND 21045, ATTN: MARK STROMDAHL, PHONE: 410-313-5757

PROJECT: GREEN BUILDING

HCLS ELKRIDGE BRANCH AND 50+ CENTER

AREA: TAX MAP 38, PARCEL 'A' PLAT ~~23870~~ 23869 ZONED B-1 & R-12
GRID NO. 7 1st ELECTION DISTRICT
6540 WASHINGTON BOULEVARD
ELKRIDGE, MARYLAND 21075-0000
HOWARD COUNTY, MARYLAND

TITLE:

EXISTING CONDITIONS AND DEMOLITION PLAN

Pennoni Associates Inc.
Engineers • Surveyors • Planners
Landscape Architects
8818 Centre Park Drive, Suite 200 Columbia, MD 21045
T 410.997.8900 F 410.997.9282

SEAL: STATE OF MARYLAND, SHARON K. CRUZ, No. 36896, REGISTERED PROFESSIONAL ENGINEER

BY: 6-29-16

"PROFESSIONAL CERTIFICATION. I HEREBY CERTIFY THAT THESE DOCUMENTS WERE PREPARED OR APPROVED BY ME, AND THAT I AM A DULY LICENSED PROFESSIONAL ENGINEER UNDER THE LAWS OF THE STATE OF MARYLAND, LICENSE NO. 36896, EXPIRATION DATE: 2-15-2017"

DESIGNED BY :	PJS/JSN
DRAWN BY:	PJS/JSN
PROJECT NO :	GRIM1402
DATE :	JUNE 20,2016
SCALE :	1" = 30'
DRAWING NO.	3 OF 50

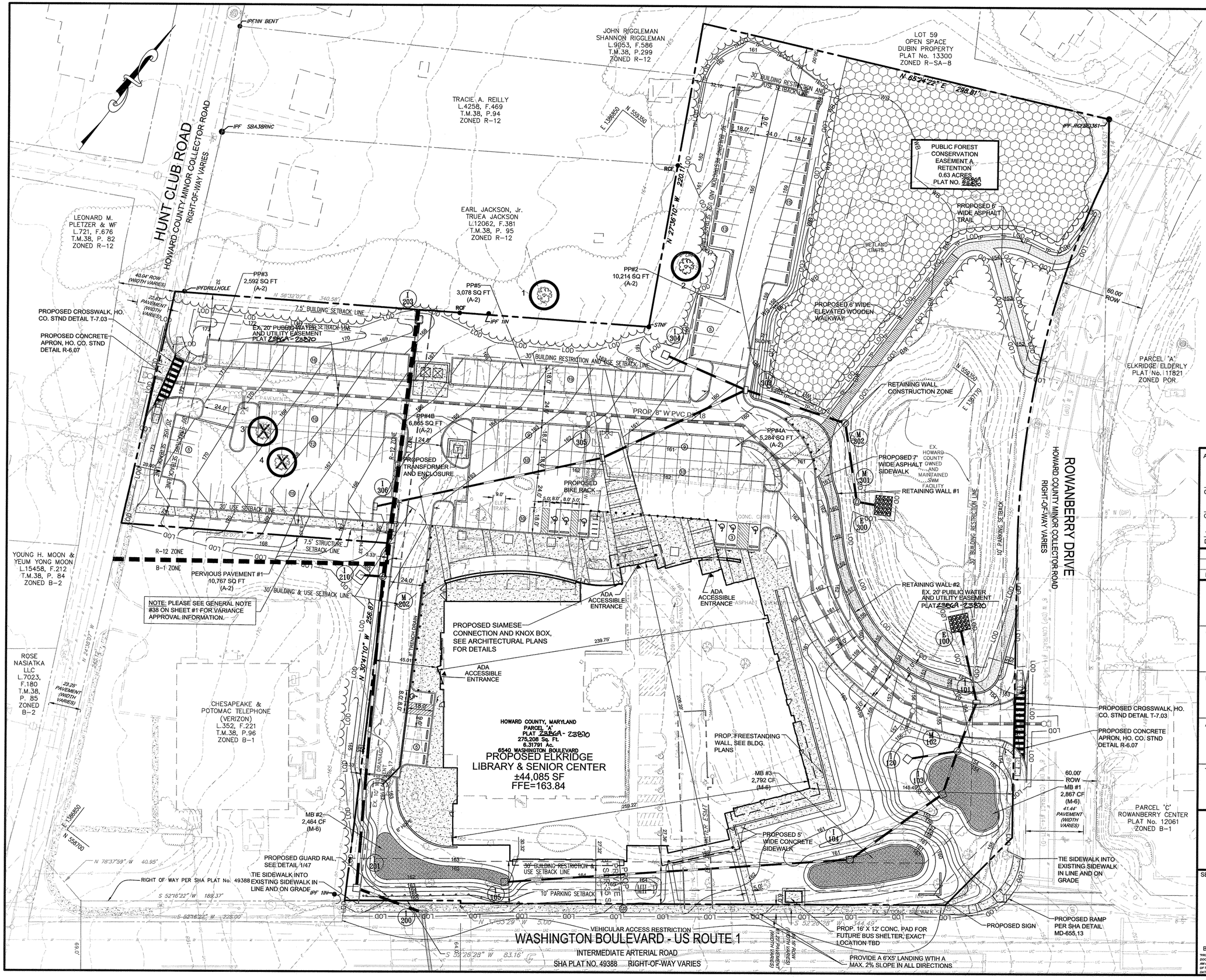

LEGEND

- PROPERTY LINE AND RIGHT-OF-WAY
- EXISTING BUILDING
- EXISTING 1' CONTOUR
- EXISTING 5' CONTOUR
- EXISTING TREE LINE
- EXISTING WETLANDS
- EXISTING WETLAND BUFFER
- EXISTING ZONING LINE
- EXISTING WATER
- EXISTING SEWER
- EXISTING COMMUNICATIONS
- EXISTING ELECTRICAL
- EXISTING GAS
- EXISTING STORM DRAIN
- PROPOSED 1' CONTOUR
- PROPOSED 5' CONTOUR
- PROPOSED MICRO-BIORETENTION FACILITY
- PROPOSED STORM DRAIN
- PROPOSED WATER
- PROP. CONCRETE SIDEWALK
- PROPOSED TREE LINE
- PROP. FOREST CONSERVATION EASEMENT

APPROVED : DEPARTMENT OF PLANNING AND ZONING

CHIEF, DEVELOPMENT ENGINEERING DIVISION — DATE 7.19.16

CHIEF, DIVISION OF LAND DEVELOPMENT — DATE 8-16-16

DIRECTOR — DATE 8-16-16

DATE	NO.	REVISION	BY

DEVELOPER
HOWARD COUNTY
DEPARTMENT OF PUBLIC WORKS
BUREAU OF FACILITIES
9250 BENDIX ROAD
COLUMBIA, MARYLAND 21045
ATTN: MARK STROMDAHL
PHONE: 410-313-5757

OWNER
HOWARD COUNTY
DEPARTMENT OF PUBLIC WORKS
BUREAU OF FACILITIES
9250 BENDIX ROAD
COLUMBIA, MARYLAND 21045
ATTN: MARK STROMDAHL
PHONE: 410-313-5757

PROJECT
GREEN BUILDING
HCLS ELKRIDGE BRANCH AND 50+ CENTER

AREA
TAX MAP 38, PARCEL 'A' PLAT 23BGA 23810 ZONED B-1 & R-12
GRID NO. 7 1st ELECTION DISTRICT
6540 WASHINGTON BOULEVARD
ELKRIDGE, MARYLAND 21075-0000
HOWARD COUNTY, MARYLAND

TITLE
SITE DEVELOPMENT PLAN

Pennoni Associates Inc.
Engineers • Surveyors • Planners
Landscape Architects
8818 Centre Park Drive, Suite 200 Columbia, MD 21045
T 410.997.8900 F 410.997.9282

SEAL
STATE OF MARYLAND — SHARON K. GRIM — No. 21431 — REGISTERED PROFESSIONAL ENGINEER

BY: — 6-23-16

"PROFESSIONAL CERTIFICATION. I HEREBY CERTIFY THAT THESE DOCUMENTS WERE PREPARED OR APPROVED BY ME, AND THAT I AM A DULY LICENSED PROFESSIONAL ENGINEER UNDER THE LAWS OF THE STATE OF MARYLAND, LICENSE NO. 36696, EXPIRATION DATE: 7-15-2017"

DESIGNED BY :	PJS/JSN
DRAWN BY:	PJS/JSN
PROJECT NO :	GRIM1402
DATE :	JUNE 20,2016
SCALE :	1" = 30'
DRAWING NO.	4 OF 50

SDP-16-038

GRAPHIC SCALE 1"=30'
15' 0' 30' 60'

MATCHLINE - SEE SHEET 47

DIVERSION FENCE
DRAINAGE AREA
1.63± AC
(70,950± SF)

DIVERSION FENCE
DRAINAGE AREA:
1.46± AC
(63,250± SF)

SUPER SILT FENCE
DRAINAGE AREA
0.37± AC
(16,641± SF)

HUNT CLUB ROAD
HOWARD COUNTY MINOR COLLECTOR ROAD
RIGHT-OF-WAY VARIES

ROWANBERRY DRIVE
HOWARD COUNTY MINOR COLLECTOR ROAD
RIGHT-OF-WAY VARIES

WASHINGTON BOULEVARD - US ROUTE 1
INTERMEDIATE ARTERIAL ROAD
SHA PLAT NO. 49388 RIGHT-OF-WAY VARIES

HOWARD COUNTY, MARYLAND
PARCEL 'A'
PLAT 23564 - 23570
275,208 Sq. Ft.
6.31791 Ac.
6540 WASHINGTON BOULEVARD

NOTE:
ALL SEDIMENT CONTROLS INTERRUPTED BY UTILITY INSTALLATION ARE TO BE REPAIRED IMMEDIATELY.

SEE SHEET 10 FOR TRAP AND BAFFLE DESIGN INFORMATION AND DETAILS

LEGEND
EXISTING 1' CONTOUR
EXISTING 5' CONTOUR
EXISTING SOILS
PROPOSED 1' CONTOUR
PROPOSED 5' CONTOUR
PROPOSED SPOT ELEVATION
PROPOSED SUPER SILT FENCE
PROPOSED EARTH DIKE
PROPOSED STABILIZED CONSTRUCTION ENTRANCE
PROPOSED STORM DRAIN
PROPOSED TREE LINE
PROPOSED DIVERSION FENCE
DRAINAGE DIVIDE
PROPOSED SOD

ENGINEER'S CERTIFICATE
"I CERTIFY THAT THIS PLAN FOR SEDIMENT AND EROSION CONTROL REPRESENTS A PRACTICAL AND WORKABLE PLAN BASED ON MY PERSONAL KNOWLEDGE OF THE SITE CONDITIONS AND THAT IT WAS PREPARED IN ACCORDANCE WITH THE REQUIREMENTS OF THE HOWARD SOIL CONSERVATION DISTRICT."

SIGNATURE OF ENGINEER (PRINT NAME BELOW SIGNATURE) Sharon L. Cruz — DATE 6-29-16

DEVELOPER'S CERTIFICATE
"I/WE CERTIFY THAT ALL DEVELOPMENT AND CONSTRUCTION WILL BE DONE ACCORDING TO THIS PLAN FOR SEDIMENT AND EROSION CONTROL, AND THAT ALL RESPONSIBLE PERSONNEL INVOLVED IN THE CONSTRUCTION PROJECT WILL HAVE A CERTIFICATE OF ATTENDANCE AT A DEPARTMENT OF THE ENVIRONMENT APPROVED TRAINING PROGRAM FOR THE CONTROL OF SEDIMENT AND EROSION BEFORE BEGINNING THE PROJECT. I ALSO AUTHORIZE PERIODIC ON-SITE INSPECTIONS BY THE HOWARD SOIL CONSERVATION DISTRICT."

SIGNATURE OF DEVELOPER (PRINT NAME BELOW SIGNATURE) RICHARD GASPAROTTI — DATE 28 JUN 2016

THIS DEVELOPMENT PLAN IS APPROVED FOR SOIL EROSION AND SEDIMENT CONTROL BY THE HOWARD SOIL CONSERVATION DISTRICT.
HOWARD SCD — DATE 7/12/16

APPROVED : DEPARTMENT OF PLANNING AND ZONING
CHIEF, DEVELOPMENT ENGINEERING DIVISION — DATE 7.18.16
CHIEF, DIVISION OF LAND DEVELOPMENT — DATE 8.16.16
DIRECTOR — DATE 8-16-16

DATE	NO.	REVISION	BY

DEVELOPER
HOWARD COUNTY
DEPARTMENT OF PUBLIC WORKS
BUREAU OF FACILITIES
9250 BENDIX ROAD
COLUMBIA, MARYLAND 21045
ATTN: MARK STROMDAHL
PHONE: 410-313-5757

OWNER
HOWARD COUNTY
DEPARTMENT OF PUBLIC WORKS
BUREAU OF FACILITIES
9250 BENDIX ROAD
COLUMBIA, MARYLAND 21045
ATTN: MARK STROMDAHL
PHONE: 410-313-5757

PROJECT
GREEN BUILDING
HCLS ELKRIDGE BRANCH AND 50+ CENTER

AREA
TAX MAP 38, PARCEL 'A' PLAT 23564 & 23570 ZONED B-1 & R-12
GRID NO. 7 1st ELECTION DISTRICT
6540 WASHINGTON BOULEVARD
ELKRIDGE, MARYLAND 21075-0000
HOWARD COUNTY, MARYLAND

TITLE
GRADING & SEDIMENT CONTROL PLAN - PHASE I

Pennoni Associates Inc.
Engineers • Surveyors • Planners
Landscape Architects
8818 Centre Park Drive, Suite 200 Columbia, MD 21045
T 410.997.8900 F 410.997.9282

SEAL
STATE OF MARYLAND — SHARON K. CRUZ — 21583 — REGISTERED PROFESSIONAL ENGINEER
BY: 6-29-16
"PROFESSIONAL CERTIFICATION. I HEREBY CERTIFY THAT THESE DOCUMENTS WERE PREPARED OR APPROVED BY ME, AND THAT I AM A DULY LICENSED PROFESSIONAL ENGINEER UNDER THE LAWS OF THE STATE OF MARYLAND, LICENSE NO. 21583, EXPIRATION DATE: 2-13-2017"

DESIGNED BY : PJS/JSN
DRAWN BY: PJS/JSN
PROJECT NO : GRIM1402
DATE : JUNE 20,2016
SCALE : 1" = 30'
DRAWING NO. 5 OF 50

SDP-16-038

GRAPHIC SCALE 1"=30'
15' 0' 30' 60'

IPF 1IN BENT

IPF SBA38RNC

HUNT CLUB ROAD
HOWARD COUNTY MINOR COLLECTOR ROAD
RIGHT-OF-WAY VARIES

LEONARD M. PLETZER & WF
L.721, F.676
T.M.38, P. 82
ZONED R-12

JOHN RIGGLEMAN
SHANNON RIGGLEMAN
L.9953, F.586
T.M.38, P.299
ZONED R-12

TRACIE A. REILLY
L.4258, F.469
T.M.38, P.94
ZONED R-12

EARL JACKSON, Jr.
TRUEA JACKSON
L.12062, F.381
T.M.38, P. 95
ZONED R-12

LOT 59
OPEN SPACE
DUBIN PROPERTY
PLAT No. 13300
ZONED R-SA-8

PARCEL 'A'
ELKRIDGE/ELDERLY
PLAT No. 11821
ZONED POR

PARCEL 'C'
ROWANBERRY CENTER
PLAT No. 12061
ZONED B-1

ROWANBERRY DRIVE
HOWARD COUNTY MINOR COLLECTOR ROAD
RIGHT-OF-WAY VARIES

YOUNG H. MOON & YEUM YONG MOON
L.15458, F.212
T.M.38, P. 84
ZONED B-2

ROSE NASIATKA LLC
L.7023, F.180
T.M.38, P. 85
ZONED B-2

CHESAPEAKE & POTOMAC TELEPHONE (VERIZON)
L.352, F.221
T.M.38, P.96
ZONED B-1

N 65°24'22" E 298.81'

N 27°38'10" W 220.17'

N 56°32'07" E 340.58'

N 24°39'01" W 267.2'

N 78°37'39" W 40.95'

S 52°16'22" W 189.37'

S 52°16'22" W 225.00'

N 37°33'29" W 5.00'

S 52°26'28" W 344.49'

S 52°26'28" W 83.16'

E 1368550
N 559350

E 1369550
N 558700

E 1369170
N 559250

WASHINGTON BOULEVARD - US ROUTE 1
INTERMEDIATE ARTERIAL ROAD
SHA PLAT NO. 49388 RIGHT-OF-WAY VARIES

HOWARD COUNTY, MARYLAND
PARCEL 'A'
PLAT 23864 - 23870
275,208 Sq. Ft.
6.31791 Ac.
6540 WASHINGTON BOULEVARD

PROPOSED ELKRIDGE
LIBRARY & SENIOR CENTER
±44,085 SF
FFE=163.84

PROPOSED SIAMESE CONNECTION AND KNOX BOX, SEE ARCHITECTURAL PLANS FOR DETAILS

NOTE:
ALL SEDIMENT CONTROLS INTERRUPTED BY UTILITY INSTALLATION ARE TO BE REPAIRED IMMEDIATELY.

167 ± LF EARTH-DIKE A-2

180 ± LF EARTH-DIKE A-2

262 ± LF DIVERSION FENCE

PROPOSED A-2 EARTHDIKE - 807 LF

PROPOSED A-2 EARTHDIKE - 828 LF

PROPOSED SUPER SILT FENCE - 91 LF

PROPOSED SUPER SILT FENCE - 284 LF

PROPOSED SUPER SILT FENCE - 291 LF

838± LF SUPER SILT FENCE

PRELIMINARY STOCKPILE AREA

SEDIMENT TRAP #1

SEDIMENT TRAP #2

EX. HOWARD COUNTY OWNED AND MAINTAINED SWM FACILITY

7.5' BUILDING SETBACK LINE

30' BUILDING RESTRICTION AND USE SETBACK LINE

20' USE SETBACK LINE

7.5' STRUCTURE SETBACK LINE

30' BUILDING & USE SETBACK LINE

10' PARKING SETBACK

10' PARKING SETBACK

30' BUILDING RESTRICTION & USE SETBACK LINE

WETLAND LIMITS

STACKING FIRE WALK

EX. 10' WATER ESMT

EX. 20' WATER ESMT

EX. 30' DRAINAGE ESMT

EX. 20' DRAINAGE ESMT

LEGEND

EXISTING 1' CONTOUR	154
EXISTING 5' CONTOUR	155
EXISTING SOILS	RuB
PROPOSED 1' CONTOUR	164
PROPOSED 5' CONTOUR	165
PROPOSED SPOT ELEVATION	51.50
PROPOSED SUPER SILT FENCE	SSF SSF
PROPOSED EARTH DIKE	
PROPOSED STABILIZED CONSTRUCTION ENTRANCE	
PROPOSED STORM DRAIN	
PROPOSED TREE LINE	
PROPOSED DIVERSION FENCE	DF DF
AT GRADE INLET PROTECTION	AGIP
STANDARD INLET PROTECTION	SIP
GABION INLET PROTECTION	GIB
GUTTER BUDDY® INLET PROTECTION	GBIP
PROPOSED SOD	

ENGINEER'S CERTIFICATE

"I CERTIFY THAT THIS PLAN FOR SEDIMENT AND EROSION CONTROL REPRESENTS A PRACTICAL AND WORKABLE PLAN BASED ON MY PERSONAL KNOWLEDGE OF THE SITE CONDITIONS AND THAT IT WAS PREPARED IN ACCORDANCE WITH THE REQUIREMENTS OF THE HOWARD SOIL CONSERVATION DISTRICT."

SIGNATURE OF ENGINEER (PRINT NAME BELOW SIGNATURE) Sharon L Cruz — DATE 6-29-16

DEVELOPER'S CERTIFICATE

"I/WE CERTIFY THAT ALL DEVELOPMENT AND CONSTRUCTION WILL BE DONE ACCORDING TO THIS PLAN FOR SEDIMENT AND EROSION CONTROL, AND THAT ALL RESPONSIBLE PERSONNEL INVOLVED IN THE CONSTRUCTION PROJECT WILL HAVE A CERTIFICATE OF ATTENDANCE AT A DEPARTMENT OF THE ENVIRONMENT APPROVED TRAINING PROGRAM FOR THE CONTROL OF SEDIMENT AND EROSION BEFORE BEGINNING THE PROJECT. I ALSO AUTHORIZE PERIODIC ON-SITE INSPECTIONS BY THE HOWARD SOIL CONSERVATION DISTRICT."

SIGNATURE OF DEVELOPER (PRINT NAME BELOW SIGNATURE) Howard Glassberg — DATE 28 JUN 2016

THIS DEVELOPMENT PLAN IS APPROVED FOR SOIL EROSION AND SEDIMENT CONTROL BY THE HOWARD SOIL CONSERVATION DISTRICT.

HOWARD SCD — DATE 7/12/16

APPROVED : DEPARTMENT OF PLANNING AND ZONING

CHIEF, DEVELOPMENT ENGINEERING DIVISION JF — DATE 7.19.16

CHIEF, DIVISION OF LAND DEVELOPMENT — DATE 8-16-16

DIRECTOR — DATE 8-16-16

DATE	NO.	REVISION	BY

DEVELOPER
HOWARD COUNTY
DEPARTMENT OF PUBLIC WORKS
BUREAU OF FACILITIES
9250 BENDIX ROAD
COLUMBIA, MARYLAND 21045
ATTN: MARK STROMDAHL
PHONE: 410-313-5757

OWNER
HOWARD COUNTY
DEPARTMENT OF PUBLIC WORKS
BUREAU OF FACILITIES
9250 BENDIX ROAD
COLUMBIA, MARYLAND 21045
ATTN: MARK STROMDAHL
PHONE: 410-313-5757

PROJECT
GREEN BUILDING
HCLS ELKRIDGE BRANCH AND 50+ CENTER

AREA
23864
TAX MAP 38, PARCEL 'A' PLAT 23870 ZONED B-1 & R-12
GRID NO. 7 1st ELECTION DISTRICT
6540 WASHINGTON BOULEVARD
ELKRIDGE, MARYLAND 21075-0000
HOWARD COUNTY, MARYLAND

TITLE
GRADING & SEDIMENT CONTROL PLAN - PH II

Pennoni Associates Inc.
Engineers • Surveyors • Planners
Landscape Architects
8818 Centre Park Drive, Suite 200 Columbia, MD 21045
T 410.997.8900 F 410.997.9282

SEAL

STATE OF MARYLAND · GERARD F. GRIM · REG. NO. 19601 · REGISTERED PROFESSIONAL ENGINEER

BY: — 6-29-16

"PROFESSIONAL CERTIFICATION. I HEREBY CERTIFY THAT THESE DOCUMENTS WERE PREPARED OR APPROVED BY ME, AND THAT I AM A DULY LICENSED PROFESSIONAL ENGINEER UNDER THE LAWS OF THE STATE OF MARYLAND, LICENSE NO. 36996, EXPIRATION DATE: 2-15-2017"

DESIGNED BY :	PJS/JSN
DRAWN BY:	PJS/JSN
PROJECT NO :	GRIM1402
DATE :	JUNE 20,2016
SCALE :	1" = 30'
DRAWING NO.	6 OF 50

SDP-16-038

B-4-2 STANDARDS AND SPECIFICATIONS FOR SOIL PREPARATION, TOPSOILING, AND SOIL AMENDMENTS

DEFINITION

THE PROCESS OF PREPARING THE SOILS TO SUSTAIN ADEQUATE VEGETATIVE STABILIZATION.

PURPOSE

TO PROVIDE A SUITABLE SOIL MEDIUM FOR VEGETATIVE GROWTH.

CONDITIONS WHERE PRACTICE APPLIES

WHERE VEGETATIVE STABILIZATION IS TO BE ESTABLISHED.

CRITERIA

A. SOIL PREPARATION

1. TEMPORARY STABILIZATION

a. SEEDBED PREPARATION CONSISTS OF LOOSENING SOIL TO A DEPTH OF 3 TO 5 INCHES BY MEANS OF SUITABLE AGRICULTURAL OR CONSTRUCTION EQUIPMENT, SUCH AS DISC HARROWS OR CHISEL PLOWS OR RIPPERS MOUNTED ON CONSTRUCTION EQUIPMENT. AFTER THE SOIL IS LOOSENED, IT MUST NOT BE ROLLED OR DRAGGED SMOOTH BUT LEFT IN THE ROUGHENED CONDITION. SLOPES 3:1 OR FLATTER ARE TO BE TRACKED WITH RIDGES RUNNING PARALLEL TO THE CONTOUR OF THE SLOPE.

b. APPLY FERTILIZER AND LIME AS PRESCRIBED ON THE PLANS.

c. INCORPORATE LIME AND FERTILIZER INTO THE TOP 3 TO 5 INCHES OF SOIL BY DISKING OR OTHER SUITABLE MEANS.

2. PERMANENT STABILIZATION

a. A SOIL TEST IS REQUIRED FOR ANY EARTH DISTURBANCE OF 5 ACRES OR MORE. THE MINIMUM SOIL CONDITIONS REQUIRED FOR PERMANENT VEGETATIVE ESTABLISHMENT ARE:

i. SOIL PH BETWEEN 6.0 AND 7.0.

ii. SOLUBLE SALTS LESS THAN 500 PARTS PER MILLION (PPM).

iii. SOIL CONTAINS LESS THAN 40 PERCENT CLAY BUT ENOUGH FINE GRAINED MATERIAL (GREATER THAN 30 PERCENT SILT PLUS CLAY) TO PROVIDE THE CAPACITY TO HOLD A MODERATE AMOUNT OF MOISTURE. AN EXCEPTION: IF LOVEGRASS WILL BE PLANTED, THEN A SANDY SOIL (LESS THAN 30 PERCENT SILT PLUS CLAY) WOULD BE ACCEPTABLE.

iv. SOIL CONTAINS 1.5 PERCENT MINIMUM ORGANIC MATTER BY WEIGHT.

v. SOIL CONTAINS SUFFICIENT PORE SPACE TO PERMIT ADEQUATE ROOT PENETRATION.

b. APPLICATION OF AMENDMENTS OR TOPSOIL IS REQUIRED IF ON-SITE SOILS DO NOT MEET THE ABOVE CONDITIONS.

c. GRADED AREAS MUST BE MAINTAINED IN A TRUE AND EVEN GRADE AS SPECIFIED ON THE APPROVED PLAN, THEN SCARIFIED OR OTHERWISE LOOSENED TO A DEPTH OF 3 TO 5 INCHES.

d. APPLY SOIL AMENDMENTS AS SPECIFIED ON THE APPROVED PLAN OR AS INDICATED BY THE RESULTS OF A SOIL TEST.

e. MIX SOIL AMENDMENTS INTO THE TOP 3 TO 5 INCHES OF SOIL BY DISKING OR OTHER SUITABLE MEANS. RAKE LAWN AREAS TO SMOOTH THE SURFACE, REMOVE LARGE OBJECTS LIKE STONES AND BRANCHES, AND READY THE AREA FOR SEED APPLICATION. LOOSEN SURFACE SOIL BY DRAGGING WITH A HEAVY CHAIN OR OTHER EQUIPMENT TO ROUGHEN THE SURFACE WHERE SITE CONDITIONS WILL NOT PERMIT NORMAL SEEDBED PREPARATION. TRACK SLOPES 3:1 OR FLATTER WITH TRACKED EQUIPMENT LEAVING THE SOIL IN AN IRREGULAR CONDITION WITH RIDGES RUNNING PARALLEL TO THE CONTOUR OF THE SLOPE. LEAVE THE TOP 1 TO 3 INCHES OF SOIL LOOSE AND FRIABLE. SEEDBED LOOSENING MAY BE UNNECESSARY ON NEWLY DISTURBED AREAS.

B. TOPSOILING

1. TOPSOIL IS PLACED OVER PREPARED SUBSOIL PRIOR TO ESTABLISHMENT OF PERMANENT VEGETATION. THE PURPOSE IS TO PROVIDE A SUITABLE SOIL MEDIUM FOR VEGETATIVE GROWTH. SOILS OF CONCERN HAVE LOW MOISTURE CONTENT, LOW NUTRIENT LEVELS, LOW PH, MATERIALS TOXIC TO PLANTS, AND/OR UNACCEPTABLE SOIL GRADATION.

2. TOPSOIL SALVAGED FROM AN EXISTING SITE MAY BE USED PROVIDED IT MEETS THE STANDARDS AS SET FORTH IN THESE SPECIFICATIONS. TYPICALLY, THE DEPTH OF TOPSOIL TO BE SALVAGED FOR A GIVEN SOIL TYPE CAN BE FOUND IN THE REPRESENTATIVE SOIL PROFILE SECTION IN THE SOIL SURVEY PUBLISHED BY USDA-NRCS.

3. TOPSOILING IS LIMITED TO AREAS HAVING 2:1 OR FLATTER SLOPES WHERE:

a. THE TEXTURE OF THE EXPOSED SUBSOIL/PARENT MATERIAL IS NOT ADEQUATE TO PRODUCE VEGETATIVE GROWTH.

b. THE SOIL MATERIAL IS SO SHALLOW THAT THE ROOTING ZONE IS NOT DEEP ENOUGH TO SUPPORT PLANTS OR FURNISH CONTINUING SUPPLIES OF MOISTURE AND PLANT NUTRIENTS.

c. THE ORIGINAL SOIL TO BE VEGETATED CONTAINS MATERIAL TOXIC TO PLANT GROWTH.

d. THE SOIL IS SO ACIDIC THAT TREATMENT WITH LIMESTONE IS NOT FEASIBLE.

4. AREAS HAVING SLOPES STEEPER THAN 2:1 REQUIRE SPECIAL CONSIDERATION AND DESIGN.

5. TOPSOIL SPECIFICATIONS: SOIL TO BE USED AS TOPSOIL MUST MEET THE FOLLOWING CRITERIA:

a. TOPSOIL MUST BE A LOAM, SANDY LOAM, CLAY LOAM, SILT LOAM, SANDY CLAY LOAM, OR LOAMY SAND. OTHER SOILS MAY BE USED IF RECOMMENDED BY AN AGRONOMIST OR SOIL SCIENTIST AND APPROVED BY THE APPROPRIATE APPROVAL AUTHORITY. TOPSOIL MUST NOT BE A MIXTURE OF CONTRASTING TEXTURED SUBSOILS AND MUST CONTAIN LESS THAN 5 PERCENT BY VOLUME OF CINDERS, STONES, SLAG, COARSE FRAGMENTS, GRAVEL, STICKS, ROOTS, TRASH, OR OTHER MATERIALS LARGER THAN 11/2 INCHES IN DIAMETER.

b. TOPSOIL MUST BE FREE OF NOXIOUS PLANTS OR PLANT PARTS SUCH AS BERMUDA GRASS, QUACK GRASS, JOHNSON GRASS, NUT SEDGE, POISON IVY, THISTLE, OR OTHERS AS SPECIFIED.

c. TOPSOIL SUBSTITUTES OR AMENDMENTS, AS RECOMMENDED BY A QUALIFIED AGRONOMIST OR SOIL SCIENTIST AND APPROVED BY THE APPROPRIATE APPROVAL AUTHORITY, MAY BE USED IN LIEU OF NATURAL TOPSOIL.

6. TOPSOIL APPLICATION

a. EROSION AND SEDIMENT CONTROL PRACTICES MUST BE MAINTAINED WHEN APPLYING TOPSOIL.

b. UNIFORMLY DISTRIBUTE TOPSOIL IN A 5 TO 8 INCH LAYER AND LIGHTLY COMPACT TO A MINIMUM THICKNESS OF 4 INCHES. SPREADING IS TO BE PERFORMED IN SUCH A MANNER THAT SODDING OR SEEDING CAN PROCEED WITH A MINIMUM OF ADDITIONAL SOIL PREPARATION AND TILLAGE. ANY IRREGULARITIES IN THE SURFACE RESULTING FROM TOPSOILING OR OTHER OPERATIONS MUST BE CORRECTED IN ORDER TO PREVENT THE FORMATION OF DEPRESSIONS OR WATER POCKETS.

c. TOPSOIL MUST NOT BE PLACED IF THE TOPSOIL OR SUBSOIL IS IN A FROZEN OR MUDDY CONDITION, WHEN THE SUBSOIL IS EXCESSIVELY WET OR IN A CONDITION THAT MAY OTHERWISE BE DETRIMENTAL TO PROPER GRADING AND SEEDBED PREPARATION.

C. SOIL AMENDMENTS (FERTILIZER AND LIME SPECIFICATIONS)

1. SOIL TESTS MUST BE PERFORMED TO DETERMINE THE EXACT RATIOS AND APPLICATION RATES FOR BOTH LIME AND FERTILIZER ON SITES HAVING DISTURBED AREAS OF 5 ACRES OR MORE. SOIL ANALYSIS MAY BE PERFORMED BY A RECOGNIZED PRIVATE OR COMMERCIAL LABORATORY. SOIL SAMPLES TAKEN FOR ENGINEERING PURPOSES MAY ALSO BE USED FOR CHEMICAL ANALYSES.

2. FERTILIZERS MUST BE UNIFORM IN COMPOSITION, FREE FLOWING AND SUITABLE FOR ACCURATE APPLICATION BY APPROPRIATE EQUIPMENT. MANURE MAY BE SUBSTITUTED FOR FERTILIZER WITH PRIOR APPROVAL FROM THE APPROPRIATE APPROVAL AUTHORITY. FERTILIZERS MUST ALL BE DELIVERED TO THE SITE FULLY LABELED ACCORDING TO THE APPLICABLE LAWS AND MUST BEAR THE NAME, TRADE NAME OR TRADEMARK AND WARRANTY OF THE PRODUCER.

3. LIME MATERIALS MUST BE GROUND LIMESTONE (HYDRATED OR BURNT LIME MAY BE SUBSTITUTED EXCEPT WHEN HYDROSEEDING) WHICH CONTAINS AT LEAST 50 PERCENT TOTAL OXIDES (CALCIUM OXIDE PLUS MAGNESIUM OXIDE). LIMESTONE MUST BE GROUND TO SUCH FINENESS THAT AT LEAST 50 PERCENT WILL PASS THROUGH A #100 MESH SIEVE AND 98 TO 100 PERCENT WILL PASS THROUGH A #20 MESH SIEVE.

4. LIME AND FERTILIZER ARE TO BE EVENLY DISTRIBUTED AND INCORPORATED INTO THE TOP 3 TO 5 INCHES OF SOIL BY DISKING OR OTHER SUITABLE MEANS.

5. WHERE THE SUBSOIL IS EITHER HIGHLY ACIDIC OR COMPOSED OF HEAVY CLAYS, SPREAD GROUND LIMESTONE AT THE RATE OF 4 TO 8 TONS/ACRE (200-400 POUNDS PER 1,000 SQUARE FEET) PRIOR TO THE PLACEMENT OF TOPSOIL.

B-4-3 STANDARDS AND SPECIFICATIONS FOR SEEDING AND MULCHING

DEFINITION

THE APPLICATION OF SEED AND MULCH TO ESTABLISH VEGETATIVE COVER.

PURPOSE

TO PROTECT DISTURBED SOILS FROM EROSION DURING AND AT THE END OF CONSTRUCTION.

CONDITIONS WHERE PRACTICE APPLIES

TO THE SURFACE OF ALL PERIMETER CONTROLS, SLOPES, AND ANY DISTURBED AREA NOT UNDER ACTIVE GRADING.

CRITERIA

A. SEEDING

1. SPECIFICATIONS

a. ALL SEED MUST MEET THE REQUIREMENTS OF THE MARYLAND STATE SEED LAW. ALL SEED MUST BE SUBJECT TO RE-TESTING BY A RECOGNIZED SEED LABORATORY. ALL SEED USED MUST HAVE BEEN TESTED WITHIN THE 6 MONTHS IMMEDIATELY PRECEDING THE DATE OF SOWING SUCH MATERIAL ON ANY PROJECT. REFER TO TABLE B.4 REGARDING THE QUALITY OF SEED. SEED TAGS MUST BE AVAILABLE UPON REQUEST TO THE INSPECTOR TO VERIFY TYPE OF SEED AND SEEDING RATE.

b. MULCH ALONE MAY BE APPLIED BETWEEN THE FALL AND SPRING SEEDING DATES ONLY IF THE GROUND IS FROZEN. THE APPROPRIATE SEEDING MIXTURE MUST BE APPLIED WHEN THE GROUND THAWS.

c. INOCULANTS: THE INOCULANT FOR TREATING LEGUME SEED IN THE SEED MIXTURES MUST BE A PURE CULTURE OF NITROGEN FIXING BACTERIA PREPARED SPECIFICALLY FOR THE SPECIES. INOCULANTS MUST NOT BE USED LATER THAN THE DATE INDICATED ON THE CONTAINER. ADD FRESH INOCULANTS AS DIRECTED ON THE PACKAGE. USE FOUR TIMES THE RECOMMENDED RATE WHEN HYDROSEEDING. NOTE: IT IS VERY IMPORTANT TO KEEP INOCULANT AS COOL AS POSSIBLE UNTIL USED. TEMPERATURES ABOVE 75 TO 80 DEGREES FAHRENHEIT CAN WEAKEN BACTERIA AND MAKE THE INOCULANT LESS EFFECTIVE.

d. SOD OR SEED MUST NOT BE PLACED ON SOIL WHICH HAS BEEN TREATED WITH SOIL STERILANTS OR CHEMICALS USED FOR WEED CONTROL UNTIL SUFFICIENT TIME HAS ELAPSED (14 DAYS MIN.) TO PERMIT DISSIPATION OF PHYTO-TOXIC MATERIALS.

2. APPLICATION

a. DRY SEEDING: THIS INCLUDES USE OF CONVENTIONAL DROP OR BROADCAST SPREADERS.

i. INCORPORATE SEED INTO THE SUBSOIL AT THE RATES PRESCRIBED ON TEMPORARY SEEDING TABLE B.1, PERMANENT SEEDING TABLE B.3, OR SITE-SPECIFIC SEEDING SUMMARIES.

ii. APPLY SEED IN TWO DIRECTIONS, PERPENDICULAR TO EACH OTHER. APPLY HALF THE SEEDING RATE IN EACH DIRECTION. ROLL THE SEEDED AREA WITH A WEIGHTED ROLLER TO PROVIDE GOOD SEED TO SOIL CONTACT

b. DRILL OR CULTIPACKER SEEDING: MECHANIZED SEEDERS THAT APPLY AND COVER SEED WITH SOIL.

i. CULTIPACKING SEEDERS ARE REQUIRED TO BURY THE SEED IN SUCH A FASHION AS TO PROVIDE AT LEAST 1/4 INCH OF SOIL COVERING. SEEDBED MUST BE FIRM AFTER PLANTING.

ii. APPLY SEED IN TWO DIRECTIONS, PERPENDICULAR TO EACH OTHER. APPLY HALF THE SEEDING RATE IN EACH DIRECTION.

c. HYDROSEEDING: APPLY SEED UNIFORMLY WITH HYDROSEEDER (SLURRY INCLUDES SEED AND FERTILIZER).

i. IF FERTILIZER IS BEING APPLIED AT THE TIME OF SEEDING, THE APPLICATION RATES SHOULD NOT EXCEED THE FOLLOWING: NITROGEN, 100 POUNDS PER ACRE TOTAL OF SOLUBLE NITROGEN; P205 (PHOSPHOROUS), 200 POUNDS PER ACRE; K20 (POTASSIUM), 200 POUNDS PER ACRE.

ii. LIME: USE ONLY GROUND AGRICULTURAL LIMESTONE (UP TO 3 TONS PER ACRE MAY BE APPLIED BY HYDROSEEDING). NORMALLY, NOT MORE THAN 2 TONS ARE APPLIED BY HYDROSEEDING AT ANY ONE TIME. DO NOT USE BURNT OR HYDRATED LIME WHEN HYDROSEEDING.

iii. MIX SEED AND FERTILIZER ON SITE AND SEED IMMEDIATELY AND WITHOUT INTERRUPTION.

iv. WHEN HYDROSEEDING DO NOT INCORPORATE SEED INTO THE SOIL.

B. MULCHING

1. MULCH MATERIALS (IN ORDER OF PREFERENCE)

a. STRAW CONSISTING OF THOROUGHLY THRESHED WHEAT, RYE, OAT, OR BARLEY AND REASONABLY BRIGHT IN COLOR. STRAW IS TO BE FREE OF NOXIOUS WEED SEEDS AS SPECIFIED IN THE MARYLAND SEED LAW AND NOT MUSTY, MOLDY, CAKED, DECAYED, OR EXCESSIVELY DUSTY. NOTE: USE ONLY STERILE STRAW MULCH IN AREAS WHERE ONE SPECIES OF GRASS IS DESIRED.

b. WOOD CELLULOSE FIBER MULCH (WCFM) CONSISTING OF SPECIALLY PREPARED WOOD CELLULOSE PROCESSED INTO A UNIFORM FIBROUS PHYSICAL STATE.

i. WCFM IS TO BE DYED GREEN OR CONTAIN A GREEN DYE IN THE PACKAGE THAT WILL PROVIDE AN APPROPRIATE COLOR TO FACILITATE VISUAL INSPECTION OF THE UNIFORMLY SPREAD SLURRY.

ii. WCFM, INCLUDING DYE, MUST CONTAIN NO GERMINATION OR GROWTH INHIBITING FACTORS.

iii. WCFM MATERIALS ARE TO BE MANUFACTURED AND PROCESSED IN SUCH A MANNER THAT THE WOOD CELLULOSE FIBER MULCH WILL REMAIN IN UNIFORM SUSPENSION IN WATER UNDER AGITATION AND WILL BLEND WITH SEED, FERTILIZER AND OTHER ADDITIVES TO FORM A HOMOGENEOUS SLURRY. THE MULCH MATERIAL MUST FORM A BLOTTER-LIKE GROUND COVER, ON APPLICATION, HAVING MOISTURE ABSORPTION AND PERCOLATION PROPERTIES AND MUST COVER AND HOLD GRASS SEED IN CONTACT WITH THE SOIL WITHOUT INHIBITING THE GROWTH OF THE GRASS SEEDLINGS.

iv. WCFM MATERIAL MUST NOT CONTAIN ELEMENTS OR COMPOUNDS AT CONCENTRATION LEVELS THAT WILL BE PHYTO-TOXIC.

v. WCFM MUST CONFORM TO THE FOLLOWING PHYSICAL REQUIREMENTS: FIBER LENGTH OF APPROXIMATELY 10 MILLIMETERS, DIAMETER APPROXIMATELY 1 MILLIMETER, PH RANGE OF 4.0 TO 8.5, ASH CONTENT OF 1.6 PERCENT MAXIMUM AND WATER HOLDING CAPACITY OF 90 PERCENT MINIMUM.

2. APPLICATION

a. APPLY MULCH TO ALL SEEDED AREAS IMMEDIATELY AFTER SEEDING.

b. WHEN STRAW MULCH IS USED, SPREAD IT OVER ALL SEEDED AREAS AT THE RATE OF 2 TONS PER ACRE TO A UNIFORM LOOSE DEPTH OF 1 TO 2 INCHES. APPLY MULCH TO ACHIEVE A UNIFORM DISTRIBUTION AND DEPTH SO THAT THE SOIL SURFACE IS NOT EXPOSED. WHEN USING A MULCH ANCHORING TOOL, INCREASE THE APPLICATION RATE TO 2.5 TONS PER ACRE.

c. WOOD CELLULOSE FIBER USED AS MULCH MUST BE APPLIED AT A NET DRY WEIGHT OF 1500 POUNDS PER ACRE. MIX THE WOOD CELLULOSE FIBER WITH WATER TO ATTAIN A MIXTURE WITH A MAXIMUM OF 50 POUNDS OF WOOD CELLULOSE FIBER PER 100 GALLONS OF WATER.

3. ANCHORING

a. PERFORM MULCH ANCHORING IMMEDIATELY FOLLOWING APPLICATION OF MULCH TO MINIMIZE LOSS BY WIND OR WATER. THIS MAY BE DONE BY ONE OF THE FOLLOWING METHODS (LISTED BY PREFERENCE), DEPENDING UPON THE SIZE OF THE AREA AND EROSION HAZARD:

i. A MULCH ANCHORING TOOL IS A TRACTOR DRAWN IMPLEMENT DESIGNED TO PUNCH AND ANCHOR MULCH INTO THE SOIL SURFACE A MINIMUM OF 2 INCHES. THIS PRACTICE IS MOST EFFECTIVE ON LARGE AREAS, BUT IS LIMITED TO FLATTER SLOPES WHERE EQUIPMENT CAN OPERATE SAFELY. IF USED ON SLOPING LAND, THIS PRACTICE SHOULD FOLLOW THE CONTOUR.

ii. WOOD CELLULOSE FIBER MAY BE USED FOR ANCHORING STRAW. APPLY THE FIBER BINDER AT A NET DRY WEIGHT OF 750 POUNDS PER ACRE. MIX THE WOOD CELLULOSE FIBER WITH WATER AT A MAXIMUM OF 50 POUNDS OF WOOD CELLULOSE FIBER PER 100 GALLONS OF WATER.

iii. SYNTHETIC BINDERS SUCH AS ACRYLIC DLR (AGRO-TACK), DCA-70, PETROSET, TERRA TAX II, TERRA TACK AR OR OTHER APPROVED EQUAL MAY BE USED. FOLLOW APPLICATION RATES AS SPECIFIED BY THE MANUFACTURER. APPLICATION OF LIQUID BINDERS NEEDS TO BE HEAVIER AT THE EDGES WHERE WIND CATCHES MULCH, SUCH AS IN VALLEYS AND ON CRESTS OF BANKS. USE OF ASPHALT BINDERS IS STRICTLY PROHIBITED.

iv. LIGHTWEIGHT PLASTIC NETTING MAY BE STAPLED OVER THE MULCH ACCORDING TO MANUFACTURER RECOMMENDATIONS. NETTING IS USUALLY AVAILABLE IN ROLLS 4 TO 15 FEET WIDE AND 300 TO 3,000 FEET LONG.

B-4-4 STANDARDS AND SPECIFICATIONS FOR TEMPORARY STABILIZATION

DEFINITION

TO STABILIZE DISTURBED SOILS WITH VEGETATION FOR UP TO 6 MONTHS.

PURPOSE

TO USE FAST GROWING VEGETATION THAT PROVIDES COVER ON DISTURBED SOILS.

CONDITIONS WHERE PRACTICE APPLIES

EXPOSED SOILS WHERE GROUND COVER IS NEEDED FOR A PERIOD OF 6 MONTHS OR LESS. FOR LONGER DURATION OF TIME, PERMANENT STABILIZATION PRACTICES ARE REQUIRED.

CRITERIA

1. SELECT ONE OR MORE OF THE SPECIES OR SEED MIXTURES LISTED IN TABLE B.1 FOR THE APPROPRIATE PLANT HARDINESS ZONE (FROM FIGURE B.3), AND ENTER THEM IN THE TEMPORARY SEEDING SUMMARY BELOW ALONG WITH APPLICATION RATES, SEEDING DATES AND SEEDING DEPTHS. IF THIS SUMMARY IS NOT PUT ON THE PLAN AND COMPLETED, THEN TABLE B.1 PLUS FERTILIZER AND LIME RATES MUST BE PUT ON THE PLAN.

2. FOR SITES HAVING SOIL TESTS PERFORMED, USE AND SHOW THE RECOMMENDED RATES BY THE TESTING AGENCY. SOIL TESTS ARE NOT REQUIRED FOR TEMPORARY SEEDING.

3. WHEN STABILIZATION IS REQUIRED OUTSIDE OF A SEEDING SEASON, APPLY SEED AND MULCH OR STRAW MULCH ALONE AS PRESCRIBED IN SECTION B-4-3.A.1.B AND MAINTAIN UNTIL THE NEXT SEEDING SEASON.

TEMPORARY SEEDING SUMMARY

Hardiness Zone (from Figure B.3): 7A Seed Mixture (from Table B.1):					Fertilizer Rate (10-20-20)	Lime Rate
No.	Species	Application Rate (lb/ac)	Seeding Dates	Seeding Depths		
	ANNUAL RYEGRASS	40	FEB 15 TO APR 30; AUG 15 TO NOV 30	0.5	436 lb/ac (10 lb/1000 sf)	2 tons/ac (90 lb/1000 sf)
	BARLEY	96	FEB 15 TO APR 30; AUG 15 TO NOV 30	1.0		
	OATS	72	FEB 15 TO APR 30; AUG 15 TO NOV 30	1.0		
	PEARL MILLET	20	MAY 1 TO AUG 14	0.5		

B-4-5 STANDARDS AND SPECIFICATIONS FOR PERMANENT STABILIZATION

DEFINITION

TO STABILIZE DISTURBED SOILS WITH PERMANENT VEGETATION.

PURPOSE

TO USE LONG-LIVED PERENNIAL GRASSES AND LEGUMES TO ESTABLISH PERMANENT GROUND COVER ON DISTURBED SOILS.

CONDITIONS WHERE PRACTICE APPLIES

EXPOSED SOILS WHERE GROUND COVER IS NEEDED FOR 6 MONTHS OR MORE.

CRITERIA

A. SEED MIXTURES

1. GENERAL USE

a. SELECT ONE OR MORE OF THE SPECIES OR MIXTURES LISTED IN TABLE B.3 FOR THE APPROPRIATE PLANT HARDINESS ZONE (FROM FIGURE B.3) AND BASED ON THE SITE CONDITION OR PURPOSE FOUND ON TABLE B.2. ENTER SELECTED MIXTURE(S), APPLICATION RATES, AND SEEDING DATES IN THE PERMANENT SEEDING SUMMARY. THE SUMMARY IS TO BE PLACED ON THE PLAN.

b. ADDITIONAL PLANTING SPECIFICATIONS FOR EXCEPTIONAL SITES SUCH AS SHORELINES, STREAM BANKS, OR DUNES OR FOR SPECIAL PURPOSES SUCH AS WILDLIFE OR AESTHETIC TREATMENT MAY BE FOUND IN USDA-NRCS TECHNICAL FIELD OFFICE GUIDE, SECTION 342 - CRITICAL AREA PLANTING.

c. FOR SITES HAVING DISTURBED AREA OVER 5 ACRES, USE AND SHOW THE RATES RECOMMENDED BY THE SOIL TESTING AGENCY.

d. FOR AREAS RECEIVING LOW MAINTENANCE, APPLY UREA FORM FERTILIZER (46-0-0) AT 3 1/2 POUNDS PER 1000 SQUARE FEET (150 POUNDS PER ACRE) AT THE TIME OF SEEDING IN ADDITION TO THE SOIL AMENDMENTS SHOWN IN THE PERMANENT SEEDING SUMMARY.

2. TURFGRASS MIXTURES

a. AREAS WHERE TURFGRASS MAY BE DESIRED INCLUDE LAWNS, PARKS, PLAYGROUNDS, AND COMMERCIAL SITES WHICH WILL RECEIVE A MEDIUM TO HIGH LEVEL OF MAINTENANCE.

b. SELECT ONE OR MORE OF THE SPECIES OR MIXTURES LISTED BELOW BASED ON THE SITE CONDITIONS OR PURPOSE. ENTER SELECTED MIXTURE(S), APPLICATION RATES, AND SEEDING DATES IN THE PERMANENT SEEDING SUMMARY. THE SUMMARY IS TO BE PLACED ON THE PLAN.

i. KENTUCKY BLUEGRASS: FULL SUN MIXTURE: FOR USE IN AREAS THAT RECEIVE INTENSIVE MANAGEMENT. IRRIGATION REQUIRED IN THE AREAS OF CENTRAL MARYLAND AND EASTERN SHORE. RECOMMENDED CERTIFIED KENTUCKY BLUEGRASS CULTIVARS SEEDING RATE: 1.5 TO 2.0 POUNDS PER 1000 SQUARE FEET. CHOOSE A MINIMUM OF THREE KENTUCKY BLUEGRASS CULTIVARS WITH EACH RANGING FROM 10 TO 35 PERCENT OF THE TOTAL MIXTURE BY WEIGHT.

ii. KENTUCKY BLUEGRASS/PERENNIAL RYE: FULL SUN MIXTURE: FOR USE IN FULL SUN AREAS WHERE RAPID ESTABLISHMENT IS NECESSARY AND WHEN TURF WILL RECEIVE MEDIUM TO INTENSIVE MANAGEMENT. CERTIFIED PERENNIAL RYEGRASS CULTIVARS/CERTIFIED KENTUCKY BLUEGRASS SEEDING RATE: 2 POUNDS MIXTURE PER 1000 SQUARE FEET. CHOOSE A MINIMUM OF THREE KENTUCKY BLUEGRASS CULTIVARS WITH EACH RANGING FROM 10 TO 35 PERCENT OF THE TOTAL MIXTURE BY WEIGHT.

iii. TALL FESCUE/KENTUCKY BLUEGRASS: FULL SUN MIXTURE: FOR USE IN DROUGHT PRONE AREAS AND/OR FOR AREAS RECEIVING LOW TO MEDIUM MANAGEMENT IN FULL SUN TO MEDIUM SHADE. RECOMMENDED MIXTURE INCLUDES; CERTIFIED TALL FESCUE CULTIVARS 95 TO 100 PERCENT, CERTIFIED KENTUCKY BLUEGRASS CULTIVARS 0 TO 5 PERCENT. SEEDING RATE: 5 TO 8 POUNDS PER 1000 SQUARE FEET. ONE OR MORE CULTIVARS MAY BE BLENDED.

iv. KENTUCKY BLUEGRASS/FINE FESCUE: SHADE MIXTURE: FOR USE IN AREAS WITH SHADE IN BLUEGRASS LAWNS. FOR ESTABLISHMENT IN HIGH QUALITY, INTENSIVELY MANAGED TURF AREA. MIXTURE INCLUDES; CERTIFIED KENTUCKY BLUEGRASS CULTIVARS 30 TO 40 PERCENT AND CERTIFIED FINE FESCUE AND 60 TO 70 PERCENT. SEEDING RATE: 1½ TO 3 POUNDS PER 1000 SQUARE FEET.

NOTES:

SELECT TURFGRASS VARIETIES FROM THOSE LISTED IN THE MOST CURRENT UNIVERSITY OF MARYLAND PUBLICATION, AGRONOMY MEMO #77, "TURFGRASS CULTIVAR RECOMMENDATIONS FOR MARYLAND"

CHOOSE CERTIFIED MATERIAL. CERTIFIED MATERIAL IS THE BEST GUARANTEE OF CULTIVAR PURITY. THE CERTIFICATION PROGRAM OF THE MARYLAND DEPARTMENT OF AGRICULTURE, TURF AND SEED SECTION, PROVIDES A RELIABLE MEANS OF CONSUMER PROTECTION AND ASSURES A PURE GENETIC LINE

c. IDEAL TIMES OF SEEDING FOR TURF GRASS MIXTURES

WESTERN MD: MARCH 15 TO JUNE 1, AUGUST 1 TO OCTOBER 1 (HARDINESS ZONES: 5B, 6A)

CENTRAL MD: MARCH 1 TO MAY 15, AUGUST 15 TO OCTOBER 15 (HARDINESS ZONE: 6B)

SOUTHERN MD, EASTERN SHORE: MARCH 1 TO MAY 15, AUGUST 15 TO OCTOBER 15 (HARDINESS ZONES: 7A, 7B)

d. TILL AREAS TO RECEIVE SEED BY DISKING OR OTHER APPROVED METHODS TO A DEPTH OF 2 TO 4 INCHES, LEVEL AND RAKE THE AREAS TO PREPARE A PROPER SEEDBED. REMOVE STONES AND DEBRIS OVER 11/2 INCHES IN DIAMETER. THE RESULTING SEEDBED MUST BE IN SUCH CONDITION THAT FUTURE MOWING OF GRASSES WILL POSE NO DIFFICULTY.

e. IF SOIL MOISTURE IS DEFICIENT, SUPPLY NEW SEEDINGS WITH ADEQUATE WATER FOR PLANT GROWTH (1/2 TO 1 INCH EVERY 3 TO 4 DAYS DEPENDING ON SOIL TEXTURE) UNTIL THEY ARE FIRMLY ESTABLISHED. THIS IS ESPECIALLY TRUE WHEN SEEDINGS ARE MADE LATE IN THE PLANTING SEASON, IN ABNORMALLY DRY OR HOT SEASONS, OR ON ADVERSE SITES.

PERMANENT SEEDING SUMMARY

Hardiness Zone (from Figure B.3): 7A Seed Mixture (from Table B.3):					Fertilizer Rate (10-20-20)			Lime Rate
No.	Species	Application Rate (lb/ac)	Seeding Dates	Seeding Depths	N	P205	K_2O	
8	TALL FESCUE	100	FEB 15-APR 30; AUG 15-OCT 31*	1/4 - 1/2 in	45 pounds per acre (1.0 lb/ 1000 sf)	90 lb/ac (2 lb/1000 sf)	90 lb/ac (2 lb/1000 sf)	2 tons/ac (90 lb/1000 sf)
9	TALL FESCUE KENTUCKY BLUEGRASS PERENNIAL RYEGRASS	60 40 20	FEB 15-APR 30; AUG 15-OCT 31*	1/4 - 1/2 in				
11	CREEPING RED FESCUE CHEWINGS FESCUE KENTUCKY BLUEGRASS	30 30 20	FEB 15-APR 30; AUG 15-OCT 31*	1/4 - 1/2 in				

* FOR MAY 1 TO AUGUST 14, PLANT WITH NURSE CROP OF PEARL MILLET BASED ON 5% OF THE PERMANENT SEED MIX APPLICATION RATE.

B. SOD: TO PROVIDE QUICK COVER ON DISTURBED AREAS (2:1 GRADE OR FLATTER).

1. GENERAL SPECIFICATIONS

a. CLASS OF TURFGRASS SOD MUST BE MARYLAND STATE CERTIFIED. SOD LABELS MUST BE MADE AVAILABLE TO THE JOB FOREMAN AND INSPECTOR.

b. SOD MUST BE MACHINE CUT AT A UNIFORM SOIL THICKNESS OF 3/4 INCH, PLUS OR MINUS 1/4 INCH, AT THE TIME OF CUTTING. MEASUREMENT FOR THICKNESS MUST EXCLUDE TOP GROWTH AND THATCH. BROKEN PADS AND TORN OR UNEVEN ENDS WILL NOT BE ACCEPTABLE.

c. STANDARD SIZE SECTIONS OF SOD MUST BE STRONG ENOUGH TO SUPPORT THEIR OWN WEIGHT AND RETAIN THEIR SIZE AND SHAPE WHEN SUSPENDED VERTICALLY WITH A FIRM GRASP ON THE UPPER 10 PERCENT OF THE SECTION

d. SOD MUST NOT BE HARVESTED OR TRANSPLANTED WHEN MOISTURE CONTENT (EXCESSIVELY DRY OR WET) MAY ADVERSELY AFFECT ITS SURVIVAL.

e. SOD MUST BE HARVESTED, DELIVERED, AND INSTALLED WITHIN A PERIOD OF 36 HOURS. SOD NOT TRANSPLANTED WITHIN THIS PERIOD MUST BE APPROVED BY AN AGRONOMIST OR SOIL SCIENTIST PRIOR TO ITS INSTALLATION.

2. SOD INSTALLATION

a. DURING PERIODS OF EXCESSIVELY HIGH TEMPERATURE OR IN AREAS HAVING DRY SUBSOIL, LIGHTLY IRRIGATE THE SUBSOIL IMMEDIATELY PRIOR TO LAYING THE SOD.

b. LAY THE FIRST ROW OF SOD IN A STRAIGHT LINE WITH SUBSEQUENT ROWS PLACED PARALLEL TO IT AND TIGHTLY WEDGED AGAINST EACH OTHER. STAGGER LATERAL JOINTS TO PROMOTE MORE UNIFORM GROWTH AND STRENGTH. ENSURE THAT SOD IS NOT STRETCHED OR OVERLAPPED AND THAT ALL JOINTS ARE BUTTED TIGHT IN ORDER TO PREVENT VOIDS WHICH WOULD CAUSE AIR DRYING OF THE ROOTS.

c. WHEREVER POSSIBLE, LAY SOD WITH THE LONG EDGES PARALLEL TO THE CONTOUR AND WITH STAGGERING JOINTS. ROLL AND TAMP, PEG OR OTHERWISE SECURE THE SOD TO PREVENT SLIPPAGE ON SLOPES. ENSURE SOLID CONTACT EXISTS BETWEEN SOD ROOTS AND THE UNDERLYING SOIL SURFACE.

d. WATER THE SOD IMMEDIATELY FOLLOWING ROLLING AND TAMPING UNTIL THE UNDERSIDE OF THE NEW SOD PAD AND SOIL SURFACE BELOW THE SOD ARE THOROUGHLY WET. COMPLETE THE OPERATIONS OF LAYING, TAMPING AND IRRIGATING FOR ANY PIECE OF SOD WITHIN EIGHT HOURS.

3. SOD MAINTENANCE

a. IN THE ABSENCE OF ADEQUATE RAINFALL, WATER DAILY DURING THE FIRST WEEK OR AS OFTEN AND SUFFICIENTLY AS NECESSARY TO MAINTAIN MOIST SOIL TO A DEPTH OF 4 INCHES. WATER SOD DURING THE HEAT OF THE DAY TO PREVENT WILTING.

b. AFTER THE FIRST WEEK, SOD WATERING IS REQUIRED AS NECESSARY TO MAINTAIN ADEQUATE MOISTURE CONTENT.

c. DO NOT MOW UNTIL THE SOD IS FIRMLY ROOTED. NO MORE THAN 1/3 OF THE GRASS LEAF MUST BE REMOVED BY THE INITIAL CUTTING OR SUBSEQUENT CUTTINGS. MAINTAIN A GRASS HEIGHT OF AT LEAST 3 INCHES UNLESS OTHERWISE SPECIFIED.

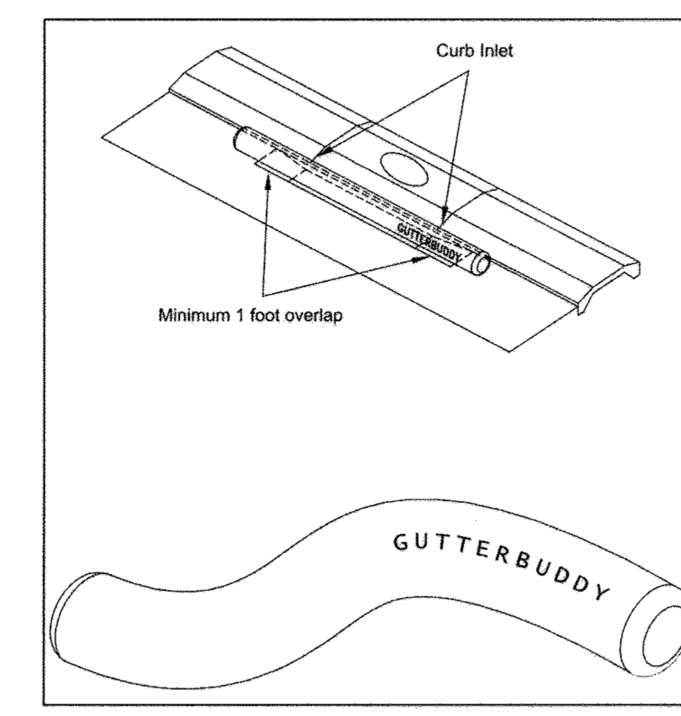

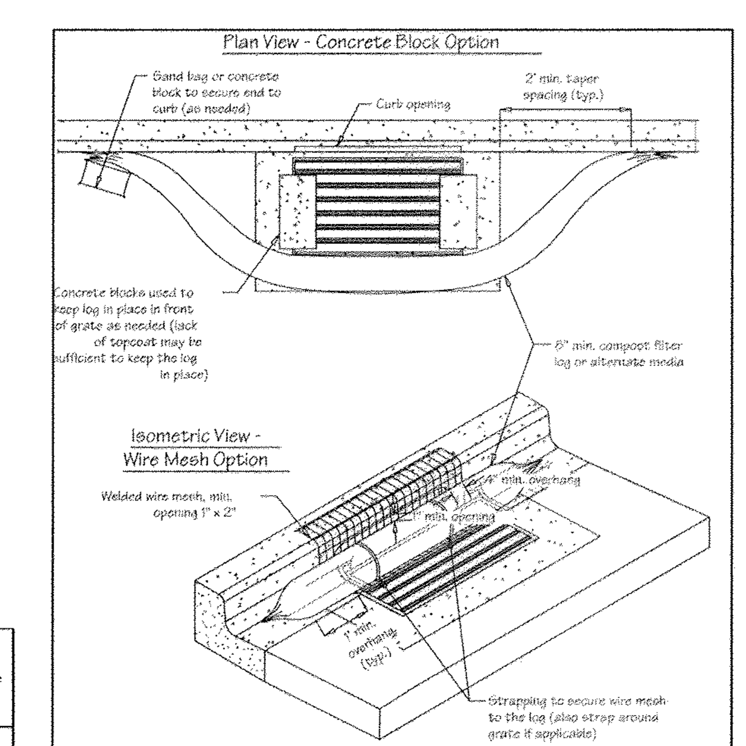

GUTTER BUDDY(R) DETAILS

NOTE TO CONTRACTOR

ALL SEDIMENT CONTROLS SHALL BE INSTALLED IN ACCORDANCE WITH THESE PLANS AND THE MDE INSPECTOR. ALL SEDIMENT CONTROL REQUIREMENTS SHALL BE STRICTLY ENFORCED.

ALL CONTROLS INTERCEPTED BY UTILITY INSTALLATIONS ARE TO BE REPAIRED IMMEDIATELY.

ENGINEER'S CERTIFICATE

"I CERTIFY THAT THIS PLAN FOR SEDIMENT AND EROSION CONTROL REPRESENTS A PRACTICAL AND WORKABLE PLAN BASED ON MY PERSONAL KNOWLEDGE OF THE SITE CONDITIONS AND THAT IT WAS PREPARED IN ACCORDANCE WITH THE REQUIREMENTS OF THE HOWARD SOIL CONSERVATION DISTRICT."

SIGNATURE OF ENGINEER (PRINT NAME BELOW SIGNATURE) DATE 6-29-16

Sharon K. Cruz

DEVELOPER'S CERTIFICATE

"I/WE CERTIFY THAT ALL DEVELOPMENT AND CONSTRUCTION WILL BE DONE ACCORDING TO THIS PLAN FOR SEDIMENT AND EROSION CONTROL, AND THAT ALL RESPONSIBLE PERSONNEL INVOLVED IN THE CONSTRUCTION PROJECT WILL HAVE A CERTIFICATE OF ATTENDANCE AT A DEPARTMENT OF THE ENVIRONMENT APPROVED TRAINING PROGRAM FOR THE CONTROL OF SEDIMENT AND EROSION BEFORE BEGINNING THE PROJECT. I ALSO AUTHORIZE PERIODIC ON-SITE INSPECTIONS BY THE HOWARD SOIL CONSERVATION DISTRICT."

SIGNATURE OF DEVELOPER (PRINT NAME BELOW SIGNATURE) DATE 28 JUN 2016

RICHARD GASPAROTTI

THIS DEVELOPMENT PLAN IS APPROVED FOR SOIL EROSION AND SEDIMENT CONTROL BY THE HOWARD SOIL CONSERVATION DISTRICT.

HOWARD SCD DATE 7/6/16

APPROVED : DEPARTMENT OF PLANNING AND ZONING

CHIEF, DEVELOPMENT ENGINEERING DIVISION — DATE 7.19.16

CHIEF, DIVISION OF LAND DEVELOPMENT — DATE 8-16-16

DIRECTOR — DATE 8-16-16

DATE	NO.	REVISION	BY

DEVELOPER: HOWARD COUNTY, DEPARTMENT OF PUBLIC WORKS, BUREAU OF FACILITIES, 9250 BENDIX ROAD, COLUMBIA, MARYLAND 21045, ATTN: MARK STROMDAHL, PHONE: 410-313-5757

OWNER: HOWARD COUNTY, DEPARTMENT OF PUBLIC WORKS, BUREAU OF FACILITIES, 9250 BENDIX ROAD, COLUMBIA, MARYLAND 21045, ATTN: MARK STROMDAHL, PHONE: 410-313-5757

PROJECT: GREEN BUILDING
HCLS ELKRIDGE BRANCH AND 50+ CENTER

AREA: TAX MAP 38, PARCEL 'A' PLAT 23869 ZONED B-1 & R-12, GRID NO. 7 1st ELECTION DISTRICT, 6540 WASHINGTON BOULEVARD, ELKRIDGE, MARYLAND 21075-0000, HOWARD COUNTY, MARYLAND

TITLE: SEDIMENT CONTROL NOTES

Pennoni Associates Inc.
Engineers • Surveyors • Planners
Landscape Architects
8818 Centre Park Drive, Suite 200 Columbia, MD 21045
T 410.997.8900 F 410.997.9282

SEAL

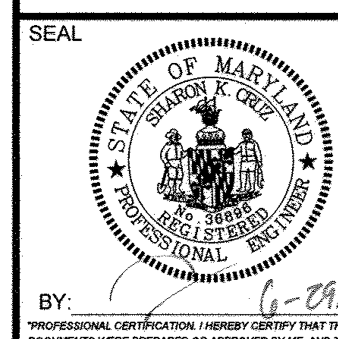

BY: 6-29-16

"PROFESSIONAL CERTIFICATION. I HEREBY CERTIFY THAT THESE DOCUMENTS WERE PREPARED OR APPROVED BY ME, AND THAT I AM A DULY LICENSED PROFESSIONAL ENGINEER UNDER THE LAWS OF THE STATE OF MARYLAND, LICENSE NO. 36896, EXPIRATION DATE: 2-15-2017"

DESIGNED BY : PJS/JSN
DRAWN BY: PJS/JSN
PROJECT NO : GRIM1402
DATE : JUNE 20,2016
SCALE : 1" = 30'
DRAWING NO. 7 OF 50

SDP-16-038

DETAIL B-1 STABILIZED CONSTRUCTION ENTRANCE

STANDARD SYMBOL: SCE

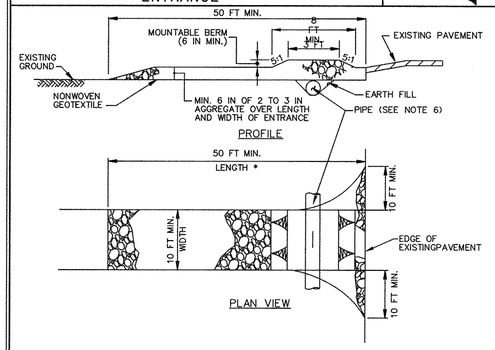

CONSTRUCTION SPECIFICATIONS

1. PLACE STABILIZED CONSTRUCTION ENTRANCE IN ACCORDANCE WITH THE APPROVED PLAN. VEHICLES MUST TRAVEL OVER THE ENTIRE LENGTH OF THE SCE. USE MINIMUM LENGTH OF 50 FEET (*50 FEET FOR SINGLE RESIDENCE LOT). USE MINIMUM WIDTH OF 10 FEET. FLARE SCE 10 FEET MINIMUM AT THE EXISTING ROAD TO PROVIDE A TURNING RADIUS.
2. PIPE ALL SURFACE WATER FLOWING TO OR DIVERTED TOWARD THE SCE UNDER THE ENTRANCE, MAINTAINING POSITIVE DRAINAGE. PROTECT PIPE INSTALLED THROUGH THE SCE WITH A MOUNTABLE BERM WITH 5:1 SLOPES AND A MINIMUM OF 12 INCHES OF STONE OVER THE PIPE. PROVIDE PIPE AS SPECIFIED ON APPROVED PLAN. WHEN THE SCE IS LOCATED AT A HIGH SPOT AND HAS NO DRAINAGE TO CONVEY, A PIPE IS NOT NECESSARY. A MOUNTABLE BERM IS REQUIRED WHEN SCE IS NOT LOCATED AT A HIGH SPOT.
3. PREPARE SUBGRADE AND PLACE NONWOVEN GEOTEXTILE, AS SPECIFIED IN SECTION H-1 MATERIALS.
4. PLACE CRUSHED AGGREGATE (2 TO 3 INCHES IN SIZE) OR EQUIVALENT RECYCLED CONCRETE (WITHOUT REBAR) AT LEAST 6 INCHES DEEP OVER THE LENGTH AND WIDTH OF THE SCE.
5. MAINTAIN ENTRANCE IN A CONDITION THAT MINIMIZES TRACKING OF SEDIMENT. ADD STONE OR MAKE OTHER REPAIRS AS CONDITIONS DEMAND TO MAINTAIN CLEAN SURFACE, MOUNTABLE BERM, AND SPECIFIED DIMENSIONS. IMMEDIATELY REMOVE STONE AND/OR SEDIMENT SPILLED, DROPPED, OR TRACKED ONTO ADJACENT ROADWAY BY VACUUMING, SCRAPING, AND/OR SWEEPING. WASHING ROADWAY TO REMOVE MUD TRACKED ONTO PAVEMENT IS NOT ACCEPTABLE UNLESS WASH WATER IS DIRECTED TO AN APPROVED SEDIMENT CONTROL PRACTICE.

MARYLAND STANDARDS AND SPECIFICATIONS FOR SOIL EROSION AND SEDIMENT CONTROL

U.S. DEPARTMENT OF AGRICULTURE NATURAL RESOURCES CONSERVATION SERVICE	2011	MARYLAND DEPARTMENT OF ENVIRONMENT WATER MANAGEMENT ADMINISTRATION

DETAIL E-1 SILT FENCE

STANDARD SYMBOL: SF

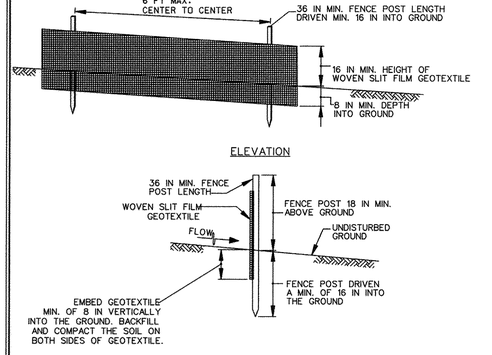

1 OF 2

MARYLAND STANDARDS AND SPECIFICATIONS FOR SOIL EROSION AND SEDIMENT CONTROL

U.S. DEPARTMENT OF AGRICULTURE NATURAL RESOURCES CONSERVATION SERVICE	2011	MARYLAND DEPARTMENT OF ENVIRONMENT WATER MANAGEMENT ADMINISTRATION

DETAIL E-3 SUPER SILT FENCE

STANDARD SYMBOL: SSF

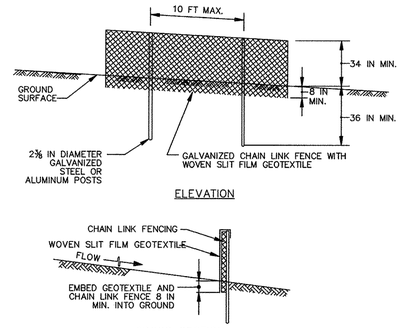

CONSTRUCTION SPECIFICATIONS

1. INSTALL 2⅜ INCH DIAMETER GALVANIZED STEEL POSTS OF 0.095 INCH WALL THICKNESS AND SIX FOOT LENGTH SPACED NO FURTHER THAN 10 FEET APART. DRIVE THE POSTS A MINIMUM OF 36 INCHES INTO THE GROUND.
2. FASTEN 9 GAUGE OR HEAVIER GALVANIZED CHAIN LINK FENCE (2⅜ INCH MAXIMUM OPENING) 42 INCHES IN HEIGHT SECURELY TO THE FENCE POSTS WITH WIRE TIES OR HUG RINGS.
3. FASTEN WOVEN SLIT FILM GEOTEXTILE AS SPECIFIED IN SECTION H-1 MATERIALS, SECURELY TO THE UPSLOPE SIDE OF CHAIN LINK FENCE WITH TIES SPACED EVERY 24 INCHES AT THE TOP AND MID SECTION. EMBED GEOTEXTILE AND CHAIN LINK FENCE A MINIMUM OF 8 INCHES INTO THE GROUND.
4. WHERE ENDS OF THE GEOTEXTILE COME TOGETHER, THE ENDS SHALL BE OVERLAPPED BY 6 INCHES, FOLDED, AND STAPLED TO PREVENT SEDIMENT BY PASS.
5. EXTEND BOTH ENDS OF THE SUPER SILT FENCE A MINIMUM OF FIVE HORIZONTAL FEET UPSLOPE AT 45 DEGREES TO THE MAIN FENCE ALIGNMENT TO PREVENT RUNOFF FROM GOING AROUND THE ENDS OF THE SUPER SILT FENCE.
6. PROVIDE MANUFACTURER CERTIFICATION TO THE INSPECTION/ENFORCEMENT AUTHORITY SHOWING THAT GEOTEXTILE USED MEETS THE REQUIREMENTS IN SECTION H-1 MATERIALS.
7. REMOVE ACCUMULATED SEDIMENT AND DEBRIS WHEN BULGES DEVELOP IN FENCE OR WHEN SEDIMENT REACHES 25% OF FENCE HEIGHT. REPLACE GEOTEXTILE IF TORN. IF UNDERMINING OCCURS, REINSTALL CHAIN LINK FENCING AND GEOTEXTILE.

MARYLAND STANDARDS AND SPECIFICATIONS FOR SOIL EROSION AND SEDIMENT CONTROL

U.S. DEPARTMENT OF AGRICULTURE NATURAL RESOURCES CONSERVATION SERVICE	2011	MARYLAND DEPARTMENT OF ENVIRONMENT WATER MANAGEMENT ADMINISTRATION

DETAIL E-1 SILT FENCE

STANDARD SYMBOL: SF

CONSTRUCTION SPECIFICATIONS

1. USE WOOD POSTS 1⅜ X 1⅜ ± ⅛ INCH (MINIMUM) SQUARE CUT OF SOUND QUALITY HARDWOOD. AS AN ALTERNATIVE TO WOODEN POST USE STANDARD "T" OR "U" SECTION STEEL POSTS WEIGHING NOT LESS THAN 1 POUND PER LINEAR FOOT.
2. USE 36 INCH MINIMUM POSTS DRIVEN 16 INCH MINIMUM INTO GROUND NO MORE THAN 6 FEET APART.
3. USE WOVEN SLIT FILM GEOTEXTILE AS SPECIFIED IN SECTION H-1 MATERIALS AND FASTEN GEOTEXTILE SECURELY TO UPSLOPE SIDE OF FENCE POSTS WITH WIRE TIES OR STAPLES AT TOP AND MID-SECTION.
4. PROVIDE MANUFACTURER CERTIFICATION TO THE AUTHORIZED REPRESENTATIVE OF THE INSPECTION/ENFORCEMENT AUTHORITY SHOWING THAT THE GEOTEXTILE USED MEETS THE REQUIREMENTS IN SECTION H-1 MATERIALS.
5. EMBED GEOTEXTILE A MINIMUM OF 8 INCHES VERTICALLY INTO THE GROUND. BACKFILL AND COMPACT THE SOIL ON BOTH SIDES OF FABRIC.
6. WHERE TWO SECTIONS OF GEOTEXTILE ADJOIN: OVERLAP, TWIST, AND STAPLE TO POST IN ACCORDANCE WITH THIS DETAIL.
7. EXTEND BOTH ENDS OF THE SILT FENCE A MINIMUM OF FIVE HORIZONTAL FEET UPSLOPE AT 45 DEGREES TO THE MAIN FENCE ALIGNMENT TO PREVENT RUNOFF FROM GOING AROUND THE ENDS OF THE SILT FENCE.
8. REMOVE ACCUMULATED SEDIMENT AND DEBRIS WHEN BULGES DEVELOP IN SILT FENCE OR WHEN SEDIMENT REACHES 25% OF FENCE HEIGHT. REPLACE GEOTEXTILE IF TORN. IF UNDERMINING OCCURS, REINSTALL FENCE.

2 OF 2

MARYLAND STANDARDS AND SPECIFICATIONS FOR SOIL EROSION AND SEDIMENT CONTROL

U.S. DEPARTMENT OF AGRICULTURE NATURAL RESOURCES CONSERVATION SERVICE	2011	MARYLAND DEPARTMENT OF ENVIRONMENT WATER MANAGEMENT ADMINISTRATION

HOWARD SOIL CONSERVATION DISTRICT (HSCD)
STANDARD SEDIMENT CONTROL NOTES

1. A PRE-CONSTRUCTION MEETING MUST OCCUR WITH THE HOWARD COUNTY DEPARTMENT OF PUBLIC WORKS, CONSTRUCTION INSPECTION DIVISION (CID), 410-313-1855 AFTER THE FUTURE LOD AND PROTECTED AREAS ARE MARKED CLEARLY IN THE FIELD. A MINIMUM OF 48 HOUR NOTICE TO CID MUST BE GIVEN AT THE FOLLOWING STAGES:
   A. PRIOR TO THE START OF EARTH DISTURBANCE,
   B. UPON COMPLETION OF THE INSTALLATION OF PERIMETER EROSION AND SEDIMENT CONTROLS, BUT BEFORE PROCEEDING WITH ANY OTHER EARTH DISTURBANCE OR GRADING,
   C. PRIOR TO THE START OF ANOTHER PHASE OF CONSTRUCTION OR OPENING OF ANOTHER GRADING UNIT,
   D. PRIOR TO THE REMOVAL OR MODIFICATION OF SEDIMENT CONTROL PRACTICES.

   OTHER BUILDING OR GRADING INSPECTION APPROVALS MAY NOT BE AUTHORIZED UNTIL THIS INITIAL APPROVAL BY THE INSPECTION AGENCY IS MADE. OTHER RELATED STATE AND FEDERAL PERMITS SHALL BE REFERENCED, TO ENSURE COORDINATION AND TO AVOID CONFLICTS WITH THIS PLAN.
2. ALL VEGETATIVE AND STRUCTURAL PRACTICES ARE TO BE INSTALLED ACCORDING TO THE PROVISIONS OF THIS PLAN AND ARE TO BE IN CONFORMANCE WITH THE 2011 MARYLAND STANDARDS AND SPECIFICATIONS FOR SOIL EROSION AND SEDIMENT CONTROL, AND REVISIONS THERETO.
3. FOLLOWING INITIAL SOIL DISTURBANCE OR RE-DISTURBANCE, PERMANENT OR TEMPORARY STABILIZATION IS REQUIRED WITHIN THREE (3) CALENDAR DAYS AS TO THE SURFACE OF ALL PERIMETER CONTROLS, DIKES, SWALES, DITCHES, PERIMETER SLOPES, AND ALL SLOPES STEEPER THAN 3 HORIZONTAL TO 1 VERTICAL (3:1); AND SEVEN (7) CALENDAR DAYS. AS TO ALL OTHER DISTURBED AREAS ON THE PROJECT SITE EXCEPT FOR THOSE AREAS UNDER ACTIVE GRADING.
4. ALL DISTURBED AREAS MUST BE STABILIZED WITHIN THE TIME PERIOD SPECIFIED ABOVE IN ACCORDANCE WITH THE 2011 MARYLAND STANDARDS AND SPECIFICATIONS FOR SOIL EROSION AND SEDIMENT CONTROL FOR TOPSOIL (SEC. B-4-2), PERMANENT SEEDING (SEC. B-4-5), TEMPORARY SEEDING (SEC. B-4-4) AND MULCHING (SEC. B-4-3). TEMPORARY STABILIZATION WITH MULCH ALONE CAN ONLY BE APPLIED BETWEEN THE FALL AND SPRING SEEDING DATES IF THE GROUND IS FROZEN. INCREMENTAL STABILIZATION (SEC. B-4-1) SPECIFICATIONS SHALL BE ENFORCED IN AREAS WITH >15' OF CUT AND/OR FILL. STOCKPILES (SEC. B-4-8) IN EXCESS OF 20 FT. MUST BE BENCHED WITH STABLE OUTLET. ALL CONCENTRATED FLOW, STEEP SLOPE, AND HIGHLY ERODIBLE AREAS SHALL RECEIVE SOIL STABILIZATION MATTING (SEC. B-4-6).
5. ALL SEDIMENT CONTROL STRUCTURES ARE TO REMAIN IN PLACE, AND ARE TO BE MAINTAINED IN OPERATIVE CONDITION UNTIL PERMISSION FOR THEIR REMOVAL HAS BEEN OBTAINED FROM THE CID.

DETAIL E-9-1 STANDARD INLET PROTECTION

STANDARD SYMBOL: SIP

TYPE A MAXIMUM DRAINAGE AREA = ¼ ACRE
TYPE B MAXIMUM DRAINAGE AREA = 1 ACRE

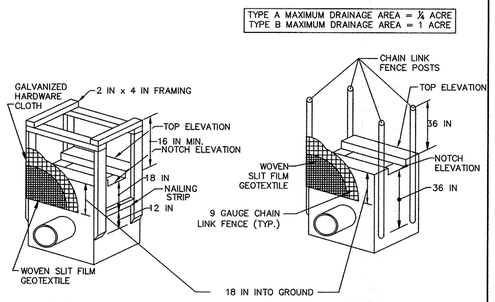

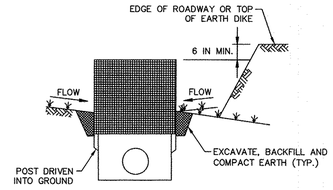

CONSTRUCTION SPECIFICATIONS

1. USE WOVEN SLIT FILM GEOTEXTILE AS SPECIFIED IN SECTION H-1 MATERIALS.
2. EXCAVATE COMPLETELY AROUND THE INLET TO A DEPTH OF 18 INCHES BELOW THE NOTCH ELEVATION.
3. FOR TYPE A, USE NOMINAL 2 INCH X 4 INCH CONSTRUCTION GRADE LUMBER POSTS, DRIVEN 1 FOOT INTO THE GROUND AT EACH CORNER OF THE INLET. PLACE NAIL STRIPS BETWEEN THE POSTS ON THE ENDS OF THE INLET. ASSEMBLE THE TOP PORTION OF THE 2X4 FRAME AS SHOWN. STRETCH ½ INCH GALVANIZED HARDWARE CLOTH TIGHTLY AROUND THE FRAME AND FASTEN SECURELY. FASTEN GEOTEXTILE SECURELY TO THE HARDWARE CLOTH WITH TIES SPACED EVERY 24 INCHES AT THE TOP AND MID SECTION. EMBED GEOTEXTILE AND HARDWARE CLOTH A MINIMUM OF 18 INCHES BELOW THE WEIR CREST. THE ENDS OF THE GEOTEXTILE MUST MEET AT A POST, BE OVERLAPPED AND FOLDED, THEN FASTENED TO THE POST.

   FOR TYPE B, USE 2⅜ INCH DIAMETER GALVANIZED STEEL POSTS OF 0.095 INCH WALL THICKNESS AND 6 FOOT LENGTH, DRIVEN A MINIMUM OF 36 INCHES BELOW THE WEIR CREST AT EACH CORNER OF THE STRUCTURE. FASTEN 9 GAUGE OR HEAVIER CHAIN LINK FENCE, 42 INCHES IN HEIGHT, SECURELY TO THE FENCE POSTS WITH WIRE TIES. FASTEN GEOTEXTILE SECURELY TO THE CHAIN LINK FENCE WITH TIES SPACED EVERY 24 INCHES AT THE TOP AND MID SECTION. EMBED GEOTEXTILE AND CHAIN LINK FENCE A MINIMUM OF 18 INCHES BELOW THE WEIR CREST.
4. BACKFILL AROUND THE INLET IN LOOSE 4 INCH LIFTS AND COMPACT UNTIL SOIL IS LEVEL WITH THE NOTCH ELEVATION ON THE ENDS AND TOP ELEVATION ON THE SIDES.
5. STORM DRAIN INLET PROTECTION REQUIRES FREQUENT MAINTENANCE. REMOVE ACCUMULATED SEDIMENT AFTER EACH RAIN EVENT TO MAINTAIN FUNCTION AND AVOID PREMATURE CLOGGING. IF INLET PROTECTION DOES NOT COMPLETELY DRAIN WITHIN 24 HOURS AFTER A STORM EVENT, IT IS CLOGGED. WHEN THIS OCCURS, REMOVE ACCUMULATED SEDIMENT AND CLEAN, OR REPLACE GEOTEXTILE AND STONE.

2 OF 2

MARYLAND STANDARDS AND SPECIFICATIONS FOR SOIL EROSION AND SEDIMENT CONTROL

U.S. DEPARTMENT OF AGRICULTURE NATURAL RESOURCES CONSERVATION SERVICE	2011	MARYLAND DEPARTMENT OF ENVIRONMENT WATER MANAGEMENT ADMINISTRATION

6. SITE ANALYSIS:
   TOTAL AREA OF SITE: 5.92 ACRES
   AREA DISTURBED: 4.99 ACRES
   AREA TO BE ROOFED OR PAVED: 3.13 ACRES
   AREA TO BE VEGETATIVELY STABILIZED: 1.73 ACRES
   TOTAL CUT: 3,467 CU. YDS.
   TOTAL FILL: 8,185 CU. YDS.
7. ANY SEDIMENT CONTROL PRACTICE WHICH IS DISTURBED BY GRADING ACTIVITY FOR PLACEMENT OF UTILITIES MUST BE REPAIRED ON THE SAME DAY OF DISTURBANCE.
8. ADDITIONAL SEDIMENT CONTROL MUST BE PROVIDED, IF DEEMED NECESSARY BY THE CID. THE SITE AND ALL CONTROLS SHALL BE INSPECTED BY THE CONTRACTOR WEEKLY; AND THE NEXT DAY AFTER EACH RAIN EVENT. A WRITTEN REPORT BY THE CONTRACTOR, MADE AVAILABLE UPON REQUEST, IS PART OF EVERY INSPECTION AND SHOULD INCLUDE:
   - INSPECTION DATE
   - INSPECTION TYPE (ROUTINE, PRE-STORM EVENT, DURING RAIN EVENT)
   - NAME AND TITLE OF INSPECTOR
   - WEATHER INFORMATION (CURRENT CONDITIONS AS WELL AS TIME AND AMOUNT OF LAST RECORDED PRECIPITATION)
   - BRIEF DESCRIPTION OF PROJECT' S STATUS (E.G., PERCENT COMPLETE) AND/OR CURRENT ACTIVITIES
   - EVIDENCE OF SEDIMENT DISCHARGES
   - IDENTIFICATION OF PLAN DEFICIENCIES
   - IDENTIFICATION OF SEDIMENT CONTROLS THAT REQUIRE MAINTENANCE
   - IDENTIFICATION OF MISSING OR IMPROPERLY INSTALLED SEDIMENT CONTROLS
   - COMPLIANCE STATUS REGARDING THE SEQUENCE OF CONSTRUCTION AND STABILIZATION REQUIREMENTS
   - PHOTOGRAPHS
   - MONITORING/SAMPLING
   - MAINTENANCE AND/OR CORRECTIVE ACTION PERFORMED
   - OTHER INSPECTION ITEMS AS REQUIRED BY THE GENERAL PERMIT FOR STORMWATER ASSOCIATED WITH CONSTRUCTION ACTIVITIES (NPDES, MDE).
9. TRENCHES FOR THE CONSTRUCTION OF UTILITIES IS LIMITED TO THREE PIPE LENGTHS OR THAT WHICH CAN AND SHALL BE BACK-FILLED AND STABILIZED BY THE END OF EACH WORKDAY, WHICHEVER IS SHORTER.
10. ANY MAJOR CHANGES OR REVISIONS TO THE PLAN OR SEQUENCE OF CONSTRUCTION MUST BE REVIEWED AND APPROVED BY THE HSCD PRIOR TO PROCEEDING WITH CONSTRUCTION. MINOR REVISIONS MAY ALLOWED BY THE CID PER THE LIST OF HSCD-APPROVED FIELD CHANGES.

DETAIL C-1 EARTH DIKE

STANDARD SYMBOL: A-1 (PLACE DESIGNATION (e.g. A-1) ON FLOW CHANNEL SIDE OF DIKE.)

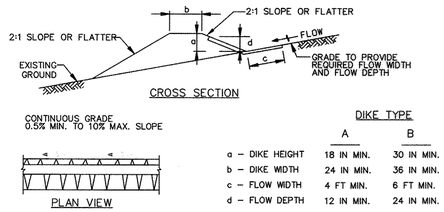

DIKE TYPE	A	B
a – DIKE HEIGHT	18 IN MIN.	30 IN MIN.
b – DIKE WIDTH	24 IN MIN.	36 IN MIN.
c – FLOW WIDTH	4 FT MIN.	6 FT MIN.
d – FLOW DEPTH	12 IN MIN.	24 IN MIN.

FLOW CHANNEL STABILIZATION

A-1	SEED WITH STRAW MULCH AND TACK. (NOT ALLOWED FOR CLEAR WATER DIVERSION.)
A-2/B-2	SEED WITH SOIL STABILIZATION MATTING OR LINE WITH SOD.
A-3/B-3	4 TO 7 INCH STONE OR EQUIVALENT RECYCLED CONCRETE PRESSED INTO SOIL A MINIMUM OF 7 INCHES AND FLUSH WITH GROUND.

CONSTRUCTION SPECIFICATIONS

1. REMOVE AND DISPOSE OF ALL TREES, BRUSH, STUMPS, OBSTRUCTIONS, AND OTHER OBJECTIONABLE MATERIAL SO AS NOT TO INTERFERE WITH PROPER FUNCTION OF EARTHDIKE.
2. EXCAVATE OR SHAPE EARTH DIKE TO LINE, GRADE, AND CROSS SECTION AS SPECIFIED. BANK PROJECTIONS OR OTHER IRREGULARITIES ARE NOT ALLOWED.
3. COMPACT FILL.
4. CONSTRUCT FLOW CHANNEL ON AN UNINTERRUPTED, CONTINUOUS GRADE, ADJUSTING THE LOCATION DUE TO FIELD CONDITIONS AS NECESSARY TO MAINTAIN POSITIVE DRAINAGE.
5. PROVIDE OUTLET PROTECTION AS REQUIRED ON APPROVED PLAN.
6. STABILIZE EARTH DIKE WITHIN THREE DAYS OF INSTALLATION. STABILIZE FLOW CHANNEL FOR CLEAR WATER DIVERSION WITHIN 24 HOURS OF INSTALLATION.
7. MAINTAIN LINE, GRADE, AND CROSS SECTION. REMOVE ACCUMULATED SEDIMENT AND DEBRIS, AND MAINTAIN POSITIVE DRAINAGE. KEEP EARTH DIKE AND POINT OF DISCHARGE FREE OF EROSION, AND CONTINUOUSLY MEET REQUIREMENTS FOR ADEQUATE VEGETATIVE ESTABLISHMENT IN ACCORDANCE WITH SECTION B-4 VEGETATIVE STABILIZATION.
8. UPON REMOVAL OF EARTH DIKE, GRADE AREA FLUSH WITH EXISTING GROUND. WITHIN 24 HOURS OF REMOVAL STABILIZE DISTURBED AREA WITH TOPSOIL, SEED, AND MULCH, OR AS SPECIFIED ON APPROVED PLAN.

MARYLAND STANDARDS AND SPECIFICATIONS FOR SOIL EROSION AND SEDIMENT CONTROL

U.S. DEPARTMENT OF AGRICULTURE NATURAL RESOURCES CONSERVATION SERVICE	2011	MARYLAND DEPARTMENT OF ENVIRONMENT WATER MANAGEMENT ADMINISTRATION

B-4-8 STANDARDS AND SPECIFICATIONS

FOR

STOCKPILE AREA

Definition

A mound or pile of soil protected by appropriately designed erosion and sediment control measures.

Purpose

To provide a designated location for the temporary storage of soil that controls the potential for erosion, sedimentation, and changes to drainage patterns.

Conditions Where Practice Applies

Stockpile areas are utilized when it is necessary to salvage and store soil for later use.

Criteria

1. The stockpile location and all related sediment control practices must be clearly indicated on the erosion and sediment control plan.
2. The footprint of the stockpile must be sized to accommodate the anticipated volume of material and based on a side slope ratio no steeper than 2:1. Benching must be provided in accordance with Section B-3 Land Grading.
3. Runoff from the stockpile area must drain to a suitable sediment control practice.
4. Access the stockpile area from the upgrade side.
5. Clear water runoff into the stockpile area must be minimized by use of a diversion device such as an earth dike, temporary swale or diversion fence. Provisions must be made for discharging concentrated flow in a non-erosive manner.
6. Where runoff concentrates along the toe of the stockpile fill, an appropriate erosion/sediment control practice must be used to intercept the discharge.
7. Stockpiles must be stabilized in accordance with the 3/7 day stabilization requirement as well as Standard B-4-1 Incremental Stabilization and Standard B-4-4 Temporary Stabilization.
8. If the stockpile is located on an impervious surface, a liner should be provided below the stockpile to facilitate cleanup. Stockpiles containing contaminated material must be covered with impermeable sheeting.

Maintenance

The stockpile area must continuously meet the requirements for Adequate Vegetative Establishment in accordance with Section B-4 Vegetative Stabilization. Side slopes must be maintained at no steeper than a 2:1 ratio. The stockpile area must be kept free of erosion. If the vertical height of a stockpile exceeds 20 feet for 2:1 slopes, 30 feet for 3:1 slopes, or 40 feet for 4:1 slopes, benching must be provided in accordance with Section B-3 Land Grading.

B-43

11. DISTURBANCE SHALL NOT OCCUR OUTSIDE THE L.O.D. A PROJECT IS TO BE SEQUENCED SO THAT GRADING ACTIVITIES BEGIN ON ONE GRADING UNIT (MAXIMUM ACREAGE OF 20 AC. PER GRADING UNIT) AT A TIME. WORK MAY PROCEED TO A SUBSEQUENT GRADING UNIT WHEN AT LEAST 50 PERCENT OF THE DISTURBED AREA IN THE PRECEDING GRADING UNIT HAS BEEN STABILIZED AND APPROVED BY THE CID. UNLESS OTHERWISE SPECIFIED AND APPROVED BY THE CID, NO MORE THAN 30 ACRES CUMULATIVELY MAY BE DISTURBED AT A GIVEN TIME.
12. WASH WATER FROM ANY EQUIPMENT, VEHICLES, WHEELS, PAVEMENT, AND OTHER SOURCES MUST BE TREATED IN A SEDIMENT BASIN OR OTHER APPROVED WASHOUT STRUCTURE.
13. TOPSOIL SHALL BE STOCKPILED AND PRESERVED ON-SITE FOR REDISTRIBUTION ONTO FINAL GRADE.
14. ALL SILT FENCE AND SUPER SILT FENCE SHALL BE PLACED ON-THE-CONTOUR, AND BE IMBRICATED AT 25' MINIMUM INTERVALS, WITH LOWER ENDS CURLED UPHILL BY 2' IN ELEVATION.
15. STREAM CHANNELS MUST NOT BE DISTURBED DURING THE FOLLOWING RESTRICTED TIME PERIODS (INCLUSIVE):
   - USE I AND IP MARCH 1 – JUNE 15
   - USE III AND IIIP OCTOBER 1 – APRIL 30
   - USE IV MARCH 1 – MAY 31
16. A COPY OF THIS PLAN, THE 2011 MARYLAND STANDARDS AND SPECIFICATIONS FOR SOIL EROSION AND SEDIMENT CONTROL, AND ASSOCIATED PERMITS SHALL BE ON-SITE AND AVAILABLE WHEN THE SITE IS ACTIVE.

ENGINEER'S CERTIFICATE

"I CERTIFY THAT THIS PLAN FOR SEDIMENT AND EROSION CONTROL REPRESENTS A PRACTICAL AND WORKABLE PLAN BASED ON MY PERSONAL KNOWLEDGE OF THE SITE CONDITIONS AND THAT IT WAS PREPARED IN ACCORDANCE WITH THE REQUIREMENTS OF THE HOWARD SOIL CONSERVATION DISTRICT."

SIGNATURE OF ENGINEER (PRINT NAME BELOW SIGNATURE) — DATE 6-29-16

Sharon K. Grue

DEVELOPER'S CERTIFICATE

"I/WE CERTIFY THAT ALL DEVELOPMENT AND CONSTRUCTION WILL BE DONE ACCORDING TO THIS PLAN FOR SEDIMENT AND EROSION CONTROL, AND THAT ALL RESPONSIBLE PERSONNEL INVOLVED IN THE CONSTRUCTION PROJECT WILL HAVE A CERTIFICATE OF ATTENDANCE AT A DEPARTMENT OF THE ENVIRONMENT APPROVED TRAINING PROGRAM FOR THE CONTROL OF SEDIMENT AND EROSION BEFORE BEGINNING THE PROJECT. I ALSO AUTHORIZE PERIODIC ON-SITE INSPECTIONS BY THE HOWARD SOIL CONSERVATION DISTRICT."

SIGNATURE OF DEVELOPER (PRINT NAME BELOW SIGNATURE) — DATE 28 JUNE 2016

RICHARD GROSSMAN

THIS DEVELOPMENT PLAN IS APPROVED FOR SOIL EROSION AND SEDIMENT CONTROL BY THE HOWARD SOIL CONSERVATION DISTRICT.

HOWARD SCD — DATE 7/12/16

APPROVED : DEPARTMENT OF PLANNING AND ZONING

CHIEF, DEVELOPMENT ENGINEERING DIVISION — DATE 7-19-16

CHIEF, DIVISION OF LAND DEVELOPMENT — DATE 8-16-16

DIRECTOR — DATE 8-16-16

DATE	NO.	REVISION	BY

DEVELOPER
HOWARD COUNTY
DEPARTMENT OF PUBLIC WORKS
BUREAU OF FACILITIES
9250 BENDIX ROAD
COLUMBIA, MARYLAND 21045
ATTN: MARK STROMDAHL
PHONE: 410-313-5757

OWNER
HOWARD COUNTY
DEPARTMENT OF PUBLIC WORKS
BUREAU OF FACILITIES
9250 BENDIX ROAD
COLUMBIA, MARYLAND 21045
ATTN: MARK STROMDAHL
PHONE: 410-313-5757

PROJECT
GREEN BUILDING
HCLS ELKRIDGE BRANCH AND 50+ CENTER

AREA
TAX MAP 38, PARCEL 'A' PLAT 23864 AND 23865 ZONED B-1 & R-12
GRID NO. 7 1st ELECTION DISTRICT
6540 WASHINGTON BOULEVARD
ELKRIDGE, MARYLAND 21075-0000
HOWARD COUNTY, MARYLAND

TITLE
SEDIMENT CONTROL DETAILS

Pennoni Associates Inc.
Engineers • Surveyors • Planners
Landscape Architects
8818 Centre Park Drive, Suite 200 Columbia, MD 21045
T 410.997.8900 F 410.997.9282

SEAL

STATE OF MARYLAND — SHARON K. GRUE — No. 36996 — REGISTERED PROFESSIONAL ENGINEER

BY: 6-29-16

"PROFESSIONAL CERTIFICATION. I HEREBY CERTIFY THAT THESE DOCUMENTS WERE PREPARED OR APPROVED BY ME, AND THAT I AM A DULY LICENSED PROFESSIONAL ENGINEER UNDER THE LAWS OF THE STATE OF MARYLAND, LICENSE NO. 36996, EXPIRATION DATE: 2-10-2017"

DESIGNED BY :	PJS/JSN
DRAWN BY:	PJS/JSN
PROJECT NO :	GRIM1402
DATE :	JUNE 20,2016
SCALE :	AS SHOWN
DRAWING NO.	8 OF 50

SDP-16-038

DETAIL B-4-6-A TEMPORARY SOIL STABILIZATION MATTING CHANNEL APPLICATION

STANDARD SYMBOL: TSSMC – ✱ 4.0 lb/ft² (✱ INCLUDE SHEAR STRESS)

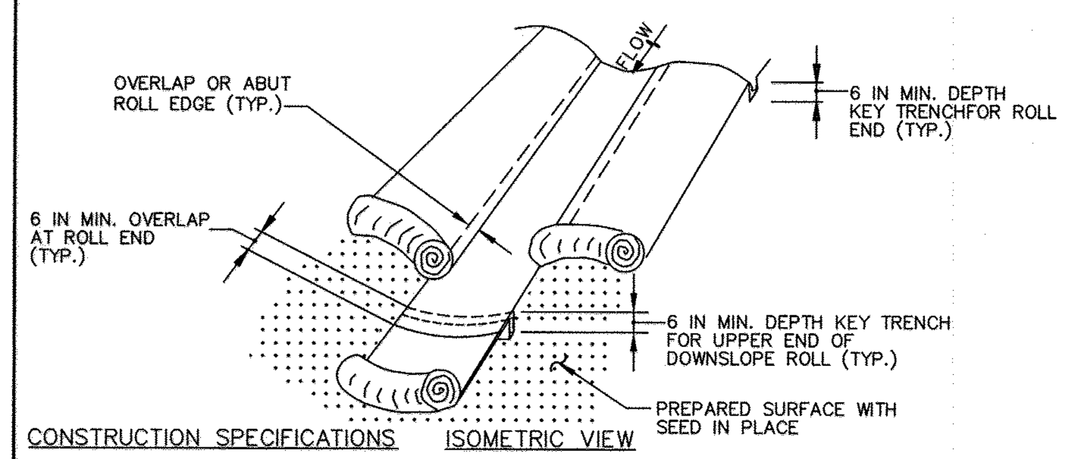

ISOMETRIC VIEW

CONSTRUCTION SPECIFICATIONS

1. USE MATTING THAT HAS A DESIGN VALUE FOR SHEAR STRESS EQUAL TO OR HIGHER THAN THE SHEAR STRESS DESIGNATED ON APPROVED PLANS.
2. USE TEMPORARY SOIL STABILIZATION MATTING MADE OF DEGRADABLE (LASTS 6 MONTHS MINIMUM) NATURAL OR MAN-MADE FIBERS (MOSTLY ORGANIC). MAT MUST HAVE UNIFORM THICKNESS AND DISTRIBUTION OF FIBERS THROUGHOUT AND BE SMOLDER RESISTANT. CHEMICALS USED IN THE MAT MUST BE NON-LEACHING AND NON-TOXIC TO VEGETATION AND SEED GERMINATION AND NON-INJURIOUS TO THE SKIN. IF PRESENT, NETTING MUST BE EXTRUDED PLASTIC WITH A MAXIMUM MESH OPENING OF 2x2 INCHES AND SUFFICIENTLY BONDED OR SEWN ON 2 INCH CENTERS ALONG LONGITUDINAL AXIS OF THE MATERIAL TO PREVENT SEPARATION OF THE NET FROM THE PARENT MATERIAL.
3. SECURE MATTING USING STEEL STAPLES, WOOD STAKES, OR BIODEGRADABLE EQUIVALENT. STAPLES MUST BE "U" OR "T" SHAPED STEEL WIRE HAVING A MINIMUM GAUGE OF NO. 11 AND NO. 8 RESPECTIVELY. "U" SHAPED STAPLES MUST AVERAGE 1 TO 1½ INCHES WIDE AND BE A MINIMUM OF 6 INCHES LONG. "T" SHAPED STAPLES MUST HAVE A MINIMUM 8 INCH MAIN LEG, A MINIMUM 1 INCH SECONDARY LEG, AND A MINIMUM 4 INCH HEAD. WOOD STAKES MUST BE ROUGH-SAWN HARDWOOD, 12 TO 24 INCHES IN LENGTH, 1x3 INCH IN CROSS SECTION, AND WEDGE SHAPED AT THE BOTTOM.
4. PERFORM FINAL GRADING, TOPSOIL APPLICATION, SEEDBED PREPARATION, AND PERMANENT SEEDING IN ACCORDANCE WITH SPECIFICATIONS. PLACE MATTING WITHIN 48 HOURS OF COMPLETING SEEDING OPERATIONS UNLESS END OF WORKDAY STABILIZATION IS SPECIFIED ON THE APPROVED EROSION AND SEDIMENT CONTROL PLAN.
5. UNROLL MATTING IN DIRECTION OF WATER FLOW, CENTERING THE FIRST ROLL ON THE CHANNEL CENTERLINE. WORK FROM CENTER OF CHANNEL OUTWARD WHEN PLACING ROLLS. LAY MAT SMOOTHLY AND FIRMLY ON THE SEEDED SURFACE. AVOID STRETCHING THE MATTING.
6. KEY-IN UPSTREAM END OF EACH MAT ROLL BY DIGGING A 6 INCH (MINIMUM) TRENCH AT THE UPSTREAM END OF THE MATTING, PLACING THE ROLL END IN THE TRENCH, STAPLING THE MAT IN PLACE, REPLACING THE EXCAVATED MATERIAL, AND TAMPING TO SECURE THE MAT END.
7. OVERLAP OR ABUT THE ROLL EDGES PER MANUFACTURER RECOMMENDATIONS. OVERLAP ROLL ENDS BY 6 INCHES (MINIMUM), WITH THE UPSTREAM MAT OVERLAPPING ON TOP OF THE NEXT DOWNSTREAM MAT.
8. STAPLE/STAKE MAT IN A STAGGERED PATTERN ON 4 FOOT (MAXIMUM) CENTERS THROUGHOUT AND 2 FOOT (MAXIMUM) CENTERS ALONG SEAMS, JOINTS, AND ROLL ENDS.
9. ESTABLISH AND MAINTAIN VEGETATION SO THAT REQUIREMENTS FOR ADEQUATE VEGETATIVE ESTABLISHMENT ARE CONTINUOUSLY MET IN ACCORDANCE WITH SECTION B-4 VEGETATIVE STABILIZATION.

MARYLAND STANDARDS AND SPECIFICATIONS FOR SOIL EROSION AND SEDIMENT CONTROL

U.S. DEPARTMENT OF AGRICULTURE NATURAL RESOURCES CONSERVATION SERVICE	2011	MARYLAND DEPARTMENT OF ENVIRONMENT WATER MANAGEMENT ADMINISTRATION

DETAIL B-4-6-C PERMANENT SOIL STABILIZATION MATTING CHANNEL APPLICATION

STANDARD SYMBOL: PSSMC – ✱ 4.0 lb/ft² (✱ INCLUDE SHEAR STRESS)

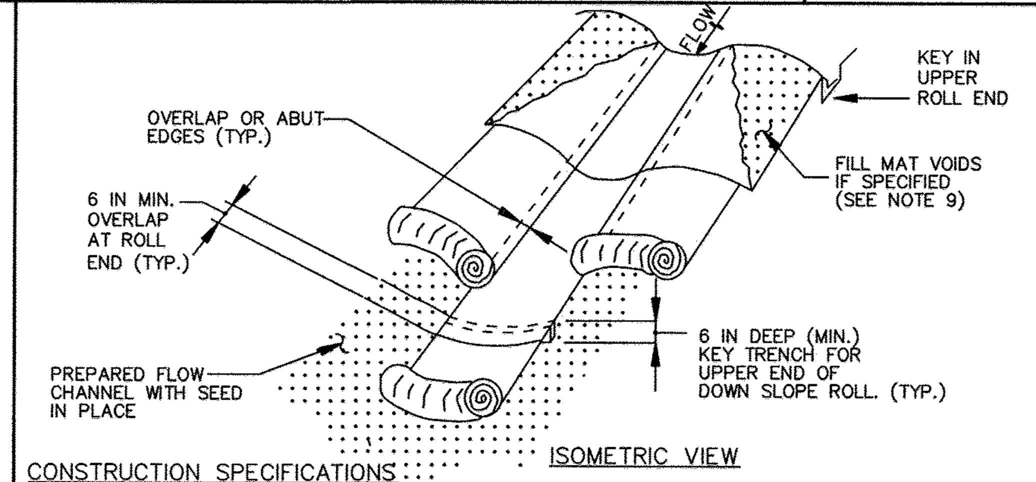

ISOMETRIC VIEW

CONSTRUCTION SPECIFICATIONS

1. USE MATTING THAT HAS A DESIGN VALUE FOR SHEAR STRESS EQUAL TO OR HIGHER THAN THE SHEAR STRESS DESIGNATED ON APPROVED PLANS.
2. USE PERMANENT SOIL STABILIZATION MATTING MADE OF OPEN WEAVE SYNTHETIC, NON-DEGRADABLE FIBERS OR ELEMENTS OF UNIFORM THICKNESS AND DISTRIBUTION THROUGHOUT. CHEMICALS USED IN THE MAT MUST BE NON-LEACHING AND NON-TOXIC TO VEGETATION AND NON-INJURIOUS TO THE SKIN. IF PRESENT, NETTING MUST BE EXTRUDED PLASTIC WITH A MAXIMUM MESH OPENING OF 2x2 INCHES AND SUFFICIENTLY BONDED OR SEWN ON 2 INCH CENTERS ALONG LONGITUDINAL AXIS OF THE MATERIAL TO PREVENT SEPARATION OF THE NET FROM THE PARENT MATERIAL.
3. SECURE MATTING USING STEEL STAPLES OR WOOD STAKES. STAPLES MUST BE "U" OR "T" SHAPED STEEL WIRE HAVING A MINIMUM GAUGE OF NO. 11 AND NO. 8 RESPECTIVELY. "U" SHAPED STAPLES MUST AVERAGE 1 TO 1 ½ INCHES WIDE AND BE A MINIMUM OF 6 INCHES LONG. "T" SHAPED STAPLES MUST HAVE A MINIMUM 8 INCH MAIN LEG, A MINIMUM 1 INCH SECONDARY LEG, AND MINIMUM 4 INCH HEAD. WOOD STAKES MUST BE ROUGH-SAWN HARDWOOD, 12 TO 24 INCHES IN LENGTH, 1x3 INCH IN CROSS SECTION, AND WEDGE SHAPE AT THE BOTTOM.
4. PERFORM FINAL GRADING, TOPSOIL APPLICATION, SEEDBED PREPARATION, AND PERMANENT SEEDING IN ACCORDANCE WITH SPECIFICATIONS. PLACE MATTING WITHIN 48 HOURS OF COMPLETING SEEDING OPERATIONS, UNLESS END OF WORKDAY STABILIZATION IS SPECIFIED ON THE APPROVED EROSION AND SEDIMENT CONTROL PLAN.
5. UNROLL MATTING IN DIRECTION OF WATER FLOW, CENTERING THE FIRST ROLL ON THE CHANNEL CENTER LINE. WORK FROM CENTER OF CHANNEL OUTWARD WHEN PLACING ROLLS. LAY MATTING SMOOTHLY AND FIRMLY UPON THE SEEDED SURFACE. AVOID STRETCHING THE MATTING.
6. OVERLAP OR ABUT EDGES OF MATTING ROLLS PER MANUFACTURER RECOMMENDATIONS. OVERLAP ROLL ENDS BY 6 INCHES (MINIMUM), WITH THE UPSTREAM MAT OVERLAPPING ON TOP OF THE NEXT DOWNSTREAM MAT.
7. KEY IN THE TOP OF SLOPE END OF MAT 6 INCHES (MINIMUM) BY DIGGING A TRENCH, PLACING THE MATTING ROLL END IN THE TRENCH, STAPLING THE MAT IN PLACE, REPLACING THE EXCAVATED MATERIAL, AND TAMPING TO SECURE THE MAT END IN THE KEY.
8. STAPLE/STAKE MAT IN A STAGGERED PATTERN ON 4 FOOT (MAXIMUM) CENTERS THROUGHOUT AND 2 FOOT (MAXIMUM) CENTERS ALONG SEAMS, JOINTS, AND ROLL ENDS.
9. IF SPECIFIED BY THE DESIGNER OR MANUFACTURER AND DEPENDING ON THE TYPE OF MAT BEING INSTALLED, ONCE THE MATTING IS KEYED AND STAPLED IN PLACE, FILL THE MAT VOIDS WITH TOP SOIL OR GRANULAR MATERIAL AND LIGHTLY COMPACT OR ROLL TO MAXIMIZE SOIL/MAT CONTACT WITHOUT CRUSHING MAT.
10. ESTABLISH AND MAINTAIN VEGETATION SO THAT REQUIREMENTS FOR ADEQUATE VEGETATIVE ESTABLISHMENT ARE CONTINUOUSLY MET IN ACCORDANCE WITH SECTION B-4 VEGETATIVE STABILIZATION.

MARYLAND STANDARDS AND SPECIFICATIONS FOR SOIL EROSION AND SEDIMENT CONTROL

U.S. DEPARTMENT OF AGRICULTURE NATURAL RESOURCES CONSERVATION SERVICE	2011	MARYLAND DEPARTMENT OF ENVIRONMENT WATER MANAGEMENT ADMINISTRATION

DETAIL E-9-2 AT-GRADE INLET PROTECTION

STANDARD SYMBOL: AGIP

MAXIMUM DRAINAGE AREA = 1 ACRE

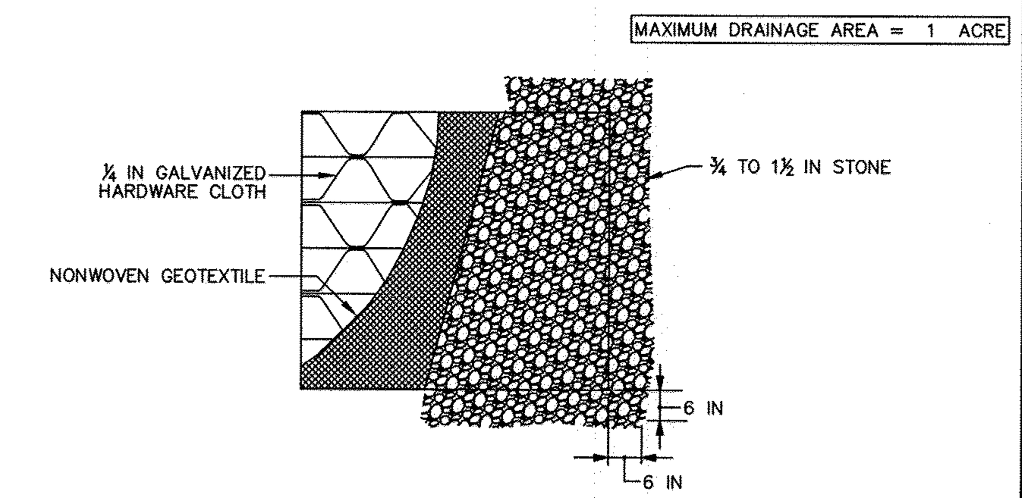

PLAN / CUT AWAY VIEW

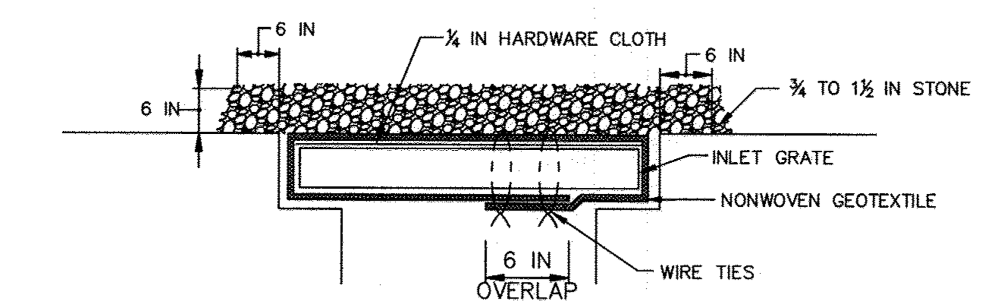

CROSS SECTION

CONSTRUCTION SPECIFICATIONS

1. USE NONWOVEN GEOTEXTILE AS SPECIFIED IN SECTION H-1 MATERIALS.
2. LIFT GRATE AND WRAP WITH NONWOVEN GEOTEXTILE TO COMPLETELY COVER ALL OPENINGS. SECURE WITH WIRE TIES AND SET GRATE BACK IN PLACE.
3. PLACE CLEAN ¾ TO 1½ INCH STONE OR EQUIVALENT RECYCLED CONCRETE 6 INCHES THICK ON THE GRATE.
4. STORM DRAIN INLET PROTECTION REQUIRES FREQUENT MAINTENANCE. REMOVE ACCUMULATED SEDIMENT AFTER EACH RAIN EVENT TO MAINTAIN FUNCTION AND AVOID PREMATURE CLOGGING. IF INLET PROTECTION DOES NOT COMPLETELY DRAIN WITHIN 24 HOURS AFTER A STORM EVENT, IT IS CLOGGED. WHEN THIS OCCURS, REMOVE ACCUMULATED SEDIMENT AND CLEAN, OR REPLACE GEOTEXTILE AND STONE.

MARYLAND STANDARDS AND SPECIFICATIONS FOR SOIL EROSION AND SEDIMENT CONTROL

U.S. DEPARTMENT OF AGRICULTURE NATURAL RESOURCES CONSERVATION SERVICE	2011	MARYLAND DEPARTMENT OF ENVIRONMENT WATER MANAGEMENT ADMINISTRATION

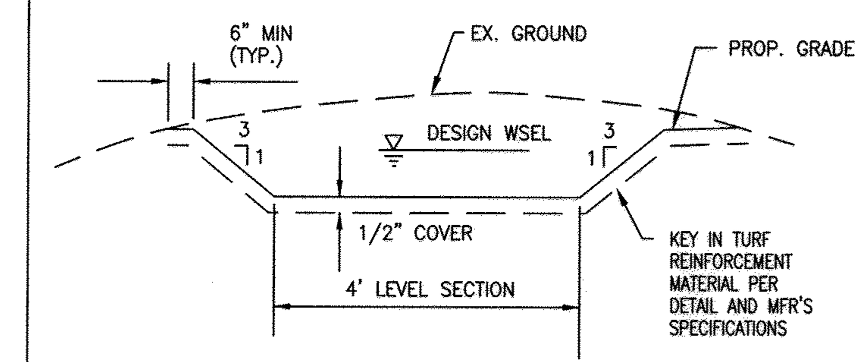

NOTES

1. INSTALL THE MATERIAL PER THE MANUFACTURER'S INSTRUCTIONS INCLUDING SURFACE PREPARATION AND STAPLING. IT IS VERY IMPORTANT THAT THE MATERIAL BE INSTALLED IN GOOD CONTACT WITH THE GROUND WITH NO WRINKLES OR VOID SPACES BELOW THE FABRIC. STAPLES MUST BE PLACED IN A DIAMOND PATTERN APPROXIMATELY 18" APART.
2. FILL VOIDS IN THE MATERIAL WITH TOPSOIL BEFORE SODDING OR SEEDING DO NOT PLACE MORE THAN ONE HALF INCH (1/2") OF TOPSOIL OVER THE MATERIAL. THE MATERIAL MUST BE WITHIN THE ROOT ZONE FOR IT TO FUNCTION PROPERLY.
3. MATERIAL MUST BE ENKAMAT 7010, ENKAMAT 7020, TENSAR TM–3000, PYRAMAT, OR OTHER MCDPS APPROVED EQUIVALENT. TO BE CONSIDERED AS AN EQUIVALENT, THE MATERIAL MUST BE A SINGLE BONDED TURF REINFORCEMENT MATERIAL.
4. TURF REINFORCEMENT IS NOT MEANT TO SERVE AS AN EROSION CONTROL MAT. IF NECESSARY, A BIOGRADABLE MATERIAL SUCH AS EXCELSIOR MAY BE PLACE OVER THE PREPARED SEED BED TO HOLD THE SEED IN PLACE. THE PURPOSE OF THE TURF REINFORCEMENT MATERIAL IS TO ADD STRENGTH TO THE ROOT SYSTEM AFTER GERMINATION.

GRASS SWALE TYPICAL SECTION

NOT TO SCALE

DETAIL D-4-1-C ROCK OUTLET PROTECTION III

STANDARD SYMBOL: ROPIII

DISCHARGE TO AN UNCONFINED CHANNEL OR FLAT AREA

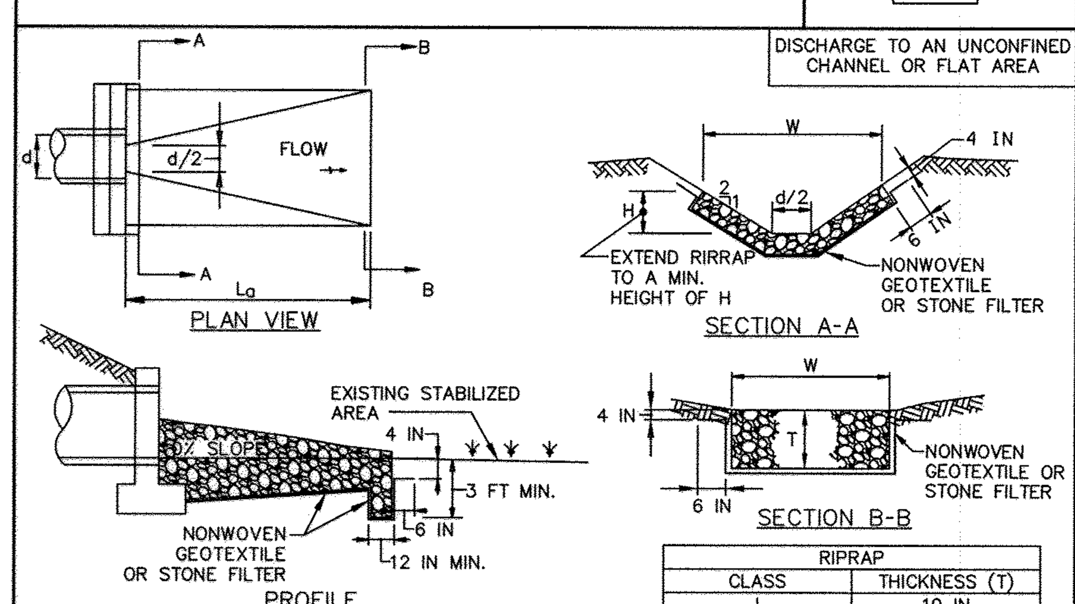

RIPRAP	
CLASS	THICKNESS (T)
I	19 IN
II	32 IN
III	46 IN

CONSTRUCTION SPECIFICATIONS

1. RIPRAP AND STONE MUST CONFORM TO THE SPECIFIED CLASS.
2. USE NONWOVEN GEOTEXTILE, AS SPECIFIED IN SECTION H-1 MATERIALS, AND PROTECT FROM PUNCTURING, CUTTING, OR TEARING. REPAIR ANY DAMAGE OTHER THAN AN OCCASIONAL SMALL HOLE BY PLACING ANOTHER PIECE OF GEOTEXTILE OVER THE DAMAGED PART OR BY COMPLETELY REPLACING THE GEOTEXTILE. PROVIDE A MINIMUM OF ONE FOOT OVERLAP FOR ALL REPAIRS AND FOR JOINING TWO PIECES OF GEOTEXTILE TOGETHER.
3. PREPARE THE SUBGRADE FOR GEOTEXTILE OR STONE FILTER (⅜ TO 1½ INCH MINIMUM STONE FOR 6 INCH MINIMUM DEPTH) AND RIPRAP TO THE REQUIRED LINES AND GRADES. COMPACT ANY FILL REQUIRED IN THE SUBGRADE TO A DENSITY OF APPROXIMATELY THAT OF THE SURROUNDING UNDISTURBED MATERIAL.
4. EXTEND GEOTEXTILE AT LEAST 6 INCHES BEYOND EDGES OF RIPRAP AND EMBED AT LEAST 4 INCHES AT SIDES OF RIPRAP.
5. CONSTRUCT RIPRAP OUTLET TO FULL COURSE THICKNESS IN ONE OPERATION AND IN SUCH A MANNER AS TO AVOID DISPLACEMENT OF UNDERLYING MATERIALS. PLACE STONE FOR RIPRAP OUTLET IN A MANNER THAT WILL ENSURE THAT IT IS REASONABLY HOMOGENOUS WITH THE SMALLER STONES AND SPALLS FILLING THE VOIDS BETWEEN THE LARGER STONES. PLACE RIPRAP IN A MANNER TO PREVENT DAMAGE TO THE FILTER BLANKET OR GEOTEXTILE. HAND PLACE TO THE EXTENT NECESSARY.
6. WHERE NO ENDWALL IS USED, CONSTRUCT THE UPSTREAM END OF THE APRON SO THAT THE WIDTH IS TWO TIMES THE DIAMETER OF THE OUTLET PIPE, AND EXTEND THE STONE UNDER THE OUTLET BY A MINIMUM OF 18 INCHES.
7. CONSTRUCT APRON WITH 0% SLOPE ALONG ITS LENGTH AND WITHOUT OBSTRUCTIONS. PLACE STONE SO THAT IT BLENDS IN WITH EXISTING GROUND.
8. MAINTAIN LINE, GRADE, AND CROSS SECTION. KEEP OUTLET FREE OF EROSION. REMOVE ACCUMULATED SEDIMENT AND DEBRIS. AFTER HIGH FLOWS INSPECT FOR SCOUR AND RIPRAP DISLODGED RIPRAP. MAKE NECESSARY REPAIRS IMMEDIATELY.

MARYLAND STANDARDS AND SPECIFICATIONS FOR SOIL EROSION AND SEDIMENT CONTROL

U.S. DEPARTMENT OF AGRICULTURE NATURAL RESOURCES CONSERVATION SERVICE	2011	MARYLAND DEPARTMENT OF ENVIRONMENT WATER MANAGEMENT ADMINISTRATION

DETAIL G-2-1 TYPICAL ANTI-SEEP COLLARS

STANDARD SYMBOL

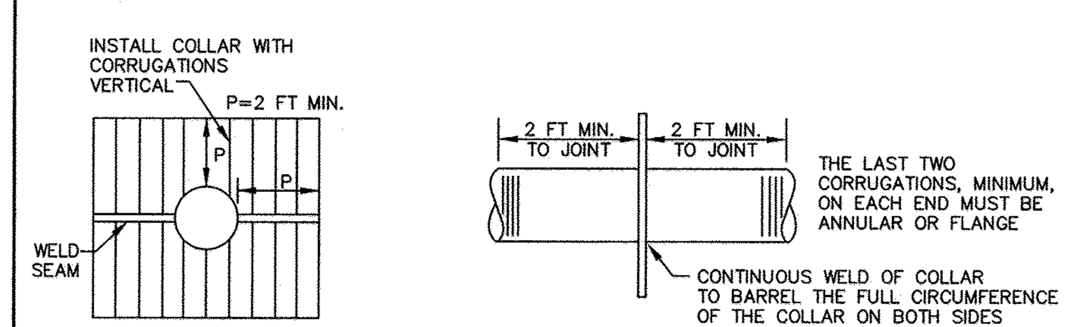

CORRUGATED COLLAR WELDED IN PLACE ON BARREL SECTION

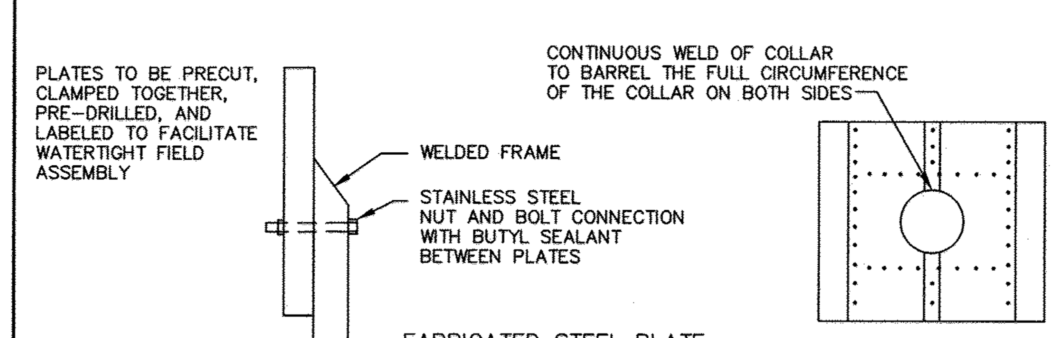

FABRICATED STEEL PLATE

COLLAR FOR FLANGE JOINT PIPE

MARYLAND STANDARDS AND SPECIFICATIONS FOR SOIL EROSION AND SEDIMENT CONTROL

U.S. DEPARTMENT OF AGRICULTURE NATURAL RESOURCES CONSERVATION SERVICE	2011	MARYLAND DEPARTMENT OF ENVIRONMENT WATER MANAGEMENT ADMINISTRATION

DETAIL G-2-3 CONCENTRIC TRASH RACK AND ANTI-VORTEX DEVICE

STANDARD SYMBOL: TR

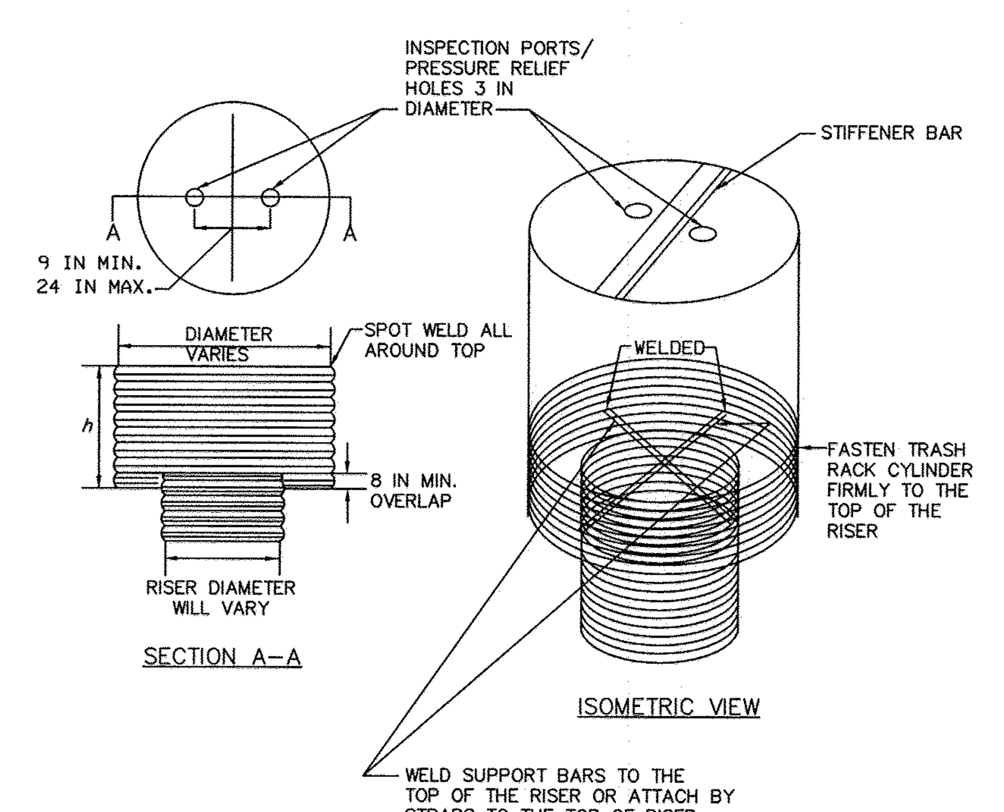

1 OF 2

MARYLAND STANDARDS AND SPECIFICATIONS FOR SOIL EROSION AND SEDIMENT CONTROL

U.S. DEPARTMENT OF AGRICULTURE NATURAL RESOURCES CONSERVATION SERVICE	2011	MARYLAND DEPARTMENT OF ENVIRONMENT WATER MANAGEMENT ADMINISTRATION

DETAIL G-2-3 CONCENTRIC TRASH RACK AND ANTI-VORTEX DEVICE

STANDARD SYMBOL: TR

	TRASH RACK CYLINDER				MINIMUM TOP	
RISER DIAM. (IN)	DIAM. (IN)	THICKNESS (GAUGE)	h (IN)	MINIMUM SIZE SUPPORT BAR	THICKNESS (GAUGE)	STIFFENER
12	18	16	14	#6 REBAR	16	N/A
15	21	16	15	#6 REBAR	16	N/A
18	27	16	16	#6 REBAR	16	N/A
21	30	16	19	#6 REBAR	16	N/A
24	36	16	21	#6 REBAR	14	N/A
27	42	16	21	#6 REBAR	14	N/A
36	54	14	25	#8 REBAR	12	N/A
42	60	14	27	#8 REBAR	12	N/A
48	72	12	29	1¼ IN PIPE OR 1¼ x 1¼ x ¼ ANGLE	10	N/A
54	78	12	33	1¼ IN PIPE OR 1¼ x 1¼ x ¼ ANGLE	10	N/A
60	90	12	37	1½ IN PIPE OR 1½ x 1½ x ¼ ANGLE	8	N/A
66	96	10	41	2 IN PIPE OR 2 x 2 x ³⁄₁₆ ANGLE	8	2 x 2 x ¼ ANGLE
72	102	10	44	2 IN PIPE OR 2 x 2 x ³⁄₁₆ ANGLE	8	2½ x 2½ x ¼ ANGLE
78	114	10	47	2½ IN PIPE OR 2 x 2 x ¼ ANGLE	8	2½ x 2½ x ¼ ANGLE
84	120	10	50	2½ IN PIPE OR 2½ x 2½ x ¼ ANGLE	8	2½ x 2½ x ⁵⁄₁₆ ANGLE

NOTE:

THE ABOVE TRASH RACK AND ANTI–VORTEX DEVICE INFORMATION IS FOR CORRUGATED METAL PIPE ONLY. CONCRETE RISERS MUST MEET THE REQUIREMENTS OF MD 378.

2 OF 2

MARYLAND STANDARDS AND SPECIFICATIONS FOR SOIL EROSION AND SEDIMENT CONTROL

U.S. DEPARTMENT OF AGRICULTURE NATURAL RESOURCES CONSERVATION SERVICE	2011	MARYLAND DEPARTMENT OF ENVIRONMENT WATER MANAGEMENT ADMINISTRATION

ENGINEER'S CERTIFICATE

"I CERTIFY THAT THIS PLAN FOR SEDIMENT AND EROSION CONTROL REPRESENTS A PRACTICAL AND WORKABLE PLAN BASED ON MY PERSONAL KNOWLEDGE OF THE SITE CONDITIONS AND THAT IT WAS PREPARED IN ACCORDANCE WITH THE REQUIREMENTS OF THE HOWARD SOIL CONSERVATION DISTRICT."

SIGNATURE OF ENGINEER (PRINT NAME BELOW SIGNATURE) — DATE 6-29-16

Sharon K. Cruz

DEVELOPER'S CERTIFICATE

"I/WE CERTIFY THAT ALL DEVELOPMENT AND CONSTRUCTION WILL BE DONE ACCORDING TO THIS PLAN FOR SEDIMENT AND EROSION CONTROL, AND THAT ALL RESPONSIBLE PERSONNEL INVOLVED IN THE CONSTRUCTION PROJECT WILL HAVE A CERTIFICATE OF ATTENDANCE AT A DEPARTMENT OF THE ENVIRONMENT APPROVED TRAINING PROGRAM FOR THE CONTROL OF SEDIMENT AND EROSION BEFORE BEGINNING THE PROJECT. I ALSO AUTHORIZE PERIODIC ON-SITE INSPECTIONS BY THE HOWARD SOIL CONSERVATION DISTRICT."

SIGNATURE OF DEVELOPER (PRINT NAME BELOW SIGNATURE) — DATE 28 JUN 2016

RICHARD GASPAROTTI

THIS DEVELOPMENT PLAN IS APPROVED FOR SOIL EROSION AND SEDIMENT CONTROL BY THE HOWARD SOIL CONSERVATION DISTRICT.

HOWARD SCD — DATE 7/12/16

APPROVED : DEPARTMENT OF PLANNING AND ZONING

CHIEF, DEVELOPMENT ENGINEERING DIVISION — DATE 7.19.16

CHIEF, DIVISION OF LAND DEVELOPMENT — DATE 8-16-16

DIRECTOR — DATE 8-16-16

DATE	NO.	REVISION	BY

DEVELOPER: HOWARD COUNTY, DEPARTMENT OF PUBLIC WORKS, BUREAU OF FACILITIES, 9250 BENDIX ROAD, COLUMBIA, MARYLAND 21045, ATTN: MARK STROMDAHL, PHONE: 410-313-5757

OWNER: HOWARD COUNTY, DEPARTMENT OF PUBLIC WORKS, BUREAU OF FACILITIES, 9250 BENDIX ROAD, COLUMBIA, MARYLAND 21045, ATTN: MARK STROMDAHL, PHONE: 410-313-5757

PROJECT: GREEN BUILDING

HCLS ELKRIDGE BRANCH AND 50+ CENTER

AREA: TAX MAP 38, PARCEL 'A' PLAT 23861 ZONED B-1 & R-12, GRID NO. 7 1st ELECTION DISTRICT, 6540 WASHINGTON BOULEVARD, ELKRIDGE, MARYLAND 21075-0000, HOWARD COUNTY, MARYLAND

TITLE:

SEDIMENT CONTROL DETAILS

Pennoni Associates Inc.
Engineers • Surveyors • Planners
Landscape Architects

8818 Centre Park Drive, Suite 200 Columbia, MD 21045
T 410.997.8900 F 410.997.9282

SEAL: STATE OF MARYLAND — SHARON K. CRUZ — No. 36896 — REGISTERED PROFESSIONAL ENGINEER

BY: 6-29-16

"PROFESSIONAL CERTIFICATION. I HEREBY CERTIFY THAT THESE DOCUMENTS WERE PREPARED OR APPROVED BY ME, AND THAT I AM A DULY LICENSED PROFESSIONAL ENGINEER UNDER THE LAWS OF THE STATE OF MARYLAND, LICENSE NO. 36896, EXPIRATION DATE: 2-15-2017"

DESIGNED BY : PJS/JSN	
DRAWN BY: PJS/JSN	
PROJECT NO : GRIM1402	
DATE : JUNE 20,2016	
SCALE : AS SHOWN	
DRAWING NO. 9 OF 50	

SDP-16-038

DETAIL F-1 REMOVABLE PUMPING STATION

STANDARD SYMBOL: ⊠RPS

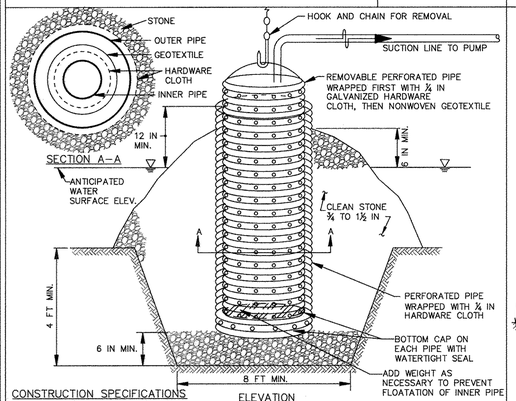

CONSTRUCTION SPECIFICATIONS

1. USE CORRUGATED METAL OR PLASTIC PIPE WITH 1 INCH DIAMETER PERFORATIONS 6 INCHES ON CENTER.
2. USE A MINIMUM 12 INCH DIAMETER INNER PIPE WITH AN OUTER PIPE A MINIMUM 6 INCHES LARGER IN DIAMETER. BOTTOM OF EACH PIPE MUST BE CAPPED WITH WATERTIGHT SEAL.
3. WRAP EACH PIPE WITH ½ INCH GALVANIZED HARDWARE CLOTH. ON INNER PIPE WRAP NONWOVEN GEOTEXTILE, AS SPECIFIED IN SECTION H-1 MATERIALS, OVER THE HARDWARE CLOTH.
4. EXCAVATE 8 FEET X 8 FEET X 4 FEET DEEP PIT FOR PIPE PLACEMENT. PLACE CLEAN ¾ TO 1½ INCH STONE OR EQUIVALENT RECYCLED CONCRETE, 6 INCHES IN DEPTH PRIOR TO PIPE PLACEMENT.
5. SET TOP OF INNER AND OUTER PIPES MINIMUM 12 INCHES ABOVE ANTICIPATED WATER SURFACE ELEVATION (OR RISER CREST ELEVATION WHEN DEWATERING A BASIN).
6. BACKFILL PIT AROUND THE OUTER PIPE WITH ¾ TO 1½ INCH CLEAN STONE OR EQUIVALENT RECYCLED CONCRETE AND EXTEND STONE A MINIMUM OF 6 INCHES ABOVE ANTICIPATED WATER SURFACE ELEVATION.
7. DISCHARGE TO A STABLE AREA AT A NONEROSIVE RATE.
8. A REMOVABLE PUMPING STATION REQUIRES FREQUENT MAINTENANCE. IF SYSTEM CLOGS, PULL OUT INNER PIPE AND REPLACE GEOTEXTILE. KEEP POINT OF DISCHARGE FREE OF EROSION.

MARYLAND STANDARDS AND SPECIFICATIONS FOR SOIL EROSION AND SEDIMENT CONTROL

U.S. DEPARTMENT OF AGRICULTURE NATURAL RESOURCES CONSERVATION SERVICE	2011	MARYLAND DEPARTMENT OF ENVIRONMENT WATER MANAGEMENT ADMINISTRATION

DETAIL D-3-1 RIPRAP INFLOW PROTECTION

STANDARD SYMBOL: ⊠RRP⊠

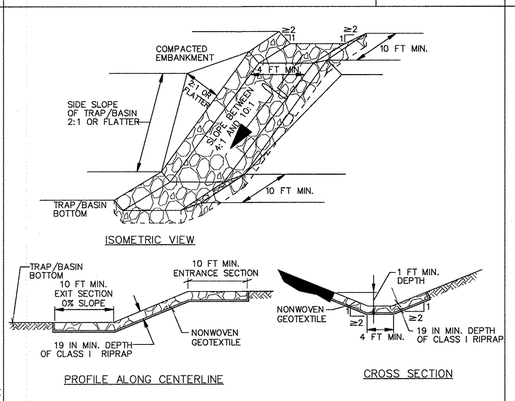

CONSTRUCTION SPECIFICATIONS

1. PROVIDE NONWOVEN GEOTEXTILE, AS SPECIFIED IN SECTION H-1 MATERIALS, UNDER THE BOTTOM AND ALONG SIDES OF ALL RIPRAP.
2. CONSTRUCT INFLOW CHANNEL WITH CLASS I RIPRAP OR EQUIVALENT RECYCLED CONCRETE LINING TO A MINIMUM DEPTH OF 19 INCHES ($2 \times D_{50}$) AND A 1 FOOT DEEP FLOW CHANNEL. INFLOW RIPRAP PROTECTION CHANNEL MUST HAVE A TRAPEZOIDAL CROSS SECTION WITH 2:1 OR FLATTER SIDE SLOPES AND A 4 FOOT MINIMUM BOTTOM WIDTH.
3. INSTALL ENTRANCE AND EXIT SECTIONS AS SHOWN ON THE PROFILE.
4. BLEND RIPRAP INTO EXISTING GROUND.
5. MAINTAIN LINE, GRADE, AND CROSS SECTION. REMOVE ACCUMULATED SEDIMENT AND DEBRIS. KEEP POINTS OF INFLOW AND OUTFLOW FREE OF EROSION.

MARYLAND STANDARDS AND SPECIFICATIONS FOR SOIL EROSION AND SEDIMENT CONTROL

U.S. DEPARTMENT OF AGRICULTURE NATURAL RESOURCES CONSERVATION SERVICE	2011	MARYLAND DEPARTMENT OF ENVIRONMENT WATER MANAGEMENT ADMINISTRATION

DETAIL G-2-4 BAFFLE BOARDS

STANDARD SYMBOL: BB

BAFFLES ARE REQUIRED TO PROVIDE A FLOW LENGTH BETWEEN INFLOW POINT AND OUTLET EQUAL TO TWICE THE EFFECTIVE TRAP/BASIN WIDTH.

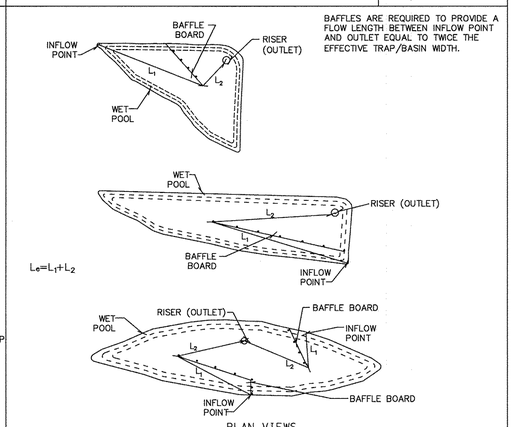

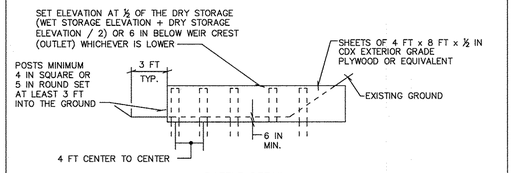

MARYLAND STANDARDS AND SPECIFICATIONS FOR SOIL EROSION AND SEDIMENT CONTROL

U.S. DEPARTMENT OF AGRICULTURE NATURAL RESOURCES CONSERVATION SERVICE	2011	MARYLAND DEPARTMENT OF ENVIRONMENT WATER MANAGEMENT ADMINISTRATION

DETAIL G-1-1 PIPE OUTLET SEDIMENT TRAP ST-I

STANDARD SYMBOL: ST-I

MAXIMUM DRAINAGE AREA = 5 ACRES

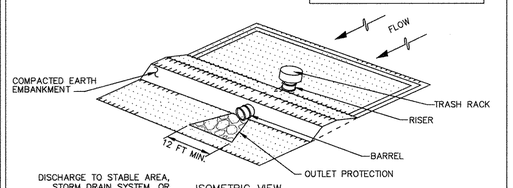

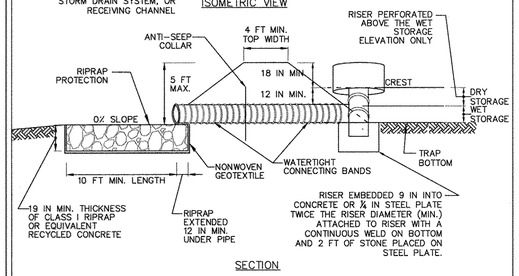

¼ INCH GALVANIZED HARDWARE CLOTH WITH NONWOVEN GEOTEXTILE SECURELY FASTENED TO PERFORATED RISER

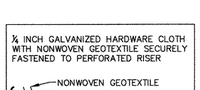

NOTE:
REFER TO DETAIL G-2-1 – TYPICAL ANTI-SEEP COLLARS
REFER TO DETAIL G-2-2 – RISER BASE
REFER TO DETAIL G-2-3 – CONCENTRIC TRASH RACK AND ANTI-VORTEX DEVICE

1 OF 3

MARYLAND STANDARDS AND SPECIFICATIONS FOR SOIL EROSION AND SEDIMENT CONTROL

U.S. DEPARTMENT OF AGRICULTURE NATURAL RESOURCES CONSERVATION SERVICE	2011	MARYLAND DEPARTMENT OF ENVIRONMENT WATER MANAGEMENT ADMINISTRATION

DETAIL G-1-1 PIPE OUTLET SEDIMENT TRAP ST-I

STANDARD SYMBOL: ST-I

CONSTRUCTION SPECIFICATIONS

1. CONSTRUCT TRAP IN SUCH A MANNER THAT EROSION AND WATER POLLUTION ARE AVOIDED.
2. CLEAR, GRUB, AND STRIP ANY VEGETATION AND ROOT MAT FROM THE AREA UNDER THE EMBANKMENT AND TRAP BOTTOM.
3. PERFORATE THE RISER WITH 1 INCH DIAMETER HOLES SPACED 6 INCHES ON CENTER WITH THE LOWEST PERFORATIONS AT THE WET STORAGE ELEVATION OR PROVIDE A HORIZONTAL OR VERTICAL DRAW-DOWN DEVICE PERFORATED ACCORDING TO APPROVED PLAN. DO NOT PERFORATE THE RISER WITHIN 6 INCHES OF THE TOP OF THE HORIZONTAL BARREL.
4. SET RISER/BARREL ASSEMBLY PRIOR TO EMBANKMENT CONSTRUCTION. MAKE ALL PIPE CONNECTIONS WATERTIGHT. OFFSET RISER FROM EMBANKMENT TO ACCOMMODATE PLACEMENT OF THE TRASH RACK. ANCHOR THE RISER WITH EITHER A REINFORCED CONCRETE BASE OR STEEL PLATE BASE TO PREVENT FLOTATION. MAKE CONCRETE BASES AT LEAST TWICE THE RISER DIAMETER AND 18 INCHES THICK WITH THE RISER EMBEDDED 9 INCHES.
5. USE FILL MATERIAL FREE OF ROOTS, WOODY VEGETATION, OVERSIZED STONES, ROCKS, ORGANIC MATERIAL, OR OTHER OBJECTIONABLE MATERIAL FOR THE EMBANKMENT.
6. HAND COMPACT IN 4 INCH LAYERS FILL MATERIAL AROUND THE PIPE SPILLWAY. PLACE A MINIMUM OF 2 FEET OF HAND COMPACTED BACKFILL OVER THE PIPE SPILLWAY BEFORE CROSSING IT WITH CONSTRUCTION EQUIPMENT.
7. CONSTRUCT TOP OF EMBANKMENT 1 FOOT MINIMUM ABOVE RISER CREST. COMPACT THE EMBANKMENT BY TRAVERSING WITH EQUIPMENT WHILE IT IS BEING CONSTRUCTED.
8. MAKE ALL CUT AND FILL SLOPES 2:1 OR FLATTER.
9. WRAP THE RISER WITH ½ INCH GALVANIZED HARDWARE CLOTH THEN WRAP WITH NONWOVEN GEOTEXTILE. DO NOT WRAP WITH MORE THAN ONE LAYER OF GEOTEXTILE. EXTEND HARDWARE CLOTH AND GEOTEXTILE AT LEAST 6 INCHES ABOVE THE HIGHEST PERFORATIONS AND AT LEAST 6 INCHES BELOW THE LOWEST PERFORATIONS. OVERLAP, FOLD AND FASTEN WHERE ENDS OF GEOTEXTILE COME TOGETHER TO PREVENT BYPASS. REPLACE GEOTEXTILE AS NECESSARY TO PREVENT CLOGGING.
10. USE STRAPS OR CONNECTING BANDS AT THE TOP AND BOTTOM OF THE GEOTEXTILE TO HOLD THE GEOTEXTILE AND HARDWARE CLOTH IN PLACE.
11. USE NONWOVEN GEOTEXTILE AS SPECIFIED IN SECTION H-1 MATERIALS.
12. STABILIZE THE EMBANKMENT AND INTERIOR SLOPES WITH SEED AND MULCH. STABILIZE POINTS OF CONCENTRATED INFLOW AS SHOWN ON APPROVED PLAN.
13. CONSTRUCT AND MAINTAIN THE OUTLET ACCORDING TO THE APPROVED PLAN AND IN SUCH A MANNER THAT EROSION AT OR BELOW THE OUTLET DOES NOT OCCUR.
14. REMOVE SEDIMENT AND RESTORE TRAP TO ORIGINAL DIMENSIONS WHEN SEDIMENT HAS ACCUMULATED TO CLEANOUT ELEVATION (50% OF WET STORAGE DEPTH). DEPOSIT REMOVED SEDIMENT IN AN APPROVED AREA AND IN SUCH A MANNER THAT IT WILL NOT ERODE. KEEP POINTS OF INFLOW AND OUTFLOW AS WELL AS INTERIOR OF THE TRAP FREE FROM EROSION, AND REMOVE ACCUMULATED DEBRIS. MAINTAIN EMBANKMENTS TO CONTINUOUSLY MEET REQUIREMENTS FOR ADEQUATE VEGETATIVE ESTABLISHMENT IN ACCORDANCE WITH SECTION B-4 VEGETATIVE STABILIZATION. REMOVE ANY TREES, BRUSH, OR OTHER WOODY VEGETATION GROWING ON EMBANKMENT OR NEAR PRINCIPAL SPILLWAY. MAINTAIN LINE, GRADE, AND CROSS SECTION. MAINTAIN WATER TIGHT CONNECTIONS. REPLACE GEOTEXTILE AROUND PERFORATED RISER IF DRY STORAGE VOLUME DOES NOT DRAW DOWN WITHIN 10 HOURS.
15. WHEN DEWATERING TRAP, PASS REMOVED WATER THROUGH AN APPROVED SEDIMENT CONTROL PRACTICE.
16. UPON REMOVAL, GRADE AND STABILIZE THE AREA OCCUPIED BY TRAP.

2 OF 3

MARYLAND STANDARDS AND SPECIFICATIONS FOR SOIL EROSION AND SEDIMENT CONTROL

U.S. DEPARTMENT OF AGRICULTURE NATURAL RESOURCES CONSERVATION SERVICE	2011	MARYLAND DEPARTMENT OF ENVIRONMENT WATER MANAGEMENT ADMINISTRATION

DETAIL E-9-7 GABION INLET PROTECTION

STANDARD SYMBOL: GIP

MAXIMUM DRAINAGE AREA = 1½ ACRE

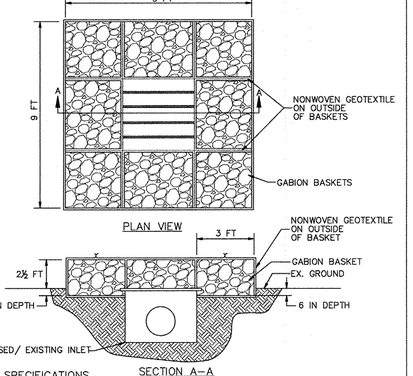

CONSTRUCTION SPECIFICATIONS

1. USE BASKETS MADE OF 11 GAUGE WIRE OR HEAVIER.
2. WRAP 3 FEET x 3 FEET GABION BASKETS (LENGTH VARIABLE) WITH NONWOVEN GEOTEXTILE, AS SPECIFIED IN SECTION H-1 MATERIALS, OVERLAPPING AT THE TOP AND FASTEN THE GEOTEXTILE AT THE TOP OF THE BASKET WITH WIRE FASTENERS (HOG RINGS) AT A MAXIMUM OF 1 FOOT INTERVALS ALONG THE SEAM.
3. AVOID TEARING OR DAMAGING GEOTEXTILE.
4. ENTRENCH GABION BASKETS TO A DEPTH OF 6 INCHES.
5. PLACE AND INTERLOCK GABION BASKETS WITH NO GAPS.
6. FILL GABION BASKETS WITH CLEAN 4 TO 7 INCH STONE OR EQUIVALENT RECYCLED CONCRETE WITHOUT REBAR OR MESH.
7. STORM DRAIN INLET PROTECTION REQUIRES FREQUENT MAINTENANCE. REMOVE ACCUMULATED SEDIMENT AFTER EACH RAIN EVENT TO MAINTAIN FUNCTION AND AVOID PREMATURE CLOGGING. IF INLET PROTECTION DOES NOT COMPLETELY DRAIN WITHIN 24 HOURS AFTER A STORM EVENT, IT IS CLOGGED. WHEN THIS OCCURS, REMOVE ACCUMULATED SEDIMENT AND CLEAN, OR REPLACE GEOTEXTILE AND STONE.

MARYLAND STANDARDS AND SPECIFICATIONS FOR SOIL EROSION AND SEDIMENT CONTROL

U.S. DEPARTMENT OF AGRICULTURE NATURAL RESOURCES CONSERVATION SERVICE	2011	MARYLAND DEPARTMENT OF ENVIRONMENT WATER MANAGEMENT ADMINISTRATION

SEQUENCE OF CONSTRUCTION

PHASE 1

1. COORDINATE ALL UTILITY DISCONNECTION WITH THE APPROPRIATE UTILITY COMPANY AND REMOVE THE UTILITIES ON THE SITE IF NOT TO BE REUSED. OBTAIN THE NECESSARY LETTERS FROM THE UTILITIES NECESSARY TO OBTAIN THE DEMOLITION PERMIT. RETURN ALL METERS TO THE APPROPRIATE UTILITY COMPANY AS DIRECTED BY THOSE COMPANIES. (2 WEEKS)
3. OBTAIN GRADING PERMIT. (1 DAY)
4. STAKEOUT LIMITS OF DISTURBANCE. (1 DAY)
5. CONDUCT A PRE-CONSTRUCTION MEETING WITH COUNTY INSPECTOR. (1 DAY)
6. BEGIN DEMOLITION ACTIVITIES FOR RENOVATION OF EXISTING BUILDING. NO DISTURBANCE TO THE EXTERIOR SITE AREAS OUTSIDE OF BUILDING FOOTPRINT WILL BE PERMITTED UNTIL ALL SEDIMENT CONTROLS ARE IN PLACE. BEGIN TREE PRESERVATION ACTIVITIES AS OUTLINED IN SEPARATE TREE PRESERVATION SEQUENCE OF CONSTRUCTION IN THIS SET. (10 DAYS)
7. INSTALL STABILIZED CONSTRUCTION ENTRANCE. CLEAR AND GRUB AS NECESSARY TO INSTALL PERIMETER SUPER SILT FENCE AND TREE PROTECTION FENCING. (3 DAYS)
8. UPON APPROVAL OF PERIMETER CONTROL INSTALLATION BY COUNTY INSPECTOR, INSTALL BYPASS STORM DRAIN FROM STRUCTURE I304 TO STRUCTURE E300. INSTALL RIP RAP OUTLET PROTECTION AT STRUCTURE E300 AND SOD AROUND THE THROAT OF THE INLET FOR I304. CONNECT EXISTING STORM DRAIN TEMPORARILY TO STRUCTURE M301 AND ALLOW EXISTING DRAINAGE TO CONTINUE TO EXISTING STORMWATER FACILITY. MAINTAIN A MINIMUM OF 24" PIPE COVER. ALL STORM DRAIN INSTALLATION FOR THIS PHASE WILL REQUIRE SAME DAY STABILIZATION; CONTRACTOR SHALL TRENCH FOR NO MORE PIPE THAN CAN BE INSTALLED IN THE SAME DAY. UPON COMPLETION OF STORM DRAIN INSTALL CLEAN WATER DIVERSION TO STRUCTURE I304. ALL GRADING IN THE VICINITY OF THE CLEAN WATER DIVERSIONS SHALL BE DELAYED UNTIL DIVERSIONS ARE NO LONGER NEEDED. (5 DAYS)
9. INSTALL BYPASS STORM DRAIN FROM STRUCTURE I203 TO STRUCTURE I200 IN US ROUTE 1. MAINTAIN A MINIMUM OF 24" PIPE COVER. INSTALL SOD AROUND THE THROAT OF THE INLET FOR I203 AND I210. ALL STORM DRAIN INSTALLATION FOR THIS PHASE WILL REQUIRE SAME DAY STABILIZATION; CONTRACTOR SHALL TRENCH FOR NO MORE PIPE THAN CAN BE INSTALLED IN THE SAME DAY. (5 DAYS)
10. CLEAR AND GRUB AS NECESSARY TO INSTALL SEDIMENT TRAP. INSTALL STORM DRAIN FROM STRUCTURE I101 TO OUTFALL INTO EXISTING STORMWATER MANAGEMENT FACILITY, STRUCTURE E100. INSTALL RIP RAP OUTLET PROTECTION AT STRUCTURE E100. INSTALL TEMPORARY PIPE FROM STRUCTURE I101 TO SEDIMENT TRAP. INSTALL STORM DRAIN FROM STRUCTURE I105 TO STRUCTURE I104, AND TEMPORARY PIPE FROM STRUCTURE I104 TO SEDIMENT TRAP. ALL STORM DRAIN INSTALLATION FOR THIS PHASE WILL REQUIRE SAME DAY STABILIZATION. CONTRACTOR SHALL TRENCH FOR NO MORE PIPE THAN CAN BE INSTALLED IN THE SAME DAY.
11. UPON COMPLETION OF THE SEDIMENT TRAP INSTALL EARTHDIKES DRAINING TO SEDIMENT TRAP. PLUG TEMPORARY PIPE FROM EXISTING STORM DRAIN AT STRUCTURE M301, AND DIVERT WATER FROM EXISTING STORM DRAIN AND INLETS TO TRAP. (5 DAYS)

PHASE 2

12. BEGIN REMOVAL OF PAVED SURFACES, CLEARING, AND SITE GRADING. CONSTRUCT RETAINING WALL AROUND EXISTING STORMWATER FACILITY AS SITE GRADING OCCURS. DO NOT CONSTRUCT, EXCAVATE FOR, OR CONSTRUCT SUBGRADE FOR PERVIOUS PAVEMENT AT THIS TIME. (28 DAYS)
13. UPON ESTABLISHMENT OF SUBGRADE, INSTALL WATER MAIN, SANITARY MANHOLE, AND WATER & SEWER HOUSE CONNECTIONS. ANY CONTROLS INTERCEPTED BY UTILITY INSTALLATION ARE TO BE REPAIRED THE SAME DAY.(5 DAYS)
14. BEGIN BUILDING ADDITION AND CONSTRUCTION AND RENOVATION TO EXISTING BUILDING. (12 MONTHS)
15. COMPLETE INSTALLATION OF STORM DRAIN SYSTEM. DELAY CONSTRUCTION OF STORM DRAIN FROM STRUCTURE I101 TO STRUCTURE I104 UNTIL TRAP IS REMOVED. (10 DAYS)
16. INSTALL CURB AND GUTTER AND CONCRETE HEADER CURB. BEGIN CURB AND PARKING LOT CONSTRUCTION AT THE WEST END OF THE SITE NEAR HUNT CLUB ROAD AND WORK TOWARDS ROWANBERRY DRIVE. AS WORK MOVES INTO THE ENTRANCE ROAD, REMOVE PORTION OF EARTH DIKE IN ENTRANCE ROAD AS NECESSARY TO GRADE ENTRANCE ROAD. CONSTRUCT THE STONE SUBGRADE OF THE ASPHALT AND NON PERMEABLE CONCRETE PAVEMENT ON THE SITE. DO NOT CONSTRUCT, EXCAVATE FOR OR CONSTRUCT SUBGRADE FOR PERVIOUS PAVEMENT AT THIS TIME. (15 DAYS)
17. INSTALL ASPHALT AND IMPERVIOUS PAVEMENT. DO NOT CONSTRUCT PERVIOUS PAVEMENT AT THIS TIME. (5 DAYS)
18. PERFORM FINE GRADING, CONSTRUCT SIDEWALKS, BOARDWALK, ASPHALT TRAILS AND ANY OTHER CONSTRUCTION ACTIVITY. (28 DAYS)
19. STABILIZE ALL DISTURBED AREAS. (1 DAY)
20. WITH APPROVAL OF THE INSPECTOR, REMOVE SEDIMENT TRAP, INCLUDING ALL SPOILS, AND STABILIZE, MAKING SURE THE DRAINAGE AREA IS STABILIZED PRIOR TO REMOVAL. COMPLETE STORM DRAIN INSTALLATION FROM STRUCTURE I101 TO STRUCTURE I104. REMOVE TEMPORARY PIPES DRAINING TO AND FROM SEDIMENT TRAP. PERMANENTLY PLUG TEMPORARY PIPE IN STRUCTURE I101. (5 DAYS)
21. REMOVE STABILIZED CONSTRUCTION ENTRANCE AND CONSTRUCT ENTRANCE ON ROWANBERRY DRIVE. (2 WEEKS)
22. CONSTRUCT LANDSCAPE RETAINING WALLS ADJACENT TO THE NEW LIBRARY. (5 DAYS)
23. CONSTRUCT MICRO BIORETENTION FACILITIES AND PERVIOUS PAVEMENTS AND ALL ASSOCIATED UNDERDRAIN/OVERDRAINS. (3 WEEKS)
24. FINISH PAVING AND LANDSCAPING ON THE SITE. (2 WEEKS)
25. INSTALL INLET PROTECTION ALONG US ROUTE 1 AND ROWANBERRY DRIVE FOR COSNTRUCTION OF SIDEWALK ALONG ROUTE 1. (1 DAY)
26. REMOVE EXISTING SIDEWALK AND INSTALL NEW SIDEWALK. STABILIZE WORK AREA AS NEW SIDEWALK IS INSTALLED. (1 WEEK).
27. UPON PERMISSION OF COUNTY SEDIMENT CONTROL INSPECTOR, REMOVE ALL REMAINING SEDIMENT CONTROL DEVICES AND STABILIZE DISTURBED AREAS IN ACCORDANCE WITH PERMANENT SEEDING NOTES. (2 DAYS)

PIPE OUTLET SEDIMENT TRAP ST-I, TRAP NO. 1		
DRAINAGE AREA – INITIAL	3.73	ACRES
DRAINAGE AREA – INTERIM	3.73	ACRES
DRAINAGE AREA – FINAL	3.73	ACRES
TOTAL STORAGE REQUIRED	14,400	CF
TOTAL STORAGE PROVIDED	18,318	CF
WET STORAGE REQUIRED	7,200	CF
WET STORAGE PROVIDED	8,133	CF
DRY STORAGE REQUIRED	7,200	CF
DRY STORAGE PROVIDED	10,185	CF
EXISTING GROUND ELEVATION AT OUTLET (WET STORAGE ELEVATION)	156.00	FT
TRAP BOTTOM ELEVATION	152.00	FT
TRAP BOTTOM DIMENSIONS	60x60	FT x FT
RISER CREST (DRY STORAGE) ELEVATION	156.00	FT
OUTLET (WET STORAGE) ELEVATION	15400	FT
CLEANOUT ELEVATION	153.00	FT
TOP OF EMBANKMENT ELEVATION	157.50	FT
SIDE SLOPE	2:1	H: V RATIO
EMBANKMENT TOP WIDTH	4	FT
PRINCIPAL SPILLWAY MATERIAL	CMP	
RISER DIAMETER	36	IN
BARREL DIAMETER	27	IN
TRASH RACK DIAMETER	54	IN
TRASH RACK HEIGHT	25	IN
ANTI-SEEP COLLAR DIMENSIONS	6.25	FT
OUTLET PROTECTION – LENGTH	12	FT
OUTLET PROTECTION – WIDTH	14	FT
OUTLET PROTECTION – DEPTH	19	IN

SEDIMENT BAFFLES–TRAP 1

D = DISTANCE BETWEEN INFLOW AND OUTFLOW

A = AREA OF NORMAL POOL

We = $\frac{A}{D}$ = EFFECTIVE WIDTH

Le = TOTAL DISTANCE FROM THE INFLOW POINT AROUND THE BAFFLES TO THE RISER

D = 41 LF

A = 3,578 SF

We = 87 LF

Le = 182 LF

Le > 2(We), THEREFORE BAFFLE DESIGN REQUIREMENTS ARE MET

ENGINEER'S CERTIFICATE

"I CERTIFY THAT THIS PLAN FOR SEDIMENT AND EROSION CONTROL REPRESENTS A PRACTICAL AND WORKABLE PLAN BASED ON MY PERSONAL KNOWLEDGE OF THE SITE CONDITIONS AND THAT IT WAS PREPARED IN ACCORDANCE WITH THE REQUIREMENTS OF THE HOWARD SOIL CONSERVATION DISTRICT."

SIGNATURE OF ENGINEER (PRINT NAME BELOW SIGNATURE) Sharon L. Cruz — DATE 6-29-16

DEVELOPER'S CERTIFICATE

"I/WE CERTIFY THAT ALL DEVELOPMENT AND CONSTRUCTION WILL BE DONE ACCORDING TO THIS PLAN FOR SEDIMENT AND EROSION CONTROL, AND THAT ALL RESPONSIBLE PERSONNEL INVOLVED IN THE CONSTRUCTION PROJECT WILL HAVE A CERTIFICATE OF ATTENDANCE AT A DEPARTMENT OF THE ENVIRONMENT APPROVED TRAINING PROGRAM FOR THE CONTROL OF SEDIMENT AND EROSION BEFORE BEGINNING THE PROJECT. I ALSO AUTHORIZE PERIODIC ON-SITE INSPECTIONS BY THE HOWARD SOIL CONSERVATION DISTRICT."

SIGNATURE OF DEVELOPER (PRINT NAME BELOW SIGNATURE) Richard Gasbarotti — DATE 26 JUNE 2016

THIS DEVELOPMENT PLAN IS APPROVED FOR SOIL EROSION AND SEDIMENT CONTROL BY THE HOWARD SOIL CONSERVATION DISTRICT.

HOWARD SCD — DATE 7/12/16

APPROVED : DEPARTMENT OF PLANNING AND ZONING

CHIEF, DEVELOPMENT ENGINEERING DIVISION — DATE 7.19.16

CHIEF, DIVISION OF LAND DEVELOPMENT — DATE 8-16-16

DIRECTOR — DATE 8-16-16

DATE	NO.	REVISION	BY

DEVELOPER
HOWARD COUNTY
DEPARTMENT OF PUBLIC WORKS
BUREAU OF FACILITIES
9250 BENDIX ROAD
COLUMBIA, MARYLAND 21045
ATTN: MARK STROMDAHL
PHONE: 410-313-5757

OWNER
HOWARD COUNTY
DEPARTMENT OF PUBLIC WORKS
BUREAU OF FACILITIES
9250 BENDIX ROAD
COLUMBIA, MARYLAND 21045
ATTN: MARK STROMDAHL
PHONE: 410-313-5757

PROJECT
GREEN BUILDING
HCLS ELKRIDGE BRANCH AND 50+ CENTER

AREA
TAX MAP 38, PARCEL 'A' PLAT 23864 & 25510 ZONED B-1 & R-12
GRID NO. 7 1st ELECTION DISTRICT
6540 WASHINGTON BOULEVARD
ELKRIDGE, MARYLAND 21075-0000
HOWARD COUNTY, MARYLAND

TITLE
SEDIMENT CONTROL DETAILS

Pennoni Associates Inc.
Engineers • Surveyors • Planners
Landscape Architects
8818 Centre Park Drive, Suite 200 Columbia, MD 21045
T 410.997.8900 F 410.997.9282

SEAL

STATE OF MARYLAND — SHARON L. CRUZ — NO. 30896 — REGISTERED PROFESSIONAL ENGINEER

BY: 6-29-16

"PROFESSIONAL CERTIFICATION. I HEREBY CERTIFY THAT THESE DOCUMENTS WERE PREPARED OR APPROVED BY ME, AND THAT I AM A DULY LICENSED PROFESSIONAL ENGINEER UNDER THE LAWS OF THE STATE OF MARYLAND, LICENSE NO. 30896, EXPIRATION DATE: 2-10-2017"

DESIGNED BY :	PJS/JSN
DRAWN BY:	PJS/JSN
PROJECT NO :	GRIM1402
DATE :	JUNE 20,2016
SCALE :	AS SHOWN
DRAWING NO.	10 OF 50

SDP-16-038

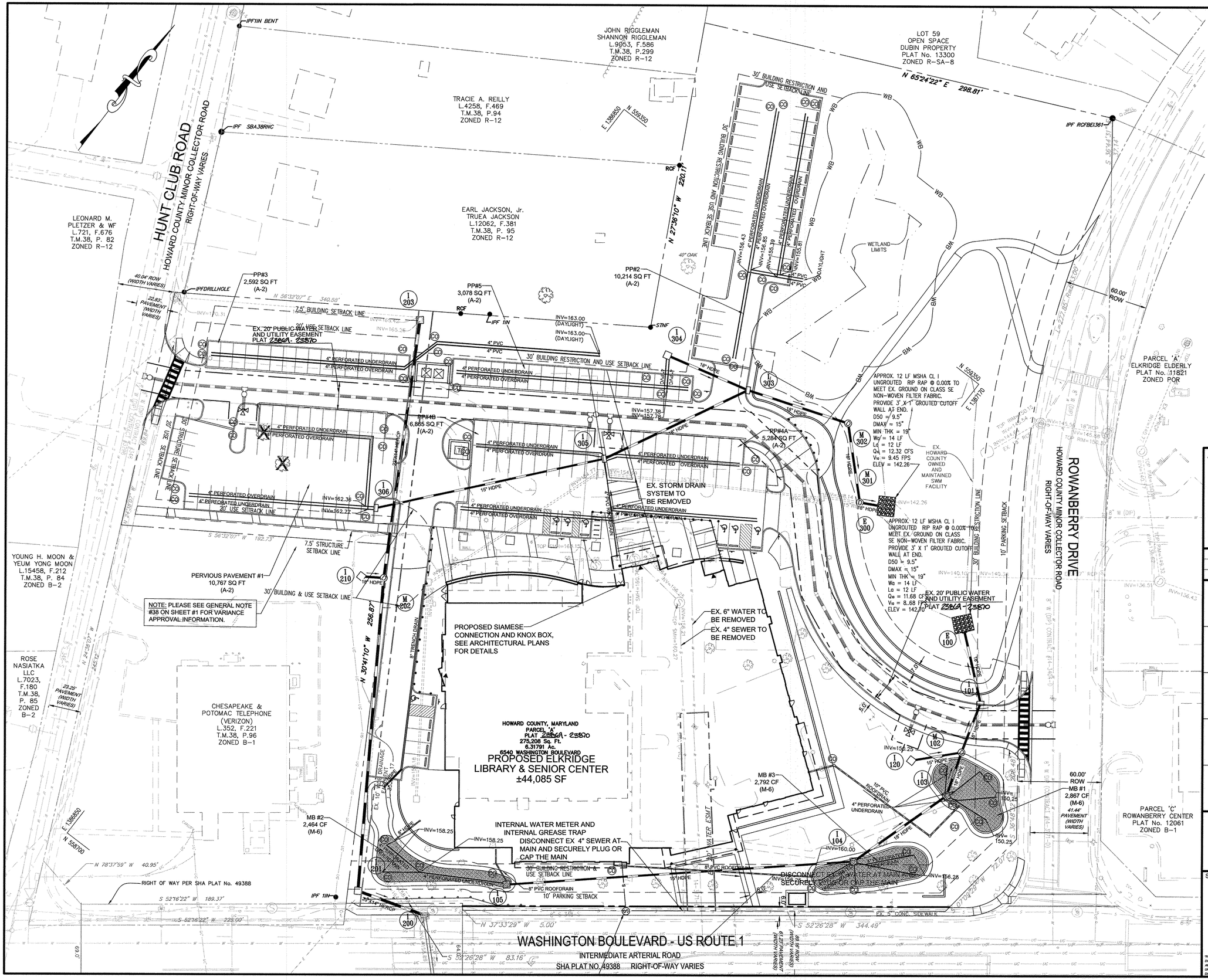

LEGEND

- PROPERTY LINE AND RIGHT-OF-WAY
- EXISTING BUILDING
- EXISTING 1' CONTOUR
- EXISTING 5' CONTOUR
- EXISTING TREE LINE
- EXISTING SOILS
- EXISTING WETLANDS
- EXISTING WETLAND BUFFER
- EXISTING ZONING LINE
- EXISTING WATER
- EXISTING SEWER
- EXISTING COMMUNICATIONS
- EXISTING ELECTRICAL
- EXISTING GAS
- EXISTING STORM DRAIN
- PROPOSED STORM DRAIN
- PROPOSED WATER LINE
- PROPOSED SEWER LINE

NOTES:

1. ALL ROOF DRAINS SHALL HAVE A MINIMUM 1% SLOPE.
2. MAINTAIN 2' OF COVER OVER ROOF DRAINS.

APPROVED : DEPARTMENT OF PLANNING AND ZONING

CHIEF, DEVELOPMENT ENGINEERING DIVISION	7.19.16 DATE
CHIEF, DIVISION OF LAND DEVELOPMENT	8.16.16 DATE
DIRECTOR	8.16.16 DATE

DATE	NO.	REVISION	BY

DEVELOPER
HOWARD COUNTY
DEPARTMENT OF PUBLIC WORKS
BUREAU OF FACILITIES
9250 BENDIX ROAD
COLUMBIA, MARYLAND 21045
ATTN: MARK STROMDAHL
PHONE: 410-313-5757

OWNER
HOWARD COUNTY
DEPARTMENT OF PUBLIC WORKS
BUREAU OF FACILITIES
9250 BENDIX ROAD
COLUMBIA, MARYLAND 21045
ATTN: MARK STROMDAHL
PHONE: 410-313-5757

PROJECT
GREEN BUILDING
HCLS ELKRIDGE BRANCH AND 50+ CENTER

AREA
23569
TAX MAP 38, PARCEL 'A' PLAT 23570 ZONED B-1 & R-12
GRID NO. 7 1st ELECTION DISTRICT
6540 WASHINGTON BOULEVARD
ELKRIDGE, MARYLAND 21075-0000
HOWARD COUNTY, MARYLAND

TITLE
STORM DRAIN PLAN

Pennoni Associates Inc.
Engineers • Surveyors • Planners
Landscape Architects
8818 Centre Park Drive, Suite 200 Columbia, MD 21045
T 410.997.8900 F 410.997.9282

SEAL
STATE OF MARYLAND · SHARON K. CRUZ · 36882 · REGISTERED · PROFESSIONAL · ENGINEER
BY: 6-21-16

"PROFESSIONAL CERTIFICATION. I HEREBY CERTIFY THAT THESE DOCUMENTS WERE PREPARED OR APPROVED BY ME, AND THAT I AM A DULY LICENSED PROFESSIONAL ENGINEER UNDER THE LAWS OF THE STATE OF MARYLAND, LICENSE NO. 36882, EXPIRATION DATE: 3-15-2017"

DESIGNED BY :	PJS/JSN
DRAWN BY:	PJS/JSN
PROJECT NO :	GRIM1402
DATE :	JUNE 20,2016
SCALE :	1" = 30'
DRAWING NO.	11 OF 50

SDP-16-038

COPYRIGHT 2016 PENNONI ASSOCIATES INC. THE DRAWINGS, SPECIFICATIONS AND DESIGNS CONTAINED HEREIN ARE THE PROPERTY OF PENNONI ASSOCIATES INC. AND ARE NOT TO BE USED IN WHOLE OR IN PART FOR ANY PURPOSE WITHOUT THE WRITTEN PERMISSION OF PENNONI ASSOCIATES INC.

LEGEND

- PROPERTY LINE AND RIGHT-OF-WAY
- EXISTING BUILDING
- EXISTING 1' CONTOUR
- EXISTING 5' CONTOUR
- EXISTING TREE LINE
- EXISTING WETLANDS
- EXISTING WETLAND BUFFER (WB)
- EXISTING STORM DRAIN
- PROPOSED STORM DRAIN
- PROPOSED TREE LINE
- PROPOSED STORM DRAIN DRAINAGE AREA

GRAPHIC SCALE 1"=30'
15' 0' 30' 60'

MATCHLINE - SEE SHEET 13

MATCHLINE - SEE SHEET 13

JOHN RIGGLEMAN
SHANNON RIGGLEMAN
L.9053, F.586
T.M.38, P.299
ZONED R-12

TRACIE A. REILLY
L.4258, F.469
T.M.38, P.94
ZONED R-12

EARL JACKSON, Jr.
TRUEA JACKSON
L.12062, F.381
T.M.38, P. 95
ZONED R-12

LOT 59
OPEN SPACE
DUBIN PROPERTY
PLAT No. 13300
ZONED R-SA-8

PARCEL 'A'
ELKRIDGE/ ELDERLY
PLAT No. 11821
ZONED POR

YOUNG H. MOON &
YEUM YONG MOON
L.15458, F.212
T.M.38, P. 84
ZONED B-2

ROSE
NASIATKA
LLC
L.7023,
F.180
T.M.38,
P. 85
ZONED
B-2

CHESAPEAKE &
POTOMAC TELEPHONE
(VERIZON)
L.352, F.221
T.M.38, P.96
ZONED B-1

PARCEL 'C'
ROWANBERRY CENTER
PLAT No. 12061
ZONED B-1

EX. HOWARD COUNTY OWNED AND MAINTAINED SWM FACILITY

HOWARD COUNTY, MARYLAND
PARCEL 'A'
PLAT 25869- 25870
275,208 Sq. Ft.
6.3179 Ac.
6540 WASHINGTON BOULEVARD
PROPOSED ELKRIDGE
LIBRARY & SENIOR CENTER
±44,085 SF
FFE=163.84

HUNT CLUB ROAD
HOWARD COUNTY MINOR COLLECTOR ROAD
RIGHT-OF-WAY VARIES

ROWANBERRY DRIVE
HOWARD COUNTY MINOR COLLECTOR ROAD
RIGHT-OF-WAY VARIES

WASHINGTON BOULEVARD - US ROUTE 1
INTERMEDIATE ARTERIAL ROAD
SHA PLAT NO. 49388 RIGHT-OF-WAY VARIES
VEHICULAR ACCESS RESTRICTION

NOTE: PLEASE SEE GENERAL NOTE #38 ON SHEET #1 FOR VARIANCE APPROVAL INFORMATION.

RIGHT OF WAY PER SHA PLAT No. 49388

DA= 0.26 AC. | C= 0.29 | 1203 | ZONE: R-12 | P= 30%
A SOIL: 0 %
B SOIL: 0 %
C SOIL: 100 %
D SOIL: 0 %

DA= 1.13 AC. | C= 0.29 | 1304 | ZONE: R-12/B-1 | P= 30%
A SOIL: 0 %
B SOIL: 0 %
C SOIL: 100 %
D SOIL: 0 %

DA= 0.50 AC. | C= 0.84 | 1303 | ZONE: B-1 | P= 96%
A SOIL: 0 %
B SOIL: 0 %
C SOIL: 0 %
D SOIL: 100 %

DA= 0.38 AC. | C= 0.75 | 1306 | ZONE: R-12 | P= 85%
A SOIL: 0 %
B SOIL: 0 %
C SOIL: 100 %
D SOIL: 0 %

DA= 0.71 AC. | C= 0.80 | 1306 | ZONE: B-1/R-12 | P= 90%
A SOIL: 0 %
B SOIL: 0 %
C SOIL: 50 %
D SOIL: 50 %

DA= 0.30 AC. | C= 0.24 | 1210 | ZONE: R-12/B-1 | P= 0%
A SOIL: 0 %
B SOIL: 0 %
C SOIL: 100 %
D SOIL: 0 %

DA= 0.08 AC. | C= 0.81 | 1101 | ZONE: B-1 | P= 90%
A SOIL: 0 %
B SOIL: 0 %
C SOIL: 0 %
D SOIL: 100 %

DA= 0.74 AC. | C= 0.73 | 1105 | ZONE: B-1 | P=84.6%
A SOIL: 0 %
B SOIL: 0 %
C SOIL: 0 %
D SOIL: 100 %

DA= 0.43 AC. | C= 0.75 | 1103 | ZONE: B-1 | P=85.3%
A SOIL: 0 %
B SOIL: 0 %
C SOIL: 0 %
D SOIL: 100 %

DA= 0.95 AC. | C= 0.53 | 1201 | ZONE: B-1 | P=46.1%
A SOIL: 0 %
B SOIL: 0 %
C SOIL: 80 %
D SOIL: 20 %

DA= 0.42 AC. | C= 0.75 | 1104 | ZONE: B-1 | P=84.6%
A SOIL: 0 %
B SOIL: 0 %
C SOIL: 0 %
D SOIL: 100 %

APPROVED : DEPARTMENT OF PLANNING AND ZONING

CHIEF, DEVELOPMENT ENGINEERING DIVISION — DATE 7.19.16

CHIEF, DIVISION OF LAND DEVELOPMENT — DATE 8-16-16

DIRECTOR — DATE 8-16-16

DATE	NO.	REVISION	BY

DEVELOPER
HOWARD COUNTY
DEPARTMENT OF PUBLIC WORKS
BUREAU OF FACILITIES
9250 BENDIX ROAD
COLUMBIA, MARYLAND 21045
ATTN: MARK STROMDAHL
PHONE: 410-313-5757

OWNER
HOWARD COUNTY
DEPARTMENT OF PUBLIC WORKS
BUREAU OF FACILITIES
9250 BENDIX ROAD
COLUMBIA, MARYLAND 21045
ATTN: MARK STROMDAHL
PHONE: 410-313-5757

PROJECT
GREEN BUILDING
HCLS ELKRIDGE BRANCH
AND 50+ CENTER

AREA
TAX MAP 38, PARCEL 'A' PLAT 25870 ZONED B-1 & R-12
GRID NO. 7 1st ELECTION DISTRICT
6540 WASHINGTON BOULEVARD
ELKRIDGE, MARYLAND 21075-0000
HOWARD COUNTY, MARYLAND

TITLE
STORM DRAIN
DRAINAGE AREA MAP

Pennoni Associates Inc.
Engineers • Surveyors • Planners
Landscape Architects
8818 Centre Park Drive, Suite 200 Columbia, MD 21045
T 410.997.8900 F 410.997.9282

SEAL
STATE OF MARYLAND — SHARON K. KRUG — No. 21599 — REGISTERED PROFESSIONAL ENGINEER
BY: 6-29-16

"PROFESSIONAL CERTIFICATION. I HEREBY CERTIFY THAT THESE DOCUMENTS WERE PREPARED OR APPROVED BY ME, AND THAT I AM A DULY LICENSED PROFESSIONAL ENGINEER UNDER THE LAWS OF THE STATE OF MARYLAND, LICENSE NO. 36996, EXPIRATION DATE 2-19-2017."

DESIGNED BY :	PJS/JSN
DRAWN BY:	PJS/JSN
PROJECT NO :	GRIM1402
DATE :	JUNE 20,2016
SCALE :	1" = 30'
DRAWING NO.	12 OF 50

SDP-16-038

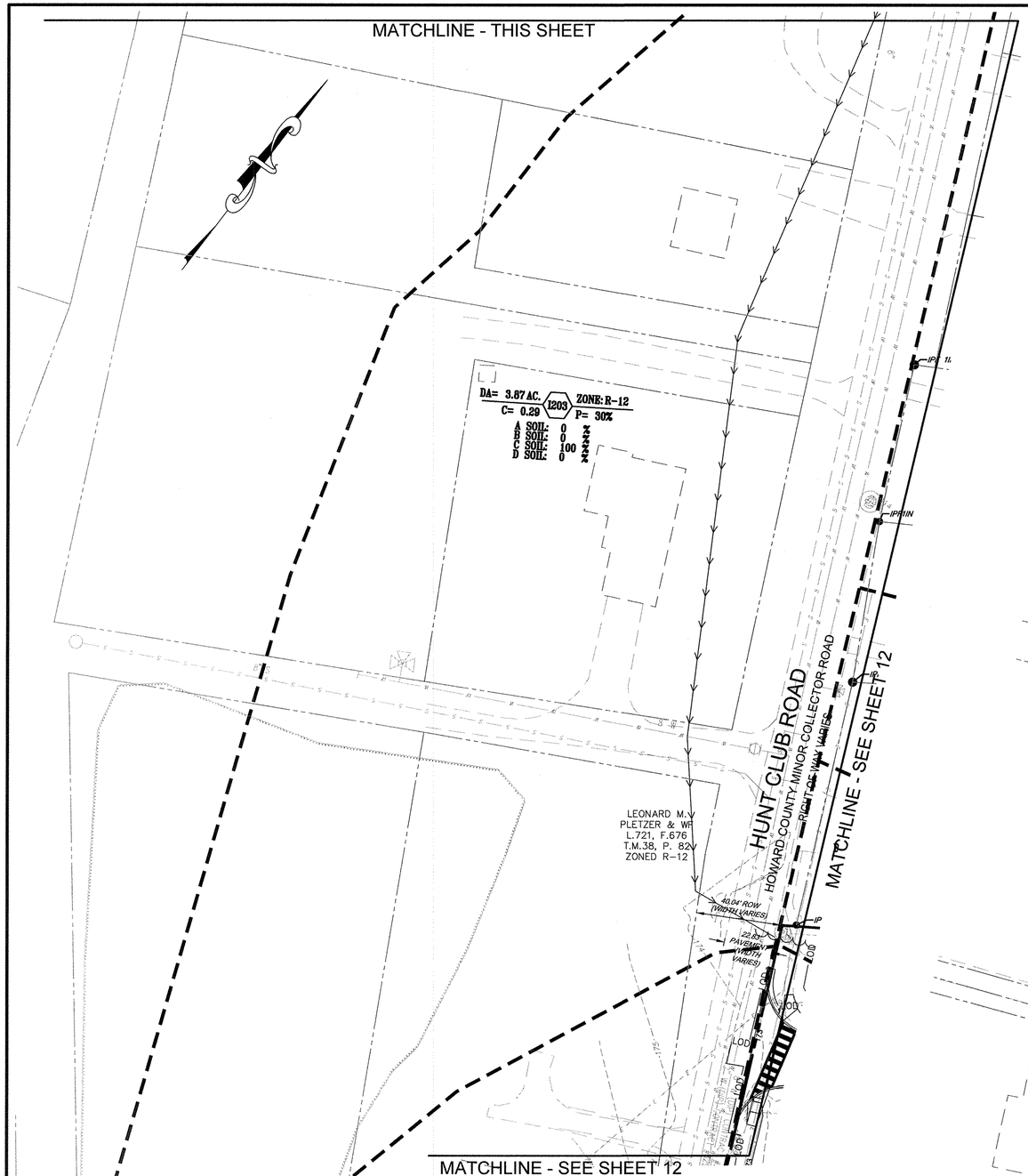

LEGEND

- PROPERTY LINE AND RIGHT-OF-WAY
- EXISTING BUILDING
- EXISTING 1' CONTOUR — 154
- EXISTING 5' CONTOUR — 155
- EXISTING TREE LINE
- EXISTING WETLANDS
- EXISTING WETLAND BUFFER — WB
- EXISTING STORM DRAIN
- PROPOSED STORM DRAIN
- PROPOSED TREE LINE
- PROPOSED STORM DRAIN DRAINAGE AREA

GRAPHIC SCALE 1"=30'
15' 0' 30' 60'

APPROVED : DEPARTMENT OF PLANNING AND ZONING

CHIEF, DEVELOPMENT ENGINEERING DIVISION — DATE 7.19.16

CHIEF, DIVISION OF LAND DEVELOPMENT — DATE 8.16.16

DIRECTOR — DATE 8-16-16

DATE	NO.	REVISION	BY

DEVELOPER
HOWARD COUNTY
DEPARTMENT OF PUBLIC WORKS
BUREAU OF FACILITIES
9250 BENDIX ROAD
COLUMBIA, MARYLAND 21045
ATTN: MARK STROMDAHL
PHONE: 410-313-5757

OWNER
HOWARD COUNTY
DEPARTMENT OF PUBLIC WORKS
BUREAU OF FACILITIES
9250 BENDIX ROAD
COLUMBIA, MARYLAND 21045
ATTN: MARK STROMDAHL
PHONE: 410-313-5757

PROJECT
GREEN BUILDING
HCLS ELKRIDGE BRANCH AND 50+ CENTER

AREA
TAX MAP 38, PARCEL 'A' PLAT 23564 & 23570 ZONED B-1 & R-12
GRID NO. 7 1st ELECTION DISTRICT
6540 WASHINGTON BOULEVARD
ELKRIDGE, MARYLAND 21075-0000
HOWARD COUNTY, MARYLAND

TITLE
STORM DRAIN DRAINAGE AREA MAP

Pennoni Associates Inc.
Engineers • Surveyors • Planners
Landscape Architects
8818 Centre Park Drive, Suite 200 Columbia, MD 21045
T 410.997.8900 F 410.997.9282

SEAL
STATE OF MARYLAND · SHARON K. CRUZ · NO. 30998 · REGISTERED PROFESSIONAL ENGINEER

BY: — 6-29-16

"PROFESSIONAL CERTIFICATION. I HEREBY CERTIFY THAT THESE DOCUMENTS WERE PREPARED OR APPROVED BY ME, AND THAT I AM A DULY LICENSED PROFESSIONAL ENGINEER UNDER THE LAWS OF THE STATE OF MARYLAND, LICENSE NO. 30998, EXPIRATION DATE: 2-15-2017"

DESIGNED BY :	PJS/JSN
DRAWN BY:	PJS/JSN
PROJECT NO :	GRIM1402
DATE :	JUNE 20,2016
SCALE :	1" = 30'
DRAWING NO.	13 OF 50

SDP-16-038

I:\PROJECTS\GRIM1402 ELKRIDGE BRANCH\DESIGN_CAD\SDP\GRIM1402_SDP-16-038_DRAINAGE AREA MAP.DWG

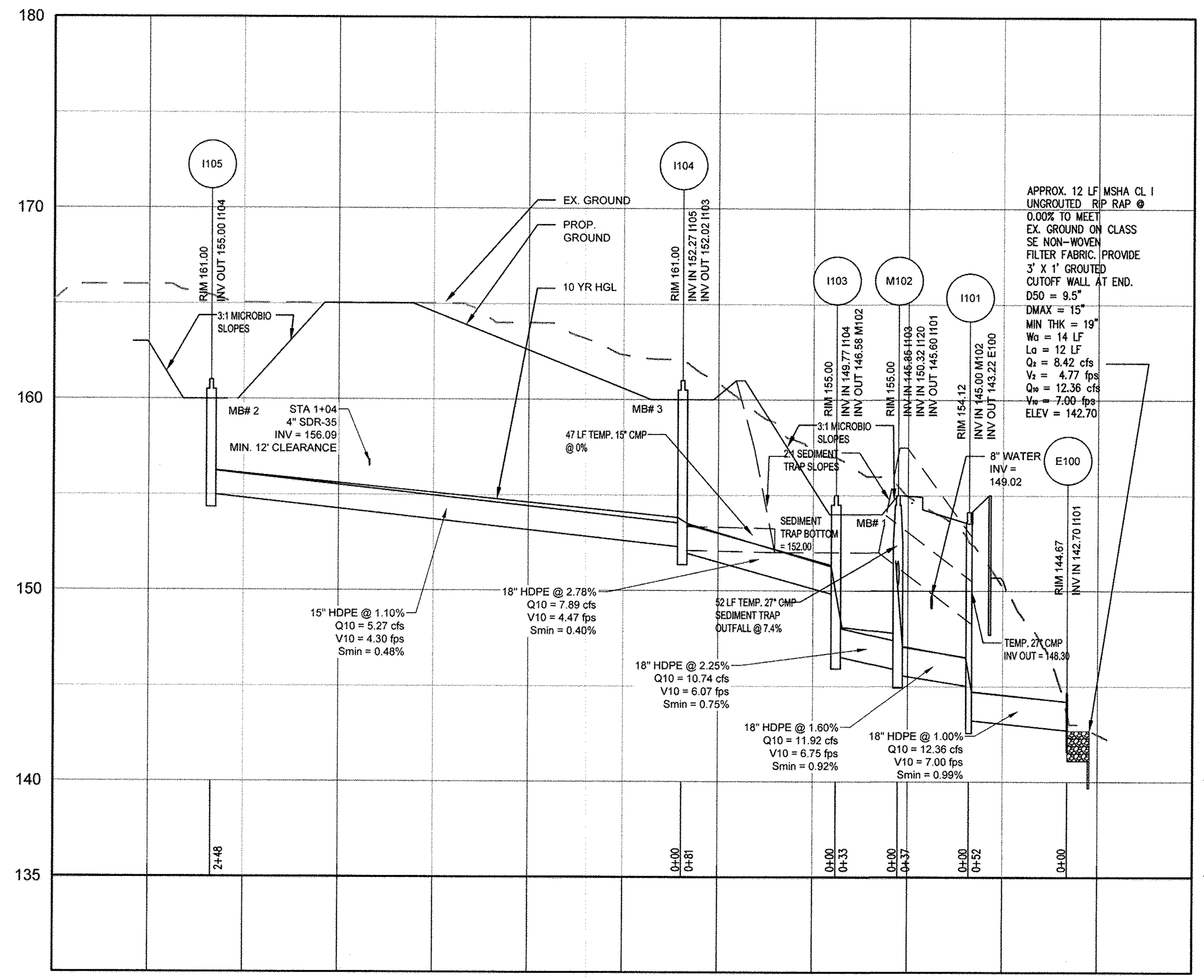

100 SERIES STORM DRAIN 8+00
HORIZONTAL SCALE: 1" = 50'
VERTICAL SCALE: 1" = 5'

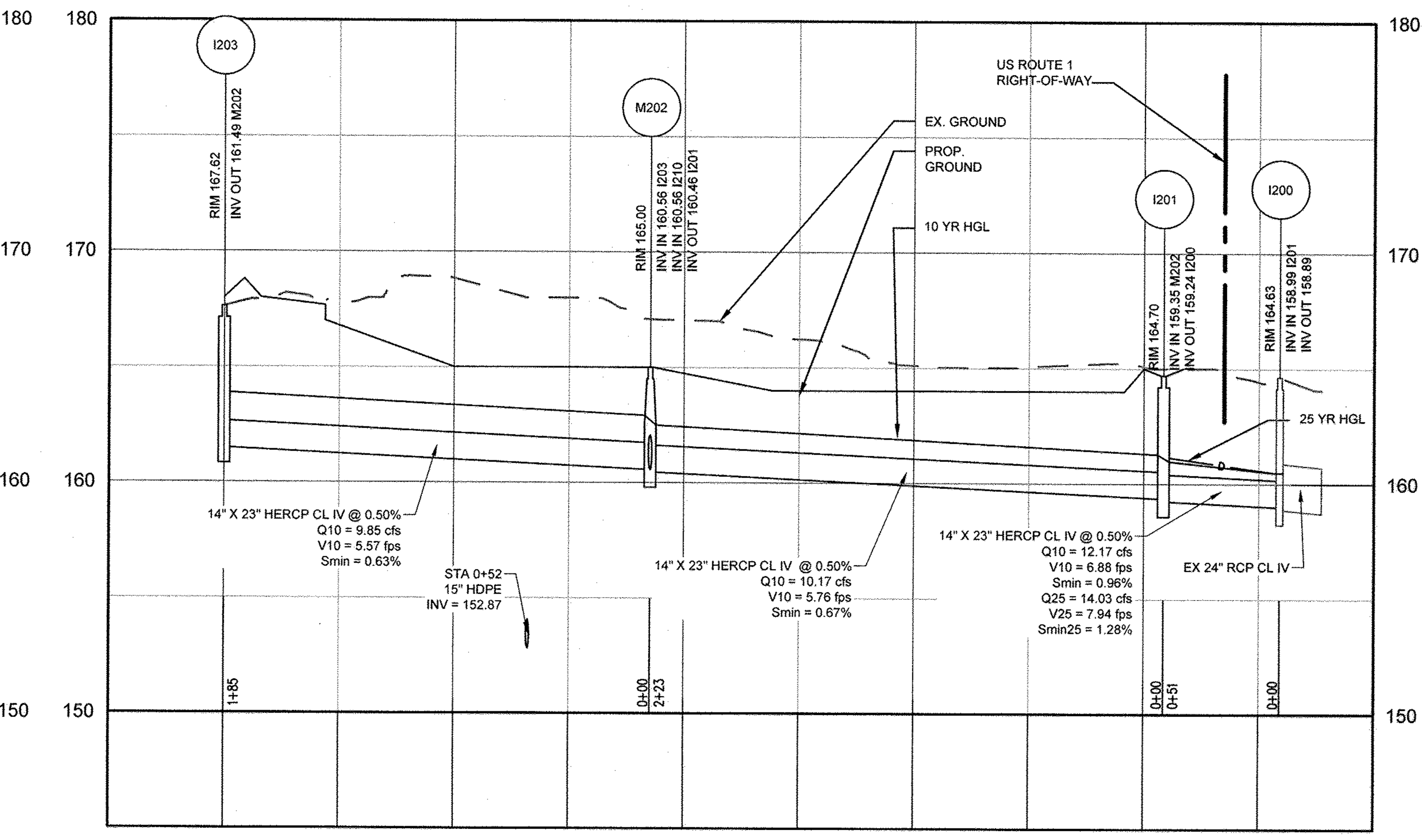

BYPASS STORM DRAIN (200 SERIES) 7+00
HORIZONTAL SCALE: 1" = 50'
VERTICAL SCALE: 1" = 5'

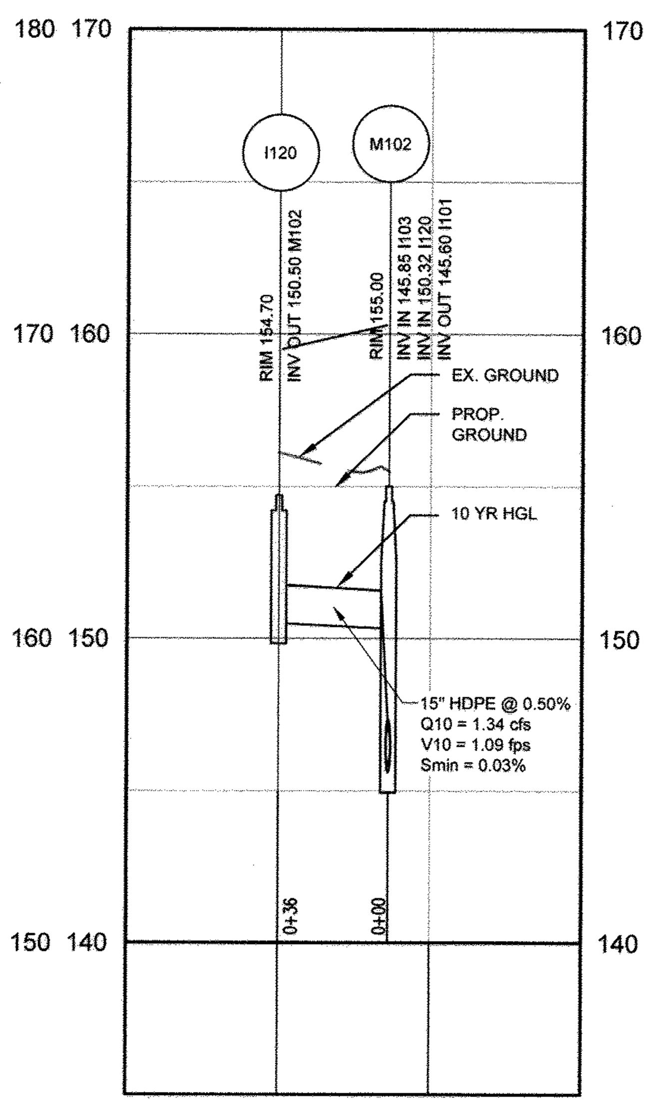

I120 TO M102 3+00
HORIZONTAL SCALE: 1" = 50'
VERTICAL SCALE: 1" = 5'

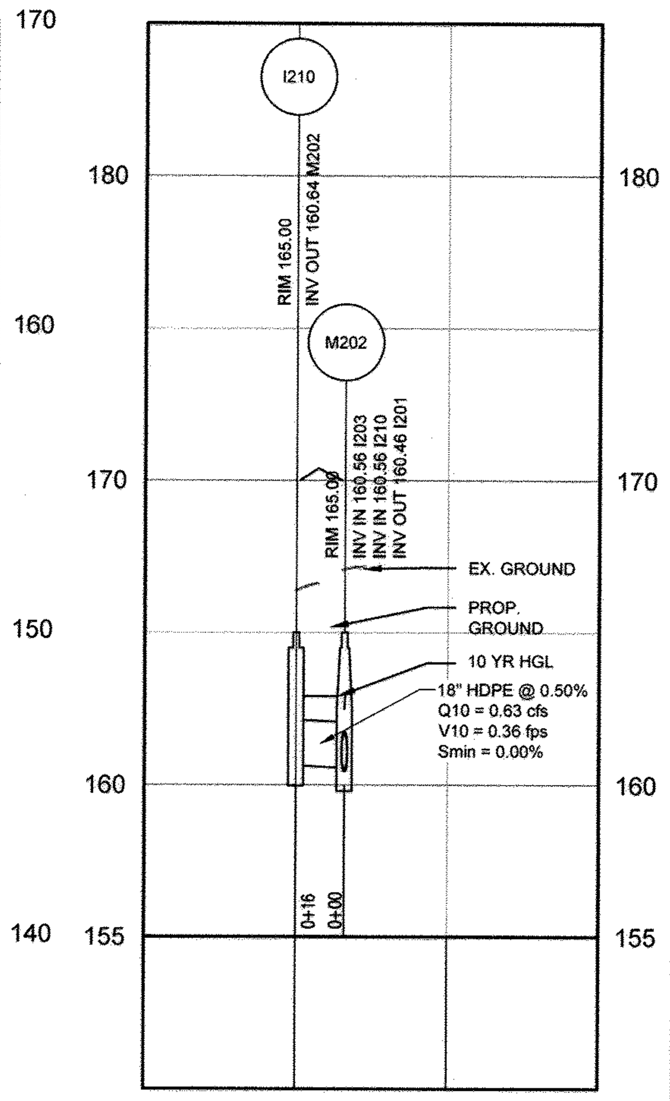

I210 TO M202 3+00
HORIZONTAL SCALE: 1" = 50'
VERTICAL SCALE: 1" = 5'

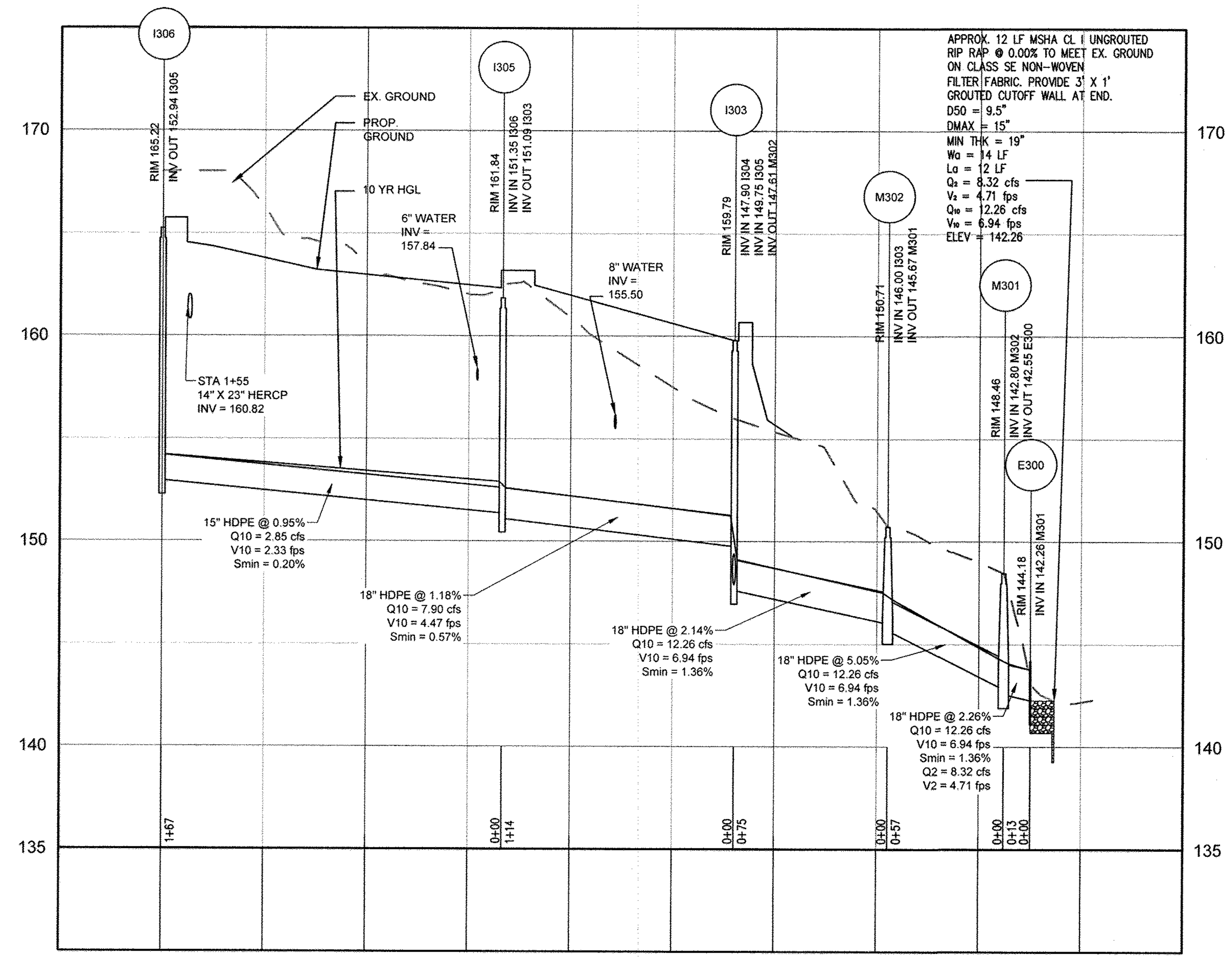

300 SERIES STORM DRAIN 7+00
HORIZONTAL SCALE: 1" = 50'
VERTICAL SCALE: 1" = 5'

PIPE SCHEDULE

SIZE	TYPE	LINEAR FOOTAGE
4"	PERFORATED PVC UNDERDRAIN	1,792
4"	PERFORATED PVC OVERDRAIN	1,461
4"	PVC	413
8"	HDPE	40
8"	PVC ROOF DRAIN*	169
10"	PVC ROOF DRAIN*	128
15"	HDPE	451
18"	HDPE	589
14"X23"	HERCP CL IV	459
8"	TRENCH DRAIN	132

*VERIFY LENGTH AND SIZE OF ROOF DRAIN WITH BUILDING PLUMBING PLANS

NOTES:

1) ALL STRUCTURES ARE HOWARD COUNTY STANDARDS UNLESS NOTED OTHERWISE. CONTRACTOR MAY USE PRECAST STRUCTURE WHERE AVAILABLE TO MEET THE STANDARD STRUCTURE SPECIFIED.

2) STATIONS ARE GIVEN TO CENTER OF STRUCTURE AT FACE OF CURB FOR CURB INLETS AND TO CENTER OF STRUCTURE FOR ALL OTHER STRUCTURES.

3) ELEVATIONS ARE GIVEN TO TOP OF CURB FOR CURB INLETS, TOP OF GRATE FOR GRATE INLETS AND TOP OF LID FOR MANHOLES.

4) PIPE LENGTHS ARE GIVEN TO THE CENTER OF THE STRUCTURE. CONTRACTOR SHALL ADJUST LENGTH TO OBTAIN ACTUAL PIPE LENGTHS.

5) ALL ROOF DRAINS SHALL HAVE MINIMUM 1% SLOPE.

6) ALL ROOF DRAINS SHALL HAVE MINIMUM 2' OF COVER.

7) ALL CLEANOUTS LOCATED IN PAVEMENT AREAS SHALL BE TRAFFIC BEARING.

8) THE PIPE SCHEDULE IS GIVEN FOR REFERENCE. IN THE EVENT OF A DISCREPANCY BETWEEN THE PIPE SCHEDULE AND THE PLAN, THE INFORMATION ON THE PLAN SHALL TAKE PRIORITY.

STORM DRAIN STRUCTURE SCHEDULE

ID	RIM ELEVATION	INV IN (FROM)	INV OUT (TO)	TYPE	LOCATION (NORTHING,EASTING)	DETAIL REFERENCE
E100	144.67	142.70 (18" HDPE @ 1.00%) I101		TYPE C ENDWALL	559204.2320,1387270.0769	D-5.21
E300	144.18	142.26 (18" HDPE @ 2.26%) M301		TYPE C ENDWALL	559237.6752,1387165.7902	D-5.21
I101	154.12	145.00 (18" HDPE @ 1.60%) M102	143.22 (18" HDPE) E100	A-5 INLET	559171.1392,1387309.9164	D-4.01
I103	155.00	149.77 (18" HDPE @ 2.78%) I104	146.58 (18" HDPE) M102	18" NYOPLAST INLINE DRAIN	559104.2826,1387330.8210	
I104	161.00	152.27 (15" HDPE @ 1.10%) I105	152.02 (18" HDPE) I103	18" NYOPLAST INLINE DRAIN	559026.8570,1387307.0129	
I105	161.00		155.00 (15" HDPE) I104	18" NYOPLAST INLINE DRAIN	558862.4940,1387121.0565	
I120	154.70		150.50 (15" HDPE) M102	YARD INLET	559108.8016,1387295.6940	D-4.14
I200	164.63	158.99 (23" @ 0.50%) I201	158.89 (24" RCP CL IV)	EX. 5' COS INLET	558809.4653,1387087.7936	
I201	164.70	159.35 (23" @ 0.50%) M202	159.24 (23") I200	YARD INLET	558794.2577,1387039.6620	D-4.14
I203	167.62		161.49 (23") M202	YARD INLET	559142.4693,1386826.3620	D-4.14
I210	165.00		160.64 (18" HDPE) M202	YARD INLET	558972.6205,1386904.8029	D-4.14
I303	159.79	147.90 (18" HDPE @ 2.50%) I304 149.75 (18" HDPE @ 1.18%) I305	147.61 (18" HDPE) M302	A-5 INLET	559245.9493,1387042.2464	D-4.01
I304	159.24		149.46 (18" HDPE) I303	YARD INLET	559230.4862,1386981.5876	D-4.01
I305	161.84	151.35 (15" HDPE @ 0.95%) I306	151.09 (18" HDPE) I303	A-5 INLET	559144.6792,1386990.8409	D-4.14
I306	165.22		152.94 (15" HDPE) I305	A-5 INLET	559017.5098,1386883.2596	D-4.01
M102	155.00	145.85 (18" HDPE @ 2.25%) I103 150.32 (15" HDPE @ 0.50%) I120	145.60 (18" HDPE) I101	48" MH	559135.2303,1387320.4741	G-5.12
M202	165.00	160.56 (23" @ 0.50%) I203 160.56 (18" HDPE @ 0.50%) I210	160.46 (23") I201	48" MH	558981.5004,1386918.1676	G-5.12
M301	148.46	142.80 (18" HDPE @ 5.05%) M302	142.55 (18" HDPE) E300	48" MH	559231.5896,1387154.2806	G-5.12
M302	150.71	146.00 (18" HDPE @ 2.14%) I303	145.67 (18" HDPE) M301	48" MH	559270.9551,1387113.2348	G-5.12

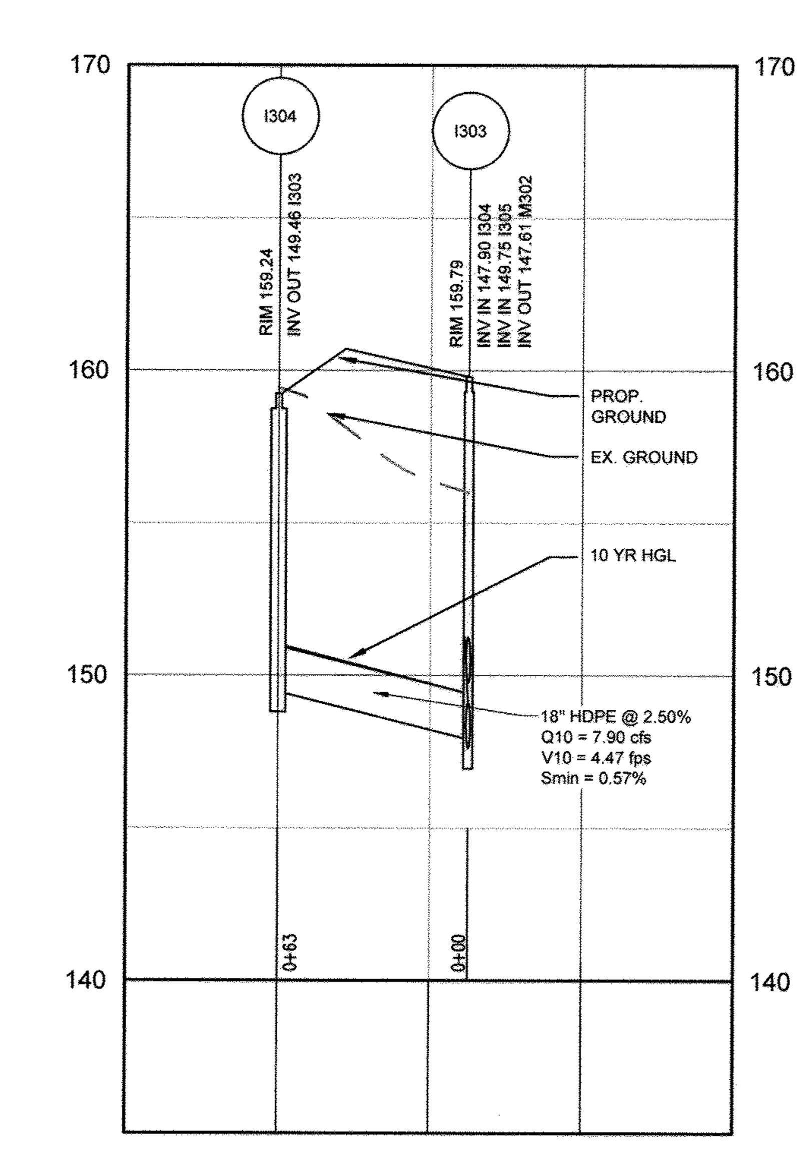

I304 CONNECTION 3+00
HORIZONTAL SCALE: 1" = 50'
VERTICAL SCALE: 1" = 5'

APPROVED : DEPARTMENT OF PLANNING AND ZONING

[signature] JP CHIEF, DEVELOPMENT ENGINEERING DIVISION	7.19.16 DATE
[signature] CHIEF, DIVISION OF LAND DEVELOPMENT	8-16-16 DATE
[signature] DIRECTOR	8-16-16 DATE

DATE	NO.	REVISION	BY

DEVELOPER
HOWARD COUNTY
DEPARTMENT OF PUBLIC WORKS
BUREAU OF FACILITIES
9250 BENDIX ROAD
COLUMBIA, MARYLAND 21045
ATTN: MARK STROMDAHL
PHONE: 410-313-5757

OWNER
HOWARD COUNTY
DEPARTMENT OF PUBLIC WORKS
BUREAU OF FACILITIES
9250 BENDIX ROAD
COLUMBIA, MARYLAND 21045
ATTN: MARK STROMDAHL
PHONE: 410-313-5757

PROJECT
GREEN BUILDING
HCLS ELKRIDGE BRANCH AND 50+ CENTER

AREA
TAX MAP 38, PARCEL 'A' PLAT ~~23870~~ 23869 ZONED B-1 & R-12
GRID NO. 7 1st ELECTION DISTRICT
6540 WASHINGTON BOULEVARD
ELKRIDGE, MARYLAND 21075-0000
HOWARD COUNTY, MARYLAND

TITLE
STORM DRAIN PROFILES & SCHEDULES

Pennoni
Pennoni Associates Inc.
Engineers • Surveyors • Planners
Landscape Architects
8818 Centre Park Drive, Suite 200 Columbia, MD 21045
T 410.997.8900 F 410.997.9282

SEAL
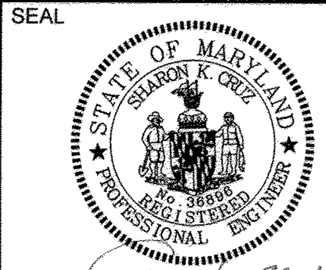

BY: [signature] 6-29-16

"PROFESSIONAL CERTIFICATION. I HEREBY CERTIFY THAT THESE DOCUMENTS WERE PREPARED OR APPROVED BY ME, AND THAT I AM A DULY LICENSED PROFESSIONAL ENGINEER UNDER THE LAWS OF THE STATE OF MARYLAND, LICENSE NO. 36896, EXPIRATION DATE: 2-15-2017"

DESIGNED BY : PJS/JSN
DRAWN BY: PJS/JSN
PROJECT NO : GRIM1402
DATE : JUNE 20,2016
SCALE : AS SHOWN
DRAWING NO. 14 OF 50

T:\PROJECTS\GRIM\GRIM1402-ELKRIDGE LIBRARY\DESIGN_DESIGN_PUBLISH\SITE DEVELOPMENT PLAN\GRIM1402-SDP14

SDP-16-038

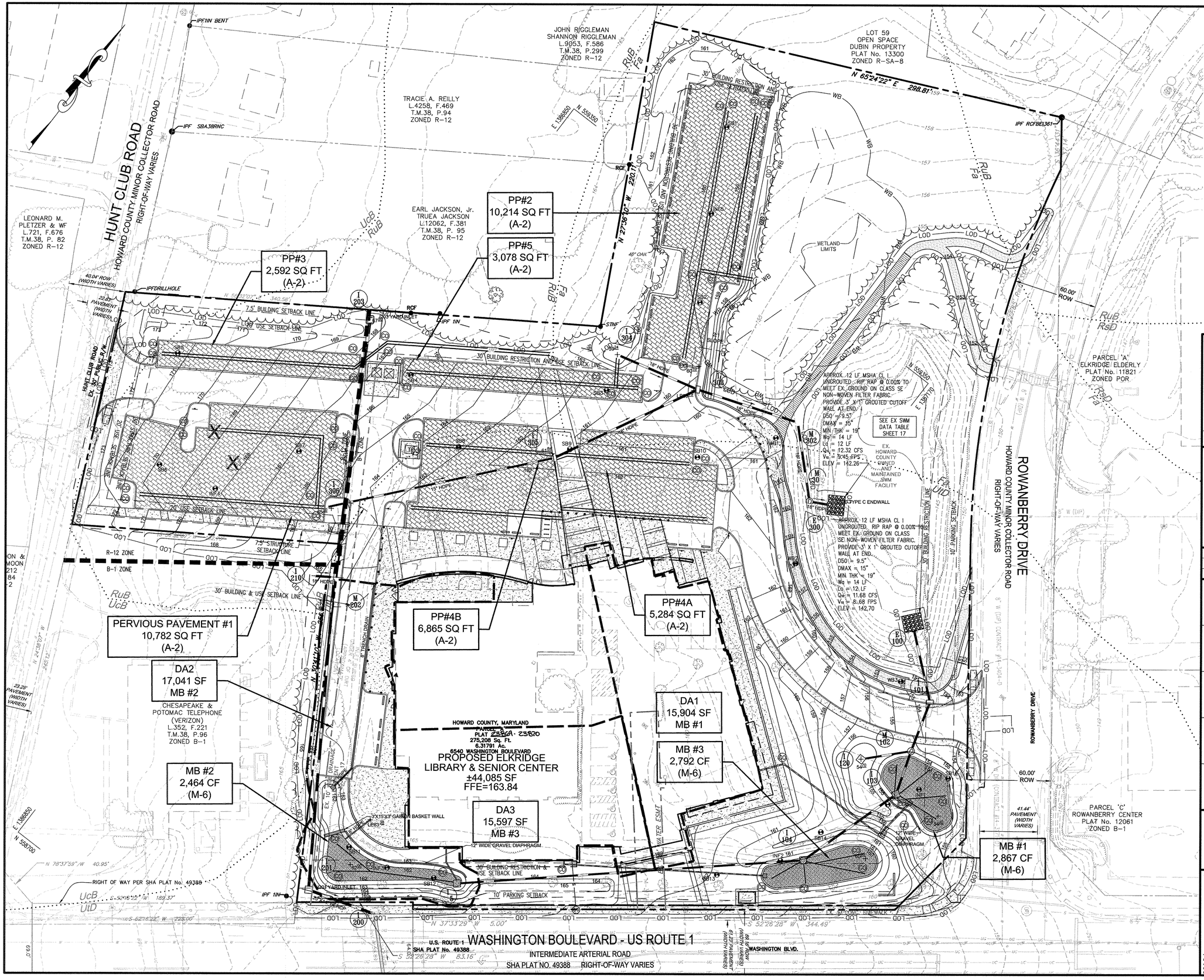

LEGEND

- PROPERTY LINE AND RIGHT-OF-WAY
- EXISTING BUILDING
- EXISTING 1' CONTOUR
- EXISTING 5' CONTOUR
- EXISTING TREE LINE
- EXISTING SOILS
- EXISTING WETLANDS
- EXISTING WETLAND BUFFER
- EXISTING ZONING LINE
- EXISTING WATER
- EXISTING SEWER
- EXISTING COMMUNICATIONS
- EXISTING ELECTRICAL
- EXISTING GAS
- EXISTING STORM DRAIN
- PROPOSED 1' CONTOUR
- PROPOSED 5' CONTOUR
- PROPOSED SPOT ELEVATION
- PROPOSED PERVIOUS PAVING
- PROPOSED MICRO-BIORETENTION FACILITY
- PROPOSED STORM DRAIN
- PROP. CONCRETE SIDEWALK
- PROPOSED TREE LINE
- SOIL BORING LOCATION

GRAPHIC SCALE 1"=30'
15' 0' 30' 60'

BY THE ENGINEER :

I CERTIFY THAT THIS PLAN FOR STORMWATER MANAGEMENT, EROSION AND SEDIMENT CONTROL REPRESENTS A PRACTICAL AND WORKABLE PLAN BASED ON MY PERSONAL KNOWLEDGE OF THE SITE CONDITIONS. THIS PLAN WAS PREPARED IN ACCORDANCE WITH THE REQUIREMENTS OF THE HOWARD SOIL CONSERVATION DISTRICT. I HAVE NOTIFIED THE DEVELOPER THAT HE/SHE MUST ENGAGE A REGISTERED PROFESSIONAL ENGINEER TO SUPERVISE POND CONSTRUCTION AND PROVIDE THE HOWARD SOIL CONSERVATION DISTRICT WITH AN "AS-BUILT" PLAN OF THE POND WITHIN 30 DAYS OF COMPLETION.

ENGINEER — DATE 6-29-16

APPROVED : DEPARTMENT OF PLANNING AND ZONING

CHIEF, DEVELOPMENT ENGINEERING DIVISION — DATE 7.19.16
CHIEF, DIVISION OF LAND DEVELOPMENT — DATE 8-4-16
DIRECTOR — DATE 8-16-16

DATE	NO.	REVISION	BY

DEVELOPER
HOWARD COUNTY
DEPARTMENT OF PUBLIC WORKS
BUREAU OF FACILITIES
9250 BENDIX ROAD
COLUMBIA, MARYLAND 21045
ATTN: MARK STROMDAHL
PHONE: 410-313-5757

OWNER
HOWARD COUNTY
DEPARTMENT OF PUBLIC WORKS
BUREAU OF FACILITIES
9250 BENDIX ROAD
COLUMBIA, MARYLAND 21045
ATTN: MARK STROMDAHL
PHONE: 410-313-5757

PROJECT
GREEN BUILDING
HCLS ELKRIDGE BRANCH AND 50+ CENTER

AREA
TAX MAP 38, PARCEL 'A' PLAT 23564 23570 ZONED B-1 & R-12
GRID NO. 7 1st ELECTION DISTRICT
6540 WASHINGTON BOULEVARD
ELKRIDGE, MARYLAND 21075-0000
HOWARD COUNTY, MARYLAND

TITLE
STORMWATER MANAGEMENT PLAN

Pennoni Associates Inc.
Engineers • Surveyors • Planners
Landscape Architects
8818 Centre Park Drive, Suite 200 Columbia, MD 21045
T 410.997.8900 F 410.997.9282

SEAL

STATE OF MARYLAND — SHARON K. GRIEP — REG. NO. 21587 — REGISTERED PROFESSIONAL ENGINEER

BY: — 6-29-16

"PROFESSIONAL CERTIFICATION. I HEREBY CERTIFY THAT THESE DOCUMENTS WERE PREPARED OR APPROVED BY ME, AND THAT I AM A DULY LICENSED PROFESSIONAL ENGINEER UNDER THE LAWS OF THE STATE OF MARYLAND, LICENSE NO. 30996, EXPIRATION DATE: 2-15-2017"

DESIGNED BY :	PJS/JSN
DRAWN BY:	PJS/JSN
PROJECT NO :	GRIM1402
DATE :	JUNE 20,2016
SCALE :	1" = 30'
DRAWING NO.	15 OF 50

SDP-16-038

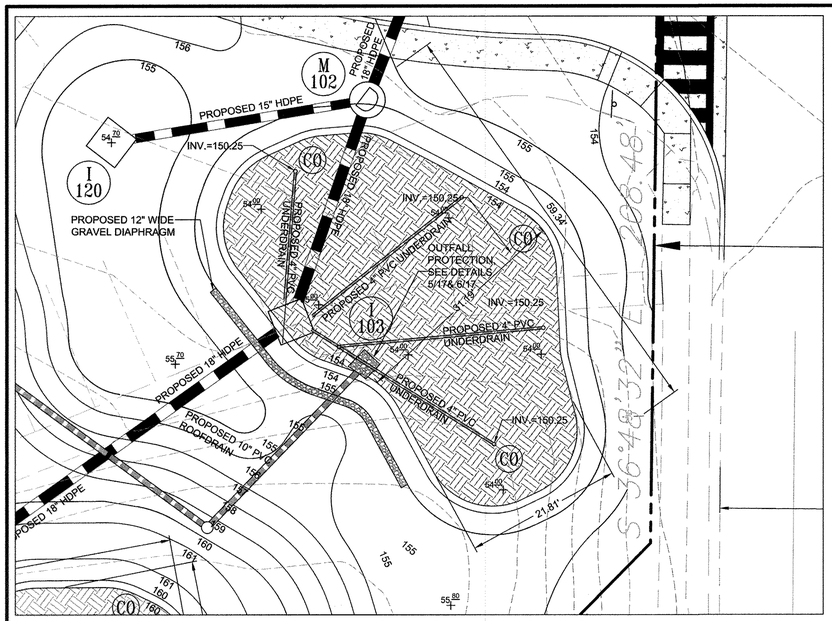

MICRO-BIORETENTION FACILITY #1 DETAIL PLAN

SCALE: 1"=10'

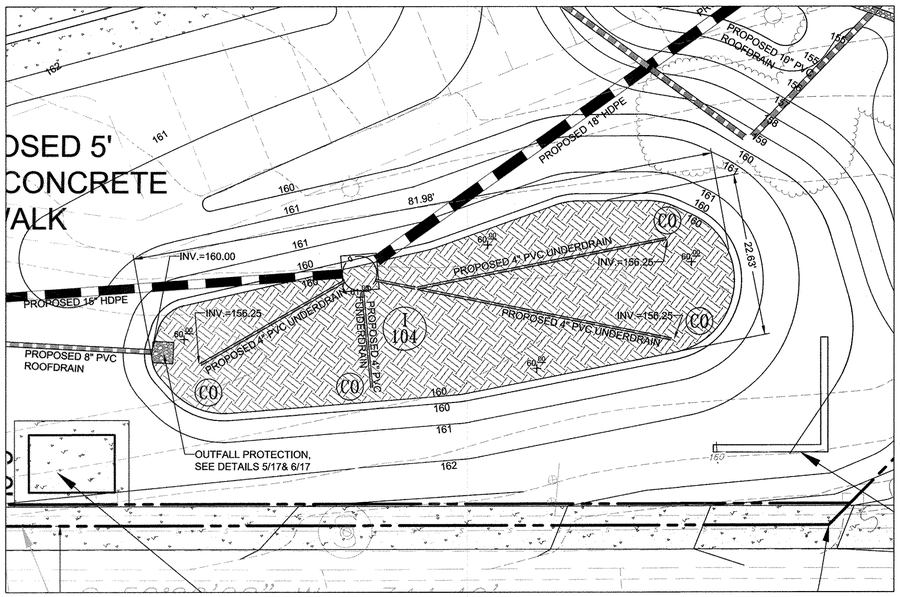

MICRO-BIORETENTION FACILITY #3 DETAIL PLAN

SCALE: 1"=10'

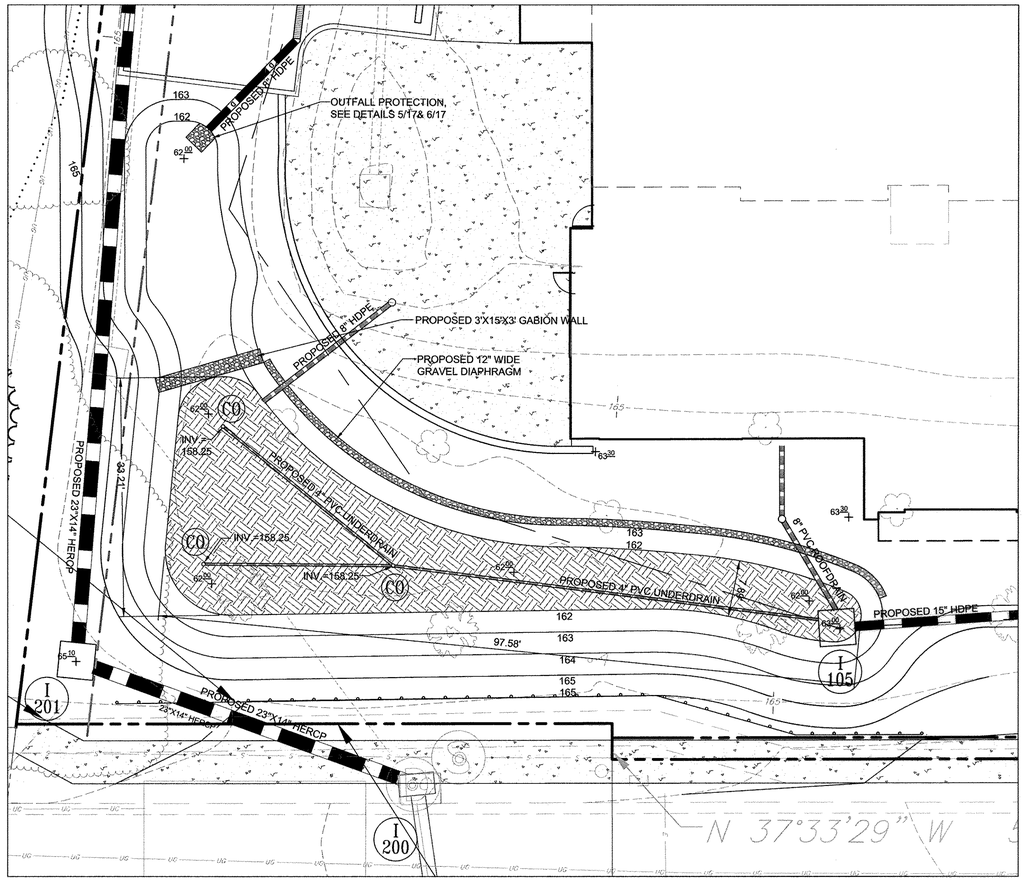

MICRO-BIORETENTION FACILITY #2 DETAIL PLAN

SCALE: 1"=10'

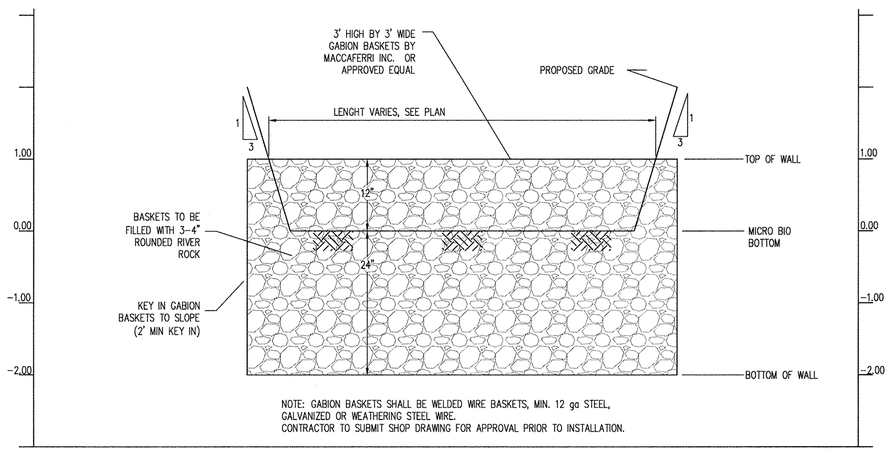

MICROBIO GABION WALL DETAIL

SCALE : HOR: 1"=10'
VERT: 1"=1'

GRAPHIC SCALE 1"=10'

5' 0' 10' 20'

BY THE ENGINEER :

I CERTIFY THAT THIS PLAN FOR STORMWATER MANAGEMENT, EROSION AND SEDIMENT CONTROL REPRESENTS A PRACTICAL AND WORKABLE PLAN BASED ON MY PERSONAL KNOWLEDGE OF THE SITE CONDITIONS. THIS PLAN WAS PREPARED IN ACCORDANCE WITH THE REQUIREMENTS OF THE HOWARD SOIL CONSERVATION DISTRICT. I HAVE NOTIFIED THE DEVELOPER THAT HE/SHE MUST ENGAGE A REGISTERED PROFESSIONAL ENGINEER TO SUPERVISE POND CONSTRUCTION AND PROVIDE THE HOWARD SOIL CONSERVATION DISTRICT WITH AN "AS-BUILT" PLAN OF THE POND WITHIN 30 DAYS OF COMPLETION.

ENGINEER — DATE 6-29-16

APPROVED : DEPARTMENT OF PLANNING AND ZONING

CHIEF, DEVELOPMENT ENGINEERING DIVISION JP — DATE 7.19.16

CHIEF, DIVISION OF LAND DEVELOPMENT — DATE 8-16-16

DIRECTOR — DATE 8-16-16

DATE	NO.	REVISION	BY

DEVELOPER
HOWARD COUNTY
DEPARTMENT OF PUBLIC WORKS
BUREAU OF FACILITIES
9250 BENDIX ROAD
COLUMBIA, MARYLAND 21045
ATTN: MARK STROMDAHL
PHONE: 410-313-5757

OWNER
HOWARD COUNTY
DEPARTMENT OF PUBLIC WORKS
BUREAU OF FACILITIES
9250 BENDIX ROAD
COLUMBIA, MARYLAND 21045
ATTN: MARK STROMDAHL
PHONE: 410-313-5757

PROJECT
GREEN BUILDING
HCLS ELKRIDGE BRANCH
AND 50+ CENTER

AREA
TAX MAP 38, PARCEL 'A' PLAT 23569 23570 ZONED B-1 & R-12
GRID NO. 7 1st ELECTION DISTRICT
6540 WASHINGTON BOULEVARD
ELKRIDGE, MARYLAND 21075-0000
HOWARD COUNTY, MARYLAND

TITLE
DETAILED
STORMWATER MANAGEMENT PLAN

Pennoni Associates Inc.
Engineers • Surveyors • Planners
Landscape Architects
8818 Centre Park Drive, Suite 200 Columbia, MD 21045
T 410.997.8900 F 410.997.9282

SEAL

STATE OF MARYLAND · SHARON K. GRIM · P.E. 36888 · PROFESSIONAL ENGINEER

BY: 6-29-16

"PROFESSIONAL CERTIFICATION. I HEREBY CERTIFY THAT THESE DOCUMENTS WERE PREPARED OR APPROVED BY ME, AND THAT I AM A DULY LICENSED PROFESSIONAL ENGINEER UNDER THE LAWS OF THE STATE OF MARYLAND, LICENSE NO. 36888, EXPIRATION DATE: 2-15-2017"

DESIGNED BY :	PJS/JSN
DRAWN BY:	PJS/JSN
PROJECT NO :	GRIM1402
DATE :	JUNE 20,2016
SCALE :	1" = 10'
DRAWING NO.	16 OF 50

SDP-16-038

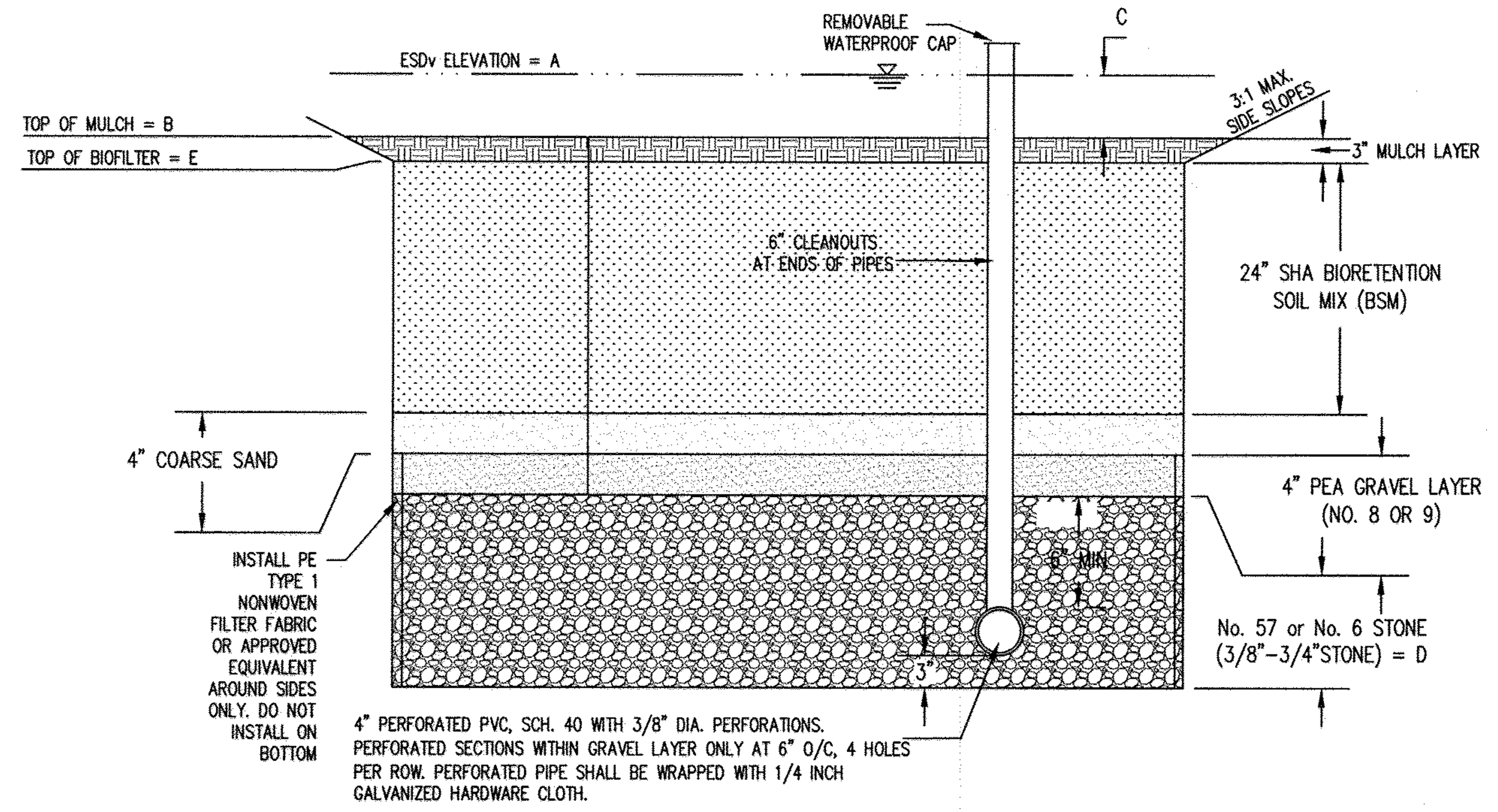

1/17 MICROBIORETENTION TYPICAL SECTION
NOT TO SCALE

MICRO-BIORETENTION DESIGN DATA			
	1	2	3
A	155.00	163.00	161.00
B	154.00	162.00	160.00
C	12"	12"	12"
D	13"	13"	13"
E	153.75	161.75	159.75
SURFACE AREA AT 'E' (SF)	1,593	1,369	1,551

MICRO-BIORETENTION SEQUENCE OF CONSTRUCTION

1. DO NOT BEGIN BIORETENTION INSTALLATION UNTIL SITE UPSTREAM OF MICRO-BIORETENTION IS STABILIZED AND FINE GRADING HAS BEEN COMPLETED.
2. EXCAVATE MICRO-BIORETENTION. CONSTRUCTION SHALL BE PERFORMED WITH LIGHTWEIGHT, WIDE-TRACKED EQUIPMENT TO MINIMIZE DISTURBANCE AND COMPACTION. EXCAVATED MATERIALS SHALL BE PLACED IN A CONTAINED AREA. (1 DAY)
3. PLACE STONE AND UNDERDRAINS. (1 DAY).
4. PLACE SAND LAYER IN LIFTS OF THREE INCHES. (0.5 DAY)
5. PLACE PLANTING SOIL AND OBSERVATION WELLS. (1 DAY)
6. PLACE MULCH. (0.5 DAY)
7. INSTALL PLANT MATERIAL. (1 DAY)
8. STABILIZE MICRO-BIORETENTION AREA. (0.5 DAY)

SAND SPECIFICATIONS

WASHED ASTM C33 FINE AGGREGATE CONCRETE SAND IS UTILIZED FOR STORMWATER MANAGEMENT APPLICATIONS. IN ADDITION TO THE ASTM C-33 SPECIFICATION, SAND MUST MEET ALL OF THE FOLLOWING CONDITIONS.

1. SAND MUST MEET GRADATION REQUIREMENTS FOR ASTM C-33 FINE AGGREGATE CONCRETE SAND. AASHTO M-6 GRADATION IS ALSO ACCEPTABLE.

2. SAND MUST BE SILICA BASED. NO LIMESTONE BASED PRODUCTS MAY BE USED. IF THE MATERIAL IS WHITE OR GRAY IN COLOR, IT IS PROBABLY NOT ACCEPTABLE.

3. SAND MUST BE CLEAN. NATURAL, UNWASHED SAND DEPOSITS MAY NOT BE USED. LIKEWISE, SAND THAT HAS BECOME CONTAMINATED BY IMPROPER STORAGE OR INSTALLATION PRACTICES WILL BE REJECTED.

4. MANUFACTURED SAND OR STONE DUST IS NOT ACCEPTABLE UNDER ANY CIRCUMSTANCE.

OPERATION AND MAINTENANCE SCHEDULE FOR MICRO-BIORETENTION (M-6)

1. ANNUAL MAINTENANCE OF PLANT MATERIAL, MULCH LAYER AND SOIL LAYER IS REQUIRED. MAINTENANCE OF MULCH AND SOIL IS LIMITED TO CORRECTING AREAS OF EROSION OR WASH OUT. ANY MULCH REPLACEMENT SHALL BE DONE IN THE SPRING. PLANT MATERIAL SHALL BE CHECKED FOR DISEASE AND INSECT INFESTATION AND MAINTENANCE WILL ADDRESS DEAD MATERIAL AND PRUNING. ACCEPTABLE REPLACEMENT PLANT MATERIAL IS LIMITED TO THE FOLLOWING: 2000 MARYLAND STORMWATER DESIGN MANUAL VOLUME II, TABLE A.4.1 AND 2.
2. SCHEDULE OF PLANT INSPECTION WILL BE TWICE A YEAR IN SPRING AND FALL. THIS INSPECTION WILL INCLUDE REMOVAL OF DEAD AND DISEASED VEGETATION CONSIDERED BEYOND TREATMENT, TREATMENT OF ALL DISEASED TREES AND SHRUBS AND REPLACEMENT OF ALL DEFICIENT STAKES AND WIRES.
3. MULCH SHALL BE INSPECTED EACH SPRING. REMOVE PREVIOUS MULCH LAYER BEFORE APPLYING NEW LAYER ONCE EVERY 2 TO 3 YEARS.
4. SOIL EROSION TO BE ADDRESSED ON AN AS NEEDED BASIS, WITH A MINIMUM OF ONCE PER MONTH AND AFTER HEAVY STORM EVENTS.

MICROBIORETENTION SPECIFICATIONS

1. THE UNDERDRAIN PIPE MUST BE 4-INCH DIAMETER SCHEDULE 40 OR STRONGER PERFORATED PVC PIPE AT 0.00% SLOPE. THREE INCHES OF GRAVEL MUST BE PLACED UNDER THE PIPE, WITH A MINIMUM OF 6 INCHES OF GRAVEL OVER THE PIPE. PERFORATIONS MUST BE 3/8 INCH IN DIAMETER AND MUST BE LOCATED 4 INCHES ON CENTER, EVERY 90 DEGREES AROUND THE PIPE. PERFORATED PIPE MUST BEGIN AT LEAST 5FT. INSIDE THE FILTER MEDIA. FILTER FABRIC MUST NOT BE WRAPPED AROUND THE UNDERDRAIN PIPE.
2. 4" INCH CLEAN-OUTS SHOULD BE USED. CLEANOUTS FOR EACH PIPE SHOULD EXTEND 6 INCHES ABOVE THE TOP OF THE PLANTING MEDIA AND HAVE A REMOVABLE CAP.
3. THE GRAVEL LAYER SURROUNDING THE UNDERDRAIN PIPES MUST MEET MSHA SIZE #7 (TABLE 901A), AND MUST PROVIDE A MINIMUM OF 6 INCHES COVER OVER THE PIPE, AND MINIMUM 3 INCHES UNDER THE PIPE. NO GEOTEXTILE OR FILTER FABRIC IS ALLOWED ANYWHERE WITHIN THE FILTER MEDIA (STONE OR SAND).
4. A MINIMUM 6-INCH FINE AGGREGATE SAND LAYER SHALL BE PROVIDED BELOW THE SOIL FILTER/PLANTING MEDIA. THE SAND MUST BE ASTM C33 FINE AGGREGATE CONCRETE SAND. MANUFACTURED SAND OR STONE DUST IS NOT ACCEPTABLE.
5. THE PLANTING MEDIA MIX SHALL MEET SHA BIORETENTION SOIL MIX STANDARDS. THE SOIL SHALL MEET THE FOLLOWING MINIMUM CRITERIA: A HOMOGENEOUS MIXTURE COMPOSED OF 5 PARTS COARSE SAND, 3 PARTS BASE SOIL, AND 2 PARTS FINE BARK. THE SOIL SHALL BE FREE OF STONES, STUMPS, ROOTS OR OTHER SIMILAR OBJECTS LARGER THAN 2 INCHES. THE PLANTING MATERIAL SHALL BE FLOODED AFTER PLACEMENT. ANY SETTLEMENT THAT OCCURS SHALL BE FILLED BACK TO THE DESIGN ELEVATION.
6. THE SURFACE MULCH LAYER WILL CONSIST OF STANDARD FINE SHREDDED AGED HARDWOOD MULCH. THE MULCH SHOULD BE UNIFORMLY TO A DEPTH OF 2 TO 3 INCHES. YEARLY REPLENISHING MAY BE NECESSARY. PINE BARK IS NOT ACCEPTABLE.

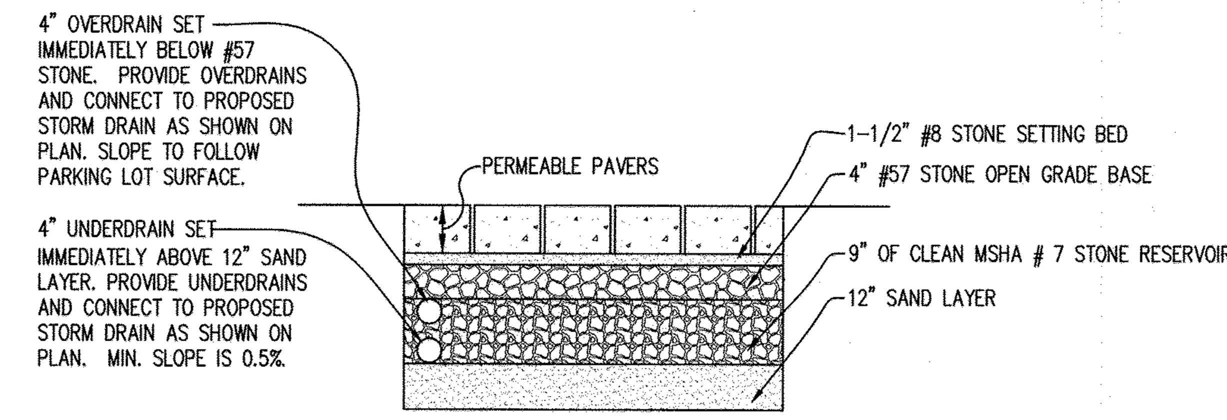

NOTES:

1. ALL PERMEABLE PAVERS SHALL BE INSTALLED BY A CERTIFIED INSTALLER.
2. PERMEABLE PAVERS SHALL HAVE A PERMEABILITY RATE OF 8 INCHES PER HOUR OR GREATER. SHOP DRAWINGS SHALL BE SUBMITTED TO THE ENGINEER PRIOR TO PLACEMENT OF ANY PERMEABLE PAVERS.
3. THE BOTTOM OF THE SUB-BASE SHALL BE LEVEL WITH ADJUSTMENTS ACCOMPLISHED BY STEPPING SUBGRADE LEVELS AT 1-FOOT CONTOUR INTERVALS PER THE GEOTECHNICAL REPORT AND ENGINEER'S DIRECTIVE.
4. ALL ADJUSTMENT TO EXISTING GRADE SHALL BE ACCOMPLISHED USING SUB-BASE MATERIAL.
5. SOILS SHALL NOT BE COMPACTED. CONSTRUCTION SHOULD BE PERFORMED WITH LIGHTWEIGHT, WIDE TRACKED EQUIPMENT TO MINIMIZE COMPACTION. EXCAVATED MATERIALS SHALL BE PLACED IN A CONTAINED AREA. LOADED DUMP TRUCKS DELIVERING THE INITIAL SAND MATERIAL SHALL ENTER EACH STEPPED AREA FROM BOTH ENDS AND SHALL LIMIT TRAVEL TO THE MINIMUM WIDTH POSSIBLE TO LIMIT SOIL COMPACTION TO THE MINIMUM AREA POSSIBLE.
6. SUB-BASE SHALL BE CLEAR AND FREE OF FINES. THE SUB-BASE SHALL BE PLACED IN LIFTS AND LIGHTLY ROLLED.
7. OVERDRAINS SHALL FOLLOW THE SLOPE OF THE PARKING LOT, AND SHALL BE SET AT THE ELEVATION SPECIFIED IN THE DETAIL.
8. UNDEDRAINS SHALL HAVE A MINIMUM SLOPE OF 0.5%, AND SHALL BE SET AT THE ELEVATION SPECIFIED IN THE DETAIL.

2/17 PERMEABLE PAVERS
NOT TO SCALE

OPERATION AND MAINTENANCE SCHEDULE FOR PRIVATELY OWNED AND MAINTAINED PERMEABLE PAVEMENT (A-2)

1. PAVEMENT SURFACES SHOULD BE SWEPT AND VACUUMED (IF POROUS CONCRETE) TO REDUCE SEDIMENT ACCUMULATION AND ENSURE CONTINUED SURFACE POROSITY. SWEEPING SHOULD BE PERFORMED AT LEAST TWICE ANNUALLY WITH A COMMERCIAL CLEANING UNIT. WASHING OR COMPRESSED AIR UNITS SHOULD NOT BE USED TO PERFORM SURFACE CLEANING.
2. DRAINAGE PIPES, INLETS, STONE EDGE DRAINS AND OTHER STRUCTURES WITHIN OR DRAINING TO THE SUBBASE SHOULD BE CLEANED OUT AT REGULAR INTERVALS.
3. DEICERS SHOULD BE USED IN MODERATION. DEICERS SHOULD BE NON-TOXIC AND BE APPLIED EITHER AS CALCIUM MAGNESIUM ACETATE OR AS PRETREATED SALT. SNOW PLOWING SHOULD BE DONE CAREFULLY WITH BLADES SET ONE-INCH ABOVE THE SURFACE. PLOWED SNOW PILES AND SNOWMELT SHOULD NOT BE DIRECTED TO PERMEABLE PAVEMENT.

PERMEABLE PAVEMENT SEQUENCE OF CONSTRUCTION

1. PERMEABLE PAVEMENT AREAS SHALL BE PROTECTED FROM COMPACTION THROUGHOUT CONSTRUCTION PROCESS.
2. UPON STABILIZATION OF ALL AREAS DRAINING ONTO PERMEABLE PAVEMENTS, AND ADJACENT PAVEMENT AND CONCRETE HEADER CURB/CURB AND GUTTER, BEGIN PERMEABLE PAVEMENT INSTALLATION.
3. EXCAVATE SUBGRADE BASED ON PERMEABLE PAVEMENT DETAIL AND FINAL GRADES. EXCAVATION SHALL BE PERFORMED WITH LIGHT WIEGHT, WIDE TRACKED EQUIPMENT. NOTE THAT BOTTOM OF SUBGRADE IS TO BE LEVEL WITH NO SLOPE.
4. INSTALL SUB-BASE IN 4" LIFTS AND LIGHTLY ROLL. INSTALL UNDER AND OVER DRAINS AS SHOWN ON PLANS WITH THE INSTALLATION OF THE SUB-BASE.
5. INSTALL PERMEABLE PAVERS.

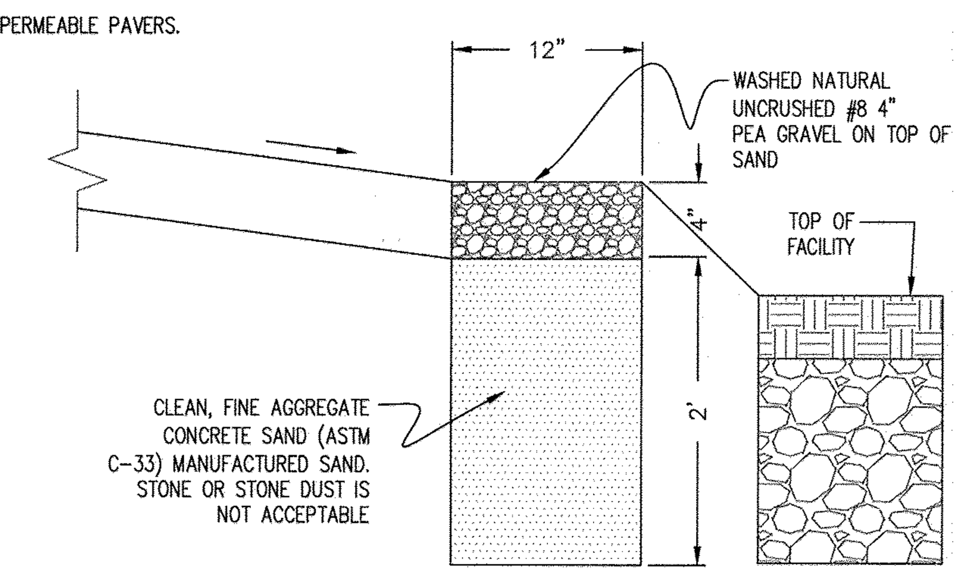

5/17 STONE DIAPHRAGM TYPICAL SECTION
NOT TO SCALE

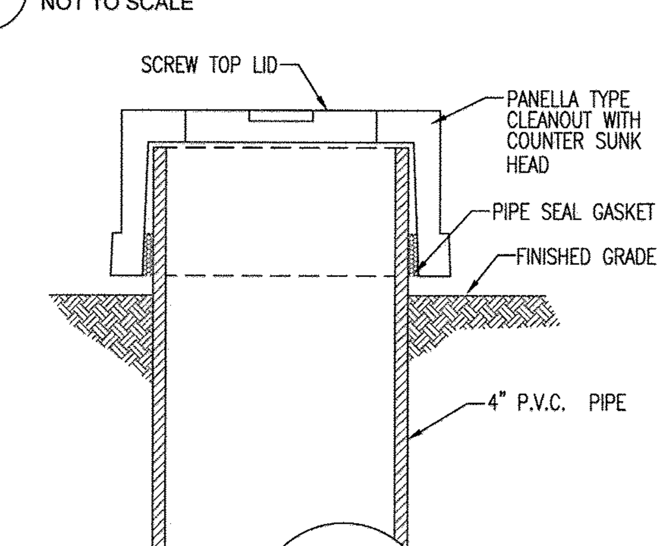

6/17 CLEAN-OUT OBSERVATION WELL CAP
NOT TO SCALE

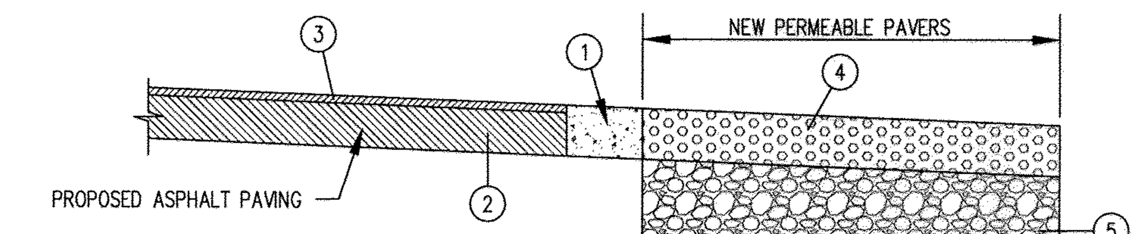

1. INSTALL CONCRETE EDGE RESTRAINT. SEE DETAIL 17 SHEET 20
2. INSTALL SUB BASE GRAVEL AND ASPHALT PAVEMENT PER DETAIL 10 SHEET 20
3. 1 1/2" SURFACE COURSE.
4. PERMEABLE PAVER PER DETAIL THIS SHEET
5. PERMEABLE PAVER BASE PER DETAIL THIS SHEET

3/17 PERMEABLE PAVER CONNECTION DETAIL PROPOSED PAVING
NOT TO SCALE

ESDv SUMMARY TABLE			
ESDv REQUIRED	ESDv REQUIRED TO MEET Cpv	ESDv REQUIRED TO MEET Wqv	ESDv PROVIDED
12,480 cf	8,826 cf	3.414 cf	13,325 cf
	NEW DEVELOPMENT AREA WITH A Pe OF 2.23"	REDEVELOPMENT AREA WITH A Pe OF 1.0"	

ESDv DEVICE SUMMARY TABLE			
TREATMENT	ESDv REQUIRED TO MEET Cpv	ESDv REQUIRED TO MEET Wqv	ESDv PROVIDED
PERMEABLE PAVEMENT 1	1,900 cf	854 cf	1,445 cf
PERMEABLE PAVEMENT 2	1,800 cf	809 cf	1,369 cf
PERMEABLE PAVEMENT 3	457 cf	205 cf	347 cf
PERMEABLE PAVEMENT 4	2,141 cf	962 cf	1,628 cf
PERMEABLE PAVEMENT 5	542 cf	244 cf	412 cf
MICRO-BIORETENTION 1	2,802 cf	1,259 cf	2,867 cf
MICRO-BIORETENTION 2	2,576 cf	1,157 cf	2,464 cf
MICRO-BIORETENTION 3	2,748 cf	1,235 cf	2,792 cf
TOTAL			13,325 cf

EX. SWM FACILITY SUMMARY				
STORM EVENT	EX. DISCHARGE (cfs)	EX. WSE	PROP. DISCHARGE (cfs)	PROP. WSE
1-YEAR	2.0	145.0	2.2	145.12
10-YEAR	12.7	147.99	13.4	148.30
100-YEAR	17.6	150.31	18.3	150.70

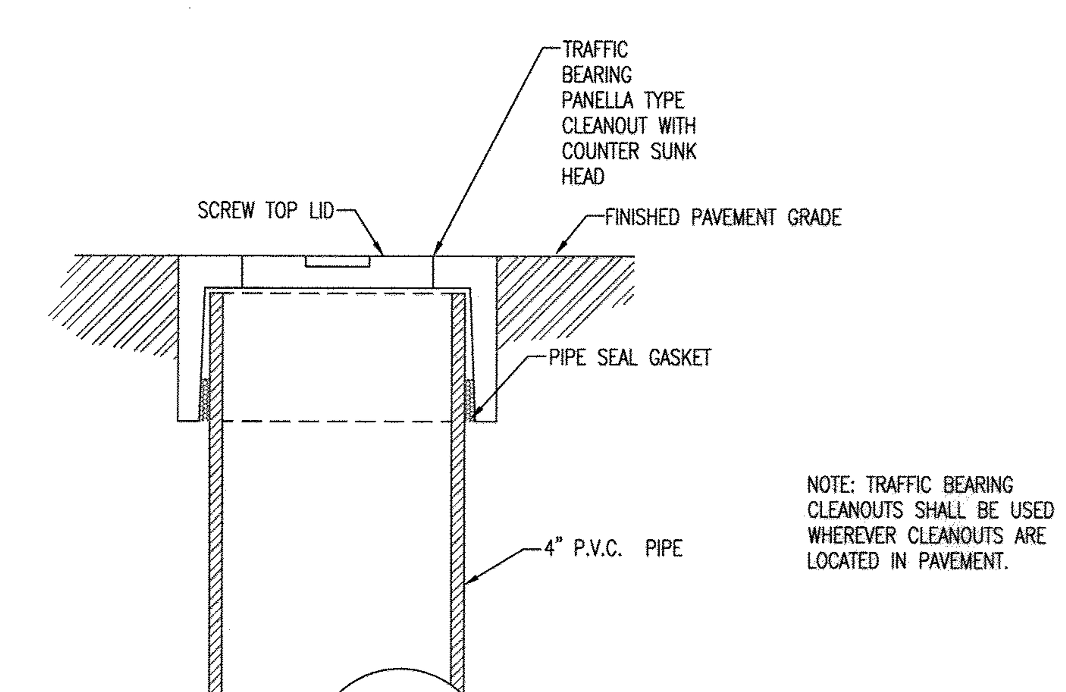

NOTE: TRAFFIC BEARING CLEANOUTS SHALL BE USED WHEREVER CLEANOUTS ARE LOCATED IN PAVEMENT.

7/17 TRAFFIC BEARING CLEAN-OUT OBSERVATION WELL CAP
NOT TO SCALE

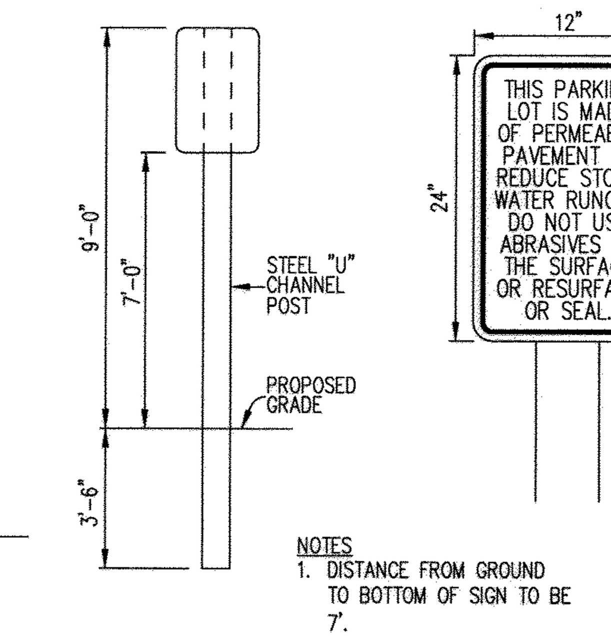

NOTES
1. DISTANCE FROM GROUND TO BOTTOM OF SIGN TO BE 7'.

4/17 PERMEABLE PAVEMENT SIGN
NOT TO SCALE

BY THE ENGINEER :
I CERTIFY THAT THIS PLAN FOR STORMWATER MANAGEMENT, EROSION AND SEDIMENT CONTROL REPRESENTS A PRACTICAL AND WORKABLE PLAN BASED ON MY PERSONAL KNOWLEDGE OF THE SITE CONDITIONS. THIS PLAN WAS PREPARED IN ACCORDANCE WITH THE REQUIREMENTS OF THE HOWARD SOIL CONSERVATION DISTRICT. I HAVE NOTIFIED THE DEVELOPER THAT HE/SHE MUST ENGAGE A REGISTERED PROFESSIONAL ENGINEER TO SUPERVISE POND CONSTRUCTION AND PROVIDE THE HOWARD SOIL CONSERVATION DISTRICT WITH AN "AS-BUILT" PLAN OF THE POND WITHIN 30 DAYS OF COMPLETION.

ENGINEER — DATE 6-29-16

APPROVED : DEPARTMENT OF PLANNING AND ZONING

CHIEF, DEVELOPMENT ENGINEERING DIVISION — DATE 7-19-16
CHIEF, DIVISION OF LAND DEVELOPMENT — DATE 8-16-16
DIRECTOR — DATE 8-16-16

DATE	NO.	REVISION	BY

DEVELOPER
HOWARD COUNTY
DEPARTMENT OF PUBLIC WORKS
BUREAU OF FACILITIES
9250 BENDIX ROAD
COLUMBIA, MARYLAND 21045
ATTN: MARK STROMDAHL
PHONE: 410-313-5757

OWNER
HOWARD COUNTY
DEPARTMENT OF PUBLIC WORKS
BUREAU OF FACILITIES
9250 BENDIX ROAD
COLUMBIA, MARYLAND 21045
ATTN: MARK STROMDAHL
PHONE: 410-313-5757

PROJECT
GREEN BUILDING
HCLS ELKRIDGE BRANCH
AND 50+ CENTER

AREA
TAX MAP 38, PARCEL 'A' PLAT ~~23870~~ 23869 ZONED B-1 & R-12
GRID NO. 7 1st ELECTION DISTRICT
6540 WASHINGTON BOULEVARD
ELKRIDGE, MARYLAND 21075-0000
HOWARD COUNTY, MARYLAND

TITLE
STORMWATER MANAGEMENT DETAILS

Pennoni
Pennoni Associates Inc.
Engineers • Surveyors • Planners
Landscape Architects
8818 Centre Park Drive, Suite 200 Columbia, MD 21045
T 410.997.8900 F 410.997.9282

SEAL
STATE OF MARYLAND — SHARON K. CRUZ — No. 36896 — REGISTERED PROFESSIONAL ENGINEER
BY: 6-29-16
"PROFESSIONAL CERTIFICATION. I HEREBY CERTIFY THAT THESE DOCUMENTS WERE PREPARED OR APPROVED BY ME, AND THAT I AM A DULY LICENSED PROFESSIONAL ENGINEER UNDER THE LAWS OF THE STATE OF MARYLAND, LICENSE NO. 36896, EXPIRATION DATE: 2-15-2017"

DESIGNED BY : PJS/JSN
DRAWN BY: PJS/JSN
PROJECT NO : GRIM1402
DATE : JUNE 20,2016
SCALE : AS SHOWN
DRAWING NO. 17 OF 50

SDP-16-038

PROJECTS\GRIM\GRIM1402-ELKRIDGE LIBRARY\DESIGN_PUBLISH\SITE DEVELOPMENT PLAN\GRIM1402-SDP17

EAGLE BAY®
Hardscape Products

STORMWATER SOLUTIONS
AQUA-BRIC®
TYPE 4 "L"

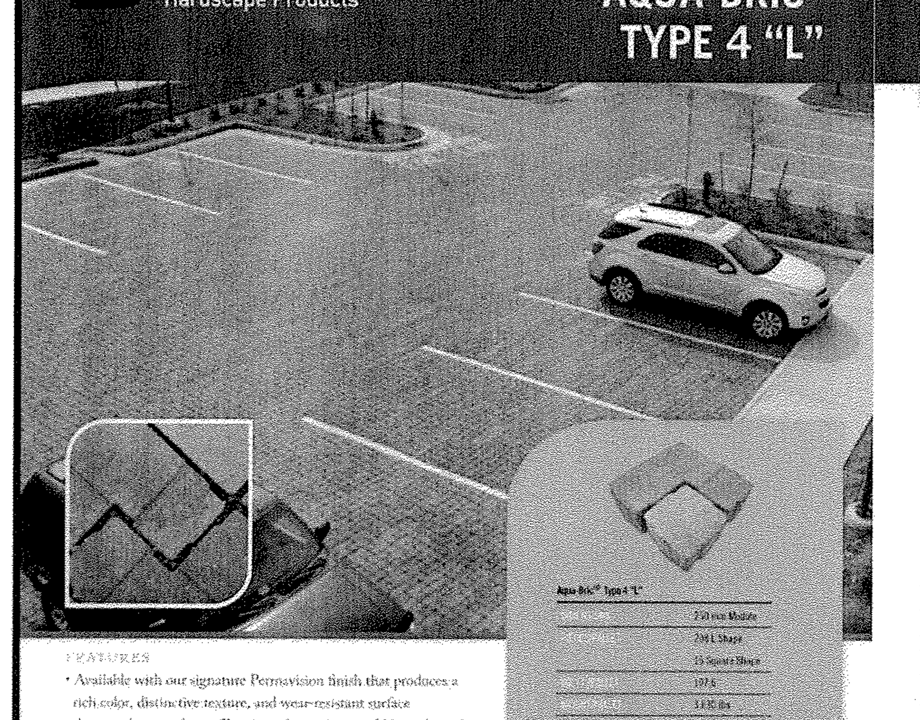

FEATURES
- Available with our signature Permavision finish that produces a rich color, distinctive texture, and wear-resistant surface
- Accomodates surface infiltration of a minimum of 100 inches of rain per hour
- Palletized layers patterned to accomodate efficient mechanical or manual installation
- Full perimeter 5 mm joint and 9 mm void "Joint/Void System" (meets Americans with Disabilities Act)
- Provides the 3 disciplines of "Interlock"
- Hidden paver spacer bars for maximum aesthetics
- 3 ⅛" for commercial applications
- Pallet includes half sizes

Aqua-Bric® Type 4 "L"
Flat face, beveled edges
Exclusive Component of filtera biopave

EAGLE BAY USA 1231 Willis Road, Richmond, VA 23237 • 800-321-9141 • coromgavesales@eaglebayusa.com • www.eaglebayusa.com

BUILDING A GREEN INFRASTRUCTURE WITH EAGLE BAY

1. Eagle Bay® PICP Systems accommodate a wide variety of stormwater management objectives due to flexibility of Pavement Design, Storage Quantity Capacities, and Water Quality Treatment.
2. Runoff reduction of up to 100%, depending on project design parameters.
3. Provides both Channel Protection and Flood Mitigation.
4. Maximizes groundwater recharge with improved Water Quality.
5. Allows for retention and storage of stormwater for possible reuse for irrigation or other non-potable applications.
6. Reduces non-point-source pollutants in stormwater, thereby mitigating impact on surrounding surface waters, and may lessen or eliminate downstream flooding and stream-bank erosion.
7. Minimizes impact and stress on existing stormwater or combined stormwater and sewer systems through reduced peak discharges.
8. The multi-purpose Permeable Pavement enhances land-use planning and leads to more efficient use of available land for greater economic value, especially in high-density urban areas. Utilizing the storage capacity of the PICP System below the pavement wearing surface, as opposed to above ground storage ponds or the deep excavation required by below grade confined space systems, accomplishes this goal.
9. May decrease project cost by reducing or eliminating drainage and retention/detention systems.
10. May reduce cost of compliance with stormwater regulatory requirements and lower Municipal or State utility / stormwater fees.
11. Solar Reflectivity Index compliance will reduce heat island effect and thermal loading of surrounding surface and/or outflow waters when Eagle Bay's SRI-Compliant colors are specified.
12. Accommodates pavement design to provide both mechanical stability and structural integrity for a variety of traffic loads, including Secondary Roadways, Light and Heavy Duty traffic requirements.

CROSS SECTION DETAIL

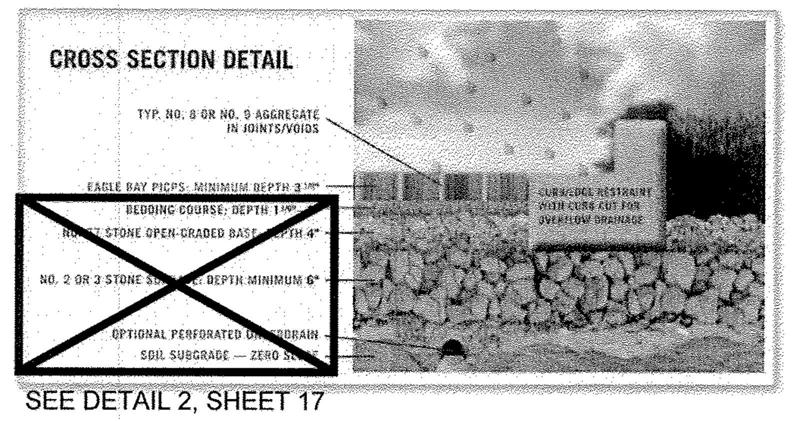

SEE DETAIL 2, SHEET 17

AQUA-BRIC® TYPE 4 "L"

1/18 PERMEABLE PAVERS
NOT TO SCALE

NOTE:
THE CONTRACTOR SHALL USE THIS PRODUCT OR APPROVED EQUAL, AND SHALL PROVIDE A SHOP DRAWING FOR APPROVAL PRIOR TO INSTALLATION.

Drainage Trench

Simple drainage systems can be determined if the application's run length and hydraulic load are known. In the "Run Length vs. Slope" table, select a slope which equals or exceeds the required run length. Add or subtract any site slope to the channel slope. Determine what trench width is required for this hydraulic load using the "Flat Site Flow" table on the opposite page. Additional technical information is available in the "Hydraulic Design Guide" at www.abtdrains.com. For more complex hydraulic applications, contact ABT®, Inc. for assistance.

PDX Run Length vs. Slope

Channel Slope Run Lengths

Channel Slope	Run Length Channel / Meters	Run Length Feet
0.5%	80	262.5
1.0%	40	131.2
1.5%	27	87.6
2.0%	20	65.6
2.5%	16	52.5
4.0%	10	32.8

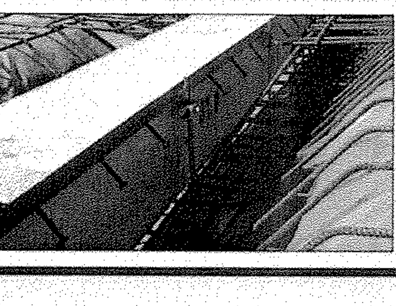

Note: Intermediate slopes in 0.5% increments between those shown above are possible with decreased run lengths. Non-sloped trenches are available in .197" [5 mm] depth increments. Contact ABT for availability and additional information.

PDX Flat Site Flow Capacity & Velocity / 19.69" Deep Channel

Invert Slope	6"			8"			10"			12"			15"			18"			24"		
	GPM	CFS	FPS	GPM	CFS	FPS	GPM	CFS	FPS	GPM	CFS	FPS	GPM	CFS	FPS	GPM	CFS	FPS	GPM	CFS	FPS
0.5%	1391	3.10	3.86	2280	5.10	4.74	3321	7.40	5.50	4533	10.10	6.22	6631	14.70	7.10	8977	20.00	8.18	14587	32.50	8.96
1.0%	1975	4.40	5.48	3202	7.20	6.69	4713	10.50	7.80	6418	14.30	8.81	9378	20.90	10.20	12702	28.30	11.56	20601	45.90	14.06
1.5%	2424	5.40	6.72	3950	8.80	8.17	5790	12.90	9.50	7855	17.50	10.78	11486	25.60	12.50	15574	34.70	14.20	25269	56.30	17.25
2.0%	2783	6.20	7.72	4578	10.20	9.47	6688	14.90	10.90	9111	20.30	12.50	13263	29.50	14.40	17998	40.10	16.41	29174	65.00	19.91
2.5%	3142	7.00	8.71	5117	11.40	10.59	7451	16.70	12.20	10144	22.60	13.92	14629	33.00	16.20	20109	44.80	18.33	32585	72.60	22.24
4.0%	3950	8.80	10.95	6463	14.40	13.37	9470	21.10	15.50	12861	28.70	17.68	18757	41.80	20.30	25449	56.70	23.20	41245	91.90	28.16

PDX Flat Site Flow Capacity & Velocity for 500mm Deep Channel

Invert Slope	152 mm			203 mm			254 mm			305 mm			381 mm			457 mm			610 mm		
	LPS	CMS	MPS	LPS	CMS	MPS	LPS	CMS	MPS	LPS	CMS	MPS	LPS	CMS	MPS	LPS	CMS	MPS	LPS	CMS	MPS
0.5%	88.70	0.09	0.08	144.50	0.14	0.08	210.80	0.21	0.08	286.00	0.29	0.54	417.20	0.42	0.54	566.70	0.57	0.54	917.90	0.92	0.54
1.0%	125.50	0.13	0.12	204.40	0.20	0.12	298.10	0.30	0.12	405.40	0.41	0.76	590.00	0.59	0.76	801.40	0.80	0.76	1298.20	1.30	0.76
1.5%	153.70	0.15	0.14	250.40	0.25	0.14	365.10	0.37	0.14	496.50	0.50	0.94	722.70	0.72	0.94	981.50	0.98	0.94	1590.00	1.59	0.94
2.0%	177.40	0.18	0.17	289.10	0.29	0.17	421.60	0.42	0.17	573.30	0.57	1.08	834.50	0.83	1.08	1133.40	1.13	1.08	1835.90	1.84	1.08
2.5%	198.40	0.20	0.19	323.30	0.32	0.19	471.40	0.47	0.19	641.00	0.64	1.21	933.00	0.93	1.21	1267.20	1.27	1.21	2052.70	2.05	1.21
4.0%	251.00	0.25	0.24	408.90	0.41	0.24	596.20	0.60	0.24	810.80	0.81	1.53	1180.10	1.18	1.53	1602.90	1.60	1.53	2596.40	2.60	1.53

4

PDX Flat Site Trench Storage Capacity & Cross Section Area

Lay out the length of trench for the site. Determine the maximum storage volume required for this trench run. Divide volume storage by trench length. In "Trench Storage Capacity" below, find which trench widths and depths provide sufficient storage and select the one that is best for the application.

Channel Depth	6"		8"		10"		12"		15"		18"		24"	
Inch	Gal/Ft	In²	Gal/Ft	In²	Gal/Ft	In²	Gal/Ft	In²	Gal/Ft	In²	Gal/Ft	In²	Gal/Ft	In²
3.94	1.10	21.20	1.51	29.07	1.92	36.95	2.33	44.82	2.94	56.63	3.56	68.44	4.78	92.07
5.91	1.71	33.01	2.33	44.82	2.94	56.63	3.56	68.44	4.48	86.16	5.40	103.88	7.24	139.31
7.87	2.33	44.82	3.15	60.57	3.96	76.32	4.78	92.07	6.01	115.69	7.24	139.31	9.69	186.55
9.84	2.94	56.63	3.96	76.32	4.99	96.00	6.01	115.69	7.54	145.22	9.08	174.74	12.15	233.80
11.81	3.56	68.44	4.78	92.07	6.01	115.69	7.24	139.31	9.08	174.74	10.92	210.18	14.60	281.04
13.78	4.17	80.26	5.60	107.81	7.03	135.37	8.46	162.93	10.61	204.27	12.76	245.61	17.05	328.29
15.75	4.78	92.07	6.42	123.56	8.06	155.06	9.69	186.55	12.15	233.80	14.60	281.04	19.51	375.53
17.72	5.40	103.88	7.24	139.31	9.08	174.74	10.92	210.18	13.68	263.33	16.44	316.48	21.96	422.78
19.69	6.01	115.69	8.06	155.06	10.10	194.43	12.15	233.80	15.21	292.85	18.28	351.91	24.42	470.02

Channel Depth	152 mm		203 mm		254 mm		305 mm		381 mm		457 mm		610 mm	
mm	L/M	M²	L/M	M²	L/M	M²	L/M	M²	L/M	M²	L/M	M²	L/M	M²
100	13.68	0.01	18.76	0.02	23.84	0.02	28.92	0.03	36.54	0.04	44.16	0.04	58.40	0.06
150	21.30	0.02	28.92	0.03	36.54	0.04	44.16	0.04	55.59	0.06	67.02	0.07	89.88	0.09
200	28.92	0.03	39.08	0.04	49.24	0.05	59.40	0.06	74.64	0.07	89.88	0.09	120.36	0.12
250	36.54	0.04	49.24	0.05	61.94	0.06	74.64	0.07	93.69	0.09	112.74	0.11	150.84	0.15
300	44.16	0.04	59.40	0.06	74.64	0.07	89.88	0.09	112.74	0.11	135.60	0.14	181.32	0.18
350	51.78	0.05	69.56	0.07	87.34	0.09	105.12	0.11	131.79	0.13	158.46	0.16	211.80	0.21
400	59.40	0.06	79.72	0.08	100.04	0.10	120.36	0.12	150.84	0.15	181.32	0.18	242.28	0.24
450	67.02	0.07	89.88	0.09	112.74	0.11	135.60	0.14	169.89	0.17	204.18	0.20	272.76	0.27
500	74.64	0.07	100.04	0.10	125.44	0.13	150.84	0.15	188.94	0.19	227.04	0.23	603.58	0.69

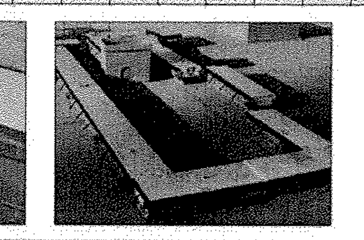

Sealants

Usually the encasement concrete forms a suitable seal for the trench drain system. However, some applications require sealing the joints to minimize seepage leaks. Three options are available for those occasions.

PolySeal 1 is a single-part polyurethane in a standard paper caulk tube, and is used as a general purpose sealant for gray water applications.

PolySeal 2 is a two-part epoxy in a double tube with a static mixing nozzle. PolySeal 2 maintains a permanent flexibility and offers a good range of chemical resistant properties.

PolySeal 3 is a two-part vinylester sealant which sets hard in about 30 minutes. It is recommended for sealing all joints in a PolyChampion installation or where the chemical resistance of PolySeal 2 is insufficient. It is also ideal for bonding all PolyDrain fabrications and miters.

5

Grate Options

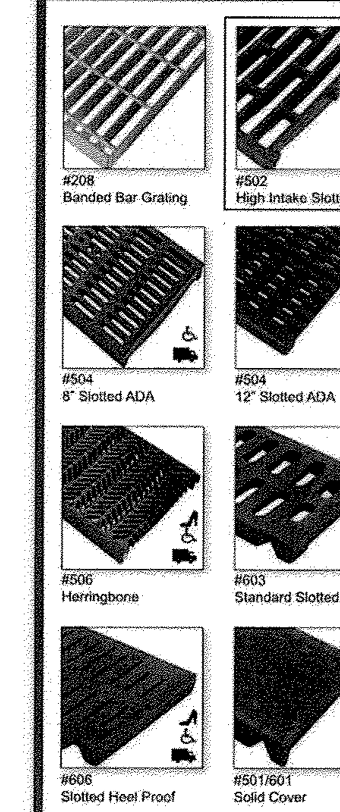

Banded Bar Grating — 208 Series

Part No.	Trench Width	Load Class	Locking Mech.	Grate Length	Angle Size	Weight (lbs)	Open Area (ft² per lin ft)
12.208C.FG	12"	C	T	24"	1.75"	19	0.9

High Intake Slotted — 502 Series

Part No.	Trench Width	Load Class	Locking Mech.	Grate Length	Angle Size	Weight (lbs)	Open Area (ft² per lin ft)
08.502F.GB	8"	F	T	19.64"	2.00"	18	0.47
12.502G.FB	12"	G	T	18"	1.75"	26.1	0.76
12.502E.GB	12"	E	T	19.64"	2"	35	0.81

Slotted ADA — 504 Series

Part No.	Trench Width	Load Class	Locking Mech.	Grate Length	Angle Size	Weight (lbs)	Open Area (ft² per lin ft)
08.504F.FE	8"	F	T	18"	1.75"	21	0.27
12.504G.FB	12"	G	T	18"	1.75"	51	0.25

Slotted ADA — 506 Series

Part No.	Trench Width	Load Class	Locking Mech.	Grate Length	Angle Size	Weight (lbs)	Open Area (ft² per lin ft)
08.506F.GB	8"	F	T	19.64"	2"	24	0.3

Standard Slotted — 603 Series

Part No.	Trench Width	Load Class	Locking Mech.	Grate Length	Angle Size	Weight (lbs)	Open Area (ft² per lin ft)
06.603D.FB	6"	D	N	24"	1.75"	37	0.2
08.603D.FB	8"	D	N	24"	1.75"	41	0.3
10.603D.FB	10"	D	N	24"	1.75"	53	0.4
15.603D.FB	15"	D	N	24"	1.75"	76	0.5
18.603D.FB	18"	D	N	24"	1.75"	103	0.7
24.603D.FB	24"	D	N	24"	1.75"	143	0.9

Slotted Heel Proof — ADA - 606 Series

Part No.	Trench Width	Load Class	Locking Mech.	Grate Length	Angle Size	Weight (lbs)	Open Area (ft² per lin ft)
06.606D.FB	6"	D	N	24"	1.75"	47	0.1
08.606D.FB	8"	D	N	24"	1.75"	61	0.1
10.606D.FB	10"	D	N	24"	1.75"	69	0.1
12.606D.FB	12"	D	N	24"	1.75"	89	0.2
15.606D.FB	15"	D	N	24"	1.75"	69	0.2
18.606D.FB	18"	D	N	24"	1.75"	106	0.5

Solid Cover — 501/601 Series

Part No.	Trench Width	Load Class	Locking Mech.	Grate Length	Angle Size	Weight (lbs)	Open Area (ft² per lin ft)
08.601D.FB	8"	D	N	24"	1.75"	50	-
10.601D.FB	10"	D	N	24"	1.75"	80	-
12.501G.FB	12"	G	T	17.88"	1.75"	60	-
15.601D.FB	15"	D	N	24"	1.75"	95	NA
18.601D.FB	18"	D	N	24"	1.75"	120	-
24.601D.FB	24"	D	N	24"	2"	181	-

= Vehicular Traffic
= ADA Compliant
= Heel Proof
Locking Mechanism
N = Non-Locking
T = Toggle

Load Class	A	B	C	D	E	F	G
Application	Light Duty Pedestrian Traffic	Medium Duty Sidewalks & Residential Parking	Heavy Duty Commercial	Extra Heavy Duty Roads & Highways	Extreme Heavy Duty Hard Tire Forklift, Heavy Vehicles	Airport Rated Municipal & Regional Airports	Airport Rated International Airports or Aircraft Port Facilities
Application Proof Load (psi)	75psi	150psi	310psi	494psi	620psi	1235psi	2469psi
Typical Standard	Pedestrian Ind. Std.	Non-Commercial Passenger	A-A60005 Federal	AASHTO M306 H-20	AASHTO M306 HS-25	Airport 100,000 lbs FAA AC-150	Airport / Port 200,000 lbs Ind. Std.

6

2/18 TRENCH DRAIN
NOT TO SCALE

NOTE:
THE CONTRACTOR SHALL USE THIS PRODUCT OR APPROVED EQUAL, AND SHALL PROVIDE A SHOP DRAWING FOR APPROVAL PRIOR TO INSTALLATION.

NYLOPLAST DRAIN BASIN WITH STANDARD GRATE

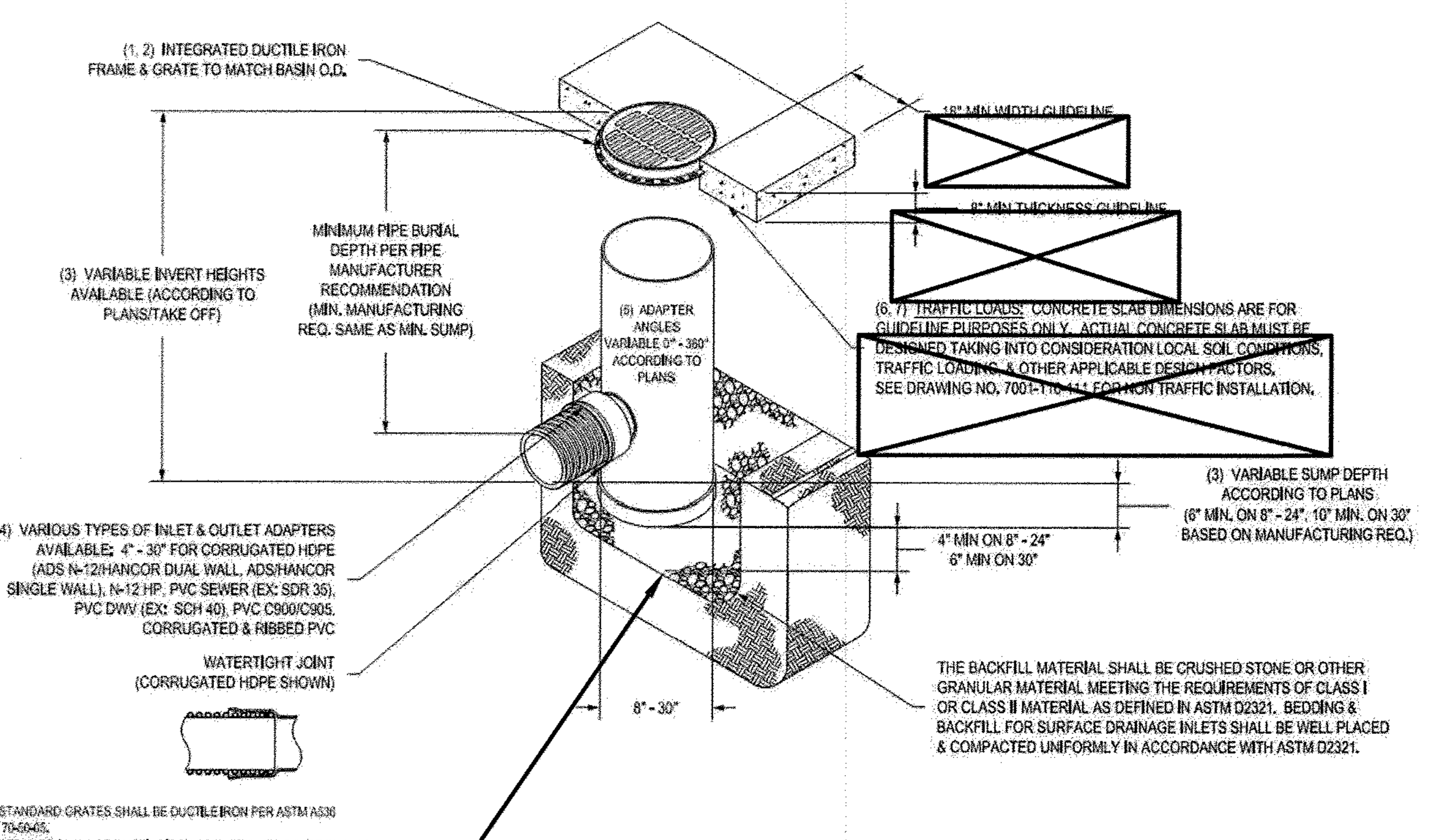

1 - 8" - 30" STANDARD GRATES SHALL BE DUCTILE IRON PER ASTM A536 GRADE 70-50-05.
2 - 12" - 30" FRAMES SHALL BE DUCTILE IRON PER ASTM A536 GRADE 70-50-05. 8" & 10" STANDARD GRATES FIT DIRECTLY ONTO DRAIN BASINS WITH THE USE OF A PVC BODY TOP. SEE DRAWING NO. 7001-110-045.
3 - DRAIN BASIN TO BE CUSTOM MANUFACTURED ACCORDING TO PLAN DETAILS. RISERS ARE NEEDED FOR BASINS OVER 84" DUE TO SHIPPING RESTRICTIONS. SEE DRAWING NO. 7001-110-065.
4 - DRAINAGE CONNECTION STUB JOINT TIGHTNESS SHALL CONFORM TO ASTM D3212 FOR CORRUGATED HDPE (ADS N-12/HANCOR DUAL WALL), N-12 HP, & PVC SEWER (4" - 24").
5 - ADAPTERS CAN BE MOUNTED ON ANY ANGLE 0° TO 360°. TO DETERMINE MINIMUM ANGLE BETWEEN ADAPTERS SEE DRAWING NO. 7001-110-012.
6 - 12" - 30" STANDARD GRATES SHALL MEET H-20 LOAD RATING.
7 - 8" & 10" STANDARD GRATES ARE RATED FOR LIGHT DUTY APPLICATIONS ONLY. NO CONCRETE COLLAR NEEDED FOR LIGHT DUTY RATING.

DRAIN BASIN TO HAVE AN OPEN BOTTOM WHERE NOTED ON STRUCTURE SCHEDULE.

THIS PRINT DISCLOSES SUBJECT MATTER IN WHICH NYLOPLAST HAS PROPRIETARY RIGHTS. THE RECEIPT OR POSSESSION OF THIS PRINT DOES NOT CONFER, TRANSFER, OR LICENSE THE USE OF THE DESIGN OR TECHNICAL INFORMATION SHOWN HEREIN REPRODUCTION OF THIS PRINT OR ANY INFORMATION CONTAINED HEREIN, OR MANUFACTURE OF ANY ARTICLE HEREFROM, FOR THE DISCLOSURE TO OTHERS IS FORBIDDEN, EXCEPT BY SPECIFIC WRITTEN PERMISSION FROM NYLOPLAST. ©2011 NYLOPLAST	DRAWN BY EBC DATE 1-23-08 REVISED BY CCA DATE 12-29-11 DWG SIZE A	MATERIAL PROJECT NO./NAME SCALE 1:40 SHEET 1 OF 1	Nyloplast 3130 VERONA AVE BUFORD, GA 30518 PHN (770) 932-2443 FAX (770) 932-2490 www.nyloplast-us.com TITLE DRAIN BASIN WITH STANDARD GRATE QUICK SPEC INSTALLATION DETAIL DWG NO. 7001-110-144 REV G

3/18 NYLOPLAST DRAIN BASIN
NOT TO SCALE

NOTE:
THE CONTRACTOR SHALL USE THIS PRODUCT OR APPROVED EQUAL, AND SHALL PROVIDE A SHOP DRAWING FOR APPROVAL PRIOR TO INSTALLATION.

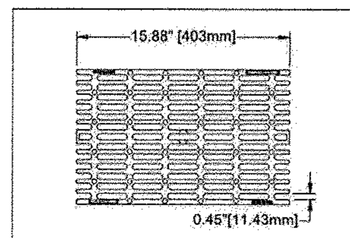

Plan Notes
Series Number: PP08-08.504E.FE-F21E
1. Grates:
   - Ductile Iron per ASTM A536-84 (Black Polymer Coated)
   - Open Area: 0.39 FT² per Lineal Foot [0.12 M² per Lineal Meter]
   - Load Rating: 620 PSI (AASHTO M-306 Test Method)
   - Made in U.S.A.
2. Concrete: Concrete Thickness and Reinforcement per Structural Engineer's Specification for the Application.

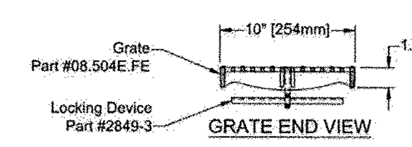

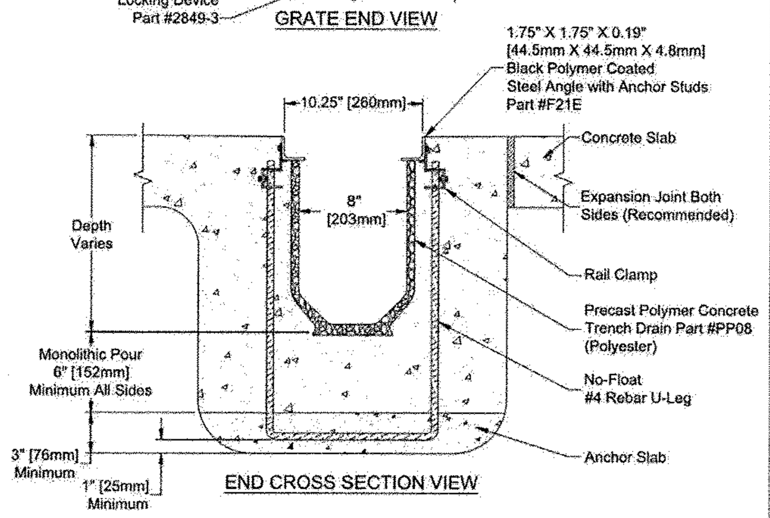

Copyright © 2010 ABT, Inc.

ABT, INC. P.O. BOX 837, 259 MURDOCK ROAD TROUTMAN, NC 28166 (704) 528-9806	PDX 08 - 8" [203mm] ID Precast Trench Drain with Longitudinal Slot ADA Grate
SERIES:	PP08-08.504E.FE-F21E REV: 01

Proprietary rights of ABT, Inc. are included in the information disclosed herein. The recipient, by accepting this document, agrees that neither this document nor the information disclosed herein nor any part thereof shall be copied, reproduced or transferred to others for manufacturing or for any other purpose except as specifically authorized in writing by ABT, Inc.

DISCLAIMER: The customer and the customer's architects, engineers, consultants and other professionals are completely responsible for the selection, installation, and maintenance of any product purchased from ABT, and EXCEPT AS EXPRESSLY PROVIDED IN ABT'S STANDARD WARRANTIES, ABT MAKES NO WARRANTY, EXPRESS OR IMPLIED, AS TO THE SUITABILITY, DESIGN, MERCHANTABILITY, OR FITNESS OF THE PRODUCT FOR CUSTOMER'S APPLICATION. Copies of ABT's standard warranties are available upon request.

4/18 PRECAST TRENCH DRAIN
NOT TO SCALE

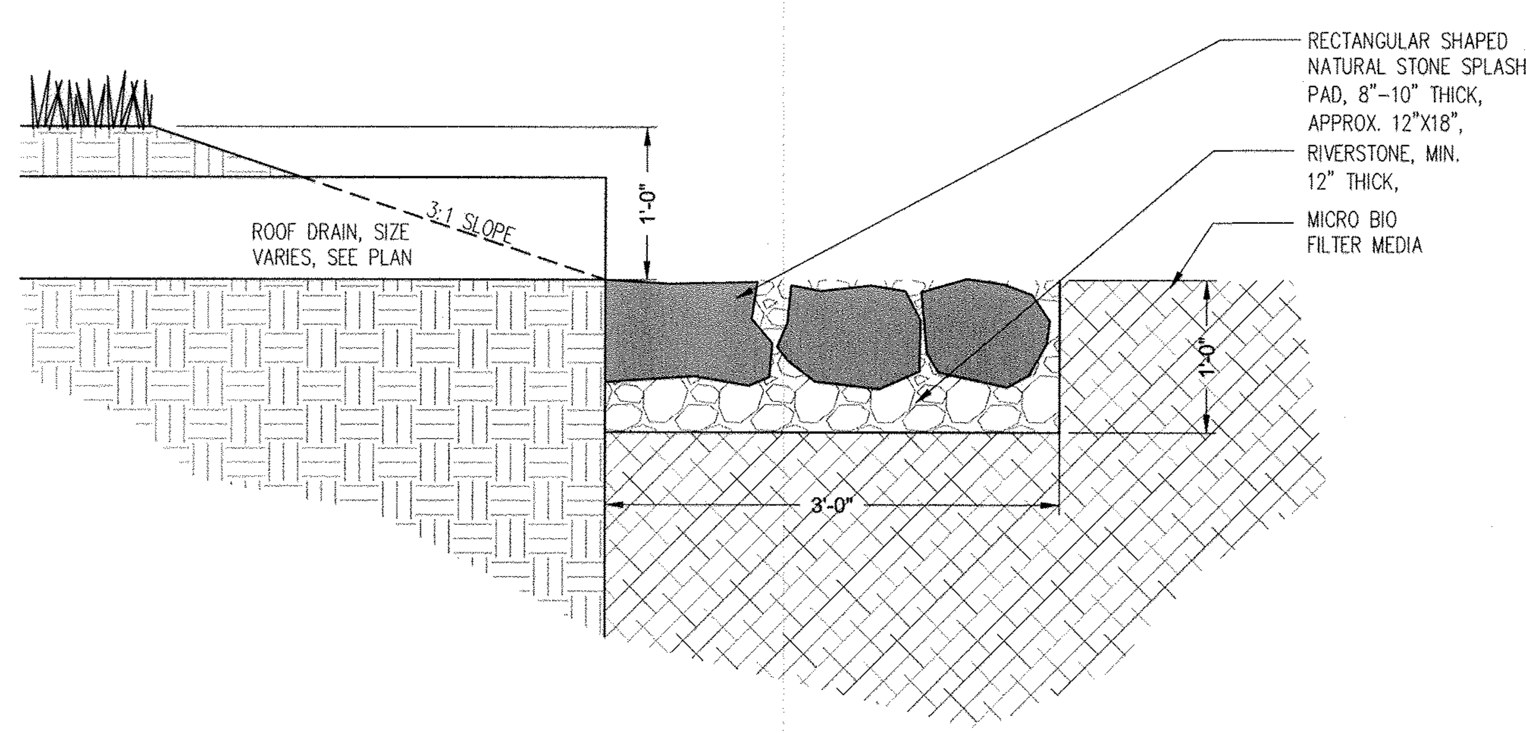

5/18 OUTFALL PROTECTION - SECTION VIEW
NOT TO SCALE

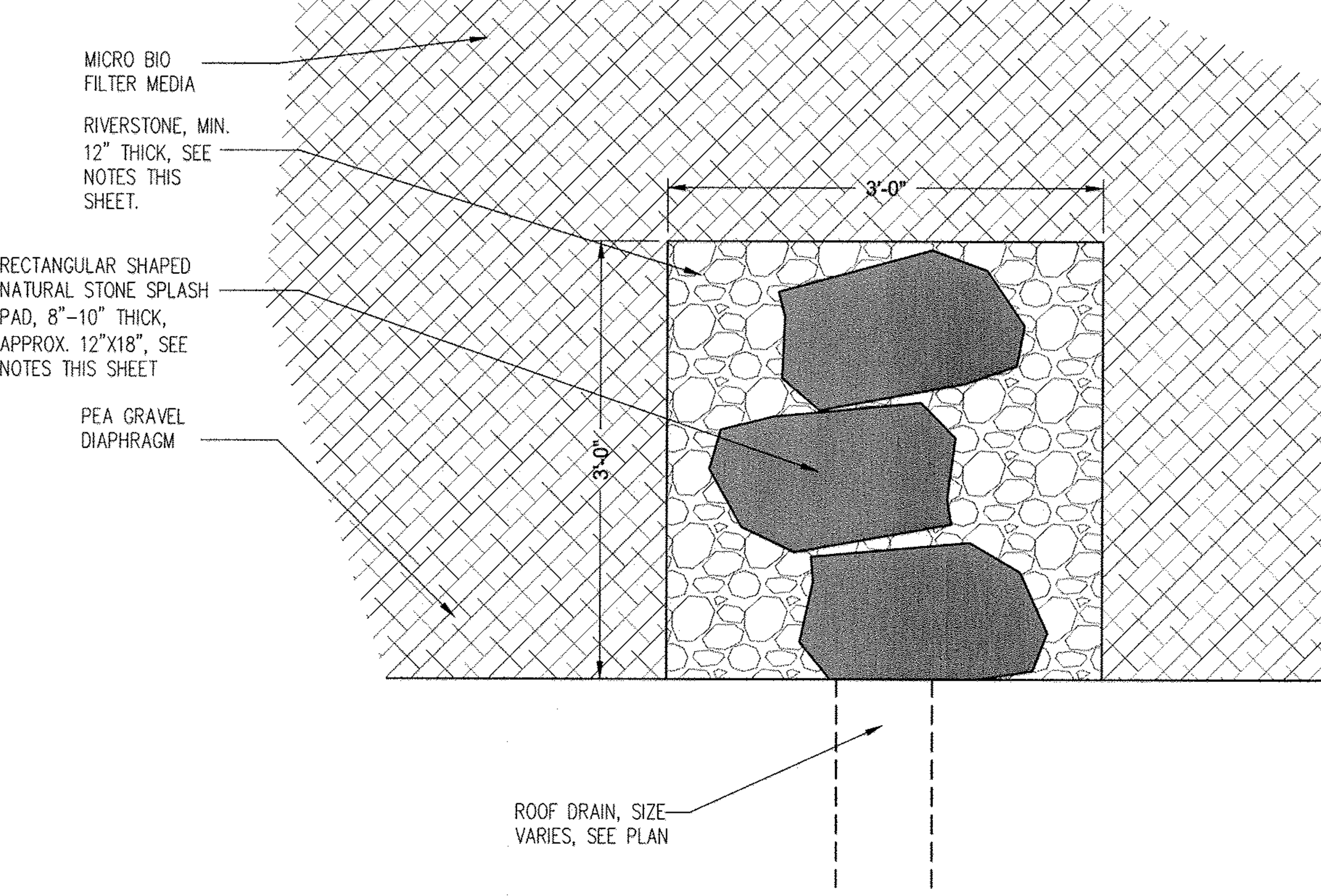

6/18 OUTFALL PROTECTION - PLAN VIEW
NOT TO SCALE

NOTES:
1. OUTFALL PIPE SHALL BE CUT FLUSH WITH SLOPE OF MICRO BIORETENTION FACILITY.
2. STONE SPLASH PAD: STONE SPLASH PADS SHALL CONSIST OF NATURAL ROCKS, GREY OR BROWN IN COLOR, SHALL BE 8-10" THICK, AND APPROXIMATELY 12"X18" IN SIZE. CONTRACTOR SHALL SUBMIT SAMPLE PHOTOS FOR APPROVAL.
3. RIVERSTONE: RIVERSTONE SHALL CONSIST OF WASHED GRANITE STONE IN SHADES OF GREY, 2-4" IN DIAMETER. RIVESTONE SHALL BE COMPOSED OF SMOOTH ROUNDED ROCK, AND SHALL BE FREE OF FINES, AND ALL ORGANIC AND IN ORGANIC DEBRIS. CONTRACTOR SHALL SUBMIT SAMPLE FOR APPROVAL.
4. PEA GRAVEL: PEA GRAVEL SHALL BE NO. 8 OR NO. 9, CLEAN WASHED GRAVEL.

APPROVED : DEPARTMENT OF PLANNING AND ZONING

CHIEF, DEVELOPMENT ENGINEERING DIVISION	DATE 7-19-16
CHIEF, DIVISION OF LAND DEVELOPMENT	DATE 8-16-16
DIRECTOR	DATE 8-16-16

DATE	NO.	REVISION	BY

DEVELOPER
HOWARD COUNTY
DEPARTMENT OF PUBLIC WORKS
BUREAU OF FACILITIES
9250 BENDIX ROAD
COLUMBIA, MARYLAND 21045
ATTN: MARK STROMDAHL
PHONE: 410-313-5757

OWNER
HOWARD COUNTY
DEPARTMENT OF PUBLIC WORKS
BUREAU OF FACILITIES
9250 BENDIX ROAD
COLUMBIA, MARYLAND 21045
ATTN: MARK STROMDAHL
PHONE: 410-313-5757

PROJECT
GREEN BUILDING
HCLS ELKRIDGE BRANCH AND 50+ CENTER

AREA
TAX MAP 38, PARCEL 'A' PLAT ~~23870~~ 23869 ZONED B-1 & R-12
GRID NO. 7 1st ELECTION DISTRICT
6540 WASHINGTON BOULEVARD
ELKRIDGE, MARYLAND 21075-0000
HOWARD COUNTY, MARYLAND

TITLE
STORMWATER MANAGEMENT AND SITE DETAILS

Pennoni Associates Inc.
Engineers • Surveyors • Planners
Landscape Architects
8818 Centre Park Drive, Suite 200 Columbia, MD 21045
T 410.997.8900 F 410.997.9282

SEAL
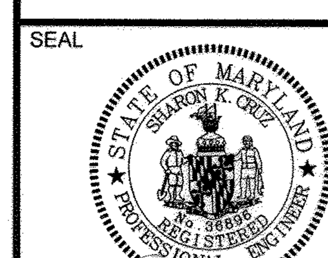

BY: 6-29-16
"PROFESSIONAL CERTIFICATION. I HEREBY CERTIFY THAT THESE DOCUMENTS WERE PREPARED OR APPROVED BY ME, AND THAT I AM A DULY LICENSED PROFESSIONAL ENGINEER UNDER THE LAWS OF THE STATE OF MARYLAND, LICENSE NO. 36896, EXPIRATION DATE: 2-15-2017"

DESIGNED BY : PJS/JSN
DRAWN BY: PJS/JSN
PROJECT NO : GRIM1402
DATE : JUNE 20,2016
SCALE : AS SHOWN
DRAWING NO. 18 OF 50

P:\PROJECTS\GRIM\GRIM1402-ELKRIDGE LIBRARY\DESIGN_PUBLISH\SITE DEVELOPMENT PLAN\GRIM1402-SDP18

SDP-16-038

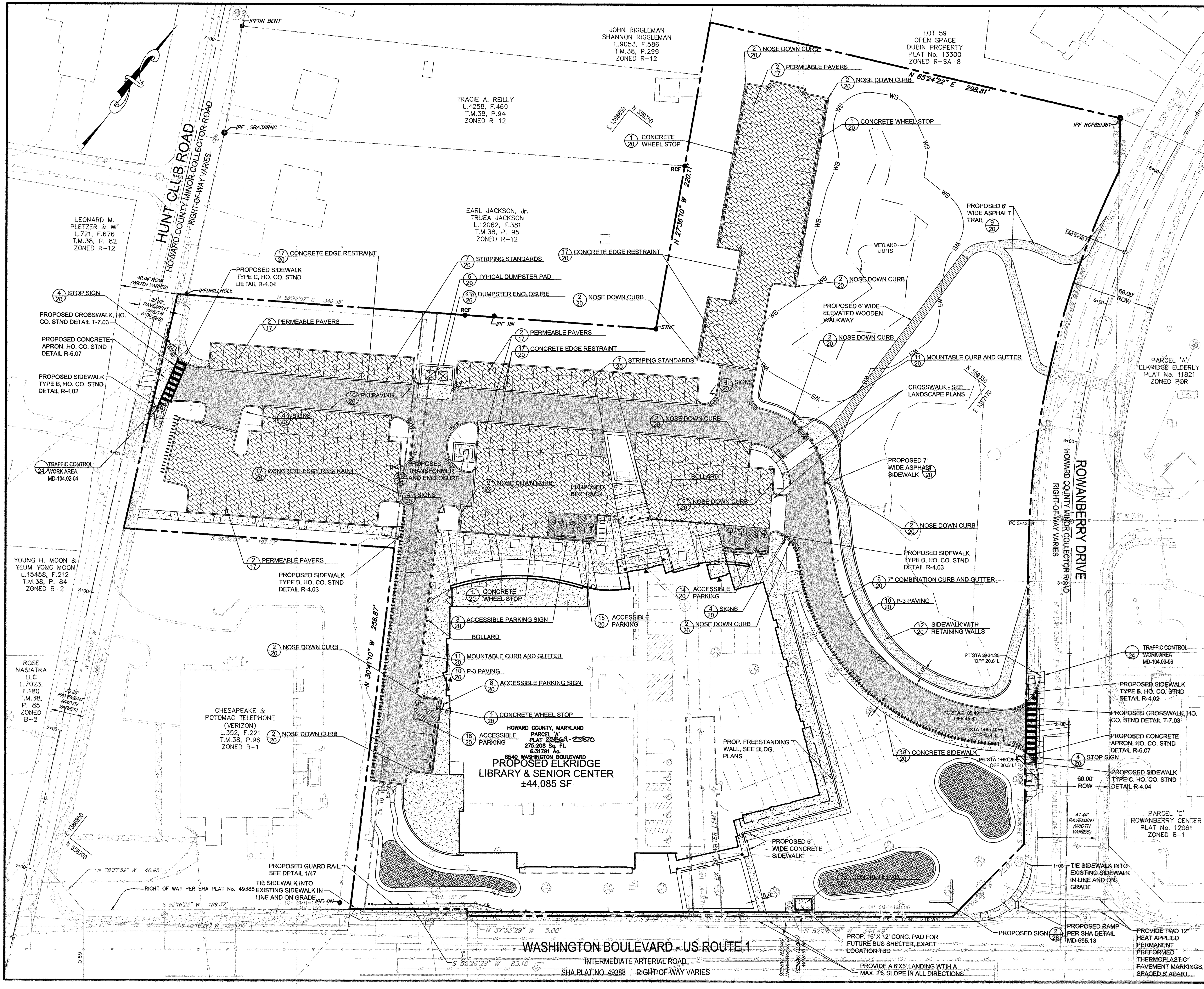

LEGEND

PROPERTY LINE AND RIGHT-OF-WAY	
EXISTING BUILDING	
EXISTING 1' CONTOUR	154
EXISTING 5' CONTOUR	155
EXISTING WETLANDS	
EXISTING WETLAND BUFFER	WB
PROPOSED MICRO-BIORETENTION FACILITY	
PROP. CONCRETE SIDEWALK	
PROP. ASPHALT SIDEWALK	
PROPOSED PERMEABLE PAVERS	
PROPOSED ASPHALT PAVING	
PROPOSED CONCRETE PAVING	
PROPOSED REVERSE CURB	
PROPOSED FLUSH CURB, HOWARD COUNTY STANDARD DETAIL R-3.07	

NOTES

1. REFER TO LANDSCAPE ARCHITECTURE PLANS DETAILED PAVING PLAN.
2. ALL CURB RADII ARE 5' UNLESS SPECIFIED.
3. SEE LANDSCAPE ARCHITECTURE PLANS FOR BOLLARD AND BIKE RACK DETAILS.

GRAPHIC SCALE 1"=30'

15' 0' 30' 60'

APPROVED : DEPARTMENT OF PLANNING AND ZONING

CHIEF, DEVELOPMENT ENGINEERING DIVISION — DATE 7.19.16

CHIEF, DIVISION OF LAND DEVELOPMENT — DATE 8-16-16

DIRECTOR — DATE 8-16-16

DATE	NO.	REVISION	BY

DEVELOPER
HOWARD COUNTY
DEPARTMENT OF PUBLIC WORKS
BUREAU OF FACILITIES
9250 BENDIX ROAD
COLUMBIA, MARYLAND 21045
ATTN: MARK STROMDAHL
PHONE: 410-313-5757

OWNER
HOWARD COUNTY
DEPARTMENT OF PUBLIC WORKS
BUREAU OF FACILITIES
9250 BENDIX ROAD
COLUMBIA, MARYLAND 21045
ATTN: MARK STROMDAHL
PHONE: 410-313-5757

PROJECT
GREEN BUILDING
HCLS ELKRIDGE BRANCH
AND 50+ CENTER

AREA
TAX MAP 38, PARCEL 'A' PLAT 23869 ZONED B-1 & R-12
GRID NO. 7 1st ELECTION DISTRICT
6540 WASHINGTON BOULEVARD
ELKRIDGE, MARYLAND 21075-0000
HOWARD COUNTY, MARYLAND

TITLE

PAVING, STRIPING, AND SIGNAGE PLAN

Pennoni Associates Inc.
Engineers • Surveyors • Planners
Landscape Architects
8818 Centre Park Drive, Suite 200 Columbia, MD 21045
T 410.997.8900 F 410.997.9282

SEAL
STATE OF MARYLAND
SHARON K. CRUZ
No. 36896
REGISTERED PROFESSIONAL ENGINEER

BY: 6-24-16

"PROFESSIONAL CERTIFICATION. I HEREBY CERTIFY THAT THESE DOCUMENTS WERE PREPARED OR APPROVED BY ME, AND THAT I AM A DULY LICENSED PROFESSIONAL ENGINEER UNDER THE LAWS OF THE STATE OF MARYLAND, LICENSE NO. 36896, EXPIRATION DATE: 2-15-2017"

DESIGNED BY : PJS/JSN
DRAWN BY: PJS/JSN
PROJECT NO : GRIM1402
DATE : JUNE 20,2016
SCALE : 1" = 30'
DRAWING NO. 19 OF 50

P:\PROJECTS\GRIM\GRIM1402-ELKRIDGE LIBRARY\DESIGN_PUBLISH\SITE DEVELOPMENT PLAN\GRIM1402-SDP19

SDP-16-038

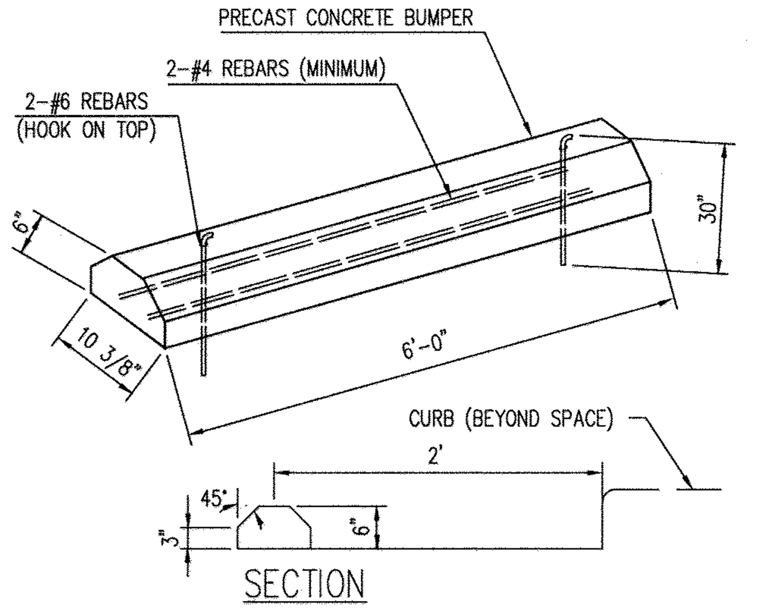

1/20 CONCRETE WHEEL STOP
NOT TO SCALE

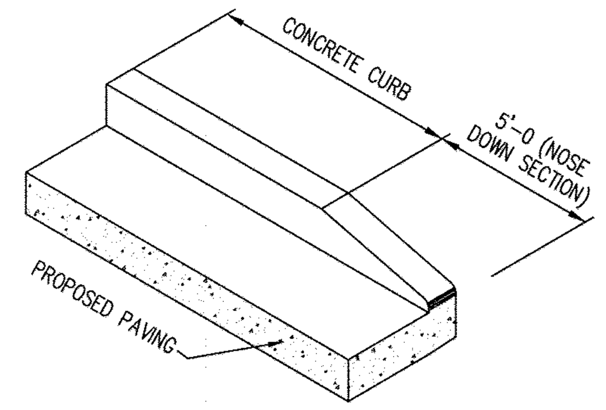

HOWARD COUNTY DESIGN MANUAL, VOLUME IV, STANDARD SPECIFICATIONS AND DETAILS FOR CONSTRUCTION (DETAIL R-3.02).

2/20 NOSE DOWN CURB
NOT TO SCALE — HC DPW STD. R-3.02

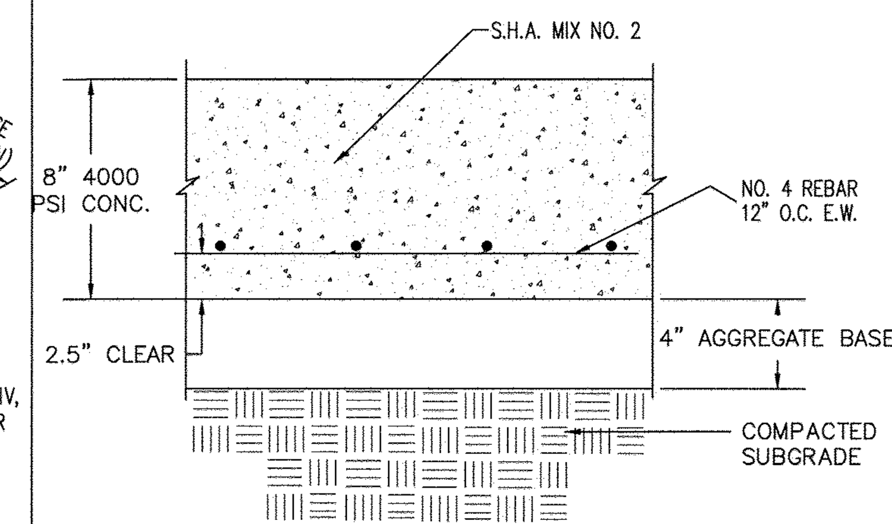

NOTES:

1. ALL FINISHED DRIVEWAY AND PARKING SUBGRADE SHOULD BE CONSTRUCTED AND COMPLY WITH "SITE PREPARATION" SPECIFICATION OF THE GEOTECHNICAL REPORT.
2. PRIOR TO PLACEMENT OF STONE BASE, THE ENTIRE SUBGRADE SHOULD BE PROOFROLLED WITH A 30-TON LOADED DUMP TRUCK. ANY SOFT AND UNSTABLE SUBGRADE SHOULD BE CORRECTED.
3. AFTER APPROVAL OF THE SUBGRADE, THE PAVEMENT SECTION SHALL BE CONSTRUCTED. THE PAVEMENT SECTION SHOULD FOLLOW THE SPECIFICATIONS IN THE GEOTECHNICAL REPORT.

3/20 CONCRETE DUMPSTER PAD
NOT TO SCALE

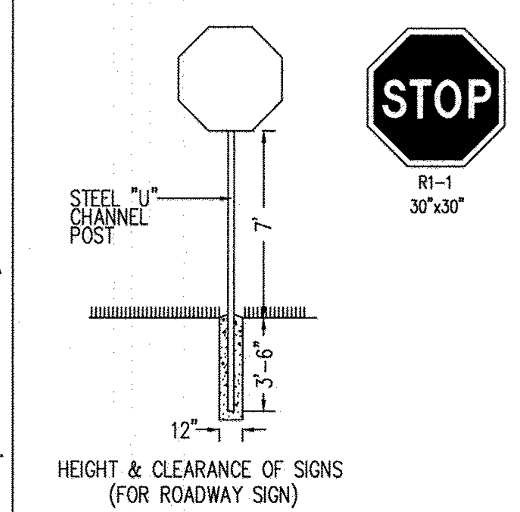

4/20 STOP SIGN
NOT TO SCALE

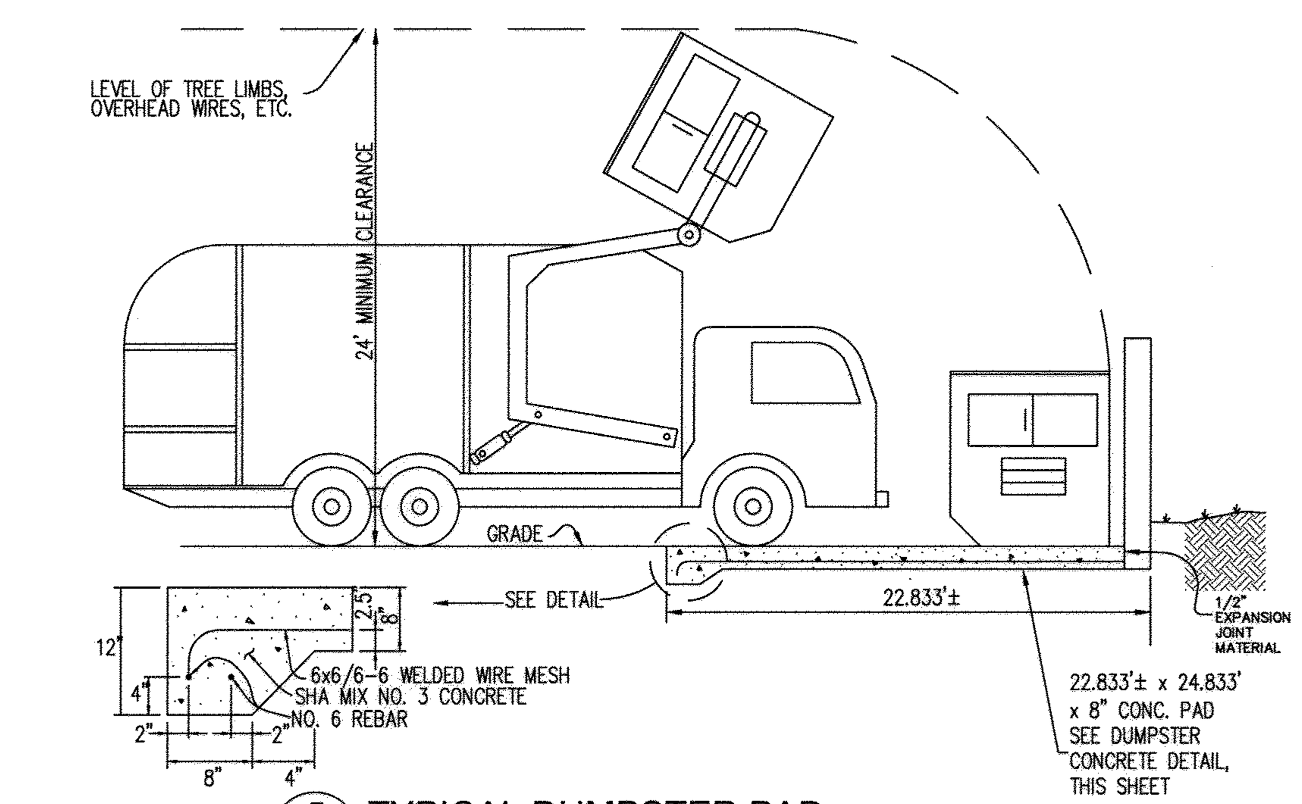

5/20 TYPICAL DUMPSTER PAD
NOT TO SCALE

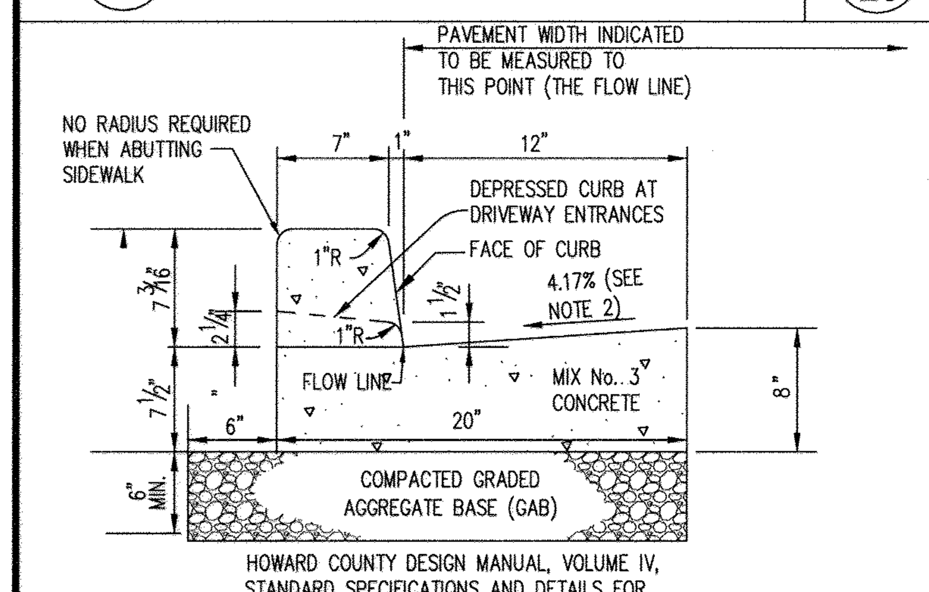

HOWARD COUNTY DESIGN MANUAL, VOLUME IV, STANDARD SPECIFICATIONS AND DETAILS FOR CONSTRUCTION (DETAIL R-3.01).

NOTES:

1. A REVERSE GUTTER PAN SHALL HAVE A GUTTER SLOPE OF 4.17% AWAY FROM THE FLOW LINE, AND SHALL NOT BE USED WHERE THIS DRAINAGE CREATES A HAZARDOUS CONDITION.

2. GUTTER PAN AT THE MEDIAN EDGE OF INTERMEDIATE ARTERIALS OR THE HIGH SIDE OF SUPERELEVATED SECTIONS SHALL BE SLOPED AT THE SAME RATE AND IN THE SAME DIRECTION AS THE PAVEMENT. MATCH PAVEMENT CROSS SLOPE WHEN CURB IS LOCATED ON THE LOW SIDE OF SUPERELEVATED SECTION AND THE RATE OF SUPERELEVATION IS GREATER THAN 3% FOR MODIFIED CURB & GUTTER.

3. A MINIMUM OF TWO (2) FEET OF COMPACTED STABILIZED EARTH, OR EQUIVALENT, SHALL SUPPORT THE ENTIRE BACK OF CURB.

4. POSITIVE DRAINAGE SHALL BE PROVIDED BOTH BEHIND THE CURB AND ALONG THE GUTTER AND FLOW LINE.

6/20 7" COMBINATION CURB AND GUTTER
NOT TO SCALE — HC DPW STD. R-3.01

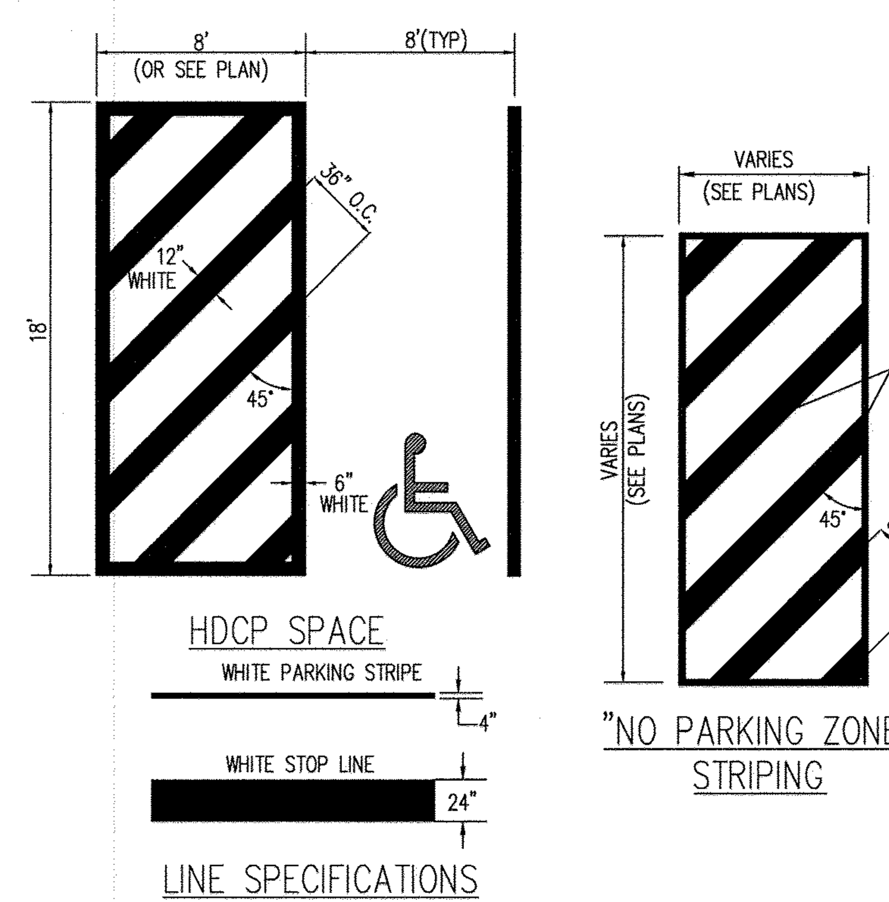

7/20 STRIPING STANDARDS
NOT TO SCALE

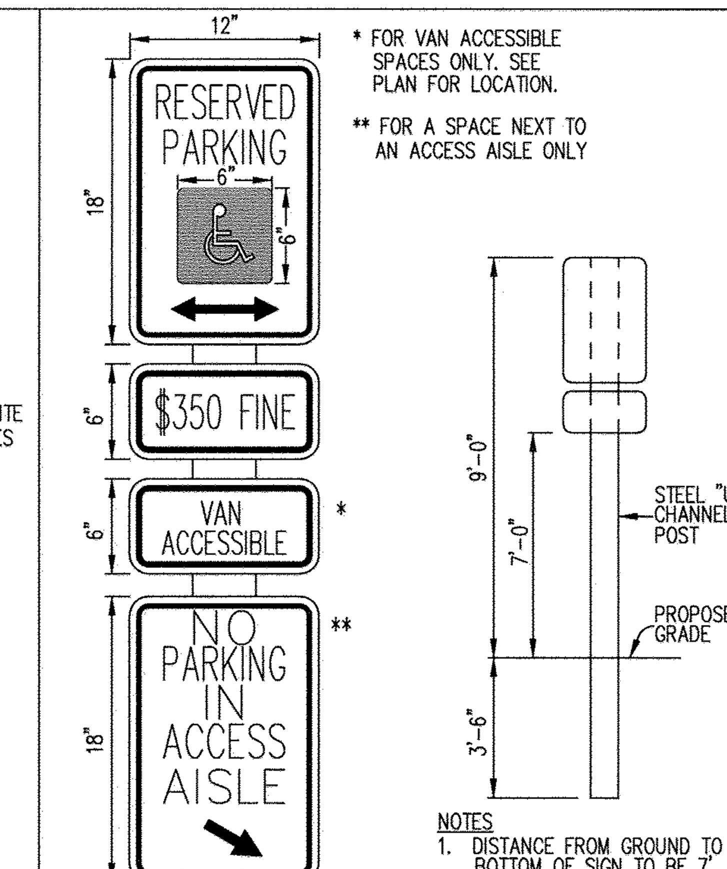

* FOR VAN ACCESSIBLE SPACES ONLY. SEE PLAN FOR LOCATION.

** FOR A SPACE NEXT TO AN ACCESS AISLE ONLY

COLOR
LEGEND AND BORDER - GREEN
WHITE SYMBOLS ON BLUE BACKGROUND
BACKGROUND - WHITE

NOTES
1. DISTANCE FROM GROUND TO BOTTOM OF SIGN TO BE 7'.
2. CONTRACTOR TO VERIFY FINE AMOUNT PRIOR TO SIGN INSTALLATION

8/20 ACCESSIBLE PARKING SIGN
NOT TO SCALE

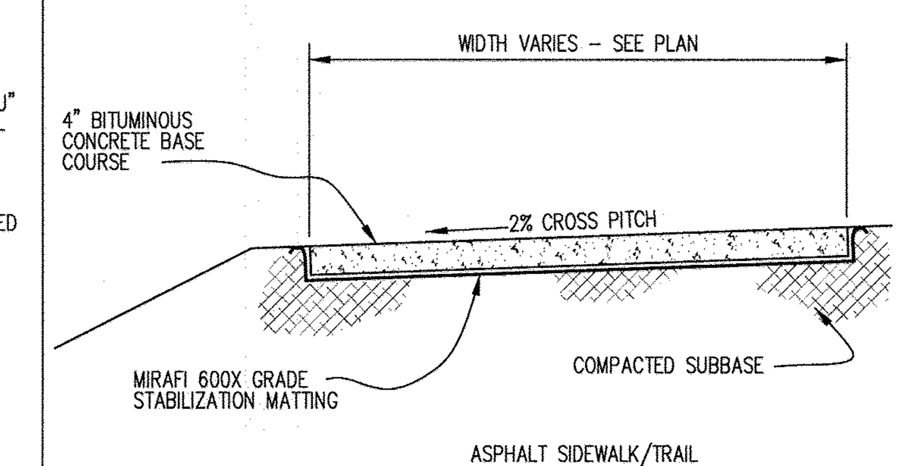

9/20 ASPHALT SIDEWALK/TRAIL
NOT TO SCALE

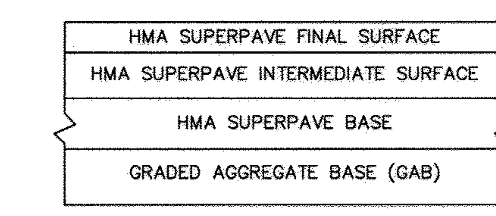

HOWARD COUNTY DESIGN MANUAL VOLUME IV-STANDARD SPECIFICATIONS AND DETAILS FOR CONSTRUCTION (DRAWING R-2.01)

NOTE:
THE PAVING SECTION SHOWN HAS NOT BEEN DESIGNED FOR ACTUAL SOIL CONDITIONS, OR IN PLACE COMPACTION RESULTS. IT IS RECOMMENDED THAT THE USER CONSULT WITH A LICENSED PROFESSIONAL GEOTECHNICAL ENGINEER FOR A SPECIFIC PAVING DESIGN BASED ON THE APPROPRIATE PARAMETERS DURING CONSTRUCTION AND PRIOR TO INSTALLATION OF THIS PAVING SECTION.

10/20 P-3 PAVING (ON SITE PAVING ONLY)
NOT TO SCALE — HC DPW STD. R-2.01

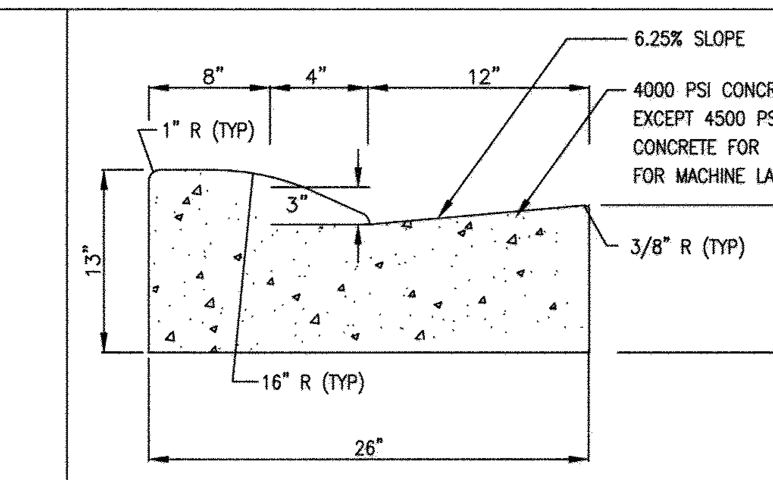

11/20 MOUNTABLE CURB AND GUTTER
NOT TO SCALE

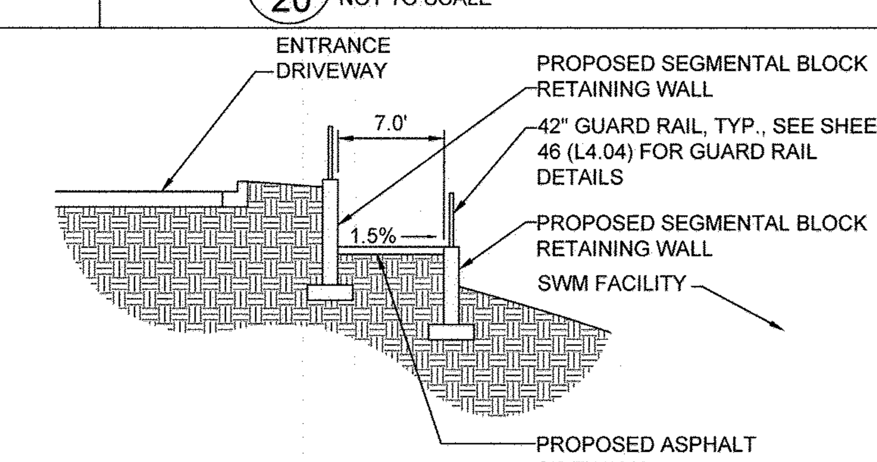

12/20 SIDEWALK WITH RETAINING WALLS - TYPICAL SECTION
SCALE" 1"=10'

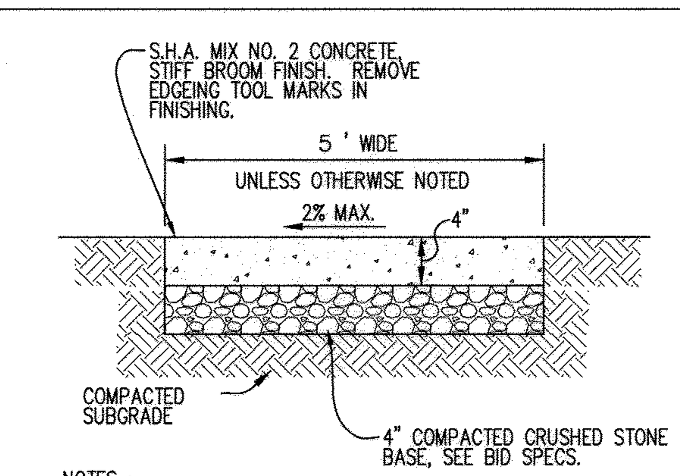

NOTES :
1. PROVIDE LATITUDINAL EXPANSION JOINTS AT 15' O.C. (MAX.)
2. PROVIDE CONTRACTION (DUMMY) JOINT AT 5' O.C. INTERVALS BETWEEN EXPANSION JOINTS. SIDEWALK TO BE SCRIBED IN 5' MAX. SQUARES. CONTRACTOR TO AVOID THE CREATION OF SMALL SCORED AREAS THAT WILL CRACK AND BREAK OFF FROM SIDWALK.
3. SIDEWALK CROSS SLOPE SHALL NOT EXCEED 2%.
4. CONCRETE SHALL BE 3,000 PSI.

13/20 CONCRETE SIDEWALK
NOT TO SCALE

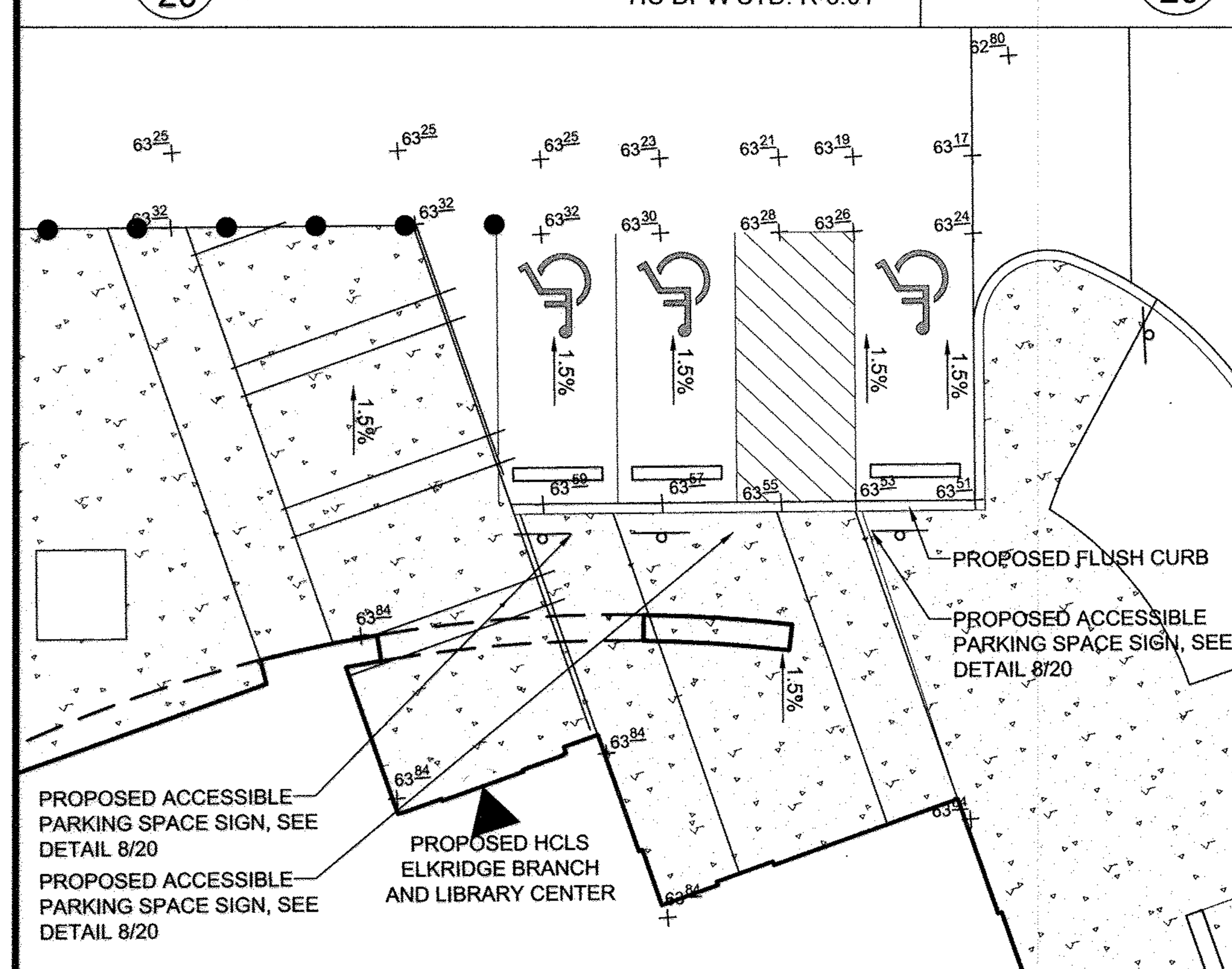

14/20 ACCESSIBLE PARKING
SCALE: 1"=10'

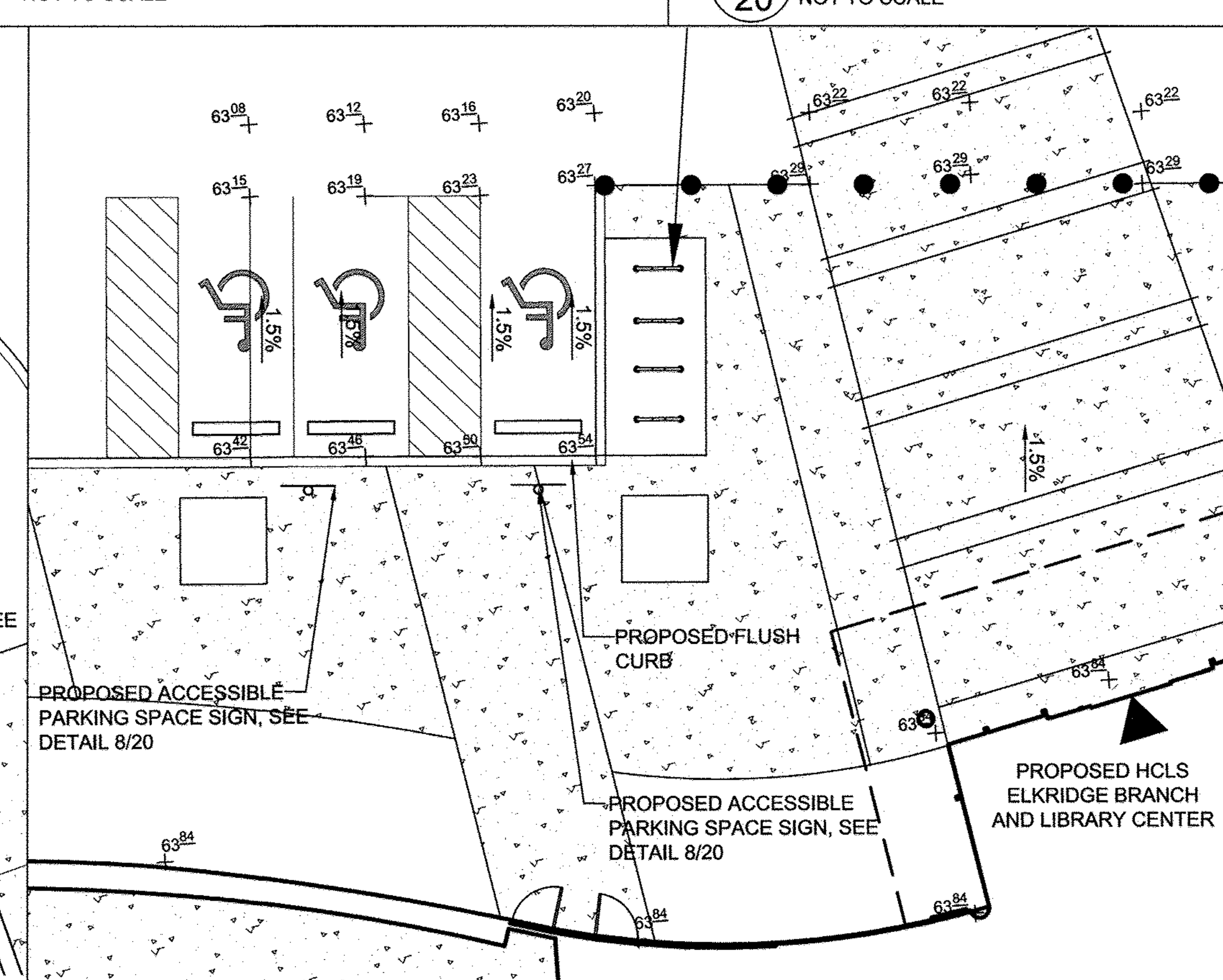

15/20 ACCESSIBLE PARKING
SCALE: 1"=10'

ACCESSIBILITY NOTES:

1. ACCESSIBLE ROUTE SHALL BE PROVIDED BETWEEN HANDICAPPED PARKING OR PUBLIC RIGHT OF WAYS TO THE MAIN BUILDING ENTRANCE IN ACCORDANCE WITH CURRENT ADA AND LOCAL STANDARDS. ALL HANDICAPPED RAMPS SHALL BE CONSTRUCTED ACCORDING TO CURRENT ADA AND LOCAL STANDARDS. EXCEPT AS SUPERSEDED IN CURRENT ADA AND LOCAL STANDARDS THE FOLLOWING SHALL APPLY:
A) MAXIMUM SIDEWALK CROSS SLOPES SHALL BE 2%,
B) A MINIMUM 5'X 5' LANDING AREA WITH A MAXIMUM SLOPE IN ANY DIRECTION OF 2% SHALL BE PROVIDED AT ALL CHANGES IN DIRECTION, TOPS AND BOTTOMS OF RAMPS, AND BUILDING EGRESS POINTS
C) ALL HANDICAPPED PARKING SHALL BE SLOPED NO GREATER THAN 2% IN ANY DIRECTION, INCLUDING A 5' WIDE AREA BEHIND THE PARKING SPACES.
D) AN ACCESS ROUTE FROM THE PARKING SPACE(S) TO THE MAIN BUILDING ENTRANCE SHALL BE PROVIDED. ALL SLOPES ALONG THE DIRECTION OF TRAVEL SHALL NOT EXCEED 1:20 UNLESS THEY FALL UNDER CONDITION B) ABOVE. SLOPES IN EXCESS OF 1:20 EXCEPT FOR CURB RAMPS, REQUIRE A HANDRAIL MEETING ADA REQUIREMENTS.

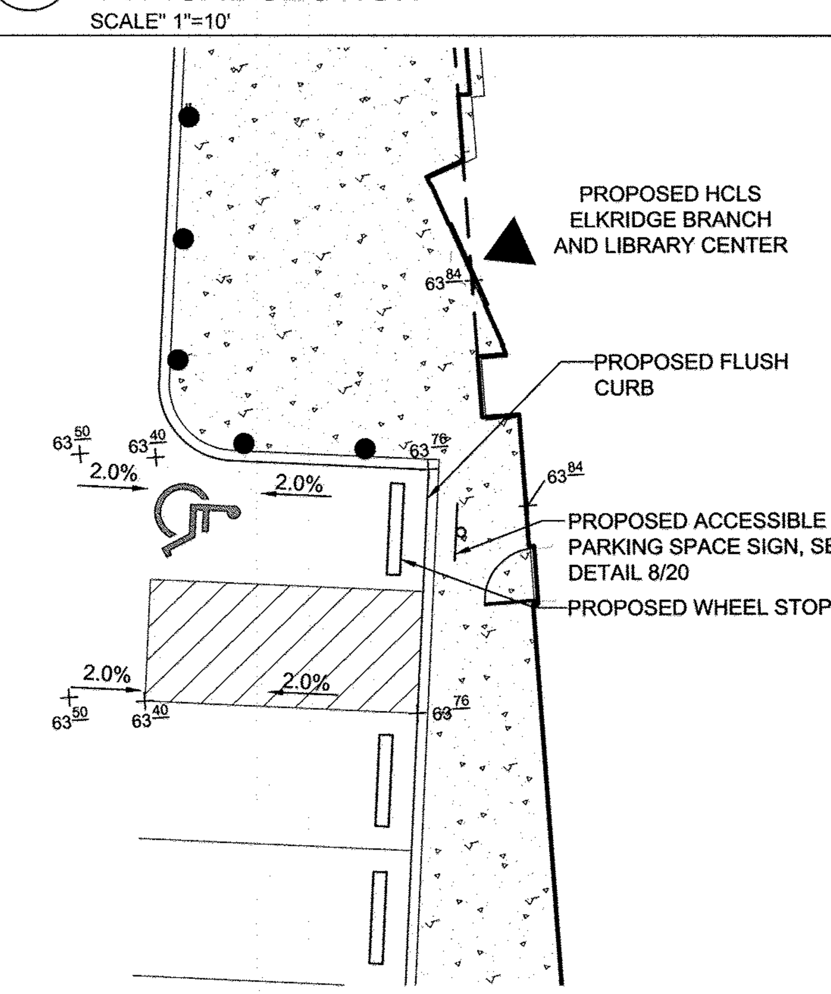

18/20 ACCESSIBLE PARKING
SCALE: 1"=10'

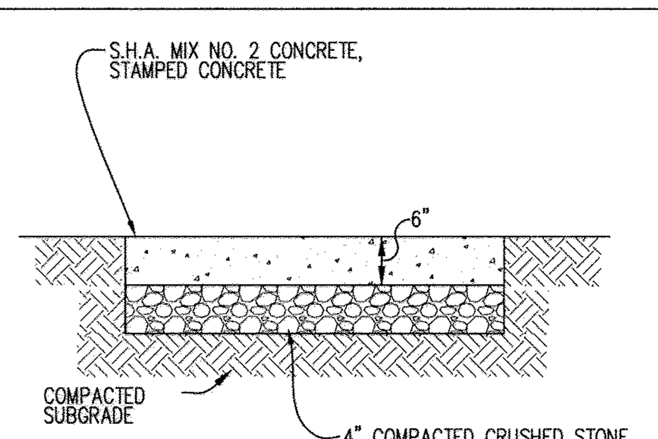

NOTES :

1. PROVIDE LATITUDINAL EXPANSION JOINTS AT 15' O.C. (MAX.)
2. PROVIDE CONTRACTION (DUMMY) JOINT AT 5' O.C. INTERVALS BETWEEN EXPANSION JOINTS. CONTRACTOR TO AVOID THE CREATION OF SMALL SCORED AREAS THAT WILL CRACK AND BREAK OFF.
4. CONCRETE SHALL BE 3,000 PSI.
5. COLOR TO BE PROVIDED BY ARCHITECT FROM MANUFACTURER'S FULL RANGE OF COLORS. PATTERN IS SHOWN ON LANDSCAPE DRAWINGS. CONTRACTOR TO PROVIDE LAYOUT DRAWINGS FOR REVIEW AND APPROVAL BY DESIGN TEAM.

19/20 STAMPED CONCRETE
NOT TO SCALE

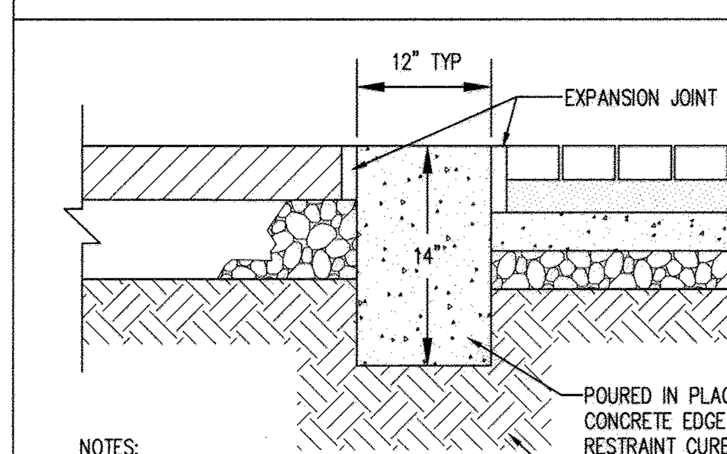

NOTES:

1. TOP OF CONCRETE EDGE RESTRAINT CURB TO BE FLUSH WITH CONCRETE PAVERS.
2. TOP OF CONCRETE EDGE RESTRAINT TO BE BRUSHED FOR A NON-SLIP SURFACE.
3. PROVIDE TOOLED CONTROL JOINTS SPACED 5' APART ALONG LENGTH OF CONCRETE EDGE RESTRAINT.

17/20 CONCRETE EDGE RESTRAINT
NOT TO SCALE

APPROVED : DEPARTMENT OF PLANNING AND ZONING

CHIEF, DEVELOPMENT ENGINEERING DIVISION	DATE 7-19-16
CHIEF, DIVISION OF LAND DEVELOPMENT	DATE 8-16-16
DIRECTOR	DATE 8-16-16

DATE	NO.	REVISION	BY

DEVELOPER: HOWARD COUNTY, DEPARTMENT OF PUBLIC WORKS, BUREAU OF FACILITIES, 9250 BENDIX ROAD, COLUMBIA, MARYLAND 21045, ATTN: MARK STROMDAHL, PHONE: 410-313-5757

OWNER: HOWARD COUNTY, DEPARTMENT OF PUBLIC WORKS, BUREAU OF FACILITIES, 9250 BENDIX ROAD, COLUMBIA, MARYLAND 21045, ATTN: MARK STROMDAHL, PHONE: 410-313-5757

PROJECT: GREEN BUILDING
HCLS ELKRIDGE BRANCH AND 50+ CENTER

AREA: TAX MAP 38, PARCEL 'A' PLAT ~~23870~~ 23869 ZONED B-1 & R-12
GRID NO. 7 1st ELECTION DISTRICT
6540 WASHINGTON BOULEVARD
ELKRIDGE, MARYLAND 21075-0000
HOWARD COUNTY, MARYLAND

TITLE:
SITE DETAILS

Pennoni Associates Inc.
Engineers • Surveyors • Planners
Landscape Architects
8818 Centre Park Drive, Suite 200 Columbia, MD 21045
T 410.997.8900 F 410.997.9282

SEAL

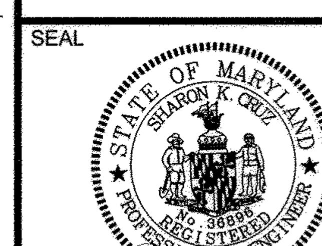

BY: 6-29-16

"PROFESSIONAL CERTIFICATION. I HEREBY CERTIFY THAT THESE DOCUMENTS WERE PREPARED OR APPROVED BY ME, AND THAT I AM A DULY LICENSED PROFESSIONAL ENGINEER UNDER THE LAWS OF THE STATE OF MARYLAND, LICENSE NO. 36896, EXPIRATION DATE: 2-15-2017"

DESIGNED BY :	PJS/JSN
DRAWN BY:	PJS/JSN
PROJECT NO :	GRIM1402
DATE :	JUNE 20,2016
SCALE :	AS SHOWN
DRAWING NO.	20 OF 50

SDP-16-038

P:\PROJECTS\GRIM\GRIM1402-ELKRIDGE LIBRARY\DESIGN_PUBLISH\SITE DEVELOPMENT PLAN\GRIM1402-SDP20

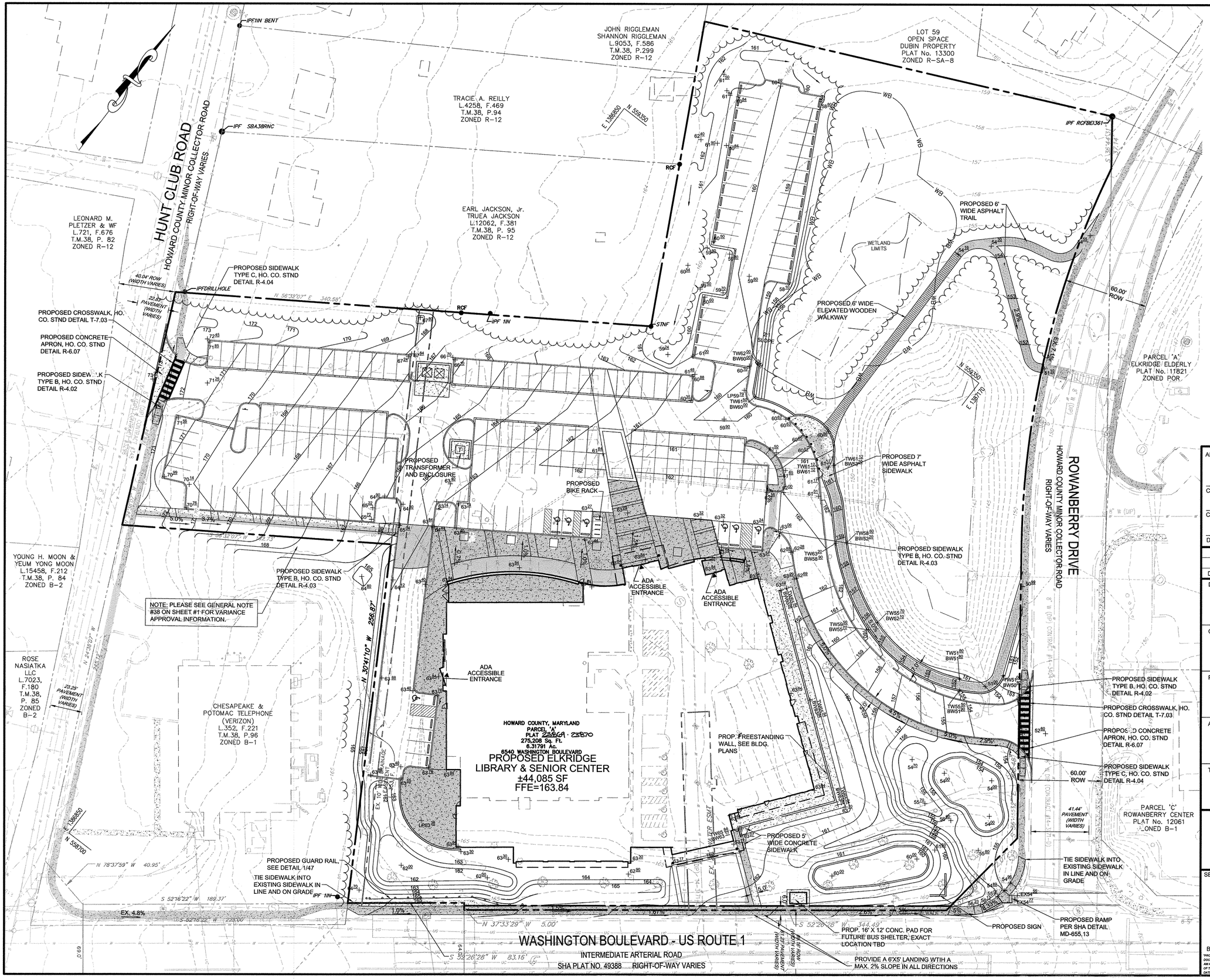

LEGEND

- PROPERTY LINE AND RIGHT-OF-WAY
- EXISTING BUILDING
- EXISTING 1' CONTOUR
- EXISTING 5' CONTOUR
- EXISTING WETLANDS
- EXISTING WETLAND BUFFER (WB)
- PROPOSED 1' CONTOUR
- PROPOSED 5' CONTOUR
- PROP. CONCRETE SIDEWALK
- PROP. ASPHALT SIDEWALK
- ADA ACCESSIBLE ROUTE

APPROVED : DEPARTMENT OF PLANNING AND ZONING

CHIEF, DEVELOPMENT ENGINEERING DIVISION	DATE 7.19.16
CHIEF, DIVISION OF LAND DEVELOPMENT	DATE 7-16-16
DIRECTOR	DATE 8-16-16

DATE	NO.	REVISION	BY

DEVELOPER
HOWARD COUNTY
DEPARTMENT OF PUBLIC WORKS
BUREAU OF FACILITIES
9250 BENDIX ROAD
COLUMBIA, MARYLAND 21045
ATTN: MARK STROMDAHL
PHONE: 410-313-5757

OWNER
HOWARD COUNTY
DEPARTMENT OF PUBLIC WORKS
BUREAU OF FACILITIES
9250 BENDIX ROAD
COLUMBIA, MARYLAND 21045
ATTN: MARK STROMDAHL
PHONE: 410-313-5757

PROJECT
GREEN BUILDING
HCLS ELKRIDGE BRANCH AND 50+ CENTER

AREA
TAX MAP 38, PARCEL 'A' PLAT 23869 ZONED B-1 & R-12
GRID NO. 7 1st ELECTION DISTRICT
6540 WASHINGTON BOULEVARD
ELKRIDGE, MARYLAND 21075-0000
HOWARD COUNTY, MARYLAND

TITLE
ADA/PEDESTRIAN ACCESS PLAN

Pennoni Associates Inc.
Engineers • Surveyors • Planners
Landscape Architects
8818 Centre Park Drive, Suite 200 Columbia, MD 21045
T 410.997.8900 F 410.997.9282

SEAL

STATE OF MARYLAND — BRIGHAM K. CRAIG — No. 39988 — REGISTERED PROFESSIONAL ENGINEER

BY: 6-29-16

"PROFESSIONAL CERTIFICATION. I HEREBY CERTIFY THAT THESE DOCUMENTS WERE PREPARED OR APPROVED BY ME, AND THAT I AM A DULY LICENSED PROFESSIONAL ENGINEER UNDER THE LAWS OF THE STATE OF MARYLAND, LICENSE NO. 39988, EXPIRATION DATE: 2-13-2017"

DESIGNED BY :	PJS/JSN
DRAWN BY:	PJS/JSN
PROJECT NO :	GRIM1402
DATE :	JUNE 20,2016
SCALE :	1" = 30'
DRAWING NO.	21 OF 50

SDP-16-038

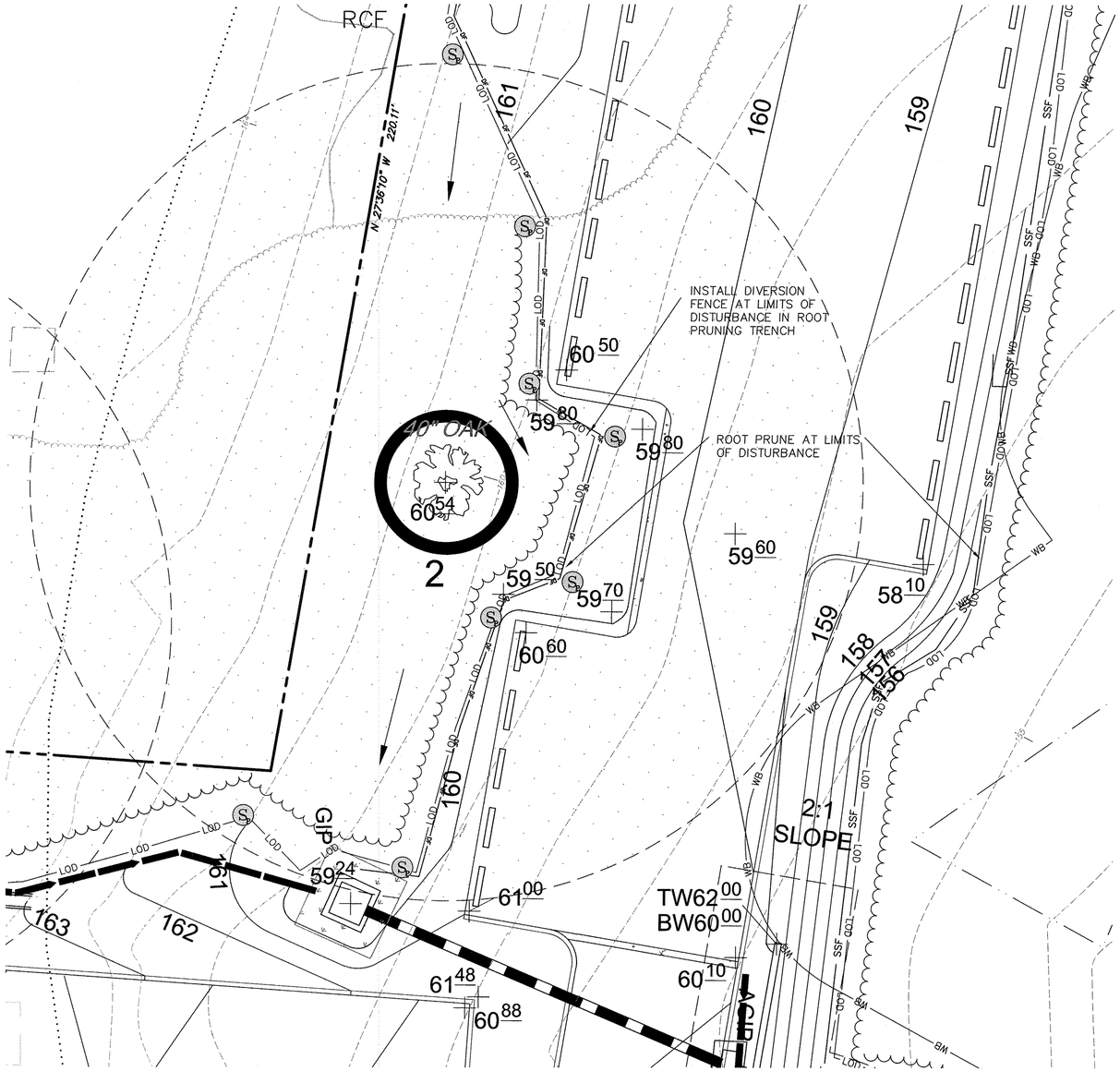

SPECIMEN TREE PROTECTION PLAN
SCALE: 1"=10'

SPECIMEN TREE PRESERVATION SEQUENCE OF CONSTUCTION

1. STAKEOUT LIMITS OF DISTURBANCE AROUND TREE EVERY 10'.
2. CONDUCT A PRECONSTRUCTION MEETING WITH CONTRACTOR, ARBORIST, LANDSCAPE ARCHITECT, AND OWNER. REVIEW LIMITS OF DISTURBANCE AND TREE PRESERVATION MEASURES.
3. CONDUCT TREE MAINTENANCE FOR SPECIMEN TREE AS OUTLINED IN ARBORIST'S REPORT.
4. ROOT PRUNE AT LIMITS OF DISTURBANCE AROUND SPECIMEN TREES 1 AND 2, AND ALONG WOODED EDGE.
5. INSTALL DIVERSION FENCE AND SUPER SILT AT THE ROOT PRUNE LINE AS SHOWN ON THE PLANS.
6. INSTALL TREE PROTECTION FENCE. WHERE SUPER SILT FENCE AND DIVERSION FENCE ARE ALREADY INSTALLED, TREE PROTECTION FENCE IS NOT REQUIRED.
7. POST TREE PROTECTION SIGNS AS NOTED ON THE PLANS.
8. ALL OTHER TREES WITHIN CRITICAL ROOT ZONE SHALL BE REMOVED BY CUTTING TREES FLUSH WITH GROUND USING HAND EQUIPMENT. NO STUMPS SHALL BE REMOVED.
9. INSTALL MULCH AS RECOMMENDED IN ARBORIST REPORT
10. DO NOT PERMIT ANY ACTIVITY WITHIN CRITICAL ROOT ZONE, INCLUDING REMOVAL OF TOPSOIL, STORAGE OF MATERIALS, PARKING OF EQUIPMENT, ETC.
11. ARBORIST SHALL MONITOR INSTALLATION OF ALL TREE PROTECTION MEASURES AND ALL TREE MAINTENANCE ACTIVITY. ARBORIST SHALL MONITOR SITE DURING CONSTRUCTION ON A MONTHLY BASIS AT A MINIMUM.
12. AT COMPLETION OF CONSTRUCTION ALL SILT FENCE AND PROTECTION MEASURES SHALL BE REMOVED. NO DISTURBANCE WITHIN THE CRITICAL ROOT ZONE IS PERMITTED DURING THIS ACTIVITY.

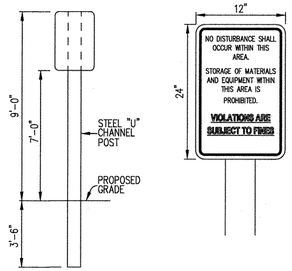

NOTES
1. DISTANCE FROM GROUND TO BOTTOM OF SIGN TO BE 7'.
2. SIGNS TO BE PROVIDED IN ENGLISH AND SPANISH.
3. CONTRACTOR TO PROVIDE A SIGN SAMPLE FOR APPROVAL PRIOR TO POSTING.

1/22 SPECIMEN TREE PROTECTION SIGN
NOT TO SCALE

LEGEND

EXISTING 1' CONTOUR 154
EXISTING 5' CONTOUR 155
EXISTING SOILS RuB
PROPOSED 1' CONTOUR 164
PROPOSED 5' CONTOUR 165
PROPOSED SPOT ELEVATION ± 51.50
PROPOSED STORM DRAIN
PROPOSED TREE LINE
PROPOSED PERVIOUS PAVING
CRITICAL ROOT ZONE
SPECIMEN TREE PROTECTION SIGN S
PROPOSED DIVERSION FENCE DF DF

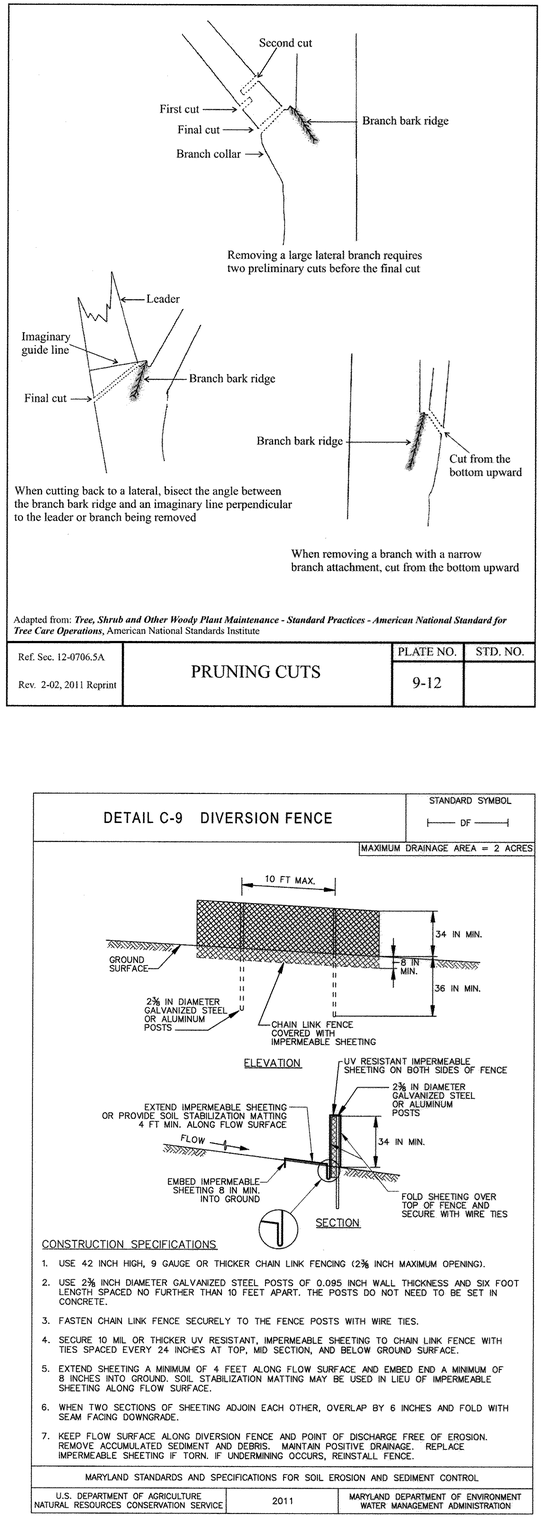

Adapted from: ***Tree, Shrub and Other Woody Plant Maintenance - Standard Practices - American National Standard for Tree Care Operations***, American National Standards Institute

Ref. Sec. 12-0706.5A Rev. 2-02, 2011 Reprint	PRUNING CUTS	PLATE NO. 9-12	STD. NO.

DETAIL C-9 DIVERSION FENCE

STANDARD SYMBOL — DF —

MAXIMUM DRAINAGE AREA = 2 ACRES

CONSTRUCTION SPECIFICATIONS

1. USE 42 INCH HIGH, 9 GAUGE OR THICKER CHAIN LINK FENCING (2⅜ INCH MAXIMUM OPENING).
2. USE 2⅜ INCH DIAMETER GALVANIZED STEEL POSTS OF 0.095 INCH WALL THICKNESS AND SIX FOOT LENGTH SPACED NO FURTHER THAN 10 FEET APART. THE POSTS DO NOT NEED TO BE SET IN CONCRETE.
3. FASTEN CHAIN LINK FENCE SECURELY TO THE FENCE POSTS WITH WIRE TIES.
4. SECURE 10 MIL OR THICKER UV RESISTANT, IMPERMEABLE SHEETING TO CHAIN LINK FENCE WITH TIES SPACED EVERY 24 INCHES AT TOP, MID SECTION, AND BELOW GROUND SURFACE.
5. EXTEND SHEETING A MINIMUM OF 4 FEET ALONG FLOW SURFACE AND EMBED END A MINIMUM OF 8 INCHES INTO GROUND. SOIL STABILIZATION MATTING MAY BE USED IN LIEU OF IMPERMEABLE SHEETING ALONG FLOW SURFACE.
6. WHEN TWO SECTIONS OF SHEETING ADJOIN EACH OTHER, OVERLAP BY 6 INCHES AND FOLD WITH SEAM FACING DOWNGRADE.
7. KEEP FLOW SURFACE ALONG DIVERSION FENCE AND POINT OF DISCHARGE FREE OF EROSION. REMOVE ACCUMULATED SEDIMENT AND DEBRIS. MAINTAIN POSITIVE DRAINAGE. REPLACE IMPERMEABLE SHEETING IF TORN. IF UNDERMINING OCCURS, REINSTALL FENCE.

MARYLAND STANDARDS AND SPECIFICATIONS FOR SOIL EROSION AND SEDIMENT CONTROL

U.S. DEPARTMENT OF AGRICULTURE NATURAL RESOURCES CONSERVATION SERVICE	2011	MARYLAND DEPARTMENT OF ENVIRONMENT WATER MANAGEMENT ADMINISTRATION

ENGINEER'S CERTIFICATE

"I CERTIFY THAT THIS PLAN FOR SEDIMENT AND EROSION CONTROL REPRESENTS A PRACTICAL AND WORKABLE PLAN BASED ON MY PERSONAL KNOWLEDGE OF THE SITE CONDITIONS AND THAT IT WAS PREPARED IN ACCORDANCE WITH THE REQUIREMENTS OF THE HOWARD SOIL CONSERVATION DISTRICT."

SIGNATURE OF ENGINEER (PRINT NAME BELOW SIGNATURE) Shannon K. Cruz — DATE 6-29-16

DEVELOPER'S CERTIFICATE

"I/WE CERTIFY THAT ALL DEVELOPMENT AND CONSTRUCTION WILL BE DONE ACCORDING TO THIS PLAN FOR SEDIMENT AND EROSION CONTROL, AND THAT ALL RESPONSIBLE PERSONNEL INVOLVED IN THE CONSTRUCTION PROJECT WILL HAVE A CERTIFICATE OF ATTENDANCE AT A DEPARTMENT OF THE ENVIRONMENT APPROVED TRAINING PROGRAM FOR THE CONTROL OF SEDIMENT AND EROSION BEFORE BEGINNING THE PROJECT. I ALSO AUTHORIZE PERIODIC ON-SITE INSPECTIONS BY THE HOWARD SOIL CONSERVATION DISTRICT."

SIGNATURE OF DEVELOPER (PRINT NAME BELOW SIGNATURE) RICHARD ABSTABROOK — DATE 29 JUN 2016

THIS DEVELOPMENT PLAN IS APPROVED FOR SOIL EROSION AND SEDIMENT CONTROL BY THE HOWARD SOIL CONSERVATION DISTRICT.

HOWARD SCD — DATE

APPROVED : DEPARTMENT OF PLANNING AND ZONING

CHIEF, DEVELOPMENT ENGINEERING DIVISION — DATE 7-19-16

CHIEF, DIVISION OF LAND DEVELOPMENT — DATE 8-16-16

DIRECTOR — DATE 8-16-16

DATE	NO.	REVISION	BY

DEVELOPER
HOWARD COUNTY
DEPARTMENT OF PUBLIC WORKS
BUREAU OF FACILITIES
9250 BENDIX ROAD
COLUMBIA, MARYLAND 21045
ATTN: MARK STROMDAHL
PHONE: 410-313-5757

OWNER
HOWARD COUNTY
DEPARTMENT OF PUBLIC WORKS
BUREAU OF FACILITIES
9250 BENDIX ROAD
COLUMBIA, MARYLAND 21045
ATTN: MARK STROMDAHL
PHONE: 410-313-5757

PROJECT
GREEN BUILDING
HCLS ELKRIDGE BRANCH AND 50+ CENTER

AREA
TAX MAP 38, PARCEL 'A' PLAT ~~23869~~ 23870 ZONED B-1 & R-12
GRID NO. 7 1st ELECTION DISTRICT
6540 WASHINGTON BOULEVARD
ELKRIDGE, MARYLAND 21075-0000
HOWARD COUNTY, MARYLAND

TITLE
TREE PROTECTION PLAN

Pennoni Associates Inc.
Engineers • Surveyors • Planners
Landscape Architects
8818 Centre Park Drive, Suite 200 Columbia, MD 21045
T 410.997.8900 F 410.997.9282

6-29-2016
STATE OF MARYLAND 3068 PETER J. STONE PROFESSIONAL LANDSCAPE ARCHITECT
PETER J. STONE #3068

DESIGNED BY :	PJS/JSN
DRAWN BY:	PJS/JSN
PROJECT NO :	GRIM1402
DATE :	JUNE 20,2016
SCALE :	1" = 10'
DRAWING NO.	22 OF 50

SDP-16-038

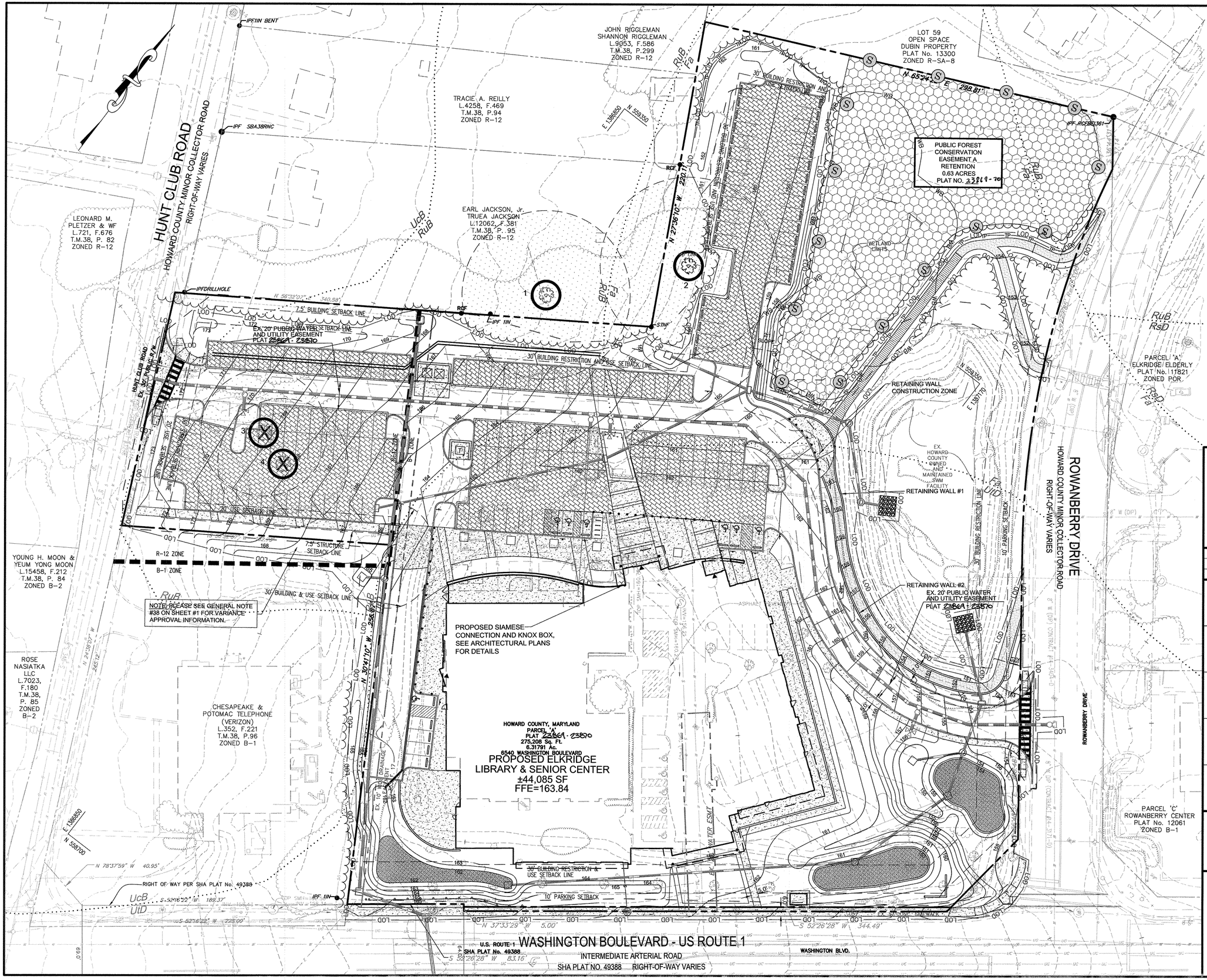

LEGEND

- PROPERTY LINE AND RIGHT-OF-WAY
- EXISTING BUILDING
- EXISTING 1' CONTOUR
- EXISTING 5' CONTOUR
- EXISTING TREE LINE
- EXISTING SOILS
- EXISTING WETLANDS
- EXISTING WETLAND BUFFER
- EXISTING ZONING LINE
- EXISTING WATER
- EXISTING SEWER
- EXISTING COMMUNICATIONS
- EXISTING ELECTRICAL
- EXISTING GAS
- EXISTING STORM DRAIN
- PROPOSED 1' CONTOUR
- PROPOSED 5' CONTOUR
- PROPOSED PERVIOUS PAVING
- PROPOSED MICRO-BIORETENTION FACILITY
- PROPOSED STORM DRAIN
- PROP. FOREST CONSERVATION EASEMENT
- PROPOSED TREE LINE
- CRITICAL ROOT ZONE
- FOREST CONSERVATION SIGN
- TREE PROTECTION FENCING

APPROVED : DEPARTMENT OF PLANNING AND ZONING

CHIEF, DEVELOPMENT ENGINEERING DIVISION	DATE 7-19-16
CHIEF, DIVISION OF LAND DEVELOPMENT	DATE 8-16-16
DIRECTOR	DATE 8-16-16

DATE	NO.	REVISION	BY

DEVELOPER
HOWARD COUNTY
DEPARTMENT OF PUBLIC WORKS
BUREAU OF FACILITIES
9250 BENDIX ROAD
COLUMBIA, MARYLAND 21045
ATTN: MARK STROMDAHL
PHONE: 410-313-5757

OWNER
HOWARD COUNTY
DEPARTMENT OF PUBLIC WORKS
BUREAU OF FACILITIES
9250 BENDIX ROAD
COLUMBIA, MARYLAND 21045
ATTN: MARK STROMDAHL
PHONE: 410-313-5757

PROJECT
GREEN BUILDING
HCLS ELKRIDGE BRANCH AND 50+ CENTER

AREA
TAX MAP 38, PARCEL 'A' PLAT 23870 ZONED B-1 & R-12
GRID NO. 7 1st ELECTION DISTRICT
6540 WASHINGTON BOULEVARD
ELKRIDGE, MARYLAND 21075-0000
HOWARD COUNTY, MARYLAND

TITLE
FOREST CONSERVATION PLAN

Pennoni Associates Inc.
Engineers • Surveyors • Planners
Landscape Architects
8818 Centre Park Drive, Suite 200 Columbia, MD 21045
T 410.997.8900 F 410.997.9282

6-29-2016
STATE OF MARYLAND 3068 PETER J. STONE PROFESSIONAL ENGINEER
PETER J. STONE #3068

DESIGNED BY :	PJS/JSN
DRAWN BY:	PJS/JSN
PROJECT NO :	GRIM1402
DATE :	JUNE 20,2016
SCALE :	1" = 30'
DRAWING NO.	23 OF 50

SDP-16-038

FOREST CONSERVATION PLAN GENERAL NOTES:

1. THE EXISTING TOPOGRAPHY IS PROVIDED BY PENNONI ASSOCIATES, INC., DATED JUNE 25, 2015, VIRGINIA RESOURCE MAPPING DATED JULY 5, 2014, AND HAS BEEN SUPPLEMENTED BY HOWARD COUNTY GIS INFORMATION.

2. NO CRITICAL HABITATS OF RARE, THREATENED OR ENDANGERED SPECIES WERE OBSERVED.

3. NO TREES, SHRUBS, OR PLANTS IDENTIFIED AS RARE, THREATENED OR ENDANGERED SPECIES WERE OBSERVED.

4. THERE ARE NO KNOWN CEMETERIES OR BURIAL PLOTS LOCATED ON THE SITE, ACCORDING TO THE HOWARD COUNTY CEMETERIES INVENTORY.

5. THERE IS ONE EXISTING BUILDING PRESENT ON THE SITE.

6. THE FOLLOWING SOILS ARE PRESENT ON THE SITE: FALLSINGTON SANDY LOAM (0-2% SLOPES)-FA, RUSSETT AND BELTSVILLE SOILS (2-5% SLOPES)-RUB, URBAN LAND-CHILLUM-BELTSVILLE COMPLEX (0-5% SLOPES)-UCB, AND URBAN LAND-UDORTHENTS COMPLEX (0-15% SLOPES)-UTB, ACCORDING TO THE NATURAL RESOURCES CONSERVATION SERVICE WEB SOIL SURVEY.

7. A FOREST STAND DELINEATION FOR THIS PROPERTY WAS COMPLETED BY PENNONI ASSOCIATES, INC. DATED SEPTEMBER 3, 2015.

8. THE HOWARD COUNTY FOREST CONSERVATION MANUAL SUPERCEDES ANY DISCREPANCIES BETWEEN THE MANUAL AND THESE PLANS.

9. THIS PROJECT COMPLIES WITH THE REQUIREMENTS OF SECTION 16.1200 OF THE HOWARD COUNTY CODE FOR FOREST CONSERVATION.

10. THIS PROJECT COMPLIES WITH THE REQUIREMENTS OF SECTION 16.1200 OF THE HOWARD COUNTY CODE FOR FOREST CONSERVATION BY 0.63ACRES OF ON-SITE RETENTION AND A PAYMENT OF A FEE-IN-LIEU OF $24,503 FOR 0.75 ACRES OF FOREST.

11. THE FOREST CONSERVATION EASEMENT HAS BEEN ESTABLISHED TO FULFILL THE REQUIREMENTS OF SECTION 16.1200 OF THE HOWARD COUNTY CODE AND FOREST CONSERVATION ACT. NO CLEARING, GRADING, OR CONSTRUCTION IS PERMITTED WITHIN THE FOREST CONSERVATION EASEMENT, HOWEVER FOREST MANAGEMENT PRACTICES AS DEFINED IN THE DEED OF FOREST CONSERVATION EASEMENT ARE ALLOWED.

FOREST CONSERVATION EASEMENT TABLE

CONSERVATION TYPE	AREA	ACRES	SF
ON-SITE RETENTION	PROPOSED EASEMENT A	0.63	27,423
TOTAL RETENTION		0.63	27,423

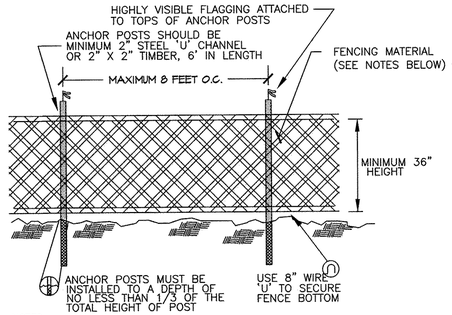

NOTES:

1. BLAZE ORANGE MESH OR SUPER SILT FENCE FOR TREE PROTECTION DEVICE, ONLY.
2. BOUNDARIES OF PROTECTION AREA WILL BE ESTABLISHED PRIOR TO GRADING AND SEDIMENT CONTROL.
3. AVOID DAMAGE TO CRITICAL ROOT ZONE. DO NOT DAMAGE OR SEVER LARGE ROOTS WHEN INSTALLING POSTS.
4. FENCING SHALL BE MAINTAINED THROUGHOUT CONSTRUCTION.

TREE PROTECTION FENCING

NOT TO SCALE

TEMPORARY TRAFFIC CONTROL TYPICAL APPLICATION

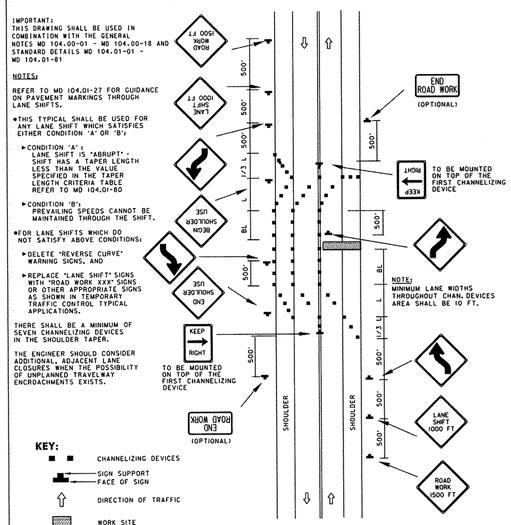

SPECIFICATION 104	CATEGORY CODE ITEMS
APPROVED	DIRECTOR - OFFICE OF TRAFFIC AND SAFETY

APPROVAL + SHA REVISIONS		APPROVAL + FEDERAL HIGHWAY ADMINISTRATION	
APPROVAL	8-20-03	APPROVAL	9-23-03
REVISED	8-11-10	REVISED	10-5-10
REVISED		REVISED	
REVISED		REVISED	

Maryland Department of Transportation
STATE HIGHWAY ADMINISTRATION
STANDARDS FOR HIGHWAYS AND INCIDENTAL STRUCTURES
LANE SHIFT RIGHT OR LEFT SIDE/2-LANE, 2-WAY EQL/LESS THAN 40 MPH/15 MIN - 12 HRS. OR DAYTIME ONLY
STANDARD NO. MD 104.02-04

TEMPORARY TRAFFIC CONTROL TYPICAL APPLICATION

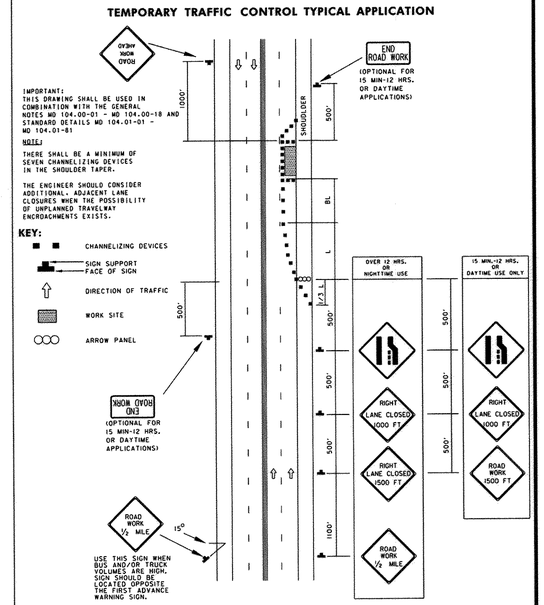

SPECIFICATION 104	CATEGORY CODE ITEMS
APPROVED	DIRECTOR - OFFICE OF TRAFFIC AND SAFETY

APPROVAL + SHA REVISIONS		APPROVAL + FEDERAL HIGHWAY ADMINISTRATION	
APPROVAL	8-20-03	APPROVAL	9-23-03
REVISED	8-11-10	REVISED	7-29-10
REVISED		REVISED	
REVISED		REVISED	

Maryland Department of Transportation
STATE HIGHWAY ADMINISTRATION
STANDARDS FOR HIGHWAYS AND INCIDENTAL STRUCTURES
RIGHT LANE CLOSURE/MULTILANE UNDIV. EQL/LESS THAN 40 MPH
STANDARD NO. MD 104.03-06

Howard County Forest Conservation Worksheet

Project Name: HCLS ELKRIDGE BRANCH AND 50+ CENTER
County File #:
Date: March 14, 2016

			Acres
Net Tract Area			
A.	*Total Tract Area*	A =	6.96
B.	*Existing Impervious Area*	B =	2.45
C.	*Net Tract Area* Net Tract Area = (A-B-C)	C =	4.51
Land Use Category: ___Institutional Development Area_____			
D.	*Afforestation Threshold* (Net Tract Area X _ 15%	D =	0.68
E.	*Conservation Threshold* (Net Tract Area X __ 20%	E =	0.90
Existing Forest Cover			
F.	***Existing Forest Cover within the Net Tract Area***	F =	1.71
G.	*Area of Forest Above Conservation Threshold* If the Existing Forest Cover (F) is greater than Conservation Threshold (G), then G = Existing Forest Cover (F) - Conservation Threshold (E); Otherwise G = 0	G =	0.81
Break Even Point			
H.	*Break Even* (Amount of forest that must be retained so that no mitigation is required) (1) If the area of forest above the Conservation Threshold (G) is greater than zero, then H = (0.2 X the area of forest above Conservation Threshold (G)) + the Conservation Threshold (E) (2) If the area of forest above the Conservation Threshold (G) is equal to zero, then H = Existing Forest Cover (F)	H =	1.06
I.	*Forest Clearing Permitted Without Mitigation* I = Existing Forest Cover (F) - Break Even Point (H)	I =	0.65
Proposed Forest Clearing			
J.	***Total Area of Forest to be Cleared***	J =	1.08
K.	*Total Area of Forest to be Retained* K = Existing Forest Cover (F) - forest to be cleared (J)	K =	0.63
Planting Requirements			
If the Total Area of Forest to be Cleared (K) is at or above the Breakeven Point (H), no planting is required and no further calculations are necessary (L=0, M=0, N=0, P=0); If not, calculate the planting requirement below:			
L.	*Reforestation for Clearing Above the Conservation Threshold* (1) if the total area of forest to be retained (K) is greater than the Conservation Threshold (E), then L = the area of forest to be cleared (J) X 0.25; or (2) If the forest to be retained (K) is less than or equal to the Conservation Threshold (E), then L = area of forest above Conservation Threshold (G) X 0.25	L =	0.20
M.	*Reforestation for Clearing Below the Conservation Threshold* (1) If Existing Forest Cover (F) is greater than Conservation Threshold (E) and the forest to be retained (K) is less than or equal to the Conservation Threshold (E), then M = 2.0 X (the Conservation Threshold (E) - the forest to be retained (K)) (2) If Existing Forest (F) is less than or equal to the Conservation Threshold (E), then M = 2.0 X Forest to be cleared (J).	M =	0.54
N.	*Credit for Retention Above the Conservation Threshold* If the area of forest to be retained (K) is greater than the Conservation Threshold (E), then N = K - E	N =	0.00
P.	*Total Reforestation Required* P = L + M - N	P =	0.75
Q.	*Total Afforestation Required* (1) If Existing Forest Cover (F) is less than the Afforestation Threshold (D) then Q = the Afforestation Threshold (D) - the Existing Forest Cover (F)	Q =	0.00
R.	*Total Planting Requirement* R = P + Q	R =	0.75

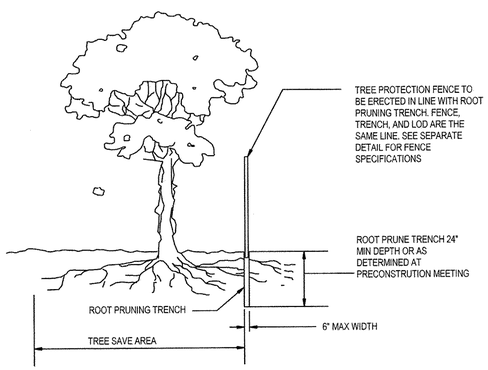

NOTES:

1. RETENTION AREAS WILL BE SET AS PART OF THE REVIEW PROCESS AND PRECONSTRUCTION MEETING.
2. BOUNDARIES OF RETENTION AREAS MUST BE STAKED AT THE PRECONSTRUCTION MEETING AND FLAGGED PRIOR TO TRENCHING.
3. EXACT LOCATION OF TRENCH SHALL BE DETERMINED IN THE FIELD IN COORDINATION WITH THE FOREST CONSERVATION (FC) INPECTOR .
4. TRENCH SHOULD BE IMMEDIATELY BACKFILLED WITH EXCAVATED SOIL OR OTHER ORGANIC SOIL AS SPECIFIED PER PLAN OR BY THE FC INSPECTOR.
5. ROOTS SHALL BE CLEANLY CUT USING VIBRATORY KNIFE OR OTHER ACCEPTABLE EQUIPMENT.
6. ALL PRUNING MUST BE EXECUTED WITH LOD SHOWN ON PLANS OR AS AUTHORIZED IN WRITING BY THE FC INSPECTOR.

ROOT PRUNING DETAIL

NTS

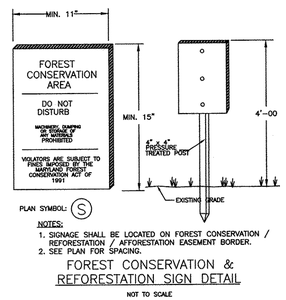

FOREST CONSERVATION & REFORESTATION SIGN DETAIL

NOT TO SCALE

APPROVED : DEPARTMENT OF PLANNING AND ZONING

CHIEF, DEVELOPMENT ENGINEERING DIVISION — DATE 7-19-16

CHIEF, DIVISION OF LAND DEVELOPMENT — DATE 6-16-16

DIRECTOR — DATE 6-16-16

DATE	NO.	REVISION	BY

DEVELOPER
HOWARD COUNTY
DEPARTMENT OF PUBLIC WORKS
BUREAU OF FACILITIES
9250 BENDIX ROAD
COLUMBIA, MARYLAND 21045
ATTN: MARK STROMDAHL
PHONE: 410-313-5757

OWNER
HOWARD COUNTY
DEPARTMENT OF PUBLIC WORKS
BUREAU OF FACILITIES
9250 BENDIX ROAD
COLUMBIA, MARYLAND 21045
ATTN: MARK STROMDAHL
PHONE: 410-313-5757

PROJECT
GREEN BUILDING
HCLS ELKRIDGE BRANCH AND 50+ CENTER

AREA
TAX MAP 38, PARCEL 'A' PLAT 22564 ZONED B-1 & R-12
GRID NO. 7 1st ELECTION DISTRICT
6540 WASHINGTON BOULEVARD
ELKRIDGE, MARYLAND 21075-0000
HOWARD COUNTY, MARYLAND

TITLE
FOREST CONSERVATION NOTES AND DETAILS/TRAFFIC CONTROL DETAILS

Pennoni Associates Inc.
Engineers • Surveyors • Planners
Landscape Architects
8818 Centre Park Drive, Suite 200 Columbia, MD 21045
T 410.997.8900 F 410.997.9282

6-29-2016

STATE OF MARYLAND 3068 PETER J. STONE PROFESSIONAL ENGINEER

PETER J. STONE #3068

DESIGNED BY :	PJS/JSN
DRAWN BY:	PJS/JSN
PROJECT NO :	GRIM1402
DATE :	JUNE 20,2016
SCALE :	AS SHOWN
DRAWING NO.	24 OF 50

SDP-16-038

GEOTECH ENGINEERS, INC. — LOG OF BORING No. SB-1

PROJECT: Elkridge Library SWM — PROJECT NO.: 352200
CLIENT: Grimm + Parker Architects
PROJECT LOCATION: 6540 Washington Blvd., Elkridge, MD
LOCATION: see boring location plan — ELEVATION: 159.19
DRILLER: Geomatrix Drilling, Inc. — LOGGED BY: KJ
DRILLING METHOD: Hollow Stem Auger — DATE: 12/11/15
DEPTH TO - WATER> INITIAL: Dry — AFTER 24 HOURS: 1.5' — CAVING> 10.0'

Depth	Description
0	1.5" topsoil Dark brown silty SAND (SM), moist
4.0'	Light brown clayey SAND (SC), moist
10	Boring terminated at 10 ft.

PVC pipe installed for water reading

This information pertains only to this boring and should not be interpreted as being indicative of the site.

Figure — PAGE 1 of 1

GEOTECH ENGINEERS, INC. — LOG OF BORING No. SB-2

PROJECT: Elkridge Library SWM — PROJECT NO.: 352200
CLIENT: Grimm + Parker Architects
PROJECT LOCATION: 6540 Washington Blvd., Elkridge, MD
LOCATION: see boring location plan — ELEVATION: 157.47
DRILLER: Geomatrix Drilling, Inc. — LOGGED BY: KJ
DRILLING METHOD: Hollow Stem Auger — DATE: 12/11/15
DEPTH TO - WATER> INITIAL: Dry — AFTER 24 HOURS: 6' — CAVING> 10.0'

Depth	Description
0	Dark brown silty SAND (SM), moist - contains some roots, organic matter
4.0'	Dark brown lean CLAY with sand (CL), moist - contanis quartz
10	Boring terminated at 10 ft.

PVC pipe installed for water reading

This information pertains only to this boring and should not be interpreted as being indicative of the site.

Figure — PAGE 1 of 1

GEOTECH ENGINEERS, INC. — LOG OF BORING No. SB-3

PROJECT: Elkridge Library SWM — PROJECT NO.: 352200
CLIENT: Grimm + Parker Architects
PROJECT LOCATION: 6540 Washington Blvd., Elkridge, MD
LOCATION: see boring location plan — ELEVATION: 159.31
DRILLER: Geomatrix Drilling, Inc. — LOGGED BY: KJ
DRILLING METHOD: Hollow Stem Auger — DATE: 12/11/15
DEPTH TO - WATER> INITIAL: Dry — AFTER 24 HOURS: Dry — CAVING> 3.1'

Depth	Description
0	Dark brown SILT with sand (ML), moist
1.5'	Light brown and gray sandy CLAY (CL), moist - contains quartz
4.0'	Light brown well graded SAND with gravel (SW), moist - gravel at 5'
10	Boring terminated at 10 ft.

This information pertains only to this boring and should not be interpreted as being indicative of the site.

Figure — PAGE 1 of 1

GEOTECH ENGINEERS, INC. — LOG OF BORING No. SB-4

PROJECT: Elkridge Library SWM — PROJECT NO.: 352200
CLIENT: Grimm + Parker Architects
PROJECT LOCATION: 6540 Washington Blvd., Elkridge, MD
LOCATION: see boring location plan — ELEVATION: 167.58
DRILLER: Geomatrix Drilling, Inc. — LOGGED BY: KJ
DRILLING METHOD: Hollow Stem Auger — DATE: 12/12/15
DEPTH TO - WATER> INITIAL: Dry — AFTER 24 HOURS: Dry — CAVING> 2.5'

Depth	Description
0	Light brown sandy CLAY (CL), moist
1.5'	Light brown silty SAND (SM), moist
4.0'	Light brown sandy CLAY (CL), moist
6.5'	Light gray silty SAND with gravel (SM), moist
10	Boring terminated at 10 ft.

This information pertains only to this boring and should not be interpreted as being indicative of the site.

Figure — PAGE 1 of 1

GEOTECH ENGINEERS, INC. — LOG OF BORING No. SB-5

PROJECT: Elkridge Library SWM — PROJECT NO.: 352200
CLIENT: Grimm + Parker Architects
PROJECT LOCATION: 6540 Washington Blvd., Elkridge, MD
LOCATION: see boring location plan — ELEVATION: 170.70
DRILLER: Geomatrix Drilling, Inc. — LOGGED BY: KJ
DRILLING METHOD: Hollow Stem Auger — DATE: 12/12/15
DEPTH TO - WATER> INITIAL: Dry — AFTER 24 HOURS: Dry — CAVING> 10.0'

Depth	Description
0	3" topsoil Brown silty SAND (SM), moist -contains some organic matter at 1.0'
4.0'	Light brown sandy lean CLAY (CL), moist - some quartz and gravel at 8.0'
10	Boring terminated at 10 ft.

PVC pipe installed for water reading

This information pertains only to this boring and should not be interpreted as being indicative of the site.

Figure — PAGE 1 of 1

GEOTECH ENGINEERS, INC. — LOG OF BORING No. SB-6

PROJECT: Elkridge Library SWM — PROJECT NO.: 352200
CLIENT: Grimm + Parker Architects
PROJECT LOCATION: 6540 Washington Blvd., Elkridge, MD
LOCATION: see boring location plan — ELEVATION: 169.23
DRILLER: Geomatrix Drilling, Inc. — LOGGED BY: KJ
DRILLING METHOD: Hollow Stem Auger — DATE: 12/12/15
DEPTH TO - WATER> INITIAL: Dry — AFTER 24 HOURS: Dry — CAVING> 10.0'

Depth	Description
0	Dark brown sandy SILT (ML), moist
1.5'	Light brown sandy lean CLAY (CL), moist
4.0'	Light brown well graded GRAVEL with sand (GW), moist
10	Boring terminated at 10 ft.

PVC pipe installed for water reading

This information pertains only to this boring and should not be interpreted as being indicative of the site.

Figure — PAGE 1 of 1

GEOTECH ENGINEERS, INC. — LOG OF BORING No. SB-7

PROJECT: Elkridge Library SWM — PROJECT NO.: 352200
CLIENT: Grimm + Parker Architects
PROJECT LOCATION: 6540 Washington Blvd., Elkridge, MD
LOCATION: see boring location plan — ELEVATION: 168.74
DRILLER: Geomatrix Drilling, Inc. — LOGGED BY: KJ
DRILLING METHOD: Hollow Stem Auger — DATE: 12/12/15
DEPTH TO - WATER> INITIAL: Dry — AFTER 24 HOURS: Dry — CAVING> 1.8'

Depth	Description
0	Brown sandy lean CLAY (CL), moist
1.5'	Light brown silty SAND (SM), moist
4.0'	Gray and red fat CLAY (CH), moist
6.5'	Gray sandy CLAY with gravel (CL), moist - gravel at 8.5'
10	Boring terminated at 10 ft.

This information pertains only to this boring and should not be interpreted as being indicative of the site.

Figure — PAGE 1 of 1

GEOTECH ENGINEERS, INC. — LOG OF BORING No. SB-8

PROJECT: Elkridge Library SWM — PROJECT NO.: 352200
CLIENT: Grimm + Parker Architects
PROJECT LOCATION: 6540 Washington Blvd., Elkridge, MD
LOCATION: see boring location plan — ELEVATION: 163.40
DRILLER: Geomatrix Drilling, Inc. — LOGGED BY: KJ
DRILLING METHOD: Hollow Stem Auger — DATE: 12/11/15
DEPTH TO - WATER> INITIAL: Dry — AFTER 24 HOURS: Dry — CAVING> 3.3'

Depth	Description
0	2" topsoil Dark brown sandy lean CLAY (CL), moist
4.0'	Light brown well-graded SAND with gravel (SW), moist
10	Boring terminated at 10 ft.

Bulk sample obtained from 0' to 5'

This information pertains only to this boring and should not be interpreted as being indicative of the site.

Figure — PAGE 1 of 1

GEOTECH ENGINEERS, INC. — LOG OF BORING No. SB-9

PROJECT: Elkridge Library SWM — PROJECT NO.: 352200
CLIENT: Grimm + Parker Architects
PROJECT LOCATION: 6540 Washington Blvd., Elkridge, MD
LOCATION: see boring location plan — ELEVATION: 162.31
DRILLER: Geomatrix Drilling, Inc. — LOGGED BY: KJ
DRILLING METHOD: Hollow Stem Auger — DATE: 12/12/15
DEPTH TO - WATER> INITIAL: Dry — AFTER 24 HOURS: Dry — CAVING> 3.0'

Depth	Description
0	3" topsoil Dark brown silty SAND (SM), moist
1.5'	Gray and red fat CLAY (CH), moist
4.0'	Brown well-graded SAND with gravel (SW), moist - gravel at 8.5'
10	Boring terminated at 10 ft.

This information pertains only to this boring and should not be interpreted as being indicative of the site.

Figure — PAGE 1 of 1

GEOTECH ENGINEERS, INC. — LOG OF BORING No. SB-10

PROJECT: Elkridge Library SWM — PROJECT NO.: 352200
CLIENT: Grimm + Parker Architects
PROJECT LOCATION: 6540 Washington Blvd., Elkridge, MD
LOCATION: see boring location plan — ELEVATION: 157.36
DRILLER: Geomatrix Drilling, Inc. — LOGGED BY: KJ
DRILLING METHOD: Hollow Stem Auger — DATE: 12/12/15
DEPTH TO - WATER> INITIAL: Dry — AFTER 24 HOURS: 4.5' — CAVING> 5.0'

Depth	Description
0	2" topsoil Dark brown silty SAND with gravel (SM), moist
1.5'	Reddish brown fat CLAY (CH), moist
4.0'	Gray sandy lean CLAY (CL), moist
6.5'	Light gray clayey SAND with gravel (SC), moist
10	Boring terminated at 10 ft.

This information pertains only to this boring and should not be interpreted as being indicative of the site.

Figure — PAGE 1 of 1

GEOTECH ENGINEERS, INC. — LOG OF BORING No. SB-11

PROJECT: Elkridge Library SWM — PROJECT NO.: 352200
CLIENT: Grimm + Parker Architects
PROJECT LOCATION: 6540 Washington Blvd., Elkridge, MD
LOCATION: see boring location plan — ELEVATION: 166.03
DRILLER: Geomatrix Drilling, Inc. — LOGGED BY: KJ
DRILLING METHOD: Hollow Stem Auger — DATE: 12/11/15
DEPTH TO - WATER> INITIAL: Dry — AFTER 24 HOURS: 8.5' — CAVING> 10.0'

Depth	Description
0	3.5" topsoil Brown to dark brown silty SAND with gravel (SM), moist
6.5'	Light brown to dark brown lean CLAY with sand (CL), moist
10	Boring terminated at 10 ft.

PVC pipe installed for water reading

This information pertains only to this boring and should not be interpreted as being indicative of the site.

Figure — PAGE 1 of 1

GEOTECH ENGINEERS, INC. — LOG OF BORING No. SB-12

PROJECT: Elkridge Library SWM — PROJECT NO.: 352200
CLIENT: Grimm + Parker Architects
PROJECT LOCATION: 6540 Washington Blvd., Elkridge, MD
LOCATION: see boring location plan — ELEVATION: 165.67
DRILLER: Geomatrix Drilling, Inc. — LOGGED BY: KJ
DRILLING METHOD: Hollow Stem Auger — DATE: 12/11/15
DEPTH TO - WATER> INITIAL: Dry — AFTER 24 HOURS: Dry — CAVING> 3.0'

Depth	Description
0	4" topsoil Brown silty sand with gravel (FILL), moist - contains some organic matter
2.5'	Brown silty SAND with gravel (SM), moist
6.5'	Light brown and gray lean CLAY with gravel (CL), moist
9.0'	Light brown well-graded SAND with gravel (SW), moist
12	Boring terminated at 12 ft.

This information pertains only to this boring and should not be interpreted as being indicative of the site.

Figure — PAGE 1 of 1

GEOTECH ENGINEERS, INC. — LOG OF BORING No. SB-13

PROJECT: Elkridge Library SWM — PROJECT NO.: 352200
CLIENT: Grimm + Parker Architects
PROJECT LOCATION: 6540 Washington Blvd., Elkridge, MD
LOCATION: see boring location plan — ELEVATION: 163.91'
DRILLER: Geomatrix Drilling, Inc. — LOGGED BY: KJ
DRILLING METHOD: Hollow Stem Auger — DATE: 12/11/15
DEPTH TO - WATER> INITIAL: Dry — AFTER 24 HOURS: 10.9' — CAVING> 14.0'

Depth	Description
0	3" topsoil Brown silty SAND with gravel (SM), moist
1.5'	Brown sandy lean CLAY (CL), moist
2.5'	Light brown to dark brown silty SAND (SM), moist
8.0'	Gray fat CLAY (CH), moist
9.0'	Dark brown silty SAND with gravel (SM), moist
14	Boring terminated at 14 ft.

PVC pipe installed for water reading

This information pertains only to this boring and should not be interpreted as being indicative of the site.

Figure — PAGE 1 of 1

APPROVED : DEPARTMENT OF PLANNING AND ZONING

CHIEF, DEVELOPMENT ENGINEERING DIVISION — DATE 7-19-16
CHIEF, DIVISION OF LAND DEVELOPMENT — DATE 8-16-16
DIRECTOR — DATE 8-16-16

DATE	NO.	REVISION	BY

DEVELOPER
HOWARD COUNTY
DEPARTMENT OF PUBLIC WORKS
BUREAU OF FACILITIES
9250 BENDIX ROAD
COLUMBIA, MARYLAND 21045
ATTN: MARK STROMDAHL
PHONE: 410-313-5757

OWNER
HOWARD COUNTY
DEPARTMENT OF PUBLIC WORKS
BUREAU OF FACILITIES
9250 BENDIX ROAD
COLUMBIA, MARYLAND 21045
ATTN: MARK STROMDAHL
PHONE: 410-313-5757

PROJECT
GREEN BUILDING
HCLS ELKRIDGE BRANCH AND 50+ CENTER

AREA
TAX MAP 38, PARCEL 'A' PLAT 23869 ZONED B-1 & R-12
GRID NO. 7 1st ELECTION DISTRICT
6540 WASHINGTON BOULEVARD
ELKRIDGE, MARYLAND 21075-0000
HOWARD COUNTY, MARYLAND

TITLE
SOIL BORING LOGS

Pennoni Associates Inc.
Engineers • Surveyors • Planners
Landscape Architects
8818 Centre Park Drive, Suite 200 Columbia, MD 21045
T 410.997.8900 F 410.997.9282

SEAL
STATE OF MARYLAND — SHARON K. CRUZ — No. 36896 — REGISTERED PROFESSIONAL ENGINEER

BY: 6-29-16
"PROFESSIONAL CERTIFICATION. I HEREBY CERTIFY THAT THESE DOCUMENTS WERE PREPARED OR APPROVED BY ME, AND THAT I AM A DULY LICENSED PROFESSIONAL ENGINEER UNDER THE LAWS OF THE STATE OF MARYLAND, LICENSE NO. 36896, EXPIRATION DATE: 2-15-2017"

DESIGNED BY : PJS/JSN
DRAWN BY: PJS/JSN
PROJECT NO : GRIM1402
DATE : JUNE 20,2016
SCALE : AS SHOWN
DRAWING NO. 25 OF 50

SDP-16-038

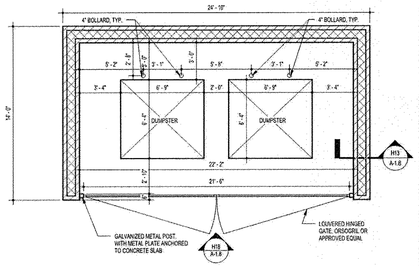

K18 PLAN - DUMPSTER ENCLOSURE
1/4" = 1'-0"

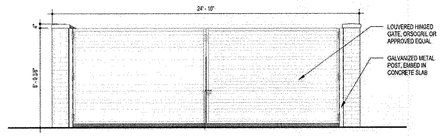

H18 ELEVATION - DUMPSTER ENCLOSURE
1/4" = 1'-0"

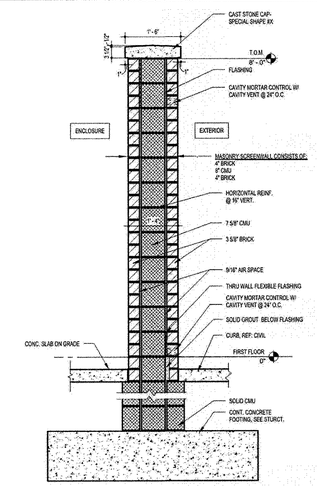

H13 SECTION - DUMPSTER SCREENWALL
3/4" = 1'-0"

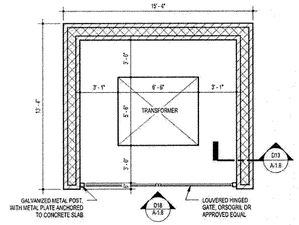

E18 PLAN - TRANSFORMER ENCLOSURE
1/4" = 1'-0"

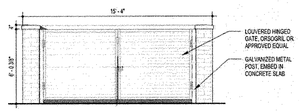

D18 ELEVATION - TRANSFORMER ENCLOSURE
1/4" = 1'-0"

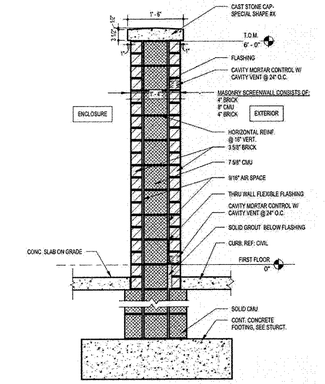

D13 SECTION - TRANSFORMER SCREENWALL
3/4" = 1'-0"

NOTE: SEE ARCHITECTURAL PLANS FOR FINAL CONSTRUCTION DETAILS.

GEOTECH ENGINEERS, INC.
LOG OF BORING No. SB-14

PROJECT: Elkridge Library SWM — PROJECT NO.: 352200
CLIENT: Grimm + Parker Architects
PROJECT LOCATION: 6540 Washington Blvd., Elkridge, MD
LOCATION: see boring location plan — ELEVATION: 159.1
DRILLER: Geomatrix Drilling, Inc. — LOGGED BY: KJ
DRILLING METHOD: Hollow Stem Auger — DATE: 12/11/15
DEPTH TO - WATER> INITIAL: ▼ Dry AFTER 24 HOURS: ▼ Dry — CAVING> C 3.0'

Elevation / Depth (feet)	Description	Graphic	Stratum	Soil Type	Blow Counts	TEST RESULTS: Plastic Limit ⊢ Water Content - ● Penetration - ▲ ⊣ Liquid Limit (10 20 30 40 50)	
159.1 / 0	2" topsoil Dark brown silty SAND with gravel (SM), moist						0
157.5 / 1.5							1.5
154.6 / 4.5	Black clayey GRAVEL (GC), moist						4.5
152.6 / 6.5	Light brown lean CLAY with gravel (CL), moist						6.5
149.1 / 10	Boring terminated at 10 ft.						10

This information pertains only to this boring and should not be interpreted as being indicative of the site.

Figure — PAGE 1 of 1

GEOTECH ENGINEERS, INC.
LOG OF BORING No. SB-15

PROJECT: Elkridge Library SWM — PROJECT NO.: 352200
CLIENT: Grimm + Parker Architects
PROJECT LOCATION: 6540 Washington Blvd., Elkridge, MD
LOCATION: see boring location plan — ELEVATION: 157.27
DRILLER: Geomatrix Drilling, Inc. — LOGGED BY: KJ
DRILLING METHOD: Hollow Stem Auger — DATE: 12/13/15
DEPTH TO - WATER> INITIAL: ▼ Dry AFTER 24 HOURS: ▼ Dry — CAVING> C 2.5'

Elevation / Depth (feet)	Description	Graphic	Stratum	Soil Type	Blow Counts	TEST RESULTS: Plastic Limit ⊢ Water Content - ● Penetration - ▲ ⊣ Liquid Limit (10 20 30 40 50)	
157.27 / 0	1.5" topsoil Dark brown silty SAND (SM), moist						0
155 / 2.5	Light brown sandy lean CLAY (CL), moist						1.5
152.5 / 5	Reddish brown and gray fat CLAY (CH), moist						4.0
150 / 7.5	Dark brown silty SAND with gravel (SM), moist						6.5
148.5 / 9	Boring terminated at 9 ft.						9

This information pertains only to this boring and should not be interpreted as being indicative of the site.

Auger refusal at 9' due to cobbles

Figure — PAGE 1 of 1

GEOTECH ENGINEERS, INC.
LOG OF BORING No. SB-16

PROJECT: Elkridge Library SWM — PROJECT NO.: 352200
CLIENT: Grimm + Parker Architects
PROJECT LOCATION: 6540 Washington Blvd., Elkridge, MD
LOCATION: see boring location plan — ELEVATION: 154.94
DRILLER: Geomatrix Drilling, Inc. — LOGGED BY: KJ
DRILLING METHOD: Hollow Stem Auger — DATE: 12/13/15
DEPTH TO - WATER> INITIAL: ▼ 9.5' AFTER 24 HOURS: ▼ Dry — CAVING> C 11.5'

Elevation / Depth (feet)	Description	Graphic	Stratum	Soil Type	Blow Counts	TEST RESULTS: Plastic Limit ⊢ Water Content - ● Penetration - ▲ ⊣ Liquid Limit (10 20 30 40 50)	
154.94 / 0	1" topsoil Dark brown silty SAND (SM), moist						0
153 / 1.5	Light brown fat CLAY (CH), moist						1.5
150 / 4.5	Light brown sandy lean CLAY (CL), moist						4.5
147.5 / 7.5	Light brown silty SAND with gravel (SM), moist						7.0
143.5 / 11.5	Boring terminated at 11.5 ft.						11.5

This information pertains only to this boring and should not be interpreted as being indicative of the site.

PVC pipe installed for water reading

Figure — PAGE 1 of 1

NOTE: SEE ARCHITECTURAL PLANS FOR FINAL CONSTRUCTION DETAILS. FINAL SIGN DESIGN AND TEXT TO BE CONFIRMED BY THE LIBRARY SYSTEM AS PART OF THE SIGN PERMIT DRAWINGS

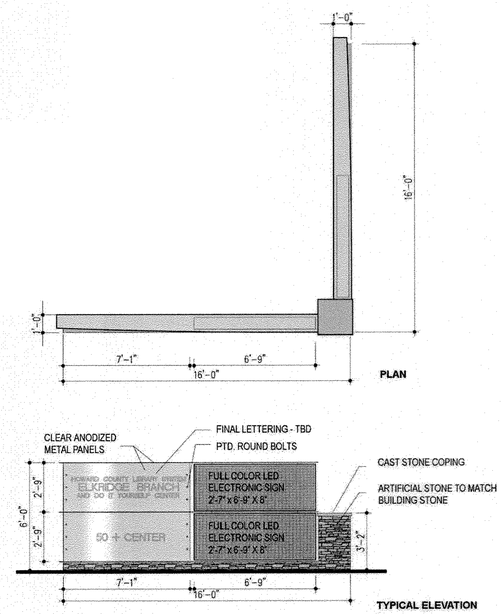

2/26 SIGN DETAIL
NOT TO SCALE

APPROVED : DEPARTMENT OF PLANNING AND ZONING

CHIEF, DEVELOPMENT ENGINEERING DIVISION — DATE 7-19-16
CHIEF, DIVISION OF LAND DEVELOPMENT — DATE 7-18-16
DIRECTOR — DATE 7-18-16

DATE	NO.	REVISION	BY

DEVELOPER
HOWARD COUNTY
DEPARTMENT OF PUBLIC WORKS
BUREAU OF FACILITIES
9250 BENDIX ROAD
COLUMBIA, MARYLAND 21045
ATTN: MARK STROMDAHL
PHONE: 410-313-5757

OWNER
HOWARD COUNTY
DEPARTMENT OF PUBLIC WORKS
BUREAU OF FACILITIES
9250 BENDIX ROAD
COLUMBIA, MARYLAND 21045
ATTN: MARK STROMDAHL
PHONE: 410-313-5757

PROJECT
GREEN BUILDING
HCLS ELKRIDGE BRANCH AND 50+ CENTER

AREA
TAX MAP 38, PARCEL 'A' PLAT ~~23618~~ 25618 ZONED B-1 & R-12
GRID NO. 7 1st ELECTION DISTRICT
6540 WASHINGTON BOULEVARD
ELKRIDGE, MARYLAND 21075-0000
HOWARD COUNTY, MARYLAND

TITLE
SITE DETAILS AND SOIL BORING LOGS

Pennoni Associates Inc.
Engineers • Surveyors • Planners
Landscape Architects
8818 Centre Park Drive, Suite 200 Columbia, MD 21045
T 410.997.8900 F 410.997.9282

SEAL
STATE OF MARYLAND · SHARON K. GRIM · 21708 · REGISTERED PROFESSIONAL ENGINEER
BY: 6-29-16
"PROFESSIONAL CERTIFICATION. I HEREBY CERTIFY THAT THESE DOCUMENTS WERE PREPARED OR APPROVED BY ME, AND THAT I AM A DULY LICENSED PROFESSIONAL ENGINEER UNDER THE LAWS OF THE STATE OF MARYLAND, LICENSE NO. 36698, EXPIRATION DATE: 2-15-2017"

DESIGNED BY :	PJS/JSN
DRAWN BY:	PJS/JSN
PROJECT NO :	GRIM1402
DATE :	JUNE 20,2016
SCALE :	AS SHOWN
DRAWING NO.	26 OF 50

SDP-16-038

I:\PROJECTS\GRIM1402-ELKRIDGE LIBRARY\DESIGN\CAD\SHEETS\SITE DEVELOPMENT PLAN\GRIM1402-SDP26

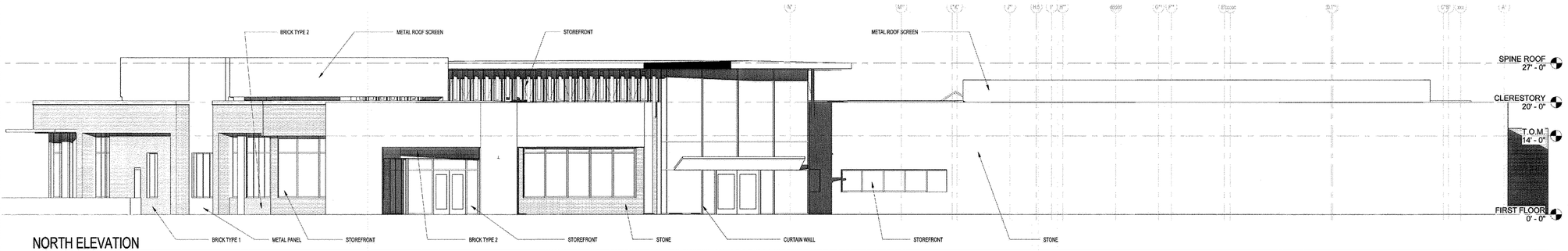

NORTH ELEVATION

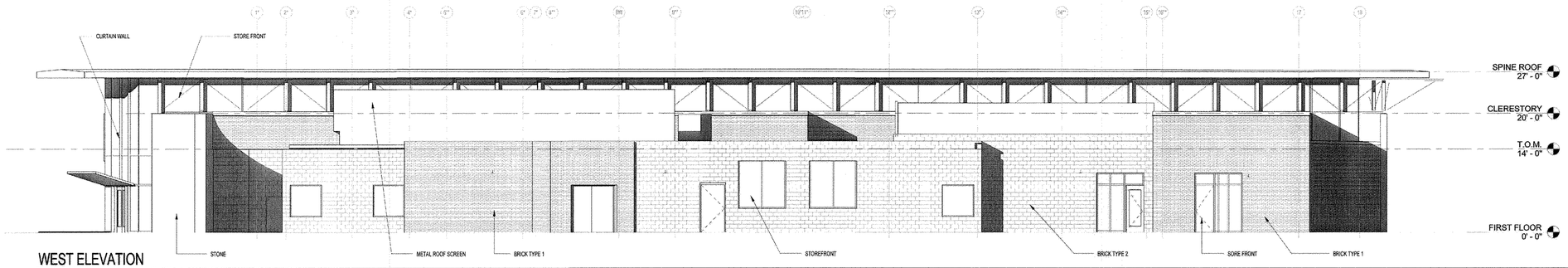

WEST ELEVATION

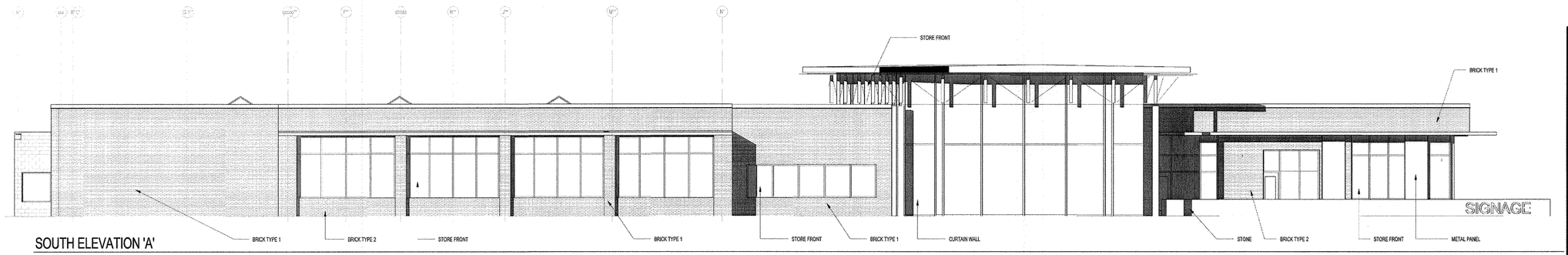

SOUTH ELEVATION 'A'

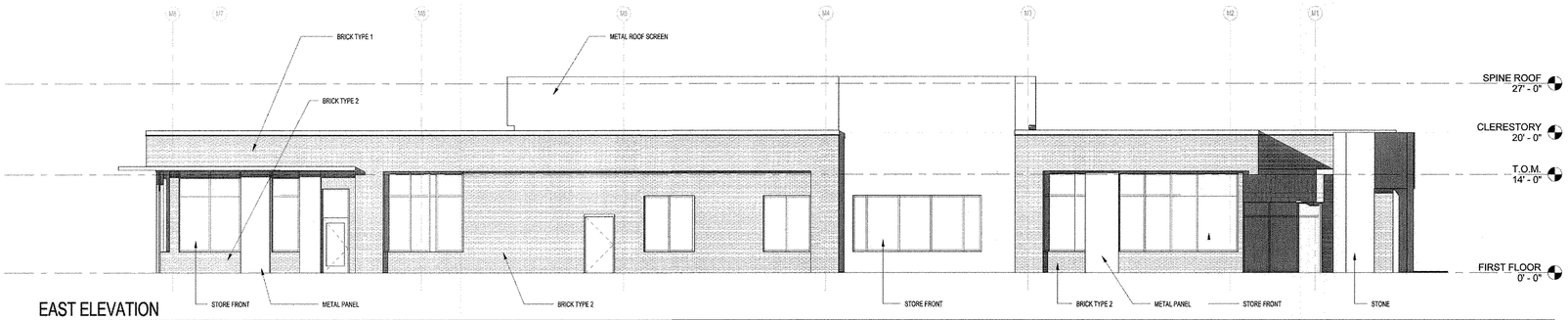

EAST ELEVATION

APPROVED : DEPARTMENT OF PLANNING AND ZONING

CHIEF, DEVELOPMENT ENGINEERING DIVISION — DATE 7-19-16

CHIEF, DIVISION OF LAND DEVELOPMENT — DATE 7.18.16

DIRECTOR — DATE 7-26-16

DATE	NO.	REVISION	BY

DEVELOPER
HOWARD COUNTY
DEPARTMENT OF PUBLIC WORKS
BUREAU OF FACILITIES
9250 BENDIX ROAD
COLUMBIA, MARYLAND 21045
ATTN: MARK STROMDAHL
PHONE: 410-313-5757

OWNER
HOWARD COUNTY
DEPARTMENT OF PUBLIC WORKS
BUREAU OF FACILITIES
9250 BENDIX ROAD
COLUMBIA, MARYLAND 21045
ATTN: MARK STROMDAHL
PHONE: 410-313-5757

PROJECT
GREEN BUILDING
HCLS ELKRIDGE BRANCH AND 50+ CENTER

AREA
TAX MAP 38, PARCEL 'A' PLAT ~~23810~~ 23819 ZONED B-1 & R-12
GRID NO. 7 1st ELECTION DISTRICT
6540 WASHINGTON BOULEVARD
ELKRIDGE, MARYLAND 21075-0000
HOWARD COUNTY, MARYLAND

TITLE
ARCHITECTURAL ELEVATIONS

Pennoni Associates Inc.
Engineers • Surveyors • Planners
Landscape Architects
8818 Centre Park Drive, Suite 200 Columbia, MD 21045
T 410.997.8900 F 410.997.9282

SEAL

STATE OF MARYLAND — SHARON L. OREM — 36994 — REGISTERED PROFESSIONAL ENGINEER

BY: — 7-19-16

"PROFESSIONAL CERTIFICATION. I HEREBY CERTIFY THAT THESE DOCUMENTS WERE PREPARED OR APPROVED BY ME, AND THAT I AM A DULY LICENSED PROFESSIONAL ENGINEER UNDER THE LAWS OF THE STATE OF MARYLAND, LICENSE NO. 36994, EXPIRATION DATE: 9-15-2017"

DESIGNED BY :	PJS/JSN
DRAWN BY:	PJS/JSN
PROJECT NO :	GRIM1402
DATE :	JUNE 20,2016
SCALE :	NOT TO SCALE
DRAWING NO.	27 OF 50

SDP-16-038

END 42" GUARDRAIL

WALL TYPE W-2
2+31 TO 2+47

WALL TYPE W-1
2+47 TO 2+99

WALL TYPE W-3
2+05 TO 2+31

WALL TYPE W-5
0+70 TO 2+05

WALL TYPE W-4
0+00 TO 0+70

REFER TO LANDSCAPE ARCHITECTURAL DETAILS AND RETAINING WALL DETAILS FOR BOARDWALK/WALL CONNECTION/

TIE GUARDRAIL TO BOARDWALK GUARDRAIL

FINISH TOP OF RETAINING WALL WITH SOLID BLOCK COURSE AND SEGMENTAL WALL CAP. REFER TO WALL RETAINING WALL DETAILS.

RETAINING WALL CONSTRUCTION ZONE

RETAINING WALL #1 WITH 42" GUARD RAIL

RETAINING WALL #2 WITH 42" GUARDRAIL. RETAINING WALL #2 IS WALL TYPE W-1 FOR ENTIRE LENGTH

BEGIN 42" GUARDRAIL, SEE RETAINING WALL PLANS AND LANDSCAPE PLANS FOR DETAILS

EP 2+99.61
PT 2+79.03
PRC 2+72.81
PCC 2+44.18
Mid 2+75.92
Mid 2+58.50
Mid 2+22.11
PRC 2+00.03
Mid 1+86.06
PRC 1+72.08
Mid 1+65.93
PC 1+59.78
PT 1+33.18
Mid 1+02.16
PCC 0+71.15
Mid 0+35.57
PC 0+19.12
Mid 0+08.07
BP 0+00

LEGEND

- PROPERTY LINE AND RIGHT-OF-WAY
- EXISTING BUILDING
- EXISTING 1' CONTOUR — 154
- EXISTING 5' CONTOUR — 155
- EXISTING TREE LINE
- EXISTING WETLANDS
- EXISTING WETLAND BUFFER — WB
- EXISTING ZONING LINE
- EXISTING WATER — W
- EXISTING SEWER — S
- EXISTING COMMUNICATIONS — UC
- EXISTING ELECTRICAL — E
- EXISTING GAS — G
- EXISTING STORM DRAIN
- PROPOSED 1' CONTOUR — 164
- PROPOSED 5' CONTOUR — 165
- PROPOSED PERVIOUS PAVING
- PROPOSED MICRO-BIORETENTION FACILITY
- PROPOSED STORM DRAIN
- PROPOSED WATER
- PROP. CONCRETE SIDEWALK
- PROPOSED TREE LINE

GRAPHIC SCALE 1"=10'
5' 0' 10' 20'

APPROVED : DEPARTMENT OF PLANNING AND ZONING

CHIEF, DEVELOPMENT ENGINEERING DIVISION JP — DATE 7.19.16

CHIEF, DIVISION OF LAND DEVELOPMENT JP — DATE 8.16.16

DIRECTOR — DATE 8-16-16

DATE	NO.	REVISION	BY

DEVELOPER
HOWARD COUNTY
DEPARTMENT OF PUBLIC WORKS
BUREAU OF FACILITIES
9250 BENDIX ROAD
COLUMBIA, MARYLAND 21045
ATTN: MARK STROMDAHL
PHONE: 410-313-5757

OWNER
HOWARD COUNTY
DEPARTMENT OF PUBLIC WORKS
BUREAU OF FACILITIES
9250 BENDIX ROAD
COLUMBIA, MARYLAND 21045
ATTN: MARK STROMDAHL
PHONE: 410-313-5757

PROJECT
GREEN BUILDING
HCLS ELKRIDGE BRANCH AND 50+ CENTER

AREA
TAX MAP 38, PARCEL 'A' PLAT 23868 ZONED B-1 & R-12
GRID NO. 7 1st ELECTION DISTRICT
6540 WASHINGTON BOULEVARD
ELKRIDGE, MARYLAND 21075-0000
HOWARD COUNTY, MARYLAND

TITLE
RETAINING WALL PLAN

Pennoni Associates Inc.
Engineers • Surveyors • Planners
Landscape Architects
8818 Centre Park Drive, Suite 200 Columbia, MD 21045
T 410.997.8900 F 410.997.9282

SEAL
STATE OF MARYLAND — SHARON J. GRIP — No. 30598 — REGISTERED PROFESSIONAL ENGINEER

BY: 6-29-16

"PROFESSIONAL CERTIFICATION. I HEREBY CERTIFY THAT THESE DOCUMENTS WERE PREPARED OR APPROVED BY ME, AND THAT I AM A DULY LICENSED PROFESSIONAL ENGINEER UNDER THE LAWS OF THE STATE OF MARYLAND, LICENSE NO. 30598, EXPIRATION DATE: 7-15-17"

DESIGNED BY :	PJS/JSN
DRAWN BY:	PJS/JSN
PROJECT NO :	GRIM1402
DATE :	JUNE 20,2016
SCALE :	1" = 10'
DRAWING NO.	28 OF 50

SDP-16-038

GENERAL NOTES

FOUNDATIONS

1.) FOUNDATIONS ARE TO BE DESIGNED FOR A BEARING CAPACITY OF 3000 PSF BASED ON THE GEOTECHNICAL REPORT PREPARED BY GEOTECH ENGINEERS, INC. DATED 12/22/2015. FOUNDATIONS SHALL BEAR ON NATURAL UNDISTURBED SOIL 1'-0" BELOW ORIGINAL GRADE. A GEOTECHNICAL ENGINEER REGISTERED IN THE LOCAL JURISDICTION SHALL VERIFY SOIL PRESSURE IN THE FIELD. IF FOUND TO BE LESS THAN THE REQUIRED BEARING PRESSURE, THE FOUNDATIONS WILL HAVE TO BE REDESIGNED.

CONCRETE:

1.) ALL CONCRETE FOR FOUNDATIONS SHALL BE f'c=3000 psi NORMAL WEIGHT CONCRETE AT 28 DAYS. ALL CONCRETE EXPOSED TO THE WEATHER SHALL BE f'c=4000 psi NORMAL WEIGHT CONCRETE AND SHALL BE AIR ENTRAINED PER ACI 318 "BUILDING CODE REQUIREMENTS FOR STRUCTURAL CONCRETE" (LATEST LOCAL APPROVED EDITION) FOR SEVERE EXPOSURE.

PLANT-ABLE SEGMENTAL RETAINING WALLS:

1.) THE NOTES AND DETAILS PROVIDED ARE FOR BIDDING PURPOSES ONLY. IT IS THE CONTRACTOR'S RESPONSIBILITY TO DESIGN THE WALLS AND COORDINATE WITH MANUFACTURER OF MODULAR FACING CONCRETE UNITS TO INSURE THE STRUCTURE INTEGRITY OF THE WALLS. DESIGN MUST MEET THE REQUIREMENTS OF "NCMA DESIGN MANUAL FOR SEGMENTAL RETAINING WALLS, 3RD EDITION, 2009."

2.) THE PLANT-ABLE SEGMENTAL RETAINING WALLS SHALL BE DESIGNED FOR THE FOLLOWING MINIMUM SAFETY FACTORS:
- a.) SLIDING 1.5
- b.) OVERTURNING 2.0
- c.) PULL OUT CAPACITY OF GRID 1.5
- d.) STABILITY OF FACING 1.5
- e.) GLOBAL STABILITY 1.4

3.) THE PLANT-ABLE SEGMENTAL RETAINING WALLS SHALL BE DESIGNED FOR THE FOLLOWING SOIL PARAMETERS AND SURCHARGES:

REINFORCED BACKFILL:
- a.) MOIST SOIL DENSITY .... 120 PCF
- b.) FRICTION ANGLE .... 30 DEGREES
- c.) COHESION 0
- d.) ACTIVE COEFFICIENT, Ka 0.33
- e.) PASSIVE COEFFICIENT, Kp 3.0

FOUNDATION SOILS:
- a.) MOIST SOIL DENSITY .... 120 PCF
- b.) FRICTION ANGLE .... 30 DEGREES
- c.) COHESION 0
- d.) FRICTIONAL SLIDING COEFFICIENT 0.6
- e.) BEARING CAPACITY .... 3000 PSF
- f.) PASSIVE COEFFICIENT, Kp 3.0

SURCHARGE:
- a.) UPPER TIER LIVE LOAD .... 250 PSF
- b.) LOWER TIER LIVE LOAD .... 100 PSF PLUS SURCHARGE FROM THE UPPER WALL PLUS SURCHARGE FROM THE GUARDRAIL

4.) PLANT-ABLE SEGMENTAL RETAINING WALL UNITS SHALL HAVE A MINIMUM COMPRESSION STRENGTH OF 3000 PSI AND SHALL BE MANUFACTURED AND TESTED PER ASTM C1372 AND ASTM C140.

5.) GEOSYNTHETIC REINFORCING SHALL CONSIST OF GEOGRIDS MANUFACTURED SPECIFICALLY FOR SOIL REINFORCING APPLICATIONS. GEOGRIDS SHALL BE MANUFACTURED FROM HIGH TENACITY POLYESTER YARN OR HIGH DENSITY POLYETHYLENE, AND SHALL MEET THE FOLLOWING:
- a.) ASTM D 4595 – STANDARD TEST FOR TENSILE PROPERTIES OF GEOTEXTILES BY THE WIDE-WIDTH STRIP METHOD
- b.) ASTM D 5262– STANDARD TEST METHOD FOR EVALUATING THE UNCONFINED TENSION CREEP AND CREEP RUPTURE BEHAVIOR OF GEOSYNTHETICS
- c.) ASTM D 5321 – STANDARD TEST METHOD FOR DETERMINING THE SHEAR STRENGTH OF SOIL-GEOSYNTHETIC AND GEOSYNTHETIC-GEOSYNTHETIC INTERFACES BY DIRECT SHEAR
- d.) ASTM D 5818 – STANDARD PRACTICE FOR EXPOSURE AND RETRIEVAL OF SAMPLES TO EVALUATE INSTALLATION DAMAGE OF GEOSYNTHETICS
- e.) ASTM D 6706 – STANDARD TEST METHOD FOR MEASURING GEOSYNTHETIC PULLOUT RESISTANCE IN SOIL

6.) THE GEOSYNTHETIC REINFORCING MUST EXTEND 1'-0" MINIMUM BEYOND THE "COULOMB" FAILURE PLANE AND SHALL HAVE A MINIMUM LENGTH OF THE LARGER OF 0.60 x H OR 4'-0".

7.) ALIGNMENT PINS SHALL BE 1/2" IN DIAMETER AND FABRICATED FROM PULTRUDED FIBERGLASS. ALIGNMENT PINS MAY ALSO BE FABRICATED FROM ASTM A36 OR A82 STEEL AND GALVANIZED IN CONFORMANCE WITH ASTM A123 (AASHTO, M-111) WHEN SPECIFIED ON THE CONSTRUCTION DRAWINGS.

8.) THE UNIT DRAINAGE FILL MATERIAL IN AND FOR A NORMAL DISTANCE 12 INCHES OR AS INDICATED ON THE CONSTRUCTION DRAWINGS SHALL CONSIST OF WASHED STONE MATERIAL COMPLYING TO THE FOLLOWING GRADATION:

SIEVE SIZE	PRECENT PASSING
1"	100
3/4"	100–75
No.4	0–10
No.50	0–5

9.) STRUCTURE BACKFILL MATERIAL BEHIND THE UNIT DRAINAGE FILL SHALL BE SELECTED BACKFILL THAT MUST CONFORM TO THE DECEMBER 22, 2015 GEOTECHNICAL REPORT PREPARED BY GEOTECH ENGINEERS, INC.

PLANT-ABLE SEGMENTAL RETAINING WALLS (CONTINUED):

10.) UNIT DRAINAGE AND STRUCTURE FILL SHALL BE PLACED AFTER THE ERECTION OF EACH COURSE OF UNITS. STRUCTURE BACKFILL SHALL BE PLACED IN SUCH A MANNER AS TO AVOID ANY DAMAGE OR DISTURBANCE OF THE WALL MATERIALS OR MISALIGNMENT OF THE FACING UNITS OR REINFORCING ELEMENTS. THE STRUCTURE BACKFILL SHALL BE PLACED SLIGHTLY HIGHER THAN LEVEL OF THE CONNECTION.

11.) STRUCTURE BACKFILL SHALL BE COMPACTED TO 95 PERCENT OF THE MAXIMUM DRY DENSITY PER ASTM D 698, STANDARD PROCTOR.

12.) THE MAXIMUM LIFT THICKNESS AFTER COMPACTION SHALL NOT EXCEED 8 INCHES (200mm). THE CONTRACTOR SHALL DECREASE THIS LIFT THICKNESS, IF NECESSARY, TO OBTAIN THE SPECIFIED DENSITY.

13.) AT THE END OF EACH DAY'S OPERATION, THE CONTRACTOR SHALL SLOPE THE LAST LEVEL OF BACKFILL AWAY FROM THE WALL FACING TO RAPIDLY DIRECT RUNOFF AWAY FROM THE WALL FACE. IN ADDITION, THE CONTRACTOR SHALL NOT ALLOW SURFACE RUNOFF FROM ADJACENT AREAS TO ENTER THE WALL CONSTRUCTION SITE.

14.) THE PLANT-ABLE SEGMENTAL RETAINING WALL CONTRACTOR MUST HAVE AT LEAST 5 YEARS OF EXPERIENCE IN THE DESIGN AND CONSTRUCTION OF SIMILAR WALLS.

MISCELLANEOUS:

1.) ITEMS AND CONDITIONS NOTED OR IDENTIFIED IN SECTIONS AND DETAILS APPLY TO AREAS SIMILAR IN CONDITION TO THOSE DENOTED BY SECTION CUT OR DETAIL MARK.

2.) ITHE CONTRACTOR SHALL NOTIFY THE ARCHITECT AND STRUCTURAL ENGINEER OF ANY DISCREPANCIES BETWEEN THE STRUCTURAL DOCUMENTS AND ANY OTHER DOCUMENTS OR EXISTING CONDITIONS FOR RESOLUTION PRIOR TO PROCEEDING WITH FABRICATION OR CONSTRUCTION.

3.) SHOP DRAWINGS FOR ALL STRUCTURAL ITEMS MUST BE SUBMITTED BY THE CONTRACTOR. IF A CONTRACTOR OR OWNER FAILS TO SUBMIT THE SHOP DRAWINGS, THE FIRM COLUMBIA ENGINEERING INC., WILL NOT BE RESPONSIBLE FOR THE STRUCTURAL CERTIFICATION AND/OR THE DESIGN OF THE PROJECT.

4.) REPRODUCTIONS OF CONTRACT DOCUMENTS WILL NOT BE ACCEPTED AS SHOP DRAWINGS.

5.) SIGNED AND SEALED SHOP DRAWINGS AND COMPUTATIONS SHALL BE SUBMITTED FOR ARCHITECT/ENGINEER REVIEW FOR THE FOLLOWING ITEMS:
- a.) PLANT-ABLE SEGMENTAL RETAINING WALLS

6.) ALL SHOP DRAWINGS USED FOR WORK SHALL BEAR THE STAMP OF THE ARCHITECT/ENGINEER AND SHALL BE MARKED "REVIEWED" OR "REVIEWED AS NOTED".

7.) LOADS GREATER THAN THE DESIGN LIVE LOADS SHALL NOT BE PLACED ON THE STRUCTURE.

8.) ALL WORK SPECIFIED HEREIN SHALL BE INSPECTED IN ACCORDANCE WITH IBC CHAPTER 17 AND ALL LOCAL ORDINANCES. THE OWNER SHALL HIRE AN EXPERIENCED, QUALIFIED INSPECTOR TO PERFORM ALL THE REQUIRED INSPECTION WORK. THE ENGINEER WILL NOT PERFORM THE REQUIRED INSPECTION AS A PART OF HIS DESIGN SERVICE. THE ENGINEER MAY VISIT THE SITE TO ASCERTAIN GENERAL CONFORMANCE TO THE CONTRACT DOCUMENTS AND SUCH VISITS ARE NOT TO BE CONSTRUED AS MEETING INSPECTION REQUIREMENTS UNLESS THE ENGINEER SPECIFICALLY SO STATES IN WRITING.

DESIGN CODES:

1.) INTERNATIONAL BUILDING CODE 2015

2.) NCMA DESIGN MANUAL FOR SEGMENTAL RETAINING WALLS, 3RD EDITION, 2009

3.) HOWARD COUNTY DESIGN MANUAL – VOLUME III

CONSTRUCTION NOTES:

1.) NO TREES SHALL BE PLANTED WITHIN 10 FEET OF THE TOP OF THE RETAINING WALLS.

2.) RETAINING WALLS SHALL ONLY BE CONSTRUCTED UNDER THE OBSERVATION OF A REGISTERED PROFESSIONAL ENGINEER AND A (NICET, WACEL OR EQUIVALENT) CERTIFIED SOILS TECHNICIAN.

3.) THE REQUIRED BEARING PRESSURE BENEATH THE WALL SYSTEM SHALL BE VERIFIED IN THE FIELD BY A CERTIFIED SOILS TECHNICIAN. TESTING DOCUMENTATION MUST BE PROVIDED TO THE HOWARD COUNTY INSPECTOR PRIOR TO THE START OF CONSTRUCTION. THE REQUIRED BEARING TEST SHALL BE THE DYNAMIC CONE PENETROMETER TEST PER ASTM STP-399.

4.) THE SUITABILITY OF FILL MATERIAL SHALL BE CONFIRMED BY THE ON-SITE SOILS TECHNICIAN. EACH EIGHT-INCH LIFT MUST BE COMPACTED TO A MINIMUM 95% STANDARD PROCTOR DENSITY AND THE TESTING REPORT SHALL BE MADE AVAILABLE TO THE HOWARD COUNTY INSPECTOR UPON COMPLETION OF CONSTRUCTION.

5.) ONE SOIL BORING SHALL BE REQUIRED EVERY ONE HUNDRED FEET ALONG THE ENTIRE LENGTH OF THE WALL. COPIES OF ALL BORINGS SHALL BE PROVIDED TO THE HOWARD COUNTY INSPECTOR PRIOR TO CONSTRUCTION.

6.) WALLS SHALL NOT BE CONSTRUCTED ON UNCERTIFIED FILL MATERIALS.

7.) WALLS SHALL NOT BE CONSTRUCTED WITHIN A HOWARD COUNTY RIGHT-OF-WAY OR EASEMENT.

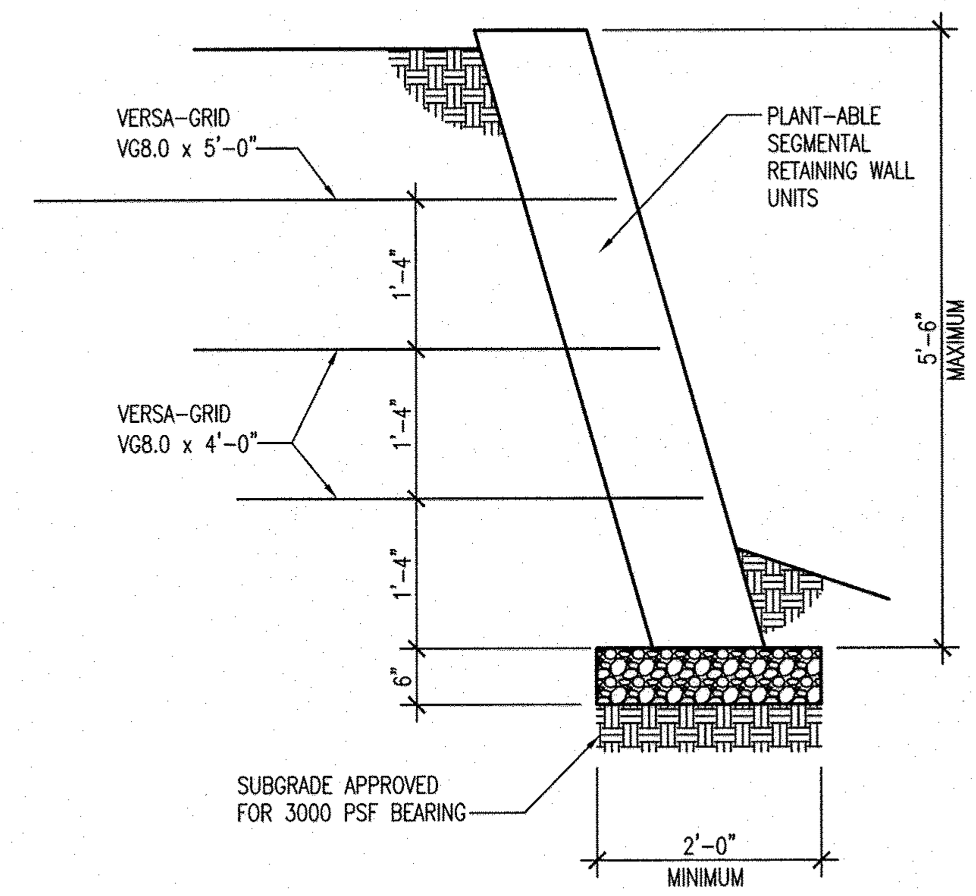

NOTES:
1.) REFER TO TYPICAL SECTIONS IN DRAWING 30 FOR PARTS NOT SHOWN.
2.) REINFORCING NOT REQUIRED FOR WALLS LESS THAN 18" TALL.

WALL TYPE W-1

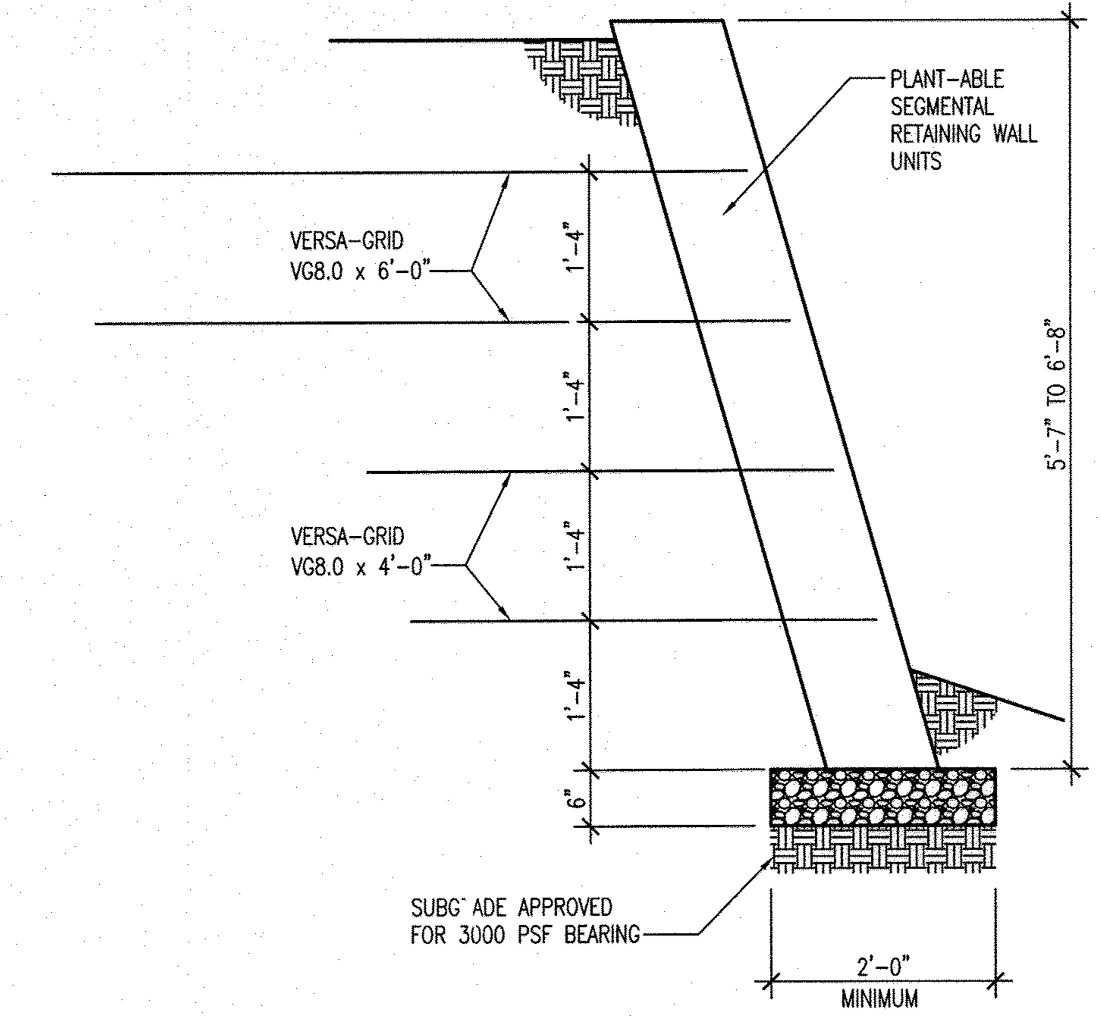

NOTES:
1.) REFER TO TYPICAL SECTIONS IN DRAWING 30 FOR PARTS NOT SHOWN.

WALL TYPE W-2

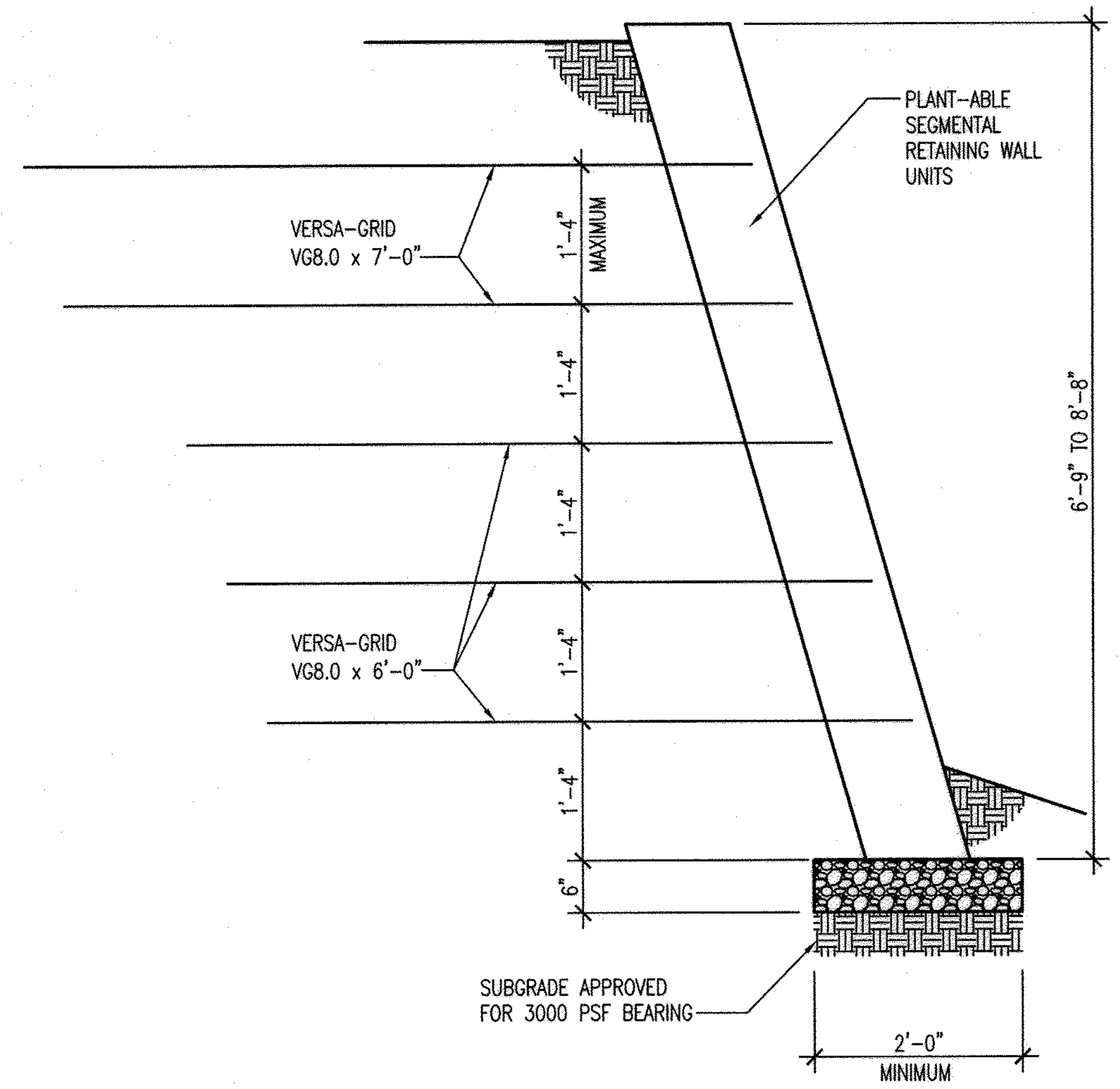

NOTES:
1.) REFER TO TYPICAL SECTIONS IN DRAWING 30 FOR PARTS NOT SHOWN.

WALL TYPE W-3

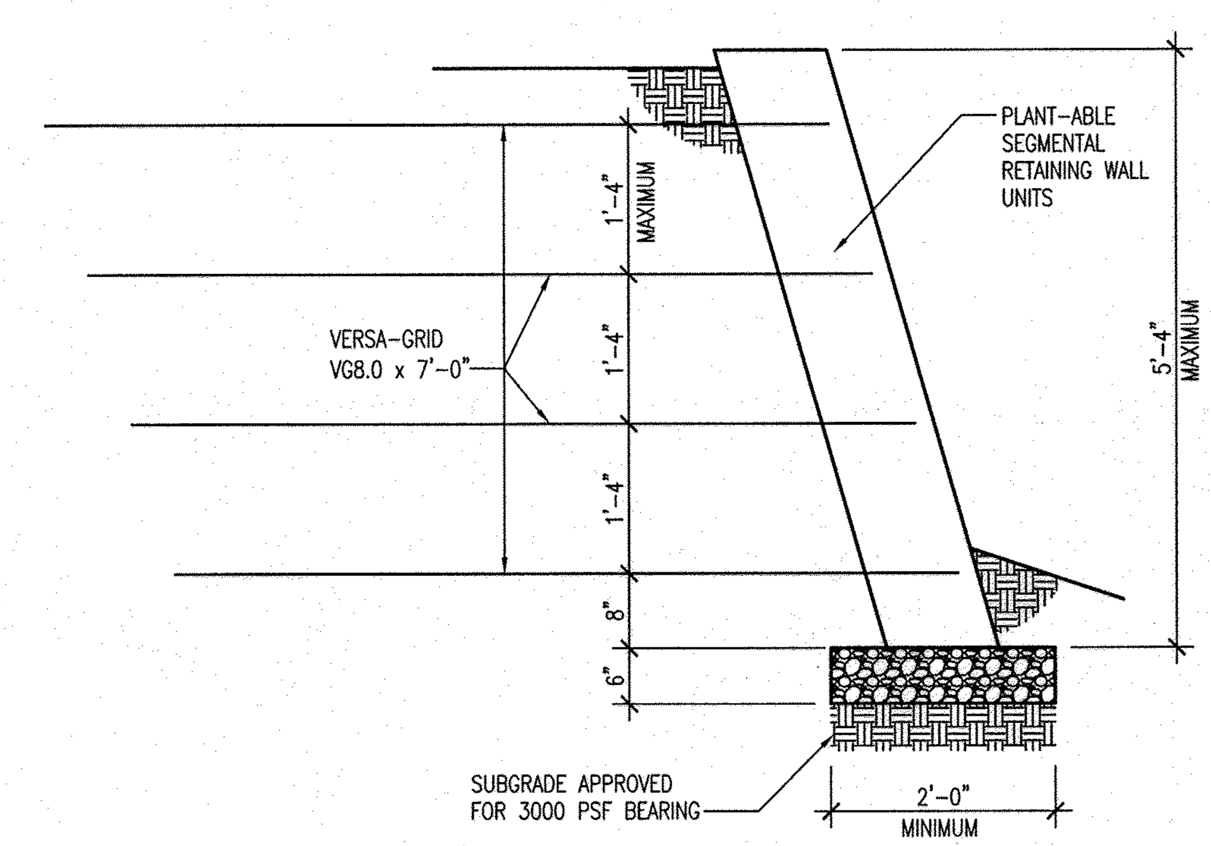

NOTES:
1.) REFER TO TYPICAL SECTIONS IN DRAWING 30 FOR PARTS NOT SHOWN.
2.) WALL TYPE APPLIES AT LOWER SECTION OF DOUBLE TIER WALL.

WALL TYPE W-4

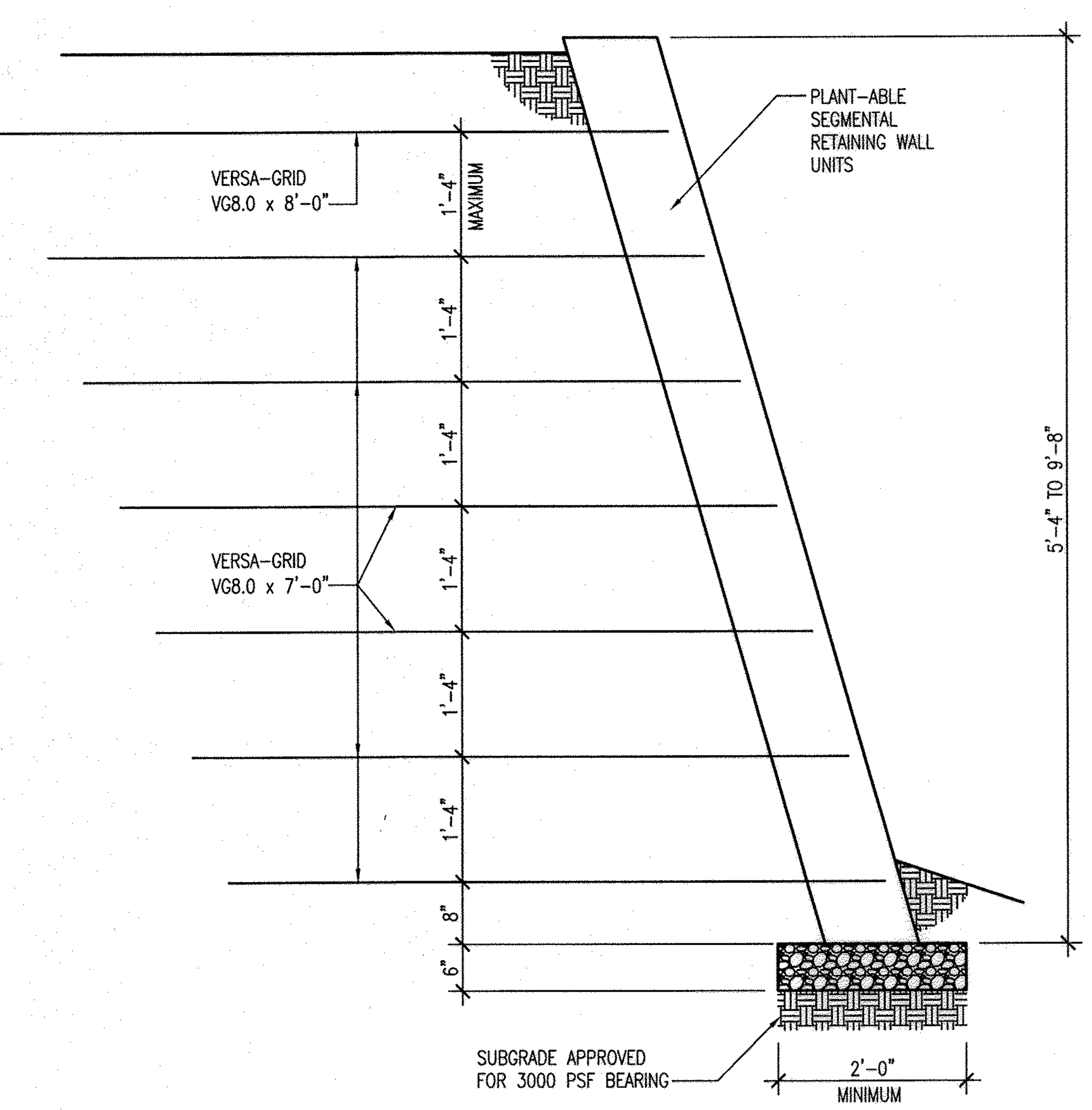

NOTES:
1.) REFER TO TYPICAL SECTIONS IN DRAWING 30 FOR PARTS NOT SHOWN.
2.) WALL TYPE APPLIES AT LOWER SECTION OF DOUBLE TIER WALL.

WALL TYPE W-5

Columbia Engineering Inc.
Structural Engineers
6210 Old Dobbin Lane 410.992.9970 Tel
Suite 150
Columbia, Maryland 21045 410.992.0627 Fax
rchacon@columbiaengineering.com

APPROVED : DEPARTMENT OF PLANNING AND ZONING

CHIEF, DEVELOPMENT ENGINEERING DIVISION	DATE 7.19.16
CHIEF, DIVISION OF LAND DEVELOPMENT	DATE 8-16-16
DIRECTOR	DATE 8-16-16

DATE	NO.	REVISION	BY

DEVELOPER: HOWARD COUNTY, DEPARTMENT OF PUBLIC WORKS, BUREAU OF FACILITIES, 9250 BENDIX ROAD, COLUMBIA, MARYLAND 21045, ATTN: MARK STROMDAHL, PHONE: 410-313-2700

OWNER: HOWARD COUNTY, DEPARTMENT OF PUBLIC WORKS, BUREAU OF FACILITIES, 9250 BENDIX ROAD, COLUMBIA, MARYLAND 21045, ATTN: MARK STROMDAHL, PHONE: 410-313-2700

PROJECT: HCLS ELKRIDGE BRANCH AND 50+ CENTER

AREA: PLAT NOS. 23869 - 23870
TAX MAP 38, PARCELS 97 & 478 ZONED B-1 & R-12
GRID NO. 7 1st ELECTION DISTRICT
6540 WASHINGTON BOULEVARD
ELKRIDGE, MARYLAND 21075-0000
HOWARD COUNTY, MARYLAND

TITLE: RETAINING WALL GENERAL NOTES

Pennoni Associates Inc.
Engineers • Surveyors • Planners
Landscape Architects
8818 Centre Park Drive, Suite 200 Columbia, MD 21045
T 410.997.8900 F 410.997.9282

SEAL: STATE OF MARYLAND, RODRIGO B. CHACON, NO. 14479, REGISTERED PROFESSIONAL ENGINEER

BY:

"PROFESSIONAL CERTIFICATION. I HEREBY CERTIFY THAT THESE DOCUMENTS WERE PREPARED OR APPROVED BY ME, AND THAT I AM A DULY LICENSED PROFESSIONAL ENGINEER UNDER THE LAWS OF THE STATE OF MARYLAND, LICENSE NO. 14479 EXPIRATION DATE: 06-22-2017."

DESIGNED BY :	RC
DRAWN BY:	MT
PROJECT NO :	GRIM1402
DATE :	JUNE 20, 2016
SCALE :	N.T.S.
DRAWING NO.	29 OF 50

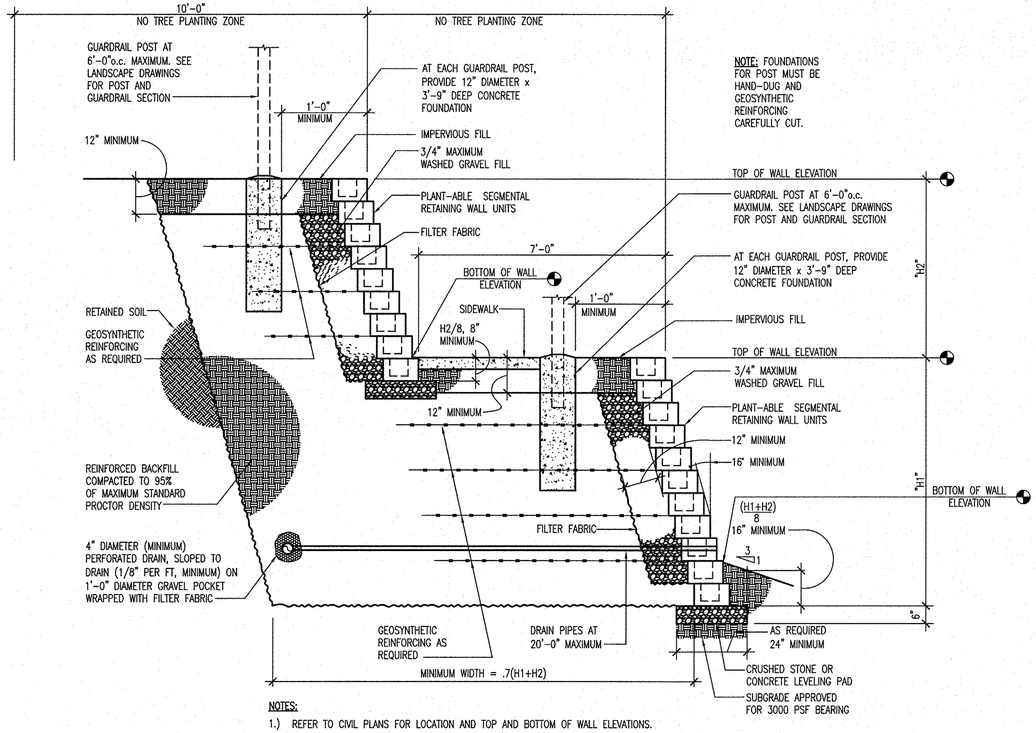

NOTES:

1.) REFER TO CIVIL PLANS FOR LOCATION AND TOP AND BOTTOM OF WALL ELEVATIONS.
2.) PROVIDE CONTINUOUS GUARDRAILS. SEE LANDSCAPE DRAWINGS FOR DETAIL.

TYPICAL TIERED RETAINING WALL SECTION

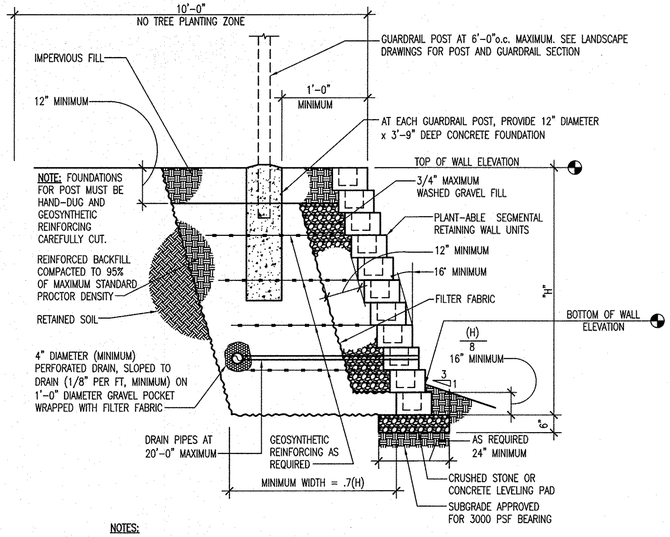

NOTES:

1.) REFER TO CIVIL PLANS FOR LOCATION AND TOP AND BOTTOM OF WALL ELEVATIONS.
2.) PROVIDE CONTINUOUS GUARDRAILS. SEE LANDSCAPE DRAWINGS FOR DETAIL.

TYPICAL RETAINING WALL SECTION

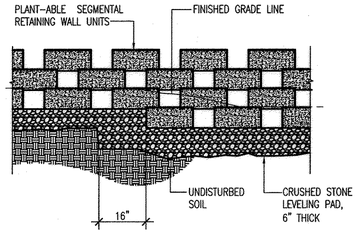

NOTES:

1.) CHANGE IN BASE ELEVATION TO MATCH HEIGHT OF MASONRY UNIT.
2.) PROVIDE STEPS AS REQUIRED TO ACCOMMODATE GRADE CHANGES.

TYPICAL WALL ELEVATION AND STEP DETAIL

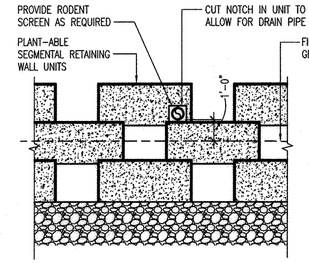

TYPICAL "WEEP PIPE" DETAIL

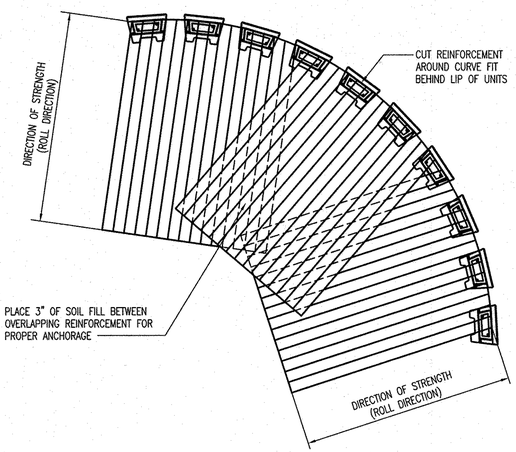

TYPICAL GEOSYNTHETIC PLACEMENT - CONVEX CURVE DETAIL

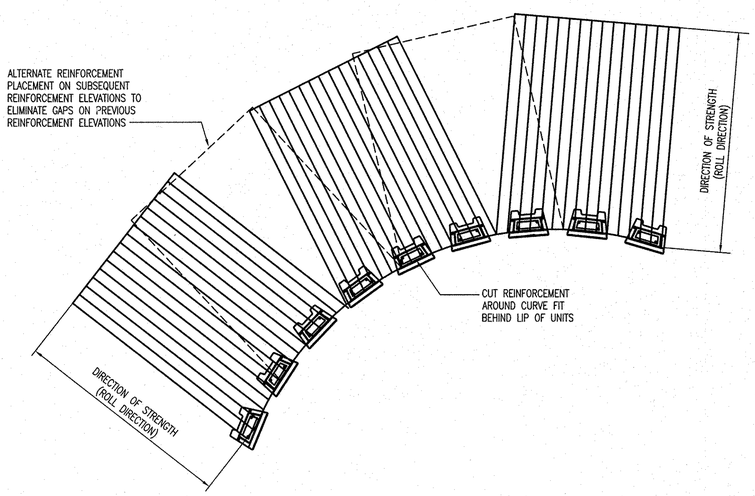

TYPICAL GEOSYNTHETIC PLACEMENT - CONCAVE CURVE DETAIL

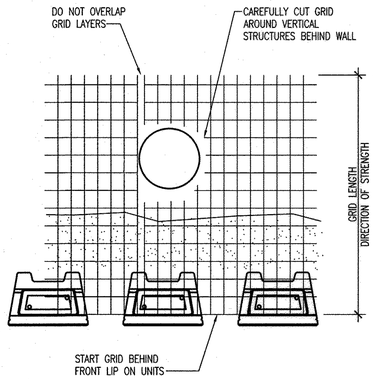

NOTES:

1.) FOLLOW GEOSYNTHETIC GRID MANUFACTURER'S INSTALLATION INSTRUCTIONS AND SPECIFICATIONS.

GEOSYNTHETIC AT STRUCTURES BEHIND WALL DETAIL

APPROVED : DEPARTMENT OF PLANNING AND ZONING

CHIEF, DEVELOPMENT ENGINEERING DIVISION — DATE 7.19.16

CHIEF, DIVISION OF LAND DEVELOPMENT — DATE 8.4.16

DIRECTOR — DATE 8-16-16

DATE	NO.	REVISION	BY

DEVELOPER
HOWARD COUNTY
DEPARTMENT OF PUBLIC WORKS
BUREAU OF FACILITIES
9250 BENDIX ROAD
COLUMBIA, MARYLAND 21045
ATTN: MARK STROMDAHL
PHONE: 410-313-2700

OWNER
HOWARD COUNTY
DEPARTMENT OF PUBLIC WORKS
BUREAU OF FACILITIES
9250 BENDIX ROAD
COLUMBIA, MARYLAND 21045
ATTN: MARK STROMDAHL
PHONE: 410-313-2700

PROJECT
HCLS ELKRIDGE BRANCH AND 50+ CENTER

AREA
PLAT NOS. 23869 - 23870
TAX MAP 38, PARCELS 97 & 478 ZONED B-1 & R-12
GRID NO. 7 1st ELECTION DISTRICT
6540 WASHINGTON BOULEVARD
ELKRIDGE, MARYLAND 21075-0000
HOWARD COUNTY, MARYLAND

TITLE
RETAINING WALL
TYPICAL SECTIONS AND DETAILS

Pennoni Associates Inc.
Engineers • Surveyors • Planners
Landscape Architects
8818 Centre Park Drive, Suite 200 Columbia, MD 21045
T 410.997.8900 F 410.997.9282

Columbia Engineering Inc.
Structural Engineers
6210 Old Dobbin Lane Suite 150 Columbia, Maryland 21045
410.992.9970 Tel
410.992.0627 Fax
rchacon@columbiaengineering.com

SEAL

STATE OF MARYLAND — ROBERT J. CHACON — NO. 14479 — REGISTERED PROFESSIONAL ENGINEER

BY:

"PROFESSIONAL CERTIFICATION. I HEREBY CERTIFY THAT THESE DOCUMENTS WERE PREPARED OR APPROVED BY ME, AND THAT I AM A DULY LICENSED PROFESSIONAL ENGINEER UNDER THE LAWS OF THE STATE OF MARYLAND, LICENSE NO. 14479 EXPIRATION DATE: 09-20-2017."

DESIGNED BY :	RC
DRAWN BY:	MT
PROJECT NO :	GRIM1402
DATE :	JUNE 20, 2016
SCALE :	N.T.S.
DRAWING NO.	30 OF 50

SDP-16-038

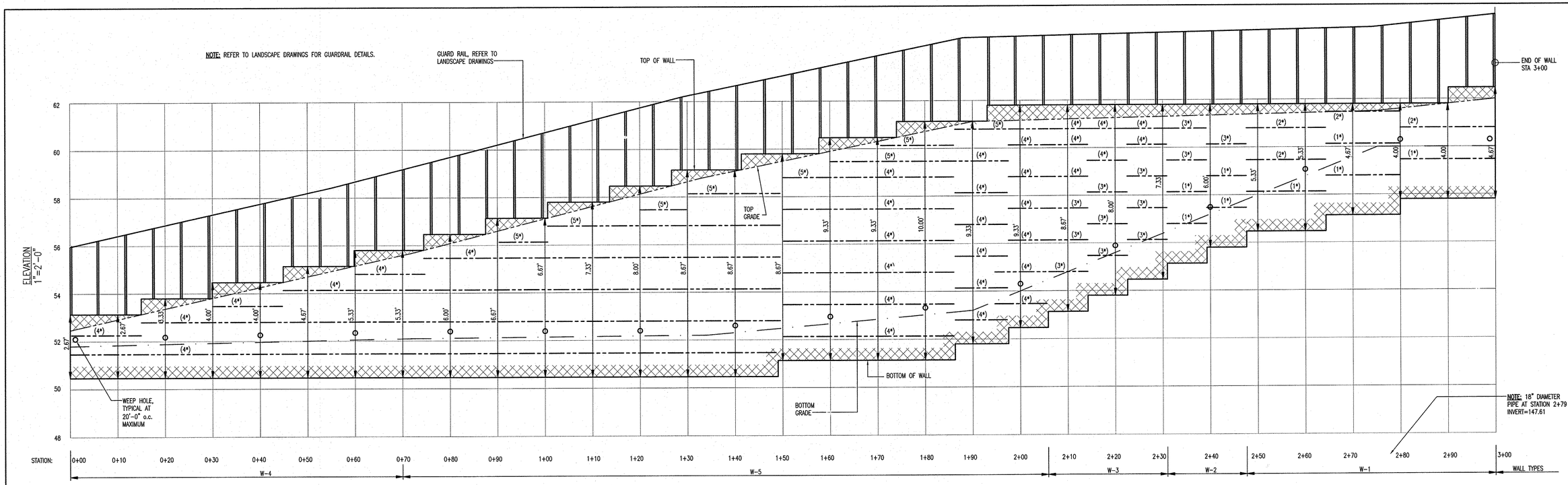

WALL #1 ELEVATION
1"=10'-0"

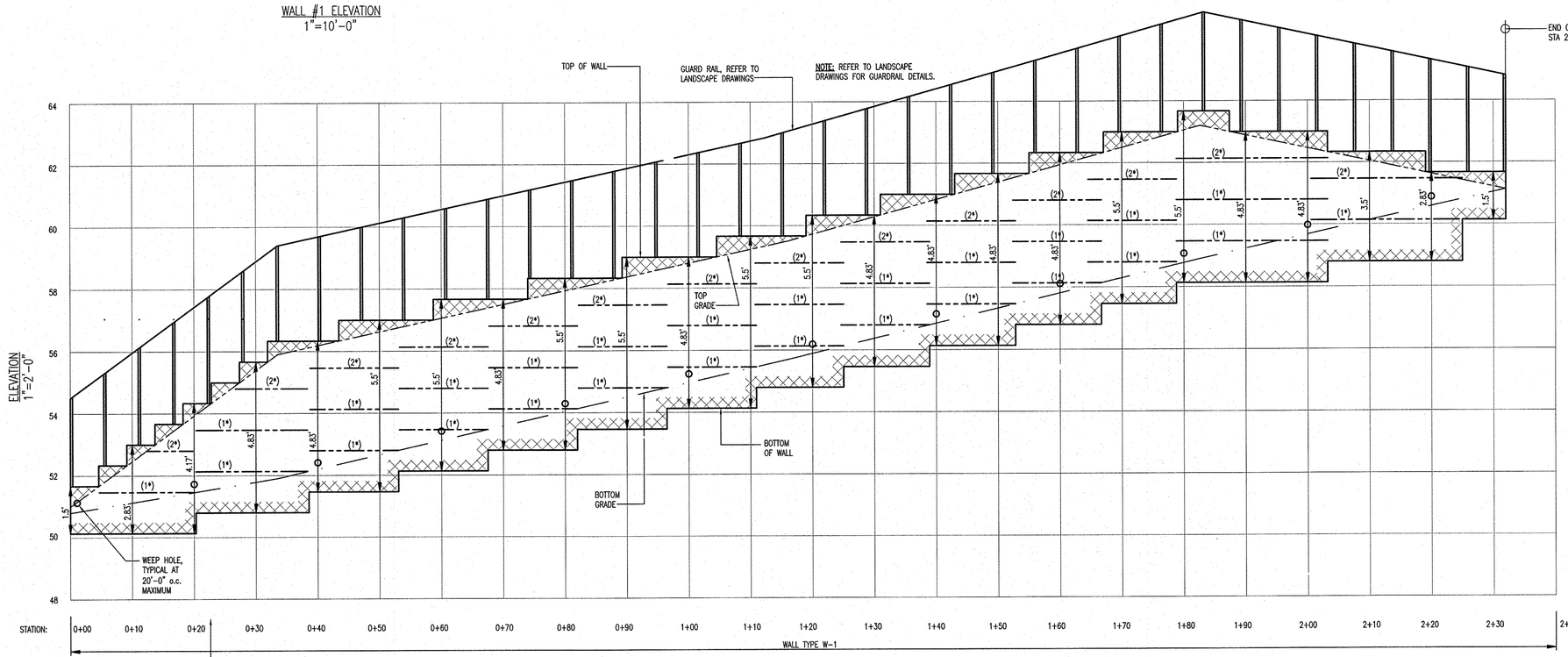

NOTE: 18" DIAMETER PIPE AT STATION 0+22 INVERT=143.28

WALL #2 ELEVATION
1"=10'-0"

REINFORCING LEGEND

(1*) DENOTES VERSA-GRID VG 8.0 x 4'-0"
(2*) DENOTES VERSA-GRID VG 8.0 x 5'-0"
(3*) DENOTES VERSA-GRID VG 8.0 x 6'-0"
(4*) DENOTES VERSA-GRID VG 8.0 x 7'-0"
(5*) DENOTES VERSA-GRID VG 8.0 x 8'-0"

APPROVED : DEPARTMENT OF PLANNING AND ZONING

CHIEF, DEVELOPMENT ENGINEERING DIVISION — DATE 7.18.16

CHIEF, DIVISION OF LAND DEVELOPMENT — DATE 8.4.16

DIRECTOR — DATE 8-16-16

DATE	NO.	REVISION	BY

DEVELOPER
HOWARD COUNTY
DEPARTMENT OF PUBLIC WORKS
BUREAU OF FACILITIES
9250 BENDIX ROAD
COLUMBIA, MARYLAND 21045
ATTN: MARK STROMDAHL
PHONE: 410-313-2700

OWNER
HOWARD COUNTY
DEPARTMENT OF PUBLIC WORKS
BUREAU OF FACILITIES
9250 BENDIX ROAD
COLUMBIA, MARYLAND 21045
ATTN: MARK STROMDAHL
PHONE: 410-313-2700

PROJECT

HCLS ELKRIDGE BRANCH AND 50+ CENTER

AREA
PLAT NOS. 23869 - 23870
TAX MAP 38, PARCELS 97 & 478 ZONED B-1 & R-12
GRID NO. 7 1st ELECTION DISTRICT
6540 WASHINGTON BOULEVARD
ELKRIDGE, MARYLAND 21075-0000
HOWARD COUNTY, MARYLAND

TITLE
RETAINING WALL ELEVATION

Pennoni Associates Inc.
Engineers • Surveyors • Planners
Landscape Architects
8818 Centre Park Drive, Suite 200 Columbia, MD 21045
T 410.997.8900 F 410.997.9282

SEAL

STATE OF MARYLAND — ROBERT B. CHEEK — NO. 14479 — REGISTERED PROFESSIONAL ENGINEER

BY:

"PROFESSIONAL CERTIFICATION. I HEREBY CERTIFY THAT THESE DOCUMENTS WERE PREPARED OR APPROVED BY ME, AND THAT I AM A DULY LICENSED PROFESSIONAL ENGINEER UNDER THE LAWS OF THE STATE OF MARYLAND, LICENSE NO. 14479 EXPIRATION DATE: 09-22-2017. "

DESIGNED BY :	RC
DRAWN BY :	MT
PROJECT NO :	GRIM1402
DATE :	JUNE 20, 2016
SCALE :	AS NOTED
DRAWING NO.	31 OF 50

Columbia Engineering Inc.
Structural Engineers
6210 Old Dobbin Lane 410.992.9970 Tel
Suite 150
Columbia, Maryland 21045 410.992.0627 Fax
rchacon@columbiaengineering.com

SDP-16-038

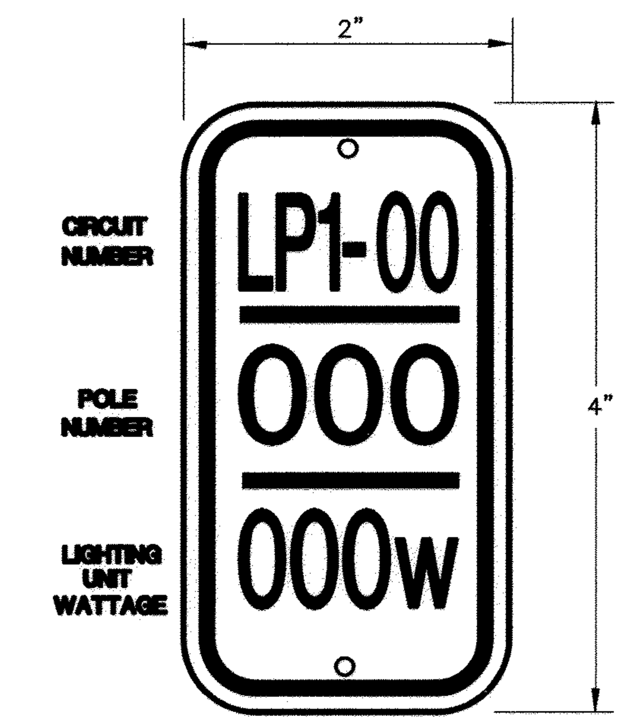

NOTE: POLE IDENTIFICATION TAG SHALL BE E/G SILVER/WHITE REFLECTIVE SHEETING, BLACK LEGEND ADHERED TO .080 ALUMINUM REMOVABLE PLATE. LETTERING SHALL BE 3/4". PLACE TAG TO FACE THE SHOULDER/CURB.

LIGHTING POLE IDENTIFICATION TAG

NO SCALE

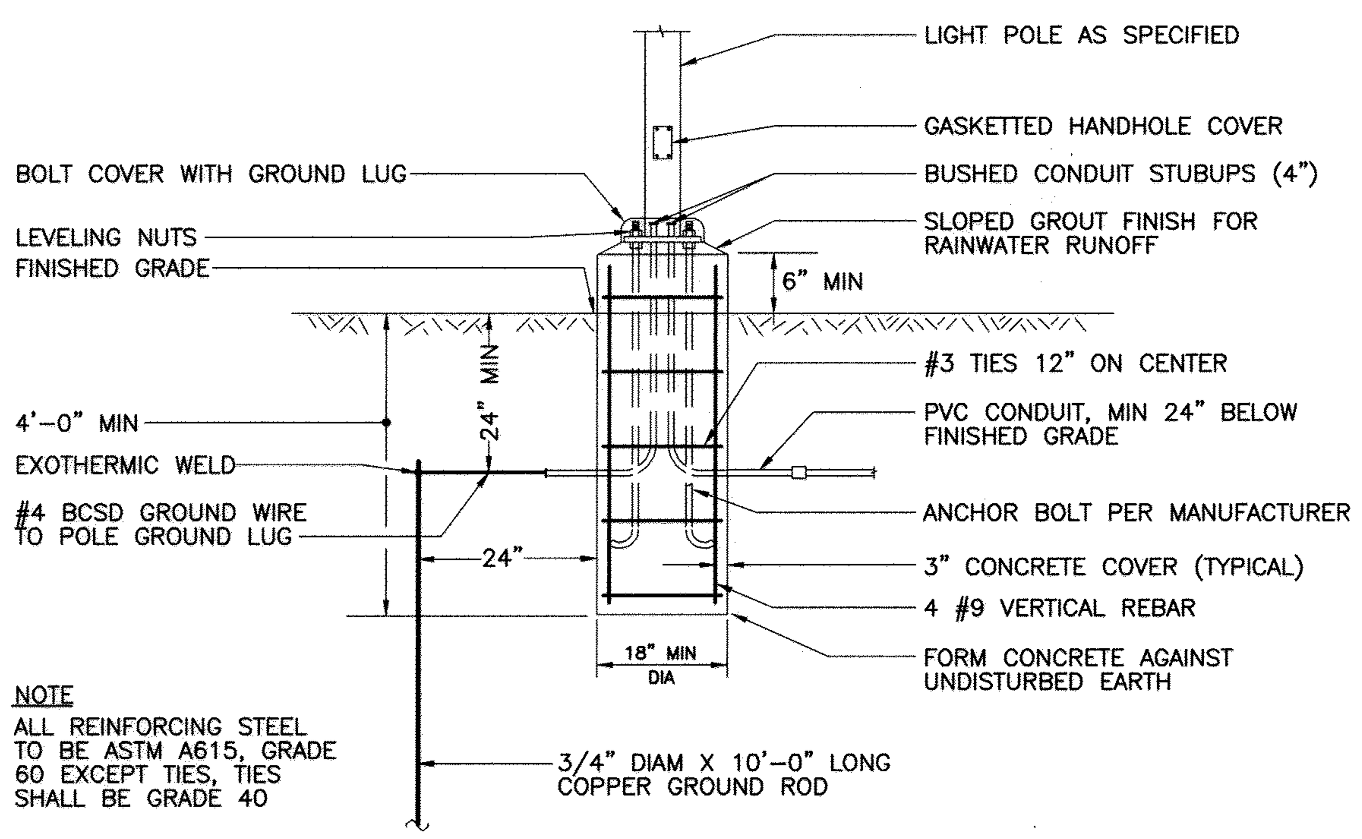

NOTE
ALL REINFORCING STEEL TO BE ASTM A615, GRADE 60 EXCEPT TIES, TIES SHALL BE GRADE 40

WALKWAY – POLE BASE

NO SCALE

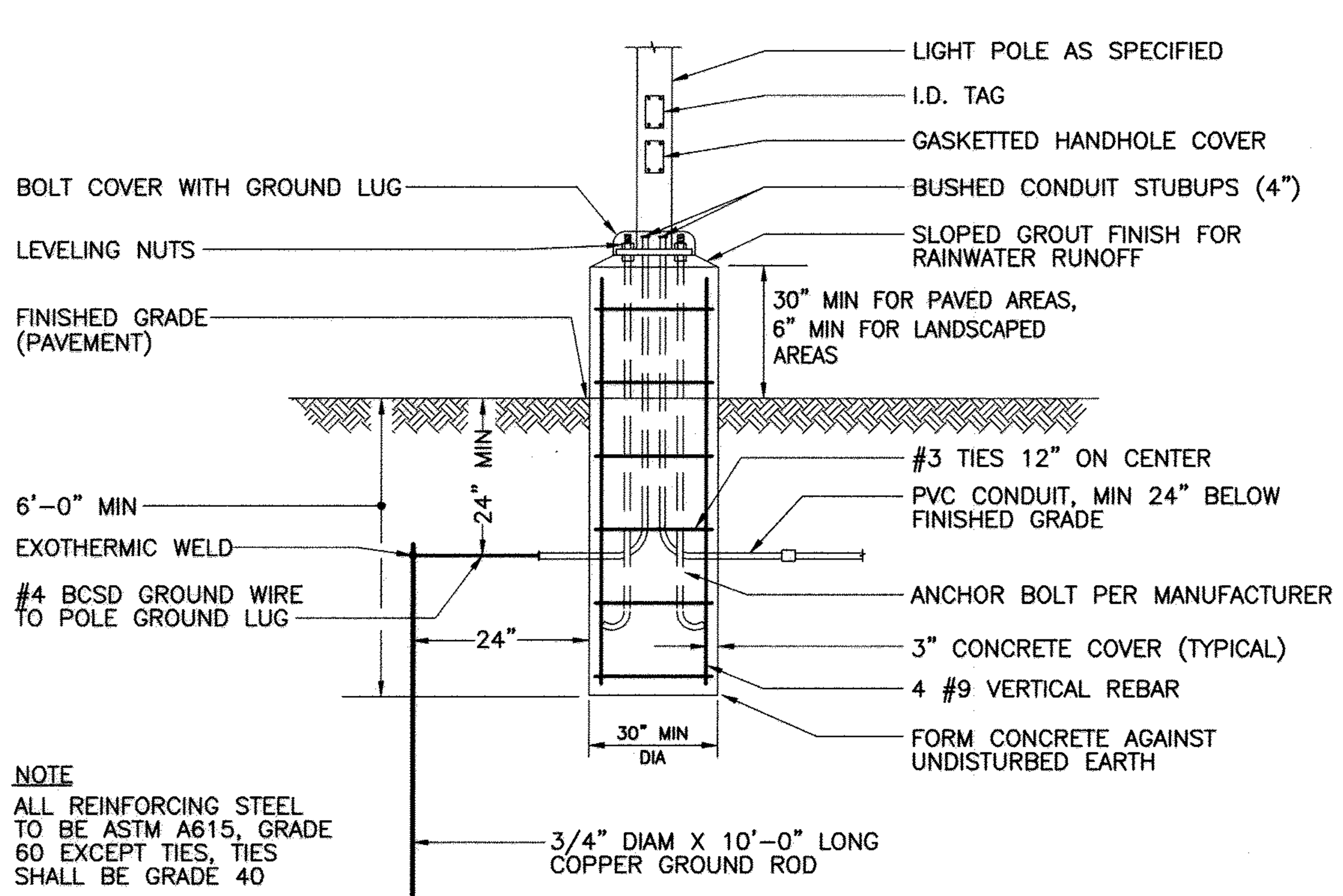

NOTE
ALL REINFORCING STEEL TO BE ASTM A615, GRADE 60 EXCEPT TIES, TIES SHALL BE GRADE 40

PARKING AREA POLE BASE

NO SCALE

ELECTRICAL LEGEND

(MOUNTING HEIGHTS ARE TO CENTERLINE OF WALL MOUNTED DEVICES AND TO THE BOTTOM OF LIGHTING FIXTURES UNLESS OTHERWISE NOTED.)

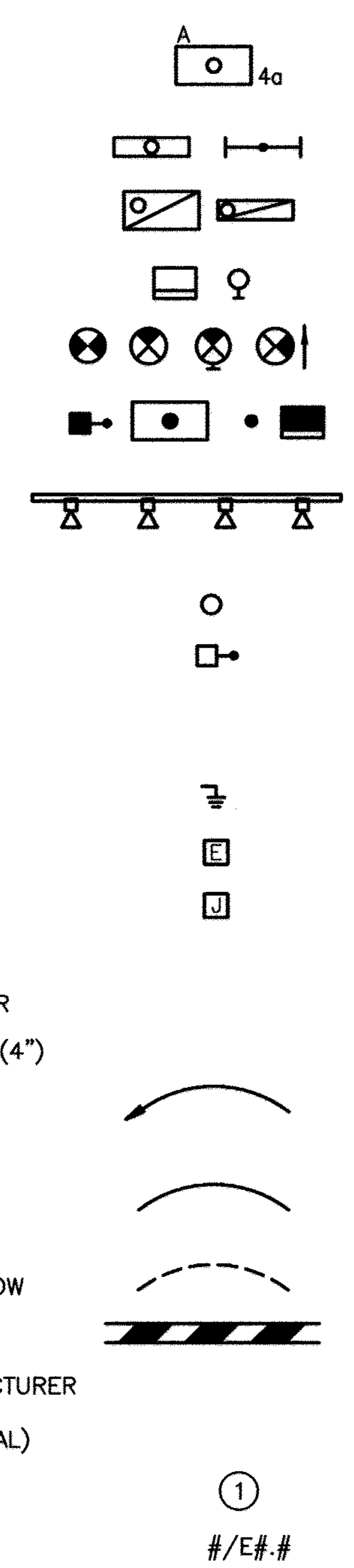

LIGHTING

FLUORESCENT FIXTURE – 2'x4'. UPPERCASE LETTER INDICATES FIXTURE TYPE, NUMBER INDICATES CIRCUIT DESIGNATION, LOWER CASE LETTER WHERE APPLICABLE INDICATES SWITCH CONTROL DEVICE.

FLUORESCENT FIXTURE – 1'x4' AND STRIP LIGHT, TYPE AS NOTED.

FIXTURE CIRCUITED TO PROVIDE TWO LEVELS OF ILLUMINATION. REFER TO SCHEDULE FOR SWITCHING/BALLAST REQUIREMENT.

LIGHTING FIXTURE – WALL MOUNTED, TYPE AS NOTED.

EXIT SIGN – CEILING, WALL MOUNTED – MOUNT 7'-6" AFF OR 6" ABOVE DOOR FRAME.

LIGHTING FIXTURES CONNECTED TO EMERGENCY CIRCUIT.

ADJUSTABLE TRACK FIXTURES WITH 2 CKT TRACK; TYPE AS NOTED; NUMBER OF FIXTURES AS SHOWN ON PLAN.

CEILING MOUNTED DOWNLIGHT

POLE MOUNTED SITE LIGHTING FIXTURE; TYPE AS NOTED

POWER

TO GROUND

ELECTRIC HANDHOLE. REFER TO DETAIL FOR INFORMATION

EXTERIOR JUNCTION BOX (IN-GRADE). REFER TO DETAIL FOR INFORMATION

CONDUIT

HOMERUN TO PANELBOARD; NUMBER OF ARROWHEADS INDICATE NUMBER OF CIRCUITS; REFER TO PANEL SCHEDULES FOR MINIMUM WIRE AND CONDUIT SIZES

CONDUIT OR WIRE CONCEALED IN CEILING SPACE, WALL OR SURFACE MOUNTED WHERE NO CEILING EXISTS

CONDUIT OR WIRE ROUTED IN OR BELOW FLOOR SLAB.

CONDUIT CONCRETE ENCASED BELOW GRADE OR FLOOR SLAB.

MISCELLANEOUS

DENOTES REFERENCE TO DRAWING NOTE

DETAIL REFERENCE: DETAIL NUMBER/DRAWING NUMBER

ABBREVIATIONS

A	AMPERE, AMPERES
AFF	ABOVE FINISHED FLOOR
AFG	ABOVE FINISHED GRADE
AHU	AIR HANDLING UNIT
AHJ	AUTHORITY HAVING JURISDICTION
AIC	AMPERE INTERRUPTING CAPACITY
AL	ALUMINUM
AWG	AMERICAN WIRE GAUGE
BDA	BIDIRECTIONAL AMPLIFIER
BF	BALLAST FACTOR
BGE	BALTIMORE GAS & ELECTRIC
CATV	CABLE TELEVISION
CCTV	CLOSED CIRCUIT TELEVISION
C	CONDUIT
CB	CIRCUIT BREAKER
CFCU	CEILING FAN COIL UNIT
CLG	CEILING, CEILING MOUNTED
CTR	COUNTER TOP RECEPTACLE
DIA	DIAMETER
DWG	DRAWING
E	EMERGENCY
EC	ELECTRICAL CONTRACTOR
ECB	ENCLOSED CIRCUIT BREAKER
EF	EXHAUST FAN
EMCS	ENERGY MANAGEMENT CONTROL SYSTEM
EPO	EMERGENCY POWER OFF
ETR	EXISTING TO REMAIN
EWC	ELECTRIC WATER COOLER
EX	EXISTING
FA	FIRE ALARM
FAAP	FIRE ALARM ANNUNCIATOR PANEL
FACP	FIRE ALARM CONTROL PANEL
FLA	FULL LOAD AMPERES
FO	FIBER OPTIC
FSS	FUSED SAFETY SWITCH
GFI	GROUND FAULT INTERRUPTING
G	GROUND
GW	GROUND WIRE
H	HIGH
HOA	HAND–OFF–AUTOMATIC
HP	HORSEPOWER
IDF	INTERMEDIATE DISTRIBUTION FRAME
IMC	INTERMEDIATE METAL CONDUIT
K	KELVIN
KCMIL	THOUSAND CIRCULAR MILS
KVA	KILOVOLT–AMPERES
KW	KILOWATT
L	LOW
LRA	LOCKED ROTOR AMPERES
MCA	MINIMUM CIRCUIT AMPERES
MCB	MAIN CIRCUIT BREAKER
MDF	MAIN DISTRIBUTION FRAME
MLO	MAIN LUGS ONLY
MOCP	MAXIMUM OVERCURRENT PROTECTION
MPOP	MAIN POINT OF PRESENCE
MTD	MOUNTED
MH	MOUNTING HEIGHT/MANHOLE
NEC	NATIONAL ELECTRICAL CODE
NEMA	NATIONAL ELECTRICAL MANUFACTURERS ASSOCIATION
NF/SS	NONFUSED SAFETY SWITCH
NIC	NOT IN CONTRACT
NO	NUMBER
OC	ON CENTERS
P	POLE, POLES
PA	PA SYSTEM
ø	PHASE
PNL	PANEL
PTZ	PAN TILT ZOOM
PVC	POLYVINYL CHLORIDE
RAF	RETURN AIR FAN
RGS	RIGID GALVANIZED STEEL
RX	REMOVE EXISTING
SPD	SURGE PROTECTION DEVICE
TAP	TAP SECTION
TK	TOE KICK
TR	TAMPER RESISTANT
TYP	TYPICAL
UH	UNIT HEATER
V	VOLT, VOLTS
VFCU	VERTICAL FAN COIL UNIT
VR	VANDAL RESISTANT
WP	WEATHERPROOF
W	WATTS, WIRE, WIRES
XFMR	TRANSFORMER
TTB	TELEPHONE TERMINAL BOARD
UTP	UNSHIELDED TWISTED PAIR
UON	UNLESS OTHERWISE NOTED

GENERAL NOTES:

1. THE ELECTRICAL CONTRACTOR SHALL FAMILIARIZE HIMSELF WITH THE DRAWINGS OF ALL OTHER TRADES ON THE PROJECT. ELECTRICAL OR SYSTEMS CONNECTIONS INDICATED ON ARCHITECTURAL, MECHANICAL, CIVIL, STRUCTURAL, KITCHEN AND ALL OTHER DRAWINGS WHICH ARE PART OF THIS PROJECT, SHALL BE CONSIDERED A PART OF THIS CONTRACT AND SHALL BE PROVIDED BY THE ELECTRICAL CONTRACTOR AT NO EXTRA COST TO THE OWNER.
2. THE ELECTRICAL DRAWINGS ARE DIAGRAMMATIC IN NATURE AND AS SUCH SHALL NOT BE SCALED. REFER TO THE ARCHITECTURAL DRAWINGS FOR EXACT LOCATIONS OF DEVICES AND EQUIPMENT AND DIMENSIONAL INFORMATION PRIOR TO ROUGH–IN. COORDINATE LOCATIONS OF MECHANICAL EQUIPMENT WITH MECHANICAL CONTRACTOR PRIOR TO ROUGH–IN OF SERVICE EQUIPMENT AND WIRING.
3. COORDINATE MOUNTING HEIGHTS OF ALL DEVICES WITH ARCHITECTURAL PLANS, SECTIONS, ELEVATIONS AND CASEWORK DRAWINGS.
4. THE CONTRACTOR SHALL BE RESPONSIBLE FOR DETERMINING THE EXACT ROUTING OF WIRING AND CONDUITS AND SHALL BE RESPONSIBLE FOR SIZING ALL BRANCH CIRCUIT WIRING TO LIMIT VOLTAGE DROP TO 3%. CONTRACTOR SHALL SIZE CONDUIT TO ACCOMMODATE WIRING PER NEC. 20 AMPERE CIRCUITS SHALL BE SIZED AS FOLLOWS:

20 AMPERE CIRCUITS				
120 VOLT		277 VOLT		MINIMUM CONDUIT SIZE
WIRING LENGTH	WIRE SIZE	WIRING LENGTH	WIRE SIZE	
0' – 60'	#12	0' – 130'	#12	3/4"
60' – 100'	#10	130' – 210'	#10	3/4"
100' – 150'	#8	210' – 340'	#8	3/4"
150' – 240'	#6	340' – 540'	#6	3/4"
OVER 240'	#4	OVER 540'	#4	1"

NOTES:
BRANCH CIRCUITS IN PANELBOARDS WITH 200% RATED NEUTRAL BUS, ECM MOTORS AND ALL DIMMED LIGHTING CIRCUITS SHALL HAVE DEDICATED NEUTRAL CONDUCTORS.

WIRING AND CONDUIT SIZES INDICATED IN PANEL SCHEDULES ARE MINIMUM ONLY. CONTRACTOR SHALL BE RESPONSIBLE FOR DETERMINING EXACT WIRING AND CONDUIT SIZES. CONTRACTOR SHALL PROVIDE SPLICE BLOCKS AND REDUCING PINS AS REQUIRED TO TERMINATE WIRING AND MAKE FINAL CONNECTIONS.

5. ELECTRICAL BOXES IN FIRE RATED PARTITIONS SHALL NOT EXCEED 16 SQUARE INCHES IN AREA (IF 4"x4"), SHALL BE MADE OF STEEL, AND SHALL BE SUCH THAT THE CUMULATIVE AREA OF BOX "CUTOUTS" IN THE FIREWALL DOES NOT EXCEED 100 SQUARE INCHES PER 100 SQUARE FEET OF WALL AREA. ELECTRICAL BOXES ON OPPOSITE SIDES OF THE SAME FIREWALL SHALL BE SEPARATED BY A HORIZONTAL AND VERTICAL DISTANCE OF NOT LESS THAN 24 INCHES. THE ELECTRICAL CONTRACTOR SHALL MAKE MINOR ADJUSTMENTS, AS NECESSARY, TO ELECTRICAL BOX LOCATIONS TO ENSURE COMPLIANCE WITH THIS REQUIREMENT SINCE BOX LOCATIONS ARE TYPICALLY NOT DIMENSIONED ON THE DRAWINGS. CONSULT ARCHITECT IF CLARIFICATION IS REQUIRED.
6. FIRE ALARM EQUIPMENT SHALL BE RATED FOR THE ENVIRONMENT IN WHICH IT IS INSTALLED, INCLUDING WATER INGRESS, TEMPERATURE AND HUMIDITY.

EXTERIOR LIGHTING FIXTURE SCHEDULE

TYPE	DESCRIPTION	MANUFACTURER	CATALOG NO.	VOLTS	INPUT WATTS	LAMP	MOUNTING	REMARKS
P2	LED FULL CUTOFF EXTERIOR AREA FIXTURE WITH IES TYPE II ASYMMETRIC DISTRIBUTION, EXTRUDED AND DIE CAST ALUMINUM HOUSING, REMOVABLE DRIVER TRAY ASSEMBLY, TGIC POWDERCOAT PAINT, UL WET LOCATION AND IP66	LITHONIA	DSX0-LED-40C-700-40K-T2M-MVOLT B2-U0-G2	277	91	LED ARRAY, 4000K, 10974 LUMENS	POLE	FIXTURE HEIGHT INCLUDING POLE BASE SHALL NOT EXCEED 20'-0"
	20 FT STRAIGHT SQUARE STEEL POLE FINISHED TO MATCH FIXTURE	LITHONIA	SSS-20-4C					
P3	LED FULL CUTOFF EXTERIOR AREA FIXTURE WITH IES TYPE III ASYMMETRIC DISTRIBUTION, EXTRUDED AND DIE CAST ALUMINUM HOUSING, REMOVABLE DRIVER TRAY ASSEMBLY, TGIC POWDERCOAT PAINT, UL WET LOCATION AND IP66	LITHONIA	DSX0-LED-40C-700-40K-T3M-MVOLT B2-U0-G3	277	91	LED ARRAY, 4000K, 10974 LUMENS	POLE	FIXTURE HEIGHT INCLUDING POLE BASE SHALL NOT EXCEED 20'-0"
	20 FT STRAIGHT SQUARE STEEL POLE FINISHED TO MATCH FIXTURE	LITHONIA	SSS-20-4C					
P4	LED FULL CUTOFF EXTERIOR AREA FIXTURE WITH IES TYPE IV FORWARD THROW DISTRIBUTION, EXTRUDED AND DIE CAST ALUMINUM HOUSING, REMOVABLE DRIVER TRAY ASSEMBLY, TGIC POWDERCOAT PAINT, UL WET LOCATION AND IP66	LITHONIA	DSX0-LED-40C-700-40K-TFTM-MVOLT B2-U0-G2	277	91	LED ARRAY, 4000K, 10957 LUMENS	POLE	FIXTURE HEIGHT INCLUDING POLE BASE SHALL NOT EXCEED 20'-0"
	20 FT STRAIGHT SQUARE STEEL POLE FINISHED TO MATCH FIXTURE	LITHONIA	SSS-20-4C					
P4H	SAME AS TYPE P4 WITH HOUSE-SIDE SHIELD	LITHONIA	DSX0-LED-40C-700-40K-TFTM-MVOLT B1-U0-G2	277	91	LED ARRAY, 4000K, 8815 LUMENS	POLE	FIXTURE HEIGHT INCLUDING POLE BASE SHALL NOT EXCEED 20'-0"
W	16"W X 7"H X 9"D FULL CUTOFF LED WALL SCONCE WITH FULL CUTOFF DISTRIBUTION, DIE CAST ALUMINUM HOUSING AND DOOR FRAME, SILICONE GASKETING, UL LISTED FOR WET LOCATION, IP65 RATED	LITHONIA	WST-LED-2-SR4	277	24	LED ARRAY, 4000K, 1927 LUMENS	SURFACE/WALL 10'-0" AFF UON	

LIGHTING NOTES

1. REFER TO INTERIOR/EXTERIOR LIGHTING SPECIFICATIONS FOR ADDITIONAL LED AND DRIVER INFORMATION. PROVIDE DRIVER FOR VOLTAGE AS INDICATED.
2. PROVIDE ALL MOUNTING HARDWARE AND ACCESSORIES AS REQUIRED FOR A COMPLETE INSTALLATION SUITABLE FOR THE MOUNTING TYPE AND CONFIGURATION.
3. COORDINATE LIGHTING FIXTURES INDICATED ON DRAWINGS WITH ARCHITECTURAL PLANS AND ELEVATIONS FOR EXACT LOCATIONS.
4. ALL FINISH SELECTIONS SHALL BE AS APPROVED BY THE ARCHITECT.
5. MANUFACTURERS SHALL PROVIDE POINT-BY-POINT CALCULATIONS FOR PARKING AND DRIVEWAY AREAS PRIOR TO APPROVAL FOR REVIEW. FIXTURES MAY UTILIZE IES TYPES II, III, IV, AND/OR TYPE V IN COMBINATION AS REQUIRED. MAINTAINED AVERAGE ILLUMINATION SHALL BE MINIMUM 1.00 FOOTCANDLES, WITH MINIMUM 0.20 FOOTCANDLES AND UNIFORMITY RATIO NOT TO EXCEED 20:1 MAXIMUM-TO-MINIMUM, AND 5:1 AVERAGE-TO-MINIMUM.
6. PRODUCTS WHICH MAY BE INCLUDED INTO THE WORK ARE LIMITED TO MANUFACTURER AND MODEL NUMBER LISTED OR APPROVED EQUAL UNLESS OTHERWISE NOTED.
7. PROVIDE HOUSESIDE SHIELDS FOR FIXTURES WHERE INDICATED ON PLANS.

APPROVED : DEPARTMENT OF PLANNING AND ZONING

CHIEF, DEVELOPMENT ENGINEERING DIVISION — DATE 7-19-16

CHIEF, DIVISION OF LAND DEVELOPMENT — DATE 8-16-16

DIRECTOR — DATE 8-16-16

DATE	NO.	REVISION	BY

DEVELOPER
HOWARD COUNTY
DEPARTMENT OF PUBLIC WORKS
BUREAU OF FACILITIES
9250 BENDIX ROAD
COLUMBIA, MARYLAND 21045
ATTN: MARK STROMDAHL
PHONE: 410-313-2700

OWNER
HOWARD COUNTY
DEPARTMENT OF PUBLIC WORKS
BUREAU OF FACILITIES
9250 BENDIX ROAD
COLUMBIA, MARYLAND 21045
ATTN: MARK STROMDAHL
PHONE: 410-313-2700

PROJECT
HCLS ELKRIDGE BRANCH AND 50+ CENTER

AREA
PLAT NOS. 23869 · 23870
TAX MAP 38, PARCELS 97 & 478 ZONED B-1 & R-12
GRID NO. 7 1st ELECTION DISTRICT
6540 WASHINGTON BOULEVARD
ELKRIDGE, MARYLAND 21075-0000
HOWARD COUNTY, MARYLAND

TITLE
LEGEND, SCHEDULES & ABBREVIATIONS

Gipe Associates Inc.
Consulting Engineers
849 Fairmount Ave Suite 102 Baltimore, MD 21286
Baltimore, Maryland (410)832-2420
Easton, Maryland (410)822-8688
W.O.# 14122

SEAL

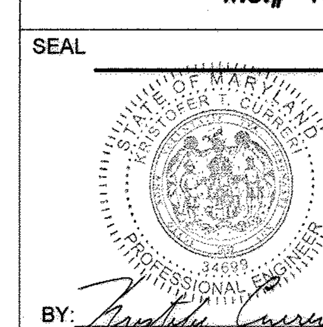

BY:
"PROFESSIONAL CERTIFICATION. I HEREBY CERTIFY THAT THESE DOCUMENTS WERE PREPARED OR APPROVED BY ME, AND THAT I AM A DULY LICENSED PROFESSIONAL ENGINEER UNDER THE LAWS OF THE STATE OF MARYLAND, LICENSE NO. 34699, EXPIRATION DATE: 07/16/2017"

E-0.1

DESIGNED BY : KTC/LPL

DRAWN BY: KTC/LPL

PROJECT NO : GRIM1402

DATE : JUNE 20, 2016

SCALE : NONE

DRAWING NO. 32 OF 50

SDP-16-038

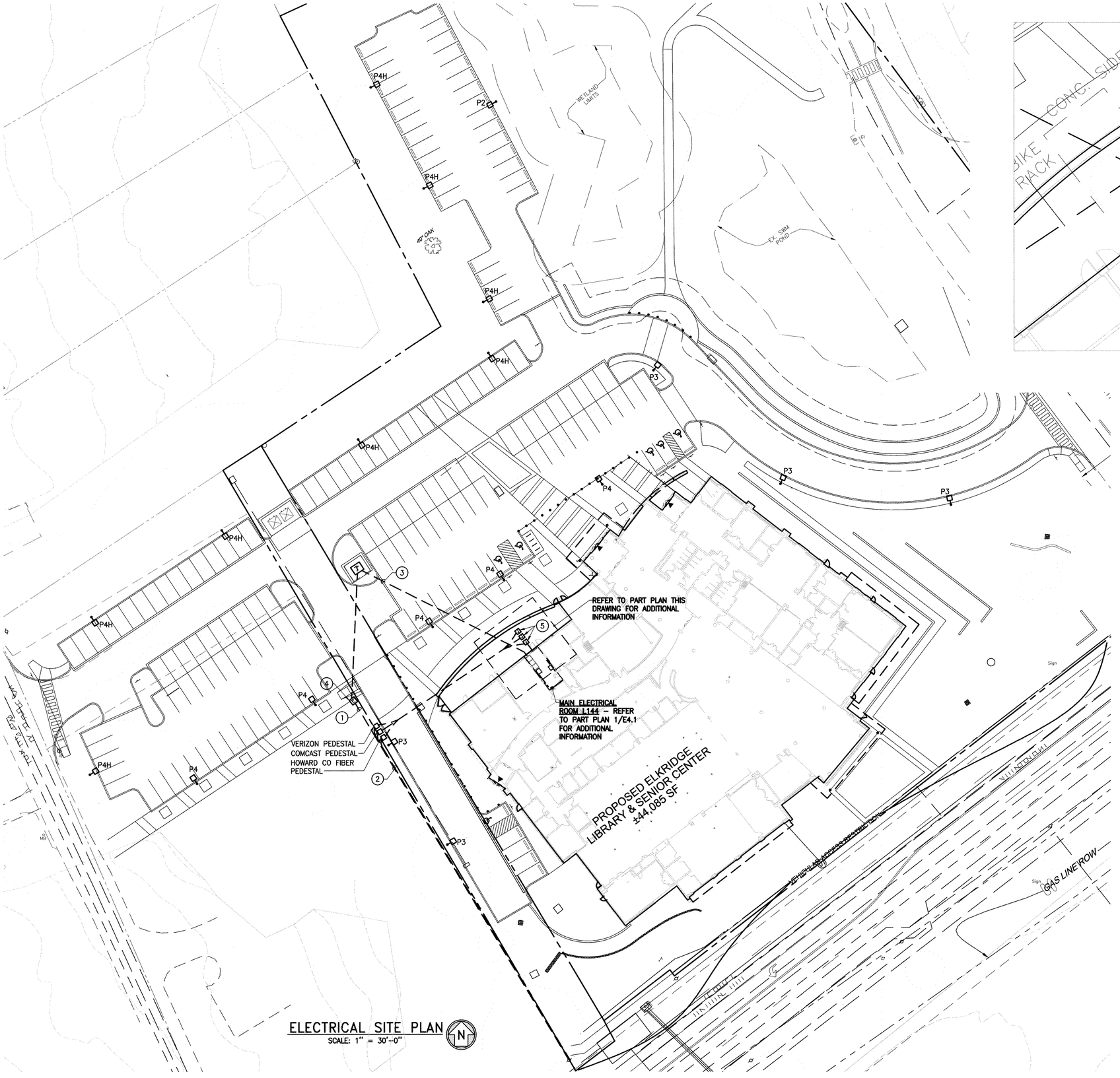

ELECTRICAL SITE PLAN
SCALE: 1" = 30'-0"

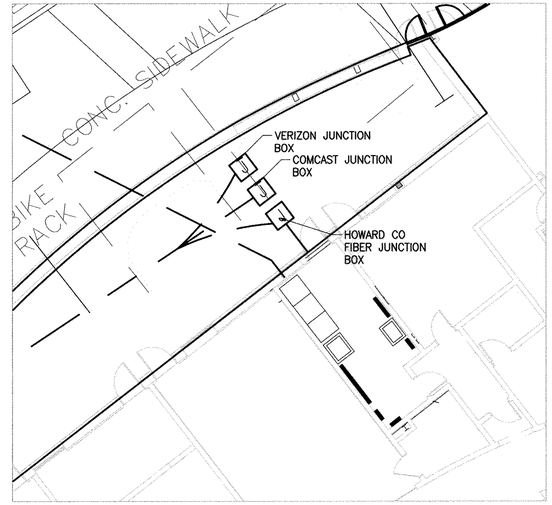

PART PLAN
MAIN ELECTRICAL ROOM
SCALE: 1" = 10'-0"

DRAWING NOTES:

1. (2) 5" DIRECT BURIED SCHEDULE 80 PVC C. FOR BGE PRIMARY CABLING. 2HX1V CONFIGURATION, TRANSITION TO STACKED CONFIGURATION AT TRANSFORMER PAD AS REQUIRED. PROVIDE CONCRETE REINFORCED ENCASEMENT WHERE CONDUITS CROSS OTHER UTILITIES 5' ON EITHER SIDE. ROUTE WITH TOP A MINIMUM OF 36" BELOW GRADE WITH A MAXIMUM OF TWO 90 DEGREE BENDS TOTAL. WIDE SWEEP BENDS SHALL BE 35' RADIUS MINIMUM TO BE CONSIDERED A STRAIGHT PULL BY BGE. PROVIDE CONCRETE ENCASEMENT WHERE CONDUITS ARE STACKED AT TRANSFORMER PADS PER BGE REQUIREMENTS. COORDINATE EXACT LOCATION OF TERMINATION POINT IN FIELD WITH BGE.
2. (1) 4" DIRECT BURIED SCHEDULE 40 PVC C. FOR COMCAST, (1) 4" DIRECT BURIED SCHEDULE 40 PVC C. FOR HOWARD COUNTY FIBER (WITH (2) 1-1/4" & (1) 1-1/2" INNERDUCTS) AND (2) 4" DIRECT BURIED SCHEDULE 40 PVC C. FOR VERIZON. PROVIDE CONCRETE REINFORCED ENCASEMENT WHERE CONDUITS CROSS OTHER UTILITIES 5' ON EITHER SIDE.
3. 8-WAY (4H X 2H) CONCRETE ENCASED DUCTBANK FOR BGE SECONDARY FEEDERS.
4. ELECTRIC HANDHOLE.
5. EXTERIOR JUNCTION BOX.

SCALE: 1" = 10'-0"
10 0 10 20

SCALE: 1" = 30'-0"
30 0 30 60

APPROVED : DEPARTMENT OF PLANNING AND ZONING

CHIEF, DEVELOPMENT ENGINEERING DIVISION — DATE 7.19.16

CHIEF, DIVISION OF LAND DEVELOPMENT — DATE 8.16.16

DIRECTOR — DATE 8-16-16

DATE	NO.	REVISION	BY

DEVELOPER
HOWARD COUNTY
DEPARTMENT OF PUBLIC WORKS
BUREAU OF FACILITIES
9250 BENDIX ROAD
COLUMBIA, MARYLAND 21045
ATTN: MARK STROMDAHL
PHONE: 410-313-2700

OWNER
HOWARD COUNTY
DEPARTMENT OF PUBLIC WORKS
BUREAU OF FACILITIES
9250 BENDIX ROAD
COLUMBIA, MARYLAND 21045
ATTN: MARK STROMDAHL
PHONE: 410-313-2700

PROJECT
HCLS ELKRIDGE BRANCH AND 50+ CENTER

AREA
~~PLAT 1400. 23869 - 23870~~
TAX MAP 38, PARCELS 97 & 478 ZONED B-1 & R-12
GRID NO. 7 1st ELECTION DISTRICT
6540 WASHINGTON BOULEVARD
ELKRIDGE, MARYLAND 21075-0000
HOWARD COUNTY, MARYLAND

TITLE
ELECTRICAL SITE PLAN

Gipe Associates Inc.
Consulting Engineers
849 Fairmount Ave Suite 102 Baltimore, MD 21286
Baltimore, Maryland (410)832-2420
Easton, Maryland (410)822-8688

W.O.# 14122

SEAL
STATE OF MARYLAND — KATHLEEN C. LAWRENCE — No. 24899 — REGISTERED PROFESSIONAL ENGINEER

BY:
"PROFESSIONAL CERTIFICATION. I HEREBY CERTIFY THAT THESE DOCUMENTS WERE PREPARED OR APPROVED BY ME, AND THAT I AM A DULY LICENSED PROFESSIONAL ENGINEER UNDER THE LAWS OF THE STATE OF MARYLAND, LICENSE NO. 24899, EXPIRATION DATE: 07/15/2017."

E-0.2

DESIGNED BY :	KTC/LPL
DRAWN BY:	KTC/LPL
PROJECT NO :	GRIM1402
DATE :	JUNE 20, 2016
SCALE :	AS NOTED
DRAWING NO.	33 OF 50

SDP-16-038

Luminaire Schedule									
Symbol	Qty	Arrangement	LLF	Description	Tag	Lum. Watts	Lum. Lumens	IES Class	BUG Rating
	5	SINGLE	0.900	DSX0 LED 40C 700 40K T3M MVOLT	P3	91	10974	Type IV	B2-U0-G3
	8	SINGLE	0.900	DSX0 LED 40C 700 40K TFTM MVOLT HS	P4H	91	8815	Type III	B1-U0-G2
	17	SINGLE	0.900	WST LED 1 10A700 40K SR4 MVOLT	W	24	1927	Type IV	B1-U0-G1
	5	SINGLE	0.900	DSX0 LED 40C 700 40K TFTM MVOLT	P4	91	10957	Type IV	B2-U0-G2
	1	SINGLE	0.900	DSX0 LED 40C 700 40K T2M MVOLT	P2	91	10889	Type II	B2-U0-G2

Calculation Summary							
Label	CalcType	Units	Avg	Max	Min	Avg/Min	Max/Min
2009 LEED 10 FT BOUNDARY	Illuminance	Fc	N.A.	1.45	0.00	N.A.	N.A.
2009 LEED BOUNDARY	Illuminance	Fc	N.A.	2.6	0.0	N.A.	N.A.
DRIVEWAY	Illuminance	Fc	1.44	3.1	0.3	4.80	10.33
PARKING A	Illuminance	Fc	1.35	3.9	0.4	3.38	9.75
PARKING B	Illuminance	Fc	1.95	3.5	0.5	3.90	7.00
PLAZA	Illuminance	Fc	1.66	4.6	0.3	5.53	15.33
SERVICE DRIVE	Illuminance	Fc	1.98	3.4	0.4	4.95	8.50

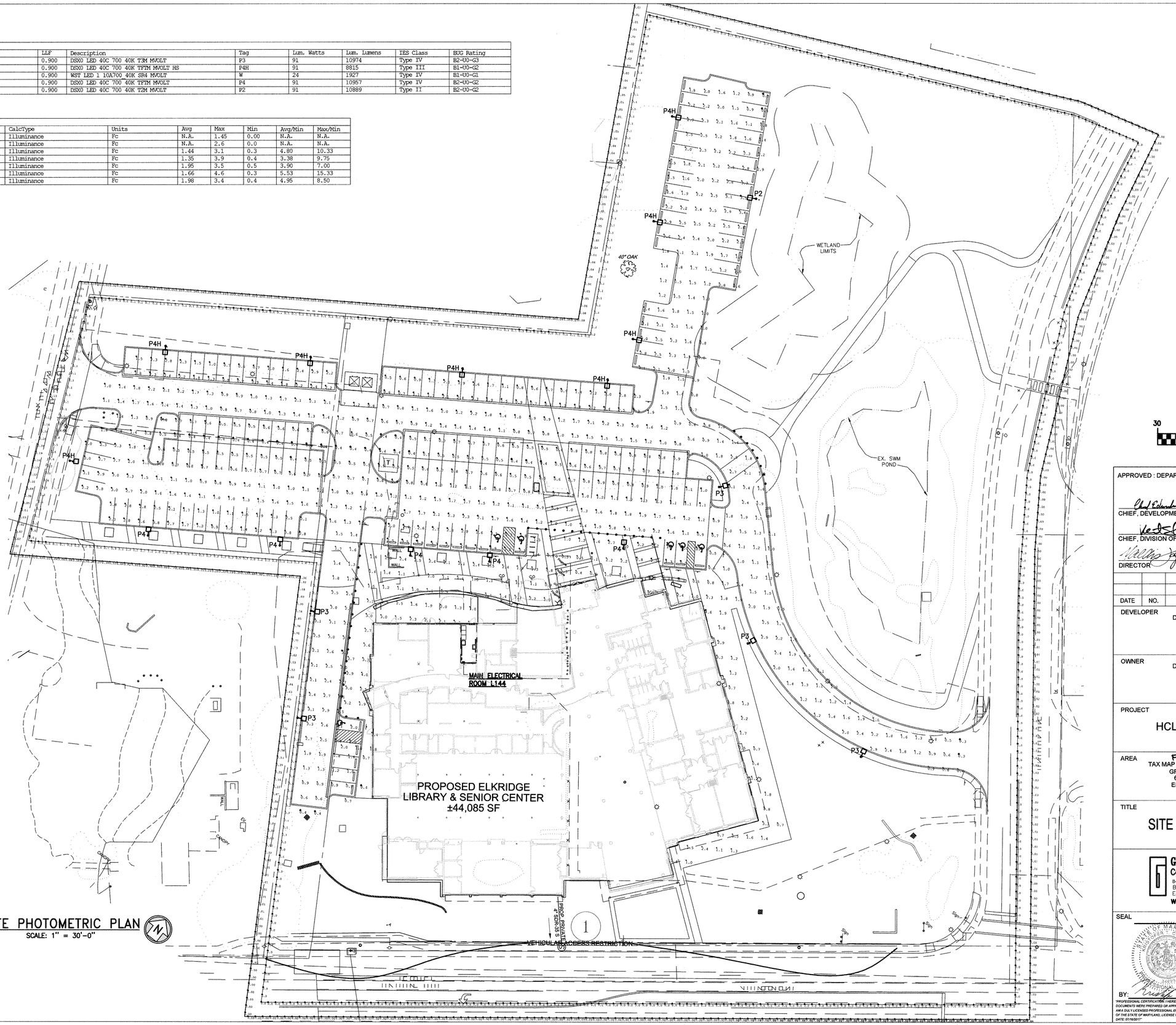

SITE PHOTOMETRIC PLAN
SCALE: 1" = 30'-0"

SCALE: 1" = 30'-0"
30 0 30 60

APPROVED : DEPARTMENT OF PLANNING AND ZONING

CHIEF, DEVELOPMENT ENGINEERING DIVISION — DATE 7.19.16

CHIEF, DIVISION OF LAND DEVELOPMENT — DATE 8.16.16

DIRECTOR — DATE 8-16-16

DATE	NO.	REVISION	BY

DEVELOPER
HOWARD COUNTY
DEPARTMENT OF PUBLIC WORKS
BUREAU OF FACILITIES
9250 BENDIX ROAD
COLUMBIA, MARYLAND 21045
ATTN: MARK STROMDAHL
PHONE: 410-313-2700

OWNER
HOWARD COUNTY
DEPARTMENT OF PUBLIC WORKS
BUREAU OF FACILITIES
9250 BENDIX ROAD
COLUMBIA, MARYLAND 21045
ATTN: MARK STROMDAHL
PHONE: 410-313-2700

PROJECT
HCLS ELKRIDGE BRANCH AND 50+ CENTER

AREA
PLAT NOS. 23869 - 23870
TAX MAP 38, PARCELS 97 & 478 ZONED B-1 & R-12
GRID NO. 7 1st ELECTION DISTRICT
6540 WASHINGTON BOULEVARD
ELKRIDGE, MARYLAND 21075-0000
HOWARD COUNTY, MARYLAND

TITLE
SITE PHOTOMETRIC PLAN

Gipe Associates Inc.
Consulting Engineers
849 Fairmount Ave Suite 102 Baltimore, MD 21286
Baltimore, Maryland (410)832-2420
Easton, Maryland (410)822-8688
W.O.# 14122

SEAL

BY:

"PROFESSIONAL CERTIFICATION. I HEREBY CERTIFY THAT THESE DOCUMENTS WERE PREPARED OR APPROVED BY ME, AND THAT I AM A DULY LICENSED PROFESSIONAL ENGINEER UNDER THE LAWS OF THE STATE OF MARYLAND, LICENSE NO. 24699, EXPIRATION DATE: 07/09/2017"

E-0.3

DESIGNED BY :	KTC/LPL
DRAWN BY:	KTC/LPL
PROJECT NO :	GRIM1402
DATE :	JUNE 20, 2016
SCALE :	1" = 30'-0"
DRAWING NO.	34 OF 50

SDP-16-038

N

HUNT CLUB ROAD

RETAINING WALL W/ GUARDRAIL;
SEE SHEET L.402 & B/L.403
FOR WALL DETAIL.
SEE B/ L.403 FOR GUARDRAIL DETAIL.

TRASH ENCLOSURE;
SEE ARCHITECTURAL & CIVIL DRAWINGS
FOR DETAILS

30' BUILDING RESTRICTION AND USE SETBACK LINE

PUBLIC FOREST CONSERVATION EASEMENT

ASPHALT TRAIL
(ADD-ALT);
SEE CIVIL DRAWINGS
FOR DETAIL.

TIMBER BOARDWALK
(ADD-ALT)
DETAIL A/ 403

ASPHALT TRAIL
(ADD-ALT);
SEE CIVIL DRAWINGS
FOR DETAIL.

30' BUILDING SETBACK LINE

30' BUILDING RESTRICTION AND USE SETBACK LINE

20' PUBLIC WATER & UTILITY EASEMENT

BLACK MEXICAN PEBBLE STONE;
DETAIL B/ L.401

PERMEABLE PAVERS;
SEE CIVIL DRAWINGS FOR DETAIL & EXTENT

CONCRETE PAVERS W/ GRANITE
COBBLE STONE BAND;
DETAIL B/ L.401

SECURITY BOLLARDS W/ LIGHT
DETAIL E/ L.400

PLANTING FOR
SWM FACILITY.
SEE L.300 SERIES
FOR DETAILS.

CONCRETE DECK;
SEE CIVIL DRAWINGS FOR DETAILS.

(1) EDUCATIONAL SIGN PANEL
DETAIL H/ L.400

GRANITE COBBLE STONE PAVING

PLANTING FOR
SWM FACILITY.
SEE L.300 SERIES
FOR DETAILS.

ROWANBERRY DRIVE

30' BUILDING RESTRICTION LINE

20' BUILDING SETBACK LINE

20' BUILDING SETBACK LINE

CONCRETE PAVERS;
DETAIL A/ L.401

CONCRETE PAVERS;
DETAIL A/ L.401

ASPHALT PAVING;
SEE CIVIL DRAWINGS FOR DETAIL

LANDSCAPE EDGE
FOR PAVERS;
DETAIL I/ L.400

PLANTING

TRASH & RECYCLE;
DETAIL B/ L.400

BENCH;
DETAIL A/ L.400

TABLE & CHAIRS
DETAIL D/ L.400

BIKE RACK
DETAIL C/ L.400

CONCRETE PAVING
SEE CIVIL DRAWINGS FOR DETAIL.

CHESAPEAKE &
POTOMAC TELEPHONE
(VERIZON)

4' WIDE GATE W/ LOCK

ART FEATURE
BY HCPL

2-3" SIZE BLACK MEXICAN PEBBLE STONE.
4" DEEP x 24" WIDE
W/METAL LANDSCAPE EDGE @ BOTH SIDES.

CONCRETE PAVING
SEE CIVIL DRAWINGS FOR DETAIL.

5' HT. BOARD ON BOARD SCREEN FENCE
DETAIL G/ L.400

PLANTING

SOD

PLANTING

SOD

30' BUILDING RESTRICTION LINE

10' PARKING SETBACK

(1) EDUCATIONAL SIGN PANEL;
DETAIL H/ L.400

RETAINING WALL W/ GUARDRAIL;
SEE CIVIL & STRUCTURAL DRAWINGS
FOR WALL DETAIL.
SEE B/ L.403 FOR GUARDRAIL DETAIL.

SITE SIGNAGE;
SEE ARCH. DRAWINGS FOR DETAIL.

WASHINGTON BOULEVARD
US ROUTE 1

0 30 60 90

APPROVED : DEPARTMENT OF PLANNING AND ZONING

CHIEF, DEVELOPMENT ENGINEERING DIVISION	7.19.16 DATE
CHIEF, DIVISION OF LAND DEVELOPMENT	8.16.16 DATE
DIRECTOR	8-16-16 DATE

DATE	NO.	REVISION	BY

DEVELOPER
HOWARD COUNTY
DEPARTMENT OF PUBLIC WORKS
BUREAU OF FACILITIES
9250 BENDIX ROAD
COLUMBIA, MARYLAND 21045
ATTN: MARK STROMDAHL
PHONE: 410-313-2700

OWNER
HOWARD COUNTY
DEPARTMENT OF PUBLIC WORKS
BUREAU OF FACILITIES
9250 BENDIX ROAD
COLUMBIA, MARYLAND 21045
ATTN: MARK STROMDAHL
PHONE: 410-313-2700

PROJECT
HCLS ELKRIDGE BRANCH AND 50+ CENTER

AREA
PLAT NOS. 23869 - 23870
TAX MAP 38, PARCELS 97 & 478 ZONED B-1 & R-12
GRID NO. 7 1st ELECTION DISTRICT
6540 WASHINGTON BOULEVARD
ELKRIDGE, MARYLAND 21075-0000
HOWARD COUNTY, MARYLAND

TITLE
MATERIALS PLAN

BRADLEY SITE DESIGN, INC.
LANDSCAPE ARCHITECTURE
12 W. Madison Street., Suite 204
Baltimore, MD 21201
P: 443-450-1385
www.bradleysitedesign.com

SEAL

BY:

PROFESSIONAL CERTIFICATION. I HEREBY CERTIFY THAT THESE DOCUMENTS WERE PREPARED OR APPROVED BY ME, AND THAT I AM A DULY LICENSED PROFESSIONAL LANDSCAPE ARCHITECT UNDER THE LAWS OF THE STATE OF MARYLAND, LICENSE NO. 806, EXPIRATION DATE: 01/10/2018"

SHEET NUMBER :	L.100
DESIGNED BY :	SB/ES
DRAWN BY:	ES
PROJECT NO :	GRIM1402
DATE :	JUNE 20, 2016
SCALE :	1"= 30'-0"
DRAWING NO.	35 OF 50

SDP-16-038

NOTES:

1. ALL PROPOSED LAWN AREAS AND DISTURBED EXISTING LAWN AREAS ARE TO BE SEEDED.
2. ALL SLOPE AREAS GREATER THAN 4:1 AND HILLSIDES MUST BE STABILIZED ACCORDING TO THE ENGINEERS PLAN BEFORE PLANTING.
3. FOLLOW MANUFACTURER'S SMART SLOPE MID-ATLANTIC BLEND PLANTING SOIL FOR SOIL SPECIFICATIONS AND SOIL QUANTITY.
4. SEE CIVIL DRAWINGS FOR DEMOLITION PLAN.

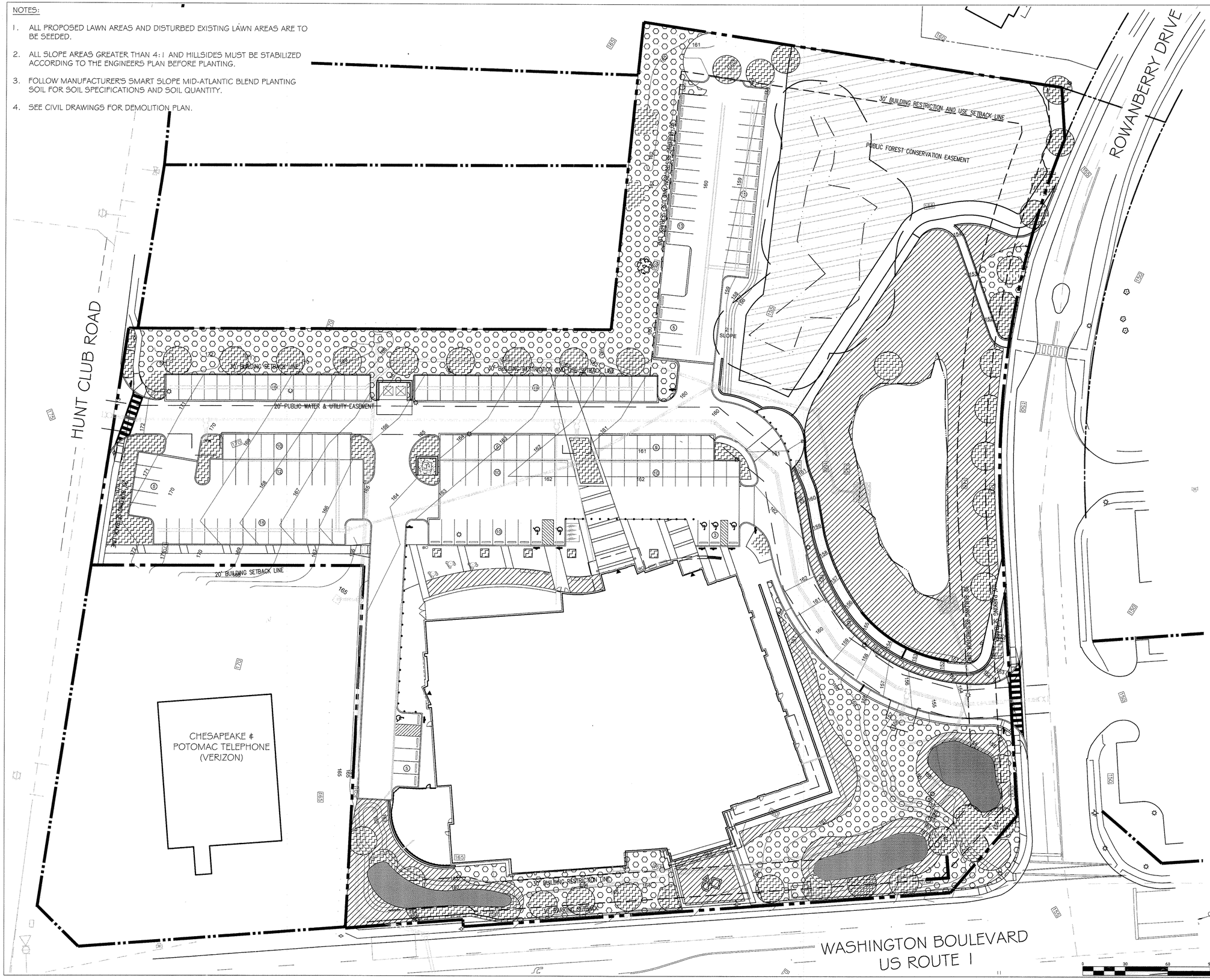

A PLANTING BED
12" SOIL DEPTH
12" PLANTING SOIL
SUBSOIL

B LAWN AREAS
4" SOIL DEPTH
4" PLANTING SOIL
SUBSOIL

C TREE PLANTING AREAS
30" SOIL DEPTH
30" PLANTING SOIL
SUBSOIL

LEGEND:

- PLANTING BED- 12" TOPSOIL; PREPARED PER SPECIFICATIONS.
- LAWN GRASS SOD- 4" TOPSOIL; PREPARED PER SPECIFICATIONS.
- TREE PLANTING AREAS- 30" TOPSOIL; PREPARED PER SPECIFICATIONS.
- BIORETENTION AREAS; SEE CIVIL PLAN FOR DETAILS.

N

APPROVED : DEPARTMENT OF PLANNING AND ZONING

CHIEF, DEVELOPMENT ENGINEERING DIVISION	DATE 7-19-16
CHIEF, DIVISION OF LAND DEVELOPMENT	DATE 8.16.16
DIRECTOR	DATE 8-16-16

DATE	NO.	REVISION	BY

DEVELOPER
HOWARD COUNTY
DEPARTMENT OF PUBLIC WORKS
BUREAU OF FACILITIES
9250 BENDIX ROAD
COLUMBIA, MARYLAND 21045
ATTN: MARK STROMDAHL
PHONE 410-313-2700

OWNER
HOWARD COUNTY
DEPARTMENT OF PUBLIC WORKS
BUREAU OF FACILITIES
9250 BENDIX ROAD
COLUMBIA, MARYLAND 21045
ATTN: MARK STROMDAHL
PHONE: 410-313-2700

PROJECT
HCLS ELKRIDGE BRANCH AND 50+ CENTER

AREA
PLAT NOS. 23869 - 23870
TAX MAP 38, PARCELS 97 & 478 ZONED B-1 & R-12
GRID NO. 7 1st ELECTION DISTRICT
6540 WASHINGTON BOULEVARD
ELKRIDGE, MARYLAND 21075-0000
HOWARD COUNTY, MARYLAND

TITLE
SOILS PLAN

BRADLEY SITE DESIGN, INC.
LANDSCAPE ARCHITECTURE
12 W. Madison Street., Suite 204
Baltimore, MD 21201
P: 443-450-1365
www.bradleysitedesign.com

SEAL

BY:
"PROFESSIONAL CERTIFICATION. I HEREBY CERTIFY THAT THESE DOCUMENTS WERE PREPARED OR APPROVED BY ME, AND THAT I AM A DULY LICENSED PROFESSIONAL LANDSCAPE ARCHITECT UNDER THE LAWS OF THE STATE OF MARYLAND, LICENSE NO. 808, EXPIRATION DATE: 01/05/2018"

SHEET NUMBER :	L.200
DESIGNED BY :	SB/ES
DRAWN BY:	ES
PROJECT NO :	GRIM1402
DATE :	JUNE 20, 2016
SCALE :	1"= 30'-0"
DRAWING NO.	36 OF 50

SDP-16-038

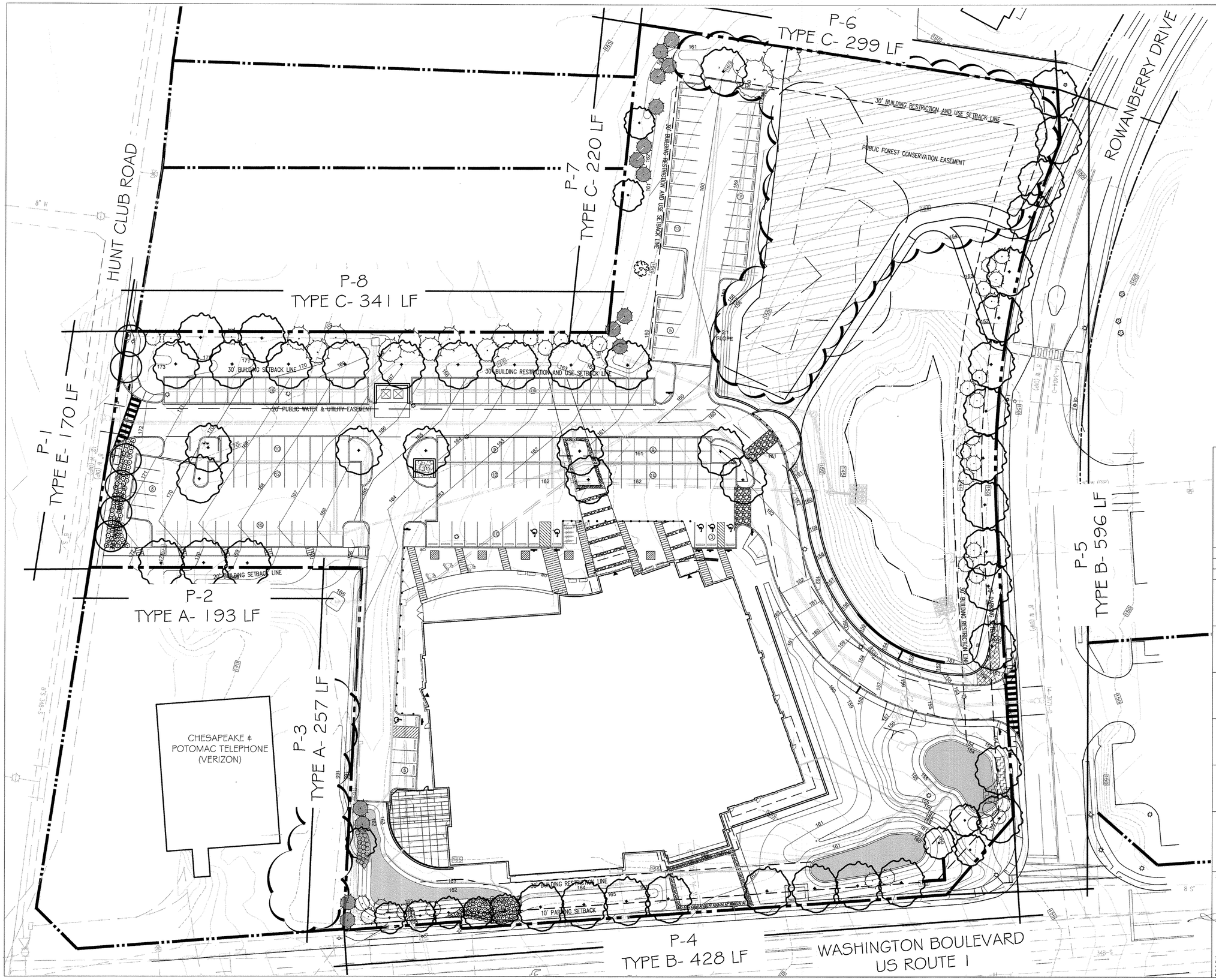

LANDSCAPE CERTIFICATE:

"I/WE CERTIFY THAT THE LANDSCAPING SHOWN ON THIS PLAN WILL BE DONE ACCORDING TO THE PLAN, SECTION 16.124 OF THE HOWARD COUNTY CODE, AND THE HOWARD COUNTY LANDSCAPE MANUAL. I/WE FURTHER CERTIFY THAT UPON COMPLETION A CERTIFICATION OF LANDSCAPE INSTALLATION, ACCOMPANIED BY AN EXECUTED ONE YEAR GUARANTEE OF PLANT MATERIALS, WILL BE SUBMITTED TO THE DEPARTMENT OF PLANNING AND ZONING."

DEVELOPER SIGNATURE: RICHARD GASPAROTTI

0 30 60 90

APPROVED : DEPARTMENT OF PLANNING AND ZONING

CHIEF, DEVELOPMENT ENGINEERING DIVISION	7-19-16 DATE
CHIEF, DIVISION OF LAND DEVELOPMENT	8-16-16 DATE
DIRECTOR	8-16-16 DATE

DATE	NO.	REVISION	BY

DEVELOPER
HOWARD COUNTY
DEPARTMENT OF PUBLIC WORKS
BUREAU OF FACILITIES
9250 BENDIX ROAD
COLUMBIA, MARYLAND 21045
ATTN: MARK STROMDAHL
PHONE: 410-313-2700

OWNER
HOWARD COUNTY
DEPARTMENT OF PUBLIC WORKS
BUREAU OF FACILITIES
9250 BENDIX ROAD
COLUMBIA, MARYLAND 21045
ATTN: MARK STROMDAHL
PHONE: 410-313-2700

PROJECT
HCLS ELKRIDGE BRANCH AND 50+ CENTER

AREA PLAT NOS. 23869 · 23870
TAX MAP 38, PARCELS 97 & 478 ZONED B-1 & R-12
GRID NO. 7 1st ELECTION DISTRICT
6540 WASHINGTON BOULEVARD
ELKRIDGE, MARYLAND 21075-0000
HOWARD COUNTY, MARYLAND

TITLE
OVERALL PLANTING PLAN - SDP

BRADLEY SITE DESIGN, INC.
LANDSCAPE ARCHITECTURE
12 W. Madison Street., Suite 204
Baltimore, MD 21201
P: 443-450-1385
www.bradleysitedesign.com

SEAL

BY:
"PROFESSIONAL CERTIFICATION. I HEREBY CERTIFY THAT THESE DOCUMENTS WERE PREPARED OR APPROVED BY ME, AND THAT I AM A DULY LICENSED PROFESSIONAL LANDSCAPE ARCHITECT UNDER THE LAWS OF THE STATE OF MARYLAND, LICENSE NO. 808, EXPIRATION DATE: 01/10/2018"

SHEET NUMBER :	L.300
DESIGNED BY :	SB/ES
DRAWN BY:	ES
PROJECT NO :	GRIM1402
DATE :	JUNE 20, 2016
SCALE :	1"= 30'-0"
DRAWING NO.	37 OF 50

SDP-16-038

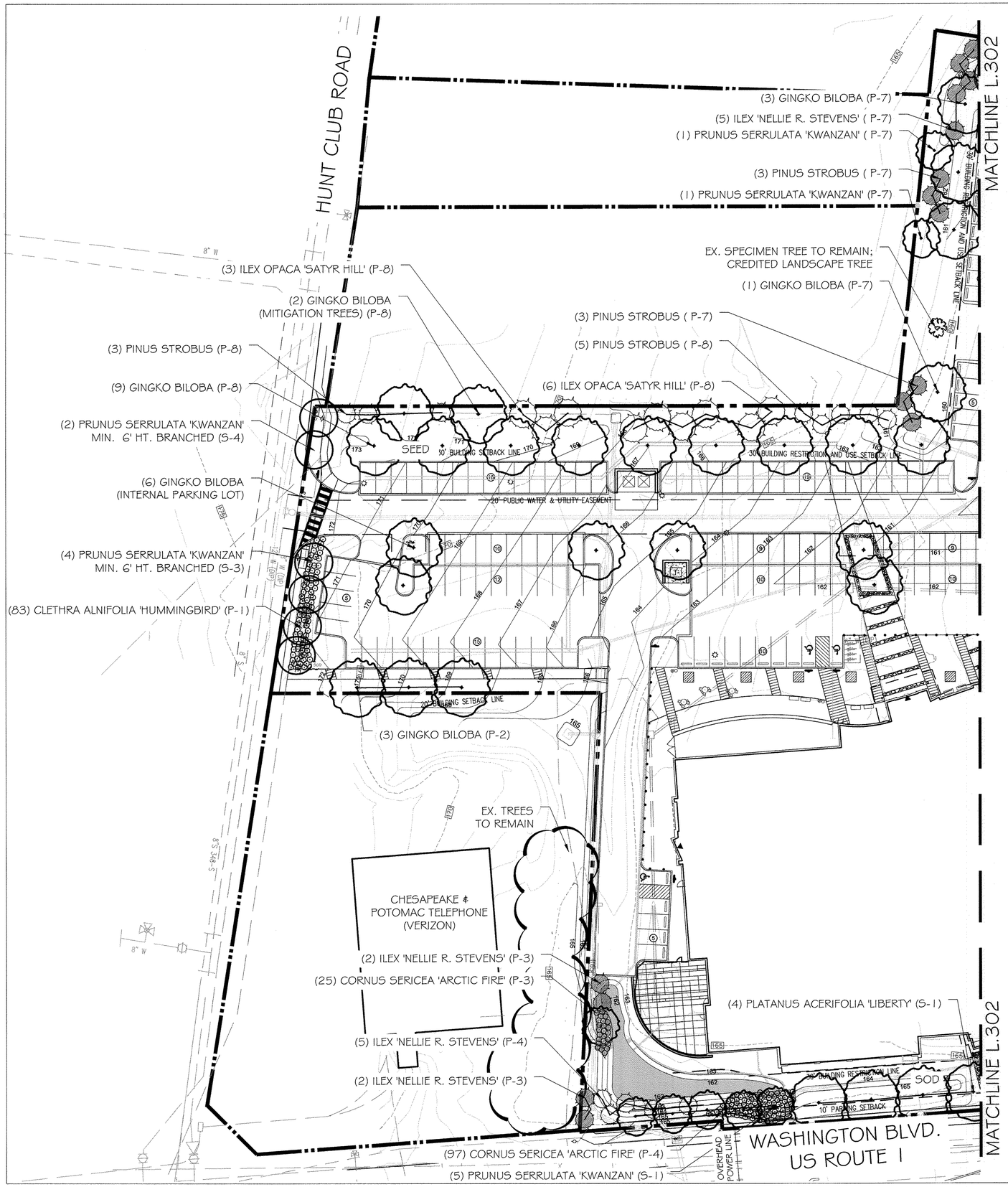

N

SHA LANDSCAPE NOTES:

SHA Standard Specifications. *Landscape construction and materials installed within the Maryland State Highway Administration right of way shall conform to SHA 2008 Standard Specifications for Construction and Materials, including all revisions and supplements, and any requirements of these notes. Landscape construction shall conform to Sections 701 thru 716, and landscape materials shall conform to Section 920. SHA Standard Specifications shall supersede all other specifications for work within the SHA right of way.*

SHA Standard Details. *Tree installation within the SHA right of way shall conform to SHA Standard Details of the Book of Standards.*

Soil Restoration. *Areas of pavement removal, excavation or drilling in landscaped areas shall remove excavated debris and restore the subgrade with approved subsoil and topsoil placed in conformance with Section 701 of the SHA Standard Specifications.*
1. A layer of approved topsoil at least 4 inch depth shall be placed on all disturbed areas flatter than 2:1 and in all channels prior to seeding, sodding or other landscaping, unless otherwise specified.
2. A layer of approved topsoil at least 2 inch depth shall be placed on all disturbed areas 2:1 and steeper prior to seeding, sodding or other landscaping, unless otherwise is specified.
3. Bioretention Soil Mix (BSM) shall be installed in conformance with the plans and pertinent specifications.

Turfgrass Sod Establishment. *shall be performed in all disturbed areas of the SHA right of way, or within the areas indicated in the plans, in conformance with Section 708 of the SHA Standard Specifications.*

Roadside Tree Permit. *Tree removal, tree installation, and tree root and branch pruning in the SHA right of way shall conform to the requirements of the Roadside Tree Permit (RTP) of the Maryland Dept. of Natural Resources or Forest Conservation Act (FCA) Approval of the local authority.*
1. A copy of the RTP or FCA Approval shall be submitted to the SHA Office of Environmental Design before work is performed, and a copy of the RTP or FCA Approvalshall be reproduced in the plans or be in possession of the applicant at the project site when the permitted work is performed.
2. A Maryland Licensed Tree Expert shall perform the specified tree operations in conformance with the SHA Standard Specifications and ANSI A300 Standards for Tree Care Operations.

Trees and Other Plant Material Installation. *Trees, shrubs, perennials, annuals, bulbs, landscape beds and similar materials installed in the SHA right of way shall be installed in conformance with Section 710 and 711 of the SHA Standard Specifications. Tree and shrubs shall be pruned at the time of installation to ensure sidewalk clearance for pedestrians is maintained to a height of 8 feet.*

Future Maintenance. *Additional maintenance that may be required after hardscape, street furniture, or plant materials are installed and accepted by SHA such as replacement, watering, weeding, mulching or pest control may be provided by the applicant when a permit for the proposed work is issued by the SHA District Office.*

Erosion & Sediment Control Manager. *Soil disturbance such as grading, excavation, soil placement or other activities that involve soil disturbance within the SHA right of way shall be supervised by an Erosion and Sediment Control Manager with a valid SHA 'Yellow Card' in conformance with SHA 2008 Specifications for Construction and Materials and any applicable Erosion and Sediment Control Permit.*

Temporary Stabilization. *Temporary Mulch shall be applied in conformance with Section 704 to ensure that areas of soil disturbance are protected from rainfall and flowing water.*

1. Temporary straw mulch or temporary matting mulch shall be applied to flat areas and slopes flatter than 4:1; temporary matting mulch shall be applied to slopes 4:1 and steeper and within channels.

2. Temporary stabilization shall be performed at the end of each working day to provide 'same day stabilization' unless other requirements are approved.

Roadway Pavement Removal. *Areas of roadway pavement removal within the SHA right of way shall be excavated to remove pavements, aggregate base, and compacted soil to a minimum depth of 10 inches below the pavement surface, or as necessary to remove all materials unsuitable for landscaping. The excavated areas shall be restored with subsoil and topsoil as part of Soil Restoration*

Excavation and Debris Removal. *Debris related to the demolition of sidewalks, driveways, curbs, trees, stumps, roots, fencing, pipes, and other materials that may interfere with landscape installation or future maintenance within the SHA right of way shall be excavated as necessary for their complete removal and disposal.*

LANDSCAPE CERTIFICATE:

"I/WE CERTIFY THAT THE LANDSCAPING SHOWN ON THIS PLAN WILL BE DONE ACCORDING TO THE PLAN, SECTION 16.124 OF THE HOWARD COUNTY CODE, AND THE HOWARD COUNTY LANDSCAPE MANUAL. I/WE FURTHER CERTIFY THAT UPON COMPLETION A CERTIFICATION OF LANDSCAPE INSTALLATION, ACCOMPANIED BY AN EXECUTED ONE YEAR GUARANTEE OF PLANT MATERIALS, WILL BE SUBMITTED TO THE DEPARTMENT OF PLANNING AND ZONING."

DEVELOPER SIGNATURE: _____

APPROVED : DEPARTMENT OF PLANNING AND ZONING

CHIEF, DEVELOPMENT ENGINEERING DIVISION JP	DATE 7-19-16
CHIEF, DIVISION OF LAND DEVELOPMENT	DATE 8-16-16
DIRECTOR	DATE 8-16-16

DATE	NO.	REVISION	BY

DEVELOPER
HOWARD COUNTY
DEPARTMENT OF PUBLIC WORKS
BUREAU OF FACILITIES
9250 BENDIX ROAD
COLUMBIA, MARYLAND 21045
ATTN: MARK STROMDAHL
PHONE: 410-313-2700

OWNER
HOWARD COUNTY
DEPARTMENT OF PUBLIC WORKS
BUREAU OF FACILITIES
9250 BENDIX ROAD
COLUMBIA, MARYLAND 21045
ATTN: MARK STROMDAHL
PHONE: 410-313-2700

PROJECT
HCLS ELKRIDGE BRANCH AND 50+ CENTER

AREA
PLAT NOS. 23869 · 23870
TAX MAP 38, PARCELS 97 & 478 ZONED B-1 & R-12
GRID NO. 7 1st ELECTION DISTRICT
6540 WASHINGTON BOULEVARD
ELKRIDGE, MARYLAND 21075-0000
HOWARD COUNTY, MARYLAND

TITLE
PLANTING PLAN- I - SDP

NOTE:

THIS PLAN IS FOR SDP SUBMISSION ONLY.
THIS DOES NOT COVER THE WHOLE PLANTING PLAN.

NOTES:

1. MAINTAIN MIN. 5' SOD CLEARANCE BETWEEN THE SIDEWALK AND PLANTING EDGE AS SHOWN ON THE DRAWINGS.- TYP.

2. STREET TREES TO BE PLANTED 10' OFF FROM THE SIDEWALK- TYP.

0 30 60 90

BRADLEY SITE DESIGN, INC.
LANDSCAPE ARCHITECTURE
12 W. Madison Street., Suite 204
Baltimore, MD 21201
P: 443-450-1385
www.bradleysitedesign.com

SEAL

BY: _____

"PROFESSIONAL CERTIFICATION. I HEREBY CERTIFY THAT THESE DOCUMENTS WERE PREPARED OR APPROVED BY ME, AND THAT I AM A DULY LICENSED PROFESSIONAL LANDSCAPE ARCHITECT UNDER THE LAWS OF THE STATE OF MARYLAND, LICENSE NO. 908, EXPIRATION DATE: 01/10/2018"

SHEET NUMBER :	L.301
DESIGNED BY :	SB/ES
DRAWN BY:	ES
PROJECT NO :	GRIM1402
DATE :	JUNE 20, 2016
SCALE :	1"= 30'-0"
DRAWING NO.	38 OF 50

SDP-16-038

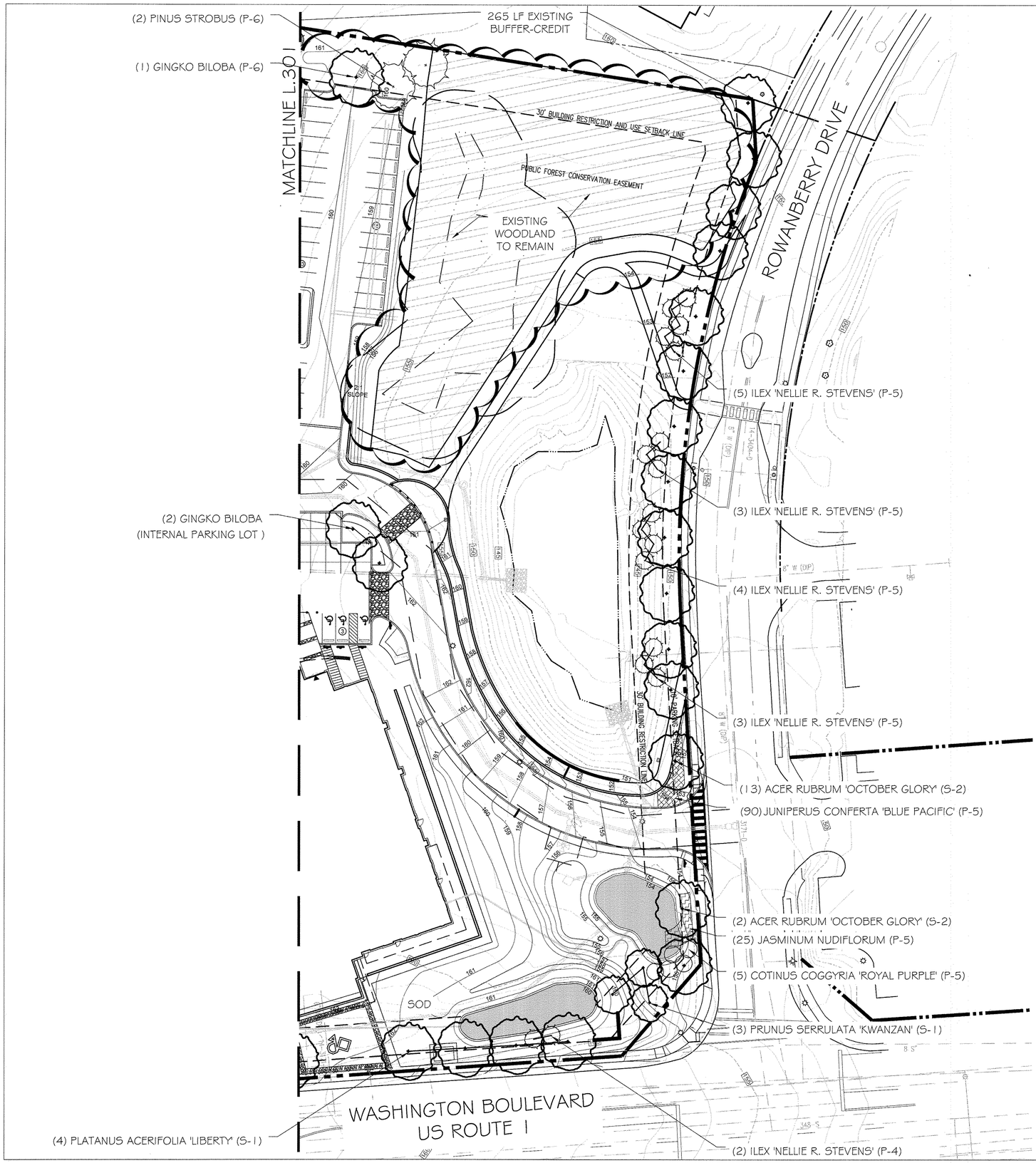

NOTES:

1. MAINTAIN MIN. 5' SOD CLEARANCE BETWEEN THE SIDEWALK AND PLANTING EDGE AS SHOWN ON THE DRAWINGS.- TYP.

2. STREET TREES TO BE PLANTED 10' OFF FROM THE SIDEWALK- TYP.

N

LANDSCAPE CERTIFICATE:

"I/WE CERTIFY THAT THE LANDSCAPING SHOWN ON THIS PLAN WILL BE DONE ACCORDING TO THE PLAN, SECTION 16.124 OF THE HOWARD COUNTY CODE, AND THE HOWARD COUNTY LANDSCAPE MANUAL. I/WE FURTHER CERTIFY THAT UPON COMPLETION A CERTIFICATION OF LANDSCAPE INSTALLATION, ACCOMPANIED BY AN EXECUTED ONE YEAR GUARANTEE OF PLANT MATERIALS, WILL BE SUBMITTED TO THE DEPARTMENT OF PLANNING AND ZONING."

DEVELOPER SIGNATURE: _____

APPROVED : DEPARTMENT OF PLANNING AND ZONING

CHIEF, DEVELOPMENT ENGINEERING DIVISION	DATE 7-19-16
CHIEF, DIVISION OF LAND DEVELOPMENT	DATE 8-16-16
DIRECTOR	DATE 8-16-16

DATE	NO.	REVISION	BY

DEVELOPER
HOWARD COUNTY
DEPARTMENT OF PUBLIC WORKS
BUREAU OF FACILITIES
9250 BENDIX ROAD
COLUMBIA, MARYLAND 21045
ATTN: MARK STROMDAHL
PHONE: 410-313-2700

OWNER
HOWARD COUNTY
DEPARTMENT OF PUBLIC WORKS
BUREAU OF FACILITIES
9250 BENDIX ROAD
COLUMBIA, MARYLAND 21045
ATTN: MARK STROMDAHL
PHONE: 410-313-2700

PROJECT
HCLS ELKRIDGE BRANCH AND 50+ CENTER

AREA
FLAT NOS. 23869 - 23870
TAX MAP 38, PARCELS 97 & 478 ZONED B-1 & R-12
GRID NO. 7 1st ELECTION DISTRICT
6540 WASHINGTON BOULEVARD
ELKRIDGE, MARYLAND 21075-0000
HOWARD COUNTY, MARYLAND

TITLE
PLANTING PLAN- II - SDP

NOTE:

THIS PLAN IS FOR SDP SUBMISSION ONLY.THIS DOES NOT COVER THE WHOLE PLANTING PLAN.

0 30 60 90

BRADLEY SITE DESIGN, INC.
LANDSCAPE ARCHITECTURE
12 W. Madison Street., Suite 204
Baltimore, MD 21201
P: 443-450-1385
www.bradleysitedesign.com

SEAL

BY: _____

"PROFESSIONAL CERTIFICATION. I HEREBY CERTIFY THAT THESE DOCUMENTS WERE PREPARED OR APPROVED BY ME, AND THAT I AM A DULY LICENSED PROFESSIONAL LANDSCAPE ARCHITECT UNDER THE LAWS OF THE STATE OF MARYLAND, LICENSE NO. 808, EXPIRATION DATE: 01/10/2018"

SHEET NUMBER :	L.302
DESIGNED BY :	SB/ES
DRAWN BY:	ES
PROJECT NO :	GRIM1402
DATE :	JUNE 20, 2016
SCALE :	1"= 30'-0"
DRAWING NO.	39 OF 50

SDP-16-038

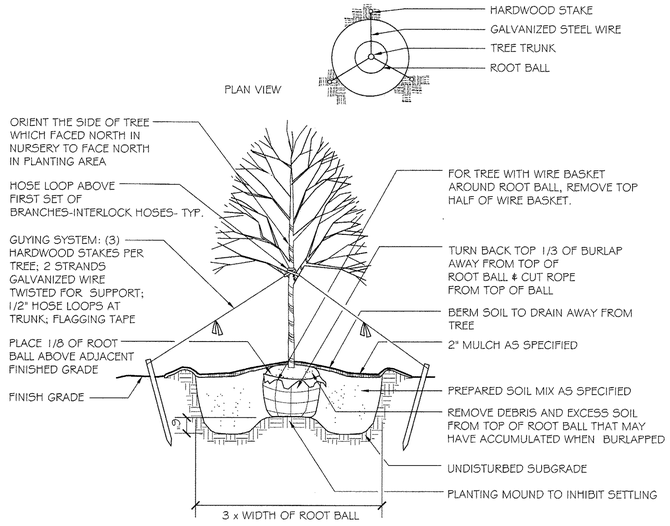

A DECIDUOUS TREE PLANTING (OVER 3" CALIPER)
NOT TO SCALE

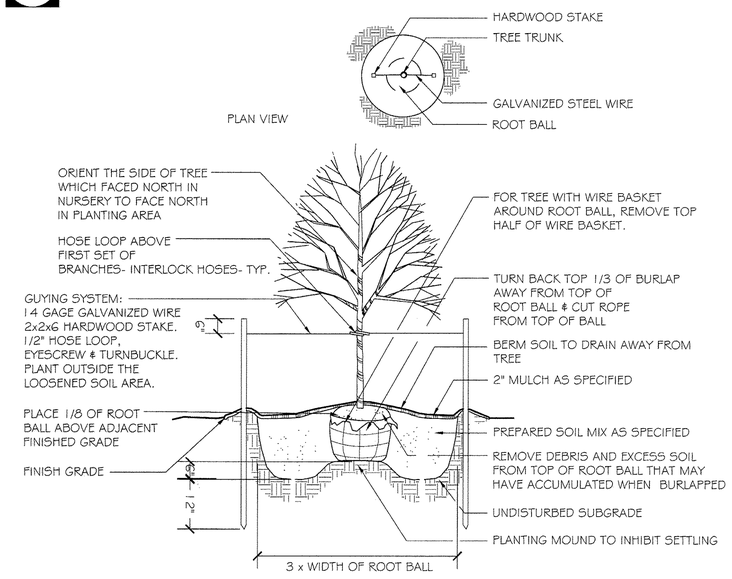

B DECIDUOUS TREE PLANTING (UNDER 3" CALIPER)
NOT TO SCALE

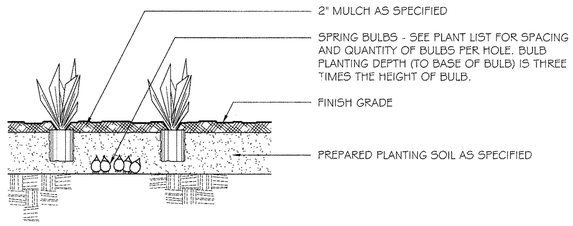

F BULB PLANTING
NOT TO SCALE

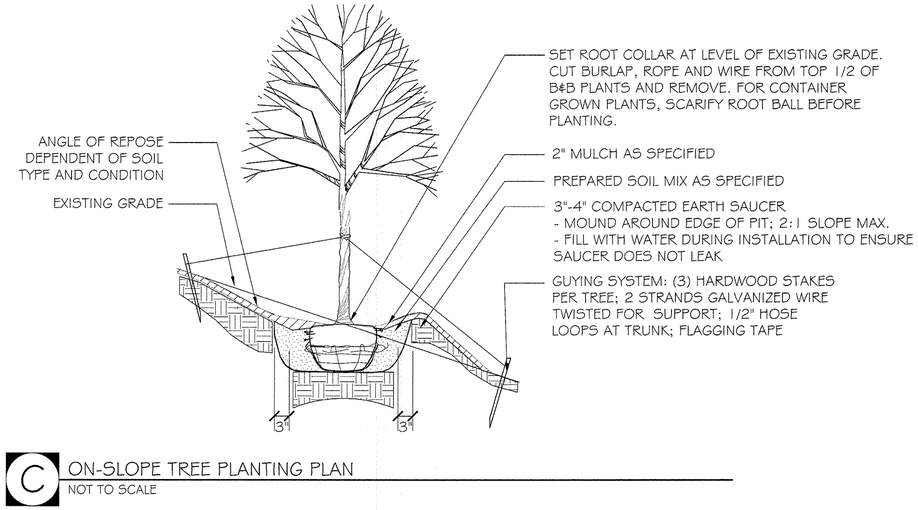

C ON-SLOPE TREE PLANTING PLAN
NOT TO SCALE

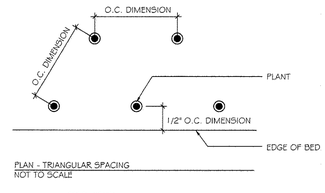

PLAN - TRIANGULAR SPACING
NOT TO SCALE

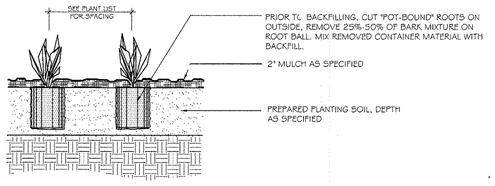

D PERENNIAL PLANTING
NOT TO SCALE

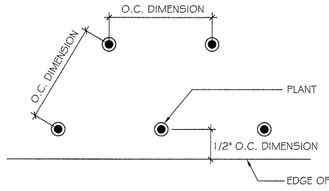

PLAN - TRIANGULAR SPACING
NOT TO SCALE

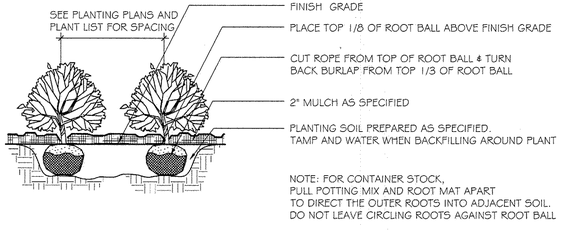

E SHRUB PLANTING
NOT TO SCALE

LANDSCAPE CERTIFICATE:

"I/WE CERTIFY THAT THE LANDSCAPING SHOWN ON THIS PLAN WILL BE DONE ACCORDING TO THE PLAN, SECTION 16.124 OF THE HOWARD COUNTY CODE, AND THE HOWARD COUNTY LANDSCAPE MANUAL. I/WE FURTHER CERTIFY THAT UPON COMPLETION A CERTIFICATION OF LANDSCAPE INSTALLATION, ACCOMPANIED BY AN EXECUTED ONE YEAR GUARANTEE OF PLANT MATERIALS, WILL BE SUBMITTED TO THE DEPARTMENT OF PLANNING AND ZONING."

DEVELOPER SIGNATURE: Kirk

APPROVED : DEPARTMENT OF PLANNING AND ZONING

CHIEF, DEVELOPMENT ENGINEERING DIVISION	DATE 7.19.16
CHIEF, DIVISION OF LAND DEVELOPMENT	DATE 8-16-16
DIRECTOR	DATE 8-16-16

DATE	NO.	REVISION	BY

DEVELOPER
HOWARD COUNTY
DEPARTMENT OF PUBLIC WORKS
BUREAU OF FACILITIES
9250 BENDIX ROAD
COLUMBIA, MARYLAND 21045
ATTN: MARK STROMDAHL
PHONE: 410-313-2700

OWNER
HOWARD COUNTY
DEPARTMENT OF PUBLIC WORKS
BUREAU OF FACILITIES
9250 BENDIX ROAD
COLUMBIA, MARYLAND 21045
ATTN: MARK STROMDAHL
PHONE: 410-313-2700

PROJECT
HCLS ELKRIDGE BRANCH AND 50+ CENTER

AREA
PLAT NOS. 23869 - 23870
TAX MAP 38, PARCELS 97 & 478 ZONED B-1 & R-12
GRID NO. 7 1st ELECTION DISTRICT
6540 WASHINGTON BOULEVARD
ELKRIDGE, MARYLAND 21075-0000
HOWARD COUNTY, MARYLAND

TITLE
PLANTING DETAILS - SDP

BRADLEY SITE DESIGN, INC.
LANDSCAPE ARCHITECTURE
12 W. Madison Street., Suite 204
Baltimore, MD 21201
P: 443-450-1385
www.bradleysitedesign.com

SEAL

BY:

"PROFESSIONAL CERTIFICATION. I HEREBY CERTIFY THAT THESE DOCUMENTS WERE PREPARED OR APPROVED BY ME, AND THAT I AM A DULY LICENSED PROFESSIONAL LANDSCAPE ARCHITECT UNDER THE LAWS OF THE STATE OF MARYLAND, LICENSE NO. 806 EXPIRATION DATE: 01/10/2018"

SHEET NUMBER :	L.303
DESIGNED BY :	SB/ES
DRAWN BY:	ES
PROJECT NO :	GRIM1402
DATE :	JUNE 20, 2016
SCALE :	AS SHOWN
DRAWING NO.	40 OF 50

SDP-16-038

SDP PLANT LIST

QTY.	BOTANICAL/COMMON NAME	SIZE	SPACING	REMARKS	NATIVE
	SHADE TREES				
15	ACER RUBRUM 'OCTOBER GLORY' Red Maple	3-3 1/2" cal.	As Shown	Strong Single Leader/Specimen	YES
23	GINGKO BILOBA Gingko Tree	3-4" cal.	As Shown	Strong Single Leader/Specimen	NO
8	PLATANUS ACERIFOLIA 'LIBERTY' Liberty London Plane Tree	3-3 1/2" cal.	As Shown	Strong Single Leader/Specimen	NO
	ORNAMENTAL TREES				
16	PRUNUS SERRULATA 'KWANZAN' Kwanzan Flowering Cherry	2-2 1/2" cal.			
	EVERGREEN TREES				
9	ILEX OPACA 'SATYR HILL' American Holly	8-10' ht.	As Shown	Single Strong Leader/Specimen	YES
31	ILEX 'NELLIE R. STEVENS' Nellie Stevens Holly	8-10' ht.	As Shown	Single Strong Leader/Specimen	YES
16	PINUS STROBUS White Pine	6-8' ht.	As Shown	Single Strong Leader/Specimen	YES
	SHRUBS				
83	CLETHRA ALNIFOLIA 'HUMMINGBIRD' Summersweet Pepperbush	24-30" ht.	36" O.C.	Appropriate for Rain Garden	YES
122	CORNUS SERICEA 'ARCTIC FIRE' Red Twig Dogwood	36" ht.	36" O.C.		YES
5	COTINUS COGGYRIA 'ROYAL PURPLE' Purple Smoke Bush	48" ht.	72" O.C.		NO
25	JASMINUM NUDIFLORUM Winter Jasmine	30" ht.	30" O.C.		NO
90	JUNIPERUS CONFERTA 'BLUE PACIFIC' Blue Pacific Shore Juniper	24" ht.	24" O.C.		NO

SCHEDULE A - PERIMETER LANDSCAPE EDGE

PERIMETER	CATEGORY PROPERTIES / ROADWAYS	LANDSCAPE TYPE	LINEAR FEET OF ROADWAY FRONTAGE PERIMETER	CREDIT FOR EXISTING VEGETATION (YES, NO, LINEAR FEET)	SHADE TREES REQUIRED	EVERGREEN TREES REQUIRED	SHRUBS REQUIRED	SHADE TREES PROVIDED	EVERGREEN TREES PROVIDED	SHRUBS PROVIDED (10:1 SUB)	OTHER TREES PROVIDED (2:1 SUB)
P-1	PARKING TO ROAD	E	170 LF	--	4	--	43	--	--	83--8.3 PU	--
P-2	NON-RESIDENTIAL TO NON-RESIDENTIAL	A	193 LF	--	3	--	--	3	--		
P-3	NON-RESIDENTIAL TO NON-RESIDENTIAL	A	257 LF	--	4	--	--	--	4--2 PU	25--2.5 PU	
P-4	NON-RESIDENTIAL TO ROAD	B	428 LF	--	9	11	--		7--3.5 PU	97--9.7 PU	5--2.5 PU
P-5	NON-RESIDENTIAL TO ROAD	B	596 LF	--	12	15	--	--	15	120--12 PU	--
P-6	NON-RESIDENTIAL TO RESIDENTIAL	C	299 LF	YES, 265 LF	1	2	--	1	2	--	--
P-7	NON-RESIDENTIAL TO RESIDENTIAL	C	220 LF	YES, (1) SHADE TREE	6	11	--	4	11	--	2--1 PU
P-8	NON-RESIDENTIAL TO RESIDENTIAL	C	341 LF	--	9	17	--	11	17		

NOTE:

P-4: LANDSCAPING ALTERNATIVE COMPLIANCE IS BEING UTILIZED TO SATISFY THE REQUIREMENTS OF THIS PERIMETER.

P-8: EXTRA TWO SHADE TREES ARE BEING PLANTED TO SATISFY THE MITIGATION PLANTINGS PER WP-16-094

STREET TREES					
S1	WASHINGTON BOULEVARD- US ROUTE 1	SIDEWALK IN RIGHT-OF-WAY	428 LF RIGHT-OF-WAY LESS THAN 6 FEET FROM CURB TO SIDEWALK	428 LF/ 40 = 11 LARGE TREES REQUIRED	8 SHADE TREES & 3 FLOWERING TREES PROVIDED
S2	ROWANBERRY DRIVE	SIDEWALK IN RIGHT-OF-WAY	598 LF RIGHT-OF-WAY LESS THAN 6 FEET FROM CURB TO SIDEWALK	598 LF/ 40 = 15 LARGE TREES REQUIRED	15 TREES PROVIDED
S3	HUNT CLUB ROAD	SIDEWALK IN RIGHT-OF-WAY	110 LF RIGHT-OF-WAY LESS THAN 6 FEET FROM CURB TO SIDEWALK	110 LF/ 30 = 4 SMALL TREES REQUIRED	4 FLOWERING TREES PROVIDED
S4	HUNT CLUB ROAD	SIDEWALK IN RIGHT-OF-WAY	60 LF RIGHT-OF-WAY GREATER THAN 6 FEET FROM CURB TO SIDEWALK	60 LF/ 30 = 2 SMALL TREES REQUIRED	2 FLOWERING TREES PROVIDED

SCHEDULE B- PARKING LOT INTERNAL LANDSCAPING	
NUMBER OF PARKING SPACES	166
NUMBER OF TREES REQUIRED	8
NUMBER OF TREES PROVIDED SHADE TREES OTHER TREES (2:1 SUB)	8 SHADE TREES

NOTE:

1. STORMWATER MANAGEMENT FACILITY IS EXISTING TO REMAIN.

2. SMALL TREES BENEATH POWER LINES AT HUNT CLUB ROAD AND WASHINGTON BOULEVARD-US ROUTE 1

LANDSCAPE CERTIFICATE:

"I/WE CERTIFY THAT THE LANDSCAPING SHOWN ON THIS PLAN WILL BE DONE ACCORDING TO THE PLAN, SECTION 16.124 OF THE HOWARD COUNTY CODE, AND THE HOWARD COUNTY LANDSCAPE MANUAL. I/WE FURTHER CERTIFY THAT UPON COMPLETION A CERTIFICATION OF LANDSCAPE INSTALLATION, ACCOMPANIED BY AN EXECUTED ONE YEAR GUARANTEE OF PLANT MATERIALS, WILL BE SUBMITTED TO THE DEPARTMENT OF PLANNING AND ZONING."

DEVELOPER SIGNATURE: _____

GENERAL NOTES:

1. THIS PLAN HAS BEEN PREPARED IN ACCORDANCE WITH THE PROVISIONS OF SECTION 16.124 OF THE HOWARD COUNTY CODE AND THE LANDSCAPE MANUAL BY PROVIDING 46 SHADE TREES, 56 EVERGREEN TREES, 16 ORNAMENTAL TREES AND 325 SHRUBS. THERE IS NO LANDSCAPE SURETY FOR COUNTY CAPITAL PROJECTS.
2. THIS PLAN IS FOR LANDSCAPING PURPOSES ONLY.
3. CONTRACTOR IS SOLELY RESPONSIBLE FOR CONSTRUCTION MEANS, METHODS, TECHNIQUES, SEQUENCES, PROCEDURES, AND SAFETY PRECAUTIONS AND PROGRAMS.
4. ALL MATERIAL SELECTED SHALL BE EQUAL TO OR BETTER THAN THE REQUIREMENTS OF THE "USA STANDARD FOR NURSERY STOCK", LATEST EDITION, AS PUBLISHED BY THE AMERICAN ASSOCIATION OF NURSERYMEN.
5. ALL MATERIAL SHALL BE PLANTED IN ACCORDANCE WITH THE MINIMUM STANDARDS CITED IN THE LATEST EDITION OF "LANDSCAPE SPECIFICATION GUIDELINES" PUBLISHED BY THE LANDSCAPE CONTRACTORS ASSOCIATION.
6. AT THE TIME OF INSTALLATION, ALL SHRUBS AND OTHER PLANTINGS SHALL BE OF THE PROPER HEIGHT AND/OR SPREAD REQUIREMENTS IN ACCORDANCE WITH THE PLAN AND THE HOWARD COUNTY LANDSCAPE MANUAL.
7. NO SUBSTITUTIONS OR RELOCATION OF PLANTS MAY BE MADE WITHOUT PRIOR APPROVAL FROM THE DEPARTMENT OF PLANNING AND ZONING OF HOWARD COUNTY. ANY DEVIATION FROM THIS LANDSCAPE PLAN MAY RESULT IN A REQUIREMENT FOR SUBMITTAL OF AN OFFICIAL "REDLINE REVISION" TO THE SITE DEVELOPMENT PLAN(S) AND/OR DENIAL IN THE RELEASE OF LANDSCAPE SURETY.

APPROVED : DEPARTMENT OF PLANNING AND ZONING

CHIEF, DEVELOPMENT ENGINEERING DIVISION — DATE 7.19.16

CHIEF, DIVISION OF LAND DEVELOPMENT — DATE 8.16.16

DIRECTOR — DATE 8-16-16

DATE	NO.	REVISION	BY

DEVELOPER
HOWARD COUNTY
DEPARTMENT OF PUBLIC WORKS
BUREAU OF FACILITIES
9250 BENDIX ROAD
COLUMBIA, MARYLAND 21045
ATTN: MARK STROMDAHL
PHONE: 410-313-2700

OWNER
HOWARD COUNTY
DEPARTMENT OF PUBLIC WORKS
BUREAU OF FACILITIES
9250 BENDIX ROAD
COLUMBIA, MARYLAND 21045
ATTN: MARK STROMDAHL
PHONE: 410-313-2700

PROJECT
HCLS ELKRIDGE BRANCH AND 50+ CENTER

AREA
PLAT NOS. 23869-23870
TAX MAP 38, PARCELS 97 & 478 ZONED B-1 & R-12
GRID NO. 7 1st ELECTION DISTRICT
6540 WASHINGTON BOULEVARD
ELKRIDGE, MARYLAND 21075-0000
HOWARD COUNTY, MARYLAND

TITLE
PLANTING SCHEDULE & REQUIREMENTS - SDP

BRADLEY SITE DESIGN, INC.
LANDSCAPE ARCHITECTURE
12 W. Madison Street., Suite 204
Baltimore, MD 21201
P: 443-450-1385
www.bradleysitedesign.com

SEAL

BY: _____

"PROFESSIONAL CERTIFICATION. I HEREBY CERTIFY THAT THESE DOCUMENTS WERE PREPARED OR APPROVED BY ME, AND THAT I AM A DULY LICENSED PROFESSIONAL LANDSCAPE ARCHITECT UNDER THE LAWS OF THE STATE OF MARYLAND, LICENSE NO. 606. EXPIRATION DATE: 01/10/2018"

SHEET NUMBER : L.304
DESIGNED BY : SB/ES
DRAWN BY: ES
PROJECT NO : GRIM1402
DATE : JUNE 20, 2016
SCALE : AS SHOWN
DRAWING NO. 41 OF 50

SDP-16-038

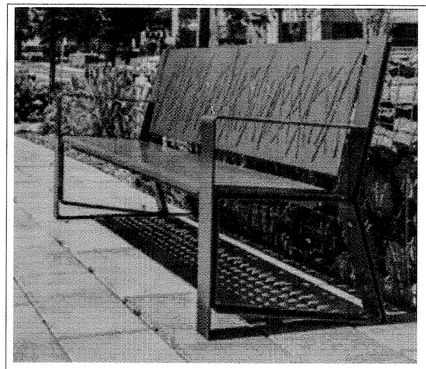

PRODUCT: LAKESIDE BENCH-GRASS BACKED.SILVER POWDERCOAT.
MANUFACTURER: FORMS SURFACES
SIZE: 25" D X 67" W X 35"H
QUANTITY: 6
INSTALLATION: SURFACE MOUNT

A LAKESIDE BENCH- LANDSCAPE FORMS
NOT TO SCALE

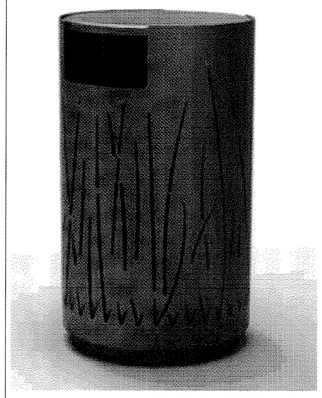

PRODUCT: LAKESIDE TRASH RECEPTACLE. GRASS. SIDE OPENING. SILVER POWDERCOAT.
MANUFACTURER: FORMS SURFACES
SIZE: 21" D X 36" H
QUANTITY: 3 TRASH & 3 RECYCLE
INSTALLATION: SURFACE MOUNT

B LAKESIDE TRASH RECEPTACLE- FORMS & SURFACES
NOT TO SCALE

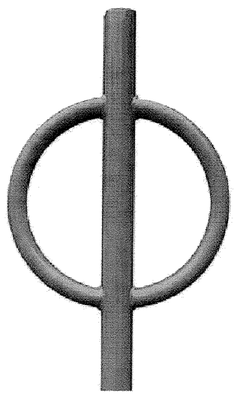

PRODUCT: BIKE HITCH - 2 BIKE CAPACITY-
POWDERCOAT: SILVER COLOR. PROVIDE SAMPLES.
MANUFACTURER: DERO
QUANTITY: 4
INSTALLATION: SURFACE MOUNT
**CUSTOM LIBRARY LOGO ON PLATE WITHIN LOOPS SUBMIT SHOP DRAWINGS.

C BIKE RACK
NOT TO SCALE

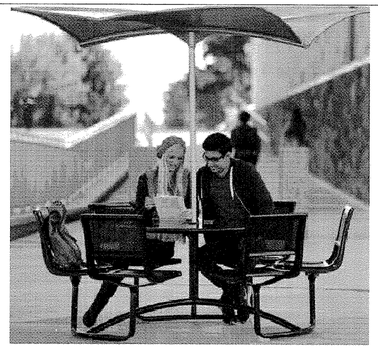

PRODUCT: MINGLE
MANUFACTURER: FORMS SURFACES
MODEL: BACKED 3 SEAT. WITH UMBRELLA HOLE. SILVER TEXTURE. CATENA TABLE TOP.
QUANTITY: 3
INSTALLATION: SURFACE MOUNTED.
SHADE: UMBRELLA ONLY. SILVER TEXTURE.

D MINGLE & SHADE- FORMS AND SURFACES
NOT TO SCALE

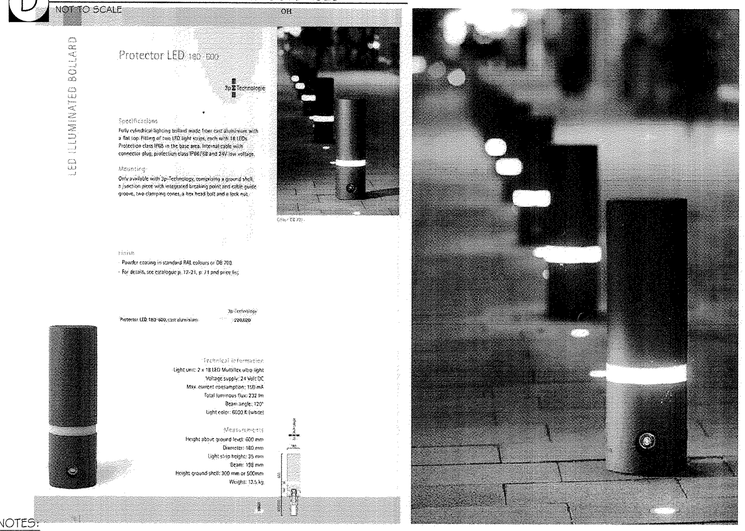

NOTES:
1. SEE ARCHITECTURAL DRAWINGS FOR FOOTING & REINFORCEMENT INFORMATION.
2. SEE MEP DRAWINGS FOR LIGHTING & ELECTRICAL INFORMATION.
3. BOLLARDS TO BE SPACED 6' O.C.- TYP. AT THE BUILDING FRONT & CONCRETE DECK AND 8' O.C.- TYP. AT THE LOADING AREA.
4. QTY:41

MODEL #: PROTECTOR 180/600. CAST IRON, LED LIGHTED

E SECURITY BOLLARDS
NOT TO SCALE

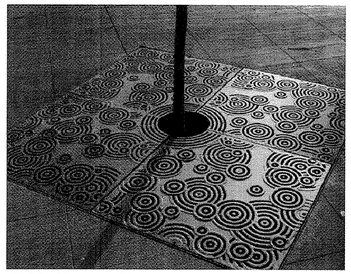

PRODUCT: OBLIO TREE GRATE. 6X6
MANUFACTURER: IRON AGE DESIGN
FINISH: CAST IRON-NATURAL.
QUANTITY: 5

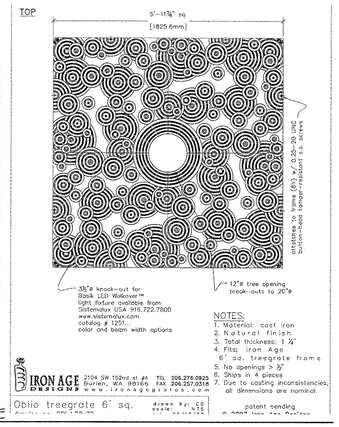

F OBLIO STYLE TREE GRATE-6' SQ.- IRON AGE
NOT TO SCALE

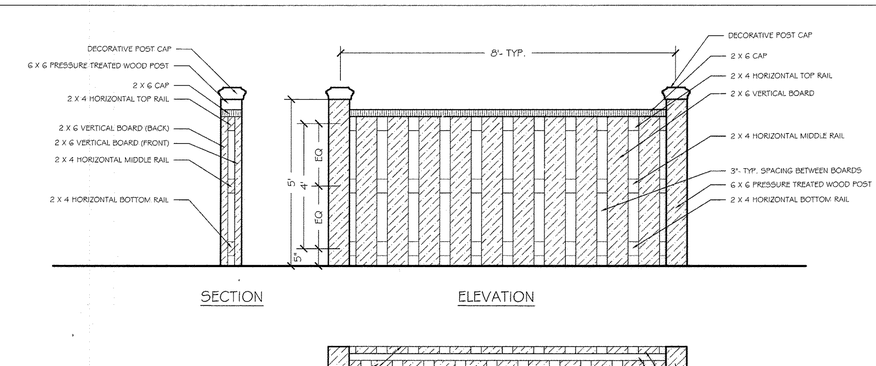

FENCE MATERIAL: COMPOSITE WOOD. SUBMIT SAMPLES.

G 5' HT. BOARD ON BOARD DECORATIVE FENCE
NTS

NOTE:
1. CONTRACTOR TO SUBMIT SHOP DRAWINGS.

PRODUCT: EDUCATIONAL SIGN PANEL
MANUFACTURER: DAVID ARTHUR SIGNS
DIMENSIONS: 18" x 24" x ¾" THICK PANEL; HIGH PRESSURE COMPOSITE PANEL
FINISH: 2" SQUARE ALUMINUM POST- COLOR: BLACK
QUANTITY: 2
INSTALLATION: EMBEDDED @ 8" DIA X 12" DEEP CONCRETE FOOTING.
**NO VISIBLE FASTENERS.
**ARCHITECT TO PROVIDE THE CONTENT.

H EDUCATIONAL SIGN PANEL @ SWM POND & CONCRETE DECK
NOT TO SCALE

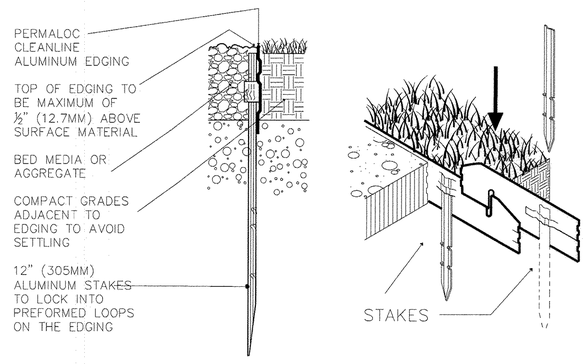

PRODUCT: ALUMINUM LANDSCAPE EDGING
MANUFACTURER: PERMALOC CLEANLINE
DIMENSIONS: 3/16" X 5 1/2"
FINISH: BLACK DURAFLEX

I METAL LANDSCAPE EDGE
NOT TO SCALE

APPROVED : DEPARTMENT OF PLANNING AND ZONING

CHIEF, DEVELOPMENT ENGINEERING DIVISION — DATE 7-19-16
CHIEF, DIVISION OF LAND DEVELOPMENT — DATE 8-16-16
DIRECTOR — DATE 8-16-16

DATE	NO.	REVISION	BY

DEVELOPER
HOWARD COUNTY
DEPARTMENT OF PUBLIC WORKS
BUREAU OF FACILITIES
9250 BENDIX ROAD
COLUMBIA, MARYLAND 21045
ATTN: MARK STROMDAHL
PHONE: 410-313-2700

OWNER
HOWARD COUNTY
DEPARTMENT OF PUBLIC WORKS
BUREAU OF FACILITIES
9250 BENDIX ROAD
COLUMBIA, MARYLAND 21045
ATTN: MARK STROMDAHL
PHONE: 410-313-2700

PROJECT
HCLS ELKRIDGE BRANCH AND 50+ CENTER

AREA
FLAT NOS. 23869-23870
TAX MAP 38, PARCELS 97 & 478 ZONED B-1 & R-12
GRID NO. 7 1st ELECTION DISTRICT
6540 WASHINGTON BOULEVARD
ELKRIDGE, MARYLAND 21075-0000
HOWARD COUNTY, MARYLAND

TITLE
SITE FURNITURE DETAILS

BRADLEY SITE DESIGN, INC.
LANDSCAPE ARCHITECTURE
12 W. Madison Street., Suite 204
Baltimore, MD 21201
P: 443-450-1385
www.bradleysitedesign.com

SEAL

BY: _____
"PROFESSIONAL CERTIFICATION. I HEREBY CERTIFY THAT THESE DOCUMENTS WERE PREPARED OR APPROVED BY ME, AND THAT I AM A DULY LICENSED PROFESSIONAL LANDSCAPE ARCHITECT UNDER THE LAWS OF THE STATE OF MARYLAND. LICENSE NO. 808, EXPIRATION DATE: 01/10/2017"

SHEET NUMBER :	L.400
DESIGNED BY :	SB/ES
DRAWN BY:	ES
PROJECT NO :	GRIM1402
DATE :	JUNE 20, 2016
SCALE :	AS SHOWN
DRAWING NO.	42 OF 50

SDP-16-038

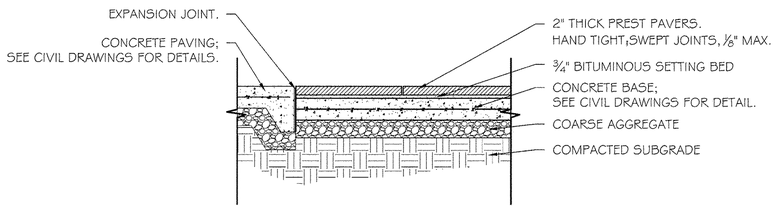

NOTE:

1. SUBMIT COLOR SAMPLES FOR PAVERS.-TYP.

A CONCRETE PAVER DETAIL--PEDESTRIAN APPLICATION
3/4"= 1'-0"

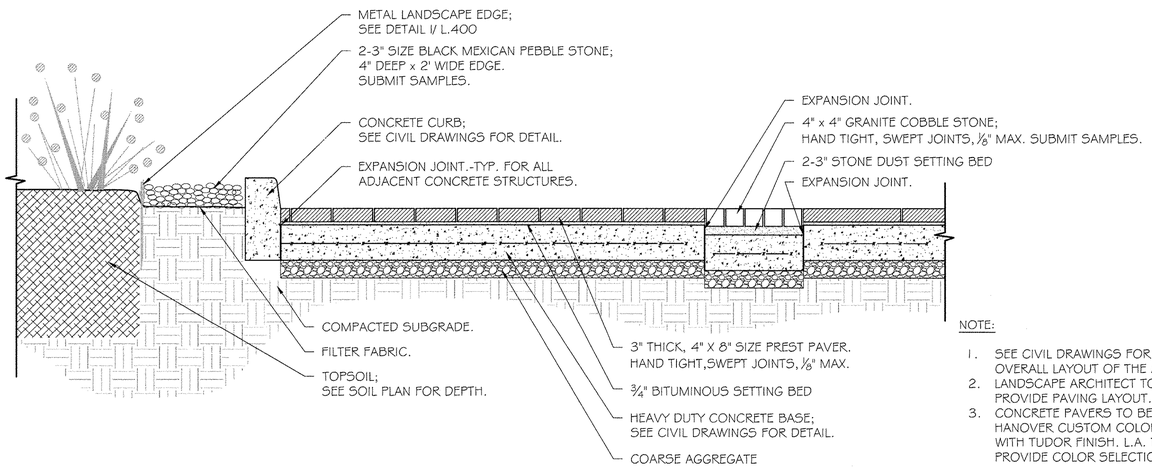

NOTE:

1. SEE CIVIL DRAWINGS FOR OVERALL LAYOUT OF THE AREA.
2. LANDSCAPE ARCHITECT TO PROVIDE PAVING LAYOUT.
3. CONCRETE PAVERS TO BE HANOVER CUSTOM COLORS WITH TUDOR FINISH. L.A. TO PROVIDE COLOR SELECTION

B PAVER SECTION THROUGH MIDDLE PARKING ISLAND--VEHICULAR APPLICATION
3/4"= 1'-0"

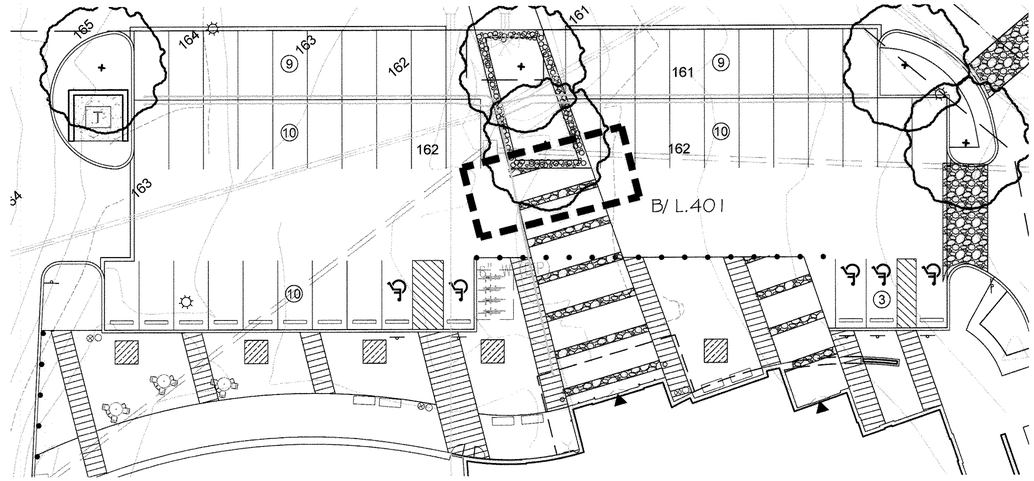

APPROVED : DEPARTMENT OF PLANNING AND ZONING

CHIEF, DEVELOPMENT ENGINEERING DIVISION — DATE 7.19.16

CHIEF, DIVISION OF LAND DEVELOPMENT — DATE 8-16-16

DIRECTOR — DATE 8-16-16

DATE	NO.	REVISION	BY

DEVELOPER
HOWARD COUNTY
DEPARTMENT OF PUBLIC WORKS
BUREAU OF FACILITIES
9250 BENDIX ROAD
COLUMBIA, MARYLAND 21045
ATTN: MARK STROMDAHL
PHONE: 410-313-2700

OWNER
HOWARD COUNTY
DEPARTMENT OF PUBLIC WORKS
BUREAU OF FACILITIES
9250 BENDIX ROAD
COLUMBIA, MARYLAND 21045
ATTN: MARK STROMDAHL
PHONE: 410-313-2700

PROJECT

HCLS ELKRIDGE BRANCH AND 50+ CENTER

AREA
PLAT NOS. 23869-23870
TAX MAP 38, PARCELS 97 & 478 ZONED B-1 & R-12
GRID NO. 7 1st ELECTION DISTRICT
6540 WASHINGTON BOULEVARD
ELKRIDGE, MARYLAND 21075-0000
HOWARD COUNTY, MARYLAND

TITLE

CONSTRUCTION DETAILS

BRADLEY SITE DESIGN, INC.
LANDSCAPE ARCHITECTURE
12 W. Madison Street., Suite 204
Baltimore, MD 21201
P: 443-450-1385
www.bradleysitedesign.com

SEAL

BY:

"PROFESSIONAL CERTIFICATION. I HEREBY CERTIFY THAT THESE DOCUMENTS WERE PREPARED OR APPROVED BY ME, AND THAT I AM A DULY LICENSED PROFESSIONAL LANDSCAPE ARCHITECT UNDER THE LAWS OF THE STATE OF MARYLAND, LICENSE NO. 808, EXPIRATION DATE 01/10/2018"

SHEET NUMBER :	L.401
DESIGNED BY :	SB/ES
DRAWN BY:	ES
PROJECT NO :	GRIM1402
DATE :	JUNE 20, 2016
SCALE :	AS SHOWN
DRAWING NO.	43 OF 50

SDP-16-038

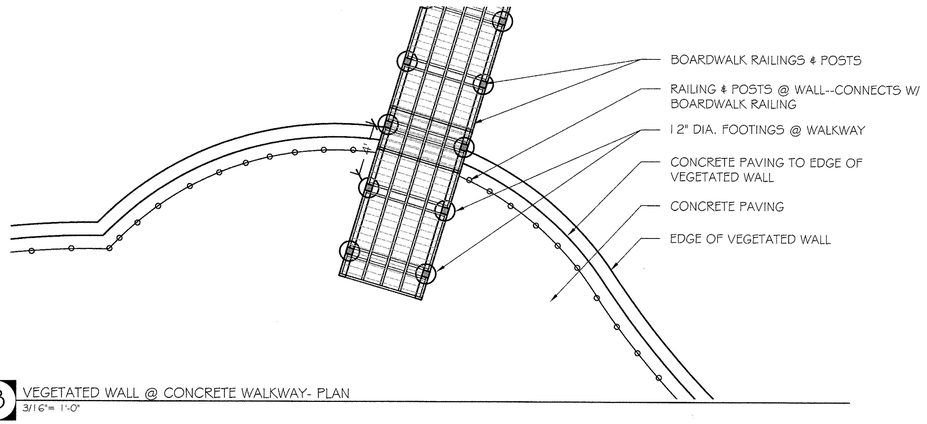

B VEGETATED WALL @ CONCRETE WALKWAY- PLAN
3/16"= 1'-0"

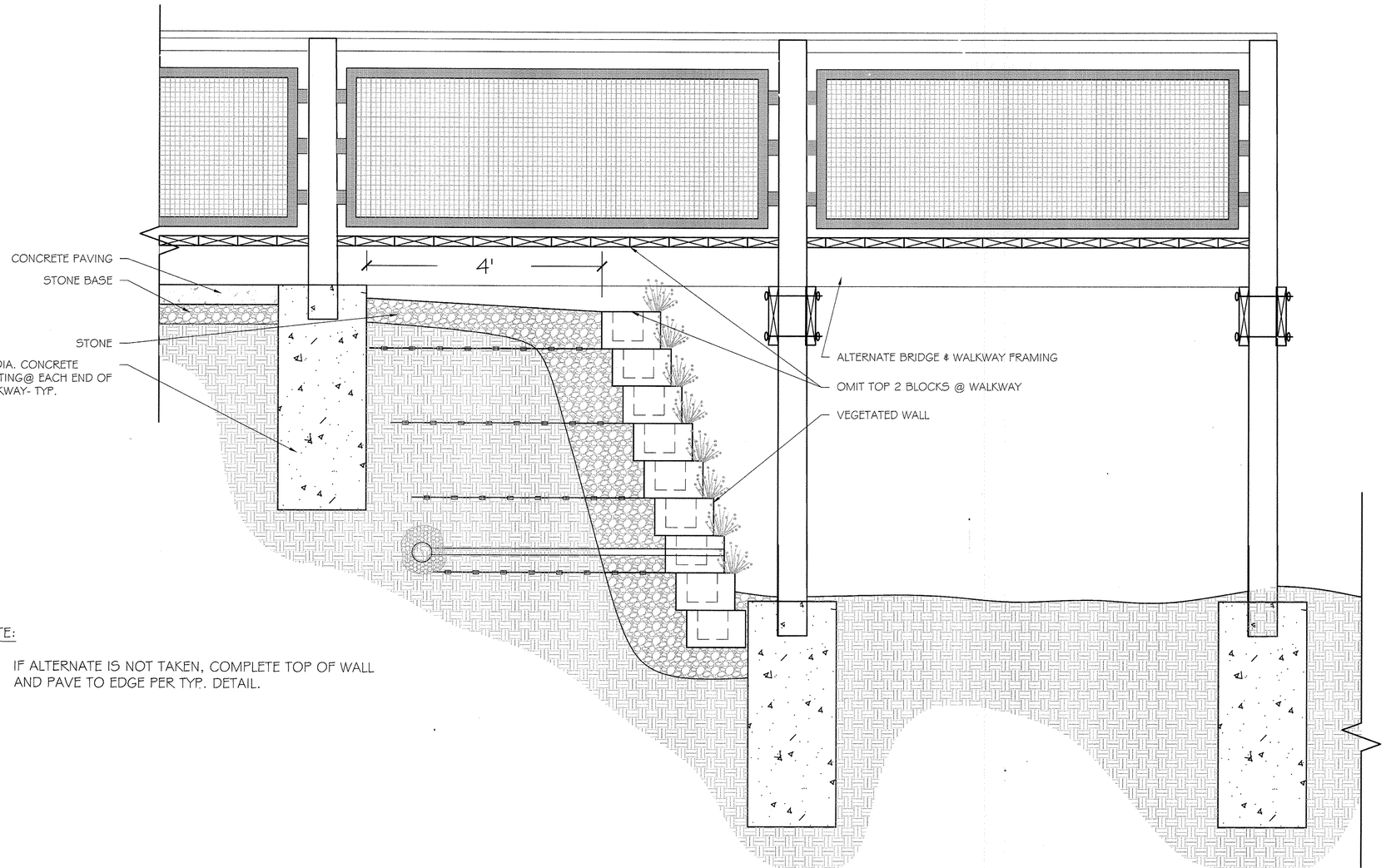

NOTE:

1. IF ALTERNATE IS NOT TAKEN, COMPLETE TOP OF WALL AND PAVE TO EDGE PER TYP. DETAIL.

A VEGETATED WALL SECTION @ CONCRETE WALKWAY
1"= 1'-0"

APPROVED : DEPARTMENT OF PLANNING AND ZONING

CHIEF, DEVELOPMENT ENGINEERING DIVISION	7.19.16 DATE
CHIEF, DIVISION OF LAND DEVELOPMENT	8.16.16 DATE
DIRECTOR	8.16.16 DATE

DATE	NO.	REVISION	BY

DEVELOPER
HOWARD COUNTY
DEPARTMENT OF PUBLIC WORKS
BUREAU OF FACILITIES
9250 BENDIX ROAD
COLUMBIA, MARYLAND 21045
ATTN: MARK STROMDAHL
PHONE: 410-313-2700

OWNER
HOWARD COUNTY
DEPARTMENT OF PUBLIC WORKS
BUREAU OF FACILITIES
9250 BENDIX ROAD
COLUMBIA, MARYLAND 21045
ATTN: MARK STROMDAHL
PHONE: 410-313-2700

PROJECT
HCLS ELKRIDGE BRANCH AND 50+ CENTER

AREA
PLAT NOS. 23869-23870
TAX MAP 38, PARCELS 97 & 478 ZONED B-1 & R-12
GRID NO. 7 1st ELECTION DISTRICT
6540 WASHINGTON BOULEVARD
ELKRIDGE, MARYLAND 21075-0000
HOWARD COUNTY, MARYLAND

TITLE
CONSTRUCTION DETAILS

BRADLEY SITE DESIGN, INC.
LANDSCAPE ARCHITECTURE
12 W. Madison Street., Suite 204
Baltimore, MD 21201
P: 443-450-1385
www.bradleysitedesign.com

SEAL

BY:

"PROFESSIONAL CERTIFICATION. I HEREBY CERTIFY THAT THESE DOCUMENTS WERE PREPARED OR APPROVED BY ME, AND THAT I AM A DULY LICENSED PROFESSIONAL LANDSCAPE ARCHITECT UNDER THE LAWS OF THE STATE OF MARYLAND, LICENSE NO. 808, EXPIRATION DATE: 01/05/2018"

SHEET NUMBER :	L.402
DESIGNED BY :	SB/ES
DRAWN BY:	ES
PROJECT NO :	GRIM1402
DATE :	JUNE 20, 2016
SCALE :	AS SHOWN
DRAWING NO.	44 OF 50

SDP-16-038

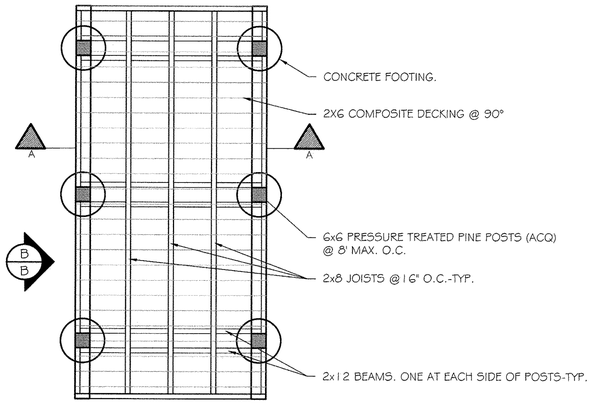

PLAN VIEW

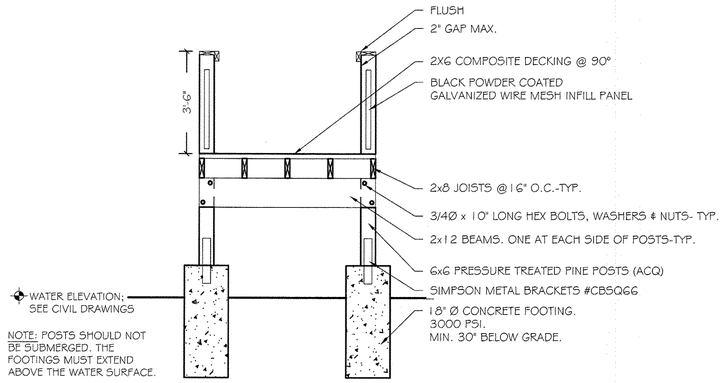

CROSS SECTION A-A

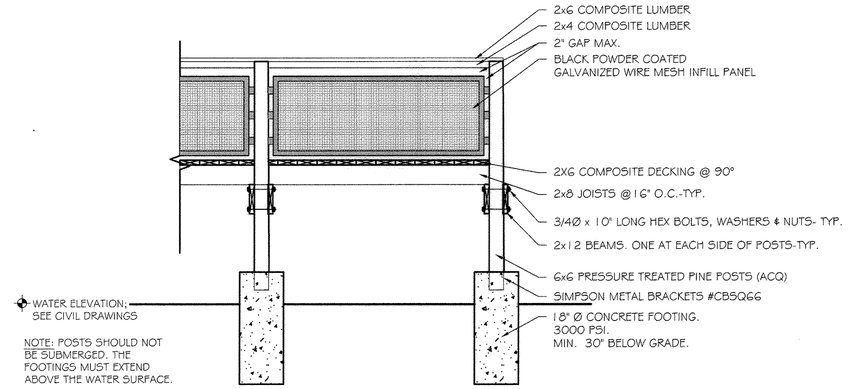

SIDE VIEW B-B

A BOARDWALK DETAIL- (ADD-ALT)
1/2"= 1'-0"

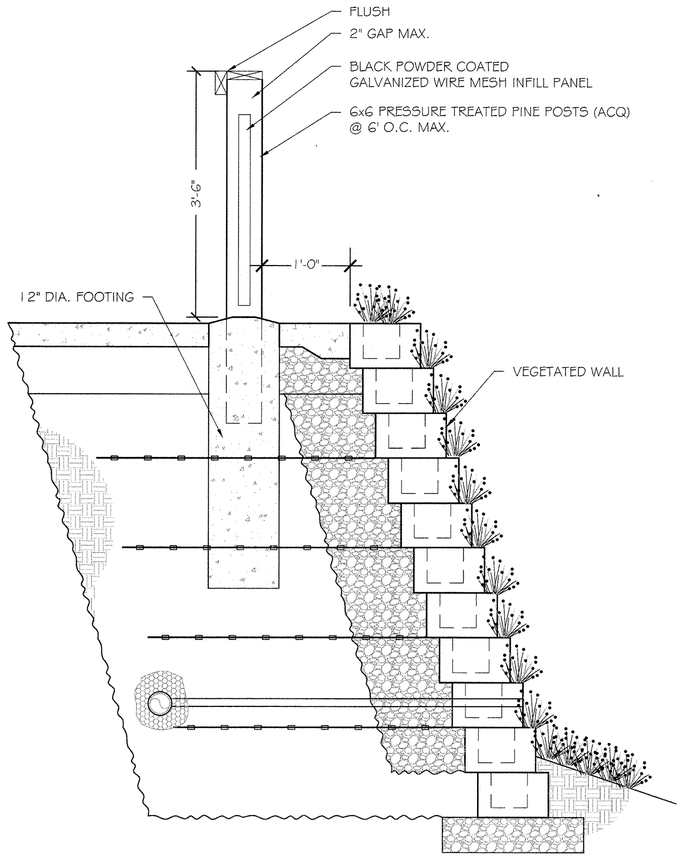

SECTION

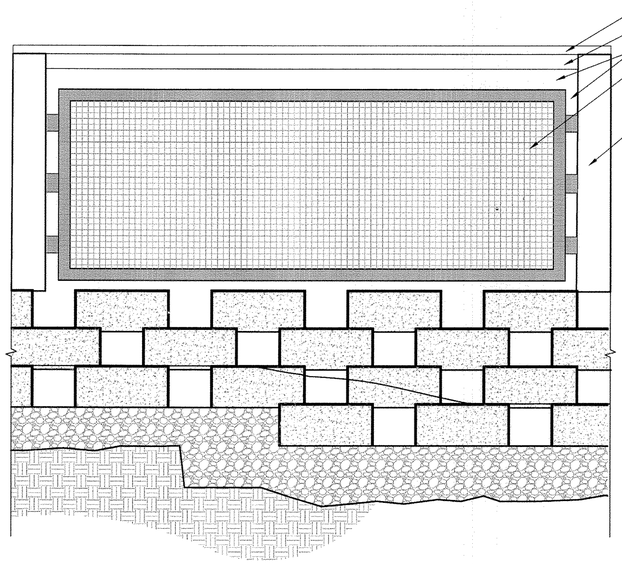

ELEVATION

B GUARDRAIL DETAIL @ RETAINING WALL
1"= 1'-0"

NOTES:

1. ALL DIMENSIONS TO BE VERIFIED IN THE FIELD.
2. POSTS: 6"X6" PRESSURE TREATED WOOD.
3. RAILINGS: 6"X6" PRESSURE TREATED WOOD.
4. REFER TO CIVIL DRAWINGS FOR LOCATION OF TOP AND BOTTOM OF WALL ELEVATIONS.
5. REFER TO STRUCTURAL ENGINEER FOR WALL DETAIL.
6. ALL CONNECTORS, ANCHORS,A ND FASTENERS SHALL BE EITHER ZMAX OR POST BATCH HOT-DIP GALVANIZED STEEL.
7. SUBMIT SAMPLES FOR INFILL PANEL AND COMPOSITE RAILING.

NOTES:

1. ALL DIMENSIONS TO BE VERIFIED IN THE FIELD.
2. POSTS: 6"X6" PRESSURE TREATED WOOD.
3. BEAMS: 2"X12" PRESSURE TREATED WOOD. 1 EACH SIDE OF POSTS, ATTACHED TO POSTS WITH (2) $\frac{3}{4}$" DIAMETER X 10" LONG HEX BOLTS, WASHERS, AND NUTS.
4. JOISTS: 2"X8" PRESSURE TREATED WOOD, SPACED AT 16" ON CENTER MAXIMUM.
5. BLOCKING: 2"X8" PRESSURE TREATED WOOD, NAILED OFFSET PERPENDICULAR TO JOISTS.
6. DECKING: 2'X6" COMPOSITE LUMBER, ATTACHED 90° TO JOISTS.
7. RAILINGS: 6"X6" PRESSURE TREATED WOOD.
8. REFER TO CIVIL DRAWINGS FOR EXTENT OF BOARDWALK AND ELEVATION.
9. ALL CONNECTORS, ANCHORS,A ND FASTENERS SHALL BE EITHER ZMAX OR POST BATCH HOT-DIP GALVANIZED STEEL.
10. SUBMIT SAMPLES FOR INFILL PANEL AND COMPOSITE DECKING. PROVIDE SHOP DRAWINGS FOR THE BOARDWALK.
11. GUARDRAIL IS REQUIRED ON THE RETAINING WALL WHERE THE GRADE DIFFERENCE IS GREATER THAN 30". SEE CIVIL DRAWINGS FOR GRADING.
12. STRUCTURAL ENGINEER REVIEW AND APPROVAL IS REQUIRED WHERE THE BOARDWALK POSTS ARE TALLER THAN 5'.

APPROVED : DEPARTMENT OF PLANNING AND ZONING

CHIEF, DEVELOPMENT ENGINEERING DIVISION	DATE 7.19.16
CHIEF, DIVISION OF LAND DEVELOPMENT	DATE 8.16.16
DIRECTOR	DATE 8-16-16

DATE	NO.	REVISION	BY

DEVELOPER
HOWARD COUNTY
DEPARTMENT OF PUBLIC WORKS
BUREAU OF FACILITIES
9250 BENDIX ROAD
COLUMBIA, MARYLAND 21045
ATTN: MARK STROMDAHL
PHONE: 410-313-2700

OWNER
HOWARD COUNTY
DEPARTMENT OF PUBLIC WORKS
BUREAU OF FACILITIES
9250 BENDIX ROAD
COLUMBIA, MARYLAND 21045
ATTN: MARK STROMDAHL
PHONE: 410-313-2700

PROJECT
HCLS ELKRIDGE BRANCH AND 50+ CENTER

AREA
PLAT Nos. 23869 - 23870
TAX MAP 38, PARCELS 97 & 478 ZONED B-1 & R-12
GRID NO. 7 1st ELECTION DISTRICT
6540 WASHINGTON BOULEVARD
ELKRIDGE, MARYLAND 21075-9000
HOWARD COUNTY, MARYLAND

TITLE
CONSTRUCTION DETAILS

BRADLEY SITE DESIGN, INC.
LANDSCAPE ARCHITECTURE
12 W. Madison Street., Suite 204
Baltimore, MD 21201
P: 443-450-1385
www.bradleysitedesign.com

SEAL

BY:
"PROFESSIONAL CERTIFICATION. I HEREBY CERTIFY THAT THESE DOCUMENTS WERE PREPARED OR APPROVED BY ME, AND THAT I AM A DULY LICENSED PROFESSIONAL LANDSCAPE ARCHITECT UNDER THE LAWS OF THE STATE OF MARYLAND, LICENSE NO. 808, EXPIRATION DATE: 01/10/2018"

SHEET NUMBER :	L.403
DESIGNED BY :	SB/ES
DRAWN BY:	ES
PROJECT NO :	GRIM1402
DATE :	JUNE 20, 2016
SCALE :	AS SHOWN
DRAWING NO.	45 OF 50

SDP-16-038

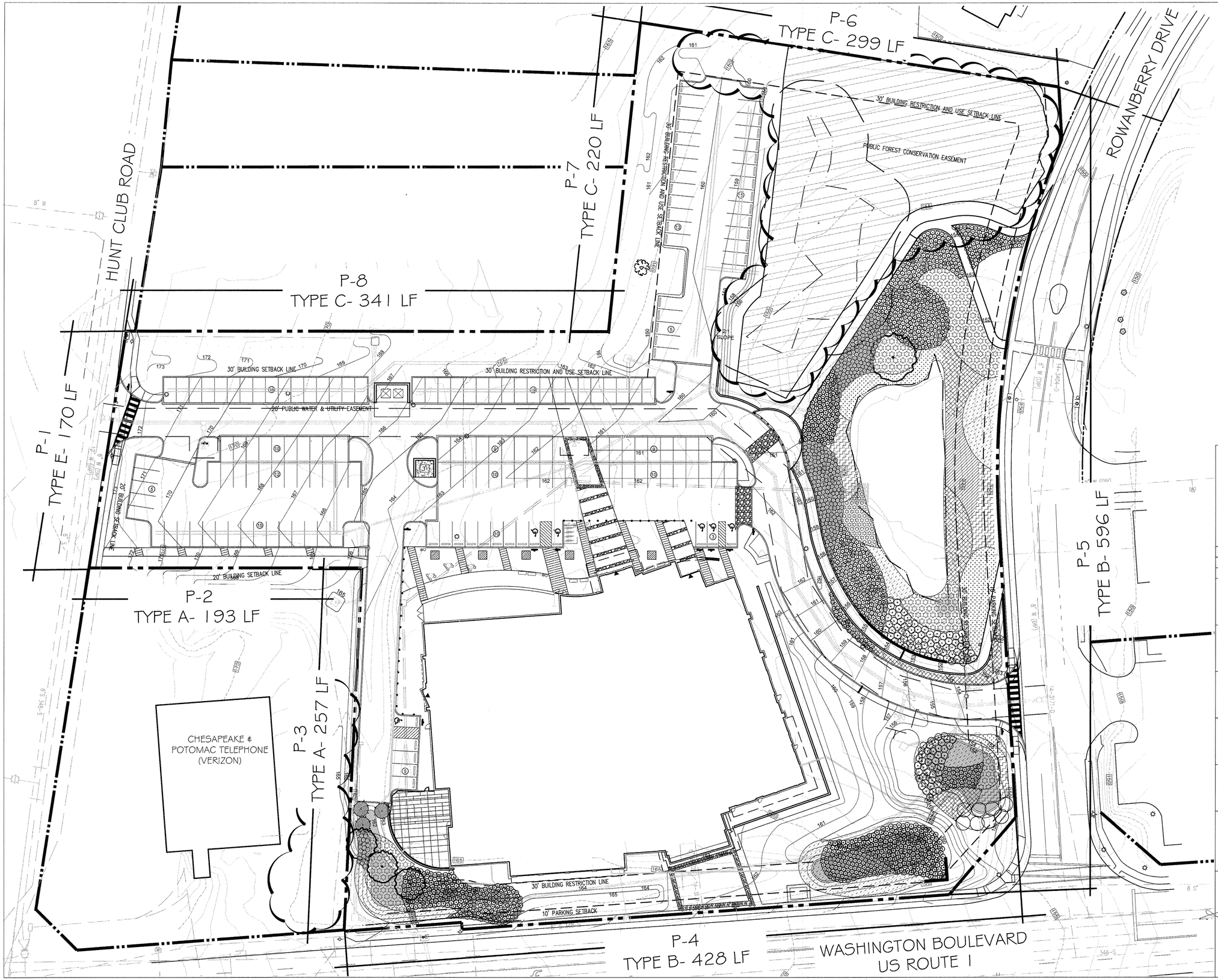

LANDSCAPE CERTIFICATE:

"I/WE CERTIFY THAT THE LANDSCAPING SHOWN ON THIS PLAN WILL BE DONE ACCORDING TO THE PLAN, SECTION 16.124 OF THE HOWARD COUNTY CODE, AND THE HOWARD COUNTY LANDSCAPE MANUAL. I/WE FURTHER CERTIFY THAT UPON COMPLETION A CERTIFICATION OF LANDSCAPE INSTALLATION, ACCOMPANIED BY AN EXECUTED ONE YEAR GUARANTEE OF PLANT MATERIALS, WILL BE SUBMITTED TO THE DEPARTMENT OF PLANNING AND ZONING."

DEVELOPER SIGNATURE: _____

0 30 60 90

APPROVED : DEPARTMENT OF PLANNING AND ZONING

CHIEF, DEVELOPMENT ENGINEERING DIVISION	7.19.16 DATE
CHIEF, DIVISION OF LAND DEVELOPMENT	8.16.16 DATE
DIRECTOR	8.16.16 DATE

DATE	NO.	REVISION	BY

DEVELOPER
HOWARD COUNTY
DEPARTMENT OF PUBLIC WORKS
BUREAU OF FACILITIES
9250 BENDIX ROAD
COLUMBIA, MARYLAND 21045
ATTN: MARK STROMDAHL
PHONE: 410-313-2700

OWNER
HOWARD COUNTY
DEPARTMENT OF PUBLIC WORKS
BUREAU OF FACILITIES
9250 BENDIX ROAD
COLUMBIA, MARYLAND 21045
ATTN: MARK STROMDAHL
PHONE: 410-313-2700

PROJECT
HCLS ELKRIDGE BRANCH AND 50+ CENTER

AREA
PLAT NOS. 23869 - 23870
TAX MAP 38, PARCELS 97 & 478 ZONED B-1 & R-12
GRID NO. 7 1st ELECTION DISTRICT
6540 WASHINGTON BOULEVARD
ELKRIDGE, MARYLAND 21075-0000
HOWARD COUNTY, MARYLAND

TITLE
OVERALL PLANTING PLAN - SWM

BRADLEY SITE DESIGN, INC.
LANDSCAPE ARCHITECTURE
12 W. Madison Street., Suite 204
Baltimore, MD 21201
P: 443-450-1385
www.bradleysitedesign.com

SEAL

BY: _____

"PROFESSIONAL CERTIFICATION. I HEREBY CERTIFY THAT THESE DOCUMENTS WERE PREPARED OR APPROVED BY ME, AND THAT I AM A DULY LICENSED PROFESSIONAL LANDSCAPE ARCHITECT UNDER THE LAWS OF THE STATE OF MARYLAND, LICENSE NO. 868, EXPIRATION DATE: 01/03/2018"

SHEET NUMBER :	L.300
DESIGNED BY :	SB/ES
DRAWN BY:	ES
PROJECT NO :	GRIM1402
DATE :	JUNE 20, 2016
SCALE :	1"= 30'-0"
DRAWING NO.	46 OF 50

SDP-16-038

N

SHA LANDSCAPE NOTES:

SHA Standard Specifications. *Landscape construction and materials installed within the Maryland State Highway Administration right of way shall conform to SHA 2008 Standard Specifications for Construction and Materials, including all revisions and supplements, and any requirements of these notes. Landscape construction shall conform to Sections 701 thru 716, and landscape materials shall conform to Section 920. SHA Standard Specifications shall supersede all other specifications for work within the SHA right of way.*

SHA Standard Details. *Tree installation within the SHA right of way shall conform to SHA Standard Details of the Book of Standards.*

Soil Restoration. *Areas of pavement removal, excavation or drilling in landscaped areas shall remove excavated debris and restore the subgrade with approved subsoil and topsoil placed in conformance with Section 701 of the SHA Standard Specifications.*
1. A layer of approved topsoil at least 4 inch depth shall be placed on all disturbed areas flatter than 2:1 and in all channels prior to seeding, sodding or other landscaping, unless otherwise specified.
2. A layer of approved topsoil at least 2 inch depth shall be placed on all disturbed areas 2:1 and steeper prior to seeding, sodding or other landscaping, unless otherwise is specified.
3. Bioretention Soil Mix (BSM) shall be installed in conformance with the plans and pertinent specifications.

Turfgrass Sod Establishment. *shall be performed in all disturbed areas of the SHA right of way, or within the areas indicated in the plans, in conformance with Section 708 of the SHA Standard Specifications.*

Roadside Tree Permit. *Tree removal, tree installation, and tree root and branch pruning in the SHA right of way shall conform to the requirements of the Roadside Tree Permit (RTP) of the Maryland Dept. of Natural Resources or Forest Conservation Act (FCA) Approval of the local authority.*
1. A copy of the RTP or FCA Approval shall be submitted to the SHA Office of Environmental Design before work is performed, and a copy of the RTP or FCA Approvalshall be reproduced in the plans or be in possession of the applicant at the project site when the permitted work is performed.
2. A Maryland Licensed Tree Expert shall perform the specified tree operations in conformance with the SHA Standard Specifications and ANSI A300 Standards for Tree Care Operations.

Trees and Other Plant Material Installation. *Trees, shrubs, perennials, annuals, bulbs, landscape beds and similar materials installed in the SHA right of way shall be installed in conformance with Section 710 and 711 of the SHA Standard Specifications. Tree and shrubs shall be pruned at the time of installation to ensure sidewalk clearance for pedestrians is maintained to a height of 8 feet.*

Future Maintenance. *Additional maintenance that may be required after hardscape, street furniture, or plant materials are installed and accepted by SHA such as replacement, watering, weeding, mulching or pest control may be provided by the applicant when a permit for the proposed work is issued by the SHA District Office.*

Erosion & Sediment Control Manager. *Soil disturbance such as grading, excavation, soil placement or other activities that involve soil disturbance within the SHA right of way shall be supervised by an Erosion and Sediment Control Manager with a valid SHA 'Yellow Card' in conformance with SHA 2008 Specifications for Construction and Materials and any applicable Erosion and Sediment Control Permit.*

Temporary Stabilization. *Temporary Mulch shall be applied in conformance with Section 704 to ensure that areas of soil disturbance are protected from rainfall and flowing water.*

1. Temporary straw mulch or temporary matting mulch shall be applied to flat areas and slopes flatter than 4:1; temporary matting mulch shall be applied to slopes 4:1 and steeper and within channels.

2. Temporary stabilization shall be performed at the end of each working day to provide 'same day stabilization' unless other requirements are approved.

Roadway Pavement Removal. *Areas of roadway pavement removal within the SHA right of way shall be excavated to remove pavements, aggregate base, and compacted soil to a minimum depth of 10 inches below the pavement surface, or as necessary to remove all materials unsuitable for landscaping. The excavated areas shall be restored with subsoil and topsoil as part of Soil Restoration*

Excavation and Debris Removal. *Debris related to the demolition of sidewalks, driveways, curbs, trees, stumps, roots, fencing, pipes, and other materials that may interfere with landscape installation or future maintenance within the SHA right of way shall be excavated as necessary for their complete removal and disposal.*

NOTE:

THIS PLAN IS FOR STORMWATER PLANTING ONLY. THIS DOES NOT COVER THE WHOLE PLANTING PLAN.

NOTES:

1. MAINTAIN MIN. 5' SOD CLEARANCE BETWEEN THE SIDEWALK AND PLANTING EDGE AS SHOWN ON THE DRAWINGS.- TYP.

2. STREET TREES TO BE PLANTED 10' OFF FROM THE SIDEWALK- TYP.

0 30 60 90

LANDSCAPE CERTIFICATE:

"I/WE CERTIFY THAT THE LANDSCAPING SHOWN ON THIS PLAN WILL BE DONE ACCORDING TO THE PLAN, SECTION 16.124 OF THE HOWARD COUNTY CODE, AND THE HOWARD COUNTY LANDSCAPE MANUAL. I/WE FURTHER CERTIFY THAT UPON COMPLETION A CERTIFICATION OF LANDSCAPE INSTALLATION, ACCOMPANIED BY AN EXECUTED ONE YEAR GUARANTEE OF PLANT MATERIALS, WILL BE SUBMITTED TO THE DEPARTMENT OF PLANNING AND ZONING."

DEVELOPER SIGNATURE: _____

APPROVED : DEPARTMENT OF PLANNING AND ZONING

CHIEF, DEVELOPMENT ENGINEERING DIVISION	DATE 7.19.16
CHIEF, DIVISION OF LAND DEVELOPMENT	DATE 8.16.16
DIRECTOR	DATE 8-16-16

DATE	NO.	REVISION	BY

DEVELOPER
HOWARD COUNTY
DEPARTMENT OF PUBLIC WORKS
BUREAU OF FACILITIES
9250 BENDIX ROAD
COLUMBIA, MARYLAND 21045
ATTN: MARK STROMDAHL
PHONE: 410-313-2700

OWNER
HOWARD COUNTY
DEPARTMENT OF PUBLIC WORKS
BUREAU OF FACILITIES
9250 BENDIX ROAD
COLUMBIA, MARYLAND 21045
ATTN: MARK STROMDAHL
PHONE: 410-313-2700

PROJECT
HCLS ELKRIDGE BRANCH AND 50+ CENTER

AREA
PLAT NOS. 23869, 23870
TAX MAP 38, PARCELS 97 & 478 ZONED B-1 & R-12
GRID NO. 7 1st ELECTION DISTRICT
6540 WASHINGTON BOULEVARD
ELKRIDGE, MARYLAND 21075-0000
HOWARD COUNTY, MARYLAND

TITLE
PLANTING PLAN- I - SWM

BRADLEY SITE DESIGN, INC.
LANDSCAPE ARCHITECTURE
12 W. Madison Street., Suite 204
Baltimore, MD 21201
P: 443-450-1385
www.bradleysitedesign.com

SEAL

BY: _____
"PROFESSIONAL CERTIFICATION. I HEREBY CERTIFY THAT THESE DOCUMENTS WERE PREPARED OR APPROVED BY ME, AND THAT I AM A DULY LICENSED PROFESSIONAL LANDSCAPE ARCHITECT UNDER THE LAWS OF THE STATE OF MARYLAND, LICENSE NO. 898, EXPIRATION DATE 01/09/2018"

SHEET NUMBER :	L.301
DESIGNED BY :	SB/ES
DRAWN BY:	ES
PROJECT NO :	GRIM1402
DATE :	JUNE 20, 2016
SCALE :	1"= 30'-0"
DRAWING NO.	47 OF 50

SDP-16-038

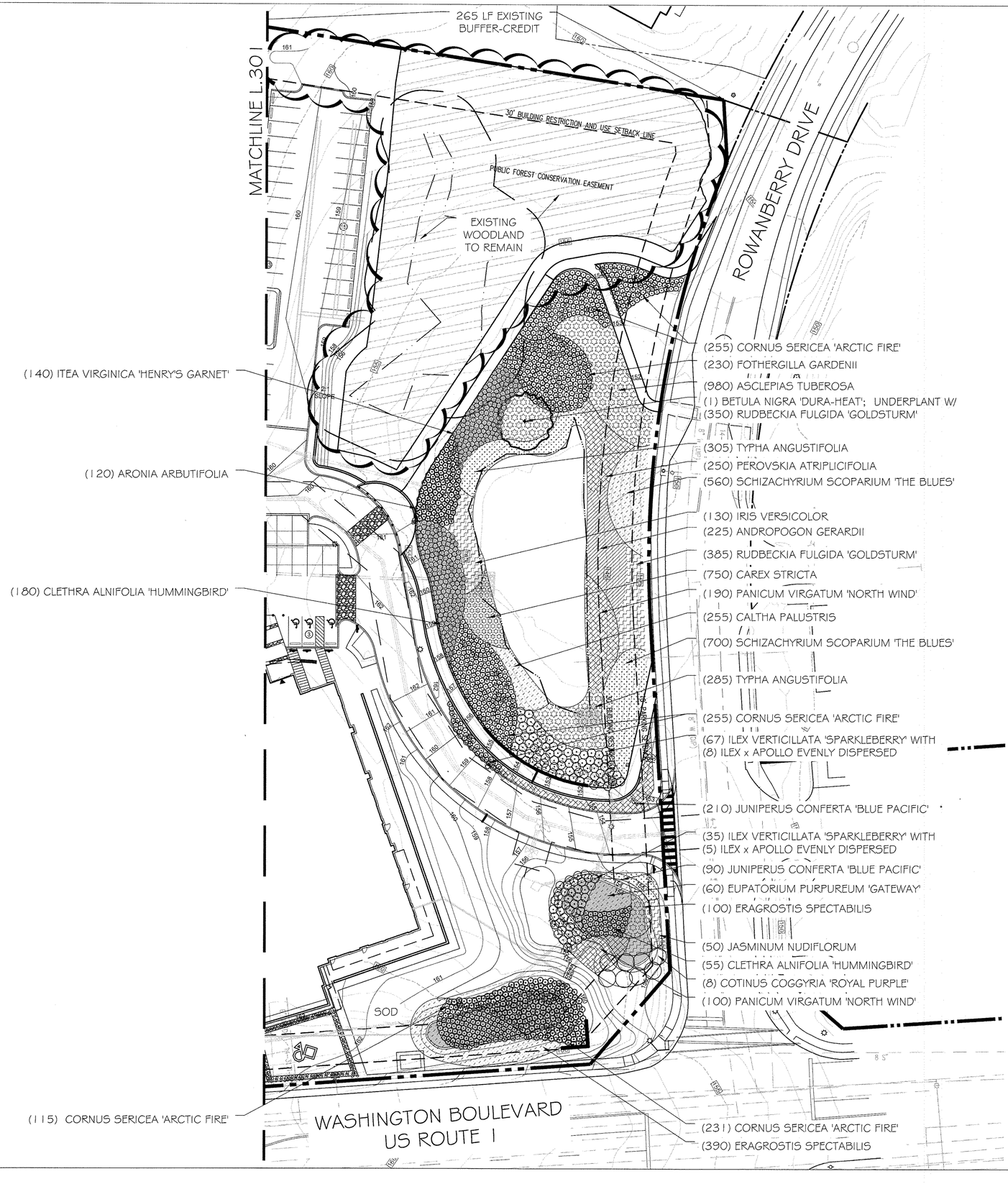

NOTES:

1. MAINTAIN MIN. 5' SOD CLEARANCE BETWEEN THE SIDEWALK AND PLANTING EDGE AS SHOWN ON THE DRAWINGS.- TYP.

2. STREET TREES TO BE PLANTED 10' OFF FROM THE SIDEWALK- TYP.

N

LANDSCAPE CERTIFICATE:

"I/WE CERTIFY THAT THE LANDSCAPING SHOWN ON THIS PLAN WILL BE DONE ACCORDING TO THE PLAN, SECTION 16.124 OF THE HOWARD COUNTY CODE, AND THE HOWARD COUNTY LANDSCAPE MANUAL. I/WE FURTHER CERTIFY THAT UPON COMPLETION A CERTIFICATION OF LANDSCAPE INSTALLATION, ACCOMPANIED BY AN EXECUTED ONE YEAR GUARANTEE OF PLANT MATERIALS, WILL BE SUBMITTED TO THE DEPARTMENT OF PLANNING AND ZONING."

DEVELOPER SIGNATURE: _____

APPROVED : DEPARTMENT OF PLANNING AND ZONING

CHIEF, DEVELOPMENT ENGINEERING DIVISION	DATE 7.19.16
CHIEF, DIVISION OF LAND DEVELOPMENT	DATE 8.16.16
DIRECTOR	DATE 8-16-16

DATE	NO.	REVISION	BY

DEVELOPER
HOWARD COUNTY
DEPARTMENT OF PUBLIC WORKS
BUREAU OF FACILITIES
9250 BENDIX ROAD
COLUMBIA, MARYLAND 21045
ATTN: MARK STROMDAHL
PHONE: 410-313-2700

OWNER
HOWARD COUNTY
DEPARTMENT OF PUBLIC WORKS
BUREAU OF FACILITIES
9250 BENDIX ROAD
COLUMBIA, MARYLAND 21045
ATTN: MARK STROMDAHL
PHONE: 410-313-2700

PROJECT
HCLS ELKRIDGE BRANCH AND 50+ CENTER

AREA
PLAT NOS. 23869-23870
TAX MAP 38, PARCELS 97 & 478 ZONED B-1 & R-12
GRID NO. 7 1st ELECTION DISTRICT
6540 WASHINGTON BOULEVARD
ELKRIDGE, MARYLAND 21075-0000
HOWARD COUNTY, MARYLAND

TITLE
PLANTING PLAN- II - SWM

BRADLEY SITE DESIGN, INC.
LANDSCAPE ARCHITECTURE
12 W. Madison Street., Suite 204
Baltimore, MD 21201
P: 443-450-1385
www.bradleysitedesign.com

NOTE:

THIS PLAN IS FOR STORMWATER PLANTING ONLY.
THIS DOES NOT COVER THE WHOLE PLANTING PLAN

0 30 60 90

SEAL

BY:
"PROFESSIONAL CERTIFICATION. I HEREBY CERTIFY THAT THESE DOCUMENTS WERE PREPARED OR APPROVED BY ME, AND THAT I AM A DULY LICENSED PROFESSIONAL LANDSCAPE ARCHITECT UNDER THE LAWS OF THE STATE OF MARYLAND, LICENSE NO. 808, EXPIRATION DATE: 01/10/2018"

SHEET NUMBER :	L.302
DESIGNED BY :	SB/ES
DRAWN BY:	ES
PROJECT NO :	GRIM1402
DATE :	JUNE 20, 2016
SCALE :	1"= 30'-0"
DRAWING NO.	48 OF 50

SDP-16-038

SWM PLANT LIST

QTY.	BOTANICAL/COMMON NAME	SIZE	SPACING	REMARKS	NATIVE
	ORNAMENTAL TREES				
4	BETULA NIGRA 'DURA-HEAT' River Birch	8-10' heavy	As Shown	Multistemmed Specimen	YES
	EVERGREEN TREES				
3	ILEX 'NELLIE R. STEVENS' Nellie Stevens Holly	8-10' ht.	As Shown	Single Strong Leader/Specimen	YES
	SHRUBS				
120	ARONIA ARBUTIFOLIA 'BRILLANTISSIMA' Red Chokeberry	24-36" ht.	36" O.C.		YES
390	CLETHRA ALNIFOLIA 'HUMMINGBIRD' Summersweet Pepperbush	24-30" ht.	36" O.C.	Appropriate for Rain Garden	YES
1011	CORNUS SERICEA 'ARCTIC FIRE' Red Twig Dogwood	36" ht.	36" O.C.		YES
8	COTINUS COGGYRIA 'ROYAL PURPLE' Purple Smoke Bush	48" ht.	72" O.C.		NO
230	FOTHERGILLA GARDENII Dwarf Fothergilla	24-30" ht.	36" O.C.		YES
13	ILEX x APOLLO Winterberry	36" ht.	60" O.C.		YES
102	ILEX VERTICILLATA 'SPARKLEBERRY' Winterberry	36" ht.	60" O.C.		YES
140	ITEA VIRGINICA 'HENRY'S GARNET' Virginia Sweetspire	24-30" ht.	36" O.C.	Appropriate for Rain Garden	YES
50	JASMINUM NUDIFLORUM Winter Jasmine	30" ht.	30" O.C.		NO
300	JUNIPERUS CONFERTA 'BLUE PACIFIC' Blue Pacific Shore Juniper	24" ht.	24" O.C.		NO
	PERENNIALS, ORNAMENTAL GRASSES, FERNS, VINES & GROUNDCOVERS				
225	ANDROPOGON GERARDII Big Bluestem	1 gal.	30" O.C.		YES
980	ASCLEPIAS TUBEROSA Butterfly Milkweed	1 gal.	18" O.C.	Appropriate for Rain Garden	YES
255	CALTHA PALUSTRIS Kingcup	1 gal.	18" O.C.		YES
750	CAREX STRICTA Tussock Sedge	1 gal.	12" O.C.		YES
900	ERAGROSTIS SPECTABILIS Purple Lovegrass	1 gal.	24" O.C.		YES
60	EUPATORIUM PURPUREUM 'GATEWAY' Joe Pye Weed	1 gal.	36" O.C.		YES
130	IRIS VERSICOLOR Harlequin Blueflag	1 gal.	30" O.C.		YES
440	PANICUM VIRGATUM 'NORTH WIND' SWITCHGRASS	1 gal.	30" O.C.		YES
250	PEROVSKIA ATRIPLICIFOLIA RUSSIAN SAGE	1 gal.	24" O.C.		NO
735	RUDBECKIA FULGIDA 'GOLDSTURM' BLACK-EYED SUSAN	1 gal.	18" O.C.		YES
1260	SCHIZACHYRIUM SCOPARIUM 'THE BLUES' THE BLUES LITTLE STEM	1 gal.	18" O.C.		YES
590	TYPHA ANGUSTIFOLIA NARROWLEAF CATTAIL	1 gal.	24" O.C.		YES

NOTE:

1. STORMWATER MANAGEMENT FACILITY IS EXISTING TO REMAIN.

2. SMALL TREES BENEATH POWER LINES AT HUNT CLUB ROAD AND WASHINGTON BOULEVARD-US ROUTE 1

LANDSCAPE CERTIFICATE:

"I/WE CERTIFY THAT THE LANDSCAPING SHOWN ON THIS PLAN WILL BE DONE ACCORDING TO THE PLAN, SECTION 16.124 OF THE HOWARD COUNTY CODE, AND THE HOWARD COUNTY LANDSCAPE MANUAL. I/WE FURTHER CERTIFY THAT UPON COMPLETION A CERTIFICATION OF LANDSCAPE INSTALLATION, ACCOMPANIED BY AN EXECUTED ONE YEAR GUARANTEE OF PLANT MATERIALS, WILL BE SUBMITTED TO THE DEPARTMENT OF PLANNING AND ZONING."

DEVELOPER SIGNATURE: _____

GENERAL NOTES:

1. THIS PLAN IS FOR LANDSCAPING PURPOSES ONLY.
2. CONTRACTOR IS SOLELY RESPONSIBLE FOR CONSTRUCTION MEANS, METHODS, TECHNIQUES, SEQUENCES, PROCEDURES, AND SAFETY PRECAUTIONS AND PROGRAMS.
3. ALL MATERIAL SELECTED SHALL BE EQUAL TO OR BETTER THAN THE REQUIREMENTS OF THE "USA STANDARD FOR NURSERY STOCK", LATEST EDITION, AS PUBLISHED BY THE AMERICAN ASSOCIATION OF NURSERYMEN.
4. ALL MATERIAL SHALL BE PLANTED IN ACCORDANCE WITH THE MINIMUM STANDARDS CITED IN THE LATEST EDITION OF "LANDSCAPE SPECIFICATION GUIDELINES" PUBLISHED BY THE LANDSCAPE CONTRACTORS ASSOCIATION.
5. AT THE TIME OF INSTALLATION, ALL SHRUBS AND OTHER PLANTINGS SHALL BE OF THE PROPER HEIGHT AND/OR SPREAD REQUIREMENTS IN ACCORDANCE WITH THE PLAN AND THE HOWARD COUNTY LANDSCAPE MANUAL.
6. NO SUBSTITUTIONS OR RELOCATION OF PLANTS MAY BE MADE WITHOUT PRIOR APPROVAL FROM THE DEPARTMENT OF PLANNING AND ZONING OF HOWARD COUNTY. ANY DEVIATION FROM THIS LANDSCAPE PLAN MAY RESULT IN A REQUIREMENT FOR SUBMITTAL OF AN OFFICIAL "REDLINE REVISION" TO THE SITE DEVELOPMENT PLAN(S) AND/OR DENIAL IN THE RELEASE OF LANDSCAPE SURETY.

APPROVED : DEPARTMENT OF PLANNING AND ZONING

CHIEF, DEVELOPMENT ENGINEERING DIVISION — DATE 7.19.16

CHIEF, DIVISION OF LAND DEVELOPMENT — DATE 8.16.16

DIRECTOR — DATE 8-16-16

DATE	NO.	REVISION	BY

DEVELOPER
HOWARD COUNTY
DEPARTMENT OF PUBLIC WORKS
BUREAU OF FACILITIES
9250 BENDIX ROAD
COLUMBIA, MARYLAND 21045
ATTN: MARK STROMDAHL
PHONE: 410-313-2700

OWNER
HOWARD COUNTY
DEPARTMENT OF PUBLIC WORKS
BUREAU OF FACILITIES
9250 BENDIX ROAD
COLUMBIA, MARYLAND 21045
ATTN: MARK STROMDAHL
PHONE: 410-313-2700

PROJECT
HCLS ELKRIDGE BRANCH AND 50+ CENTER

AREA
PLAT NOS. 23869 - 23870
TAX MAP 38, PARCELS 97 & 478 ZONED B-1 & R-12
GRID NO. 7 1st ELECTION DISTRICT
6540 WASHINGTON BOULEVARD
ELKRIDGE, MARYLAND 21075-0000
HOWARD COUNTY, MARYLAND

TITLE
PLANTING SCHEDULE & REQUIREMENTS - SWM

BRADLEY SITE DESIGN, INC.
LANDSCAPE ARCHITECTURE
12 W. Madison Street., Suite 204
Baltimore, MD 21201
P. 443-450-1305
www.bradleysitedesign.com

SEAL

BY: _____

"PROFESSIONAL CERTIFICATION. I HEREBY CERTIFY THAT THESE DOCUMENTS WERE PREPARED OR APPROVED BY ME, AND THAT I AM A DULY LICENSED PROFESSIONAL LANDSCAPE ARCHITECT UNDER THE LAWS OF THE STATE OF MARYLAND, LICENSE NO. 808, EXPIRATION DATE 3/13/2017"

SHEET NUMBER : L.303
DESIGNED BY : SB/ES
DRAWN BY: ES
PROJECT NO : GRIM1402
DATE : JUNE 20, 2016
SCALE : AS SHOWN
DRAWING NO. 49 OF 50

SDP-16-038

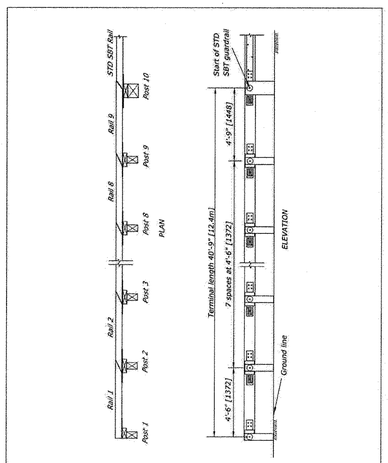

STEEL-BACKED TIMBER GUARDRAIL TANGENT END TERMINAL

ARIBA

SED01	
SHEET NO.	DATE:
1 of 5	10/31/2013

INTENDED USE

SED01 is an *NCHRP Report 350* TL-2 Steel Backed Timber (SBT) Guardrail Tangent End Terminal. The overall length is 40 ft. 9 in. [12.42 m], and it consists of nine (9) wood rail segments and nine (9) wood posts. The rail segments' cross-sectional area is 6 in. x 10 in. [150 mm x 250 mm], similar to the cross-section of the steel-backed timber SBT barrier rail segments. The length of the first rail segment is 5 ft. 3 in. [1.6 m]. The last rail segment (number 9) is 5 ft. 9 in. [1.75 m] in length. The remaining rails (numbers 2-8) are 5 ft. 6 in. [1.676 m] in length. These rail segment lengths are about half the rail segment lengths of the SBT barrier and were selected such that the spacing between the posts is 4 ft. [1.22 m].

Both ends of the rail segments are cut at a 1:2 (26 degree) angle, with the exception of first rail segment, which has one end at 90 degree, and the last rail segment, which has one end cut at a 1:1 (45 degree) angle. The first rail of the SBT guardrail is also cut at a 1:1 (45 degree) angle to fit the end of the terminal.

The steel splices and wood block-outs are connected to the posts using 5/8 in. [16 mm] diameter bolts. The bolts are 15 in. [380 mm] in length. The steel splices are 6 in. x 30 in. x 3/8 in. [150 mm x 750 mm x 10 mm]. The wood block-outs are 12 in. x 9 in. x 4 in. [300 mm x 225 mm x 100 mm]. Both are of similar size to the original SBT barrier.

APPROVALS

Federal Highway Administration (FHWA) Eligibility Letter CC-116, May 6, 2011.

CONTACT INFORMATION

Eastern Federal Lands Highway Division
21400 Ridgetop Circle
Sterling, VA 20166
(703) 404-6332
EFL.FHWA@fhwa.dot.gov

STEEL-BACKED TIMBER GUARDRAIL TANGENT END TERMINAL

SED01	
SHEET NO.	DATE
2 of 5	10/31/2013

ARIBA

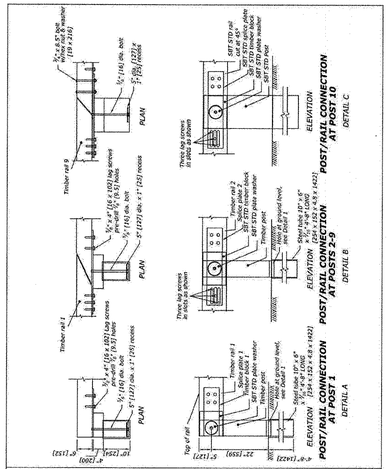

STEEL-BACKED TIMBER GUARDRAIL TANGENT END TERMINAL

ARIBA

SED01	
SHEET NO.	DATE:
3 of 5	10/31/2013

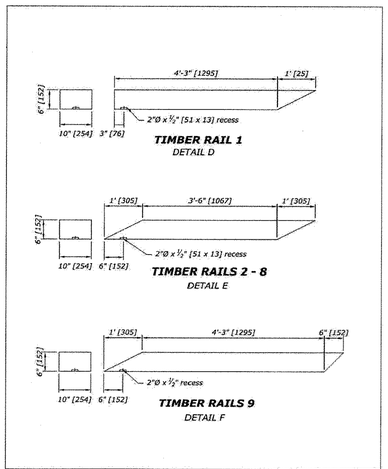

STEEL-BACKED TIMBER GUARDRAIL TANGENT END TERMINAL

ARIBA

SED01	
SHEET NO.	DATE:
4 of 5	10/31/2013

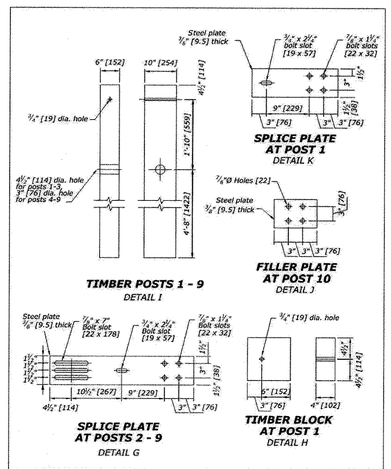

STEEL-BACKED TIMBER GUARDRAIL TANGENT END TERMINAL

ARIBA

SED01	
SHEET NO.	DATE:
5 of 5	10/31/2013

1/48 STEEL BACKED TIMBER GUARD RAIL
NOT TO SCALE

NOTES:

1. ALL TIMBER SHALL BE PRESSURE TREATED.
2. ALL BOLTS AND FASTENERS SHALL BE GALVANIZED.

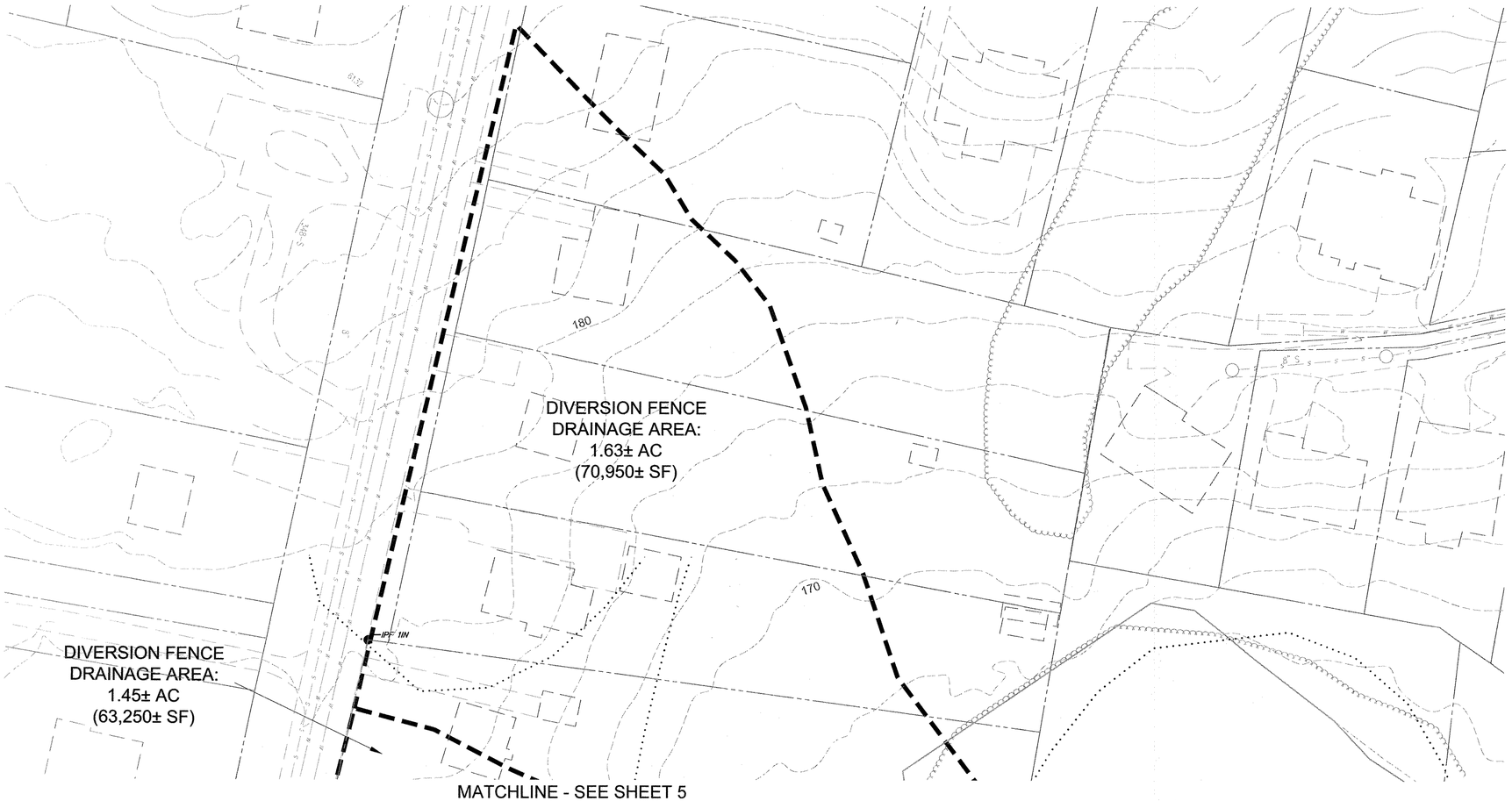

APPROVED : DEPARTMENT OF PLANNING AND ZONING

CHIEF, DEVELOPMENT ENGINEERING DIVISION — DATE 7.19.16

CHIEF, DIVISION OF LAND DEVELOPMENT — DATE 8-16-16

DIRECTOR — DATE 8-16-16

DATE	NO.	REVISION	BY

DEVELOPER
HOWARD COUNTY
DEPARTMENT OF PUBLIC WORKS
BUREAU OF FACILITIES
9250 BENDIX ROAD
COLUMBIA, MARYLAND 21045
ATTN: MARK STROMDAHL
PHONE: 410-313-5757

OWNER
HOWARD COUNTY
DEPARTMENT OF PUBLIC WORKS
BUREAU OF FACILITIES
9250 BENDIX ROAD
COLUMBIA, MARYLAND 21045
ATTN: MARK STROMDAHL
PHONE: 410-313-5757

PROJECT
GREEN BUILDING
HCLS ELKRIDGE BRANCH
AND 50+ CENTER

AREA
TAX MAP 38, PARCEL 'A' PLAT 23869 & 23870 ZONED B-1 & R-12
GRID NO. 7 1st ELECTION DISTRICT
6540 WASHINGTON BOULEVARD
ELKRIDGE, MARYLAND 21075-0000
HOWARD COUNTY, MARYLAND

TITLE
SITE DETAILS AND
SEDIMENT CONTROL DRAINAGE AREA MAP

Pennoni Associates Inc.
Engineers • Surveyors • Planners
Landscape Architects
8818 Centre Park Drive, Suite 200 Columbia, MD 21045
T 410.997.8900 F 410.997.9282

SEAL

STATE OF MARYLAND · SHARON K. GRIZ · 21666 · REGISTERED PROFESSIONAL ENGINEER

BY: 6-29-16

"PROFESSIONAL CERTIFICATION. I HEREBY CERTIFY THAT THESE DOCUMENTS WERE PREPARED OR APPROVED BY ME, AND THAT I AM A DULY LICENSED PROFESSIONAL ENGINEER UNDER THE LAWS OF THE STATE OF MARYLAND, LICENSE NO. 21666, EXPIRATION DATE 2-15-2017"

DESIGNED BY :	PJS/JSN
DRAWN BY:	PJS/JSN
PROJECT NO :	GRIM1402
DATE :	JUNE 20,2016
SCALE :	1"=30'
DRAWING NO.	50 OF 50

SDP-16-038