SITE DEVELOPMENT PLAN FOR

CVS/pharmacy

LOCATION OF SITE

7105 MONTEVIDEO ROAD, PARCEL A
ZONING: B-1, 1ST ELECTION DISTRICT
TAX MAP 43, GRID 10, PARCEL 16A
MONTEVIDEO CROSSING
HOWARD COUNTY, MARYLAND

GENERAL NOTES

1. ALL CONSTRUCTION SHALL BE IN ACCORDANCE WITH THE LATEST STANDARDS AND SPECIFICATIONS OF HOWARD COUNTY PLUS MSHA STANDARDS IF APPLICABLE.
2. THE CONTRACTOR SHALL NOTIFY THE DEPARTMENT OF PUBLIC WORKS/BUREAU OF ENGINEERING/CONSTRUCTION INSPECTION DIVISION AT (410) 313-1880 AT LEAST FIVE (5) WORKING DAYS PRIOR TO THE START OF WORK.
3. THE CONTRACTOR SHALL NOTIFY "MISS UTILITY" AT 1-800-257-7777 AT LEAST 48 HOURS PRIOR TO ANY EXCAVATION WORK BEING DONE.
4. THE TRAFFIC CONTROL DEVICE LOCATIONS SHOWN ON THE PLANS ARE APPROXIMATE AND MUST BE FIELD APPROVED BY HOWARD COUNTY TRAFFIC DIVISION (410-313-2430) PRIOR TO THE INSTALLATION OF ANY OF THE TRAFFIC CONTROL DEVICES. ALL TRAFFIC CONTROL DEVICES AND THEIR LOCATIONS SHALL BE IN ACCORDANCE WITH THE LATEST EDITION OF THE "MARYLAND MANUAL ON UNIFORM TRAFFIC CONTROL DEVICES" (MD MUTCD). ALL SIGN POSTS USED FOR TRAFFIC CONTROL SIGNS INSTALLED WITHIN COUNTY RIGHT-OF-WAY SHALL BE MOUNTED ON A 2" GALVANIZED STEEL, PERFORATED (QUICK PUNCH), SQUARE TUBE POST (14 GAUGE) INSERTED INTO A 2.5" GALVANIZED STEEL, PERFORATED, SQUARE TUBE SLEEVE (12 GAUGE) - 3' LONG. THE ANCHOR SHALL NOT EXTEND MORE THAN TWO QUICK PUNCH HOLES ABOVE GROUND LEVEL. A GALVANIZED STEEL POLE CAP SHALL BE MOUNTED ON TOP OF EACH POST.
5. ALL PLAN DIMENSIONS ARE TO FACE OF CURB UNLESS OTHERWISE NOTED.
6. THE EXISTING TOPOGRAPHY IS TAKEN FROM A FIELD RUN SURVEY WITH ONE FOOT CONTOUR INTERVALS PREPARED BY BOHLER ENGINEERING, DATED NOVEMBER 20, 2014, LAST REVISED FEBRUARY 12, 2015.
7. THE COORDINATES SHOWN HEREON ARE BASED UPON THE HOWARD COUNTY GEODETIC CONTROL WHICH IS BASED UPON THE MARYLAND STATE PLANE COORDINATE SYSTEM. HOWARD COUNTY MONUMENT NO. 43BC WAS USED FOR THIS PROJECT. HORIZONTAL AND VERTICAL CONTROL DATUM IS BASED ON HOWARD COUNTY MONUMENT NO. 43BC. GEODETIC CONTROL STATIONS:

   HOWARD COUNTY MONUMENT NO. 43BC ELEV. = 214.125
   HOWARD COUNTY MONUMENT NO. 43BB ELEV. = 209.10
8. PUBLIC WATER AND PUBLIC SEWER SHALL BE UTILIZED TO SERVE THE DEVELOPMENT. SEWER CONTRACT NUMBER 56-S AND WATER CONTRACT NUMBER 44-3805 (PREVIOUSLY CONTRACT NUMBER 36 W & S). THIS DEVELOPMENT IS LOCATED WITHIN THE PATAPSCO RIVER DRAINAGE AREA.
9. STORMWATER MANAGEMENT WILL BE PROVIDED IN ACCORDANCE WITH HOWARD COUNTY SPECIFICATIONS. WATER QUALITY VOLUME WILL BE PROVIDED BY A MICROBIORETENTION FACILITY TO MEET MDE REQUIREMENTS. RECHARGE VOLUME, CHANNEL PROTECTION, OVERBANK FLOOD PROTECTION VOLUME, AND EXTREME FLOOD VOLUME ARE NOT REQUIRED FOR THIS SITE. CVS (UNIT #1) WILL OWN AND MAINTAIN ITS ON-SITE STORMWATER MANAGEMENT FACILITIES TO COUNTY STANDARDS THROUGHOUT IT'S TENANCY; PROPERTY OWNER SHALL ASSUME MAINTENANCE RESPONSIBILITIES SHOULD CVS VACATE THE PARCEL.
10. EXISTING UTILITIES ARE BASED ON A FIELD RUN SURVEY PREPARED BY BOHLER ENGINEERING, DATED NOVEMBER 20, 2014, LAST REVISED FEBRUARY 12, 2015.
11. A FLOODPLAIN STUDY IS NOT REQUIRED FOR THIS PROJECT. THERE IS NO FLOODPLAIN ON THIS SITE PER FEMA FIRM COMMUNITY PANEL NO. 240044-0170-D, EFFECTIVE DATE NOVEMBER 6, 2013.
12. NO WETLANDS EXIST WITHIN THE LIMIT OF DISTURBANCE AS SHOWN ON THIS PLAN PER AN ON-SITE INSPECTION BY BOHLER ENGINEERING, JULY 22, 2016.
13. THE TRAFFIC STUDY FOR THIS PROJECT WAS PREPARED BY THE TRAFFIC GROUP, DATED JULY 9, 2015.
14. SUBJECT PROPERTY ZONED B-1 (BUSINESS LOCAL) DISTRICT PER THE 10/6/13 COMPREHENSIVE ZONING REGULATIONS.
15. SOILS INFORMATION TAKEN FROM SOIL SURVEY, HOWARD COUNTY, MARYLAND, ISSUED SEPTEMBER 24, 2014 (VERSION 8).
16. BOUNDARY OUTLINE BASED ON FIELD RUN SURVEY PERFORMED BY BOHLER ENGINEERING, DATED NOVEMBER 20, 2014, LAST REVISED FEBRUARY 12, 2015.
17. THERE ARE AREAS OF STEEP SLOPES (25% OR GREATER) LOCATED ON THIS PROPERTY AS DEFINED BY THE HOWARD COUNTY SUBDIVISION AND LAND DEVELOPMENT REGULATIONS, SECTION 16.116.B; HOWEVER, THESE AREAS ARE NOT PROPOSED TO BE DISTURBED AS PART OF THIS APPLICATION.
18. THE GEOTECHNICAL REPORT FOR THIS PROJECT WAS PREPARED BY ECS MID-ATLANTIC, LLC, DATED MAY 28, 2015.
19. THIS PROPERTY IS LOCATED INSIDE OF THE METROPOLITAN DISTRICT.
20. FOREST CONSERVATION REQUIREMENTS PER SECTION 16.1200 OF THE HOWARD COUNTY CODE AND THE FOREST CONSERVATION MANUAL FOR THIS SUBDIVISION WILL BE FULFILLED BY PAYMENT OF FEE IN LIEU TO HOWARD COUNTY'S FOREST CONSERVATION FUND IN THE AMOUNT OF $16,335 FOR 0.5 ACRES OF REQUIRED REFORESTATION.
21. REQUIRED LANDSCAPING IN ACCORDANCE WITH THE ROUTE 1 MANUAL AND SEC. 16.124 OF THE LANDSCAPE MANUAL SHALL BE MET BY PROVIDING 15 STREET TREES ALONG US ROUTE 1 AND RELOCATED MONTEVIDEO ROAD AND 15 PERIMETER SHADE TREES AND 120 SHRUBS. SURETY IN THE AMOUNT OF $12,600.00 FOR 30 SHADE TREES AND 120 SHRUBS SHALL BE POSTED WITH THE DEVELOPERS AGREEMENT FOR THIS SITE PLAN, SDP-15-069. FURTHER PLANTINGS ALONG US ROUTE 1 WILL BE REQUIRED AT THE TIME PHASE 2 OF THE SUBJECT SITE (LAND TO THE EAST) IS DEVELOPED.
22. NO HYDRIC SOILS, SOILS WITH HYDRIC INCLUSIONS OR SOILS WITH LESS THAN 15% SLOPES WITH SIGNIFICANT EROSION POTENTIAL EXIST ON THE SITE.
23. THE PROJECT IS IN CONFORMANCE WITH THE LATEST HOWARD COUNTY STANDARDS UNLESS WAIVERS HAVE BEEN NOTED/APPROVED.
24. A KNOX BOX (FIRE DEPARTMENT ACCESS BOX) IS REQUIRED TO BE PLACED ON THE FRONT OF THE BUILDING. THEY SHALL BE PLACED TO THE RIGHT OF THE MAIN ENTRANCE AT A RANGE OF 4-5' IN HEIGHT AND NO MORE THEN 6' LATERALLY FROM THE DOOR. EACH BOX SHALL BE ELECTRONICALLY SUPERVISED TO NOTIFY THE OWNER THAT IT IS BEING ACCESSED (INTEGRATED WITH THE FIRE ALARM SYSTEM NFPA-1 10.12.1.)
25. NO NOISE STUDY IS REQUIRED FOR THIS PROJECT.
26. DELIVERIES AND TRASH REMOVAL ARE TO OCCUR AT NON-PEAK HOURS.
27. PRIOR TO ANY SITE EXCAVATION THAT MAY ENCOUNTER GROUNDWATER, THE CONTRACTOR IS REQUIRED TO NOTIFY THE MARYLAND DEPARTMENT OF THE ENVIRONMENT AND IMPLEMENT A SITE SPECIFIC HEALTH AND SAFETY PLAN IN ACCORDANCE WITH THE "NO FURTHER REQUIREMENTS DETERMINATION" FOR THE PROPERTY ISSUED BY THE VOLUNTARY CLEANUP PROGRAM ON MARCH 24, 2011.
28. A DESIGN MANUAL WAIVER APPROVED ON JULY 28, 2010 REQUESTING THE WAIVING OF SECTIONS 5.2.1.A OF CHAPTER 5 OF HOWARD COUNTY DESIGN MANUAL, VOLUME I REQUIRING MANAGEMENT CONTROL OF THE 10 AND 100 YEAR STORMS TO ALLOW FOR ALTERNATIVE COMPLIANCE BY ADDRESSING ALL IMPERVIOUS THAT EXCEEDS THE EXISTING FOR THE 100 YEAR STORM AND EFFECTIVELY REDUCING THE IMPERVIOUS BY 50%. PROPOSED MITIGATION FOR THE SITE WILL ACHIEVE MANAGEMENT CONTROL FOR THE CVS DEVELOPMENT, WHICH USES A WEIGHTED AVERAGE TO CALCULATE THE REQUIRED VOLUME OF THE10 AND 100 YEAR STORMS.
29. A DESIGN ADVISORY PANEL MEETING WAS HELD ON 4/8/15 AND COMMENTS HAVE BEEN ISSUED. THIS SITE IS BEING DEVELOPED IN ACCORDANCE WITH THE B-1 ZONING REGULATIONS AND IS NOT AN OPTIONAL DESIGN PROJECT OF SECTION 121.1.H OF THE ZONING REGULATIONS.
30. NO HISTORICAL STRUCTURES OR CEMETERIES EXIST ON THIS SITE.
31. THIS PLAN IS IN CONFORMANCE WITH THE AMENDED FIFTH EDITION OF THE SUBDIVISION AND LAND DEVELOPMENT REGULATIONS.
32. OUTDOOR LIGHTING SHALL BE IN COMPLIANCE WITH SECTION 134.0 OF THE ZONING REGULATIONS.
33. HEALTH DEPARTMENT APPROVAL OF THIS SITE DEVELOPMENT PLAN (SDP) DOES NOT ENSURE APPROVAL OF BUILDING PERMIT APPLICATIONS ASSOCIATED WITH THIS PLAN. PERMIT PLANS FOR CERTAIN FACILITIES TO BE CONSTRUCTED WITHIN THE LIMITS DESCRIBED BY THIS SDP WILL REQUIRE REVIEW AND APPROVAL BY THE HEALTH DEPARTMENT. SUCH FACILITIES MAY INCLUDE, BUT ARE NOT LIMITED TO, THOSE WHICH HAVE SWIMMING POOLS, OR THAT SELL PREPARED OR PACKAGED FOODS, OR THAT MAY HAVE EQUIPMENT THAT EMITS RADIATION.
34. AN ADVANCED DEPOSIT ORDER (ADO) WILL BE REQUIRED FOR THE PROPOSED 6" WATER, MANHOLE AND SANITARY SEWER CONNECTION WITHIN THE PUBLIC RIGHT-OF-WAY.
35. ALL WORK DONE IN THE SHA RIGHT-OF-WAY WILL REQUIRE A PERMIT FROM SHA.
36. PER WAIVER PETITION FILE NUMBER WP-10-157 APPROVED ON JUNE 3, 2010 TO WAIVE SECTION 16.155(a)(1)(I) REQUIRING A SITE DEVELOPMENT PLAN FOR MASS GRADING OF NON-RESIDENTIAL PROPERTY; SECTION 16.1202(a) REQUIRING SUBMISSION OF A FOREST CONSERVATION PLAN ON PARCEL A AND SECTION 16.12 05(a)(10) REQUIRING THE RETENTION OF SPECIMEN TREES SO AS TO REMOVE THE FOUR TREES LOCATED ON PARCEL A AND C. APPROVAL IS SUBJECT TO THE FOLLOWING CONDITIONS:
   - 36.1. ALL FUTURE DEVELOPMENT ON PARCEL A AND/OR GRADING AND DEVELOPMENT ON PARCEL C WILL REQUIRE SUBMISSION OF A SITE DEVELOPMENT PLAN.
   - 36.2. THE DEVELOPER SHALL PROVIDE ENHANCES SHADE TREE PLANTINGS AT A RATIO OF 2 PER 1 SPECIMEN TREE REMOVED IN ADDITION TO STANDARD LANDSCAPE REQUIREMENTS UNDER THE SITE DEVELOPMENT PLAN FOR PARCEL A.
   - 36.3. THE STORMWATER MANAGEMENT REQUIREMENTS SHALL BE MET UNDER THE SITE DEVELOPMENT PLAN. AN ENVIRONMENTAL CONCEPT PLAN IS REQUIRED PRIOR TO SUBMISSION OF THE SDP.
   - 36.4. WAIVER OF SECTION 16.1202(a) IS ONLY FOR A TEMPORARY DEFERRAL OF THE FOREST CONSERVATION PLAN REQUIREMENT UNTIL THE SITE IS DEVELOPED WITH A SITE DEVELOPMENT PLAN. IF A SITE DEVELOPMENT PLAN IS NOT SUBMITTED IN A TIMELY MANNER, THE DEVELOPER IS REQUIRED TO ADDRESS THE FOREST CONSERVATION OBLIGATION FOR THE LIMIT OF DISTURBANCE INDICATED FOR THIS SITE UNDER THE GRADING PLAN AND GRADING PERMIT APPLICATION.
38. THE LOADING WILL TAKE PLACE WITHIN THE BYPASS LANE DURING OFF-PEAK HOURS.

REFERENCES

- **ALTA/ACSM LAND TITLE SURVEY:**
  ENTITLED: ALTA/ACSM LAND TITLE SURVEY; MARYLAND CVS PHARMACY, L.L.C.; 7136 MONTEVIDEO ROAD; PARCEL A, MONTEVIDEO CROSSING; PLAT BOOK 23695; 1ST ELECTION DISTRICT; HOWARD COUNTY, MARYLAND
  PREPARED BY: BOHLER ENGINEERING
  PROJECT NO.: SD131504
  DATED:11/20/14, LAST REVISED 2/12/15
- **GEOTECHNICAL INVESTIGATION REPORT:**
  ENTITLED: REPORT OF SUBSURFACE EXPLORATION LABORATORY TESTING AND GEOTECHNICAL ENGINEERING ANALYSIS
  PREPARED BY: ECS MID-ATLANTIC, LLC
  PROJECT NO.: 02-7619
  DATED: 5/28/15
- **FUTURE ROAD IMPROVEMENT PLANS:**
  ENTITLED: RELOCATED MONTEVIDEO ROAD PHASE 1, SEGMENT A
  PREPARED BY: JMT
  PROJECT NO.: J-4206-1A
  DATED: 12/2015
- **FUTURE ROAD IMPROVEMENT PLANS:**
  ENTITLED: US ROUTE 1 FROM MD 175 TO MONTEVIDEO ROAD
  PREPARED BY: JMT
  PROJECT NO.: J-4241
  DATED: 12/2015
- **FUTURE WATER/SEWER IMPROVEMENT PLANS:**
  ENTITLED: RELOCATED MONTEVIDEO ROAD WATER AND SEWER PLANS PHASE 1, SEGMENT A
  PREPARED BY: JMT
  PROJECT NO.: W8248
  DATED: 3/2/2016
- **ARCHITECTURAL ELEVATIONS:**
  ENTITLED: 10258MD_Color Elevations 04.16.2015
  CVS #10528, WASHINGTON BLVD. & MONTEVIDEO RD.,JESSUP, MD PREPARED BY: NORR
  DATED: 4/16/15
- **PHASE 1 ENVIRONMENTAL SITE ASSESSMENT:**
  ENTITLED: PROPOSED JESSUP STORE #10528
  7136 MONTEVIDEO ROAD, JESSUP, HOWARD COUNTY, MD
  PREPARED BY: ECS MID-ATLANTIC, LLC
  DATED: 5/16/14
- **ADEQUATE ROAD FACILITIES EVALUATION AND TRAFFIC STUDY:**
  ENTITLED: CVS - JESSUP
  HOWARD COUNTY, MD
  PREPARED BY: THE TRAFFIC GROUP
  DATED: 7/9/15

GOVERNING AGENCIES

- **HOWARD COUNTY DEPARTMENT OF PLANNING AND ZONING**
  3430 COURT HOUSE DRIVE
  ELLICOTT CITY, MD 21043
  (410) 313-2350 (P)

UTILITY CONTACTS

GAS / ELECTRIC
- BALTIMORE GAS AND ELECTRIC
  1068 N. FRONT ST. ROOM 401
  BALTIMORE, MD 21202
  PHONE (410) 291-3315

SANITARY SEWER / WATER
- HOWARD COUNTY DEPT. OF PUBLIC WORKS, BUREAU OF UTILITIES
  8250 AND 8270 OLD MONTGOMERY ROAD
  COLUMBIA, MD 21045
  PHONE (410) 313-4900

STORMWATER
- HOWARD COUNTY DEPT. OF PUBLIC WORKS, STORMWATER MANAGEMENT DIVISION
  6751 MONTGOMERY GATEWAY DR.
  SUITE 314
  COLUMBIA, MD 21046
  PHONE (410) 313-6413

TELEPHONE
- VERIZON
  7133 RUTHERFORD ROAD
  BALTIMORE, MD 21244
  PHONE (410) 224-5286

SETBACK COMPLIANCE CHART (PARCEL NO. 16A)

USE		NORTH SETBACK					SOUTH SETBACK				
PROPOSED	REGULATIONS	BUILDING		PARKING		DESCRIPTION	BUILDING		PARKING		DESCRIPTION
		PROVIDED	REQUIRED	PROVIDED	REQUIRED	DESCRIPTION	PROVIDED	REQUIRED	PROVIDED	REQUIRED	DESCRIPTION
COMMERCIAL	118.0.B.D	86.03'	30'	19.53'	10'	ROUTE 1	88.57'	NOT SPECIFIED	11.05'	10'	COMMERCIAL
		EAST SETBACK					WEST SETBACK				
		BUILDING		PARKING		DESCRIPTION	BUILDING		PARKING		DESCRIPTION
		PROVIDED	REQUIRED	PROVIDED	REQUIRED	DESCRIPTION	PROVIDED	REQUIRED	PROVIDED	REQUIRED	DESCRIPTION
		259.63'	30'	190.21'	10'	MONTEVIDEO ROAD	87.14'	30'	12.80'	10'	RELOCATED MONTEVIDEO ROAD

N / W / E / S

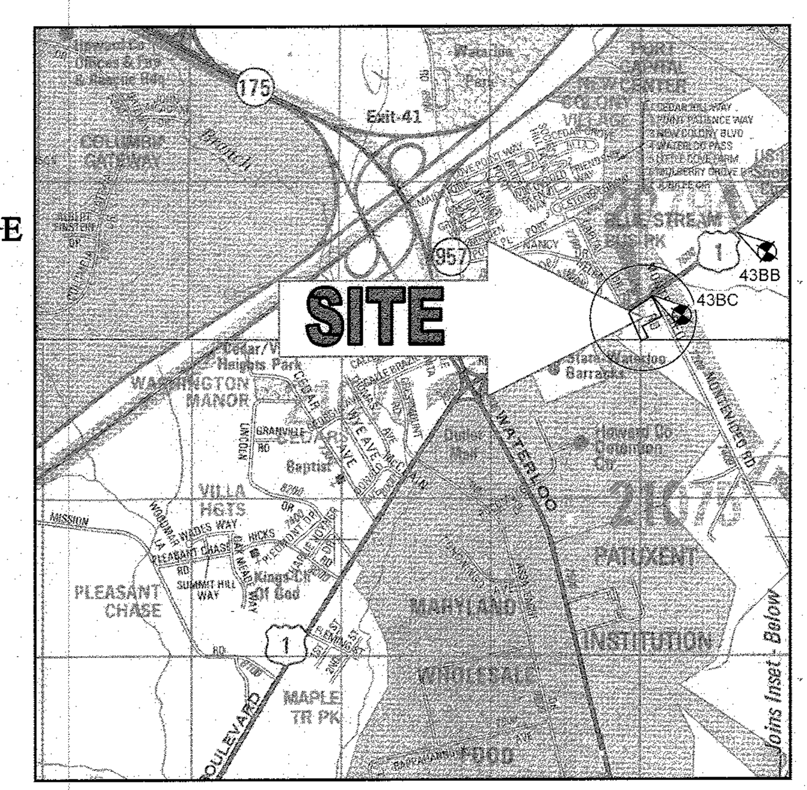

LOCATION MAP

COPYRIGHT ADC THE MAP PEOPLE
PERMIT USE NO. 20602153-5
SCALE: 1"=2000'
ADC MAP COORDINATES: K13

BENCHMARKS NAD 83 HORIZONTAL

HO. CO. #43BB
STAMPED BRASS DISK SET ON TOP OF CONCRETE BASE
N 550,534.19' E 1,376,905.25'

HO.CO. #43BC
STAMPED BRASS DISK SET ON TOP OF CONCRETE BASE
N 549,592.091' E 1,375,466.62'

SITE ANALYSIS DATA CHART

A. TOTAL PROJECT AREA: 175,920 S.F. OR 4.039 AC.

B. LIMIT OF DISTURBED AREA: 147,460 S.F. OR 3.38 AC. (2.79 AC. ONSITE, 0.61 AC. OFFSITE)

C. PRESENT ZONING: B-1 (BUSINESS LOCAL)

D. PROPOSED USE: CVS PHARMACY WITH DRIVE-THRU (COMMERCIAL)
PERMITTED PER ZONING SECTION 118.0.B.20 AND 121.1.E.2

E. FLOOR AREA: RETAIL: 13,281 S.F

F. MAXIMUM BUILDING HEIGHT [ZONING SECTION 118.0.D.1.a] 40' MAX. 22' PROVIDED*

G. MAXIMUM NUMBER OF EMPLOYEES: N/A

H. PARKING SPACES REQUIRED: [ZONING SECTION 133.0.D.4.a]
RETAIL:
5.0 SPACES PER 1,000 S.F. X 13,281 S.F. = 67 SPACES

I. PARKING SPACES PROVIDED:
STANDARD PARKING SPACES (9'X18') = 63 SPACES
HANDICAP (12'X18') = 4 SPACES
TOTAL = 67 SPACES

J. LOADING [ZONING SECTION 133.0.C]
OFF-STREET LOADING SHALL BE PROVIDED FOR RETAIL AND SERVICE BUSINESS ESTABLISHMENTS (COMPUTES)

K. OPEN SPACE ON SITE: 1.28 AC. OR 31.7% OF SITE AREA.

L. AREA OF AMENITY AREA REQUIRED: N/A

M. BUILDING COVERAGE: PERMITTED / PROVIDED
PARCEL A: NO REQUIREMENT / 7.5% (LOT AREA)

N. APPLICABLE DPZ FILE REFERENCE: DR-15-02, ECP-10-012 AND F-10-047

O. REQUIRED DRIVE-THRU STACKING: N/A 7 PROVIDED

P. [ZONING SECTION 128 0.A.3.a] RETAINING WALLS THREE FEET (3') OR LFSS SHALL BE EXEMPT FROM ALL STRUCTURE AND USE SETBACK REQUIREMENTS.

Q. FLOOR AREA RATIO 0.07

R. VARIANCE TO BE REQUESTED UNDER SEPARATE COVER TO PROVIDE LESS THAN THE REQUIRED FREESTANDING SIGN SETBACK AND A LARGER SIGN AREA THAN PERMITTED. [ZONING SECTION 3.501.C.2.c] LOCATION OF SIGN AS SHOWN ON THIS PLAN IS NOT TO BE CONSTRUED AS APPROVAL.

*[128.OA(3)A] PARAPET WALLS MAY EXTEND 4' ABOVE THE MAXIMUM ALLOWED HEIGHT.
[128.OA(3)B] HEIGHT LIMITATIONS SHALL NOT APPLY TO BULKHEADS AND MECHANICAL EQUIPMENT COVERING <25% OF THE ROOF.

PERMIT INFORMATION CHART

SUBDIVISION NAME		SECTION/AREA		LOT/PARCEL NO.	
MONTEVIDEO CROSSING		N/A		PARCEL A	
PLAT # OR L/F	GRID #	ZONING	TAX MAP	ELECTION DISTRICT	CENSUS TRACT
23695	10	B-1	43	1	6012.03
WATER CODE:			SEWER CODE:		

SUMMARY TABLE

SITE AREA	4.039 ACRES	
ESDv	3,414 CF (REQUIRED)	4,424 CF (PROVIDED)
Rev	NOT REQUIRED (REDEVELOPMENT)	
CPv	NOT REQUIRED (REDEVELOPMENT)	
QP10	1,173 CF (REQUIRED)	4,424 CF (PROVIDED)
QP100	4,221 CF (REQUIRED)	4,424 CF (PROVIDED)

GENERAL NOTE:
IT IS THE RESPONSIBILITY OF THE CONTRACTOR TO REVIEW ALL OF THE DRAWINGS AND SPECIFICATIONS ASSOCIATED WITH THIS PROJECT WORK SCOPE PRIOR TO THE INITIATION OF CONSTRUCTION. SHOULD THE CONTRACTOR FIND A CONFLICT WITH THE DOCUMENTS RELATIVE TO THE SPECIFICATIONS OR APPLICABLE CODES, IT IS THE CONTRACTOR'S RESPONSIBILITY TO NOTIFY THE PROJECT ENGINEER OF RECORD IN WRITING PRIOR TO THE START OF CONSTRUCTION. FAILURE BY THE CONTRACTOR TO NOTIFY THE PROJECT ENGINEER SHALL CONSTITUTE ACCEPTANCE OF FULL RESPONSIBILITY BY THE CONTRACTOR TO COMPLETE THE SCOPE OF THE WORK AS DEFINED BY THE DRAWINGS AND IN FULL CONFORMANCE WITH LOCAL REGULATIONS AND CODES.

APPROVED: FOR PUBLIC WATER AND PUBLIC SEWERAGE SYSTEMS
10/26/2016
COUNTY HEALTH OFFICER — DATE
HOWARD COUNTY HEALTH DEPARTMENT

ADDRESS CHART

LOT/PARCEL	BUILDING #	STREET ADDRESS
A	1 (CVS PHARMACY)	7105 MONTEVIDEO ROAD

* THE TEMPORARY ADDRESS, 7136 MONTEVIDEO ROAD, WILL BE USED UNTIL RELOCATED MONTEVIDEO ROAD IS COMPLETE.

APPROVED: DEPARTMENT OF PLANNING AND ZONING
CHIEF-DEVELOPMENT ENGINEERING DIVISION — 10-14-16 — DATE
CHIEF-DIVISION OF LAND DEVELOPMENT — 11-2-16 — DATE
DIRECTOR — 11-3-16 — DATE

PREPARED BY:

BOHLER ENGINEERING

901 DULANEY VALLEY ROAD, SUITE 801
TOWSON, MARYLAND 21204
Phone: (410) 821-7900
Fax: (410) 821-7987
MD@BohlerEng.com
CONTACT: DAVID M. KUKLISH, P.E.

SHEET INDEX

SHEET TITLE	SHEET NUMBER
COVER SHEET	1
GENERAL NOTES	2
LEGEND	3
EXISTING CONDITIONS AND DEMOLITION PLAN	4
SITE PLAN	5
GRADING PLAN	6
ADA COMPLIANCE PLAN	7
UTILITY PLAN	8
MICRO-BIORETENTION FACILITY DETAILS	9-10
STORMWATER MANAGEMENT DETAILS	11
STORMDRAIN DRAINAGE AREA MAP	12
LIGHTING PLAN	13
LIGHTING DETAILS	14
CONSTRUCTION DETAILS	15-16
STORMDRAIN PROFILES	17
EROSION AND SEDIMENT CONTROL PLAN	18
EROSION AND SEDIMENT CONTROL NOTES AND DETAILS	19-21
LANDSCAPE PLAN	22
LANDSCAPE NOTES AND DETAILS	23
ARCHITECTURAL ELEVATIONS (PLAN PREPARED BY NORR)	24
FOREST CONSERVATION PLAN	25
WATER AND SEWER PROFILES	26
ORNAMENTAL WALL DETAILS	27

SUBDIVISION NAME: MONTEVIDEO CROSSING
PARCEL A
SECTION/AREA: N/A
PLAT # 23695
WATER CODE: N/A
SEWER CODE: N/A

OWNER: PARCEL 16A
MIT MONTEVIDEO, LLC
8850 COLUMBIA PARKWAY
COLUMBIA, MD 21045
CONTACT: MARK LEVY
TEL: (410) 579-2442

DEVELOPER: J.C. BAR PROPERTIES, INC
415 FALLOWFIELD ROAD, SUITE 301
CAMP HILL, PA 17011
CONTACT: JASON MITCHELL
TEL: (717) 761-7801

TAX MAP: 43 GRID: 10 ZONED: B-1
PARCEL: 16A
1ST ELECTION DISTRICT, HOWARD COUNTY, MARYLAND
ZB REF.: 1096m SITE AREA: 4.039 AC
DPZ REF.: SDP-15-069

PROFESSIONAL CERTIFICATION
I, DAVID M. KUKLISH, P.E., HEREBY CERTIFY THAT THESE DOCUMENTS WERE PREPARED OR APPROVED BY ME, AND THAT I AM A DULY LICENSED PROFESSIONAL ENGINEER UNDER THE LAWS OF THE STATE OF MARYLAND. LICENSE NO. 36224, EXPIRATION DATE: 8/19/2018

CVS pharmacy

TYPE 'B'
REAR DRIVE-THRU

STORE NUMBER: 10528

WASHINGTON BLVD. & MONTEVIDEO RD.
JESSUP, HOWARD COUNTY, MARYLAND

PROJECT TYPE: NEW
DEAL TYPE: LEASE

CS PROJECT NUMBER: 77620

THE FOLLOWING STATES REQUIRE NOTIFICATION BY EXCAVATORS, DESIGNERS, OR ANY PERSON PREPARING TO DISTURB THE EARTH'S SURFACE ANYWHERE IN THE STATE. IN VIRGINIA, MARYLAND, THE DISTRICT OF COLUMBIA, AND DELAWARE CALL - 811
(WV 1-800-245-4848) (PA 1-800-242-1776) (DC 1-800-257-7777)
(VA 1-800-552-7001) (MD 1-800-257-7777) (DE 1-800-282-8555)

BOHLER ENGINEERING
901 DULANEY VALLEY ROAD, SUITE 801
TOWSON, MARYLAND 21204
Phone: (410) 821-7900
Fax: (410) 821-7987
MD@BohlerEng.com

DEVELOPER

J.C. BAR DEVELOPMENT, LLC

415 FALLOWFIELD ROAD, SUITE 301
CAMP HILL, PA 17011
CONTACT: JASON MITCHELL
TEL : (717) 761-7801

D.M. KUKLISH
PROFESSIONAL ENGINEER
DELAWARE LICENSE No. 14522
MARYLAND LICENSE No. 36224
VIRGINIA LICENSE No. 0402045209

REVISIONS

REV:	DATE:	COMMENT:	BY:

CHECKED BY: DMK
DRAWN BY: CRH
DATE: 4/13/16
JOB NUMBER: MD131504
TITLE:

COVER SHEET

SHEET NUMBER: 1 OF 27

COMMENTS: FILE NO. SDP-15-069

C:\USERS\CHOCHSTEDLER\APPDATA\LOCAL\TEMP\ACPUBLISH_7864\DE150009SD6 - - - - ->LAYOUT: 01 - COVER SHEET

GENERAL NOTES:

CONTRACTOR IS RESPONSIBLE FOR COMPLIANCE WITH THE NOTES AND SPECIFICATIONS CONTAINED HEREIN. CONTRACTOR IS RESPONSIBLE TO ENSURE THAT ALL SUBCONTRACTORS FULLY AND COMPLETELY CONFORM TO AND COMPLY WITH THESE REQUIREMENTS.

1. THE FOLLOWING DOCUMENTS ARE INCORPORATED BY REFERENCE AS PART OF THIS SITE PLAN:
   - SURVEY - SEE COVER SHEET
   - GEOTECHNICAL REPORT - SEE COVER SHEET
   - STORMWATER MANAGEMENT REPORT - SEE COVER SHEET

   PRIOR TO THE START OF CONSTRUCTION, THE CONTRACTOR MUST VERIFY THAT HE/SHE HAS THE LATEST EDITION OF THE DOCUMENTS REFERENCED ABOVE. THIS IS CONTRACTOR'S RESPONSIBILITY.
2. ALL ACCESSIBLE (A/K/A ADA) PARKING SPACES MUST BE CONSTRUCTED TO MEET, AT A MINIMUM, THE MORE STRINGENT OF THE REQUIREMENTS OF THE "AMERICANS WITH DISABILITIES ACT" (ADA) CODE (42 U.S.C. § 12101 et seq. AND 42 U.S.C. § 4151 et seq.) OR THE REQUIREMENTS OF THE JURISDICTION WHERE THE PROJECT IS TO BE CONSTRUCTED, AND ANY AND ALL AMENDMENTS TO BOTH WHICH ARE IN EFFECT WHEN THESE PLANS ARE COMPLETED.
3. PRIOR TO STARTING CONSTRUCTION, THE CONTRACTOR IS RESPONSIBLE TO ENSURE THAT ALL REQUIRED PERMITS AND APPROVALS HAVE BEEN OBTAINED. NO CONSTRUCTION OR FABRICATION SHALL BEGIN UNTIL THE CONTRACTOR HAS RECEIVED AND THOROUGHLY REVIEWED THE COMMENTS TO ALL PLANS AND OTHER DOCUMENTS REVIEWED AND APPROVED BY THE PERMITTING AUTHORITIES AND CONFIRMED THAT ALL NECESSARY OR REQUIRED PERMITS HAVE BEEN OBTAINED. CONTRACTOR MUST HAVE COPIES OF ALL PERMITS AND APPROVALS ON SITE AT ALL TIMES.
4. THE OWNER/CONTRACTOR MUST BE FAMILIAR WITH AND RESPONSIBLE FOR THE PROCUREMENT OF ANY AND ALL CERTIFICATIONS REQUIRED FOR THE ISSUANCE OF A CERTIFICATE OF OCCUPANCY.
5. ALL WORK MUST BE PERFORMED IN ACCORDANCE WITH THESE PLANS,. SPECIFICATIONS AND CONDITIONS OF APPROVAL, AND ALL APPLICABLE REQUIREMENTS, RULES, REGULATIONS, STATUTORY REQUIREMENTS, CODES, LAWS AND STANDARDS OF ALL GOVERNMENTAL ENTITIES WITH JURISDICTION OVER THIS PROJECT.
6. THE GEOTECHNICAL REPORT AND RECOMMENDATIONS SET FORTH HEREIN ARE A PART OF THE REQUIRED CONSTRUCTION DOCUMENTS AND, IN CASE OF CONFLICT, DISCREPANCY OR AMBIGUITY, THE MORE STRINGENT REQUIREMENTS AND/OR RECOMMENDATIONS CONTAINED IN THE PLANS AND THE GEOTECHNICAL REPORT AND RECOMMENDATIONS SHALL TAKE PRECEDENCE UNLESS SPECIFICALLY NOTED OTHERWISE ON THE PLANS. THE CONTRACTOR MUST NOTIFY THE ENGINEER, IN WRITING, OF ANY SUCH CONFLICT, DISCREPANCY OR AMBIGUITY BETWEEN THE GEOTECHNICAL REPORTS AND PLANS AND SPECIFICATIONS PRIOR TO PROCEEDING WITH ANY FURTHER WORK.
7. THESE PLANS ARE BASED ON INFORMATION PROVIDED TO BOHLER ENGINEERING BY THE OWNER AND OTHERS PRIOR TO THE TIME OF PLAN PREPARATION. CONTRACTOR MUST FIELD VERIFY EXISTING CONDITIONS AND NOTIFY BOHLER ENGINEERING, IN WRITING, IMMEDIATELY IF ACTUAL SITE CONDITIONS DIFFER FROM THOSE SHOWN ON THE PLAN, OR IF THE PROPOSED WORK CONFLICTS WITH ANY OTHER SITE FEATURES.
8. ALL DIMENSIONS SHOWN ON THE PLANS MUST BE FIELD VERIFIED BY THE CONTRACTOR PRIOR TO THE START OF CONSTRUCTION. CONTRACTOR MUST NOTIFY ENGINEER, IN WRITING, IF ANY CONFLICTS, DISCREPANCIES, OR AMBIGUITIES EXIST PRIOR TO PROCEEDING WITH CONSTRUCTION. NO EXTRA COMPENSATION WILL BE PAID TO THE CONTRACTOR FOR WORK WHICH HAS TO BE REDONE OR REPAIRED DUE TO DIMENSIONS OR GRADES SHOWN INCORRECTLY ON THESE PLANS PRIOR TO CONTRACTOR GIVING ENGINEER WRITTEN NOTIFICATION OF SAME AND ENGINEER, THEREAFTER, PROVIDING CONTRACTOR WITH WRITTEN AUTHORIZATION TO PROCEED WITH SUCH ADDITIONAL WORK.
9. CONTRACTOR MUST REFER TO THE ARCHITECTURAL/BUILDING PLANS "OF RECORD" FOR EXACT LOCATIONS AND DIMENSIONS OF ENTRY/EXIT POINTS, ELEVATIONS, PRECISE BUILDING DIMENSIONS, AND EXACT BUILDING UTILITY LOCATIONS.
10. PRIOR TO THE START OF CONSTRUCTION, THE CONTRACTOR MUST COORDINATE THE BUILDING LAYOUT BY CAREFUL REVIEW OF THE ENTIRE SITE PLAN AND THE LATEST ARCHITECTURAL PLANS (INCLUDING, BUT NOT LIMITED TO, STRUCTURAL, MECHANICAL, ELECTRICAL, PLUMBING AND FIRE SUPPRESSION PLAN, WHERE APPLICABLE). CONTRACTOR MUST IMMEDIATELY NOTIFY OWNER, ARCHITECT AND SITE ENGINEER, IN WRITING, OF ANY CONFLICTS, DISCREPANCIES OR AMBIGUITIES WHICH EXIST.
11. DEBRIS MUST NOT BE BURIED ON THE SUBJECT SITE AND ALL UNSUITABLE EXCAVATED MATERIAL AND DEBRIS (SOLID WASTE) MUST BE DISPOSED OF IN ACCORDANCE WITH THE REQUIREMENTS OF ANY AND ALL GOVERNMENTAL AUTHORITIES WHICH HAVE JURISDICTION OVER THIS PROJECT OR OVER CONTRACTOR.
12. THE CONTRACTOR IS RESPONSIBLE FOR IDENTIFYING WHEN SHORING IS REQUIRED AND FOR INSTALLING ALL SHORING REQUIRED DURING EXCAVATION (TO BE PERFORMED IN ACCORDANCE WITH CURRENT OSHA STANDARDS) AND ANY ADDITIONAL PRECAUTIONS TO BE TAKEN TO ASSURE THE STABILITY OF ADJACENT, NEARBY AND CONTIGUOUS STRUCTURES AND PROPERTIES.
13. THE CONTRACTOR IS TO EXERCISE EXTREME CARE WHEN PERFORMING ANY WORK ACTIVITIES ADJACENT TO PAVEMENT, STRUCTURES, ETC. WHICH ARE TO REMAIN EITHER FOR AN INITIAL PHASE OF THE PROJECT OR AS PART OF THE FINAL CONDITION. CONTRACTOR IS RESPONSIBLE FOR TAKING ALL APPROPRIATE MEASURES REQUIRED TO ENSURE THE STRUCTURAL STABILITY OF SIDEWALKS AND PAVEMENT, UTILITIES, BUILDINGS, AND INFRASTRUCTURE WHICH ARE TO REMAIN, AND TO PROVIDE A SAFE WORK AREA FOR THIRD PARTIES, PEDESTRIANS AND ANYONE INVOLVED WITH THE PROJECT.
14. THE CONTRACTOR IS RESPONSIBLE FOR REPAIRING ANY DAMAGE DONE TO ANY NEW OR EXISTING CONSTRUCTION OR PROPERTY DURING THE COURSE OF CONSTRUCTION, INCLUDING BUT NOT LIMITED TO DRAINAGE, UTILITIES, PAVEMENT, STRIPING, CURB, ETC. AND SHALL BEAR ALL COSTS ASSOCIATED WITH SAME TO INCLUDE, BUT NOT BE LIMITED TO, REDESIGN, RE-SURVEY, RE-PERMITTING AND CONSTRUCTION. THE CONTRACTOR IS RESPONSIBLE FOR AND MUST REPLACE ALL SIGNAL INTERCONNECTION CABLE, WIRING CONDUITS, AND ANY UNDERGROUND ACCESSORY EQUIPMENT DAMAGED DURING CONSTRUCTION AND MUST BEAR ALL COSTS ASSOCIATED WITH SAME. THE REPAIR OF ANY SUCH NEW OR EXISTING CONSTRUCTION OR PROPERTY MUST RESTORE SUCH CONSTRUCTION OR PROPERTY TO A CONDITION EQUIVALENT TO OR BETTER THAN THE CONDITIONS PRIOR TO COMMENCEMENT OF THE CONSTRUCTION, AND IN CONFORMANCE WITH APPLICABLE CODES, LAWS RULES, REGULATIONS, STATUTORY REQUIREMENTS AND STATUTES. CONTRACTOR MUST BEAR ALL COSTS ASSOCIATED WITH SAME. CONTRACTOR IS RESPONSIBLE TO DOCUMENT ALL EXISTING DAMAGE AND TO NOTIFY THE OWNER AND THE CONSTRUCTION MANAGER PRIOR TO THE START OF CONSTRUCTION.
15. ALL CONCRETE MUST BE AIR ENTRAINED AND HAVE THE MINIMUM COMPRESSIVE STRENGTH OF 4,000 PSI AT 28 DAYS UNLESS OTHERWISE NOTED ON THE PLANS, DETAILS AND/OR GEOTECHNICAL REPORT.
16. THE ENGINEER IS NOT RESPONSIBLE FOR CONSTRUCTION METHODS, MEANS, TECHNIQUES OR PROCEDURES, GENERALLY OR FOR THE CONSTRUCTION MEAN, METHODS, TECHNIQUES OR PROCEDURES FOR COMPLETION OF THE WORK DEPICTED BOTH ON THESE PLANS, AND FOR ANY CONFLICTS/SCOPE REVISIONS WHICH RESULT FROM SAME. CONTRACTOR IS RESPONSIBLE FOR DETERMINING THE METHODS/MEANS FOR COMPLETION OF THE WORK PRIOR TO THE COMMENCEMENT OF CONSTRUCTION.
17. THE ENGINEER OF RECORD IS NOT RESPONSIBLE FOR JOB SITE SAFETY. THE ENGINEER OF RECORD HAS NOT BEEN RETAINED TO PERFORM OR BE RESPONSIBLE FOR JOB SITE SAFETY, SAME BEING WHOLLY OUTSIDE OF ENGINEER'S SERVICES AS RELATED TO THE PROJECT. THE ENGINEER OF RECORD IS NOT RESPONSIBLE TO IDENTIFY OR REPORT ANY JOB SITE SAFETY ISSUES, AT ANY TIME.
18. ALL CONTRACTORS MUST CARRY THE SPECIFIED STATUTORY WORKER'S COMPENSATION INSURANCE, EMPLOYER'S LIABILITY INSURANCE AND LIMITS OF COMMERCIAL GENERAL LIABILITY INSURANCE (CGL). ALL CONTRACTORS MUST HAVE THEIR CGL POLICIES ENDORSED TO NAME BOHLER ENGINEERING, AND ITS PAST, PRESENT AND FUTURE OWNERS, OFFICERS, DIRECTORS, PARTNERS, SHAREHOLDERS, MEMBERS, PRINCIPALS, COMMISSIONERS, AGENTS, SERVANTS, EMPLOYEES, AFFILIATES, SUBSIDIARIES, AND RELATED ENTITIES, AND ITS SUBCONTRACTORS AND SUBCONSULTANTS AS ADDITIONAL NAMED INSURED AND TO PROVIDE CONTRACTUAL LIABILITY COVERAGE SUFFICIENT TO INSURE THIS HOLD HARMLESS AND INDEMNITY OBLIGATIONS ASSUMED BY THE CONTRACTORS. ALL CONTRACTORS MUST FURNISH BOHLER ENGINEERING WITH CERTIFICATIONS OF INSURANCE AS EVIDENCE OF THE REQUIRED INSURANCE PRIOR TO COMMENCING WORK AND UPON RENEWAL OF EACH POLICY DURING THE ENTIRE PERIOD OF CONSTRUCTION AND FOR ONE YEAR AFTER THE COMPLETION OF CONSTRUCTION. IN ADDITION, ALL CONTRACTORS WILL, TO THE FULLEST EXTENT PERMITTED UNDER THE LAW, INDEMNIFY, DEFEND AND HOLD HARMLESS BOHLER ENGINEERING AND ITS PAST, PRESENT AND FUTURE OWNERS, OFFICERS, DIRECTORS, PARTNERS, SHAREHOLDERS, MEMBERS, PRINCIPALS, COMMISSIONERS, AGENTS, SERVANTS, EMPLOYEES, AFFILIATES, SUBSIDIARIES, AND RELATED ENTITIES, AND ITS SUBCONTRACTORS AND SUBCONSULTANTS FROM AND AGAINST ANY DAMAGES, INJURIES, CLAIMS, ACTIONS, PENALTIES, EXPENSES, PUNITIVE DAMAGES, TORT DAMAGES, STATUTORY CLAIMS, STATUTORY CAUSES OF ACTION, LOSSES, CAUSES OF ACTION, LIABILITIES OR COSTS, INCLUDING, BUT NOT LIMITED TO, REASONABLE ATTORNEYS' FEES AND DEFENSE COSTS, ARISING OUT OF OR IN ANY WAY CONNECTED WITH OR TO THE PROJECT, INCLUDING ALL CLAIMS BY EMPLOYEES OF THE CONTRACTORS, ALL CLAIMS BY THIRD PARTIES AND ALL CLAIMS RELATED TO THE PROJECT. CONTRACTOR MUST NOTIFY ENGINEER, IN WRITING, AT LEAST THIRTY (30) DAYS PRIOR TO ANY TERMINATION, SUSPENSION OR CHANGE OF ITS INSURANCE HEREUNDER.
19. BOHLER ENGINEERING WILL REVIEW OR TAKE OTHER APPROPRIATE ACTION ON THE CONTRACTOR SUBMITTALS, SUCH AS SHOP DRAWINGS, PRODUCT DATA, SAMPLES, AND OTHER DATA, WHICH THE CONTRACTOR IS REQUIRED TO SUBMIT, BUT ONLY FOR THE LIMITED PURPOSE OF CHECKING FOR CONFORMANCE WITH THE DESIGN INTENT AND THE INFORMATION SHOWN IN THE CONSTRUCTION CONTRACT DOCUMENTS. CONSTRUCTION MEANS AND/OR METHODS AND/OR TECHNIQUES OR PROCEDURES, COORDINATION OF THE WORK WITH OTHER TRADES, AND CONSTRUCTION SAFETY PRECAUTIONS ARE THE SOLE RESPONSIBILITY OF THE CONTRACTOR AND BOHLER HAS NO RESPONSIBILITY OR LIABILITY FOR SAME HEREUNDER. BOHLER ENGINEERING'S SHOP DRAWING REVIEW WILL BE CONDUCTED WITH REASONABLE PROMPTNESS WHILE ALLOWING SUFFICIENT TIME TO PERMIT ADEQUATE REVIEW. REVIEW OF A SPECIFIC ITEM MUST NOT INDICATE THAT BOHLER ENGINEERING HAS REVIEWED THE ENTIRE ASSEMBLY OF WHICH THE ITEM IS A COMPONENT. BOHLER ENGINEERING WILL NOT BE RESPONSIBLE FOR ANY DEVIATIONS FROM THE CONSTRUCTION DOCUMENTS NOT PROMPTLY AND IMMEDIATELY BROUGHT TO ITS ATTENTION, IN WRITING, BY THE CONTRACTOR. BOHLER ENGINEERING WILL NOT BE REQUIRED TO REVIEW PARTIAL SUBMISSIONS OR THOSE FOR WHICH SUBMISSIONS OF CORRELATED ITEMS HAVE NOT BEEN RECEIVED.
20. NEITHER THE PROFESSIONAL ACTIVITIES OF BOHLER ENGINEERING, NOR THE PRESENCE OF BOHLER ENGINEERING AND/OR ITS PAST, PRESENT AND FUTURE OWNERS, OFFICERS, DIRECTORS, PARTNERS, SHAREHOLDERS, MEMBERS, PRINCIPALS, COMMISSIONERS, AGENTS, SERVANTS, EMPLOYEES, AFFILIATES, SUBSIDIARIES, AND RELATED ENTITIES, AND ITS SUBCONTRACTORS AND SUBCONSULTANTS AT A CONSTRUCTION/PROJECT SITE, SHALL RELIEVE THE GENERAL CONTRACTOR OF ITS OBLIGATIONS, DUTIES AND RESPONSIBILITIES INCLUDING, BUT NOT LIMITED TO, CONSTRUCTION MEANS, METHODS, SEQUENCE, TECHNIQUES OR PROCEDURES NECESSARY FOR PERFORMING, OVERSEEING, SUPERINTENDING AND COORDINATING THE WORK IN ACCORDANCE WITH THE CONTRACT DOCUMENTS AND COMPLIANCE ANY HEALTH OR SAFETY PRECAUTIONS REQUIRED BY ANY REGULATORY AGENCIES WITH JURISDICTION OVER THE PROJECT AND/OR PROPERTY. BOHLER ENGINEERING AND ITS PERSONNEL HAVE NO AUTHORITY TO EXERCISE ANY CONTROL OVER ANY CONSTRUCTION CONTRACTOR OR ITS EMPLOYEES IN CONNECTION WITH THEIR WORK OR ANY HEALTH OR SAFETY PROGRAMS OR PROCEDURES. THE GENERAL CONTRACTOR IS SOLELY RESPONSIBLE FOR JOB SITE SAFETY. BOHLER ENGINEERING SHALL BE INDEMNIFIED BY THE GENERAL CONTRACTOR AND MUST BE NAMED AN ADDITIONAL INSURED UNDER THE GENERAL CONTRACTOR'S POLICIES OF GENERAL LIABILITY INSURANCE AS DESCRIBED ABOVE IN NOTE 19 FOR JOB SITE SAFETY.
21. IF THE CONTRACTOR DEVIATES FROM THE PLANS AND SPECIFICATIONS, INCLUDING THE NOTES CONTAINED HEREIN, WITHOUT FIRST OBTAINING THE PRIOR WRITTEN AUTHORIZATION OF THE ENGINEER FOR SUCH DEVIATIONS, THE CONTRACTOR IS SOLELY RESPONSIBLE FOR THE PAYMENT OF ALL COSTS INCURRED IN CORRECTING ANY WORK DONE WHICH DEVIATES FROM THE PLANS, ALL FINES AND/OR PENALTIES ASSESSED WITH RESPECT THERETO AND ALL COMPENSATORY OR PUNITIVE DAMAGES RESULTING THEREFROM AND, FURTHER, SHALL DEFEND, INDEMNIFY AND HOLD HARMLESS THE ENGINEER, TO THE FULLEST EXTENT PERMITTED UNDER THE LAW, IN ACCORDANCE WITH PARAGRAPH 19 HEREIN, FOR AND FROM ALL FEES, ATTORNEYS' FEES, DAMAGES, COSTS, JUDGMENTS, PENALTIES AND THE LIKE RELATED TO SAME.
22. CONTRACTOR IS RESPONSIBLE FOR MAINTENANCE AND PROTECTION OF TRAFFIC PLAN FOR ALL WORK THAT AFFECTS PUBLIC TRAVEL EITHER IN THE R.O.W. OR ON SITE. THE COST FOR THIS ITEM MUST BE INCLUDED IN THE CONTRACTOR'S PRICE.
23. ALL SIGNING AND PAVEMENT STRIPING MUST CONFORM TO MANUAL ON UNIFORM TRAFFIC CONTROL DEVICES OR LOCALLY APPROVED SUPPLEMENT.
24. ENGINEER IS NOT RESPONSIBLE FOR ANY INJURY OR DAMAGES RESULTING FROM CONTRACTOR'S FAILURE TO BUILD OR CONSTRUCT IN STRICT ACCORDANCE WITH THE APPROVED PLANS. IF CONTRACTOR AND/OR OWNER FAIL BUILD OR CONSTRUCT IN STRICT ACCORDANCE WITH APPROVED PLANS, THEY AGREE TO JOINTLY AND SEVERALLY INDEMNIFY AND HOLD ENGINEER HARMLESS FOR ALL INJURIES AND DAMAGES THAT ENGINEER SUFFERS AND COSTS THAT ENGINEER INCURS.
25. OWNER MUST MAINTAIN AND PRESERVE ALL PHYSICAL SITE FEATURES AND DESIGN FEATURES DEPICTED ON THE PLANS AND RELATED DOCUMENTS, IN STRICT ACCORDANCE WITH THE APPROVED PLAN(S) AND DESIGN AND, FURTHER ENGINEER IS NOT RESPONSIBLE FOR ANY FAILURE TO SO MAINTAIN OR PRESERVE SITE AND/OR DESIGN FEATURES. IF OWNER FAILS TO MAINTAIN AND/OR PRESERVE ALL PHYSICAL SITE FEATURES AND/OR DESIGN FEATURES DEPICTED ON THE PLANS AND RELATED DOCUMENTS, OWNER AGREES TO INDEMNIFY AND HOLD ENGINEER HARMLESS FOR ALL INJURIES AND DAMAGES THAT ENGINEER SUFFERS AND COSTS THAT ENGINEER INCURS AS A RESULT OF SAID FAILURE.
26. ALL DIMENSIONS MUST BE TO FACE OF CURB, EDGE OF PAVEMENT, OR EDGE OF BUILDING, UNLESS NOTED OTHERWISE.
27. ALL CONSTRUCTION AND MATERIALS MUST COMPLY WITH AND CONFORM TO APPLICABLE FEDERAL, STATE AND LOCAL REGULATIONS, LAWS, ORDINANCES, RULES AND CODES, AND ALL APPLICABLE OSHA REQUIREMENTS.
28. CONTRACTOR AND OWNER MUST INSTALL ALL ELEMENTS AND COMPONENTS IN STRICT COMPLIANCE WITH AND ACCORDANCE WITH MANUFACTURER'S STANDARDS AND RECOMMENDED INSTALLATION CRITERIA AND SPECIFICATIONS. IF CONTRACTOR AND/OR OWNER FAIL TO DO SO, THEY AGREE TO JOINTLY AND SEVERALLY INDEMNIFY AND HOLD ENGINEER HARMLESS FOR ALL INJURIES AND DAMAGES THAT ENGINEER SUFFERS AND COSTS THAT ENGINEER INCURS AS A RESULT OF SAID FAILURE.
29. CONTRACTOR IS RESPONSIBLE TO MAINTAIN ON-SITE STORMWATER POLLUTION PREVENTION PLAN (SWPPP) IN COMPLIANCE WITH EPA REQUIREMENTS FOR SITES WHERE ONE (1) ACRE OR MORE (UNLESS THE LOCAL JURISDICTION REQUIRES FEWER) IS DISTURBED BY CONSTRUCTION ACTIVITIES. CONTRACTOR IS RESPONSIBLE TO ENSURE THAT ALL ACTIVITIES, INCLUDING THOSE OF SUBCONTRACTORS, ARE IN COMPLIANCE WITH THE SWPPP, INCLUDING BUT NOT LIMITED TO LOGGING ACTIVITIES (MINIMUM ONCE PER WEEK AND AFTER RAINFALL EVENTS) AND CORRECTIVE MEASURES, AS APPROPRIATE.
30. AS CONTAINED IN THESE DRAWINGS AND ASSOCIATED APPLICATION DOCUMENTS PREPARED BY THE SIGNATORY PROFESSIONAL ENGINEER, THE USE OF THE WORDS CERTIFY OR CERTIFICATION CONSTITUTES AN EXPRESSION OF "PROFESSIONAL OPINION" REGARDING THE INFORMATION WHICH IS THE SUBJECT OF THE UNDERSIGNED PROFESSIONAL KNOWLEDGE OR BELIEF AND IN ACCORDANCE WITH COMMON ACCEPTED PROCEDURE CONSISTENT WITH THE APPLICABLE STANDARDS OF PRACTICE, AND DOES NOT CONSTITUTE A WARRANTY OR GUARANTEE, EITHER EXPRESSED OR IMPLIED.

GENERAL NOTE:
IT IS THE RESPONSIBILITY OF THE CONTRACTOR TO REVIEW ALL OF THE DRAWINGS AND SPECIFICATIONS ASSOCIATED WITH THIS PROJECT WORK SCOPE PRIOR TO THE INITIATION OF CONSTRUCTION. SHOULD THE CONTRACTOR FIND A CONFLICT WITH THE DOCUMENTS RELATIVE TO THE SPECIFICATIONS OR APPLICABLE CODES, IT IS THE CONTRACTOR'S RESPONSIBILITY TO NOTIFY THE PROJECT ENGINEER OF RECORD IN WRITING PRIOR TO THE START OF CONSTRUCTION. FAILURE BY THE CONTRACTOR TO NOTIFY THE PROJECT ENGINEER SHALL CONSTITUTE ACCEPTANCE OF FULL RESPONSIBILITY BY THE CONTRACTOR TO COMPLETE THE SCOPE OF THE WORK AS DEFINED BY THE DRAWINGS AND IN FULL CONFORMANCE WITH LOCAL REGULATIONS AND CODES.

GENERAL DEMOLITION NOTES:

1. THIS PLAN REFERENCES DOCUMENTS AND INFORMATION BY:

   ENTITLED: ALTA/ACSM LAND TITLE SURVEY; MARYLAND CVS PHARMACY, L.L.C.; 7136 MONTEVIDEO ROAD, PARCEL A, MONTEVIDEO CROSSING; PLAT BOOK 20994; 1ST ELECTION DISTRICT; HOWARD COUNTY, MARYLAND
   PREPARED BY: BOHLER ENGINEERING
   PROJECT NO.: SD131504
   DATED:11/20/14
2. CONTRACTOR SHALL PERFORM ALL WORK IN ACCORDANCE WITH THE REQUIREMENTS OF THE OCCUPATIONAL SAFETY AND HEALTH ACT OF 1970, (29 U.S.C. 651 et seq.), AS AMENDED AND ANY MODIFICATIONS, AMENDMENTS OR REVISIONS TO SAME.
3. BOHLER ENGINEERING HAS NO CONTRACTUAL, LEGAL, OR OTHER RESPONSIBILITY FOR JOB SITE SAFETY OR JOB SITE SUPERVISION, OR ANYTHING RELATED TO SAME.
4. THE DEMOLITION PLAN IS INTENDED TO PROVIDE GENERAL INFORMATION, ONLY, REGARDING ITEMS TO BE DEMOLISHED AND/OR REMOVED. THE CONTRACTOR MUST ALSO REVIEW THE OTHER SITE PLAN DRAWINGS AND INCLUDE IN DEMOLITION ACTIVITIES ALL INCIDENTAL WORK NECESSARY FOR THE CONSTRUCTION OF THE NEW SITE IMPROVEMENTS.
5. CONTRACTOR MUST RAISE ANY QUESTIONS CONCERNING THE ACCURACY OR INTENT OF THESE PLANS OR SPECIFICATIONS, CONCERNS REGARDING THE APPLICABLE SAFETY STANDARDS, OR THE SAFETY OF THE CONTRACTOR OR THIRD PARTIES IN PERFORMING THE WORK ON THIS PROJECT, WITH BOHLER ENGINEERING, IN WRITING, AND RESPONDED TO BY BOHLER, IN WRITING, PRIOR TO THE INITIATION OF ANY SITE ACTIVITY AND ANY DEMOLITION ACTIVITY. ALL DEMOLITION ACTIVITIES MUST BE PERFORMED IN ACCORDANCE WITH THE REQUIREMENTS OF THESE PLANS AND SPECIFICATIONS AND ALL APPLICABLE FEDERAL, STATE AND LOCAL REGULATIONS, RULES, REQUIREMENTS, STATUTES, ORDINANCES AND CODES.
6. PRIOR TO STARTING ANY DEMOLITION, CONTRACTOR IS RESPONSIBLE FOR/TO:

   A. OBTAINING ALL REQUIRED PERMITS AND MAINTAINING THE SAME ON SITE FOR REVIEW BY THE ENGINEER AND OTHER PUBLIC AGENCIES HAVING JURISDICTION THROUGHOUT THE DURATION OF THE PROJECT, SITE WORK AND DEMOLITION WORK.

ADA INSTRUCTIONS TO CONTRACTOR

CONTRACTORS MUST EXERCISE APPROPRIATE CARE AND PRECISION IN CONSTRUCTION OF ADA (HANDICAP) ACCESSIBLE COMPONENTS AND ACCESS ROUTES FOR THE SITE. THESE COMPONENTS, AS CONSTRUCTED, MUST COMPLY WITH THE CURRENT ADA STANDARDS AND REGULATIONS' BARRIER FREE ACCESS AND ANY MODIFICATIONS, REVISIONS OR UPDATES TO SAME. FINISHED SURFACES ALONG THE ACCESSIBLE ROUTE OF TRAVEL FROM PARKING SPACE, PUBLIC TRANSPORTATION, PEDESTRIAN ACCESS, INTER-BUILDING ACCESS, TO POINTS OF ACCESSIBLE BUILDING ENTRANCE/EXIT, MUST COMPLY WITH THESE ADA CODE REQUIREMENTS. THESE INCLUDE, BUT ARE NOT LIMITED TO THE FOLLOWING:

- PARKING SPACES AND PARKING AISLES - SLOPE SHALL NOT EXCEED 1:50 (1/4" PER FOOT OR NOMINALLY 2.0%) IN ANY DIRECTION.
- CURB RAMPS - SLOPE MUST NOT EXCEED 1:12 (8.3%) FOR A MAXIMUM OF SIX (6) FEET.
- LANDINGS - MUST BE PROVIDED AT EACH END OF RAMPS, MUST PROVIDE POSITIVE DRAINAGE, AND MUST NOT EXCEED 1:50 (1/4" PER FOOT OR NOMINALLY 2.0%) IN ANY DIRECTION.
- PATH OF TRAVEL ALONG ACCESSIBLE ROUTE - MUST PROVIDE A 36-INCH OR GREATER UNOBSTRUCTED WIDTH OF TRAVEL (CAR OVERHANGS AND/OR HANDRAILS CANNOT REDUCE THIS MINIMUM WIDTH). THE SLOPE MUST BE NO GREATER THAN 1:20 (5.0%) IN THE DIRECTION OF TRAVEL, AND MUST NOT EXCEED 1:50 (1/4" PER FOOT OR NOMINALLY 2.0%) IN CROSS SLOPE. WHERE PATH OF TRAVEL WILL BE GREATER THAN 1:20 (5.0%), ADA RAMP MUST BE ADHERED TO. A MAXIMUM SLOPE OF 1:12 (8.3%), FOR A MAXIMUM RISE OF 2.5 FEET, MUST BE PROVIDED. THE RAMP MUST HAVE ADA HAND RAILS AND "LEVEL" LANDINGS ON EACH END THAT ARE CROSS SLOPED NO MORE THAN 1:50 IN ANY DIRECTION (1/4" PER FOOT OR NOMINALLY 2.0%) FOR POSITIVE DRAINAGE.
- DOORWAYS - MUST HAVE A "LEVEL" LANDING AREA ON THE EXTERIOR SIDE OF THE DOOR THAT IS SLOPED AWAY FROM THE DOOR NO MORE THAN 1:50 (1/4" PER FOOT OR NOMINALLY 2.0%) FOR POSITIVE DRAINAGE. THIS LANDING AREA MUST BE NO LESS THAN 60 INCHES (5 FEET) LONG, EXCEPT WHERE OTHERWISE PERMITTED BY ADA STANDARDS FOR ALTERNATIVE DOORWAY OPENING CONDITIONS. (SEE ICC/ANSI A117.1-2003 AND OTHER REFERENCED INCORPORATED BY COD.)
- WHEN THE PROPOSED CONSTRUCTION INVOLVES RECONSTRUCTION, MODIFICATION, REVISION OR EXTENSION OF OR TO ADA COMPONENTS FROM EXISTING DOORWAYS OR SURFACES, CONTRACTOR MUST VERIFY EXISTING ELEVATIONS SHOWN ON THE PLAN. NOTE THAT TABLE 405.2 OF THE DEPARTMENT OF JUSTICE'S ADA STANDARDS FOR ACCESSIBLE DESIGN ALLOWS FOR STEEPER RAMP SLOPES, IN RARE CIRCUMSTANCES. THE CONTRACTOR MUST IMMEDIATELY NOTIFY THE DESIGN ENGINEER OF ANY DISCREPANCIES AND/OR FIELD CONDITIONS THAT DIFFER IN ANY WAY OR ANY RESPECT FROM WHAT IS SHOWN ON THE PLANS, IN WRITING, BEFORE COMMENCEMENT OF WORK. CONSTRUCTED IMPROVEMENTS MUST FALL WITHIN THE MAXIMUM AND MINIMUM LIMITATIONS IMPOSED BY THE BARRIER FREE REGULATIONS AND THE ADA REQUIREMENTS.
- THE CONTRACTOR MUST VERIFY THE SLOPES OF CONTRACTOR'S FORMS PRIOR TO POURING CONCRETE. IF ANY NON-CONFORMANCE IS OBSERVED OR EXISTS, CONTRACTOR MUST IMMEDIATELY NOTIFY THE ENGINEER PRIOR TO POURING CONCRETE. CONTRACTOR IS RESPONSIBLE FOR ALL COSTS TO REMOVE, REPAIR AND REPLACE NON-CONFORMING CONCRETE.

IT IS STRONGLY RECOMMENDED THAT THE CONTRACTOR REVIEW THE INTENDED CONSTRUCTION WITH THE LOCAL BUILDING CODE PRIOR TO COMMENCEMENT OF CONSTRUCTION.

APPROVED: DEPARTMENT OF PLANNING AND ZONING

[signature] CHIEF, DEVELOPMENT ENGINEERING DIVISION	10.14.16 DATE
[signature] CHIEF-DIVISION OF LAND DEVELOPMENT	11-2-16 DATE
[signature] DIRECTOR	11-3-16 DATE

GENERAL GRADING & UTILITY NOTES

1. LOCATIONS OF ALL EXISTING AND PROPOSED SERVICES ARE APPROXIMATE AND MUST BE INDEPENDENTLY CONFIRMED WITH LOCAL UTILITY COMPANIES PRIOR TO COMMENCEMENT OF ANY CONSTRUCTION OR EXCAVATION. SANITARY SEWER AND ALL OTHER UTILITY SERVICE CONNECTION POINTS MUST BE INDEPENDENTLY CONFIRMED BY THE CONTRACTOR IN THE FIELD PRIOR TO THE COMMENCEMENT OF CONSTRUCTION. ALL DISCREPANCIES MUST IMMEDIATELY BE REPORTED, IN WRITING, TO THE ENGINEER. CONSTRUCTION MUST COMMENCE BEGINNING AT THE LOWEST INVERT (POINT OF CONNECTION) AND PROGRESS UP GRADIENT. PROPOSED INTERFACE POINTS (CROSSINGS) WITH EXISTING UNDERGROUND UTILITIES SHALL BE FIELD VERIFIED BY TEST PIT PRIOR TO COMMENCEMENT OF CONSTRUCTION.
2. CONTRACTOR MUST VERTICALLY AND HORIZONTALLY LOCATE ALL UTILITIES AND SERVICES INCLUDING, BUT NOT LIMITED TO, GAS, WATER, ELECTRIC, SANITARY AND STORM SEWER, TELEPHONE, CABLE, FIBER OPTIC CABLE, ETC. WITHIN THE LIMITS OF DISTURBANCE OR WORK SPACE, WHICHEVER IS GREATER. THE CONTRACTOR MUST USE, REFER TO, AND COMPLY WITH THE REQUIREMENTS OF THE APPLICABLE UTILITY NOTIFICATION SYSTEM TO LOCATE ALL THE UNDERGROUND UTILITIES. THE CONTRACTOR IS RESPONSIBLE FOR REPAIRING ALL DAMAGE TO ANY EXISTING UTILITIES DURING CONSTRUCTION, AT NO COST TO THE OWNER. CONTRACTOR SHALL BEAR ALL COSTS ASSOCIATED WITH DAMAGE TO ANY EXISTING UTILITIES DURING CONSTRUCTION.
3. IT IS THE CONTRACTOR'S RESPONSIBILITY TO REVIEW ALL CONSTRUCTION CONTRACT DOCUMENTS INCLUDING, BUT NOT LIMITED TO, ALL OF THE DRAWINGS AND SPECIFICATIONS ASSOCIATED WITH THE PROJECT WORK SCOPE PRIOR TO THE INITIATION AND COMMENCEMENT OF CONSTRUCTION. SHOULD THE CONTRACTOR FIND A CONFLICT AND/OR DISCREPANCY BETWEEN THE DOCUMENTS RELATIVE TO THE SPECIFICATIONS OR THE RELATIVE OR APPLICABLE CODES, REGULATIONS, LAWS, RULES, STATUTES AND/OR ORDINANCES, IT IS THE CONTRACTOR'S SOLE RESPONSIBILITY TO NOTIFY THE PROJECT ENGINEER OF RECORD, IN WRITING, OF SAID CONFLICT AND/OR DISCREPANCY PRIOR TO THE START OF CONSTRUCTION. CONTRACTOR'S FAILURE TO NOTIFY THE PROJECT ENGINEER SHALL CONSTITUTE CONTRACTOR'S FULL AND COMPLETE ACCEPTANCE OF ALL RESPONSIBILITY TO COMPLETE THE SCOPE OF WORK AS DEFINED BY THE DRAWINGS AND IN FULL COMPLIANCE WITH ALL FEDERAL, STATE AND LOCAL REGULATIONS, LAWS, STATUTES, ORDINANCES AND CODES AND, FURTHER, CONTRACTOR SHALL BE RESPONSIBLE FOR ALL COSTS ASSOCIATED WITH SAME.
4. THE CONTRACTOR MUST LOCATE AND CLEARLY AND UNAMBIGUOUSLY DEFINE VERTICALLY AND HORIZONTALLY ALL ACTIVE AND INACTIVE UTILITY AND/OR SERVICE SYSTEMS THAT ARE TO BE REMOVED. THE CONTRACTOR IS RESPONSIBLE TO PROTECT AND MAINTAIN ALL ACTIVE AND INACTIVE SYSTEMS THAT ARE NOT BEING REMOVED/RELOCATED DURING SITE ACTIVITY.
5. THE CONTRACTOR MUST FAMILIARIZE ITSELF WITH THE APPLICABLE UTILITY SERVICE PROVIDER REQUIREMENTS AND IS RESPONSIBLE FOR ALL COORDINATION REGARDING UTILITY DEMOLITION AS IDENTIFIED OR REQUIRED FOR THE PROJECT. THE CONTRACTOR MUST PROVIDE THE OWNER WITH WRITTEN NOTIFICATION THAT THE EXISTING UTILITIES AND SERVICES HAVE BEEN TERMINATED AND ABANDONED IN ACCORDANCE WITH THE JURISDICTION AND UTILITY COMPANY REQUIREMENTS AND ALL OTHER APPLICABLE REQUIREMENTS, RULES, STATUTES, LAWS, ORDINANCES AND CODES.
6. THE CONTRACTOR MUST INSTALL ALL STORM SEWER AND SANITARY SEWER COMPONENTS WHICH FUNCTION BY GRAVITY PRIOR TO THE INSTALLATION OF ALL OTHER UTILITIES.
7. CONTRACTOR IS RESPONSIBLE FOR COORDINATION OF SITE PLAN DOCUMENTS AND ARCHITECTURAL DESIGN FOR EXACT BUILDING UTILITY CONNECTION LOCATIONS, GREASE TRAP REQUIREMENTS/DETAILS, DOOR ACCESS, AND EXTERIOR GRADING. THE ARCHITECT WILL DETERMINE THE UTILITY SERVICE SIZES. THE CONTRACTOR MUST COORDINATE INSTALLATION OF UTILITIES/SERVICES WITH THE INDIVIDUAL COMPANIES, TO AVOID CONFLICTS AND TO ENSURE THAT PROPER DEPTHS ARE ACHIEVED. THE CONTRACTOR IS RESPONSIBLE FOR ENSURING THAT INSTALLATION OF ALL IMPROVEMENTS COMPLIES WITH ALL UTILITY REQUIREMENTS WITH JURISDICTION AND/OR CONTROL OF THE SITE, AND ALL OTHER APPLICABLE REQUIREMENTS, RULES, STATUTES, LAWS, ORDINANCES AND CODES AND, FURTHER, IS RESPONSIBLE FOR COORDINATING THE UTILITY TIE-INS/CONNECTIONS PRIOR TO CONNECTING TO THE EXISTING UTILITY/SERVICE. WHERE A CONFLICT(S) EXISTS BETWEEN THESE SITE PLANS AND THE ARCHITECTURAL PLANS, OR WHERE ARCHITECTURAL PLAN UTILITY CONNECTION POINTS DIFFER, THE CONTRACTOR MUST IMMEDIATELY NOTIFY THE ENGINEER, IN WRITING, AND PRIOR TO CONSTRUCTION, RESOLVE SAME.
8. WATER SERVICE MATERIALS, BURIAL DEPTH, AND COVER REQUIREMENTS MUST BE SPECIFIED BY THE LOCAL UTILITY COMPANY. CONTRACTOR'S PRICE FOR WATER SERVICE MUST INCLUDE ALL FEES, COSTS AND APPURTENANCES REQUIRED BY THE UTILITY TO PROVIDE FULL AND COMPLETE WORKING SERVICE. CONTRACTOR MUST CONTACT THE APPLICABLE MUNICIPALITY TO CONFIRM THE PROPER WATER METER AND VAULT, PRIOR TO COMMENCING CONSTRUCTION.
9. ALL NEW UTILITIES/SERVICES, INCLUDING ELECTRIC, TELEPHONE, CABLE TV, ETC. ARE TO BE INSTALLED UNDERGROUND. ALL NEW UTILITIES/SERVICES MUST BE INSTALLED IN ACCORDANCE WITH THE UTILITY/SERVICE PROVIDER INSTALLATION SPECIFICATIONS AND STANDARDS.
10. SITE GRADING MUST BE PERFORMED IN ACCORDANCE WITH THESE PLANS AND SPECIFICATIONS AND THE RECOMMENDATIONS SET FORTH IN THE GEOTECHNICAL REPORT REFERENCED IN THIS PLAN SET. THE CONTRACTOR IS RESPONSIBLE FOR REMOVING AND REPLACING UNSUITABLE MATERIALS WITH SUITABLE MATERIALS AS SPECIFIED IN THE GEOTECHNICAL REPORT. ALL EXCAVATED OR FILLED AREAS MUST BE COMPACTED AS OUTLINED IN THE GEOTECHNICAL REPORT. MOISTURE CONTENT AT TIME OF PLACEMENT MUST BE SUBMITTED IN A COMPACTION REPORT PREPARED BY A QUALIFIED GEOTECHNICAL ENGINEER, REGISTERED WITH THE STATE WHERE THE WORK IS PERFORMED, VERIFYING THAT ALL FILLED AREAS AND SUBGRADE AREAS WITHIN THE BUILDING PAD AREA AND AREAS TO BE PAVED HAVE BEEN COMPACTED IN ACCORDANCE WITH THESE PLANS, SPECIFICATIONS AND THE RECOMMENDATIONS SET FORTH IN THE GEOTECHNICAL REPORT AND ALL APPLICABLE REQUIREMENTS, RULES, STATUTES, LAWS, ORDINANCES AND CODES. SUBBASE MATERIAL FOR SIDEWALKS, CURB, OR ASPHALT MUST BE FREE OF ORGANICS AND OTHER UNSUITABLE MATERIALS. SHOULD SUBBASE BE DEEMED UNSUITABLE BY OWNER/DEVELOPER, OR OWNER/DEVELOPER'S REPRESENTATIVE, SUBBASE IS TO BE REMOVED AND FILLED WITH APPROVED FILL MATERIAL COMPACTED AS DIRECTED BY THE GEOTECHNICAL REPORT. EARTHWORK ACTIVITIES INCLUDING, BUT NOT LIMITED TO, EXCAVATION, BACKFILL, AND COMPACTING MUST COMPLY WITH THE RECOMMENDATIONS IN THE GEOTECHNICAL REPORT AND ALL APPLICABLE REQUIREMENTS, RULES, STATUTES, LAWS, ORDINANCES AND CODES. EARTHWORK ACTIVITIES MUST COMPLY WITH THE STANDARD STATE DOT SPECIFICATIONS FOR ROADWAY CONSTRUCTION (LATEST EDITION) AND ANY AMENDMENTS OR REVISIONS THERETO.
11. ALL FILL, COMPACTION, AND BACKFILL MATERIALS REQUIRED FOR UTILITY INSTALLATION MUST BE AS PER THE RECOMMENDATIONS PROVIDED IN THE GEOTECHNICAL REPORT AND MUST BE COORDINATED WITH THE APPLICABLE UTILITY COMPANY SPECIFICATIONS. WHEN THE PROJECT DOES NOT HAVE GEOTECHNICAL RECOMMENDATIONS, FILL AND COMPACTION MUST, AT A MINIMUM, COMPLY WITH THE STATE DOT REQUIREMENTS AND SPECIFICATIONS AND CONSULTANT SHALL HAVE NO LIABILITY OR RESPONSIBILITY FOR OR AS RELATED TO FILL, COMPACTION AND BACKFILL. FURTHER, CONTRACTOR IS FULLY RESPONSIBLE FOR EARTHWORK BALANCE.
12. THE CONTRACTOR MUST COMPLY, TO THE FULLEST EXTENT, WITH THE LATEST OSHA STANDARDS AND REGULATIONS, AND/OR ANY OTHER AGENCY WITH JURISDICTION FOR EXCAVATION AND TRENCHING PROCEDURES. THE CONTRACTOR IS RESPONSIBLE FOR DETERMINING THE "MEANS AND METHODS" REQUIRED TO MEET THE INTENT AND PERFORMANCE CRITERIA OF OSHA, AS WELL AS ANY OTHER ENTITY THAT HAS JURISDICTION FOR EXCAVATION AND/OR TRENCHING PROCEDURES AND CONSULTANT SHALL HAVE NO RESPONSIBILITY FOR OR AS RELATED FOR OR AS RELATED TO EXCAVATION AND TRENCHING PROCEDURES.
13. PAVEMENT MUST BE SAW CUT IN STRAIGHT LINES, AND EXCEPT FOR EDGE OF BUTT JOINTS, MUST EXTEND TO THE FULL DEPTH OF THE EXISTING PAVEMENT. ALL DEBRIS FROM REMOVAL OPERATIONS MUST BE REMOVED FROM THE SITE AT THE TIME OF EXCAVATION. STOCKPILING OF DEBRIS WILL NOT BE PERMITTED.
14. THE TOPS OF EXISTING MANHOLES, INLET STRUCTURES, AND SANITARY CLEANOUT TOPS MUST BE ADJUSTED, AS NECESSARY, TO MATCH PROPOSED GRADES IN ACCORDANCE WITH ALL APPLICABLE STANDARDS, REQUIREMENTS, RULES, STATUTES, LAWS, ORDINANCES AND CODES.
15. DURING THE INSTALLATION OF SANITARY SEWER, STORM SEWER, AND ALL UTILITIES, THE CONTRACTOR MUST MAINTAIN A CONTEMPORANEOUS AND THOROUGH RECORD OF CONSTRUCTION TO IDENTIFY THE AS-INSTALLED LOCATIONS OF ALL UNDERGROUND INFRASTRUCTURE. THE CONTRACTOR MUST CAREFULLY NOTE ANY INSTALLATIONS THAT DEVIATE FROM THE INFORMATION CONTAINED IN THE UTILITY PLAN. THIS RECORD MUST BE KEPT ON A CLEAN COPY OF THE SITE PLAN, WHICH CONTRACTOR MUST PROMPTLY PROVIDE TO THE OWNER AT THE COMPLETION OF WORK.
16. WHEN THE SITE IMPROVEMENT PLANS INVOLVE MULTIPLE BUILDINGS, SOME OF WHICH MAY BE BUILT AT A LATER DATE, THE CONTRACTOR MUST EXTEND ALL LINES, INCLUDING BUT NOT LIMITED TO STORM SEWER, SANITARY SEWER, UTILITIES, AND IRRIGATION LINE, TO A POINT AT LEAST FIVE (5) FEET BEYOND THE PAVED AREAS FOR WHICH THE CONTRACTOR IS RESPONSIBLE. CONTRACTOR MUST CAP ENDS AS APPROPRIATE, MARK LOCATIONS WITH A 2X4, AND MUST NOTE THE LOCATION OF ALL OF THE ABOVE ON A CLEAN COPY OF THE SITE PLAN, WHICH CONTRACTOR MUST PROMPTLY PROVIDE TO THE OWNER UPON COMPLETION OF THE WORK.
17. THE CONTRACTOR IS FULLY RESPONSIBLE FOR VERIFICATION OF EXISTING TOPOGRAPHIC INFORMATION AND UTILITY INVERT ELEVATIONS PRIOR TO COMMENCING ANY CONSTRUCTION. CONTRACTOR MUST CONFIRM AND ENSURE 0.75% MINIMUM SLOPE AGAINST ALL ISLANDS, GUTTERS, AND CURBS; 1.0% ON ALL CONCRETE SURFACES; AND 1.5% MINIMUM ON ASPHALT (EXCEPT WHERE ADA REQUIREMENTS LIMIT GRADES), TO PREVENT PONDING. CONTRACTOR MUST IMMEDIATELY IDENTIFY, IN WRITING TO THE ENGINEER, ANY DISCREPANCIES THAT MAY OR COULD AFFECT THE PUBLIC SAFETY, HEALTH OR GENERAL WELFARE, OR PROJECT COST. IF CONTRACTOR PROCEEDS WITH CONSTRUCTION WITHOUT PROVIDING PROPER NOTIFICATION, MUST BE AT THE CONTRACTOR'S OWN RISK AND, FURTHER, CONTRACTOR SHALL INDEMNIFY, DEFEND AND HOLD HARMLESS THE DESIGN ENGINEER FOR ANY DAMAGES, COSTS, INJURIES, ATTORNEY'S FEES AND THE LIKE WHICH RESULT FROM SAME.
18. PROPOSED TOP OF CURB ELEVATIONS ARE GENERALLY 6" ABOVE EXISTING LOCAL ASPHALT GRADE UNLESS OTHERWISE NOTED. FIELD ADJUST TO CREATE A MINIMUM OF 0.75% GUTTER GRADE ALONG CURB FACE. IT IS CONTRACTOR'S OBLIGATION TO ENSURE THAT DESIGN ENGINEER APPROVES FINAL CURBING CUT SHEETS PRIOR TO INSTALLATION OF SAME.
19. REFER TO SITE PLAN FOR ADDITIONAL NOTES.
20. IN THE EVENT OF DISCREPANCIES AND/OR CONFLICTS BETWEEN PLANS OR RELATIVE TO OTHER PLANS, THE SITE PLAN WILL TAKE PRECEDENCE AND CONTROL. CONTRACTOR MUST IMMEDIATELY NOTIFY THE DESIGN ENGINEER, IN WRITING, OF ANY DISCREPANCIES AND/OR CONFLICTS.
21. CONTRACTOR MUST REQUIRED TO SECURE ALL NECESSARY AND/OR REQUIRED PERMITS AND APPROVALS FOR ALL OFF SITE MATERIAL SOURCES AND DISPOSAL FACILITIES. CONTRACTOR MUST SUPPLY A COPY OF APPROVALS TO ENGINEER AND OWNER PRIOR TO INITIATING WORK ANY WORK.
22. WHERE RETAINING WALLS (WHETHER OR NOT THEY MEET THE JURISDICTIONAL DEFINITION) ARE IDENTIFIED ON PLANS, ELEVATIONS IDENTIFIED ARE FOR THE EXPOSED PORTION OF THE WALL. WALL FOOTINGS/FOUNDATION ELEVATIONS ARE NOT IDENTIFIED HEREIN AND ARE TO BE SET/DETERMINED BY THE CONTRACTOR BASED ON FINAL STRUCTURAL DESIGN SHOP DRAWINGS PREPARED BY THE APPROPRIATE PROFESSIONAL LICENSED IN THE STATE WHERE THE CONSTRUCTION OCCURS.
23. STORM DRAINAGE PIPE:

    UNLESS INDICATED OTHERWISE, ALL STORM SEWER PIPE MUST BE REINFORCED CONCRETE PIPE (RCP) CLASS III WITH SILT TIGHT JOINTS. WHEN HIGH-DENSITY POLYETHYLENE PIPE (HDPE) IS CALLED FOR ON THE PLANS, IT MUST CONFORM TO AASHTO M294 AND TYPE S (SMOOTH INTERIOR WITH ANGULAR CORRUGATIONS) WITH GASKET FOR SILT TIGHT JOINT. PVC PIPE FOR ROOF DRAIN CONNECTION MUST BE SDR 26 OR SCHEDULE 40 UNLESS INDICATED OTHERWISE.
24. SANITARY SEWER PIPE MUST BE POLYVINYL CHLORIDE (PVC) SDR 35 EXCEPT WHERE INDICATED OTHERWISE. SANITARY LATERAL MUST BE PVC SCHEDULE 40 OR PVC SDR 26 UNLESS INDICATED, IN WRITING, OTHERWISE.
25. STORM AND SANITARY SEWER PIPE LENGTHS INDICATED ARE NOMINAL AND MEASURED CENTER OF INLET AND/OR MANHOLES STRUCTURE TO CENTER OF STRUCTURE.
26. STORMWATER ROOF DRAIN LOCATIONS ARE BASED ON PRELIMINARY ARCHITECTURAL PLANS. CONTRACTOR IS RESPONSIBLE TO AND FOR VERIFYING LOCATIONS OF SAME BASED ON FINAL ARCHITECTURAL PLANS.
27. SEWERS CROSSING STREAMS AND/OR LOCATION WITHIN 10 FEET OF THE STREAM EMBANKMENT, OR WHERE SITE CONDITIONS SO INDICATE, MUST BE CONSTRUCTED OF STEEL, REINFORCED CONCRETE, DUCTILE IRON OR OTHER SUITABLE MATERIAL.

    SEWERS CONVEYING SANITARY FLOW COMBINED SANITARY AND STORMWATER FLOW OR INDUSTRIAL FLOW MUST BE SEPARATED FROM WATER MAINS BY A DISTANCE OF AT LEAST 10 FEET HORIZONTALLY. IF SUCH LATERAL SEPARATION IS NOT POSSIBLE, THE PIPES MUST BE IN SEPARATE TRENCHES WITH THE SEWER AT LEAST 18 INCHES BELOW THE BOTTOM OF THE WATER MAIN, OR SUCH OTHER SEPARATION AS APPROVED BY THE GOVERNMENT AGENCY WITH JURISDICTION OVER SAME.
    - WHERE APPROPRIATE SEPARATION FROM A WATER MAIN IS NOT POSSIBLE, THE SEWER MUST BE ENCASED IN CONCRETE, OR CONSTRUCTED OF DUCTILE IRON PIPE USING MECHANICAL OR SLIP-ON JOINTS FOR A DISTANCE OF AT LEAST 10 FEET ON EITHER SIDE OF THE CROSSING. IN ADDITION, ONE FULL LENGTH OF SEWER PIPE SHOULD BE LOCATED SO BOTH JOINTS WILL BE AS FAR FROM THE WATER LINE AS POSSIBLE. WHERE A WATER MAIN CROSSES UNDER A SEWER, ADEQUATE STRUCTURAL SUPPORT FOR THE SEWER MUST BE PROVIDED.
28. WATER MAIN PIPING MUST BE INSTALLED IN ACCORDANCE WITH THE REQUIREMENTS AND SPECIFICATIONS OF THE LOCAL WATER PURVEYOR. IN THE ABSENCE OF SUCH REQUIREMENTS, WATER MAIN PIPING MUST BE CEMENT-LINED DUCTILE IRON (DIP) MINIMUM CLASS 52 THICKNESS. ALL PIPE AND APPURTENANCES MUST COMPLY WITH THE APPLICABLE AWWA STANDARDS IN EFFECT AT THE TIME OF APPLICATION.
29. CONTRACTOR MUST ENSURE THAT ALL UTILITY TRENCHES LOCATED IN EXISTING PAVED ROADWAYS INCLUDING SEWER, WATER AND STORM SYSTEMS, MUST BE REPAIRED IN ACCORDANCE WITH REFERENCED DETAILS PER JURISDICTION OF AUTHORITY AS APPLICABLE. CONTRACTOR MUST COORDINATE INSPECTION AND APPROVAL OF COMPLETED WORK WITH THE AGENCY WITH JURISDICTION OVER SAME.
30. WHERE BASEMENTS ARE TO BE PROVIDED FOR PROPOSED DWELLING UNITS, THE DEVELOPER SHALL, BY BORING OR BY TEST PIT, DETERMINE THE DEPTH TO GROUNDWATER AT THE LOCATION OF THE PROPOSED DWELLINGS. WHERE GROUNDWATER IS ENCOUNTERED IN THE BASEMENT AREA, BASEMENTS WILL NOT BE INSTALLED UNLESS SPECIAL CONSTRUCTION METHODS ARE UTILIZED, TO BE REVIEWED AND APPROVED BY THE MUNICIPAL CONSTRUCTION CODE OFFICIAL. IF AND WHERE SUMP PUMPS ARE INSTALLED, ALL DISCHARGES MUST BE CONNECTED TO THE STORM SEWER. A CLEANOUT MUST BE PROVIDED PRIOR TO THE CONNECTION TO THE STORM DRAIN IN ORDER THAT BLOCKAGES CAN BE ADDRESSED.
31. FOR SINGLE AND TWO-FAMILY RESIDENTIAL PROJECTS, WHERE THE PROPOSED DWELLING AND ADJACENT SPOT ELEVATION(S) ARE SCHEMATIC FOR GENERIC BUILDING FOOTPRINT, GRADES MUST BE ADJUSTED BASED ON FINAL ARCHITECTURAL PLANS TO PROVIDE A MINIMUM OF SIX (6) INCHES BELOW TOP OF BLOCK AND /OR SIX (6) INCHES BELOW SIDING, WHICHEVER IS LOWEST, AND MUST PROVIDE POSITIVE DRAINAGE (2% MIN.) AWAY FROM DWELLING. ALL CONSTRUCTION, INCLUDING GRADING, MUST COMPLY WITH THE LATEST LOCAL AND STATE BUILDING CODE AND ALL OTHER APPLICABLE REQUIREMENTS, RULES, STATUTES, LAWS, ORDINANCES AND CODES.
32. LOCATION OF PROPOSED UTILITY POLE RELOCATION IS AT THE SOLE DISCRETION OF UTILITY COMPANY.
33. CONSULTANT IS NEITHER LIABLE NOR RESPONSIBLE FOR ANY SUBSURFACE CONDITIONS AND FURTHER, SHALL HAVE NO LIABILITY FOR ANY HAZARDOUS MATERIALS, HAZARDOUS SUBSTANCES, OR POLLUTANTS ON, ABOUT OR UNDER THE PROPERTY.

SUBDIVISION NAME: MONTEVIDEO CROSSING PARCEL A SECTION/AREA: N/A PLAT # 23695 WATER CODE: N/A SEWER CODE: N/A	OWNER: PARCEL 16A MIT MONTEVIDEO, LLC 8850 COLUMBIA PARKWAY COLUMBIA, MD 21045 CONTACT: MARK LEVY TEL: (410) 579-2442
	DEVELOPER: J.C. BAR PROPERTIES, INC 415 FALLOWFIELD ROAD, SUITE 301 CAMP HILL, PA 17011 CONTACT: JASON MITCHELL TEL: (717) 761-7801
	TAX MAP: 43 GRID: 10 ZONED: B-1 PARCEL: 16A 1ST ELECTION DISTRICT, HOWARD COUNTY, MARYLAND ZB REF.: 1096m SITE AREA: 4.039 AC DPZ REF.: SDP-15-069

PROFESSIONAL CERTIFICATION
I, DAVID M. KUKLISH, P.E., HEREBY CERTIFY THAT THESE DOCUMENTS WERE PREPARED OR APPROVED BY ME, AND THAT I AM A DULY LICENSED PROFESSIONAL ENGINEER UNDER THE LAWS OF THE STATE OF MARYLAND, LICENSE NO. 36224, EXPIRATION DATE: 8/19/2018

CVS pharmacy

TYPE 'B'
REAR DRIVE-THRU
STORE NUMBER: 10528
WASHINGTON BLVD. & MONTEVIDEO RD.
JESSUP, HOWARD COUNTY, MARYLAND
PROJECT TYPE: NEW
DEAL TYPE: LEASE
CS PROJECT NUMBER: 77620

DIG WITH CARE — CALL BEFORE YOU DIG
THE FOLLOWING STATES REQUIRE NOTIFICATION BY EXCAVATORS, DESIGNERS, OR ANY PERSON PREPARING TO DISTURB THE EARTH'S SURFACE ANYWHERE IN THE STATE. IN VIRGINIA, MARYLAND, THE DISTRICT OF COLUMBIA, AND DELAWARE CALL - 811
(WV 1-800-245-4848) (PA 1-800-242-1776) (DC 1-800-257-7777)
(VA 1-800-552-7001) (MD 1-800-257-7777) (DE 1-800-282-8555)

BOHLER ENGINEERING
901 DULANEY VALLEY ROAD, SUITE 801
TOWSON, MARYLAND 21204
Phone: (410) 821-7900
Fax: (410) 821-7987
MD@BohlerEng.com

DEVELOPER
J.C. BAR DEVELOPMENT, LLC
415 FALLOWFIELD ROAD, SUITE 301
CAMP HILL, PA 17011
CONTACT: JASON MITCHELL
TEL : (717) 761-7801

D.M. KUKLISH
PROFESSIONAL ENGINEER
DELAWARE LICENSE No. 14522
MARYLAND LICENSE No. 36224
VIRGINIA LICENSE No. 0402045209

REVISIONS

REV:	DATE:	COMMENT:	BY:

CHECKED BY: DMK
DRAWN BY: CRH
DATE: 4/13/16
JOB NUMBER: MD131504
TITLE:
GENERAL NOTES
SHEET NUMBER: 2 OF 27
COMMENTS: FILE NO. SDP-15-069

H:\15\DE150009\DRAWINGS\PLAN SETS\SITE DEVELOPMENT PLANS\REVISIONS\REVISION 6\DE150009SD5-----LAYOUT: 02 - GENERAL NOTES

STANDARD DRAWING LEGEND

FOR ENTIRE PLAN SET
(NOT TO SCALE)

EXISTING NOTE	TYPICAL NOTE TEXT	PROPOSED NOTE
	ONSITE PROPERTY LINE / R.O.W. LINE	
	NEIGHBORING PROPERTY LINE / INTERIOR PARCEL LINE	
	EASEMENT LINE	
	SETBACK LINE	
	CONCRETE CURB & GUTTER	CURB AND GUTTER; SPILL CURB; TRANSITION CURB; DEPRESSED CURB AND GUTTER
	UTILITY POLE WITH LIGHT	
	POLE LIGHT	
	TRAFFIC LIGHT	
	UTILITY POLE	
	TYPICAL LIGHT	
	ACORN LIGHT	
	TYPICAL SIGN	
	PARKING COUNTS	
170; 169	CONTOUR LINE	190; 187
TC 516.4 OR 516.4	SPOT ELEVATIONS	TC 516.00; TC 516.00 BC 515.55
SAN #	SANITARY LABEL	SAN #
	STORM LABEL	X #
SL	SANITARY SEWER LATERAL	SL
W	UNDERGROUND WATER LINE	W
E	UNDERGROUND ELECTRIC LINE	E
G	UNDERGROUND GAS LINE	G
OH	OVERHEAD WIRE	OH
T	UNDERGROUND TELEPHONE LINE	T
C	UNDERGROUND CABLE LINE	C
	STORM SEWER	
S	SANITARY SEWER MAIN	S
	HYDRANT	
S	SANITARY MANHOLE	S
D	STORM MANHOLE	D
WM	WATER METER	
WV	WATER VALVE	
	GAS VALVE	
	GAS METER	
	TYPICAL END SECTION	
	HEADWALL OR ENDWALL	
	YARD INLET	
	CURB INLET	
	CLEAN OUT	
E	ELECTRIC MANHOLE	E
T	TELEPHONE MANHOLE	T
EB	ELECTRIC BOX	EB
EP	ELECTRIC PEDESTAL	EP

STANDARD DRAWING LEGEND

FOR ENTIRE PLAN SET
(NOT TO SCALE)

	MONITORING WELL	
	TEST PIT	
	BENCHMARK	
	BORING	

STANDARD ABBREVIATIONS

FOR ENTIRE PLAN SET

AC	ACRES	POG	POINT OF GRADE
ADA	AMERICANS WITH DISABILITY ACT	PROP	PROPOSED
ARCH	ARCHITECTURAL	PT	POINT OF TANGENCY
BC	BOTTOM OF CURB	PTCR	POINT OF TANGENCY, CURB RETURN
BF	BASEMENT FLOOR	PVC	POLYVINYL CHLORIDE PIPE
BK	BLOCK	PVI	POINT OF VERTICAL INTERSECTION
BL	BASELINE	PVT	POINT OF VERTICAL TANGENCY
BLDG	BUILDING	R	RADIUS
BM	BUILDING BENCHMARK	RCP	REINFORCED CONCRETE PIPE
BRL	BUILDING RESTRICTION LINE	RET WALL	RETAINING WALL
CF	CUBIC FEET	R/W	RIGHT OF WAY
CL	CENTERLINE	S	SLOPE
CMP	CORRUGATED METAL PIPE	SAN	SANITARY SEWER
CONN	CONNECTION	SF	SQUARE FEET
CONC	CONCRETE	STA	STATION
CPP	CORRUGATED PLASTIC PIPE	STM	STORM
CY	CUBIC YARDS	S/W	SIDEWALK
DEC	DECORATIVE	TBR	TO BE REMOVED
DEP	DEPRESSED	TBRL	TO BE RELOCATED
DIP	DUCTILE IRON PIPE	TC	TOP OF CURB
DOM	DOMESTIC	TELE	TELEPHONE
ELEC	ELECTRIC	TPF	TREE PROTECTION FENCE
ELEV	ELEVATION	TW	TOP OF WALL
EP	EDGE OF PAVEMENT	TYP	TYPICAL
ES	EDGE OF SHOULDER	UG	UNDERGROUND
EW	END WALL	UP	UTILITY POLE
EX	EXISTING	W	WIDE
FES	FLARED END SECTION	W/L	WATER LINE
FF	FINISHED FLOOR	W/M	WATER METER
FH	FIRE HYDRANT	±	PLUS OR MINUS
FG	FINISHED GRADE	°	DEGREE
G	GRADE	Ø	DIAMETER
GF	GARAGE FLOOR (AT DOOR)	#	NUMBER
GH	GRADE HIGHER SIDE OF WALL		
GL	GRADE LOWER SIDE OF WALL		
GRT	GRATE		
GV	GATE VALVE		
HDPE	HIGH DENSITY POLYETHYLENE PIPE		
HP	HIGH POINT		
HOR	HORIZONTAL		
HW	HEADWALL		
INT	INTERSECTION		
INV	INVERT		
LF	LINEAR FOOT		
LOC	LIMITS OF CLEARING		
LOD	LIMITS OF DISTURBANCE		
LOS	LINE OF SIGHT		
LP	LOW POINT		
L/S	LANDSCAPE		
MAX	MAXIMUM		
MIN	MINIMUM		
MH	MANHOLE		
MJ	MECHANICAL JOINT		
OC	ON CENTER		
PA	POINT OF ANALYSIS		
PC	POINT CURVATURE		
PCCR	POINT OF COMPOUND CURVATURE, CURB RETURN		
PI	POINT OF INTERSECTION		

APPROVED: DEPARTMENT OF PLANNING AND ZONING

CHIEF-DEVELOPMENT ENGINEERING DIVISION	DATE 10.14.16
CHIEF-DIVISION OF LAND DEVELOPMENT	DATE 11-2-16
DIRECTOR	DATE 11-3-16

GENERAL NOTE:
IT IS THE RESPONSIBILITY OF THE CONTRACTOR TO REVIEW ALL OF THE DRAWINGS AND SPECIFICATIONS ASSOCIATED WITH THIS PROJECT WORK SCOPE PRIOR TO THE INITIATION OF CONSTRUCTION. SHOULD THE CONTRACTOR FIND A CONFLICT WITH THE DOCUMENTS RELATIVE TO THE SPECIFICATIONS OR APPLICABLE CODES, IT IS THE CONTRACTOR'S RESPONSIBILITY TO NOTIFY THE PROJECT ENGINEER OF RECORD IN WRITING PRIOR TO THE START OF CONSTRUCTION. FAILURE BY THE CONTRACTOR TO NOTIFY THE PROJECT ENGINEER SHALL CONSTITUTE ACCEPTANCE OF FULL RESPONSIBILITY BY THE CONTRACTOR TO COMPLETE THE SCOPE OF THE WORK AS DEFINED BY THE DRAWINGS AND IN FULL CONFORMANCE WITH LOCAL REGULATIONS AND CODES.

A:\15-LETS\20009\DRAWINGS\PLAN SETS\SITE DEVELOPMENT PLANS\REVISIONS\REVISION 6\DET15009SDP5 ------ XA\TSHT. 01 - LEGEND

CVS pharmacy

TYPE 'B'
REAR DRIVE-THRU

STORE NUMBER: 10528

WASHINGTON BLVD. & MONTEVIDEO RD.
JESSUP, HOWARD COUNTY, MARYLAND

PROJECT TYPE: NEW
DEAL TYPE: LEASE

CS PROJECT NUMBER: 77620

THE FOLLOWING STATES REQUIRE NOTIFICATION BY EXCAVATORS, DESIGNERS, OR ANY PERSON PREPARING TO DISTURB THE EARTH'S SURFACE ANYWHERE IN THE STATE. IN VIRGINIA, MARYLAND, THE DISTRICT OF COLUMBIA, AND DELAWARE CALL - 811
(WV 1-800-245-4848) (PA 1-800-242-1776) (DC 1-800-257-7777) (VA 1-800-552-7001) (MD 1-800-257-7777) (DE 1-800-282-8555)

BOHLER ENGINEERING
901 DULANEY VALLEY ROAD, SUITE 801
TOWSON, MARYLAND 21204
Phone: (410) 821-7900
Fax: (410) 821-7987
MD@BohlerEng.com

DEVELOPER
J.C. BAR DEVELOPMENT, LLC

415 FALLOWFIELD ROAD, SUITE 301
CAMP HILL, PA 17011
CONTACT: JASON MITCHELL
TEL : (717) 761-7801

D.M. KUKLISH
PROFESSIONAL ENGINEER
DELAWARE LICENSE No. 14322
MARYLAND LICENSE No. 36224
VIRGINIA LICENSE No. 0402018205

REVISIONS

REV:	DATE:	COMMENT:	BY:

CHECKED BY:	DMK
DRAWN BY:	CRH
DATE:	4/13/16
JOB NUMBER:	MD131504

TITLE:
LEGEND

SHEET NUMBER:
3 OF 27

COMMENTS:
FILE NO. SDP-15-069

OWNER:	PARCEL 16A M/T MONTEVIDEO, LLC 8850 COLUMBIA PARKWAY COLUMBIA, MD 21045 CONTACT: MARK LEVY TEL: (410) 579-2442
DEVELOPER:	J.C. BAR PROPERTIES, INC 415 FALLOWFIELD ROAD, SUITE 301 CAMP HILL, PA 17011 CONTACT: JASON MITCHELL TEL: (717) 761-7801
	TAX MAP: 43 GRID: 10 ZONED: B-1 PARCEL: 16A 1ST ELECTION DISTRICT, HOWARD COUNTY, MARYLAND ZB REF.: 1096m SITE AREA: 4.039 AC DP2 REF.: SDP-15-069

SUBDIVISION NAME: MONTEVIDEO CROSSING
PARCEL A
SECTION/AREA: N/A
PLAT # 23695
WATER CODE: N/A
SEWER CODE: N/A

PROFESSIONAL CERTIFICATION
I, DAVID M. KUKLISH, P.E., HEREBY CERTIFY THAT THESE DOCUMENTS WERE PREPARED OR APPROVED BY ME, AND THAT I AM A DULY LICENSED PROFESSIONAL ENGINEER UNDER THE LAWS OF THE STATE OF MARYLAND, LICENSE NO. 36224, EXPIRATION DATE: 6/19/2018

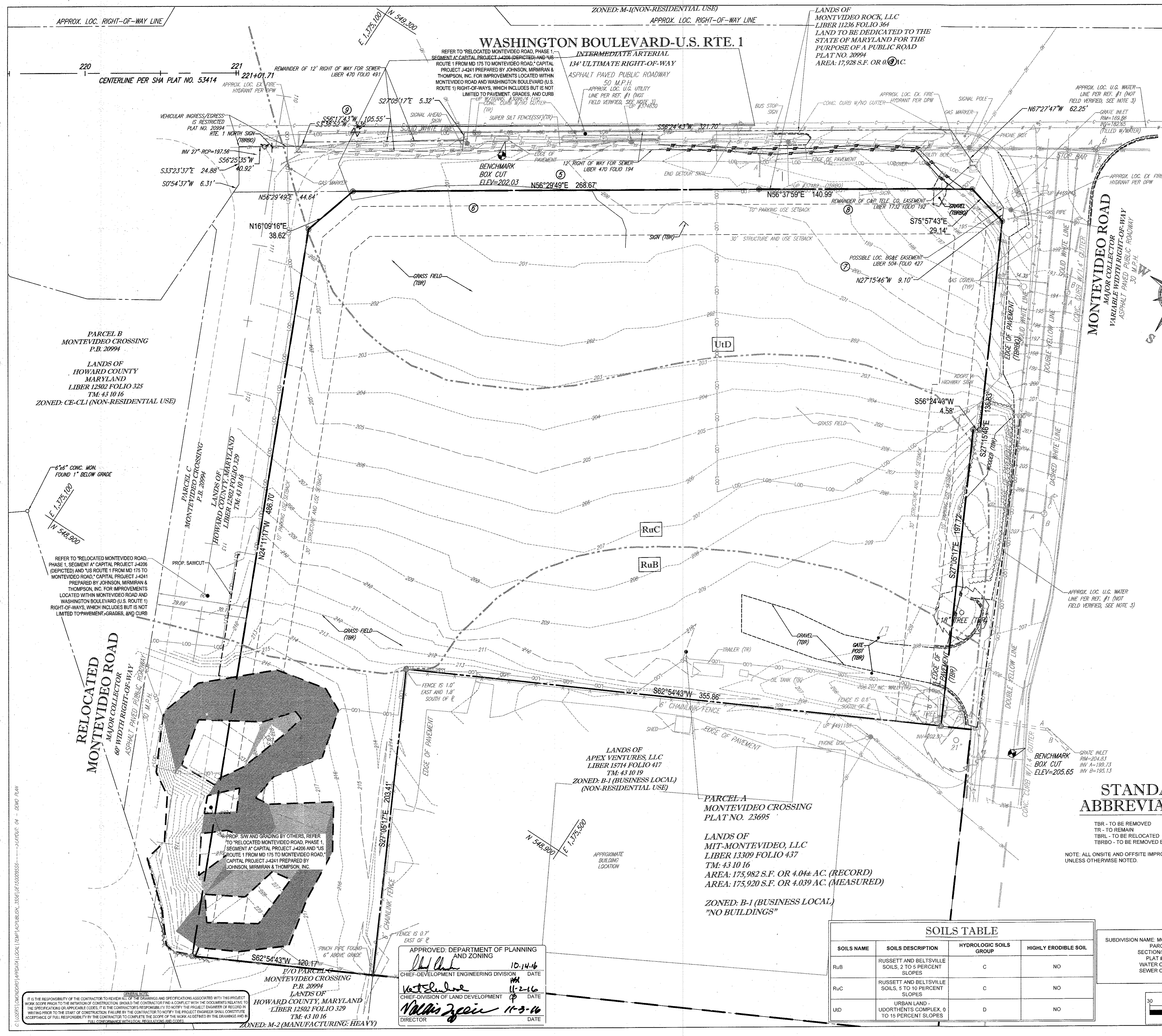

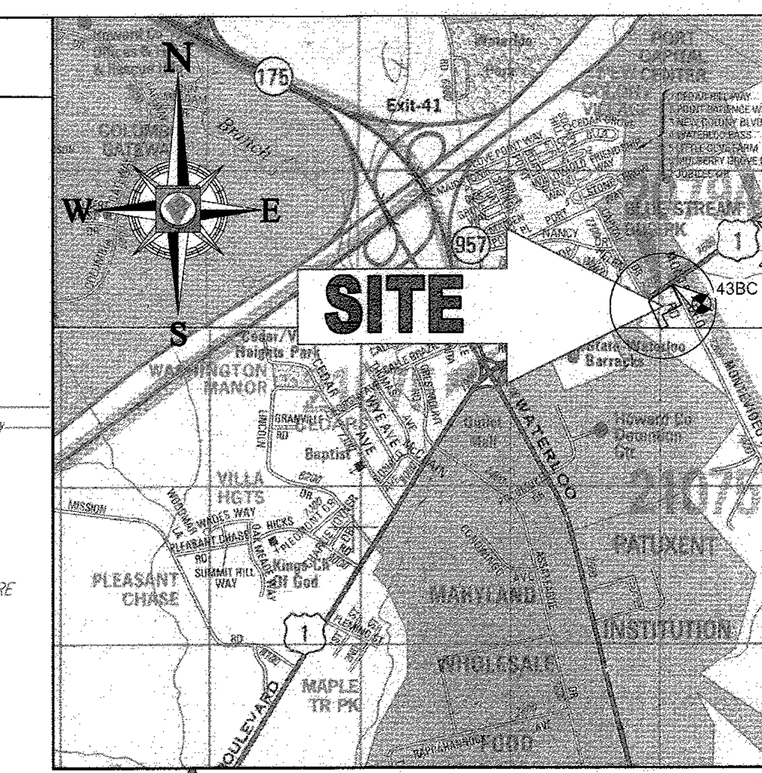

LOCATION MAP

COPYRIGHT ADC THE MAP PEOPLE
PERMIT USE NO. 20602153-5
SCALE: 1"=2000'
ADC MAP COORDINATES: K13

BENCHMARKS NAD 83 HORIZONTAL

HO. CO. #43BB
STAMPED BRASS DISK SET ON TOP OF CONCRETE BASE
N 550,534.19' E 1,376,905.25'

HO.CO. #43BC
STAMPED BRASS DISK SET ON TOP OF CONCRETE BASE
N 549,592.091' E 1,375,466.62'

SURVEY NOTES

1. PROPERTY IS PARCEL A, MONTEVIDEO CROSSING AS RECORDED AS PLAT NO. 20994 AND BEING THE LANDS OF MIT-MONTEVIDEO, LLC AS RECORDED IN LIBER 13309 AT FOLIO 437 AMONG THE LAND RECORDS OF HOWARD COUNTY, MARYLAND AND HAVING A TAX MAP NUMBER OF 43 10 16 PER THE DEPARTMENT OF ASSESSMENTS.

2. AREA = 175,920 SQUARE FEET OR 4.039 ACRES

3. LOCATION OF ALL UNDERGROUND UTILITIES ARE APPROXIMATE. SOURCE INFORMATION FROM PLANS AND MARKINGS HAS BEEN COMBINED WITH OBSERVED EVIDENCE OF UTILITIES TO DEVELOP A VIEW OF THOSE UNDERGROUND UTILITIES. HOWEVER, LACKING EXCAVATION, THE EXACT LOCATION OF UNDERGROUND FEATURES CANNOT BE ACCURATELY, COMPLETELY AND RELIABLY DEPICTED. WHERE ADDITIONAL OR MORE DETAILED INFORMATION IS REQUIRED, THE CLIENT IS ADVISED THAT EXCAVATION MAY BE NECESSARY.

4. THIS SURVEY IS BASED ON INFORMATION AND REFERENCE MATERIAL AS LISTED HEREON.

5. THIS SURVEY IS PREPARED WITH REFERENCE TO A COMMITMENT FOR TITLE INSURANCE PREPARED BY CHICAGO TITLE INSURANCE COMPANY, TITLE NO. 132378AZ, WITH AN EFFECTIVE DATE OF JUNE 2, 2014. OUR OFFICE HAS REVIEWED THE FOLLOWING SURVEY RELATED EXCEPTIONS IN SCHEDULE B, SECTION II:

6. SUBJECT TO EASEMENTS AND RIGHTS OF WAY CONTAINED IN A DEED AND AGREEMENT BETWEEN STANLEY MASIATKA AND ROSE MASIATKA AND THE LAUREL BUILDING ASSOCIATION OF PRINCE GEORGE COUNTY AND HOWARD COUNTY METROPOLITAN COMMISSION DATED MAY 16, 1967 AND RECORDED AMONG THE LAND RECORDS OF HOWARD COUNTY, MARYLAND IN LIBER 470, FOLIO 194; ***DO NOT AFFECT PARCEL A, AFFECT THE STRIP OF LAND TO BE DEDICATED TO THE STATE FOR ROADWAY PURPOSES, SHOWN.***

7. SUBJECT TO EASEMENTS AND RIGHTS OF WAY CONTAINED IN A DEED AND AGREEMENT BETWEEN EDWARD R PUTMAN AND PLACIDA LAZDUSKY AND FRANCIS J. LAZDUSKY AND CAPITAL SAVINGS AND LOAN ASSOCIATION AND HOWARD COUNTY METROPOLITAN COMMISSION DATED MAY 15, 1967 AND RECORDED AMONG THE LAND RECORDS OF HOWARD COUNTY, MARYLAND IN LIBER 470, FOLIO 491; ***DO NOT AFFECT PARCEL A, AFFECT THE STRIP OF LAND TO BE DEDICATED TO THE STATE FOR ROADWAY PURPOSES, SHOWN.***

8. SUBJECT TO EASEMENTS AND RIGHTS OF WAY CONTAINED IN AN AGREEMENT BY BALTIMORE GA AND ELECTRIC COMPANY DATED JANUARY 30, 1969 AND RECORDED AMONG THE LAND RECORDS OF HOWARD COUNTY, MARYLAND IN LIBER 504, FOLIO 427; ***MAY AFFECT THE SUBJECT PROPERTY, POLE AND GUY WIRE SHOWN.***

9. SUBJECT TO EASEMENTS AND RIGHTS OF WAY CONTAINED IN A DEED OF EASEMENT BY AND BETWEEN THE CHESAPEAKE AND POTOMAC TELEPHONE COMPANY OF BALTIMORE AND STANLEY NASIA1KA AND ROSE NASIATKA DATED SEPTEMBER 17, 1987 AND RECORDED AMONG THE LAND RECORDS OF HOWARD COUNTY, MARYLAND IN LIBER 1732, FOLIO 192; ***DO NOT AFFECT PARCEL A, AFFECT STRIP TO BE DEDICATED TO STATE OF MARYLAND, SHOWN.***

10. SUBJECT TO THE BUILDING RESTRICTION LINES, SET BACK LINES, NOTES, EASEMENTS, RESTRICTIONS, RESERVATIONS, CONDITIONS, AND LIMITATIONS AS SHOWN ON A PLAT ENTITLED "MONTEVIDEO CROSSING, PARCELS A, B, C, A SUBDIVISION OF PARCELS 16, 17, 18 AND 668" RECORDED AMONG THE LAND RECORDS OF HOWARD COUNTY, MARYLAND IN PLAT NO. 20994; ***AFFECTS THE SUBJECT PROPERTY, PLOTTABLE ITEMS ARE SHOWN. PLAT SHOWS AREA TO BE CONVEYED TO THE STATE OF MARYLAND FOR THE PURPOSE OF A ROAD. NO DEED TO THE STATE PROVIDED, THEREFORE IT IS UNCLEAR AS TO THE STATUS OF THIS LAND.***

11. THE EXISTENCE OF UNDERGROUND STORAGE TANKS, IF ANY, WAS NOT KNOWN AT THE TIME OF THE FIELD SURVEY; HOWEVER, NO PHYSICAL INDICATIONS OF SUCH WERE FOUND AT THE TIME OF THE FIELD INSPECTION OF THIS SITE.

12. ELEVATIONS ARE BASED ON NAVD 88 DATUM PER HOWARD COUNTY DEPARTMENT OF PUBLIC WORKS, GEODETIC SURVEY CONTROL MONUMENT NUMBER 43BC WITH A PUBLISHED ELEVATION OF 214.125 FEET.

13. THE PROPERTY IS LOCATED IN OTHER AREAS ZONE X (AREAS DETERMINED TO BE OUTSIDE THE 0.2% ANNUAL CHANCE FLOODPLAIN) PER MAP ENTITLED "FIRM, FLOOD INSURANCE RATE MAP, HOWARD COUNTY, MARYLAND AND INCORPORATED AREAS, PANEL 170 OF 235", MAP NUMBER 24027C0170D, WITH A MAP EFFECTIVE DATE OF NOVEMBER 6, 2013.

14. UTILITIES ARE SHOWN PER FIELD LOCATION OF ABOVE GROUND STRUCTURE AND PLANS REFERENCED HEREON.

15. ZONING: B-1-CR (BUSINESS LOCAL COMMERCIAL REDEVELOPMENT)

SETBACKS:

FRONT:	30' BUILDING, 10' PARKING
REAR:	10' PARKING
SIDE:	10' PARKING
MAXIMUM HEIGHT:	40', 48' WITH PITCHED ROOF

ZONING INFORMATION IS PER THE HOWARD COUNTY ZONING ORDINANCE AND SHOULD BE VERIFIED PRIOR TO USE TO CONFIRM IT REPRESENTS CURRENT INFORMATION.

16. THE PROPERTY IS NOT LOCATED IN ANY AREA SUBJECT TO A MORATORIUM OR RATIONING OF WATER OR SEWER OR OTHER UTILITY SERVICES.

17. THE PROPERTY IS LOCATED WITHIN A COMMERCIAL REDEVELOPMENT (CR) OVERLAY DISTRICT.

STANDARD ABBREVIATIONS

TBR - TO BE REMOVED
TR - TO REMAIN
TBRL - TO BE RELOCATED
TBRBO - TO BE REMOVED BY OFFSITE CONTRACTOR

NOTE: ALL ONSITE AND OFFSITE IMPROVEMENTS ARE TO REMAIN UNLESS OTHERWISE NOTED.

SLOPES LEGEND

SLOPES (15-24.9%)
SLOPES (>25%)
LIMIT OF STEEP SLOPE AREA 14,173± SF

SOILS TABLE

SOILS NAME	SOILS DESCRIPTION	HYDROLOGIC SOILS GROUP	HIGHLY ERODIBLE SOIL
RuB	RUSSETT AND BELTSVILLE SOILS, 2 TO 5 PERCENT SLOPES	C	NO
RuC	RUSSETT AND BELTSVILLE SOILS, 5 TO 10 PERCENT SLOPES	C	NO
UtD	URBAN LAND - UDORTHENTS COMPLEX, 0 TO 15 PERCENT SLOPES	D	NO

GENERAL NOTE:
IT IS THE RESPONSIBILITY OF THE CONTRACTOR TO REVIEW ALL OF THE DRAWINGS AND SPECIFICATIONS ASSOCIATED WITH THIS PROJECT WORK SCOPE PRIOR TO THE INITIATION OF CONSTRUCTION. SHOULD THE CONTRACTOR FIND A CONFLICT WITH THE DOCUMENTS RELATIVE TO THE SPECIFICATIONS OR APPLICABLE CODES, IT IS THE CONTRACTOR'S RESPONSIBILITY TO NOTIFY THE PROJECT ENGINEER OF RECORD IN WRITING PRIOR TO THE START OF CONSTRUCTION. FAILURE BY THE CONTRACTOR TO NOTIFY THE PROJECT ENGINEER SHALL CONSTITUTE ACCEPTANCE OF FULL RESPONSIBILITY BY THE CONTRACTOR TO COMPLETE THE SCOPE OF THE WORK AS DEFINED BY THE DRAWINGS AND IN FULL CONFORMANCE WITH LOCAL REGULATIONS AND CODES.

APPROVED: DEPARTMENT OF PLANNING AND ZONING

[signature] 10.14.16	
CHIEF-DEVELOPMENT ENGINEERING DIVISION	DATE
[signature] 11-2-16	
CHIEF-DIVISION OF LAND DEVELOPMENT	DATE
[signature] 11-3-16	
DIRECTOR	DATE

SUBDIVISION NAME: MONTEVIDEO CROSSING
PARCEL A
SECTION/AREA: N/A
PLAT # 23695
WATER CODE: N/A
SEWER CODE: N/A

OWNER: PARCEL 16A
MIT MONTEVIDEO, LLC
8850 COLUMBIA PARKWAY
COLUMBIA, MD 21045
CONTACT: MARK LEVY
TEL: (410) 579-2442

DEVELOPER: J.C. BAR PROPERTIES, INC
415 FALLOWFIELD ROAD, SUITE 301
CAMP HILL, PA 17011
CONTACT: JASON MITCHELL
TEL: (717) 761-7801

TAX MAP: 43 GRID: 10 ZONED: B-1
PARCEL: 16A
1ST ELECTION DISTRICT, HOWARD COUNTY, MARYLAND
ZB REF.: 1096m SITE AREA: 4.039 AC
DPZ REF.: SDP-15-069

30 15 7.5 0 30
1"= 30'

PROFESSIONAL CERTIFICATION
I, DAVID M. KUKLISH, P.E., HEREBY CERTIFY THAT THESE DOCUMENTS WERE PREPARED OR APPROVED BY ME, AND THAT I AM A DULY LICENSED PROFESSIONAL ENGINEER UNDER THE LAWS OF THE STATE OF MARYLAND, LICENSE NO. 36224, EXPIRATION DATE: 8/19/2018

CVS pharmacy

TYPE 'B'
REAR DRIVE-THRU

STORE NUMBER: 10528

WASHINGTON BLVD. & MONTEVIDEO RD.
JESSUP, HOWARD COUNTY, MARYLAND

PROJECT TYPE: NEW
DEAL TYPE: LEASE

CS PROJECT NUMBER: 77620

THE FOLLOWING STATES REQUIRE NOTIFICATION BY EXCAVATORS, DESIGNERS, OR ANY PERSON PREPARING TO DISTURB THE EARTH'S SURFACE ANYWHERE IN THE STATE. IN VIRGINIA, MARYLAND, THE DISTRICT OF COLUMBIA, AND DELAWARE CALL - 811
(WV 1-800-245-4848) (PA 1-800-242-1776) (DC 1-800-257-7777) (VA 1-800-552-7001) (MD 1-800-257-7777) (DE 1-800-282-8555)

BOHLER ENGINEERING
901 DULANEY VALLEY ROAD, SUITE 801
TOWSON, MARYLAND 21204
Phone: (410) 821-7900
Fax: (410) 821-7987
MD@BohlerEng.com

DEVELOPER

J.C. BAR DEVELOPMENT, LLC

415 FALLOWFIELD ROAD, SUITE 301
CAMP HILL, PA 17011
CONTACT: JASON MITCHELL
TEL : (717) 761-7801

D.M. KUKLISH
PROFESSIONAL ENGINEER
DELAWARE LICENSE No. 14522
MARYLAND LICENSE No. 36224
VIRGINIA LICENSE No. 0402045209

REVISIONS

REV:	DATE:	COMMENT:	BY:

CHECKED BY: DMK
DRAWN BY: CRH
DATE: 4/13/16
JOB NUMBER: MD131504
TITLE: EXISTING CONDITIONS AND DEMOLITION PLAN
SHEET NUMBER: 4 OF 27
COMMENTS: FILE NO. SDP-15-069

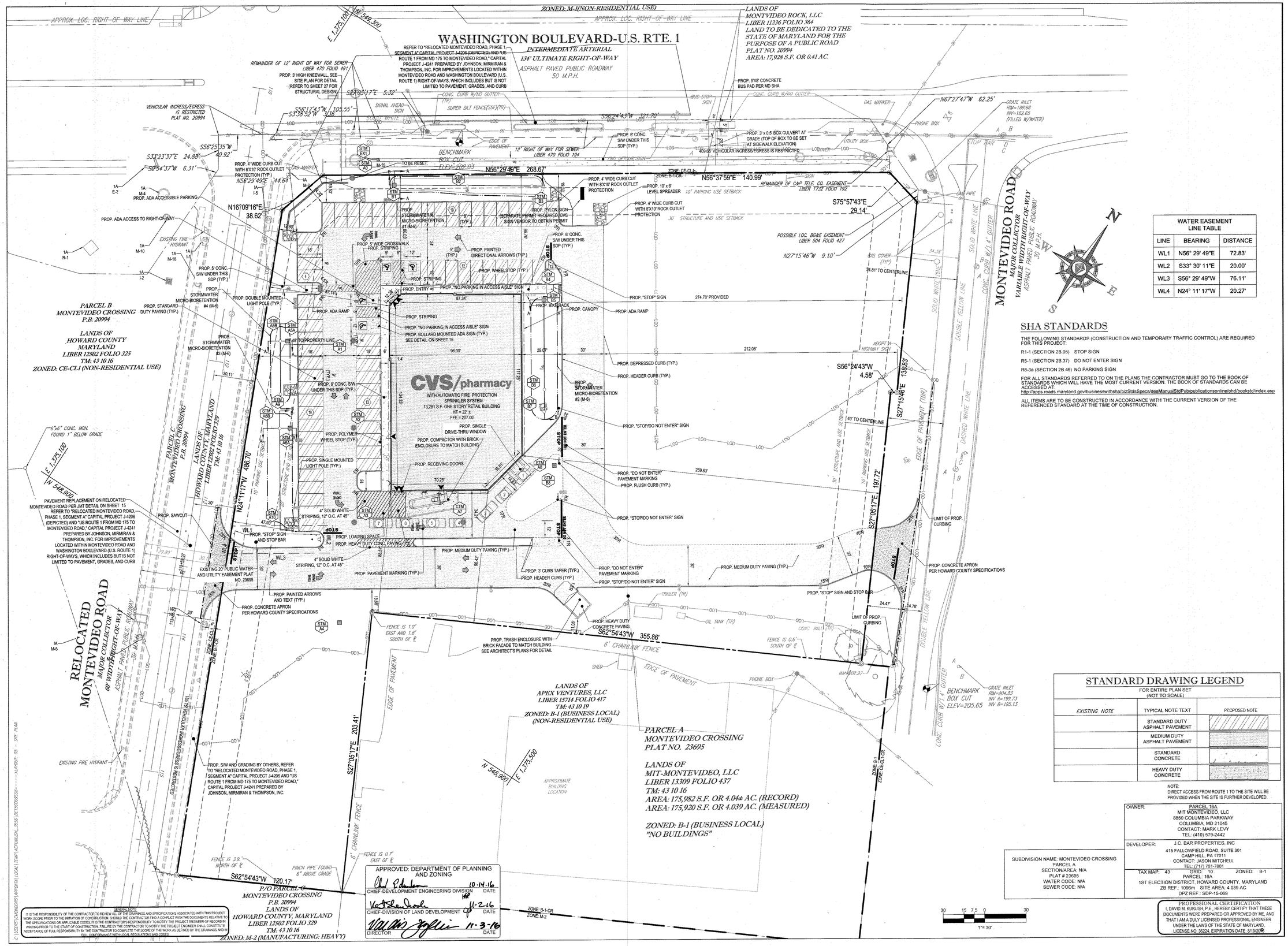

WATER EASEMENT LINE TABLE		
LINE	BEARING	DISTANCE
WL1	N56° 29' 49"E	72.83'
WL2	S33° 30' 11"E	20.00'
WL3	S56° 29' 49"W	76.11'
WL4	N24° 11' 17"W	20.27'

SHA STANDARDS

THE FOLLOWING STANDARDS (CONSTRUCTION AND TEMPORARY TRAFFIC CONTROL) ARE REQUIRED FOR THIS PROJECT:

R1-1 (SECTION 2B.05) STOP SIGN

R5-1 (SECTION 2B.37) DO NOT ENTER SIGN

R8-3a (SECTION 2B.46) NO PARKING SIGN

FOR ALL STANDARDS REFERRED TO ON THE PLANS THE CONTRACTOR MUST GO TO THE BOOK OF STANDARDS WHICH WILL HAVE THE MOST CURRENT VERSION. THE BOOK OF STANDARDS CAN BE ACCESSED AT:
http://apps.roads.maryland.gov/businesswithsha/bizStdsSpecs/desManualStdPub/publicationsonline/ohd/bookstd/index.asp

ALL ITEMS ARE TO BE CONSTRUCTED IN ACCORDANCE WITH THE CURRENT VERSION OF THE REFERENCED STANDARD AT THE TIME OF CONSTRUCTION.

STANDARD DRAWING LEGEND

FOR ENTIRE PLAN SET
(NOT TO SCALE)

EXISTING NOTE	TYPICAL NOTE TEXT	PROPOSED NOTE
	STANDARD DUTY ASPHALT PAVEMENT	
	MEDIUM DUTY ASPHALT PAVEMENT	
	STANDARD CONCRETE	
	HEAVY DUTY CONCRETE	

NOTE:
DIRECT ACCESS FROM ROUTE 1 TO THE SITE WILL BE PROVIDED WHEN THE SITE IS FURTHER DEVELOPED.

SUBDIVISION NAME: MONTEVIDEO CROSSING
PARCEL A
SECTION/AREA: N/A
PLAT # 23695
WATER CODE: N/A
SEWER CODE: N/A

OWNER: PARCEL 16A
MIT MONTEVIDEO, LLC
8850 COLUMBIA PARKWAY
COLUMBIA, MD 21045
CONTACT: MARK LEVY
TEL: (410) 579-2442

DEVELOPER: J.C. BAR PROPERTIES, INC
415 FALLOWFIELD ROAD, SUITE 301
CAMP HILL, PA 17011
CONTACT: JASON MITCHELL
TEL: (717) 761-7801

TAX MAP: 43 GRID: 10 ZONED: B-1
PARCEL: 16A
1ST ELECTION DISTRICT, HOWARD COUNTY, MARYLAND
ZB REF.: 1098m SITE AREA: 4.039 AC
DPZ REF.: SDP-15-069

PROFESSIONAL CERTIFICATION
I, DAVID M. KUKLISH, P.E., HEREBY CERTIFY THAT THESE DOCUMENTS WERE PREPARED OR APPROVED BY ME, AND THAT I AM A DULY LICENSED PROFESSIONAL ENGINEER UNDER THE LAWS OF THE STATE OF MARYLAND, LICENSE NO. 36224, EXPIRATION DATE 8/19/2016

APPROVED: DEPARTMENT OF PLANNING AND ZONING

CHIEF-DEVELOPMENT ENGINEERING DIVISION	DATE 10-14-16
CHIEF-DIVISION OF LAND DEVELOPMENT	DATE 11-2-16
DIRECTOR	DATE 11-3-16

GENERAL NOTE
IT IS THE RESPONSIBILITY OF THE CONTRACTOR TO REVIEW ALL OF THE DRAWINGS AND SPECIFICATIONS ASSOCIATED WITH THIS PROJECT WORK SCOPE PRIOR TO THE INITIATION OF CONSTRUCTION. SHOULD THE CONTRACTOR FIND A CONFLICT WITH THE DOCUMENTS RELATIVE TO THE SPECIFICATIONS OR APPLICABLE CODES, IT IS THE CONTRACTOR'S RESPONSIBILITY TO NOTIFY THE PROJECT ENGINEER OF RECORD IN WRITING PRIOR TO THE START OF CONSTRUCTION. FAILURE BY THE CONTRACTOR TO NOTIFY THE PROJECT ENGINEER SHALL CONSTITUTE ACCEPTANCE OF FULL RESPONSIBILITY BY THE CONTRACTOR TO COMPLETE THE SCOPE OF THE WORK AS DEFINED BY THE DRAWINGS AND IN FULL CONFORMANCE WITH LOCAL REGULATIONS AND CODES.

C:\USERS\CMRCORD\APPDATA\LOCAL\TEMP\ACPUBLISH_3556\US FS0009539----->LAYOUT: 05 - SITE PLAN

CVS pharmacy

TYPE 'B'
REAR DRIVE-THRU

STORE NUMBER: 10528

WASHINGTON BLVD. & MONTEVIDEO RD.
JESSUP, HOWARD COUNTY, MARYLAND

PROJECT TYPE: NEW
DEAL TYPE: LEASE

CS PROJECT NUMBER: 77620

THE FOLLOWING STATES REQUIRE NOTIFICATION BY EXCAVATORS, DESIGNERS, OR ANY PERSON PREPARING TO DISTURB THE EARTH'S SURFACE ANYWHERE IN THE STATE IN VIRGINIA, MARYLAND, THE DISTRICT OF COLUMBIA, AND DELAWARE CALL - 811
(WV 1-800-245-4848) (PA 1-800-242-1776) (DC 1-800-257-7777) (VA 1-800-552-7001) (MD 1-800-257-7777) (DE 1-800-282-8555)

BOHLER ENGINEERING
901 DULANEY VALLEY ROAD, SUITE 801
TOWSON, MARYLAND 21204
Phone: (410) 821-7900
Fax: (410) 821-7987
MD@BohlerEng.com

DEVELOPER
J.C. BAR DEVELOPMENT, LLC

415 FALLOWFIELD ROAD, SUITE 301
CAMP HILL, PA 17011
CONTACT: JASON MITCHELL
TEL : (717) 761-7801

D.M. KUKLISH
PROFESSIONAL ENGINEER
DELAWARE LICENSE No. 14822
MARYLAND LICENSE No. 36224
VIRGINIA LICENSE No. 0402062200

REVISIONS

REV:	DATE:	COMMENT:	BY:

CHECKED BY: DMK
DRAWN BY: CRH
DATE: 4/13/16
JOB NUMBER: MD131504

TITLE:
SITE PLAN

SHEET NUMBER:
5 OF 27

COMMENTS:
FILE NO. SDP-15-069

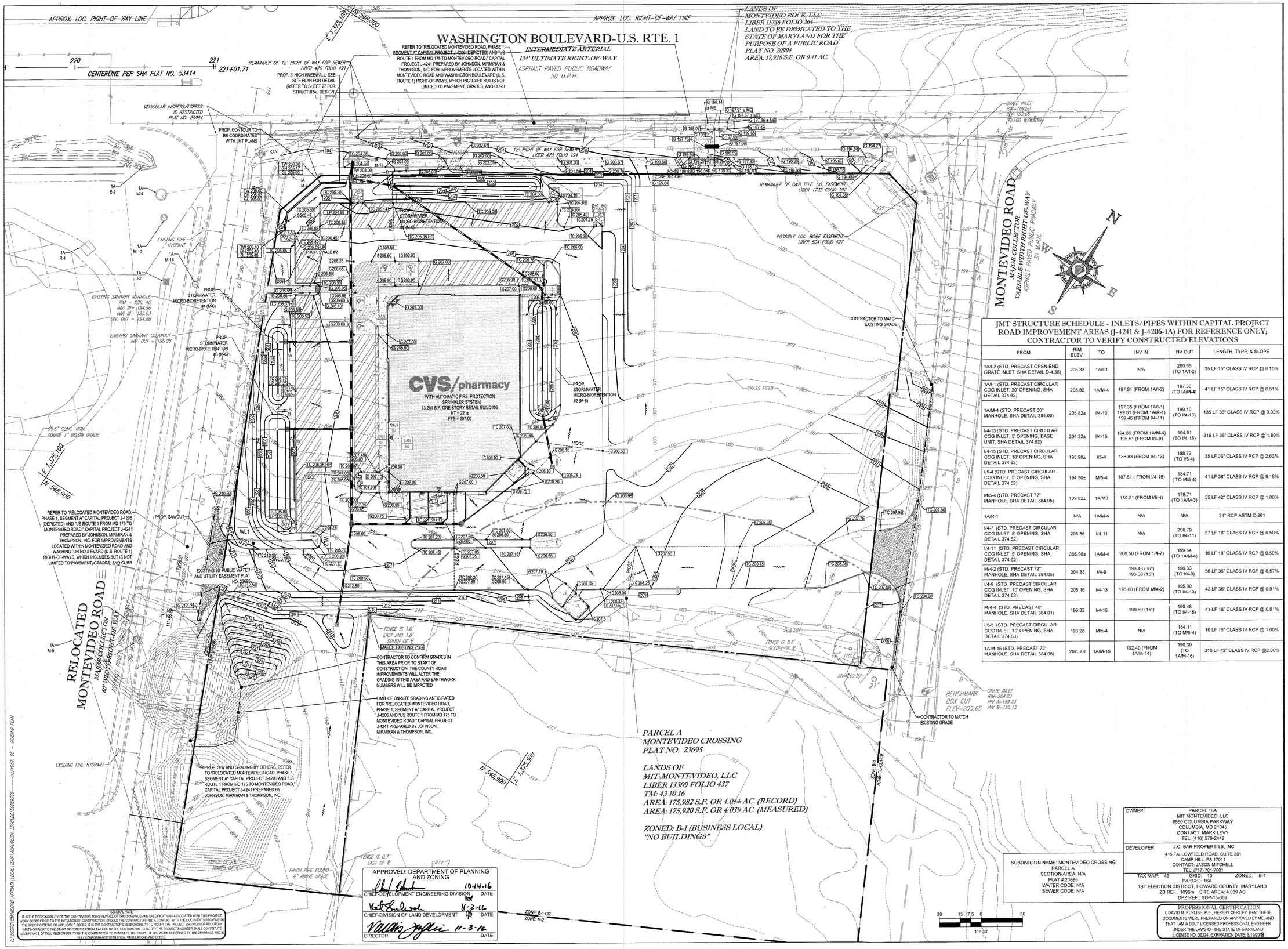

JMT STRUCTURE SCHEDULE - INLETS/PIPES WITHIN CAPITAL PROJECT ROAD IMPROVEMENT AREAS (J-4241 & J-4206-1A) FOR REFERENCE ONLY; CONTRACTOR TO VERIFY CONSTRUCTED ELEVATIONS

FROM	RIM ELEV.	TO	INV IN	INV OUT	LENGTH, TYPE, & SLOPE
1A/I-2 (STD. PRECAST OPEN END GRATE INLET, SHA DETAIL D-4.36)	205.33	1A/I-1	N/A	200.66 (TO 1A/I-2)	35 LF 15" CLASS IV RCP @ 8.15%
1A/I-1 (STD. PRECAST CIRCULAR COG INLET, 20' OPENING, SHA DETAIL 374.62)	205.82	1A/M-4	197.81 (FROM 1A/I-2)	197.56 (TO IA/M-4)	41 LF 15" CLASS IV RCP @ 0.51%
1A/M-4 (STD. PRECAST 60" MANHOLE, SHA DETAIL 384.03)	205.82±	I/4-13	197.35 (FROM 1A/I-1) 199.01 (FROM 1A/R-1) 199.46 (FROM I/4-11)	199.10 (TO I/4-13)	135 LF 36" CLASS IV RCP @ 0.92%
I/4-13 (STD. PRECAST CIRCULAR COG INLET, 10' OPENING, BASE UNIT, SHA DETAIL 374.62)	204.32±	I/4-15	194.86 (FROM 1A/M-4) 195.51 (FROM I/4-9)	194.51 (TO I/4-15)	315 LF 36" CLASS IV RCP @ 1.80%
I/4-15 (STD. PRECAST CIRCULAR COG INLET, 10' OPENING, SHA DETAIL 374.62)	195.98±	I/5-4	188.83 (FROM I/4-13)	188.73 (TO I/5-4)	35 LF 36" CLASS IV RCP @ 2.63%
I/5-4 (STD. PRECAST CIRCULAR COG INLET, 5' OPENING, SHA DETAIL 374.62)	194.50±	M/5-4	187.81 (FROM I/4-15)	184.71 (TO M/5-4)	41 LF 36" CLASS IV RCP @ 9.18%
M/5-4 (STD. PRECAST 72" MANHOLE, SHA DETAIL 384.05)	189.82±	1A/M3	180.21 (FROM I/5-4)	179.71 (TO 1A/M-3)	55 LF 42" CLASS IV RCP @ 1.00%
1A/R-1	N/A	1A/M-4	N/A	N/A	24" RCP ASTM C-361
I/4-7 (STD. PRECAST CIRCULAR COG INLET, 5' OPENING, SHA DETAIL 374.62)	206.86	I/4-11	N/A	200.79 (TO I/4-11)	57 LF 18" CLASS IV RCP @ 0.50%
I/4-11 (STD. PRECAST CIRCULAR COG INLET, 5' OPENING, SHA DETAIL 374.62)	205.95±	1A/M-4	200.50 (FROM 1/4-7)	199.54 (TO 1A/M-4)	16 LF 18" CLASS IV RCP @ 0.50%
M/4-2 (STD. PRECAST 72" MANHOLE, SHA DETAIL 384.05)	204.88	I/4-9	196.43 (36") 196.30 (15")	196.33 (TO I/4-9)	58 LF 36" CLASS IV RCP @ 0.57%
I/4-9 (STD. PRECAST CIRCULAR COG INLET, 10' OPENING, SHA DETAIL 374.62)	205.16	I/4-13	196.00 (FROM M/4-2)	195.90 (TO I/4-13)	43 LF 36" CLASS IV RCP @ 0.91%
M/4-4 (STD. PRECAST 48" MANHOLE, SHA DETAIL 384.01)	196.33	I/4-15	190.69 (15")	190.48 (TO I/4-15)	41 LF 18" CLASS IV RCP @ 0.51%
I/5-5 (STD. PRECAST CIRCULAR COG INLET, 10' OPENING, SHA DETAIL 374.63)	193.28	M/5-4	N/A	184.11 (TO M/5-4)	10 LF 15" CLASS IV RCP @ 1.00%
1A M-15 (STD. PRECAST 72" MANHOLE, SHA DETAIL 384.05)	202.30±	1A/M-16	192.40 (FROM 1A/M-14)	190.30 (TO 1A/M-16)	316 LF 42" CLASS IV RCP @2.00%

OWNER:	PARCEL 16A MIT MONTEVIDEO, LLC 8850 COLUMBIA PARKWAY COLUMBIA, MD 21045 CONTACT: MARK LEVY TEL: (410) 579-2442
DEVELOPER:	J.C. BAR PROPERTIES, INC 415 FALLOWFIELD ROAD, SUITE 301 CAMP HILL, PA 17011 CONTACT: JASON MITCHELL TEL: (717) 761-7801
TAX MAP: 43 GRID: 10 ZONED: B-1	PARCEL: 16A 1ST ELECTION DISTRICT, HOWARD COUNTY, MARYLAND ZB REF.: 1096m SITE AREA: 4.039 AC DPZ REF.: SDP-15-069

SUBDIVISION NAME: MONTEVIDEO CROSSING
PARCEL A
SECTION/AREA: N/A
PLAT # 23695
WATER CODE: N/A
SEWER CODE: N/A

APPROVED: DEPARTMENT OF PLANNING AND ZONING

CHIEF-DEVELOPMENT ENGINEERING DIVISION	DATE 10-14-16
CHIEF-DIVISION OF LAND DEVELOPMENT	DATE 11-2-16
DIRECTOR	DATE 11-3-16

GENERAL NOTE:
IT IS THE RESPONSIBILITY OF THE CONTRACTOR TO REVIEW ALL OF THE DRAWINGS AND SPECIFICATIONS ASSOCIATED WITH THIS PROJECT WORK SCOPE PRIOR TO THE INITIATION OF CONSTRUCTION. ON-SITE THE CONTRACTOR FINDS A CONFLICT WITH THE DOCUMENTS RELATING TO THE SPECIFICATIONS OR APPLICABLE CODES, IT IS THE CONTRACTOR'S RESPONSIBILITY TO NOTIFY THE PROJECT ENGINEER OF RECORD IN WRITING PRIOR TO THE START OF CONSTRUCTION. FAILURE BY THE CONTRACTOR TO NOTIFY THE PROJECT ENGINEER SHALL CONSTITUTE ACCEPTANCE OF FULL RESPONSIBILITY BY THE CONTRACTOR TO COMPLETE THE SCOPE OF THE WORK AS DEFINED BY THE DRAWINGS AND IN FULL CONFORMANCE WITH LOCAL REGULATIONS AND CODES.

PROFESSIONAL CERTIFICATION
I, DAVID M. KUKLISH, P.E., HEREBY CERTIFY THAT THESE DOCUMENTS WERE PREPARED OR APPROVED BY ME, AND THAT I AM A DULY LICENSED PROFESSIONAL ENGINEER UNDER THE LAWS OF THE STATE OF MARYLAND, LICENSE NO. 36224, EXPIRATION DATE: 6/19/2018

CVS pharmacy

TYPE 'B'
REAR DRIVE-THRU

STORE NUMBER: 10528

WASHINGTON BLVD. & MONTEVIDEO RD.
JESSUP, HOWARD COUNTY, MARYLAND

PROJECT TYPE: NEW
DEAL TYPE: LEASE

CS PROJECT NUMBER: 77620

THE FOLLOWING STATES REQUIRE NOTIFICATION BY EXCAVATORS, DESIGNERS, OR ANY PERSON PREPARING TO DISTURB THE EARTH'S SURFACE ANYWHERE IN THE STATE. IN VIRGINIA, MARYLAND, THE DISTRICT OF COLUMBIA, AND DELAWARE CALL - 811
(WV 1-800-245-4848) (PA 1-800-242-1776) (DC 1-800-257-7777)
(VA 1-800-552-7001) (MD 1-800-257-7777) (DE 1-800-282-8555)

BOHLER ENGINEERING
901 DULANEY VALLEY ROAD, SUITE 801
TOWSON, MARYLAND 21204
Phone: (410) 821-7900
Fax: (410) 821-7987
MD@BohlerEng.com

DEVELOPER
J.C. BAR DEVELOPMENT, LLC

415 FALLOWFIELD ROAD, SUITE 301
CAMP HILL, PA 17011
CONTACT: JASON MITCHELL
TEL : (717) 761-7801

D.M. KUKLISH
PROFESSIONAL ENGINEER
No. 36224
MARYLAND
LICENSED
PROFESSIONAL ENGINEER
VIRGINIA LICENSE No. 0402020209

REVISIONS

REV:	DATE:	COMMENT:	BY:

CHECKED BY: DMK
DRAWN BY: CRH
DATE: 4/13/16
JOB NUMBER: MD131504

TITLE:
GRADING PLAN

SHEET NUMBER: 6 OF 27

COMMENTS:
FILE NO. SDP-15-069

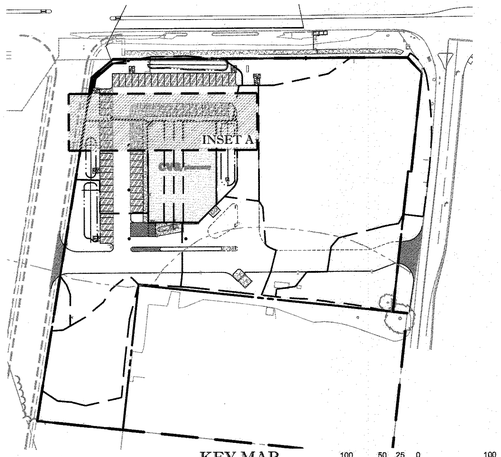

KEY MAP
SCALE: 1"=100'

100 50 25 0 100
1"= 100'

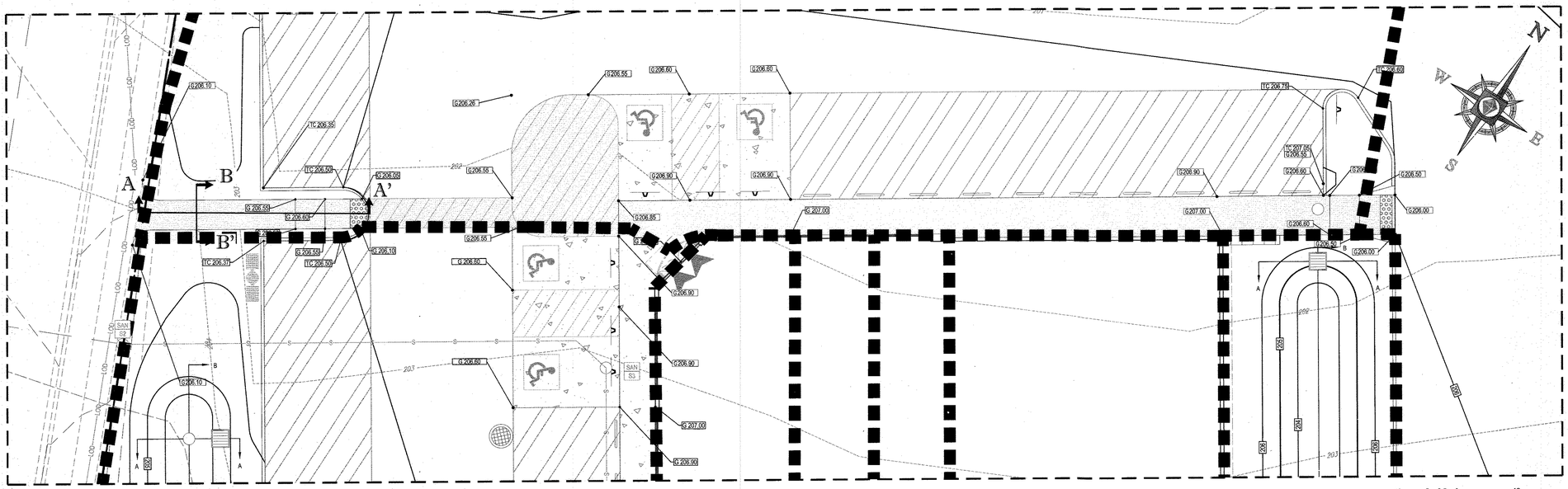

INSET A
SCALE: 1"=10'

10 5 2.5 0 10
1"= 10'

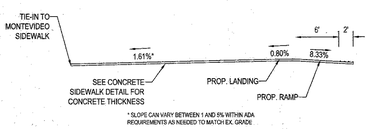

SECTION A-A'

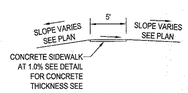

SECTION B-B'

ADA SIDEWALK SECTIONS

SCALE: 1" = 10'

LEGEND

ADA ROUTE TO RIGHT-OF-WAY

ADA CONSTRUCTION NOTES TO CONTRACTOR

1. NO SIDEWALK AND/OR CROSSWALK IS TO EXCEED 2.00% CROSS SLOPE.
2. NO ADA PARKING SPACE IS TO EXCEED 2.00% SLOPE IN ANY DIRECTION.
3. NO ADA CURB RAMP IS TO EXCEED 8.33%.
4. THE CONTRACTOR IS RESPONSIBLE DURING THE FORMING OF SIDEWALKS, RAMPS, CROSSWALKS, AND ADA PARKING TO VERIFY THAT ADA COMPLIANCE IS ACHIEVED.
5. IF DURING THAT CHECK ANY NON-CONFORMANCE IS DETERMINED, THE ENGINEER IS TO BE IMMEDIATELY NOTIFIED PRIOR TO POURING CONCRETE AND/OR LAYING ASPHALT.
6. CONTRACTOR SHALL CONFIRM ALL EXISTING SLOPES FOR ACCESSIBLE ROUTES AS WELL AS THE ACCESSIBLE PARKING STALLS AND ACCESSIBLE AISLES WITH A SLOPE METER TO CONFIRM MAXIMUM SLOPES ARE NOT EXCEEDED.
7. CONTRACTOR IS REQUIRED TO PROVIDE AS-BUILT SPOT ELEVATIONS ALONG THE ACCESSIBLE ROUTES SHOWN ON THIS PLAN EVERY 10' MIN. IN ORDER TO CONFIRM MAXIMUM (2%) CROSS-SLOPE AND MAXIMUM (5%) SLOPES IN THE DIRECTION OF TRAVEL. IN ADDITION, SPOT ELEVATIONS ARE REQUIRED ON ALL CORNERS AND MIDPOINTS OF ACCESSIBLE PARKING STALLS AND ACCESSIBLE AISLES TO CONFIRM MAXIMUM 2% SLOPES ARE NOT EXCEEDED IN ALL DIRECTIONS. THIS INFORMATION SHALL BE PROVIDED A MINIMUM OF 2 WEEKS BEFORE STORE TURNOVER.

OWNER:	PARCEL 16A MIT MONTEVIDEO, LLC 8850 COLUMBIA PARKWAY COLUMBIA, MD 21045 CONTACT: MARK LEVY TEL: (410) 579-2442
DEVELOPER:	J.C. BAR PROPERTIES, INC 415 FALLOWFIELD ROAD, SUITE 301 CAMP HILL, PA 17011 CONTACT: JASON MITCHELL TEL: (717) 761-7801
TAX MAP: 43 GRID: 10 ZONED: B-1 PARCEL: 16A 1ST ELECTION DISTRICT, HOWARD COUNTY, MARYLAND ZB REF.: 1096m SITE AREA: 4.039 AC DPZ REF.: SDP-15-069	

SUBDIVISION NAME: MONTEVIDEO CROSSING
PARCEL A
SECTION/AREA: N/A
PLAT # 23695
WATER CODE: N/A
SEWER CODE: N/A

PROFESSIONAL CERTIFICATION
I, DAVID M. KUKLISH, P.E., HEREBY CERTIFY THAT THESE DOCUMENTS WERE PREPARED OR APPROVED BY ME, AND THAT I AM A DULY LICENSED PROFESSIONAL ENGINEER UNDER THE LAWS OF THE STATE OF MARYLAND, LICENSE NO. 36224, EXPIRATION DATE: 8/19/2016

GENERAL NOTE:
IT IS THE RESPONSIBILITY OF THE CONTRACTOR TO REVIEW ALL OF THE DRAWINGS AND SPECIFICATIONS ASSOCIATED WITH THIS PROJECT. WORK SCOPE PRIOR TO THE INITIATION OF CONSTRUCTION. SHOULD THE CONTRACTOR FIND A CONFLICT WITH THE DOCUMENTS RELATIVE TO THE SPECIFICATIONS OR APPLICABLE CODES, IT IS THE CONTRACTOR'S RESPONSIBILITY TO NOTIFY THE PROJECT ENGINEER OF RECORD IN WRITING PRIOR TO THE START OF CONSTRUCTION. FAILURE BY THE CONTRACTOR TO NOTIFY THE PROJECT ENGINEER SHALL CONSTITUTE ACCEPTANCE OF FULL RESPONSIBILITY BY THE CONTRACTOR TO COMPLETE THE SCOPE OF THE WORK AS DEFINED BY THE DRAWINGS AND IN FULL CONFORMANCE WITH LOCAL REGULATIONS AND CODES.

APPROVED: DEPARTMENT OF PLANNING AND ZONING

CHIEF-DEVELOPMENT ENGINEERING DIVISION	DATE 10-14-16
CHIEF-DIVISION OF LAND DEVELOPMENT	DATE 11-2-16
DIRECTOR	DATE 11-3-16

CVS pharmacy

TYPE 'B'
REAR DRIVE-THRU

STORE NUMBER: 10528

WASHINGTON BLVD. & MONTEVIDEO RD.
JESSUP, HOWARD COUNTY, MARYLAND

PROJECT TYPE: NEW
DEAL TYPE: LEASE

CS PROJECT NUMBER: 77620

THE FOLLOWING STATES REQUIRE NOTIFICATION BY EXCAVATORS, DESIGNERS, OR ANY PERSON PREPARING TO DISTURB THE EARTH'S SURFACE ANYWHERE IN THE STATE, IN VIRGINIA, MARYLAND, THE DISTRICT OF COLUMBIA, AND DELAWARE CALL - 811
(WV 1-800-245-4848) (PA 1-800-242-1776) (DC 1-800-257-7777) (VA 1-800-552-7001) (MD 1-800-257-7777) (DE 1-800-282-8555)

BOHLER ENGINEERING
901 DULANEY VALLEY ROAD, SUITE 801
TOWSON, MARYLAND 21204
Phone: (410) 821-7900
Fax: (410) 821-7987
MD@BohlerEng.com

DEVELOPER
J.C. BAR DEVELOPMENT, LLC

415 FALLOWFIELD ROAD, SUITE 301
CAMP HILL, PA 17011
CONTACT: JASON MITCHELL
TEL : (717) 761-7801

D.M. KUKLISH
PROFESSIONAL ENGINEER
DELAWARE LICENSE No. 14024
MARYLAND LICENSE No. 36224
VIRGINIA LICENSE No. 036224

REVISIONS

REV:	DATE:	COMMENT:	BY:

CHECKED BY: DMK
DRAWN BY: CRH
DATE: 4/13/16
JOB NUMBER: MD131504

TITLE: ADA COMPLIANCE PLAN

SHEET NUMBER: 7 OF 27

COMMENTS: FILE NO. SDP-15-069

K:\15DET55009\DRAWINGS\PLAN SETS\SITE DEVELOPMENT PLANS\REVISIONS\REVISION 6\DET55009SSP-----\LAYOUT 07 - ADA PLAN

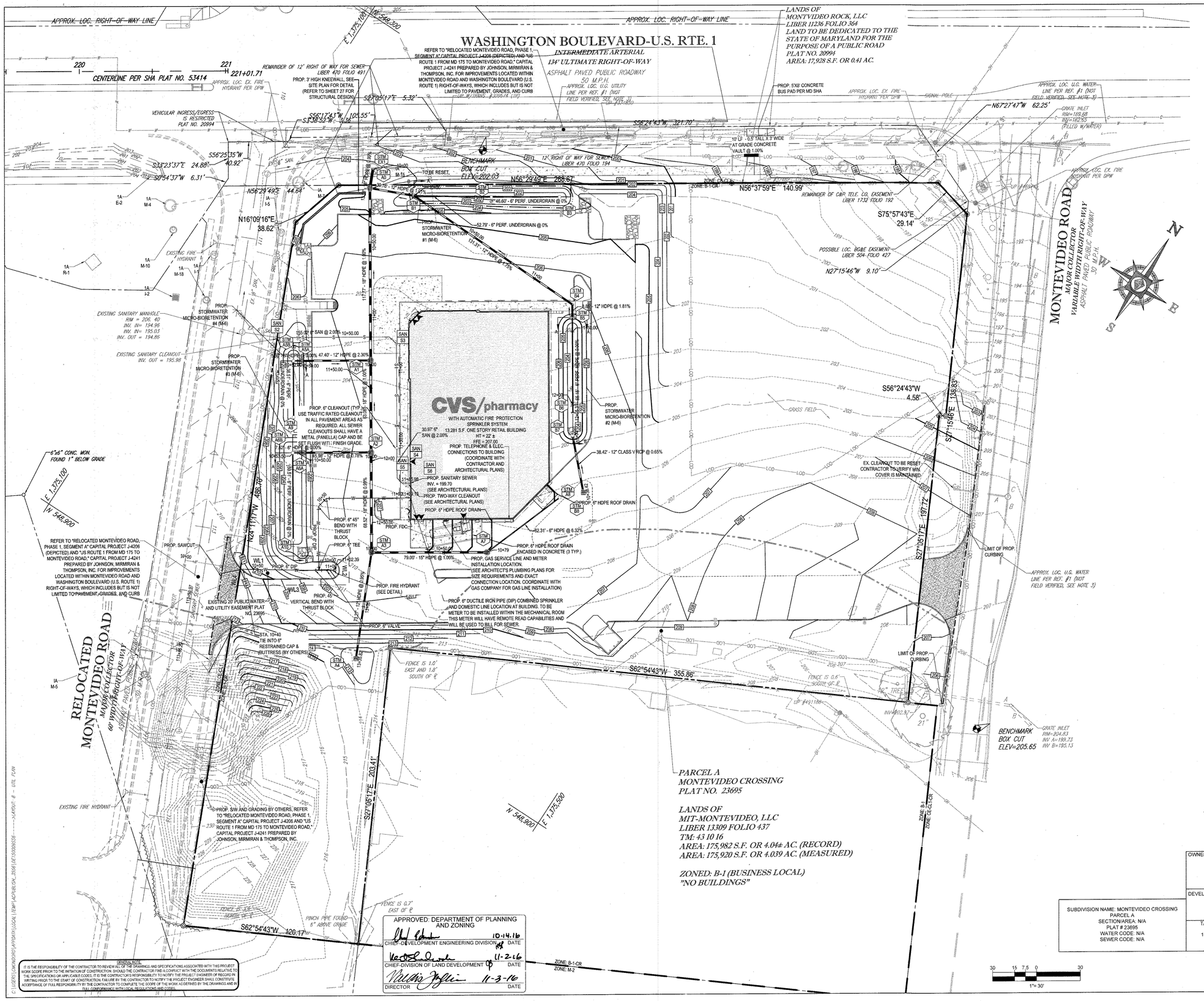

cvs pharmacy

TYPE 'B'
REAR DRIVE-THRU

STORE NUMBER: 10528

WASHINGTON BLVD. & MONTEVIDEO RD.
JESSUP, HOWARD COUNTY, MARYLAND

PROJECT TYPE: NEW
DEAL TYPE: LEASE

CS PROJECT NUMBER: 77620

THE FOLLOWING STATES REQUIRE NOTIFICATION BY EXCAVATORS, DESIGNERS, OR ANY PERSON PREPARING TO DISTURB THE EARTH'S SURFACE ANYWHERE IN THE STATE: IN VIRGINIA, MARYLAND, THE DISTRICT OF COLUMBIA, AND DELAWARE CALL - 811
(WV: 1-800-245-4848) (PA: 1-800-242-1776) (DC: 1-800-257-7777) (VA: 1-800-552-7001) (MD: 1-800-257-7777) (DE: 1-800-282-8555)

BOHLER ENGINEERING
901 DULANEY VALLEY ROAD, SUITE 801
TOWSON, MARYLAND 21204
Phone: (410) 821-7900
Fax: (410) 821-7987
MD@BohlerEng.com

DEVELOPER
J.C. BAR DEVELOPMENT, LLC

415 FALLOWFIELD ROAD, SUITE 301
CAMP HILL, PA 17011
CONTACT: JASON MITCHELL
TEL : (717) 761-7801

D.M. KUKLISH
PROFESSIONAL ENGINEER
DELAWARE LICENSE No. 12432
MARYLAND LICENSE No. 36224
VIRGINIA LICENSE No. 0402048309

REVISIONS

REV:	DATE:	COMMENT:	BY:

CHECKED BY: DMK
DRAWN BY: CRH
DATE: 4/13/16
JOB NUMBER: MD131504

TITLE:
UTILITY PLAN

SHEET NUMBER: 8 OF 27

COMMENTS:
FILE NO. SDP-15-069

OPERATION AND MAINTENANCE SCHEDULE FOR BIO-RETENTION AREAS (M-6)

(FACILITY NOS. 19, 21, 26, & 28)

1. THE OWNER SHALL MAINTAIN THE PLANT MATERIAL, MULCH LAYER AND SOIL LAYER ANNUALLY. MAINTENANCE OF MULCH AND SOIL IS LIMITED TO CORRECTING AREAS OF EROSION OR WASH OUT. ANY MULCH REPLACEMENT SHALL BE DONE IN THE SPRING. PLANT MATERIAL SHALL BE CHECKED FOR DISEASE AND INSECT INFESTATION AND MAINTENANCE WILL ADDRESS DEAD MATERIAL AND PRUNING. ACCEPTABLE REPLACEMENT PLANT MATERIAL IS LIMITED TO THE FOLLOWING: 2000 MARYLAND STORMWATER DESIGN MANUAL VOLUME II, TABLE A.4.1 AND 2.
2. THE OWNER SHALL PERFORM A PLANT IN THE SPRING AND IN THE FALL EACH YEAR. DURING THE INSPECTION, THE OWNER SHALL REMOVE DEAD AND DISEASED VEGETATION CONSIDERED BEYOND TREATMENT, REPLACE DEAD PLANT MATERIAL WITH ACCEPTABLE REPLACEMENT PLAN MATERIAL. TREAT DISEASED TREES AND SHRUBS AND REPLACE DEFICIENT STAKES AND WIRES.
3. THE OWNER SHALL INSPECT THE MULCH EACH SPRING. THE MULCH SHALL BE REPLACED EVERY TWO TO THREE YEARS. THE PREVIOUS MULCH LAYER SHALL BE REMOVED BEFORE THE NEW LAYER IS APPLIED.
4. THE OWNER SHALL CORRECT SOIL EROSION ON AN AS NEEDED BASIS, WITH A MINIMUM OF ONCE PER MONTH AND AFTER EACH HEAVY STORM.

REFER TO "RELOCATED MONTEVIDEO ROAD, PHASE 1, SEGMENT A" AND "US ROUTE 1 FROM MD 175 TO MONTEVIDEO ROAD," PREPARED BY JOHNSON, MIRMIRAN & THOMPSON, INC. FOR IMPROVEMENTS LOCATED WITHIN MONTEVIDEO ROAD AND WASHINGTON BOULEVARD (U.S. ROUTE 1) RIGHT-OF-WAYS, WHICH INCLUDES BUT IS NOT LIMITED TO PAVEMENT, GRADES, AND CURB

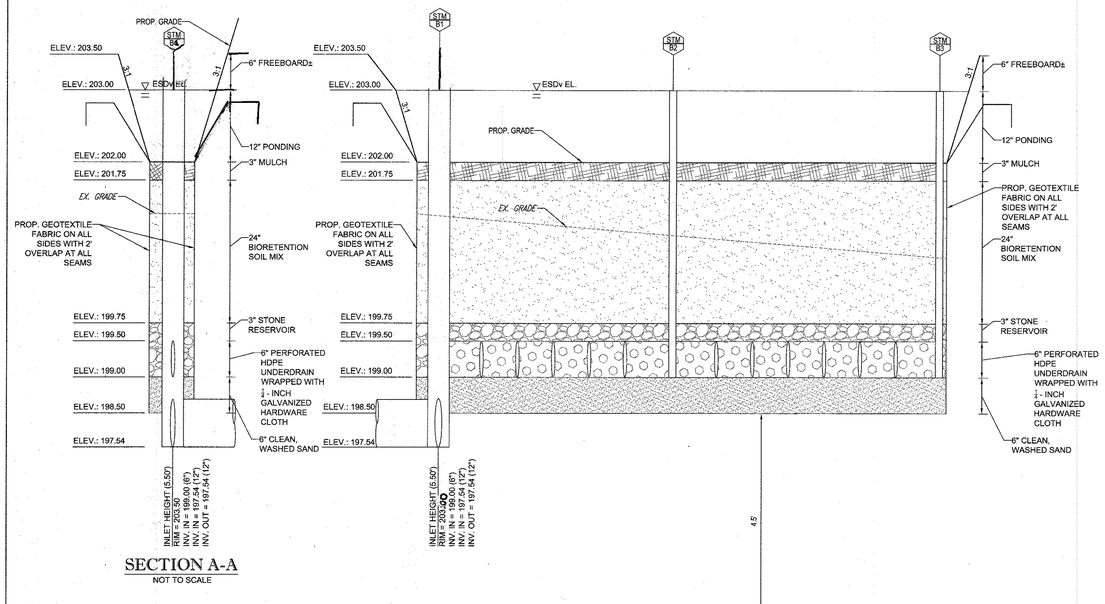

SECTION A-A
NOT TO SCALE

SECTION B-B
NOT TO SCALE

WL ELEV.: 194.00
PER ESC SUBSURFACE EXPLORATION, LABORATORY TESTING, AND GEOTECHNICAL ENGINEERING ANALYSIS REPORT

MICRO BIORETENTION (M-6) FACILITY #1
NOT TO SCALE

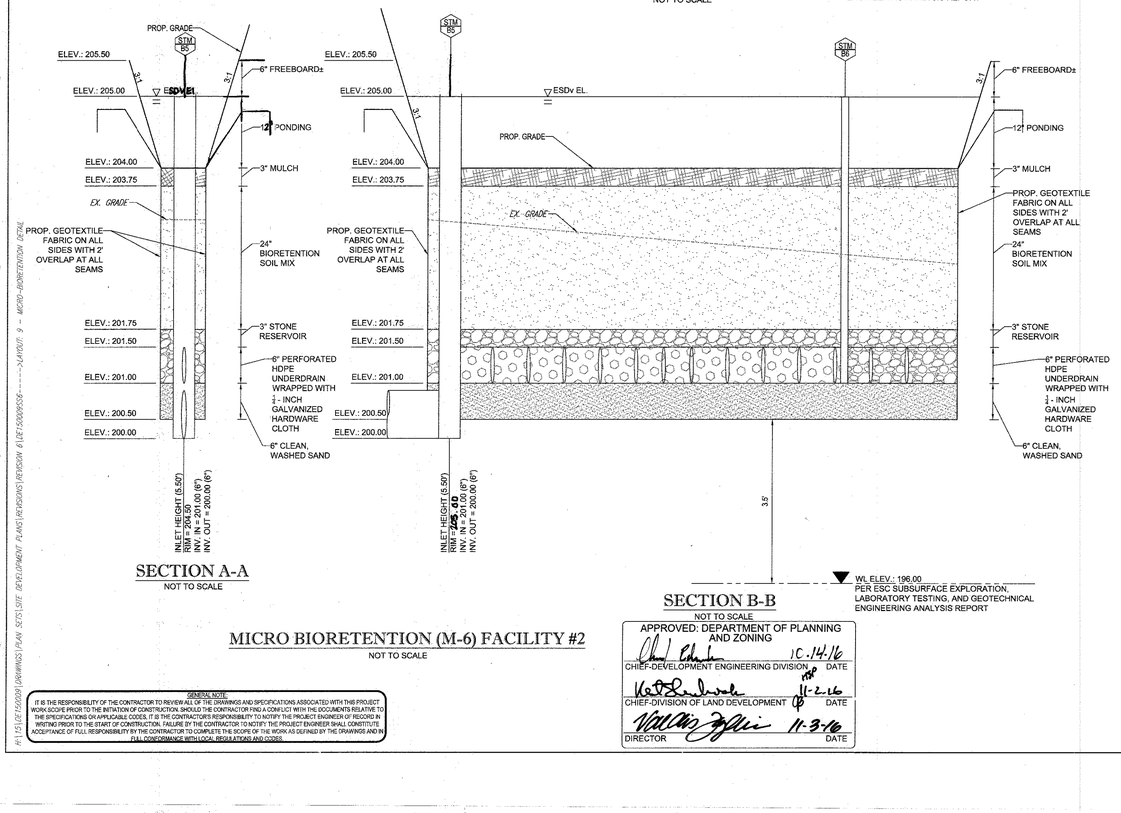

SECTION A-A
NOT TO SCALE

SECTION B-B
NOT TO SCALE

WL ELEV.: 196.00
PER ESC SUBSURFACE EXPLORATION, LABORATORY TESTING, AND GEOTECHNICAL ENGINEERING ANALYSIS REPORT

MICRO BIORETENTION (M-6) FACILITY #2
NOT TO SCALE

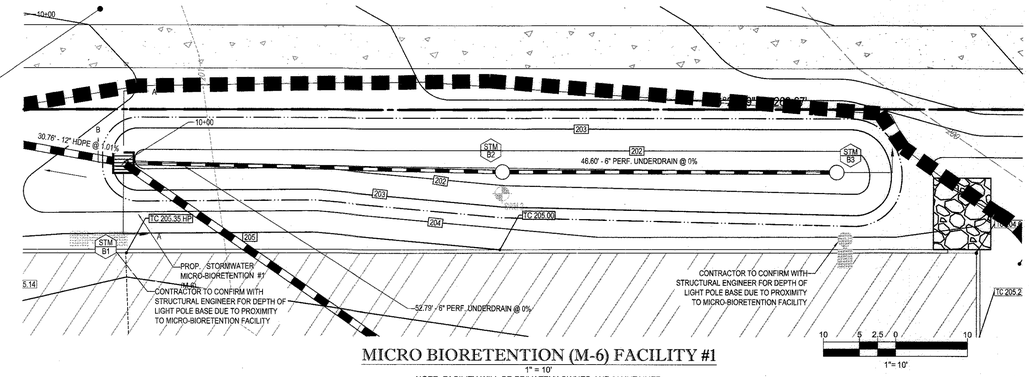

MICRO BIORETENTION (M-6) FACILITY #1
1" = 10'
NOTE: FACILITY WILL BE PRIVATELY OWNED AND MAINTAINED

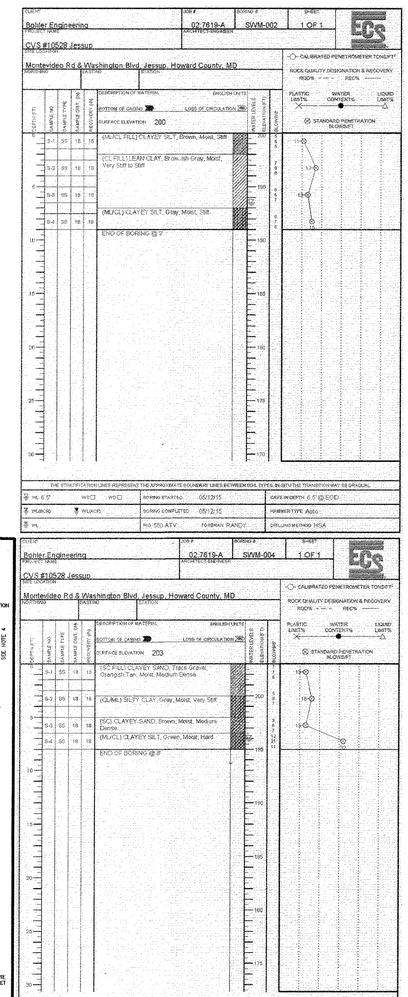

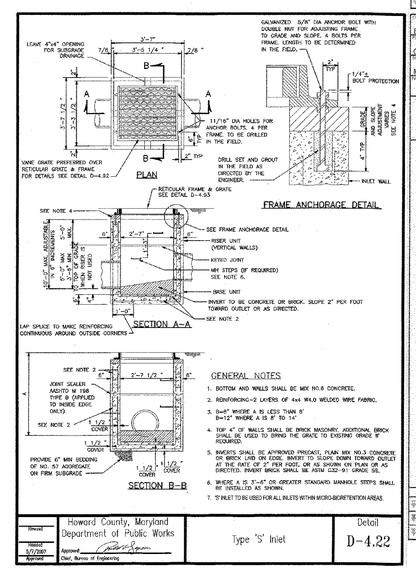

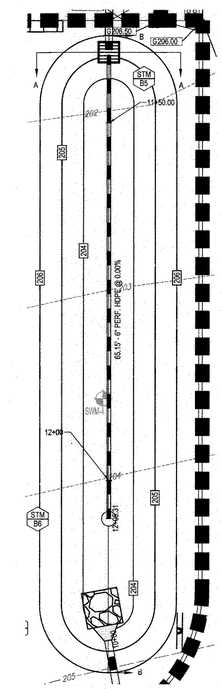

MICRO BIORETENTION (M-6) FACILITY #2
1" = 10'
NOTE: FACILITY WILL BE PRIVATELY OWNED AND MAINTAINED
10 5 2.5 0 10
1"= 10'

GENERAL NOTE
IT IS THE RESPONSIBILITY OF THE CONTRACTOR TO REVIEW ALL OF THE DRAWINGS AND SPECIFICATIONS ASSOCIATED WITH THIS PROJECT WORK SCOPE PRIOR TO THE INITIATION OF CONSTRUCTION. SHOULD THE CONTRACTOR FIND A CONFLICT WITH THE DOCUMENTS RELATIVE TO THE SPECIFICATIONS ON APPLICABLE CODES, IT IS THE CONTRACTOR'S RESPONSIBILITY TO NOTIFY THE PROJECT ENGINEER OF RECORD IN WRITING PRIOR TO THE START OF CONSTRUCTION. FAILURE BY THE CONTRACTOR TO NOTIFY THE PROJECT ENGINEER SHALL CONSTITUTE ACCEPTANCE OF FULL RESPONSIBILITY BY THE CONTRACTOR TO COMPLETE THE SCOPE OF THE WORK AS DEFINED BY THE DRAWINGS AND IN FULL CONFORMANCE WITH LOCAL REGULATIONS AND CODES.

APPROVED: DEPARTMENT OF PLANNING AND ZONING

CHIEF-DEVELOPMENT ENGINEERING DIVISION	DATE 11-14-16
CHIEF-DIVISION OF LAND DEVELOPMENT	DATE 11-2-16
DIRECTOR	DATE 11-3-16

CVS pharmacy

TYPE 'B'
REAR DRIVE-THRU

STORE NUMBER: 10528

WASHINGTON BLVD. & MONTEVIDEO RD.
JESSUP, HOWARD COUNTY, MARYLAND

PROJECT TYPE: NEW
DEAL TYPE: LEASE

CS PROJECT NUMBER: 77620

THE FOLLOWING STATES REQUIRE NOTIFICATION BY EXCAVATORS, DESIGNERS, OR ANY PERSON PREPARING TO DISTURB THE EARTH'S SURFACE ANYWHERE IN THE STATE. IN VIRGINIA, MARYLAND, THE DISTRICT OF COLUMBIA, AND DELAWARE CALL - 811
(WV 1-800-245-4848) (PA 1-800-242-1776) (DC 1-800-257-7777)
(VA 1-800-552-7001) (MD 1-800-257-7777) (DE 1-800-282-8555)

BOHLER ENGINEERING
901 DULANEY VALLEY ROAD, SUITE 801
TOWSON, MARYLAND 21204
Phone: (410) 821-7900
Fax: (410) 821-7987
MD@BohlerEng.com

DEVELOPER
J.C. BAR DEVELOPMENT, LLC

415 FALLOWFIELD ROAD, SUITE 301
CAMP HILL, PA 17011
CONTACT: JASON MITCHELL
TEL : (717) 761-7801

D.M. KUKLISH
PROFESSIONAL ENGINEER
DEVELOPMENT DESIGN & PLANNING
MARYLAND LICENSE NO. 36224
VIRGINIA LICENSE NO. 0402020769

REVISIONS

REV:	DATE:	COMMENT:	BY:

CHECKED BY:	DMK
DRAWN BY:	CRH
DATE:	4/13/16
JOB NUMBER:	MD131504

TITLE: MICRO-BIORETENTION FACILITY DETAILS

SHEET NUMBER: 9 OF 27

COMMENTS: FILE NO. SDP-15-069

OWNER: PARCEL 19A
MIT MONTEVIDEO, LLC
8850 COLUMBIA PARKWAY
COLUMBIA, MD 21045
CONTACT: MARK LEVY
TEL: (410) 579-2442

DEVELOPER: J.C. BAR PROPERTIES, INC
415 FALLOWFIELD ROAD, SUITE 301
CAMP HILL, PA 17011
CONTACT: JASON MITCHELL
TEL: (717) 761-7801

TAX MAP: 43 GRID: 10 ZONED: B-1
PARCEL: 19A
1ST ELECTION DISTRICT, HOWARD COUNTY, MARYLAND
ZB REF.: 1096m SITE AREA: 4.039 AC
DPZ REF.: SDP-15-069

SUBDIVISION NAME: MONTEVIDEO CROSSING
PARCEL A
SECTION/AREA: N/A
PLAT # 23695
WATER CODE: N/A
SEWER CODE: N/A

PROFESSIONAL CERTIFICATION
I, DAVID M. KUKLISH, P.E., HEREBY CERTIFY THAT THESE DOCUMENTS WERE PREPARED OR APPROVED BY ME, AND THAT I AM A DULY LICENSED PROFESSIONAL ENGINEER UNDER THE LAWS OF THE STATE OF MARYLAND, LICENSE NO. 36224, EXPIRATION DATE: 8/18/2017

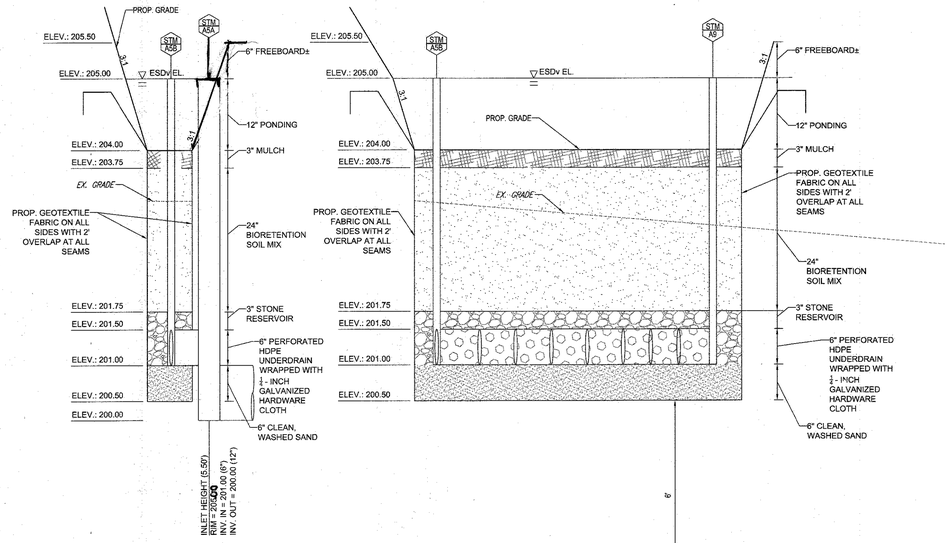

SECTION A-A
NOT TO SCALE

MICRO BIORETENTION (M-6) FACILITY #4
NOT TO SCALE

SECTION B-B
NOT TO SCALE

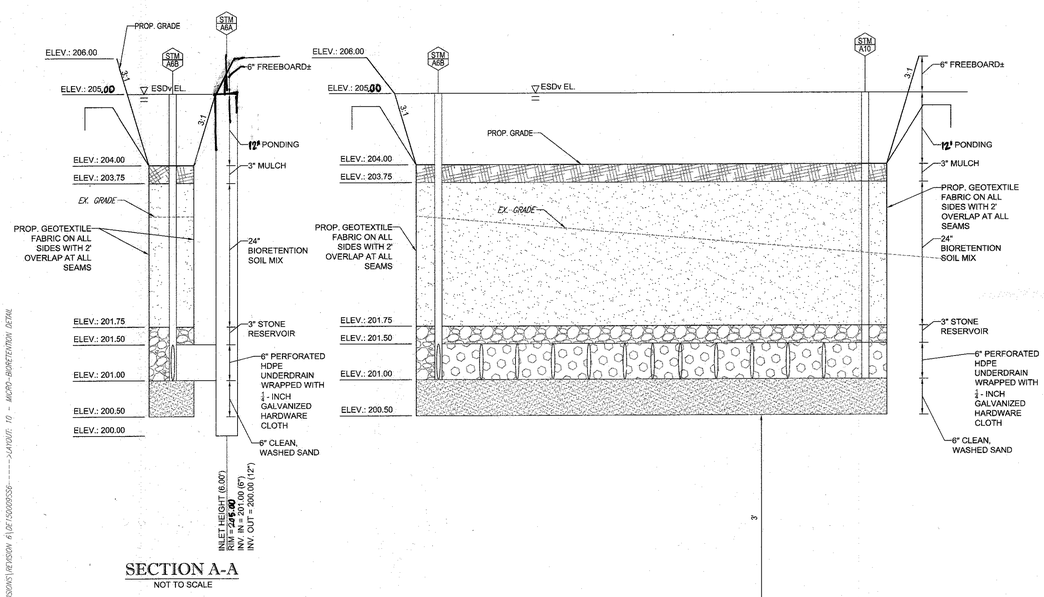

SECTION A-A
NOT TO SCALE

MICRO BIORETENTION (M-6) FACILITY #3
NOT TO SCALE

SECTION B-B
NOT TO SCALE

OPERATION AND MAINTENANCE SCHEDULE FOR BIO-RETENTION AREAS (M-6)

(FACILITY NOS. 19, 21, 26, & 28)

1. THE OWNER SHALL MAINTAIN THE PLANT MATERIAL, MULCH LAYER AND SOIL LAYER ANNUALLY. MAINTENANCE OF MULCH AND SOIL IS LIMITED TO CORRECTING AREAS OF EROSION OR WASH OUT. ANY MULCH REPLACEMENT SHALL BE DONE IN THE SPRING. PLANT MATERIAL SHALL BE CHECKED FOR DISEASE AND INSECT INFESTATION AND MAINTENANCE WILL ADDRESS DEAD MATERIAL AND PRUNING. ACCEPTABLE REPLACEMENT PLANT MATERIAL IS LIMITED TO THE FOLLOWING: 2000 MARYLAND STORMWATER DESIGN MANUAL VOLUME II, TABLE A.4.1 AND 2.
2. THE OWNER SHALL PERFORM A PLANT IN THE SPRING AND IN THE FALL EACH YEAR. DURING THE INSPECTION, THE OWNER SHALL REMOVE DEAD AND DISEASED VEGETATION CONSIDERED BEYOND TREATMENT, REPLACE DEAD PLANT MATERIAL WITH ACCEPTABLE REPLACEMENT PLAN MATERIAL, TREAT DISEASED TREES AND SHRUBS AND REPLACE DEFICIENT STAKES AND WIRES.
3. THE OWNER SHALL INSPECT THE MULCH EACH SPRING. THE MULCH SHALL BE REPLACED EVERY TWO TO THREE YEARS. THE PREVIOUS MULCH LAYER SHALL BE REMOVED BEFORE THE NEW LAYER IS APPLIED.
4. THE OWNER SHALL CORRECT SOIL EROSION ON AN AS NEEDED BASIS, WITH A MINIMUM OF ONCE PER MONTH AND AFTER EACH HEAVY STORM.

REFER TO "RELOCATED MONTEVIDEO ROAD, PHASE 1, SEGMENT A" CAPITAL PROJECT J-4208 AND "US ROUTE 1 FROM MD 175 TO MONTEVIDEO ROAD," CAPITAL PROJECT J-4241 PREPARED BY JOHNSON, MIRMIRAN & THOMPSON, INC. FOR IMPROVEMENTS LOCATED WITHIN MONTEVIDEO ROAD AND WASHINGTON BOULEVARD (U.S. ROUTE 1) RIGHT-OF-WAYS, WHICH INCLUDES BUT IS NOT LIMITED TO PAVEMENT, GRADES, AND CURB

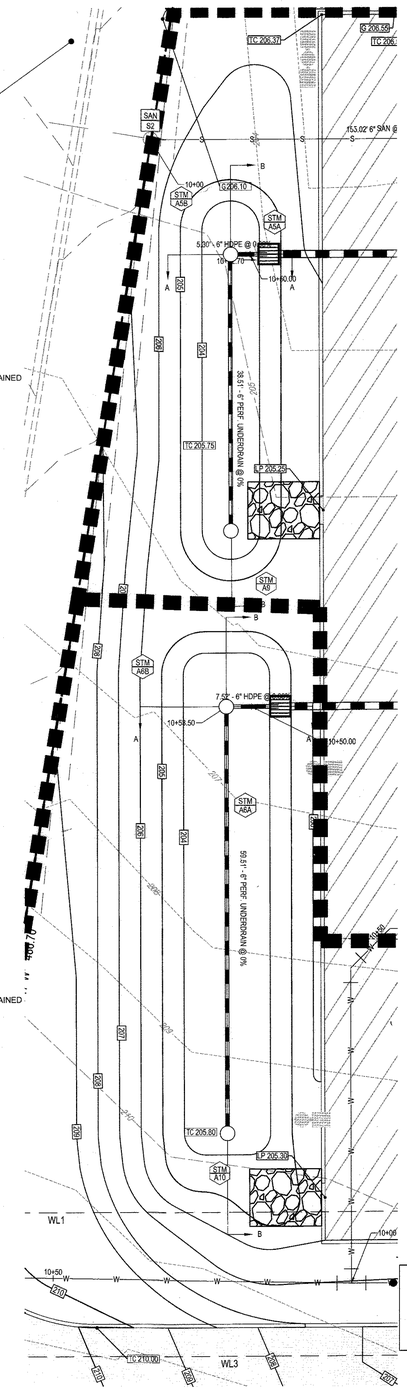

MICRO BIORETENTION (M-6) FACILITY #4
1" = 10'
NOTE: FACILITY WILL BE PRIVATELY OWNED AND MAINTAINED

MICRO BIORETENTION (M-6) FACILITY #3
1" = 10'
NOTE: FACILITY WILL BE PRIVATELY OWNED AND MAINTAINED

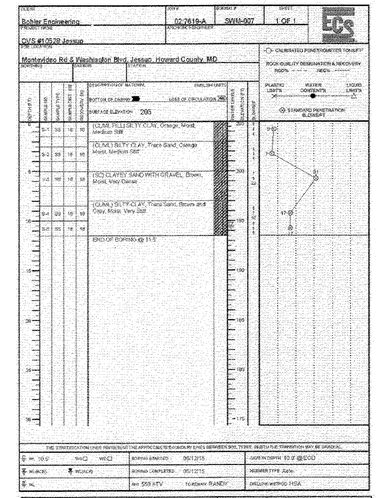

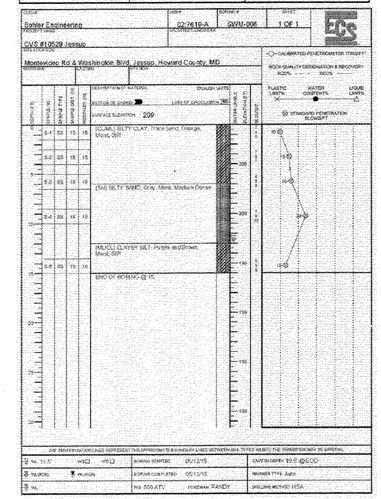

OWNER:	PARCEL 16A MIT MONTEVIDEO, LLC 8850 COLUMBIA PARKWAY COLUMBIA, MD 21045 CONTACT: MARK LEVY TEL: (410) 579-2442
DEVELOPER:	J.C. BAR PROPERTIES, INC 415 FALLOWFIELD ROAD, SUITE 301 CAMP HILL, PA 17011 CONTACT: JASON MITCHELL TEL: (717) 761-7801
TAX MAP: 43 GRID: 10 ZONED: B-1	PARCEL: 16A 1ST ELECTION DISTRICT, HOWARD COUNTY, MARYLAND ZB REF.: 1096m SITE AREA: 4.039 AC DPZ REF.: SDP-15-069

SUBDIVISION NAME: MONTEVIDEO CROSSING
PARCEL A
SECTION/AREA: N/A
PLAT # 23695
WATER CODE: N/A
SEWER CODE: N/A

10 5 2.5 0 10
1" = 10'

PROFESSIONAL CERTIFICATION
I, DAVID M. KUKLISH, P.E., HEREBY CERTIFY THAT THESE DOCUMENTS WERE PREPARED OR APPROVED BY ME, AND THAT I AM A DULY LICENSED PROFESSIONAL ENGINEER UNDER THE LAWS OF THE STATE OF MARYLAND, LICENSE NO. 36224, EXPIRATION DATE: 8/19/20

APPROVED: DEPARTMENT OF PLANNING AND ZONING

CHIEF-DEVELOPMENT ENGINEERING DIVISION	DATE 10-14-16
CHIEF-DIVISION OF LAND DEVELOPMENT	DATE 11-2-16
DIRECTOR	DATE 11-3-16

GENERAL NOTE:
IT IS THE RESPONSIBILITY OF THE CONTRACTOR TO REVIEW ALL OF THE DRAWINGS AND SPECIFICATIONS ASSOCIATED WITH THIS PROJECT WORK SCOPE PRIOR TO THE INITIATION OF CONSTRUCTION. SHOULD THE CONTRACTOR FIND A CONFLICT WITH THE DOCUMENTS RELATIVE TO THE SPECIFICATIONS OR APPLICABLE CODES, IT IS THE CONTRACTORS RESPONSIBILITY TO NOTIFY THE PROJECT ENGINEER OF RECORD IN WRITING PRIOR TO THE START OF CONSTRUCTION. FAILURE BY THE CONTRACTOR TO NOTIFY THE PROJECT ENGINEER SHALL CONSTITUTE ACCEPTANCE OF FULL RESPONSIBILITY BY THE CONTRACTOR TO COMPLETE THE SCOPE OF THE WORK AS DEFINED BY THE DRAWINGS AND IN FULL CONFORMANCE WITH LOCAL REGULATIONS AND CODES.

A:\15\MD131504\DRAWINGS\PLAN SETS\SITE DEVELOPMENT PLANS\REVISIONS\REVISION 4\DEDOOOOS56----JAYSON 10 - MICRO-BIORETENTION DETAIL

CVS pharmacy

TYPE 'B'
REAR DRIVE-THRU

STORE NUMBER: 10528

WASHINGTON BLVD. & MONTEVIDEO RD.
JESSUP, HOWARD COUNTY, MARYLAND

PROJECT TYPE: NEW
DEAL TYPE: LEASE

CS PROJECT NUMBER: 77620

THE FOLLOWING STATES REQUIRE NOTIFICATION BY EXCAVATORS, DESIGNERS, OR ANY PERSON PREPARING TO DISTURB THE EARTH'S SURFACE ANYWHERE IN THE STATE. IN VIRGINIA, MARYLAND, THE DISTRICT OF COLUMBIA, AND DELAWARE CALL - 811
(WV 1-800-245-4848) (PA 1-800-242-1776) (DC 1-800-257-7777) (VA 1-800-552-7001) (MD 1-800-257-7777) (DE 1-800-282-8555)

BOHLER ENGINEERING
901 DULANEY VALLEY ROAD, SUITE 801
TOWSON, MARYLAND 21204
Phone: (410) 821-7900
Fax: (410) 821-7987
MD@BohlerEng.com

DEVELOPER
J.C. BAR DEVELOPMENT, LLC

415 FALLOWFIELD ROAD, SUITE 301
CAMP HILL, PA 17011
CONTACT: JASON MITCHELL
TEL : (717) 761-7801

D.M. KUKLISH
PROFESSIONAL ENGINEER
VIRGINIA LICENSE No. 0402013209

REVISIONS

REV:	DATE:	COMMENT:	BY:

CHECKED BY:	DMK
DRAWN BY:	CRH
DATE:	4/13/16
JOB NUMBER:	MD131504

TITLE:
MICRO-BIORETENTION FACILITY DETAILS

SHEET NUMBER:
10 OF 27

COMMENTS:
FILE NO. SDP-15-069

NOTES:

1. CONTRACTOR SHALL PROVIDE 3"-45° BEVEL AROUND PIPE OPENINGS UPSTREAM HEADWALLS.

D	E	F	G	H	J	K	L	N	R	Δ VOL. CY
12" 15"	2'-8" 2'-11"	7'-2" 7'-5"	3'-0" 3'-0"	2'-6" 2'-9"	2'-0" 2'-0"	8"	8"	8"	#5-12" O/C	1.50 1.60
18" 21"	3'-0" 3'-4"	7'-6" 7'-9"	3'-0"	3'-0" 3'-3"	2'-0" 2'-0"	8"	8"	8"	#5-12" O/C	1.70 1.80
24" 27"	3'-8" 3'-11"	8'-0" 8'-3"	3'-0"	3'-6" 3'-9"	2'-0" 2'-0"	8"	8"	8"	#5-12" O/C	1.90 2.00
30"	4'-2"	8'-6"	3'-0"	4'-0"	2'-1±	8"	8"	10"	#5-12" O/C	2.85
36"	4'-8"	10'-0"	3'-6"	4'-6"	2'-3"	8"	10"	10"	#5-12" O/C	3.15
42"	5'-3"	11'-6"	4'-0"	5'-0"	2'-9"	8"	10"	10"	#5-12" O/C	3.87
48"	5'-10"	13'-0"	4'-6"	5'-6"	3'-0"	8"	10"	12"	#5-12" O/C	5.08
54"	6'-5"	14'-6"	5'-0"	6'-0"	3'-3"	9"	12"	12"	#6-8" O/C	6.50
60"	7'-0"	16'-0"	5'-6"	6'-6"	3'-6"	9"	12"	12"	#6-8" O/C	7.98
66"	7'-7"	17'-6"	6'-0"	7'-0"	3'-9"	9"	12"	14"	#6-8" O/C	9.14
72"	8'-2"	19'-0"	6'-6"	7'-6"	4'-3"	9"	12"	14"	#6-8" O/C	11.10

Δ - BASED ON 2:1 CHANNEL SIDE SLOPES AND 45 ANGLE

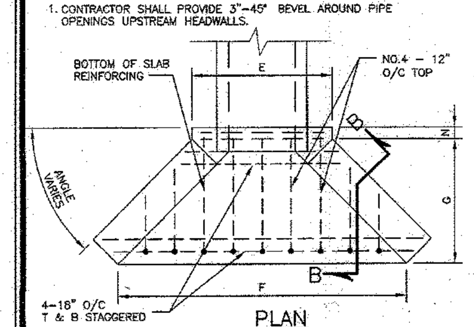

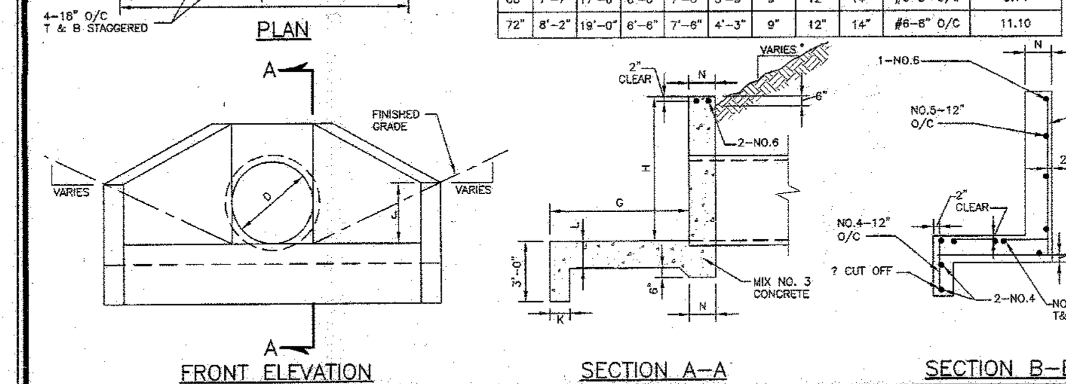

Howard County, Maryland Department of Public Works — Revised 5/7/2007 — Approved: Chief, Bureau of Engineering — TYPE 'A' Headwall Circular Pipe — Detail D-5.11

FIGURES SHOWN IN TABLE ARE MEASURED FROM INVERT OF PIPE TO GRADE

PIPE DIA	REINFORCED CONCRETE PIPE ASTM-C76 CLASS I MIN DEPTH	CLASS I MAX DEPTH	CLASS II MIN DEPTH	CLASS II MAX DEPTH	CLASS III MIN DEPTH	CLASS III MAX DEPTH	CLASS IV MIN DEPTH	CLASS IV MAX DEPTH	CLASS V MIN DEPTH	CLASS V	HDPE PIPE ASTM F405, F667; AASHTO M252, M294, MP6-95 PIPE DIAMETER	MIN DEPTH	MAX DEPTH
12"					4	7	3	14	3	ALL PIPE CAN BE USED OVER 30 FEET DEPTH	4"	3	15
14"											6"	3	15
15"					4	11	3	22	3		8"	3	13
16"											10"	3	12
18"					4	12	3	23	3		12"	4	13
20"											15"	4	13
21"					4	12	3	24	3		18"	4	13
24"					5	13	4	25	4		24"	5	14
27"					5	13	4	20	4		30"	5	14
30"					5	13	4	21	4		36"	5	15
36"			6	9	5	14	5	22	5		42"	6	13
42"			6	9	5	14	5	21	5		48"	6	14
48"			6	10	6	15	6	22	6		60"	7	15
54"			6	11	6	16	6	23	6				
60"			7	12	7	17	7	23	7				
66"	8	10	7	13	7	17	7	24	7				
72"	8	11	8	13	8	17	8	25	8				

1. PIPE SHALL NOT BE USED WHERE THERE ARE BLANK SPACES IN THE TABLE.
2. SEE G-2.11 AND G-2.12 FOR BEDDING.

Howard County, Maryland Department of Public Works — Revised 5/7/2007 — Approved: Chief, Bureau of Engineering — Storm Drain RCP & HDPE Pipe Permissible Depth Table — Detail D-3.01

APPENDIX D.8 MISCELLANEOUS DETAILS FOR COMPLIANCE WITH PERFORMANCE CRITERIA

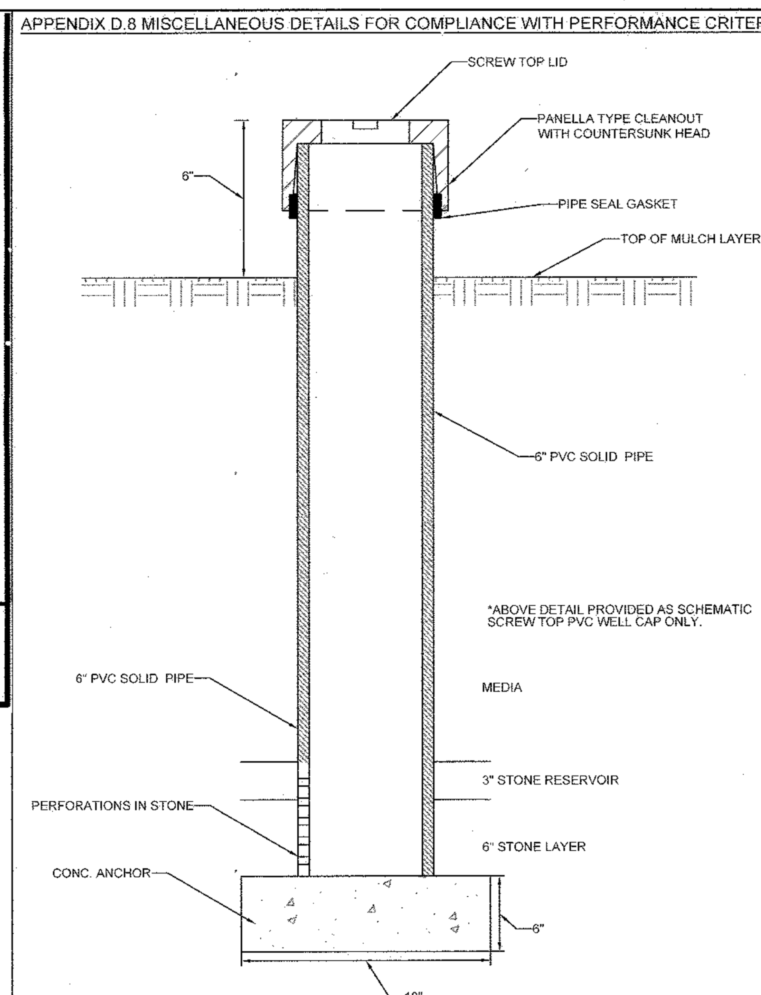

OBSERVATION WELL DETAIL

EACH OBSERVATION WELL/CLEANOUT MUST INCLUDE THE FOLLOWING:
1. FOR AN UNDERGROUND FLUSH MOUNTED OBSERVATION WELL/CLEANOUT, PROVIDE A TUBE MADE OF NON-CORROSIVE MATERIAL, SCHEDULE 40 OR EQUAL, AT LEAST THREE FEET LONG WITH AN INSIDE DIAMETER OF AT LEAST 6 INCHES.
2. THE TUBE SHALL HAVE A FACTORY ATTACHED CAST IRON OR HIGH IMPACT PLASTIC COLLAR WITH RIBS TO PREVENT ROTATION WHEN REMOVING SCREW TOP LID. THE SCREW TOP SHALL BE CAST IRON OR HIGH IMPACT PLASTIC THAT WILL WITHSTAND ULTRA-VIOLET RAYS.
3. OBSERVATION WELL TO EXTEND 6" ABOVE THE TOP OF MULCH. THE 6" PVC PIPE IS TO BE PERFORATED WITH 3/8" PERFORATIONS AT 6" ON CENTER, 4 PER ROW FOR THE ENTIRE HEIGHT OF THE CLEANOUT WITHIN THE STONE LAYER.

NOTE: WELL CAP MUST BE PERMANENTLY MARKED WITH AS-BUILT DEPTH TO INVERT.

D.8.5

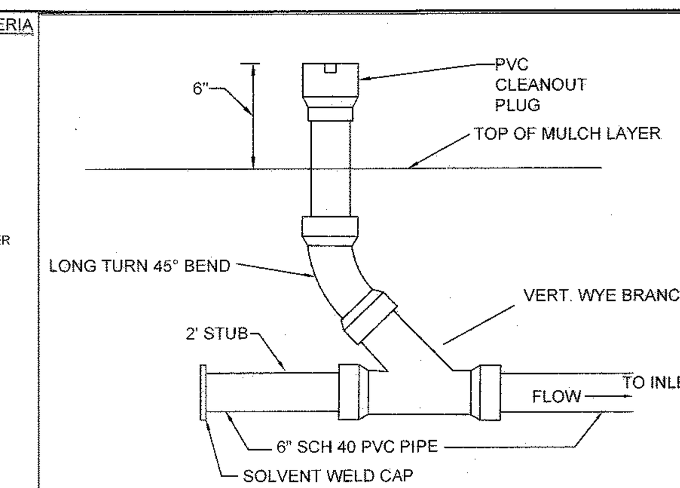

MICRO-BIORETENTION CLEANOUT DETAIL

NOT TO SCALE

Appendix B.4. Construction Specifications for Environmental Site Design Practices

Table B.4.x. Materials Specifications for Micro-Bioretention, Rain Gardens & Landscape Infiltration

Material	Specification	Size	Notes
Plantings	see Appendix A, Table A.4	n/a	plantings are site-specific
Planting soil [2' to 4' deep]	loamy sand (60 - 65%) & compost (35 - 40%) or sandy loam (30%), coarse sand (30%) & compost (40%)	n/a	USDA soil types loamy sand or sandy loam; clay content < 5%
Organic content	Min. 10% by dry weight (ASTM D 2974)		
Mulch	shredded hardwood		aged 6 months, minimum; no pine or wood chips
Pea gravel diaphragm	pea gravel: ASTM-D-448	NO. 8 OR NO. 9 (1/8" TO 3/8")	
Curtain drain	ornamental stone: washed cobbles	stone: 2" to 5"	
Geotextile		n/a	PE Type 1 nonwoven
Gravel (underdrains and infiltration berms)	AASHTO M-43	NO. 57 OR NO. 6 AGGREGATE (3/8" to 3/4")	
Underdrain piping	F 758, Type PS 28 or AASHTO M-278	4" to 6" rigid schedule 40 PVC or SDR35	Slotted or perforated pipe; 3/8" perf. @ 6" on center, 4 holes per row; minimum of 3" of gravel over pipes; not necessary underneath pipes. Perforated pipe shall be wrapped with ¼-inch galvanized hardware cloth
Poured in place concrete (if required)	MSHA Mix No. 3; f'c = 3500 psi @ 28 days, normal weight, air-entrained; reinforcing to meet ASTM-615-60	n/a	on-site testing of poured-in-place concrete required: 28 day strength and slump test; all concrete design (cast-in-place or pre-cast) not using previously approved State or local standards requires design drawings sealed and approved by a professional structural engineer licensed in the State of Maryland - design to include meeting ACI Code 350.R/89; vertical loading [H-10 or H-20]; allowable horizontal loading (based on soil pressures); and analysis of potential cracking
Sand	AASHTO-M-6 or ASTM-C-33	0.02" to 0.04"	Sand substitutions such as Diabase and Graystone (AASHTO) #10 are not acceptable. No calcium carbonated or dolomitic sand substitutions are acceptable. No "rock dust" can be used for sand

NOTE: FOR CURB AND GUTTER TRANSITION SEE DETAIL R-3.06

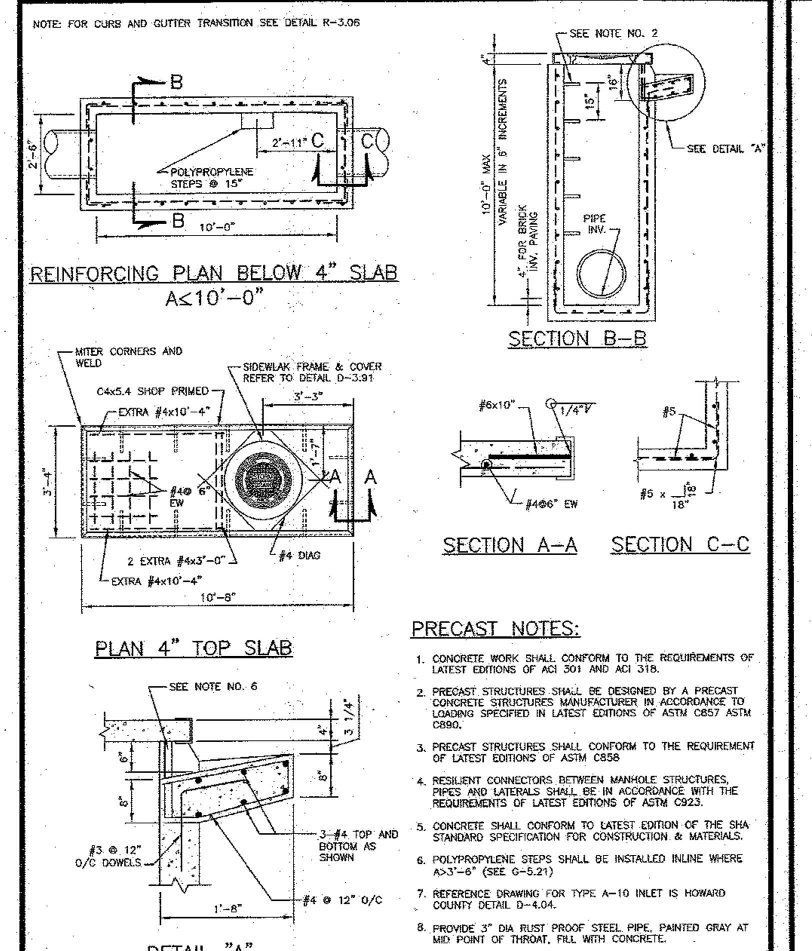

PRECAST NOTES:

1. CONCRETE WORK SHALL CONFORM TO THE REQUIREMENTS OF LATEST EDITIONS OF ACI 301 AND ACI 318.
2. PRECAST STRUCTURES SHALL BE DESIGNED BY A PRECAST CONCRETE STRUCTURES MANUFACTURER IN ACCORDANCE TO LOADING SPECIFIED IN LATEST EDITIONS OF ASTM C857 ASTM C890.
3. PRECAST STRUCTURES SHALL CONFORM TO THE REQUIREMENT OF LATEST EDITIONS OF ASTM C858
4. RESILIENT CONNECTORS BETWEEN MANHOLE STRUCTURES, PIPES AND LATERALS SHALL BE IN ACCORDANCE WITH THE REQUIREMENTS OF LATEST EDITIONS OF ASTM C923.
5. CONCRETE SHALL CONFORM TO LATEST EDITION OF THE SHA STANDARD SPECIFICATION FOR CONSTRUCTION & MATERIALS.
6. POLYPROPYLENE STEPS SHALL BE INSTALLED INLINE WHERE A>3'-6" (SEE G-5.21)
7. REFERENCE DRAWING FOR TYPE A-10 INLET IS HOWARD COUNTY DETAIL D-4.04.
8. PROVIDE 3" DIA RUST PROOF STEEL PIPE, PAINTED GRAY AT MID POINT OF THROAT. FILL WITH CONCRETE.

Howard County, Maryland Department of Public Works — Revised 5/7/2007 — Approved: Chief, Bureau of Engineering — Type A-10 Inlet Precast ≤10' Depth — Detail D-4.03

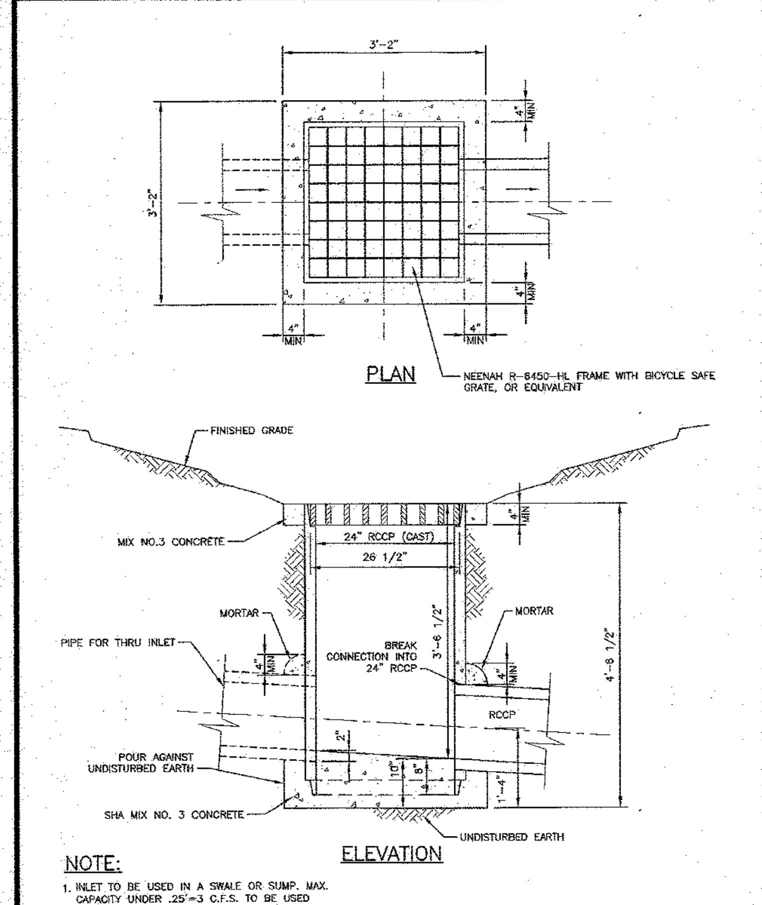

NOTE:
1. INLET TO BE USED IN A SWALE OR SUMP. MAX. CAPACITY UNDER .25'=3 C.F.S. TO BE USED WITH 15" CONN. OR SMALLER. NOT TO BE USED IN ROADWAY OR PARKING AREA.
2. TO BE USED ONLY WHEN APPROVED BY COUNTY.

Howard County, Maryland Department of Public Works — Revised 5/7/2007 — Approved: Chief, Bureau of Engineering — Yard Inlet — Detail D-4.14

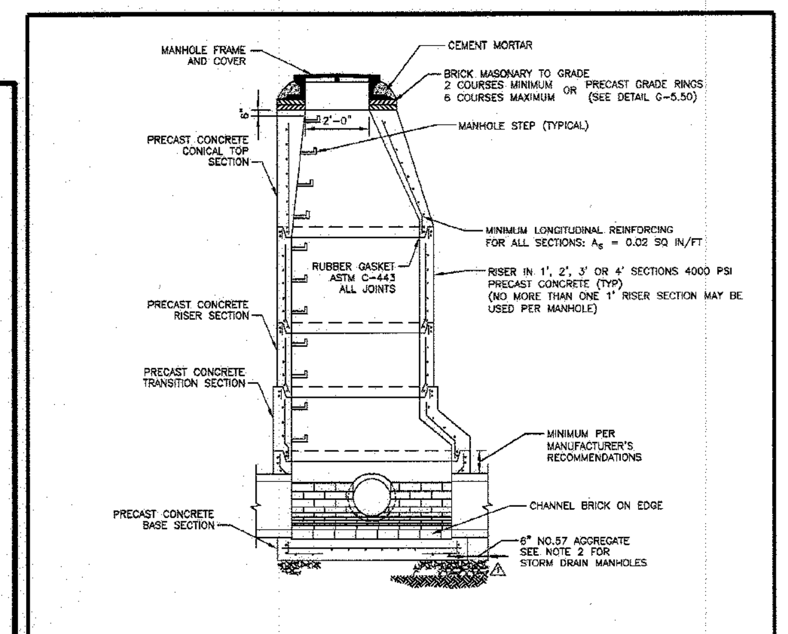

GENERAL NOTES APPLICABLE TO ALL PRECAST MANHOLES

1. MANHOLE BASE SECTION SHALL BE BEDDED ON 6-INCH NO.57 AGGREGATE ON FIRM SUBGRADE.
2. NO.57 AGGREGATE MATERIAL SHALL BE EXTENDED FROM 6-INCHES UNDERNEATH BOTTOM OF STRUCTURE TO SUBGRADE (STORM ONLY).
3. CONNECTION BETWEEN MANHOLE WALL AND SEWER SHALL BE NON-SHRINK GROUT (STORM) OR COMPRESSION TYPE RUBBER GASKET (SANITARY SEWER).
4. MANHOLE STEPS SHALL BE AS INDICATED ON DETAIL G-5.21.
5. MANHOLE COVER SHALL BE AS SPECIFIED ON DETAIL G-5.51, G-5.52, & G-5.53.
6. PROVIDE TWO APPLICATIONS OF BITUMINOUS MATERIAL (MINIMUM 16 MILS DFT) COATING ON EXTERIOR SURFACE OF MANHOLES (SANITARY SEWER ONLY).
7. ⚠ MANHOLE CHANNELS SHALL BE FORMED TO PROVIDE A SMOOTH HYDRAULIC TRANSITION BETWEEN PIPES. BENCH SHALL BE TO TOP OF PIPE OR AS SHOWN ON CONTRACT DOCUMENTS. SANITARY SEWER MANHOLE CHANNEL AND BENCH SHALL BE PRECAST OR FORMED FROM SEWER BRICK SET ON EDGE. STORM DRAIN MANHOLE CHANNELS SHALL BE SEWER BRICK SET ON EDGE.
8. MANHOLE SHALL BE IN ACCORDANCE WITH ASTM C-478 EXCEPT AS INDICATED.
9. MAXIMUM INVERT DIFFERENTIAL IS 6 INCHES WITHOUT A DROP CONNECTION. SEE DETAIL S-1.32 FOR DROP CONNECTION DETAILS.
10. THE MINIMUM DISTANCE BETWEEN PIPE OPENINGS IN THE WALL OF THE MANHOLE SHALL BE 12 INCHES.
11. A MINIMUM OF 4" SHALL BE PROVIDED BETWEEN MANHOLE FLOOR AND LOWEST PIPE INVERT.
12. PRECAST RINGS MAY BE SUPPLIED IN PLACE OF BRICK MASONRY COURSES. SEE DETAIL G-5.50.
13. MANHOLE INTERMEDIATE LANDINGS SHALL BE AS INDICATED ON DETAIL G-5.16.

Howard County, Maryland Department of Public Works — Revised ⚠ 5/1/2014 — Revised 5/7/2007 — Approved: Chief, Bureau of Engineering — PRECAST MANHOLE Notes — Detail G-5.11

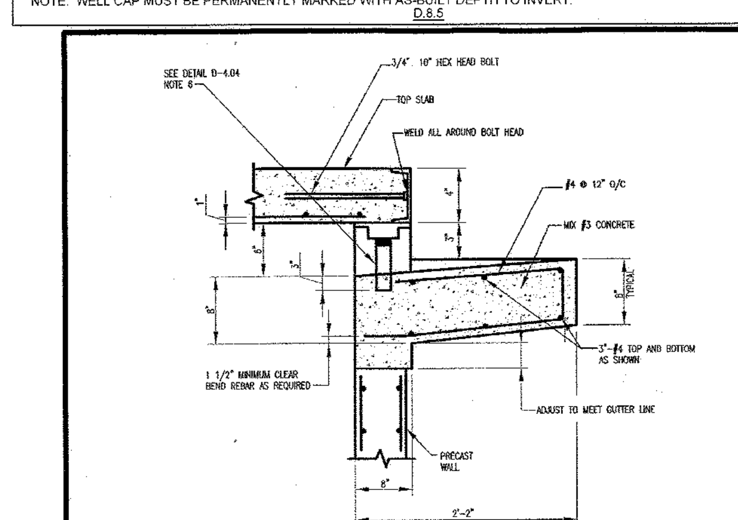

DETAIL A FOR PRECAST A AND B INLETS

(SEE DETAILS D-4.01 & D-4.03)

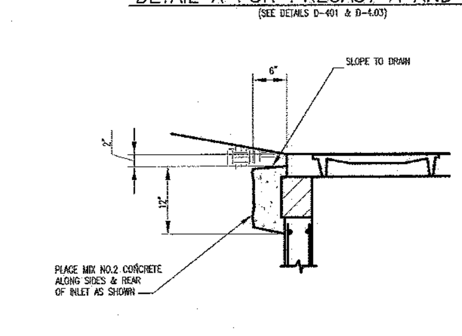

TOP SLAB ANCHOR DETAIL

(NO SIDEWALK)

Howard County, Maryland Department of Public Works — Revised 5/7/2007 — Approved: Chief, Bureau of Engineering — TYPE A-5 & A-10 Inlet Slab & Throat — Detail D-4.05

NOTES:

1. SEE GENERAL NOTES APPLICABLE TO ALL PRECAST MANHOLES ON DETAIL G-5.11.
2. FOR PIPE SIZES 27" TO 36" AND LARGER USE DETAIL G-5.13.
3. WHERE 'A' (COVER) IS MORE THAN 4.5 FEET USE STANDARD PRECAST MANHOLE.
4. MAXIMUM INVERT DIFFERENTIAL IS 6" WITHOUT DROP CONNECTION. (SEE DETAIL S-1.32 FOR DROP CONNECTION)

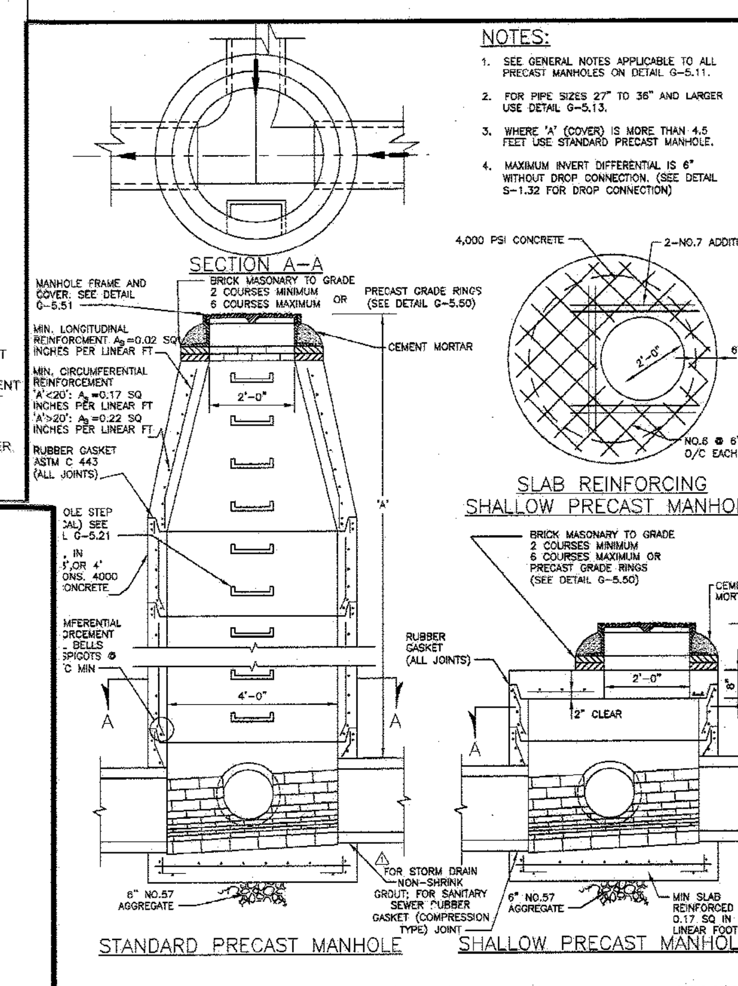

Howard County, Maryland Department of Public Works — Revised ⚠ 5/1/2014 — Revised 5/7/2007 — Approved: Chief, Bureau of Engineering — PRECAST MANHOLE Standard and Shallow 4'-0" for 24" Pipe and smaller — Detail G-5.12

NOTES:

1. WEIGHT OF FRAME SHALL NOT BE LESS THAN 250 POUNDS.
2. WEIGHT OF COVER SHALL NOT BE LESS THAN 170 POUNDS.
3. MANHOLE FRAME AND COVER SHALL BE HEAVY DUTY AND BE CAST IRON MEETING ASTMA-48 CLASS 35B
4. PRECAST CONCRETE RINGS MAY BE USED IN PLACE OF BRICK MASONRY COURSES. A MINIMUM OF ONE GRADE RING AND MAXIMUM OF FOUR GRADE RINGS SHALL BE PROVIDED, WITH A MAX. TOTAL HEIGHT OF 18 INCHES FROM THE TOP OF THE MANHOLE TO BOTTOM OF FRAME. SEE DETAIL G-5.50. GRADE RINGS SHALL BE BEVELED WHEN NECESSARY TO ACCOMODATE ROAD SLOPE.
5. SEE DETAILS G-5.11 FOR GENERAL NOTES.

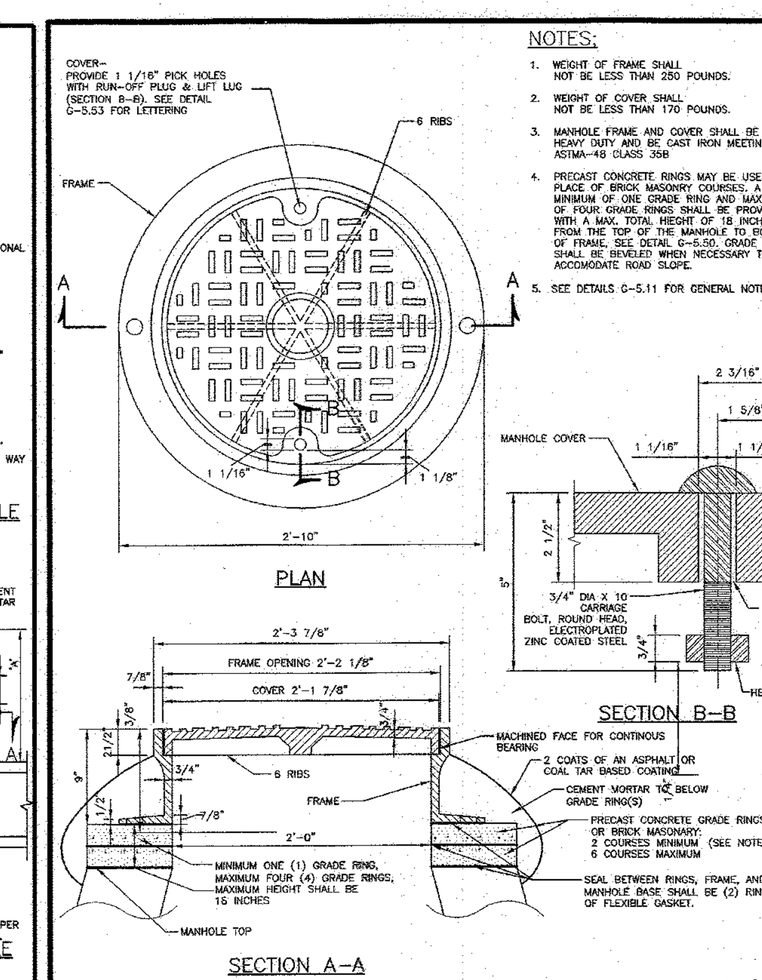

Howard County, Maryland Department of Public Works — Revised 5/7/2007 — Approved: Chief, Bureau of Engineering — Manhole Heavy Traffic Frame and Cover — Detail G-5.51

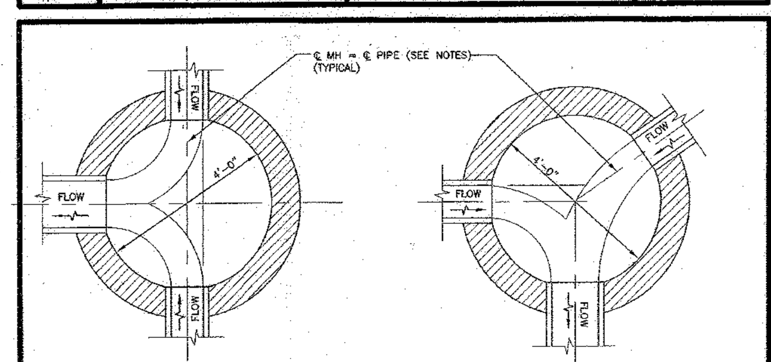

CHANNEL LINING NOTES

1. CHANNEL LININGS SHALL BE FORMED USING SEWER BRICK (ASTM C32, GRADE SM, SIZE NO.1) OR PRECAST CONCRETE BY MANHOLE MANUFACTURER. USE NON-REINFORCED 3500 PSI CONCRETE FOR PRECAST CHANNEL.
2. CHANNEL SHALL PROVIDE SMOOTH HYDRAULIC TRANSITION BETWEEN PIPES, INCLUDING MATCHING INSIDE DIAMETER OF PIPES.
3. MINIMUM CENTERLINE CHANNEL RADIUS SHALL BE 2.5 TIMES OUTLET PIPE DIAMETER.
4. MAXIMUM ALLOWABLE NUMBER OF CHANNELS IS FOUR (4) - SEE TYPE "C".
5. THE CENTERLINE OF ALL PIPES ENTERING A MANHOLE SHALL INTERSECT WITHIN 11" OF THE LOGITUDINAL AXIS OF THE MANHOLE BARREL (CENTER) AND SHALL BE AS DETAILED ON THE CONTRACT DRAWINGS.
6. MANHOLE SHALL BE IN ACCORDANCE WITH ASTM C478 EXCEPT AS SHOWN.

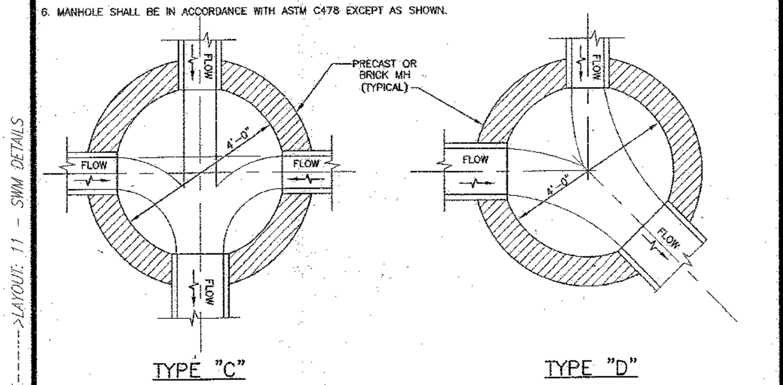

Howard County, Maryland Department of Public Works — Revised 5/7/2007 — Approved: Chief, Bureau of Engineering — Manhole Channel Configuration Types A, B, C & D — Detail G-5.31

PLASTIC		
PIPE DIA "D"	"W"	TRENCH WIDTH
4	12	28
6	11	28
8	10	28
10	9	28
12	8	28

ALL DIMENSIONS IN INCHES

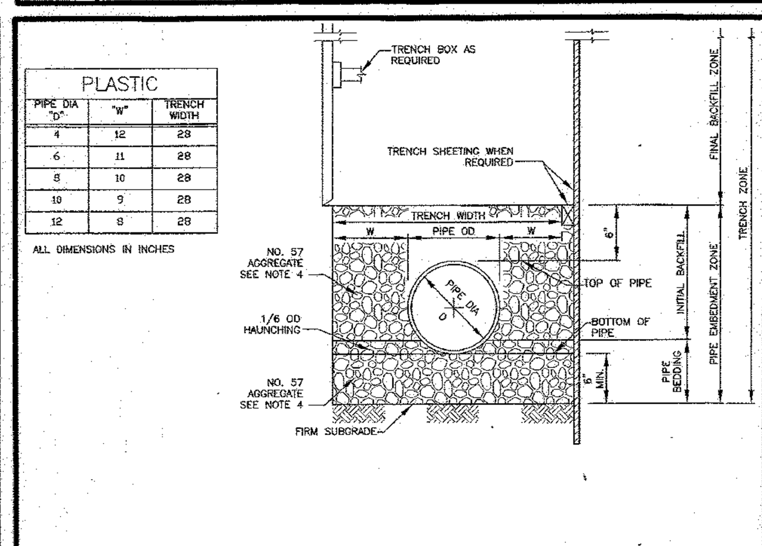

NOTES:

1. THE "W" DIMENSION SHALL BE USED TO CALCULATE MAXIMUM TRENCH PAY WIDTH.
2. FOR TRENCHES WHERE TRENCH BOX OR TRENCH SHEETING IS NOT REQUIRED, MEASUREMENT FOR CONTINGENT BORROW MATERIALS WILL BE BASED ON THE TRENCH WIDTH SHOWN.
3. FOR TRENCHES WHERE TRENCH BOX OR TRENCH SHEETING IS REQUIRED, MEASUREMENT FOR CONTINGENT BORROW MATERIALS WILL BE BASED ON THE TRENCH WIDTH SHOWN PLUS 24 INCHES.
4. FOR COPPER, PVC AND HDPE PIPE, 3 INCHES OR SMALLER:
   PIPE EMBEDMENT ZONE MATERIAL IS FINE AGGREGATE (SAND)
   "W" DIMENSION IS 6 INCHES MINIMUM AND BEDDING THICKNESS UNDER PIPE IS 4" MINIMUM.
   FOR TRENCHES IN ROCK, MINIMUM BEDDING THICKNESS IS 6 INCHES.
5. SPECIAL DESIGN IS REQUIRED AND SHALL BE SPECIFIED OR DETAILED IN THE CONTRACT DOCUMENTS FOR THE FOLLOWING PIPES:
   PVC AWWA C-905 LARGER THAN 12 INCHES
   PVC GRAVITY SANITARY SEWERS LARGER THAN 12 INCHES
   HDPE CORREGATED DRAIN PIPE
   STREAM CROSSINGS SEE DETAILS S-3.11 AND S-3.12

Howard County, Maryland Department of Public Works — Revised 5/7/2007 — Approved: Chief, Bureau of Engineering — Pipe Trench Plastic & Copper — Detail G-2.12

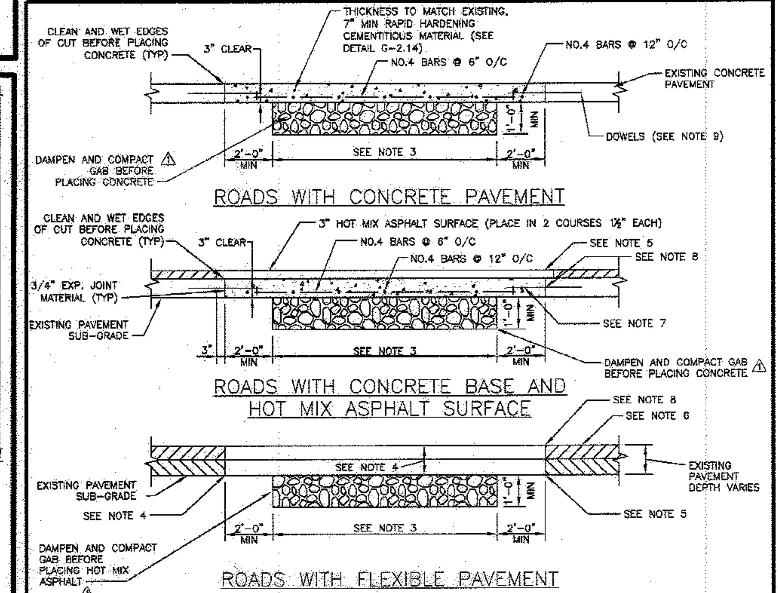

NOTES:

1. WHEREVER A TRENCH CROSSES A CONCRETE ROADWAY THAT HAS JOINT INSTALLATIONS THE ENTIRE SLAB BETWEEN THE EDGE OF THE TRENCH AND THE NEAREST JOINT SHALL BE REMOVED IF THE DISTANCE IS LESS THAN 10 FEET.
2. CLEAN AND WET EDGES OF CUT AND SUBGRADE BEFORE PLACING CONCRETE.
3. AGGREGATE SUB-BASE WIDTH SHALL BE 6 FT MINIMUM OR ACTUAL TRENCH WIDTH, WHICH EVER IS GREATER.
4. ⚠ HOT MIX ASPHALT PAVEMENT PATCH THICKNESS SHALL BE EQUAL TO THE EXISTING PAVING SECTION OR AS APPROVED BY DPW. THE MINIMUM PAVING PATCH SHALL CONSIST OF 2" HMA SURFACE COURSE OVER 4" HMA BASE COURSE. GRADED AGGREGATE BASE (GAB) SHALL BE PLACED AND COMPACTED IN 6" MAXIMUM COMPACTED THICKNESS LAYERS.
5. CLEAN EXPOSED VERTICAL SURFACE OF ADJACENT PAVEMENT AND PLACE TACK COAT ON ALL VERTICAL SURFACES PRIOR TO PLACING HMA.
6. IF THE REMAINING EXISTING PAVEMENT IS LESS THAN 4' WIDE , THE RESIDUAL PAVEMENT SHALL BE REMOVED IN ITS ENTIRITY AND REPLACED.
7. CONCRETE REPLACEMENT SHALL BE 10" MINIMUM MIX NO. 6.
8. SAW CUT FULL DEPTH ALL JOINTS OF EXISTING CONCRETE, BITUMINOUS, AND BASE PAVEMENTS.
9. REINFORCEMENT OF CONCRETE PAVING SHALL BE ACCOMPLISHED BY DOWELING. DOWELS SHALL BE CENTERED IN PAVEMENT THICKNESS. NEW REINFORCING SHALL BE TIED TO DOWELS.
10. TOTAL REPAIR WIDTH SHALL BE EQUAL TO THE LANE WIDTH IN ACCORDANCE WITH THE SPECIFICATIONS.

Howard County, Maryland Department of Public Works — Revised ⚠ 5/1/2014 — Revised 5/7/2007 — Approved: Chief, Bureau of Engineering — Utility Trench Roadway Repaving — Detail G-4.01

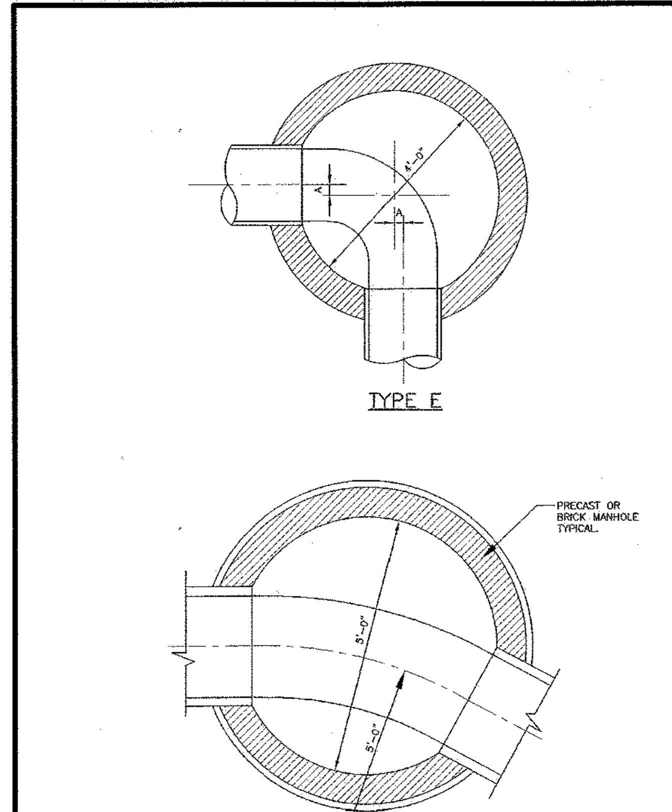

NOTES:

1. ALL NOTES ON DETAIL G-5.31 APPLY HERE.
2. THE "A" DIMENSIONS SHALL BE AS SHOWN ON THE CONTRACT DRAWINGS.
3. TYPE "G" CHANNELS ARE APPLICABLE TO 18, 21, AND 24-INCH DIAMETER SEWERS.
4. ℄ CHANNEL RADIUS SHALL BE MIN 2.5 TIMES OUTLET PIPE DIAMETER

Howard County, Maryland Department of Public Works — Revised 5/7/2007 — Approved: Chief, Bureau of Engineering — Manhole Channel Configuration Types E & G — Detail G-5.32

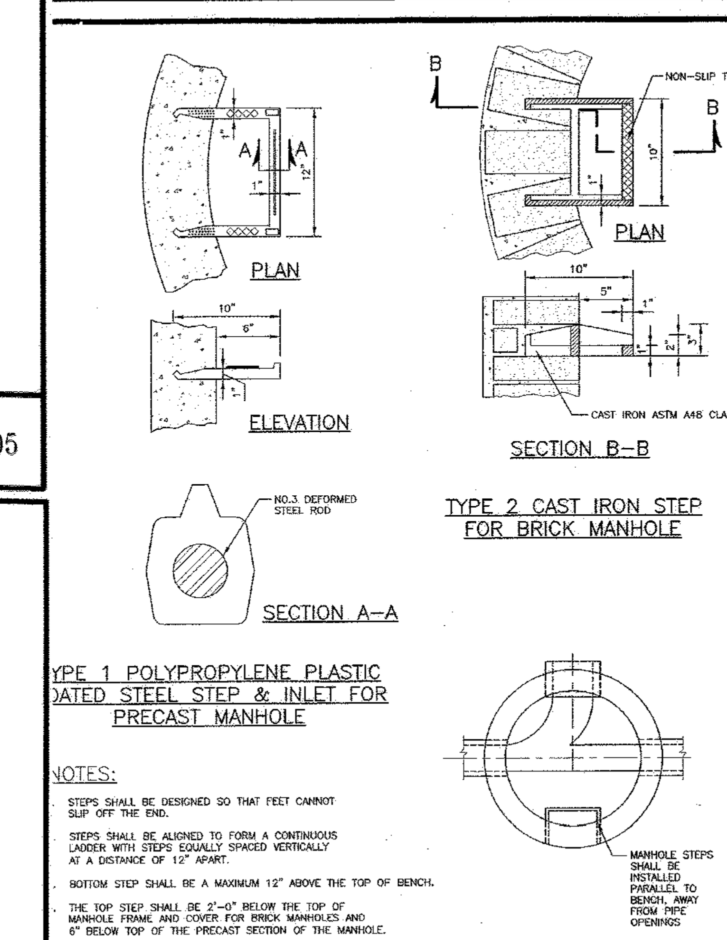

TYPE 1 POLYPROPYLENE PLASTIC COATED STEEL STEP & INLET FOR PRECAST MANHOLE

NOTES:
- STEPS SHALL BE DESIGNED SO THAT FEET CANNOT SLIP OFF THE END.
- STEPS SHALL BE ALIGNED TO FORM A CONTINUOUS LADDER WITH STEPS EQUALLY SPACED VERTICALLY AT A DISTANCE OF 12" APART.
- BOTTOM STEP SHALL BE A MAXIMUM 12" ABOVE THE TOP OF BENCH.
- THE TOP STEP SHALL BE 2'-0" BELOW THE TOP OF MANHOLE FRAME AND COVER FOR BRICK MANHOLES AND 6" BELOW TOP OF THE PRECAST SECTION OF THE MANHOLE.

Howard County, Maryland Department of Public Works — Approved: Chief, Bureau of Engineering — Manhole & Inlet Steps — Detail G-5.21

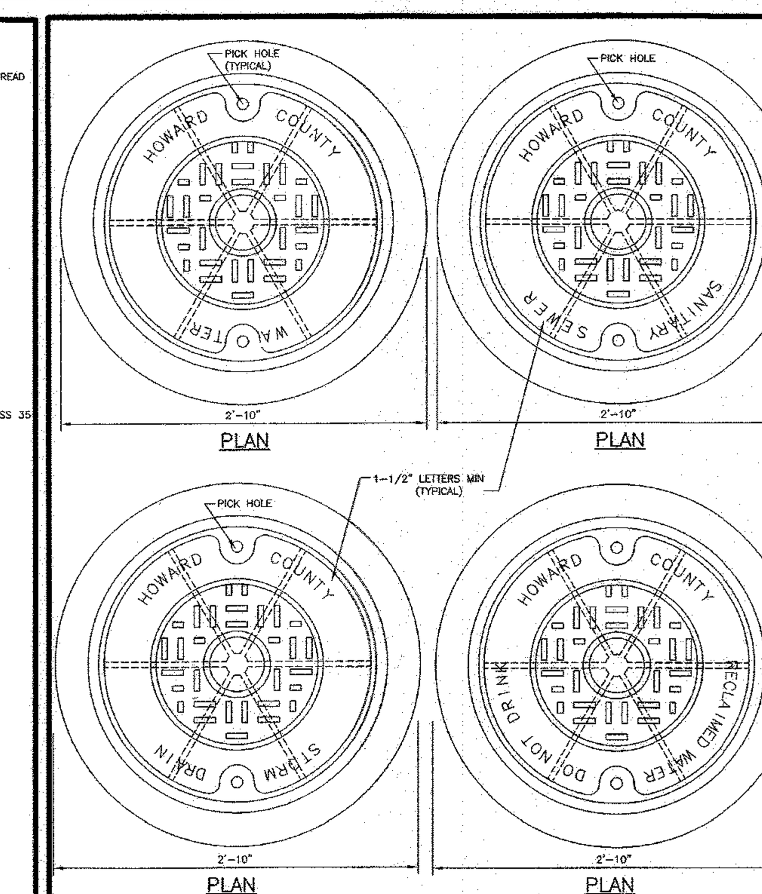

NOTES:
1. FOR FRAME AND COVER ASSEMBLY, AND NOTES SEE DETAIL G-5.51.

Howard County, Maryland Department of Public Works — Revised 5/7/2007 — Approved: Chief, Bureau of Engineering — Manhole Cover Lettering — Detail G-5.53

OPERATION AND MAINTENANCE SCHEDULE FOR MICRO-BIORETENTION (M-6)

A. THE OWNER SHALL MAINTAIN THE PLANT MATERIAL, MULCH LAYER AND SOIL LAYER ANNUALLY. MAINTENANCE OF MULCH AND SOIL IS LIMITED TO CORRECTING AREAS OF EROSION OR WASH OUT. ANY MULCH REPLACEMENT SHALL BE DONE IN THE SPRING. PLANT MATERIAL SHALL BE CHECKED FOR DISEASE AND INSECT INFESTATION AND MAINTENANCE WILL ADDRESS DEAD MATERIAL AND PRUNING. ACCEPTABLE REPLACEMENT PLANT MATERIAL IS LIMITED TO THE FOLLOWING: 2000 MARYLAND STORMWATER DESIGN MANUAL VOLUME II, TABLE A.4.1 AND 2.

B. THE OWNER SHALL PERFORM A PLANT INSPECTION IN THE SPRING AND IN THE FALL OF EACH YEAR. DURING THE INSPECTION, THE OWNER SHALL REMOVE DEAD AND DISEASED VEGETATION CONSIDERED BEYOND TREATMENT, REPLACE DEAD PLANT MATERIAL WITH ACCEPTABLE REPLACEMENT PLANT MATERIAL, TREAT DISEASED TREES AND SHRUBS, AND REPLACE ALL DEFICIENT STAKES AND WIRES.

C. THE OWNER SHALL INSPECT THE MULCH EACH SPRING. THE MULCH SHALL BE REPLACED EVERY TWO TO THREE YEARS. THE PREVIOUS MULCH LAYER SHALL BE REMOVED BEFORE THE NEW LAYER IS APPLIED.

D. THE OWNER SHALL CORRECT SOIL EROSION ON AN AS NEEDED BASIS, WITH A MINIMUM OF ONCE PER MONTH AND AFTER EACH HEAVY STORM.

GENERAL NOTE:
IT IS THE RESPONSIBILITY OF THE CONTRACTOR TO REVIEW ALL OF THE DRAWINGS AND SPECIFICATIONS ASSOCIATED WITH THIS PROJECT WORK SCOPE PRIOR TO THE INITIATION OF CONSTRUCTION. SHOULD THE CONTRACTOR FIND A CONFLICT WITH THE DOCUMENTS RELATIVE TO THE SPECIFICATIONS OR APPLICABLE CODES, IT IS THE CONTRACTOR'S RESPONSIBILITY TO NOTIFY THE PROJECT ENGINEER OF RECORD IN WRITING PRIOR TO THE START OF CONSTRUCTION. FAILURE BY THE CONTRACTOR TO NOTIFY THE PROJECT ENGINEER SHALL CONSTITUTE ACCEPTANCE OF FULL RESPONSIBILITY BY THE CONTRACTOR TO COMPLETE THE SCOPE OF THE WORK AS DEFINED BY THE DRAWINGS AND IN FULL CONFORMANCE WITH LOCAL REGULATIONS AND CODES.

C:\USERS\CMONDORO\APPDATA\LOCAL\TEMP\ACPUBLISH_4692\DE150009SD5---->LAYOUT: 11 - SWM DETAILS

APPROVED: DEPARTMENT OF PLANNING AND ZONING

10.14.16
CHIEF-DEVELOPMENT ENGINEERING DIVISION — DATE

11-2-16
CHIEF-DIVISION OF LAND DEVELOPMENT — DATE

11-3-16
DIRECTOR — DATE

SUBDIVISION NAME: MONTEVIDEO CROSSING
PARCEL A
SECTION/AREA: N/A
PLAT # 23695
WATER CODE: N/A
SEWER CODE: N/A

OWNER: PARCEL 16A
MIT MONTEVIDEO, LLC
8850 COLUMBIA PARKWAY
COLUMBIA, MD 21045
CONTACT: MARK LEVY
TEL: (410) 579-2442

DEVELOPER: J.C. BAR PROPERTIES, INC
415 FALLOWFIELD ROAD, SUITE 301
CAMP HILL, PA 17011
CONTACT: JASON MITCHELL
TEL: (717) 761-7801

TAX MAP: 43 GRID: 10 ZONED: B-1
PARCEL: 16A
1ST ELECTION DISTRICT, HOWARD COUNTY, MARYLAND
ZB REF.: 1096m SITE AREA: 4.039 AC
DPZ REF.: SDP-15-069

PROFESSIONAL CERTIFICATION
I, DAVID M. KUKLISH, P.E., HEREBY CERTIFY THAT THESE DOCUMENTS WERE PREPARED OR APPROVED BY ME, AND THAT I AM A DULY LICENSED PROFESSIONAL ENGINEER UNDER THE LAWS OF THE STATE OF MARYLAND, LICENSE NO. 36224, EXPIRATION DATE: 8/19/2018

CVS pharmacy

TYPE 'B'
REAR DRIVE-THRU

STORE NUMBER: 10528

WASHINGTON BLVD. & MONTEVIDEO RD. JESSUP, HOWARD COUNTY, MARYLAND

PROJECT TYPE: NEW
DEAL TYPE: LEASE

CS PROJECT NUMBER: 77620

THE FOLLOWING STATES REQUIRE NOTIFICATION BY EXCAVATORS, DESIGNERS, OR ANY PERSON PREPARING TO DISTURB THE EARTH'S SURFACE ANYWHERE IN THE STATE. IN VIRGINIA, MARYLAND, THE DISTRICT OF COLUMBIA, AND DELAWARE CALL - 811
(WV 1-800-245-4848) (PA 1-800-242-1776) (DC 1-800-257-7777)
(VA 1-800-552-7001) (MD 1-800-257-7777) (DE 1-800-282-8555)

BOHLER ENGINEERING
901 DULANEY VALLEY ROAD, SUITE 801
TOWSON, MARYLAND 21204
Phone: (410) 821-7900
Fax: (410) 821-7987
MD@BohlerEng.com

DEVELOPER
J.C. BAR DEVELOPMENT, LLC

415 FALLOWFIELD ROAD, SUITE 301
CAMP HILL, PA 17011
CONTACT: JASON MITCHELL
TEL : (717) 761-7801

D.M. KUKLISH
PROFESSIONAL ENGINEER
DELAWARE LICENSE No. 14622
MARYLAND LICENSE No. 36224
VIRGINIA LICENSE No. 0402045209

REVISIONS

REV:	DATE:	COMMENT:	BY:

CHECKED BY: DMK
DRAWN BY: CRH
DATE: 4/13/16
JOB NUMBER: MD131504
TITLE: STORMWATER MANAGEMENT DETAIL
SHEET NUMBER: 11 OF 27
COMMENTS: FILE NO. SDP-15-069

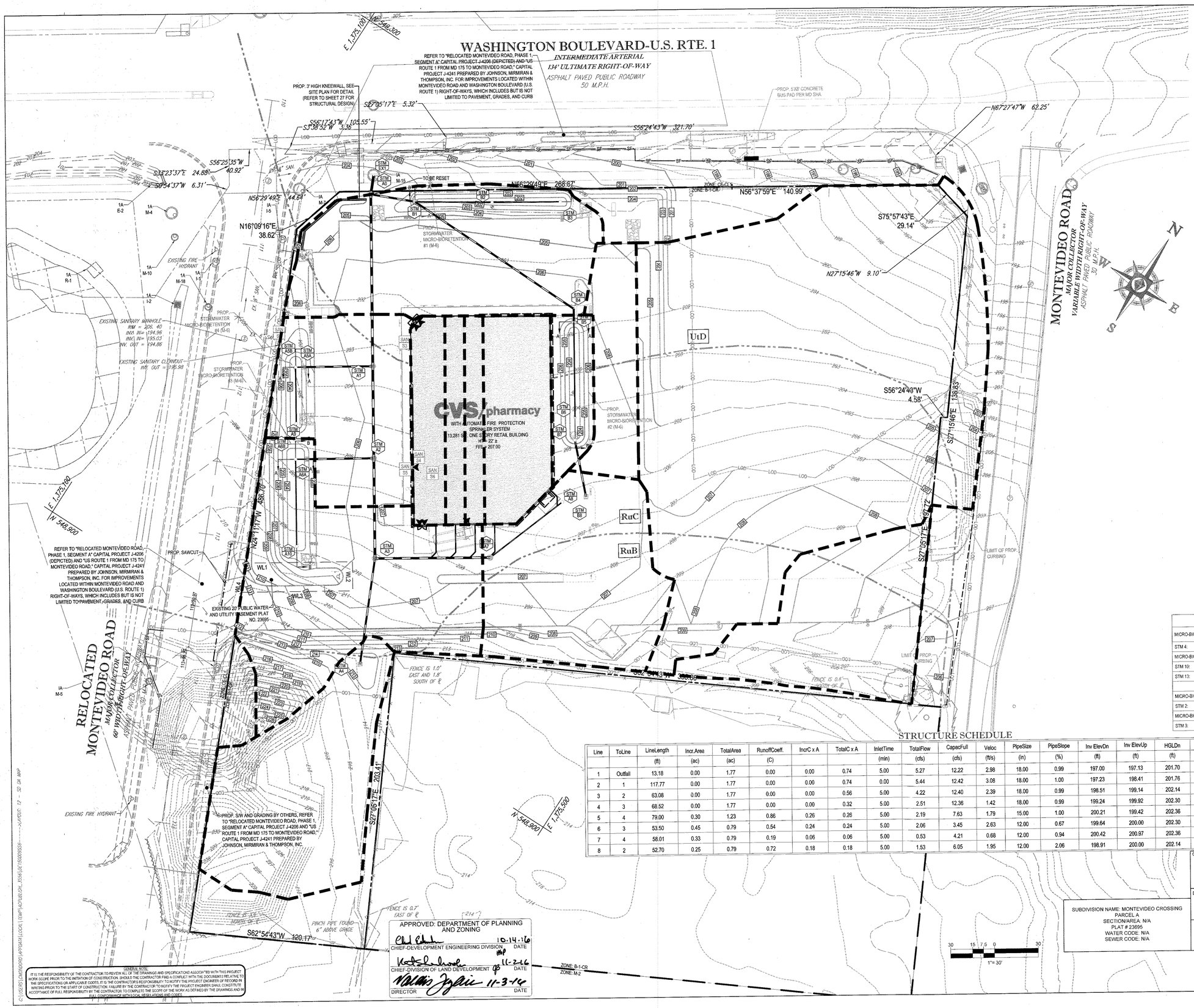

ESD DRAINAGE AREAS

MICRO-BIORETENTION AREA #1	AREA	PERCENT IMPERVIOUS	"C" VALUE
STM 4:	0.39± AC	69%	0.67
MICRO-BIORETENTION AREA #2			
STM 10:	0.30± AC	71%	0.64
STM 13:	0.07± AC	0%	0.19
	0.37± AC	58%	0.55
MICRO-BIORETENTION AREA #3			
STM 2:	0.45± AC	52%	0.54
MICRO-BIORETENTION AREA #4			
STM 3:	0.25± AC	80%	0.73

STRUCTURE SCHEDULE

Line	ToLine	LineLength (ft)	Incr.Area (ac)	TotalArea (ac)	RunoffCoeff. (C)	IncrC x A	TotalC x A	InletTime (min)	TotalFlow (cfs)	CapacFull (cfs)	Veloc (ft/s)	PipeSize (in)	PipeSlope (%)	Inv ElevDn (ft)	Inv ElevUp (ft)	HGLDn (ft)	HGLUp (ft)	Grnd/RimDn (ft)	Grnd/RimUp (ft)	Line ID
1	Outfall	13.18	0.00	1.77	0.00	0.00	0.74	5.00	5.27	12.22	2.98	18.00	0.99	197.00	197.13	201.70	201.72	204.00	204.62	A-0 - EX-1
2	1	117.77	0.00	1.77	0.00	0.00	0.74	0.00	5.44	12.42	3.08	18.00	1.00	197.23	198.41	201.76	201.99	204.62	206.40	A-1 - A-0
3	2	63.08	0.00	1.77	0.00	0.00	0.56	5.00	4.22	12.40	2.39	18.00	0.99	198.51	199.14	202.14	202.21	206.40	206.25	A-2 - A-1
4	3	68.52	0.00	1.77	0.00	0.00	0.32	5.00	2.51	12.36	1.42	18.00	0.99	199.24	199.92	202.30	202.33	206.25	206.25	A-3 - A-2
5	4	79.00	0.30	1.23	0.86	0.26	0.26	5.00	2.19	7.63	1.79	15.00	1.00	200.21	199.42	202.36	202.42	206.25	206.75	A-7 - A-3
6	3	53.50	0.45	0.79	0.54	0.24	0.24	5.00	2.06	3.45	2.63	12.00	0.67	199.64	200.00	202.30	202.43	206.25	206.00	A-6 - A-2
7	4	58.01	0.33	0.79	0.19	0.06	0.06	5.00	0.53	4.21	0.68	12.00	0.94	200.42	200.97	202.36	202.37	206.25	209.00	A-4 - A-3
8	2	52.70	0.25	0.79	0.72	0.18	0.18	5.00	1.53	6.05	1.95	12.00	2.06	198.91	200.00	202.14	202.21	206.40	205.50	A-5 - A-1

GENERAL NOTE:
IT IS THE RESPONSIBILITY OF THE CONTRACTOR TO REVIEW ALL OF THE DRAWINGS AND SPECIFICATIONS ASSOCIATED WITH THIS PROJECT WORK SCOPE PRIOR TO THE INITIATION OF CONSTRUCTION. SHOULD THE CONTRACTOR FIND A CONFLICT WITH THE DOCUMENTS RELATIVE TO THE SPECIFICATIONS OR APPLICABLE CODES, IT IS THE CONTRACTOR'S RESPONSIBILITY TO NOTIFY THE PROJECT ENGINEER OF RECORD IN WRITING PRIOR TO THE START OF CONSTRUCTION. FAILURE BY THE CONTRACTOR TO NOTIFY THE PROJECT ENGINEER SHALL CONSTITUTE ACCEPTANCE OF FULL RESPONSIBILITY BY THE CONTRACTOR TO COMPLETE THE SCOPE OF THE WORK AS DEFINED BY THE DRAWINGS AND IN FULL CONFORMANCE WITH LOCAL REGULATIONS AND CODES.

APPROVED: DEPARTMENT OF PLANNING AND ZONING

CHIEF-DEVELOPMENT ENGINEERING DIVISION	DATE 10-14-16
CHIEF-DIVISION OF LAND DEVELOPMENT	DATE 11-2-16
DIRECTOR	DATE 11-3-16

SUBDIVISION NAME: MONTEVIDEO CROSSING
PARCEL A
SECTION/AREA: N/A
PLAT # 23695
WATER CODE: N/A
SEWER CODE: N/A

OWNER: PARCEL 16A
MIT MONTEVIDEO, LLC
8850 COLUMBIA PARKWAY
COLUMBIA, MD 21045
CONTACT: MARK LEVY
TEL: (410) 579-2442

DEVELOPER: J.C. BAR PROPERTIES, INC
415 FALLOWFIELD ROAD, SUITE 301
CAMP HILL, PA 17011
CONTACT: JASON MITCHELL
TEL: (717) 761-7801

TAX MAP: 43 GRID: 10 ZONED B-1
PARCEL: 16A
1ST ELECTION DISTRICT, HOWARD COUNTY, MARYLAND
ZB REF.: 1096m SITE AREA: 4.039 AC
DPZ REF.: SDP-15-069

PROFESSIONAL CERTIFICATION
I, DAVID M. KUKLISH, P.E., HEREBY CERTIFY THAT THESE DOCUMENTS WERE PREPARED OR APPROVED BY ME, AND THAT I AM A DULY LICENSED PROFESSIONAL ENGINEER UNDER THE LAWS OF THE STATE OF MARYLAND, LICENSE NO. 36224, EXPIRATION DATE: 8/19/20

cvs pharmacy

TYPE 'B'
REAR DRIVE-THRU

STORE NUMBER: 10528

WASHINGTON BLVD. & MONTEVIDEO RD.
JESSUP, HOWARD COUNTY, MARYLAND

PROJECT TYPE: NEW
DEAL TYPE: LEASE

CS PROJECT NUMBER: 77620

THE FOLLOWING STATES REQUIRE NOTIFICATION BY EXCAVATORS, DESIGNERS, OR ANY PERSON PREPARING TO DISTURB THE EARTH'S SURFACE ANYWHERE IN THE STATE. IN VIRGINIA, MARYLAND, THE DISTRICT OF COLUMBIA, AND DELAWARE CALL - 811
(W) 1-800-245-4848; (PA - 1-800-242-1776) (DC 1-800-257-7777)
(VA 1-800-552-7001) (MD 1-800-257-7777) (DE 1-800-282-8555)

BOHLER ENGINEERING
901 DULANEY VALLEY ROAD, SUITE 801
TOWSON, MARYLAND 21204
Phone: (410) 821-7900
Fax: (410) 821-7987
MD@BohlerEng.com

DEVELOPER
J.C. BAR DEVELOPMENT, LLC
415 FALLOWFIELD ROAD, SUITE 301
CAMP HILL, PA 17011
CONTACT: JASON MITCHELL
TEL : (717) 761-7801

D.M. KUKLISH
PROFESSIONAL ENGINEER

REVISIONS

REV:	DATE:	COMMENT:	BY:

CHECKED BY: DMK
DRAWN BY: CRH
DATE: 4/13/16
JOB NUMBER: MD131504

TITLE: STORMDRAIN DRAINAGE AREA MAP

SHEET NUMBER: 12 OF 27

COMMENTS: FILE NO. SDP-15-069

* Z = LUMINAIRE MOUNTING HEIGHT A.F.G.

Luminaire Location Summary

LumNo	Label	X	Y	Z *	Orient	Tilt
1	A	619	453	28	0	0
2	A	792	625	28	270	0
3	A2	688	625	28	270	0
4	A2	619	552	28	0	0
5	D	810	414	28	0	0
6	D60	615	404	28	0	0
7	F	760	342	28	90	0
8	F	896	342	28	90	0
9	F	998	342	28	90	0
10	OB	778	429	9.33	270	0
11	OB	778	431	9.33	270	0
12	OB	782	433	9.33	270	0
13	OB	790	435	9.33	270	0
14	OC	690.3	555.3	16	0	0
15	S2	783.37	442.81	16.66	90	0
16	S6	738.27	557.97	16.66	0	0
17	S6	783.37	554.8	16.66	90	0
18	S6	687.79	508.45	16.66	90	0
19	S6	760.05	417.25	16.66	45	0
20	S6	764.28	421.46	16.66	45	0
21	S6	768.52	425.69	16.66	45	0
22	S6	772.75	429.92	16.66	45	0
23	S6	776.99	434.15	16.66	45	0
24	S6	781.24	438.4	16.66	45	0
25	S6	783.37	548.8	16.66	90	0
26	S6	783.37	542.8	16.66	90	0
27	S6	783.37	536.8	16.66	90	0
28	S6	783.37	530.8	16.66	90	0
29	S6	783.37	524.8	16.66	90	0
30	S6	783.37	518.8	16.66	90	0
31	S6	783.37	512.8	16.66	90	0
32	S6	783.37	506.8	16.66	90	0
33	S6	783.37	500.8	16.66	90	0
34	S6	783.37	494.8	16.66	90	0
35	S6	783.37	488.8	16.66	90	0
36	S6	783.37	482.8	16.66	90	0
37	S6	783.37	476.8	16.66	90	0
38	S6	783.37	470.8	16.66	90	0
39	S6	783.37	464.8	16.66	90	0
40	S6	783.37	458.8	16.66	90	0
41	S6	783.37	452.8	16.66	90	0
42	S6	783.37	446.8	16.66	90	0
43	S6	687.79	502.45	16.66	90	0
44	S6	687.79	496.45	16.66	90	0
45	S6	687.79	490.45	16.66	90	0
46	S6	687.79	484.45	16.66	90	0
47	S6	687.79	478.45	16.66	90	0
48	S6	687.79	472.45	16.66	90	0
49	S6	687.79	466.45	16.66	90	0
50	S6	687.79	460.45	16.66	90	0
51	S6	687.79	454.45	16.66	90	0
52	S6	687.79	448.45	16.66	90	0
53	S6	687.79	436.45	16.66	90	0
54	S6	687.79	442.45	16.66	90	0
55	S6	687.79	430.45	16.66	90	0
56	S6	687.79	424.45	16.66	90	0
57	S6	687.79	418.45	16.66	90	0
58	S6	744.27	557.97	16.66	0	0
59	S6	750.27	557.97	16.66	0	0
60	S6	756.27	557.97	16.66	0	0
61	S6	762.27	557.97	16.66	0	0
62	S6	768.27	557.97	16.66	0	0
63	S6	774.27	557.97	16.66	0	0
64	S6	780.27	557.97	16.66	0	0
65	WP	703.3	415.2	12	270	0
66	WP	725.3	415.2	12	270	0
67	WP	750.3	415.2	12	270	0
68	WS	658	550.4	7	135	0
69	WS	695.2	557.7	7	135	0

* HUBBELL IS NOT RESPONSIBLE FOR THE PERFORMANCE OF LUMINAIRE MANUFACTURED BY OTHERS

Luminaire Schedule

	Symbol	Label	Qty	Description	Arrangement	Lum. Watts	Lum. Lumens	LMF	LDD	BF	LLF
		A	2	CL1-60L-4K-I (Hubbell Ltg)	SINGLE	141	12036	0.950	0.950	1.000	0.903
		A2	2	QTY 2 - CL1-60L-4K-I (Hubbell Ltg)	TWIN	141	12036	0.950	0.950	1.000	0.903
		D	1	CL1-60L-4K-5M (Hubbell Ltg)	SINGLE	140.8	12038	0.950	0.950	1.000	0.903
		D60	1	CL1-60L-4K-5M (Hubbell Ltg)	SINGLE	207.8	18622	0.950	0.950	1.000	0.903
		F	3	CL1-60L-4K-2-BC (Hubbell Ltg)	SINGLE	141.9	7998	0.950	0.950	1.000	0.903
*		OB	4	PT2013-E0155	SINGLE	19.9	1130	0.950	0.900	1.000	0.855
*		OC	1	EVO 41/29 8AR 120	SINGLE	48.9	3108	0.950	0.950	1.000	0.903
*		S2	1	ECVLXWET-2-120-4K-2780	GROUP	N.A.	N.A.	N.A.	N.A.	N.A.	0.903
*		S6	49	ECVLXWET-6-120-4K-2780	GROUP	N.A.	N.A.	N.A.	N.A.	N.A.	0.903
*		WP	3	DSXW1 LED 10C 1000 40K TFTM MVOLT	SINGLE	40	3065	0.950	0.950	1.000	0.903
*		WS	2	AZ-5L-LED75-4K (2)EBU-BB-CTB-BZ	SINGLE	77.3	5187	0.950	0.950	1.000	0.903

Calculation Summary

Label	Description	Units	Avg	Max	Min	Avg/Min	Max/Min
CVS PARKING	1.0 FC MINIMUM	Fc	3.22	12.0	1.2	2.68	10.00

POLE SPEC FOR CIMARRON:

SINGLE FIXTURE
SSS-XX-XX-X-A2-XX

TWIN FIXTURE 180 DEGREE APART
SSS-XX-XX-X-C2-XX

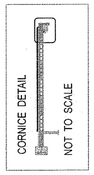

FOR PRICING CONTACT

NESCO
40 Hudson Rd
Canton, MA 02021
Tel: 781-828-9494
Fax: 781-575-1398
E-Mail: CVSplans@nescoweb.com

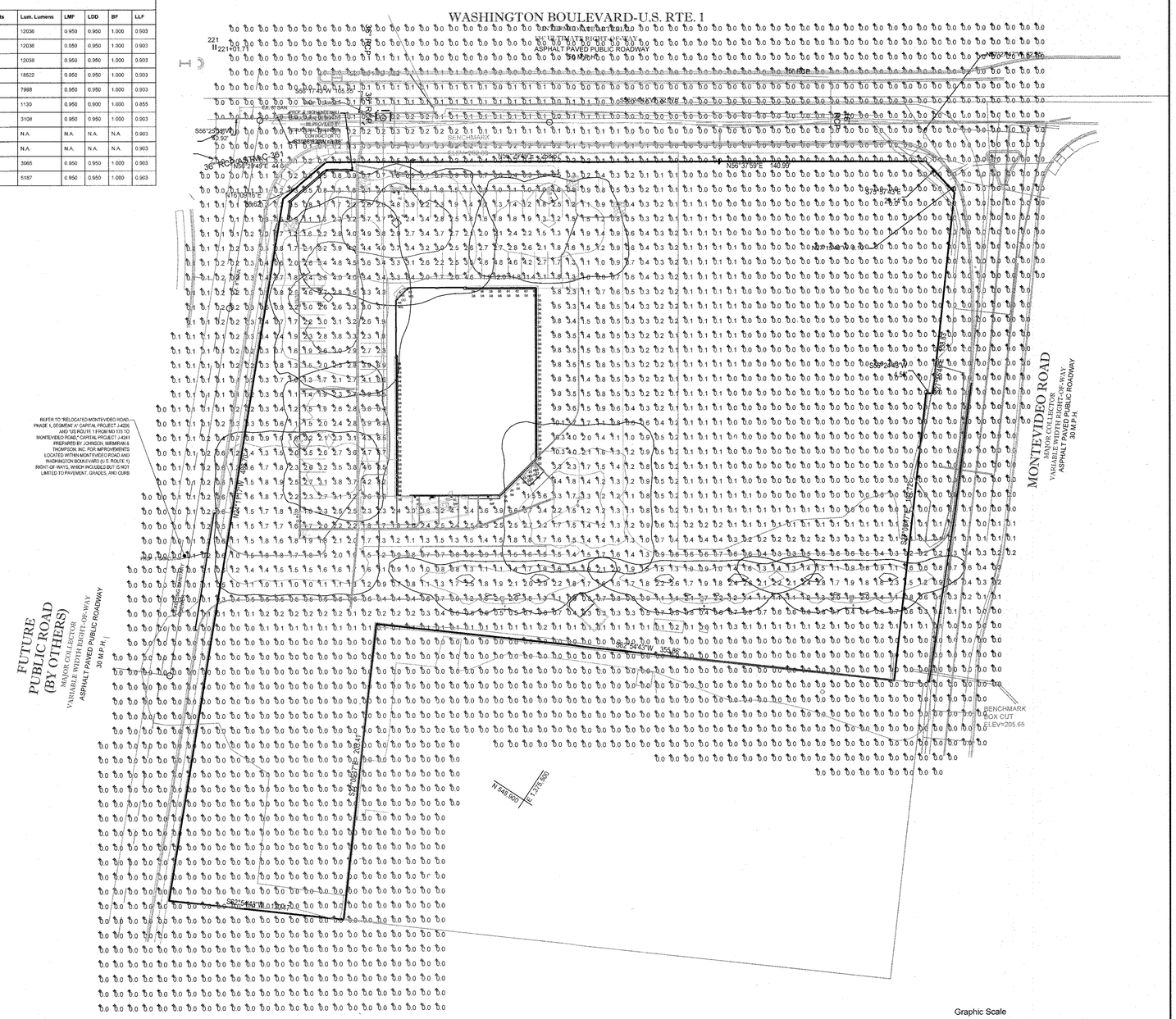

1. THIS LIGHTING DESIGN IS BASED ON LIMITED INFORMATION SUPPLIED BY OTHERS TO HUBBELL LIGHTING. SITE DETAILS PROVIDED HEREON ARE REPRODUCED ONLY AS A VISUALIZATION AID. FIELD DEVIATIONS MAY SIGNIFICANTLY AFFECT PREDICTED PERFORMANCE. PRIOR TO INSTALLATION, CRITICAL SITE INFORMATION (POLE LOCATIONS, ORIENTATION, MOUNTING HEIGHT, ETC.) SHOULD BE COORDINATED WITH THE CONTRACTOR AND/OR SPECIFIER RESPONSIBLE FOR THE PROJECT.
2. LUMINAIRE DATA IS TESTED TO INDUSTRY STANDARDS UNDER LABORATORY CONDITIONS. OPERATING VOLTAGE AND NORMAL MANUFACTURING TOLERANCES OF LAMP, BALLAST, AND LUMINAIRE MAY AFFECT FIELD RESULTS.
3. CONFORMANCE TO FACILITY CODE AND OTHER LOCAL REQUIREMENTS IS THE RESPONSIBILITY OF THE OWNER AND/OR THE OWNER'S REPRESENTATIVE.

SUBDIVISION NAME: MONTEVIDEO CROSSING PARCEL A SECTION/AREA: N/A PLAT # 23695 WATER CODE: N/A SEWER CODE: N/A	OWNER: PARCEL 16A MIT MONTEVIDEO, LLC 8850 COLUMBIA PARKWAY COLUMBIA, MD 21045 CONTACT: MARK LEVY TEL: (410) 579-2442
	DEVELOPER: J.C. BAR PROPERTIES, INC 415 FALLOWFIELD ROAD, SUITE 301 CAMP HILL, PA 17011 CONTACT: JASON MITCHELL TEL: (717) 761-7801
	TAX MAP: 43 GRID: 10 ZONED: B-1 PARCEL 16A 1ST ELECTION DISTRICT, HOWARD COUNTY, MARYLAND ZB REF.: 1096m SITE AREA: 4.039 AC DPZ REF.: SDP-15-069

PROFESSIONAL CERTIFICATION
I, DAVID M. KUKLISH, P.E., HEREBY CERTIFY THAT THESE DOCUMENTS WERE PREPARED OR APPROVED BY ME, AND THAT I AM A DULY LICENSED PROFESSIONAL ENGINEER UNDER THE LAWS OF THE STATE OF MARYLAND, LICENSE NO. 36224, EXPIRATION DATE: 8/19/2016

APPROVED: DEPARTMENT OF PLANNING AND ZONING

CHIEF-DEVELOPMENT ENGINEERING DIVISION	DATE 10-14-16
CHIEF-DIVISION OF LAND DEVELOPMENT	DATE 11-2-16
DIRECTOR	DATE 11-3-16

GENERAL NOTE
IT IS THE RESPONSIBILITY OF THE CONTRACTOR TO REVIEW ALL OF THE DRAWINGS AND SPECIFICATIONS ASSOCIATED WITH THIS PROJECT WORK SCOPE PRIOR TO THE INITIATION OF CONSTRUCTION. SHOULD THE CONTRACTOR FIND A CONFLICT WITH THE DOCUMENTS RELATIVE TO THE SPECIFICATIONS OR APPLICABLE CODES, IT IS THE CONTRACTOR'S RESPONSIBILITY TO NOTIFY THE PROJECT ENGINEER OF RECORD IN WRITING PRIOR TO THE START OF CONSTRUCTION. FAILURE BY THE CONTRACTOR TO NOTIFY THE PROJECT ENGINEER SHALL CONSTITUTE ACCEPTANCE OF FULL RESPONSIBILITY BY THE CONTRACTOR TO COMPLETE THE SCOPE OF THE WORK AS DEFINED BY THE DRAWINGS AND IN FULL COMPLIANCE WITH LOCAL REGULATIONS AND CODES.

cvs pharmacy

TYPE 'B'
REAR DRIVE-THRU

STORE NUMBER:

WASHINGTON BLVD. & MONTEVIDEO RD.
JESSUP, HOWARD COUNTY, MARYLAND

PROJECT TYPE:
DEAL TYPE:

CS PROJECT NUMBER:

THE FOLLOWING STATES REQUIRE NOTIFICATION BY EXCAVATORS, DESIGNERS, OR ANY PERSON PREPARING TO DISTURB THE EARTH'S SURFACE ANYWHERE IN THE STATE IN: VIRGINIA, MARYLAND, THE DISTRICT OF COLUMBIA, AND DELAWARE CALL - 811
(WV 1-800-245-4848) (PA 1-800-242-1776) (DC 1-800-257-7777) (VA 1-800-552-7001) (MD 1-800-257-7777) (DE 1-800-282-8555)

BOHLER ENGINEERING
901 DULANEY VALLEY ROAD, SUITE 801
TOWSON, MARYLAND 21204
Phone: (410) 821-7900
Fax: (410) 821-7987
MD@BohlerEng.com

DEVELOPER
J.C. BAR DEVELOPMENT, LLC

415 FALLOWFIELD ROAD, SUITE 301
CAMP HILL, PA 17011
CONTACT: JASON MITCHELL
TEL : (717) 761-7801

D.M. KUKLISH
PROFESSIONAL ENGINEER
No. 36224
STATE OF MARYLAND

REVISIONS

DMK
CRH
4/13/16
MD131504

LIGHTING PLAN

NOT FOR CONSTRUCTION

FILE NO. SDP-15-069

CL1 LED

Cimarron LED Series

SITE A
CL1-A-60LU-4K-4-GR

FEATURES
- Stylish vertically finned die-cast solid top housing and lower heat sink optimize for maximum heat dissipation
- Isolated electrical compartment with integral heat sinking for cooler operation and longer driver life
- Drivers have greater than 90% power factor and less than 10% THD
- Optional continuous dimming to 10% or dual circuitry available
- Automatic thermal self protection
- Surge protection standard
- 60,000 hours life (L90 @ 40°C)
- Shipped with upswept or straight arm for uniform look and ease of installation
- -20 deg C to 40 deg C ambient operation
- Lektrocote TGIC polyester powder coat finish
- Choice of 32 high brightness LED configurations with individual acrylic lenses aimed to produce IES type II, III, IV and V distribution
  - Increased lumen ouput with use of 1050 mA driver (90L only)
  - Backlight control option reduces spill light behind pole by 85%, doesn't change fixture appearance or EPA
- CRI – 70
- 5000K, 3,000K, 4000K CCT, new turtle friendly Amber
- Features exclusive wiHUBB technology
  - Wireless system for On/Off and 0-10VDC full range dimming control
  - Programmable autonomous operation
- IP65
- DLC approved
- Listed to UL1598 and CSA C22.2#250.0-24 for wet locations

ORDERING INFORMATION

CL1 – [ ] – [ ] – [ ] – [ ] – [ ] – [ ] – [ ] – [ ]

ENERGY DATA	
Power Factor	>.9
Total Harmonic Distortion	<10%

LIGHT ENGINE	INPUT WATTS 120-277V	INPUT WATTS 347V-480V	TYPE II	TYPE III	TYPE IV	TYPE 5M
30L-5K	70	87	6384	6164	6643	7103
60L-5K	140	157	12300	12842	13125	13185
90L-5K	210	227	19684	19006	19202	20592
90L-5K-105	326	363	26974	26351	26548	25793
30L-4K	70	87	6089	6309	6104	6417
60L-4K	140	157	11583	11468	12038	12038
90L-4K	210	227	17143	16973	17848	18521
90L-4K-105	326	363	23896	23912	24199	24582

ADJUSTABLE MOUNTING ARMS

Catalog Number	Description	EPA (ft²)	Weight lbs (kg)
ARM-CL-K-TA-XX	2 3/8" OD tenon slipfitter for single fixture	—	5 (2.3)
ARM-CL-TK-TA-XX	2 3/8" OD tenon slipfitter for twin fixture (180°)	—	7 (3.2)
ARM-CL-K-S-XX	10" Adjustable arm	0.5 (0.05)	5.75 (2.6)

*Projected per IESNA TM-21-11.
NOTE: All poles to be drilled with #2 pattern

	A	B	C	D	E	F	G	EPA	Weight
CL1	6 3/4"	21 3/4"	16"	6 5/8"	6 5/16"	5 5/8"	6 1/8"	<1.3 ft²	Approx 45 lbs
	171mm	552mm	406mm	168mm	160mm	143mm	155mm	<0.12 m²	Approx 20.4 kg

SPAULDING LIGHTING

CL1 LED

Cimarron LED Series

SITE D90
CL1-A-90LU-4K-5M-GR

(Second copy of the CL1 LED cut sheet — features, ordering information, mounting arms and dimensions as above.)

SYLVANIA DRIVER 79556

gotham®

TYPE OC
EVO 41/29 8AR 120
EVO 8AR TRW TRIM U

Gotham Architectural Downlighting
LED Downlights

8" Evo®
Open Reflector

Solid-State Lighting

OPTICAL SYSTEM
- Self flanged semi specular, matte-diffuse or specular finish reflector
- Patented Bounding Ray™ optical design (U.S. Patent No. 5,800,050)
- 45° cutoff to source and source image
- Top-down flash characteristic

MECHANICAL SYSTEM
- 16-gauge galvanized steel construction; maximum 1-1/2" ceiling thickness
- Telescopic mounting bars maximum of 32" and minimum of 15", preinstalled, 4" vertical adjustment
- Toolless adjustments post installation
- Junction box capacity: 8 (4 in, 4 out) 12AWG rated for 90°C
- Light engine and driver accessible through aperture

ELECTRICAL SYSTEM
- Fully serviceable and upgradeable lensed LED light engine
- 70% lumen maintenance at 60,000 hours based on IESNA LM-79-2008
- 120-277VAC, 50/60hz power supply with 0-10V dimming (10-100%); rated for 50,000-hour life
- Overload and short circuit protected
- LEDs tested under LM80

LISTINGS
- Fixtures are CSA certified to meet US and Canadian standards; wet location, covered ceiling

WARRANTY
- 5-year limited warranty. Complete warranty terms located at: www.acuitybrands.com/CustomerResources/Terms_and_conditions.aspx

EXAMPLE: EVO 35/18 8AR 120

Series	Color temperature	Nominal lumen values	Aperture/trim color	Distribution	Finish	Voltage
EVO	27/ 2700 K	18 1800 lumens	8AR Clear	(blank) 1.0 s/mh	(blank) Semi-specular	120
	30/ 3000 K	22 2200 lumens	8PR Pewter	VND Very narrow (0.45 s/mh)	LD Matte diffuse	277
	35/ 3500 K	29 2900 lumens	8WTR Wheat	ND Narrow (0.52 s/mh)	LS Specular	347
	41/ 4100 K		8GR Gold	MD Medium (0.80 s/mh)		
			8WR White	WD Wide (1.1 s/mh)		

Driver		Options			
(blank)	0-10V dimming driver. Minimum dimming level 10%	SF	Single fuse	TRBL	Black painted flange
ECOS2	Lutron® Hi-Lume® 2-wire forward-phase dimming driver. Minimum dimming level 1%	RRL	RELOC®-ready luminaire. Provides compatibility with Lithonia RELOC system. Access above ceiling required.	EL	Emergency battery pack with integral test switch
ECOS3	Lutron® Hi-Lume® 3-wire or EcoSystem® dimming driver. Minimum dimming level 1%	NEPP	Interface for Sensor Switch® nLight® network with integral power supply. Refer to TECH-025-01.	ELR	Emergency battery pack with remote test switch
		NSP	Sensor Switch® nLight® dimming relay	CP	Chicago plenum
		TRW	White painted flange		

ACCESSORIES order as separate catalog numbers (shipped separately)

SCA8	Sloped ceiling adapter. Degree of slope must be specified (10D, 15D, 20D, 25D, 30D). Ex: SCA8 10D. Refer to TECH-190.
CTA4-8 YK	Ceiling thickness adapter (extends mounting frame to accommodate ceiling thickness up to 2").
SVRT	Vandal-resistant trim accessory. Refer to TECH-208.
ISD BC	0-10V wallbox dimmer. Refer to ISD-BC.

ORDERING NOTES
1. Not available with finishes.
2. Refer to TECH-240 for compatible dimmers.
3. Not available with NEPP option.
4. 120V only.
5. One 5A relay with one 0-10 VDC dimming output, shipped installed. Refer to nSPS-D.
6. Not available with white reflector.
7. For dimensional changes, refer to TECH-160. Not available with CP option.
8. Not available with EL or ELR options.

GOTHAM ARCHITECTURAL DOWNLIGHTING | 1400 Lester Road Conyers GA 30012 | P 800-315-4982 | gothamlighting.com

TYPE OC
EVO 41/29 8AR 120
EVO 8AR TRW TRIM U

8" EVO
Open Reflector
Solid-State Lighting

All dimensions are inches (centimeters) unless otherwise noted.

Aperture: 7-7/8 (20.1)
Ceiling Opening: 8-7/8 (21.5)
Overlap Trim: 9-1/4 (23.5)

LUMENS	WATTAGE	LUMENS per WATT
2900	49	64
2200	39	63
1800	33	55

BULLET
OUTDOOR RECESSED FIXED DOWNLIGHT

LF ILLUMINATION — WET LOCATION - IP66 | LED

TYPE OB
5811-1SA-T-20L8040MD2USS

DOWNLIGHT
- Recessed fixed downlight
- Die-cast aluminum trim
- Powder coat finish

HOUSING
- Extruded aluminum central housing
- Powder coat finish
- Dust and water jet tight sealed
- Ceiling Cut-Out - Ø4.65"

LED SOURCE
- Field replaceable LED
- Field-changeable optic
- 20W / 1000lm, 80CRI / 3000K
- Accepts up to 2 or more optical accessories

ELECTRICAL
- Remotely installed LED driver
- Separated primary wiring compartment with integral power supply
- Double cable entry for through wiring
- Superpure aluminum reflector
- Dimmable

MOUNTING
- Swing out pressure fit mounting clips
- Adjustable up to 1.18" max. ceiling thickness

LABELS
- Suitable for wet location
- Title 24 Compliant
- IP66 rated

Ordering Example: 5811-1SA-T-20L-8030-N-D1-1-SS-CP

©2013 LF ILLUMINATION LLC — www.lfillumination.com

SSL solid state luminaires

EC24W
TCAPW
SC10W

Type: TYPE S2 ECVLXWET21204K3080
Fixture: TYPE S4 ECVLXWET41204K3080
Project: TYPE S6 ECVLXWET61204K3080

eCOVELINE XL WET

The eCOVELINE XL WET is a powerful and versatile interior / exterior cove luminaire. eCOVELINE XL WET comes in a 1 ft, 4 ft or 6 ft nominal lengths and 2700K, 3000K or 4000K color temperatures. The housing is constructed of extruded aluminum with locked end caps and is IP66 rated for interior & exterior use. Features IP68 line voltage Plug N' Play connectors for easy installation. Power supply is integral, no remote driver required. Universal orientation fixture: up, down, horizontal or vertical positioning and 2 optical solutions. Flicker free dimmable to 3% full brightness with ELV leading & trailing edge dimming.

PERFORMANCE

Model	Connected Wattage	2700K	3000K	4000K
ECVLXWET-1	6.5	530	538	555
ECVLXWET-4	26	2120	2152	2220
ECVLXWET-6	39	3180	3228	3330

SYLVANIA DRIVER 79556

OPTOTRONIC®
Multi-channel Constant Current Dimmable LED Power Supplies

Key Features & Benefits
- Configurable output to perfectly match the LED load and maximize performance
- Multiple Class 2 Constant Current output-channels to reduce luminaire BOM costs
- Wide selection of standard pre-configured drive currents and custom configurations: – OT100W - 450mA to 700mA
- OT100W - compact T5 profile - 1.18" x 1.0" (W X H)
- Universal Input Voltage – 120-277V AC 50/60Hz
- Dimmable with 0-10V dimmers
- High power factor and efficiency
- Short circuit, open circuit, overload and overheat protection for sustained performance
- UL Class 2 output for safe operation

The OPTOTRONIC multi-channel dimmable family consists of highly efficient, constant current, multiple-channel 100W LED power supplies. They are factory-configurable with available output currents between 450mA and 700mA. The 100W comes in a sleek T5 fluorescent ballast housing that is only 1" tall which is ideal for low profile luminaires. The family has built-in 0-10V dimming enabling direct integration and operation with standard dimmers, sensors, as well as energy and light-management systems.

Product Offering — Output Configurations Available: Max Power 100W; Number of Channels 4; Drive Current 450mA to 700mA

Application Information — Applications: Hi-Bay, Indirect/direct, Industrial, Linear, Recessed troffer

OT100W – Compliant to 47 CFR, Part 15 Class B

OSRAM — SEE THE WORLD IN A NEW LIGHT

Ordering Information — OT100W

Item Number	Ordering Abbreviation	Number of Channels	Total Output Power	Current (mA)	Voltage Range	Max Load (W)
79550	OT100W/4x700C/UNV/DIM	4	100W	700 mA	10 – 40 VDC	25
79551	OT100W/4x650C/UNV/DIM	4	100W	650 mA	10 – 40 VDC	25
79552	OT100W/4x600C/UNV/DIM	4	100W	600 mA	10 – 40 VDC	25
79553	OT90W/4x550C/UNV/DIM	4	90W	550 mA	10 – 40 VDC	22.5
79554	OT80W/4x500C/UNV/DIM	4	80W	500 mA	10 – 40 VDC	20
79556	OT70W/4x450C/UNV/DIM	4	70W	450 mA	10 – 40 VDC	17.5

gotham® — TYPE OC — EVO 41/29 8AR 120 — EVO 8AR TRW TRIM U — 8" EVO Open Reflector

EVO 35/18 8AR LS — INPUT WATTS: 34.6, DELIVERED LUMENS: 1910.1, LM/W=55.2, 1.0 S/MH, TEST NO. LTL21102

EVO 35/22 8AR LS — INPUT WATTS: 39.3, DELIVERED LUMENS: 2470.3, LM/W=62.9, 1.0 S/MH, TEST NO. LTL21112

EVO 35/29 8AR LS — INPUT WATTS: 48.6, DELIVERED LUMENS: 3094.3, LM/W=63.7, 1.0 S/MH, TEST NO. LTL21108

PHOTOMETRY NOTES
- Tested in accordance with IESNA LM-79-08.
- Tested to current IES and NEMA standards under stabilized laboratory conditions.
- Actual performance may differ as a result of end-user environment and application.
- Actual wattage may differ by +/- 10% when operating between 120-277V +/- 10%.
- CRI: 83 typical.

TYPE WP
DSXW1-LED 10C-1000-40K-TFTM-MVOLT-DDBXD

D-Series Size 1
LED Wall Luminaire

Introduction

The D-Series Wall luminaire is a stylish, fully integrated LED solution for building-mount applications. It features a sleek, modern design and is carefully engineered to provide long-lasting, energy-efficient lighting with a variety of optical and control options for customized performance.

With an expected service life of over 20 years of nighttime use and up to 74% in energy savings over comparable 250W metal halide luminaires, the D-Series Wall is a reliable, low-maintenance lighting solution that produces sites that are exceptionally illuminated.

Specifications — Luminaire: Width 13-3/4", Weight 12 lbs, Depth 10", Height 6-3/8". Back Box (BBW, ELCW): Width 13-3/4", BBW Weight 5 lbs, Depth 4", ELCW Weight 10 lbs, Height 6-3/8".

Ordering Information — EXAMPLE: DSXW1 LED 20C 1000 40K T3M MVOLT DDBTXD

LITHONIA LIGHTING — One Lithonia Way • Conyers, Georgia 30012 • Phone: 800.279.8041 • Fax: 770.918.1209 • www.lithonia.com

Aztec
GALILEO BASIC R SERIES
ROUND DIFFUSER, NO PERFEX, NO SHIELD
Wall Mount/Indoor/Outdoor Sconce
LED Luminaire

TYPE WS
AZ-5L-LED75-4K-(2)EBU-BB-CTB-BZ

LED technology is advancing. Consult Factory or website for periodic updates as additional wattages with higher efficacy may be available.

ORDERING GUIDE: SERIES AZ | SIZE XL2 | OPERATING WATTS 75W LED | COLOR TEMP 4K | VOLTAGE/PWR FACTOR (2)EBU | FINISH BZ

SERIES: AZ = Aztec Series
SIZE: XL2 = 12¼" wide x 28¼" tall x 7¼" deep
LAMP TYPE/QUANTITY/WATTAGE: LED75 = ±75 Watt LED
COLOR TEMP: 4K = ±4000K range
VOLTAGE: (2)EBU = Two High Temp Universal Volt (120-277v) Electronic Drivers
OPTIONS: CTB = Clear Top & Bottom (Standard with Uplight or/and Downlight)
FINISH: BZ = Bronze Finish

ECLIPSE LIGHTING

TYPE WS
AZ-5L-LED75-4K-(2)EBU-BB-CTB-BZ

PHOTOMETRIC DATA: Galileo Series: Aztec — Tested Using the IES LM79 Standards

POWER FACTOR	99.4%
LUMENS (Light Output)	5183
WATTS (AC Input)	77.3
EFFICACY (Lumens per Watt)	67.1
CRI (Color Rendering Index)	85.2
CCT (Correlated Color Temp)	4259K

SYLVANIA DRIVER 79556

Specification Data

CVS pharmacy

TYPE 'B'
REAR DRIVE-THRU

STORE NUMBER: 10528

WASHINGTON BLVD. & MONTEVIDEO RD.
JESSUP, HOWARD COUNTY, MARYLAND

PROJECT TYPE: NEW
DEAL TYPE: LEASE

CS PROJECT NUMBER: 77620

THE FOLLOWING STATES REQUIRE NOTIFICATION BY EXCAVATORS, DESIGNERS, OR ANY PERSON PREPARING TO DISTURB THE EARTH'S SURFACE ANYWHERE IN THE STATE. IN VIRGINIA, MARYLAND, THE DISTRICT OF COLUMBIA, AND DELAWARE CALL - 811
(WV 1-800-245-4848) (PA 1-800-242-1776) (DC 1-800-257-7777)
(VA 1-800-552-7001) (MD 1-800-257-7777) (DE 1-800-282-8555)

BOHLER ENGINEERING
901 DULANEY VALLEY ROAD, SUITE 801
TOWSON, MARYLAND 21204
Phone: (410) 821-7900
Fax: (410) 821-7987
MD@BohlerEng.com

DEVELOPER
J.C. BAR DEVELOPMENT, LLC
415 FALLOWFIELD ROAD, SUITE 301
CAMP HILL, PA 17011
CONTACT: JASON MITCHELL
TEL : (717) 761-7801

D.M. KUKLISH
PROFESSIONAL ENGINEER
DELAWARE LICENSE No. 14522
MARYLAND LICENSE No. 36224
VIRGINIA LICENSE No. 0402045209

REVISIONS

REV:	DATE:	COMMENT:	BY:

CHECKED BY: DMK
DRAWN BY: CRH
DATE: 4/13/16
JOB NUMBER: MD131504
TITLE: LIGHTING DETAILS
SHEET NUMBER: 14 OF 27
COMMENTS: FILE NO. SDP-15-069

OWNER: PARCEL 16A
MIT MONTEVIDEO, LLC
8850 COLUMBIA PARKWAY
COLUMBIA, MD 21045
CONTACT: MARK LEVY
TEL: (410) 579-2442

DEVELOPER: J.C. BAR PROPERTIES, INC
415 FALLOWFIELD ROAD, SUITE 301
CAMP HILL, PA 17011
CONTACT: JASON MITCHELL
TEL: (717) 761-7801

TAX MAP: 43 GRID: 10 ZONED: B-1
PARCEL: 16A
1ST ELECTION DISTRICT, HOWARD COUNTY, MARYLAND
ZB REF.: 1096m SITE AREA: 4.039 AC
DPZ REF.: SDP-15-069

SUBDIVISION NAME: MONTEVIDEO CROSSING
PARCEL A
SECTION/AREA: N/A
PLAT # 23695
WATER CODE: N/A
SEWER CODE: N/A

PROFESSIONAL CERTIFICATION
I, DAVID M. KUKLISH, P.E., HEREBY CERTIFY THAT THESE DOCUMENTS WERE PREPARED OR APPROVED BY ME, AND THAT I AM A DULY LICENSED PROFESSIONAL ENGINEER UNDER THE LAWS OF THE STATE OF MARYLAND, LICENSE NO. 36224, EXPIRATION DATE: 8/19/2018

APPROVED: DEPARTMENT OF PLANNING AND ZONING
[signature] 10-14-16
CHIEF-DEVELOPMENT ENGINEERING DIVISION DATE
[signature] 11-2-16
CHIEF-DIVISION OF LAND DEVELOPMENT DATE
[signature] 11-3-16
DIRECTOR DATE

GENERAL NOTE:
IT IS THE RESPONSIBILITY OF THE CONTRACTOR TO REVIEW ALL OF THE DRAWINGS AND SPECIFICATIONS ASSOCIATED WITH THIS PROJECT WORK SCOPE PRIOR TO THE INITIATION OF CONSTRUCTION. SHOULD THE CONTRACTOR FIND A CONFLICT WITH THE DOCUMENTS RELATIVE TO THE SPECIFICATIONS OR APPLICABLE CODES, IT IS THE CONTRACTOR'S RESPONSIBILITY TO NOTIFY THE PROJECT ENGINEER OF RECORD IN WRITING PRIOR TO THE START OF CONSTRUCTION. FAILURE BY THE CONTRACTOR TO NOTIFY THE PROJECT ENGINEER SHALL CONSTITUTE ACCEPTANCE OF FULL RESPONSIBILITY BY THE CONTRACTOR TO COMPLETE THE SCOPE OF THE WORK AS DEFINED BY THE DRAWINGS AND IN FULL CONFORMANCE WITH LOCAL REGULATIONS AND CODES.

C:\USERS\CMONDORO\APPDATA\LOCAL\TEMP\ACPUBLISH_4692\DE150009SD5----->LAYOUT: 14 - LIGHTING DETAILS

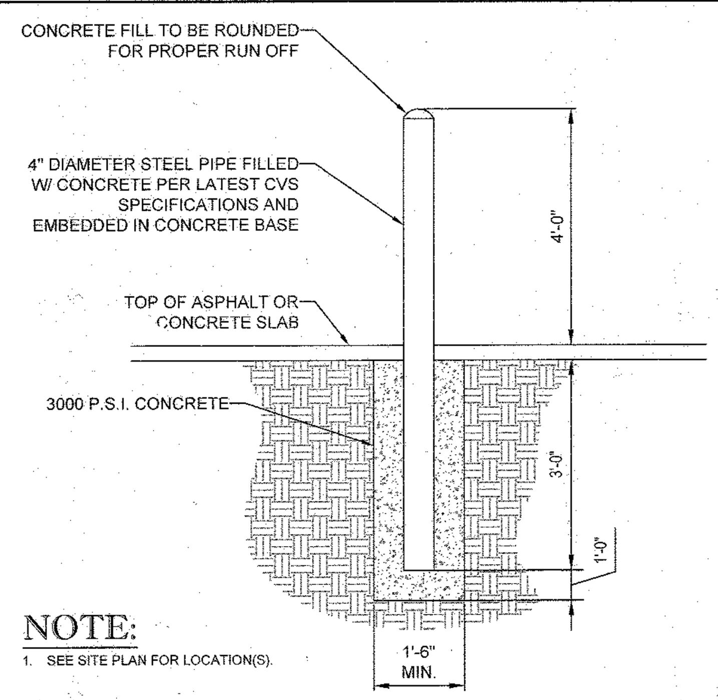

NOTE:
1. SEE SITE PLAN FOR LOCATION(S).

BOLLARD DETAIL
NOT TO SCALE

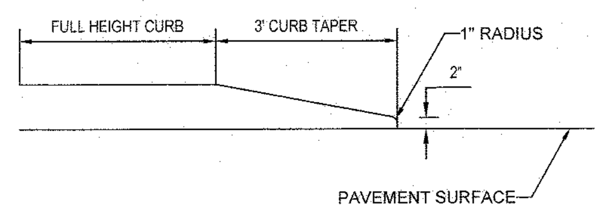

CURB TAPER DETAIL
NOT TO SCALE

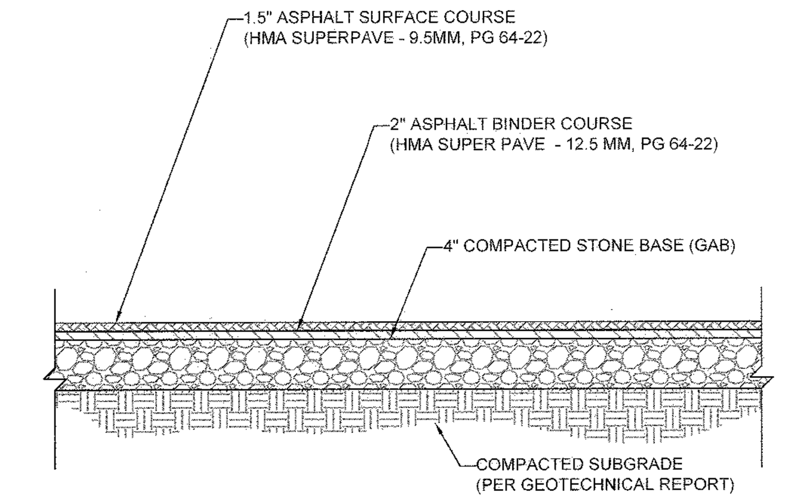

NOTE:
1. SECTION SHOWN IS BASED ON AN ANTICIPATED CBR OF 3 PER GEOTECHNICAL REPORT PREPARED BY ECS MID-ATLANTIC, LLC, ENTITLED "REPORT OF SUBSURFACE EXPLORATION, LABORATORY TESTING, AND GEOTECHNICAL ENGINEERING ANALYSIS", DATED 5/28/15 (PROJECT #02-7619). FINAL DESIGN TO BE PROVIDED ONCE FINAL CBR'S ARE AVAILABLE ON COMPACTED SUB-BASE.

STANDARD DUTY ASPHALT PAVEMENT SECTION
NOT TO SCALE

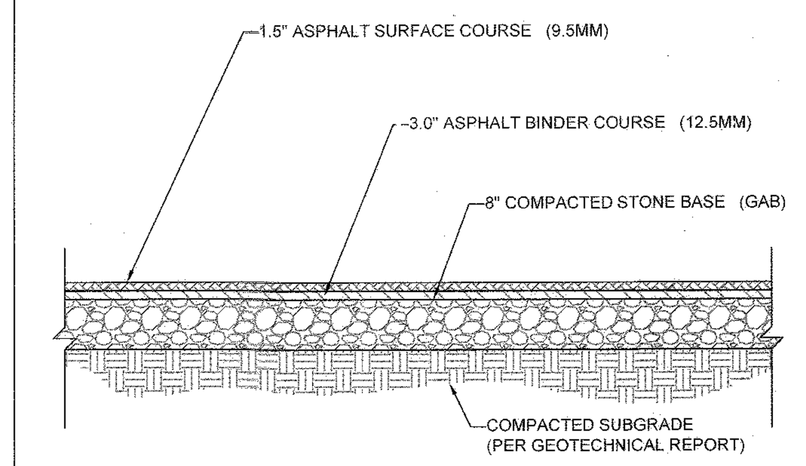

NOTE:
1. SECTION SHOWN IS BASED ON AN ANTICIPATED CBR OF 3 PER GEOTECHNICAL REPORT PREPARED BY ECS MID-ATLANTIC, LLC, ENTITLED "REPORT OF SUBSURFACE EXPLORATION, LABORATORY TESTING, AND GEOTECHNICAL ENGINEERING ANALYSIS", DATED 5/28/15 (PROJECT #02-7619). FINAL DESIGN TO BE PROVIDED ONCE FINAL CBR'S ARE AVAILABLE ON COMPACTED SUB-BASE.

MEDIUM DUTY ASPHALT PAVEMENT SECTION
NOT TO SCALE

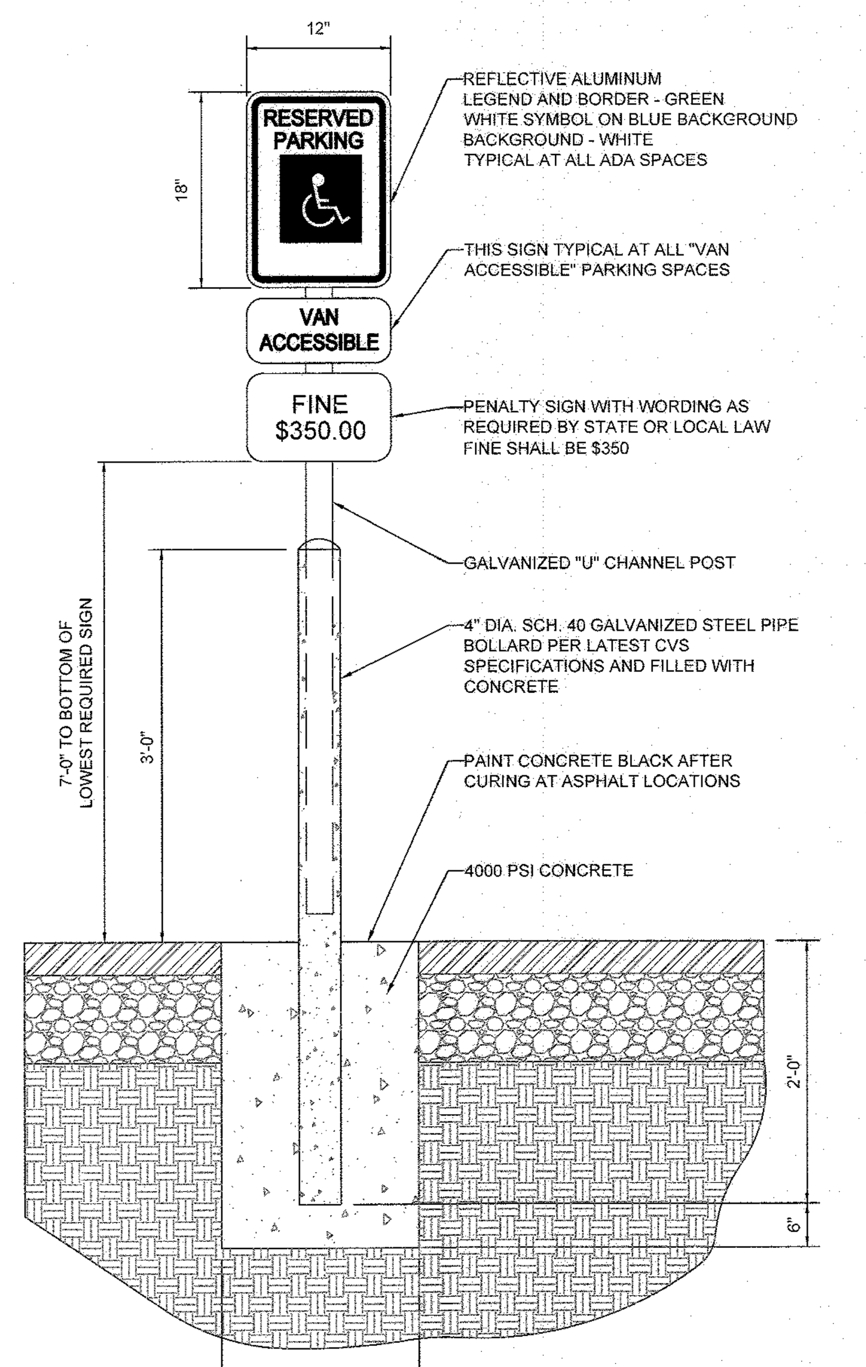

NOTE:
ONE AT EACH ADA SPACE. WHERE ADA SPACES FACE EACH OTHER WITHOUT WALKWAY, THERE SHALL BE ONE POST WITH SIGNS MOUNTED BOTH SIDES

BOLLARD MOUNTED ADA PARKING SIGN DETAIL
NOT TO SCALE

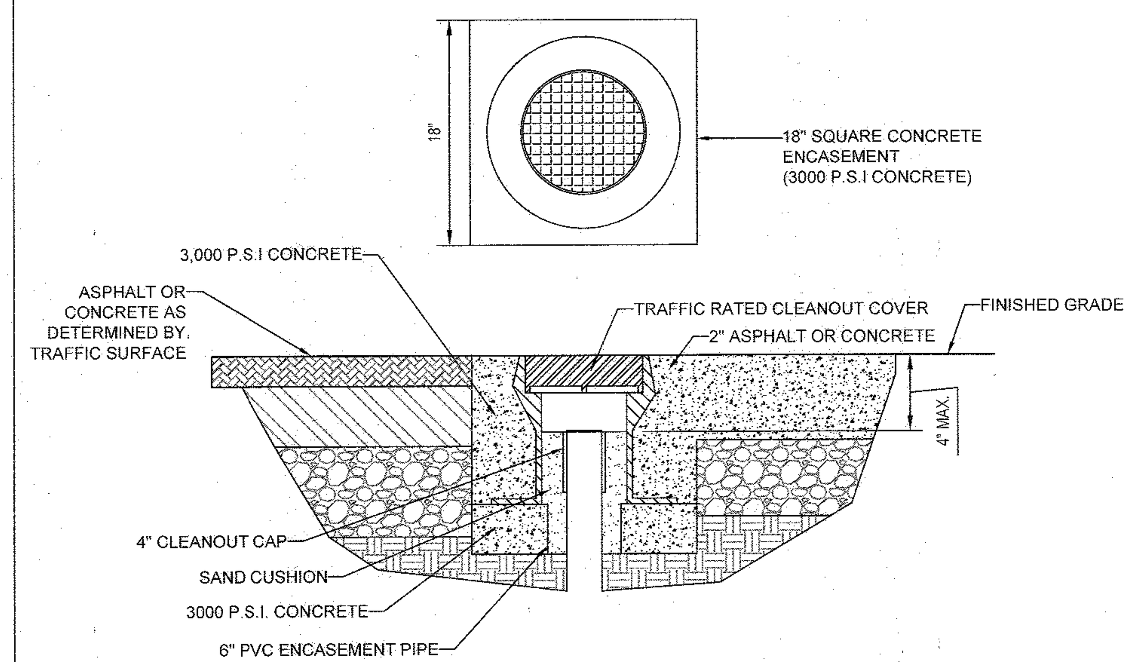

TRAFFIC RATED CLEANOUT DETAIL
NOT TO SCALE

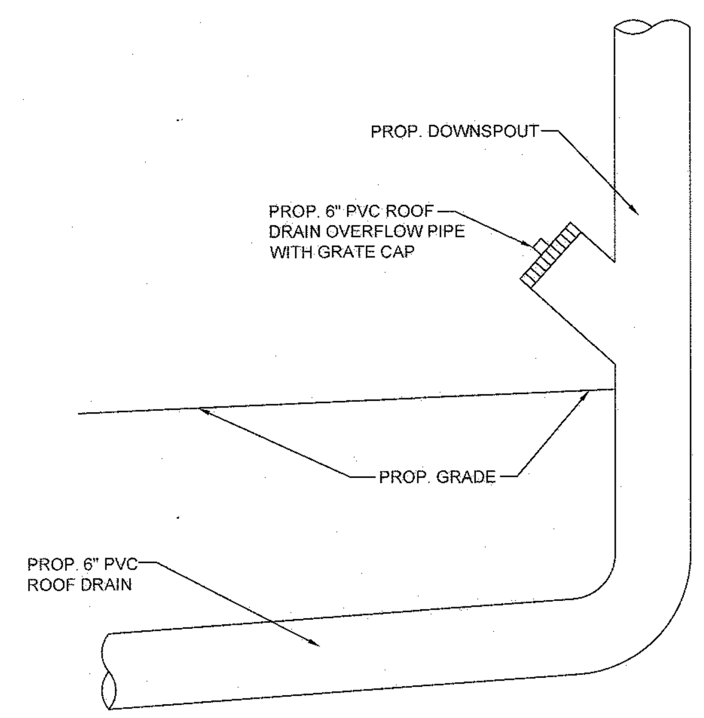

ROOF DRAIN LEADER DETAIL
NOT TO SCALE

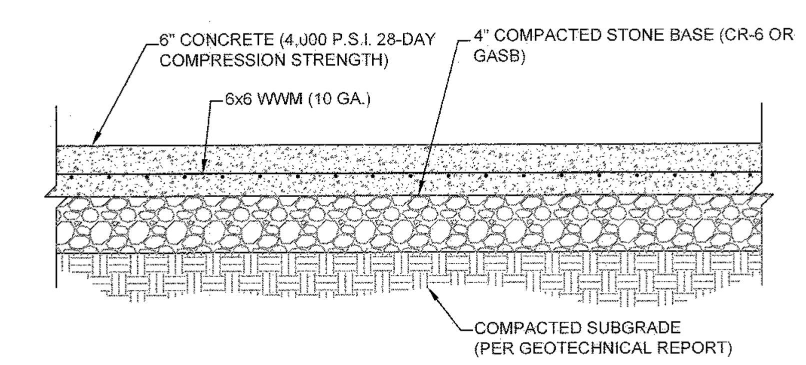

NOTE:
1. SECTION SHOWN IS BASED ON AN ANTICIPATED CBR OF 3 PER GEOTECHNICAL REPORT PREPARED BY ECS MID-ATLANTIC, LLC, ENTITLED "REPORT OF SUBSURFACE EXPLORATION, LABORATORY TESTING, AND GEOTECHNICAL ENGINEERING ANALYSIS", DATED 5/28/15 (PROJECT #02-7619). FINAL DESIGN TO BE PROVIDED ONCE FINAL CBR'S ARE AVAILABLE ON COMPACTED SUB-BASE.

CONCRETE PAVEMENT SECTION
NOT TO SCALE

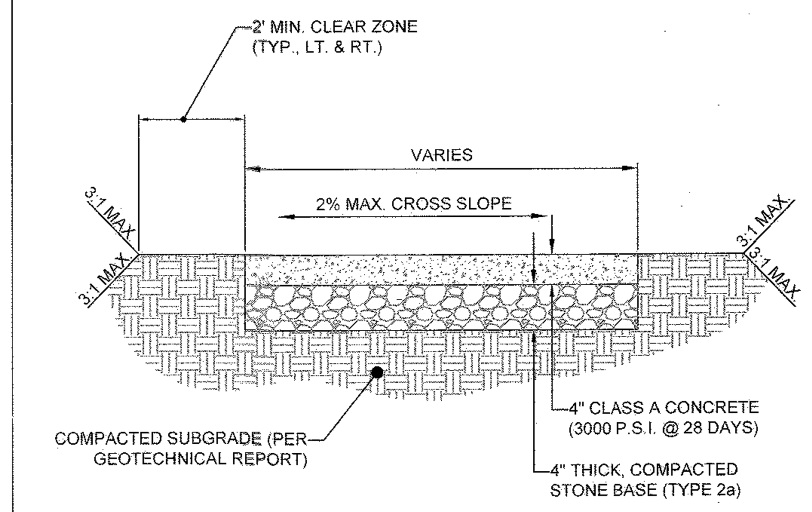

NOTE:
1. EXPANSION JOINTS 1/2" WIDE PREMOLDED BIT. MATERIAL SHALL BE INSTALLED AT 30' INTERVALS, CRACK CONTROL JOINTS TO BE SPACED AT INTERVALS EQUAL TO SIDEWALK WIDTH.

CONCRETE SIDEWALK DETAIL
NOT TO SCALE

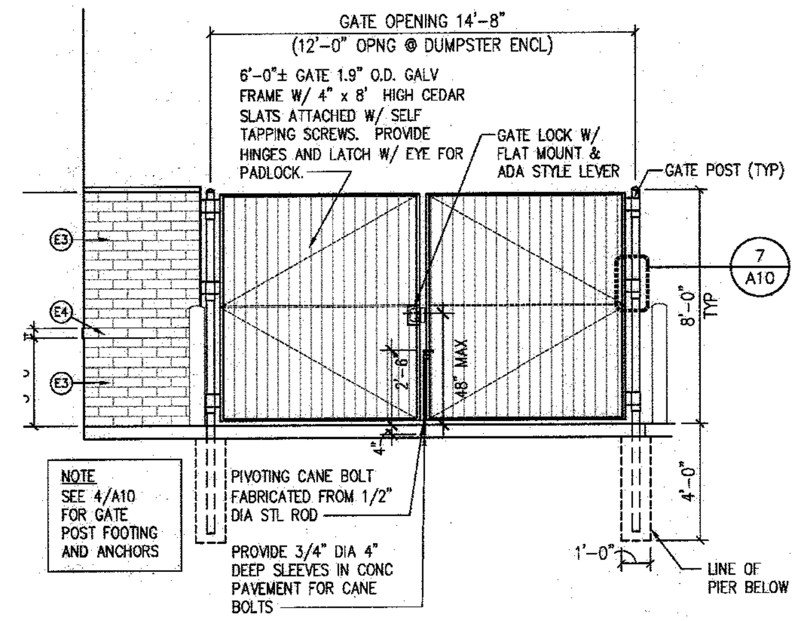

2 A10 GATE ELEVATION

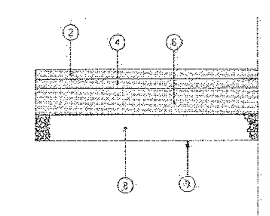

FULL-DEPTH CONSTRUCTION
RELOCATED MONTEVIDEO ROAD

PAVEMENT LEGEND
1. 1.5" HOT-MIX ASPHALT SUPERPAVE 9.5 mm FOR SURFACE- PG 64-22, LEVEL-1
2. 2.0" HOT-MIX ASPHALT SUPERPAVE 12.5 mm FOR SURFACE- PG 64-22, LEVEL-2
3. 1.0" HOT-MIX ASPHALT SUPERPAVE 9.5 mm FOR INTERMEDIATE SURFACE - PG 64-22, LEVEL-1
4. 2.0" HOT-MIX ASPHALT SUPERPAVE 12.5 mm FOR INTERMEDIATE SURFACE - PG 64-22, LEVEL-2
5. 3.5" HOT-MIX ASPHALT SUPERPAVE 19.0 mm FOR BASE - PG 64-22, LEVEL-1
6. 6.0" HOT-MIX ASPHALT SUPERPAVE 19.0 mm FOR BASE - PG 64-22, LEVEL-2
7. 4.0" GRADED AGGREGATE BASE
8. 6.0" GRADED AGGREGATE BASE
9. TOP OF SUBGRADE AND LIMIT OF CLASS 1 EXCAVATION

RELOCATED MONTEVIDEO PAVEMENT REPLACEMENT DETAIL
(BY JMT) NOT TO SCALE

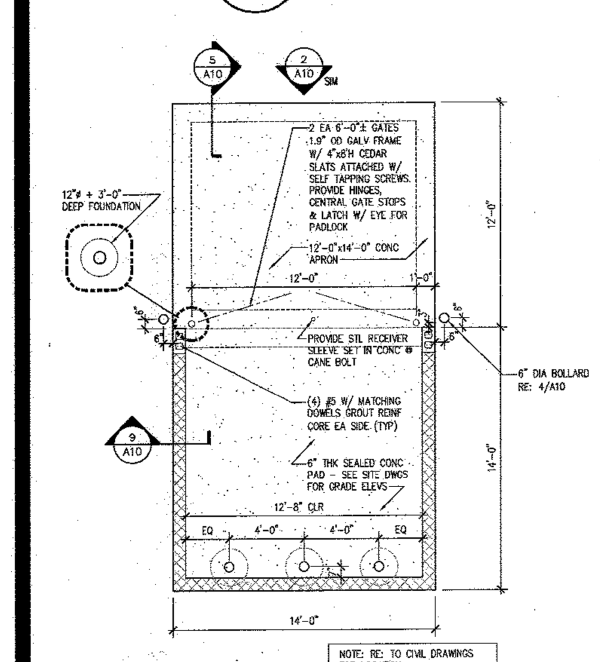

8 A10 DUMPSTER ENCLOSURE PLAN

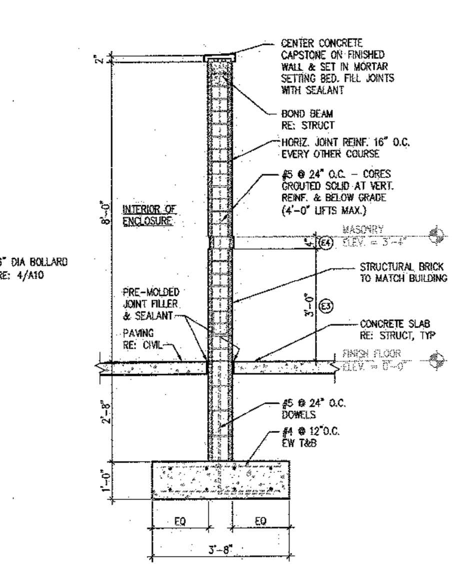

9 A10 ENCLOSURE SECTION

DUMPSTER ENCLOSURE DETAIL
(BY NORR) NOT TO SCALE

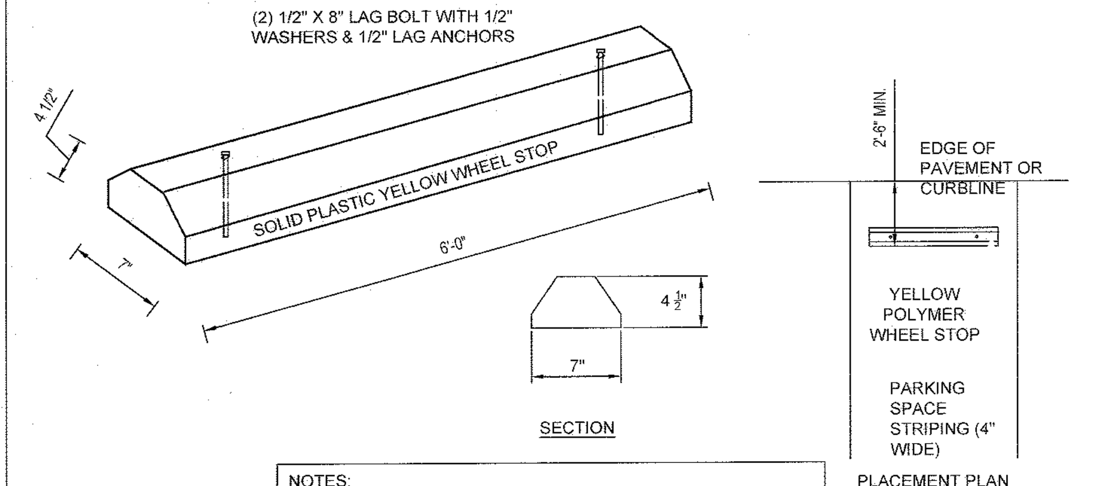

NOTES:
1.) POLYMER WHEEL STOP SHALL INNOPLAST, MODEL #PBS6 (6'-0"x4-1/2"x7", YELLOW SOLID PLASTIC) AND SHALL BE INSTALLED IN ACCORDANCE WITH MANUFACTURER'S SPECIFICATIONS.
2.) REFER TO PLAN SET FOR LOCATIONS OF PROPOSED WHEEL STOPS.
3.) WHEEL STOPS SHALL BE YELLOW SO AS TO CONTRAST WITH PAVEMENT SURFACE. WHEEL STOPS MUST BE PERPETUALLY MAINTAINED BY PROPERTY OWNER OR PARTY RESPONSIBLE FOR SITE MAINTENANCE.

POLYMER WHEEL STOP (CVS)
NOT TO SCALE

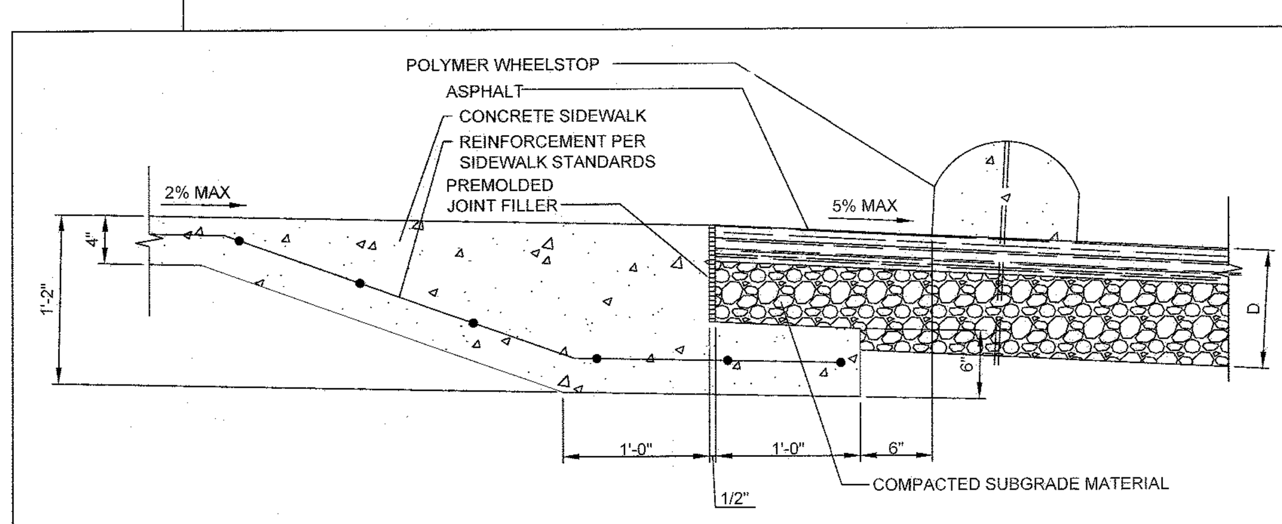

CONCRETE PAVEMENT TRANSITION DETAIL
NOT TO SCALE

NOTES:
1. ALL RAMPS SHALL HAVE A WARNING TEXTURE EXTENDING THE FULL WIDTH AND DEPTH OF RAMP. SEE DETAIL R-4.07.
2. GRASS AREA ADJACENT TO SIDEWALK MUST BE SLOPED TO MEET RAMP.
3. 4'-0" SIDEWALK REQUIRES PASSING AREA (SEE DETAIL R-4.01).

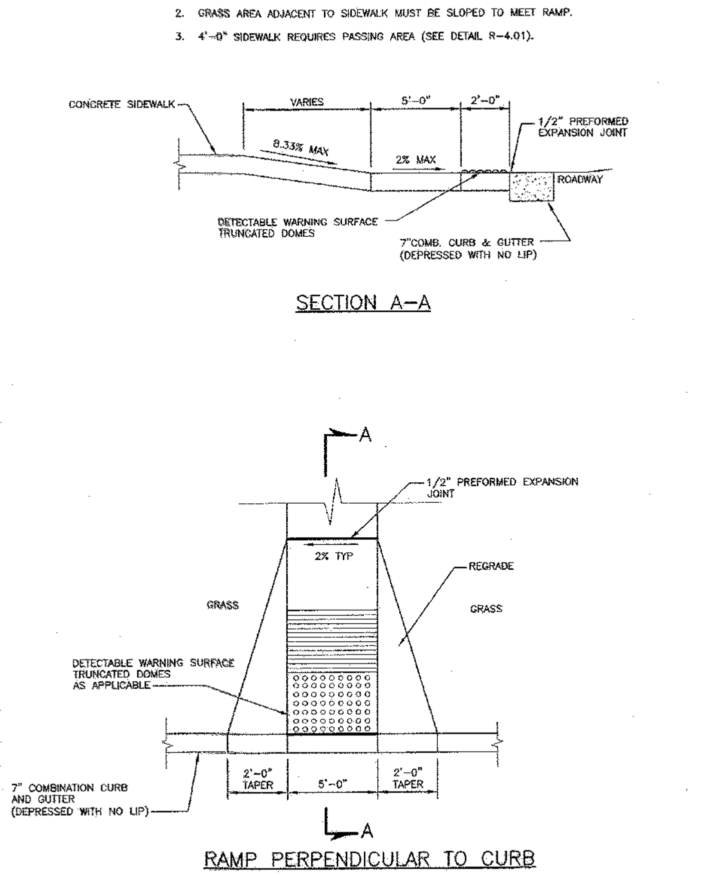

Revised / Revised 5/7/2007 / Approved	Howard County, Maryland Department of Public Works Approved: Chief, Bureau of Engineering	SIDEWALK RAMP Layout & Grading Perpendicular to Curb	Detail R-4.05

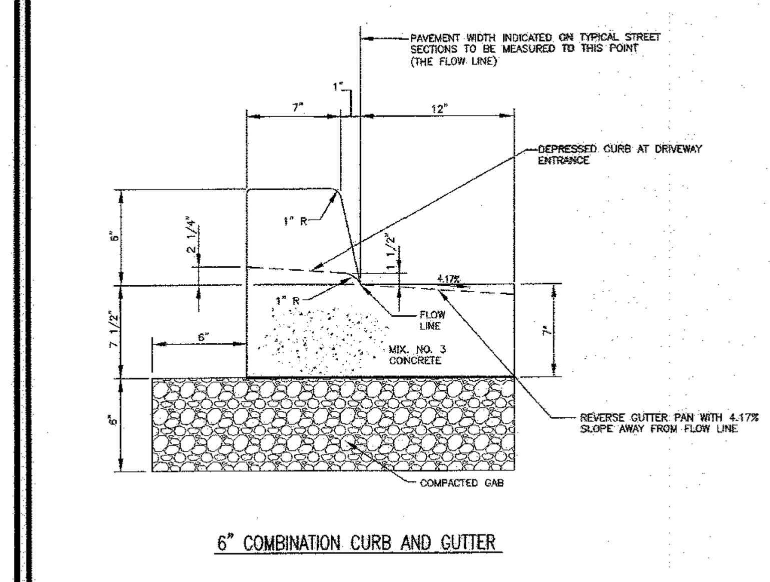

6" COMBINATION CURB AND GUTTER

NOTE:
1. GUTTER PAN AT THE MEDIAN EDGE OF INTERMEDIATE ARTERIALS OR THE HIGH SIDE OF SUPERELEVATED SECTIONS SHALL BE SLOPED AT THE SAME RATE AND IN THE SAME DIRECTION AS THE PAVEMENT. MATCH PAVEMENT CROSS SLOPE WHEN CURB IS LOCATED ON THE LOW SIDE OF SUPERELEVATED SECTION AND THE RATE OF SUPERELEVATION IS GREATER THAN 3% FOR MODIFIED CURB AND GUTTER.

Revised / Revised 5/7/2007 / Approved	Howard County, Maryland Department of Public Works Approved: Chief, Bureau of Engineering	CURB AND GUTTER 6" Combination Curb and Gutter Private	Detail R-9.01

NOTE:
ALL DETAILS ON THIS SHEET (WITHIN BOLD FRAMES) WERE PROVIDED BY CVS OR NORR) AND ARE FOR INFORMATIONAL PURPOSES, ONLY. BOHLER ENGINEERING SHALL BE HELD HARMLESS IN THE EVENT OF ERRONEOUS INFORMATION CONTAINED WITHIN THESE DETAILS AND/OR STRUCTURAL FAILURE.

OWNER: PARCEL 16A
MIT MONTEVIDEO, LLC
8850 COLUMBIA PARKWAY
COLUMBIA, MD 21045
CONTACT: MARK LEVY
TEL: (410) 579-2442

DEVELOPER: J.C. BAR PROPERTIES, INC
415 FALLOWFIELD ROAD, SUITE 301
CAMP HILL, PA 17011
CONTACT: JASON MITCHELL
TEL: (717) 761-7801

TAX MAP: 43 GRID: 10 ZONED: B-1
PARCEL: 16A
1ST ELECTION DISTRICT, HOWARD COUNTY, MARYLAND
ZB REF.: 1096m SITE AREA: 4.039 AC
DPZ REF.: SDP-15-069

SUBDIVISION NAME: MONTEVIDEO CROSSING
PARCEL A
SECTION/AREA: N/A
PLAT # 23695
WATER CODE: N/A
SEWER CODE: N/A

APPROVED: DEPARTMENT OF PLANNING AND ZONING
[signature] 10.14.16
CHIEF-DEVELOPMENT ENGINEERING DIVISION DATE
[signature] 11-2-16
CHIEF-DIVISION OF LAND DEVELOPMENT DATE
[signature] 11-3-16
DIRECTOR DATE

GENERAL NOTE:
IT IS THE RESPONSIBILITY OF THE CONTRACTOR TO REVIEW ALL OF THE DRAWINGS AND SPECIFICATIONS ASSOCIATED WITH THIS PROJECT WORK SCOPE PRIOR TO THE INITIATION OF CONSTRUCTION. SHOULD THE CONTRACTOR FIND A CONFLICT WITH THE DOCUMENTS RELATIVE TO THE SPECIFICATIONS OR APPLICABLE CODES, IT IS THE CONTRACTOR'S RESPONSIBILITY TO NOTIFY THE PROJECT ENGINEER OF RECORD IN WRITING PRIOR TO THE START OF CONSTRUCTION. FAILURE BY THE CONTRACTOR TO NOTIFY THE PROJECT ENGINEER SHALL CONSTITUTE ACCEPTANCE OF FULL RESPONSIBILITY BY THE CONTRACTOR TO COMPLETE THE SCOPE OF THE WORK AS DEFINED BY THE DRAWINGS AND IN FULL CONFORMANCE WITH LOCAL REGULATIONS AND CODES.

C:\USERS\CMONDORO\APPDATA\LOCAL\TEMP\ACPUBLISH_4692\DE150009SD5---------->LAYOUT: 15 - CONSTRUCTION DETAILS

PROFESSIONAL CERTIFICATION
I, DAVID M. KUKLISH, P.E., HEREBY CERTIFY THAT THESE DOCUMENTS WERE PREPARED OR APPROVED BY ME, AND THAT I AM A DULY LICENSED PROFESSIONAL ENGINEER UNDER THE LAWS OF THE STATE OF MARYLAND, LICENSE NO. 36224, EXPIRATION DATE: 8/19/2018

CVS pharmacy
TYPE 'B'
REAR DRIVE-THRU
STORE NUMBER: 10528
WASHINGTON BLVD. & MONTEVIDEO RD.
JESSUP, HOWARD COUNTY, MARYLAND
PROJECT TYPE: NEW
DEAL TYPE: LEASE
CS PROJECT NUMBER: 77620

THE FOLLOWING STATES REQUIRE NOTIFICATION BY EXCAVATORS, DESIGNERS, OR ANY PERSON PREPARING TO DISTURB THE EARTH'S SURFACE ANYWHERE IN THE STATE. IN VIRGINIA, MARYLAND, THE DISTRICT OF COLUMBIA, AND DELAWARE CALL - 811
(WV 1-800-245-4848) (PA 1-800-242-1776) (DC 1-800-257-7777)
(VA 1-800-552-7001) (MD 1-800-257-7777) (DE 1-800-282-8555)

BOHLER ENGINEERING
901 DULANEY VALLEY ROAD, SUITE 801
TOWSON, MARYLAND 21204
Phone: (410) 821-7900
Fax: (410) 821-7987
MD@BohlerEng.com

DEVELOPER
J.C. BAR DEVELOPMENT, LLC
415 FALLOWFIELD ROAD, SUITE 301
CAMP HILL, PA 17011
CONTACT: JASON MITCHELL
TEL : (717) 761-7801

D.M. KUKLISH
PROFESSIONAL ENGINEER
DELAWARE LICENSE No. 14522
MARYLAND LICENSE No. 36224
VIRGINIA LICENSE No. 0402045209

REVISIONS

REV:	DATE:	COMMENT:	BY:

CHECKED BY: DMK
DRAWN BY: CRH
DATE: 4/13/16
JOB NUMBER: MD131504
TITLE: CONSTRUCTION DETAILS
SHEET NUMBER: 15 OF 27
COMMENTS: FILE NO. SDP-15-069

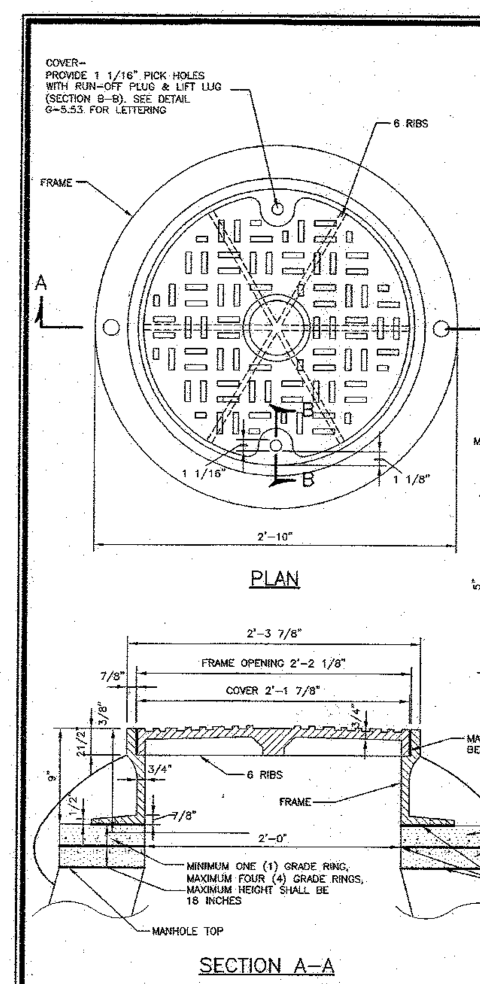

NOTES:

1. WEIGHT OF FRAME SHALL NOT BE LESS THAN 250 POUNDS.
2. WEIGHT OF COVER SHALL NOT BE LESS THAN 170 POUNDS.
3. MANHOLE FRAME AND COVER SHALL BE HEAVY DUTY AND BE CAST IRON MEETING ASTMA–48 CLASS 35B
4. PRECAST CONCRETE RINGS MAY BE USED IN PLACE OF BRICK MASONRY COURSES. A MINIMUM OF ONE GRADE RING AND MAXIMUM OF FOUR GRADE RINGS SHALL BE PROVIDED, WITH A MAX. TOTAL HIEGHT OF 18 INCHES FROM THE TOP OF THE MANHOLE TO BOTTOM OF FRAME. SEE DETAIL G–5.50. GRADE RINGS SHALL BE BEVELED WHEN NECESSARY TO ACCOMODATE ROAD SLOPE.
5. SEE DETAILS G–5.11 FOR GENERAL NOTES.

Howard County, Maryland — Department of Public Works — Revised; Revised 5/7/2007 Approved — Approved: Chief, Bureau of Engineering — Manhole Heavy Traffic Frame and Cover — Detail G–5.51

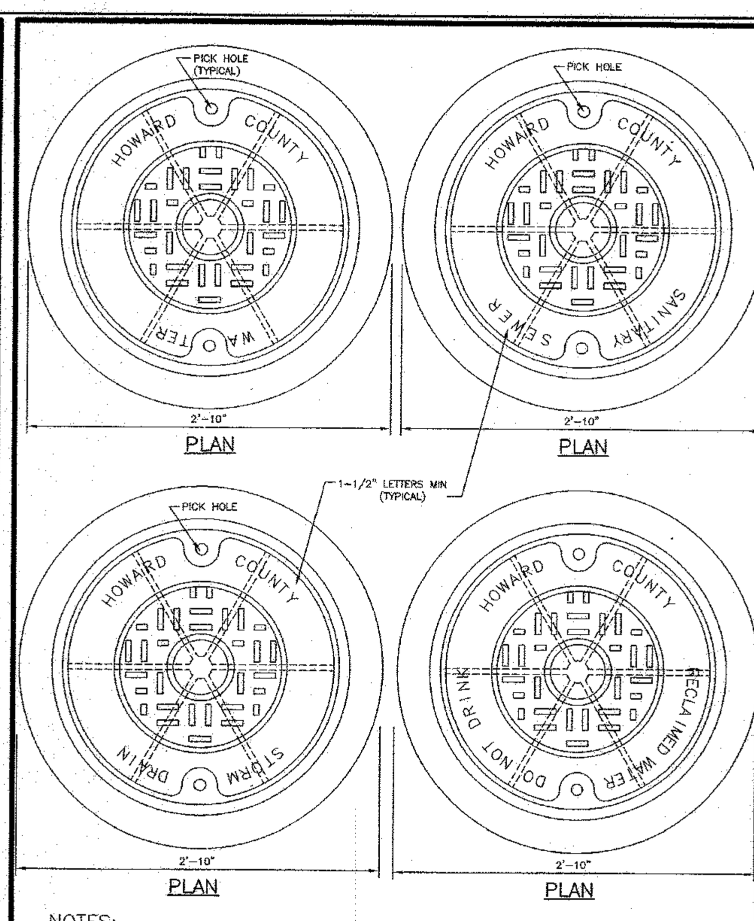

NOTES:

1. FOR FRAME AND COVER ASSEMBLY, AND NOTES SEE DETAIL G–5.51.

Howard County, Maryland — Department of Public Works — Revised; Revised 5/7/2007 Approved — Approved: Chief, Bureau of Engineering — Manhole Cover Lettering — Detail G–5.53

DIP PIPE DIA "D"	"W"	TRENCH PAYMENT WIDTH
4	12	28
6	11	28
8	10	28
10	9	28
12	8	28
14	8	36
16	8	32
18	8	34
20	8	36
24	12	48

RCP PIPE DIA "D"	"W"	TRENCH PAYMENT WIDTH
4	12	28
6	11	28
12	8	28
15	9	31
18	9	34
21	8	37
24	12	48
27	12	51
30	12	54
33	15	63
36	15	66
42	15	72
48	18	84
54	18	90
60	18	96
66	18	102
72	18	108
78	18	114
84	18	120
90	18	126
96	18	132
102	18	138
108	18	144

ALL DIMENSIONS IN INCHES

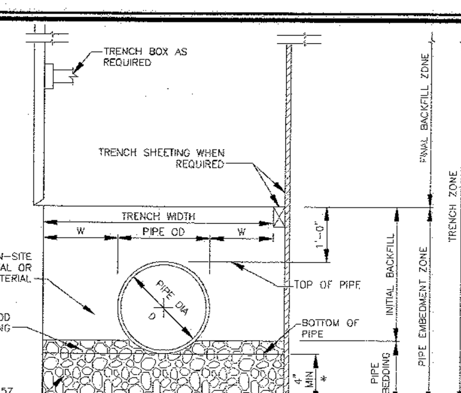

* FOR TRENCHES IN ROCK, MINIMUM BEDDING DEPTH IS 6 INCHES. FOR RCP 96 INCHES AND GREATER, MINIMUM BEDDING DEPTH IS 12 INCHES.

NOTES:

1. THE "W" DIMENSION SHALL BE USED TO CALCULATE MAXIMUM TRENCH PAY WIDTH.
2. FOR TRENCHES WHERE TRENCH BOX OR TRENCH SHEETING IS NOT REQUIRED, MEASUREMENT FOR CONTINGENT BORROW MATERIALS WILL BE BASED ON THE TRENCH WIDTH SHOWN.
3. FOR TRENCHES WHERE TRENCH BOX OR TRENCH SHEETING IS REQUIRED, MEASUREMENT FOR CONTINGENT BORROW MATERIALS WILL BE BASED ON THE TRENCH WIDTH SHOWN PLUS 24 INCHES.
4. THE MAXIMUM WIDTH OF THE TRENCH EXCAVATED ON-SITE FOR RCP, SHALL NOT EXCEED THE TRENCH PAYMENT WIDTH PLUS 12 INCHES.
5. MINIMUM SPACING BETWEEN PARALLEL CULVERT PIPES SHALL BE TWICE THE "W" DIMENSION.
6. SPECIAL DESIGN IS REQUIRED AND SHALL BE SPECIFIED OR DETAILED IN THE CONTRACT DOCUMENTS FOR THE FOLLOWING PIPES:
   RCP STORM DRAINS LARGER THAN 108 INCHES
   RCP GRAVITY SANITARY SEWERS LARGER THAN 48 INCHES
   DIP LARGER THAN 24 INCHES
   STREAM CROSSINGS SEE S–3.11 AND S–3.12
7. (△) WATERMAIN SHALL BE SPECIAL THICKNESS CLASS 54 DIP MINIMUM.

Howard County, Maryland — Department of Public Works — Revised △ 6/30/2011; Revised 5/7/2007 Approved — Approved: Chief, Bureau of Engineering — Pipe Trench DIP & RCP — Detail G–2.11

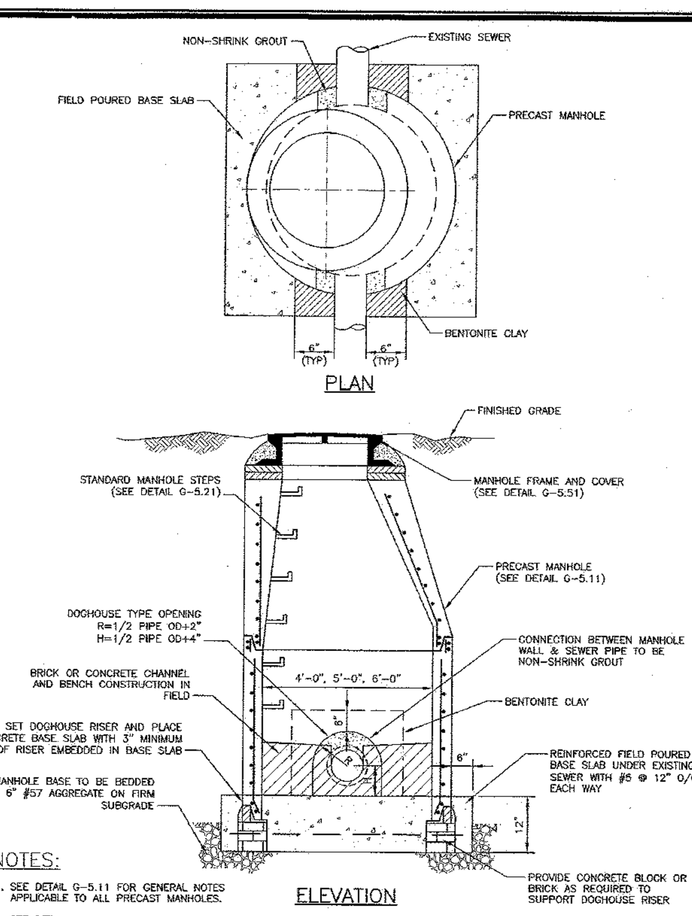

NOTES:

1. SEE DETAIL G–5.11 FOR GENERAL NOTES APPLICABLE TO ALL PRECAST MANHOLES.
2. SEE DETAIL G–5.13 FOR MANHOLE DETAILS FOR PIPES 27 INCHES TO 36 INCHES.

Howard County, Maryland — Department of Public Works — Revised; Revised 5/7/2007 Approved — Approved: Chief, Bureau of Engineering — PRECAST MANHOLE Doghouse Over Existing Sewer 24" Pipe and smaller — Detail G–5.14

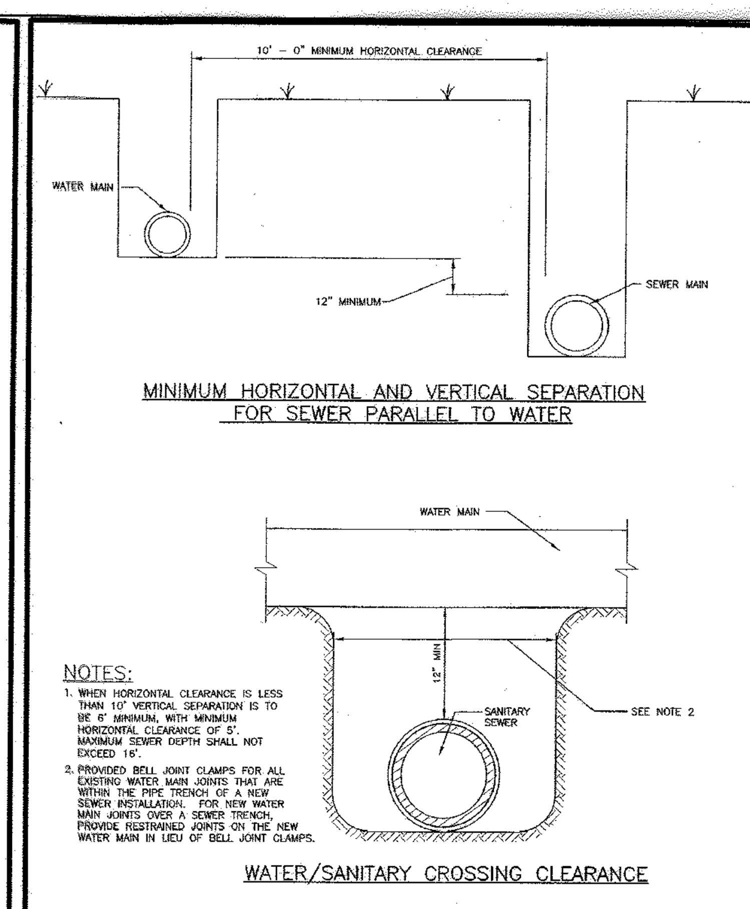

NOTES:

1. WHEN HORIZONTAL CLEARANCE IS LESS THAN 10' VERTICAL SEPARATION IS TO BE 6' MINIMUM, WITH MINIMUM HORIZONTAL CLEARANCE OF 5'. MAXIMUM SEWER DEPTH SHALL NOT EXCEED 16'.
2. PROVIDED BELL JOINT CLAMPS FOR ALL EXISTING WATER MAIN JOINTS THAT ARE WITHIN THE PIPE TRENCH OF A NEW SEWER INSTALLATION. FOR NEW WATER MAIN JOINTS OVER A SEWER TRENCH, PROVIDE RESTRAINED JOINTS ON THE NEW WATER MAIN IN LIEU OF BELL JOINT CLAMPS.

Howard County, Maryland — Department of Public Works — Revised; Revised 5/7/2007 Approved — Approved: Chief, Bureau of Engineering — Clearance Requirements Water To Sewer — Detail S–3.13

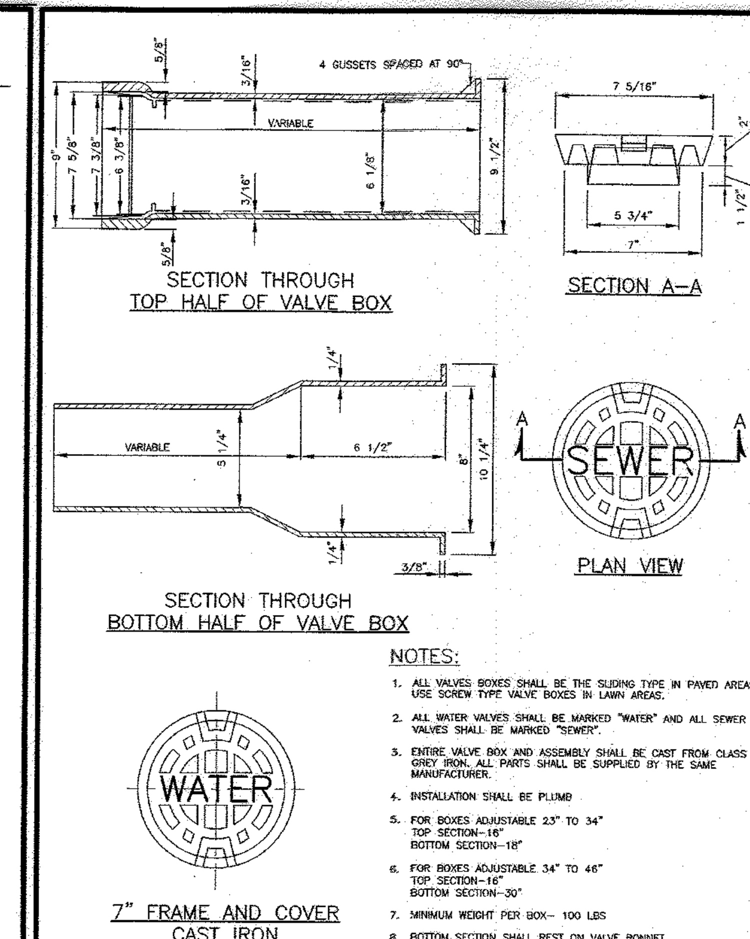

NOTES:

1. ALL VALVES BOXES SHALL BE THE SLIDING TYPE IN PAVED AREAS. USE SCREW TYPE VALVE BOXES IN LAWN AREAS.
2. ALL WATER VALVES SHALL BE MARKED "WATER" AND ALL SEWER VALVES SHALL BE MARKED "SEWER".
3. ENTIRE VALVE BOX AND ASSEMBLY SHALL BE CAST FROM CLASS 35 GREY IRON. ALL PARTS SHALL BE SUPPLIED BY THE SAME MANUFACTURER.
4. INSTALLATION SHALL BE PLUMB
5. FOR BOXES ADJUSTABLE 23" TO 34" TOP SECTION–16" BOTTOM SECTION–18"
6. FOR BOXES ADJUSTABLE 34" TO 46" TOP SECTION–16" BOTTOM SECTION–30"
7. MINIMUM WEIGHT PER BOX– 100 LBS
8. BOTTOM SECTION SHALL REST ON VALVE BONNET.

Howard County, Maryland — Department of Public Works — Revised; Revised 5/7/2007 Approved — Approved: Chief, Bureau of Engineering — Valve Box Adjustable Round Head — Detail G–8.01

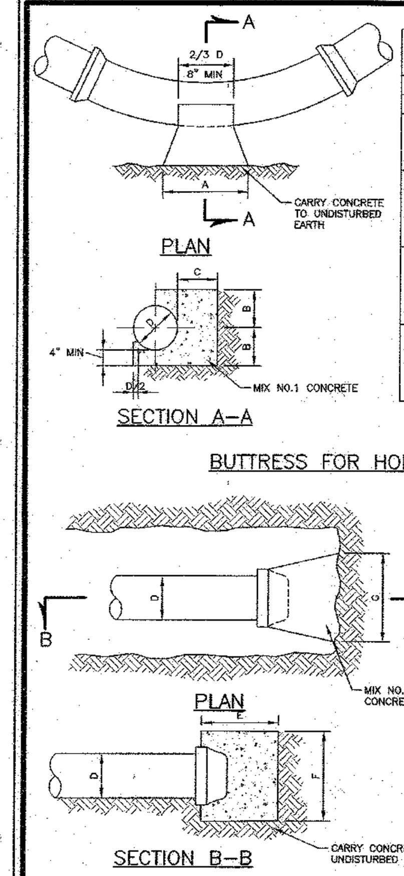

MINIMUM DIMENSIONS OF BUTTRESS FOR HORIZONTAL BENDS *

BEND	DIAMETER: (D)	6"	8"	12"	16"	20"	24"
1/64 (5 5/8°)	A	–	–	–	–	1'–8"	2'–0"
	B	–	–	–	–	1'–2"	1'–4"
	C	–	–	–	–	10"	1'–0"
1/32 (11 1/4°)	A	6"	8"	1'–2"	1'–7"	2'–0"	2'–5"
	B	7"	8"	10"	1'–0"	1'–2"	1'–4"
	C	8"	8"	8"	10"	10"	1'–0"
1/16 (22 1/2°)	A	11"	1'–2"	1'–10"	2'–5"	3'–0"	3'–7"
	B	7"	8"	10"	1'–1"	1'–2"	1'–5"
	C	8"	9"	11"	1'–2"	1'–4"	1'–6"
1/8 (45°)	A	1'–5"	1'–10"	2'–10"	3'–9"	4'–8"	5'–7"
	B	7"	8"	11"	1'–3"	1'–7"	1'–11"
	C	8"	9"	11"	1'–2"	1'–4"	1'–9"

AREA OF BEARING = Ax2B

BUTTRESS FOR HORIZONTAL BENDS

MINIMUM DIMENSIONS OF BUTTRESS FOR CAPS AND PLUGS *

	SIZE		
D	6"	8"	10"
E	7"	9"	11"
F	1'–1"	1'–5"	1'–9"
G	1'–7"	2'–2"	2'–8"

AREA OF BEARING = FxG

NOTES:

1. PLUGS FOR 12" DIAMETER AND GREATER PIPE ARE ON DETAIL W–2.23.
2. BUTTRESSES FOR 90° HORIZONTAL BENDS ARE ON DETAIL W–2.23.

BUTTRESS FOR CAPS AND PLUGS

* ALL BUTTRESS DIMENSIONS ARE BASED ON A STATIC WATER PRESSURE OF 150 PSI AND A MINIMUM SOIL BEARING PRESSURE OF 3000 PSF. WHERE ACTUAL FIELD CONDITIONS ARE DIFFERENT, THE AREA OF BEARING SHALL BE INCREASED AS DETERMINED BY THE ENGINEER.

Howard County, Maryland — Department of Public Works — Revised; Revised 5/7/2007 Approved — Approved: Chief, Bureau of Engineering — WATER MAIN Buttress Cap & Horizontal Bend — Detail W–2.21

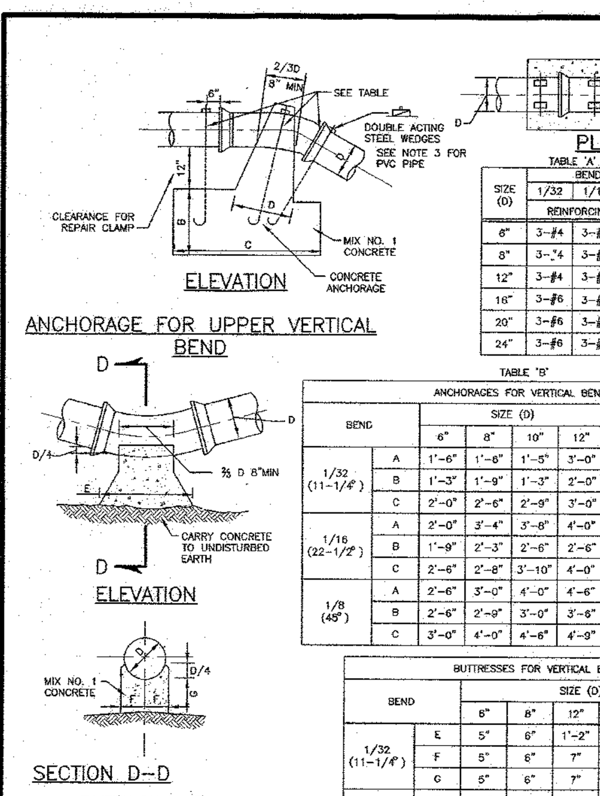

TABLE 'A'

SIZE (D)	BENDS 1/32	1/16	1/8
	REINFORCING BARS		
6"	3–#4	3–#4	3–#4
8"	3–_4	3–#4	3–#4
12"	3–#4	3–#4	3–#5
16"	3–#6	3–#6	3–#6
20"	3–#6	3–#6	4–#6
24"	3–#6	3–#6	5–#6

TABLE 'B' — ANCHORAGES FOR VERTICAL BENDS

BEND		SIZE (D) 6"	8"	10"	12"	16"	20"	24"
1/32 (11–1/4°)	A	1'–6"	1'–8"	1'–5"	3'–0"	3'–6"	4'–0"	4'–3"
	B	1'–3"	1'–9"	1'–3"	2'–0"	2'–0"	2'–6"	2'–6"
	C	2'–0"	2'–6"	2'–9"	3'–0"	4'–0"	5'–0"	5'–9"
1/16 (22–1/2°)	A	2'–0"	3'–4"	3'–8"	4'–0"	4'–4"	4'–8"	5'–0"
	B	1'–9"	2'–3"	2'–6"	2'–6"	2'–6"	2'–8"	3'–8"
	C	2'–6"	2'–8"	3'–10"	4'–0"	5'–6"	7'–6"	8'–6"
1/8 (45°)	A	2'–6"	3'–0"	4'–0"	4'–6"	5'–2"	5'–6"	6'–0"
	B	2'–6"	2'–9"	3'–0"	3'–6"	4'–0"	4'–6"	5'–6"
	C	3'–0"	4'–0"	4'–6"	4'–9"	6'–6"	8'–0"	9'–6"

BUTTRESSES FOR VERTICAL BENDS

BEND		SIZE (D) 6"	8"	12"	16"	20"	24"
1/32 (11–1/4°)	E	5"	6"	1'–2"	1'–7"	2'–0"	2'–5"
	F	5"	6"	7"	9"	11"	1'–2"
	G	5"	6"	7"	9"	11"	1'–2"
1/16 (22–1/2°)	E	11"	1'–2"	1'–10"	2'–5"	3'–0"	3'–7"
	F	5"	6"	8"	11"	1'–2"	1'–5"
	G	5"	6"	8"	11"	1'–2"	1'–5"
1/8 (45°)	E	1'–5"	1'–10"	2'–10"	3'–9"	4'–8"	5'–7"
	F	7"	8"	11"	1'–3"	1'–7"	1'–11"
	G	7"	8"	11"	1'–3"	1'–7"	1'–11"

NOTE:

1. ANCHORAGE & BUTTRESS DIMENSIONS ARE BASED ON A STATIC WATER PRESSURE OF 150 PSI AND A MINIMUM SOIL BEARING PRESSURE OF 3000 PSF WHEN ACTUAL FIELD CONDITIONS ARE DIFFERENT THE AREA OF BEARING SHALL BE INCREASED AS DETERMINED BY THE ENGINEER.
2. PAINT EXPOSED BARS/STRAPS WITH 2 COATS OF BITUMINOUS MATERIAL PROTECTIVE COATING PER AWWA C203.
3. WHEN ANCHORING PVC PIPE, THE STRAPPING IN CONTACT WITH THE PIPE SURFACE SHALL BE 1" WIDE X ¼" THICK STEEL (NOT SHOWN). THE REMAINING PORTION OF THE STRAP SHALL BE A REINFORCING BAR SIZED IN ACCORDANCE WITH TABLE A.

Howard County, Maryland — Department of Public Works — Revised; Revised 5/7/2007 Approved — Approved: Chief, Bureau of Engineering — WATER MAIN Buttress & Anchorage Vertical Bend — Detail W–2.22

DIAMETER	O	P	R	S
6"	1' – 2"	1' – 2"	1' – 8"	5"
8"	1' – 7"	1' – 6"	1' – 8"	6"
12"	2' – 0"	2' – 6"	1' – 11"	7"
16"	2' – 10"	3' – 0"	2' – 2"	10"
18"	3' – 1"	3' – 6"	2' – 6"	1' – 0"
20"	3' – 6"	3' – 10"	2' – 10"	1' – 0"
24"	4' – 8"	4' – 0"	3' – 0"	1' – 0"

AREA OF BEARING = 2 X O X P

MINIMUM DIMENSIONS OF BUTTRESS FOR TEES

LABEL	SIZE OF BRANCH					
D	6"	8"	12"	16"	20"	24"
H	8"	9"	1'–0"	1'–4"	1'–8"	2'–2"
I	10"	1'–1"	1'–7"	2'–2"	2'–8"	3'–2"
J	6"	8"	1'–1"	1'–5"	1'–9"	2'–1"
K	6"	7"	9"	10"	1'–2"	1'–4"

BUTTRESS FOR TEES

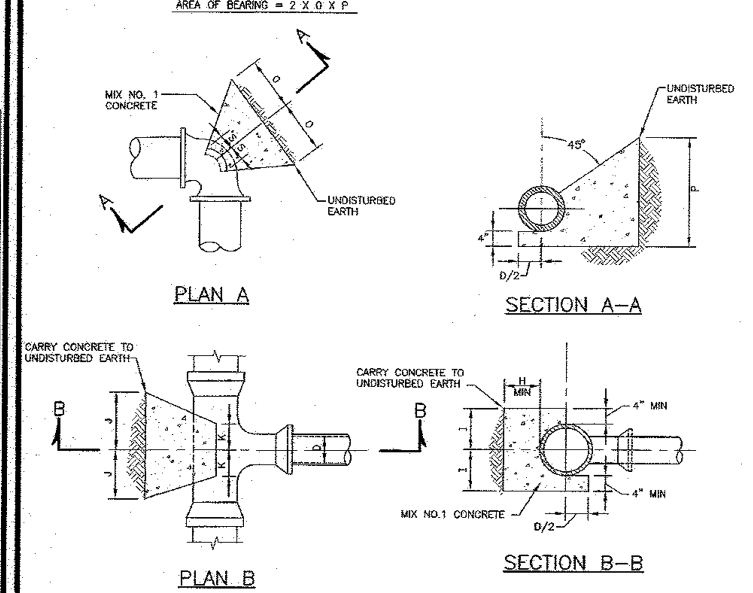

NOTES:

1. BUTTRESS DIMENSIONS ARE BASED ON A WATER PRESSURE OF 150 PSI. AND A MINIMUM SOIL BEARING PRESSURE OF 3000 PSF. WHEN ACTUAL FIELD CONDITIONS ARE DIFFERENT THE AREA OF BEARING SHALL BE INCREASED AS DETERMINED BY THE ENGINEER AND SHOWN ON THE CONTRACT DOCUMENTS.
2. AREA OF BEARING = 2J x 2I

Howard County, Maryland — Department of Public Works — Revised; Revised 5/7/2007 Approved — Approved: Chief, Bureau of Engineering — WATER MAIN Buttress Tee & 1/4 Bend — Detail W–2.23

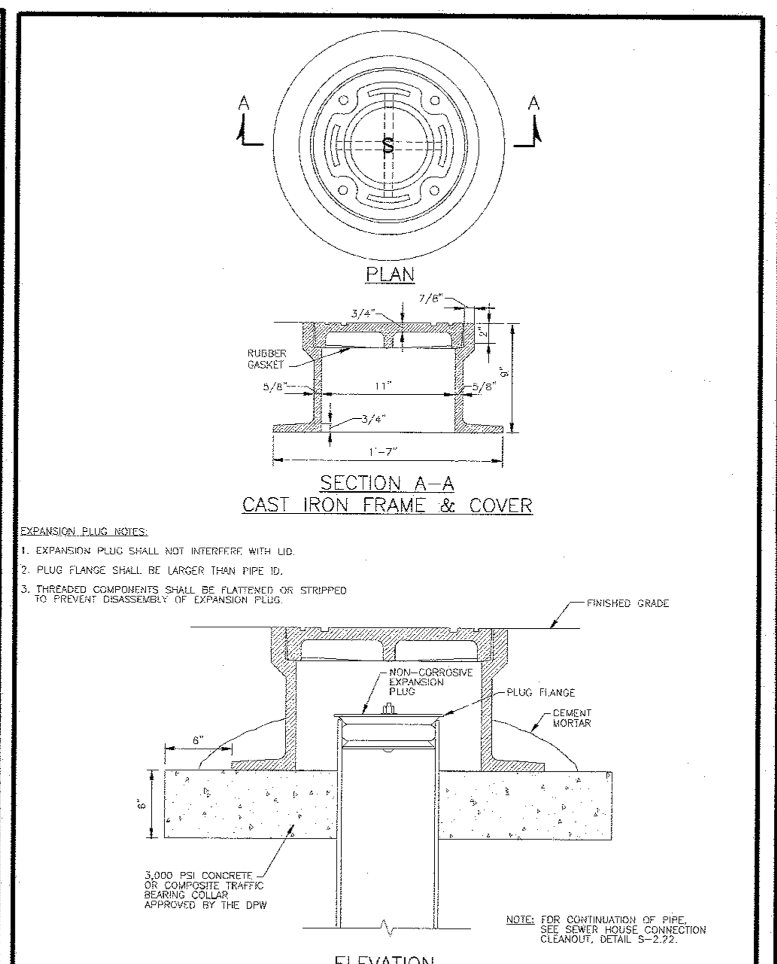

EXPANSION PLUG NOTES:

1. EXPANSION PLUG SHALL NOT INTERFERE WITH LID.
2. PLUG FLANGE SHALL BE LARGER THAN PIPE ID.
3. THREADED COMPONENTS SHALL BE FLATTENED OR STRIPPED TO PREVENT DISASSEMBLY OF EXPANSION PLUG.

Howard County, Maryland — Department of Public Works — Revised; Revised 6/30/2011 Approved — Approved: Chief, Bureau of Engineering — Cleanout Cover Assembly For All Paved Areas — Detail S–2.23

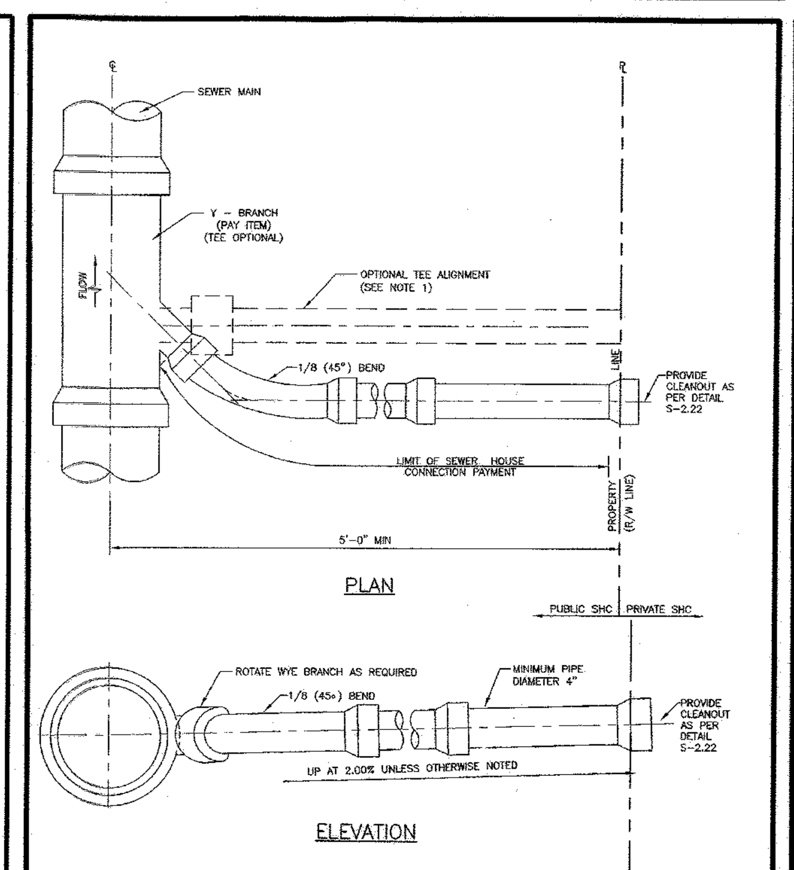

NOTES:

1. FOR USE WITH TAPPING SADDLES ON EXISTING MAINS ONLY. (SEE DETAIL S–2.21)

Howard County, Maryland — Department of Public Works — Revised; Revised 5/7/2007 Approved — Approved: Chief, Bureau of Engineering — SEWER HOUSE CONNECTION SHC — Detail S–2.11

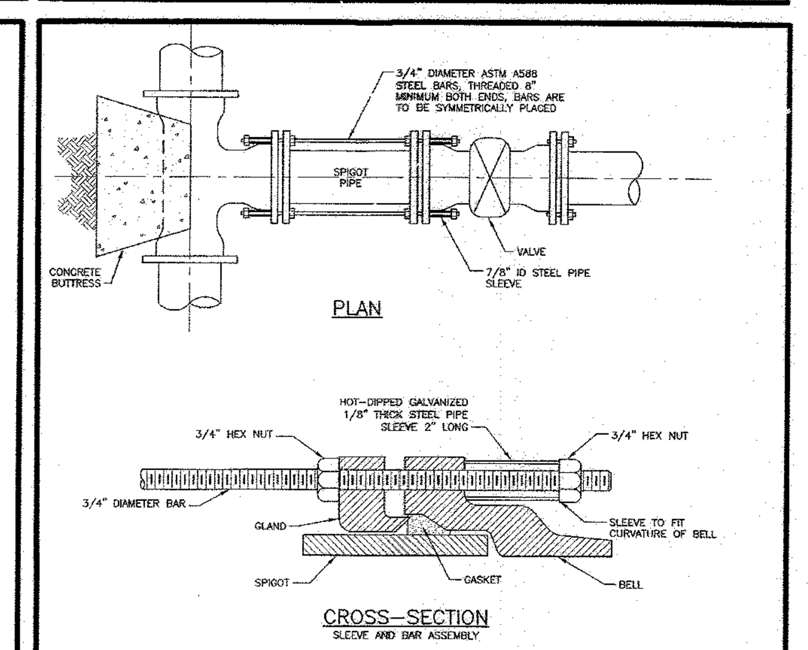

VALVE SIZE	NUMBER OF ¾" DIA BARS REQUIRED	MAX LENGTH OF SPIGOT PIPE
6"	2	27"
8"	2	27"
12"	6	27"
16"	8	36"
18"	10	36"
20"	12	36"
24"	16	36"

NOTES:

1. APPLY BITUMINOUS MATERIAL PROTECTIVE COATING TO ALL EXPOSED STEEL PER AWWA C203.

Howard County, Maryland — Department of Public Works — Revised; Revised 5/7/2007 Approved — Approved: Chief, Bureau of Engineering — WATER MAIN Restraining Valve To Main — Detail W–2.13

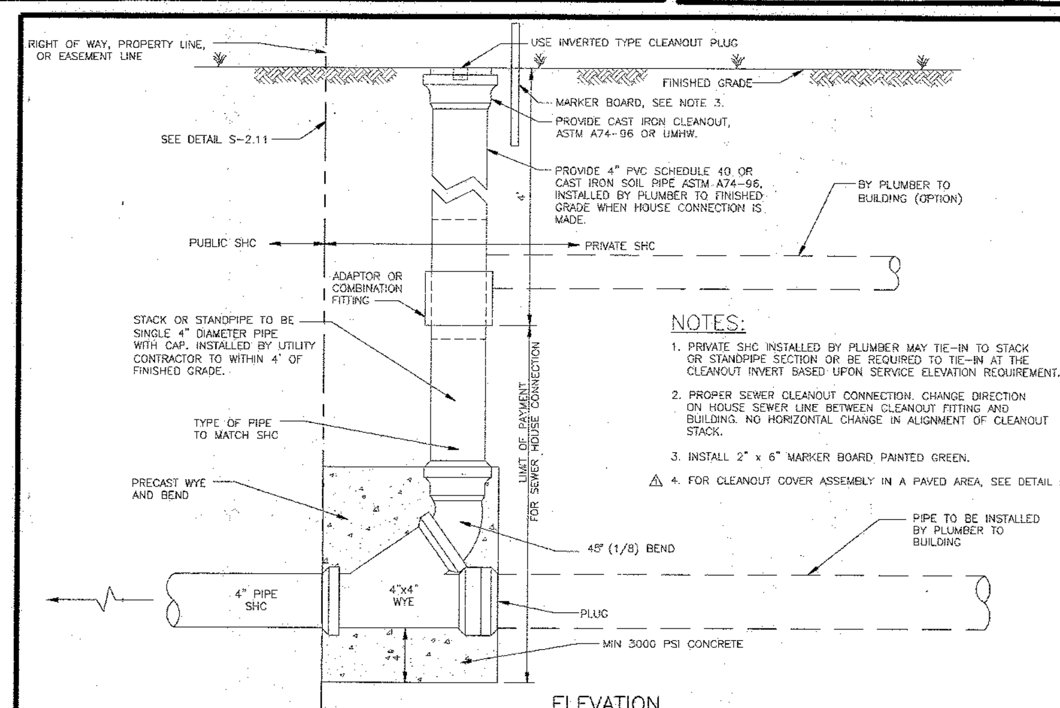

NOTES:

1. PRIVATE SHC INSTALLED BY PLUMBER MAY TIE–IN TO STACK OR STANDPIPE SECTION OR BE REQUIRED TO TIE–IN AT THE CLEANOUT INVERT BASED UPON SERVICE ELEVATION REQUIREMENT.
2. PROPER SEWER CLEANOUT CONNECTION. CHANGE DIRECTION ON HOUSE SEWER LINE BETWEEN CLEANOUT FITTING AND BUILDING. NO HORIZONTAL CHANGE IN ALIGNMENT OF CLEANOUT STACK.
3. INSTALL 2" x 6" MARKER BOARD PAINTED GREEN.
4. (△) FOR CLEANOUT COVER ASSEMBLY IN A PAVED AREA, SEE DETAIL S–2.23.

Howard County, Maryland — Department of Public Works — Revised △ 6/30/2011; Revised 5/7/2007 Approved — Approved: Chief, Bureau of Engineering — SEWER HOUSE CONNECTION Cleanout — Detail S–2.22

NOTES:

1. 5/8" METER SETTING AND 3/4" SERVICE TO BE USED ONLY WITH EXISTING WATER SERVICE CONNECTION FOR RELOCATION PURPOSE AS REQUIRED.
2. (△) ALL FITTINGS FOR COPPER AND BRASS SHALL BE FLARED TYPE, OR COMPRESSION END WITH GRIP JOINTS
3. TAPPING SADDLE IS REQUIRED FOR DIP MAINS 4" AND SMALLER, ALL PVC MAINS, AND 1 1/2" AND 2" TAPS.
4. CAST–IRON OR POLY–IRON COVER VALVE BOX (SEE DETAIL G–8.01), SCREW STYLE ONLY. THE TOP OF THE VALVE TO BE SET 18 INCHES ABOVE GRADE BE THE CONTRACTOR.
5. CAST–IRON OR POLY–IRON COVER TO BE ADJUSTED (SCREWED DOWN) TO FINISHED GRADE BY OTHERS.

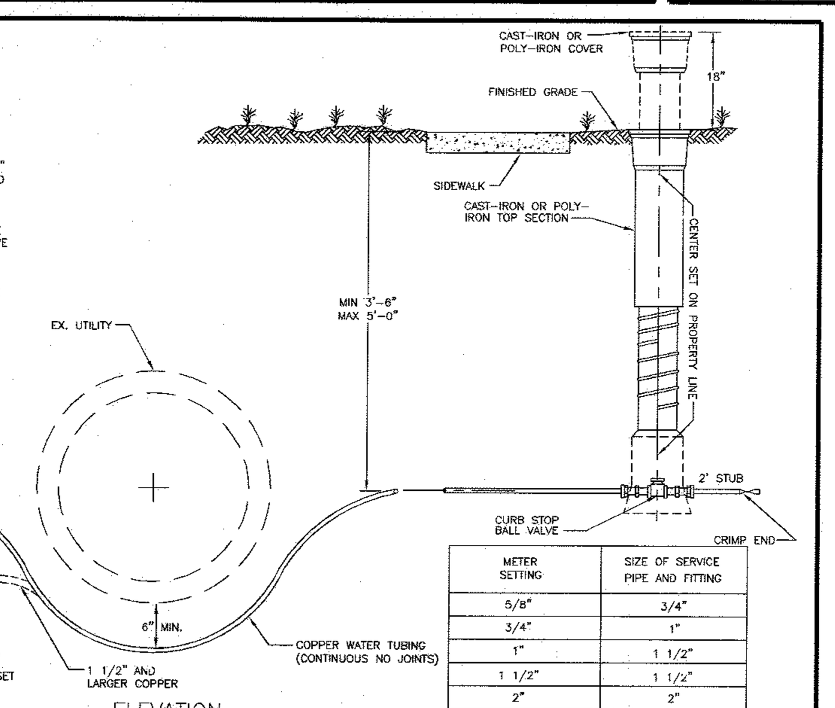

METER SETTING	SIZE OF SERVICE PIPE AND FITTING
5/8"	3/4"
3/4"	1"
1"	1 1/2"
1 1/2"	1 1/2"
2"	2"

Howard County, Maryland — Department of Public Works — Revised △ 5/1/2014; Revised 5/7/2007 Approved — Approved: Chief, Bureau of Engineering — WATER SERVICE CONNECTION 5/8", 3/4", 1", 1 1/2", & 2" Inside Meter Settings — Detail W–3.21

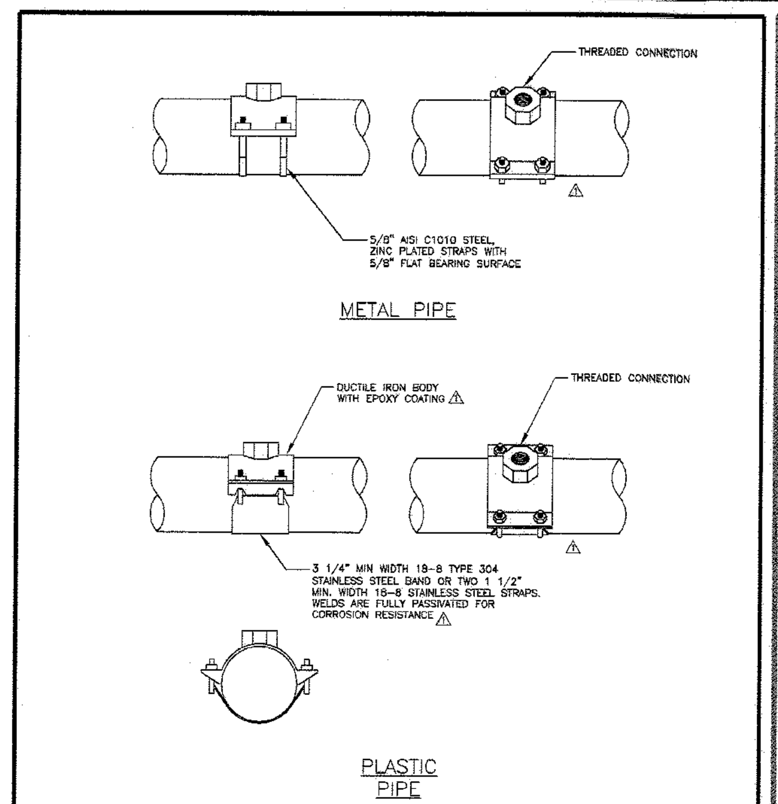

NOTES:

1. SADDLE SHALL CONFORM TO ANSI/NSF STANDARD 61.
2. (△) PLASTIC PIPE SADDLE SHALL CONFORM TO THE RECOMMENDATION OF UNI–BELL HANDBOOK OF PVC PIPE AND AWWA MANUAL M23.
3. TIGHTEN SADDLE PER MANUFACTURER'S REQUIREMENTS.
4. (△) NUTS SHALL BE 1/2" TO 5/8" HEAVY HEX NUTS AND WASHERS AND SHALL BE COATED TO PREVENT GALLING.
5. (△) GASKETS SHALL BE RUBBER PER ASTM D2000.

Howard County, Maryland — Department of Public Works — Revised △ 5/1/2014; Revised 5/7/2007 Approved — Approved: Chief, Bureau of Engineering — WATER METER Water Service Saddle 3/4" Thru 2" — Detail W–3.30

NORMAL PIPE DIAMETER	MAXIMUM PAYMENT CUBIC FT PER LINEAR FT: CRADLE	CONCRETE ENCASEMENT
6"	1.28	1.53
8"	1.58	2.55
10"	1.86	2.95
12"	2.33	3.63
15"	2.82	4.20
18"	4.02	5.71
21"	4.52	6.35
24"	5.95	8.22
27"	6.58	8.94
30"	7.42	9.83
33"	9.42	12.16
36"	10.53	13.09
42"	12.30	15.22
48"	16.25	19.83
54"	18.46	22.97
60"	20.80	24.95
66"	23.08	27.71

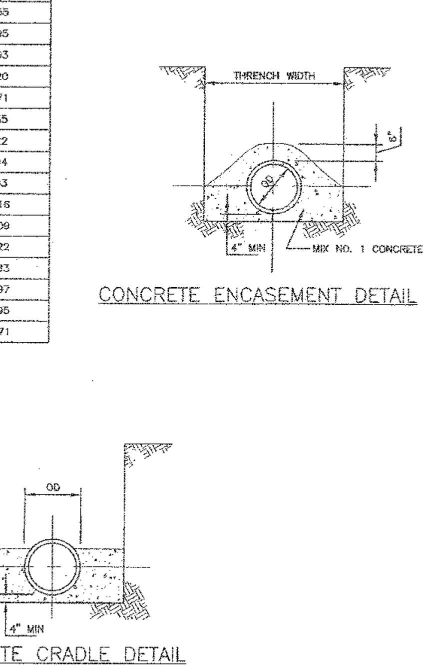

NOTES:

1. POUR CONCRETE TO UNDISTURBED EARTH.
2. CONCRETE CRADLES AND ENCASEMENT SHALL BE MIX NO. 1 CONCRETE.
3. ALL PAYMENT FOR CONCRETE ENCASEMENT OR CRADLES SHALL BE IN ACCORDANCE WITH THE TABLE ON THIS DETAIL. PAYMENT WILL NOT BE PER ACTUAL TRENCH WIDTH.
4. CONCRETE ENCASEMENTS AND CRADLES FOR WATER AND SEWER LINES ARE NOT PERMITTED WITHOUT WRITTEN AUTHORIZATION FROM THE DEPARTMENT OF PUBLIC WORKS.
5. SEE DETAIL S–3.11 AND S–3.12 FOR STREAM CROSSING DETAILS.

Howard County, Maryland — Department of Public Works — Revised; Revised 5/7/2007 Approved — Approved: Chief, Bureau of Engineering — Pipe Trench Cradle & Encasement — Detail G–2.13

NOTE:
ALL DETAILS ON THIS SHEET (WITHIN BOLD FRAMES) WERE PROVIDED BY CVS) AND ARE FOR INFORMATIONAL PURPOSES, ONLY. BOHLER ENGINEERING SHALL BE HELD HARMLESS IN THE EVENT OF ERRONEOUS INFORMATION CONTAINED WITHIN THESE DETAILS AND/OR STRUCTURAL FAILURE.

ING

OWNER:	PARCEL 16A MIT MONTEVIDEO, LLC 8850 COLUMBIA PARKWAY COLUMBIA, MD 21045 CONTACT: MARK LEVY TEL: (410) 579-2442
DEVELOPER:	J.C. BAR PROPERTIES, INC 415 FALLOWFIELD ROAD, SUITE 301 CAMP HILL, PA 17011 CONTACT: JASON MITCHELL TEL: (717) 761-7801
TAX MAP: 43 GRID: 10 ZONED: B-1	PARCEL: 16A 1ST ELECTION DISTRICT, HOWARD COUNTY, MARYLAND ZB REF.: 1096m SITE AREA: 4.039 AC DPZ REF.: SDP-15-069

APPROVED: DEPARTMENT OF PLANNING AND ZONING

CHIEF-DEVELOPMENT ENGINEERING DIVISION — DATE 10.14.16

CHIEF-DIVISION OF LAND DEVELOPMENT — DATE 11-2-16

DIRECTOR — DATE 11-3-16

GENERAL NOTE:
IT IS THE RESPONSIBILITY OF THE CONTRACTOR TO REVIEW ALL OF THE DRAWINGS AND SPECIFICATIONS ASSOCIATED WITH THIS PROJECT WORK SCOPE PRIOR TO THE INITIATION OF CONSTRUCTION. SHOULD THE CONTRACTOR FIND A CONFLICT WITH THE DOCUMENTS RELATIVE TO THE SPECIFICATIONS OR APPLICABLE CODES, IT IS THE CONTRACTOR'S RESPONSIBILITY TO NOTIFY THE PROJECT ENGINEER OF RECORD IN WRITING PRIOR TO THE START OF CONSTRUCTION. FAILURE BY THE CONTRACTOR TO NOTIFY THE PROJECT ENGINEER SHALL CONSTITUTE ACCEPTANCE OF FULL RESPONSIBILITY BY THE CONTRACTOR TO COMPLETE THE SCOPE OF THE WORK AS DEFINED BY THE DRAWINGS AND IN FULL CONFORMANCE WITH LOCAL REGULATIONS AND CODES.

PROFESSIONAL CERTIFICATION
I, DAVID M. KUKLISH, P.E., HEREBY CERTIFY THAT THESE DOCUMENTS WERE PREPARED OR APPROVED BY ME, AND THAT I AM A DULY LICENSED PROFESSIONAL ENGINEER UNDER THE LAWS OF THE STATE OF MARYLAND, LICENSE NO. 36224, EXPIRATION DATE: 8/19/2018

CVS pharmacy

TYPE 'B'
REAR DRIVE-THRU

STORE NUMBER: 10528

WASHINGTON BLVD. & MONTEVIDEO RD. JESSUP, HOWARD COUNTY, MARYLAND

PROJECT TYPE: NEW
DEAL TYPE: LEASE

CS PROJECT NUMBER: 77620

THE FOLLOWING STATES REQUIRE NOTIFICATION BY EXCAVATORS, DESIGNERS, OR ANY PERSON PREPARING TO DISTURB THE EARTH'S SURFACE ANYWHERE IN THE STATE. IN VIRGINIA, MARYLAND, THE DISTRICT OF COLUMBIA, AND DELAWARE CALL - 811
(WV 1-800-245-4848) (PA 1-800-242-1776) (DC 1-800-257-7777)
(VA 1-800-552-7001) (MD 1-800-257-7777) (DE 1-800-282-8555)

BOHLER ENGINEERING
901 DULANEY VALLEY ROAD, SUITE 801
TOWSON, MARYLAND 21204
Phone: (410) 821-7900
Fax: (410) 821-7987
MD@BohlerEng.com

DEVELOPER
J.C. BAR DEVELOPMENT, LLC
415 FALLOWFIELD ROAD, SUITE 301
CAMP HILL, PA 17011
CONTACT: JASON MITCHELL
TEL : (717) 761-7801

D.M. KUKLISH
PROFESSIONAL ENGINEER

REVISIONS

REV:	DATE:	COMMENT:	BY:

CHECKED BY: DMK
DRAWN BY: CRH
DATE: 4/13/16
JOB NUMBER: MD131504
TITLE: CONSTRUCTION DETAILS
SHEET NUMBER: 16 OF 27
COMMENTS: FILE NO. SDP-15-069

C:\USERS\CMONDORO\APPDATA\LOCAL\TEMP\ACPUBLISH_4692\DE150009SD5-----LAYOUT: 16 - CONSTRUCTION DETAILS

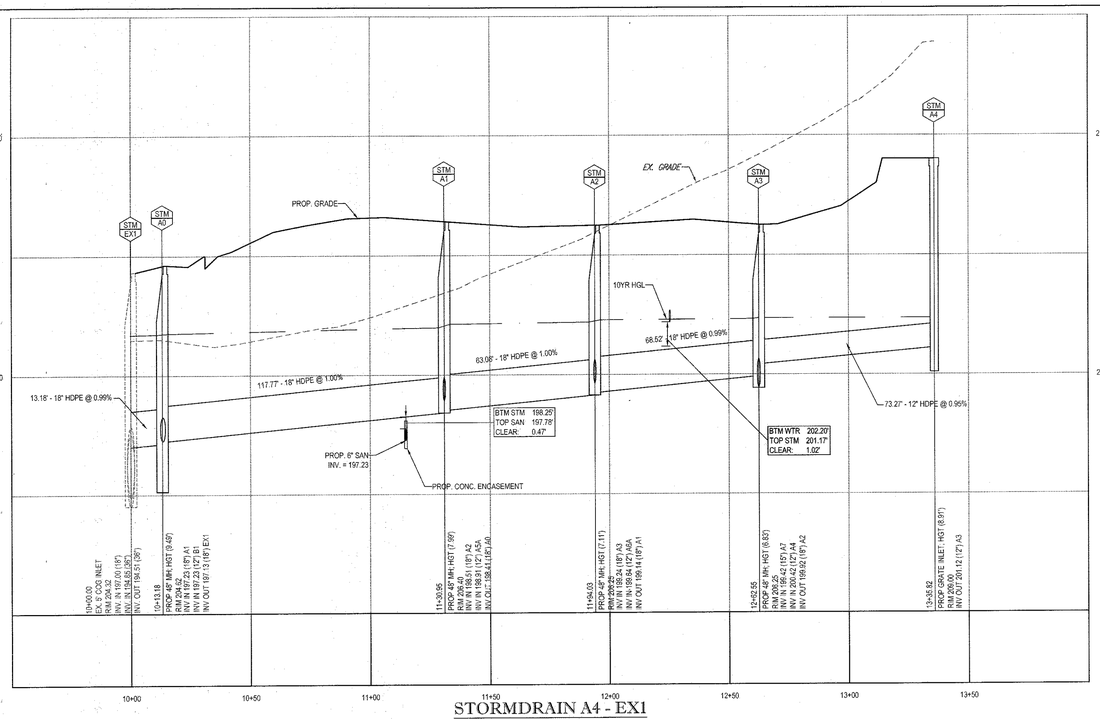

STORMDRAIN A4 - EX1

SCALE: 1"=30' HORIZONTAL
1"=3' VERTICAL

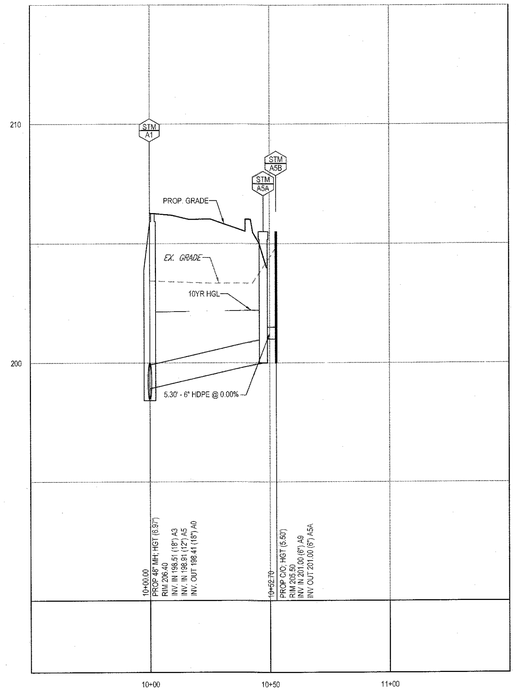

STORMDRAIN A5 - A1

SCALE: 1"= 30 ' HORIZONTAL
1"= 3 ' VERTICAL

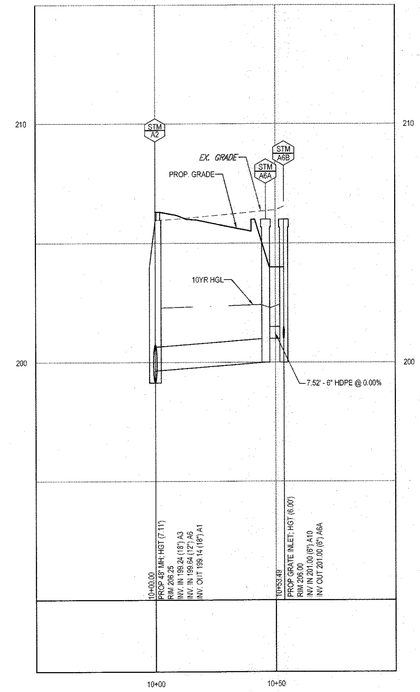

STORMDRAIN A6 - A2

SCALE: 1"= 30 ' HORIZONTAL
1"= 3 ' VERTICAL

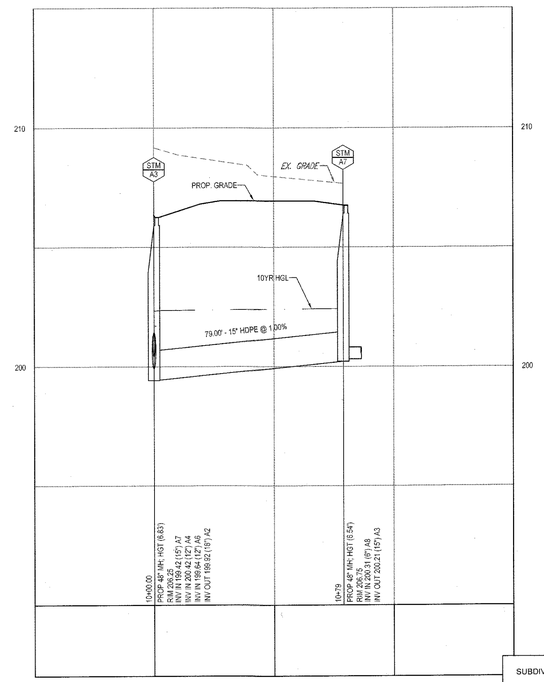

STORMDRAIN A7 - A3

SCALE: 1"= 30 ' HORIZONTAL
1"= 3 ' VERTICAL

STORM STRUCTURE SCHEDULE

NAME	TYPE	RIM ELEV. (FT.)	INVERTS
A0	PROP. 48" MH	204.62'	INV IN = 197.23' INV IN = 197.23' INV OUT = 197.13'
A1	PROP. 48" MH	206.40'	INV IN = 198.51' INV IN = 198.51' INV OUT = 198.41'
A2	PROP. 48" MH	206.25'	INV IN = 199.24' INV IN = 199.64' INV OUT = 199.14'
A3	PROP. 48" MH	206.25'	INV IN = 199.42' INV IN = 200.42' INV OUT = 199.92'
A4	PROP. YARD INLET	209.00'	INV OUT = 201.12'
A5A	TYPE 'S' INLET	205.50'	INV IN = 201.00' INV OUT = 200.00'
A5B	PROP. 6" CLEANOUT	205.50'	INV IN = 201.00' INV OUT = 201.00'
A6A	TYPE 'S' INLET	206.00'	INV IN = 201.00' INV OUT = 200.00'
A6B	PROP. 6" CLEANOUT	206.00'	INV IN = 201.00' INV OUT = 201.00'
A7	PROP. 48" MH	206.75'	INV OUT = 200.21'
A8	PROP. 6" CLEANOUT	206.28'	INV OUT = 200.62'
A9	PROP. 6" OBSERVATION PORT	205.00'	INV OUT = 201.00'
A10	PROP. 6" OBSERVATION PORT	205.50'	INV OUT = 201.00'
B2	PROP. 6" OBSERVATION PORT	203.00'	INV OUT = 199.00'
B3	PROP. 6" OBSERVATION PORT	203.00'	INV OUT = 199.00'
B1	TYPE 'S' INLET	203.00'	INV IN = 197.54' INV IN = 199.00' INV OUT = 197.54'
B4	PROP. 6" CLEANOUT	206.11'	INV OUT = 199.84'
B5	TYPE 'S' INLET	205.50'	INV OUT = 200.00'
B6	PROP. 6" CLEANOUT	205.00'	INV OUT = 200.00'
B7	12" HDPE END SECTION	205.00'	INV IN = 204.00'
B8	YARD INLET	206.00'	INV OUT = 203.75'
EX1	EX.5' COG INLET	204.00'	INV IN = 197.00'

STORM DRAIN SCHEDULE

FROM	TO	UPPER INVERT	LOWER INVERT	LENGTH	SLOPE (%)	SIZE (in.)	MATERIAL
A10	A6	201.00	201.00	59.51	0.00%	6"	PERF. HDPE
A9	A5	201.00	201.00	38.51	0.00%	6"	PERF. HDPE
A8	A7	204.25	200.31	62.31	6.32%	6"	HDPE
A5	A1	200.00	198.91	52.70	2.06%	12"	HDPE
A4	A3	200.97	200.42	73.27	0.94%	12"	HDPE
A6	A2	200.00	199.64	53.50	0.67%	12"	HDPE
A7	A3	200.21	199.42	79.00	1.00%	15"	HDPE
A3	A2	199.92	199.24	68.52	0.99%	18"	HDPE
A2	A1	199.14	198.51	63.08	0.99%	18"	HDPE
A1	A0	198.41	197.23	117.77	1.00%	18"	HDPE
A0	EX1	197.13	197.00	13.18	0.99%	18"	HDPE
B8	B7	205.75	204.00	38.42	0.65%	12"	CLASS V RCP
B6	B5	200.00	200.00	65.15	0.00%	6"	PERF. HDPE
B5	B4	200.00	199.84	8.85	1.81%	12"	HDPE
B4	B1	199.84	197.54	131.31	1.75%	12"	HDPE
B3	B2	199.00	199.00	46.60	0.00%	6"	PERF. HDPE
B2	B1	199.00	199.00	52.79	0.00%	6"	PERF. HDPE
B1	A0	197.54	197.23	30.76	1.01%	12"	HDPE

PIPE

LineNo.	LineID	DrainageArea	RunoffCoeff	IncrCxA	Tc	iInlet	FlowRate	CapacityFull	LineSlope	LineSize	LineLength	VelAve	GutterDepth	Gutter Spread (2-Year)
		(ac)	(C)		(min)	(in/hr)	(cfs)	(cfs)	(%)	(in)	(ft)	(ft/s)	(ft)	(ft)
1	A-0 - EX-1	0.00	0.00	0.00	5.00	0.00	5.27	12.22	0.99	18.00	13.18	2.98	....	....
2	A-1 - A-0	0.00	0.00	0.00	5.00	0.00	5.44	12.42	1.00	18.00	117.77	3.08	....	....
3	A-2 - A-1	0.00	0.00	0.00	5.00	0.00	4.22	12.4	0.99	18.00	63.08	2.39	....	....
4	A-3 - A-2	0.00	0.00	0.00	5.00	8.49	2.51	12.36	0.99	18.00	68.52	1.42	....	....
5	A-7 - A-3	0.30	0.86	0.26	5.00	8.49	2.19	7.63	1.00	15.00	79	1.79	....	....
6	A-6 - A-2	0.45	0.54	0.24	5.00	8.49	2.06	3.45	0.67	12.00	53.5	2.63	0.27	....
7	A-4 - A-3	0.33	0.19	0.06	5.00	8.49	0.53	4.21	0.94	12.00	73.21	0.68	0.15	2.94
8	A-5 - A-1	0.25	0.72	0.18	5.00		1.53	6.05	2.06	12.00	52.7	1.95	0.25	....

APPROVED: DEPARTMENT OF PLANNING AND ZONING

CHIEF-DEVELOPMENT ENGINEERING DIVISION	DATE 10-14-16
CHIEF-DIVISION OF LAND DEVELOPMENT	DATE 11-2-16
DIRECTOR	DATE 11-3-16

GENERAL NOTE
IT IS THE RESPONSIBILITY OF THE CONTRACTOR TO REVIEW ALL OF THE DRAWINGS AND SPECIFICATIONS ASSOCIATED WITH THIS PROJECT WORK SCOPE PRIOR TO THE INITIATION OF CONSTRUCTION. SHOULD THE CONTRACTOR FIND A CONFLICT WITH THE DOCUMENTS RELATIVE TO THE SPECIFICATIONS OR APPLICABLE CODES, IT IS THE CONTRACTOR'S RESPONSIBILITY TO NOTIFY THE PROJECT ENGINEER OF RECORD IN WRITING PRIOR TO THE START OF CONSTRUCTION. FAILURE BY THE CONTRACTOR TO NOTIFY THE PROJECT ENGINEER SHALL CONSTITUTE ACCEPTANCE OF FULL RESPONSIBILITY BY THE CONTRACTOR TO COMPLETE THE SCOPE OF THE WORK, AS DEFINED BY THE DRAWINGS AND IN FULL CONFORMANCE WITH LOCAL REGULATORS AND CODES.

NOTES:
REFER TO AASHTO - T - 180 SPECIFICATIONS FOR PIPES IN FILE.

OWNER: PARCEL 16A
MIT MONTEVIDEO, LLC
8850 COLUMBIA PARKWAY
COLUMBIA, MD 21045
CONTACT: MARK LEVY
TEL: (410) 579-2442

DEVELOPER: J.C. BAR PROPERTIES, INC
415 FALLOWFIELD ROAD, SUITE 301
CAMP HILL, PA 17011
CONTACT: JASON MITCHELL
TEL: (717) 781-7801

TAX MAP: 43 GRID: 10 ZONED: B-1
PARCEL: 16A
1ST ELECTION DISTRICT, HOWARD COUNTY, MARYLAND
ZB REF.: 10966m SITE AREA: 4.039 AC
DPZ REF.: SDP-15-069

SUBDIVISION NAME: MONTEVIDEO CROSSING
PARCEL A
SECTION/AREA: N/A
PLAT # 23695
WATER CODE: N/A
SEWER CODE: N/A

PROFESSIONAL CERTIFICATION
I, DAVID M. KUKLISH, P.E., HEREBY CERTIFY THAT THESE DOCUMENTS WERE PREPARED OR APPROVED BY ME, AND THAT I AM A DULY LICENSED PROFESSIONAL ENGINEER UNDER THE LAWS OF THE STATE OF MARYLAND, LICENSE NO. 36224, EXPIRATION DATE: 8/19/2016.

CVS pharmacy

TYPE 'B'
REAR DRIVE-THRU

STORE NUMBER: 10528

WASHINGTON BLVD. & MONTEVIDEO RD.
JESSUP, HOWARD COUNTY, MARYLAND

PROJECT TYPE: NEW
DEAL TYPE: LEASE

CS PROJECT NUMBER: 77620

THE FOLLOWING STATES REQUIRE NOTIFICATION BY EXCAVATORS, DESIGNERS, OR ANY PERSON PREPARING TO DISTURB THE EARTH'S SURFACE ANYWHERE IN THE STATE: IN VIRGINIA, MARYLAND, THE DISTRICT OF COLUMBIA, AND DELAWARE CALL - 811
(WV: 1-800-245-4848) (PA: 1-800-242-1776) (DC: 1-800-257-7777) (VA: 1-800-552-7001) (MD: 1-800-257-7777) (DE: 1-800-282-8555)

BOHLER ENGINEERING
901 DULANEY VALLEY ROAD, SUITE 801
TOWSON, MARYLAND 21204
Phone: (410) 821-7900
Fax: (410) 821-7987
MD@BohlerEng.com

DEVELOPER
J.C. BAR DEVELOPMENT, LLC

415 FALLOWFIELD ROAD, SUITE 301
CAMP HILL, PA 17011
CONTACT: JASON MITCHELL
TEL : (717) 761-7801

D.M. KUKLISH
PROFESSIONAL ENGINEER
DELAWARE LICENSE NO. 14402
MARYLAND LICENSE NO. 36224
VIRGINIA LICENSE NO. 0402048720

REVISIONS

REV:	DATE:	COMMENT:	BY:

CHECKED BY: DMK
DRAWN BY: CRH
DATE: 4/13/16
JOB NUMBER: MD131504

TITLE: STORMDRAIN PROFILES

SHEET NUMBER: 17 OF 27

COMMENTS: FILE NO. SDP-15-069

C:\USERS\LOPDCASTELER\APPDATA\LOCAL\TEMP\ACPUBLISH_7864\JOB\SHEET 17 - SDP PROFILES

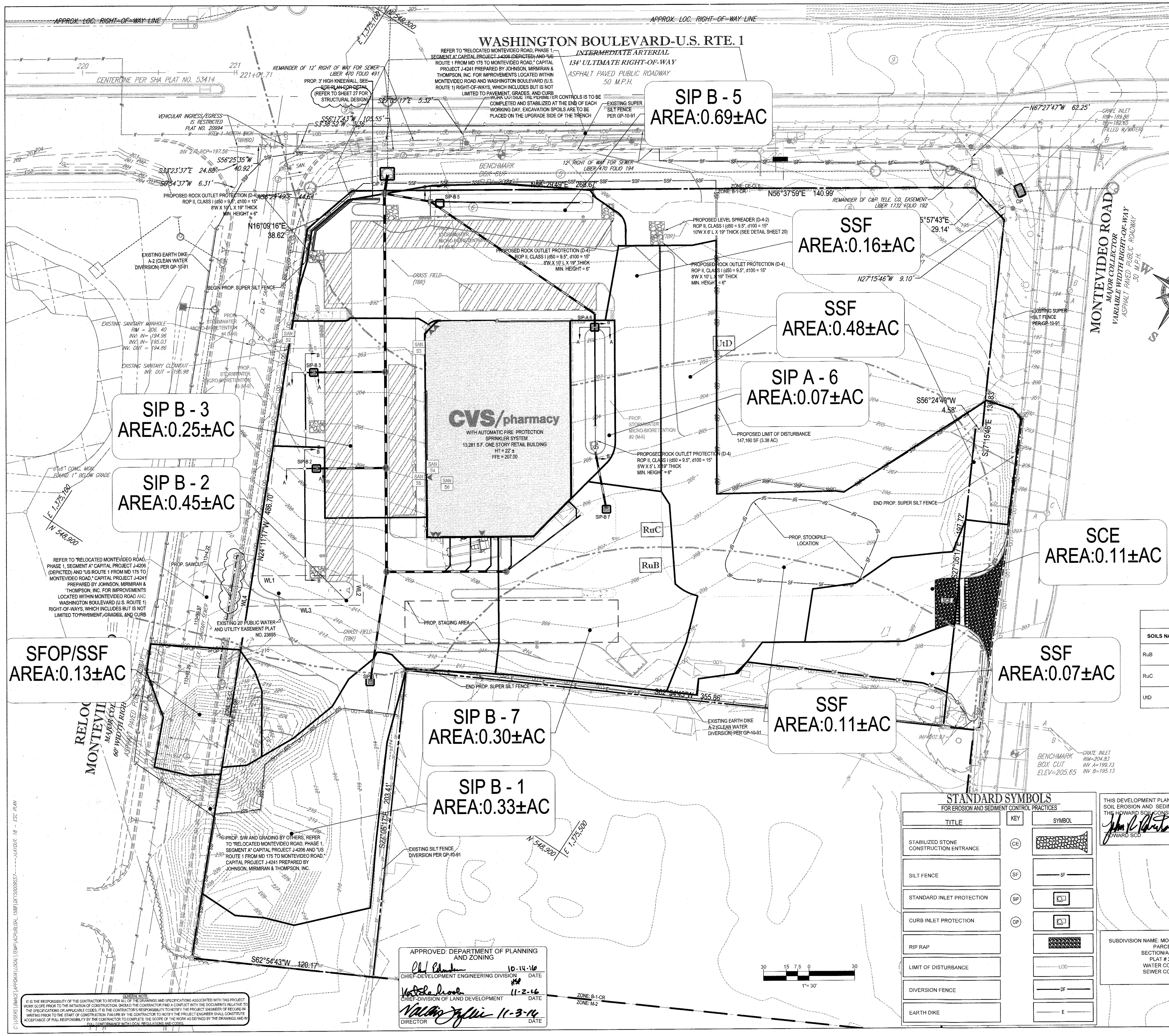

GENERAL NOTE:
IT IS THE RESPONSIBILITY OF THE CONTRACTOR TO REVIEW ALL OF THE DRAWINGS AND SPECIFICATIONS ASSOCIATED WITH THIS PROJECT WORK SCOPE PRIOR TO THE INITIATION OF CONSTRUCTION. SHOULD THE CONTRACTOR FIND A CONFLICT WITH THE DOCUMENTS RELATIVE TO THE SPECIFICATIONS OR APPLICABLE CODES, IT IS THE CONTRACTOR'S RESPONSIBILITY TO NOTIFY THE PROJECT ENGINEER OF RECORD IN WRITING PRIOR TO THE START OF CONSTRUCTION. FAILURE BY THE CONTRACTOR TO NOTIFY THE PROJECT ENGINEER SHALL CONSTITUTE ACCEPTANCE OF FULL RESPONSIBILITY BY THE CONTRACTOR TO COMPLETE THE SCOPE OF THE WORK AS DEFINED BY THE DRAWINGS AND IN FULL CONFORMANCE WITH LOCAL REGULATIONS AND CODES.

APPROVED: DEPARTMENT OF PLANNING AND ZONING

CHIEF-DEVELOPMENT ENGINEERING DIVISION — DATE 10.14.16

CHIEF-DIVISION OF LAND DEVELOPMENT — DATE 11-2-16

DIRECTOR — DATE 11-3-16

STANDARD SYMBOLS
FOR EROSION AND SEDIMENT CONTROL PRACTICES

TITLE	KEY	SYMBOL
STABILIZED STONE CONSTRUCTION ENTRANCE	CE	
SILT FENCE	SF	SF
STANDARD INLET PROTECTION	SIP	
CURB INLET PROTECTION	CIP	
RIP RAP		
LIMIT OF DISTURBANCE		LOD
DIVERSION FENCE		DF
EARTH DIKE		E

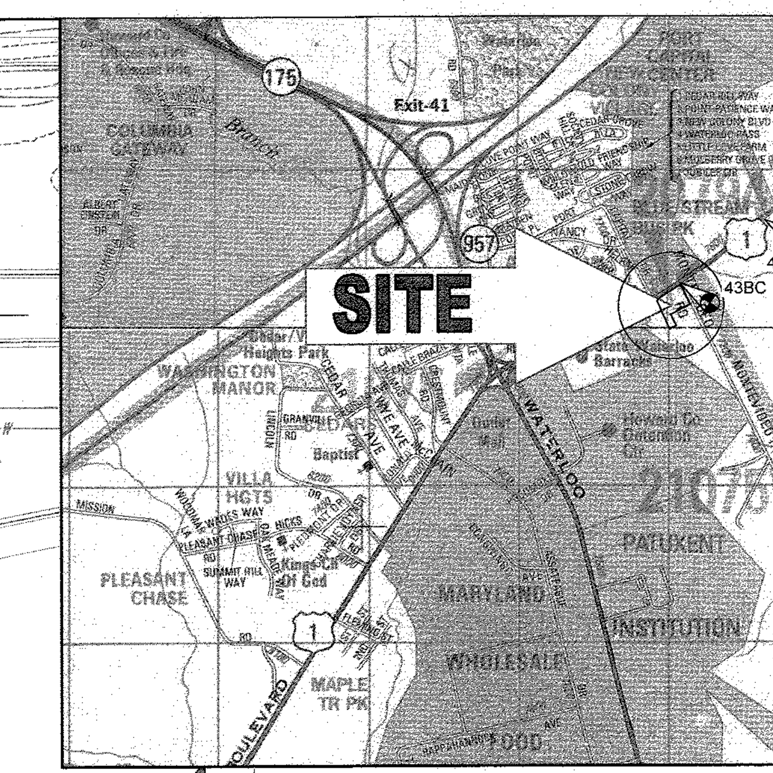

LOCATION MAP
COPYRIGHT ADC THE MAP PEOPLE
PERMIT USE NO. 20602153-5
SCALE: 1"=2000'
ADC MAP COORDINATES: K13

BENCHMARK NOTE:
THE COORDINATES SHOWN HEREON ARE BASED UPON THE HOWARD COUNTY GEODETIC CONTROL WHICH IS BASED UPON THE MARYLAND STATE PLANE COORDINATE SYSTEM.
BENCHMARKS NAD 83 HORIZONTAL
HO. CO. #43BB
STAMPED BRASS DISK SET ON TOP OF CONCRETE BASE
N 550,534.19' E 1,376,905.25'

HO. CO. #43BC
STAMPED BRASS DISK SET ON TOP OF CONCRETE BASE
N 549,592.091' E 1,375,466.62'

NOTES:
1. REFER TO SHEET 19 FOR SEQUENCE OF CONSTRUCTION, SEDIMENT CONTROL NOTES, AND SEDIMENT CONTROL DETAILS.
2. ALL PROPOSED WORK OUTSIDE OF PERIMETER CONTROLS SHALL BE STABILIZED AT THE END OF EACH WORK DAY.
3. PROPOSED SILT FENCE IS TO BE CHANGED TO SUPER SILT FENCE AT THE DIRECTION OF THE SEDIMENT CONTROL INSPECTOR.

INLET PROTECTION NOTE
THE CONTRACTOR IS REQUIRED TO INSTALL INLET PROTECTION ON ALL STORM DRAIN INLETS WITH THE EXCEPTION OF THE FOLLOWING:

1) ANY INLET DIRECTLY OUTFALLING INTO A SEDIMENT TRAPPING DEVICE.
2) INLETS ON PRIVATE OR PUBLIC ROAD OPEN TO THE PUBLIC.

ALL INLET PROTECTION WILL BE INSTALLED AS DIRECTED BY THE INSPECTOR IN ACCORDANCE WITH THE 2011 MARYLAND STANDARDS AND SPECIFICATIONS FOR SOIL EROSION AND SEDIMENT CONTROL, PAGE E.23. THE REMOVAL OF ANY INLET PROTECTION DEVICES WILL REQUIRE APPROVAL FROM THE INSPECTOR.

EROSION AND SEDIMENT CONTROL UTILITY INSTALLATION NOTES
1. CONTRACTOR SHALL OPEN ONLY THAT SECTION OF TRENCH THAT CAN BE BACKFILLED AND STABILIZED EACH DAY. IF TRENCH MUST REMAIN OPEN LONGER THAN ONE DAY, SILT FENCE SHALL BE PLACED BELOW (DOWNSLOPE OF) TRENCH.
2. PLACE ALL EXCAVATED MATERIAL ON UPHILL SIDE OF TRENCH.
3. ANY SEDIMENT CONTROLS DISTURBED BY UTILITY CONSTRUCTION ARE TO BE REPAIRED IMMEDIATELY.
4. THE CONTRACTOR SHALL TAKE APPROPRIATE MEASURES TO PROTECT PEDESTRIANS AT ALL TIMES DURING UNDERGROUND UTILITY CONSTRUCTION.

SOILS TABLE

SOILS NAME	SOILS DESCRIPTION	HYDROLOGIC SOILS GROUP	HIGHLY ERODIBLE SOIL
RuB	RUSSETT AND BELTSVILLE SOILS, 2 TO 5 PERCENT SLOPES	C	NO
RuC	RUSSETT AND BELTSVILLE SOILS, 5 TO 10 PERCENT SLOPES	C	NO
UtD	URBAN LAND - UDORTHENTS COMPLEX, 0 TO 15 PERCENT SLOPES	D	NO

THIS DEVELOPMENT PLAN IS APPROVED FOR SOIL EROSION AND SEDIMENT CONTROL BY THE HOWARD SOIL CONSERVATION DISTRICT.

HOWARD SCD — DATE 10/5/16

ENGINEER'S CERTIFICATE
"I HEREBY CERTIFY THAT THIS PLAN FOR EROSION AND SEDIMENT CONTROL REPRESENTS A PRACTICAL AND WORKABLE PLAN BASED ON MY PERSONAL KNOWLEDGE OF THE SITE CONDITIONS AND IT WAS PREPARED IN ACCORDANCE WITH THE REQUIREMENTS OF THE HOWARD SOIL CONSERVATION DISTRICT."

SIGNATURE OF ENGINEER — DATE 09-30-16
DAVID M. KUKLISH, P.E.

DEVELOPER'S CERTIFICATE
"I/WE HEREBY CERTIFY THAT ALL DEVELOPMENT AND CONSTRUCTION WILL BE DONE ACCORDING TO THIS PLAN, AND THAT ANY RESPONSIBLE PERSONNEL INVOLVED IN THE CONSTRUCTION PROJECT WILL HAVE A CERTIFICATE OF ATTENDANCE AT A DEPARTMENT OF THE ENVIRONMENT APPROVED TRAINING PROGRAM FOR THE CONTROL OF SEDIMENT AND EROSION BEFORE BEGINNING THE PROJECT. I ALSO AUTHORIZE PERIODIC ONSITE INSPECTION BY THE HOWARD SOIL CONSERVATION DISTRICT."

J.C. BAR DEVELOPMENT, LLC

BY:
NAME: JASON MITCHELL — DATE 10.4.16

OWNER: PARCEL 16A
MIT MONTEVIDEO, LLC
8850 COLUMBIA PARKWAY
COLUMBIA, MD 21045
CONTACT: MARK LEVY
TEL. (410) 579-2442

DEVELOPER: J.C. BAR PROPERTIES, INC
415 FALLOWFIELD ROAD, SUITE 301
CAMP HILL, PA 17011
CONTACT: JASON MITCHELL
TEL. (717) 761-7801

SUBDIVISION NAME: MONTEVIDEO CROSSING
PARCEL A
SECTION/AREA: N/A
PLAT # 23695
WATER CODE: N/A
SEWER CODE: N/A

TAX MAP: 43 GRID: 10 ZONED: B-1
PARCEL: 16A
1ST ELECTION DISTRICT, HOWARD COUNTY, MARYLAND
ZB REF.: 1096m SITE AREA: 4.039 AC
DPZ REF.: SDP-15-069

PROFESSIONAL CERTIFICATION
I, DAVID M. KUKLISH, P.E., HEREBY CERTIFY THAT THESE DOCUMENTS WERE PREPARED OR APPROVED BY ME, AND THAT I AM A DULY LICENSED PROFESSIONAL ENGINEER UNDER THE LAWS OF THE STATE OF MARYLAND, LICENSE NO. 36224, EXPIRATION DATE: 8/19/2018

CVS pharmacy

TYPE 'B'
REAR DRIVE-THRU

STORE NUMBER: 10528

WASHINGTON BLVD. & MONTEVIDEO RD.
JESSUP, HOWARD COUNTY, MARYLAND

PROJECT TYPE: NEW
DEAL TYPE: LEASE

CS PROJECT NUMBER: 77620

THE FOLLOWING STATES REQUIRE NOTIFICATION BY EXCAVATORS, DESIGNERS, OR ANY PERSON PREPARING TO DISTURB THE EARTH'S SURFACE ANYWHERE IN THE STATE. IN VIRGINIA, MARYLAND, THE DISTRICT OF COLUMBIA, AND DELAWARE CALL - 811
(WV 1-800-245-4848) (PA 1-800-242-1776) (DC 1-800-257-7777)
(VA 1-800-552-7001) (MD 1-800-257-7777) (DE 1-800-282-8555)

BOHLER ENGINEERING
901 DULANEY VALLEY ROAD, SUITE 801
TOWSON, MARYLAND 21204
Phone: (410) 821-7900
Fax: (410) 821-7987
MD@BohlerEng.com

DEVELOPER
J.C. BAR DEVELOPMENT, LLC

415 FALLOWFIELD ROAD, SUITE 301
CAMP HILL, PA 17011
CONTACT: JASON MITCHELL
TEL : (717) 761-7801

D.M. KUKLISH
PROFESSIONAL ENGINEER

REVISIONS

REV:	DATE:	COMMENT:	BY:

CHECKED BY: DMK
DRAWN BY: CRH
DATE: 4/13/16
JOB NUMBER: MD131504
TITLE: EROSION AND SEDIMENT CONTROL PLAN
SHEET NUMBER: 18 OF 27
COMMENTS: FILE NO. SDP-15-069

DETAIL E-9-1 STANDARD INLET PROTECTION

STANDARD SYMBOL: SIP

TYPE A MAXIMUM DRAINAGE AREA = ¼ ACRE
TYPE B MAXIMUM DRAINAGE AREA = 1 ACRE

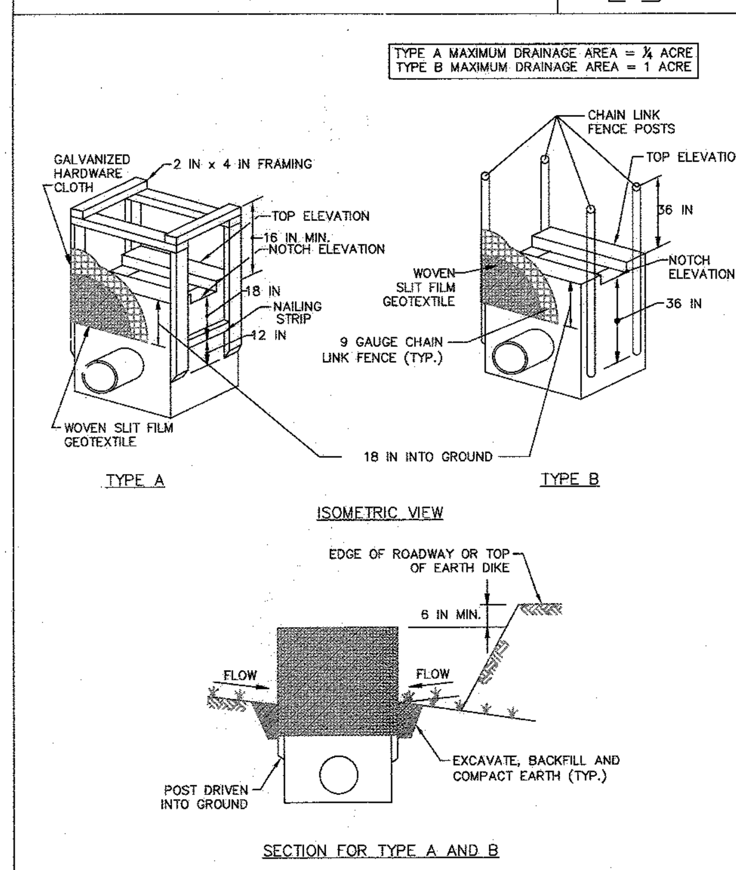

1 OF 2

MARYLAND STANDARDS AND SPECIFICATIONS FOR SOIL EROSION AND SEDIMENT CONTROL

U.S. DEPARTMENT OF AGRICULTURE NATURAL RESOURCES CONSERVATION SERVICE | 2011 | MARYLAND DEPARTMENT OF ENVIRONMENT WATER MANAGEMENT ADMINISTRATION

DETAIL E-1 SILT FENCE

STANDARD SYMBOL: SF

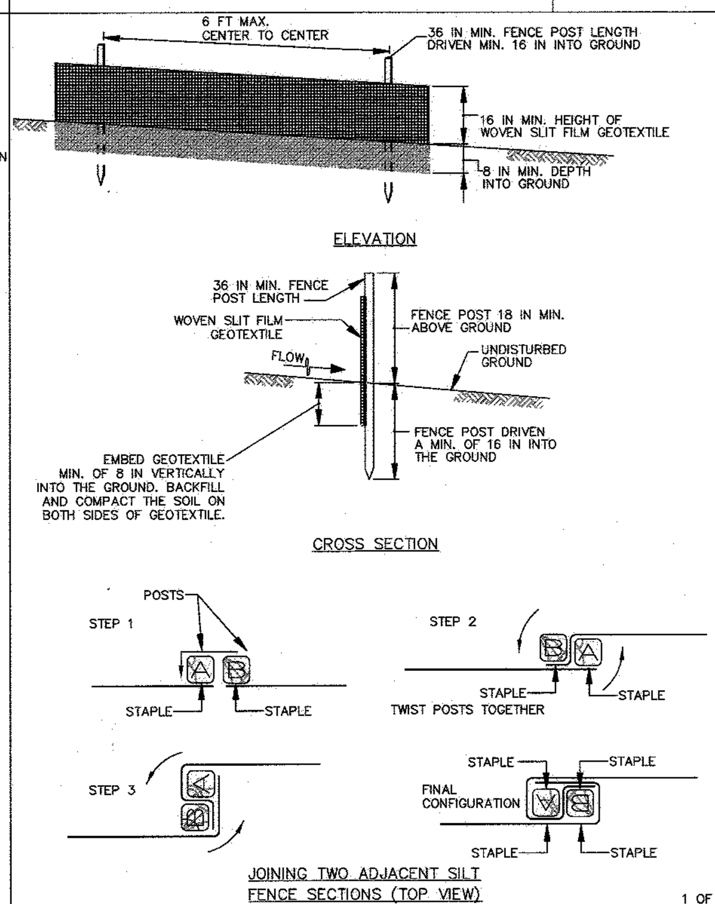

1 OF 2

MARYLAND STANDARDS AND SPECIFICATIONS FOR SOIL EROSION AND SEDIMENT CONTROL

U.S. DEPARTMENT OF AGRICULTURE NATURAL RESOURCES CONSERVATION SERVICE | 2011 | MARYLAND DEPARTMENT OF ENVIRONMENT WATER MANAGEMENT ADMINISTRATION

DETAIL E-1 SILT FENCE

STANDARD SYMBOL: SF

CONSTRUCTION SPECIFICATIONS

1. USE WOOD POSTS 1¾ X 1¾ ± 1/16 INCH (MINIMUM) SQUARE CUT OF SOUND QUALITY HARDWOOD. AS AN ALTERNATIVE TO WOODEN POST USE STANDARD "T" OR "U" SECTION STEEL POSTS WEIGHING NOT LESS THAN 1 POUND PER LINEAR FOOT.
2. USE 36 INCH MINIMUM POSTS DRIVEN 16 INCH MINIMUM INTO GROUND NO MORE THAN 6 FEET APART.
3. USE WOVEN SLIT FILM GEOTEXTILE AS SPECIFIED IN SECTION H-1 MATERIALS AND FASTEN GEOTEXTILE SECURELY TO UPSLOPE SIDE OF FENCE POSTS WITH WIRE TIES OR STAPLES AT TOP AND MID-SECTION.
4. PROVIDE MANUFACTURER CERTIFICATION TO THE AUTHORIZED REPRESENTATIVE OF THE INSPECTION/ENFORCEMENT AUTHORITY SHOWING THAT THE GEOTEXTILE USED MEETS THE REQUIREMENTS IN SECTION H-1 MATERIALS.
5. EMBED GEOTEXTILE A MINIMUM OF 8 INCHES VERTICALLY INTO THE GROUND. BACKFILL AND COMPACT THE SOIL ON BOTH SIDES OF FABRIC.
6. WHERE TWO SECTIONS OF GEOTEXTILE ADJOIN: OVERLAP, TWIST, AND STAPLE TO POST IN ACCORDANCE WITH THIS DETAIL.
7. EXTEND BOTH ENDS OF THE SILT FENCE A MINIMUM OF FIVE HORIZONTAL FEET UPSLOPE AT 45 DEGREES TO THE MAIN FENCE ALIGNMENT TO PREVENT RUNOFF FROM GOING AROUND THE ENDS OF THE SILT FENCE.
8. REMOVE ACCUMULATED SEDIMENT AND DEBRIS WHEN BULGES DEVELOP IN SILT FENCE OR WHEN SEDIMENT REACHES 25% OF FENCE HEIGHT. REPLACE GEOTEXTILE IF TORN. IF UNDERMINING OCCURS, REINSTALL FENCE.

2 OF 2

MARYLAND STANDARDS AND SPECIFICATIONS FOR SOIL EROSION AND SEDIMENT CONTROL

U.S. DEPARTMENT OF AGRICULTURE NATURAL RESOURCES CONSERVATION SERVICE | 2011 | MARYLAND DEPARTMENT OF ENVIRONMENT WATER MANAGEMENT ADMINISTRATION

DETAIL E-2 SILT FENCE ON PAVEMENT

STANDARD SYMBOL: SFOP

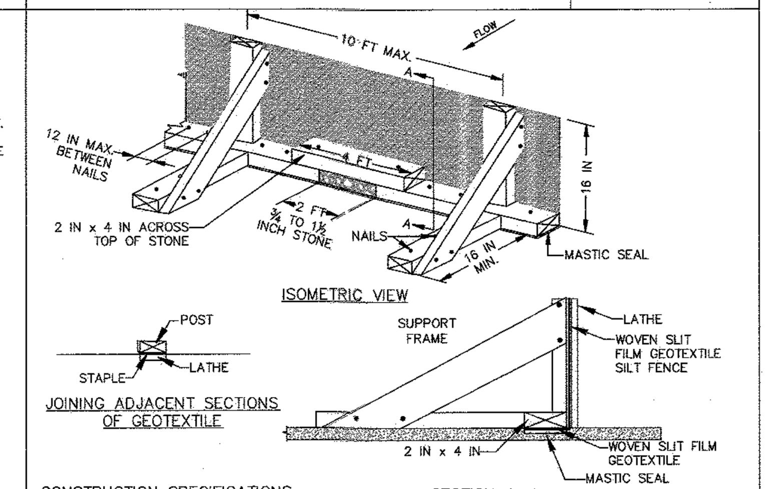

CONSTRUCTION SPECIFICATIONS

1. USE NOMINAL 2 INCH X 4 INCH LUMBER.
2. USE WOVEN SLIT FILM GEOTEXTILE, AS SPECIFIED IN SECTION H-1 MATERIALS.
3. PROVIDE MANUFACTURER CERTIFICATION TO THE AUTHORIZED REPRESENTATIVE OF THE INSPECTION/ENFORCEMENT AUTHORITY SHOWING THAT THE GEOTEXTILE USED MEETS THE REQUIREMENTS IN SECTION H-1 MATERIALS.
4. SPACE UPRIGHT SUPPORTS NO MORE THAN 10 FEET APART.
5. PROVIDE A TWO FOOT OPENING BETWEEN EVERY SET OF SUPPORTS AND PLACE STONE IN THE OPENING OVER GEOTEXTILE.
6. KEEP SILT FENCE TAUT AND SECURELY STAPLE TO THE UPSLOPE SIDE OF UPRIGHT SUPPORTS. EXTEND GEOTEXTILE UNDER 2x4.
7. WHERE TWO SECTIONS OF GEOTEXTILE ADJOIN: OVERLAP, FOLD, AND STAPLE TO POST IN ACCORDANCE WITH THIS DETAIL. ATTACH LATHE.
8. PROVIDE A MASTIC SEAL BETWEEN PAVEMENT, GEOTEXTILE, AND 2x4 TO PREVENT SEDIMENT-LADEN WATER FROM ESCAPING BENEATH SILT FENCE INSTALLATION.
9. SECURE BOARDS TO PAVEMENT WITH 40D 5 INCH MINIMUM LENGTH NAILS.
10. REMOVE ACCUMULATED SEDIMENT AND DEBRIS WHEN BULGES DEVELOP IN SILT FENCE OR WHEN SEDIMENT REACHES 25% OF FENCE HEIGHT. REPLACE GEOTEXTILE IF TORN. MAINTAIN WATER TIGHT SEAL ALONG BOTTOM. REPLACE STONE IF DISPLACED.

MARYLAND STANDARDS AND SPECIFICATIONS FOR SOIL EROSION AND SEDIMENT CONTROL

U.S. DEPARTMENT OF AGRICULTURE NATURAL RESOURCES CONSERVATION SERVICE | 2011 | MARYLAND DEPARTMENT OF ENVIRONMENT WATER MANAGEMENT ADMINISTRATION

SEQUENCE OF CONSTRUCTION

1. CONTRACTOR TO INSPECT PREVIOUSLY EXISTING EROSION AND SEDIMENT CONTROL MEASURES INSTALLED BY OTHERS PER GP-10-91.
2. OBTAIN GRADING PERMIT
3. NOTIFY HOWARD COUNTY'S SEDIMENT CONTROL INSPECTOR AT 410-313-1855 AT LEAST 48 HOURS PRIOR TO THE START OF CONSTRUCTION. (1 DAY)
4. THE GENERAL CONTRACTOR SHALL NOT COMMENCE ANY LAND DISTURBING ACTIVITIES PRIOR TO OBTAINING A GRADING PERMIT. (1 DAY)
5. THE CONTRACTOR SHALL HOLD A PRE-CONSTRUCTION MEETING WITH CVS'S CONSTRUCTION MANAGER AND THE HOWARD COUNTY EROSION AND SEDIMENT CONTROL INSPECTOR PRIOR TO COMMENCING ANY LAND DISTURBANCE ACTIVITIES. (1 DAY)
6. ALL AREAS WHICH ARE TO BE DISTURBED SHALL BE CLEARLY MARKED IN THE FIELD PRIOR TO CONSTRUCTION. DISTURBED AREAS WITHIN THE SITE WHERE CONSTRUCTION ACTIVITY HAS CEASED SHALL BE PERMANENTLY OR TEMPORARILY STABILIZED WITHIN: (2 DAYS)
   A. THREE CALENDAR DAYS ON SLOPES GREATER THAN 3:1, ALL WATERWAYS AND TO THE SURFACE OF ALL PERIMETER CONTROLS.
   B. SEVEN CALENDAR DAYS AS TO ALL OTHER DISTURBED OR GRADED AREAS OF THE PROJECT.
7. INSTALL STABILIZED CONSTRUCTION ENTRANCE. ALL HARD SURFACE PUBLIC ROADS SHALL BE CLEANED AT THE END OF EACH WORK DAY. (2 DAYS)
8. INSTALL PERIMETER SILT FENCE. THIS MUST BE INSPECTED AND APPROVED BY HOWARD COUNTY'S SEDIMENT CONTROL INSPECTOR. NO ADDITIONAL CONSTRUCTION ACTIVITY WILL BE AUTHORIZED WITHOUT APPROVAL. (2 DAYS)
9. BEGIN CLEARING, GRUBBING, AND PRELIMINARY GRADING ACTIVITY, INCLUDING GRADING AND INSTALLATION OF STORMDRAIN PIPES FOR MICRO-BIORETENTION FACILITIES. (2 WEEKS)
10. INSTALL UTILITIES AS SHOWN, GENERAL CONTRACTOR SHALL COORDINATE WITH THE RESPECTIVE UTILITY COMPANIES. (4 WEEKS)
11. BEGIN BUILDING CONSTRUCTION. (6 WEEKS)
12. COMPLETE FINAL GRADING ACTIVITIES WITHIN PAVED AREAS. (2 WEEKS)
13. INSTALL CURB AND GUTTER AND APPLY BASE STONE FOR ALL PAVED AREAS. (5 WEEKS)
14. FLUSH THE PROPOSED STORM DRAIN SYSTEM TO REMOVE ANY SEDIMENT. THIS MUST BE INSPECTED AND APPROVED BY HOWARD COUNTY'S SEDIMENT CONTROL INSPECTOR. (1 DAY)
15. AS THE LANDSCAPED AREAS ARE BROUGHT TO FINAL GRADE, PERMANENTLY STABILIZE ALL DISTURBED AREAS WITHIN FOURTEEN (14) DAYS. (3 WEEKS)
16. INSTALL ALL PERMANENT LANDSCAPING. (2 WEEKS)
17. AFTER CONSTRUCTION OPERATIONS HAVE ENDED AND ALL DISTURBED AREAS HAVE BEEN STABILIZED, SEDIMENT CONTROL DEVICES CAN BE REMOVED UPON COORDINATION WITH THE HOWARD COUNTY SEDIMENT CONTROL INSPECTOR. (2 DAYS)

DETAIL E-9-2 AT-GRADE INLET PROTECTION

STANDARD SYMBOL: AGIP

MAXIMUM DRAINAGE AREA = 1 ACRE

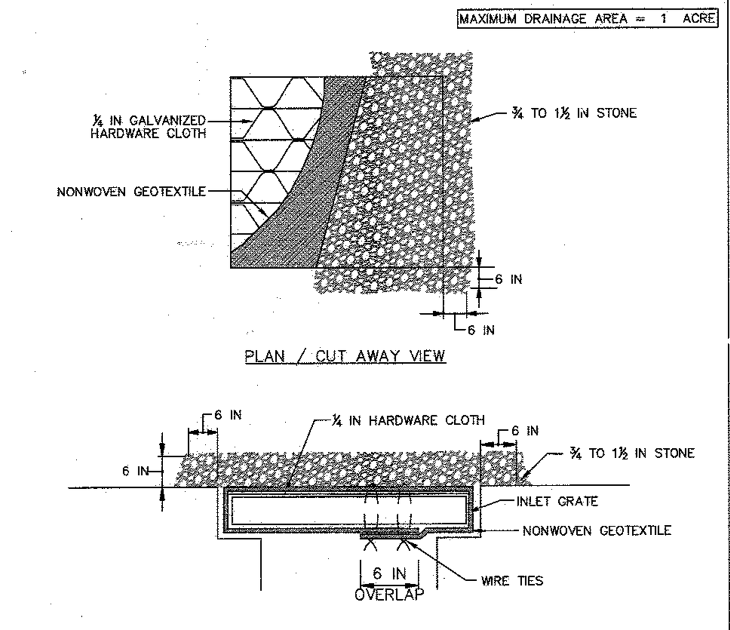

CONSTRUCTION SPECIFICATIONS

1. USE NONWOVEN GEOTEXTILE AS SPECIFIED IN SECTION H-1 MATERIALS.
2. LIFT GRATE AND WRAP WITH NONWOVEN GEOTEXTILE TO COMPLETELY COVER ALL OPENINGS. SECURE WITH WIRE TIES AND SET GRATE BACK IN PLACE.
3. PLACE CLEAN ¾ TO 1½ INCH STONE OR EQUIVALENT RECYCLED CONCRETE 6 INCHES THICK ON THE GRATE.
4. STORM DRAIN INLET PROTECTION REQUIRES FREQUENT MAINTENANCE. REMOVE ACCUMULATED SEDIMENT AFTER EACH RAIN EVENT TO MAINTAIN FUNCTION AND AVOID PREMATURE CLOGGING. IF INLET PROTECTION DOES NOT COMPLETELY DRAIN WITHIN 24 HOURS AFTER A STORM EVENT, IT IS CLOGGED. WHEN THIS OCCURS, REMOVE ACCUMULATED SEDIMENT AND CLEAN, OR REPLACE GEOTEXTILE AND STONE.

MARYLAND STANDARDS AND SPECIFICATIONS FOR SOIL EROSION AND SEDIMENT CONTROL

U.S. DEPARTMENT OF AGRICULTURE NATURAL RESOURCES CONSERVATION SERVICE | 2011 | MARYLAND DEPARTMENT OF ENVIRONMENT WATER MANAGEMENT ADMINISTRATION

DETAIL E-9-1 STANDARD INLET PROTECTION

STANDARD SYMBOL: SIP

CONSTRUCTION SPECIFICATIONS

1. USE WOVEN SLIT FILM GEOTEXTILE AS SPECIFIED IN SECTION H-1 MATERIALS.
2. EXCAVATE COMPLETELY AROUND THE INLET TO A DEPTH OF 18 INCHES BELOW THE NOTCH ELEVATION.
3. FOR TYPE A, USE NOMINAL 2 INCH X 4 INCH CONSTRUCTION GRADE LUMBER POSTS, DRIVEN 1 FOOT INTO THE GROUND AT EACH CORNER OF THE INLET. PLACE NAIL STRIPS BETWEEN THE POSTS ON THE ENDS OF THE INLET. ASSEMBLE THE TOP PORTION OF THE 2X4 FRAME AS SHOWN. STRETCH ½ INCH GALVANIZED HARDWARE CLOTH TIGHTLY AROUND THE FRAME AND FASTEN SECURELY. FASTEN GEOTEXTILE SECURELY TO THE HARDWARE CLOTH WITH TIES SPACED EVERY 24 INCHES AT THE TOP AND MID SECTION. EMBED GEOTEXTILE AND HARDWARE CLOTH A MINIMUM OF 18 INCHES BELOW THE WEIR CREST. THE ENDS OF THE GEOTEXTILE MUST MEET AT A POST, BE OVERLAPPED AND FOLDED, THEN FASTENED TO THE POST.

   FOR TYPE B, USE 2⅜ INCH DIAMETER GALVANIZED STEEL POSTS OF 0.095 INCH WALL THICKNESS AND 6 FOOT LENGTH, DRIVEN A MINIMUM OF 36 INCHES BELOW THE WEIR CREST AT EACH CORNER OF THE STRUCTURE. FASTEN 9 GAUGE OR HEAVIER CHAIN LINK FENCE, 42 INCHES IN HEIGHT, SECURELY TO THE FENCE POSTS WITH WIRE TIES. FASTEN GEOTEXTILE SECURELY TO THE CHAIN LINK FENCE WITH TIES SPACED EVERY 24 INCHES AT THE TOP AND MID SECTION. EMBED GEOTEXTILE AND CHAIN LINK FENCE A MINIMUM OF 18 INCHES BELOW THE WEIR CREST.
4. BACKFILL AROUND THE INLET IN LOOSE 4 INCH LIFTS AND COMPACT UNTIL SOIL IS LEVEL WITH THE NOTCH ELEVATION ON THE ENDS AND TOP ELEVATION ON THE SIDES.
5. STORM DRAIN INLET PROTECTION REQUIRES FREQUENT MAINTENANCE. REMOVE ACCUMULATED SEDIMENT AFTER EACH RAIN EVENT TO MAINTAIN FUNCTION AND AVOID PREMATURE CLOGGING. IF INLET PROTECTION DOES NOT COMPLETELY DRAIN WITHIN 24 HOURS AFTER A STORM EVENT, IT IS CLOGGED. WHEN THIS OCCURS, REMOVE ACCUMULATED SEDIMENT AND CLEAN, OR REPLACE GEOTEXTILE AND STONE.

2 OF 2

MARYLAND STANDARDS AND SPECIFICATIONS FOR SOIL EROSION AND SEDIMENT CONTROL

U.S. DEPARTMENT OF AGRICULTURE NATURAL RESOURCES CONSERVATION SERVICE | 2011 | MARYLAND DEPARTMENT OF ENVIRONMENT WATER MANAGEMENT ADMINISTRATION

DETAIL C-8 MOUNTABLE BERM

STANDARD SYMBOL: MB

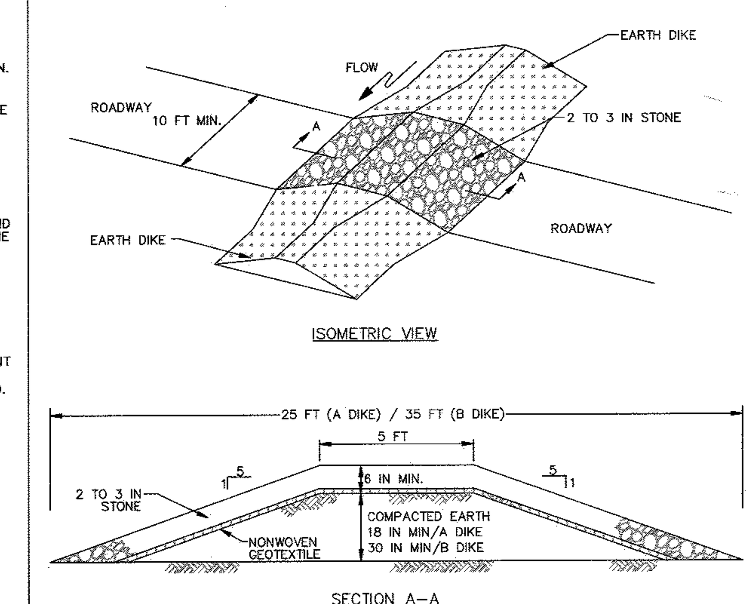

CONSTRUCTION SPECIFICATIONS

1. USE MINIMUM WIDTH OF 10 FEET TO ALLOW FOR VEHICULAR PASSAGE.
2. PLACE NONWOVEN GEOTEXTILE, AS SPECIFIED IN SECTION H-1 MATERIALS, OVER THE EARTH MOUND PRIOR TO PLACING STONE.
3. PLACE 2 TO 3 INCH STONE OR EQUIVALENT RECYCLED CONCRETE AT LEAST 6 INCHES DEEP OVER THE LENGTH AND WIDTH OF THE MOUNTABLE BERM.
4. MAINTAIN LINE, GRADE, AND CROSS SECTION. ADD STONE OR MAKE OTHER REPAIRS AS CONDITIONS DEMAND TO MAINTAIN SPECIFIED DIMENSIONS. REMOVE ACCUMULATED SEDIMENT AND DEBRIS. MAINTAIN POSITIVE DRAINAGE.

MARYLAND STANDARDS AND SPECIFICATIONS FOR SOIL EROSION AND SEDIMENT CONTROL

U.S. DEPARTMENT OF AGRICULTURE NATURAL RESOURCES CONSERVATION SERVICE | 2011 | MARYLAND DEPARTMENT OF ENVIRONMENT WATER MANAGEMENT ADMINISTRATION

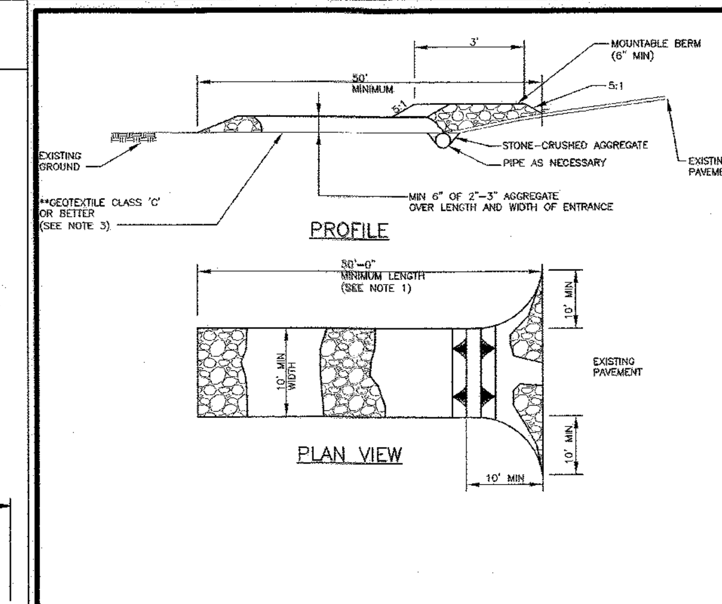

NOTES:
1. LENGTH – MINIMUM OF 50' (30' FOR SINGLE RESIDENCE LOT).
2. WIDTH – 10' MINIMUM SHOULD BE FLARED AT THE EXISTING ROAD TO PROVIDE A TURNING RADIUS.
3. GEOTEXTILE FABRIC (FILTER CLOTH) SHALL BE PLACED OVER THE EXISTING GROUND PRIOR TO PLACING STONE. ** THE PLAN APPROVAL AUTHORITY MAY NOT REQUIRE SINGLE FAMILY RESIDENCES TO USE GEOTEXTILE.
4. STONE-CRUSHED AGGREGATE (2" TO 3") OR RECLAIMED OR RECYCLED CONCRETE EQUIVALENT SHALL BE PLACED AT LEAST 6" DEEP OVER THE LENGTH AND WIDTH OF THE ENTRANCE.
5. SURFACE WATER-ALL SURFACE WATER FLOWING TO OR DIVERTED TOWARD CONSTRUCTION ENTRANCES SHALL BE PIPED THROUGH THE ENTRANCE, MAINTAINING POSITIVE DRAINAGE. PIPE INSTALLED THROUGH THE STABILIZED CONSTRUCTION ENTRANCE SHALL BE PROTECTED WITH A MOUNTABLE BERM WITH 5:1 SLOPES AND A MINIMUM OF 6" OF STONE OVER THE PIPE. PIPE HAS TO BE SIZED ACCORDING TO THE DRAINAGE. WHEN THE SCE IS LOCATED AT A HIGH SPOT AND HAS NO DRAINAGE TO CONVEY A PIPE WILL NOT BE NECESSARY. PIPE SHOULD BE SIZED ACCORDING TO THE AMOUNT OF RUNOFF TO BE CONVEYED. A 8" MINIMUM DIAMETER IS REQUIRED.
6. LOCATION- A STABILIZED CONSTRUCTION ENTRANCE SHALL BE LOCATED AT EVERY POINT WHERE CONSTRUCTION TRAFFIC ENTERS OR LEAVES A CONSTRUCTION SITE. VEHICLES LEAVING THE SITE MUST TRAVEL OVER THE ENTIRE LENGTH OF STABILIZED CONSTRUCTION ENTRANCE.
7. STABILIZED CONSTRUCTION ENTRANCE SHALL BE PLACED IN ACCORDANCE WITH THE CONTRACT DOCUMENTS. ADDITIONAL ENTRANCES ARE PROHIBITED.

Revised / Revised 1/2/2007 / Approved	Howard County, Maryland Department of Public Works Approved: Chief, Bureau of Engineering	Stabilized Construction Entrance	Detail G-6.01

DETAIL E-3 SUPER SILT FENCE

STANDARD SYMBOL: SSF

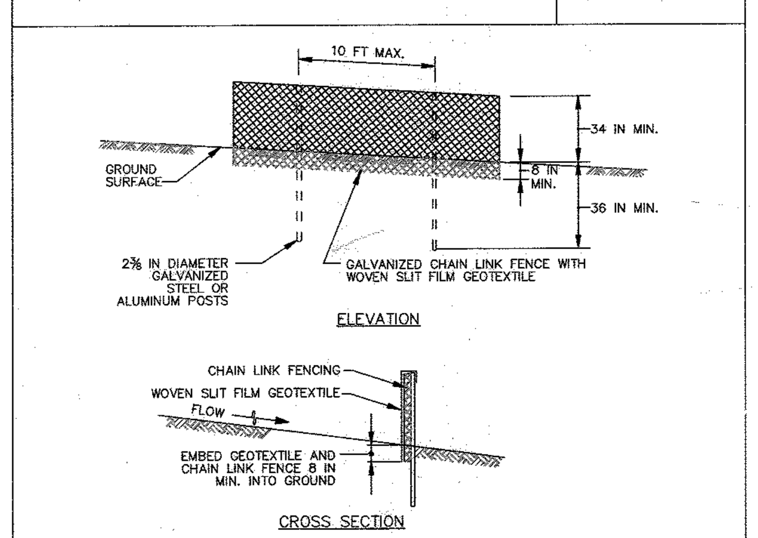

CONSTRUCTION SPECIFICATIONS

1. INSTALL 2⅜ INCH DIAMETER GALVANIZED STEEL POSTS OF 0.095 INCH WALL THICKNESS AND SIX FOOT LENGTH SPACED NO FURTHER THAN 10 FEET APART. DRIVE THE POSTS A MINIMUM OF 36 INCHES INTO THE GROUND.
2. FASTEN 9 GAUGE OR HEAVIER GALVANIZED CHAIN LINK FENCE (2⅜ INCH MAXIMUM OPENING) 42 INCHES IN HEIGHT SECURELY TO THE FENCE POSTS WITH WIRE TIES OR HUG RINGS.
3. FASTEN WOVEN SLIT FILM GEOTEXTILE AS SPECIFIED IN SECTION H-1 MATERIALS, SECURELY TO THE UPSLOPE SIDE OF CHAIN LINK FENCE WITH TIES SPACED EVERY 24 INCHES AT THE TOP AND MID SECTION. EMBED GEOTEXTILE AND CHAIN LINK FENCE A MINIMUM OF 8 INCHES INTO THE GROUND.
4. WHERE ENDS OF THE GEOTEXTILE COME TOGETHER, THE ENDS SHALL BE OVERLAPPED BY 6 INCHES, FOLDED, AND STAPLED TO PREVENT SEDIMENT BY PASS.
5. EXTEND BOTH ENDS OF THE SUPER SILT FENCE A MINIMUM OF FIVE HORIZONTAL FEET UPSLOPE AT 45 DEGREES TO THE MAIN FENCE ALIGNMENT TO PREVENT RUNOFF FROM GOING AROUND THE ENDS OF THE SUPER SILT FENCE.
6. PROVIDE MANUFACTURER CERTIFICATION TO THE INSPECTION/ENFORCEMENT AUTHORITY SHOWING THAT GEOTEXTILE USED MEETS THE REQUIREMENTS IN SECTION H-1 MATERIALS.
7. REMOVE ACCUMULATED SEDIMENT AND DEBRIS WHEN BULGES DEVELOP IN FENCE OR WHEN SEDIMENT REACHES 25% OF FENCE HEIGHT. REPLACE GEOTEXTILE IF TORN. IF UNDERMINING OCCURS, REINSTALL CHAIN LINK FENCING AND GEOTEXTILE.

MARYLAND STANDARDS AND SPECIFICATIONS FOR SOIL EROSION AND SEDIMENT CONTROL

U.S. DEPARTMENT OF AGRICULTURE NATURAL RESOURCES CONSERVATION SERVICE | 2011 | MARYLAND DEPARTMENT OF ENVIRONMENT WATER MANAGEMENT ADMINISTRATION

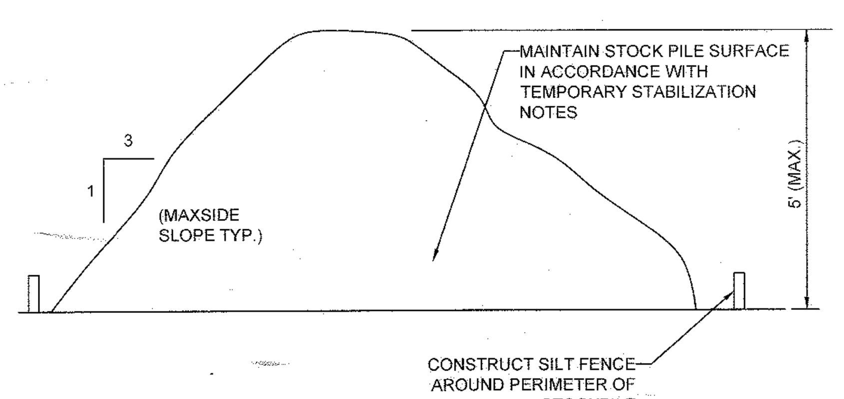

TEMPORARY STOCKPILE DETAIL

NOT TO SCALE

DETAIL C-9 DIVERSION FENCE

STANDARD SYMBOL: DF

MAXIMUM DRAINAGE AREA = 2 ACRES

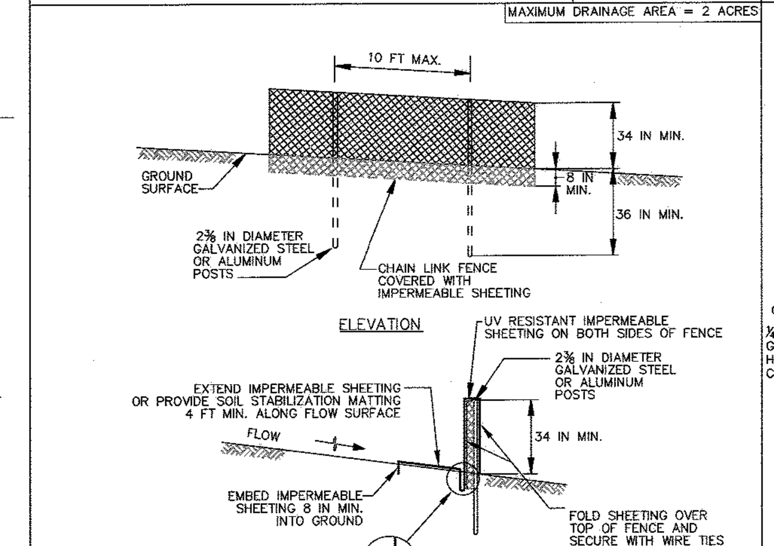

CONSTRUCTION SPECIFICATIONS

1. USE 42 INCH HIGH, 9 GAUGE OR THICKER CHAIN LINK FENCING (2⅜ INCH MAXIMUM OPENING).
2. USE 2⅜ INCH DIAMETER GALVANIZED STEEL POSTS OF 0.095 INCH WALL THICKNESS AND SIX FOOT LENGTH SPACED NO FURTHER THAN 10 FEET APART. THE POSTS DO NOT NEED TO BE SET IN CONCRETE.
3. FASTEN CHAIN LINK FENCE SECURELY TO THE FENCE POSTS WITH WIRE TIES.
4. SECURE 10 MIL OR THICKER UV RESISTANT, IMPERMEABLE SHEETING TO CHAIN LINK FENCE WITH TIES SPACED EVERY 24 INCHES AT TOP, MID SECTION, AND BELOW GROUND SURFACE.
5. EXTEND SHEETING A MINIMUM OF 4 FEET ALONG FLOW SURFACE AND EMBED END A MINIMUM OF 8 INCHES INTO GROUND. SOIL STABILIZATION MATTING MAY BE USED IN LIEU OF IMPERMEABLE SHEETING ALONG FLOW SURFACE.
6. WHEN TWO SECTIONS OF SHEETING ADJOIN EACH OTHER, OVERLAP BY 6 INCHES AND FOLD WITH SEAM FACING DOWNGRADE.
7. KEEP FLOW SURFACE ALONG DIVERSION FENCE AND POINT OF DISCHARGE FREE OF EROSION. REMOVE ACCUMULATED SEDIMENT AND DEBRIS. MAINTAIN POSITIVE DRAINAGE. REPLACE IMPERMEABLE SHEETING IF TORN. IF UNDERMINING OCCURS, REINSTALL FENCE.

MARYLAND STANDARDS AND SPECIFICATIONS FOR SOIL EROSION AND SEDIMENT CONTROL

U.S. DEPARTMENT OF AGRICULTURE NATURAL RESOURCES CONSERVATION SERVICE | 2011 | MARYLAND DEPARTMENT OF ENVIRONMENT WATER MANAGEMENT ADMINISTRATION

DETAIL E-9-3 CURB INLET PROTECTION

STANDARD SYMBOL: CIP

MAXIMUM DRAINAGE AREA = ¼ ACRE

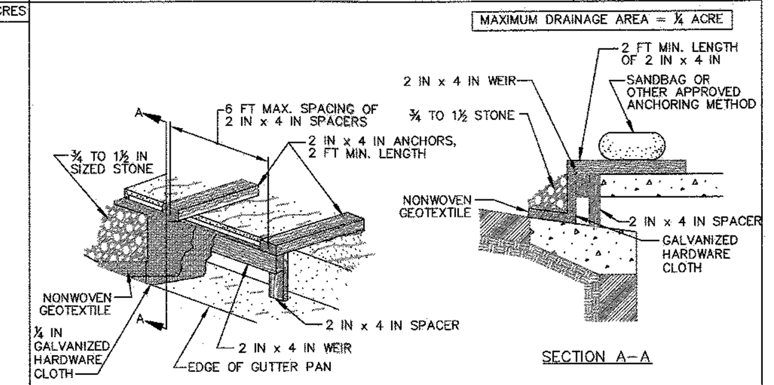

CONSTRUCTION SPECIFICATIONS

1. USE NOMINAL 2 INCH x 4 INCH LUMBER
2. USE NONWOVEN GEOTEXTILE AS SPECIFIED IN SECTION H-1 MATERIALS.
3. NAIL THE 2x4 WEIR TO 9 INCH LONG VERTICAL SPACERS (MAXIMUM 6 FEET APART).
4. ATTACH A CONTINUOUS PIECE OF ¼ INCH GALVANIZED HARDWARE CLOTH, WITH A MINIMUM WIDTH OF 30 INCHES AND A MINIMUM LENGTH OF 4 FEET LONGER THAN THE THROAT OPENING, TO THE 2x4 WEIR, EXTENDING IT 2 FEET BEYOND THROAT ON EACH SIDE.
5. PLACE A CONTINUOUS PIECE OF NONWOVEN GEOTEXTILE OF THE SAME DIMENSIONS AS THE HARDWARE CLOTH OVER THE HARDWARE CLOTH AND SECURELY ATTACH TO THE 2x4 WEIR.
6. PLACE THE ASSEMBLY AGAINST THE INLET THROAT AND NAIL TO 2x4 ANCHORS (MINIMUM 2 FEET LENGTH). EXTEND THE ANCHORS ACROSS THE INLET TOP AND HOLD IN PLACE BY SANDBAGS OR OTHER APPROVED ANCHORING METHOD.
7. INSTALL END SPACERS A MINIMUM OF 1 FOOT BEYOND THE ENDS OF THE THROAT OPENING.
8. FORM THE HARDWARE CLOTH AND THE GEOTEXTILE TO THE CONCRETE GUTTER AND FACE OF CURB TO SPAN THE INLET OPENING. COVER THE HARDWARE CLOTH AND GEOTEXTILE WITH CLEAN ¾ TO 1½ INCH STONE OR EQUIVALENT RECYCLED CONCRETE.
9. AT NON-SUMP LOCATIONS, INSTALL A TEMPORARY SANDBAG OR ASPHALT BERM TO PREVENT INLET BYPASS.
10. STORM DRAIN INLET PROTECTION REQUIRES FREQUENT MAINTENANCE. REMOVE ACCUMULATED SEDIMENT AFTER EACH RAIN EVENT TO MAINTAIN FUNCTION AND AVOID PREMATURE CLOGGING. IF INLET PROTECTION DOES NOT COMPLETELY DRAIN WITHIN 24 HOURS AFTER A STORM EVENT, IT IS CLOGGED. WHEN THIS OCCURS, REMOVE ACCUMULATED SEDIMENT AND CLEAN, OR REPLACE GEOTEXTILE AND STONE.

MARYLAND STANDARDS AND SPECIFICATIONS FOR SOIL EROSION AND SEDIMENT CONTROL

U.S. DEPARTMENT OF AGRICULTURE NATURAL RESOURCES CONSERVATION SERVICE | 2011 | MARYLAND DEPARTMENT OF ENVIRONMENT WATER MANAGEMENT ADMINISTRATION

GENERAL NOTE:
IT IS THE RESPONSIBILITY OF THE CONTRACTOR TO REVIEW ALL OF THE DRAWINGS AND SPECIFICATIONS ASSOCIATED WITH THIS PROJECT WORK SCOPE PRIOR TO THE INITIATION OF CONSTRUCTION. SHOULD THE CONTRACTOR FIND A CONFLICT WITH THE DOCUMENTS RELATIVE TO THE SPECIFICATIONS OR APPLICABLE CODES, IT IS THE CONTRACTOR'S RESPONSIBILITY TO NOTIFY THE PROJECT ENGINEER OF RECORD IN WRITING PRIOR TO THE START OF CONSTRUCTION. FAILURE BY THE CONTRACTOR TO NOTIFY THE PROJECT ENGINEER SHALL CONSTITUTE ACCEPTANCE OF FULL RESPONSIBILITY BY THE CONTRACTOR TO COMPLETE THE SCOPE OF THE WORK AS DEFINED BY THE DRAWINGS AND IN FULL CONFORMANCE WITH LOCAL REGULATIONS AND CODES.

C:\USERS\BMACE\APPDATA\LOCAL\TEMP\ACPUBLISH_1588\DE150009SD7--------->LAYOUT: 19 - E&S CONTROL NOTES-DETAILS

APPROVED: DEPARTMENT OF PLANNING AND ZONING

Signature	Date
CHIEF-DEVELOPMENT ENGINEERING DIVISION	10.14.16
CHIEF-DIVISION OF LAND DEVELOPMENT	11-2-16
DIRECTOR	11-3-16

THIS DEVELOPMENT PLAN IS APPROVED FOR SOIL EROSION AND SEDIMENT CONTROL BY THE HOWARD SOIL CONSERVATION DISTRICT.
HOWARD SCD — DATE: 10/6/16

SUBDIVISION NAME: MONTEVIDEO CROSSING
PARCEL A
SECTION/AREA: N/A
PLAT # 23695
WATER CODE: N/A
SEWER CODE: N/A

ENGINEER'S CERTIFICATE

"I HEREBY CERTIFY THAT THIS PLAN FOR EROSION AND SEDIMENT CONTROL REPRESENTS A PRACTICAL AND WORKABLE PLAN BASED ON MY PERSONAL KNOWLEDGE OF THE SITE CONDITIONS AND IT WAS PREPARED IN ACCORDANCE WITH THE REQUIREMENTS OF THE HOWARD SOIL CONSERVATION DISTRICT."

SIGNATURE OF ENGINEER — DATE: 09-30-16
DAVID M. KUKLISH, P.E.

DEVELOPER'S CERTIFICATE

"I/WE HEREBY CERTIFY THAT ALL DEVELOPMENT AND CONSTRUCTION WILL BE DONE ACCORDING TO THIS PLAN, AND THAT ANY RESPONSIBLE PERSONNEL INVOLVED IN THE CONSTRUCTION PROJECT WILL HAVE A CERTIFICATE OF ATTENDANCE AT A DEPARTMENT OF THE ENVIRONMENT APPROVED TRAINING PROGRAM FOR THE CONTROL OF SEDIMENT AND EROSION BEFORE BEGINNING THE PROJECT. I ALSO AUTHORIZE PERIODIC ONSITE INSPECTION BY THE HOWARD SOIL CONSERVATION DISTRICT."

J.C. BAR PROPERTIES, INC

BY:
NAME: JASON MITCHELL — DATE: 10-4-16

OWNER: PARCEL 16A
MIT MONTEVIDEO, LLC
8850 COLUMBIA PARKWAY
COLUMBIA, MD 21045
CONTACT: MARK LEVY
TEL: (410) 579-2442

DEVELOPER: J.C. BAR PROPERTIES, INC
415 FALLOWFIELD ROAD, SUITE 301
CAMP HILL, PA 17011
CONTACT: JASON MITCHELL
TEL: (717) 761-7801

TAX MAP: 43 GRID: 10 ZONED: B-1
PARCEL: 16A
1ST ELECTION DISTRICT, HOWARD COUNTY, MARYLAND
ZB REF.: 1096m SITE AREA: 4.039 AC
DPZ REF.: SDP-15-069

PROFESSIONAL CERTIFICATION
I, DAVID M. KUKLISH, P.E., HEREBY CERTIFY THAT THESE DOCUMENTS WERE PREPARED OR APPROVED BY ME, AND THAT I AM A DULY LICENSED PROFESSIONAL ENGINEER UNDER THE LAWS OF THE STATE OF MARYLAND, LICENSE NO. 36224, EXPIRATION DATE: 8/19/2018

CVS pharmacy

TYPE 'B'
REAR DRIVE-THRU

STORE NUMBER: 10528

WASHINGTON BLVD. & MONTEVIDEO RD.
JESSUP, HOWARD COUNTY, MARYLAND

PROJECT TYPE: NEW
DEAL TYPE: LEASE

CS PROJECT NUMBER: 77620

THE FOLLOWING STATES REQUIRE NOTIFICATION BY EXCAVATORS, DESIGNERS, OR ANY PERSON PREPARING TO DISTURB THE EARTH'S SURFACE ANYWHERE IN THE STATE. IN VIRGINIA, MARYLAND, THE DISTRICT OF COLUMBIA, AND DELAWARE CALL - 811
(WV 1-800-245-4848) (PA 1-800-242-1776) (DC 1-800-257-7777)
(VA 1-800-552-7001) (MD 1-800-257-7777) (DE 1-800-282-8555)

BOHLER ENGINEERING
901 DULANEY VALLEY ROAD, SUITE 801
TOWSON, MARYLAND 21204
Phone: (410) 821-7900
Fax: (410) 821-7987
MD@BohlerEng.com

DEVELOPER
J.C. BAR DEVELOPMENT, LLC

415 FALLOWFIELD ROAD, SUITE 301
CAMP HILL, PA 17011
CONTACT: JASON MITCHELL
TEL : (717) 761-7801

D.M. KUKLISH
PROFESSIONAL ENGINEER

REVISIONS

REV:	DATE:	COMMENT:	BY:

CHECKED BY: DMK
DRAWN BY: CRH
DATE: 4/13/16
JOB NUMBER: MD131504
TITLE: EROSION AND SEDIMENT CONTROL NOTES AND DETAILS
SHEET NUMBER: 19 OF 27
COMMENTS: FILE NO. SDP-15-069

HOWARD SOIL CONSERVATION DISTRICT (HSCD) STANDARD SEDIMENT CONTROL NOTES

1. A PRE-CONSTRUCTION MEETING MUST OCCUR WITH THE HOWARD COUNTY DEPARTMENT OF PUBLIC WORKS, CONSTRUCTION INSPECTION DIVISION (CID), 410-313-1855 AFTER THE FUTURE LOD AND PROTECTED AREAS ARE MARKED CLEARLY IN THE FIELD. A MINIMUM OF 48 HOUR NOTICE TO CID MUST BE GIVEN AT THE FOLLOWING STAGES:
   - A. PRIOR TO THE START OF EARTH DISTURBANCE,
   - B. UPON COMPLETION OF THE INSTALLATION OF PERIMETER EROSION AND SEDIMENT CONTROLS, BUT BEFORE PROCEEDING WITH ANY OTHER EARTH DISTURBANCE OR GRADING,
   - C. PRIOR TO THE START OF ANOTHER PHASE OF CONSTRUCTION OR OPENING OF ANOTHER GRADING UNIT,
   - D. PRIOR TO THE REMOVAL OR MODIFICATION OF SEDIMENT CONTROL PRACTICES.

   OTHER BUILDING OR GRADING INSPECTION APPROVALS MAY NOT BE AUTHORIZED UNTIL THIS INITIAL APPROVAL BY THE INSPECTION AGENCY IS MADE. OTHER RELATED STATE AND FEDERAL PERMITS SHALL BE REFERENCED, TO ENSURE COORDINATION AND TO AVOID CONFLICTS WITH THIS PLAN.
2. ALL VEGETATIVE AND STRUCTURAL PRACTICES ARE TO BE INSTALLED ACCORDING TO THE PROVISIONS OF THIS PLAN AND ARE TO BE IN CONFORMANCE WITH THE 2011 MARYLAND STANDARDS AND SPECIFICATIONS FOR SOIL EROSION AND SEDIMENT CONTROL, AND REVISIONS THERETO.
3. FOLLOWING INITIAL SOIL DISTURBANCE OR RE-DISTURBANCE, PERMANENT OR TEMPORARY STABILIZATION IS REQUIRED WITHIN THREE (3) CALENDAR DAYS AS TO THE SURFACE OF ALL PERIMETER CONTROLS, DIKES, SWALES, DITCHES, PERIMETER SLOPES, AND ALL SLOPES STEEPER THAN 3 HORIZONTAL TO 1 VERTICAL (3:1); AND SEVEN (7) CALENDAR DAYS AS TO ALL OTHER DISTURBED AREAS ON THE PROJECT SITE EXCEPT FOR THOSE AREAS UNDER ACTIVE GRADING.
4. ALL DISTURBED AREAS MUST BE STABILIZED WITHIN THE TIME PERIOD SPECIFIED ABOVE IN ACCORDANCE WITH THE 2011 MARYLAND STANDARDS AND SPECIFICATIONS FOR SOIL EROSION AND SEDIMENT CONTROL FOR TOPSOIL (SEC. B-4-2), PERMANENT SEEDING (SEC. B-4-5), TEMPORARY SEEDING (SEC. B-4-4) AND MULCHING (SEC. B-4-3). TEMPORARY STABILIZATION WITH MULCH ALONE CAN ONLY BE APPLIED BETWEEN THE FALL AND SPRING SEEDING DATES IF THE GROUND IS FROZEN. INCREMENTAL STABILIZATION (SEC. B-4-1) SPECIFICATIONS SHALL BE ENFORCED IN AREAS WITH >15' OF CUT AND/OR FILL. STOCKPILES (SEC. B-4-8) IN EXCESS OF 20 FT. MUST BE BENCHED WITH STABLE OUTLET. ALL CONCENTRATED FLOW, STEEP SLOPE, AND HIGHLY ERODIBLE AREAS SHALL RECEIVE SOIL STABILIZATION MATTING (SEC. B-4-6).
5. ALL SEDIMENT CONTROL STRUCTURES ARE TO REMAIN IN PLACE, AND ARE TO BE MAINTAINED IN OPERATIVE CONDITION UNTIL PERMISSION FOR THEIR REMOVAL HAS BEEN OBTAINED FROM THE CID.
6. SITE ANALYSIS:
   - TOTAL AREA OF SITE: 4.039 ACRES
   - AREA DISTURBED: 3.70 ACRES
   - AREA TO BE ROOFED OR PAVED: 2.76 ACRES
   - AREA TO BE VEGETATIVELY STABILIZED:1.28 ACRES
   - TOTAL CUT: 3,688 CU. YDS.
   - TOTAL FILL: 6,473 CU. YDS.
   - EXCESS CUT OR BORROW MATERIAL SHALL GO TO, OR COME FROM, RESPECTIVELY, A SITE WITH AN OPEN GRADING PERMIT.
7. ANY SEDIMENT CONTROL PRACTICE WHICH IS DISTURBED BY GRADING ACTIVITY FOR PLACEMENT OF UTILITIES MUST BE REPAIRED ON THE SAME DAY OF DISTURBANCE.
8. ADDITIONAL SEDIMENT CONTROL MUST BE PROVIDED, IF DEEMED NECESSARY BY THE CID. THE SITE AND ALL CONTROLS SHALL BE INSPECTED BY THE CONTRACTOR WEEKLY; AND THE NEXT DAY AFTER EACH RAIN EVENT. A WRITTEN REPORT BY THE CONTRACTOR, MADE AVAILABLE UPON REQUEST, IS PART OF EVERY INSPECTION AND SHOULD INCLUDE:
   - INSPECTION DATE
   - INSPECTION TYPE (ROUTINE, PRE-STORM EVENT, DURING RAIN EVENT)
   - NAME AND TITLE OF INSPECTOR
   - WEATHER INFORMATION (CURRENT CONDITIONS AS WELL AS TIME AND AMOUNT OF LAST RECORDED PRECIPITATION)
   - BRIEF DESCRIPTION OF PROJECT'S STATUS (E.G., PERCENT COMPLETE) AND/OR CURRENT ACTIVITIES
   - EVIDENCE OF SEDIMENT DISCHARGES
   - IDENTIFICATION OF PLAN DEFICIENCIES
   - IDENTIFICATION OF SEDIMENT CONTROLS THAT REQUIRE MAINTENANCE
   - IDENTIFICATION OF MISSING OR IMPROPERLY INSTALLED SEDIMENT CONTROLS
   - COMPLIANCE STATUS REGARDING THE SEQUENCE OF CONSTRUCTION AND STABILIZATION REQUIREMENTS
   - PHOTOGRAPHS
   - MONITORING/SAMPLING
   - MAINTENANCE AND/OR CORRECTIVE ACTION PERFORMED
   - OTHER INSPECTION ITEMS AS REQUIRED BY THE GENERAL PERMIT FOR STORMWATER ASSOCIATED WITH CONSTRUCTION ACTIVITIES (NPDES, MDE).
9. TRENCHES FOR THE CONSTRUCTION OF UTILITIES IS LIMITED TO THREE PIPE LENGTHS OR THAT WHICH CAN AND SHALL BE BACK-FILLED AND STABILIZED BY THE END OF EACH WORKDAY, WHICHEVER IS SHORTER.
10. ANY MAJOR CHANGES OR REVISIONS TO THE PLAN OR SEQUENCE OF CONSTRUCTION MUST BE REVIEWED AND APPROVED BY THE HSCD PRIOR TO PROCEEDING WITH CONSTRUCTION. MINOR REVISIONS MAY ALLOWED BY THE CID PER THE LIST OF HSCD-APPROVED FIELD CHANGES.
11. DISTURBANCE SHALL NOT OCCUR OUTSIDE THE L.O.D. A PROJECT IS TO BE SEQUENCED SO THAT GRADING ACTIVITIES BEGIN ON ONE GRADING UNIT (MAXIMUM ACREAGE OF 20 AC. PER GRADING UNIT) AT A TIME. WORK MAY PROCEED TO A SUBSEQUENT GRADING UNIT WHEN AT LEAST 50 PERCENT OF THE DISTURBED AREA IN THE PRECEDING GRADING UNIT HAS BEEN STABILIZED AND APPROVED BY THE CID. UNLESS OTHERWISE SPECIFIED AND APPROVED BY THE CID, NO MORE THAN 30 ACRES CUMULATIVELY MAY BE DISTURBED AT A GIVEN TIME.
12. WASH WATER FROM ANY EQUIPMENT, VEHICLES, WHEELS, PAVEMENT, AND OTHER SOURCES MUST BE TREATED IN A SEDIMENT BASIN OR OTHER APPROVED WASHOUT STRUCTURE.
13. TOPSOIL SHALL BE STOCKPILED AND PRESERVED ON-SITE FOR REDISTRIBUTION ONTO FINAL GRADE.
14. ALL SILT FENCE AND SUPER SILT FENCE SHALL BE PLACED ON-THE-CONTOUR, AND BE IMBRICATED AT 25' MINIMUM INTERVALS, WITH LOWER ENDS CURLED UPHILL BY 2' IN ELEVATION.
15. STREAM CHANNELS MUST NOT BE DISTURBED DURING THE FOLLOWING RESTRICTED TIME PERIODS (INCLUSIVE):
   - USE I AND IP MARCH 1 - JUNE 15
   - USE III AND IIIP OCTOBER 1 - APRIL 30
   - USE IV MARCH 1 - MAY 31
16. A COPY OF THIS PLAN, THE 2011 MARYLAND STANDARDS AND SPECIFICATIONS FOR SOIL EROSION AND SEDIMENT CONTROL, AND ASSOCIATED PERMITS SHALL BE ON-SITE AND AVAILABLE WHEN THE SITE IS ACTIVE.

DETAIL B-4-6-A TEMPORARY SOIL STABILIZATION MATTING CHANNEL APPLICATION

STANDARD SYMBOL: TSSMC – * lb/ft² (* INCLUDE SHEAR STRESS)

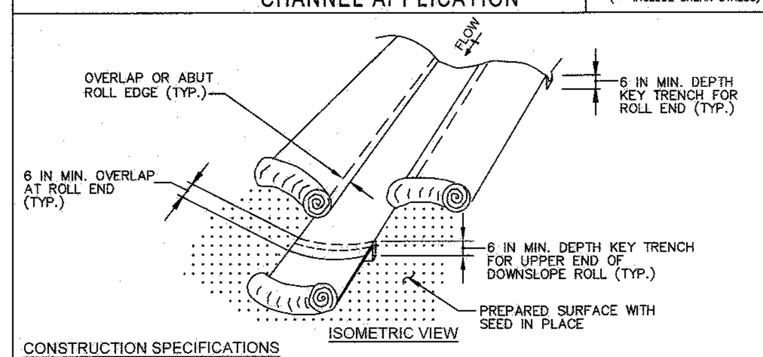

CONSTRUCTION SPECIFICATIONS

1. USE MATTING THAT HAS A DESIGN VALUE FOR SHEAR STRESS EQUAL TO OR HIGHER THAN THE SHEAR STRESS DESIGNATED ON APPROVED PLANS.
2. USE TEMPORARY SOIL STABILIZATION MATTING MADE OF DEGRADABLE (LASTS 6 MONTHS MINIMUM) NATURAL OR MAN-MADE FIBERS (MOSTLY ORGANIC). MAT MUST HAVE UNIFORM THICKNESS AND DISTRIBUTION OF FIBERS THROUGHOUT AND BE SMOLDER RESISTANT. CHEMICALS USED IN THE MAT MUST BE NON-LEACHING AND NON-TOXIC TO VEGETATION AND SEED GERMINATION AND NON-INJURIOUS TO THE SKIN. IF PRESENT, NETTING MUST BE EXTRUDED PLASTIC WITH A MAXIMUM MESH OPENING OF 2x2 INCHES AND SUFFICIENTLY BONDED OR SEWN ON 2 INCH CENTERS ALONG LONGITUDINAL AXIS OF THE MATERIAL TO PREVENT SEPARATION OF THE NET FROM THE PARENT MATERIAL.
3. SECURE MATTING USING STEEL STAPLES, WOOD STAKES, OR BIODEGRADABLE EQUIVALENT. STAPLES MUST BE "U" OR "T" SHAPED STEEL WIRE HAVING A MINIMUM GAUGE OF NO. 11 AND NO. 8 RESPECTIVELY. "U" SHAPED STAPLES MUST AVERAGE 1 TO 1½ INCHES WIDE AND BE A MINIMUM OF 6 INCHES LONG. "T" SHAPED STAPLES MUST HAVE A MINIMUM 8 INCH MAIN LEG, A MINIMUM 1 INCH SECONDARY LEG, AND A MINIMUM 4 INCH HEAD. WOOD STAKES MUST BE ROUGH-SAWN HARDWOOD, 12 TO 24 INCHES IN LENGTH, 1x3 INCH IN CROSS SECTION, AND WEDGE SHAPED AT THE BOTTOM.
4. PERFORM FINAL GRADING, TOPSOIL APPLICATION, SEEDBED PREPARATION, AND PERMANENT SEEDING IN ACCORDANCE WITH SPECIFICATIONS. PLACE MATTING WITHIN 48 HOURS OF COMPLETING SEEDING OPERATIONS UNLESS END OF WORKDAY STABILIZATION IS SPECIFIED ON THE APPROVED EROSION AND SEDIMENT CONTROL PLAN.
5. UNROLL MATTING IN DIRECTION OF WATER FLOW, CENTERING THE FIRST ROLL ON THE CHANNEL CENTERLINE. WORK FROM CENTER OF CHANNEL OUTWARD WHEN PLACING ROLLS. LAY MAT SMOOTHLY AND FIRMLY ON THE SEEDED SURFACE. AVOID STRETCHING THE MATTING.
6. KEY-IN UPSTREAM END OF EACH MAT ROLL BY DIGGING A 6 INCH (MINIMUM) TRENCH AT THE UPSTREAM END OF THE MATTING, PLACING THE ROLL END IN THE TRENCH, STAPLING THE MAT IN PLACE, REPLACING THE EXCAVATED MATERIAL, AND TAMPING TO SECURE THE MAT END.
7. OVERLAP OR ABUT THE ROLL EDGES PER MANUFACTURER RECOMMENDATIONS. OVERLAP ROLL ENDS BY 6 INCHES (MINIMUM), WITH THE UPSTREAM MAT OVERLAPPING ON TOP OF THE NEXT DOWNSTREAM MAT.
8. STAPLE/STAKE MAT IN A STAGGERED PATTERN ON 4 FOOT (MAXIMUM) CENTERS THROUGHOUT AND 2 FOOT (MAXIMUM) CENTERS ALONG SEAMS, JOINTS, AND ROLL ENDS.
9. ESTABLISH AND MAINTAIN VEGETATION SO THAT REQUIREMENTS FOR ADEQUATE VEGETATIVE ESTABLISHMENT ARE CONTINUOUSLY MET IN ACCORDANCE WITH SECTION B-4 VEGETATIVE STABILIZATION.

MARYLAND STANDARDS AND SPECIFICATIONS FOR SOIL EROSION AND SEDIMENT CONTROL

U.S. DEPARTMENT OF AGRICULTURE NATURAL RESOURCES CONSERVATION SERVICE	2011	MARYLAND DEPARTMENT OF ENVIRONMENT WATER MANAGEMENT ADMINISTRATION

DETAIL B-4-6-C PERMANENT SOIL STABILIZATION MATTING CHANNEL APPLICATION

STANDARD SYMBOL: PSSMC – * lb/ft² (* INCLUDE SHEAR STRESS)

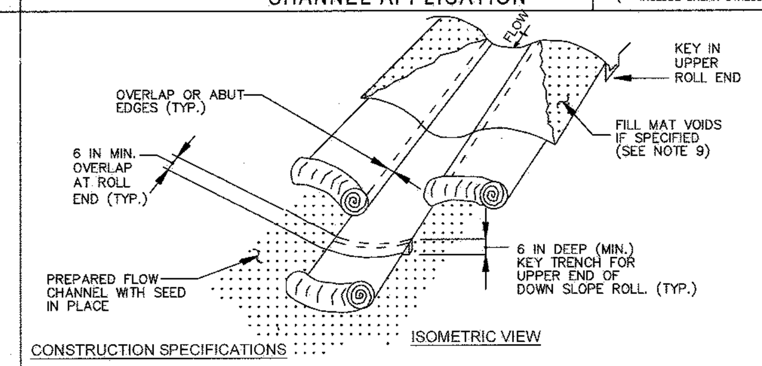

CONSTRUCTION SPECIFICATIONS

1. USE MATTING THAT HAS A DESIGN VALUE FOR SHEAR STRESS EQUAL TO OR HIGHER THAN THE SHEAR STRESS DESIGNATED ON APPROVED PLANS.
2. USE PERMANENT SOIL STABILIZATION MATTING MADE OF OPEN WEAVE SYNTHETIC, NON-DEGRADABLE FIBERS OR ELEMENTS OF UNIFORM THICKNESS AND DISTRIBUTION THROUGHOUT. CHEMICALS USED IN THE MAT MUST BE NON-LEACHING AND NON-TOXIC TO VEGETATION AND SEED GERMINATION AND NON-INJURIOUS TO THE SKIN. IF PRESENT, NETTING MUST BE EXTRUDED PLASTIC WITH A MAXIMUM MESH OPENING OF 2x2 INCHES AND SUFFICIENTLY BONDED OR SEWN ON 2 INCH CENTERS ALONG LONGITUDINAL AXIS OF THE MATERIAL TO PREVENT SEPARATION OF THE NET FROM THE PARENT MATERIAL.
3. SECURE MATTING USING STEEL STAPLES OR WOOD STAKES. STAPLES MUST BE "U" OR "T" SHAPED STEEL WIRE HAVING A MINIMUM GAUGE OF NO. 11 AND NO. 8 RESPECTIVELY. "U" SHAPED STAPLES MUST AVERAGE 1 TO 1½ INCHES WIDE AND BE A MINIMUM OF 6 INCHES LONG. "T" SHAPED STAPLES MUST HAVE A MINIMUM 8 INCH MAIN LEG, A MINIMUM 1 INCH SECONDARY LEG, AND MINIMUM 4 INCH HEAD. WOOD STAKES MUST BE ROUGH-SAWN HARDWOOD, 12 TO 24 INCHES IN LENGTH, 1x3 INCH IN CROSS SECTION, AND WEDGE SHAPE AT THE BOTTOM.
4. PERFORM FINAL GRADING, TOPSOIL APPLICATION, SEEDBED PREPARATION, AND PERMANENT SEEDING IN ACCORDANCE WITH SPECIFICATIONS. PLACE MATTING WITHIN 48 HOURS OF COMPLETING SEEDING OPERATIONS, UNLESS END OF WORKDAY STABILIZATION IS SPECIFIED ON THE APPROVED EROSION AND SEDIMENT CONTROL PLAN.
5. UNROLL MATTING IN DIRECTION OF WATER FLOW, CENTERING THE FIRST ROLL ON THE CHANNEL CENTER LINE. WORK FROM CENTER OF CHANNEL OUTWARD WHEN PLACING ROLLS. LAY MATTING SMOOTHLY AND FIRMLY UPON THE SEEDED SURFACE. AVOID STRETCHING THE MATTING.
6. OVERLAP OR ABUT EDGES OF MATTING ROLLS PER MANUFACTURER RECOMMENDATIONS. OVERLAP ROLL ENDS BY 6 INCHES (MINIMUM), WITH THE UPSTREAM MAT OVERLAPPING ON TOP OF THE NEXT DOWNSTREAM MAT.
7. KEY IN THE TOP OF SLOPE END OF MAT 6 INCHES (MINIMUM) BY DIGGING A TRENCH, PLACING THE MATTING ROLL END IN THE TRENCH, STAPLING THE MAT IN PLACE, REPLACING THE EXCAVATED MATERIAL, AND TAMPING TO SECURE THE MAT END IN THE KEY.
8. STAPLE/STAKE MAT IN A STAGGERED PATTERN ON 4 FOOT (MAXIMUM) CENTERS THROUGHOUT AND 2 FOOT (MAXIMUM) CENTERS ALONG SEAMS, JOINTS, AND ROLL ENDS.
9. IF SPECIFIED BY THE DESIGNER OR MANUFACTURER AND DEPENDING ON THE TYPE OF MAT BEING INSTALLED, ONCE THE MATTING IS KEYED AND STAPLED IN PLACE, FILL THE MAT VOIDS WITH TOP SOIL OR GRANULAR MATERIAL AND LIGHTLY COMPACT OR ROLL TO MAXIMIZE SOIL/MAT CONTACT WITHOUT CRUSHING MAT.
10. ESTABLISH AND MAINTAIN VEGETATION SO THAT REQUIREMENTS FOR ADEQUATE VEGETATIVE ESTABLISHMENT ARE CONTINUOUSLY MET IN ACCORDANCE WITH SECTION B-4 VEGETATIVE STABILIZATION.

MARYLAND STANDARDS AND SPECIFICATIONS FOR SOIL EROSION AND SEDIMENT CONTROL

U.S. DEPARTMENT OF AGRICULTURE NATURAL RESOURCES CONSERVATION SERVICE	2011	MARYLAND DEPARTMENT OF ENVIRONMENT WATER MANAGEMENT ADMINISTRATION

DETAIL B-4-6-B TEMPORARY SOIL STABILIZATION MATTING SLOPE APPLICATION

STANDARD SYMBOL: TSSMS – * lb/ft² (* INCLUDE SHEAR STRESS)

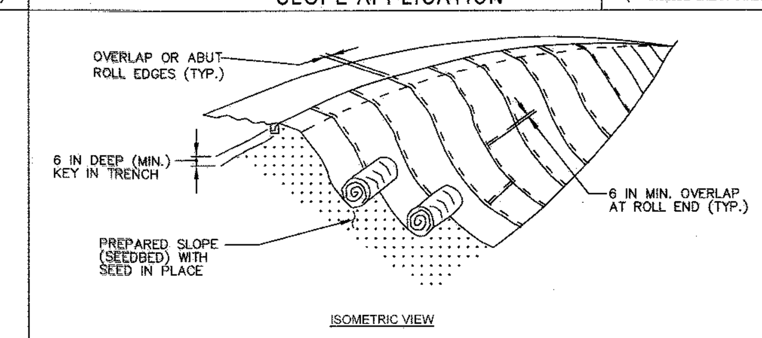

CONSTRUCTION SPECIFICATIONS

1. USE MATTING THAT HAS A DESIGN VALUE FOR SHEAR STRESS EQUAL TO OR HIGHER THAN THE SHEAR STRESS DESIGNATED ON APPROVED PLANS.
2. USE TEMPORARY SOIL STABILIZATION MATTING MADE OF DEGRADABLE (LASTS 6 MONTHS MINIMUM) NATURAL OR MAN-MADE FIBERS (MOSTLY ORGANIC). MAT MUST HAVE UNIFORM THICKNESS AND DISTRIBUTION OF FIBERS THROUGHOUT AND BE SMOLDER RESISTANT. CHEMICALS USED IN THE MAT MUST BE NON-LEACHING AND NON-TOXIC TO VEGETATION AND SEED GERMINATION AND NON-INJURIOUS TO THE SKIN. IF PRESENT, NETTING MUST BE EXTRUDED PLASTIC WITH A MAXIMUM MESH OPENING OF 2x2 INCHES AND SUFFICIENTLY BONDED OR SEWN ON 2 INCH CENTERS ALONG LONGITUDINAL AXIS OF THE MATERIAL TO PREVENT SEPARATION OF THE NET FROM THE PARENT MATERIAL.
3. SECURE MATTING USING STEEL STAPLES, WOOD STAKES, OR BIODEGRADABLE EQUIVALENT. STAPLES MUST BE "U" OR "T" SHAPED STEEL WIRE HAVING A MINIMUM GAUGE OF NO. 11 AND NO. 8 RESPECTIVELY. "U" SHAPED STAPLES MUST AVERAGE 1 TO 1½ INCHES WIDE AND BE A MINIMUM OF 6 INCHES LONG. "T" SHAPED STAPLES MUST HAVE A MINIMUM 8 INCH MAIN LEG, A MINIMUM 1 INCH SECONDARY LEG, AND A MINIMUM 4 INCH HEAD. WOOD STAKES MUST BE ROUGH-SAWN HARDWOOD, 12 TO 24 INCHES IN LENGTH, 1x3 INCH IN CROSS SECTION, AND WEDGE SHAPED AT THE BOTTOM.
4. PERFORM FINAL GRADING, TOPSOIL APPLICATION, SEEDBED PREPARATION, AND PERMANENT SEEDING IN ACCORDANCE WITH SPECIFICATIONS. PLACE MATTING WITHIN 48 HOURS OF COMPLETING SEEDING OPERATIONS UNLESS END OF WORKDAY STABILIZATION IS SPECIFIED ON THE APPROVED EROSION & SEDIMENT CONTROL PLAN.
5. UNROLL MATTING DOWNSLOPE. LAY MAT SMOOTHLY AND FIRMLY UPON THE SEEDED SURFACE. AVOID STRETCHING THE MATTING.
6. OVERLAP OR ABUT ROLL EDGES PER MANUFACTURER RECOMMENDATIONS. OVERLAP ROLL ENDS BY 6 INCHES (MINIMUM), WITH THE UPSLOPE MAT OVERLAPPING ON TOP OF THE DOWNSLOPE MAT.
7. KEY IN THE UPSLOPE END OF MAT 6 INCHES (MINIMUM) BY DIGGING A TRENCH, PLACING THE MATTING ROLL END IN THE TRENCH, STAPLING THE MAT IN PLACE, REPLACING THE EXCAVATED MATERIAL, AND TAMPING TO SECURE THE MAT END IN THE KEY.
8. STAPLE/STAKE MAT IN A STAGGERED PATTERN ON 4 FOOT (MAXIMUM) CENTERS THROUGHOUT AND 2 FOOT (MAXIMUM) CENTERS ALONG SEAMS, JOINTS, AND ROLL ENDS.
9. ESTABLISH AND MAINTAIN VEGETATION SO THAT REQUIREMENTS FOR ADEQUATE VEGETATIVE ESTABLISHMENT ARE CONTINUOUSLY MET IN ACCORDANCE WITH SECTION B-4 VEGETATIVE STABILIZATION.

MARYLAND STANDARDS AND SPECIFICATIONS FOR SOIL EROSION AND SEDIMENT CONTROL

U.S. DEPARTMENT OF AGRICULTURE NATURAL RESOURCES CONSERVATION SERVICE	2011	MARYLAND DEPARTMENT OF ENVIRONMENT WATER MANAGEMENT ADMINISTRATION

DETAIL B-4-6-D PERMANENT SOIL STABILIZATION MATTING SLOPE APPLICATION

STANDARD SYMBOL: PSSMS – * lb/ft² (* INCLUDE SHEAR STRESS)

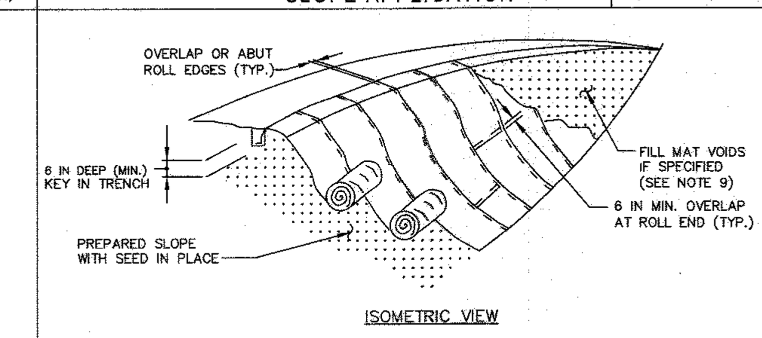

CONSTRUCTION SPECIFICATIONS

1. USE MATTING THAT HAS A DESIGN VALUE FOR SHEAR STRESS EQUAL TO OR HIGHER THAN THE SHEAR STRESS DESIGNATED ON APPROVED PLANS.
2. USE PERMANENT SOIL STABILIZATION MATTING MADE OF OPEN WEAVE SYNTHETIC, NON-DEGRADABLE FIBERS OR ELEMENTS OF UNIFORM THICKNESS AND DISTRIBUTION THROUGHOUT. CHEMICALS USED IN THE MAT MUST BE NON-LEACHING AND NON-TOXIC TO VEGETATION AND SEED GERMINATION AND NON-INJURIOUS TO THE SKIN. IF PRESENT, NETTING MUST BE EXTRUDED PLASTIC WITH A MAXIMUM MESH OPENING OF 2x2 INCHES AND SUFFICIENTLY BONDED OR SEWN ON 2 INCH CENTERS ALONG LONGITUDINAL AXIS OF THE MATERIAL TO PREVENT SEPARATION OF THE NET FROM THE PARENT MATERIAL.
3. SECURE MATTING USING STEEL STAPLES OR WOOD STAKES. STAPLES MUST BE "U" OR "T" SHAPED STEEL WIRE HAVING A MINIMUM GAUGE OF NO. 11 AND NO. 8 RESPECTIVELY. "U" SHAPED STAPLES MUST AVERAGE 1 TO 1½ INCHES WIDE AND BE A MINIMUM OF 6 INCHES LONG. "T" SHAPED STAPLES MUST HAVE A MINIMUM 8 INCH MAIN LEG, A MINIMUM 1 INCH SECONDARY LEG, AND MINIMUM 4 INCH HEAD. WOOD STAKES MUST BE ROUGH-SAWN HARDWOOD, 12 TO 24 INCHES IN LENGTH, 1x3 INCH IN CROSS SECTION, AND WEDGE SHAPE AT THE BOTTOM.
4. PERFORM FINAL GRADING, TOPSOIL APPLICATION, SEEDBED PREPARATION, AND PERMANENT SEEDING IN ACCORDANCE WITH SPECIFICATIONS. PLACE MATTING WITHIN 48 HOURS OF COMPLETING SEEDING OPERATIONS, UNLESS END OF WORKDAY STABILIZATION IS SPECIFIED ON THE APPROVED EROSION AND SEDIMENT CONTROL PLAN.
5. UNROLL MATTING DOWN SLOPE. LAY MATTING SMOOTHLY AND FIRMLY UPON THE SEEDED SURFACE. AVOID STRETCHING THE MATTING.
6. OVERLAP OR ABUT EDGES OF MATTING ROLLS PER MANUFACTURER RECOMMENDATIONS. OVERLAP ROLL ENDS BY 6 INCHES (MINIMUM), WITH THE UPSTREAM MAT OVERLAPPING ON TOP OF THE DOWNSLOPE MAT.
7. KEY IN THE TOP OF SLOPE END OF MAT 6 INCHES (MINIMUM) BY DIGGING A TRENCH, PLACING THE MATTING ROLL END IN THE TRENCH, STAPLING THE MAT IN PLACE, REPLACING THE EXCAVATED MATERIAL, AND TAMPING TO SECURE THE MAT END IN THE KEY.
8. STAPLE/STAKE MAT IN A STAGGERED PATTERN ON 4 FOOT (MAXIMUM) CENTERS THROUGHOUT AND 2 FOOT (MAXIMUM) CENTERS ALONG SEAMS, JOINTS, AND ROLL ENDS.
9. IF SPECIFIED BY THE DESIGNER OR MANUFACTURER AND DEPENDING ON THE TYPE OF MAT BEING INSTALLED, ONCE THE MATTING IS KEYED AND STAPLED IN PLACE, FILL THE MAT VOIDS WITH TOP SOIL OR GRANULAR MATERIAL AND LIGHTLY COMPACT OR ROLL TO MAXIMIZE SOIL/MAT CONTACT WITHOUT CRUSHING MAT.
10. ESTABLISH AND MAINTAIN VEGETATION SO THAT REQUIREMENTS FOR ADEQUATE VEGETATIVE ESTABLISHMENT ARE CONTINUOUSLY MET IN ACCORDANCE WITH SECTION B-4 VEGETATIVE STABILIZATION.

MARYLAND STANDARDS AND SPECIFICATIONS FOR SOIL EROSION AND SEDIMENT CONTROL

U.S. DEPARTMENT OF AGRICULTURE NATURAL RESOURCES CONSERVATION SERVICE	2011	MARYLAND DEPARTMENT OF ENVIRONMENT WATER MANAGEMENT ADMINISTRATION

B-4-8 STANDARDS AND SPECIFICATIONS FOR STOCKPILE AREA

Definition

A mound or pile of soil protected by appropriately designed erosion and sediment control measures.

Purpose

To provide a designated location for the temporary storage of soil that controls the potential for erosion, sedimentation, and changes to drainage patterns.

Conditions Where Practice Applies

Stockpile areas are utilized when it is necessary to salvage and store soil for later use.

Criteria

1. The stockpile location and all related sediment control practices must be clearly indicated on the erosion and sediment control plan.
2. The footprint of the stockpile must be sized to accommodate the anticipated volume of material and based on a side slope ratio no steeper than 2:1. Benching must be provided in accordance with Section B-3 Land Grading.
3. Runoff from the stockpile area must drain to a suitable sediment control practice.
4. Access the stockpile area from the upgrade side.
5. Clear water runoff into the stockpile area must be minimized by use of a diversion device such as an earth dike, temporary swale or diversion fence. Provisions must be made for discharging concentrated flow in a non-erosive manner.
6. Where runoff concentrates along the toe of the stockpile fill, an appropriate erosion/sediment control practice must be used to intercept the discharge.
7. Stockpiles must be stabilized in accordance with the 3/7 day stabilization requirement as well as Standard B-4-1 Incremental Stabilization and Standard B-4-4 Temporary Stabilization.
8. If the stockpile is located on an impervious surface, a liner should be provided below the stockpile to facilitate cleanup. Stockpiles containing contaminated material must be covered with impermeable sheeting.

Maintenance

The stockpile area must continuously meet the requirements for Adequate Vegetative Establishment in accordance with Section B-4 Vegetative Stabilization. Side slopes must be maintained at no steeper than a 2:1 ratio. The stockpile area must be kept free of erosion. If the vertical height of a stockpile exceeds 20 feet for 2:1 slopes, 30 feet for 3:1 slopes, or 40 feet for 4:1 slopes, benching must be provided in accordance with Section B-3 Land Grading.

DETAIL D-4-2 LEVEL SPREADER

STANDARD SYMBOL: LS

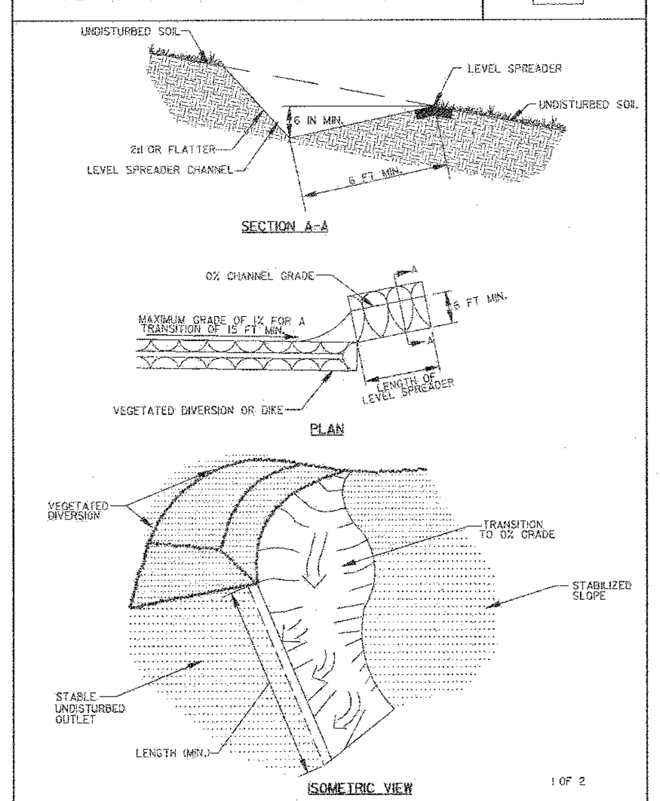

1 OF 2

MARYLAND STANDARDS AND SPECIFICATIONS FOR SOIL EROSION AND SEDIMENT CONTROL

U.S. DEPARTMENT OF AGRICULTURE NATURAL RESOURCES CONSERVATION SERVICE		MARYLAND DEPARTMENT OF ENVIRONMENT WATER MANAGEMENT ADMINISTRATION

D.27 DRAFT October 15, 2009

DETAIL F-4 FILTER BAG

STANDARD SYMBOL: ☒FB

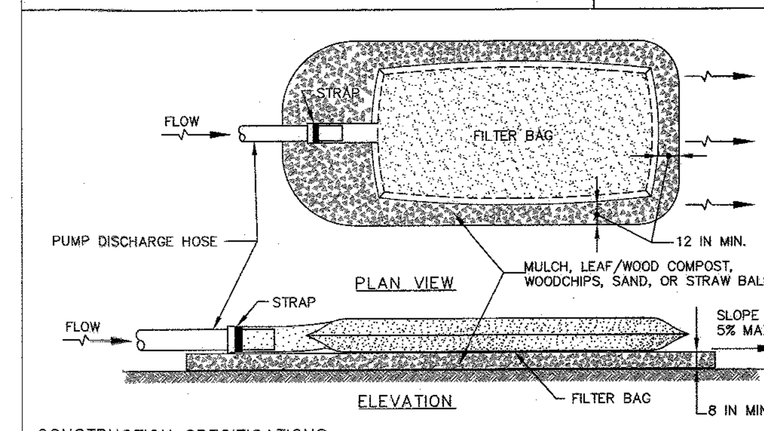

CONSTRUCTION SPECIFICATIONS

1. TIGHTLY SEAL SLEEVE AROUND THE PUMP DISCHARGE HOSE WITH A STRAP OR SIMILAR DEVICE.
2. PLACE FILTER BAG ON SUITABLE BASE (E.G., MULCH, LEAF/WOOD COMPOST, WOODCHIPS, SAND, OR STRAW BALES) LOCATED ON A LEVEL OR 5% MAXIMUM SLOPING SURFACE. DISCHARGE TO A STABILIZED AREA. EXTEND BASE A MINIMUM OF 12 INCHES FROM EDGES OF BAG.
3. CONTROL PUMPING RATE TO PREVENT EXCESSIVE PRESSURE WITHIN THE FILTER BAG IN ACCORDANCE WITH THE MANUFACTURER RECOMMENDATIONS. AS THE BAG FILLS WITH SEDIMENT, REDUCE PUMPING RATE.
4. REMOVE AND PROPERLY DISPOSE OF FILTER BAG UPON COMPLETION OF PUMPING OPERATIONS OR AFTER BAG HAS REACHED CAPACITY, WHICHEVER OCCURS FIRST. SPREAD THE DEWATERED SEDIMENT FROM THE BAG IN AN APPROVED UPLAND AREA AND STABILIZE WITH SEED AND MULCH BY THE END OF THE WORK DAY. RESTORE THE SURFACE AREA BENEATH THE BAG TO ORIGINAL CONDITION UPON REMOVAL OF THE DEVICE.
5. USE NONWOVEN GEOTEXTILE WITH DOUBLE STITCHED SEAMS USING HIGH STRENGTH THREAD. SIZE SLEEVE TO ACCOMMODATE A MAXIMUM 4 INCH DIAMETER PUMP DISCHARGE HOSE. THE BAG MUST BE MANUFACTURED FROM A NONWOVEN GEOTEXTILE THAT MEETS OR EXCEEDS MINIMUM AVERAGE ROLL VALUES (MARV) FOR THE FOLLOWING:

GRAB TENSILE	250 LB	ASTM D-4632
PUNCTURE	150 LB	ASTM D-4833
FLOW RATE	70 GAL/MIN/FT²	ASTM D-4491
PERMITTIVITY (SEC^{-1})	1.2 SEC^{-1}	ASTM D-4491
UV RESISTANCE	70% STRENGTH @ 500 HOURS	ASTM D-4355
APPARENT OPENING SIZE (AOS)	0.15–0.18 MM	ASTM D-4751
SEAM STRENGTH	90%	ASTM D-4632

6. REPLACE FILTER BAG IF BAG CLOGS OR HAS RIPS, TEARS, OR PUNCTURES. DURING OPERATION KEEP CONNECTION BETWEEN PUMP HOSE AND FILTER BAG WATER TIGHT. REPLACE BEDDING IF IT BECOMES DISPLACED.

MARYLAND STANDARDS AND SPECIFICATIONS FOR SOIL EROSION AND SEDIMENT CONTROL

U.S. DEPARTMENT OF AGRICULTURE NATURAL RESOURCES CONSERVATION SERVICE	2011	MARYLAND DEPARTMENT OF ENVIRONMENT WATER MANAGEMENT ADMINISTRATION

DETAIL F-2 SUMP PIT

STANDARD SYMBOL: ☒SP

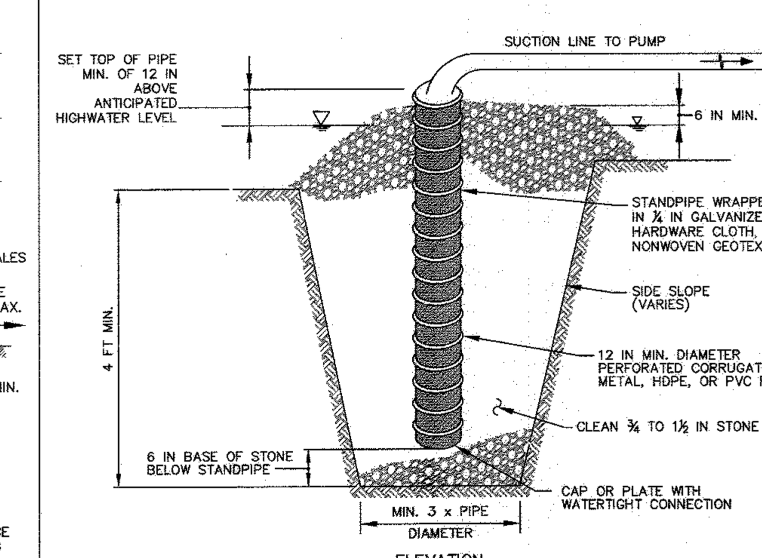

CONSTRUCTION SPECIFICATIONS

1. USE 12 INCH OR LARGER DIAMETER CORRUGATED METAL, HDPE, OR PVC PIPE WITH 1 INCH DIAMETER PERFORATIONS, 6 INCHES ON CENTER. BOTTOM OF PIPE MUST BE CAPPED WITH WATERTIGHT SEAL.
2. WRAP PIPE WITH ¼ INCH GALVANIZED HARDWARE CLOTH AND WRAP NONWOVEN GEOTEXTILE, AS SPECIFIED IN SECTION H-1 MATERIALS, OVER THE HARDWARE CLOTH.
3. EXCAVATE PIT TO THREE TIMES THE PIPE DIAMETER AND FOUR FEET IN DEPTH. PLACE ¾ TO 1½ INCH STONE OR EQUIVALENT RECYCLED CONCRETE, 6 INCHES IN DEPTH PRIOR TO PIPE PLACEMENT.
4. SET TOP OF PIPE MINIMUM 12 INCHES ABOVE ANTICIPATED WATER SURFACE ELEVATION.
5. BACKFILL PIT AROUND THE PIPE WITH ¾ TO 1½ INCH CLEAN STONE OR EQUIVALENT RECYCLED CONCRETE AND EXTEND STONE A MINIMUM OF 6 INCHES ABOVE ANTICIPATED WATER SURFACE ELEVATION.
6. DISCHARGE TO A STABLE AREA AT A NONEROSIVE RATE.
7. A SUMP PIT REQUIRES FREQUENT MAINTENANCE. IF SYSTEM CLOGS, REMOVE PERFORATED PIPE AND REPLACE GEOTEXTILE AND STONE. KEEP POINT OF DISCHARGE FREE OF EROSION.

MARYLAND STANDARDS AND SPECIFICATIONS FOR SOIL EROSION AND SEDIMENT CONTROL

U.S. DEPARTMENT OF AGRICULTURE NATURAL RESOURCES CONSERVATION SERVICE	2011	MARYLAND DEPARTMENT OF ENVIRONMENT WATER MANAGEMENT ADMINISTRATION

GENERAL NOTE:
IT IS THE RESPONSIBILITY OF THE CONTRACTOR TO REVIEW ALL OF THE DRAWINGS AND SPECIFICATIONS ASSOCIATED WITH THIS PROJECT WORK SCOPE PRIOR TO THE INITIATION OF CONSTRUCTION. SHOULD THE CONTRACTOR FIND A CONFLICT WITH THE DOCUMENTS RELATIVE TO THE SPECIFICATIONS OR APPLICABLE CODES, IT IS THE CONTRACTOR'S RESPONSIBILITY TO NOTIFY THE PROJECT ENGINEER OF RECORD IN WRITING PRIOR TO THE START OF CONSTRUCTION. FAILURE BY THE CONTRACTOR TO NOTIFY THE PROJECT ENGINEER SHALL CONSTITUTE ACCEPTANCE OF FULL RESPONSIBILITY BY THE CONTRACTOR TO COMPLETE THE SCOPE OF THE WORK AS DEFINED BY THE DRAWINGS AND IN FULL CONFORMANCE WITH LOCAL REGULATIONS AND CODES.

C:\USERS\OMONDORO\APPDATA\LOCAL\TEMP\ACPUBLISH_4692\DE150009SD5----->LAYOUT: 20 - E&S CONTROL NOTES-DETAILS

APPROVED: DEPARTMENT OF PLANNING AND ZONING

[signature]	10.14.1'
CHIEF-DEVELOPMENT ENGINEERING DIVISION	DATE
[signature]	11-2-16
CHIEF-DIVISION OF LAND DEVELOPMENT	DATE
[signature]	11-3-16
DIRECTOR	DATE

THIS DEVELOPMENT PLAN IS APPROVED FOR SOIL EROSION AND SEDIMENT CONTROL BY THE HOWARD SOIL CONSERVATION DISTRICT.
[signature] 10/5/16
HOWARD SCD DATE

SUBDIVISION NAME: MONTEVIDEO CROSSING
PARCEL A
SECTION/AREA: N/A
PLAT # 23695
WATER CODE: N/A
SEWER CODE: N/A

ENGINEER'S CERTIFICATE

"I HEREBY CERTIFY THAT THIS PLAN FOR EROSION AND SEDIMENT CONTROL REPRESENTS A PRACTICAL AND WORKABLE PLAN BASED ON MY PERSONAL KNOWLEDGE OF THE SITE CONDITIONS AND IT WAS PREPARED IN ACCORDANCE WITH THE REQUIREMENTS OF THE HOWARD SOIL CONSERVATION DISTRICT."

[signature] 08-20-16
SIGNATURE OF ENGINEER DATE
DAVID M. KUKLISH, P.E.

DEVELOPER'S CERTIFICATE

"I/WE HEREBY CERTIFY THAT ALL DEVELOPMENT AND CONSTRUCTION WILL BE DONE ACCORDING TO THIS PLAN, AND THAT ANY RESPONSIBLE PERSONNEL INVOLVED IN THE CONSTRUCTION PROJECT WILL HAVE A CERTIFICATE OF ATTENDANCE AT A DEPARTMENT OF THE ENVIRONMENT APPROVED TRAINING PROGRAM FOR THE CONTROL OF SEDIMENT AND EROSION BEFORE BEGINNING THE PROJECT. I ALSO AUTHORIZE PERIODIC ONSITE INSPECTION BY THE HOWARD SOIL CONSERVATION DISTRICT."

J.C. BAR PROPERTIES, INC.
BY: [signature] 8.31.16
NAME: JASON MITCHELL DATE

OWNER: PARCEL 16A
MIT MONTEVIDEO, LLC
8850 COLUMBIA PARKWAY
COLUMBIA, MD 21045
CONTACT: MARK LEVY
TEL: (410) 579-2442

DEVELOPER: J.C. BAR PROPERTIES, INC
415 FALLOWFIELD ROAD, SUITE 301
CAMP HILL, PA 17011
CONTACT: JASON MITCHELL
TEL: (717) 761-7801

TAX MAP: 43 GRID: 10 ZONED: B-1
PARCEL: 16A
1ST ELECTION DISTRICT, HOWARD COUNTY, MARYLAND
ZB REF.: 1096m SITE AREA: 4.039 AC
DPZ REF.: SDP-15-069

PROFESSIONAL CERTIFICATION
I, DAVID M. KUKLISH, P.E., HEREBY CERTIFY THAT THESE DOCUMENTS WERE PREPARED OR APPROVED BY ME, AND THAT I AM A DULY LICENSED PROFESSIONAL ENGINEER UNDER THE LAWS OF THE STATE OF MARYLAND, LICENSE NO. 36224, EXPIRATION DATE: 8/19/2018

CVS pharmacy

TYPE 'B'
REAR DRIVE-THRU

STORE NUMBER: 10528

WASHINGTON BLVD. & MONTEVIDEO RD.
JESSUP, HOWARD COUNTY, MARYLAND

PROJECT TYPE: NEW
DEAL TYPE: LEASE

CS PROJECT NUMBER: 77620

DIG WITH CARE — CALL BEFORE YOU DIG

THE FOLLOWING STATES REQUIRE NOTIFICATION BY EXCAVATORS, DESIGNERS, OR ANY PERSON PREPARING TO DISTURB THE EARTH'S SURFACE ANYWHERE IN THE STATE. IN VIRGINIA, MARYLAND, THE DISTRICT OF COLUMBIA, AND DELAWARE CALL - 811
(WV 1-800-245-4848) (PA 1-800-242-1776) (DC 1-800-257-7777)
(VA 1-800-552-7001) (MD 1-800-257-7777) (DE 1-800-282-8555)

BOHLER ENGINEERING
901 DULANEY VALLEY ROAD, SUITE 801
TOWSON, MARYLAND 21204
Phone: (410) 821-7900
Fax: (410) 821-7987
MD@BohlerEng.com

DEVELOPER
J.C. BAR DEVELOPMENT, LLC

415 FALLOWFIELD ROAD, SUITE 301
CAMP HILL, PA 17011
CONTACT: JASON MITCHELL
TEL : (717) 761-7801

D.M. KUKLISH
PROFESSIONAL ENGINEER
DELAWARE LICENSE No. 14522
MARYLAND LICENSE No. 36224
VIRGINIA LICENSE No. 0402045209

REVISIONS

REV:	DATE:	COMMENT:	BY:

CHECKED BY: DMK
DRAWN BY: CRH
DATE: 4/13/16
JOB NUMBER: MD131504
TITLE: EROSION AND SEDIMENT CONTROL NOTES AND DETAILS
SHEET NUMBER: 20 OF 27
COMMENTS: FILE NO. SDP-15-069

B-4 STANDARDS AND SPECIFICATIONS FOR VEGETATIVE STABILIZATION

DEFINITION

USING VEGETATION AS COVER TO PROTECT EXPOSED SOIL FROM EROSION.

PURPOSE

TO PROMOTE THE ESTABLISHMENT OF VEGETATION ON EXPOSED SOIL.

CONDITIONS WHERE PRACTICE APPLIES

ON ALL DISTURBED AREAS NOT STABILIZED BY OTHER METHODS. THIS SPECIFICATION IS DIVIDED INTO SECTIONS ON INCREMENTAL STABILIZATION; SOIL PREPARATION, SOIL AMENDMENTS AND TOPSOILING; SEEDING AND MULCHING; TEMPORARY STABILIZATION; AND PERMANENT STABILIZATION.

EFFECTS ON WATER QUALITY AND QUANTITY

STABILIZATION PRACTICES ARE USED TO PROMOTE THE ESTABLISHMENT OF VEGETATION ON EXPOSED SOIL. WHEN SOIL IS STABILIZED WITH VEGETATION, THE SOIL IS LESS LIKELY TO ERODE AND MORE LIKELY TO ALLOW INFILTRATION OF RAINFALL, THEREBY REDUCING SEDIMENT LOADS AND RUNOFF TO DOWNSTREAM AREAS.

PLANTING VEGETATION IN DISTURBED AREAS WILL HAVE AN EFFECT ON THE WATER BUDGET, ESPECIALLY ON VOLUMES AND RATES OF RUNOFF, INFILTRATION, EVAPORATION, TRANSPIRATION, PERCOLATION, AND GROUNDWATER RECHARGE. OVER TIME, VEGETATION WILL INCREASE ORGANIC MATTER CONTENT AND IMPROVE THE WATER HOLDING CAPACITY OF THE SOIL AND SUBSEQUENT PLANT GROWTH.

VEGETATION WILL HELP REDUCE THE MOVEMENT OF SEDIMENT, NUTRIENTS, AND OTHER CHEMICALS CARRIED BY RUNOFF TO RECEIVING WATERS. PLANTS WILL ALSO HELP PROTECT GROUNDWATER SUPPLIES BY ASSIMILATING THOSE SUBSTANCES PRESENT WITHIN THE ROOT ZONE.

SEDIMENT CONTROL PRACTICES MUST REMAIN IN PLACE DURING GRADING, SEEDBED PREPARATION, SEEDING, MULCHING, AND VEGETATIVE ESTABLISHMENT.

ADEQUATE VEGETATIVE ESTABLISHMENT

INSPECT SEEDED AREAS FOR VEGETATIVE ESTABLISHMENT AND MAKE NECESSARY REPAIRS, REPLACEMENTS, AND RESEEDINGS WITHIN THE PLANTING SEASON.

1. ADEQUATE VEGETATIVE STABILIZATION REQUIRES 95 PERCENT GROUNDCOVER.
2. IF AN AREA HAS LESS THAN 40 PERCENT GROUNDCOVER, RESTABILIZE FOLLOWING THE ORIGINAL RECOMMENDATIONS FOR LIME, FERTILIZER, SEEDBED PREPARATION, AND SEEDING.
3. IF AN AREA HAS BETWEEN 40 AND 94 PERCENT GROUNDCOVER, OVER-SEED AND FERTILIZE USING HALF OF THE RATES ORIGINALLY SPECIFIED.
4. MAINTENANCE FERTILIZER RATES FOR PERMANENT SEEDING ARE SHOWN IN TABLE B.6.

B-4-1 STANDARDS AND SPECIFICATIONS FOR INCREMENTAL STABILIZATION

DEFINITION

ESTABLISHMENT OF VEGETATIVE COVER ON CUT AND FILL SLOPES.

PURPOSE

TO PROVIDE TIMELY VEGETATIVE COVER ON CUT AND FILL SLOPES AS WORK PROGRESSES.

CONDITIONS WHERE PRACTICE APPLIES

ANY CUT OR FILL SLOPE GREATER THAN 15 FEET IN HEIGHT. THIS PRACTICE ALSO APPLIES TO STOCKPILES.

CRITERIA

A. INCREMENTAL STABILIZATION - CUT SLOPES

1. EXCAVATE AND STABILIZE CUT SLOPES IN INCREMENTS NOT TO EXCEED 15 FEET IN HEIGHT. PREPARE SEEDBED AND APPLY SEED AND MULCH ON ALL CUT SLOPES AS THE WORK PROGRESSES.
2. CONSTRUCTION SEQUENCE EXAMPLE (REFER TO FIGURE B.1):
   a. CONSTRUCT AND STABILIZE ALL TEMPORARY SWALES OR DIKES THAT WILL BE USED TO CONVEY RUNOFF AROUND THE EXCAVATION.
   b. PERFORM PHASE 1 EXCAVATION, PREPARE SEEDBED, AND STABILIZE.
   c. PERFORM PHASE 2 EXCAVATION, PREPARE SEEDBED, AND STABILIZE. OVERSEED PHASE 1 AREAS AS NECESSARY.
   d. PERFORM FINAL PHASE EXCAVATION, PREPARE SEEDBED, AND STABILIZE. OVERSEED PREVIOUSLY SEEDED AREAS AS NECESSARY.

NOTE: ONCE EXCAVATION HAS BEGUN THE OPERATION SHOULD BE CONTINUOUS FROM GRUBBING THROUGH THE COMPLETION OF GRADING AND PLACEMENT OF TOPSOIL (IF REQUIRED) AND PERMANENT SEED AND MULCH. ANY INTERRUPTIONS IN THE OPERATION OR COMPLETING THE OPERATION OUT OF THE SEEDING SEASON WILL NECESSITATE THE APPLICATION OF TEMPORARY STABILIZATION.

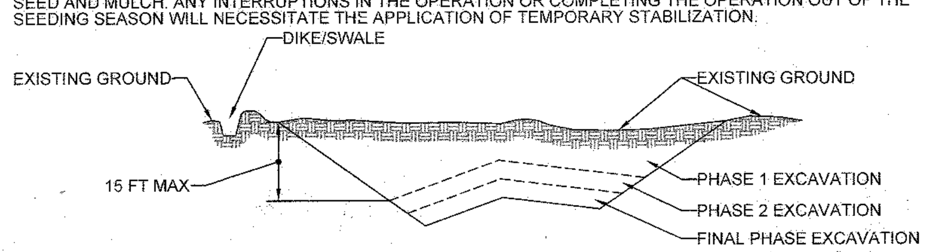

FIGURE B.1: INCREMENTAL STABILIZATION - CUT

B. INCREMENTAL STABILIZATION - FILL SLOPES

1. CONSTRUCT AND STABILIZE FILL SLOPES IN INCREMENTS NOT TO EXCEED 15 FEET IN HEIGHT. PREPARE SEEDBED AND APPLY SEED AND MULCH ON ALL SLOPES AS THE WORK PROGRESSES.
2. STABILIZE SLOPES IMMEDIATELY WHEN THE VERTICAL HEIGHT OF A LIFT REACHES 15 FEET, OR WHEN THE GRADING OPERATION CEASES AS PRESCRIBED IN THE PLANS.
3. AT THE END OF EACH DAY, INSTALL TEMPORARY WATER CONVEYANCE PRACTICE(S), AS NECESSARY, TO INTERCEPT SURFACE RUNOFF AND CONVEY IT DOWN THE SLOPE IN A NON-EROSIVE MANNER.
4. CONSTRUCTION SEQUENCE EXAMPLE (REFER TO FIGURE B.2):
   a. CONSTRUCT AND STABILIZE ALL TEMPORARY SWALES OR DIKES THAT WILL BE USED TO DIVERT RUNOFF AROUND THE FILL. CONSTRUCT SILT FENCE ON LOW SIDE OF FILL UNLESS OTHER METHODS SHOWN ON THE PLANS ADDRESS THIS AREA.
   b. AT THE END OF EACH DAY, INSTALL TEMPORARY WATER CONVEYANCE PRACTICE(S), AS NECESSARY, TO INTERCEPT SURFACE RUNOFF AND CONVEY IT DOWN THE SLOPE IN A NON-EROSIVE MANNER.
   c. PLACE PHASE 1 FILL, PREPARE SEEDBED, AND STABILIZE.
   d. PLACE PHASE 2 FILL, PREPARE SEEDBED, AND STABILIZE.
   e. PLACE FINAL PHASE FILL, PREPARE SEEDBED, AND STABILIZE. OVERSEED PREVIOUSLY SEEDED AREAS AS NECESSARY.

NOTE: ONCE THE PLACEMENT OF FILL HAS BEGUN THE OPERATION SHOULD BE CONTINUOUS FROM GRUBBING THROUGH THE COMPLETION OF GRADING AND PLACEMENT OF TOPSOIL (IF REQUIRED) AND PERMANENT SEED AND MULCH. ANY INTERRUPTIONS IN THE OPERATION OR COMPLETING THE OPERATION OUT OF THE SEEDING SEASON WILL NECESSITATE THE APPLICATION OF TEMPORARY STABILIZATION.

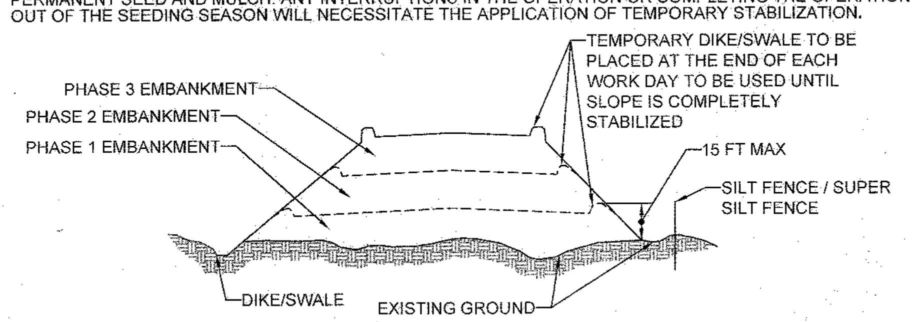

FIGURE B.2: INCREMENTAL STABILIZATION - FILL

B-4-2 STANDARDS AND SPECIFICATIONS FOR SOIL PREPARATION, TOPSOILING, AND SOIL AMENDMENTS

DEFINITION

THE PROCESS OF PREPARING THE SOILS TO SUSTAIN ADEQUATE VEGETATIVE STABILIZATION.

PURPOSE

TO PROVIDE A SUITABLE SOIL MEDIUM FOR VEGETATIVE GROWTH.

CONDITIONS WHERE PRACTICE APPLIES

WHERE VEGETATIVE STABILIZATION IS TO BE ESTABLISHED.

CRITERIA

A. SOIL PREPARATION

1. TEMPORARY STABILIZATION
   a. SEEDBED PREPARATION CONSISTS OF LOOSENING SOIL TO A DEPTH OF 6 TO 5 INCHES BY MEANS OF SUITABLE AGRICULTURAL OR CONSTRUCTION EQUIPMENT, SUCH AS DISC HARROWS OR CHISEL PLOWS OR RIPPERS MOUNTED ON CONSTRUCTION EQUIPMENT. AFTER THE SOIL IS LOOSENED, IT MUST NOT BE ROLLED OR DRAGGED SMOOTH BUT LEFT IN THE ROUGHENED CONDITION. SLOPES 3:1 OR FLATTER ARE TO BE TRACKED WITH RIDGES RUNNING PARALLEL TO THE CONTOUR OF THE SLOPE.
   b. APPLY FERTILIZER AND LIME AS PRESCRIBED ON THE PLANS.
   c. INCORPORATE LIME AND FERTILIZER INTO THE TOP 3 TO 5 INCHES OF SOIL BY DISKING OR OTHER SUITABLE MEANS.
2. PERMANENT STABILIZATION
   a. A SOIL TEST IS REQUIRED FOR ANY EARTH DISTURBANCE OF 6 ACRES OR MORE. THE MINIMUM SOIL CONDITIONS REQUIRED FOR PERMANENT VEGETATIVE ESTABLISHMENT ARE:

i. SOIL PH BETWEEN 6.0 AND 7.0.
ii. SOLUBLE SALTS LESS THAN 500 PARTS PER MILLION (PPM).
iii. SOIL CONTAINS LESS THAN 40 PERCENT CLAY BUT ENOUGH FINE GRAINED MATERIAL (GREATER THAN 30 PERCENT SILT PLUS CLAY) TO PROVIDE THE CAPACITY TO HOLD A MODERATE AMOUNT OF MOISTURE. AN EXCEPTION: IF LOVEGRASS WILL BE PLANTED, THEN A SANDY SOIL (LESS THAN 30 PERCENT SILT PLUS CLAY) WOULD BE ACCEPTABLE.
iv. SOIL CONTAINS 1.5 PERCENT MINIMUM ORGANIC MATTER BY WEIGHT.
v. SOIL CONTAINS SUFFICIENT PORE SPACE TO PERMIT ADEQUATE ROOT PENETRATION.

b. APPLICATION OF AMENDMENTS OR TOPSOIL IS REQUIRED IF ON-SITE SOILS DO NOT MEET THE ABOVE CONDITIONS.
c. GRADED AREAS MUST BE MAINTAINED IN A TRUE AND EVEN GRADE AS SPECIFIED ON THE APPROVED PLAN, THEN SCARIFIED OR OTHERWISE LOOSENED TO A DEPTH OF 6 TO 5 INCHES.
d. APPLY SOIL AMENDMENTS AS SPECIFIED ON THE APPROVED PLAN OR AS INDICATED BY THE RESULTS OF A SOIL TEST.
e. MIX SOIL AMENDMENTS INTO THE TOP 3 TO 5 INCHES OF SOIL BY DISKING OR OTHER SUITABLE MEANS. RAKE LAWN AREAS TO SMOOTH THE SURFACE, REMOVE LARGE OBJECTS LIKE STONES AND BRANCHES, AND READY THE AREA FOR SEED APPLICATION. LOOSEN SURFACE SOIL BY DRAGGING WITH A HEAVY CHAIN OR OTHER EQUIPMENT TO ROUGHEN THE SURFACE WHERE SITE CONDITIONS WILL NOT PERMIT NORMAL SEEDBED PREPARATION. TRACK SLOPES 3:1 OR FLATTER WITH TRACKED EQUIPMENT LEAVING THE SOIL IN AN IRREGULAR CONDITION WITH RIDGES RUNNING PARALLEL TO THE CONTOUR OF THE SLOPE. LEAVE THE TOP 1 TO 3 INCHES OF SOIL LOOSE AND FRIABLE. SEEDBED LOOSENING MAY BE UNNECESSARY ON NEWLY DISTURBED AREAS.

B. TOPSOILING

1. TOPSOIL IS PLACED OVER PREPARED SUBSOIL PRIOR TO ESTABLISHMENT OF PERMANENT VEGETATION. THE PURPOSE IS TO PROVIDE A SUITABLE SOIL MEDIUM FOR VEGETATIVE GROWTH. SOILS OF CONCERN HAVE LOW MOISTURE CONTENT, LOW NUTRIENT LEVELS, LOW PH, MATERIALS TOXIC TO PLANTS, AND/OR UNACCEPTABLE SOIL GRADATION.
2. TOPSOIL SALVAGED FROM AN EXISTING SITE MAY BE USED PROVIDED IT MEETS THE STANDARDS AS SET FORTH IN THESE SPECIFICATIONS. TYPICALLY, THE DEPTH OF TOPSOIL TO BE SALVAGED FOR A GIVEN SOIL TYPE CAN BE FOUND IN THE REPRESENTATIVE SOIL PROFILE SECTION IN THE SOIL SURVEY PUBLISHED BY USDA-NRCS.
3. TOPSOILING IS LIMITED TO AREAS HAVING 2:1 OR FLATTER SLOPES WHERE:
a. THE TEXTURE OF THE EXPOSED SUBSOIL/PARENT MATERIAL IS NOT ADEQUATE TO PRODUCE VEGETATIVE GROWTH.
b. THE SOIL MATERIAL IS SO SHALLOW THAT THE ROOTING ZONE IS NOT DEEP ENOUGH TO SUPPORT PLANTS OR FURNISH CONTINUING SUPPLIES OF MOISTURE AND PLANT NUTRIENTS.
c. THE ORIGINAL SOIL TO BE VEGETATED CONTAINS MATERIAL TOXIC TO PLANT GROWTH.
d. THE SOIL IS SO ACIDIC THAT TREATMENT WITH LIMESTONE IS NOT FEASIBLE.
4. AREAS HAVING SLOPES STEEPER THAN 2:1 REQUIRE SPECIAL CONSIDERATION AND DESIGN.
5. TOPSOIL SPECIFICATIONS: SOIL TO BE USED AS TOPSOIL MUST MEET THE FOLLOWING CRITERIA:
a. TOPSOIL MUST BE A LOAM, SANDY LOAM, CLAY LOAM, SILT LOAM, SANDY CLAY LOAM, OR LOAMY SAND. OTHER SOILS MAY BE USED IF RECOMMENDED BY AN AGRONOMIST OR SOIL SCIENTIST AND APPROVED BY THE APPROPRIATE APPROVAL AUTHORITY. TOPSOIL MUST NOT BE A MIXTURE OF CONTRASTING TEXTURED SUBSOILS AND MUST CONTAIN LESS THAN 5 PERCENT BY VOLUME OF CINDERS, STONES, SLAG, COARSE FRAGMENTS, GRAVEL, STICKS, ROOTS, TRASH, OR OTHER MATERIALS LARGER THAN 1½ INCHES IN DIAMETER.
b. TOPSOIL MUST BE FREE OF NOXIOUS PLANTS OR PLANT PARTS SUCH AS BERMUDA GRASS, QUACK GRASS, JOHNSON GRASS, NUT SEDGE, POISON IVY, THISTLE, OR OTHERS AS SPECIFIED.
c. TOPSOIL SUBSTITUTES OR AMENDMENTS, AS RECOMMENDED BY A QUALIFIED AGRONOMIST OR SOIL SCIENTIST AND APPROVED BY THE APPROPRIATE APPROVAL AUTHORITY, MAY BE USED IN LIEU OF NATURAL TOPSOIL.
6. TOPSOIL APPLICATION
a. EROSION AND SEDIMENT CONTROL PRACTICES MUST BE MAINTAINED WHEN APPLYING TOPSOIL.
b. UNIFORMLY DISTRIBUTE TOPSOIL IN A 5 TO 8 INCH LAYER AND LIGHTLY COMPACT TO A MINIMUM THICKNESS OF 6 INCHES. SPREADING IS TO BE PERFORMED IN SUCH A MANNER THAT SODDING OR SEEDING CAN PROCEED WITH A MINIMUM OF ADDITIONAL SOIL PREPARATION AND TILLAGE. ANY IRREGULARITIES IN THE SURFACE RESULTING FROM TOPSOILING OR OTHER OPERATIONS MUST BE CORRECTED IN ORDER TO PREVENT THE FORMATION OF DEPRESSIONS OR WATER POCKETS.
c. TOPSOIL MUST NOT BE PLACED IF THE TOPSOIL OR SUBSOIL IS IN A FROZEN OR MUDDY CONDITION, WHEN THE SUBSOIL IS EXCESSIVELY WET OR IN A CONDITION THAT MAY OTHERWISE BE DETRIMENTAL TO PROPER GRADING AND SEEDBED PREPARATION.

C. SOIL AMENDMENTS (FERTILIZER AND LIME SPECIFICATIONS)

1. SOIL TESTS MUST BE PERFORMED TO DETERMINE THE EXACT RATIOS AND APPLICATION RATES FOR BOTH LIME AND FERTILIZER ON SITES HAVING DISTURBED AREAS OF 6 ACRES OR MORE. SOIL ANALYSIS MAY BE PERFORMED BY A RECOGNIZED PRIVATE OR COMMERCIAL LABORATORY. SOIL SAMPLES TAKEN FOR ENGINEERING PURPOSES MAY ALSO BE USED FOR CHEMICAL ANALYSES.
2. FERTILIZERS MUST BE UNIFORM IN COMPOSITION, FREE FLOWING AND SUITABLE FOR ACCURATE APPLICATION BY APPROPRIATE EQUIPMENT. MANURE MAY BE SUBSTITUTED FOR FERTILIZER WITH PRIOR APPROVAL FROM THE APPROPRIATE APPROVAL AUTHORITY. FERTILIZERS MUST ALL BE DELIVERED TO THE SITE FULLY LABELED ACCORDING TO THE APPLICABLE LAWS AND MUST BEAR THE NAME, TRADE NAME OR TRADEMARK AND WARRANTY OF THE PRODUCER.
3. LIME MATERIALS MUST BE GROUND LIMESTONE (HYDRATED OR BURNT LIME MAY BE SUBSTITUTED EXCEPT WHEN HYDROSEEDING) WHICH CONTAINS AT LEAST 50 PERCENT TOTAL OXIDES (CALCIUM OXIDE PLUS MAGNESIUM OXIDE). LIMESTONE MUST BE GROUND TO SUCH FINENESS THAT AT LEAST 50 PERCENT WILL PASS THROUGH A #100 MESH SIEVE AND 98 TO 100 PERCENT WILL PASS THROUGH A #20 MESH SIEVE.
4. LIME AND FERTILIZER ARE TO BE EVENLY DISTRIBUTED AND INCORPORATED INTO THE TOP 3 TO 5 INCHES OF SOIL BY DISKING OR OTHER SUITABLE MEANS.
5. WHERE THE SUBSOIL IS EITHER HIGHLY ACIDIC OR COMPOSED OF HEAVY CLAYS, SPREAD GROUND LIMESTONE AT THE RATE OF 6 TO 8 TONS/ACRE (200-400 POUNDS PER 1,000 SQUARE FEET) PRIOR TO THE PLACEMENT OF TOPSOIL.

B-4-3 STANDARDS AND SPECIFICATIONS FOR SEEDING AND MULCHING

DEFINITION

THE APPLICATION OF SEED AND MULCH TO ESTABLISH VEGETATIVE COVER.

PURPOSE

TO PROTECT DISTURBED SOILS FROM EROSION DURING AND AT THE END OF CONSTRUCTION.

CONDITIONS WHERE PRACTICE APPLIES

TO THE SURFACE OF ALL PERIMETER CONTROLS, SLOPES, AND ANY DISTURBED AREA NOT UNDER ACTIVE GRADING.

CRITERIA

A. SEEDING

1. SPECIFICATIONS
a. ALL SEED MUST MEET THE REQUIREMENTS OF THE MARYLAND STATE SEED LAW. ALL SEED MUST BE SUBJECT TO RE-TESTING BY A RECOGNIZED SEED LABORATORY. ALL SEED USED MUST HAVE BEEN TESTED WITHIN THE 6 MONTHS IMMEDIATELY PRECEDING THE DATE OF SOWING SUCH MATERIAL ON ANY PROJECT. REFER TO TABLE B.4 REGARDING THE QUALITY OF SEED. SEED TAGS MUST BE AVAILABLE UPON REQUEST TO THE INSPECTOR TO VERIFY TYPE OF SEED AND SEEDING RATE.
b. MULCH ALONE MAY BE APPLIED BETWEEN THE FALL AND SPRING SEEDING DATES ONLY IF THE GROUND IS FROZEN. THE APPROPRIATE SEEDING MIXTURE MUST BE APPLIED WHEN THE GROUND THAWS.
c. INOCULANTS: THE INOCULANT FOR TREATING LEGUME SEED IN THE SEED MIXTURES MUST BE A PURE CULTURE OF NITROGEN FIXING BACTERIA PREPARED SPECIFICALLY FOR THE SPECIES. INOCULANTS MUST NOT BE USED LATER THAN THE DATE INDICATED ON THE CONTAINER. ADD FRESH INOCULANTS AS DIRECTED ON THE PACKAGE. USE FOUR TIMES THE RECOMMENDED RATE WHEN HYDROSEEDING. NOTE: IT IS VERY IMPORTANT TO KEEP INOCULANT AS COOL AS POSSIBLE UNTIL USED. TEMPERATURES ABOVE 75 TO 80 DEGREES FAHRENHEIT CAN WEAKEN BACTERIA AND MAKE THE INOCULANT LESS EFFECTIVE.
d. SOD OR SEED MUST NOT BE PLACED ON SOIL WHICH HAS BEEN TREATED WITH SOIL STERILANTS OR CHEMICALS USED FOR WEED CONTROL UNTIL SUFFICIENT TIME HAS ELAPSED (14 DAYS MIN.) TO PERMIT DISSIPATION OF PHYTO-TOXIC MATERIALS.
2. APPLICATION
a. DRY SEEDING: THIS INCLUDES USE OF CONVENTIONAL DROP OR BROADCAST SPREADERS.
i. INCORPORATE SEED INTO THE SUBSOIL AT THE RATES PRESCRIBED ON TEMPORARY SEEDING TABLE B.1, PERMANENT SEEDING TABLE B.3, OR SITE-SPECIFIC SEEDING SUMMARIES.
ii. APPLY SEED IN TWO DIRECTIONS, PERPENDICULAR TO EACH OTHER. APPLY HALF THE SEEDING RATE IN EACH DIRECTION. ROLL THE SEEDED AREA WITH A WEIGHTED ROLLER TO PROVIDE GOOD SEED TO SOIL CONTACT.
b. DRILL OR CULTIPACKER SEEDING: MECHANIZED SEEDERS THAT APPLY AND COVER SEED WITH SOIL.
i. CULTIPACKING SEEDERS ARE REQUIRED TO BURY THE SEED IN SUCH A FASHION AS TO PROVIDE AT LEAST 1/4 INCH OF SOIL COVERING. SEEDBED MUST BE FIRM AFTER PLANTING.
ii. APPLY SEED IN TWO DIRECTIONS, PERPENDICULAR TO EACH OTHER. APPLY HALF THE SEEDING RATE IN EACH DIRECTION.
c. HYDROSEEDING: APPLY SEED UNIFORMLY WITH HYDROSEEDER (SLURRY INCLUDES SEED AND FERTILIZER).
i. IF FERTILIZER IS BEING APPLIED AT THE TIME OF SEEDING, THE APPLICATION RATES SHOULD NOT EXCEED THE FOLLOWING: NITROGEN, 100 POUNDS PER ACRE TOTAL OF SOLUBLE NITROGEN; P2O5 (PHOSPHOROUS), 200 POUNDS PER ACRE; K2O (POTASSIUM), 200 POUNDS PER ACRE.
ii. LIME: USE ONLY GROUND AGRICULTURAL LIMESTONE (UP TO 3 TONS PER ACRE MAY BE APPLIED BY HYDROSEEDING). NORMALLY, NOT MORE THAN 2 TONS ARE APPLIED BY HYDROSEEDING AT ANY ONE TIME. DO NOT USE BURNT OR HYDRATED LIME WHEN HYDROSEEDING.
iii. MIX SEED AND FERTILIZER ON SITE AND SEED IMMEDIATELY AND WITHOUT INTERRUPTION.
iv. WHEN HYDROSEEDING DO NOT INCORPORATE SEED INTO THE SOIL.

B. MULCHING

1. MULCH MATERIALS (IN ORDER OF PREFERENCE)
a. STRAW CONSISTING OF THOROUGHLY THRESHED WHEAT, RYE, OAT, OR BARLEY AND REASONABLY BRIGHT IN COLOR. STRAW IS TO BE FREE OF NOXIOUS WEED SEEDS AS SPECIFIED IN THE MARYLAND SEED LAW AND NOT MUSTY, MOLDY, CAKED, DECAYED, OR EXCESSIVELY DUSTY. NOTE: USE ONLY STERILE STRAW MULCH IN AREAS WHERE ONE SPECIES OF GRASS IS DESIRED.
b. WOOD CELLULOSE FIBER MULCH (WCFM) CONSISTING OF SPECIALLY PREPARED WOOD CELLULOSE PROCESSED INTO A UNIFORM FIBROUS PHYSICAL STATE.
   i. WCFM IS TO BE DYED GREEN OR CONTAIN A GREEN DYE IN THE PACKAGE THAT WILL PROVIDE AN APPROPRIATE COLOR TO FACILITATE VISUAL INSPECTION OF THE UNIFORMLY SPREAD SLURRY.
   ii. WCFM, INCLUDING DYE, MUST CONTAIN NO GERMINATION OR GROWTH INHIBITING FACTORS.
   iii. WCFM MATERIALS ARE TO BE MANUFACTURED AND PROCESSED IN SUCH A MANNER THAT THE WOOD CELLULOSE FIBER MULCH WILL REMAIN IN UNIFORM SUSPENSION IN WATER UNDER AGITATION AND WILL BLEND WITH SEED, FERTILIZER AND OTHER ADDITIVES TO FORM A HOMOGENEOUS SLURRY. THE MULCH MATERIAL MUST FORM A BLOTTER-LIKE GROUND COVER, ON APPLICATION, HAVING MOISTURE ABSORPTION AND PERCOLATION PROPERTIES AND MUST COVER AND HOLD GRASS SEED IN CONTACT WITH THE SOIL WITHOUT INHIBITING THE GROWTH OF THE GRASS SEEDLINGS.
   iv. WCFM MATERIAL MUST NOT CONTAIN ELEMENTS OR COMPOUNDS AT CONCENTRATION LEVELS THAT WILL BE PHYTO-TOXIC.
   v. WCFM MUST CONFORM TO THE FOLLOWING PHYSICAL REQUIREMENTS: FIBER LENGTH OF APPROXIMATELY 10 MILLIMETERS, DIAMETER APPROXIMATELY 1 MILLIMETER, PH RANGE OF 6.0 TO 8.5, ASH CONTENT OF 1.6 PERCENT MAXIMUM AND WATER HOLDING CAPACITY OF 90 PERCENT MINIMUM.
2. APPLICATION
   a. APPLY MULCH TO ALL SEEDED AREAS IMMEDIATELY AFTER SEEDING.
   b. WHEN STRAW MULCH IS USED, SPREAD IT OVER ALL SEEDED AREAS AT THE RATE OF 2 TONS PER ACRE TO A UNIFORM LOOSE DEPTH OF 1 TO 2 INCHES. APPLY MULCH TO ACHIEVE A UNIFORM DISTRIBUTION AND DEPTH SO THAT THE SOIL SURFACE IS NOT EXPOSED. WHEN USING A MULCH ANCHORING TOOL, INCREASE THE APPLICATION RATE TO 2.5 TONS PER ACRE.
   c. WOOD CELLULOSE FIBER USED AS MULCH MUST BE APPLIED AT A NET DRY WEIGHT OF 1500 POUNDS PER ACRE. MIX THE WOOD CELLULOSE FIBER WITH WATER TO ATTAIN A MIXTURE WITH A MAXIMUM OF 60 POUNDS OF WOOD CELLULOSE FIBER PER 100 GALLONS OF WATER.
3. ANCHORING
   a. PERFORM MULCH ANCHORING IMMEDIATELY FOLLOWING APPLICATION OF MULCH TO MINIMIZE LOSS BY WIND OR WATER. THIS MAY BE DONE BY ONE OF THE FOLLOWING METHODS (LISTED BY PREFERENCE), DEPENDING UPON THE SIZE OF THE AREA AND EROSION HAZARD:
   i. A MULCH ANCHORING TOOL IS A TRACTOR DRAWN IMPLEMENT DESIGNED TO PUNCH AND ANCHOR MULCH INTO THE SOIL SURFACE A MINIMUM OF 2 INCHES. THIS PRACTICE IS MOST EFFECTIVE ON LARGE AREAS, BUT IS LIMITED TO FLATTER SLOPES WHERE EQUIPMENT CAN OPERATE SAFELY. IF USED ON SLOPING LAND, THIS PRACTICE SHOULD FOLLOW THE CONTOUR.
   ii. WOOD CELLULOSE FIBER MAY BE USED FOR ANCHORING STRAW. APPLY THE FIBER BINDER AT A NET DRY WEIGHT OF 750 POUNDS PER ACRE. MIX THE WOOD CELLULOSE FIBER WITH WATER AT A MAXIMUM OF 60 POUNDS OF WOOD CELLULOSE FIBER PER 100 GALLONS OF WATER.
   iii. SYNTHETIC BINDERS SUCH AS ACRYLIC DLR (AGRO-TACK), DCA-70, PETROSET, TERRA TAX II, TERRA TACK AR OR OTHER APPROVED EQUAL MAY BE USED. FOLLOW APPLICATION RATES AS SPECIFIED BY THE MANUFACTURER. APPLICATION OF LIQUID BINDERS NEEDS TO BE HEAVIER AT THE EDGES WHERE WIND CATCHES MULCH, SUCH AS IN VALLEYS AND ON CRESTS OF BANKS. USE OF ASPHALT BINDERS IS STRICTLY PROHIBITED.
   iv. LIGHTWEIGHT PLASTIC NETTING MAY BE STAPLED OVER THE MULCH ACCORDING TO MANUFACTURER RECOMMENDATIONS. NETTING IS USUALLY AVAILABLE IN ROLLS 4 TO 15 FEET WIDE AND 300 TO 3,000 FEET LONG.

B-4-4 STANDARDS AND SPECIFICATIONS FOR TEMPORARY STABILIZATION

DEFINITION

TO STABILIZE DISTURBED SOILS WITH VEGETATION FOR UP TO 6 MONTHS.

PURPOSE

TO USE FAST GROWING VEGETATION THAT PROVIDES COVER ON DISTURBED SOILS.

CONDITIONS WHERE PRACTICE APPLIES

EXPOSED SOILS WHERE GROUND COVER IS NEEDED FOR A PERIOD OF 6 MONTHS OR LESS. FOR LONGER DURATION OF TIME, PERMANENT STABILIZATION PRACTICES ARE REQUIRED.

CRITERIA

1. SELECT ONE OR MORE OF THE SPECIES OR SEED MIXTURES LISTED IN TABLE B.1 FOR THE APPROPRIATE PLANT HARDINESS ZONE (FROM FIGURE B.3), AND ENTER THEM IN THE TEMPORARY SEEDING SUMMARY BELOW ALONG WITH APPLICATION RATES, SEEDING DATES AND SEEDING DEPTHS. IF THIS SUMMARY IS NOT PUT ON THE PLAN AND COMPLETED, THEN TABLE B.1 PLUS FERTILIZER AND LIME RATES MUST BE PUT ON THE PLAN.
2. FOR SITES HAVING SOIL TESTS PERFORMED, USE AND SHOW THE RECOMMENDED RATES BY THE TESTING AGENCY. SOIL TESTS ARE NOT REQUIRED FOR TEMPORARY SEEDING.
3. WHEN STABILIZATION IS REQUIRED OUTSIDE OF A SEEDING SEASON, APPLY SEED AND MULCH OR STRAW MULCH ALONE AS PRESCRIBED IN SECTION B-4-3.A.1.B AND MAINTAIN UNTIL THE NEXT SEEDING SEASON.

TEMPORARY SEEDING SUMMARY

HARDINESS ZONE (from Figure B.3): ZONE 6B SEED MIXTURE (from Table B.1)					FERTILIZER RATE (10-20-20)	LIME RATE
NO.	SPECIES	APPLICATION RATE (LB/AC)	SEEDING DATES	SEEDING DEPTHS		
COOL SEASON GRASSES						
1	ANNUAL RYEGRASS	40	3/1 - 5/15 8/1 - 10/15	0.5"	436 LB/AC (10 LB/1000 SF)	2 TONS/AC (90 LB/1000 SF)
2	BARLEY	96	3/1 - 5/15 8/1 - 10/15	1"		
3	OATS	72	3/1 - 5/15 8/1 - 10/15	1"		
4	WHEAT	120	3/1 - 5/15 8/1 - 10/15	1"		
5	CEREAL RYE	112	3/1 - 5/15 8/1 - 10/15	1"		
WARM SEASON GRASSES						
6	FOXTAIL MILLET	30	5/16 - 7/31	0.5"	436 LB/AC (10 LB/1000 SF)	2 TONS/AC (90 LB/1000 SF)
7	PEARL MILLET	20	5/16 - 7/31	0.5"		

B-4-4 STANDARDS AND SPECIFICATIONS FOR PERMANENT STABILIZATION

DEFINITION

TO STABILIZE DISTURBED SOILS WITH PERMANENT VEGETATION.

PURPOSE

TO USE LONG-LIVED PERENNIAL GRASSES AND LEGUMES TO ESTABLISH PERMANENT GROUND COVER ON DISTURBED SOILS.

CONDITIONS WHERE PRACTICE APPLIES

EXPOSED SOILS WHERE GROUND COVER IS NEEDED FOR 6 MONTHS OR MORE.

CRITERIA

A. SEED MIXTURES

1. GENERAL USE
   a. SELECT ONE OR MORE OF THE SPECIES OR MIXTURES LISTED IN TABLE B.3 FOR THE APPROPRIATE PLANT HARDINESS ZONE (FROM FIGURE B.3) AND BASED ON THE SITE CONDITION OR PURPOSE FOUND ON TABLE B.2. ENTER SELECTED MIXTURE(S), APPLICATION RATES, AND SEEDING DATES IN THE PERMANENT SEEDING SUMMARY. THE SUMMARY IS TO BE PLACED ON THE PLAN.
   b. ADDITIONAL PLANTING SPECIFICATIONS FOR EXCEPTIONAL SITES SUCH AS SHORELINES, STREAM BANKS, OR DUNES OR FOR SPECIAL PURPOSES SUCH AS WILDLIFE OR AESTHETIC TREATMENT MAY BE FOUND IN USDA-NRCS TECHNICAL FIELD OFFICE GUIDE, SECTION 342 - CRITICAL AREA PLANTING.
   c. FOR SITES HAVING DISTURBED AREA OVER 5 ACRES, USE AND SHOW THE RATES RECOMMENDED BY THE SOIL TESTING AGENCY.
   d. FOR AREAS RECEIVING LOW MAINTENANCE, APPLY UREA FORM FERTILIZER (46-0-0) AT 3 ½ POUNDS PER 1000 SQUARE FEET (150 POUNDS PER ACRE) AT THE TIME OF SEEDING IN ADDITION TO THE SOIL AMENDMENTS SHOWN IN THE PERMANENT SEEDING SUMMARY .
2. TURFGRASS MIXTURES
   a. AREAS WHERE TURFGRASS MAY BE DESIRED INCLUDE LAWNS, PARKS, PLAYGROUNDS, AND COMMERCIAL SITES WHICH WILL RECEIVE A MEDIUM TO HIGH LEVEL OF MAINTENANCE.
   b. SELECT ONE OR MORE OF THE SPECIES OR MIXTURES LISTED BELOW BASED ON THE SITE CONDITIONS OR PURPOSE. ENTER SELECTED MIXTURE(S), APPLICATION RATES, AND SEEDING DATES IN THE PERMANENT SEEDING SUMMARY. THE SUMMARY IS TO BE PLACED ON THE PLAN.
   i. KENTUCKY BLUEGRASS: FULL SUN MIXTURE: FOR USE IN AREAS THAT RECEIVE INTENSIVE MANAGEMENT. IRRIGATION REQUIRED IN THE AREAS OF CENTRAL MARYLAND AND EASTERN SHORE. RECOMMENDED CERTIFIED KENTUCKY BLUEGRASS CULTIVARS SEEDING RATE: 1.5 TO 2.0 POUNDS PER 1000 SQUARE FEET. CHOOSE A MINIMUM OF THREE KENTUCKY BLUEGRASS CULTIVARS WITH EACH RANGING FROM 10 TO 35 PERCENT OF THE TOTAL MIXTURE BY WEIGHT.
   ii. KENTUCKY BLUEGRASS/PERENNIAL RYE: FULL SUN MIXTURE: FOR USE IN FULL SUN AREAS WHERE RAPID ESTABLISHMENT IS NECESSARY AND WHEN TURF WILL RECEIVE MEDIUM TO INTENSIVE MANAGEMENT. CERTIFIED PERENNIAL RYEGRASS CULTIVARS/CERTIFIED KENTUCKY BLUEGRASS SEEDING RATE: 2 POUNDS MIXTURE PER 1000 SQUARE FEET. CHOOSE A MINIMUM OF THREE KENTUCKY BLUEGRASS CULTIVARS WITH EACH RANGING FROM 10 TO 35 PERCENT OF THE TOTAL MIXTURE BY WEIGHT.
   iii. TALL FESCUE/KENTUCKY BLUEGRASS: FULL SUN MIXTURE: FOR USE IN DROUGHT PRONE AREAS AND/OR FOR AREAS RECEIVING LOW TO MEDIUM MANAGEMENT IN FULL SUN TO MEDIUM SHADE. RECOMMENDED MIXTURE INCLUDES; CERTIFIED TALL FESCUE CULTIVARS 95 TO 100 PERCENT, CERTIFIED KENTUCKY BLUEGRASS CULTIVARS 0 TO 5 PERCENT. SEEDING RATE: 5 TO 8 POUNDS PER 1000 SQUARE FEET. ONE OR MORE CULTIVARS MAY BE BLENDED.
   iv. KENTUCKY BLUEGRASS/FINE FESCUE: SHADE MIXTURE: FOR USE IN AREAS WITH SHADE IN BLUEGRASS LAWNS. FOR ESTABLISHMENT IN HIGH QUALITY, INTENSIVELY MANAGED TURF AREA. MIXTURE INCLUDES; CERTIFIED KENTUCKY BLUEGRASS CULTIVARS 30 TO 40 PERCENT AND CERTIFIED FINE FESCUE AND 60 TO 70 PERCENT. SEEDING RATE: 1½ TO 3 POUNDS PER 1000 SQUARE FEET.

   NOTES:

   SELECT TURFGRASS VARIETIES FROM THOSE LISTED IN THE MOST CURRENT UNIVERSITY OF MARYLAND PUBLICATION, AGRONOMY MEMO #77, "TURFGRASS CULTIVAR RECOMMENDATIONS FOR MARYLAND"

   iw. CHOOSE CERTIFIED MATERIAL. CERTIFIED MATERIAL IS THE BEST GUARANTEE OF CULTIVAR PURITY. THE CERTIFICATION PROGRAM OF THE MARYLAND DEPARTMENT OF AGRICULTURE, TURF AND SEED SECTION, PROVIDES A RELIABLE MEANS OF CONSUMER PROTECTION AND ASSURES A PURE GENETIC LINE

   c. IDEAL TIMES OF SEEDING FOR TURF GRASS MIXTURES

   WESTERN MD: MARCH 15 TO JUNE 1, AUGUST 1 TO OCTOBER 1 (HARDINESS ZONES: 5B, 6A)

   CENTRAL MD: MARCH 1 TO MAY 15, AUGUST 15 TO OCTOBER 15 (HARDINESS ZONE: 6B)

   SOUTHERN MD, EASTERN SHORE: MARCH 1 TO MAY 15, AUGUST 15 TO OCTOBER 15 (HARDINESS ZONES: 7A, 7B)

   d. TILL AREAS TO RECEIVE SEED BY DISKING OR OTHER APPROVED METHODS TO A DEPTH OF 2 TO 4 INCHES, LEVEL AND RAKE THE AREAS TO PREPARE A PROPER SEEDBED. REMOVE STONES AND DEBRIS OVER 1½ INCHES IN DIAMETER. THE RESULTING SEEDBED MUST BE IN SUCH CONDITION THAT FUTURE MOWING OF GRASSES WILL POSE NO DIFFICULTY.
   e. IF SOIL MOISTURE IS DEFICIENT, SUPPLY NEW SEEDINGS WITH ADEQUATE WATER FOR PLANT GROWTH (½ TO 1 INCH EVERY 3 TO 4 DAYS DEPENDING ON SOIL TEXTURE) UNTIL THEY ARE FIRMLY ESTABLISHED. THIS IS ESPECIALLY TRUE WHEN SEEDINGS ARE MADE LATE IN THE PLANTING SEASON, IN ABNORMALLY DRY OR HOT SEASONS, OR ON ADVERSE SITES.

PERMANENT SEEDING SUMMARY

HARDINESS ZONE (from Figure B.3): ZONE 6B SEED MIXTURE (from Table B.3)					FERTILIZER RATE (10-20-20)			LIME RATE
NO.	SPECIES	APPLICATION RATE (LB/AC)	SEEDING DATES	SEEDING DEPTHS	N	P2O5	K2O	
9	TALL FESCUE KENTUCKY BLUEGRASS PERENNIAL RYE GRASS	60 40 20	2/15 - 4/30 8/15 - 11/30	1/4" - 1/2"	45 LB/AC (1.0 LB/1000 SF)	90 LB/AC (2 LB/1000 SF)	90 LB/AC (2 LB/1000 SF)	2 TONS/AC (90 LB/1000 SF)
5	HARD FESCUE PERENNIAL RYE GRASS FLAT PEA	20 10 15	2/15 - 4/30 8/15 - 11/30	1/4" - 1/2"				
1	SWITCH GRASS CREEPING RED FESCUE PARTRIDGE PEA	10 15 4	2/15 - 5/31	1/4" - 1/2"				

B. SOD: TO PROVIDE QUICK COVER ON DISTURBED AREAS (2:1 GRADE OR FLATTER).

1. GENERAL SPECIFICATIONS
   a. CLASS OF TURFGRASS SOD MUST BE MARYLAND STATE CERTIFIED. SOD LABELS MUST BE MADE AVAILABLE TO THE JOB FOREMAN AND INSPECTOR.
   b. SOD MUST BE MACHINE CUT AT A UNIFORM SOIL THICKNESS OF ¾ INCH, PLUS OR MINUS ¼ INCH, AT THE TIME OF CUTTING. MEASUREMENT FOR THICKNESS MUST EXCLUDE TOP GROWTH AND THATCH. BROKEN PADS AND TORN OR UNEVEN ENDS WILL NOT BE ACCEPTABLE.
   c. STANDARD SIZE SECTIONS OF SOD MUST BE STRONG ENOUGH TO SUPPORT THEIR OWN WEIGHT AND RETAIN THEIR SIZE AND SHAPE WHEN SUSPENDED VERTICALLY WITH A FIRM GRASP ON THE UPPER 10 PERCENT OF THE SECTION.
   d. SOD MUST NOT BE HARVESTED OR TRANSPLANTED WHEN MOISTURE CONTENT (EXCESSIVELY DRY OR WET) MAY ADVERSELY AFFECT ITS SURVIVAL.
   e. SOD MUST BE HARVESTED, DELIVERED, AND INSTALLED WITHIN A PERIOD OF 66 HOURS. SOD NOT TRANSPLANTED WITHIN THIS PERIOD MUST BE APPROVED BY AN AGRONOMIST OR SOIL SCIENTIST PRIOR TO ITS INSTALLATION.
2. SOD INSTALLATION
   a. DURING PERIODS OF EXCESSIVELY HIGH TEMPERATURE OR IN AREAS HAVING DRY SUBSOIL, LIGHTLY IRRIGATE THE SUBSOIL IMMEDIATELY PRIOR TO LAYING THE SOD.
   b. LAY THE FIRST ROW OF SOD IN A STRAIGHT LINE WITH SUBSEQUENT ROWS PLACED PARALLEL TO IT AND TIGHTLY WEDGED AGAINST EACH OTHER. STAGGER LATERAL JOINTS TO PROMOTE MORE UNIFORM GROWTH AND STRENGTH. ENSURE THAT SOD IS NOT STRETCHED OR OVERLAPPED AND THAT ALL JOINTS ARE BUTTED TIGHT IN ORDER TO PREVENT VOIDS WHICH WOULD CAUSE AIR DRYING OF THE ROOTS.
   c. WHEREVER POSSIBLE, LAY SOD WITH THE LONG EDGES PARALLEL TO THE CONTOUR AND WITH STAGGERING JOINTS. ROLL AND TAMP, PEG OR OTHERWISE SECURE THE SOD TO PREVENT SLIPPAGE ON SLOPES. ENSURE SOLID CONTACT EXISTS BETWEEN SOD ROOTS AND THE UNDERLYING SOIL SURFACE.
   d. WATER THE SOD IMMEDIATELY FOLLOWING ROLLING AND TAMPING UNTIL THE UNDERSIDE OF THE NEW SOD PAD AND SOIL SURFACE BELOW THE SOD ARE THOROUGHLY WET. COMPLETE THE OPERATIONS OF LAYING, TAMPING AND IRRIGATING FOR ANY PIECE OF SOD WITHIN EIGHT HOURS.
3. SOD MAINTENANCE
   a. IN THE ABSENCE OF ADEQUATE RAINFALL, WATER DAILY DURING THE FIRST WEEK OR AS OFTEN AND SUFFICIENTLY AS NECESSARY TO MAINTAIN MOIST SOIL TO A DEPTH OF 6 INCHES. WATER SOD DURING THE HEAT OF THE DAY TO PREVENT WILTING.
   b. AFTER THE FIRST WEEK, SOD WATERING IS REQUIRED AS NECESSARY TO MAINTAIN ADEQUATE MOISTURE CONTENT.
   c. DO NOT MOW UNTIL THE SOD IS FIRMLY ROOTED. NO MORE THAN ⅓ OF THE GRASS LEAF MUST BE REMOVED BY THE INITIAL CUTTING OR SUBSEQUENT CUTTINGS. MAINTAIN A GRASS HEIGHT OF AT LEAST 3 INCHES UNLESS OTHERWISE SPECIFIED.

B-4-6 STANDARDS AND SPECIFICATIONS FOR SOIL STABILIZATION MATTING

DEFINITION

MATERIAL USED TO TEMPORARILY OR PERMANENTLY STABILIZE CHANNELS OR STEEP SLOPES UNTIL GROUNDCOVER IS ESTABLISHED.

PURPOSE

TO PROTECT THE SOILS UNTIL VEGETATION IS ESTABLISHED.

CONDITIONS WHERE PRACTICE APPLIES

ON NEWLY SEEDED SURFACES TO PREVENT THE APPLIED SEED FROM WASHING OUT; IN CHANNELS AND ON STEEP SLOPES WHERE THE FLOW HAS EROSIVE VELOCITIES OR CONVEYS CLEAR WATER; ON TEMPORARY SWALES, EARTH DIKES, AND PERIMETER DIKE SWALES AS REQUIRED BY THE RESPECTIVE DESIGN STANDARD; AND, ON STREAM BANKS WHERE MOVING WATER IS LIKELY TO WASH OUT NEW VEGETATIVE PLANTINGS.

MAINTENANCE

VEGETATION MUST BE ESTABLISHED AND MAINTAINED SO THAT THE REQUIREMENTS FOR ADEQUATE VEGETATIVE ESTABLISHMENT ARE CONTINUOUSLY MET IN ACCORDANCE WITH SECTION B-4 VEGETATIVE STABILIZATION.

EROSION AND SEDIMENT CONTROL NOTES

1. REFER TO "2011 MARYLAND STANDARDS AND SPECIFICATIONS FOR SOIL EROSION AND SEDIMENT CONTROL" FOR STANDARD DETAILS AND DETAILED SPECIFICATIONS OF EACH PRACTICE SPECIFIED HEREIN.
2. WITH THE APPROVAL OF THE SEDIMENT CONTROL INSPECTOR, MINOR FIELD ADJUSTMENTS CAN AND WILL BE MADE TO INSURE THE CONTROL OF ANY SEDIMENT. CHANGES IN SEDIMENT CONTROL PRACTICES. REQUIRE PRIOR APPROVAL OF THE SEDIMENT CONTROL INSPECTOR AND THE BALTIMORE COUNTY SOIL CONSERVATION DISTRICT.
3. AT THE END OF EACH WORKING DAY, ALL SEDIMENT CONTROL PRACTICES WILL BE INSPECTED AND LEFT IN OPERATIONAL CONDITION.
4. FOLLOWING INITIAL SOIL DISTURBANCE OR REDISTURBANCE, PERMANENT OR TEMPORARY STABILIZATION SHALL BE COMPLETED WITHIN: A.) THREE CALENDAR DAYS AS TO THE SURFACE OF ALL PERIMETER CONTROLS, DIKES, SWALES, DITCHES, PERIMETER SLOPES, AND ALL SLOPES GREATER THAN THREE HORIZONTAL TO ONE VERTICAL (3:1), AND B.) SEVEN DAYS AS TO ALL OTHER DISTURBED OR GRADED AREAS ON THE PROJECT SITE WHICH WILL REMAIN IDLE OVER FOURTEEN DAYS.
5. ANY CHANGE TO THE GRADING PROPOSED ON THIS PLAN REQUIRES RE-SUBMISSION TO BALTIMORE COUNTY SOIL CONSERVATION DISTRICT FOR APPROVAL.
6. DUST CONTROL WILL BE PROVIDED FOR ALL DISTURBED AREAS. REFER TO "2011 MARYLAND STANDARDS AND SPECIFICATIONS FOR SOIL EROSION AND SEDIMENT CONTROL", PG. H.22, FOR ACCEPTABLE METHODS AND SPECIFICATIONS FOR DUST CONTROL.
7. ANY VARIATIONS FROM THE SEQUENCE OF OPERATIONS STATED ON THIS PLAN REQUIRES THE APPROVAL . OF THE SEDIMENT CONTROL INSPECTOR AND THE BALTIMORE COUNTY SOIL CONSERVATION DISTRICT PRIOR TO THE INITIATION OF THE CHANGE.
8. EXCESS CUT OR BORROW MATERIAL SHALL GO TO, OR COME FROM, RESPECTIVELY, A SITE WITH AN OPEN GRADING PERMIT.
9. THE FOLLOWING ITEM MAY BE USED AS APPLICABLE: REFER TO "MARYLAND'S GUIDELINES TO WATERWAY CONSTRUCTION" BY THE WATER MANAGEMENT ADMINISTRATION OF THE MARYLAND DEPARTMENT OF THE ENVIRONMENT, REVISED NOVEMBER, 2000, FOR STANDARD DETAILS AND DETAILED SPECIFICATIONS OF EACH PRACTICE SPECIFIED HEREIN FOR WATERWAY CONSTRUCTION.
10. PUMPING SEDIMENT LADEN WATER INTO WATERS OF THE STATE IS STRICTLY PROHIBITED. ANY PORTABLE DEWATERING DEVICE MUST BE LOCATED WITHIN LIMIT OF DISTURBANCE.

ENGINEER'S CERTIFICATE

"I HEREBY CERTIFY THAT THIS PLAN FOR EROSION AND SEDIMENT CONTROL REPRESENTS A PRACTICAL AND WORKABLE PLAN BASED ON MY PERSONAL KNOWLEDGE OF THE SITE CONDITIONS AND IT WAS PREPARED IN ACCORDANCE WITH THE REQUIREMENTS OF THE HOWARD SOIL CONSERVATION DISTRICT."

08-30-16

SIGNATURE OF ENGINEER — DATE
DAVID M. KUKLISH, P.E.

DEVELOPER'S CERTIFICATE

"I/WE HEREBY CERTIFY THAT ALL DEVELOPMENT AND CONSTRUCTION WILL BE DONE ACCORDING TO THIS PLAN, AND THAT ANY RESPONSIBLE PERSONNEL INVOLVED IN THE CONSTRUCTION PROJECT WILL HAVE A CERTIFICATE OF ATTENDANCE AT A DEPARTMENT OF THE ENVIRONMENT APPROVED TRAINING PROGRAM FOR THE CONTROL OF SEDIMENT AND EROSION BEFORE BEGINNING THE PROJECT. I ALSO AUTHORIZE PERIODIC ONSITE INSPECTION BY THE HOWARD SOIL CONSERVATION DISTRICT."

J.C. BAR PROPERTIES, INC

BY: — 8-31-16
NAME: JASON MITCHELL — DATE

THIS DEVELOPMENT PLAN IS APPROVED FOR SOIL EROSION AND SEDIMENT CONTROL BY THE HOWARD SOIL CONSERVATION DISTRICT.

10/5/16
HOWARD SCD — DATE

SUBDIVISION NAME: MONTEVIDEO CROSSING
PARCEL A
SECTION/AREA: N/A
PLAT # 23695
WATER CODE: N/A
SEWER CODE: N/A

OWNER: PARCEL 16A
MIT MONTEVIDEO, LLC
8850 COLUMBIA PARKWAY
COLUMBIA, MD 21045
CONTACT: MARK LEVY
TEL: (410) 579-2442

DEVELOPER: J.C. BAR PROPERTIES, INC
415 FALLOWFIELD ROAD, SUITE 301
CAMP HILL, PA 17011
CONTACT: JASON MITCHELL
TEL: (717) 761-7801

TAX MAP: 43 GRID: 10 ZONED: B-1
PARCEL: 16A
1ST ELECTION DISTRICT, HOWARD COUNTY, MARYLAND
ZB REF.: 1096m SITE AREA: 4.039 AC
DPZ REF.: SDP-15-069

PROFESSIONAL CERTIFICATION

I, DAVID M. KUKLISH, P.E., HEREBY CERTIFY THAT THESE DOCUMENTS WERE PREPARED OR APPROVED BY ME, AND THAT I AM A DULY LICENSED PROFESSIONAL ENGINEER UNDER THE LAWS OF THE STATE OF MARYLAND, LICENSE NO. 36224, EXPIRATION DATE: 8/19/2018

APPROVED: DEPARTMENT OF PLANNING AND ZONING

10-14-16
CHIEF-DEVELOPMENT ENGINEERING DIVISION — DATE

11-2-16
CHIEF-DIVISION OF LAND DEVELOPMENT — DATE

11-3-16
DIRECTOR — DATE

GENERAL NOTE:
IT IS THE RESPONSIBILITY OF THE CONTRACTOR TO REVIEW ALL OF THE DRAWINGS AND SPECIFICATIONS ASSOCIATED WITH THIS PROJECT WORK SCOPE PRIOR TO THE INITIATION OF CONSTRUCTION. SHOULD THE CONTRACTOR FIND A CONFLICT WITH THE DOCUMENTS RELATIVE TO THE SPECIFICATIONS OR APPLICABLE CODES, IT IS THE CONTRACTOR'S RESPONSIBILITY TO NOTIFY THE PROJECT ENGINEER OF RECORD IN WRITING PRIOR TO THE START OF CONSTRUCTION. FAILURE BY THE CONTRACTOR TO NOTIFY THE PROJECT ENGINEER SHALL CONSTITUTE ACCEPTANCE OF FULL RESPONSIBILITY BY THE CONTRACTOR TO COMPLETE THE SCOPE OF THE WORK AS DEFINED BY THE DRAWINGS AND IN FULL CONFORMANCE WITH LOCAL REGULATIONS AND CODES.

C:\USERS\CMONDORO\APPDATA\LOCAL\TEMP\ACPUBLISH_4692\DE150009SD5---------->LAYOUT: 21 - E&S CONTROL NOTES-DETAILS

CVS pharmacy

TYPE 'B'
REAR DRIVE-THRU

STORE NUMBER: 10528

WASHINGTON BLVD. & MONTEVIDEO RD.
JESSUP, HOWARD COUNTY, MARYLAND

PROJECT TYPE: NEW
DEAL TYPE: LEASE

CS PROJECT NUMBER: 77620

DIG WITH CARE — CALL BEFORE YOU DIG

THE FOLLOWING STATES REQUIRE NOTIFICATION BY EXCAVATORS, DESIGNERS, OR ANY PERSON PREPARING TO DISTURB THE EARTH'S SURFACE ANYWHERE IN THE STATE. IN VIRGINIA, MARYLAND, THE DISTRICT OF COLUMBIA, AND DELAWARE CALL - 811
(WV 1-800-245-4848) (PA 1-800-242-1776) (DC 1-800-257-7777)
(VA 1-800-552-7001) (MD 1-800-257-7777) (DE 1-800-282-8555)

BOHLER ENGINEERING
901 DULANEY VALLEY ROAD, SUITE 801
TOWSON, MARYLAND 21204
Phone: (410) 821-7900
Fax: (410) 821-7987
MD@BohlerEng.com

DEVELOPER

J.C. BAR DEVELOPMENT, LLC

415 FALLOWFIELD ROAD, SUITE 301
CAMP HILL, PA 17011
CONTACT: JASON MITCHELL
TEL : (717) 761-7801

STATE OF MARYLAND
D.M. KUKLISH
PROFESSIONAL ENGINEER
DELAWARE LICENSE No. 14522
MARYLAND LICENSE No. 36224
VIRGINIA LICENSE No. 0402045209

REVISIONS

REV:	DATE:	COMMENT:	BY:

CHECKED BY: DMK
DRAWN BY: CRH
DATE: 4/13/16
JOB NUMBER: MD131504
TITLE: EROSION AND SEDIMENT CONTROL NOTES AND DETAILS
SHEET NUMBER: 21 OF 27
COMMENTS: FILE NO. SDP-15-069

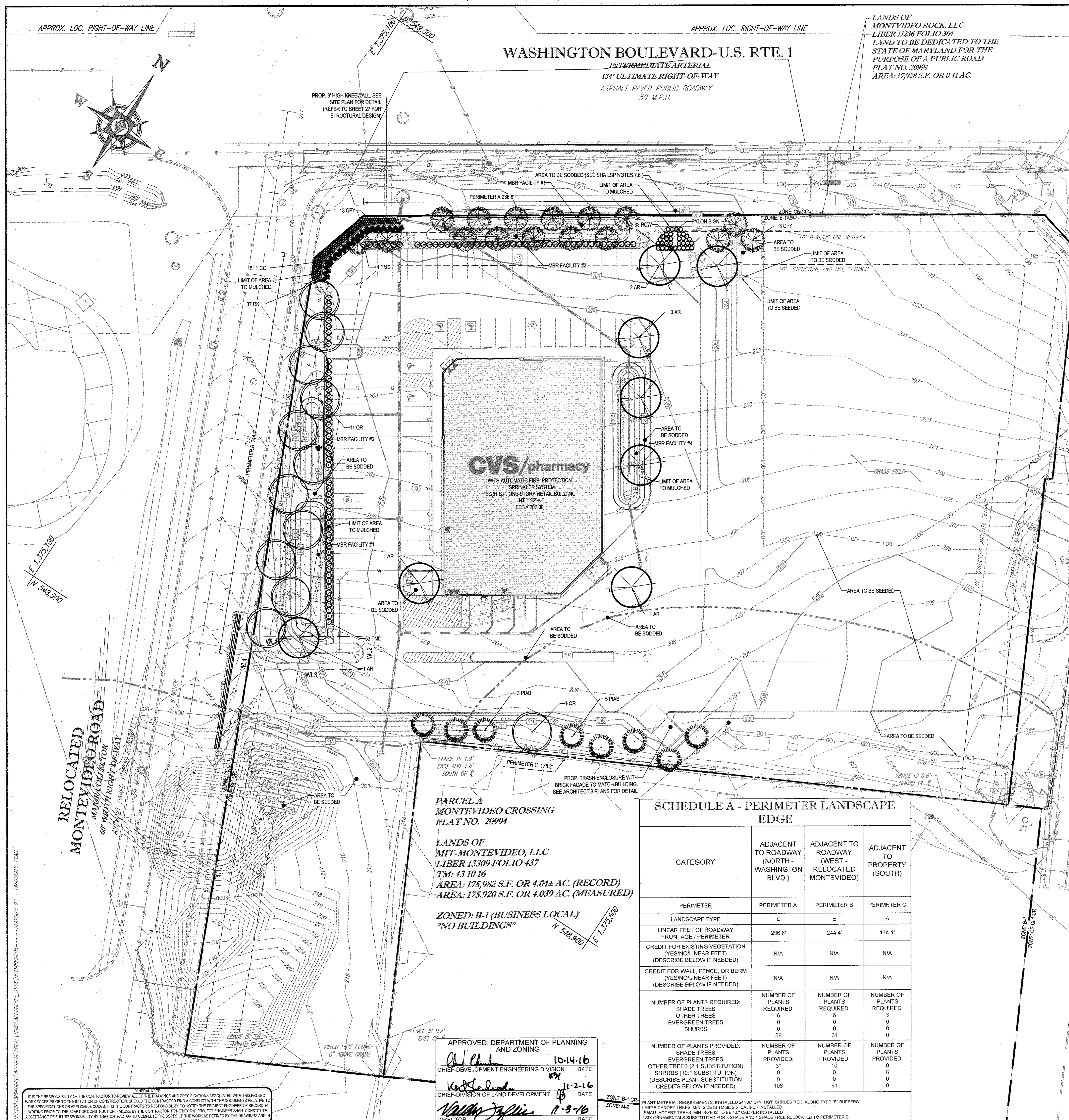

LANDSCAPE SCHEDULE

KEY	QTY.	BOTANICAL NAME	COMMON NAME	SIZE	REMARKS
SHADE TREE(S)					
AR	8	ACER RUBRUM	RED MAPLE	2 1/2-3" CAL. / 12-14'	B+B
QR	12	QUERCUS RUBRA	RED OAK	2 1/2-3" CAL.	B+B
SUBTOTAL:	20				
ORNAMENTAL TREE(S)					
CPY	16	CRATAEGUS PHAENOPYRUM	WASHINGTON HAWTHORN	2-2 1/2" CAL.	B+B
SUBTOTAL:	16				
EVERGREEN TREE(S)					
PIAB	8	PICEA ABIES	NORWAY SPRUCE	6-7'	B+B
SUBTOTAL:	8				
DECIDUOUS SHRUB(S)					
RCW	33	ROSA 'CAREFREE WONDER'	CAREFREE WONDER ROSE	24"	3 GAL.
RK	37	ROSA 'KNCCKOUT'	KNOCKOUT ROSE	2 GAL.	CONTAINER
SUBTOTAL:	70				
EVERGREEN SHRUB(S)					
TMD	97	TAXUS X MEDIA 'DENSIFORMIS'	DENSIFORMIS YEW	24-30"	B+B
SUBTOTAL:	97				
PERENNIAL(S)					
HCC	151	HEMEROCALLIS 'CHERRY CHEEKS'	CHERRY CHEEKS DAYLILY	2 GAL.	CONTAINER
SUBTOTAL:	151				

STREET TREE CHART

STREET NAME	REQUIRED	PROVIDED
RELOCATED MONTEVIDEO RD. (244 LF / 40)	6 TREES	6 TREES
WASHINGTON BLVD. (268 LF / 30)	9 TREES	9 TREES
TOTAL TREES	15 TREES	15 EQUIVALENT TREES

SCHEDULE B - PARKING LOT INTERNAL LANDSCAPING

NUMBER OF PARKING SPACES	67 (INCLUDING 4 ADA SPACES)
NUMBER OF TREES REQUIRED: (1 / 20 SPACES)	NUMBER OF TREES REQUIRED: 3
NUMBER OF PLANTS PROVIDED: SHADE TREES	NUMBER OF PLANTS PROVIDED: 3
NUMBER OF LANDSCAPE ISLANDS REQUIRED: (1 / 20 SPACES)	3 REQUIRED 3 PROVIDED

BIORETENTION AREAS PLANTING SCHEDULE

SPECIES		TYPE	SPACING	SIZE	FACILITY 1 (1423 S.F.)	FACILITY 2 (741 S.F.)	FACILITY 3 (1448 S.F.)	FACILITY 4 (778 S.F.)	TOTAL
BOTANICAL NAME	COMMON NAME								
HIBISCUS MOSCHEUTOS	SWAMP ROSE MALLOW	PERENNIAL	12" O.C.	PLUG	113	59	115	62	349
CORNUS AMMOMUM	SILKY DOGWOOD	SHRUB	30" O.C.	1 GAL. CONT.	56	29	57	31	173
LOBELIA CARDINALIS	CARDINAL FLOWER	PERENNIAL	12" O.C.	PLUG	113	59	115	62	349
ARONIA ARBUTIFOLIA	CHOKEBERRY	SHRUB	30" O.C.	1 GAL. CONT.	56	29	57	31	173
RUDBECKIA LACINIATA	TALL CONEFLOWER	PERENNIAL	12" O.C.	PLUG	113	59	115	62	349
JUNCUS EFFUSUS	SOFT RUSH	PERENNIAL	12" O.C.	PLUG	256	133	260	140	789
SCIRPUS ACUTUS	HARDSTEMMED BULLRUSH	PERENNIAL	12" O.C.	PLUG	256	133	260	140	789

SHA LANDSCAPE NOTES

7.1	TITLE	SHA LANDSCAPE NOTES. LANDSCAPE CONSTRUCTION WITHIN THE RIGHT OF WAY OF THE MARYLAND STATE HIGHWAY ADMINISTRATION (SHA) SHALL CONFORM TO THESE NOTES.
7.2	SPECIFICATIONS	SHA STANDARD SPECIFICATIONS. LANDSCAPE CONSTRUCTION SHALL CONFORM TO SECTIONS 701 THROUGH 716 AND LANDSCAPE MATERIALS SHALL CONFORM TO SECTION 902 OF THE SHA 2008 STANDARD SPECIFICATIONS FOR CONSTRUCTION AND MATERIALS, INCLUDING ALL REVISIONS OR SUPPLEMENTS AND AS SPECIFIED IN THESE NOTES. THESE REQUIREMENTS SHALL SUPERSEDE ALL OTHER SPECIFICATIONS FOR WORK WITHIN THE SHA RIGHT OF WAY.
7.3	E&S MANAGER (ESCM)	EROSION & SEDIMENT CONTROL MANAGER (ESCM). SOIL DISTURBANCE SUCH AS GRADING, EXCAVATION, SOIL PLACEMENT OR OTHER ACTIVITIES THAT INVOLVE SOIL DISTURBANCE WITHIN THE SHA RIGHT OF WAY SHALL BE SUPERVISED BY AN EROSION AND SEDIMENT CONTROL MANAGER WITH A VALID SHA 'YELLOW CARD' IN CONFORMANCE WITH SHA 2008 SPECIFICATIONS FOR CONSTRUCTION AND MATERIALS AND ANY APPLICABLE EROSION AND SEDIMENT CONTROL PERMIT.
7.5	TEMPORARY STABILIZATION	TEMPORARY STABILIZATION SHALL BE INSTALLED IN CONFORMANCE WITH SECTION 704 TO ENSURE THAT AREAS OF SOIL DISTURBANCE ARE PROTECTED FROM RAINFALL AND FLOWING WATER UNTIL PERMANENT STABILIZATION IS INSTALLED. 1. TEMPORARY MULCH, EITHER AS TEMPORARY STRAW MULCH OR TEMPORARY MATTING MULCH, SHALL BE INSTALLED AT THE END OF EACH WORKING DAY TO PROVIDE 'SAME DAY STABILIZATION' UNLESS OTHER APPROVED STABILIZATION IS INSTALLED. 2. TEMPORARY STRAW MULCH SHALL BE INSTALLED ON AREAS AND SLOPES FLATTER THAN 4:1; TEMPORARY MATTING MULCH SHALL BE APPLIED TO SLOPES 4:1 AND STEEPER, AND TO AREAS WITH CHANNELS. 3. TEMPORARY SEED SHALL BE INSTALLED IN LIEU OF TEMPORARY MULCH WHEN SOIL REDISTURBANCE IS EXPECTED MORE THAN 30 DAYS AFTER SOIL DISTURBANCE. THE REQUIRED APPLICATION RATE OF 15-30-15 FERTILIZER SHALL BE REDUCED TO 150 LBS PER ACRE.
7.7	EXCAVATION AND DEBRIS REMOVAL	EXCAVATION AND DEBRIS REMOVAL. DEBRIS RELATED TO THE DEMOLITION OF SIDEWALKS, DRIVEWAYS, CURBS, TREES, STUMPS, ROOTS, FENCING, PIPES, AND OTHER MATERIALS THAT MAY INTERFERE WITH LANDSCAPE INSTALLATION OR FUTURE MAINTENANCE WITHIN THE SHA RIGHT OF WAY SHALL BE EXCAVATED AS NECESSARY FOR THEIR COMPLETE REMOVAL AND DISPOSAL.
7.8	SOIL RESTORATION	SOIL RESTORATION. AREAS OF PAVEMENT REMOVAL, EXCAVATION, OR DRILLING IN LANDSCAPED AREAS SHALL REMOVE EXCAVATED DEBRIS AND RESTORE THE SUBGRADE WITH APPROVED SUBSOIL AND TOPSOIL PLACED IN CONFORMANCE WITH SECTION 701 OF THE SHA STANDARD SPECIFICATIONS. 1. A LAYER OF APPROVED TOPSOIL AT LEAST 4 INCH DEPTH SHALL BE PLACED ON ALL DISTURBED AREAS FLATTER THAN 2:1 AND IN ALL CHANNELS PRIOR TO SEEDING, SODDING OR OTHER LANDSCAPING, UNLESS OTHERWISE SPECIFIED. 2. A LAYER OF APPROVED TOPSOIL AT LEAST 2 INCH DEPTH SHALL BE PLACE IN ALL DISTURBED AREAS 2:1 AND STEEPER PRIOR TO SEEDING, SODDING OR OTHER LANDSCAPING, UNLESS OTHERWISE SPECIFIED. BIORETENTION SOIL MIX (BSM) SHALL BE INSTALLED IN CONFORMANCE WITH THE PLANS AND PERTINENT SPECIFICATIONS.
7.9	TURFGRASS SOD ESTABLISHMENT	TURFGRASS SOD ESTABLISHMENT SHALL BE PERFORMED IN ALL DISTURBED AREAS OF THE SHA RIGHT OF WAY, OR WITHIN THE AREAS INDICATED IN THE PLANS, IN CONFORMANCE WITH SECTION 708 OF THE SHA STANDARD SPECIFICATIONS. THE REQUIRED APPLICATION RATE OF 20-16-12 FERTILIZER SHALL BE REDUCED TO 200 LBS PER ACRE, AND NO FERTILIZER SHALL BE APPLIED FROM NOV. 15 TO MAR. 1.

SCHEDULE A - PERIMETER LANDSCAPE EDGE

CATEGORY	ADJACENT TO ROADWAY (NORTH - WASHINGTON BLVD.)	ADJACENT TO ROADWAY (WEST - RELOCATED MONTEVIDEO)	ADJACENT TO PROPERTY (SOUTH)
PERIMETER	PERIMETER A	PERIMETER B	PERIMETER C
LANDSCAPE TYPE	E	E	A
LINEAR FEET OF ROADWAY FRONTAGE / PERIMETER	236.8'	244.4'	174.1'
CREDIT FOR EXISTING VEGETATION (YES/NO/LINEAR FEET) (DESCRIBE BELOW IF NEEDED)	N/A	N/A	N/A
CREDIT FOR WALL, FENCE, OR BERM (YES/NO/LINEAR FEET) (DESCRIBE BELOW IF NEEDED)	N/A	N/A	N/A
NUMBER OF PLANTS REQUIRED: SHADE TREES / OTHER TREES / EVERGREEN TREES / SHURBS	NUMBER OF PLANTS REQUIRED: 6 / 0 / 0 / 59	NUMBER OF PLANTS REQUIRED: 6 / 0 / 0 / 61	NUMBER OF PLANTS REQUIRED: 3 / 0 / 0 / 0
NUMBER OF PLANTS PROVIDED: SHADE TREES / EVERGREEN TREES / OTHER TREES (2:1 SUBSTITUTION) / SHRUBS (10:1 SUBSTITUTION) / (DESCRIBE PLANT SUBSTITUTION CREDITS BELOW IF NEEDED)	NUMBER OF PLANTS PROVIDED: 3* / 0 / 0 / 106	NUMBER OF PLANTS PROVIDED: 10 / 0 / 0 / 61	NUMBER OF PLANTS PROVIDED: 0 / 8 / 0 / 0

PLANT MATERIAL REQUIREMENTS: INSTALLED 24"-30" MIN. HGT. SHRUBS RQ'D ALONG TYPE "E" BUFFERS.
LARGE CANOPY TREES: MIN. SIZE IS TO BE 2.5" CALIPER INSTALLED
SMALL ACCENT TREES: MIN. SIZE IS TO BE 1.5" CALIPER INSTALLED
* SIX ORNAMENTALS SUBSTITUTED FOR 3 SHADE AND 1 SHADE TREE RELOCATED TO PERIMETER B.

NOTE:
REQUIRED LANDSCAPING IN ACCORDANCE WITH THE ROUTE 1 MANUAL AND SEC. 16.124 OF THE LANDSCAPE MANUAL SHALL BE MET BY PROVIDING 15 STREET TREES ALONG US ROUTE 1 AND RELOCATED MONTEVIDEO ROAD AND 15 PERIMETER AND INTERNAL PARKING SHADE TREES AND 120 SHRUBS. SURETY IN THE AMOUNT OF $12,600.00 FOR 30 SHADE TREES AND 120 SHRUBS SHALL BE POSTED WITH THE DEVELOPERS AGREEMENT FOR THIS SITE PLAN, SDP-15-069. FUTHER PLANTINGS ALONG US ROUTE 1 WILL BE REQUIRED AT THE TIME PHASE 2 OF THE SUBJECT SITE (LAND TO THE EAST) IS DEVELOPED.

GENERAL NOTE:
IT IS THE RESPONSIBILITY OF THE CONTRACTOR TO REVIEW ALL OF THE DRAWINGS AND SPECIFICATIONS ASSOCIATED WITH THIS PROJECT WORK SCOPE PRIOR TO THE INITIATION OF CONSTRUCTION. SHOULD THE CONTRACTOR FIND A CONFLICT WITH THE DOCUMENTS RELATIVE TO THE SPECIFICATIONS OR APPLICABLE CODES, IT IS THE CONTRACTOR'S RESPONSIBILITY TO NOTIFY THE PROJECT ENGINEER OF RECORD IN WRITING PRIOR TO THE START OF CONSTRUCTION. FAILURE BY THE CONTRACTOR TO NOTIFY THE PROJECT ENGINEER SHALL CONSTITUTE ACCEPTANCE OF FULL RESPONSIBILITY BY THE CONTRACTOR TO COMPLETE THE SCOPE OF THE WORK AS DEFINED BY THE DRAWINGS AND IN FULL CONFORMANCE WITH LOCAL REGULATIONS AND CODES.

C:\USERS\CMONDORO\APPDATA\LOCAL\TEMP\ACPUBLISH_3556\DE150009LP5---->LAYOUT: 22 - LANDSCAPE PLAN

APPROVED: DEPARTMENT OF PLANNING AND ZONING

CHIEF-DEVELOPMENT ENGINEERING DIVISION (signature)	DATE 10.14.16
CHIEF-DIVISION OF LAND DEVELOPMENT (signature)	DATE 11-2-16
DIRECTOR (signature)	DATE 11-3-16

LEGEND
TURFGRASS SOD ESTABLISHMENT (SEE SHA LANDSCAPE NOTE 7.9)

SCALE: 30 15 7.5 0 30 — 1"= 30'

SUBDIVISION NAME: MONTEVIDEO CROSSING
PARCEL A
SECTION/AREA: N/A
PLAT # 23695
WATER CODE: N/A
SEWER CODE: N/A

OWNER: PARCEL 16A
MIT MONTEVIDEO, LLC
8850 COLUMBIA PARKWAY
COLUMBIA, MD 21045
CONTACT: MARK LEVY
TEL: (410) 579-2442

DEVELOPER: J.C. BAR PROPERTIES, INC
415 FALLOWFIELD ROAD, SUITE 301
CAMP HILL, PA 17011
CONTACT: JASON MITCHELL
TEL: (717) 761-7801

TAX MAP: 43 GRID: 10 ZONED: B-1
PARCEL: 16A
1ST ELECTION DISTRICT, HOWARD COUNTY, MARYLAND
ZB REF.: 1096m SITE AREA: 4.039 AC
DPZ REF.: SDP-15-069

I, ERIC R. McWILLIAMS, HEREBY CERTIFY THAT THESE DOCUMENTS WERE PREPARED OR APPROVED BY ME, AND THAT I AM A DULY LICENSED LANDSCAPE ARCHITECT UNDER THE LAWS OF THE STATE OF MARYLAND, LICENSE NO. 3697, EXPIRATION DATE: 9/20/2016

CVS pharmacy

TYPE 'B'
REAR DRIVE-THRU

STORE NUMBER: 10528

WASHINGTON BLVD. & MONTEVIDEO RD.
JESSUP, HOWARD COUNTY, MARYLAND

PROJECT TYPE: NEW
DEAL TYPE: LEASE

CS PROJECT NUMBER: 77620

DIG WITH CARE — CALL BEFORE YOU DIG

THE FOLLOWING STATES REQUIRE NOTIFICATION BY EXCAVATORS, DESIGNERS, OR ANY PERSON PREPARING TO DISTURB THE EARTH'S SURFACE ANYWHERE IN THE STATE. IN VIRGINIA, MARYLAND, THE DISTRICT OF COLUMBIA, AND DELAWARE CALL - 811
(WV 1-800-245-4848) (PA 1-800-242-1776) (DC 1-800-257-7777)
(VA 1-800-552-7001) (MD 1-800-257-7777) (DE 1-800-282-8555)

BOHLER ENGINEERING
901 DULANEY VALLEY ROAD, SUITE 801
TOWSON, MARYLAND 21204
Phone: (410) 821-7900
Fax: (410) 821-7987
MD@BohlerEng.com

DEVELOPER
J.C. BAR DEVELOPMENT, LLC

415 FALLOWFIELD ROAD, SUITE 301
CAMP HILL, PA 17011
CONTACT: JASON MITCHELL
TEL : (717) 761-7801

E.R. McWILLIAMS
REGISTERED LANDSCAPE ARCHITECT

REVISIONS

REV:	DATE:	COMMENT:	BY:

CHECKED BY: DMK
DRAWN BY: CRH
DATE: 4/13/16
JOB NUMBER: MD131504
TITLE:
LANDSCAPE PLAN
SHEET NUMBER:

COMMENTS:
FILE NO. SDP-15-069

LANDSCAPE SPECIFICATIONS

1. SCOPE OF WORK:
THE LANDSCAPE CONTRACTOR SHALL BE REQUIRED TO PERFORM ALL CLEARING, FINISHED GRADING, SOIL PREPARATION, PERMANENT SEEDING OR SODDING, PLANTING AND MULCHING INCLUDING ALL LABOR, MATERIALS, TOOLS AND EQUIPMENT NECESSARY FOR THE COMPLETION OF THIS PROJECT, UNLESS OTHERWISE CONTRACTED BY THE GENERAL CONTRACTOR.

2. MATERIALS
A. GENERAL - ALL HARDSCAPE MATERIALS SHALL MEET OR EXCEED SPECIFICATIONS AS OUTLINED IN THE STATE DEPARTMENT OF TRANSPORTATION'S SPECIFICATIONS.

B. TOPSOIL - NATURAL, FRIABLE, LOAMY SILT SOIL HAVING AN ORGANIC CONTENT NOT LESS THAN 5%, A PH RANGE BETWEEN 4.5-7.0. IT SHALL BE FREE OF DEBRIS, ROCKS LARGER THAN ONE INCH (1"), WOOD, ROOTS, VEGETABLE MATTER AND CLAY CLODS.

C. LAWN - ALL DISTURBED AREAS ARE TO BE TREATED WITH A MINIMUM SIX INCH (6") THICK LAYER OF TOPSOIL, OR AS DIRECTED BY THE LOCAL ORDINANCE OR CLIENT, AND SEEDED OR SODDED IN ACCORDANCE WITH THE PERMANENT STABILIZATION METHODS INDICATED WITHIN THE SOIL EROSION AND SEDIMENT CONTROL NOTES.
1.1. LAWN SEED MIXTURE SHALL BE FRESH, CLEAN NEW CROP SEED.
1.2. SOD SHALL BE STRONGLY ROOTED, WEED AND DISEASE/PEST FREE WITH A UNIFORM THICKNESS.
1.3. SOD INSTALLED ON SLOPES GREATER THAN 4:1 SHALL BE PEGGED TO HOLD SOD IN PLACE.

D. MULCH - THE MULCH AROUND THE PERIMETER OF THE BUILDING SHALL BE A 3" LAYER OF DOUBLE SHREDDED BLACK CEDAR MULCH ONLY. ALL OTHER AREAS SHALL BE MULCHED WITH A 3" LAYER OF DOUBLE SHREDDED DARK BROWN HARDWOOD BARK MULCH, UNLESS OTHERWISE STATED ON THE LANDSCAPE PLAN.

E. FERTILIZER
1.1. FERTILIZER SHALL BE DELIVERED TO THE SITE MIXED AS SPECIFIED IN THE ORIGINAL UNOPENED STANDARD BAGS SHOWING WEIGHT, ANALYSIS AND NAME OF MANUFACTURER. FERTILIZER SHALL BE STORED IN A WEATHERPROOF PLACE SO THAT IT CAN BE KEPT DRY PRIOR TO USE.
1.2. FOR THE PURPOSE OF BIDDING, ASSUME THAT FERTILIZER SHALL BE 10% NITROGEN, 6% PHOSPHORUS AND 4% POTASSIUM BY WEIGHT. A FERTILIZER SHOULD NOT BE SELECTED WITHOUT A SOIL TEST PERFORMED BY A CERTIFIED SOIL LABORATORY.

F. PLANT MATERIAL
1.1. ALL PLANTS SHALL IN ALL CASES CONFORM TO THE REQUIREMENTS OF THE "AMERICAN STANDARD FOR NURSERY STOCK" (ANSI Z60.1), LATEST EDITION, AS PUBLISHED BY THE AMERICAN NURSERY & LANDSCAPE ASSOCIATION.
1.2. IN ALL CASES, BOTANICAL NAMES SHALL TAKE PRECEDENCE OVER COMMON NAMES FOR ANY AND ALL PLANT MATERIAL.
1.3. PLANTS SHALL BE LEGIBLY TAGGED WITH THE PROPER NAME AND SIZE. TAGS ARE TO REMAIN ON AT LEAST ONE PLANT OF EACH SPECIES FOR VERIFICATION PURPOSES DURING THE FINAL INSPECTION.
1.4. TREES WITH ABRASION OF THE BARK, SUN SCALDS, DISFIGURATION OR FRESH CUTS OF LIMBS OVER 1¼", WHICH HAVE NOT BEEN COMPLETELY CALLUSED, SHALL BE REJECTED.PLANTS SHALL NOT BE BOUND WITH WIRE OR ROPE AT ANY TIME SO AS TO DAMAGE THE BARK OR BREAK BRANCHES.
1.5. ALL PLANTS SHALL BE TYPICAL OF THEIR SPECIES OR VARIETY AND SHALL HAVE A NORMAL HABIT OF GROWTH: WELL DEVELOPED BRANCHES, DENSELY FOLIATED, VIGOROUS ROOT SYSTEMS AND BE FREE OF DISEASE, INSECTS, PESTS, EGGS OR LARVAE.
1.6. CALIPER MEASUREMENTS OF NURSERY GROWN TREES SHALL BE TAKEN AT A POINT ON THE TRUNK SIX INCHES (6") ABOVE THE NATURAL GRADE FOR TREES UP TO AND INCLUDING A FOUR INCH (4") CALIPER SIZE. IF THE CALIPER AT SIX INCHES (6") ABOVE THE GROUND EXCEEDS FOUR INCHES (4") IN CALIPER, THE CALIPER SHOULD BE MEASURED AT A POINT 12" ABOVE THE NATURAL GRADE.
1.7. SHRUBS SHALL BE MEASURED TO THE AVERAGE HEIGHT OR SPREAD OF THE SHRUB, AND NOT TO THE LONGEST BRANCH.
1.8. TREES AND SHRUBS SHALL BE HANDLED WITH CARE BY THE ROOT BALL.

3. GENERAL WORK PROCEDURES
A. CONTRACTOR TO UTILIZE WORKMANLIKE INDUSTRY STANDARDS IN PERFORMING ALL LANDSCAPE CONSTRUCTION. THE SITE IS TO BE LEFT IN A CLEAN STATE AT THE END OF EACH WORKDAY. ALL DEBRIS, MATERIALS AND TOOLS SHALL BE PROPERLY STORED, STOCKPILED OR DISPOSED OF.

B. WASTE MATERIALS AND DEBRIS SHALL BE COMPLETELY DISPOSED OF AT THE CONTRACTOR'S EXPENSE. DEBRIS SHALL NOT BE BURIED, INCLUDING ORGANIC MATERIALS, BUT SHALL BE REMOVED COMPLETELY FROM THE SITE.

4. SITE PREPARATIONS
A. BEFORE AND DURING PRELIMINARY GRADING AND FINISHED GRADING, ALL WEEDS AND GRASSES SHALL BE DUG OUT BY THE ROOTS AND DISPOSED OF IN ACCORDANCE WITH GENERAL WORK PROCEDURES OUTLINED HEREIN.

B. ALL EXISTING TREES TO REMAIN SHALL BE PRUNED TO REMOVE ANY DAMAGED BRANCHES. THE ENTIRE LIMB OF ANY DAMAGED BRANCH SHALL BE CUT OFF AT THE TRUNK. CONTRACTOR SHALL ENSURE THAT CUTS ARE SMOOTH AND STRAIGHT. ANY EXPOSED ROOTS SHALL BE CUT BACK WITH CLEAN, SHARP TOOLS AND TOPSOIL SHALL BE PLACED AROUND THE REMAINDER OF THE ROOTS. EXISTING TREES SHALL BE MONITORED ON A REGULAR BASIS FOR ADDITIONAL ROOT OR BRANCH DAMAGE AS A RESULT OF CONSTRUCTION. ROOTS SHALL NOT BE LEFT EXPOSED FOR MORE THAN ONE (1) DAY. CONTRACTOR SHALL WATER EXISTING TREES AS NEEDED TO PREVENT SHOCK OR DECLINE.

C. CONTRACTOR SHALL ARRANGE TO HAVE A UTILITY STAKE-OUT TO LOCATE ALL UNDERGROUND UTILITIES PRIOR TO INSTALLATION OF ANY LANDSCAPE MATERIAL. UTILITY COMPANIES SHALL BE CONTACTED THREE (3) DAYS PRIOR TO THE BEGINNING OF WORK.

5. TREE PROTECTION
A. CONTRACTOR SHALL BE RESPONSIBLE FOR THE PROTECTION OF ALL EXISTING TREES TO REMAIN. A TREE PROTECTION ZONE SHALL BE ESTABLISHED AT THE DRIP LINE OR 15 FEET FROM THE TRUNK OR AT THE LIMIT OF CONSTRUCTION DISTURBANCE, WHICHEVER IS GREATER. LOCAL STANDARDS THAT MAY REQUIRE A MORE STRICT TREE PROTECTION ZONE SHALL BE HONORED.

B. A FORTY-EIGHT INCH (48") HIGH WOODEN SNOW FENCE OR ORANGE COLORED HIGH-DENSITY 'VISI-FENCE', OR APPROVED EQUAL, MOUNTED ON STEEL POSTS SHALL BE PLACED ALONG THE BOUNDARY OF THE TREE PROTECTION ZONE. POSTS SHALL BE LOCATED AT A MAXIMUM OF EIGHT FEET (8') ON CENTER OR AS INDICATED WITHIN THE TREE PROTECTION DETAIL.

C. WHEN THE TREE PROTECTION FENCING HAS BEEN INSTALLED, IT SHALL BE INSPECTED BY THE APPROVING AGENCY PRIOR TO DEMOLITION, GRADING, TREE CLEARING OR ANY OTHER CONSTRUCTION. THE FENCING ALONG THE TREE PROTECTION ZONE SHALL BE REGULARLY INSPECTED BY THE LANDSCAPE CONTRACTOR AND MAINTAINED UNTIL ALL CONSTRUCTION ACTIVITY HAS BEEN COMPLETED.

D. AT NO TIME SHALL MACHINERY, DEBRIS, FALLEN TREES OR OTHER MATERIALS BE PLACED, STOCKPILED OR LEFT STANDING IN THE TREE PROTECTION ZONE.

6. SOIL MODIFICATIONS
A. CONTRACTOR SHALL ATTAIN A SOIL TEST FOR ALL AREAS OF THE SITE PRIOR TO CONDUCTING ANY PLANTING. SOIL TESTS SHALL BE PERFORMED BY A CERTIFIED SOIL LABORATORY.

B. LANDSCAPE CONTRACTOR SHALL REPORT ANY SOIL OR DRAINAGE CONDITIONS CONSIDERED DETRIMENTAL TO THE GROWTH OF PLANT MATERIAL. SOIL MODIFICATIONS, AS SPECIFIED HEREIN, MAY NEED TO BE CONDUCTED BY THE LANDSCAPE CONTRACTOR DEPENDING ON SITE CONDITIONS.

C. THE FOLLOWING AMENDMENTS AND QUANTITIES ARE APPROXIMATE AND ARE FOR BIDDING PURPOSES ONLY. COMPOSITION OF AMENDMENTS SHOULD BE REVISED DEPENDING ON THE OUTCOME OF A TOPSOIL ANALYSIS PERFORMED BY A CERTIFIED SOIL LABORATORY.
1.1. TO INCREASE A SANDY SOIL'S ABILITY TO RETAIN WATER AND NUTRIENTS, THOROUGHLY TILL ORGANIC MATTER INTO THE TOP 6-12". USE COMPOSTED BARK, COMPOSTED LEAF MULCH OR PEAT MOSS. ALL PRODUCTS SHOULD BE COMPOSTED TO A DARK COLOR AND BE FREE OF PIECES WITH IDENTIFIABLE LEAF OR WOOD STRUCTURE. AVOID MATERIAL WITH A PH HIGHER THAN 7.5.
1.2. TO INCREASE DRAINAGE, MODIFY HEAVY CLAY OR SILT (MORE THAN 40% CLAY OR SILT) BY ADDING COMPOSTED PINE BARK (UP TO 30% BY VOLUME) AND/OR AGRICULTURAL GYPSUM. COARSE SAND MAY BE USED IF ENOUGH IS ADDED TO BRING THE SAND CONTENT TO MORE THAN 60% OF THE TOTAL MIX. SUBSURFACE DRAINAGE LINES MAY NEED TO BE ADDED TO INCREASE DRAINAGE.
1.3. MODIFY EXTREMELY SANDY SOILS (MORE THAN 85%) BY ADDING ORGANIC MATTER AND/OR DRY, SHREDDED CLAY LOAM UP TO 30% OF THE TOTAL MIX.

7. FINISHED GRADING
A. UNLESS OTHERWISE CONTRACTED, THE LANDSCAPE CONTRACTOR SHALL BE RESPONSIBLE FOR THE INSTALLATION OF TOPSOIL AND THE ESTABLISHMENT OF FINE-GRADING WITHIN THE DISTURBANCE AREA OF THE SITE.

B. LANDSCAPE CONTRACTOR SHALL VERIFY THAT SUBGRADE FOR INSTALLATION OF TOPSOIL HAS BEEN ESTABLISHED. THE SUBGRADE OF THE SITE MUST MEET THE FINISHED GRADE LESS THE REQUIRED TOPSOIL THICKNESS (1"±).

C. ALL LAWN AND PLANTING AREAS SHALL BE GRADED TO A SMOOTH, EVEN AND UNIFORM PLANE WITH NO ABRUPT CHANGE OF SURFACE AS DEPICTED WITHIN THIS SET OF CONSTRUCTION PLANS, UNLESS OTHERWISE DIRECTED BY THE PROJECT ENGINEER OR LANDSCAPE ARCHITECT.

D. ALL PLANTING AREAS SHALL BE GRADED AND MAINTAINED TO ALLOW FREE FLOW OF SURFACE WATER IN AND AROUND THE PLANTING BEDS. STANDING WATER SHALL NOT BE PERMITTED IN PLANTING BEDS.

8. TOPSOILING
A. CONTRACTOR SHALL PROVIDE A SIX INCH (6") THICK MINIMUM LAYER OF TOPSOIL, OR AS DIRECTED BY THE LOCAL ORDINANCE OR CLIENT, IN ALL PLANTING AREAS. TOPSOIL SHOULD BE SPREAD OVER A PREPARED SURFACE IN A UNIFORM LAYER TO ACHIEVE THE DESIRED COMPACTED THICKNESS.

B. ON-SITE TOPSOIL MAY BE USED TO SUPPLEMENT THE TOTAL AMOUNT REQUIRED. TOPSOIL FROM THE SITE MAY BE REJECTED IF IT HAS NOT BEEN PROPERLY REMOVED, STORED AND PROTECTED PRIOR TO CONSTRUCTION.

C. CONTRACTOR SHALL FURNISH TO THE APPROVING AGENCY AN ANALYSIS OF BOTH IMPORTED AND ON-SITE TOPSOIL TO BE UTILIZED IN ALL PLANTING AREAS. THE PH AND NUTRIENT LEVELS MAY NEED TO BE ADJUSTED THROUGH SOIL MODIFICATIONS AS NEEDED TO ACHIEVE THE REQUIRED LEVELS AS SPECIFIED IN THE MATERIALS SECTION ABOVE.

D. ALL PLANTING AND LAWN AREAS ARE TO BE CULTIVATED TO A DEPTH OF SIX INCHES (6"). ALL DEBRIS EXPOSED FROM EXCAVATION AND CULTIVATION SHALL BE DISPOSED OF IN ACCORDANCE WITH GENERAL WORK PROCEDURES SECTION ABOVE. THE FOLLOWING SHALL BE TILLED INTO THE TOP FOUR INCHES (4") IN TWO DIRECTIONS (QUANTITIES BASED ON A 1,000 SQUARE FOOT AREA):
1.1. 20 POUNDS 'GROW POWER' OR APPROVED EQUAL
1.2. 20 POUNDS NITRO-FORM (COURSE) 38-0-0 BLUE CHIP

E. THE SPREADING OF TOPSOIL SHALL NOT BE CONDUCTED UNDER MUDDY OR FROZEN CONDITIONS.

9. PLANTING
A. INSOFAR THAT IT IS FEASIBLE, PLANT MATERIAL SHALL BE PLANTED ON THE DAY OF DELIVERY. IN THE EVENT THAT THIS IS NOT POSSIBLE, LANDSCAPE CONTRACTOR SHALL PROTECT UNINSTALLED PLANT MATERIAL. PLANTS SHALL NOT REMAIN UNPLANTED FOR LONGER THAN A THREE DAY PERIOD AFTER DELIVERY. PLANTS THAT WILL NOT BE PLANTED FOR A PERIOD OF TIME GREATER THAN THREE DAYS SHALL BE HEALED IN WITH TOPSOIL OR MULCH TO HELP PRESERVE ROOT MOISTURE.

B. PLANTING OPERATIONS SHALL BE PERFORMED DURING PERIODS WITHIN THE PLANTING SEASON WHEN WEATHER AND SOIL CONDITIONS ARE SUITABLE AND IN ACCORDANCE WITH ACCEPTED LOCAL PRACTICE. PLANTS SHALL NOT BE INSTALLED IN TOPSOIL THAT IS IN A MUDDY OR FROZEN CONDITION.

C. ANY INJURED ROOTS OR BRANCHES SHALL BE PRUNED TO MAKE CLEAN-CUT ENDS PRIOR TO PLANTING UTILIZING CLEAN, SHARP TOOLS. ONLY INJURED OR DISEASED BRANCHING SHALL BE REMOVED.

D. ALL PLANTING CONTAINERS AND NON-BIODEGRADABLE MATERIALS SHALL BE REMOVED FROM ROOT BALLS DURING PLANTING. NATURAL FIBER BURLAP MUST BE CUT FROM AROUND THE TRUNK OF THE TREE AND FOLDED DOWN AGAINST THE ROOT BALL PRIOR TO BACKFILLING.

E. POSITION TREES AND SHRUBS AT THEIR INTENDED LOCATIONS AS PER THE PLANS AND SECURE THE APPROVAL OF THE LANDSCAPE ARCHITECT PRIOR TO EXCAVATING PITS, MAKING NECESSARY ADJUSTMENTS AS DIRECTED.

F. PRIOR TO THE ISSUANCE OF ANY CERTIFICATE OF OCCUPANCY, THE PROPOSED LANDSCAPE, AS SHOWN ON THE APPROVED LANDSCAPE PLAN, MUST BE INSTALLED, INSPECTED AND APPROVED BY THE APPROVING AGENCY. THE APPROVING AGENCY SHALL TAKE INTO ACCOUNT SEASONAL CONSIDERATIONS IN THIS REGARD AS FOLLOWS. THE PLANTING OF TREES, SHRUBS, VINES OR GROUND COVER SHALL OCCUR ONLY DURING THE FOLLOWING PLANTING SEASONS:
1.1. PLANTS: MARCH 15 TO DECEMBER 15
1.2. LAWN: MARCH 15 TO JUNE 15 OR SEPT. 1 TO DECEMBER 1

G. PLANTINGS REQUIRED FOR A CERTIFICATE OF OCCUPANCY SHALL BE PROVIDED DURING THE NEXT APPROPRIATE SEASON AT THE MUNICIPALITY'S DISCRETION. CONTRACTOR SHOULD CONTACT APPROVING AGENCY FOR POTENTIAL SUBSTITUTIONS.

H. FURTHERMORE, THE FOLLOWING TREE VARIETIES ARE UNUSUALLY SUSCEPTIBLE TO WINTER DAMAGE. WITH TRANSPLANT SHOCK AND THE SEASONAL LACK OF NITROGEN AVAILABILITY, THE RISK OF PLANT DEATH IS GREATLY INCREASED. IT IS NOT RECOMMENDED THAT THESE SPECIES BE PLANTED DURING THE FALL PLANTING SEASON:

ACER RUBRUM	PLATANUS X ACERIFOLIA
BETULA VARIETIES	POPULOUS VARIETIES
CARPINUS VARIETIES	PRUNUS VARIETIES
CRATAEGUS VARIETIES	PYRUS VARIETIES
KOELREUTERIA	QUERCUS VARIETIES
LIQUIDAMBER STYRACIFLUA	TILIA TOMENTOSA
LIRIODENDRON TULIPIFERA	ZELKOVA VARIETIES

I. PLANTING PITS SHALL BE DUG WITH LEVEL BOTTOMS, WITH THE WIDTH TWICE THE DIAMETER OF ROOT BALL. THE ROOT BALL SHALL REST ON UNDISTURBED GRADE. EACH PLANT PIT SHALL BE BACKFILLED IN LAYERS WITH THE FOLLOWING PREPARED SOIL MIXED THOROUGHLY:
- 1 PART PEAT MOSS
- 1 PART COMPOSTED COW MANURE BY VOLUME
- 3 PARTS TOPSOIL BY VOLUME
- 21 GRAMS 'AGRIFORM' PLANTING TABLETS (OR APPROVED EQUAL) AS FOLLOWS:
  - A) 2 TABLETS PER 1 GALLON PLANT
  - B) 3 TABLETS PER 5 GALLON PLANT
  - C) 4 TABLETS PER 15 GALLON PLANT
  - D) LARGER PLANTS: 2 TABLETS PER ½" CALIPER OF TRUNK

J. FILL PREPARED SOIL AROUND BALL OF PLANT HALF-WAY AND INSERT PLANT TABLETS. COMPLETE BACKFILL AND WATER THOROUGHLY.

K. ALL PLANTS SHALL BE PLANTED SO THAT THE TOP OF THE ROOT BALL, THE POINT AT WHICH THE ROOT FLARE BEGINS, IS SET AT GROUND LEVEL AND IN THE CENTER OF THE PIT. NO SOIL IS TO BE PLACED DIRECTLY ON TOP OF THE ROOT BALL.

L. ALL PROPOSED TREES DIRECTLY ADJACENT TO WALKWAYS OR DRIVEWAYS SHALL BE PRUNED AND MAINTAINED TO A MINIMUM BRANCHING HEIGHT OF 7' FROM GRADE.

M. GROUND COVER AREAS SHALL RECEIVE A ½" LAYER OF HUMUS RAKED INTO THE TOP 1" OF PREPARED SOIL PRIOR TO PLANTING. ALL GROUND COVER AREAS SHALL BE WEEDED AND TREATED WITH A PRE-EMERGENT CHEMICAL AS PER MANUFACTURER'S RECOMMENDATION.

N. NO PLANT, EXCEPT GROUND COVERS, GRASSES OR VINES, SHALL BE PLANTED LESS THAN TWO FEET (2') FROM EXISTING STRUCTURES AND SIDEWALKS.

O. ALL PLANTING AREAS AND PLANTING PITS SHALL BE MULCHED AS SPECIFIED HEREIN TO FILL THE ENTIRE BED AREA OR SAUCER. NO MULCH IS TO TOUCH THE TRUNK OF THE TREE OR SHRUB.

P. ALL PLANTING AREAS SHALL BE WATERED IMMEDIATELY UPON INSTALLATION IN ACCORDANCE WITH THE WATERING SPECIFICATIONS AS LISTED HEREIN.

10. TRANSPLANTING (WHEN REQUIRED)
A. ALL TRANSPLANTS SHALL BE DUG WITH INTACT ROOT BALLS CAPABLE OF SUSTAINING THE PLANT.

B. IF PLANTS ARE TO BE STOCKPILED BEFORE REPLANTING, THEY SHALL BE HEALED IN WITH MULCH OR SOIL, ADEQUATELY WATERED AND PROTECTED FROM EXTREME HEAT, SUN AND WIND.

C. PLANTS SHALL NOT BE DUG FOR TRANSPLANTING BETWEEN APRIL 10 AND JUNE 30.

D. UPON REPLANTING, BACKFILL SOIL SHALL BE AMENDED WITH FERTILIZER AND ROOT GROWTH HORMONE.

E. TRANSPLANTS SHALL BE GUARANTEED FOR THE LENGTH OF THE GUARANTEE PERIOD SPECIFIED HEREIN.

F. IF TRANSPLANTS DIE, SHRUBS AND TREES LESS THAN SIX INCHES (6") DBH SHALL BE REPLACED IN KIND. TREES GREATER THAN SIX INCHES (6") DBH MAY BE REQUIRED TO BE REPLACED IN ACCORDANCE WITH THE MUNICIPALITY'S TREE REPLACEMENT GUIDELINES.

11. WATERING
A. NEW PLANTINGS OR LAWN AREAS SHALL BE ADEQUATELY IRRIGATED BEGINNING IMMEDIATELY AFTER PLANTING. WATER SHALL BE APPLIED TO EACH TREE AND SHRUB IN SUCH MANNER AS NOT TO DISTURB BACKFILL AND TO THE EXTENT THAT ALL MATERIALS IN THE PLANTING HOLE ARE THOROUGHLY SATURATED. WATERING SHALL CONTINUE AT LEAST UNTIL PLANTS ARE ESTABLISHED.

B. SITE OWNER SHALL PROVIDE WATER IF AVAILABLE ON SITE AT TIME OF PLANTING. IF WATER IS NOT AVAILABLE ON SITE, CONTRACTOR SHALL SUPPLY ALL NECESSARY WATER. THE USE OF WATERING BAGS IS RECOMMENDED FOR ALL NEWLY PLANTED TREES.

C. IF AN IRRIGATION SYSTEM HAS BEEN INSTALLED ON THE SITE, IT SHALL BE USED TO WATER PROPOSED PLANT MATERIAL, BUT ANY FAILURE OF THE SYSTEM DOES NOT ELIMINATE THE CONTRACTOR'S RESPONSIBILITY OF MAINTAINING THE DESIRED MOISTURE LEVEL FOR VIGOROUS, HEALTHY GROWTH.

12. GUARANTEE
A. THE LANDSCAPE CONTRACTOR SHALL GUARANTEE ALL PLANTS FOR A PERIOD OF ONE (1) YEAR FROM APPROVAL OF LANDSCAPE INSTALLATION BY THE APPROVING AGENCY. CONTRACTOR SHALL SUPPLY THE OWNER WITH A MAINTENANCE BOND FOR TEN PERCENT (10%) OF THE VALUE OF THE LANDSCAPE INSTALLATION WHICH WILL BE RELEASED AT THE CONCLUSION OF THE GUARANTEE PERIOD AND WHEN A FINAL INSPECTION HAS BEEN COMPLETED AND APPROVED BY THE OWNER OR AUTHORIZED REPRESENTATIVE.

B. ANY DEAD OR DYING PLANT MATERIAL SHALL BE REPLACED FOR THE LENGTH OF THE GUARANTEE PERIOD. REPLACEMENT OF PLANT MATERIAL SHALL BE CONDUCTED AT THE FIRST SUCCEEDING PLANTING SEASON. ANY DEBRIS SHALL BE DISPOSED OF OFF-SITE, WITHOUT EXCEPTION.

C. TREES AND SHRUBS SHALL BE MAINTAINED BY THE CONTRACTOR DURING CONSTRUCTION AND THROUGHOUT THE 90 DAY MAINTENANCE PERIOD AS SPECIFIED HEREIN. CULTIVATION, WEEDING, WATERING AND THE PREVENTATIVE TREATMENTS SHALL BE PERFORMED AS NECESSARY TO KEEP PLANT MATERIAL IN GOOD CONDITION AND FREE OF INSECTS AND DISEASE.

D. LAWNS SHALL BE MAINTAINED THROUGH WATERING, FERTILIZING, WEEDING, MOWING, TRIMMING AND OTHER OPERATIONS SUCH AS ROLLING, REGARDING AND REPLANTING AS REQUIRED TO ESTABLISH A SMOOTH, ACCEPTABLE LAWN, FREE OF ERODED OR BARE AREAS.

13. CLEANUP
A. UPON THE COMPLETION OF ALL LANDSCAPE INSTALLATION AND BEFORE THE FINAL ACCEPTANCE, THE CONTRACTOR SHALL REMOVE ALL UNUSED MATERIALS, EQUIPMENT AND DEBRIS FROM THE SITE. ALL PAVED AREAS ARE TO BE CLEANED.

B. THE SITE SHALL BE CLEANED AND LEFT IN A NEAT AND ACCEPTABLE CONDITION AS APPROVED BY THE OWNER OR AUTHORIZED REPRESENTATIVE.

GENERAL NOTE:
IT IS THE RESPONSIBILITY OF THE CONTRACTOR TO REVIEW ALL OF THE DRAWINGS AND SPECIFICATIONS ASSOCIATED WITH THIS PROJECT WORK SCOPE PRIOR TO THE INITIATION OF CONSTRUCTION. SHOULD THE CONTRACTOR FIND A CONFLICT WITH THE DOCUMENTS RELATIVE TO THE SPECIFICATIONS OR APPLICABLE CODES, IT IS THE CONTRACTOR'S RESPONSIBILITY TO NOTIFY THE PROJECT ENGINEER OF RECORD IN WRITING PRIOR TO THE START OF CONSTRUCTION. FAILURE BY THE CONTRACTOR TO NOTIFY THE PROJECT ENGINEER SHALL CONSTITUTE ACCEPTANCE OF FULL RESPONSIBILITY BY THE CONTRACTOR TO COMPLETE THE SCOPE OF THE WORK AS DEFINED BY THE DRAWINGS AND IN FULL CONFORMANCE WITH LOCAL REGULATIONS AND CODES.

C:\USERS\CMONDORO\APPDATA\LOCAL\TEMP\ACPUBLISH_4692\DE150009LP5---------->LAYOUT: 23 - LANDSCAPE NOTE DETAILS

APPROVED: DEPARTMENT OF PLANNING AND ZONING

CHIEF-DEVELOPMENT ENGINEERING DIVISION	DATE 10-14-16
CHIEF-DIVISION OF LAND DEVELOPMENT	DATE 11-2-16
DIRECTOR	DATE 11-3-16

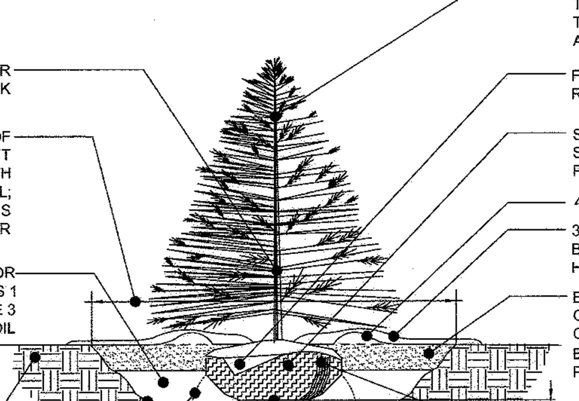

REFERENCE: ARCHITECTURAL GRAPHIC STANDARDS 1998 CUMULATIVE SUPPLEMENT.

EVERGREEN TREE PLANTING DETAIL

NOT TO SCALE

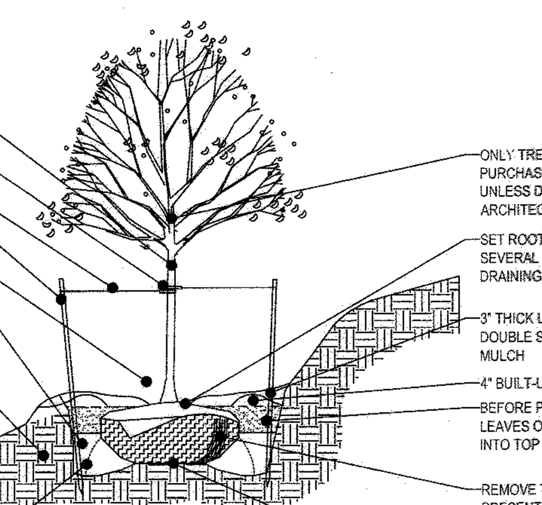

TREE PLANTING ON SLOPE DETAIL

NOT TO SCALE

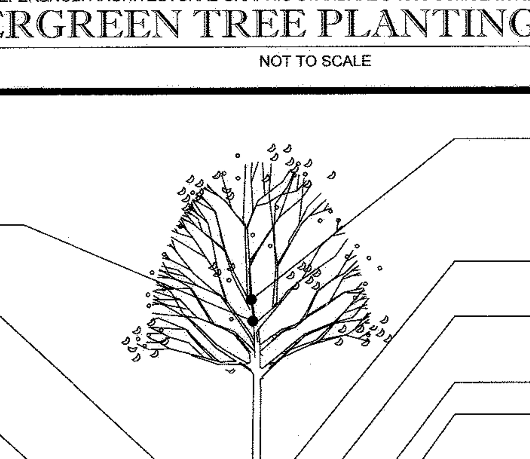

REFERENCE: ARCHITECTURAL GRAPHIC STANDARDS 1998 CUMULATIVE SUPPLEMENT.

DECIDUOUS TREE PLANTING DETAIL

NOT TO SCALE

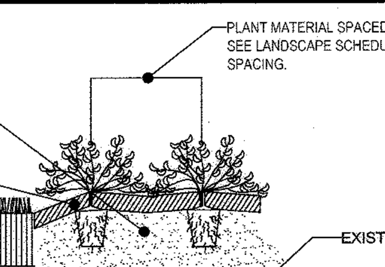

TYPICAL PERENNIAL AND GROUND COVER PLANTING

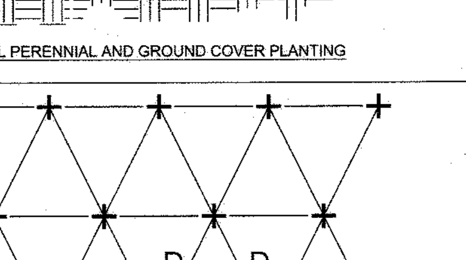

TYPICAL PERENNIAL AND GROUND COVER SPACING & LAYOUT

PERENNIAL/GROUND COVER PLANTING DETAIL

NOT TO SCALE

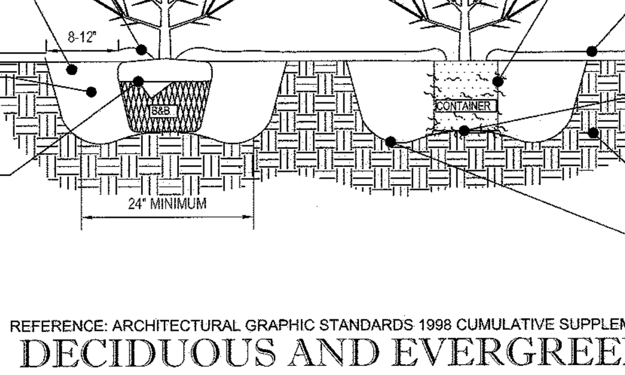

REFERENCE: ARCHITECTURAL GRAPHIC STANDARDS 1998 CUMULATIVE SUPPLEMENT

DECIDUOUS AND EVERGREEN SHRUB PLANTING DETAIL

NOT TO SCALE

OWNER MAINTENANCE RESPONSIBILITIES

UPON OWNER'S (OR OWNER CONTRACTOR'S) COMPLETION OF LANDSCAPING WORK, THE OWNER IS FULLY RESPONSIBLE FOR ALL FUTURE MAINTENANCE, CARE, UPKEEP, WATERING, AND TRIMMING OF ALL INSTALLED VEGETATION, PLANTS, TREE, BUSHES, SHRUBS, GRASSES, GRASS, ORNAMENTAL PLANTS AND FLOWERS, FLOWERS, GROUND COVER, AND LANDSCAPING, INCLUDING ALL LANDSCAPE ISLANDS AND AREAS ADJACENT OR PART OF THE LANDSCAPED AREAS. THIS RESPONSIBILITY INCLUDES, BUT IS NOT LIMITED TO, THE FOLLOWING:

- TREES ADJACENT TO WALKWAYS AND AREAS OF PEDESTRIAN TRAFFIC MUST BE MAINTAINED TO ASSURE THAT ANY BRANCHES MUST BE LIMBED UP TO A CLEARANCE HEIGHT OF 7 FT. (FROM ALL PEDESTRIAN SURFACES) OR PRUNED BACK TO AVOID ANY INTERFERENCE WITH THE TYPICAL PATH OF TRAVEL.
- TREES WITHIN VEHICULAR SIGHT LINES, AS ILLUSTRATED ON THE LANDSCAPE PLAN, ARE TO BE TRIMMED TO A CLEARANCE HEIGHT OF 7 FT. (FROM ALL PAVED, TRAVELED SURFACES), OR AS OTHERWISE INDICATED ON THE PLANS.
- VEGETATIVE GROUND COVER, SHRUBS AND ORNAMENTAL PLANTS AND GRASSES MUST BE TRIMMED SO THAT NO PORTION OF THE PLANT EXCEEDS 30 INCHES ABOVE GRADE (OF ALL PAVED, TRAVEL SURFACES) ALONG AND WITHIN THE SIGHT LINES OF PARKING LOTS AND INGRESS-EGRESS WAYS.
- FALLEN PLANT FLOWERS, FRUIT, SEEDS AND DEBRIS DROPPINGS ARE TO BE REMOVED IMMEDIATELY FROM VEHICULAR AND PEDESTRIAN TRAFFIC AREAS TO PREVENT TRIPPING, SLIPPING OR ANY OTHER HAZARDS.

THESE REQUIREMENTS DO NOT AFFECT THE PLANT LIFE GUARANTEES THE LANDSCAPE CONTRACTOR IS REQUIRED TO PROVIDE.

PLANTING ZONES FOR BIORETENTION FACILITIES

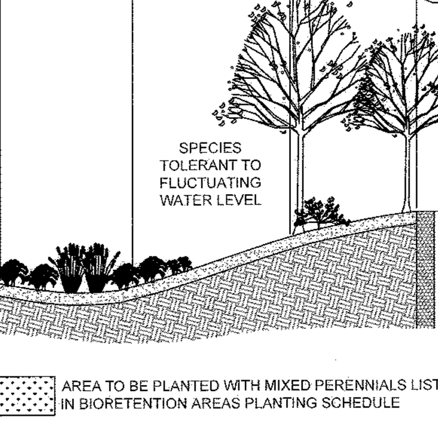

AREA TO BE PLANTED WITH MIXED PERENNIALS LISTED IN BIORETENTION AREAS PLANTING SCHEDULE

NOTES:
1. HERBACEOUS PERENNIALS TO BE PLANTED IN GROUPS BETWEEN 15 TO 20 PLUGS AND SPACED AS SHOWN WITH BIORENDITION NEED PLANTING SCHEDULE.
2. LANDSCAPE CONTRACTOR TO GROUP LIKE PLANTS TOGETHER IN EACH BED AS SHOWN IN PLANTING DISTRIBUTION PATTERN DETAIL.
3. ALL BIORETENTION AREAS ARE TO BE MULCHED WITH A 4" LAYER OF DOUBLE SHREDDED HARDWOOD BARK MULCH.
4. PLACEMENT OF THE PLANTING SOIL SHOULD BE IN 12" TO 18" LIFTS THAT ARE LOOSELY COMPACTED (TAMPED LIGHTLY WITH A BACKHOE BUCKET OR TRAVERSED BY DOZER TRACKS.

TYPICAL PLANTING FOR BIORETENTION AREAS

NOT TO SCALE

TYPICAL CLUMP BIORETENTION PLANTING DISTRIBUTION PATTERN

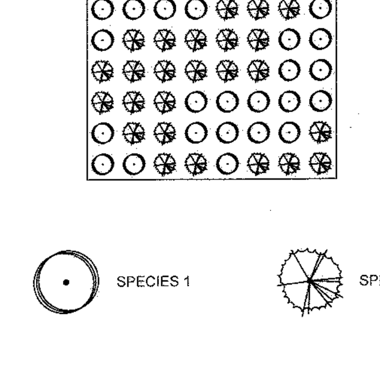

NOTE:
NATURALLY OCCURRING POPULATIONS TEND TO BE FOUND IN INFORMAL GROUPINGS. A CLUSTER OF PLANTS IS REALLY A MOSAIC OF DIFFERENT SPECIES GROUPS. THE OBJECTIVE IS TO SELECT THE APPROPRIATE SPECIES AND DISTRIBUTION PATTERN FOR A CHOSEN SITE THAT MIMIC NATURAL PATTERNS.

PLANTING DISTRIBUTION PATTERN DETAIL FOR BIORETENTION AREAS

NOT TO SCALE

SEEDING SPECIFICATIONS

1. PRIOR TO SEEDING, AREA IS TO BE TOPSOILED, FINE GRADED, AND RAKED OF ALL DEBRIS LARGER THAN 2" DIAMETER.
2. PRIOR TO SEEDING, CONSULT MANUFACTURER'S RECOMMENDATIONS AND INSTRUCTIONS.
3. SEEDING RATES:

PERENNIAL RYEGRASS	1/2 LB/1,000 SQ FT
KENTUCKY BLUEGRASS	1 LB/1,000 SQ FT
RED FESCUE	1 1/2 LBS/1,000 SQ FT
SPREADING FESCUE	1 1/2 LBS/1,000 SQ FT
FERTILIZER (20:10:10)	14 LBS/1,000 SQ FT
MULCH	90 LBS/1,000 SQ FT

4. GERMINATION RATES WILL VARY AS TO TIME OF YEAR FOR SOWING. CONTRACTOR TO IRRIGATE SEEDED AREA UNTIL AN ACCEPTABLE STAND OF COVER IS ESTABLISHED BY OWNER.

SUBDIVISION NAME: MONTEVIDEO CROSSING
PARCEL A
SECTION/AREA: N/A
PLAT # 23695
WATER CODE: N/A
SEWER CODE: N/A

OWNER: PARCEL 16A
MIT MONTEVIDEO, LLC
8850 COLUMBIA PARKWAY
COLUMBIA, MD 21045
CONTACT: MARK LEVY
TEL: (410) 579-2442

DEVELOPER: J.C. BAR PROPERTIES, INC
415 FALLOWFIELD ROAD, SUITE 301
CAMP HILL, PA 17011
CONTACT: JASON MITCHELL
TEL: (717) 761-7801

TAX MAP: 43 GRID: 10 ZONED: B-1
PARCEL: 16A
1ST ELECTION DISTRICT, HOWARD COUNTY, MARYLAND
ZB REF.: 1096m SITE AREA: 4.039 AC
DPZ REF.: SDP-15-069

PROFESSIONAL CERTIFICATION
I, ERIC R. McWILLIAMS, HEREBY CERTIFY THAT THESE DOCUMENTS WERE PREPARED OR APPROVED BY ME, AND THAT I AM A DULY LICENSED LANDSCAPE ARCHITECT UNDER THE LAWS OF THE STATE OF MARYLAND, LICENSE NO. 3697, EXPIRATION DATE: 9/20/2016

CVS pharmacy

TYPE 'B'
REAR DRIVE-THRU

STORE NUMBER: 10528

WASHINGTON BLVD. & MONTEVIDEO RD.
JESSUP, HOWARD COUNTY, MARYLAND

PROJECT TYPE: NEW
DEAL TYPE: LEASE

CS PROJECT NUMBER: 77620

DIG WITH CARE — CALL BEFORE YOU DIG
THE FOLLOWING STATES REQUIRE NOTIFICATION BY EXCAVATORS, DESIGNERS, OR ANY PERSON PREPARING TO DISTURB THE EARTH'S SURFACE ANYWHERE IN THE STATE. IN VIRGINIA, MARYLAND, THE DISTRICT OF COLUMBIA, AND DELAWARE CALL - 811
(WV 1-800-245-4848) (PA 1-800-242-1776) (DC 1-800-257-7777)
(VA 1-800-552-7001) (MD 1-800-257-7777) (DE 1-800-282-8555)

BOHLER ENGINEERING
901 DULANEY VALLEY ROAD, SUITE 801
TOWSON, MARYLAND 21204
Phone: (410) 821-7900
Fax: (410) 821-7987
MD@BohlerEng.com

DEVELOPER
J.C. BAR DEVELOPMENT, LLC
415 FALLOWFIELD ROAD, SUITE 301
CAMP HILL, PA 17011
CONTACT: JASON MITCHELL
TEL : (717) 761-7801

E.R. McWILLIAMS
REGISTERED LANDSCAPE ARCHITECT

REVISIONS

REV:	DATE:	COMMENT:	BY:

CHECKED BY: DMK
DRAWN BY: CRH
DATE: 4/13/16
JOB NUMBER: MD131504
TITLE:
LANDSCAPE NOTES AND DETAILS
SHEET NUMBER:
23 OF 27
COMMENTS:
FILE NO. SDP-15-069

EXTERIOR FINISH SCHEDULE

TAG	MATERIAL / DESCRIPTION	MFR./ STYLE / CAT. NO.	COLOR	NOTES
E1	EIFS/ DEFS	STO LOTUSAN SYSTEM 191 STOLIT, LOTUSAN 1.5	NA06-0029 PEACHY BEIGE	INSTALLED PER MANUF. SPECIFICATIONS
E2	EIFS	STO LOTUSAN SYSTEM 191 STOLIT, LOTUSAN 1.5	NA05-0001 RAFTERTAIL	CORNICE
E3	NOT USED			
E4	STRUCTURAL BRICK	OLDCASTLE ARCHITECTURAL	A-296-R GARNET	HOLCIM ENVIROCORE MORTAR CORAL
E5	PAINT	BENJAMIN MOORE	2174-30 SEDONA CLAY	HOLLOW MTL DOORS/FRAMES, GUTTERS/DOWNSPOUTS
E6	BOLLARD COVER	INNOPLAST BOLLARDGARD BC752 OR BC452	YELLOW	TYP FOR ALL PIPE BOLLARDS
E7	PREFINISHED METAL COPING		COLOR TO MATCH "E2" EIFS	
E8	ALUM STOREFRONT		CLEAR ANODIZED	
E9	ALUM AUTOMATIC DOOR	STANLEY DURAGLIDE 5300	CLEAR ANODIZED	
E10	SPANDREL GLASS		BLACK	
E11	ALUMINUM CANOPY	MAPES ARCHITECTURAL CANOPIES	CLASS II CLEAR ANODIZED	

NOTE: SIGNAGE UNDER SEPARATE PERMIT. REFER TO APPROVED SIGNAGE PACKAGE FROM SIGNAGE VENDOR FOR SIZES AND LOCATIONS OF SIGNS. EXTERIOR SIGNAGE TO BE EXPANSION ANCHORED.

PYLON SIGNAGE EIFS COLOR TO MATCH THE BUILDING EIFS COLOR.

LEGEND

(XX) - RE: EXTERIOR FINISH SCHEDULE

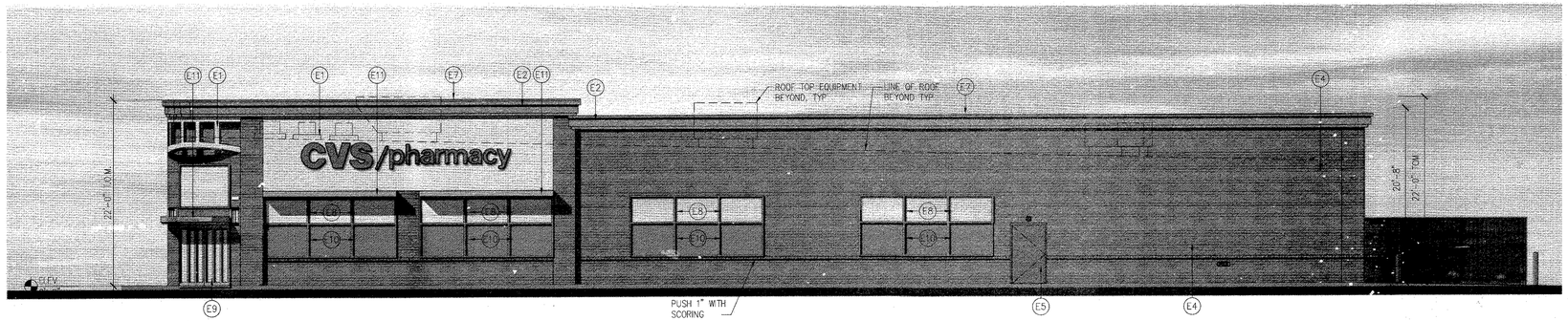

SOUTH-WEST ELEVATION-MONTEVIDEO DR.

SCALE: 1/8"=1'-0"

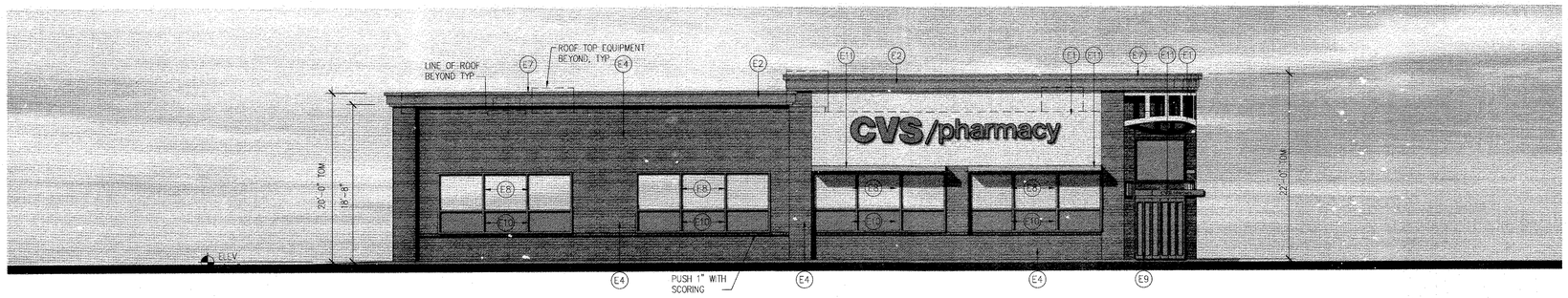

NORTH-WEST ELEVATION-WASHINGTON BLVD.

SCALE: 1/8"=1'-0"

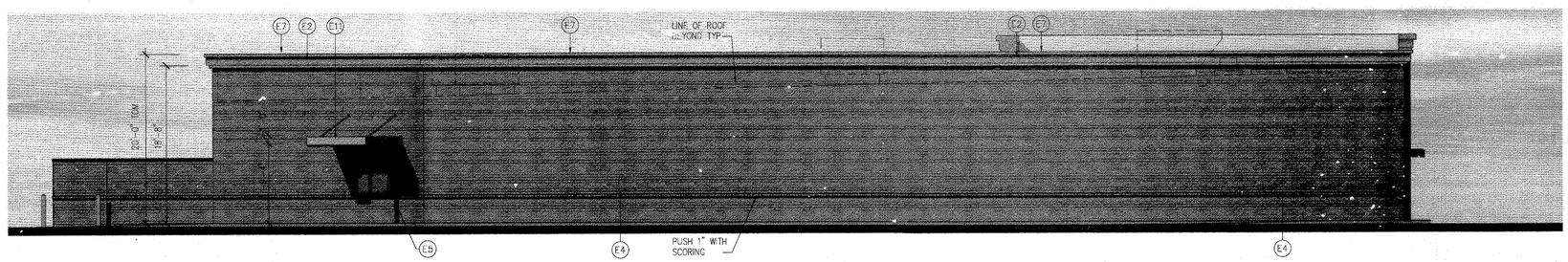

NORTH-EAST ELEVATION

SCALE: 1/8"=1'-0"

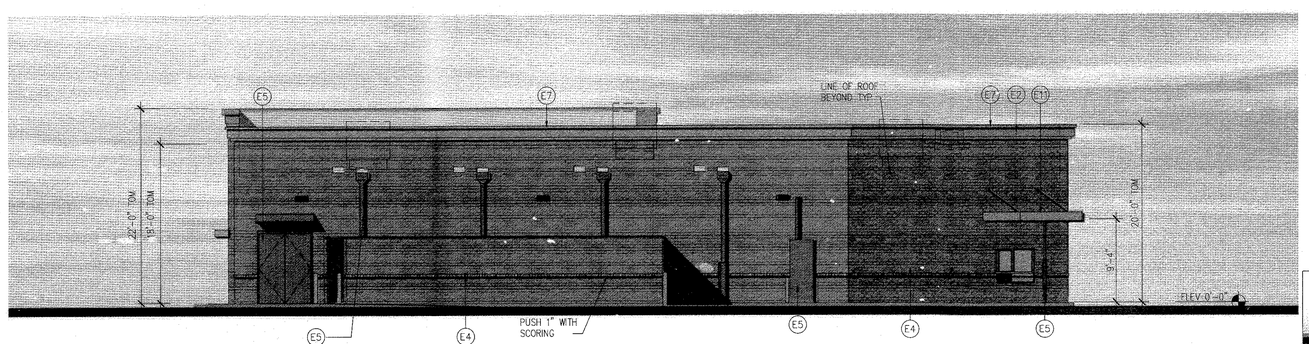

SOUTH-EAST ELEVATION

SCALE: 1/8"=1'-0"

NORR
ARCHITECTS ENGINEERS PLANNERS
719 Griswold Street
Suite 1000
Detroit, MI 48226
www.norr.com

APPROVED: DEPARTMENT OF PLANNING AND ZONING

10-14-16
CHIEF-DEVELOPMENT ENGINEERING DIVISION DATE

11-2-16
CHIEF-DIVISION OF LAND DEVELOPMENT DATE

11-3-16
DIRECTOR DATE

FILE NO. SDP-15-069

J.C. BAR PROPERTIES, INC.

CVS #10528, WASHINGTON BLVD. & MONTEVIDEO RD. JESSUP, MD

cvs/pharmacy

sheet 24 of 27

04.16.2015

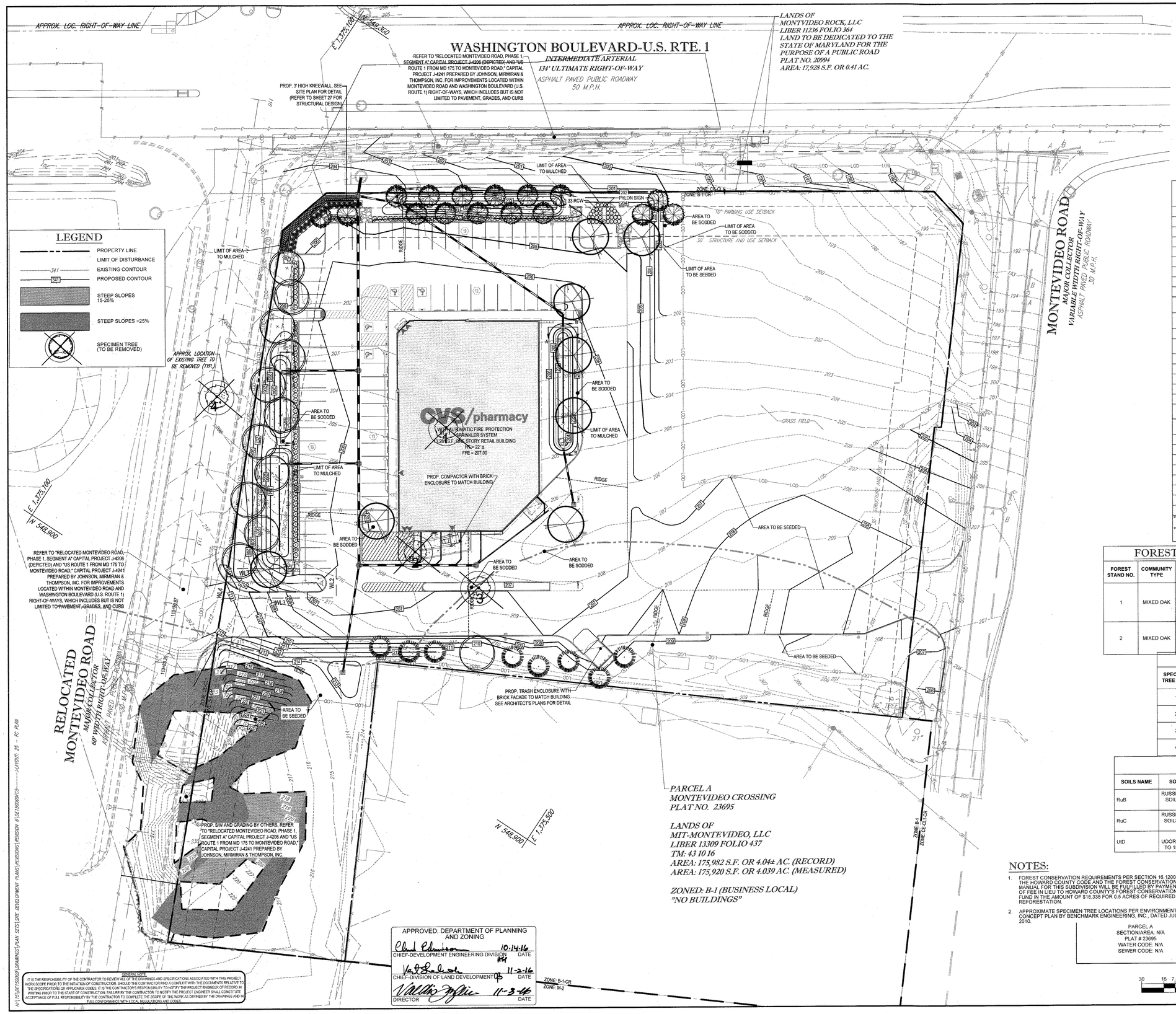

SITE AREA COMPUTATIONS

GROSS TRACT AREA = 4.85 AC.
100 YEAR FLOODPLAIN = 0.00 AC.
SHA FOREST EASEMENT = 0.00 AC.
EXISTING IMPERVIOUS AREA = 2.40 AC.
NET TRACT AREA = 2.45 AC
ZONING = B-1

FOREST CLEARING

FOREST TO BE CLEARED = 1.10 AC

FOREST CONSERVATION SEQUENCE OF CONSTRUCTION

1. PRECONSTRUCTION MEETING SHALL BE HELD BETWEEN DEVELOPER, CONTRACTOR, AND COUNTY INSPECTOR.
2. SEDIMENT CONTROL SHALL BE INSTALLED IN ACCORDANCE WITH GENERAL CONSTRUCTION PLAN FOR SITE. TEMPORARY PROTECTIVE FENCING AND CONSERVATION SIGNAGE SHALL BE INSTALLED AS PER FOREST CONSERVATION PLAN.
3. SITE SHALL BE GRADED, INFRASTRUCTURE INSTALLED, AND STORE CONSTRUCTED. DISTURBED AREAS SHALL BE STABILIZED. PERMANENT SIGNAGE IN POOR CONDITION SHALL BE REPLACED.
4. POST CONSTRUCTION MEETING SHALL BE HELD WITH COUNTY INSPECTOR TO ENSURE COMPLIANCE WITH DEVELOPMENT PLAN. SEDIMENT CONTROL AND TEMPORARY PROTECTIVE FENCING UPON STABILIZATION OF SITE AND COMPLETION OF CONSTRUCTION ACTIVITIES.

FOREST CONSERVATION WORKSHEET

BASIC SITE DATA		ACRES
GROSS SITE ACREAGE		4.04
AREA WITHIN FLOODPLAIN		0
EXISTING IMPERVIOUS AREA*		2.40
NET TRACT AREA		1.60
LAND USE CATEGORY		CIA
INFORMATION FOR CALCULATIONS		ACRES
NET TRACT AREA		1.60
FOREST CONSERVATION THRESHOLD (PERCENTAGE OF NET TRACT AREA)	15.00%	0.2
AFFORESTATION THRESHOLD (PERCENTAGE OF NET TRACT AREA)	15.00%	0.2
EXISTING FOREST ON NET TRACT AREA		0.5
EXISTING FOREST ABOVE FOREST CONSERVATION THRESHOLD		0.0
BREAK-EVEN POINT		0.0
FOREST TO BE CLEARED		0.5
FOREST TO BE RETAINED		0.0
AFFORESTATION CALCULATIONS		ACRES
NO FOREST CLEARING: AFFORESTATION THRESHOLD - EXISTING FOREST		N/A
FOREST CLEARING: (AFF. THRESH. - EX. FOREST) + (FOREST TO BE CLEARED X2)		N/A
REFORESTATION CALCULATIONS		ACRES
FOREST CLEARED ABOVE THRESHOLD 0.3 X 0.25		0.1
FOREST REMOVED BELOW THRESHOLD 0.2 X 2		0.4
FOREST RETAINED ABOVE THRESHOLD		0.0
REFORESTATION REQUIRED		0.5
ON-SITE REFORESTATION/AFFORESTATION PROVIDED		0
OFF-SITE REFORESTATION/AFFORESTATION PROVIDED**		0.5

* THE EXISTING IMPERVIOUS AREA HAS BEEN ESTABLISHED BASED ON WP-10-157, APPROVED BY HOWARD COUNTY ON JUNE 3RD, 2010.
** FOREST CONSERVATION OBLIGATION WILL BE MET BY A PAYMENT FOR FEE-IN-LIEU OF 0.5 ACRES OF REFORESTATION (SEE NOTE BELOW).

FOREST STAND / VEGETATIVE COVER

FOREST STAND NO.	COMMUNITY TYPE	ACREAGE	DOMINANT VEGETATION	GENERAL CONDITION	PRIORITY ACREAGE (EX. IN BUFFERS)
1	MIXED OAK	0.39	WHITE OAK, RED OAK, SCARLET OAK, PIGNUT HICKORY, MULTIFLORA ROSE, ENGLISH IVY, VINCA VINE, JAPANESE HONEYSUCKLE	GOOD	0
2	MIXED OAK	0.74	WHITE OAK, RED OAK, MAPLE-LEAVED VIBUMUM, LOWBUSH BLUEBERRY, VIRGINIA CREEPER, JAPANESE HONEYSUCKLE	VERY GOOD	0

SPECIMEN TREES

SPECIMEN TREE (ST) #	COMMON NAME	BOTANICAL NAME	SIZE DBH	CONDITION	TO REMAIN
1	RED OAK	QUERCUS RUBRA	31.5"	GOOD	NO
2	SCARLET OAK	QUERCUS COCCINEA	33.5"	POOR	NO
3	SCARLET OAK	QUERCUS COCCINEA	34"	FAIR	NO
4	WHITE OAK	QUERCUS ALBA	30"	GOOD	NO

SOILS TABLE

SOILS NAME	SOILS DESCRIPTION	HYDROLOGIC SOILS GROUP	HIGHLY ERODIBLE SOIL
RuB	RUSSETT AND BELTSVILLE SOILS, 2 TO 5 PERCENT SLOPES	C	NO
RuC	RUSSETT AND BELTSVILLE SOILS, 5 TO 10 PERCENT SLOPES	C	NO
UtD	URBAN LAND - UDORTHENTS COMPLEX, 0 TO 15 PERCENT SLOPES	D	NO

NOTES:

1. FOREST CONSERVATION REQUIREMENTS PER SECTION 16.1200 OF THE HOWARD COUNTY CODE AND THE FOREST CONSERVATION MANUAL FOR THIS SUBDIVISION WILL BE FULFILLED BY PAYMENT OF FEE IN LIEU TO HOWARD COUNTY'S FOREST CONSERVATION FUND IN THE AMOUNT OF $16,335 FOR 0.5 ACRES OF REQUIRED REFORESTATION.
2. APPROXIMATE SPECIMEN TREE LOCATIONS PER ENVIRONMENTAL CONCEPT PLAN BY BENCHMARK ENGINEERING, INC., DATED JULY 2010.

PARCEL A
SECTION/AREA: N/A
PLAT # 23695
WATER CODE: N/A
SEWER CODE: N/A

OWNER:	PARCEL 16A MIT MONTEVIDEO, LLC 8850 COLUMBIA PARKWAY COLUMBIA, MD 21045 CONTACT: MARK LEVY TEL: (410) 579-2442
DEVELOPER:	J.C. BAR PROPERTIES, INC. 415 FALLOWFIELD ROAD, SUITE 301 CAMP HILL, PA 17011 CONTACT: JASON MITCHELL TEL: (717) 761-7801
TAX MAP: 43 GRID: 10 ZONED: B-1	PARCEL: 16A 1ST ELECTION DISTRICT, HOWARD COUNTY, MARYLAND ZB REF.: 1096m SITE AREA: 4.039 AC DPZ REF.: SDP-15-069

30 15 7.5 0 30
1"= 30'

I, ERIC R. McWILLIAMS, HEREBY CERTIFY THAT THESE DOCUMENTS WERE PREPARED OR APPROVED BY ME, AND THAT I AM A DULY LICENSED LANDSCAPE ARCHITECT UNDER THE LAWS OF THE STATE OF MARYLAND, LICENSE NO. 3657, EXPIRATION DATE: 9/22/2016.

APPROVED: DEPARTMENT OF PLANNING AND ZONING

Chad Edmondson	10-14-16
CHIEF-DEVELOPMENT ENGINEERING DIVISION	DATE
Kent Sheubrooks	11-2-16
CHIEF-DIVISION OF LAND DEVELOPMENT	DATE
Valdis Lazdins	11-3-16
DIRECTOR	DATE

GENERAL NOTE
IT IS THE RESPONSIBILITY OF THE CONTRACTOR TO REVIEW ALL OF THE DRAWINGS AND SPECIFICATIONS ASSOCIATED WITH THIS PROJECT WORK SCOPE PRIOR TO THE INITIATION OF CONSTRUCTION. SHOULD THE CONTRACTOR FIND A CONFLICT WITH THE DOCUMENTS RELATIVE TO THE SPECIFICATIONS OR APPLICABLE CODES, IT IS THE CONTRACTORS RESPONSIBILITY TO NOTIFY THE PROJECT ENGINEER OF RECORD IN WRITING PRIOR TO THE START OF CONSTRUCTION. FAILURE BY THE CONTRACTOR TO NOTIFY THE PROJECT ENGINEER SHALL CONSTITUTE ACCEPTANCE OF FULL RESPONSIBILITY BY THE CONTRACTOR TO COMPLETE THE SCOPE OF THE WORK AS DEFINED BY THE DRAWINGS AND IN FULL CONFORMANCE WITH LOCAL REGULATIONS AND CODES.

H:\151DE15020\DRAWINGS\PLAN SETS\SITE DEVELOPMENT PLANS\SDP\SDP15-069\REVISION 6\DE15020SP15-069-FC PLAN.DWG LAYOUT: 25 - FC PLAN

CVS pharmacy

TYPE 'B'
REAR DRIVE-THRU

STORE NUMBER: 10528

WASHINGTON BLVD. & MONTEVIDEO RD.
JESSUP, HOWARD COUNTY, MARYLAND

PROJECT TYPE: NEW
DEAL TYPE: LEASE

CS PROJECT NUMBER: 77620

THE FOLLOWING STATES REQUIRE NOTIFICATION BY EXCAVATORS, DESIGNERS, OR ANY PERSON PREPARING TO DISTURB THE EARTH'S SURFACE ANYWHERE IN THE STATE, IN VIRGINIA, MARYLAND, THE DISTRICT OF COLUMBIA, AND DELAWARE CALL - 811
(NV - 1-800-345-4848) (PA - 1-800-242-1776) (DC - 1-800-257-7777) (VA 1-800-552-7001) (MD 1-800-257-7777) (DE 1-800-282-8555)

BOHLER ENGINEERING
901 DULANEY VALLEY ROAD, SUITE 801
TOWSON, MARYLAND 21204
Phone: (410) 821-7900
Fax: (410) 821-7987
MD@BohlerEng.com

DEVELOPER
J.C. BAR DEVELOPMENT, LLC

415 FALLOWFIELD ROAD, SUITE 301
CAMP HILL, PA 17011
CONTACT: JASON MITCHELL
TEL : (717) 761-7801

E.R. McWILLIAMS
REGISTERED LANDSCAPE ARCHITECT

REVISIONS

REV:	DATE:	COMMENT:	BY:

CHECKED BY: DMK
DRAWN BY: CRH
DATE: 4/13/16
JOB NUMBER: MD131504

TITLE: FOREST CONSERVATION PLAN

SHEET NUMBER:
25 OF 27

COMMENTS:
FILE NO. SDP-15-069

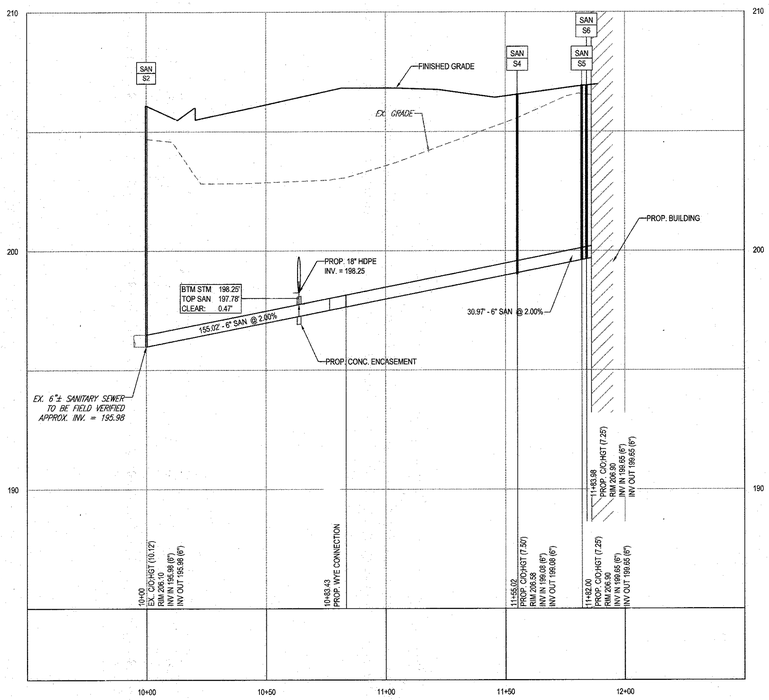

SANITARY 'A' PROFILE

SCALE: 1"= 30 ' HORIZONTAL
1"= 3 ' VERTICAL

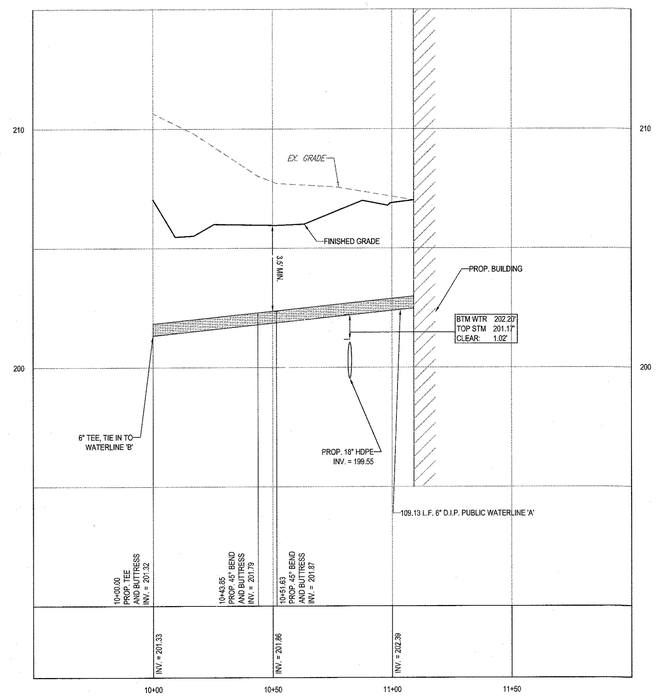

WATERLINE 'A'

SCALE: 1"= 30 ' HORIZONTAL
1"= 3 ' VERTICAL

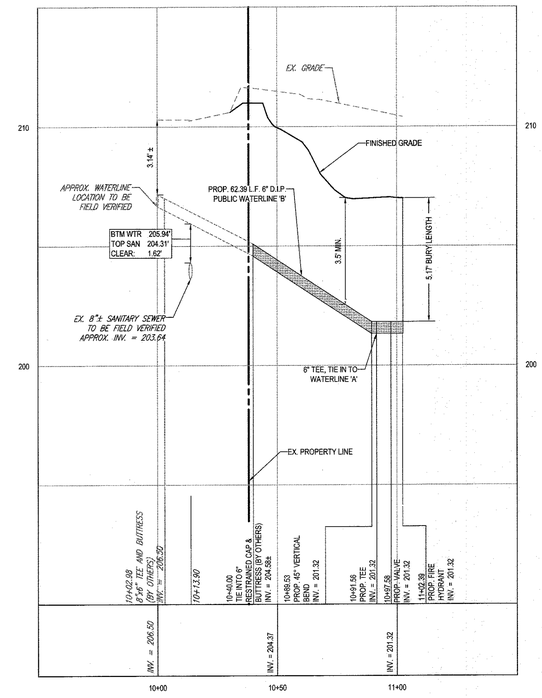

WATERLINE 'B'

SCALE: 1"= 30 ' HORIZONTAL
1"= 3 ' VERTICAL

NOTES:
REFER TO AASHTO - T - 180 SPECIFICATIONS FOR PIPES IN FILE.

OWNER:	PARCEL 16A MIT MONTEVIDEO, LLC 8850 COLUMBIA PARKWAY COLUMBIA, MD 21045 CONTACT: MARK LEVY TEL: (410) 579-2442
DEVELOPER:	J.C. BAR PROPERTIES, INC 415 FALLOWFIELD ROAD, SUITE 301 CAMP HILL, PA 17011 CONTACT: JASON MITCHELL TEL: (717) 761-7801
TAX MAP: 43 GRID: 10 ZONED: B-1 PARCEL: 16A 1ST ELECTION DISTRICT, HOWARD COUNTY, MARYLAND ZB REF.: 1096m SITE AREA: 4.039 AC DPZ REF.: SDP-15-069	

SUBDIVISION NAME: MONTEVIDEO CROSSING
PARCEL A
SECTION/AREA: N/A
PLAT # 23695
WATER CODE: N/A
SEWER CODE: N/A

APPROVED: DEPARTMENT OF PLANNING AND ZONING

Chad Edmondson	10-14-16
CHIEF-DEVELOPMENT ENGINEERING DIVISION	DATE
Kent Sheubrooks (for)	11-2-16
CHIEF-DIVISION OF LAND DEVELOPMENT	DATE
Valdis Lazdins	11-3-16
DIRECTOR	DATE

GENERAL NOTE
IT IS THE RESPONSIBILITY OF THE CONTRACTOR TO REVIEW ALL OF THE DRAWINGS AND SPECIFICATIONS ASSOCIATED WITH THIS PROJECT WORK SCOPE PRIOR TO THE INITIATION OF CONSTRUCTION. SHOULD THE CONTRACTOR FIND A CONFLICT WITH THE DOCUMENTS RELATIVE TO THE SPECIFICATIONS OR APPLICABLE CODES, IT IS THE CONTRACTOR'S RESPONSIBILITY TO NOTIFY THE PROJECT ENGINEER OF RECORD IN WRITING PRIOR TO THE START OF CONSTRUCTION. FAILURE BY THE CONTRACTOR TO NOTIFY THE PROJECT ENGINEER SHALL CONSTITUTE ACCEPTANCE OF FULL RESPONSIBILITY BY THE CONTRACTOR TO COMPLETE THE SCOPE OF THE WORK AS DEFINED BY THE DRAWINGS AND IN FULL CONFORMANCE WITH LOCAL REGULATIONS AND CODES.

PROFESSIONAL CERTIFICATION
I, DAVID M. KUKLISH, P.E., HEREBY CERTIFY THAT THESE DOCUMENTS WERE PREPARED OR APPROVED BY ME, AND THAT I AM A DULY LICENSED PROFESSIONAL ENGINEER UNDER THE LAWS OF THE STATE OF MARYLAND, LICENSE NO. 36224, EXPIRATION DATE: 6/19/2018

H:\131504\SDP\MD\DRAWINGS\PLAN SETS\SITE DEVELOPMENT PLANS\REVISIONS\REVISION 6\DEV150069PLS-----\LAYOUT: 26 WATER SEWER PROFILES

CVS pharmacy

TYPE 'B'
REAR DRIVE-THRU

STORE NUMBER: 10528

WASHINGTON BLVD. & MONTEVIDEO RD.
JESSUP, HOWARD COUNTY, MARYLAND

PROJECT TYPE: NEW
DEAL TYPE: LEASE

CS PROJECT NUMBER: 77620

THE FOLLOWING STATES REQUIRE NOTIFICATION BY EXCAVATORS, DESIGNERS, OR ANY PERSON PREPARING TO DISTURB THE EARTH'S SURFACE ANYWHERE IN THE STATE. IN VIRGINIA, MARYLAND, THE DISTRICT OF COLUMBIA, AND DELAWARE CALL - 811
(WV 1-800-245-4848) (PA 1-800-242-1776) (DC 1-800-257-7777) (VA 1-800-552-7001) (MD 1-800-257-7777) (DE 1-800-282-8555)

BOHLER ENGINEERING
901 DULANEY VALLEY ROAD, SUITE 801
TOWSON, MARYLAND 21204
Phone: (410) 821-7900
Fax: (410) 821-7987
MD@BohlerEng.com

DEVELOPER
J.C. BAR DEVELOPMENT, LLC

415 FALLOWFIELD ROAD, SUITE 301
CAMP HILL, PA 17011
CONTACT: JASON MITCHELL
TEL : (717) 761-7801

D.M. KUKLISH
PROFESSIONAL ENGINEER
DELAWARE LICENSE NO. 14850
MARYLAND LICENSE NO. 36224
VIRGINIA LICENSE NO. 042202

REVISIONS

REV:	DATE:	COMMENT:	BY:

CHECKED BY:	DMK
DRAWN BY:	CRH
DATE:	4/13/16
JOB NUMBER:	MD131504

TITLE: WATER AND SEWER PROFILES

SHEET NUMBER: 26 OF 27

COMMENTS: FILE NO. SDP-15-069

NOTE:
DIMENSIONS ARE TO THE CENTERLINE OF THE WALL, AND OUTSIDE FACE OF QUIK BRIK AT EACH END U.O.N.

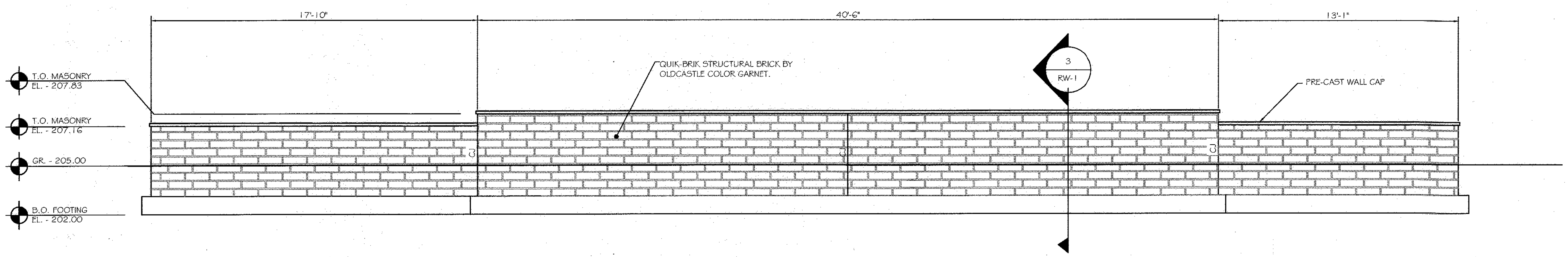

1 EXPANDED WALL ELEVATION

SCALE: 1/4" 1'-0"

NOTE:
DIMENSIONS ARE TO THE CENTERLINE OF THE WALL, AND OUTSIDE FACE OF QUIK BRIK AT EACH END U.O.N.

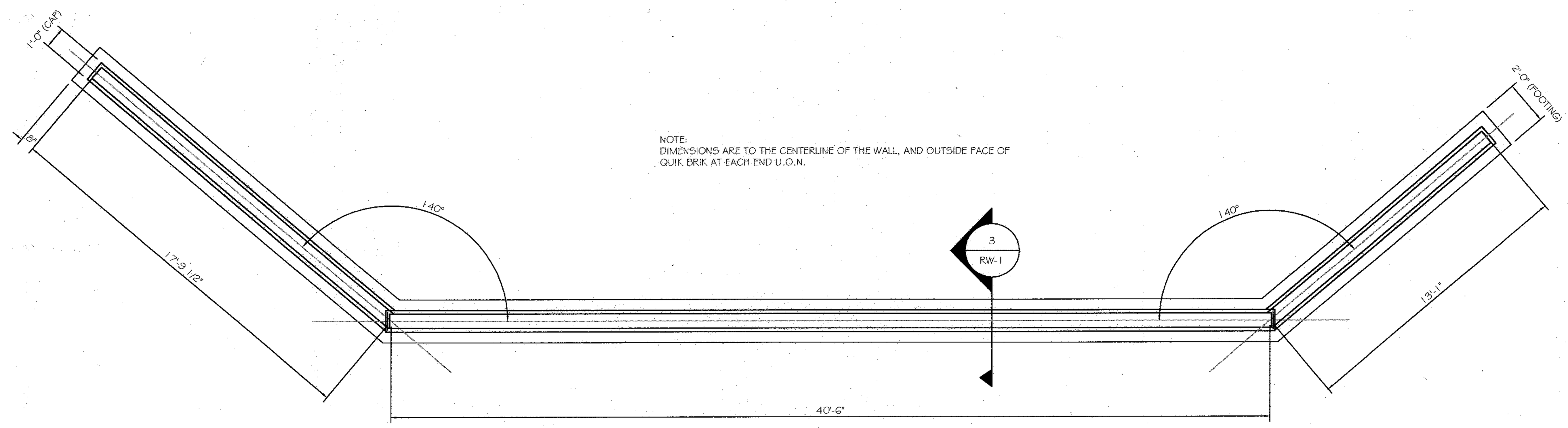

2 WALL LAYOUT PLAN - SEE LAND DEVELOPMENT PLANS FOR ORIENTATION ON SITE

SCALE: 1/4" 1'-0"

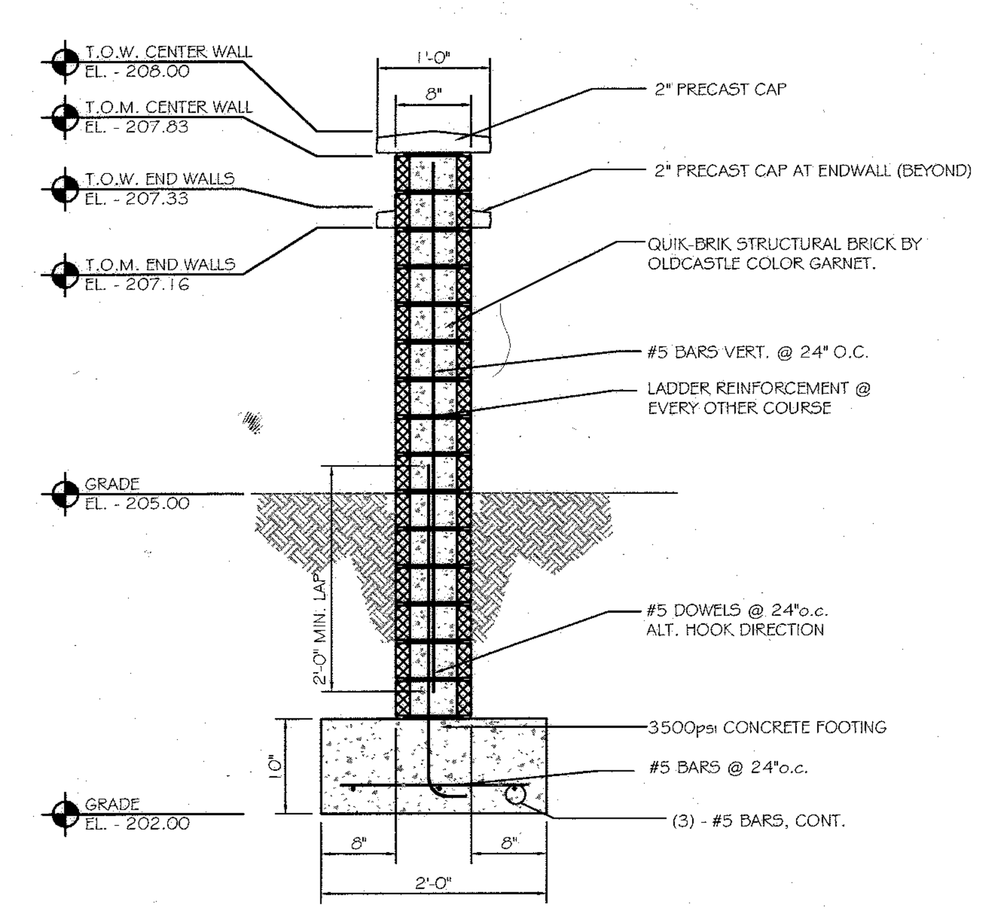

3 WALL SECTION

SCALE: 3/16" 1'-0"

GENERAL NOTES

A. USE PROPERLY DESIGNED SHORING, BRACING, UNDERPINNING, ETC. AS NECESSITATED BY CONDITIONS OR AS REQUIRED. IT IS THE CONTRACTOR'S SOLE RESPONSIBILITY TO DETERMINE ERECTION PROCEDURE AND SEQUENCE TO ENSURE THE SAFETY OF THE BUILDING AND ITS COMPONENT PARTSDURING ERECTION.

B. NO FIELD REVISIONS TO ANY FOUNDATION COMPONENTS SHALL BE MADE WITHOUT PRIOR APPROVAL BY THE ENGINEER. THIS INCLUDES (BUT IS NOT LIMITED TO) REVISIONS DUE TO MISLOCATION, MISFIT OR ANY OTHER CONSTRUCTION ERRORS.

C. BRACE ALL WALLS DURING CONSTRUCTION TO PREVENT DAMAGE FROM WIND, WATER, EARTH PRESSURE AND CONSTRUCTION LOADS UNTIL ALL SUPPORTING ELEMENTS ARE IN PLACE AND OF SUFFICIENT STRENGTH.

D. FOUNDATION DRAWINGS ARE TO BE COORDINATED AND USED IN CONJUNCTION WITH ALL OTHER CONSTRUCTION DOCUMENTS OR DRAWINGS.

E. ALL MATERIALS AND WORKMANSHIP SHALL BE IN ACCORDANCE WITH THE INTERNATIONAL BUILDING AND RESIDENTIAL CODES - LATEST ED..

F. QUALITY CONTROL: STANDARDS INCLUDE BY REFERENCE: EXCEPT AS OTHERWISE SPECIFIED, THE FOLLOWING PUBLICATIONS OF THE AMERICAN CONCRETE INSTITUTE ARE HEREBY INCORPORATED IN THIS SPECIFICATION:

"SPECIFICATIONS FOR STRUCTURAL CONCRETE FOR BUILDINGS"	(ACI 301)
"STANDARD PRACTICE FOR DETAILING REINFORCED CONCRETE STRUCTURES"	(ACI 315)
"BUILDING CODE REQUIREMENTS FOR REINFORCED CONCRETE"	(ACI 318)
"RECOMMENDED PRACTICE FOR SELECTING PROPORTIONS FOR CONCRETE"	(ACI 613 AND 613A)
"RECOMMENDED PRACTICE FOR MEASURING, MIXING, AND PLACING CONCRETE"	(ACI 614)
"RECOMMENDED PRACTICE FOR WINTER CONCRETING METHODS"	(ACI 604)
"RECOMMENDED PRACTICE FOR CONCRETE FORMWORK"	(ACI 347)

G. FOUNDATIONS HAVE BEEN DESIGN BASED ON A GEOTECHNICAL INVESTIGATION PREPARED BY:ECS MID-ATLANTIC, LLC DATED MAY 28, 2015. THAT REPORT IS HEREBY MADE PART OF THESE SPECIFICATIONS.

DESIGN VALUES

SOIL WEIGHT(STRATUM II):	120 (PCF)
ACTIVE EARTH PRESSURE K_a:	0.36
PASSIVE EARTH PRESSURE KP:	2.76
FRICTION ANGLE:	28°
BEARING CAPACITY:	2500 PSF

MASONRY

NOTES:

A. NO MASONRY WORK SHALL BE DONE WHEN THE TEMPERATURE IS 40 DEG F OR BELOW AND FALLING OR FREEZING TEMPERATURES ARE PREDICTED WITHIN TWENTY FOUR (24) HOURS, UNLESS ADEQUATE PROTECTION IS PROVIDED.

MATERIALS

A. CONCRETE MASONRY UNITS: SHALL CONFORM TO THE REQUIREMENTS OF ASTM SPECIFICATIONS C-90 FOR HOLLOW LOAD-BEARING NORMAL WEIGHT CONCRETE MASONRY UNITS, GRADE N. FACE DIMENSIONS SHALL BE NOMINAL 4" X 16", UNLESS SPECIFICALLY NOTED OTHERWISE.

B. JOINT REINFORCEMENT:MASONRY JOINT REINFORCEMENT FOR ALL MASONRY COLUMNS SHALL BE SIZED FOR APPROPRIATE WALL THICKNESS TO PROVIDE 5/8" MINIMUM MORTAR COVERAGE ON THE FACES OF MASONRY CAVITY WALLS AND COMPOSITION OF 3/16" DEFORMED SIDE RODS AND 3/16" CROSS RODS. ALL REINFORCEMENT SHALL BE HOT DIP GALVANIZED. PRODUCTS SHALL BE AS MANUFACTURED BY DUR-O-WALL, AA WIRE PRODUCTS, OR EQUAL.

C. CONCRETE BLOCK MORTAR: TYPE M OR S, CONFORMING TO ASTM C-270, COLOR CORAL, ENVIROCORE AS MANUFACTRUERED BY HOLCIM .

INSTALLATION

1. ALL MASONRY:

A. CUTTING:CUTTING SHALL BE DONE WITH A MASONRY SAW.

B. PROTECTION: ALL MATERIAL AND WALLS SHALL BE COVERED AND PROTECTED AGAINST WEATHER DURING CONSTRUCTION.

C. BOND: SHALL BE COMMON BOND UNLESS OTHERWISE INDICATED.

D. JOINTS: SHALL BE TOOLED TO FORM A TIGHT-TOOLED CONCAVE JOINT.

2. JOINT REINFORCEMENT:

A. SHALL BE INSTALLED CONTINUOUSLY IN HORIZONTAL COURSES AT 8" O.C. VERTICALLY ABOVE GRADE, AND AT 8" VERTICALLY BELOW GRADE.

3. MORTAR:

MORTAR SHALL BE MIXED AND USED IN ACCORDANCE WITH APPLICABLE CODES AND THE DICTATES OF GOOD PRACTICE.

CAST-IN-PLACE CONCRETE

NOTES

A. FOUNDATION STRUCTURE IS BASED ON THE USE OF SPREAD FOOTINGS AT A MAXIMUM SOIL PRESSURE OF 2500 POUNDS PER SQUARE FOOT, BEARING IN STRATUM II. THE SUBGRADE SHOULD BE VERIFIED BY A GEOTECHNICAL ENGINEER FOR SUITABILITY. IF FIELD CONDITIONS DO NOT PROVIDE THIS MINIMUM VALUE, THE ENGINEER SHOULD BE NOTIFIED IMMEDIATELY.

B. SHOULD ORGANIC SILT, CLAY POCKETS OR OTHER UNSUITABLE BEARING CONDITIONS BE ENCOUNTERED DURING EXCAVATION, NOTIFY THE ENGINEER BEFORE CONTINUING WITH CONSTRUCTION.

C. UNLESS NOTED OTHERWISE OR REQUIRED BY CONDITIONS SHOWN ON THE DRAWINGS, EXCAVATION FOR THE FOOTINGS SHALL BE SUCH THAT THE BOTTOM OF FOOTING MEASURES 3'-0 MINIMUM BELOW FINISHED ADJACENT GRADE.

D. THE CONTRACTOR MUST PROVIDE SURFACE DRAINAGE AND PUMPS TO PROTECT ALL EXCAVATION FROM FLOODING. FLOODING OF ANY EXCAVATION AFTER APPROVAL OF THE SUBGRADE WILL BE CAUSE FOR COMPLETE RE-PREPARATION AND RE-APPROVAL OF THE SUBGRADE.

E. THE CONTRACTOR SHALL PROVIDE ALL NECESSARY MEASURES TO PREVENT ANY WATER FROM PENETRATING ANY FOOTING OR SUBGRADE BEFORE AND AFTER THE PLACING OF CONCRETE AND UNTIL SUCH SUBGRADES ARE FULLY PROTECTED BY THE PERMANENT BUILDING STRUCTURE.

MATERIALS

A. CEMENT SHALL BE ASTM C-175, TYPE IA AIR-ENTRAINED PORTLAND CEMENT. FINE AGGREGATE SHALL BE CRUSHED STONE OR GRAVEL HAVING HARD DURABLE UNCOATED PARTICLES RANGING IN SIZE FROM 1" DOWN TO 1/4".

B. PROVIDE CONCRETE TO OBTAIN THE FOLLOWING MINIMUM COMPRESSIVE STRENGTH AT 28 DAYS:
1. FOOTINGS 3500 PSI

C. NO SLUMP OVER 4" SHALL BE PERMITTED FOR STRUCTURAL CONCRETE.

D. CONCRETE MATERIALS AND WORKMANSHIP SHALL BE IN ACCORDANCE WITH ACI-318-BUILDING CODE REQUIREMENTS FOR REINFORCED CONCRETE AND ACI-301-SPECIFICATIONS FOR STRUCTURAL CONCRETE FOR BUILDINGS.

E. THE MINIMUM CONCRETE COVER SHALL BE IN ACCORDANCE WITH ACI-318, SECTION 7.7.

F. METAL ACCESSORIES: SPACERS, CHAIRS, TIES, AND OTHER DEVICES NECESSARY FOR PROPERLY PLACING, SPACING, SUPPORTING AND FASTENING REINFORCING STEEL SHALL BE HICO CORP. OF AMERICA OR EQUAL.

G. THE CONTRACTOR IS RESPONSIBLE FOR THE PROPER DESIGN AND CONSTRUCTION OF ALL FORMWORK, SHORING AND RESHORING. PROVIDE COMMERCIAL FORM COATING COMPOUNDS THAT WILL NOT BOND, STAIN OR ADVERSELY AFFECT CONCRETE SURFACES.

REINFORCING STEEL

MATERIALS

A. ALL REINFORCING STEEL SHALL BE BILLET STEEL CONFORMING TO STANDARDS OF ASTM A615, GRADE 60.

B. ALL WELDED WIRE FABRIC SHALL CONFORM TO STANDARDS OF ASTM A185.

C. ALL REINFORCING DETAILS SHALL CONFORM TO "MANUAL OF STANDARD PRACTICE FOR DETAILING REINFORCED CONCRETE STRUCTURES" (ACI 315) UNLESS DETAILED OTHERWISE ON THE STRUCTURAL DRAWINGS.

INSTALLATION

A. FIELD BENDING OF BARS PARTIALLY EMBEDDED IN HARDENED CONCRETE IS NOT ALLOWED UNLESS APPROVED BY THE STRUCTURAL ENGINEER.

B. ALL REINFORCING STEEL SHALL BE FREE OF GREASE, OIL, OR MUD, ETC. AT THE TIME OF CONCRETE PLACEMENT. INTENDED COATINGS SHALL BE PER PLANS OR APPROVED BY ENGINEER.

GENERAL NOTE:
IT IS THE RESPONSIBILITY OF THE CONTRACTOR TO REVIEW ALL OF THE DRAWINGS AND SPECIFICATIONS ASSOCIATED WITH THIS PROJECT WORK SCOPE PRIOR TO THE INITIATION OF CONSTRUCTION. SHOULD THE CONTRACTOR FIND A CONFLICT WITH THE DOCUMENTS RELATIVE TO THE SPECIFICATIONS OR APPLICABLE CODES, IT IS THE CONTRACTOR'S RESPONSIBILITY TO NOTIFY THE PROJECT ENGINEER OF RECORD IN WRITING PRIOR TO THE START OF CONSTRUCTION. FAILURE BY THE CONTRACTOR TO NOTIFY THE PROJECT ENGINEER SHALL CONSTITUTE ACCEPTANCE OF FULL RESPONSIBILITY BY THE CONTRACTOR TO COMPLETE THE SCOPE OF THE WORK AS DEFINED BY THE DRAWINGS AND IN FULL CONFORMANCE WITH LOCAL REGULATIONS AND CODES.

R:\16\PC161034_CAD\PC161034WALL-0------>LAYOUT: 24X36

APPROVED: DEPARTMENT OF PLANNING AND ZONING

10.14.16	
CHIEF-DEVELOPMENT ENGINEERING DIVISION	DATE
11-02-16	
CHIEF-DIVISION OF LAND DEVELOPMENT	DATE
11-3-16	
DIRECTOR	DATE

SUBDIVISION NAME: MONTEVIDEO CROSSING
PARCEL A
SECTION/AREA: N/A
PLAT # 23695
WATER CODE: N/A
SEWER CODE: N/A

OWNER: PARCEL 16A
MIT MONTEVIDEO, LLC
8850 COLUMBIA PARKWAY
COLUMBIA, MD 21045
CONTACT: MARK LEVY
TEL: (410) 579-2442

DEVELOPER: J.C. BAR PROPERTIES, INC
415 FALLOWFIELD ROAD, SUITE 301
CAMP HILL, PA 17011
CONTACT: JASON MITCHELL
TEL: (717) 761-7801

TAX MAP: 43 GRID: 10 ZONED: B-1
PARCEL: 16A
1ST ELECTION DISTRICT, HOWARD COUNTY, MARYLAND
ZB REF.: 1096m SITE AREA: 4.039 AC
DPZ REF.: SDP-15-069

PROFESSIONAL CERTIFICATION
I, FRANK A. COULTER, P.E., HEREBY CERTIFY THAT THESE DOCUMENTS WERE PREPARED OR APPROVED BY ME, AND THAT I AM A DULY LICENSED PROFESSIONAL ENGINEER UNDER THE LAWS OF THE STATE OF MARYLAND, LICENSE NO. 35112, EXPIRATION DATE: 2/20/2018

CVS pharmacy

TYPE 'B'
REAR DRIVE-THRU

STORE NUMBER: 10528

WASHINGTON BLVD. & MONTEVIDEO RD.
JESSUP, HOWARD COUNTY, MARYLAND

PROJECT TYPE: NEW
DEAL TYPE: LEASE

CS PROJECT NUMBER: 77620

THE FOLLOWING STATES REQUIRE NOTIFICATION BY EXCAVATORS, DESIGNERS, OR ANY PERSON PREPARING TO DISTURB THE EARTH'S SURFACE ANYWHERE IN THE STATE. IN VIRGINIA, MARYLAND, THE DISTRICT OF COLUMBIA, AND DELAWARE CALL - 811
(WV 1-800-245-4848) (PA 1-800-242-1776) (DC 1-800-257-7777)
(VA 1-800-552-7001) (MD 1-800-257-7777) (DE 1-800-282-8555)

BOHLER ENGINEERING
1600 MANOR DRIVE, SUITE 200
CHALFONT, PENNSYLVANIA 18914
Phone: (215) 996-9100
Fax: (215) 996-9102
www.BohlerEngineering.com

DEVELOPER
J.C. BAR DEVELOPMENT, LLC

415 FALLOWFIELD ROAD, SUITE 301
CAMP HILL, PA 17011
CONTACT: JASON MITCHELL
TEL : (717) 761-7801

SEAL:
F.A. CO[illegible]
PROFESS[illegible]
MARYLAND [illegible]

REVISIONS

REV:	DATE:	COMMENT:	BY:

CHECKED BY: M.M.C.
DRAWN BY: F.A.C.
DATE: 1/29/2016
JOB NUMBER: PC161034
TITLE: ORNAMENTAL WALL DETAILS
SHEET NUMBER:

27 of 27

COMMENTS:
FILE NO. SDP-15-069