SITE DEVELOPMENT PLAN
KINDLER OVERLOOK II
SINGLE FAMILY LOTS 1-7

SHEET INDEX	
NO.	DESCRIPTION
1	COVER
2	SITE DEVELOPMENT AND GRADING PLAN
3	SEDIMENT AND EROSION CONTROL PLAN, NOTES, DETAILS AND SOILS MAP
4	STORMWATER MANAGEMENT DETAILS

GENERAL NOTES

1. SUBJECT PROPERTY ZONED R-20 PER THE 10-6-2013 COMPREHENSIVE ZONING PLAN.
2. THE EXISTING TOPOGRAPHY IS TAKEN FROM ROAD CONSTRUCTION PLANS F-10-051. ALL VERTICAL CONTROLS ARE BASED ON NAVD83.
3. THE COORDINATES SHOWN HEREON ARE BASED UPON THE HOWARD COUNTY GEODETIC CONTROL WHICH IS BASED UPON THE MARYLAND STATE COORDINATE SYSTEM. HOWARD COUNTY MONUMENT NOS. 41EC AND 41FA WERE USED FOR THIS PROJECT.
4. STORMWATER MANAGEMENT WILL BE PROVIDED VIA ENVIRONMENTAL SITE DESIGN METHODS, USING MICRO-BIORETENTION. ON-LOT FACILITIES WILL BE PRIVATELY OWNED AND MAINTAINED BY THE LOT OWNER. MB-A WILL BE PRIVATELY OWNED BY THE HOMEOWNERS ASSOCIATION, AND WILL BE JOINTLY MAINTAINED BY HOWARD COUNTY AND THE HOMEOWNER'S ASSOCIATION. MB-B WILL BE PRIVATELY OWNED AND MAINTAINED BY THE HOMEOWNERS ASSOCIATION.
5. EXISTING UTILITIES SHOWN WERE TAKEN FROM RECORD DRAWINGS PER CONTRACT #34-4613-D AND F-10-051. IF NECESSARY, CONTRACTOR SHALL ADJUST STRUCTURE TOPS TO MEET SDP GRADES.
6. WETLAND DELINEATIONS PROVIDED BY WILDMAN ENVIRONMENTAL SERVICES DATED DECEMBER 17, 2006 AND REVISED IN JULY, 2007 AND BY ECO-SCIENCE PROFESSIONALS, INC. DECEMBER, 2008 WERE APPROVED FOR THE KINDLER OVERLOOK II SITE AS PART OF F-10-051. THERE ARE NO WETLANDS, WETLANDS BUFFERS, STREAMS, STREAM BUFFERS, STEEP SLOPES OR 100-YEAR FLOODPLAIN ON LOTS 1-7.
7. THIS PLAN HAS BEEN PREPARED IN ACCORDANCE WITH THE PROVISIONS OF SECTION 16.124 OF THE HOWARD COUNTY CODE AND THE LANDSCAPE MANUAL.
8. FINANCIAL SURETY FOR THE REQUIRED LANDSCAPING WAS POSTED AS PART OF THE DPW DEVELOPER'S AGREEMENT FOR F-10-051 IN THE AMOUNT OF $5,700.00 FOR 19 SHADE TREES.
9. TO THE BEST OF OUR KNOWLEDGE THERE ARE NO CEMETERIES ON THIS PROPERTY. THERE ARE NO HISTORIC STRUCTURES ON THE SITE.
10. THIS PROJECT COMPLIED WITH THE REQUIREMENTS OF SECTION 16.1200 OF THE HOWARD COUNTY CODE FOR FOREST CONSERVATION UNDER F-10-051 BY MEETING THE TOTAL (2.83 AC) OBLIGATION WITH ON-SITE RETENTION OF 0.97 AC. OF NET TRACT AREA FOREST WITHIN A FOREST CONSERVATION EASEMENT, AND OFFSITE PLANTING OF 1.86 ACRES WITHIN THE FOREST MITIGATION BANK LOCATED WITHIN THE McKENDREE SPRINGS SUBDIVISION (F-09-108). FINANCIAL SURETY FOR THE OFF-SITE PLANTING WAS POSTED AS PART OF THE DPW DEVELOPERS AGREEMENT FOR McKENDREE SPRINGS (F-09-108). AN ADDITIONAL 0.74 ACRES WAS RETAINED ON OPEN SPACE LOT 8 AS A FOREST BANK UNDER F-10-051.
11. UNLESS NOTED AS "PRIVATE", ALL EASEMENTS ARE PUBLIC.
12. BRL INDICATES ZONING BUILDING RESTRICTION LINE, OTHER RESTRICTIONS MAY APPLY.
13. IN ACCORDANCE WITH SECTION 128 OF THE HOWARD COUNTY ZONING REGULATIONS; BAY WINDOWS, CHIMNEYS OR EXTERIOR STAIRWAYS NOT MORE THAN 16 FEET IN WIDTH MAY PROJECT NOT MORE THAN 4 FEET INTO ANY SETBACKS; PORCHES OR DECKS, OPEN OR ENCLOSED MAY PROJECT NOT MORE THAN 10 FEET INTO THE FRONT OR REAR YARD SETBACK.
14. ANY DAMAGE TO THE COUNTY'S RIGHT-OF-WAY SHALL BE CORRECTED AT THE BUILDERS EXPENSE.
15. NO GRADING, REMOVAL OF VEGETATIVE COVER OR TREES, PAVING AND NEW STRUCTURES SHALL BE PERMITTED WITHIN THE REQUIRED WETLANDS, STREAM(S) OR THEIR BUFFERS, FOREST CONSERVATION EASEMENT AREAS AND 100 YEAR FLOODPLAIN, IF APPLICABLE.
16. FOR FLAG OR PIPE STEM LOTS, REFUSE COLLECTION, SNOW REMOVAL AND ROAD MAINTENANCE ARE PROVIDED TO THE JUNCTION OF THE FLAG OR PIPE STEM AND ROAD RIGHT OF WAY LINE ONLY AND NOT ONTO THE FLAG OF PIPE STEM LOT DRIVEWAY.
17. DRIVEWAYS SHALL BE PROVIDED PRIOR TO ISSUANCE OF A USE AND OCCUPANCY PERMIT FOR ANY NEW DWELLINGS TO INSURE SAFE ACCESS FOR FIRE AND EMERGENCY VEHICLES PER THE FOLLOWING MINIMUM REQUIREMENTS:
    - a) WIDTH - 12' (16' SERVING MORE THAN ONE RESIDENCE)
    - b) SURFACE - 6" OF COMPACT CRUSHER RUN BASE WITH TAR AND CHIP COATING (1-1/2"MIN.)
    - c) GEOMETRY - MAXIMUM 15% GRADE, MAXIMUM 10% GRADE CHANGE AND MINIMUM 45' TURNING RADIUS.
    - d) STRUCTURES (CULVERTS/BRIDGES) - CAPABLE OF SUPPORTING 25 GROSS TONS (H25 LOADING).
    - e) DRAINAGE ELEMENTS - CAPABLE OF SAFELY PASSING 100 YEAR FLOODPLAIN WITH NO MORE THAN 1 FOOT DEPTH OVER DRIVEWAY.
    - f) STRUCTURE CLEARANCES - MINIMUM 12 FEET.
    - g) MAINTENANCE - SUFFICIENT TO INSURE ALL WEATHER USE.
18. ALL CONSTRUCTION SHALL BE IN ACCORDANCE WITH THE LATEST STANDARDS AND SPECIFICATIONS OF HOWARD COUNTY.
19. ALL WATER METERS SHALL BE SET INSIDE.
20. THE CONTRACTOR SHALL NOTIFY "MISS UTILITY" AT 1-800-257-7777 AT LEAST 48 HOURS PRIOR TO ANY EXCAVATION WORK BEING DONE.
21. FOR DRIVEWAY ENTRANCE DETAIL SEE HOWARD COUNTY STANDARD DETAILS R-6.03.
22. SHC ELEVATIONS SHOWN ARE AT THE PROPERTY LINE OR EASEMENT LINE.
23. THE PRIVATE USE-IN-COMMON MAINTENANCE AGREEMENTS FOR LOTS 1&2, AND 5-7 HAVE BEEN RECORDED IN THE LAND RECORDS OF HOWARD COUNTY AT L 15936 F 068 AND L 15936 F 073.
24. THE STAKING OF FOUNDATIONS PRIOR TO CONSTRUCTION TO ENSURE COMPLIANCE WITH REGULATORY BUILDING RESTRICTION LINES IS RECOMMENDED.
25. DRIVEWAY SLOPES SHOWN ARE AVERAGE. THE SLOPE AT THE OUTSIDE EDGES COULD BE FLATTER OR STEEPER DEPENDING ON GRADE OF ROADWAY.
26. THIS PLAN CONFORMS WITH THE 5th EDITION OF THE HOWARD COUNTY SUBDIVISION AND LAND DEVELOPMENT REGULATIONS AND THE 1993 ZONING REGULATIONS AMENDED BY CB 50-2001. THE BUILDER SHALL APPLY FOR BUILDING PERMITS FOR ALL LOTS AS SHOWN ON THIS SITE DEVELOPMENT PLAN WITHIN FIVE YEARS OF SIGNATURE APPROVAL OF THIS PLAN.
27. OPEN SPACE LOTS 8 AND 10 WERE DEDICATED TO HOWARD COUNTY, MARYLAND DEPARTMENT OF RECREATION AND PARKS ON PLAT 23144
28. ALL SEWER HOUSE CONNECTION SLOPES ARE 2.0% FROM THE PROPERTY LINE TO THE MAIN.
29. THE COMMUNITY MEETING FOR THIS PROJECT WAS HELD ON SITE (7565 OLD COLUMBIA ROAD, LAUREL, MARYLAND, DECEMBER 27, 2006 AT 6:00 P.M.
30. WP-15-157, ASSOCIATED WITH F-10-951 WAS APPROVED NOVEMBER 7, 2014. THIS PETITION WAIVED SECTION 16.144(q), WHICH ESTABLISHED THE DEADLINE TO COMPLETE THE FINAL SUBDIVISION PLAT ORIGINALS. THE APPROVAL WAS SUBJECT TO COMPLETION OF THE REDLINE REVISION TO THE ROAD CONSTRUCTION DRAWINGS BY DECEMBER 22, 2014, SUBMISSION OF THE FINAL PLAT ORIGINALS BY JANUARY 6, 2015, AND PAYMENT OF ANY ADDITIONAL PROCESSING FEES.
31. A PUBLIC HEARING FOR TEMPORARY USE CASE 14-010 FOR 7565 KINDLER OVERLOOK DRIVE WAS CONDUCTED JANUARY 6, 2015. THE STATED PURPOSE OF THE TEMPORARY USE WAS TO ALLOW THE RECORDATION OF THE PLAT TO PRECEDE THE DEMOLITION OF THE EXISTING HOUSE, CREATING A TEMPORARY SETBACK VIOLATION, PENDING THE REQUIRED MDE APPROVALS FOR REMOVAL OF THE UNDERGROUND OIL TANK. UPON RECEIVING MDE APPROVAL, THE TANK WILL BE REMOVED, AND THE HOUSE WILL BE DEMOLISHED. THE APPROVAL WAS GRANTED JANUARY 22, 2015, AND WAS CONDITIONED ON THE FOLLOWING:
    1. THE PETITIONER SHALL COMPLY WITH ALL APPLICABLE FEDERAL, STATE AND COUNTY LAWS AND REGULATIONS.
    2. THE PETITIONER SHALL CONDUCT THE TEMPORARY USE IN SUBSTANTIAL CONFORMANCE WITH THE RECORDED TESTIMONY.

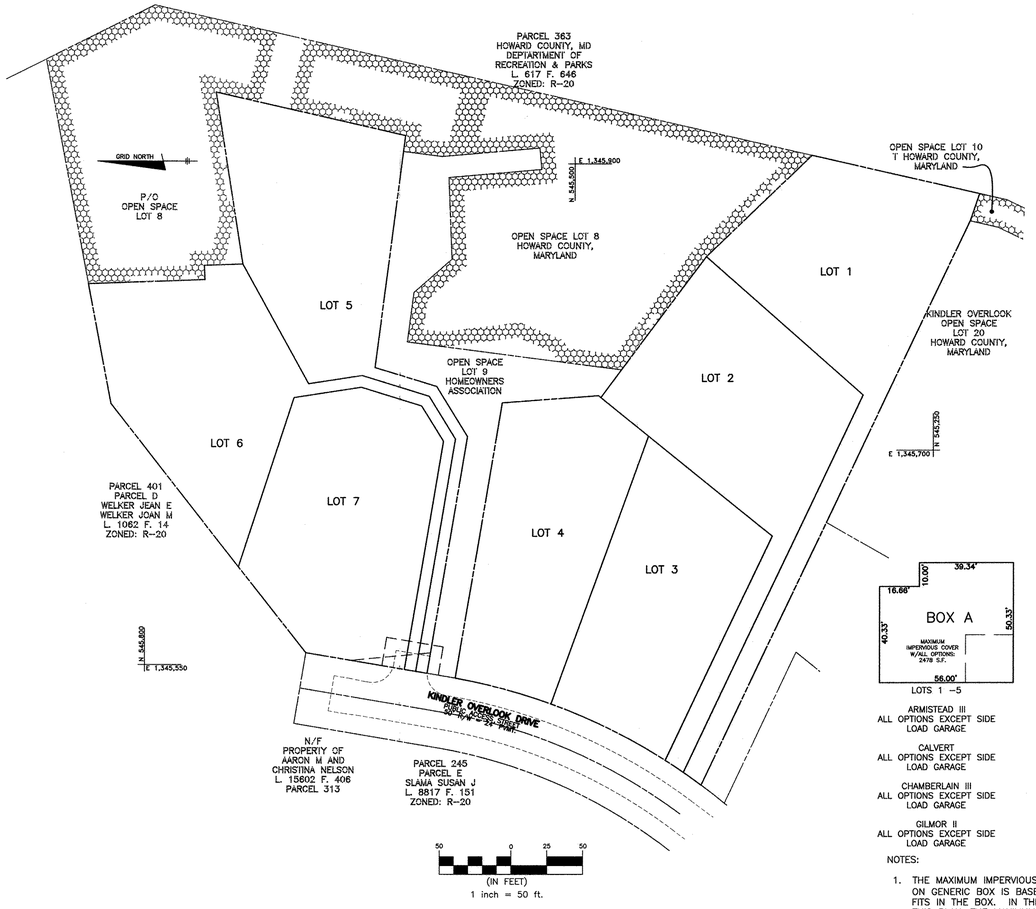

BENCH MARKS-(NAD'83)	
HO.CO. 41EC	ELEV. 430.34
STAMPED DISC SET ON TOP OF 3' DEEP COLUMN OF CONCRETE	
N 543,588.8040	E 1,342,628.7800
HO.CO. 41FA	ELEV. 407.60
STAMPED DISC SET ON TOP OF 3' DEEP COLUMN OF CONCRETE	
N 545210.7590'	E 1344786.9530'

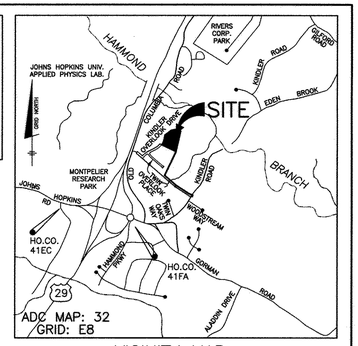

ADC MAP: 32
GRID: E8

VICINITY MAP
SCALE: 1" = 2000'

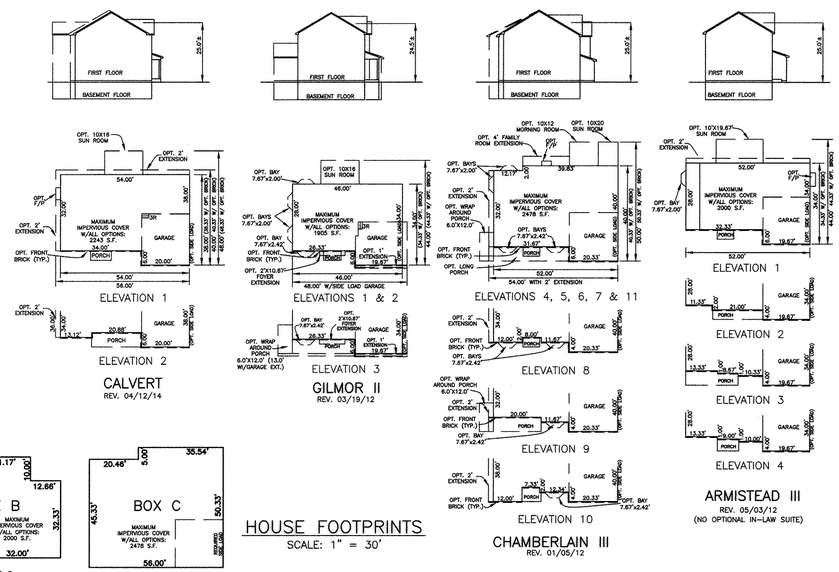

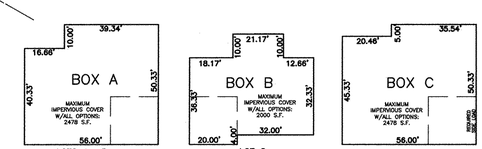

HOUSE FOOTPRINTS
SCALE: 1" = 30'

LOTS 1 -5
ARMISTEAD III
ALL OPTIONS EXCEPT SIDE LOAD GARAGE
CALVERT
ALL OPTIONS EXCEPT SIDE LOAD GARAGE
CHAMBERLAIN III
ALL OPTIONS EXCEPT SIDE LOAD GARAGE
GILMOR II
ALL OPTIONS EXCEPT SIDE LOAD GARAGE

LOT 6
ARMISTEAD III
ALL OPTIONS EXCEPT SIDE LOAD GARAGE
GILMOR II
ALL OPTIONS EXCEPT SIDE LOAD GARAGE

LOT 7
ARMISTEAD III
ALL OPTIONS
MANDATORY SIDE LOAD GARAGE
CALVERT
ALL OPTIONS
MANDATORY SIDE LOAD GARAGE
CHAMBERLAIN III
ALL OPTIONS
MANDATORY SIDE LOAD GARAGE
GILMORE II
ALL OPTIONS
MANDATORY SIDE LOAD GARAGE

NOTES:

1. THE MAXIMUM IMPERVIOUS AREA FOR STORMWATER MANAGEMENT COMPUTATIONS SHOWN ON GENERIC BOX IS BASED ON THE LARGEST HOUSE (INCLUDING ALL OPTIONS) THAT FITS IN THE BOX. IN THE EVENT THAT A HOUSE IS PLACED THAT IS NOT SHOWN ON THIS PLAN, THE MAXIMUM IMPERVIOUS AREA SHOULD BE REVIEWED, AND IF IT EXCEEDS THIS MAXIMUM SHOWN, STORMWATER MANAGEMENT SHOULD BE REDESIGNED.
2. ONLY OPTIONS SHOWN ABOVE FIT WITHIN THE GENERIC BOXES AS SHOWN. SHOULD ADDITIONAL OPTIONS BE SELECTED, A REDLINE TO THE SDP WILL BE NECESSARY.

SITE ANALYSIS DATA CHART

A.) TOTAL PROJECT AREA*	3.24 AC.
B.) AREA OF THIS PLAN SUBMISSION	3.24 AC.
C.) APPROXIMATE LIMIT OF DISTURBANCE	2.07 AC.
D.) PRESENT ZONING:	R-20
E.) PROPOSED USE OF SITE:	RESIDENTIAL SINGLE FAMILY DETACHED UNITS
F.) TOTAL NUMBER OF UNITS ALLOWED AS SHOWN ON FINAL PLAT(S)	7
G.) TOTAL NUMBER OF UNITS PROPOSED	7
H.) APPLICABLE DPZ FILE REFERENCES:	S-07-003 WP-07-068 WP-08-048 P-09-003 WP-10-165 WP-11-090 WP-12-055 WP-13-151 WP-14-036 ECP-14-055, F-10-051
I.) PROPOSED WATER AND SEWER SYSTEMS: X PUBLIC ___ PRIVATE	
J.) PREVIOUS OPEN SPACE (F-10-051): *	REQUIRED: 0.61 AC. PROVIDED: 1.67 AC. (CREDITED)

* PROJECT AREA IS LIMITED TO LOTS 1-7

APPROVED: DEPARTMENT OF PLANNING AND ZONING

CHIEF, DIVISION OF LAND DEVELOPMENT	DATE 3/16/15
CHIEF, DEVELOPMENT ENGINEERING DIVISION	DATE 3·13·15
DIRECTOR	DATE 3/23/15

STORMWATER MANAGEMENT PRACTICES CHART

LOT	STREET ADDRESS	MICRO-BIORETENTION M-6 (NUMBER)
1	7583 KINDLER OVERLOOK DRIVE	1
2	7579 KINDLER OVERLOOK DRIVE	1
3	7575 KINDLER OVERLOOK DRIVE	1
4	7571 KINDLER OVERLOOK DRIVE	1
5	7567 KINDLER OVERLOOK DRIVE	1
6	7563 KINDLER OVERLOOK DRIVE	1
7	7559 KINDLER OVERLOOK DRIVE	1

MINIMUM LOT SIZE CHART

LOT NO.	GROSS AREA	PIPESTEM AREA	MINIMUM LOT SIZE
1	22,501 S.F.	4,357 S.F.	18,144 S.F.
2	21,370 S.F.	2,588 S.F.	18,782 S.F.
5	20,171 S.F.	1,977 S.F.	18,194 S.F.
6	20,783 S.F.	2,510 S.F.	18,273 S.F.

ADDRESS CHART

LOT	STREET ADDRESS
1	7583 KINDLER OVERLOOK DRIVE
2	7579 KINDLER OVERLOOK DRIVE
3	7575 KINDLER OVERLOOK DRIVE
4	7571 KINDLER OVERLOOK DRIVE
5	7567 KINDLER OVERLOOK DRIVE
6	7563 KINDLER OVERLOOK DRIVE
7	7559 KINDLER OVERLOOK DRIVE

PERMIT INFORMATION CHART

SUBDIVISION NAME:			SECTION/AREA:	LOT/PARCEL #
KINDLER OVERLOOK II			N/A	PARCEL 386 (LOTS 1-7)
PLAT No.	GRID No.	ZONE	TAX MAP	ELECTION DISTRICT	CENSUS TRACT
23144-23146	18	R-20	41	6th	6068.02

OWNER/BUILDER:
DORSEY FAMILY HOMES
10717-B BIRMINGHAM WAY
WOODSTOCK, MARYLAND 21163
410-463-4771

NO.	DATE	REVISION

BENCHMARK
ENGINEERS ▲ LAND SURVEYORS ▲ PLANNERS
ENGINEERING, INC.
8480 BALTIMORE NATIONAL PIKE ▲ SUITE 315 ▲ ELLICOTT CITY, MARYLAND 21043
(P) 410-465-6105 (F) 410-465-6644
WWW.BEI-CIVILENGINEERING.COM

STATE OF MARYLAND — BLAKE A. MILLER — No. 28376 — PROFESSIONAL ENGINEER — 1-1-15

Professional Certification. I certify that these documents were prepared or approved by me, and that I am a duly licensed professional engineer under the laws of the State of Maryland, License No. 28376, Expiration Date: 1-1-2017.

KINDLER OVERLOOK II
SINGLE FAMILY LOTS 1 thru 7

LOCATION: TAX MAP: 41 GRID: 18 PARCEL: 386
ZONED: R-20
ELECTION DISTRICT NO. 6
HOWARD COUNTY, MARYLAND

TITLE: COVER

DATE: FEBRUARY, 2015 | BEI PROJECT NO. 1962

SCALE: AS SHOWN | SHEET 1 OF 4

SDP-15-022

P:\1962\dwg\8000.dwg, COVER, 2/12/2015 9:59:46 AM, bdixdicon

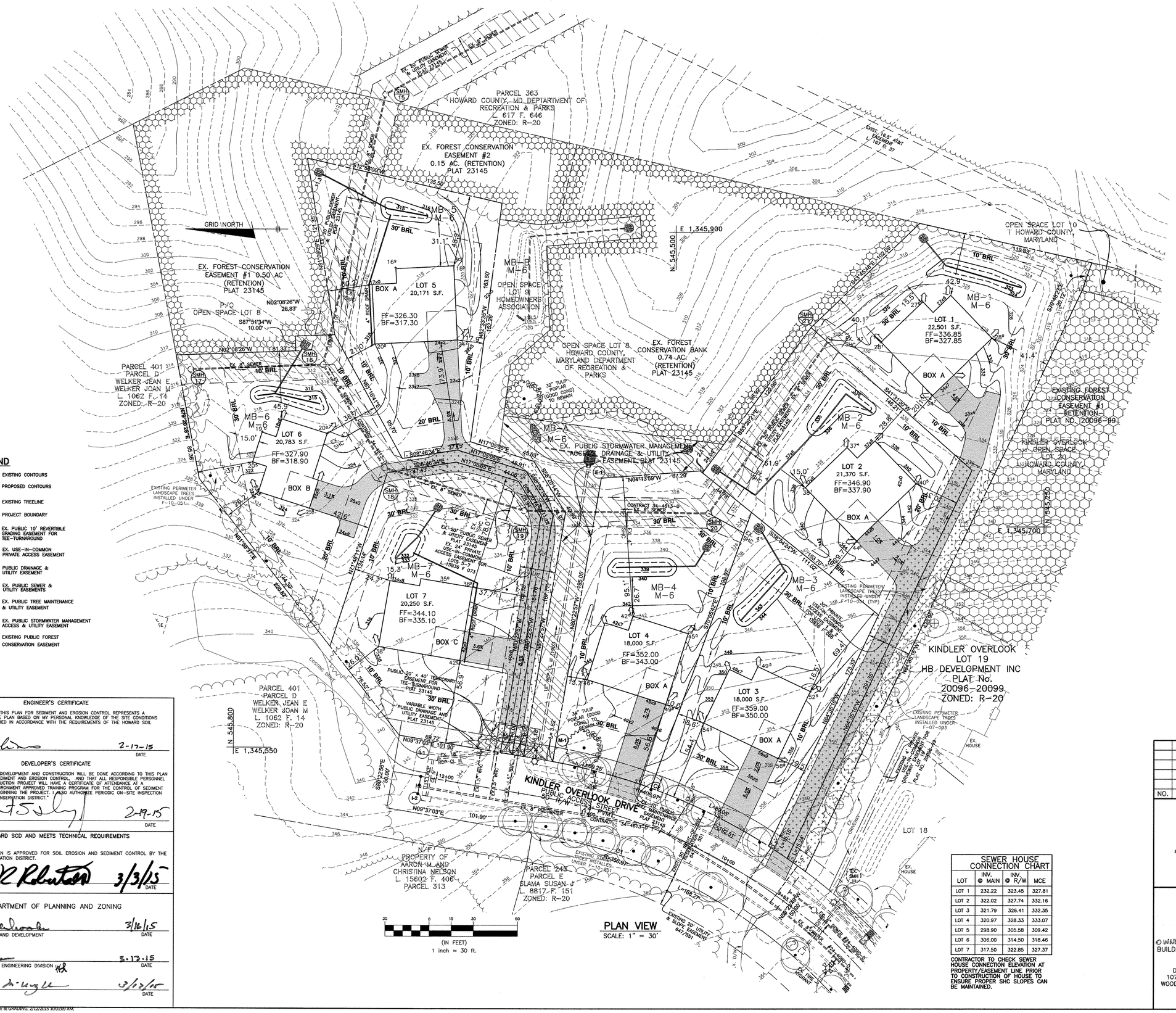

PLAN VIEW
SCALE: 1" = 30'

LEGEND

- EXISTING CONTOURS
- PROPOSED CONTOURS
- EXISTING TREELINE
- PROJECT BOUNDARY
- EX. PUBLIC 10' REVERTIBLE GRADING EASEMENT FOR TEE-TURNAROUND
- EX. USE-IN-COMMON PRIVATE ACCESS EASEMENT
- PUBLIC DRAINAGE & UTILITY EASEMENT
- EX. PUBLIC SEWER & UTILITY EASEMENTS
- EX. PUBLIC TREE MAINTENANCE & UTILITY EASEMENT
- EX. PUBLIC STORMWATER MANAGEMENT ACCESS & UTILITY EASEMENT
- EXISTING PUBLIC FOREST CONSERVATION EASEMENT

ENGINEER'S CERTIFICATE

"I HEREBY CERTIFY THAT THIS PLAN FOR SEDIMENT AND EROSION CONTROL REPRESENTS A PRACTICAL AND WORKABLE PLAN BASED ON MY PERSONAL KNOWLEDGE OF THE SITE CONDITIONS AND THAT IT WAS PREPARED IN ACCORDANCE WITH THE REQUIREMENTS OF THE HOWARD SOIL CONSERVATION DISTRICT."

ENGINEER — DATE 2-17-15

DEVELOPER'S CERTIFICATE

"I/WE CERTIFY THAT ALL DEVELOPMENT AND CONSTRUCTION WILL BE DONE ACCORDING TO THIS PLAN OF DEVELOPMENT FOR SEDIMENT AND EROSION CONTROL, AND THAT ALL RESPONSIBLE PERSONNEL INVOLVED IN THE CONSTRUCTION PROJECT WILL HAVE A CERTIFICATE OF ATTENDANCE AT A DEPARTMENT OF THE ENVIRONMENT APPROVED TRAINING PROGRAM FOR THE CONTROL OF SEDIMENT AND EROSION BEFORE BEGINNING THE PROJECT. I ALSO AUTHORIZE PERIODIC ON-SITE INSPECTION BY THE HOWARD SOIL CONSERVATION DISTRICT."

DEVELOPER — DATE 2-19-15

REVIEWED FOR HOWARD SCD AND MEETS TECHNICAL REQUIREMENTS

THIS DEVELOPMENT PLAN IS APPROVED FOR SOIL EROSION AND SEDIMENT CONTROL BY THE HOWARD SOIL CONSERVATION DISTRICT.

HOWARD SCD — DATE 3/3/15

APPROVED: DEPARTMENT OF PLANNING AND ZONING

CHIEF, DIVISION OF LAND DEVELOPMENT — DATE 3/16/15

CHIEF, DEVELOPMENT ENGINEERING DIVISION — DATE 3-13-15

DIRECTOR — DATE 3/13/15

SEWER HOUSE CONNECTION CHART			
LOT	INV. @ MAIN	INV. @ R/W	MCE
LOT 1	232.22	323.45	327.81
LOT 2	322.02	327.74	332.16
LOT 3	321.79	326.41	332.35
LOT 4	320.97	328.33	333.07
LOT 5	298.90	305.58	309.42
LOT 6	306.00	314.50	318.46
LOT 7	317.50	322.85	327.37

CONTRACTOR TO CHECK SEWER HOUSE CONNECTION ELEVATION AT PROPERTY/EASEMENT LINE PRIOR TO CONSTRUCTION OF HOUSE TO ENSURE PROPER SHC SLOPES CAN BE MAINTAINED.

DETAIL E-3 SUPER SILT FENCE

STANDARD SYMBOL —SSF—

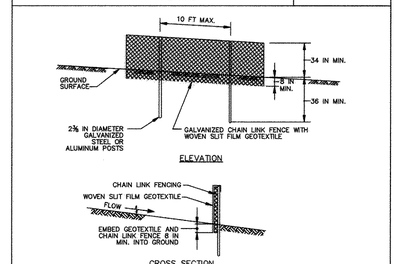

CONSTRUCTION SPECIFICATIONS

1. INSTALL 2⅜ INCH DIAMETER GALVANIZED STEEL POSTS OF 0.095 INCH WALL THICKNESS AND SIX FOOT LENGTH SPACED NO FURTHER THAN 10 FEET APART. DRIVE THE POSTS A MINIMUM OF 36 INCHES INTO THE GROUND.
2. FASTEN 9 GAUGE OR HEAVIER GALVANIZED CHAIN LINK FENCE (2⅜ INCH MAXIMUM OPENING) 42 INCHES IN HEIGHT SECURELY TO THE FENCE POSTS WITH WIRE TIES OR HUG RINGS.
3. FASTEN WOVEN SLIT FILM GEOTEXTILE AS SPECIFIED IN SECTION H-1 MATERIALS, SECURELY TO THE UPSLOPE SIDE OF CHAIN LINK FENCE WITH TIES SPACED EVERY 24 INCHES AT THE TOP AND MID SECTION. EMBED GEOTEXTILE AND CHAIN LINK FENCE A MINIMUM OF 8 INCHES INTO THE GROUND.
4. WHERE ENDS OF THE GEOTEXTILE COME TOGETHER, THE ENDS SHALL BE OVERLAPPED BY 6 INCHES, FOLDED, AND STAPLED TO PREVENT SEDIMENT BY PASS.
5. EXTEND BOTH ENDS OF THE SUPER SILT FENCE A MINIMUM OF FIVE HORIZONTAL FEET UPSLOPE AT 45 DEGREES TO THE MAIN FENCE ALIGNMENT TO PREVENT RUNOFF FROM GOING AROUND THE ENDS OF THE SUPER SILT FENCE.
6. PROVIDE MANUFACTURER CERTIFICATION TO THE INSPECTION/ENFORCEMENT AUTHORITY SHOWING THAT GEOTEXTILE USED MEETS THE REQUIREMENTS IN SECTION H-1 MATERIALS.
7. REMOVE ACCUMULATED SEDIMENT AND DEBRIS WHEN BULGES DEVELOP IN FENCE OR WHEN SEDIMENT REACHES 25% OF FENCE HEIGHT. REPLACE GEOTEXTILE IF TORN. IF UNDERMINING OCCURS, REINSTALL CHAIN LINK FENCING AND GEOTEXTILE.

MARYLAND STANDARDS AND SPECIFICATIONS FOR SOIL EROSION AND SEDIMENT CONTROL

U.S. DEPARTMENT OF AGRICULTURE NATURAL RESOURCES CONSERVATION SERVICE	2011	MARYLAND DEPARTMENT OF ENVIRONMENT WATER MANAGEMENT ADMINISTRATION

DETAIL B-1 STABILIZED CONSTRUCTION ENTRANCE

STANDARD SYMBOL —SCE—

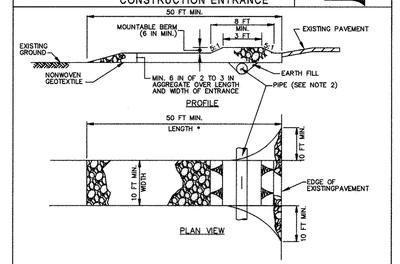

CONSTRUCTION SPECIFICATIONS

1. PLACE STABILIZED CONSTRUCTION ENTRANCE IN ACCORDANCE WITH THE APPROVED PLAN. VEHICLES MUST TRAVEL OVER THE ENTIRE LENGTH OF THE SCE. USE MINIMUM LENGTH OF 50 FEET (*30 FEET FOR SINGLE RESIDENCE LOT). USE MINIMUM WIDTH OF 10 FEET. FLARE SCE 10 FEET MINIMUM AT THE EXISTING ROAD TO PROVIDE A TURNING RADIUS.
2. PIPE ALL SURFACE WATER FLOWING TO OR DIVERTED TOWARD THE SCE UNDER THE ENTRANCE, MAINTAINING POSITIVE DRAINAGE. PROTECT PIPE INSTALLED THROUGH THE SCE WITH A MOUNTABLE BERM WITH 5:1 SLOPES AND A MINIMUM OF 12 INCHES OF STONE OVER THE PIPE. PROVIDE PIPE AS SPECIFIED ON APPROVED PLAN. WHEN THE SCE IS LOCATED AT A HIGH SPOT AND HAS NO DRAINAGE TO CONVEY, A PIPE IS NOT NECESSARY. A MOUNTABLE BERM IS REQUIRED WHEN SCE IS NOT LOCATED AT A HIGH SPOT.
3. PREPARE SUBGRADE AND PLACE NONWOVEN GEOTEXTILE, AS SPECIFIED IN SECTION H-1 MATERIALS.
4. PLACE CRUSHED AGGREGATE (2 TO 3 INCHES IN SIZE) OR EQUIVALENT RECYCLED CONCRETE (WITHOUT REBAR) AT LEAST 6 INCHES DEEP OVER THE LENGTH AND WIDTH OF THE SCE.
5. MAINTAIN ENTRANCE IN A CONDITION THAT MINIMIZES TRACKING OF SEDIMENT. ADD STONE OR MAKE OTHER REPAIRS AS CONDITIONS DEMAND TO MAINTAIN CLEAN SURFACE, MOUNTABLE BERM, AND SPECIFIED DIMENSIONS. IMMEDIATELY REMOVE STONE AND/OR SEDIMENT SPILLED, DROPPED, OR TRACKED ONTO ADJACENT ROADWAY BY VACUUMING, SCRAPING, AND/OR SWEEPING. WASHING ROADWAY TO REMOVE MUD TRACKED ONTO PAVEMENT IS NOT ACCEPTABLE UNLESS WASH WATER IS DIRECTED TO AN APPROVED SEDIMENT CONTROL PRACTICE.

MARYLAND STANDARDS AND SPECIFICATIONS FOR SOIL EROSION AND SEDIMENT CONTROL

U.S. DEPARTMENT OF AGRICULTURE NATURAL RESOURCES CONSERVATION SERVICE	2011	MARYLAND DEPARTMENT OF ENVIRONMENT WATER MANAGEMENT ADMINISTRATION

NO.	DATE	REVISION

BENCHMARK
ENGINEERS ▲ LAND SURVEYORS ▲ PLANNERS
ENGINEERING, INC.
8480 BALTIMORE NATIONAL PIKE A SUITE 315 A ELLICOTT CITY, MARYLAND 21043
(P) 410-465-6105 (F) 410-465-6644
WWW.BEI-CIVILENGINEERING.COM

STATE OF MARYLAND — MICHAEL A. MILLER — No. 28376 — PROFESSIONAL ENGINEER

Professional Certification. I hereby certify that these documents were prepared or approved by me, and that I am a duly licensed professional engineer under the laws of the State of Maryland, License No. 28376, Expiration Date: 1-1-2017. 2-17-15

OWNER\ BUILDER:

DORSEY FAMILY HOMES
10717-B BIRMINGHAM WAY
WOODSTOCK, MARYLAND 21163
410-463-4771

KINDLER OVERLOOK II

SINGLE FAMILY LOTS 1 thru 7

LOCATION: TAX MAP: 41 GRID: 18 PARCEL: 386
ZONED: R-20
ELECTION DISTRICT NO. 6
HOWARD COUNTY, MARYLAND

TITLE: SITE DEVELOPMENT AND GRADING PLAN

DATE: FEBRUARY, 2015	BEI PROJECT NO. 1962
SCALE: AS SHOWN	SHEET 2 OF 4

SDP-15-022

A:\1962\dwg\8000.dwg, SITE & GRADING, 2/12/2015 10:01:09 AM, bdodson

THIS PLAN IS FOR SEDIMENT CONTROL PURPOSES ONLY

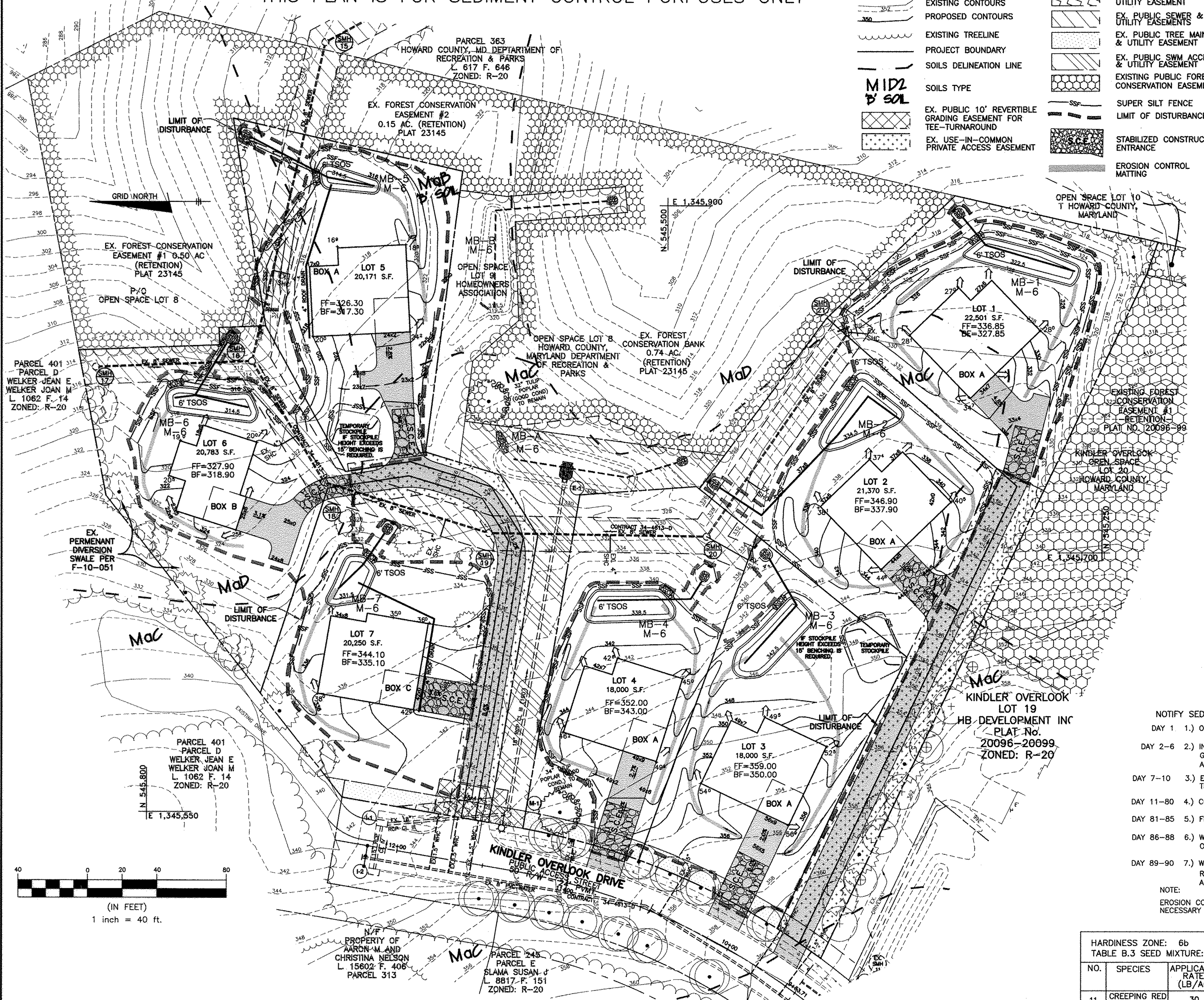

LEGEND

352 / 350	EXISTING CONTOURS / PROPOSED CONTOURS		PUBLIC DRAINAGE & UTILITY EASEMENT
	EXISTING TREELINE		EX. PUBLIC SEWER & UTILITY EASEMENTS
	PROJECT BOUNDARY		EX. PUBLIC TREE MAINTENANCE & UTILITY EASEMENT
	SOILS DELINEATION LINE		EX. PUBLIC SWM ACCESS & UTILITY EASEMENT
MID2 'B' SOIL	SOILS TYPE		EXISTING PUBLIC FOREST CONSERVATION EASEMENT
	EX. PUBLIC 10' REVERTIBLE GRADING EASEMENT FOR TEE-TURNAROUND	SSF	SUPER SILT FENCE
	EX. USE-IN-COMMON PRIVATE ACCESS EASEMENT		LIMIT OF DISTURBANCE
		S.C.E.	STABILIZED CONSTRUCTION ENTRANCE
			EROSION CONTROL MATTING

B-4-2 STANDARDS AND SPECIFICATIONS FOR SOIL PREPARATION, TOPSOILING, AND SOIL AMENDMENTS

A. Soil Preparation
1. Temporary Stabilization
a. Seedbed preparation consists of loosening soil to a depth of 3 to 5 inches by means of suitable agricultural or construction equipment, such as disc harrows or chisel plows or rippers mounted on construction equipment. After the soil is loosened, it must not be rolled or dragged smooth but left in the roughened condition. Slopes 3:1 or flatter are to be tracked with ridges running parallel to the contour of the slope.
b. Apply fertilizer and lime as prescribed on the plans.
c. Incorporate lime and fertilizer into the top 3 to 5 inches of soil by disking or other suitable means.
2. Permanent Stabilization
a. A soil test is required for any earth disturbance of 5 acres or more. The minimum soil conditions required for permanent vegetative establishment are:
i. Soil pH between 6.0 and 7.0.
ii. Soluble salts less than 500 parts per million (ppm).
iii. Soil contains less than 40 percent clay but enough fine grained material (greater than 30 percent silt plus clay) to provide the capacity to hold a moderate amount of moisture. An exception: if lovegrass will be planted, then a sandy soil (less than 30 percent silt plus clay) would be acceptable.
iv. Soil contains 1.5 percent minimum organic matter by weight.
v. Soil contains sufficient pore space to permit adequate root penetration.
b. Application of amendments or topsoil is required if on-site soils do not meet the above conditions.
c. Graded areas must be maintained in a true and even grade as specified on the approved plan, then scarified or otherwise loosened to a depth of 3 to 5 inches.
d. Apply soil amendments as specified on the approved plan or as indicated by the results of a soil test.
e. Mix soil amendments into the top 3 to 5 inches of soil by disking or other suitable means. Rake lawn areas to smooth the surface, remove large objects like stones and branches, and ready the area for seed application. Loosen surface soil by dragging with a heavy chain or other equipment to roughen the surface where site conditions will not permit normal seedbed preparation. Track slopes 3:1 or flatter with tracked equipment leaving the soil in an irregular condition with ridges running parallel to the contour of the slope. Leave the top 1 to 3 inches of soil loose and friable. Seedbed loosening may be unnecessary on newly disturbed areas.

B. Topsoiling
1. Topsoil is placed over prepared subsoil prior to establishment of permanent vegetation. The purpose is to provide a suitable soil medium for vegetative growth. Soils of concern have low moisture content, low nutrient levels, low pH, materials toxic to plants, and/or unacceptable soil gradation.
2. Topsoil salvaged from an existing site may be used provided it meets the standards as set forth in these specifications. Typically, the depth of topsoil to be salvaged for a given soil type can be found in the representative soil profile section in the Soil Survey published by USDA-NRCS.
3. Topsoiling is limited to areas having 2:1 or flatter slopes where:
a. The texture of the exposed subsoil/parent material is not adequate to produce vegetative growth.
b. The soil material is so shallow that the rooting zone is not deep enough to support plants or furnish continuing supplies of moisture and plant nutrients.
c. The original soil to be vegetated contains material toxic to plant growth.
d. The soil is so acidic that treatment with limestone is not feasible.
4. Areas having slopes steeper than 2:1 require special consideration and design.
5. Topsoil Specifications: Soil to be used as topsoil must meet the following criteria:
a. Topsoil must be a loam, sandy loam, clay loam, silt loam, sandy clay loam, or loamy sand. Other soils may be used if recommended by an agronomist or soil scientist and approved by the appropriate approval authority. Topsoil must not be a mixture of contrasting textured subsoils and must contain less than 5 percent by volume of cinders, stones, slag, coarse fragments, gravel, sticks, roots, trash, or other materials larger than 1½ inches in diameter.
b. Topsoil must be free of noxious plants or plant parts such as Bermuda grass, quack grass, Johnson grass, nut sedge, poison ivy, thistle, or others as specified.
c. Topsoil substitutes or amendments, as recommended by a qualified agronomist or soil scientist and approved by the appropriate approval authority, may be used in lieu of natural topsoil.
6. Topsoil Application
a. Erosion and sediment control practices must be maintained when applying topsoil.
b. Uniformly distribute topsoil in a 5 to 8 inch layer and lightly compact to a minimum thickness of 4 inches. Spreading is to be performed in such a manner that sodding or seeding can proceed with a minimum of additional soil preparation and tillage. Any irregularities in the surface resulting from topsoiling or other operations must be corrected in order to prevent the formation of depressions or water pockets.
c. Topsoil must not be placed if the topsoil or subsoil is in a frozen or muddy condition, when the subsoil is excessively wet or in a condition that may otherwise be detrimental to proper grading and seedbed preparation.

C. Soil Amendments (Fertilizer and Lime Specifications)
1. Soil tests must be performed to determine the exact ratios and application rates for both lime and fertilizer on sites having disturbed areas of 5 acres or more. Soil analysis may be performed by a recognized private or commercial laboratory. Soil samples taken for engineering purposes may also be used for chemical analyses.
2. Fertilizers must be uniform in composition, free flowing and suitable for accurate application by appropriate equipment. Manure may be substituted for fertilizer with prior approval from the appropriate approval authority. Fertilizers must all be delivered to the site fully labeled according to the applicable laws and must bear the name, trade name or trademark and warranty of the producer.
3. Lime materials must be ground limestone (hydrated or burnt lime may be substituted except when hydroseeding) which contains at least 50 percent total oxides (calcium oxide plus magnesium oxide). Limestone must be ground to such fineness that at least 50 percent will pass through a #100 mesh sieve and 98 to 100 percent will pass through a #20 mesh sieve.
4. Lime and fertilizer are to be evenly distributed and incorporated into the top 3 to 5 inches of soil by disking or other suitable means.
5. Where the subsoil is either highly acidic or composed of heavy clays, spread ground limestone at the rate of 4 to 8 tons/acre (200-400 pounds per 1,000 square feet) prior to the placement of topsoil.

B-4-3 STANDARDS AND SPECIFICATIONS FOR SEEDING AND MULCHING

A. Seeding
1. Specifications
a. All seed must meet the requirements of the Maryland State Seed Law. All seed must be subject to re-testing by a recognized seed laboratory. All seed used must have been tested within the 6 months immediately preceding the date of sowing such material on any project. Refer to Table B.4 regarding the quality of seed. Seed tags must be available upon request to the inspector to verify type of seed and seeding rate.
b. Mulch alone may be applied between the fall and spring seeding dates only if the ground is frozen. The appropriate seeding mixture must be applied when the ground thaws.
c. Inoculants: The inoculant for treating legume seed in the seed mixtures must be a pure culture of nitrogen fixing bacteria prepared specifically for the species. Inoculants must not be used later than the date indicated on the container. Add fresh inoculants as directed on the package. Use four times the recommended rate when hydroseeding. Note: It is very important to keep inoculant as cool as possible until used. Temperatures above 75 to 80 degrees Fahrenheit can weaken bacteria and make the inoculant less effective.
d. Sod or seed must not be placed on soil which has been treated with soil sterilants or chemicals used for weed control until sufficient time has elapsed (14 days min.) to permit dissipation of phyto-toxic materials.
2. Application
a. Dry Seeding: This includes use of conventional drop or broadcast spreaders.
i. Incorporate seed into the subsoil at the rates prescribed on Temporary Seeding Table B.1, Permanent Seeding Table B.3, or site-specific seeding summaries.
ii. Apply seed in two directions, perpendicular to each other. Apply half the seeding rate in each direction. Roll the seeded area with a weighted roller to provide good seed to soil contact.
b. Drill or Cultipacker Seeding: Mechanized seeders that apply and cover seed with soil.
i. Cultipacking seeders are required to bury the seed in such a fashion as to provide at least 1/4 inch of soil covering. Seedbed must be firm after planting.
ii. Apply seed in two directions, perpendicular to each other. Apply half the seeding rate in each direction.
c. Hydroseeding: Apply seed uniformly with hydroseeder (slurry includes seed and fertilizer).
i. If fertilizer is being applied at the time of seeding, the application rates should not exceed the following: nitrogen, 100 pounds per acre total of soluble nitrogen; P205 (phosphorous), 200 pounds per acre; K20 (potassium), 200 pounds per acre.
ii. Lime: Use only ground agricultural limestone (up to 3 tons per acre may be applied by hydroseeding). Normally, not more than 2 tons are applied by hydroseeding at any one time. Do not use burnt or hydrated lime when hydroseeding.
iii. Mix seed and fertilizer on site and seed immediately and without interruption.
iv. When hydroseeding do not incorporate seed into the soil.

B. Mulching
1. Mulch Materials (in order of preference)
a. Straw consisting of thoroughly threshed wheat, rye, oat, or barley and reasonably bright in color. Straw is to be free of noxious weed seeds as specified in the Maryland Seed Law and not musty, moldy, caked, decayed, or excessively dusty. Note: Use only sterile straw mulch in areas where one species of grass is desired.
b. Wood Cellulose Fiber Mulch (WCFM) consisting of specially prepared wood cellulose processed into a uniform fibrous physical state.
i. WCFM is to be dyed green or contain a green dye in the package that will provide an appropriate color to facilitate visual inspection of the uniformly spread slurry.
ii. WCFM, including dye, must contain no germination or growth inhibiting factors.
iii. WCFM materials are to be manufactured and processed in such a manner that the wood cellulose fiber mulch will remain in uniform suspension in water under agitation and will blend with seed, fertilizer and other additives to form a homogeneous slurry. The mulch material must form a blotter-like ground cover, on application, having moisture absorption and percolation properties and must cover and hold grass seed in contact with the soil without inhibiting the growth of the grass seedlings.
iv. WCFM material must not contain elements or compounds at concentration levels that will be phyto-toxic.
v. WCFM must conform to the following physical requirements: fiber length of approximately 10 millimeters, diameter approximately 1 millimeter, pH range of 4.0 to 8.5, ash content of 1.6 percent maximum and water holding capacity of 90 percent minimum.
2. Application
a. Apply mulch to all seeded areas immediately after seeding.
b. When straw mulch is used, spread it over all seeded areas at the rate of 2 tons per acre to a uniform loose depth of 1 to 2 inches. Apply mulch to achieve a uniform distribution and depth so that the soil surface is not exposed. When using a mulch anchoring tool, increase the application rate to 2.5 tons per acre.
c. Wood cellulose fiber used as mulch must be applied at a net dry weight of 1500 pounds per acre. Mix the wood cellulose fiber with water to attain a mixture with a maximum of 50 pounds of wood cellulose fiber per 100 gallons of water.
3. Anchoring
a. Perform mulch anchoring immediately following application of mulch to minimize loss by wind or water. This may be done by one of the following methods (listed by preference), depending upon the size of the area and erosion hazard:
i. A mulch anchoring tool is a tractor drawn implement designed to punch and anchor mulch into the soil surface a minimum of 2 inches. This practice is most effective on large areas, but is limited to flatter slopes where equipment can operate safely. If used on sloping land, this practice should follow the contour.
ii. Wood cellulose fiber may be used for anchoring straw. Apply the fiber binder at a net dry weight of 750 pounds per acre. Mix the wood cellulose fiber with water at a maximum of 50 pounds of wood cellulose fiber per 100 gallons of water. iii. Synthetic binders such as Acrylic DLR (Agro-Tack), DCA-70, Petroset, Terra Tax II, Terra Tack AR or other approved equal may be used. Follow application rates as specified by the manufacturer. Application of liquid binders needs to be heavier at the edges where wind catches mulch, such as in valleys and on crests of banks. Use of asphalt binders is strictly prohibited.
iv. Lightweight plastic netting may be stapled over the mulch according to manufacturer recommendations. Netting is usually available in rolls 4 to 15 feet wide and 300 to 3,000 feet long.

B-4-8 STANDARDS AND SPECIFICATIONS FOR STOCKPILE AREA

Definition: A mound or pile of soil protected by appropriately designed erosion and sediment control measures.
Purpose: To provide a designated location for the temporary storage of soil that controls the potential for erosion, sedimentation, and changes to drainage patterns.

Conditions Where Practice Applies

Stockpile areas are utilized when it is necessary to salvage and store soil for later use.

Criteria

1. The stockpile location and all related sediment control practices must be clearly indicated on the erosion and sediment control plan.
2. The footprint of the stockpile must be sized to accommodate the anticipated volume of material and based on a side slope ratio no steeper than 2:1. Benching must be provided in accordance with Section B-3 Land Grading.
3. Runoff from the stockpile area must drain to a suitable sediment control practice.
4. Access the stockpile area from the upgrade side.
5. Clear water runoff into the stockpile area must be minimized by use of a diversion device such as an earth dike, temporary swale or diversion fence. Provisions must be made for discharging concentrated flow in a non-erosive manner.
6. Where runoff concentrates along the toe of the stockpile fill, an appropriate erosion/sediment control practice must be used to intercept the discharge.
7. Stockpiles must be stabilized in accordance with the 3/7 day stabilization requirement as well as Standard B-4-1 Incremental Stabilization and Standard B-4-4 Temporary Stabilization.
8. If the stockpile is located on an impervious surface, a liner should be provided below the stockpile to facilitate cleanup. Stockpiles containing contaminated material must be covered with impermeable sheeting.

Maintenance

The stockpile area must continuously meet the requirements for Adequate Vegetative Establishment in accordance with Section B-4 Vegetative Stabilization. Side slopes must be maintained at no steeper than a 2:1 ratio. The stockpile area must be kept free of erosion. If the vertical height of a stockpile exceeds 20 feet for 2:1 slopes, 30 feet for 3:1 slopes, or 40 feet for 4:1 slopes, benching must be provided in accordance with Section B-3 Land Grading.

SEQUENCE OF CONSTRUCTION
(SINGLE LOT CONSTRUCTION)

NOTIFY SEDIMENT CONTROL DIVISION 48 HOURS PRIOR TO START OF CONSTRUCTION

DAY 1 1.) OBTAIN GRADING PERMIT AND REQUEST PRE-CONSTRUCTION MEETING.

DAY 2-6 2.) INSTALL STABILIZED CONSTRUCTION ENTRANCE AND SUPER SILT FENCE. ROUGH GRADE MICRO-BIORETENTION AREAS WITHOUT EXCAVATING FOR PLANTING SOILS, AND INSTALL TEMPORARY STONE OUTLET STRUCTURE.

DAY 7-10 3.) EXCAVATE FOR FOUNDATION, ROUGH GRADE AND STABILIZE IN ACCORDANCE WITH TEMPORARY SEEDBED NOTES.

DAY 11-80 4.) CONSTRUCT HOUSE, BACKFILL AND CONSTRUCT DRIVEWAY.

DAY 81-85 5.) FINAL GRADE AND STABILIZE IN ACCORDANCE WITH PERMANENT SEEDBED NOTES.

DAY 86-88 6.) WHEN THE LOT IS FULLY STABILIZED, REMOVED TSOS AND CONSTRUCT ON-LOT STORMWATER FACILITY.

DAY 89-90 7.) WITH THE APPROVAL OF THE HOWARD COUNTY SEDIMENT CONTROL INSPECTOR, REMOVE SEDIMENT CONTROL DEVICES AND STABILIZE ANY REMAINING DITURBED AREAS.

NOTE:
EROSION CONTROL MATTING SHALL BE PLACED IN SWALES WHERE DEEMED NECESSARY UNTIL VEGETATION IS ESTABLISHED OR SOLID SOD SHOULD BE USED.

PERMANENT SEED MIXTURE

HARDINESS ZONE: 6b TABLE B.3 SEED MIXTURE: 11					FERTILIZER RATE (10-20-20)			LIME RATE
NO.	SPECIES	APPLICATION RATE (LB/AC)	SEEDING DATES	SEEDING DEPTHS (IN)	N	P205	5K20	
11	CREEPING RED FESCUE	30	3/1 to 5/1 & 8/18 to 10/15	1/4-1/2 IN	45 LB PER ACRE (1.0 LB/ 1000 SF)	90 LB PER ACRE (2.0 LB/ 1000 SF)	90 LB PER ACRE (2.0 LB/ 1000 SF)	2 TONS PER ACRE (90 LB/ 1000 SF)
	CHEWINGS FESCUE	30	3/1 to 5/1 & 8/18 to 10/15	1/4-1/2 IN				
	KENTUCKY BLUEGRASS	30	3/1 to 5/1 & 8/18 to 10/15	1/4-1/2 IN				

Table B.1: Temporary Seeding for Site Stabilization

Plant Species	Seeding Rate 1/ lb/ac	Seeding Rate 1/ lb/1000 ft²	Seeding Depth 2/ (inches)	Recommended Seeding Dates by Plant Hardiness Zone 3/ 5b and 6a	6b	7a and 7b
Cool-Season Grasses						
Annual Ryegrass (*Lolium perenne ssp. multiflorum*)	40	1.0	0.5	Mar 15 to May 31; Aug 1 to Sep 30	Mar 1 to May 15; Aug 1 to Oct 15	Feb 15 to Apr 30; Aug 15 to Nov 30
Barley (*Hordeum vulgare*)	96	2.2	1.0	Mar 15 to May 31; Aug 1 to Sep 30	Mar 1 to May 15; Aug 1 to Oct 15	Feb 15 to Apr 30; Aug 15 to Nov 30
Oats (*Avena sativa*)	72	1.7	1.0	Mar 15 to May 31; Aug 1 to Sep 30	Mar 1 to May 15; Aug 1 to Oct 15	Feb 15 to Apr 30; Aug 15 to Nov 30
Wheat (*Triticum aestivum*)	120	2.8	1.0	Mar 15 to May 31; Aug 1 to Sep 30	Mar 1 to May 15; Aug 1 to Oct 15	Feb 15 to Apr 30; Aug 15 to Nov 30
Cereal Rye (*Secale cereale*)	112	2.8	1.0	Mar 15 to May 31; Aug 1 to Oct 31	Mar 1 to May 15; Aug 1 to Nov 15	Feb 15 to Apr 30; Aug 15 to Dec 15
Warm-Season Grasses						
Foxtail Millet (*Setaria italica*)	30	0.7	0.5	Jun 1 to Jul 31	May 16 to Jul 31	May 1 to Aug 14
Pearl Millet (*Pennisetum glaucum*)	20	0.5	0.5	Jun 1 to Jul 31	May 16 to Jul 31	May 1 to Aug 14

NOTES:
1/ Seeding rates for the warm-season grasses are in pounds of Pure Live Seed (PLS). Actual planting rates shall be adjusted to reflect percent seed germination and purity, as tested. Adjustments are usually not needed for the cool-season grasses.

Seeding rates listed above are for temporary seedings, when planted alone. When planted as a nurse crop with permanent seed mixes, use 1/3 of the seeding rate listed above for barley, oats, and wheat. For smaller-seeded grasses (annual ryegrass, pearl millet, foxtail millet), do not exceed more than 5% (by weight) of the overall permanent seeding mix. Cereal rye generally should not be used as a nurse crop, unless planting will occur in very late fall beyond the seeding dates for other temporary seedings. Cereal rye has allelopathic properties that inhibit the germination and growth of other plants. If it must be used as a nurse crop, seed at 1/3 of the rate listed above.

Oats are the recommended nurse crop for warm-season grasses.

2/ For sandy soils, plant seeds at twice the depth listed above.
3/ The planting dates listed are averages for each Zone and may require adjustment to reflect local conditions, especially near the boundaries of the zone.

SOILS LEGEND

SYMBOL	TYPE	K* FACTOR	NAME
GgC	B	.20	GLENELG LOAM – 8 TO 15 PERCENT SLOPES – MODERATELY ERODED
GmC	B	.37	GLENVILLE SILT LOAM – 8 TO 15 PERCENT SLOPES
GoB	B	.37	GLENVILLE-CORDORUS SILT LOAMS – 0 TO 8 PERCENT SLOPES
MaB	B	.24	MANOR LOAM – 3 TO 8 PERCENT SLOPES
MaC	B	.24	MANOR LOAM – 8 TO 15 PERCENT SLOPES
MaD	B	.24	MANOR LOAM – 15 TO 25 PERCENT SLOPES
MkF	B	.24	MANOR BRINKLOW COMPLEX, 25 TO 65 PERCENT SLOPES – VERY ROCKY

SOILS TAKEN FROM NRCS WEB SOIL SURVEY, MARCH 17, 2014
*WHOLE SOIL K FACTOR

SEDIMENT CONTROL NOTES

1. A MINIMUM OF 48 HOURS NOTICE MUST BE GIVEN TO THE HOWARD COUNTY DEPARTMENT OF INSPECTION, LICENSES AND PERMITS, SEDIMENT CONTROL DIVISION PRIOR TO THE START OF ANY CONSTRUCTION, (313-1855).
2. ALL VEGETATIVE AND STRUCTURAL PRACTICES ARE TO BE INSTALLED ACCORDING TO THE PROVISIONS OF THIS PLAN AND ARE TO BE IN CONFORMANCE WITH THE MOST CURRENT "MARYLAND STANDARDS AND SPECIFICATION FOR SOIL EROSION AND SEDIMENT CONTROL", REVISIONS THERETO.
3. FOLLOWING INITIAL SOIL DISTURBANCE OR REDISTURBANCE, PERMANENT OR TEMPORARY STABILIZATION SHALL BE COMPLETED WITHIN: A) 3 CALENDAR DAYS FOR ALL PERIMETER SEDIMENT CONTROL STRUCTURES, DIKES, PERIMETER SLOPES AND ALL SLOPES GREATER THAN 3:1, B) 7 DAYS AS TO ALL OTHER DISTURBED OR GRADED AREAS ON THE PROJECT SITE.
4. ALL DISTURBED AREAS MUST BE STABILIZED WITHIN THE TIME PERIOD SPECIFIED ABOVE IN ACCORDANCE WITH THE 2011 MARYLAND STANDARDS AND SPECIFICATIONS FOR SOIL EROSION AND SEDIMENT CONTROL FOR PERMANENT SEEDING (SEC. B-4-5), TEMPORARY SEEDING (SEC. B-4-4) AND MULCHING (SEC. B-4-3). TEMPORARY STABILIZATION WITH MULCH ALONE CAN ONLY BE DONE WHEN RECOMMENDED SEEDING DATES DO NOT ALLOW FOR PROPER GERMINATION AND ESTABLISHMENT OF GRASSES.
5. ALL SEDIMENT CONTROL STRUCTURES ARE TO REMAIN IN PLACE AND ARE TO BE MAINTAINED IN OPERATIVE CONDITION UNTIL PERMISSION FOR THEIR REMOVAL HAS BEEN OBTAINED FROM THE HOWARD COUNTY SEDIMENT CONTROL INSPECTOR.
6. SITE ANALYSIS:

TOTAL AREA OF SITE (THIS SUBMISSION)	6.34	ACRES
AREA DISTURBED	2.07	ACRES
AREA TO BE ROOFED OR PAVED	0.59	ACRES
AREA TO BE VEGETATIVELY STABILIZED	1.48	ACRES
TOTAL CUT	1710*	CY
TOTAL FILL	1610*	CY
OFFSITE WASTE/BORROW AREA LOCATION	**	

* CUT/FILL QUANTITIES ARE FOR SEDIMENT CONTROL PURPOSES ONLY. CONTRACTOR SHALL PERFORM THEIR OWN EARTHWORK CALCULATIONS FOR SITE BALANCING.
** IT IS THE RESPONSIBILITY OF THE CONTRACTOR TO IDENTIFY THE SPOIL/BORROW SITE AND NOTIFY AND GAIN APPROVAL FROM THE SEDIMENT CONTROL INSPECTOR OF THE SITE AND ITS GRADING PERMIT NUMBER AT THE TIME OF CONSTRUCTION.

7. ANY SEDIMENT CONTROL PRACTICE WHICH IS DISTURBED BY GRADING ACTIVITY FOR PLACEMENT OF UTILITIES MUST BE REPAIRED ON THE SAME DAY OF DISTURBANCE.
8. ADDITIONAL SEDIMENT CONTROL MUST BE PROVIDED, IF DEEMED NECESSARY BY THE HOWARD COUNTY SEDIMENT CONTROL INSPECTOR.
9. ON ALL SITES WITH DISTURBED AREAS IN EXCESS OF 2 ACRES, APPROVAL OF THE INSPECTION AGENCY SHALL BE REQUESTED UPON COMPLETION OF INSTALLATION OF PERIMETER EROSION AND SEDIMENT CONTROLS, BUT BEFORE PROCEEDING WITH ANY OTHER EARTH DISTURBANCE OR GRADING. OTHER BUILDING OR GRADING INSPECTION APPROVALS MAY NOT BE AUTHORIZED UNTIL THIS INITIAL APPROVAL BY THE INSPECTION AGENCY IS MADE.
10. TRENCHES FOR THE CONSTRUCTION OF UTILITIES IS LIMITED TO THREE PIPE LENGTHS OR THAT WHICH CAN BE BACK FILLED AND STABILIZED WITHIN ONE WORKING DAY, WHICHEVER IS SHORTER.
11. ANY CHANGES OR REVISIONS TO THE SEQUENCE OF CONSTRUCTION MUST BE REVIEWED AND APPROVED BY THE PLAN APPROVAL AUTHORITY PRIOR TO PROCEEDING WITH CONSTRUCTION.

NOTE:
* ANY SEDIMENT CONTROL PRACTICE THAT IS DISTURBED BY GRADING ACTIVITY FOR PLACEMENT OF UTILITIES MUST BE REPAIRED ON THE SAME DAY OF DISTURBANCE.
* EITHER TEMPORARY OR PERMANENT STABILIZATION IS TO BE PROVIDED AT THE REQUEST OF THE SEDIMENT CONTROL INSPECTOR OR AT THOSE TIME FRAMES REQUIRED BY THE 2011 MARYLAND STANDARDS AND SPECIFICATIONS FOR SOIL EROSION AND SEDIMENT CONTROL WHICHEVER IS MORE RESTRICTIVE.

DETAIL E-7 TEMPORARY STONE OUTLET STRUCTURE
STANDARD SYMBOL TSOS

MAXIMUM DRAINAGE AREA = ½ ACRE

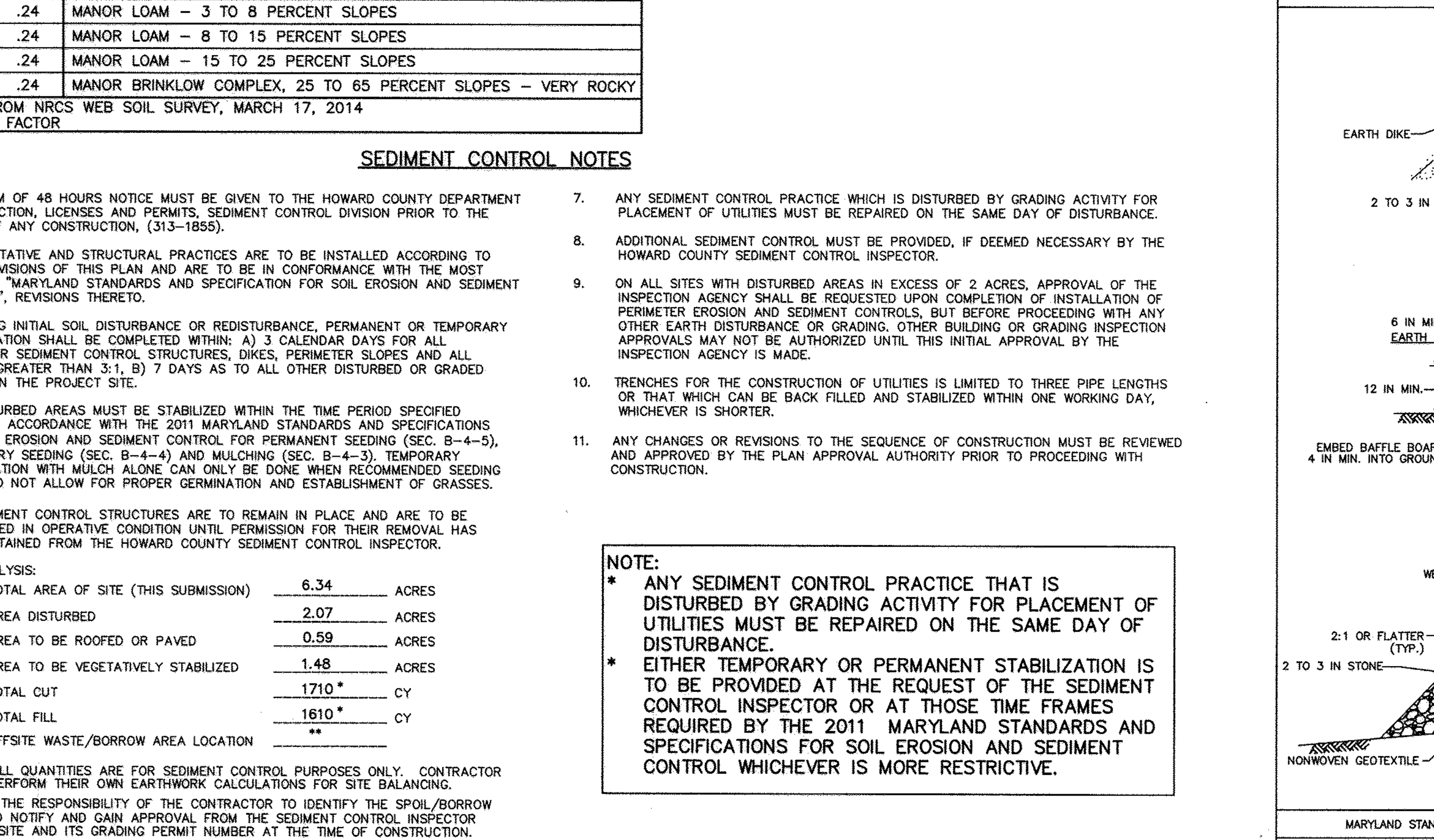

1 OF 2

MARYLAND STANDARDS AND SPECIFICATIONS FOR SOIL EROSION AND SEDIMENT CONTROL

U.S. DEPARTMENT OF AGRICULTURE NATURAL RESOURCES CONSERVATION SERVICE	2011	MARYLAND DEPARTMENT OF ENVIRONMENT WATER MANAGEMENT ADMINISTRATION

DETAIL E-7 TEMPORARY STONE OUTLET STRUCTURE
STANDARD SYMBOL TSOS

CONSTRUCTION SPECIFICATIONS

1. PROVIDE STORAGE VOLUME AS SPECIFIED ON APPROVED PLANS.
2. USE NONWOVEN GEOTEXTILE ON INTERFACE BETWEEN GROUND AND STONE.
3. PERFORATE BAFFLE BOARD WITH 3 ROWS OF 1 INCH DIAMETER HOLES 6 INCHES ON CENTER, EMBED A MINIMUM OF 4 INCHES INTO GROUND, AND EXTEND BAFFEL BOARD MINIMUM OF 12 INCHES INTO EARTH DIKE.
4. USE CLEAN 2 TO 3 INCH STONE OR EQUIVALENT RECYCLED CONCRETE. PLACE WOVEN MONOFILAMENT GEOTEXTILE ON UPSTREAM FACE AND COVER WITH A MINIMUM OF 6 INCHES OF ADDITIONAL STONE.
5. USE NONWOVEN AND WOVEN MONOFILAMENT GEOTEXTILES AS SPECIFIED IN SECTION H-1 MATERIALS.
6. SET WEIR CREST OF STONE 6 INCHES LOWER THAN THE TOP OF EARTH DIKE. USE MINIMUM LENGTH OF 6 FEET FOR WEIR CREST.
7. REMOVE SEDIMENT WHEN IT HAS ACCUMULATED TO WITHIN 6 INCHES OF WEIR CREST. REPLACE GEOTEXTILE AND STONE FACING WHEN STRUCTURE CEASES TO DRAIN. MAINTAIN LINE, GRADE, AND CROSS SECTION.
8. UPON REMOVAL OF STONE OUTLET STRUCTURE, GRADE AREA FLUSH WITH EXISTING GROUND. WITHIN 24 HOURS STABILIZE DISTURBED AREA WITH TOPSOIL, SEED, AND MULCH, OR AS SPECIFIED ON APPROVED PLAN.

2 OF 2

MARYLAND STANDARDS AND SPECIFICATIONS FOR SOIL EROSION AND SEDIMENT CONTROL

U.S. DEPARTMENT OF AGRICULTURE NATURAL RESOURCES CONSERVATION SERVICE	2011	MARYLAND DEPARTMENT OF ENVIRONMENT WATER MANAGEMENT ADMINISTRATION

DETAIL B-4-6-C PERMANENT SOIL STABILIZATION MATTING CHANNEL APPLICATION
STANDARD SYMBOL PSSMC – * lb/ft² (* INCLUDE SHEAR STRESS)

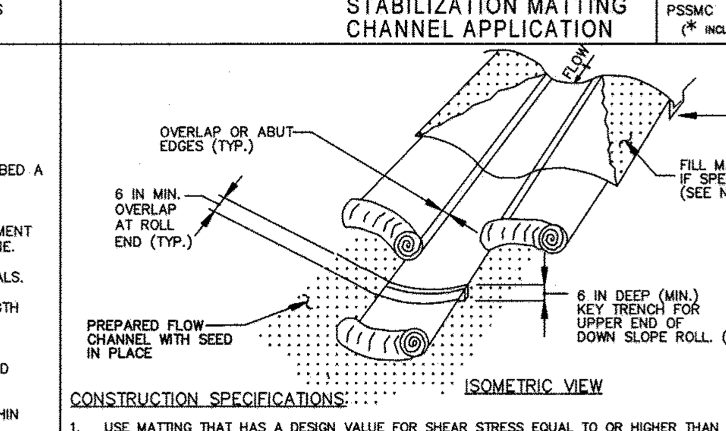

CONSTRUCTION SPECIFICATIONS

1. USE MATTING THAT HAS A DESIGN VALUE FOR SHEAR STRESS EQUAL TO OR HIGHER THAN THE SHEAR STRESS DESIGNATED ON APPROVED PLANS.
2. USE PERMANENT SOIL STABILIZATION MATTING MADE OF OPEN WEAVE SYNTHETIC, NON-DEGRADABLE FIBERS OR ELEMENTS OF UNIFORM THICKNESS AND DISTRIBUTION THROUGHOUT. CHEMICALS USED IN THE MAT MUST BE NON-LEACHING AND NON-TOXIC TO VEGETATION AND SEED GERMINATION AND NON-INJURIOUS TO THE SKIN. IF PRESENT, NETTING MUST BE EXTRUDED PLASTIC WITH A MAXIMUM MESH OPENING OF 2x2 INCHES AND SUFFICIENTLY BONDED OR SEWN ON 2 INCH CENTERS ALONG LONGITUDINAL AXIS OF THE MATERIAL TO PREVENT SEPARATION OF THE NET FROM THE PARENT MATERIAL.
3. SECURE MATTING USING STEEL STAPLES OR WOOD STAKES. STAPLES MUST BE "U" OR "T" SHAPED STEEL WIRE HAVING A MINIMUM GAUGE OF NO. 11 AND NO. 8 RESPECTIVELY. "U" SHAPED STAPLES MUST AVERAGE 1 TO 1 ½ INCHES WIDE AND BE A MINIMUM OF 6 INCHES LONG. "T" SHAPED STAPLES MUST HAVE A MINIMUM 8 INCH MAIN LEG, A MINIMUM 1 INCH SECONDARY LEG, AND MINIMUM 4 INCH HEAD. WOOD STAKES MUST BE ROUGH-SAWN HARDWOOD, 12 TO 24 INCHES IN LENGTH, 1x3 INCH IN CROSS SECTION, AND WEDGE SHAPE AT THE BOTTOM.
4. PERFORM FINAL GRADING, TOPSOIL APPLICATION, SEEDBED PREPARATION, AND PERMANENT SEEDING IN ACCORDANCE WITH SPECIFICATIONS. PLACE MATTING WITHIN 48 HOURS OF COMPLETING SEEDING OPERATIONS, UNLESS END OF WORKDAY STABILIZATION IS SPECIFIED ON THE APPROVED EROSION AND SEDIMENT CONTROL PLAN.
5. UNROLL MATTING IN DIRECTION OF WATER FLOW, CENTERING THE FIRST ROLL ON THE CHANNEL CENTER LINE. WORK FROM CENTER OF CHANNEL OUTWARD WHEN PLACING ROLLS. LAY MATTING SMOOTHLY AND FIRMLY UPON THE SEEDED SURFACE. AVOID STRETCHING THE MATTING.
6. OVERLAP OR ABUT EDGES OF MATTING ROLLS PER MANUFACTURER RECOMMENDATIONS. OVERLAP ROLL ENDS BY 6 INCHES (MINIMUM), WITH THE UPSTREAM MAT OVERLAPPING ON TOP OF THE NEXT DOWNSTREAM MAT.
7. KEY IN THE TOP OF SLOPE END OF MAT 6 INCHES (MINIMUM) BY DIGGING A TRENCH, PLACING THE MATTING ROLL END IN THE TRENCH, STAPLING THE MAT IN PLACE, REPLACING THE EXCAVATED MATERIAL, AND TAMPING TO SECURE THE MAT END IN THE KEY.
8. STAPLE/STAKE MAT IN A STAGGERED PATTERN ON 4 FOOT (MAXIMUM) CENTERS THROUGHOUT AND 2 FOOT (MAXIMUM) CENTERS ALONG SEAMS, JOINTS, AND ROLL ENDS.
9. IF SPECIFIED BY THE DESIGNER OR MANUFACTURER AND DEPENDING ON THE TYPE OF MAT BEING INSTALLED, ONCE THE MATTING IS KEYED AND STAPLED IN PLACE, FILL THE MAT VOIDS WITH TOP SOIL OR GRANULAR MATERIAL AND LIGHTLY COMPACT OR ROLL TO MAXIMIZE SOIL/MAT CONTACT WITHOUT CRUSHING MAT.
10. ESTABLISH AND MAINTAIN VEGETATION SO THAT REQUIREMENTS FOR ADEQUATE VEGETATIVE ESTABLISHMENT ARE CONTINUOUSLY MET IN ACCORDANCE WITH SECTION B-4 VEGETATIVE STABILIZATION.

MARYLAND STANDARDS AND SPECIFICATIONS FOR SOIL EROSION AND SEDIMENT CONTROL

U.S. DEPARTMENT OF AGRICULTURE NATURAL RESOURCES CONSERVATION SERVICE	2011	MARYLAND DEPARTMENT OF ENVIRONMENT WATER MANAGEMENT ADMINISTRATION

ENGINEER'S CERTIFICATE

"I HEREBY CERTIFY THAT THIS PLAN FOR SEDIMENT AND EROSION CONTROL REPRESENTS A PRACTICAL AND WORKABLE PLAN BASED ON MY PERSONAL KNOWLEDGE OF THE SITE CONDITIONS AND THAT IT WAS PREPARED IN ACCORDANCE WITH THE REQUIREMENTS OF THE HOWARD SOIL CONSERVATION DISTRICT."

ENGINEER 2-17-15 DATE

DEVELOPER'S CERTIFICATE

"I/WE CERTIFY THAT ALL DEVELOPMENT AND CONSTRUCTION WILL BE DONE ACCORDING TO THIS PLAN OF DEVELOPMENT FOR SEDIMENT AND EROSION CONTROL, AND THAT ALL RESPONSIBLE PERSONNEL INVOLVED IN THE CONSTRUCTION PROJECT WILL HAVE A CERTIFICATE OF ATTENDANCE AT A DEPARTMENT OF THE ENVIRONMENT APPROVED TRAINING PROGRAM FOR THE CONTROL OF SEDIMENT AND EROSION BEFORE BEGINNING THE PROJECT. I ALSO AUTHORIZE PERIODIC ON-SITE INSPECTION BY THE HOWARD SOIL CONSERVATION DISTRICT."

DEVELOPER 2-19-15 DATE

REVIEWED FOR HOWARD SCD AND MEETS TECHNICAL REQUIREMENTS

THIS DEVELOPMENT PLAN IS APPROVED FOR SOIL EROSION AND SEDIMENT CONTROL BY THE HOWARD SOIL CONSERVATION DISTRICT.

John R Robertson
HOWARD SCD 3/3/15 DATE

APPROVED: DEPARTMENT OF PLANNING AND ZONING

CHIEF, DIVISION OF LAND DEVELOPMENT 3-16-15 DATE

CHIEF, DEVELOPMENT ENGINEERING DIVISION #58 3.13.15 DATE

DIRECTOR 3/13/15 DATE

NO.	DATE	REVISION

BENCHMARK
ENGINEERS ▲ LAND SURVEYORS ▲ PLANNERS
ENGINEERING, INC.
8480 BALTIMORE NATIONAL PIKE ▲ SUITE 315 ▲ ELLICOTT CITY, MARYLAND 21043
(P) 410-465-6105 (F) 410-465-6644
WWW.BEI-CIVILENGINEERING.COM

STATE OF MARYLAND ALICE A. MILLER No. 28376 PROFESSIONAL ENGINEER

Professional Certification. I hereby certify that these documents were prepared or approved by me, and that I am a duly licensed professional engineer under the laws of the State of Maryland, License No. 28376, Expiration Date: 1-1-2017.

OWNER\ BUILDER:
DORSEY FAMILY HOMES
10717-B BIRMINGHAM WAY
WOODSTOCK, MARYLAND 21163
410-463-4771

KINDLER OVERLOOK II
SINGLE FAMILY LOTS 1 thru 7

LOCATION: TAX MAP: 41 GRID: 18 PARCEL: 386
ZONED: R-20
ELECTION DISTRICT NO. 6
HOWARD COUNTY, MARYLAND

TITLE: SEDIMENT AND EROSION CONTROL NOTES, DETAILS AND SOILS MAP

DATE: FEBRUARY, 2015	BEI PROJECT NO. 1962
SCALE: AS SHOWN	SHEET 3 OF 4

SDP-15-022

J:\1962\dwg\8000.dwg, SEC, 2/12/2015 10:02:08 AM, bdodson

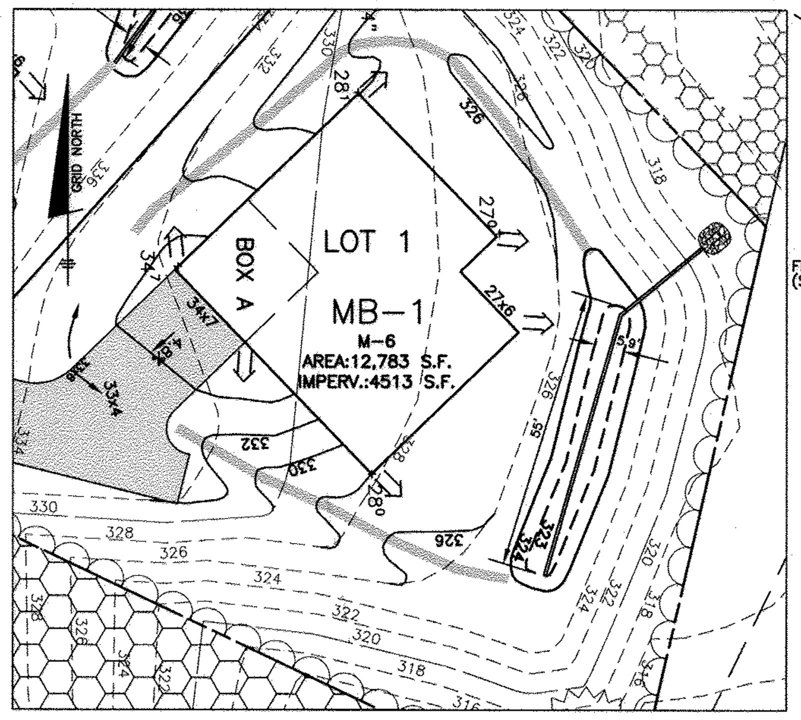

MICRO-BIORETENTION #1 – PLAN VIEW

SCALE: 1" = 30'

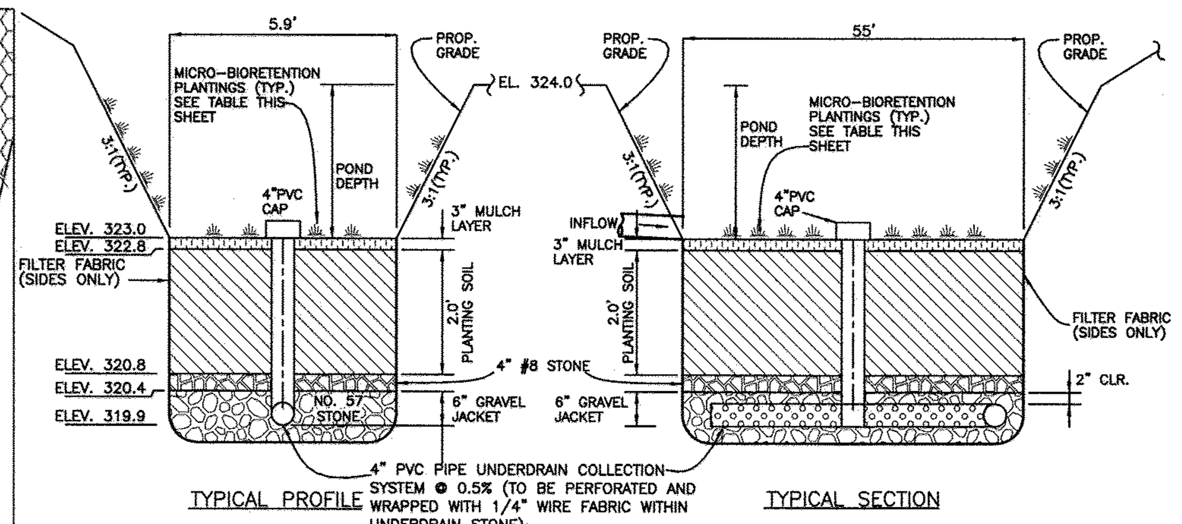

MICRO-BIORETENTION #1 DETAIL

LOT 1

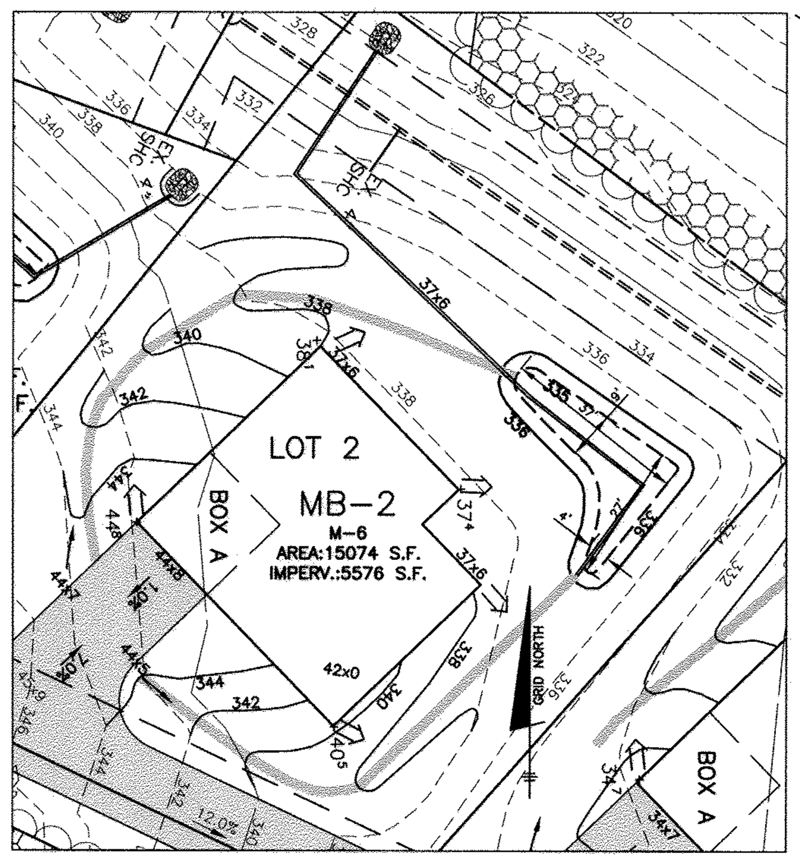

MICRO-BIORETENTION #2 – PLAN VIEW

SCALE: 1" = 30'

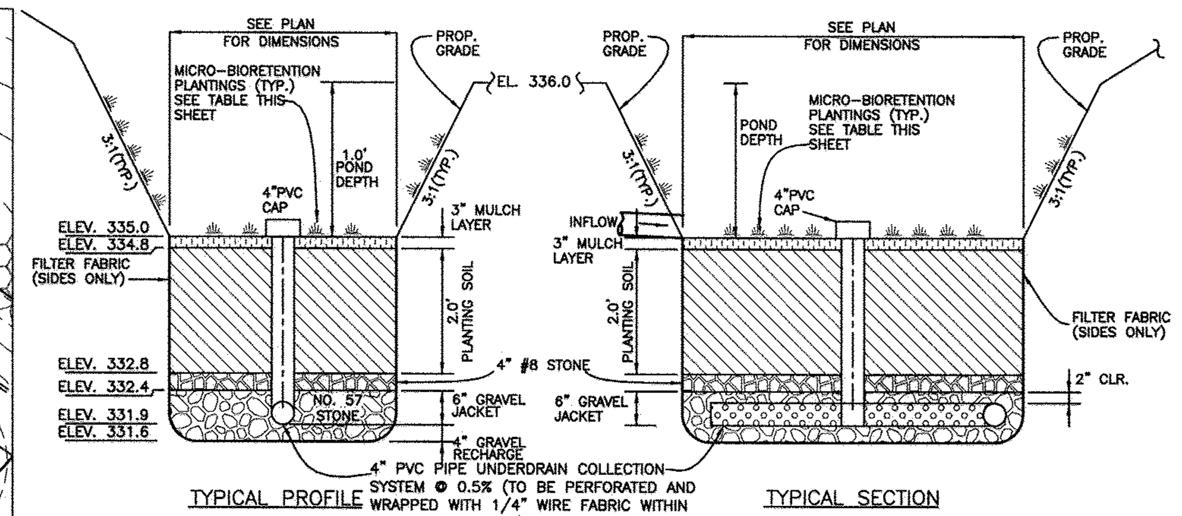

MICRO-BIORETENTION #2 DETAIL

LOT 2

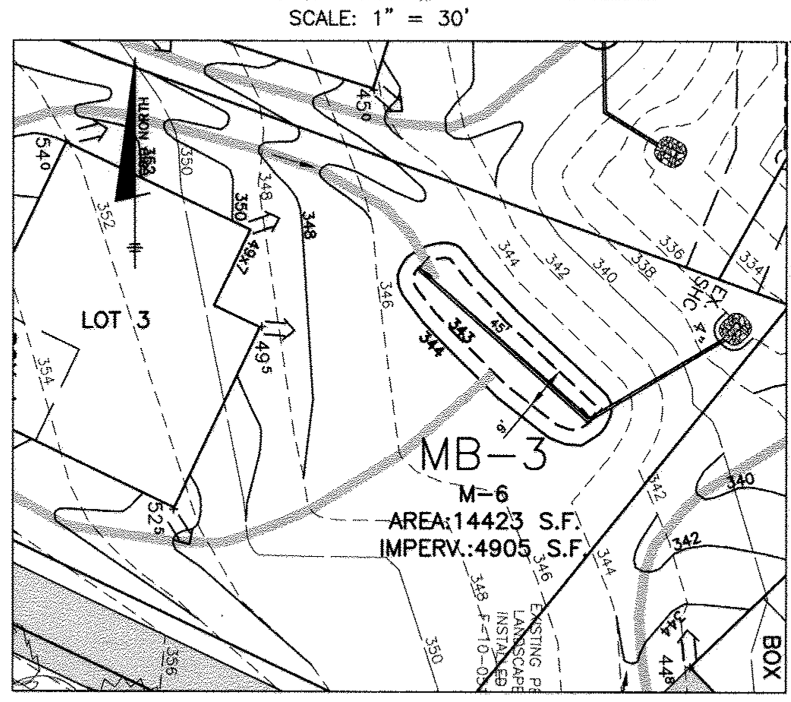

MICRO-BIORETENTION #3 – PLAN VIEW

SCALE: 1" = 30'

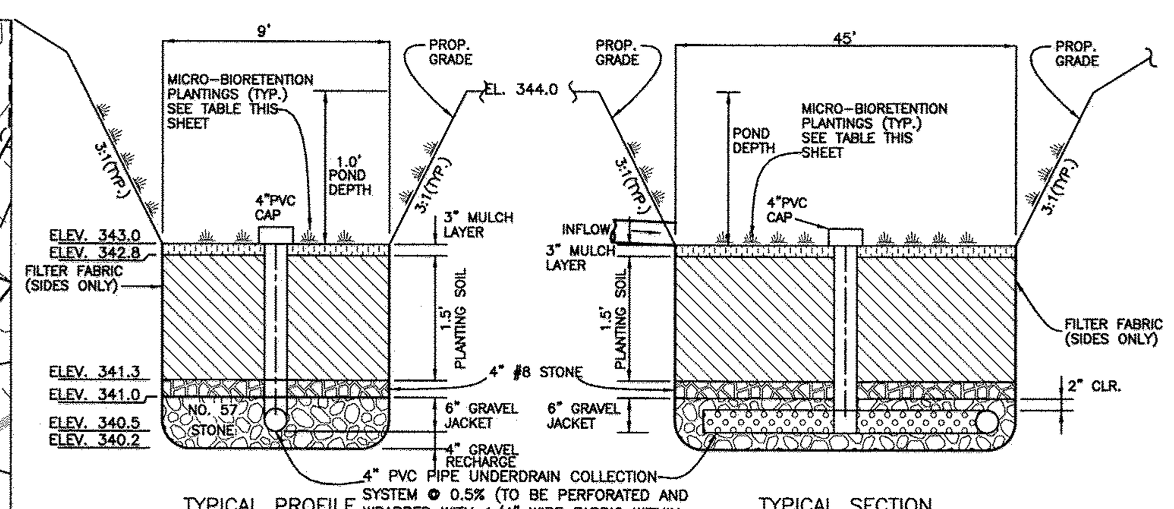

MICRO-BIORETENTION #3 DETAIL

LOT 3

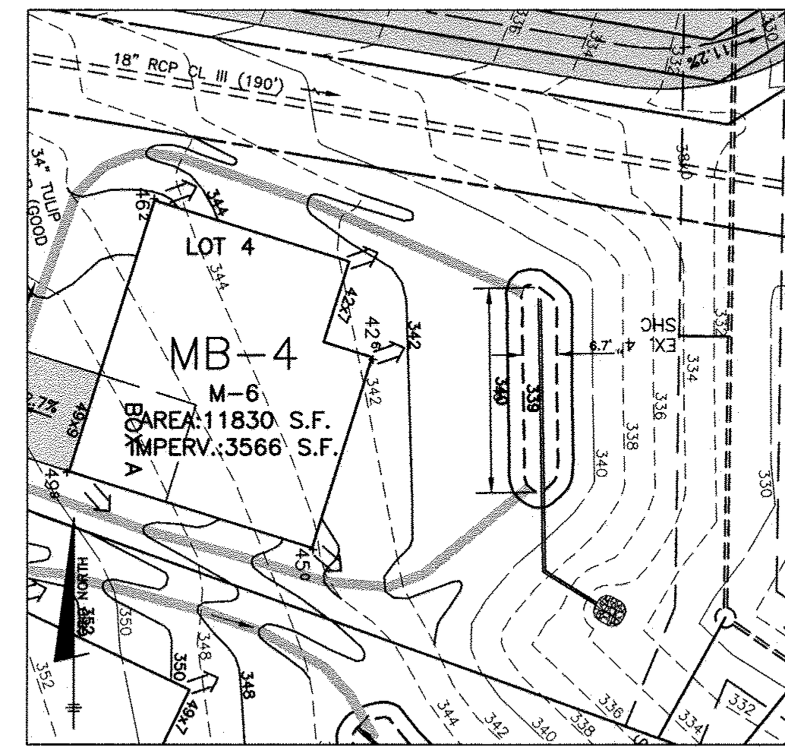

MICRO-BIORETENTION #4 – PLAN VIEW

SCALE: 1" = 30'

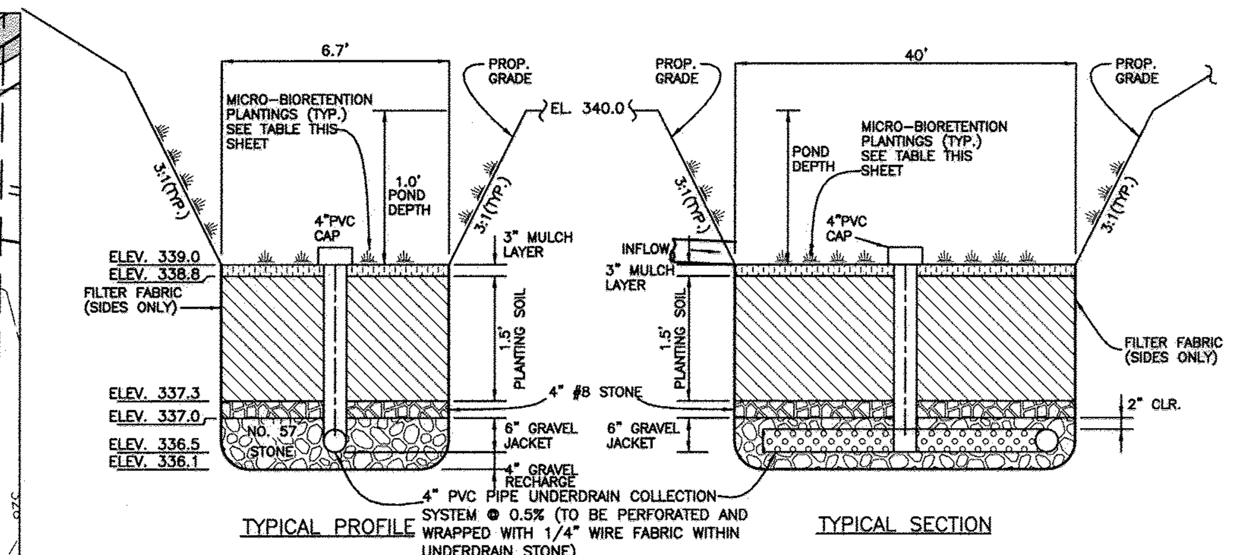

MICRO-BIORETENTION #4 DETAIL

LOT 4

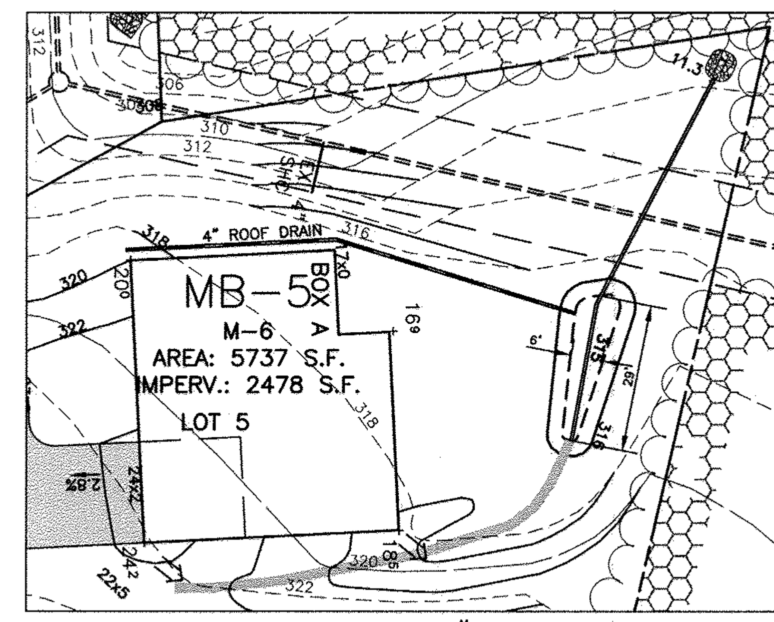

MICRO-BIORETENTION #5 – PLAN VIEW

SCALE: 1" = 30'

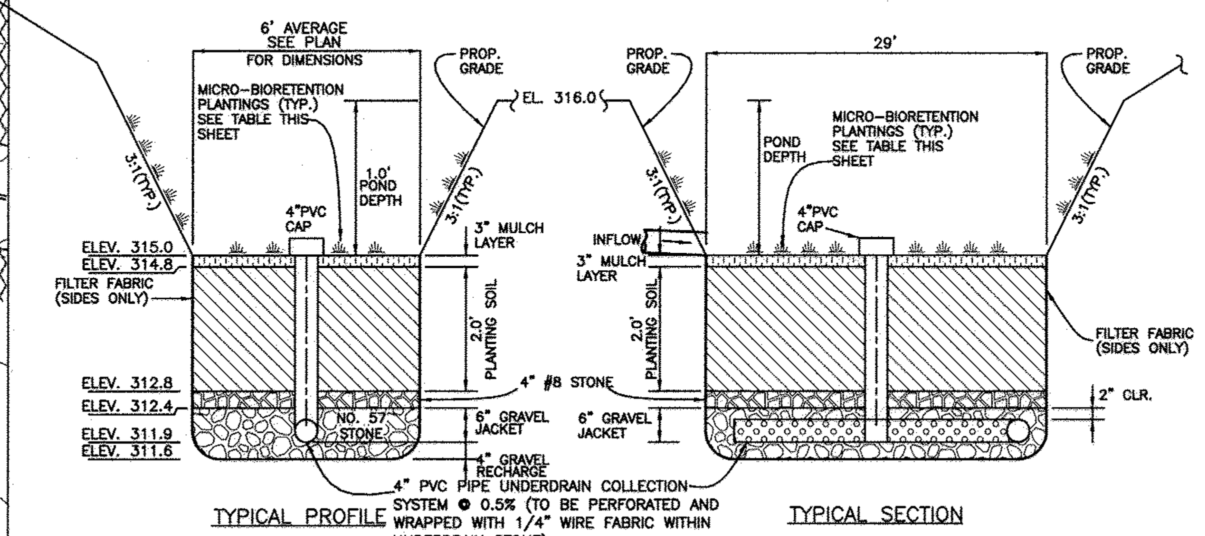

MICRO-BIORETENTION #5 DETAIL

LOT 5

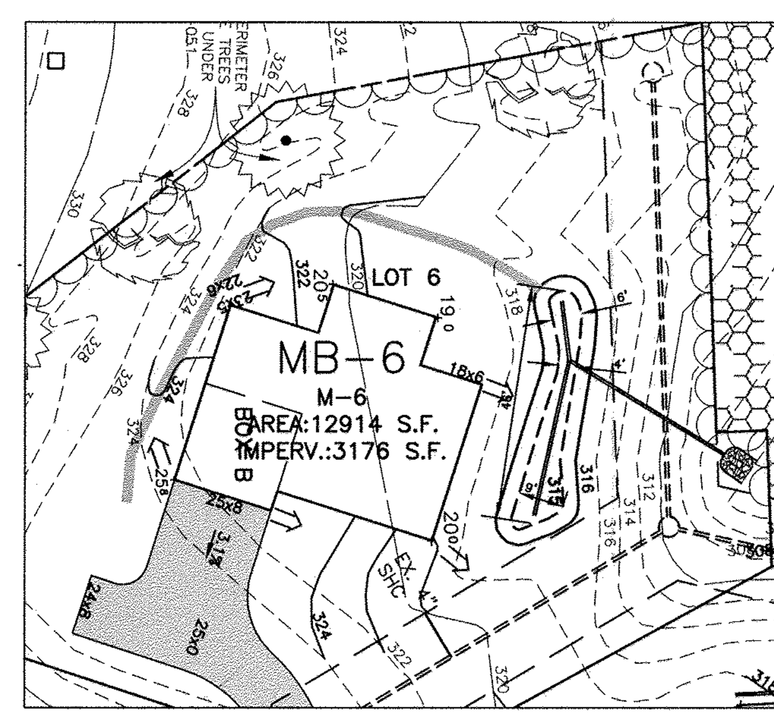

MICRO-BIORETENTION #6 – PLAN VIEW

SCALE: 1" = 30'

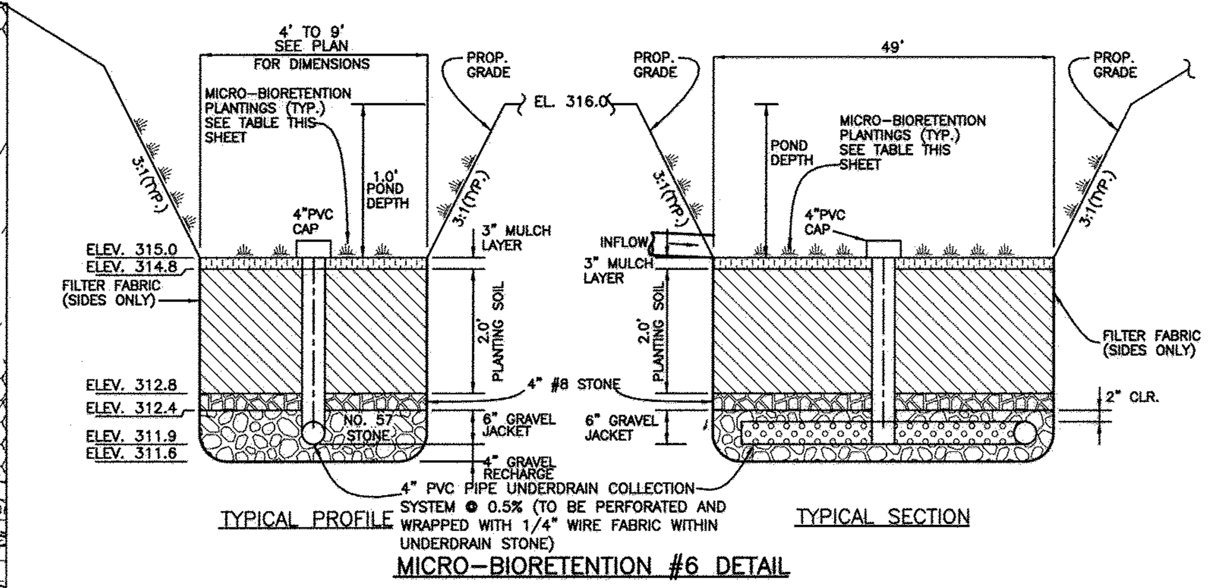

MICRO-BIORETENTION #6 DETAIL

LOT 6

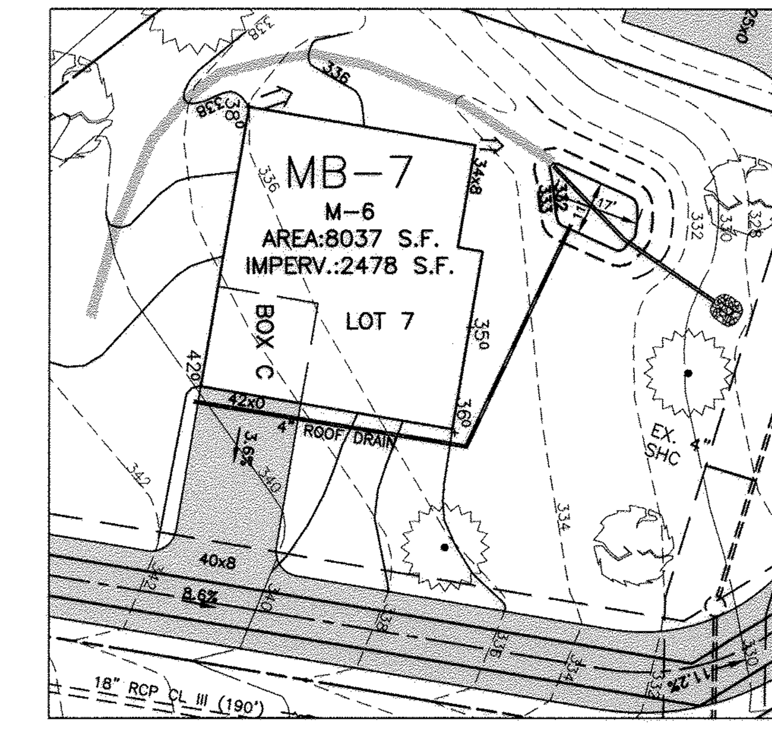

MICRO-BIORETENTION #7 – PLAN VIEW

SCALE: 1" = 30'

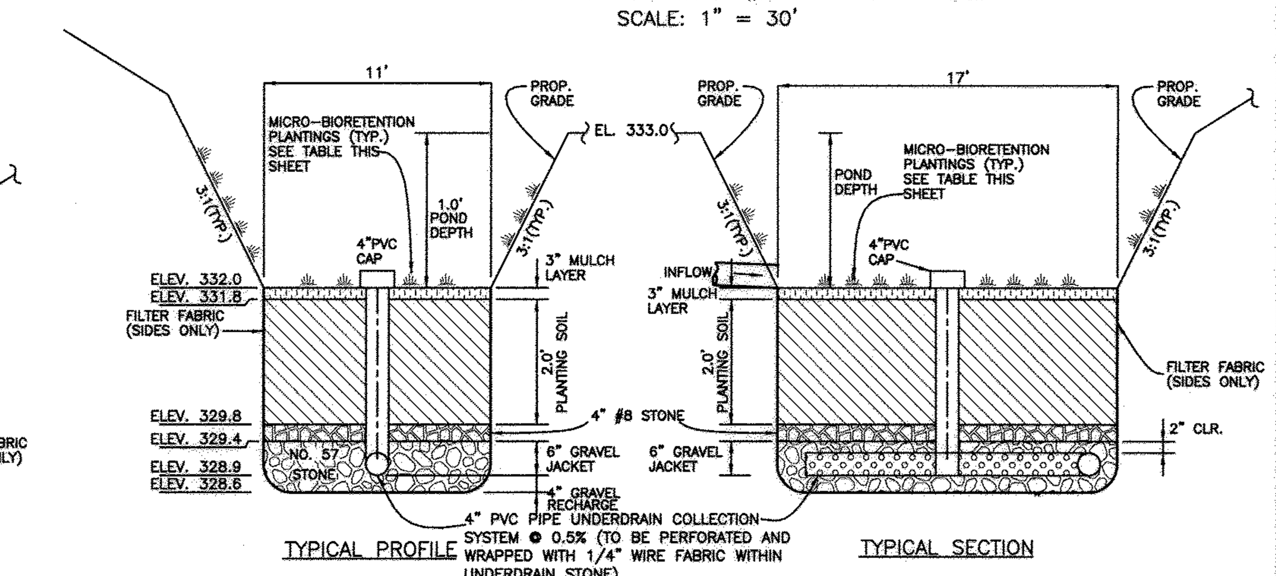

MICRO-BIORETENTION #7 DETAIL

LOT 7

MATERIALS & SPECIFICATIONS FOR MICRO-BIORETENTION

MATERIAL	SPECIFICATION	SIZE	NOTES:
PLANTINGS	SEE APPENDIX A; TABLE A.4	N/A	PLANTINGS ARE SITE SPECIFIC
PLANTING SOIL (2.0' TO 4.0' DEEP)	LOAMY SAND 60–65% COMPOST 35–40% OR SANDY LOAM 30% COARSE SAND 30% & COMPOST 40%	N/A	USDA SOIL TYPES: LOAMY SAND OR SANDY LOAM; CLAY CONTENT <5%
ORGANIC CONTENT	MIN 10% BY DRY WEIGHT ASTM D 2974		
MULCH	SHREDDED HARDWOOD	N/A	AGED 6 MONTHS, MINIMUM, NO PINE OR WOOD CHIPS
GEOTEXTILE (CLASS "C")		N/A	PE TYPE 1 NONWOVEN
GEOTEXTILE (1/4" WIRE MESH)		1/4" WIRE MESH	1/4" WIRE MESH
UNDERDRAIN GRAVEL	AASHTO M–43	NO. 57 OR NO. 6 0.375" TO 0.750"	
UNDERDRAIN PIPING	F758, TYPE PS28 OR AASHTO M–278	4" TO 6" RIGID SCH.40 PVC, SDR35 OR HDPE	3/8" PERF. @ 6" O/C, 4 HOLES PER ROW; MINIMUM OF 3" OF GRAVEL OVER PIPES, NOT NECESSARY UNDERNEATH PIPES. PIPE SHALL BE WRAPPED WITH 1/4–INCH GALVANIZED HARDWARE CLOTH
GEOTEXTILE (BELOW IMPERV. LINER)	ASTM–D–4833 (PUNCTURE STRENGTH 125LB) ASTM–D–4632 (TENSILE STRENGTH 300 LB.)		

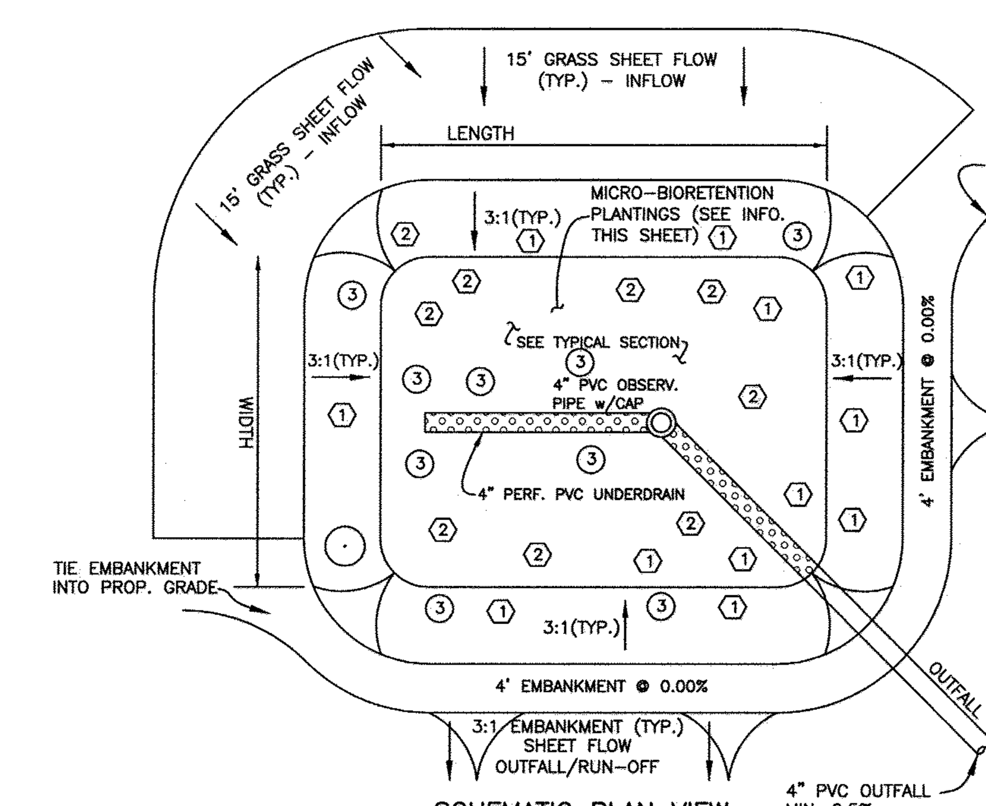

SCHEMATIC PLAN VIEW

MICRO-BIORETENTION PLANTING SCHEDULE

- (1) IRIS VERSICOLOR –IRIS
- [2] RUDBECKIA SUBTOMENTOSA – SWEET CONEFLOWER
- (3) LOBELIA CARDINALIS – CARDINAL FLOWER
- (⊗) CALLUNA VULGARIS (HEATHER)
- (·) ACER RUBRUM – RED MAPLE

PLANTING SCHEDULE			
FACILITY	(1)	[2]	(3)
LOT OWNER OWNED AND MAINTAINED:			
MB-1	14	11	11
MB-2	19	14	14
MB-3	17	13	13
MB-4	12	9	9
MB-5	8	6	6
MB-6	12	9	9
MB-7	8	6	6

PLANTING DATA

1. PLANTINGS WITHIN THE PONDING AREA OF THE FACILITY ARE TO BE OF A MEDIUM TO HIGH WATER TOLERANCE
2. PLANTINGS ALONG THE PERIMETER (BERM) AREA OF THE FACILITY ARE TO BE OF A LOW TO MEDIUM WATER TOLERANCE
3. AVOID PLANTINGS WITH EXCESSIVE ROOT MASS IN POND AREA OF THE FACILITY NEAR OBSERVATION PIPE AND UNDERDRAIN.

OPERATION AND MAINTENANCE SCHEDULE FOR MICRO-BIORETENTION (M–6)

A. THE OWNER SHALL MAINTAIN THE PLANT MATERIAL, MULCH LAYER AND SOIL LAYER ANNUALLY. MAINTENANCE OF MULCH AND SOIL IS LIMITED TO CORRECTING AREAS OF EROSION OR WASH OUT. ANY MULCH REPLACEMENT SHALL BE DONE IN THE SPRING. PLANT MATERIAL SHALL BE CHECKED FOR DISEASE AND INSECT INFESTATION AND MAINTENANCE WILL ADDRESS DEAD MATERIAL AND PRUNING. ACCEPTABLE REPLACEMENT PLANT MATERIAL IS LIMITED TO THE FOLLOWING: 2000 MARYLAND STORMWATER DESIGN MANUAL VOLUME II, TABLE A.4.1 AND 2.

B. THE OWNER SHALL PERFORM A PLANT INSPECTION IN THE SPRING AND IN THE FALL OF EACH YEAR. DURING THE INSPECTION, THE OWNER SHALL REMOVE DEAD AND DISEASED VEGETATION CONSIDERED BEYOND TREATMENT, REPLACE DEAD PLANT MATERIAL WITH ACCEPTABLE REPLACEMENT PLANT MATERIAL, TREAT DISEASED TREES AND SHRUBS, AND REPLACE ALL DEFICIENT STAKES AND WIRES.

C. THE OWNER SHALL INSPECT THE MULCH EACH SPRING. THE MULCH SHALL BE REPLACED EVERY TWO TO THREE YEARS. THE PREVIOUS MULCH LAYER SHALL BE REMOVED BEFORE THE NEW LAYER IS APPLIED.

D. THE OWNER SHALL CORRECT SOIL EROSION ON AN AS NEEDED BASIS, WITH A MINIMUM OF ONCE PER MONTH AND AFTER EACH HEAVY STORM.

APPROVED: DEPARTMENT OF PLANNING AND ZONING

Signature	Date
CHIEF, DIVISION OF LAND DEVELOPMENT	3-16-15
CHIEF, DEVELOPMENT ENGINEERING DIVISION	3-13-15
DIRECTOR	3/12/15

J:\1962\dwg\8000.dwg, SWM, 2/12/2015 10:03:17 AM, bdodson

NO.	DATE	REVISION

BENCHMARK ENGINEERING, INC.
ENGINEERS ▲ LAND SURVEYORS ▲ PLANNERS
8480 BALTIMORE NATIONAL PIKE ▲ SUITE 315 ▲ ELLICOTT CITY, MARYLAND 21043
(P) 410–465–6105 (F) 410–465–6644
WWW.BEI–CIVILENGINEERING.COM

STATE OF MARYLAND · ALICE A. MILLER · PROFESSIONAL ENGINEER · No. 28376

Professional Certification. I hereby certify that these documents were prepared or approved by me, and that I am a duly licensed professional engineer under the laws of the State of Maryland, License No. 28376, Expiration Date: 1-1-2017.

KINDLER OVERLOOK II

SINGLE FAMILY LOTS 1 thru 7

OWNER\BUILDER:
DORSEY FAMILY HOMES
10717–B BIRMINGHAM WAY
WOODSTOCK, MARYLAND 21163
410–463–4771

LOCATION: TAX MAP: 41 GRID: 18 PARCEL: 386
ZONED: R–20
ELECTION DISTRICT NO. 6
HOWARD COUNTY, MARYLAND

TITLE: STORMWATER MANAGEMENT DETAILS

DATE: FEBRUARY, 2015 BEI PROJECT NO. 1962

SCALE: AS SHOWN SHEET 4 OF 4

SDP–15–022