SITE DEVELOPMENT PLANS

FOR

RESERVOIR ESTATES

BUILDABLE LOTS 1 - 20 AND OPEN SPACE LOTS 21 - 26

LOCATION OF SITE

10883 SCAGGSVILLE ROAD
ZONING: R-20, 6TH ELECTION DISTRICT
TAX MAP 46, GRID 11, PARCEL 56
HOWARD COUNTY, MARYLAND

STANDARD DRAWING LEGEND

FOR ENTIRE PLAN SET
(NOT TO SCALE)

EXISTING NOTE	TYPICAL NOTE TEXT	PROPOSED NOTE
	ONSITE PROPERTY LINE / R.O.W. LINE	
	NEIGHBORING PROPERTY LINE / INTERIOR PARCEL LINE	
	EASEMENT LINE	
	SETBACK LINE	
	CONCRETE CURB & GUTTER	CURB AND GUTTER; SPILL CURB / TRANSITION CURB; DEPRESSED CURB AND GUTTER
	UTILITY POLE WITH LIGHT	
	POLE LIGHT	
	TRAFFIC LIGHT	
	UTILITY POLE	
	TYPICAL LIGHT	
	ACORN LIGHT	
	TYPICAL SIGN	
X	PARKING COUNTS	X
170 / 169	CONTOUR LINE	190 / 187
TC 516.4 OR 516.4	SPOT ELEVATIONS	TC 516.00 / TC 516.00 BC 515.55
SAN #	SANITARY LABEL	SAN #
X #	STORM LABEL	X #
FP	FLOOD PLAIN LINE	
W	UNDERGROUND WATER LINE	
E	UNDERGROUND ELECTRIC LINE	E
G	UNDERGROUND GAS LINE	G
OH	OVERHEAD WIRE	OH
T	UNDERGROUND TELEPHONE LINE	T
C	UNDERGROUND CABLE LINE	C
	STORM SEWER	
S	SANITARY SEWER MAIN	
	HYDRANT	
S	SANITARY MANHOLE	
D	STORM MANHOLE	
WM	WATER METER	
WV	WATER VALVE	
	GAS VALVE	
	GAS METER	
	TYPICAL END SECTION	
	HEADWALL OR ENDWALL	
	YARD INLET	
	CURB INLET	
	CLEAN OUT	
E	ELECTRIC MANHOLE	E
T	TELEPHONE MANHOLE	T
EB	ELECTRIC BOX	EB
EP	ELECTRIC PEDESTAL	EP
	MONITORING WELL	
	TEST PIT	
	BENCHMARK	
	BORING	
	STEEP SLOPES (>25%)	
	PERMEABLE PAVEMENT (SEE SHEET 13 OF 15 FOR DETAIL)	

APPROVED: DEPARTMENT OF PLANNING AND ZONING

[signature] 12-19-14
CHIEF, DIVISION OF LAND DEVELOPMENT — DATE

[signature] 12.15.14
CHIEF, DEVELOPMENT ENGINEERING DIVISION — DATE

[signature] 12/19/14
DIRECTOR - DEPARTMENT OF PLANNING AND ZONING — DATE

ADDRESS CHART

LOT NO.	ADDRESS
1	10802 ROCKLAND DRIVE
2	10806 ROCKLAND DRIVE
3	10820 ROCKLAND DRIVE
4	10824 ROCKLAND DRIVE
5	10828 ROCKLAND DRIVE
6	10832 ROCKLAND DRIVE
7	10836 ROCKLAND DRIVE
8	10840 ROCKLAND DRIVE
9	10844 ROCKLAND DRIVE
10	10848 ROCKLAND DRIVE
11	10843 ROCKLAND DRIVE
12	10839 ROCKLAND DRIVE
13	10835 ROCKLAND DRIVE
14	10825 ROCKLAND DRIVE
15	10821 ROCKLAND DRIVE
16	10817 ROCKLAND DRIVE
17	10813 ROCKLAND DRIVE
18	10809 ROCKLAND DRIVE
19	10805 ROCKLAND DRIVE
20	10801 ROCKLAND DRIVE
21	N/A
22	N/A
23	N/A
24	N/A
25	N/A
26	N/A

MINIMUM LOT SIZE CHART

LOT NO.	GROSS AREA	PIPESTEM AREA	MINIMUM LOT AREA
7	12,379 S.F.	281 S.F.	12,098 S.F.
8	12,618 S.F.	598 S.F.	12,020 S.F.
9	15,445 S.F.	899 S.F.	14,546 S.F.
10	15,497 S.F.	1,212 S.F.	14,285 S.F.
11	13,385 S.F.	879 S.F.	12,506 S.F.
12	12,610 S.F.	538 S.F.	12,072 S.F.

UTILITIES:

THE FOLLOWING COMPANIES WERE NOTIFIED BY DELMARVA MISS UTILITY SYSTEM (1-800-257-7777) AND REQUESTED TO MARK OUT UNDERGROUND FACILITIES AFFECTING AND SERVICING THIS SITE. THE UNDERGROUND UTILITY INFORMATION SHOWN HEREON IS BASED UPON THE UTILITY COMPANIES RESPONSE TO THIS REQUEST. SERIAL NUMBER(S): 12499659

UTILITY COMPANY	PHONE NUMBER
VERIZON - LAMBERT CABLE	(410) 536-0070
BGE ELECTRIC-USIC	(800) 778-9140
BGE GAS-USIC	(800) 778-9140
COMCAST- FIBER/UTILIQUEST	(410) 536-0070
HOWARD COUNTY WATER/SEWER	(410) 313-4982
COMCAST/UTILIQUEST	(410) 536-0070
COLONIAL PIPELINE	(678) 762-2403
AT&T TRANSMISSION	(800) 252-1133
QWEST GOVERNMENT SERVICES	(703) 464-7592

OPEN SPACE CHART

LOT No.	OWNER	PURPOSE
21	HOWARD COUNTY DEPARTMENT OF RECREATION AND PARKS	OPEN SPACE
22	HOME OWNERS ASSOCIATION	OPEN SPACE
23	HOME OWNERS ASSOCIATION	RECREATIONAL OPEN SPACE
24	HOWARD COUNTY DEPARTMENT OF RECREATION AND PARKS	OPEN SPACE
25	HOME OWNERS ASSOCIATION	OPEN SPACE
26	HOME OWNERS ASSOCIATION	OPEN SPACE

LOT INFORMATION

LOT TYPE	LOTS	MINIMUM LOT SIZE	MIN. LOT WIDTH AT FRONT BRL
SINGLE FAMILY DETACHED	1-20	12,000 SQUARE FEET	60'

SINGLE FAMILY ATTACHED PARKING ANALYSIS

NUMBER OF SINGLE DETACHED LOTS FOR THIS SDP = 20

REQUIRED PARKING (@ 2 SPACES PER UNIT) = 40
REQUIRED OVERFLOW PARKING (@ 0.5 SPACES/UNIT PER DMV 3, TABLE 2.11) = 10

TOTAL REQUIRED SPACES = 50 SPACES

PARKING REQUIRED

4 SPACES/UNIT (2 GARAGE & 2 DRIVEWAY SPACES) = 80 SPACES

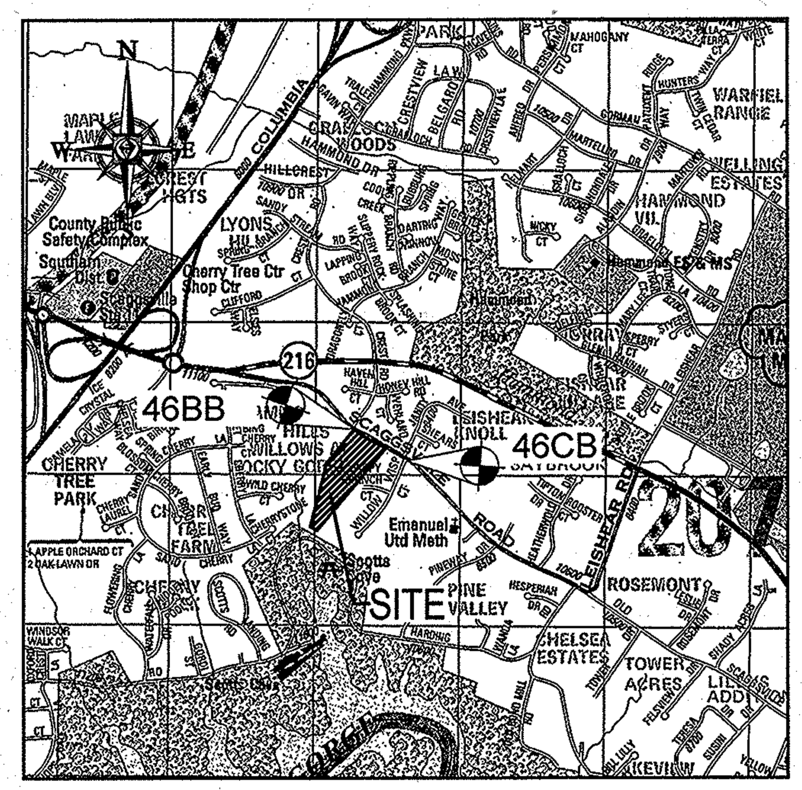

VICINITY MAP

COPYRIGHT ADC THE MAP PEOPLE
PERMIT USE NO. 20602153-5
SCALE: 1"=2000'
ADC MAP COORDINATES: 5052/H8

BENCHMARK

GEODETIC SURVEY CONTROL - 46BB	GEODETIC SURVEY CONTROL - 46CB
ELEV. 422.444'	ELEV. 394.623'
N 538,306.4913	N 537,123.0429
E 1,341,329.1023	E 1,344,291.3654

BOHLER ENGINEERING

901 DULANEY VALLEY ROAD, SUITE 801
TOWSON, MARYLAND 21204
Phone: (410) 821-7900
Fax: (410) 821-7987
MD@BohlerEng.com
CONTACT: BRANDON ROWE, P.E.

GENERAL NOTES

1. ALL CONSTRUCTION SHALL BE IN ACCORDANCE WITH THE LATEST STANDARDS AND SPECIFICATIONS OF HOWARD COUNTY PLUS MSHA STANDARDS AND SPECIFICATIONS IF APPLICABLE.
2. THE CONTRACTOR SHALL NOTIFY THE DEPARTMENT OF PUBLIC WORKS / BUREAU OF ENGINEERING / CONSTRUCTION INSPECTION DIVISION AT 410-313-1880 AT LEAST FIVE (5) WORKING DAYS PRIOR TO THE START OF WORK.
3. THE CONTRACTOR SHALL NOTIFY "MISS UTILITY" AT 1-800-257-7777 AT LEAST 48 HOURS PRIOR TO ANY EXCAVATION WORK BEING DONE.
4. EXISTING TOPOGRAPHIC CONTOURS BASED ON BOUNDARY & TOPOGRAPHIC SURVEY PERFORMED BY BOHLER ENGINEERING, DATED 10/9/12, LAST REVISED 11/13/12.
5. THE COORDINATES SHOWN HEREON ARE BASED UPON THE HOWARD COUNTY GEODETIC CONTROL WHICH IS BASED UPON THE MARYLAND STATE PLAN COORDINATE SYSTEM. HORIZONTAL AND VERTICAL CONTROL DATUM ARE BASED ON HOWARD COUNTY MONUMENT NOS. 46BB AND 46CB WHICH WERE USED FOR THIS PROJECT.

   HOWARD COUNTY MONUMENT NO: 46BB ELEV. = 422.444
   HOWARD COUNTY MONUMENT NO: 46CB ELEV. = 394.623
6. WATER IS PUBLIC (CONTRACT NO. 24-4787-D)
7. SEWER IS PUBLIC (CONTRACT NO. 24-4787-D)
8. STORM WATER MANAGEMENT TO BE PROVIDED FOR THIS DEVELOPMENT BY ENVIRONMENTAL SITE DESIGN UTILIZING MICRO-BIO -RETENTION FACILITIES, DRY WELLS, AND PERVIOUS DRIVEWAYS AND SIDEWALKS. THE MICRO BIO RETENTION FACILITIES ALONG THE ROAD WILL BE JOINTLY MAINTAINED BY HOWARD COUNTY AND THE HOA. THE COUNTY WILL MAINTAIN THE INLET STRUCTURE AND THE HOA SHALL MAINTAIN THE PERFORATED UNDER DRAINS, PLANTINGS, ETC. WITHIN THE EASEMENTS. THE PERMEABLE CONCRETE DRIVEWAYS, DRY WELLS AND ON LOT MICRO-BIO-RETENTION FACILITIES WILL BE PRIVATELY MAINTAINED BY THE INDIVIDUAL HOMEOWNERS.
9. EXISTING UTILITIES ARE BASED ON FIELD RUN SURVEY PERFORMED BY BOHLER ENGINEERING, DATED 10/9/12, LAST REVISED 11/13/12.
10. AN OBVIOUSLY NON-CRITICAL FLOOD PLAIN STUDY WAS COMPLETED BY BOHLER ENGINEERING ON 11/16/12. FLOODPLAIN DOES EXIST ON THIS SITE. PROPOSED IMPROVEMENTS DO NOT IMPACT EX. FLOOD PLAIN
11. WETLANDS EXIST ON SITE BASED UPON A WETLAND DELINEATION REPORT BY ECO-SCIENCE PROFESSIONALS, INC. DATED 10/22/12. FIELD WORK WAS PERFORMED ON 9/21/12.
12. THE ADEQUATE ROAD FACILITIES TEST EVALUATION FOR THIS PROJECT WAS PREPARED BY THE TRAFFIC GROUP, DATED 11/20/12.
13. THE SUBJECT PROPERTY IS ZONED R-20 AND IS CONSIDERED TO BE "GRANDFATHERED" TO THE 2/2/04 COMPREHENSIVE ZONING PLAN AND THE "COMP LITE" ZONING AMENDMENTS EFFECTIVE 7/28/06. THE GRANDFATHERING OF THIS MAJOR SUBDIVISION PLAN IS IN ACCORDANCE WITH SECTION 100.E.3.B OF THE NEW ZONING REGULATIONS (EFFECTIVE 10/6/13) SINCE THE INITIAL PLAN SUBMISSION OF THE PRELIMINARY EQUIVALENT SKETCH PLAN (SP-13-008) WAS GRANTED A "TECHNICALLY COMPLETE" STATUS PRIOR TO THE ENACTMENT DATE OF THE NEW REGULATIONS. THIS SUBDIVISION IS NOT REQUIRED TO PROVIDE 10% MODERATE INCOME HOUSING UNITS (MIHU).
14. SITE ANALYSIS DATA
    A. GROSS AREA OF TRACT = 11.36 AC.
    B. AREA OF FLOODPLAIN = 0.14 AC.
    C. AREA OF 25% OR GREATER SLOPES = 0.06 AC.
    D. NET AREA OF TRACT = 11.16 AC.
    E. REQUIRED OPEN SPACE = 40% OF GROSS AREA (BASED ON 12,000 S.F. LOTS) = 4.54 AC.
    F. PROVIDED OPEN SPACE = 4.55 AC. (LOTS 21-26)
    G. REQUIRED RECREATIONAL OPEN SPACE = 200 S.F./UNIT = 4,000 S.F.
    H. PROVIDED RECREATIONAL OPEN SPACE = 5,182 S.F.
15. NUMBER OF LOTS: 26 (TOTAL)
    A. BUILDABLE = 20
    B. OPEN SPACE = 6
16. RELATED DPZ FILE NUMBERS ASSOCIATED WITH THIS PROJECT INCLUDE WP-13-048, ECP-13-038, BA-95-023, SP-13-008, 24-4787-D, AND F-14-003.
17. SOILS INFORMATION TAKEN FROM SOIL SURVEY, HOWARD COUNTY, MARYLAND, ISSUED MAY 2008.
18. BOUNDARY OUTLINE BASED ON FIELD RUN SURVEY PERFORMED BY BOHLER ENGINEERING, DATED 10/9/12, LAST REVISED 11/13/12.
19. A PORTION (0.06 AC.) OF THE PROPERTY QUALIFIES AS STEEP SLOPES (25% OR GREATER) AS DEFINED BY THE HOWARD COUNTY SUBDIVISION AND LAND DEVELOPMENT REGULATIONS, SECTION 16.116.B. THIS AREA IS SHOWN ON THE SITE DEVELOPMENT PLAN AND WILL REMAIN UNDISTURBED.
20. THE SUBSURFACE EXPLORATION REPORT FOR THIS PROJECT WAS PREPARED BY HILLIS-CARNES ENGINEERING ASSOCIATES, INC. DATED 12/16/12.
21. THIS PROPERTY IS LOCATED INSIDE OF THE METROPOLITAN DISTRICT.
22. NO CEMETERIES EXIST WITHIN THIS SUBDIVISION.
23. A FOREST STAND DELINEATION REPORT WAS COMPLETED BY ECO-SCIENCE PROFESSIONALS, INC. ON 10/22/12. FIELD WORK WAS PERFORMED ON 9/21/12 AND 9/22/12.
24. THIS PLAN IS SUBJECT TO THE AMENDED FIFTH EDITION OF THE SUBDIVISION AND LAND DEVELOPMENT REGULATIONS PER COUNCIL BILL NO. 45-2003 AND THE AMENDED ZONING REGULATIONS PER COUNCIL BILL NO. 75-2003. DEVELOPMENT OR CONSTRUCTION ON THIS PROPERTY MUST COMPLY WITH SETBACK AND BUFFER REGULATIONS IN EFFECT AT THE TIME OF SUBMISSION OF THE SITE DEVELOPMENT PLAN, WAIVER PETITION APPLICATION OR BUILDING/GRADING PERMIT APPLICATIONS.
25. NO HISTORIC STRUCTURES EXIST ON THIS PROPERTY.
26. TWO PRIVATE RANGE OF ADDRESS SIGN ASSEMBLIES SHALL BE FABRICATED AND INSTALLED BY HOWARD COUNTY BUREAU OF HIGHWAYS AT THE DEVELOPERS/OWNERS EXPENSE. CONTACT HOWARD COUNTY TRAFFIC DIVISION AT 410-313-5752 FOR DETAILS AND COST ESTIMATES.
27. PRELIMINARY PLAN APPROVAL DATE: JULY 17, 2013
28. DRIVEWAYS SHALL BE PROVIDED PRIOR TO RESIDENTIAL OCCUPANCY TO ENSURE SAFE ACCESS FOR FIRE AND EMERGENCY VEHICLES PER THE FOLLOWING (MINIMUM) REQUIREMENTS:
    a. WIDTH - 12 FEET (16 FEET SERVING MORE THAN ONE RESIDENCE)
    b. SURFACE - SIX (6") INCHES OF COMPACTED CRUSHER RUN BASE WITH TAR AND CHIP COATING
    c. GEOMETRY - MAXIMUM 15% GRADE, MAXIMUM 10% GRADE CHANGE AND MINIMUM OF 45 TURNING RADIUS
    d. STRUCTURES (CULVERTS/BRIDGES) CAPABLE OF SUPPORTING 25 GROSS TONS (H 25 LOADING)
    e. DRAINAGE ELEMENTS - CAPABLE OF SAFELY PASSING 100 YEAR FLOOD WITH NO MORE THAN 1 FOOT DEPTH OVER DRIVEWAY SURFACE.
    f. STRUCTURE CLEARANCES - MINIMUM 12 FEET
    g. MAINTENANCE - SUFFICIENT TO INSURE ALL WEATHER USE
29. NO GRADING, REMOVAL OF VEGETATIVE COVER OR TREES, PAVING AND NEW STRUCTURES SHALL BE PERMITTED WITHIN THE LIMITS OF WETLANDS, STREAMS OR THEIR REQUIRED BUFFERS, FLOODPLAIN AND FOREST CONSERVATION EASEMENT AREAS.
30. FOR FLAG OR PIPESTEM LOTS, REFUSE COLLECTION, SNOW REMOVAL AND ROAD MAINTENANCE ARE PROVIDED TO THE JUNCTION OF THE FLAG OR PIPESTEM AND ROAD RIGHT-OF-WAY LINE AND NOT ONTO THE PIPESTEM LOT DRIVEWAY.
31. WATER AND SEWER SERVICE TO THESE LOTS WILL BE GRANTED UNDER THE PROVISIONS OF SECTION 18.122.B OF THE HOWARD COUNTY CODE.
32. PUBLIC WATER AND SEWAGE ALLOCATION WILL BE GRANTED AT THE TIME OF ISSUANCE OF THE BUILDING PERMIT IF CAPACITY IS AVAILABLE AT THAT TIME.
33. THE FOREST CONSERVATION EASEMENT SHOWN ON THIS PLAN HAS BEEN ESTABLISHED TO FULFILL THE REQUIREMENTS OF SECTION 16.1200 OF THE HOWARD COUNTY CODE AND FOREST CONSERVATION ACT. NO CLEARING, GRADING OR CONSTRUCTION IS PERMITTED WITHIN THE FOREST CONSERVATION EASEMENT; HOWEVER, FOREST MANAGEMENT PRACTICES AS DEFINED IN THE DEED OF FOREST CONSERVATION EASEMENT ARE ALLOWED.
34. NO GRADING, REMOVAL OF VEGETATIVE COVER OR TREES, PAVING AND NEW STRUCTURES SHALL BE PERMITTED WITHIN THE LIMITS OF WETLANDS, STREAM(S), OR THEIR REQUIRED BUFFERS, FLOODPLAIN AND FOREST CONSERVATION EASEMENT AREAS.
35. THIS SUBDIVISION PLAN COMPLIES WITH THE REQUIREMENTS OF SECTION 16.1200 OF THE HOWARD COUNTY CODE FOR FOREST CONSERVATION. THE FOREST CONSERVATION OBLIGATIONS WERE ADDRESSED UNDER F-14-003.
36. ALL FILL AREAS WITHIN ROADWAYS AND UNDER STRUCTURES SHALL BE COMPACTED TO A MINIMUM OF 95% COMPACTION OF AASHTO T-180.
37. A PROPOSED 4' VINYL SPLIT RAIL FENCE SHALL BE MAINTAINED ADJACENT TO OPEN SPACE LOTS WHERE INDICATED ON THESE PLANS.
38. A HOMEOWNERS ASSOCIATION WILL BE ESTABLISHED FOR THE RESIDENTS OF THIS SUBDIVISION AND PROTECTIVE COVENANTS AND COVENANTS GOVERNING THE MAINTENANCE OF THE COMMUNITY OWNED OPEN SPACE LOTS HAVE BEEN RECORDED IN THE LAND RECORDS OF HOWARD COUNTY, IN LIBER 15924 FOLIO 261, DATED 12/12/14 SIMULTANEOUS WITH THE RECORDING OF THE SUBDIVISION PLAT.
39. THE SHARED DRIVEWAY ACCESS AND MAINTENANCE OBLIGATION AGREEMENTS FOR THE 16' DRIVEWAYS WHICH SERVE LOTS 3 & 4 AND LOTS 7 - 12 HAVE BEEN RECORDED IN THE LAND RECORDS OF HOWARD COUNTY, IN LIBER 15924 FOLIO 261, DATED 12/12/14 SIMULTANEOUSLY WITH THE RECORDATION OF THIS SUBDIVISION PLAT, F-14-003.
40. ANY DAMAGE TO THE ADJACENT COUNTY-OWNER RIGHT-OF-WAY AND PROPERTY SHALL BE CORRECTED AT THE CONTRACTOR'S EXPENSE.
41. IN ACCORDANCE WITH SECTION 128 OF THE HOWARD COUNTY ZONING REGULATIONS, BAY WINDOWS, CHIMNEYS OR EXTERIOR STAIRWAYS NOT MORE THAN 16 FEET IN WIDTH MAY PROJECT NOT MORE THAN 4 FEET INTO ANY SETBACKS. PORCHES, OR DECKS, OPEN OR ENCLOSED MAY PROJECT NOT MORE THAN 10 FEET INTO THE FRONT OR REAR YARD SETBACK.
42. WATER METERS ARE TO BE PROVIDED IN OUTSIDE VAULTS.
43. FLAG AND PIPESTEM LOTS, REFUSE COLLECTION, SNOW REMOVAL AND ROAD MAINTENANCE ARE PROVIDED TO THE JUNCTION OF THE FLAG OR PIPESTEM AND ROAD RIGHT-OF-WAY LINE AND NOT ONTO THE PIPESTEM LOT DRIVEWAY.

GENERAL NOTES (cont.)

44. LANDSCAPING FOR THIS DEVELOPMENT HAS BEEN PROVIDED IN ACCORDANCE WITH SECTION 16.124 OF THE HOWARD COUNTY CODE AND THE LANDSCAPE MANUAL. PERIMETER LANDSCAPE SURETY HAS BEEN POSTED BY THE DEVELOPER AS PART OF THE DPW DEVELOPER'S AGREEMENT, F-14-003 .
45. THE PURPOSE OF THE PUBLIC TREE MAINTENANCE EASEMENT WHICH RUNS ALONG THE EDGE OF THE PUBLIC ROAD IS TO ALLOW HOWARD COUNTY THE RIGHT TO ACCESS THE PROPERTY WHEN NECESSARY FOR THE SPECIFIC PURPOSE OF INSTALLATION, REPAIR AND MAINTENANCE OF COUNTY OWNED TREES LOCATED WITHIN THE BOUNDARIES OF THE SAID EASEMENT AREA.
46. WAIVER REQUEST WP-13-048 FOR THE FOLLOWING:
    1. THE ALLOWANCE OF A 15' MINIMUM SETBACK FROM EX. UNDERGROUND GAS TRANSMISSION MAIN EASEMENT IN LIEU OF THE REQUIRED 30' SETBACK (SECTION 16.120.(B).(9).(I)).
    2. THE REMOVAL OF 10 SPECIMEN TREES (SECTION 16.1205.(A).(10)).

    APPROVED: 1/30/13
    APPROVAL IS SUBJECT TO THE FOLLOWING CONDITIONS:

    (1) SECTION 16.120.(B).(9).(I):

    a. DPZ APPROVES THE REDUCTION OF THE 30' REQUIRED SETBACK FROM THE EDGE OF THE UTILITY EASEMENT FROM THE EXISTING "OUT OF SERVICE-IDLED" UNDERGROUND PIPELINE (COLONIAL PIPELINE COMPANY LETTER ON FILE WITH THIS OFFICE) TO 15' FROM THE EDGE OF THE UTILITY EASEMENT FOR LOTS 13 AND 14 ONLY.
    b. ON LOTS 13 AND 14 THE AFFECTED SIDE BRL'S SHOULD BE DRAWN 15' FROM AND PARALLEL TO THE EDGE OF THE UTILITY EASEMENT.
    c. ON LOTS 2 AND 3 THE FRONT BRL'S DRAWN 30' FROM AND PARALLEL TO THE EDGE OF THE UTILITY EASEMENT.
    d. THE DEVELOPER SHALL PLACE A BOLD NOTE WITHIN LOTS 13 AN 14 ON THE PRELIMINARY EQUIVALENT SKETCH PLAN (SP-13-008) AND ALL FUTURE FINAL PLATS AND SDP'S THAT DESCRIBES THIS SETBACK REDUCTION FROM 30' TO 15'.

    (2) SECTION 16.1205.(A).(7):

    a. MITIGATION FOR THE REMOVAL OF THE TEN(10) SPECIMEN TREES (A, D, E, F, G, H, L, M, N & O AS IDENTIFIED ON THE ENVIRONMENTAL CONCEPT PLAN AND THE WAIVER PETITION EXHIBIT AS "TO BE REMOVED") WILL CONSIST OF ONE(1) 2 ½" CALIPER TREES FOR EACH ONE(1) REMOVED OF IDENTICAL SPECIES. THESE TEN(10) TREES WILL BE PLACED WITHIN CLOSE PROXIMITY TO THE LOCATION OF THE ORIGINAL SPECIMEN TREE AND WILL BE IN ADDITION TO THE REQUIRED PERIMETER LANDSCAPING (AS DEPICTED ON THE WAIVER PETITION EXHIBIT). COSTS TO COVER THE INSTALLATION OF THESE TREES SHALL BE INCLUDED IN THE PERIMETER LANDSCAPING ESTIMATE; AND, SURETY AND INSPECTION FEES SHALL BE POSTED WITH THE DPW DEVELOPER'S AGREEMENT AT THE FINAL PLAN STAGE FOR THIS DEVELOPMENT.
    b. THE REMOVAL OF ANY OF THE REMAINING SIX(6) SPECIMEN TREES (TREES B, C, I, J, K & P) NOT DESIGNATED FOR REMOVAL UNDER THIS WAIVER PETITION WP-13-048, WOULD REQUIRE A SEPARATE WAIVER PETITION APPROVAL IN ACCORDANCE WITH SECTION 16.1205.(A).7 OF THE SUBDIVISION AND LAND DEVELOPMENT REGULATIONS.

    (3) ON ECP-13-038, SP-13-008 AND ALL SUBSEQUENT PLANS AND PLATS, PROVIDE A BRIEF DESCRIPTION OF THIS WAIVER PETITION, WP-13-048, AS A GENERAL NOTE TO INCLUDE REQUESTS, SECTIONS OF THE REGULATIONS, ACTION AND DATE.

SHEET INDEX

SHEET TITLE	SHEET NUMBER
TITLE SHEET	1
GENERAL NOTES	2
HOUSE TYPES	3
EXISTING CONDITIONS PLAN	4 - 5
SITE DEVELOPMENT PLAN	6 - 7
EROSION AND SEDIMENT CONTROL PLAN	8 - 9
SEDIMENT CONTROL NOTES & DETAILS	10 - 11
STORM DRAIN AND STORMWATER MANAGEMENT DRAINAGE AREA MAP	12
STORMWATER MANAGEMENT NOTES & DETAILS	13 - 14
STORM DRAIN PROFILES	15

THIS DEVELOPMENT PLAN IS APPROVED FOR SOIL EROSION AND SEDIMENT CONTROL BY THE HOWARD SOIL CONSERVATION DISTRICT.

[signature] 12/9/14
HOWARD SCD — DATE

BUILDER:	OWNER/DEVELOPER:
CRAFTMARK HOMES, INC. 1355 BEVERLY ROAD, SUITE 330 MCLEAN, VA 22101 CONTACT: DAVID SCHOEN PHONE: (703) 898-0377	CM HIGDON LC 1355 BEVERLY ROAD, SUITE 330 MCLEAN, VA 22101 CONTACT: DAVID SCHOEN PHONE: (703) 898-0377

PERMIT INFORMATION CHART

SUBDIVISION NAME: RESERVOIR ESTATES		SECTION/AREA: N/A		LOT/PARCEL NO.: 56	
PLAT # OR L/F: 15161/365	GRID #: 11	ZONING: R-20	TAX MAP NO.: 46	ELECT DISTR: 6TH	CENSUS TRACT: 606805

PREVIOUS FILE No. : WP-13-048, ECP-13-038, BA-95-028, SP-13-008, 24-4787-D, F-14-003

PROFESSIONAL CERTIFICATION
I, BRANDON R. ROWE, HEREBY CERTIFY THAT THESE DOCUMENTS WERE PREPARED OR APPROVED BY ME, AND THAT I AM A DULY LICENSED PROFESSIONAL ENGINEER UNDER THE LAWS OF THE STATE OF MARYLAND, LICENSE NO. 40808, EXPIRATION DATE: 7/3/2015

BOHLER ENGINEERING
SITE CIVIL AND CONSULTING ENGINEERING
LAND SURVEYING · PROGRAM MANAGEMENT · LANDSCAPE ARCHITECTURE
SUSTAINABLE DESIGN · PERMITTING SERVICES · TRANSPORTATION SERVICES
WARREN, NJ · UPSTATE NEW YORK · BOSTON, MA · NEW YORK METRO · PHILADELPHIA/SOUTHERN NJ · LEHIGH VALLEY, PA · SOUTHEASTERN, PA · BALTIMORE, MD · SOUTHERN MARYLAND · NORTHERN VIRGINIA · CENTRAL VIRGINIA · CHARLOTTE, NC · RALEIGH, NC

THE INFORMATION, DESIGN AND CONTENT OF THIS PLAN ARE PROPRIETARY AND SHALL NOT BE COPIED OR USED FOR ANY PURPOSE WITHOUT PRIOR WRITTEN AUTHORIZATION FROM BOHLER ENGINEERING. ONLY APPROVED, SIGNED AND SEALED PLANS SHALL BE UTILIZED FOR CONSTRUCTION PURPOSES © 2008 BOHLER ENGINEERING

REVISIONS

REV	DATE	COMMENT	BY

DIG WITH C.A.R.E. — CALL BEFORE YOU DIG

THE FOLLOWING STATES REQUIRE NOTIFICATION BY EXCAVATORS, DESIGNERS, OR ANY PERSON PREPARING TO DISTURB THE EARTH'S SURFACE ANYWHERE IN THE STATE. IN VIRGINIA, MARYLAND, THE DISTRICT OF COLUMBIA, NORTH CAROLINA AND DELAWARE CALL - 811
(WV 1-800-245-4848) (PA 1-800-242-1776) (DC 1-800-257-7777) (VA 1-800-552-7001) (MD 1-800-257-7777) (DE 1-800-282-8555)

NOT APPROVED FOR CONSTRUCTION

PROJECT No.:	MD122066.1
DRAWN BY:	RLB
CHECKED BY:	BRR
DATE:	11/20/14
SCALE:	AS SHOWN
CAD I.D.:	SD1

PROJECT: SITE DEVELOPMENT PLANS FOR RESERVOIR ESTATES
SINGLE FAMILY DETACHED UNITS
BUILDABLE LOTS 1-20 AND OPEN SPACE LOTS 21-26
PLAT NO. 23120
LOCATION OF SITE
10883 AND 10887 SCAGGSVILLE ROAD
LAUREL, MD. 20723
HOWARD COUNTY

BOHLER ENGINEERING
901 DULANEY VALLEY ROAD, SUITE 801
TOWSON, MARYLAND 21204
Phone: (410) 821-7900
Fax: (410) 821-7987
MD@BohlerEng.com

B.R. ROWE
STATE OF MARYLAND · BRANDON R. ROWE · PROFESSIONAL ENGINEER · No. 40808

SHEET TITLE: TITLE SHEET

SHEET NUMBER: 1 OF 15

SDP-15-012

GENERAL NOTES:

CONTRACTOR IS RESPONSIBLE FOR COMPLIANCE WITH THE NOTES AND SPECIFICATIONS CONTAINED HEREIN. CONTRACTOR IS RESPONSIBLE TO ENSURE THAT ALL SUBCONTRACTORS FULLY AND COMPLETELY CONFORM TO AND COMPLY WITH THESE REQUIREMENTS.

1. THE FOLLOWING DOCUMENTS ARE INCORPORATED BY REFERENCE AS PART OF THIS SITE PLAN:

   - SURVEY - PREPARED BY BOHLER ENGINEERING, TITLED: ALTA/ACSM LAND TITLE SURVEY, HIGDON PROPERTY, 10883 SCAGGSVILLE ROAD, 6TH ELECTION DISTRICT, HOWARD COUNTY, MARYLAND. DATED: 08/08/13, JOB#: SD122066
   - FINAL ROAD CONSTRUCTION PLANS - PREPARED BY BOHLER ENGINEERING, TITLED: FINAL ROAD CONSTRUCTION PLANS FOR RESERVOIR ESTATES, BUILDABLE LOTS 1 - 20 AND OPEN SPACE LOTS 21 - 26, 10833 SCAGGSVILLE ROAD, ZONING: R-20, 6TH ELECTION DISTRICT, TAX MAP 46, GRID 11, PARCEL 56, HOWARD COUNTY, MARYLAND. DATED: 08/21/13; LAST REVISED 2/18/14, JOB # MD122066.

   PRIOR TO THE START OF CONSTRUCTION, THE CONTRACTOR MUST VERIFY THAT HE/SHE HAS THE LATEST EDITION OF THE DOCUMENTS REFERENCED ABOVE. THIS IS CONTRACTOR'S RESPONSIBILITY.

2. ALL ACCESSIBLE (A/K/A ADA) PARKING SPACES MUST BE CONSTRUCTED TO MEET, AT A MINIMUM, THE MORE STRINGENT OF THE REQUIREMENTS OF THE "AMERICANS WITH DISABILITIES ACT" (ADA) CODE (42 U.S.C. § 12101 et seq. AND 42 U.S.C. § 4151 et seq.) OR THE REQUIREMENTS OF THE JURISDICTION WHERE THE PROJECT IS TO BE CONSTRUCTED, AND ANY AND ALL AMENDMENTS TO BOTH WHICH ARE IN EFFECT WHEN THESE PLANS ARE COMPLETED.
3. PRIOR TO STARTING CONSTRUCTION, THE CONTRACTOR IS RESPONSIBLE TO ENSURE THAT ALL REQUIRED PERMITS AND APPROVALS HAVE BEEN OBTAINED. NO CONSTRUCTION OR FABRICATION SHALL BEGIN UNTIL THE CONTRACTOR HAS RECEIVED AND THOROUGHLY REVIEWED THE COMMENTS TO ALL PLANS AND OTHER DOCUMENTS REVIEWED AND APPROVED BY THE PERMITTING AUTHORITIES AND CONFIRMED THAT ALL NECESSARY OR REQUIRED PERMITS HAVE BEEN OBTAINED. CONTRACTOR MUST HAVE COPIES OF ALL PERMITS AND APPROVALS ON SITE AT ALL TIMES.
4. THE OWNER/CONTRACTOR MUST BE FAMILIAR WITH AND RESPONSIBLE FOR THE PROCUREMENT OF ANY AND ALL CERTIFICATIONS REQUIRED FOR THE ISSUANCE OF A CERTIFICATE OF OCCUPANCY.
5. ALL WORK MUST BE PERFORMED IN ACCORDANCE WITH THESE PLANS,. SPECIFICATIONS AND CONDITIONS OF APPROVAL, AND ALL APPLICABLE REQUIREMENTS, RULES, REGULATIONS, STATUTORY REQUIREMENTS, CODES, LAWS AND STANDARDS OF ALL GOVERNMENTAL ENTITIES WITH JURISDICTION OVER THIS PROJECT.
6. THE GEOTECHNICAL REPORT AND RECOMMENDATIONS SET FORTH HEREIN ARE A PART OF THE REQUIRED CONSTRUCTION DOCUMENTS AND, IN CASE OF CONFLICT, DISCREPANCY OR AMBIGUITY, THE MORE STRINGENT REQUIREMENTS AND/OR RECOMMENDATIONS CONTAINED IN THE PLANS AND THE GEOTECHNICAL REPORT AND RECOMMENDATIONS SHALL TAKE PRECEDENCE UNLESS SPECIFICALLY NOTED OTHERWISE ON THE PLANS. THE CONTRACTOR MUST NOTIFY THE ENGINEER, IN WRITING, OF ANY SUCH CONFLICT, DISCREPANCY OR AMBIGUITY BETWEEN THE GEOTECHNICAL REPORTS AND PLANS AND SPECIFICATIONS PRIOR TO PROCEEDING WITH ANY FURTHER WORK.
7. THESE PLANS ARE BASED ON INFORMATION PROVIDED TO BOHLER ENGINEERING BY THE OWNER AND OTHERS PRIOR TO THE TIME OF PLAN PREPARATION. CONTRACTOR MUST FIELD VERIFY EXISTING CONDITIONS AND NOTIFY BOHLER ENGINEERING, IN WRITING, IMMEDIATELY IF ACTUAL SITE CONDITIONS DIFFER FROM THOSE SHOWN ON THE PLAN, OR IF THE PROPOSED WORK CONFLICTS WITH ANY OTHER SITE FEATURES.
8. ALL DIMENSIONS SHOWN ON THE PLANS MUST BE FIELD VERIFIED BY THE CONTRACTOR PRIOR TO THE START OF CONSTRUCTION. CONTRACTOR MUST NOTIFY ENGINEER, IN WRITING, IF ANY CONFLICTS, DISCREPANCIES, OR AMBIGUITIES EXIST PRIOR TO PROCEEDING WITH CONSTRUCTION. NO EXTRA COMPENSATION WILL BE PAID TO THE CONTRACTOR FOR WORK WHICH HAS TO BE REDONE OR REPAIRED DUE TO DIMENSIONS OR GRADES SHOWN INCORRECTLY ON THESE PLANS PRIOR TO CONTRACTOR GIVING ENGINEER WRITTEN NOTIFICATION OF SAME AND ENGINEER, THEREAFTER, PROVIDING CONTRACTOR WITH WRITTEN AUTHORIZATION TO PROCEED WITH SUCH ADDITIONAL WORK.
9. CONTRACTOR MUST REFER TO THE ARCHITECTURAL/BUILDING PLANS "OF RECORD" FOR EXACT LOCATIONS AND DIMENSIONS OF ENTRY/EXIT POINTS, ELEVATIONS, PRECISE BUILDING DIMENSIONS, AND EXACT BUILDING UTILITY LOCATIONS.
10. PRIOR TO THE START OF CONSTRUCTION, THE CONTRACTOR MUST COORDINATE THE BUILDING LAYOUT BY CAREFUL REVIEW OF THE ENTIRE SITE PLAN AND THE LATEST ARCHITECTURAL PLANS (INCLUDING, BUT NOT LIMITED TO, STRUCTURAL, MECHANICAL, ELECTRICAL, PLUMBING AND FIRE SUPPRESSION PLAN, WHERE APPLICABLE). CONTRACTOR MUST IMMEDIATELY NOTIFY OWNER, ARCHITECT AND SITE ENGINEER, IN WRITING, OF ANY CONFLICTS, DISCREPANCIES OR AMBIGUITIES WHICH EXIST.
11. DEBRIS MUST NOT BE BURIED ON THE SUBJECT SITE AND ALL UNSUITABLE EXCAVATED MATERIAL AND DEBRIS (SOLID WASTE) MUST BE DISPOSED OF IN ACCORDANCE WITH THE REQUIREMENTS OF ANY AND ALL GOVERNMENTAL AUTHORITIES WHICH HAVE JURISDICTION OVER THIS PROJECT OR OVER CONTRACTOR.
12. THE CONTRACTOR IS RESPONSIBLE FOR IDENTIFYING WHEN SHORING IS REQUIRED AND FOR INSTALLING ALL SHORING REQUIRED DURING EXCAVATION (TO BE PERFORMED IN ACCORDANCE WITH CURRENT OSHA STANDARDS) AND ANY ADDITIONAL PRECAUTIONS TO BE TAKEN TO ASSURE THE STABILITY OF ADJACENT, NEARBY AND CONTIGUOUS STRUCTURES AND PROPERTIES.
13. THE CONTRACTOR IS TO EXERCISE EXTREME CARE WHEN PERFORMING ANY WORK ACTIVITIES ADJACENT TO PAVEMENT, STRUCTURES, ETC. WHICH ARE TO REMAIN EITHER FOR AN INITIAL PHASE OF THE PROJECT OR AS PART OF THE FINAL CONDITION. CONTRACTOR IS RESPONSIBLE FOR TAKING ALL APPROPRIATE MEASURES REQUIRED TO ENSURE THE STRUCTURAL STABILITY OF SIDEWALKS AND PAVEMENT, UTILITIES, BUILDINGS, AND INFRASTRUCTURE WHICH ARE TO REMAIN, AND TO PROVIDE A SAFE WORK AREA FOR THIRD PARTIES, PEDESTRIANS AND ANYONE INVOLVED WITH THE PROJECT.
14. THE CONTRACTOR IS RESPONSIBLE FOR REPAIRING ANY DAMAGE DONE TO ANY NEW OR EXISTING CONSTRUCTION OR PROPERTY DURING THE COURSE OF CONSTRUCTION, INCLUDING BUT NOT LIMITED TO DRAINAGE, UTILITIES, PAVEMENT, STRIPING, CURB, ETC. AND SHALL BEAR ALL COSTS ASSOCIATED WITH SAME TO INCLUDE, BUT NOT BE LIMITED TO, REDESIGN, RE-SURVEY, RE-PERMITTING AND CONSTRUCTION. THE CONTRACTOR IS RESPONSIBLE FOR AND MUST REPLACE ALL SIGNAL INTERCONNECTION CABLE, WIRING CONDUITS, AND ANY UNDERGROUND ACCESSORY EQUIPMENT DAMAGED DURING CONSTRUCTION AND MUST BEAR ALL COSTS ASSOCIATED WITH SAME. THE REPAIR OF ANY SUCH NEW OR EXISTING CONSTRUCTION OR PROPERTY MUST RESTORE SUCH CONSTRUCTION OR PROPERTY TO A CONDITION EQUIVALENT TO OR BETTER THAN THE CONDITIONS PRIOR TO COMMENCEMENT OF THE CONSTRUCTION, AND IN CONFORMANCE WITH APPLICABLE CODES, LAWS RULES, REGULATIONS, STATUTORY REQUIREMENTS AND STATUTES. CONTRACTOR MUST BEAR ALL COSTS ASSOCIATED WITH SAME. CONTRACTOR IS RESPONSIBLE TO DOCUMENT ALL EXISTING DAMAGE AND TO NOTIFY THE OWNER AND THE CONSTRUCTION MANAGER PRIOR TO THE START OF CONSTRUCTION.
15. ALL CONCRETE MUST BE AIR ENTRAINED AND HAVE THE MINIMUM COMPRESSIVE STRENGTH OF 4,000 PSI AT 28 DAYS UNLESS OTHERWISE NOTED ON THE PLANS, DETAILS AND/OR GEOTECHNICAL REPORT.
16. THE ENGINEER IS NOT RESPONSIBLE FOR CONSTRUCTION METHODS, MEANS, TECHNIQUES OR PROCEDURES, GENERALLY OR FOR THE CONSTRUCTION MEAN, METHODS, TECHNIQUES OR PROCEDURES FOR COMPLETION OF THE WORK DEPICTED BOTH ON THESE PLANS, AND FOR ANY CONFLICTS/SCOPE REVISIONS WHICH RESULT FROM SAME. CONTRACTOR IS RESPONSIBLE FOR DETERMINING THE METHODS/MEANS FOR COMPLETION OF THE WORK PRIOR TO THE COMMENCEMENT OF CONSTRUCTION.
17. THE ENGINEER OF RECORD IS NOT RESPONSIBLE FOR JOB SITE SAFETY. THE ENGINEER OF RECORD HAS NOT BEEN RETAINED TO PERFORM OR BE RESPONSIBLE FOR JOB SITE SAFETY, SAME BEING WHOLLY OUTSIDE OF ENGINEER'S SERVICES AS RELATED TO THE PROJECT. THE ENGINEER OF RECORD IS NOT RESPONSIBLE TO IDENTIFY OR REPORT ANY JOB SITE SAFETY ISSUES, AT ANY TIME.
18. ALL CONTRACTORS MUST CARRY THE SPECIFIED STATUTORY WORKER'S COMPENSATION INSURANCE, EMPLOYER'S LIABILITY INSURANCE AND LIMITS OF COMMERCIAL GENERAL LIABILITY INSURANCE (CGL). ALL CONTRACTORS MUST HAVE THEIR CGL POLICIES ENDORSED TO NAME BOHLER ENGINEERING, AND ITS PAST, PRESENT AND FUTURE OWNERS, OFFICERS, DIRECTORS, PARTNERS, SHAREHOLDERS, MEMBERS, PRINCIPALS, COMMISSIONERS, AGENTS, SERVANTS, EMPLOYEES, AFFILIATES, SUBSIDIARIES, AND RELATED ENTITIES, AND ITS SUBCONTRACTORS AND SUBCONSULTANTS AS ADDITIONAL NAMED INSURED AND TO PROVIDE CONTRACTUAL LIABILITY COVERAGE SUFFICIENT TO INSURE THIS HOLD HARMLESS AND INDEMNITY OBLIGATIONS ASSUMED BY THE CONTRACTORS. ALL CONTRACTORS MUST FURNISH BOHLER ENGINEERING WITH CERTIFICATIONS OF INSURANCE AS EVIDENCE OF THE REQUIRED INSURANCE PRIOR TO COMMENCING WORK AND UPON RENEWAL OF EACH POLICY DURING THE ENTIRE PERIOD OF CONSTRUCTION AND FOR ONE YEAR AFTER THE COMPLETION OF CONSTRUCTION. IN ADDITION, ALL CONTRACTORS WILL, TO THE FULLEST EXTENT PERMITTED UNDER THE LAW, INDEMNIFY, DEFEND AND HOLD HARMLESS BOHLER ENGINEERING AND ITS PAST, PRESENT AND FUTURE OWNERS, OFFICERS, DIRECTORS, PARTNERS, SHAREHOLDERS, MEMBERS, PRINCIPALS, COMMISSIONERS, AGENTS, SERVANTS, EMPLOYEES, AFFILIATES, SUBSIDIARIES, AND RELATED ENTITIES, AND ITS SUBCONTRACTORS AND SUBCONSULTANTS FROM AND AGAINST ANY DAMAGES, INJURIES, CLAIMS, ACTIONS, PENALTIES, EXPENSES, PUNITIVE DAMAGES, TORT DAMAGES, STATUTORY CLAIMS, STATUTORY CAUSES OF ACTION, LOSSES, CAUSES OF ACTION, LIABILITIES OR COSTS, INCLUDING, BUT NOT LIMITED TO, REASONABLE ATTORNEYS' FEES AND DEFENSE COSTS, ARISING OUT OF OR IN ANY WAY CONNECTED WITH OR TO THE PROJECT, INCLUDING ALL CLAIMS BY EMPLOYEES OF THE CONTRACTORS, ALL CLAIMS BY THIRD PARTIES AND ALL CLAIMS RELATED TO THE PROJECT. CONTRACTOR MUST NOTIFY ENGINEER, IN WRITING, AT LEAST THIRTY (30) DAYS PRIOR TO ANY TERMINATION, SUSPENSION OR CHANGE OF ITS INSURANCE HEREUNDER.
19. BOHLER ENGINEERING WILL REVIEW OR TAKE OTHER APPROPRIATE ACTION ON THE CONTRACTOR SUBMITTALS, SUCH AS SHOP DRAWINGS, PRODUCT DATA, SAMPLES, AND OTHER DATA, WHICH THE CONTRACTOR IS REQUIRED TO SUBMIT, BUT ONLY FOR THE LIMITED PURPOSE OF CHECKING FOR CONFORMANCE WITH THE DESIGN INTENT AND THE INFORMATION SHOWN IN THE CONSTRUCTION CONTRACT DOCUMENTS. CONSTRUCTION MEANS AND/OR METHODS AND/OR TECHNIQUES OR PROCEDURES, COORDINATION OF THE WORK WITH OTHER TRADES, AND CONSTRUCTION SAFETY PRECAUTIONS ARE THE SOLE RESPONSIBILITY OF THE CONTRACTOR AND BOHLER HAS NO RESPONSIBILITY OR LIABILITY FOR SAME HEREUNDER. BOHLER ENGINEERING'S SHOP DRAWING REVIEW WILL BE CONDUCTED WITH REASONABLE PROMPTNESS WHILE ALLOWING SUFFICIENT TIME TO PERMIT ADEQUATE REVIEW. REVIEW OF A SPECIFIC ITEM MUST NOT INDICATE THAT BOHLER ENGINEERING HAS REVIEWED THE ENTIRE ASSEMBLY OF WHICH THE ITEM IS A COMPONENT. BOHLER ENGINEERING WILL NOT BE RESPONSIBLE FOR ANY DEVIATIONS FROM THE CONSTRUCTION DOCUMENTS NOT PROMPTLY AND IMMEDIATELY BROUGHT TO ITS ATTENTION, IN WRITING, BY THE CONTRACTOR. BOHLER ENGINEERING WILL NOT BE REQUIRED TO REVIEW PARTIAL SUBMISSIONS OR THOSE FOR WHICH SUBMISSIONS OF CORRELATED ITEMS HAVE NOT BEEN RECEIVED.
20. NEITHER THE PROFESSIONAL ACTIVITIES OF BOHLER ENGINEERING, NOR THE PRESENCE OF BOHLER ENGINEERING AND/OR ITS PAST, PRESENT AND FUTURE OWNERS, OFFICERS, DIRECTORS, PARTNERS, SHAREHOLDERS, MEMBERS, PRINCIPALS, COMMISSIONERS, AGENTS, SERVANTS, EMPLOYEES, AFFILIATES, SUBSIDIARIES, AND RELATED ENTITIES, AND ITS SUBCONTRACTORS AND SUBCONSULTANTS AT A CONSTRUCTION/PROJECT SITE, SHALL RELIEVE THE GENERAL CONTRACTOR OF ITS OBLIGATIONS, DUTIES AND RESPONSIBILITIES INCLUDING, BUT NOT LIMITED TO, CONSTRUCTION MEANS, METHODS, SEQUENCE, TECHNIQUES OR PROCEDURES NECESSARY FOR PERFORMING, OVERSEEING, SUPERINTENDING AND COORDINATING THE WORK IN ACCORDANCE WITH THE CONTRACT DOCUMENTS AND COMPLIANCE ANY HEALTH OR SAFETY PRECAUTIONS REQUIRED BY ANY REGULATORY AGENCIES WITH JURISDICTION OVER THE PROJECT AND/OR PROPERTY. BOHLER ENGINEERING AND ITS PERSONNEL HAVE NO AUTHORITY TO EXERCISE ANY CONTROL OVER ANY CONSTRUCTION CONTRACTOR OR ITS EMPLOYEES IN CONNECTION WITH THEIR WORK OR ANY HEALTH OR SAFETY PROGRAMS OR PROCEDURES. THE GENERAL CONTRACTOR IS SOLELY RESPONSIBLE FOR JOB SITE SAFETY. BOHLER ENGINEERING SHALL BE INDEMNIFIED BY THE GENERAL CONTRACTOR AND MUST BE NAMED AN ADDITIONAL INSURED UNDER THE GENERAL CONTRACTOR'S POLICIES OF GENERAL LIABILITY INSURANCE AS DESCRIBED ABOVE IN NOTE 19 FOR JOB SITE SAFETY.
21. IF THE CONTRACTOR DEVIATES FROM THE PLANS AND SPECIFICATIONS, INCLUDING THE NOTES CONTAINED HEREIN, WITHOUT FIRST OBTAINING THE PRIOR WRITTEN AUTHORIZATION OF THE ENGINEER FOR SUCH DEVIATIONS, THE CONTRACTOR IS SOLELY RESPONSIBLE FOR THE PAYMENT OF ALL COSTS INCURRED IN CORRECTING ANY WORK DONE WHICH DEVIATES FROM THE PLANS, ALL FINES AND/OR PENALTIES ASSESSED WITH RESPECT THERETO AND ALL COMPENSATORY OR PUNITIVE DAMAGES RESULTING THEREFROM AND, FURTHER, SHALL DEFEND, INDEMNIFY AND HOLD HARMLESS THE ENGINEER, TO THE FULLEST EXTENT PERMITTED UNDER THE LAW, IN ACCORDANCE WITH PARAGRAPH 19 HEREIN, FOR AND FROM ALL FEES, ATTORNEYS' FEES, DAMAGES, COSTS, JUDGMENTS, PENALTIES AND THE LIKE RELATED TO SAME.
22. CONTRACTOR IS RESPONSIBLE FOR MAINTENANCE AND PROTECTION OF TRAFFIC PLAN FOR ALL WORK THAT AFFECTS PUBLIC TRAVEL EITHER IN THE R.O.W. OR ON SITE. THE COST FOR THIS ITEM MUST BE INCLUDED IN THE CONTRACTOR'S PRICE.
23. ALL SIGNING AND PAVEMENT STRIPING MUST CONFORM TO MANUAL ON UNIFORM TRAFFIC CONTROL DEVICES OR LOCALLY APPROVED SUPPLEMENT.
24. ENGINEER IS NOT RESPONSIBLE FOR ANY INJURY OR DAMAGES RESULTING FROM CONTRACTOR'S FAILURE TO BUILD OR CONSTRUCT IN STRICT ACCORDANCE WITH THE APPROVED PLANS. IF CONTRACTOR AND/OR OWNER FAIL BUILD OR CONSTRUCT IN STRICT ACCORDANCE WITH APPROVED PLANS, THEY AGREE TO JOINTLY AND SEVERALLY INDEMNIFY AND HOLD ENGINEER HARMLESS FOR ALL INJURIES AND DAMAGES THAT ENGINEER SUFFERS AND COSTS THAT ENGINEER INCURS.
25. OWNER MUST MAINTAIN AND PRESERVE ALL PHYSICAL SITE FEATURES AND DESIGN FEATURES DEPICTED ON THE PLANS AND RELATED DOCUMENTS, IN STRICT ACCORDANCE WITH THE APPROVED PLAN(S) AND DESIGN AND, FURTHER ENGINEER IS NOT RESPONSIBLE FOR ANY FAILURE TO SO MAINTAIN OR PRESERVE SITE AND/OR DESIGN FEATURES. IF OWNER FAILS TO MAINTAIN AND/OR PRESERVE ALL PHYSICAL SITE FEATURES AND/OR DESIGN FEATURES DEPICTED ON THE PLANS AND RELATED DOCUMENTS, OWNER AGREES TO INDEMNIFY AND HOLD ENGINEER HARMLESS FOR ALL INJURIES AND DAMAGES THAT ENGINEER SUFFERS AND COSTS THAT ENGINEER INCURS AS A RESULT OF SAID FAILURE.
26. ALL DIMENSIONS MUST BE TO FACE OF CURB, EDGE OF PAVEMENT, OR EDGE OF BUILDING, UNLESS NOTED OTHERWISE.
27. ALL CONSTRUCTION AND MATERIALS MUST COMPLY WITH AND CONFORM TO APPLICABLE FEDERAL, STATE AND LOCAL REGULATIONS, LAWS, ORDINANCES, RULES AND CODES, AND ALL APPLICABLE OSHA REQUIREMENTS.
28. CONTRACTOR AND OWNER MUST INSTALL ALL ELEMENTS AND COMPONENTS IN STRICT COMPLIANCE WITH AND ACCORDANCE WITH MANUFACTURER'S STANDARDS AND RECOMMENDED INSTALLATION CRITERIA AND SPECIFICATIONS. IF CONTRACTOR AND/OR OWNER FAIL TO DO SO, THEY AGREE TO JOINTLY AND SEVERALLY INDEMNIFY AND HOLD ENGINEER HARMLESS FOR ALL INJURIES AND DAMAGES THAT ENGINEER SUFFERS AND COSTS THAT ENGINEER INCURS AS A RESULT OF SAID FAILURE.
29. CONTRACTOR IS RESPONSIBLE TO MAINTAIN ON-SITE STORMWATER POLLUTION PREVENTION PLAN (SWPPP) IN COMPLIANCE WITH EPA REQUIREMENTS FOR SITES WHERE ONE (1) ACRE OR MORE (UNLESS THE LOCAL JURISDICTION REQUIRES FEWER) IS DISTURBED BY CONSTRUCTION ACTIVITIES. CONTRACTOR IS RESPONSIBLE TO ENSURE THAT ALL ACTIVITIES, INCLUDING THOSE OF SUBCONTRACTORS, ARE IN COMPLIANCE WITH THE SWPPP, INCLUDING BUT NOT LIMITED TO LOGGING ACTIVITIES (MINIMUM ONCE PER WEEK AND AFTER RAINFALL EVENTS) AND CORRECTIVE MEASURES, AS APPROPRIATE.
30. AS CONTAINED IN THESE DRAWINGS AND ASSOCIATED APPLICATION DOCUMENTS PREPARED BY THE SIGNATORY PROFESSIONAL ENGINEER, THE USE OF THE WORDS CERTIFY OR CERTIFICATION CONSTITUTES AN EXPRESSION OF "PROFESSIONAL OPINION" REGARDING THE INFORMATION WHICH IS THE SUBJECT OF THE UNDERSIGNED PROFESSIONAL KNOWLEDGE OR BELIEF AND IN ACCORDANCE WITH COMMON ACCEPTED PROCEDURE CONSISTENT WITH THE APPLICABLE STANDARDS OF PRACTICE, AND DOES NOT CONSTITUTE A WARRANTY OR GUARANTEE, EITHER EXPRESSED OR IMPLIED.

GENERAL DEMOLITION NOTES:

1. THIS PLAN REFERENCES DOCUMENTS AND INFORMATION BY:

   BOHLER ENGINEERING
   22636 DAVIS DRIVE, SUITE 250
   STERLING, VA 20164
   DATED: 08/08/13
   JOB#: SD122066

2. CONTRACTOR SHALL PERFORM ALL WORK IN ACCORDANCE WITH THE REQUIREMENTS OF THE OCCUPATIONAL SAFETY AND HEALTH ACT OF 1970, (29 U.S.C. 651 et seq.), AS AMENDED AND ANY MODIFICATIONS, AMENDMENTS OR REVISIONS TO SAME.
3. BOHLER ENGINEERING HAS NO CONTRACTUAL, LEGAL, OR OTHER RESPONSIBILITY FOR JOB SITE SAFETY OR JOB SITE SUPERVISION, OR ANYTHING RELATED TO SAME.
4. THE DEMOLITION PLAN IS INTENDED TO PROVIDE GENERAL INFORMATION, ONLY, REGARDING ITEMS TO BE DEMOLISHED AND/OR REMOVED. THE CONTRACTOR MUST ALSO REVIEW THE OTHER SITE PLAN DRAWINGS AND INCLUDE IN DEMOLITION ACTIVITIES ALL INCIDENTAL WORK NECESSARY FOR THE CONSTRUCTION OF THE NEW SITE IMPROVEMENTS.
5. CONTRACTOR MUST RAISE ANY QUESTIONS CONCERNING THE ACCURACY OR INTENT OF THESE PLANS OR SPECIFICATIONS, CONCERNS REGARDING THE APPLICABLE SAFETY STANDARDS, OR THE SAFETY OF THE CONTRACTOR OR THIRD PARTIES IN PERFORMING THE WORK ON THIS PROJECT, WITH BOHLER ENGINEERING, IN WRITING, AND RESPONDED TO BY BOHLER, IN WRITING, PRIOR TO THE INITIATION OF ANY SITE ACTIVITY AND ANY DEMOLITION ACTIVITY. ALL DEMOLITION ACTIVITIES MUST BE PERFORMED IN ACCORDANCE WITH THE REQUIREMENTS OF THESE PLANS AND SPECIFICATIONS AND ALL APPLICABLE FEDERAL, STATE AND LOCAL REGULATIONS, RULES, REQUIREMENTS, STATUTES, ORDINANCES AND CODES.
6. PRIOR TO STARTING ANY DEMOLITION, CONTRACTOR IS RESPONSIBLE FOR/TO:

   A. OBTAINING ALL REQUIRED PERMITS AND MAINTAINING THE SAME ON SITE FOR REVIEW BY THE ENGINEER AND OTHER PUBLIC AGENCIES HAVING JURISDICTION THROUGHOUT THE DURATION OF THE PROJECT, SITE WORK AND DEMOLITION WORK.

ADA INSTRUCTIONS TO CONTRACTOR

CONTRACTORS MUST EXERCISE APPROPRIATE CARE AND PRECISION IN CONSTRUCTION OF ADA (HANDICAP) ACCESSIBLE COMPONENTS AND ACCESS ROUTES FOR THE SITE. THESE COMPONENTS, AS CONSTRUCTED, MUST COMPLY WITH THE CURRENT ADA STANDARDS AND REGULATIONS' BARRIER FREE ACCESS AND ANY MODIFICATIONS, REVISIONS OR UPDATES TO SAME. FINISHED SURFACES ALONG THE ACCESSIBLE ROUTE OF TRAVEL FROM PARKING SPACE, PUBLIC TRANSPORTATION, PEDESTRIAN ACCESS, INTER-BUILDING ACCESS, TO POINTS OF ACCESSIBLE BUILDING ENTRANCE/EXIT, MUST COMPLY WITH THESE ADA CODE REQUIREMENTS. THESE INCLUDE, BUT ARE NOT LIMITED TO THE FOLLOWING:

- PARKING SPACES AND PARKING AISLES - SLOPE SHALL NOT EXCEED 1:50 (1/4" PER FOOT OR NOMINALLY 2.0%) IN ANY DIRECTION.
- CURB RAMPS - SLOPE MUST NOT EXCEED 1:12 (8.3%) FOR A MAXIMUM OF SIX (6) FEET.
- LANDINGS - MUST BE PROVIDED AT EACH END OF RAMPS, MUST PROVIDE POSITIVE DRAINAGE, AND MUST NOT EXCEED 1:50 (1/4" PER FOOT OR NOMINALLY 2.0%) IN ANY DIRECTION.
- PATH OF TRAVEL ALONG ACCESSIBLE ROUTE - MUST PROVIDE A 36-INCH OR GREATER UNOBSTRUCTED WIDTH OF TRAVEL (CAR OVERHANGS AND/OR HANDRAILS CANNOT REDUCE THIS MINIMUM WIDTH). THE SLOPE MUST BE NO GREATER THAN 1:20 (5.0%) IN THE DIRECTION OF TRAVEL, AND MUST NOT EXCEED 1:50 (1/4" PER FOOT OR NOMINALLY 2.0%) IN CROSS SLOPE. WHERE PATH OF TRAVEL WILL BE GREATER THAN 1:30 (5.0%), ADA RAMP MUST BE ADHERED TO. A MAXIMUM SLOPE OF 1:12 (8.3%), FOR A MAXIMUM RISE OF 2.5 FEET, MUST BE PROVIDED. THE RAMP MUST HAVE ADA HAND RAILS AND "LEVEL" LANDINGS ON EACH END THAT ARE CROSS SLOPED NO MORE THAN 1:50 IN ANY DIRECTION (1/4" PER FOOT OR NOMINALLY 2.0%) FOR POSITIVE DRAINAGE.
- DOORWAYS - MUST HAVE A "LEVEL" LANDING AREA ON THE EXTERIOR SIDE OF THE DOOR THAT IS SLOPED AWAY FROM THE DOOR NO MORE THAN 1:50 (1/4" PER FOOT OR NOMINALLY 2.0%) FOR POSITIVE DRAINAGE. THIS LANDING AREA MUST BE NO LESS THAN 60 INCHES (5 FEET) LONG, EXCEPT WHERE OTHERWISE PERMITTED BY ADA STANDARDS FOR ALTERNATIVE DOORWAY OPENING CONDITIONS. (SEE ICC/ANSI A117.1-2003 AND OTHER REFERENCED INCORPORATED BY COD.)
- WHEN THE PROPOSED CONSTRUCTION INVOLVES RECONSTRUCTION, MODIFICATION, REVISION OR EXTENSION OF OR TO ADA COMPONENTS FROM EXISTING DOORWAYS OR SURFACES, CONTRACTOR MUST VERIFY EXISTING ELEVATIONS SHOWN ON THE PLAN. NOTE THAT TABLE 405.2 OF THE DEPARTMENT OF JUSTICE'S ADA STANDARDS FOR ACCESSIBLE DESIGN ALLOWS FOR STEEPER RAMP SLOPES, IN RARE CIRCUMSTANCES. THE CONTRACTOR MUST IMMEDIATELY NOTIFY THE DESIGN ENGINEER OF ANY DISCREPANCIES AND/OR FIELD CONDITIONS THAT DIFFER IN ANY WAY OR ANY RESPECT FROM WHAT IS SHOWN ON THE PLANS, IN WRITING, BEFORE COMMENCEMENT OF WORK. CONSTRUCTED IMPROVEMENTS MUST FALL WITHIN THE MAXIMUM AND MINIMUM LIMITATIONS IMPOSED BY THE BARRIER FREE REGULATIONS AND THE ADA REQUIREMENTS.
- THE CONTRACTOR MUST VERIFY THE SLOPES OF CONTRACTOR'S FORMS PRIOR TO POURING CONCRETE. IF ANY NON-CONFORMANCE IS OBSERVED OR EXISTS, CONTRACTOR MUST IMMEDIATELY NOTIFY THE ENGINEER PRIOR TO POURING CONCRETE. CONTRACTOR IS RESPONSIBLE FOR ALL COSTS TO REMOVE, REPAIR AND REPLACE NON-CONFORMING CONCRETE.

IT IS STRONGLY RECOMMENDED THAT THE CONTRACTOR REVIEW THE INTENDED CONSTRUCTION WITH THE LOCAL BUILDING CODE PRIOR TO COMMENCEMENT OF CONSTRUCTION.

GENERAL GRADING & UTILITY NOTES

1. LOCATIONS OF ALL EXISTING AND PROPOSED SERVICES ARE APPROXIMATE AND MUST BE INDEPENDENTLY CONFIRMED WITH LOCAL UTILITY COMPANIES PRIOR TO COMMENCEMENT OF ANY CONSTRUCTION OR EXCAVATION. SANITARY SEWER AND ALL OTHER UTILITY SERVICE CONNECTION POINTS MUST BE INDEPENDENTLY CONFIRMED BY THE CONTRACTOR IN THE FIELD PRIOR TO THE COMMENCEMENT OF CONSTRUCTION. ALL DISCREPANCIES MUST IMMEDIATELY BE REPORTED, IN WRITING, TO THE ENGINEER. CONSTRUCTION MUST COMMENCE BEGINNING AT THE LOWEST INVERT (POINT OF CONNECTION) AND PROGRESS UP GRADIENT. PROPOSED INTERFACE POINTS (CROSSINGS) WITH EXISTING UNDERGROUND UTILITIES SHALL BE FIELD VERIFIED BY TEST PIT PRIOR TO COMMENCEMENT OF CONSTRUCTION.
2. CONTRACTOR MUST VERTICALLY AND HORIZONTALLY LOCATE ALL UTILITIES AND SERVICES INCLUDING, BUT NOT LIMITED TO, GAS, WATER, ELECTRIC, SANITARY AND STORM SEWER, TELEPHONE, CABLE, FIBER OPTIC CABLE, ETC. WITHIN THE LIMITS OF DISTURBANCE OR WORK SPACE, WHICHEVER IS GREATER. THE CONTRACTOR MUST USE, REFER TO, AND COMPLY WITH THE REQUIREMENTS OF THE APPLICABLE UTILITY NOTIFICATION SYSTEM TO LOCATE ALL THE UNDERGROUND UTILITIES. THE CONTRACTOR IS RESPONSIBLE FOR REPAIRING ALL DAMAGE TO ANY EXISTING UTILITIES DURING CONSTRUCTION, AT NO COST TO THE OWNER. CONTRACTOR SHALL BEAR ALL COSTS ASSOCIATED WITH DAMAGE TO ANY EXISTING UTILITIES DURING CONSTRUCTION.
3. IT IS THE CONTRACTOR'S RESPONSIBILITY TO REVIEW ALL CONSTRUCTION CONTRACT DOCUMENTS INCLUDING, BUT NOT LIMITED TO, ALL OF THE DRAWINGS AND SPECIFICATIONS ASSOCIATED WITH THE PROJECT WORK SCOPE PRIOR TO THE INITIATION AND COMMENCEMENT OF CONSTRUCTION. SHOULD THE CONTRACTOR FIND A CONFLICT AND/OR DISCREPANCY BETWEEN THE DOCUMENTS RELATIVE TO THE SPECIFICATIONS OR THE RELATIVE OR APPLICABLE CODES, REGULATIONS, LAWS, RULES, STATUTES AND/OR ORDINANCES, IT IS THE CONTRACTOR'S SOLE RESPONSIBILITY TO NOTIFY THE PROJECT ENGINEER OF RECORD, IN WRITING, OF SAID CONFLICT AND/OR DISCREPANCY PRIOR TO THE START OF CONSTRUCTION. CONTRACTOR'S FAILURE TO NOTIFY THE PROJECT ENGINEER SHALL CONSTITUTE CONTRACTOR'S FULL AND COMPLETE ACCEPTANCE OF ALL RESPONSIBILITY TO COMPLETE THE SCOPE OF WORK AS DEFINED BY THE DRAWINGS AND IN FULL COMPLIANCE WITH ALL FEDERAL, STATE AND LOCAL REGULATIONS, LAWS, STATUTES, ORDINANCES AND CODES AND, FURTHER, CONTRACTOR SHALL BE RESPONSIBLE FOR ALL COSTS ASSOCIATED WITH SAME.
4. THE CONTRACTOR MUST LOCATE AND CLEARLY AND UNAMBIGUOUSLY DEFINE VERTICALLY AND HORIZONTALLY ALL ACTIVE AND INACTIVE UTILITY AND/OR SERVICE SYSTEMS THAT ARE TO BE REMOVED. THE CONTRACTOR IS RESPONSIBLE TO PROTECT AND MAINTAIN ALL ACTIVE AND INACTIVE SYSTEMS THAT ARE NOT BEING REMOVED/RELOCATED DURING SITE ACTIVITY.
5. THE CONTRACTOR MUST FAMILIARIZE ITSELF WITH THE APPLICABLE UTILITY SERVICE PROVIDER REQUIREMENTS AND IS RESPONSIBLE FOR ALL COORDINATION REGARDING UTILITY DEMOLITION AS IDENTIFIED OR REQUIRED FOR THE PROJECT. THE CONTRACTOR MUST PROVIDE THE OWNER WITH WRITTEN NOTIFICATION THAT THE EXISTING UTILITIES AND SERVICES HAVE BEEN TERMINATED AND ABANDONED IN ACCORDANCE WITH THE JURISDICTION AND UTILITY COMPANY REQUIREMENTS AND ALL OTHER APPLICABLE REQUIREMENTS, RULES, STATUTES, LAWS, ORDINANCES AND CODES.
6. THE CONTRACTOR MUST INSTALL ALL STORM SEWER AND SANITARY SEWER COMPONENTS WHICH FUNCTION BY GRAVITY PRIOR TO THE INSTALLATION OF ALL OTHER UTILITIES.
7. CONTRACTOR IS RESPONSIBLE FOR COORDINATION OF SITE PLAN DOCUMENTS AND ARCHITECTURAL DESIGN FOR EXACT BUILDING UTILITY CONNECTION LOCATIONS, GREASE TRAP REQUIREMENTS/DETAILS, DOOR ACCESS, AND EXTERIOR GRADING. THE ARCHITECT WILL DETERMINE THE UTILITY SERVICE SIZES. THE CONTRACTOR MUST COORDINATE INSTALLATION OF UTILITIES/SERVICES WITH THE INDIVIDUAL COMPANIES, TO AVOID CONFLICTS AND TO ENSURE THAT PROPER DEPTHS ARE ACHIEVED. THE CONTRACTOR IS RESPONSIBLE FOR ENSURING THAT INSTALLATION OF ALL IMPROVEMENTS COMPLIES WITH ALL UTILITY REQUIREMENTS WITH JURISDICTION AND/OR CONTROL OF THE SITE, AND ALL OTHER APPLICABLE REQUIREMENTS, RULES, STATUTES, LAWS, ORDINANCES AND CODES AND, FURTHER, IS RESPONSIBLE FOR COORDINATING THE UTILITY TIE-INS/CONNECTIONS PRIOR TO CONNECTING TO THE EXISTING UTILITY/SERVICE. WHERE A CONFLICT(S) EXISTS BETWEEN THESE SITE PLANS AND THE ARCHITECTURAL PLANS, OR WHERE ARCHITECTURAL PLAN UTILITY CONNECTION POINTS DIFFER, THE CONTRACTOR MUST IMMEDIATELY NOTIFY THE ENGINEER, IN WRITING, AND PRIOR TO CONSTRUCTION, RESOLVE SAME.
8. WATER SERVICE MATERIALS, BURIAL DEPTH, AND COVER REQUIREMENTS MUST BE SPECIFIED BY THE LOCAL UTILITY COMPANY. CONTRACTOR'S PRICE FOR WATER SERVICE MUST INCLUDE ALL FEES, COSTS AND APPURTENANCES REQUIRED BY THE UTILITY TO PROVIDE FULL AND COMPLETE WORKING SERVICE. CONTRACTOR MUST CONTACT THE APPLICABLE MUNICIPALITY TO CONFIRM THE PROPER WATER METER AND VAULT, PRIOR TO COMMENCING CONSTRUCTION.
9. ALL NEW UTILITIES/SERVICES, INCLUDING ELECTRIC, TELEPHONE, CABLE TV, ETC. ARE TO BE INSTALLED UNDERGROUND. ALL NEW UTILITIES/SERVICES MUST BE INSTALLED IN ACCORDANCE WITH THE UTILITY/SERVICE PROVIDER INSTALLATION SPECIFICATIONS AND STANDARDS.
10. SITE GRADING MUST BE PERFORMED IN ACCORDANCE WITH THESE PLANS AND SPECIFICATIONS AND THE RECOMMENDATIONS SET FORTH IN THE GEOTECHNICAL REPORT REFERENCED IN THIS PLAN SET. THE CONTRACTOR IS RESPONSIBLE FOR REMOVING AND REPLACING UNSUITABLE MATERIALS WITH SUITABLE MATERIALS AS SPECIFIED IN THE GEOTECHNICAL REPORT. ALL EXCAVATED OR FILLED AREAS MUST BE COMPACTED AS OUTLINED IN THE GEOTECHNICAL REPORT. MOISTURE CONTENT AT TIME OF PLACEMENT MUST BE SUBMITTED IN A COMPACTION REPORT PREPARED BY A QUALIFIED GEOTECHNICAL ENGINEER, REGISTERED WITH THE STATE WHERE THE WORK IS PERFORMED, VERIFYING THAT ALL FILLED AREAS AND SUBGRADE AREAS WITHIN THE BUILDING PAD AREA AND AREAS TO BE PAVED HAVE BEEN COMPACTED IN ACCORDANCE WITH THESE PLANS, SPECIFICATIONS AND THE RECOMMENDATIONS SET FORTH IN THE GEOTECHNICAL REPORT AND ALL APPLICABLE REQUIREMENTS, RULES, STATUTES, LAWS, ORDINANCES AND CODES. SUBBASE MATERIAL FOR SIDEWALKS, CURB, OR ASPHALT MUST BE FREE OF ORGANICS AND OTHER UNSUITABLE MATERIALS. SHOULD SUBBASE BE DEEMED UNSUITABLE BY OWNER/DEVELOPER, OR OWNER/DEVELOPER'S REPRESENTATIVE, SUBBASE IS TO BE REMOVED AND FILLED WITH APPROVED FILL MATERIAL COMPACTED AS DIRECTED BY THE GEOTECHNICAL REPORT. EARTHWORK ACTIVITIES INCLUDING, BUT NOT LIMITED TO, EXCAVATION, BACKFILL, AND COMPACTING MUST COMPLY WITH THE RECOMMENDATIONS IN THE GEOTECHNICAL REPORT AND ALL APPLICABLE REQUIREMENTS, RULES, STATUTES, LAWS, ORDINANCES AND CODES. EARTHWORK ACTIVITIES MUST COMPLY WITH THE STANDARD STATE DOT SPECIFICATIONS FOR ROADWAY CONSTRUCTION (LATEST EDITION) AND ANY AMENDMENTS OR REVISIONS THERETO.
11. ALL FILL, COMPACTION, AND BACKFILL MATERIALS REQUIRED FOR UTILITY INSTALLATION MUST BE AS PER THE RECOMMENDATIONS PROVIDED IN THE GEOTECHNICAL REPORT AND MUST BE COORDINATED WITH THE APPLICABLE UTILITY COMPANY SPECIFICATIONS. WHEN THE PROJECT DOES NOT HAVE GEOTECHNICAL RECOMMENDATIONS, FILL AND COMPACTION MUST, AT A MINIMUM, COMPLY WITH THE STATE DOT REQUIREMENTS AND SPECIFICATIONS AND CONSULTANT SHALL HAVE NO LIABILITY OR RESPONSIBILITY FOR OR AS RELATED TO FILL, COMPACTION AND BACKFILL. FURTHER, CONTRACTOR IS FULLY RESPONSIBLE FOR EARTHWORK BALANCE.
12. THE CONTRACTOR MUST COMPLY, TO THE FULLEST EXTENT, WITH THE LATEST OSHA STANDARDS AND REGULATIONS, AND/OR ANY OTHER AGENCY WITH JURISDICTION FOR EXCAVATION AND TRENCHING PROCEDURES. THE CONTRACTOR IS RESPONSIBLE FOR DETERMINING THE "MEANS AND METHODS" REQUIRED TO MEET THE INTENT AND PERFORMANCE CRITERIA OF OSHA, AS WELL AS ANY OTHER ENTITY THAT HAS JURISDICTION FOR EXCAVATION AND/OR TRENCHING PROCEDURES AND CONSULTANT SHALL HAVE NO RESPONSIBILITY FOR OR AS RELATED FOR OR AS RELATED TO EXCAVATION AND TRENCHING PROCEDURES.
13. PAVEMENT MUST BE SAW CUT IN STRAIGHT LINES, AND EXCEPT FOR EDGE OF BUTT JOINTS, MUST EXTEND TO THE FULL DEPTH OF THE EXISTING PAVEMENT. ALL DEBRIS FROM REMOVAL OPERATIONS MUST BE REMOVED FROM THE SITE AT THE TIME OF EXCAVATION. STOCKPILING OF DEBRIS WILL NOT BE PERMITTED.
14. THE TOPS OF EXISTING MANHOLES, INLET STRUCTURES, AND SANITARY CLEANOUT TOPS MUST BE ADJUSTED, AS NECESSARY, TO MATCH PROPOSED GRADES IN ACCORDANCE WITH ALL APPLICABLE STANDARDS, REQUIREMENTS, RULES, STATUTES, LAWS, ORDINANCES AND CODES.
15. DURING THE INSTALLATION OF SANITARY SEWER, STORM SEWER, AND ALL UTILITIES, THE CONTRACTOR MUST MAINTAIN A CONTEMPORANEOUS AND THOROUGH RECORD OF CONSTRUCTION TO IDENTIFY THE AS-INSTALLED LOCATIONS OF ALL UNDERGROUND INFRASTRUCTURE. THE CONTRACTOR MUST CAREFULLY NOTE ANY INSTALLATIONS THAT DEVIATE FROM THE INFORMATION CONTAINED IN THE UTILITY PLAN. THIS RECORD MUST BE KEPT ON A CLEAN COPY OF THE SITE PLAN, WHICH CONTRACTOR MUST PROMPTLY PROVIDE TO THE OWNER AT THE COMPLETION OF WORK.
16. WHEN THE SITE IMPROVEMENT PLANS INVOLVE MULTIPLE BUILDINGS, SOME OF WHICH MAY BE BUILT AT A LATER DATE, THE CONTRACTOR MUST EXTEND ALL LINES, INCLUDING BUT NOT LIMITED TO STORM SEWER, SANITARY SEWER, UTILITIES, AND IRRIGATION LINE, TO A POINT AT LEAST FIVE (5) FEET BEYOND THE PAVED AREAS FOR WHICH THE CONTRACTOR IS RESPONSIBLE. CONTRACTOR MUST CAP ENDS AS APPROPRIATE, MARK LOCATIONS WITH A 2X4, AND MUST NOTE THE LOCATION OF ALL OF THE ABOVE ON A CLEAN COPY OF THE SITE PLAN, WHICH CONTRACTOR MUST PROMPTLY PROVIDE TO THE OWNER UPON COMPLETION OF THE WORK.
17. THE CONTRACTOR IS FULLY RESPONSIBLE FOR VERIFICATION OF EXISTING TOPOGRAPHIC INFORMATION AND UTILITY INVERT ELEVATIONS PRIOR TO COMMENCING ANY CONSTRUCTION. CONTRACTOR MUST CONFIRM AND ENSURE 0.75% MINIMUM SLOPE AGAINST ALL ISLANDS, GUTTERS, AND CURBS; 1.0% ON ALL CONCRETE SURFACES; AND 1.5% MINIMUM ON ASPHALT (EXCEPT WHERE ADA REQUIREMENTS LIMIT GRADES), TO PREVENT PONDING. CONTRACTOR MUST IMMEDIATELY IDENTIFY, IN WRITING TO THE ENGINEER, ANY DISCREPANCIES THAT MAY OR COULD AFFECT THE PUBLIC SAFETY, HEALTH OR GENERAL WELFARE, OR PROJECT COST. IF CONTRACTOR PROCEEDS WITH CONSTRUCTION WITHOUT PROVIDING PROPER NOTIFICATION, MUST BE AT THE CONTRACTOR'S OWN RISK AND, FURTHER, CONTRACTOR SHALL INDEMNIFY, DEFEND AND HOLD HARMLESS THE DESIGN ENGINEER FOR ANY DAMAGES, COSTS, INJURIES, ATTORNEY'S FEES AND THE LIKE WHICH RESULT FROM SAME.
18. PROPOSED TOP OF CURB ELEVATIONS ARE GENERALLY 6" ABOVE EXISTING LOCAL ASPHALT GRADE UNLESS OTHERWISE NOTED. FIELD ADJUST TO CREATE A MINIMUM OF .075% GUTTER GRADE ALONG CURB FACE. IT IS CONTRACTOR'S OBLIGATION TO ENSURE THAT DESIGN ENGINEER APPROVES FINAL CURBING CUT SHEETS PRIOR TO INSTALLATION OF SAME.
19. REFER TO SITE PLAN FOR ADDITIONAL NOTES.
20. IN THE EVENT OF DISCREPANCIES AND/OR CONFLICTS BETWEEN PLANS OR RELATIVE TO OTHER PLANS, THE SITE PLAN WILL TAKE PRECEDENCE AND CONTROL. CONTRACTOR MUST IMMEDIATELY NOTIFY THE DESIGN ENGINEER, IN WRITING, OF ANY DISCREPANCIES AND/OR CONFLICTS.
21. CONTRACTOR MUST REQUIRED TO SECURE ALL NECESSARY AND/OR REQUIRED PERMITS AND APPROVALS FOR ALL OFF SITE MATERIAL SOURCES AND DISPOSAL FACILITIES. CONTRACTOR MUST SUPPLY A COPY OF APPROVALS TO ENGINEER AND OWNER PRIOR TO INITIATING WORK ANY WORK.
22. WHERE RETAINING WALLS (WHETHER OR NOT THEY MEET THE JURISDICTIONAL DEFINITION) ARE IDENTIFIED ON PLANS, ELEVATIONS IDENTIFIED ARE FOR THE EXPOSED PORTION OF THE WALL. WALL FOOTINGS/FOUNDATION ELEVATIONS ARE NOT IDENTIFIED HEREIN AND ARE TO BE SET/DETERMINED BY THE CONTRACTOR BASED ON FINAL STRUCTURAL DESIGN SHOP DRAWINGS PREPARED BY THE APPROPRIATE PROFESSIONAL LICENSED IN THE STATE WHERE THE CONSTRUCTION OCCURS.
23. STORM DRAINAGE PIPE:

    UNLESS INDICATED OTHERWISE, ALL STORM SEWER PIPE MUST BE REINFORCED CONCRETE PIPE (RCP) CLASS III WITH SILT TIGHT JOINTS. WHEN HIGH-DENSITY POLYETHYLENE PIPE (HDPE) IS CALLED FOR ON THE PLANS, IT MUST CONFORM TO AASHTO M294 AND TYPE S (SMOOTH INTERIOR WITH ANGULAR CORRUGATIONS) WITH GASKET FOR SILT TIGHT JOINT. PVC PIPE FOR ROOF DRAIN CONNECTION MUST BE SDR 26 OR SCHEDULE 40 UNLESS INDICATED OTHERWISE.

24. SANITARY SEWER PIPE MUST BE POLYVINYL CHLORIDE (PVC) SDR 35 EXCEPT WHERE INDICATED OTHERWISE. SANITARY LATERAL MUST BE PVC SCHEDULE 40 OR PVC SDR 26 UNLESS INDICATED, IN WRITING, OTHERWISE.
25. STORM AND SANITARY SEWER PIPE LENGTHS INDICATED ARE NOMINAL AND MEASURED CENTER OF INLET AND/OR MANHOLES STRUCTURE TO CENTER OF STRUCTURE.
26. STORMWATER ROOF DRAIN LOCATIONS ARE BASED ON PRELIMINARY ARCHITECTURAL PLANS. CONTRACTOR IS RESPONSIBLE TO AND FOR VERIFYING LOCATIONS OF SAME BASED ON FINAL ARCHITECTURAL PLANS.
27. SEWERS CROSSING STREAMS AND/OR LOCATION WITHIN 10 FEET OF THE STREAM EMBANKMENT, OR WHERE SITE CONDITIONS SO INDICATE, MUST BE CONSTRUCTED OF STEEL, REINFORCED CONCRETE, DUCTILE IRON OR OTHER SUITABLE MATERIAL.

    SEWERS CONVEYING SANITARY FLOW COMBINED SANITARY AND STORMWATER FLOW OR INDUSTRIAL FLOW MUST BE SEPARATED FROM WATER MAINS BY A DISTANCE OF AT LEAST 10 FEET HORIZONTALLY. IF SUCH LATERAL SEPARATION IS NOT POSSIBLE, THE PIPES MUST BE IN SEPARATE TRENCHES WITH THE SEWER AT LEAST 18 INCHES BELOW THE BOTTOM OF THE WATER MAIN, OR SUCH OTHER SEPARATION AS APPROVED BY THE GOVERNMENT AGENCY WITH JURISDICTION OVER SAME.

    - WHERE APPROPRIATE SEPARATION FROM A WATER MAIN IS NOT POSSIBLE, THE SEWER MUST BE ENCASED IN CONCRETE, OR CONSTRUCTED OF DUCTILE IRON PIPE USING MECHANICAL OR SLIP-ON JOINTS FOR A DISTANCE OF AT LEAST 10 FEET ON EITHER SIDE OF THE CROSSING. IN ADDITION, ONE FULL LENGTH OF SEWER PIPE SHOULD BE LOCATED SO BOTH JOINTS WILL BE AS FAR FROM THE WATER LINE AS POSSIBLE. WHERE A WATER MAIN CROSSES UNDER A SEWER, ADEQUATE STRUCTURAL SUPPORT FOR THE SEWER MUST BE PROVIDED.

28. WATER MAIN PIPING MUST BE INSTALLED IN ACCORDANCE WITH THE REQUIREMENTS AND SPECIFICATIONS OF THE LOCAL WATER PURVEYOR. IN THE ABSENCE OF SUCH REQUIREMENTS, WATER MAIN PIPING MUST BE CEMENT-LINED DUCTILE IRON (DIP) MINIMUM CLASS 52 THICKNESS. ALL PIPE AND APPURTENANCES MUST COMPLY WITH THE APPLICABLE AWWA STANDARDS IN EFFECT AT THE TIME OF APPLICATION.
29. CONTRACTOR MUST ENSURE THAT ALL UTILITY TRENCHES LOCATED IN EXISTING PAVED ROADWAYS INCLUDING SEWER, WATER AND STORM SYSTEMS, MUST BE REPAIRED IN ACCORDANCE WITH REFERENCED MUNICIPAL, COUNTY AND/OR NJDOT DETAILS AS APPLICABLE. CONTRACTOR MUST COORDINATE INSPECTION AND APPROVAL OF COMPLETED WORK WITH THE AGENCY WITH JURISDICTION OVER SAME.
30. WHERE BASEMENTS ARE TO BE PROVIDED FOR PROPOSED DWELLING UNITS, THE DEVELOPER SHALL, BY BORING OR BY TEST PIT, DETERMINE THE DEPTH TO GROUNDWATER AT THE LOCATION OF THE PROPOSED DWELLINGS. WHERE GROUNDWATER IS ENCOUNTERED IN THE BASEMENT AREA, BASEMENTS WILL NOT BE INSTALLED UNLESS SPECIAL CONSTRUCTION METHODS ARE UTILIZED, TO BE REVIEWED AND APPROVED BY THE MUNICIPAL CONSTRUCTION CODE OFFICIAL. IF AND WHERE SUMP PUMPS ARE INSTALLED, ALL DISCHARGES MUST BE CONNECTED TO THE STORM SEWER. A CLEANOUT MUST BE PROVIDED PRIOR TO THE CONNECTION TO THE STORM DRAIN IN ORDER THAT BLOCKAGES CAN BE ADDRESSED.
31. FOR SINGLE AND TWO-FAMILY RESIDENTIAL PROJECTS, WHERE THE PROPOSED DWELLING AND ADJACENT SPOT ELEVATION(S) ARE SCHEMATIC FOR GENERIC BUILDING FOOTPRINT, GRADES MUST BE ADJUSTED BASED ON FINAL ARCHITECTURAL PLANS TO PROVIDE A MINIMUM OF SIX (6) INCHES BELOW TOP OF BLOCK AND /OR SIX (6) INCHES BELOW SIDING, WHICHEVER IS LOWEST, AND MUST PROVIDE POSITIVE DRAINAGE (2% MIN.) AWAY FROM DWELLING. ALL CONSTRUCTION, INCLUDING GRADING, MUST COMPLY WITH THE LATEST LOCAL AND STATE BUILDING CODE AND ALL OTHER APPLICABLE REQUIREMENTS, RULES, STATUTES, LAWS, ORDINANCES AND CODES.
32. LOCATION OF PROPOSED UTILITY POLE RELOCATION IS AT THE SOLE DISCRETION OF UTILITY COMPANY.
33. CONSULTANT IS NEITHER LIABLE NOR RESPONSIBLE FOR ANY SUBSURFACE CONDITIONS AND FURTHER, SHALL HAVE NO LIABILITY FOR ANY HAZARDOUS MATERIALS, HAZARDOUS SUBSTANCES, OR POLLUTANTS ON, ABOUT OR UNDER THE PROPERTY.

APPROVED: DEPARTMENT OF PLANNING AND ZONING

CHIEF, DIVISION OF LAND DEVELOPMENT	DATE 12-19-14
CHIEF, DEVELOPMENT ENGINEERING DIVISION	DATE 12-15-14
DIRECTOR - DEPARTMENT OF PLANNING AND ZONING	DATE 12/19/14

THIS DEVELOPMENT PLAN IS APPROVED FOR SOIL EROSION AND SEDIMENT CONTROL BY THE HOWARD SOIL CONSERVATION DISTRICT.

HOWARD SCD — DATE 12/9/14

BUILDER: CRAFTMARK HOMES, INC. 1355 BEVERLY ROAD, SUITE 330 MCLEAN, VA 22101 CONTACT: DAVID SCHOEN PHONE: (703) 898-0377	OWNER/DEVELOPER: CM HIGDON LC 1355 BEVERLY ROAD, SUITE 330 MCLEAN, VA 22101 CONTACT: DAVID SCHOEN PHONE: (703) 898-0377

PERMIT INFORMATION CHART

SUBDIVISION NAME: RESERVOIR ESTATES	SECTION/AREA: N/A		LOT/PARCEL NO.: 56	
PLAT # OR L/F: 15161/365	GRID #: 11	ZONING: R-20	TAX MAP NO.: 46	ELECT DISTR: 6TH	CENSUS TRACT: 606805

PREVIOUS FILE No. : WP-13-048, ECP-13-038, BA-95-028, SP-13-008, 24-4787-D, F-14-003

PROFESSIONAL CERTIFICATION
I, BRANDON R. ROWE, HEREBY CERTIFY THAT THESE DOCUMENTS WERE PREPARED OR APPROVED BY ME, AND THAT I AM A DULY LICENSED PROFESSIONAL ENGINEER UNDER THE LAWS OF THE STATE OF MARYLAND, LICENSE NO. 40808, EXPIRATION DATE: 7/3/2015

BOHLER ENGINEERING™

SITE CIVIL AND CONSULTING ENGINEERING
LAND SURVEYING — PROGRAM MANAGEMENT — LANDSCAPE ARCHITECTURE
SUSTAINABLE DESIGN — PERMITTING SERVICES — TRANSPORTATION SERVICES

- WARREN, NJ
- UPSTATE NEW YORK
- BOSTON, MA
- NEW YORK METRO
- PHILADELPHIA/SOUTHERN NJ
- LEHIGH VALLEY, PA
- SOUTHEASTERN, PA
- BALTIMORE, MD
- SOUTHERN MARYLAND
- NORTHERN VIRGINIA
- CENTRAL VIRGINIA
- CHARLOTTE, NC
- RALEIGH, NC

THE INFORMATION, DESIGN AND CONTENT OF THIS PLAN ARE PROPRIETARY AND SHALL NOT BE COPIED OR USED FOR ANY PURPOSE WITHOUT PRIOR WRITTEN AUTHORIZATION FROM BOHLER ENGINEERING. ONLY APPROVED, SIGNED AND SEALED PLANS SHALL BE UTILIZED FOR CONSTRUCTION PURPOSES © 2008 BOHLER ENGINEERING.

REVISIONS

REV	DATE	COMMENT	BY

THE FOLLOWING STATES REQUIRE NOTIFICATION BY EXCAVATORS, DESIGNERS, OR ANY PERSON PREPARING TO DISTURB THE EARTH'S SURFACE ANYWHERE IN THE STATE. IN VIRGINIA, MARYLAND, THE DISTRICT OF COLUMBIA, NORTH CAROLINA AND DELAWARE CALL - 811
(WV 1-800-245-4848) (PA 1-800-242-1776) (DC 1-800-257-7777)
(VA 1-800-552-7001) (MD 1-800-257-7777) (DE 1-800-282-8555)

NOT APPROVED FOR CONSTRUCTION

PROJECT No.:	MD122066.1
DRAWN BY:	RLB
CHECKED BY:	BRR
DATE:	11/20/14
SCALE:	AS SHOWN
CAD I.D.:	SD1

PROJECT:
SITE DEVELOPMENT PLANS
FOR
RESERVOIR ESTATES
SINGLE FAMILY DETACHED UNITS
BUILDABLE LOTS 1-20 AND
OPEN SPACE LOTS 21-26
PLAT NO. 23120
LOCATION OF SITE
10883 AND 10887
SCAGGSVILLE ROAD
LAUREL, MD. 20723
HOWARD COUNTY

BOHLER ENGINEERING
901 DULANEY VALLEY ROAD, SUITE 801
TOWSON, MARYLAND 21204
Phone: (410) 821-7900
Fax: (410) 821-7987
MD@BohlerEng.com

B.R. ROWE
STATE OF MARYLAND — BRANDON R. ROWE — PROFESSIONAL ENGINEER — No. 40808

SHEET TITLE:
GENERAL NOTES

SHEET NUMBER:
2 OF 15

SDP-15-012

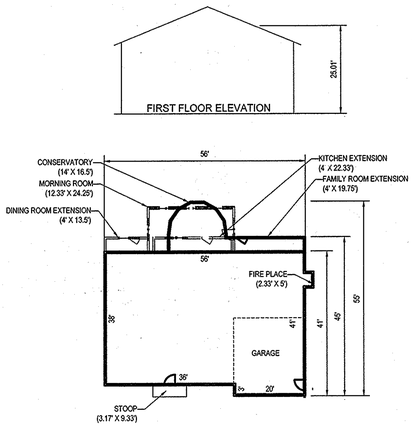

CHEVY CHASE

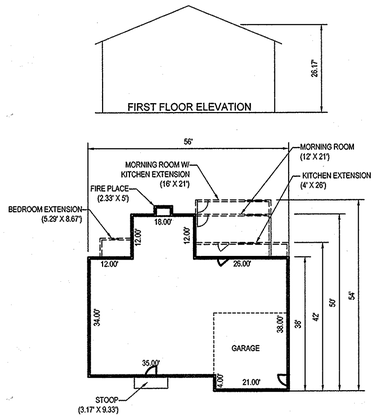

CLIFTON

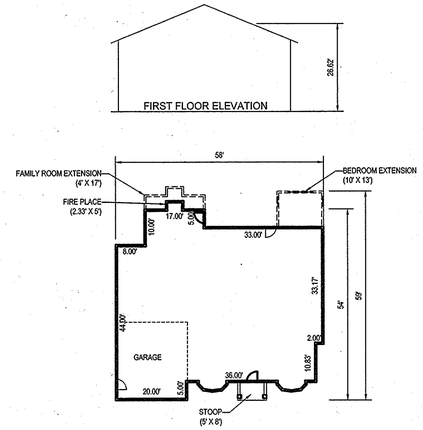

EDGEMOOR

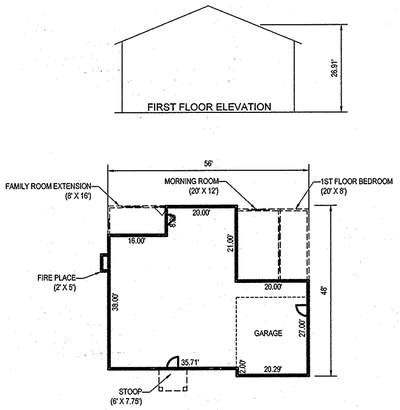

HAMILTON

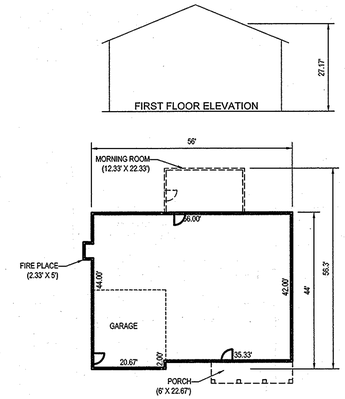

OAKDALE

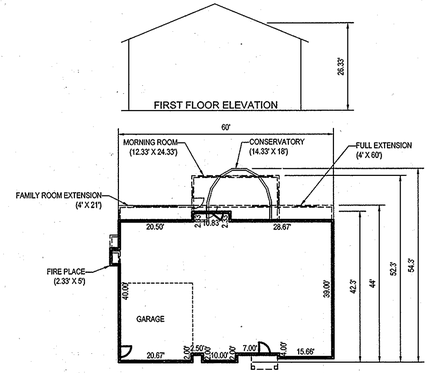

OAKTON

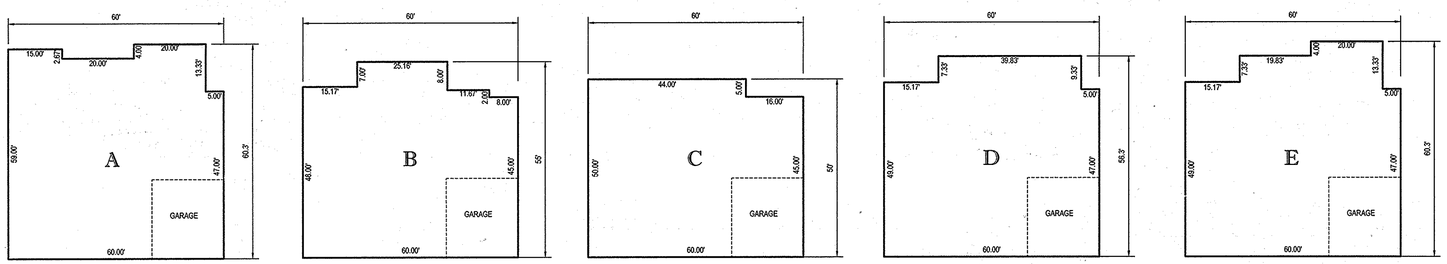

GENERAL HOUSE FOOTPRINTS

SCALE: 1"=20'

20 10 5 0 20

1"= 20'

HOUSE OPTIONS

GENERIC FOOTPRINT	UNIT NAME																							
	CHEVY CHASE						CLIFTON					EDGEMOOR			HAMILTON				OAKDALE		OAKTON			
	BASE	CONSERVATORY	MORNING ROOM	KITCHEN EXTENSION	FAMILY ROOM EXTENSION	DINING ROOM EXTENSION	BASE	MORNING ROOM	1ST FLOOR BEDROOM	KITCHEN EXTENSION + MORNING ROOM	KITCHEN EXTENSION	BASE	FAMILY ROOM EXTENSION	BEDROOM EXTENSION	BASE	MORNING ROOM	FAMILY ROOM EXTENSION	1ST FLOOR BEDROOM	BASE	MORNING ROOM	BASE	FULL REAR EXTENSION	CONSERVATORY	MORNING ROOM
A	Y	Y	Y	Y	Y	Y	Y	Y	Y	Y	Y	Y	Y	Y	Y	Y	Y	Y	Y	Y	Y	Y	Y	Y
B	Y	Y	Y	Y	Y	Y	Y	Y	Y	N	Y	N	N	N	Y	Y	Y	N	Y	N	Y	Y	Y	Y
C	Y	N	N	Y	Y	Y	Y	Y	Y	N	Y	N	N	N	Y	Y	N	Y	Y	N	Y	Y	N	N
D	Y	Y	Y	Y	Y	Y	Y	Y	Y	Y	Y	Y	N	N	Y	Y	Y	Y	Y	Y	Y	Y	Y	Y
E	Y	Y	Y	Y	Y	Y	Y	Y	Y	Y	Y	Y	Y	N	Y	Y	Y	Y	Y	Y	Y	Y	Y	Y

APPROVED: DEPARTMENT OF PLANNING AND ZONING

CHIEF, DIVISION OF LAND DEVELOPMENT	DATE 12-19-14
CHIEF, DEVELOPMENT ENGINEERING DIVISION	DATE 12-15-14
DIRECTOR - DEPARTMENT OF PLANNING AND ZONING	DATE 12/19/14

THIS DEVELOPMENT PLAN IS APPROVED FOR SOIL EROSION AND SEDIMENT CONTROL BY THE HOWARD SOIL CONSERVATION DISTRICT.

HOWARD SCD — DATE 12/9/14

BUILDER:	OWNER/DEVELOPER:
CRAFTMARK HOMES, INC. 1355 BEVERLY ROAD, SUITE 330 MCLEAN, VA 22101 CONTACT: DAVID SCHOEN PHONE: (703) 898-0377	CM HIGDON LC 1355 BEVERLY ROAD, SUITE 330 MCLEAN, VA 22101 CONTACT: DAVID SCHOEN PHONE: (703) 898-0377

PERMIT INFORMATION CHART

SUBDIVISION NAME: RESERVOIR ESTATES		SECTION/AREA: N/A	LOT/PARCEL NO.: 56
PLAT # OR L/F: 15161/365	GRID #: 11	ZONING: R-20	TAX MAP NO.: 46	ELECT DISTR: 6TH	CENSUS TRACT: 606805

PREVIOUS FILE No. : WP-13-048, ECP-13-038, BA-95-028, SP-13-008, 24-4787-D, F-14-003

PROFESSIONAL CERTIFICATION
I, BRANDON R. ROWE, HEREBY CERTIFY THAT THESE DOCUMENTS WERE PREPARED OR APPROVED BY ME, AND THAT I AM A DULY LICENSED PROFESSIONAL ENGINEER UNDER THE LAWS OF THE STATE OF MARYLAND, LICENSE NO. 40808, EXPIRATION DATE: 7/3/2015

BOHLER ENGINEERING

SITE CIVIL AND CONSULTING ENGINEERING
LAND SURVEYING — LANDSCAPE ARCHITECTURE
SUSTAINABLE DESIGN — PROGRAM MANAGEMENT — TRANSPORTATION SERVICES
PERMITTING SERVICES

◆ NEW JERSEY
◆ UPSTATE NEW YORK
◆ NEW YORK METRO
◆ PHILADELPHIA/SOUTHERN NJ
◆ LONG ISLAND, NY
◆ SOUTHEASTERN PA
◆ SOUTHERN MARYLAND
◆ NORTHERN VIRGINIA
◆ RICHMOND, VA
◆ CHARLOTTE, NC
◆ RALEIGH, NC

THE INFORMATION, DESIGNS AND CONTENT OF THIS PLAN ARE PROPRIETARY AND SHALL NOT BE COPIED OR USED FOR ANY PURPOSE WITHOUT PRIOR WRITTEN AUTHORIZATION OF BOHLER ENGINEERING. ©2012 BOHLER ENGINEERING, ALL RIGHTS RESERVED. THIS PLAN IS NOT APPROVED FOR CONSTRUCTION UNLESS AND UNTIL THE APPROPRIATE GOVERNMENT AGENCY HAS ISSUED A WRITTEN APPROVAL.

REVISIONS

REV	DATE	COMMENT	BY

THE WHEN, WHERE, HOW OF DIGGING

THE FOLLOWING STATES REQUIRE NOTIFICATION BY EXCAVATORS, DESIGNERS, OR ANY PERSON PREPARING TO DISTURB THE EARTH'S SURFACE ANYWHERE IN THE STATE. IN VIRGINIA, MARYLAND, THE DISTRICT OF COLUMBIA, NORTH CAROLINA AND DELAWARE CALL - 811
(WV 1-800-245-4848) (PA 1-800-242-1776) (DC 1-800-257-7777) (VA 1-800-552-7001) (MD 1-800-257-7777) (DE 1-800-282-8555)

NOT APPROVED FOR CONSTRUCTION

PROJECT No.:	MD122066.1
DRAWN BY:	RLB
CHECKED BY:	BRR
DATE:	11/20/14
SCALE:	AS SHOWN
CAD I.D.:	SD1

PROJECT:

SITE DEVELOPMENT PLANS

FOR

RESERVOIR ESTATES

SINGLE FAMILY DETACHED UNITS
BUILDABLE LOTS 1-20 AND
OPEN SPACE LOTS 21-26
PLAT NO. 23120
LOCATION OF SITE
10883 AND 10887
SCAGGSVILLE ROAD
LAUREL, MD. 20723
HOWARD COUNTY

BOHLER ENGINEERING
901 DULANEY VALLEY ROAD, SUITE 801
TOWSON, MARYLAND 21204
Phone: (410) 821-7900
Fax: (410) 821-7997
MD@BohlerEng.com

B. R. ROWE — STATE OF MARYLAND — BRANDON R. ROWE — No. 40808 — PROFESSIONAL ENGINEER

SHEET TITLE:

HOUSE TYPES

SHEET NUMBER:

3 OF 15

SDP-15-012

H:\2012\MD122066.1\DRAWINGS\PLAN SETS\SITE DEVELOPMENT PLANS\MD122066.1SDP1.DWG PLOTTED BY: RBONDY 11/21/2014 9:11:42 AM LAST SAVED BY:

LEGEND :

- RECREATIONAL OPEN SPACE (5,128 S.F. OR 0.12 AC.)
- PUBLIC STORMWATER MANAGEMENT, DRAINAGE & UTILITY EASEMENT
- 5' PRIVATE FENCE MAINTENANCE EASEMENT
- 20' PUBLIC TREE MAINTENANCE EASEMENT
- PUBLIC WATER, SEWER & UTILITY EASEMENT
- 24' PRIVATE USE-IN-COMMON DRIVEWAY ACCESS EASEMENT (FOR THE USE AND BENEFIT OF LOTS 7-12)
- PRIVATE STORMWATER MANAGEMENT, DRAINAGE & UTILITY EASEMENT
- 33' COLONIAL GAS COMPANY PIPELINE EASEMENT LIBER 94, FOLIO 536
- 12' ACCESS EASEMENT(FOR RESIDENTIAL AND VEHICULAR ACCESS TO OS LOT 21)
- PUBLIC 100-YEAR FLOODPLAIN, DRAINAGE & UTILITY EASEMENT
- LIMITS OF WETLANDS
- PUBLIC FOREST CONSERVATION EASEMENT
- STEEP SLOPES (GREATER THAN 25%)
- FOREST CONSERVATION SIGNAGE
- SPECIMEN TREE (TO REMAIN)

CURVE TABLE

CURVE	RADIUS	LENGTH	CHORD BEARING	CHORD	DELTA	TANGENT
C13	55.00'	4.07'	S41°15'32"E	4.07'	004°14'19"	2.04'
C14	55.00'	4.02'	S37°02'35"E	4.02'	004°11'35"	2.01'
C15	55.00'	4.00'	S32°51'41"E	4.00'	004°10'14"	2.00'
C16	55.00'	4.00'	S28°41'27"E	4.00'	004°10'14"	2.00'
C17	55.00'	4.02'	S24°30'32"E	4.02'	004°11'35"	2.01'
C18	55.00'	4.07'	S20°17'35"E	4.07'	004°14'19"	2.04'

SPECIMEN TREES

KEY	SPECIES NAME	SIZE	COND.	TO REMAIN
B	RED MAPLE	36	GOOD	YES
C	TULIP POPLAR	30	F. GOOD	YES
I	RED MAPLE	44	GOOD	YES
J	WHITE MAPLE	31	FAIR	YES
K	RED MAPLE	38	FAIR	YES
P	TULIP POPLAR	31	F. GOOD	YES

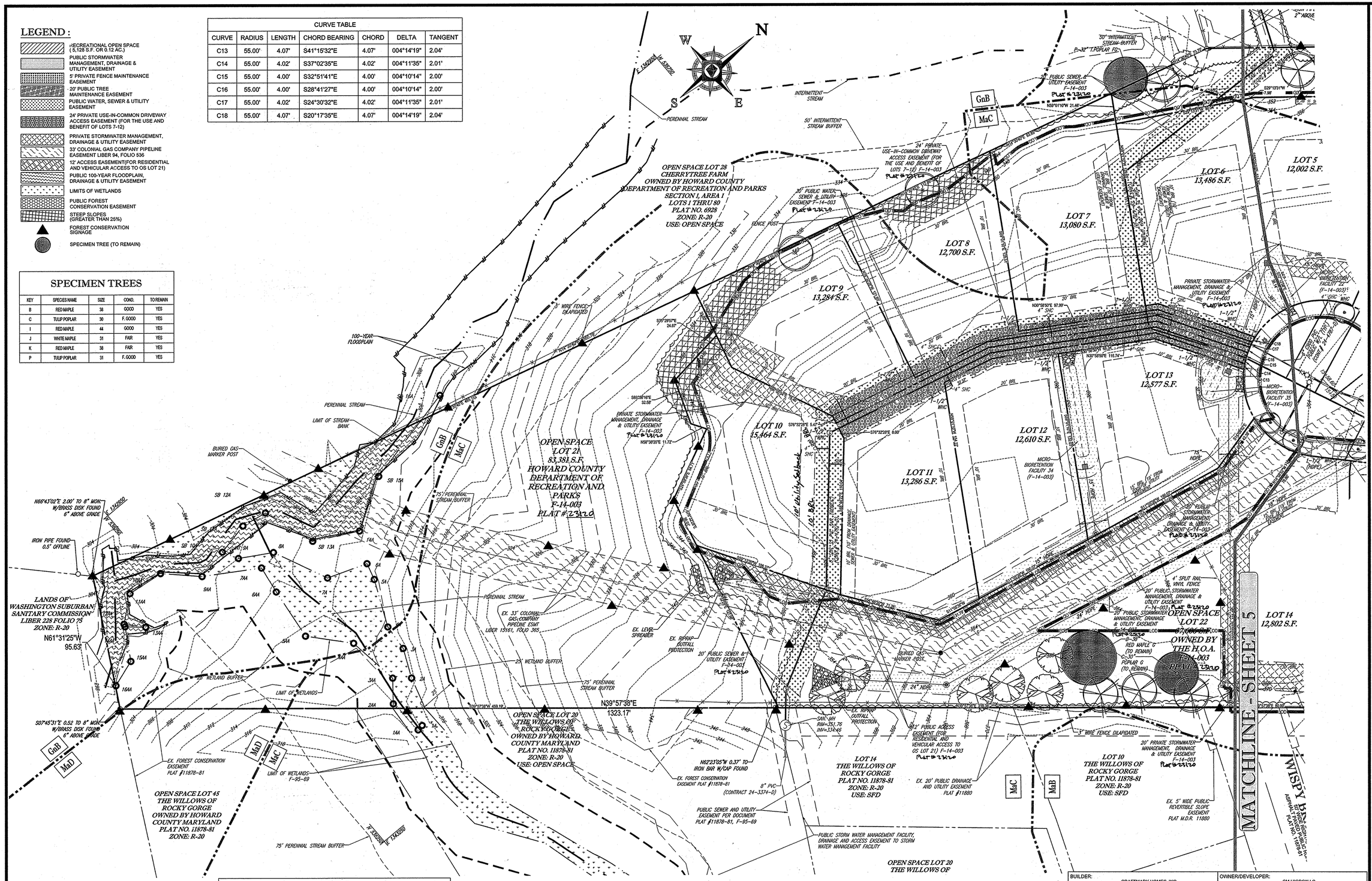

SOILS

MAP SYMBOL	MAP UNIT NAME	RATING
GnB	GLENELG-URBAN LAND COMPLEX, 0 TO 8 PERCENT SLOPES	B
GmB	GLENVILLE SILT LOAM, 3 TO 8 PERCENT SLOPES	C
GnB	GLENVILLE-BAILE SILT LOAMS, 0 TO 8 PERCENT SLOPES	C
MaB	MANOR LOAM, 3 TO 8 PERCENT SLOPES	B
MaC	MANOR LOAM, 8 TO 15 PERCENT SLOPES	B
MaD	MANOR LOAM, 15 TO 25 PERCENT SLOPES	B

APPROVED: DEPARTMENT OF PLANNING AND ZONING

CHIEF, DIVISION OF LAND DEVELOPMENT	DATE 12-19-14
CHIEF, DEVELOPMENT ENGINEERING DIVISION	DATE 12-15-14
DIRECTOR - DEPARTMENT OF PLANNING AND ZONING	DATE 12/19/14

THIS DEVELOPMENT PLAN IS APPROVED FOR SOIL EROSION AND SEDIMENT CONTROL BY THE HOWARD SOIL CONSERVATION DISTRICT.

HOWARD SCD — DATE 12/9/14

30 15 7.5 0 30
1"=30'

BUILDER:	OWNER/DEVELOPER:
CRAFTMARK HOMES, INC. 1355 BEVERLY ROAD, SUITE 330 MCLEAN, VA 22101 CONTACT: DAVID SCHOEN PHONE: (703) 898-0377	CM HIGDON LC 1355 BEVERLY ROAD, SUITE 330 MCLEAN, VA 22101 CONTACT: DAVID SCHOEN PHONE: (703) 898-0377

PERMIT INFORMATION CHART

SUBDIVISION NAME: RESERVOIR ESTATES	SECTION/AREA: N/A	LOT/PARCEL NO.: 56
PLAT # OR L/F: 15161/365 · GRID #: 11	ZONING: R-20 · TAX MAP NO.: 46	ELECT DISTR: 6TH · CENSUS TRACT: 606805

PREVIOUS FILE No. : WP-13-048, ECP-13-038, BA-95-028, SP-13-008, 24-4787-D, F-14-003

PROFESSIONAL CERTIFICATION
I, BRANDON R. ROWE, HEREBY CERTIFY THAT THESE DOCUMENTS WERE PREPARED OR APPROVED BY ME, AND THAT I AM A DULY LICENSED PROFESSIONAL ENGINEER UNDER THE LAWS OF THE STATE OF MARYLAND, LICENSE NO. 40808, EXPIRATION DATE: 7/3/2015.

BOHLER ENGINEERING
SITE CIVIL AND CONSULTING ENGINEERING
LANDSCAPE ARCHITECTURE
PROGRAM MANAGEMENT
TRANSPORTATION SERVICES
PERMITTING SERVICES
LAND SURVEYING
SUSTAINABLE DESIGN
NEW JERSEY
UPSTATE NEW YORK
NEW YORK METRO
PHILADELPHIA/SOUTHERN NJ
LEHIGH VALLEY, PA
SOUTHEASTERN, PA
SOUTHERN MARYLAND
CENTRAL PENNSYLVANIA
CENTRAL VIRGINIA
CHARLOTTE, NC
RALEIGH, NC
THE INFORMATION, DESIGNS AND CONTENT OF THIS PLAN ARE PROPRIETARY AND SHALL NOT BE COPIED OR USED FOR ANY PURPOSE WITHOUT PRIOR WRITTEN AUTHORIZATION OF BOHLER ENGINEERING. © 2014 BOHLER ENGINEERING ALL RIGHTS RESERVED

REVISIONS

REV	DATE	COMMENT	BY

THE FOLLOWING STATES REQUIRE NOTIFICATION BY EXCAVATORS, DESIGNERS, OR ANY PERSON PREPARING TO DISTURB THE EARTH'S SURFACE ANYWHERE IN THE STATE: IN VIRGINIA, MARYLAND, THE DISTRICT OF COLUMBIA, NORTH CAROLINA AND DELAWARE CALL - 811
(VW 1-800-245-4848) (PA 1-800-242-1776) (DC 1-800-257-7777) (VA 1-800-552-7001) (MD 1-800-257-7777) (DE 1-800-282-8555)

NOT APPROVED FOR CONSTRUCTION

PROJECT No.:	MD122066.1
DRAWN BY:	RLB
CHECKED BY:	BRR
DATE:	11/20/14
SCALE:	1"=30'
CAD I.D.:	SS1

PROJECT:
SITE DEVELOPMENT PLANS
FOR
RESERVOIR ESTATES
SINGLE FAMILY DETACHED UNITS
BUILDABLE LOTS 1-20 AND
OPEN SPACE LOTS 21-26
PLAT NO. 23120
LOCATION OF SITE
10883 AND 10887
SCAGGSVILLE ROAD
LAUREL, MD. 20723
HOWARD COUNTY

BOHLER ENGINEERING
901 DULANEY VALLEY ROAD, SUITE 801
TOWSON, MARYLAND 21204
Phone: (410) 821-7900
Fax: (410) 821-7987
MD@BohlerEng.com

B.R. ROWE
PROFESSIONAL ENGINEER
11-25-14

SHEET TITLE:
EXISTING CONDITIONS PLAN

SHEET NUMBER:
4
OF 15

SDP-15-012

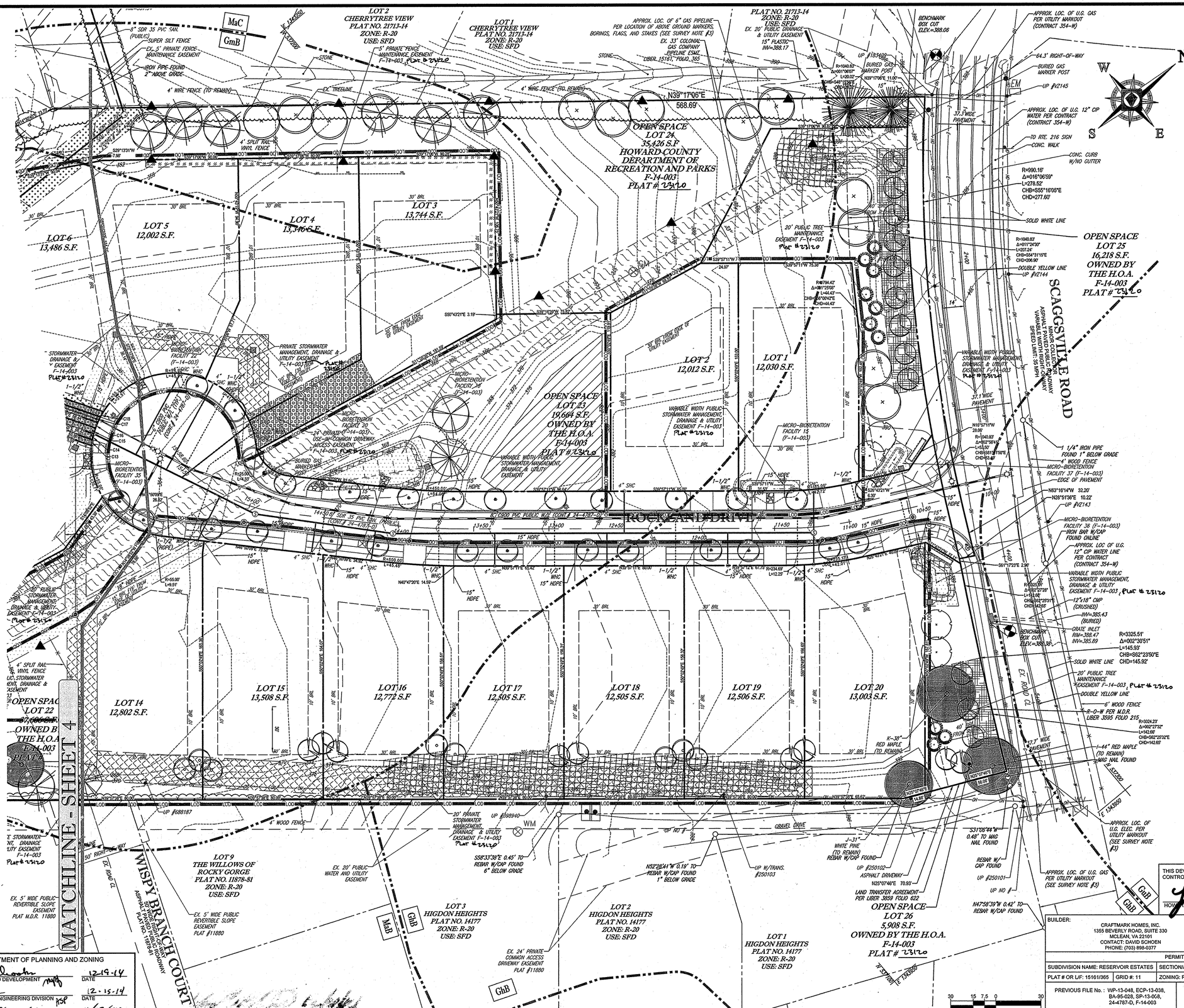

SPECIMEN TREES

KEY	SPECIMS NAME	SIZE	COND.	TO REMAIN
B	RED MAPLE	38	GOOD	YES
C	TULIP POPLAR	30	F. GOOD	YES
I	RED MAPLE	44	GOOD	YES
J	WHITE MAPLE	31	FAIR	YES
K	RED MAPLE	38	FAIR	YES
P	TULIP POPLAR	31	F. GOOD	YES

APPROVED: DEPARTMENT OF PLANNING AND ZONING

CHIEF, DIVISION OF LAND DEVELOPMENT	DATE 12-19-14
CHIEF, DEVELOPMENT ENGINEERING DIVISION	DATE 12-15-14
DIRECTOR - DEPARTMENT OF PLANNING AND ZONING	DATE 12/19/14

THIS DEVELOPMENT PLAN IS APPROVED FOR SOIL EROSION AND SEDIMENT CONTROL BY THE HOWARD SOIL CONSERVATION DISTRICT.

HOWARD SCD DATE 12/9/14

BUILDER:	OWNER/DEVELOPER:
CRAFTMARK HOMES, INC. 1355 BEVERLY ROAD, SUITE 330 MCLEAN, VA 22101 CONTACT: DAVID SCHOEN PHONE: (703) 898-0377	CM HIGDON LC 1355 BEVERLY ROAD, SUITE 330 MCLEAN, VA 22101 CONTACT: DAVID SCHOEN PHONE: (703) 898-0377

PERMIT INFORMATION CHART

SUBDIVISION NAME: RESERVOIR ESTATES	SECTION/AREA: N/A	LOT/PARCEL NO.: 56
PLAT # OR L/F: 15161/365 GRID #: 11	ZONING: R-20 TAX MAP NO.: 46	ELECT DISTR: 6TH CENSUS TRACT: 606805

PREVIOUS FILE No.: WP-13-048, ECP-13-038, BA-95-028, SP-13-0C8, 24-4787-D, F-14-003

PROFESSIONAL CERTIFICATION
I, BRANDON R. ROWE, HEREBY CERTIFY THAT THESE DOCUMENTS WERE PREPARED OR APPROVED BY ME, AND THAT I AM A DULY LICENSED PROFESSIONAL ENGINEER UNDER THE LAWS OF THE STATE OF MARYLAND, LICENSE NO. 40808, EXPIRATION DATE: 7/3/2015

BOHLER ENGINEERING
SITE CIVIL AND CONSULTING ENGINEERING
LAND SURVEYING
SUSTAINABLE DESIGN
PROGRAM MANAGEMENT
PERMITTING SERVICES
LANDSCAPE ARCHITECTURE
TRANSPORTATION SERVICES
◆ NEW JERSEY ◆ UPSTATE NEW YORK ◆ NEW YORK METRO ◆ PHILADELPHIA/SOUTHERN NJ ◆ SOUTHEASTERN PA ◆ SOUTHERN MARYLAND ◆ NORTHERN VIRGINIA ◆ CHARLOTTE, NC ◆ RALEIGH, NC
THE INFORMATION, DESIGNS AND CONTENT OF THIS PLAN ARE PROPRIETARY AND SHALL NOT BE COPIED OR USED FOR ANY PURPOSE WITHOUT PRIOR WRITTEN AUTHORIZATION OF BOHLER ENGINEERING. © 2013 BOHLER ENGINEERING ALL RIGHTS RESERVED

REVISIONS

REV	DATE	COMMENT	BY

THE FOLLOWING STATES REQUIRE NOTIFICATION BY EXCAVATORS, DESIGNERS, OR ANY PERSON PREPARING TO DISTURB THE EARTH'S SURFACE ANYWHERE IN THE STATE. IN VIRGINIA, MARYLAND, THE DISTRICT OF COLUMBIA, NORTH CAROLINA AND DELAWARE CALL - 811
(WV 1-800-245-4848) (PA 1-800-242-1776) (DC 1-800-257-7777) (VA 1-800-552-7001) (MD 1-800-257-7777) (DE 1-800-282-8555)

NOT APPROVED FOR CONSTRUCTION

PROJECT No.:	MD122056.1
DRAWN BY:	RLB
CHECKED BY:	BRR
DATE:	11/20/14
SCALE:	1"=30'
CAD I.D.:	SS1

PROJECT:
SITE DEVELOPMENT PLANS
FOR
RESERVOIR ESTATES
SINGLE FAMILY DETACHED UNITS
BUILDABLE LOTS 1-20 AND
OPEN SPACE LOTS 21-26
PLAT NO. 23120
LOCATION OF SITE
10883 AND 10887
SCAGGSVILLE ROAD
LAUREL, MD. 20723
HOWARD COUNTY

BOHLER ENGINEERING
901 DULANEY VALLEY ROAD, SUITE 801
TOWSON, MARYLAND 21204
Phone: (410) 821-7900
Fax: (410) 821-7987
MD@BohlerEng.com

B.R. ROWE
STATE OF MARYLAND BRANDON R. ROWE No. 40808 PROFESSIONAL ENGINEER

SHEET TITLE:
EXISTING CONDITIONS PLAN

SHEET NUMBER:
5
OF 15

SDP-15-012

SHC TABLE

LOT	FF ELEV.	CELLAR ELEV.	INV. @ MAIN	SHC LENGTH TO ROW (FT)	SHC SLOPE WITHIN ROW	INVERT @ ROW	SHC SLOPE WITHIN LOT	MAX. SHC LENGTH (FT)	2.50 FT BELOW CELLAR	MIN. CELLAR ELEV. (MCE)	CONNECTION TYPE
1	393.02	383.00	376.00	29.00	2.0%	434.00	2.0%	129.00	2.50	694.50	STD SHC
2	388.69	378.67	369.09	28.00	2.0%	425.09	2.0%	140.00	2.50	707.59	DROP TYPE A
3	372.89	362.87	353.05	61.00	2.0%	475.05	2.0%	220.00	2.50	917.55	STD SHC
4	371.09	361.67	352.94	68.00	2.0%	488.94	2.0%	150.00	2.50	791.44	STD SHC
5	369.35	359.33	352.72	64.00	2.0%	480.72	2.0%	122.00	2.50	727.22	STD SHC
6	367.02	357.00	350.38	22.00	2.0%	394.38	2.0%	120.00	2.50	636.88	STD SHC
7	363.69	353.67	344.37	20.00	2.0%	384.37	2.0%	120.00	2.50	626.87	DROP TYPE A
8	361.69	351.67	343.90	20.00	2.0%	383.90	2.0%	107.00	2.50	600.40	DROP TYPE A
9	361.02	351.00	343.50	20.00	2.0%	383.50	2.0%	93.00	2.50	572.00	DROP TYPE A
10	361.02	351.00	343.26	10.00	2.0%	363.26	2.0%	95.00	2.50	555.76	DROP TYPE A
11	363.35	353.33	343.21	10.00	2.0%	363.21	2.0%	99.00	2.50	563.71	DROP TYPE A
12	364.02	354.00	343.88	10.00	2.0%	363.88	2.0%	115.00	2.50	596.38	DROP TYPE A
13	366.35	356.33	344.67	10.00	2.0%	364.67	2.0%	112.00	2.50	591.17	DROP TYPE A
14	370.69	360.67	353.35	33.00	2.0%	419.35	2.0%	159.00	2.50	739.85	STD SHC
15	373.69	363.67	355.59	21.00	2.0%	397.59	2.0%	149.00	2.50	698.09	STD SHC
16	378.02	368.00	356.84	20.00	2.0%	396.84	2.0%	136.00	2.50	671.34	DROP TYPE A
17	382.35	372.33	364.31	22.00	2.0%	408.31	2.0%	132.00	2.50	674.81	STD SHC
18	387.02	377.00	368.40	22.00	2.0%	412.40	2.0%	133.00	2.50	680.90	DROP TYPE A
19	391.35	381.33	372.88	22.00	2.0%	416.88	2.0%	133.00	2.50	685.38	DROP TYPE A
20	394.35	384.33	376.00	22.00	2.0%	420.00	2.0%	139.00	2.50	700.50	DROP TYPE A

LEGEND :

- PUBLIC FOREST CONSERVATION EASEMENT
- STEEP SLOPES (GREATER THAN 25%)
- FOREST CONSERVATION SIGNAGE
- SPECIMEN TREE (TO REMAIN)

NOTES:

1. THIS REDLINE SDP PROPOSES AN ADDITIONAL 231 S.F. OF IMPERVIOUS COVER. BECAUSE THIS IS LESS THAN 5,000 S.F. OF DISTURBANCE, THERE IS NO ADDITIONAL STORMWATER MANAGEMENT PROPOSED ON THIS PLAN. ANY ADDITIONAL IMPERVIOUS AREA PROPOSED IN THE FUTURE WILL BE ADDED TO THIS 231 S.F. TO DETERMINE IF THE 5,000S.F. THRESHOLD FOR STORMWATER MANAGEMENT IS MET.
2. THE EXISTING WATER METER VAULT LID ON LOT 7 MUST BE REPLACED WITH A TRAFFIC RATED FRAME AND LID.

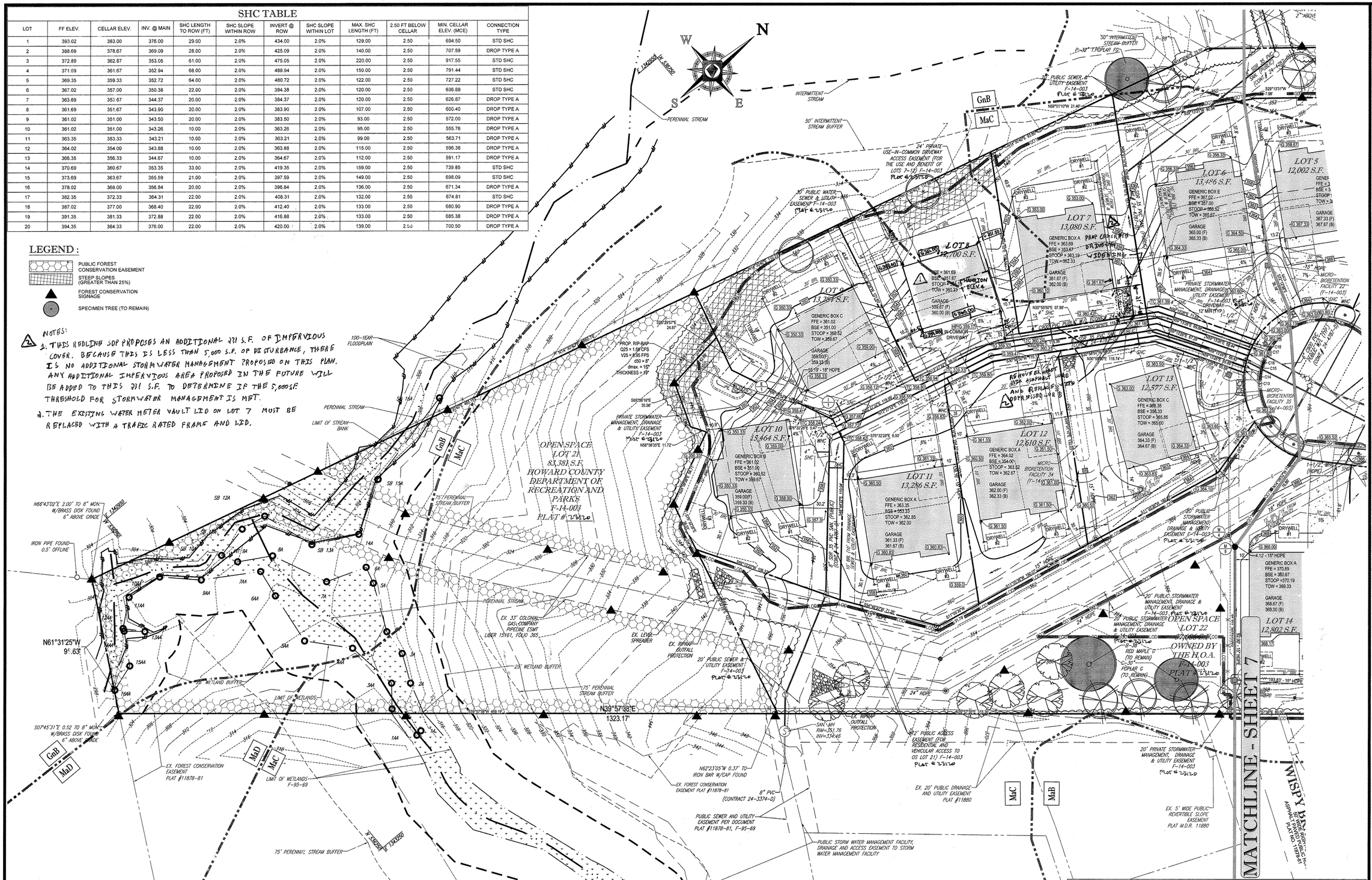

NOTE: FOR GENERIC BOX FORMATS, SEE "HOUSE TYPES" ON SHEET 3 OF 15.

7/11/16 REVISION 2 ONLY

1/5/16 REVISION 1 ONLY

30 15 7.5 0 30
1"= 30'

BUILDER:	OWNER/DEVELOPER:
CRAFTMARK HOMES, INC. 1355 BEVERLY ROAD, SUITE 330 MCLEAN, VA 22101 CONTACT: DAVID SCHOEN PHONE: (703) 898-0377	CM HIGDON LC 1355 BEVERLY ROAD, SUITE 330 MCLEAN, VA 22101 CONTACT: DAVID SCHOEN PHONE: (703) 898-0377

PERMIT INFORMATION CHART

SUBDIVISION NAME: RESERVOIR ESTATES		SECTION/AREA: N/A	LOT/PARCEL NO.: 56
PLAT # OR L/F: 15161/365	GRID #: 11	ZONING: R-20	TAX MAP NO.: 46	ELECT DISTR: 6TH	CENSUS TRACT: 606805
PREVIOUS FILE No. : WP-13-048, ECP-13-038, BA-95-028, SP-13-008, 24-4787-D, F-14-003			

PROFESSIONAL CERTIFICATION
I, BRANDON R. ROWE, HEREBY CERTIFY THAT THESE DOCUMENTS WERE PREPARED OR APPROVED BY ME, AND THAT I AM A DULY LICENSED PROFESSIONAL ENGINEER UNDER THE LAWS OF THE STATE OF MARYLAND, LICENSE NO. 40988, EXPIRATION DATE: 7/3/2015

APPROVED: DEPARTMENT OF PLANNING AND ZONING

CHIEF, DIVISION OF LAND DEVELOPMENT	DATE 12-19-14
CHIEF, DEVELOPMENT ENGINEERING DIVISION	DATE 12-15-14
DIRECTOR - DEPARTMENT OF PLANNING AND ZONING	DATE 12/23/14

THIS DEVELOPMENT PLAN IS APPROVED FOR SOIL EROSION AND SEDIMENT CONTROL BY THE HOWARD SOIL CONSERVATION DISTRICT.

HOWARD SCD DATE

BOHLER ENGINEERING

SITE CIVIL AND CONSULTING ENGINEERING
LAND SURVEYING • PROJECT MANAGEMENT • LANDSCAPE ARCHITECTURE
SUSTAINABLE DESIGN • TRANSPORTATION SERVICES
PERMITTING SERVICES

- WARREN, NJ
- STATEN ISLAND, NEW YORK
- BOSTON, MA
- NEW YORK METRO
- SOUTHERN NEW JERSEY/NORTHERN NJ
- LEHIGH VALLEY, PA
- SOUTHEASTERN, PA
- BALTIMORE, MD
- PRINCE WILLIAM COUNTY, VA AND NORTHERN VIRGINIA
- CENTRAL VIRGINIA
- RICHMOND, VA
- RALEIGH, NC

THE INFORMATION, DESIGNS, DRAWINGS, AND SPECIFICATIONS CONTAINED HEREIN ARE THE PROPERTY AND COPYRIGHT OF BOHLER ENGINEERING AND MAY NOT BE REPRODUCED OR UTILIZED FOR ANY OTHER PROJECT WITHOUT WRITTEN AUTHORIZATION FROM BOHLER ENGINEERING. ONLY APPROVED, SIGNED AND SEALED PLANS SHALL BE UTILIZED FOR CONSTRUCTION PURPOSES.

REVISIONS

REV	DATE	COMMENT	BY
1	1/4/16	LOT 8 HOUSE REVISION	RLB
2	7/11/16	LOT 7 DRIVEWAY	MCG

THE FOLLOWING STATES REQUIRE NOTIFICATION BY EXCAVATORS, DESIGNERS, OR ANY PERSON PREPARING TO DISTURB THE EARTH'S SURFACE ANYWHERE IN THE STATE. IN VIRGINIA, MARYLAND, THE DISTRICT OF COLUMBIA, NORTH CAROLINA AND DELAWARE CALL - 811
(WV 1-800-245-4848) (PA 1-800-242-1776) (DC 1-800-257-7777) (VA 1-800-552-7001) (MD 1-800-257-7777) (DE 1-800-282-8555)

NOT APPROVED FOR CONSTRUCTION

PROJECT No.:	MD122066.1
DRAWN BY:	RLB
CHECKED BY:	BRR
DATE:	11/20/14
SCALE:	1"=30'
CAD I.D.:	SS1

PROJECT:
SITE DEVELOPMENT PLANS
FOR
RESERVOIR ESTATES
SINGLE FAMILY DETACHED UNITS
BUILDABLE LOTS 1-20 AND
OPEN SPACE LOTS 21-26
PLAT NO. 23120
LOCATION OF SITE
10883 AND 10887
SCAGGSVILLE ROAD
LAUREL, MD. 20723
HOWARD COUNTY

BOHLER ENGINEERING
901 DULANEY VALLEY ROAD, SUITE 801
TOWSON, MARYLAND 21204
Phone: (410) 821-7900
Fax: (410) 821-7987
MD@BohlerEng.com

B.R. ROWE
PROFESSIONAL ENGINEER
No. 40988

SHEET TITLE:
SITE DEVELOPMENT PLAN

SHEET NUMBER:
6
OF 15

SDP-15-012

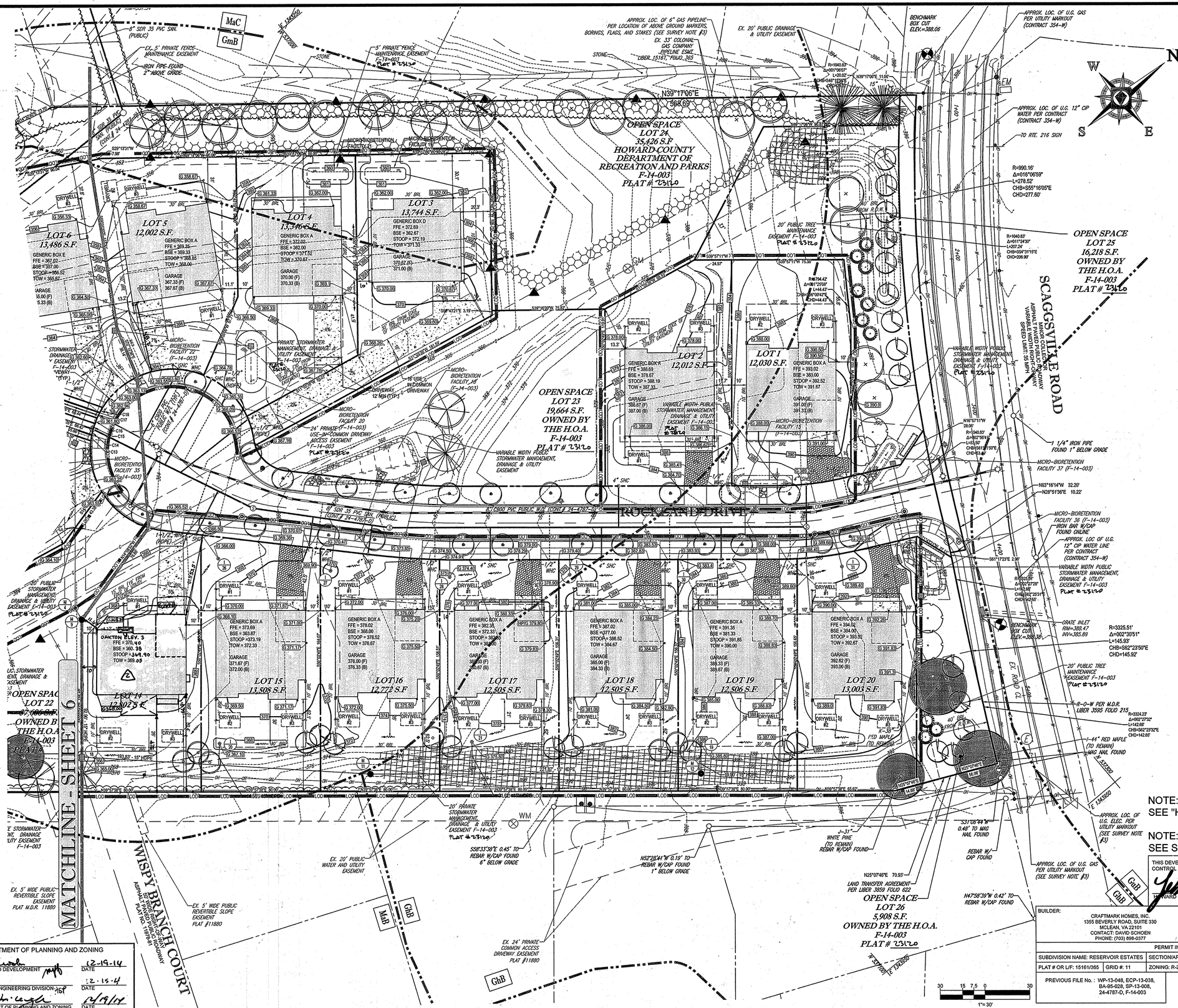

APPROVED: DEPARTMENT OF PLANNING AND ZONING

CHIEF, DIVISION OF LAND DEVELOPMENT	DATE 12-19-14
CHIEF, DEVELOPMENT ENGINEERING DIVISION	DATE 12-15-14
DIRECTOR - DEPARTMENT OF PLANNING AND ZONING	DATE 12/19/14

NOTE: FOR GENERIC BOX FORMATS, SEE "HOUSE TYPES" ON SHEET 3 OF 15.

NOTE: FOR INDIVIDUAL LOT SHC TABLE SEE SHEET 6 OF 15.

THIS DEVELOPMENT PLAN IS APPROVED FOR SOIL EROSION AND SEDIMENT CONTROL BY THE HOWARD SOIL CONSERVATION DISTRICT.

HOWARD SCD — DATE 12/9/14

BUILDER:	OWNER/DEVELOPER:
CRAFTMARK HOMES, INC. 1355 BEVERLY ROAD, SUITE 330 MCLEAN, VA 22101 CONTACT: DAVID SCHOEN PHONE: (703) 898-0377	CM HIGDON LC 1355 BEVERLY ROAD, SUITE 330 MCLEAN, VA 22101 CONTACT: DAVID SCHOEN PHONE: (703) 898-0377

PERMIT INFORMATION CHART

SUBDIVISION NAME: RESERVOIR ESTATES	SECTION/AREA: N/A	LOT/PARCEL NO.: 56
PLAT # OR L/F: 15161/365 · GRID #: 11	ZONING: R-20 · TAX MAP NO.: 46	ELECT DISTR: 6TH · CENSUS TRACT: 606805

PREVIOUS FILE No.: WP-13-048, ECP-13-038, BA-95-028, SP-13-008, 24-4787-D, F-14-003

PROFESSIONAL CERTIFICATION
I, BRANDON R. ROWE, HEREBY CERTIFY THAT THESE DOCUMENTS WERE PREPARED OR APPROVED BY ME, AND THAT I AM A DULY LICENSED PROFESSIONAL ENGINEER UNDER THE LAWS OF THE STATE OF MARYLAND, LICENSE NO. 40808, EXPIRATION DATE: 7/3/2015

LEGEND:

- PUBLIC FOREST CONSERVATION EASEMENT
- STEEP SLOPES (GREATER THAN 25%)
- FOREST CONSERVATION SIGNAGE
- SPECIMEN TREE (TO REMAIN)

BOHLER ENGINEERING

SITE CIVIL AND CONSULTING ENGINEERING, LANDSCAPE ARCHITECTURE, LAND SURVEYING, PROJECT MANAGEMENT, SUSTAINABLE DESIGN, PERMITTING SERVICES, TRANSPORTATION SERVICES

- WARREN, NJ
- LITITZ, PENNSYLVANIA, NEW YORK
- BOSTON, MA
- NEW YORK METRO
- HUNTINGTON, LONG ISLAND, NORTHERN NJ
- LEHIGH VALLEY, PA
- NORTHERN VIRGINIA
- BALTIMORE, MD
- CENTRAL VIRGINIA
- RICHMOND, VA
- RALEIGH, NC

THE INFORMATION, DESIGN CONTENT OF THIS PLAN AND DOCUMENT, AND SHALL NOT BE COPIED OR USED FOR ANY PURPOSE WITHOUT PRIOR WRITTEN AUTHORIZATION FROM BOHLER ENGINEERING. ONLY APPROVED, SIGNED AND SEALED PLAN SHALL BE ACCEPTED FOR CONSTRUCTION PURPOSES. © 2014 BOHLER ENGINEERING

REVISIONS

REV	DATE	COMMENT	BY
2	2/24/16	LOT 14 HOUSE REVISION	RLB

THE FOLLOWING STATES REQUIRE NOTIFICATION BY EXCAVATORS, DESIGNERS, OR ANY PERSON PREPARING TO DISTURB THE EARTH'S SURFACE ANYWHERE IN THE STATE. IN VIRGINIA, MARYLAND, THE DISTRICT OF COLUMBIA, NORTH CAROLINA AND DELAWARE CALL - 811
(NY 1-800-345-4545) (PA 1-800-242-1776) (DC 1-800-257-7777)
(VA 1-800-552-7001) (MD 1-800-257-7777) (DE 1-800-282-8555)

NOT APPROVED FOR CONSTRUCTION

PROJECT No.:	MD122066.1
DRAWN BY:	RLB
CHECKED BY:	BRR
DATE:	11/20/14
SCALE:	1"=30'
CAD I.D.:	SS1

PROJECT:

SITE DEVELOPMENT PLANS

FOR

RESERVOIR ESTATES

SINGLE FAMILY DETACHED UNITS
BUILDABLE LOTS 1-20 AND
OPEN SPACE LOTS 21-26
PLAT NO. 23120
LOCATION OF SITE
10883 AND 10887
SCAGGSVILLE ROAD
LAUREL, MD. 20723
HOWARD COUNTY

BOHLER ENGINEERING
901 DULANEY VALLEY ROAD, SUITE 801
TOWSON, MARYLAND 21204
Phone: (410) 821-7900
Fax: (410) 821-7987
MD@BohlerEng.com

SHEET TITLE:

SITE DEVELOPMENT PLAN

SHEET NUMBER:

7 OF 15

SDP-15-012

EROSION AND SEDIMENT CONTROL LEGEND

Symbol	Description
SCE	STABILIZED CONSTRUCTION ENTRANCE
—SF—	SILT FENCE
—SSF—	SUPER SILT FENCE
▬ ▬ ▬	LIMIT OF WORK (LIMIT OF DISTURBANCE FOR EACH LOT)
—LOD—	OVERALL LIMIT OF DISTURBANCE
▬ ▪ ▪ ▬	SOIL DIVIDE
MaB	SOIL LABEL
CIP	CURB INLET PROTECTION
SIP	STANDARD INLET PROTECTION
▲	FOREST CONSERVATION SIGNAGE
●	SPECIMEN TREE (TO REMAIN)

EROSION AND SEDIMENT CONTROL NOTES:

1. CONTRACTOR TO ACCOUNT FOR BASEMENT CUT BY LOWERING ELEVATIONS OF LOTS AS REQUIRED. GENERAL GRADING DESIGN SHOULD REMAIN THE SAME. LOTS SHOULD BE BROUGHT TO FINAL GRADE AFTER SDP APPROVAL WHEN HOUSES ARE BUILT AND CUT IN BASEMENTS IS AVAILABLE.
2. REFER TO SHEET 10 - 11 FOR SEQUENCE OF CONSTRUCTION, SEDIMENT CONTROL NOTES, AND SEDIMENT CONTROL DETAILS.
3. ALL PROPOSED WORK OUTSIDE OF PERIMETER CONTROLS SHALL BE STABILIZED AT THE END OF EACH WORK DAY.
4. PROPOSED SILT FENCE IS TO BE CHANGED TO SUPER SILT FENCE AT THE DIRECTION OF THE SEDIMENT CONTROL INSPECTOR.
5. EITHER TEMPORARY OR PERMANENT SEEDING IS TO BE PERFORMED AT THE DIRECTION OF THE SEDIMENT CONTROL INSPECTOR OR AT THE TIME FRAMES REQUIRED BY THE 2011 MARYLAND STANDARDS AND SPECIFICATIONS FOR SOIL EROSION AND SEDIMENT CONTROL, WHICHEVER IS MORE RESTRICTIVE.
6. CONTRACTOR TO INSTALL STABILIZATION MATTING IN ALL SWALES AND ON ALL SLOPES 3:1 OR GREATER.
7. SHOULD THE STOCKPILE EXCEED 15 FT. IN HEIGHT, IT MUST BE BENCHED.

EROSION AND SEDIMENT CONTROL UTILITY INSTALLATION NOTES:

1. CONTRACTOR SHALL OPEN ONLY THAT SECTION OF TRENCH THAT CAN BE BACKFILLED AND STABILIZED EACH DAY. IF TRENCH MUST REMAIN OPEN LONGER THAN ONE DAY, SILT FENCE SHALL BE PLACED BELOW (DOWNSLOPE OF) TRENCH.
2. PLACE ALL EXCAVATED MATERIAL ON UPHILL SIDE OF TRENCH.
3. ANY SEDIMENT CONTROLS DISTURBED BY UTILITY CONSTRUCTION ARE TO BE REPAIRED IMMEDIATELY.
4. THE CONTRACTOR SHALL TAKE APPROPRIATE MEASURES TO PROTECT PEDESTRIANS AT ALL TIMES DURING UNDERGROUND UTILITY CONSTRUCTION.

INLET PROTECTION NOTE

THE CONTRACTOR IS REQUIRED TO INSTALL INLET PROTECTION ON ALL STORM DRAIN INLETS WITH THE EXCEPTION OF THE FOLLOWING:

1) ANY INLET DIRECTLY OUTFALLING INTO A SEDIMENT TRAPPING DEVICE.
2) INLETS ON PRIVATE OR PUBLIC ROAD OPEN TO THE PUBLIC.

ALL INLET PROTECTION WILL BE INSTALLED AS DIRECTED BY THE INSPECTOR IN ACCORDANCE WITH THE 2011 MARYLAND STANDARDS AND SPECIFICATIONS FOR SOIL EROSION AND SEDIMENT CONTROL, PAGE E.23. THE REMOVAL OF ANY INLET PROTECTION DEVICES WILL REQUIRE APPROVAL FROM THE INSPECTOR.

EROSION AND SEDIMENT CONTROL QUANTITIES:

TOTAL FOR ALL PHASES

LIMIT OF WORK:	6.29 AC.
SILT FENCE:	5,570 LF
SUPER SILT FENCE:	1,835 LF
STANDARD INLET PROTECTION A:	13 EA.
STANDARD INLET PROTECTION B:	3 EA.
CURB INLET PROTECTION:	1 EA.
EARTHWORK:	14,500 CY CUT 14,500 CY FILL 0 CY EXPORT
STABILIZED CONSTRUCTION ENTRANCE:	20 EA

SPOIL MATERIAL SHALL BE DISCARDED AT A SITE WITH AN ACTIVE GRADING PERMIT AND APPROVED SEDIMENT CONTROL PLAN. BORROW MATERIAL SHALL BE OBTAINED FROM AN APPROVED SITE WITH AN ACTIVE GRADING PERMIT AND AN APPROVED SEDIMENT CONTROL PLAN.

EARTH QUANTITIES LISTED ABOVE ARE FOR SEDIMENT CONTROL USE ONLY. CONTRACTOR SHALL NOT RELY ON THESE FIGURES FOR ESTIMATING AND BONDING PURPOSES.

BENCHMARK NOTE:

THE COORDINATES SHOWN HEREON ARE BASED UPON THE HOWARD COUNTY GEODETIC CONTROL WHICH IS BASED UPON THE MARYLAND STATE PLAN COORDINATE SYSTEM. HORIZONTAL AND VERTICAL CONTROL DATUM ARE BASED ON HOWARD COUNTY MONUMENT NOS. 46BB AND 46CB WHICH WERE USED FOR THIS PROJECT.

HOWARD COUNTY MONUMENT NO: 46BB ELEV. = 422.444
HOWARD COUNTY MONUMENT NO: 46CB ELEV. = 394.623

△1 STATE OF MARYLAND — BRANDON R. ROWE — No. 40808 — PROFESSIONAL ENGINEER — 1/13/16 FOR REVISION 1 ONLY

△2 STATE OF MARYLAND — BRANDON R. ROWE — No. 40808 — PROFESSIONAL ENGINEER — 7/26/16 FOR REVISION 2 ONLY

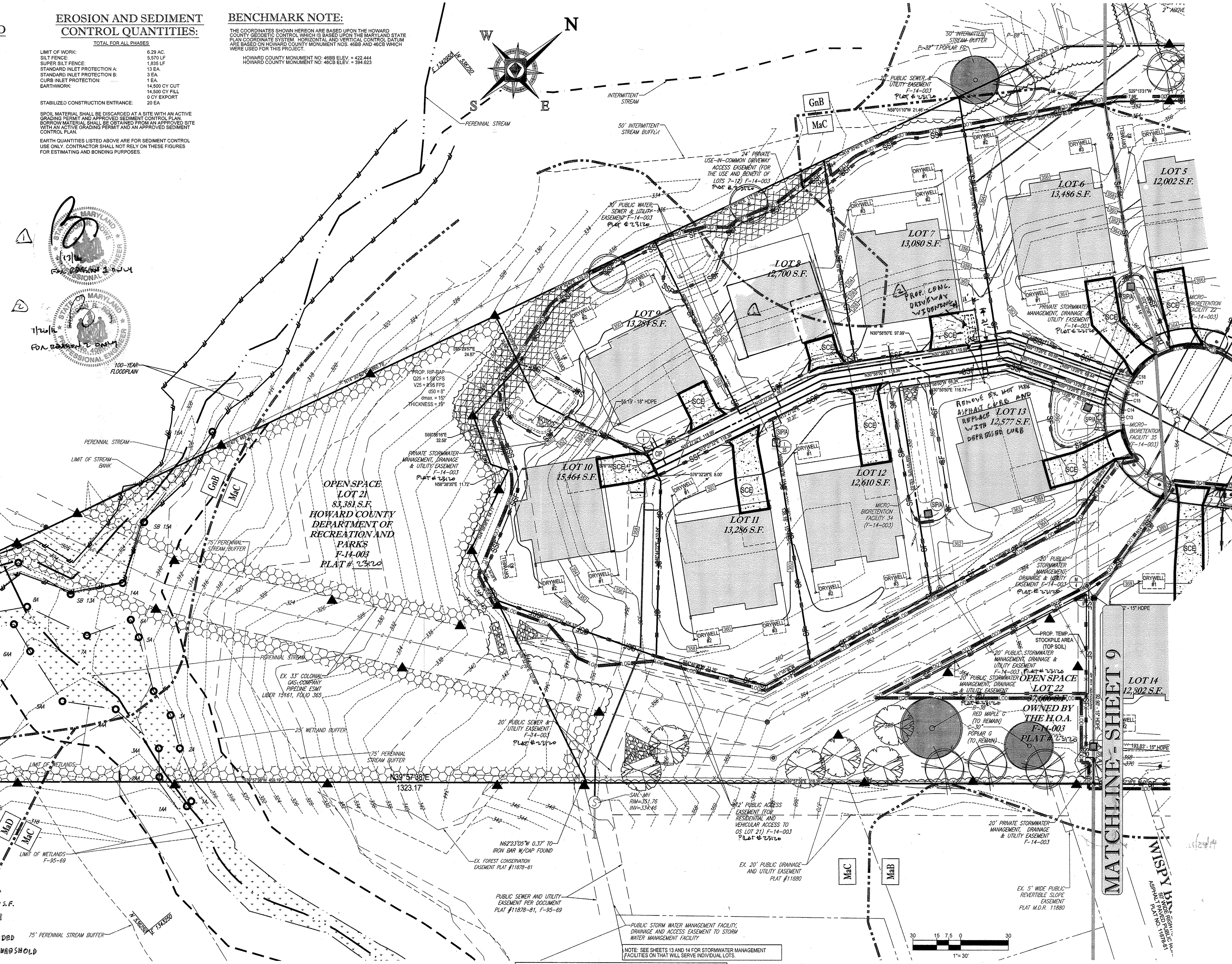

NOTE: SEE SHEETS 13 AND 14 FOR STORMWATER MANAGEMENT FACILITIES ON THAT WILL SERVE INDIVIDUAL LOTS.

30 15 7.5 0 30
1"= 30'

NOTES:

△2 1. THIS REDLINE SDP PROPOSES AN ADDITIONAL 231 S.F. OF IMPERVIOUS COVER. BECAUSE THIS IS LESS THAN 5,000 S.F. OF DISTURBANCE, THERE IS NO ADDITIONAL STORMWATER MANAGEMENT PROPOSED ON THIS PLAN. ANY ADDITIONAL IMPERVIOUS AREA PROPOSED IN THE FUTURE WILL BE ADDED TO THIS 231 S.F. TO DETERMINE IF THE 5,000 S.F THRESHOLD FOR STORMWATER MANAGEMENT IS MET.

2. THE EXISTING WATER METER VAULT LID ON LOT 7 MUST BE REPLACED WITH A TRAFFIC RATED FRAME AND LID.

APPROVED: DEPARTMENT OF PLANNING AND ZONING

Signature	Date
CHIEF, DIVISION OF LAND DEVELOPMENT	12-19-14
CHIEF, DEVELOPMENT ENGINEERING DIVISION	12-15-14
DIRECTOR - DEPARTMENT OF PLANNING AND ZONING	12/19/14

SOILS

MAP SYMBOL	MAP UNIT NAME	RATING
GhB	GLENELG-URBAN LAND COMPLEX, 0 TO 8 PERCENT SLOPES	B
GmB	GLENVILLE SILT LOAM, 3 TO 8 PERCENT SLOPES	C
GnB	GLENVILLE-BAILE SILT LOAMS, 0 TO 8 PERCENT SLOPES	C
MaB	MANOR LOAM, 3 TO 8 PERCENT SLOPES	B
MaC	MANOR LOAM, 8 TO 15 PERCENT SLOPES	B
MaD	MANOR LOAM, 15 TO 25 PERCENT SLOPES	B

NOTES:

1. TEMPORARY SWM IS PROVIDED UNDER F-14-003.
2. IF HOUSE CONSTRUCTION IS CONCURRENT WITH ROAD CONSTRUCTION, COORDINATE THE WORK ON THESE PLANS WITH F-14-003.
3. NO STOCKPILE WILL BE PERMITTED ON SITE.
4. SEEDING AND STABILIZATION IS TO BE PERFORMED AT THE DIRECTION OF THE SEDIMENT CONTROL INSPECTOR OR IN COMPLIANCE WITH THE STANDARD SEEDING AND STABILIZATION NOTES WHICHEVER IS MORE RESTRICTIVE.
5. FOR SEQUENCE OF CONSTRUCTION FOR EACH LOT, SEE SHEET 11 OF 15, EROSION AND SEDIMENT CONTROL NOTES & DETAILS.

THIS DEVELOPMENT PLAN IS APPROVED FOR SOIL EROSION AND SEDIMENT CONTROL BY THE HOWARD SOIL CONSERVATION DISTRICT.

HOWARD SCD — DATE 12/9/14

ENGINEER'S CERTIFICATE

"I HEREBY CERTIFY THAT THIS PLAN FOR EROSION AND SEDIMENT CONTROL REPRESENTS A PRACTICAL AND WORKABLE PLAN BASED ON MY PERSONAL KNOWLEDGE OF THE SITE CONDITIONS AND IT WAS PREPARED IN ACCORDANCE WITH THE REQUIREMENTS OF THE HOWARD SOIL CONSERVATION DISTRICT."

SIGNATURE OF ENGINEER — DATE 11/25/14
BRANDON R. ROWE, P.E.

HIGDON PROPERTY

20 SINGLE FAMILY DETACHED UNITS

DEVELOPER'S CERTIFICATE

"I/WE HEREBY CERTIFY THAT ALL DEVELOPMENT AND CONSTRUCTION WILL BE DONE ACCORDING TO THIS PLAN, AND THAT ANY RESPONSIBLE PERSONNEL INVOLVED IN THE CONSTRUCTION PROJECT WILL HAVE A CERTIFICATE OF ATTENDANCE AT A DEPARTMENT OF THE ENVIRONMENT APPROVED TRAINING PROGRAM FOR THE CONTROL OF SEDIMENT AND EROSION BEFORE BEGINNING THE PROJECT. I ALSO AUTHORIZE PERIODIC ONSITE INSPECTION BY THE HOWARD SOIL CONSERVATION DISTRICT."

SIGNATURE OF DEVELOPER — DATE 11/24/14
DAVID PASTVA, VICE PRESIDENT

BUILDER:	OWNER/DEVELOPER:
CRAFTMARK HOMES, INC. 1355 BEVERLY ROAD, SUITE 330 MCLEAN, VA 22101 CONTACT: DAVID SCHOEN PHONE: (703) 898-0377	CM HIGDON LC 1355 BEVERLY ROAD, SUITE 330 MCLEAN, VA 22101 CONTACT: DAVID SCHOEN PHONE: (703) 898-0377

PERMIT INFORMATION CHART

SUBDIVISION NAME: RESERVOIR ESTATES	SECTION/AREA: N/A	LOT/PARCEL NO.: 56	
PLAT # OR L/F: 15161/365	GRID #: 11	ZONING: R-20	TAX MAP NO.: 46
ELECT DISTR: 6TH	CENSUS TRACT: 606805		

PREVIOUS FILE No. : WP-13-048, ECP-13-038, BA-95-028, SP-13-008, 24-4787-D, F-14-003

PROFESSIONAL CERTIFICATION
I, BRANDON R. ROWE, HEREBY CERTIFY THAT THESE DOCUMENTS WERE PREPARED OR APPROVED BY ME, AND THAT I AM A DULY LICENSED PROFESSIONAL ENGINEER UNDER THE LAWS OF THE STATE OF MARYLAND, LICENSE NO. 40808, EXPIRATION DATE: 7/3/2015

H:\2012\MD122066.1\DRAWINGS\PLAN SETS\SITE DEVELOPMENT PLANS\MD122066.1SS2.DWG PRINTED BY: RBOWEN 11.21.14 @ 11:47 AM LAST SAVED B

BOHLER ENGINEERING
LAND SURVEYING · SUSTAINABLE DESIGN · SITE CIVIL AND CONSULTING ENGINEERING · PROGRAM MANAGEMENT · PERMITTING SERVICES · LANDSCAPE ARCHITECTURE · TRANSPORTATION SERVICES
WARREN, NJ · UPSTATE NEW YORK · BOSTON, MA · NEW YORK METRO · PHILADELPHIA/SOUTHERN NJ · LEHIGH VALLEY, PA · SOUTHEASTERN, PA · BALTIMORE, MD · SOUTHERN MARYLAND · NORTHERN VIRGINIA · CENTRAL VIRGINIA · CHARLOTTE, NC · RALEIGH, NC

THE INFORMATION, DESIGN AND CONTENT OF THIS PLAN ARE PROPRIETARY AND SHALL NOT BE COPIED OR USED FOR ANY PURPOSE WITHOUT PRIOR WRITTEN AUTHORIZATION FROM BOHLER ENGINEERING. ONLY APPROVED, SIGNED AND SEALED PLANS SHALL BE UTILIZED FOR CONSTRUCTION PURPOSES © 2008 BOHLER ENGINEERING.

REVISIONS

REV	DATE	COMMENT	BY
1	1/4/16	LOT 8 HOUSE REVISION	RLB
2	7/11/16	LOT 7 DRIVEWAY	MCB

DIG WITH CARE — CALL BEFORE YOU DIG

THE FOLLOWING STATES REQUIRE NOTIFICATION BY EXCAVATORS, DESIGNERS, OR ANY PERSON PREPARING TO DISTURB THE EARTH'S SURFACE ANYWHERE IN THE STATE. IN VIRGINIA, MARYLAND, THE DISTRICT OF COLUMBIA, NORTH CAROLINA AND DELAWARE CALL - 811
(WV 1-800-245-4848) (PA 1-800-242-1776) (DC 1-800-257-7777) (VA 1-800-552-7001) (MD 1-800-257-7777) (DE 1-800-282-8555)

NOT APPROVED FOR CONSTRUCTION

PROJECT No.:	MD122066.1
DRAWN BY:	RLB
CHECKED BY:	BRR
DATE:	11/20/14
SCALE:	1"=30'
CAD I.D.:	SS1

PROJECT:

SITE DEVELOPMENT PLANS FOR RESERVOIR ESTATES

SINGLE FAMILY DETACHED UNITS
BUILDABLE LOTS 1-20 AND
OPEN SPACE LOTS 21-26
PLAT NO. 23120
LOCATION OF SITE
10883 AND 10887
SCAGGSVILLE ROAD
LAUREL, MD. 20723
HOWARD COUNTY

BOHLER ENGINEERING
901 DULANEY VALLEY ROAD, SUITE 801
TOWSON, MARYLAND 21204
Phone: (410) 821-7900
Fax: (410) 821-7987
MD@BohlerEng.com

B.R. ROWE
STATE OF MARYLAND — BRANDON R. ROWE — PROFESSIONAL ENGINEER — MARYLAND LICENSE No. 40808 — 11/25/14

SHEET TITLE:

EROSION AND SEDIMENT CONTROL PLAN

SHEET NUMBER:

SDP-15-012

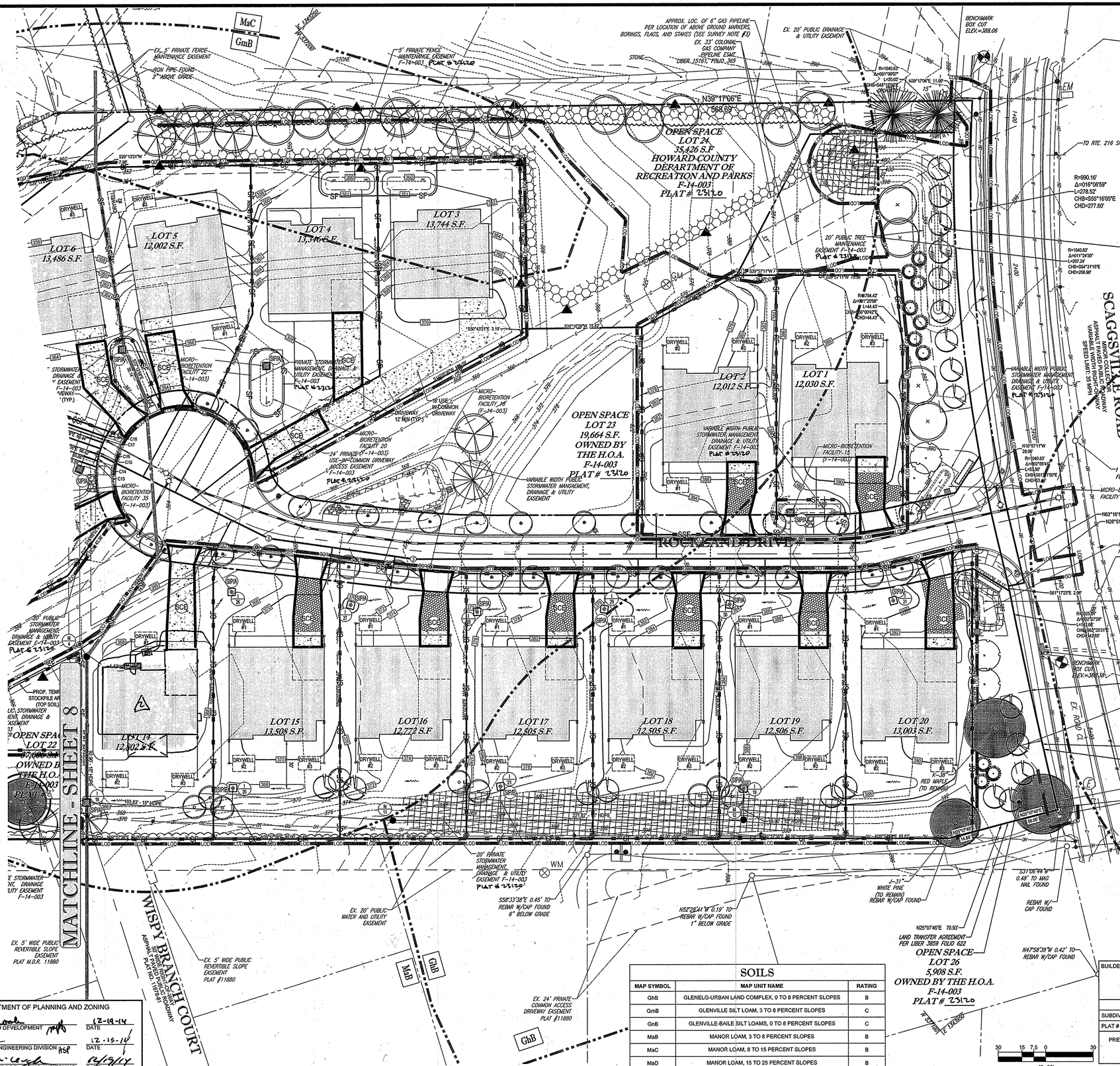

EROSION AND SEDIMENT CONTROL LEGEND

SCE	STABILIZED CONSTRUCTION ENTRANCE
SF — SF	SILT FENCE
SSF — SSF	SUPER SILT FENCE
	LIMIT OF WORK (LIMIT OF DISTURBANCE FOR EACH LOT)
LOD — LOD	LIMIT OF DISTURBANCE (PER APPROVED REVISED FINAL ROAD CONSTRUCTION PLANS)
	SOIL DIVIDE
MaB	SOIL LABEL
SIP	STANDARD INLET PROTECTION
	FOREST CONSERVATION SIGNAGE
	SPECIMEN TREE (TO REMAIN)

NOTES:

1. STORMWATER MANAGEMENT FROM THE PUBLIC IMPROVEMENT IS PROVIDED UNDER F-14-003.
2. IF HOUSE CONSTRUCTION IS CONCURRENT WITH ROAD CONSTRUCTION, COORDINATE THE WORK ON THESE PLANS WITH F-14-003.
3. NO STOCKPILE WILL BE PERMITTED ON SITE.
4. SEEDING AND STABILIZATION IS TO BE PERFORMED AT THE DIRECTION OF THE SEDIMENT CONTROL INSPECTOR OR IN COMPLIANCE WITH THE STANDARD SEEDING AND STABILIZATION NOTES, WHICHEVER IS MORE RESTRICTIVE.
5. FOR SEQUENCE OF CONSTRUCTION FOR EACH LOT, SEE SHEET 11 OF 15, SEDIMENT CONTROL NOTES & DETAILS.

ENGINEER'S CERTIFICATE

"I HEREBY CERTIFY THAT THIS PLAN FOR EROSION AND SEDIMENT CONTROL REPRESENTS A PRACTICAL AND WORKABLE PLAN BASED ON MY PERSONAL KNOWLEDGE OF THE SITE CONDITIONS AND IT WAS PREPARED IN ACCORDANCE WITH THE REQUIREMENTS OF THE HOWARD SOIL CONSERVATION DISTRICT."

SIGNATURE OF ENGINEER BRANDON R. ROWE, P.E. — DATE 11/25/14

DEVELOPER'S CERTIFICATE

"I/WE HEREBY CERTIFY THAT ALL DEVELOPMENT AND CONSTRUCTION WILL BE DONE ACCORDING TO THIS PLAN, AND THAT ANY RESPONSIBLE PERSONNEL INVOLVED IN THE CONSTRUCTION PROJECT WILL HAVE A CERTIFICATE OF ATTENDANCE AT A DEPARTMENT OF THE ENVIRONMENT APPROVED TRAINING PROGRAM FOR THE CONTROL OF SEDIMENT AND EROSION BEFORE BEGINNING THE PROJECT. I ALSO AUTHORIZE PERIODIC ONSITE INSPECTION BY THE HOWARD SOIL CONSERVATION DISTRICT."

SIGNATURE OF DEVELOPER DAVID PASTVA, VICE PRESIDENT — DATE 11/24/14

THIS DEVELOPMENT PLAN IS APPROVED FOR SOIL EROSION AND SEDIMENT CONTROL BY THE HOWARD SOIL CONSERVATION DISTRICT.

HOWARD SCD — DATE 12/9/14

SOILS

MAP SYMBOL	MAP UNIT NAME	RATING
GhB	GLENELG-URBAN LAND COMPLEX, 0 TO 8 PERCENT SLOPES	B
GmB	GLENVILLE SILT LOAM, 3 TO 8 PERCENT SLOPES	C
GnB	GLENVILLE-BAILE SILT LOAMS, 0 TO 8 PERCENT SLOPES	C
MaB	MANOR LOAM, 3 TO 8 PERCENT SLOPES	B
MaC	MANOR LOAM, 8 TO 15 PERCENT SLOPES	B
MaD	MANOR LOAM, 15 TO 25 PERCENT SLOPES	B

BUILDER:	OWNER/DEVELOPER:
CRAFTMARK HOMES, INC. 1355 BEVERLY ROAD, SUITE 330 MCLEAN, VA 22101 CONTACT: DAVID SCHOEN PHONE: (703) 898-0377	CM HIGDON LC 1355 BEVERLY ROAD, SUITE 330 MCLEAN, VA 22101 CONTACT: DAVID SCHOEN PHONE: (703) 898-0377

PERMIT INFORMATION CHART

SUBDIVISION NAME: RESERVOIR ESTATES	SECTION/AREA: N/A	LOT/PARCEL NO.: 56
PLAT # OR L/F: 15161/365 GRID #: 11 ZONING: R-20 TAX MAP NO.: 46	ELECT DISTR: 6TH	CENSUS TRACT: 606805

PREVIOUS FILE No.: WP-13-048, ECP-13-038, BA-95-028, SP-13-008, 24-4787-D, F-14-003

PROFESSIONAL CERTIFICATION
I, BRANDON R. ROWE, HEREBY CERTIFY THAT THESE DOCUMENTS WERE PREPARED OR APPROVED BY ME, AND THAT I AM A DULY LICENSED PROFESSIONAL ENGINEER UNDER THE LAWS OF THE STATE OF MARYLAND, LICENSE NO. 40908, EXPIRATION DATE: 7/3/2015

APPROVED: DEPARTMENT OF PLANNING AND ZONING

CHIEF, DIVISION OF LAND DEVELOPMENT	DATE 12-19-14
CHIEF, DEVELOPMENT ENGINEERING DIVISION	DATE 12-15-14
DIRECTOR - DEPARTMENT OF PLANNING AND ZONING	DATE 12/19/14

BOHLER ENGINEERING
SITE CIVIL AND CONSULTING ENGINEERING
LAND SURVEYING · LANDSCAPE ARCHITECTURE
SUSTAINABLE DESIGN · PERMITTING SERVICES · TRANSPORTATION SERVICES
WARREN, NJ · HUNTINGDON VALLEY, PA · NEW YORK · BOSTON, MA · NEW YORK-METRO · NORTHERN NEW JERSEY/SOUTHERN NJ · LEHIGH VALLEY, PA · CENTRAL VIRGINIA · RICHMOND, VA · RALEIGH, NC · BALTIMORE, MD · NORTHERN VIRGINIA · CENTRAL MARYLAND

THE INFORMATION, DESIGNS AND DATA SHOWN ON THIS PLAN IS PROPRIETARY AND SHALL NOT BE COPIED OR USED FOR ANY PURPOSE WITHOUT PRIOR WRITTEN AUTHORIZATION FROM BOHLER ENGINEERING. ONLY APPROVED, SIGNED AND SEALED PLANS SHALL BE RELIED ON FOR CONSTRUCTION PURPOSES. © 2014 BOHLER ENGINEERING

REVISIONS

REV	DATE	COMMENT	BY
2	2/24/14	LOT 14 HOUSE REVISED	RLB

FOR REVISION 2 ONLY

THE FOLLOWING STATES REQUIRE NOTIFICATION BY EXCAVATORS, DESIGNERS, OR ANY PERSON PREPARING TO DISTURB THE EARTH'S SURFACE ANYWHERE IN THE STATE. IN VIRGINIA, MARYLAND, THE DISTRICT OF COLUMBIA, NORTH CAROLINA AND DELAWARE CALL - 811
(MV 1-800-245-4848) (PA 1-800-242-1776) (DC 1-800-257-7777) (VA 1-800-552-7001) (MD 1-800-257-7777) (DE 1-800-282-8555)

NOT APPROVED FOR CONSTRUCTION

PROJECT No.:	MD122056.1
DRAWN BY:	RLB
CHECKED BY:	BRR
DATE:	11/20/14
SCALE:	1"=30'
CAD I.D.:	SS1

PROJECT: SITE DEVELOPMENT PLANS FOR RESERVOIR ESTATES
SINGLE FAMILY DETACHED UNITS
BUILDABLE LOTS 1-20 AND OPEN SPACE LOTS 21-26
PLAT NO. 23120
LOCATION OF SITE
10883 AND 10887
SCAGGSVILLE ROAD
LAUREL, MD. 20723
HOWARD COUNTY

BOHLER ENGINEERING
901 DULANEY VALLEY ROAD, SUITE 801
TOWSON, MARYLAND 21204
Phone: (410) 821-7900
Fax: (410) 821-7987
MD@BohlerEng.com

SHEET TITLE: EROSION AND SEDIMENT CONTROL PLAN

SHEET NUMBER: 9 OF 15

SDP-15-012

B-4 STANDARDS AND SPECIFICATIONS FOR VEGETATIVE STABILIZATION

DEFINITION

USING VEGETATION AS COVER TO PROTECT EXPOSED SOIL FROM EROSION.

PURPOSE

TO PROMOTE THE ESTABLISHMENT OF VEGETATION ON EXPOSED SOIL.

CONDITIONS WHERE PRACTICE APPLIES

ON ALL DISTURBED AREAS NOT STABILIZED BY OTHER METHODS. THIS SPECIFICATION IS DIVIDED INTO SECTIONS ON INCREMENTAL STABILIZATION; SOIL PREPARATION, SOIL AMENDMENTS AND TOPSOILING; SEEDING AND MULCHING; TEMPORARY STABILIZATION; AND PERMANENT STABILIZATION.

EFFECTS ON WATER QUALITY AND QUANTITY

STABILIZATION PRACTICES ARE USED TO PROMOTE THE ESTABLISHMENT OF VEGETATION ON EXPOSED SOIL. WHEN SOIL IS STABILIZED WITH VEGETATION, THE SOIL IS LESS LIKELY TO ERODE AND MORE LIKELY TO ALLOW INFILTRATION OF RAINFALL, THEREBY REDUCING SEDIMENT LOADS AND RUNOFF TO DOWNSTREAM AREAS.

PLANTING VEGETATION IN DISTURBED AREAS WILL HAVE AN EFFECT ON THE WATER BUDGET, ESPECIALLY ON VOLUMES AND RATES OF RUNOFF, INFILTRATION, EVAPORATION, TRANSPIRATION, PERCOLATION, AND GROUNDWATER RECHARGE. OVER TIME, VEGETATION WILL INCREASE ORGANIC MATTER CONTENT AND IMPROVE THE WATER HOLDING CAPACITY OF THE SOIL AND SUBSEQUENT PLANT GROWTH.

VEGETATION WILL HELP REDUCE THE MOVEMENT OF SEDIMENT, NUTRIENTS, AND OTHER CHEMICALS CARRIED BY RUNOFF TO RECEIVING WATERS. PLANTS WILL ALSO HELP PROTECT GROUNDWATER SUPPLIES BY ASSIMILATING THOSE SUBSTANCES PRESENT WITHIN THE ROOT ZONE.

SEDIMENT CONTROL PRACTICES MUST REMAIN IN PLACE DURING GRADING, SEEDBED PREPARATION, SEEDING, MULCHING, AND VEGETATIVE ESTABLISHMENT.

ADEQUATE VEGETATIVE ESTABLISHMENT

INSPECT SEEDED AREAS FOR VEGETATIVE ESTABLISHMENT AND MAKE NECESSARY REPAIRS, REPLACEMENTS, AND RESEEDINGS WITHIN THE PLANTING SEASON.

1. ADEQUATE VEGETATIVE STABILIZATION REQUIRES 95 PERCENT GROUNDCOVER.
2. IF AN AREA HAS LESS THAN 40 PERCENT GROUNDCOVER, RESTABILIZE FOLLOWING THE ORIGINAL RECOMMENDATIONS FOR LIME, FERTILIZER, SEEDBED PREPARATION, AND SEEDING.
3. IF AN AREA HAS BETWEEN 40 AND 94 PERCENT GROUNDCOVER, OVER-SEED AND FERTILIZE USING HALF OF THE RATES ORIGINALLY SPECIFIED.
4. MAINTENANCE FERTILIZER RATES FOR PERMANENT SEEDING ARE SHOWN IN TABLE B.6.

B-4-1 STANDARDS AND SPECIFICATIONS FOR INCREMENTAL STABILIZATION

DEFINITION

ESTABLISHMENT OF VEGETATIVE COVER ON CUT AND FILL SLOPES.

PURPOSE

TO PROVIDE TIMELY VEGETATIVE COVER ON CUT AND FILL SLOPES AS WORK PROGRESSES.

CONDITIONS WHERE PRACTICE APPLIES

ANY CUT OR FILL SLOPE GREATER THAN 15 FEET IN HEIGHT. THIS PRACTICE ALSO APPLIES TO STOCKPILES.

CRITERIA

A. INCREMENTAL STABILIZATION - CUT SLOPES

1. EXCAVATE AND STABILIZE CUT SLOPES IN INCREMENTS NOT TO EXCEED 15 FEET IN HEIGHT. PREPARE SEEDBED AND APPLY SEED AND MULCH ON ALL CUT SLOPES AS THE WORK PROGRESSES.
2. CONSTRUCTION SEQUENCE EXAMPLE (REFER TO FIGURE B.1):
   a. CONSTRUCT AND STABILIZE ALL TEMPORARY SWALES OR DIKES THAT WILL BE USED TO CONVEY RUNOFF AROUND THE EXCAVATION.
   b. PERFORM PHASE 1 EXCAVATION, PREPARE SEEDBED, AND STABILIZE.
   c. PERFORM PHASE 2 EXCAVATION, PREPARE SEEDBED, AND STABILIZE. OVERSEED PHASE 1 AREAS AS NECESSARY.
   d. PERFORM FINAL PHASE EXCAVATION, PREPARE SEEDBED, AND STABILIZE. OVERSEED PREVIOUSLY SEEDED AREAS AS NECESSARY.

NOTE: ONCE EXCAVATION HAS BEGUN THE OPERATION SHOULD BE CONTINUOUS FROM GRUBBING THROUGH THE COMPLETION OF GRADING AND PLACEMENT OF TOPSOIL (IF REQUIRED) AND PERMANENT SEED AND MULCH. ANY INTERRUPTIONS IN THE OPERATION OR COMPLETING THE OPERATION OUT OF THE SEEDING SEASON WILL NECESSITATE THE APPLICATION OF TEMPORARY STABILIZATION.

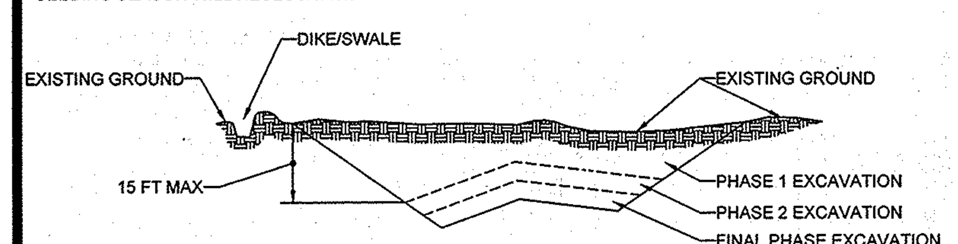

FIGURE B.1: INCREMENTAL STABILIZATION - CUT

B. INCREMENTAL STABILIZATION - FILL SLOPES

1. CONSTRUCT AND STABILIZE FILL SLOPES IN INCREMENTS NOT TO EXCEED 15 FEET IN HEIGHT. PREPARE SEEDBED AND APPLY SEED AND MULCH ON ALL SLOPES AS THE WORK PROGRESSES.
2. STABILIZE SLOPES IMMEDIATELY WHEN THE VERTICAL HEIGHT OF A LIFT REACHES 15 FEET, OR WHEN THE GRADING OPERATION CEASES AS PRESCRIBED IN THE PLANS.
3. AT THE END OF EACH DAY, INSTALL TEMPORARY WATER CONVEYANCE PRACTICE(S), AS NECESSARY, TO INTERCEPT SURFACE RUNOFF AND CONVEY IT DOWN THE SLOPE IN A NON-EROSIVE MANNER.
4. CONSTRUCTION SEQUENCE EXAMPLE (REFER TO FIGURE B.2):
   a. CONSTRUCT AND STABILIZE ALL TEMPORARY SWALES OR DIKES THAT WILL BE USED TO DIVERT RUNOFF AROUND THE FILL. CONSTRUCT SILT FENCE ON LOW SIDE OF FILL UNLESS OTHER METHODS SHOWN ON THE PLANS ADDRESS THIS AREA.
   b. AT THE END OF EACH DAY, INSTALL TEMPORARY WATER CONVEYANCE PRACTICE(S), AS NECESSARY, TO INTERCEPT SURFACE RUNOFF AND CONVEY IT DOWN THE SLOPE IN A NON-EROSIVE MANNER.
   c. PLACE PHASE 1 FILL, PREPARE SEEDBED, AND STABILIZE.
   d. PLACE PHASE 2 FILL, PREPARE SEEDBED, AND STABILIZE.
   e. PLACE FINAL PHASE FILL, PREPARE SEEDBED, AND STABILIZE. OVERSEED PREVIOUSLY SEEDED AREAS AS NECESSARY.

NOTE: ONCE THE PLACEMENT OF FILL HAS BEGUN THE OPERATION SHOULD BE CONTINUOUS FROM GRUBBING THROUGH THE COMPLETION OF GRADING AND PLACEMENT OF TOPSOIL (IF REQUIRED) AND PERMANENT SEED AND MULCH. ANY INTERRUPTIONS IN THE OPERATION OR COMPLETING THE OPERATION OUT OF THE SEEDING SEASON WILL NECESSITATE THE APPLICATION OF TEMPORARY STABILIZATION.

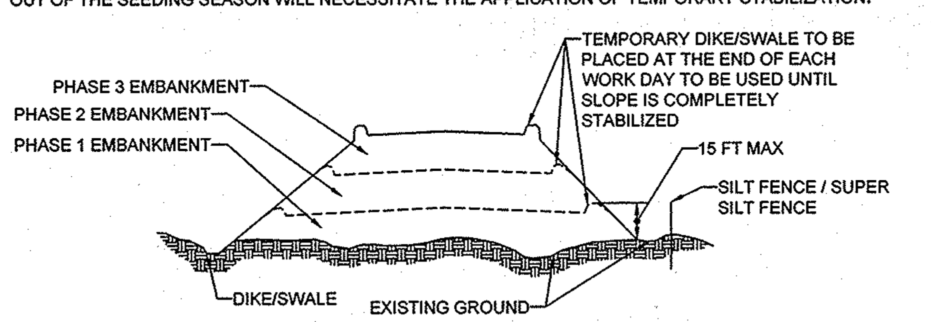

FIGURE B.2: INCREMENTAL STABILIZATION - FILL

APPROVED: DEPARTMENT OF PLANNING AND ZONING	
CHIEF, DIVISION OF LAND DEVELOPMENT	DATE 12-19-14
CHIEF, DEVELOPMENT ENGINEERING DIVISION	DATE 12.15.14
DIRECTOR - DEPARTMENT OF PLANNING AND ZONING	DATE 12/19/14

B-4-2 STANDARDS AND SPECIFICATIONS FOR SOIL PREPARATION, TOPSOILING, AND SOIL AMENDMENTS

DEFINITION

THE PROCESS OF PREPARING THE SOILS TO SUSTAIN ADEQUATE VEGETATIVE STABILIZATION.

PURPOSE

TO PROVIDE A SUITABLE SOIL MEDIUM FOR VEGETATIVE GROWTH.

CONDITIONS WHERE PRACTICE APPLIES

WHERE VEGETATIVE STABILIZATION IS TO BE ESTABLISHED.

CRITERIA

A. SOIL PREPARATION

1. TEMPORARY STABILIZATION
   a. SEEDBED PREPARATION CONSISTS OF LOOSENING SOIL TO A DEPTH OF 3 TO 5 INCHES BY MEANS OF SUITABLE AGRICULTURAL OR CONSTRUCTION EQUIPMENT, SUCH AS DISC HARROWS OR CHISEL PLOWS OR RIPPERS MOUNTED ON CONSTRUCTION EQUIPMENT. AFTER THE SOIL IS LOOSENED, IT MUST NOT BE ROLLED OR DRAGGED SMOOTH BUT LEFT IN THE ROUGHENED CONDITION. SLOPES 3:1 OR FLATTER ARE TO BE TRACKED WITH RIDGES RUNNING PARALLEL TO THE CONTOUR OF THE SLOPE.
   b. APPLY FERTILIZER AND LIME AS PRESCRIBED ON THE PLANS.INCORPORATE LIME AND FERTILIZER INTO THE TOP 3 TO 5 INCHES OF SOIL BY DISKING OR OTHER SUITABLE MEANS.
2. PERMANENT STABILIZATION
   a. A SOIL TEST IS REQUIRED FOR ANY EARTH DISTURBANCE OF 5 ACRES OR MORE. THE MINIMUM SOIL CONDITIONS REQUIRED FOR PERMANENT VEGETATIVE ESTABLISHMENT ARE:
      i. SOIL PH BETWEEN 6.0 AND 7.0.
      ii. SOLUBLE SALTS LESS THAN 500 PARTS PER MILLION (PPM).
      iii. SOIL CONTAINS LESS THAN 40 PERCENT CLAY BUT ENOUGH FINE GRAINED MATERIAL (GREATER THAN 30 PERCENT SILT PLUS CLAY) TO PROVIDE THE CAPACITY TO HOLD A MODERATE AMOUNT OF MOISTURE. AN EXCEPTION: IF LOVEGRASS WILL BE PLANTED, THEN A SANDY SOIL (LESS THAN 30 PERCENT SILT PLUS CLAY) WOULD BE ACCEPTABLE.
      iv. SOIL CONTAINS 1.5 PERCENT MINIMUM ORGANIC MATTER BY WEIGHT.
      v. SOIL CONTAINS SUFFICIENT PORE SPACE TO PERMIT ADEQUATE ROOT PENETRATION.
   b. APPLICATION OF AMENDMENTS OR TOPSOIL IS REQUIRED IF ON-SITE SOILS DO NOT MEET THE ABOVE CONDITIONS.
   c. GRADED AREAS MUST BE MAINTAINED IN A TRUE AND EVEN GRADE AS SPECIFIED ON THE APPROVED PLAN, THEN SCARIFIED OR OTHERWISE LOOSENED TO A DEPTH OF 3 TO 5 INCHES.
   d. APPLY SOIL AMENDMENTS AS SPECIFIED ON THE APPROVED PLAN OR AS INDICATED BY THE RESULTS OF A SOIL TEST.
   e. MIX SOIL AMENDMENTS INTO THE TOP 3 TO 5 INCHES OF SOIL BY DISKING OR OTHER SUITABLE MEANS. RAKE LAWN AREAS TO SMOOTH THE SURFACE, REMOVE LARGE OBJECTS LIKE STONES AND BRANCHES, AND READY THE AREA FOR SEED APPLICATION. LOOSEN SURFACE SOIL BY DRAGGING WITH A HEAVY CHAIN OR OTHER EQUIPMENT TO ROUGHEN THE SURFACE WHERE SITE CONDITIONS WILL NOT PERMIT NORMAL SEEDBED PREPARATION. TRACK SLOPES 3:1 OR FLATTER WITH TRACKED EQUIPMENT LEAVING THE SOIL IN AN IRREGULAR CONDITION WITH RIDGES RUNNING PARALLEL TO THE CONTOUR OF THE SLOPE. LEAVE THE TOP 1 TO 3 INCHES OF SOIL LOOSE AND FRIABLE. SEEDBED LOOSENING MAY BE UNNECESSARY ON NEWLY DISTURBED AREAS.

B. TOPSOILING

1. TOPSOIL IS PLACED OVER PREPARED SUBSOIL PRIOR TO ESTABLISHMENT OF PERMANENT VEGETATION. THE PURPOSE IS TO PROVIDE A SUITABLE SOIL MEDIUM FOR VEGETATIVE GROWTH. SOILS OF CONCERN HAVE LOW MOISTURE CONTENT, LOW NUTRIENT LEVELS, LOW PH, MATERIALS TOXIC TO PLANTS, AND/OR UNACCEPTABLE SOIL GRADATION.
2. TOPSOIL SALVAGED FROM AN EXISTING SITE MAY BE USED PROVIDED IT MEETS THE STANDARDS AS SET FORTH IN THESE SPECIFICATIONS. TYPICALLY, THE DEPTH OF TOPSOIL TO BE SALVAGED FOR A GIVEN SOIL TYPE CAN BE FOUND IN THE REPRESENTATIVE SOIL PROFILE SECTION IN THE SOIL SURVEY PUBLISHED BY USDA-NRCS.
3. TOPSOILING IS LIMITED TO AREAS HAVING 2:1 OR FLATTER SLOPES WHERE:
   a. THE TEXTURE OF THE EXPOSED SUBSOIL/PARENT MATERIAL IS NOT ADEQUATE TO PRODUCE VEGETATIVE GROWTH.
   b. THE SOIL MATERIAL IS SO SHALLOW THAT THE ROOTING ZONE IS NOT DEEP ENOUGH TO SUPPORT PLANTS OR FURNISH CONTINUING SUPPLIES OF MOISTURE AND PLANT NUTRIENTS.
   c. THE ORIGINAL SOIL TO BE VEGETATED CONTAINS MATERIAL TOXIC TO PLANT GROWTH.
   d. THE SOIL IS SO ACIDIC THAT TREATMENT WITH LIMESTONE IS NOT FEASIBLE.
4. AREAS HAVING SLOPES STEEPER THAN 2:1 REQUIRE SPECIAL CONSIDERATION AND DESIGN.
5. TOPSOIL SPECIFICATIONS: SOIL TO BE USED AS TOPSOIL MUST MEET THE FOLLOWING CRITERIA:
   a. TOPSOIL MUST BE A LOAM, SANDY LOAM, CLAY LOAM, SILT LOAM, SANDY CLAY LOAM, OR LOAMY SAND. OTHER SOILS MAY BE USED IF RECOMMENDED BY AN AGRONOMIST OR SOIL SCIENTIST AND APPROVED BY THE APPROPRIATE APPROVAL AUTHORITY. TOPSOIL MUST NOT BE A MIXTURE OF CONTRASTING TEXTURED SUBSOILS AND MUST CONTAIN LESS THAN 5 PERCENT BY VOLUME OF CINDERS, STONES, SLAG, COARSE FRAGMENTS, GRAVEL, STICKS, ROOTS, TRASH, OR OTHER MATERIALS LARGER THAN 1½ INCHES IN DIAMETER.
   b. TOPSOIL MUST BE FREE OF NOXIOUS PLANTS OR PLANT PARTS SUCH AS BERMUDA GRASS, QUACK GRASS, JOHNSON GRASS, NUT SEDGE, POISON IVY, THISTLE, OR OTHERS AS SPECIFIED.
   c. TOPSOIL SUBSTITUTES OR AMENDMENTS, AS RECOMMENDED BY A QUALIFIED AGRONOMIST OR SOIL SCIENTIST AND APPROVED BY THE APPROPRIATE APPROVAL AUTHORITY, MAY BE USED IN LIEU OF NATURAL TOPSOIL.
6. TOPSOIL APPLICATION
   a. EROSION AND SEDIMENT CONTROL PRACTICES MUST BE MAINTAINED WHEN APPLYING TOPSOIL.
   b. UNIFORMLY DISTRIBUTE TOPSOIL IN A 5 TO 8 INCH LAYER AND LIGHTLY COMPACT TO A MINIMUM THICKNESS OF 4 INCHES. SPREADING IS TO BE PERFORMED IN SUCH A MANNER THAT SODDING OR SEEDING CAN PROCEED WITH A MINIMUM OF ADDITIONAL SOIL PREPARATION AND TILLAGE. ANY IRREGULARITIES IN THE SURFACE RESULTING FROM TOPSOILING OR OTHER OPERATIONS MUST BE CORRECTED IN ORDER TO PREVENT THE FORMATION OF DEPRESSIONS OR WATER POCKETS.
   c. TOPSOIL MUST NOT BE PLACED IF THE TOPSOIL OR SUBSOIL IS IN A FROZEN OR MUDDY CONDITION, WHEN THE SUBSOIL IS EXCESSIVELY WET OR IN A CONDITION THAT MAY OTHERWISE BE DETRIMENTAL TO PROPER GRADING AND SEEDBED PREPARATION.

C. SOIL AMENDMENTS (FERTILIZER AND LIME SPECIFICATIONS)

1. SOIL TESTS MUST BE PERFORMED TO DETERMINE THE EXACT RATIOS AND APPLICATION RATES FOR BOTH LIME AND FERTILIZER ON SITES HAVING DISTURBED AREAS OF 5 ACRES OR MORE. SOIL ANALYSIS MAY BE PERFORMED BY A RECOGNIZED PRIVATE OR COMMERCIAL LABORATORY. SOIL SAMPLES TAKEN FOR ENGINEERING PURPOSES MAY ALSO BE USED FOR CHEMICAL ANALYSES.
2. FERTILIZERS MUST BE UNIFORM IN COMPOSITION, FREE FLOWING AND SUITABLE FOR ACCURATE APPLICATION BY APPROPRIATE EQUIPMENT. MANURE MAY BE SUBSTITUTED FOR FERTILIZER WITH PRIOR APPROVAL FROM THE APPROPRIATE APPROVAL AUTHORITY. FERTILIZERS MUST ALL BE DELIVERED TO THE SITE FULLY LABELED ACCORDING TO THE APPLICABLE LAWS AND MUST BEAR THE NAME, TRADE NAME OR TRADEMARK AND WARRANTY OF THE PRODUCER.
3. LIME MATERIALS MUST BE GROUND LIMESTONE (HYDRATED OR BURNT LIME MAY BE SUBSTITUTED EXCEPT WHEN HYDROSEEDING) WHICH CONTAINS AT LEAST 50 PERCENT TOTAL OXIDES (CALCIUM OXIDE PLUS MAGNESIUM OXIDE). LIMESTONE MUST BE GROUND TO SUCH FINENESS THAT AT LEAST 50 PERCENT WILL PASS THROUGH A #100 MESH SIEVE AND 98 TO 100 PERCENT WILL PASS THROUGH A #20 MESH SIEVE.
4. LIME AND FERTILIZER ARE TO BE EVENLY DISTRIBUTED AND INCORPORATED INTO THE TOP 3 TO 5 INCHES OF SOIL BY DISKING OR OTHER SUITABLE MEANS.
5. WHERE THE SUBSOIL IS EITHER HIGHLY ACIDIC OR COMPOSED OF HEAVY CLAYS, SPREAD GROUND LIMESTONE AT THE RATE OF 4 TO 8 TONS/ACRE (200-400 POUNDS PER 1,000 SQUARE FEET) PRIOR TO THE PLACEMENT OF TOPSOIL.

B-4-3 STANDARDS AND SPECIFICATIONS FOR SEEDING AND MULCHING

DEFINITION

THE APPLICATION OF SEED AND MULCH TO ESTABLISH VEGETATIVE COVER.

PURPOSE

TO PROTECT DISTURBED SOILS FROM EROSION DURING AND AT THE END OF CONSTRUCTION.

CONDITIONS WHERE PRACTICE APPLIES

TO THE SURFACE OF ALL PERIMETER CONTROLS, SLOPES, AND ANY DISTURBED AREA NOT UNDER ACTIVE GRADING.

CRITERIA

A. SEEDING

1. SPECIFICATIONS
   a. ALL SEED MUST MEET THE REQUIREMENTS OF THE MARYLAND STATE SEED LAW. ALL SEED MUST BE SUBJECT TO RE-TESTING BY A RECOGNIZED SEED LABORATORY. ALL SEED USED MUST HAVE BEEN TESTED WITHIN THE 6 MONTHS IMMEDIATELY PRECEDING THE DATE OF SOWING SUCH MATERIAL ON ANY PROJECT. REFER TO TABLE B.4 REGARDING THE QUALITY OF SEED. SEED TAGS MUST BE AVAILABLE UPON REQUEST TO THE INSPECTOR TO VERIFY TYPE OF SEED AND SEEDING RATE.
   b. MULCH ALONE MAY BE APPLIED BETWEEN THE FALL AND SPRING SEEDING DATES ONLY IF THE GROUND IS FROZEN. THE APPROPRIATE SEEDING MIXTURE MUST BE APPLIED WHEN THE GROUND THAWS.
   c. INOCULANTS: THE INOCULANT FOR TREATING LEGUME SEED IN THE SEED MIXTURES MUST BE A PURE CULTURE OF NITROGEN FIXING BACTERIA PREPARED SPECIFICALLY FOR THE SPECIES. INOCULANTS MUST NOT BE USED LATER THAN THE DATE INDICATED ON THE CONTAINER. ADD FRESH INOCULANTS AS DIRECTED ON THE PACKAGE. USE FOUR TIMES THE RECOMMENDED RATE WHEN HYDROSEEDING. NOTE: IT IS VERY IMPORTANT TO KEEP INOCULANT AS COOL AS POSSIBLE UNTIL USED. TEMPERATURES ABOVE 75 TO 80 DEGREES FAHRENHEIT CAN WEAKEN BACTERIA AND MAKE THE INOCULANT LESS EFFECTIVE.
   d. SOD OR SEED MUST NOT BE PLACED ON SOIL WHICH HAS BEEN TREATED WITH SOIL STERILANTS OR CHEMICALS USED FOR WEED CONTROL UNTIL SUFFICIENT TIME HAS ELAPSED (14 DAYS MIN.) TO PERMIT DISSIPATION OF PHYTO-TOXIC MATERIALS.
2. APPLICATION
   a. DRY SEEDING: THIS INCLUDES USE OF CONVENTIONAL DROP OR BROADCAST SPREADERS.
      i. INCORPORATE SEED INTO THE SUBSOIL AT THE RATES PRESCRIBED ON TEMPORARY SEEDING TABLE B.1, PERMANENT SEEDING TABLE B.3, OR SITE-SPECIFIC SEEDING SUMMARIES.
      ii. APPLY SEED IN TWO DIRECTIONS, PERPENDICULAR TO EACH OTHER. APPLY HALF THE SEEDING RATE IN EACH DIRECTION. ROLL THE SEEDED AREA WITH A WEIGHTED ROLLER TO PROVIDE GOOD SEED TO SOIL CONTACT.
   b. DRILL OR CULTIPACKER SEEDING: MECHANIZED SEEDERS THAT APPLY AND COVER SEED WITH SOIL.
      i. CULTIPACKING SEEDERS ARE REQUIRED TO BURY THE SEED IN SUCH A FASHION AS TO PROVIDE AT LEAST 1/4 INCH OF SOIL COVERING. SEEDBED MUST BE FIRM AFTER PLANTING.
      ii. APPLY SEED IN TWO DIRECTIONS, PERPENDICULAR TO EACH OTHER. APPLY HALF THE SEEDING RATE IN EACH DIRECTION.
   c. HYDROSEEDING: APPLY SEED UNIFORMLY WITH HYDROSEEDER (SLURRY INCLUDES SEED AND FERTILIZER).
      i. IF FERTILIZER IS BEING APPLIED AT THE TIME OF SEEDING, THE APPLICATION RATES SHOULD NOT EXCEED THE FOLLOWING: NITROGEN, 100 POUNDS PER ACRE TOTAL OF SOLUBLE NITROGEN; P2O5 (PHOSPHOROUS), 200 POUNDS PER ACRE; K2O (POTASSIUM), 200 POUNDS PER ACRE.
      ii. LIME: USE ONLY GROUND AGRICULTURAL LIMESTONE (UP TO 3 TONS PER ACRE MAY BE APPLIED BY HYDROSEEDING). NORMALLY, NOT MORE THAN 2 TONS ARE APPLIED BY HYDROSEEDING AT ANY ONE TIME. DO NOT USE BURNT OR HYDRATED LIME WHEN HYDROSEEDING.
      iii. MIX SEED AND FERTILIZER ON SITE AND SEED IMMEDIATELY AND WITHOUT INTERRUPTION.
      iv. WHEN HYDROSEEDING DO NOT INCORPORATE SEED INTO THE SOIL.

B. MULCHING

1. MULCH MATERIALS (IN ORDER OF PREFERENCE)
   a. STRAW CONSISTING OF THOROUGHLY THRESHED WHEAT, RYE, OAT, OR BARLEY AND REASONABLY BRIGHT IN COLOR. STRAW IS TO BE FREE OF NOXIOUS WEED SEEDS AS SPECIFIED IN THE MARYLAND SEED LAW AND NOT MUSTY, MOLDY, CAKED, DECAYED, OR EXCESSIVELY DUSTY. NOTE: USE ONLY STERILE STRAW MULCH IN AREAS WHERE ONE SPECIES OF GRASS IS DESIRED.
      i. WCFM IS TO BE DYED GREEN OR CONTAIN A GREEN DYE IN THE PACKAGE THAT WILL PROVIDE AN APPROPRIATE COLOR TO FACILITATE VISUAL INSPECTION OF THE UNIFORMLY SPREAD SLURRY.
      ii. WCFM, INCLUDING DYE, MUST CONTAIN NO GERMINATION OR GROWTH INHIBITING FACTORS.
      iii. WCFM MATERIALS ARE TO BE MANUFACTURED AND PROCESSED IN SUCH A MANNER THAT THE WOOD CELLULOSE FIBER MULCH WILL REMAIN IN UNIFORM SUSPENSION IN WATER UNDER AGITATION AND WILL BLEND WITH SEED, FERTILIZER AND OTHER ADDITIVES TO FORM A HOMOGENEOUS SLURRY. THE MULCH MATERIAL MUST FORM A BLOTTER-LIKE GROUND COVER, ON APPLICATION, HAVING MOISTURE ABSORPTION AND PERCOLATION PROPERTIES AND MUST COVER AND HOLD GRASS SEED IN CONTACT WITH THE SOIL WITHOUT INHIBITING THE GROWTH OF THE GRASS SEEDLINGS.
      iv. WCFM MATERIAL MUST NOT CONTAIN ELEMENTS OR COMPOUNDS AT CONCENTRATION LEVELS THAT WILL BE PHYTO-TOXIC.
      v. WCFM MUST CONFORM TO THE FOLLOWING PHYSICAL REQUIREMENTS: FIBER LENGTH OF APPROXIMATELY 10 MILLIMETERS, DIAMETER APPROXIMATELY 1 MILLIMETER, PH RANGE OF 4.0 TO 8.5, ASH CONTENT OF 1.6 PERCENT MAXIMUM AND WATER HOLDING CAPACITY OF 90 PERCENT MINIMUM.
2. APPLICATION
   a. APPLY MULCH TO ALL SEEDED AREAS IMMEDIATELY AFTER SEEDING.
   b. WHEN STRAW MULCH IS USED, SPREAD IT OVER ALL SEEDED AREAS AT THE RATE OF 2 TONS PER ACRE TO A UNIFORM LOOSE DEPTH OF 1 TO 2 INCHES. APPLY MULCH TO ACHIEVE A UNIFORM DISTRIBUTION AND DEPTH SO THAT THE SOIL SURFACE IS NOT EXPOSED. WHEN USING A MULCH ANCHORING TOOL, INCREASE THE APPLICATION RATE TO 2.5 TONS PER ACRE.
   c. WOOD CELLULOSE FIBER USED AS MULCH MUST BE APPLIED AT A NET DRY WEIGHT OF 1500 POUNDS PER ACRE. MIX THE WOOD CELLULOSE FIBER WITH WATER TO ATTAIN A MIXTURE WITH A MAXIMUM OF 50 POUNDS OF WOOD CELLULOSE FIBER PER 100 GALLONS OF WATER.
3. ANCHORING
   a. PERFORM MULCH ANCHORING IMMEDIATELY FOLLOWING APPLICATION OF MULCH TO MINIMIZE LOSS BY WIND OR WATER. THIS MAY BE DONE BY ONE OF THE FOLLOWING METHODS (LISTED BY PREFERENCE), DEPENDING UPON THE SIZE OF THE AREA AND EROSION HAZARD:
      i. A MULCH ANCHORING TOOL IS A TRACTOR DRAWN IMPLEMENT DESIGNED TO PUNCH AND ANCHOR MULCH INTO THE SOIL SURFACE A MINIMUM OF 2 INCHES. THIS PRACTICE IS MOST EFFECTIVE ON LARGE AREAS, BUT IS LIMITED TO FLATTER SLOPES WHERE EQUIPMENT CAN OPERATE SAFELY. IF USED ON SLOPING LAND, THIS PRACTICE SHOULD FOLLOW THE CONTOUR.
      ii. WOOD CELLULOSE FIBER MAY BE USED FOR ANCHORING STRAW. APPLY THE FIBER BINDER AT A NET DRY WEIGHT OF 750 POUNDS PER ACRE. MIX THE WOOD CELLULOSE FIBER WITH WATER AT A MAXIMUM OF 50 POUNDS OF WOOD CELLULOSE FIBER PER 100 GALLONS OF WATER.
      iii. SYNTHETIC BINDERS SUCH AS ACRYLIC DLR (AGRO-TACK), DCA-70, PETROSET, TERRA TAX II, TERRA TACK AR OR OTHER APPROVED EQUAL MAY BE USED. FOLLOW APPLICATION RATES AS SPECIFIED BY THE MANUFACTURER. APPLICATION OF LIQUID BINDERS NEEDS TO BE HEAVIER AT THE EDGES WHERE WIND CATCHES MULCH, SUCH AS IN VALLEYS AND ON CRESTS OF BANKS. USE OF ASPHALT BINDERS IS STRICTLY PROHIBITED.
      iv. LIGHTWEIGHT PLASTIC NETTING MAY BE STAPLED OVER THE MULCH ACCORDING TO MANUFACTURER RECOMMENDATIONS. NETTING IS USUALLY AVAILABLE IN ROLLS 4 TO 15 FEET WIDE AND 300 TO 3,000 FEET LONG.

B-4-4 STANDARDS AND SPECIFICATIONS FOR TEMPORARY STABILIZATION

DEFINITION

TO STABILIZE DISTURBED SOILS WITH VEGETATION FOR UP TO 6 MONTHS.

PURPOSE

TO USE FAST GROWING VEGETATION THAT PROVIDES COVER ON DISTURBED SOILS.

CONDITIONS WHERE PRACTICE APPLIES

EXPOSED SOILS WHERE GROUND COVER IS NEEDED FOR A PERIOD OF 6 MONTHS OR LESS. FOR LONGER DURATION OF TIME, PERMANENT STABILIZATION PRACTICES ARE REQUIRED.

CRITERIA

1. SELECT ONE OR MORE OF THE SPECIES OR SEED MIXTURES LISTED IN TABLE B.1 FOR THE APPROPRIATE PLANT HARDINESS ZONE (FROM FIGURE B.3), AND ENTER THEM IN THE TEMPORARY SEEDING SUMMARY BELOW ALONG WITH APPLICATION RATES, SEEDING DATES AND SEEDING DEPTHS. IF THIS SUMMARY IS NOT PUT ON THE PLAN AND COMPLETED, THEN TABLE B.1 PLUS FERTILIZER AND LIME RATES MUST BE PUT ON THE PLAN.
2. FOR SITES HAVING SOIL TESTS PERFORMED, USE AND SHOW THE RECOMMENDED RATES BY THE TESTING AGENCY. SOIL TESTS ARE NOT REQUIRED FOR TEMPORARY SEEDING.
3. WHEN STABILIZATION IS REQUIRED OUTSIDE OF A SEEDING SEASON, APPLY SEED AND MULCH OR STRAW MULCH ALONE AS PRESCRIBED IN SECTION B-4-3.A.1.B AND MAINTAIN UNTIL THE NEXT SEEDING SEASON.

TEMPORARY SEEDING SUMMARY

HARDINESS ZONE (from Figure B.3): ZONE 7A SEED MIXTURE (from Table B.1)					FERTILIZER RATE (10-20-20)	LIME RATE
NO.	SPECIES	APPLICATION RATE (LB/AC)	SEEDING DATES	SEEDING DEPTHS		
COOL SEASON GRASSES						
1	ANNUAL RYEGRASS	40	2/15 - 4/30 8/1 - 11/30	0.5"	436 LB/AC (10 LB/1000 SF)	2 TONS/AC (90 LB/1000 SF)
2	BARLEY	96	2/15 - 4/30 8/1 - 11/30	1"		
3	OATS	72	2/15 - 4/30 8/1 - 11/30	1"		
4	WHEAT	120	2/15 - 4/30 8/1 - 11/30	1"		
5	CEREAL RYE	112	2/15 - 4/30 8/1 - 11/30	1"		
WARM SEASON GRASSES						
6	FOXTAIL MILLET	30	5/1 - 7/31	0.5"	436 LB/AC (10 LB/1000 SF)	2 TONS/AC (90 LB/1000 SF)
7	PEARL MILLET	20	5/1 - 7/31	0.5"		

B-4-4 STANDARDS AND SPECIFICATIONS FOR PERMANENT STABILIZATION

DEFINITION

TO STABILIZE DISTURBED SOILS WITH PERMANENT VEGETATION.

PURPOSE

TO USE LONG-LIVED PERENNIAL GRASSES AND LEGUMES TO ESTABLISH PERMANENT GROUND COVER ON DISTURBED SOILS.

CONDITIONS WHERE PRACTICE APPLIES

EXPOSED SOILS WHERE GROUND COVER IS NEEDED FOR 6 MONTHS OR MORE.

CRITERIA

A. SEED MIXTURES

1. GENERAL USE
   a. SELECT ONE OR MORE OF THE SPECIES OR MIXTURES LISTED IN TABLE B.3 FOR THE APPROPRIATE PLANT HARDINESS ZONE (FROM FIGURE B.3) AND BASED ON THE SITE CONDITION OR PURPOSE FOUND ON TABLE B.2. ENTER SELECTED MIXTURE(S), APPLICATION RATES, AND SEEDING DATES IN THE PERMANENT SEEDING SUMMARY. THE SUMMARY IS TO BE PLACED ON THE PLAN.
   b. ADDITIONAL PLANTING SPECIFICATIONS FOR EXCEPTIONAL SITES SUCH AS SHORELINES, STREAM BANKS, OR DUNES OR FOR SPECIAL PURPOSES SUCH AS WILDLIFE OR AESTHETIC TREATMENT MAY BE FOUND IN USDA-NRCS TECHNICAL FIELD OFFICE GUIDE, SECTION 342 - CRITICAL AREA PLANTING.
   c. FOR SITES HAVING DISTURBED AREA OVER 5 ACRES, USE AND SHOW THE RATES RECOMMENDED BY THE SOIL TESTING AGENCY.
   d. FOR AREAS RECEIVING LOW MAINTENANCE, APPLY UREA FORM FERTILIZER (46-0-0) AT 3 ½ POUNDS PER 1000 SQUARE FEET (150 POUNDS PER ACRE) AT THE TIME OF SEEDING IN ADDITION TO THE SOIL AMENDMENTS SHOWN IN THE PERMANENT SEEDING SUMMARY .
2. TURFGRASS MIXTURES
   a. AREAS WHERE TURFGRASS MAY BE DESIRED INCLUDE LAWNS, PARKS, PLAYGROUNDS, AND COMMERCIAL SITES WHICH WILL RECEIVE A MEDIUM TO HIGH LEVEL OF MAINTENANCE.
   b. SELECT ONE OR MORE OF THE SPECIES OR MIXTURES LISTED BELOW BASED ON THE SITE CONDITIONS OR PURPOSE. ENTER SELECTED MIXTURE(S), APPLICATION RATES, AND SEEDING DATES IN THE PERMANENT SEEDING SUMMARY. THE SUMMARY IS TO BE PLACED ON THE PLAN.
      i. KENTUCKY BLUEGRASS: FULL SUN MIXTURE: FOR USE IN AREAS THAT RECEIVE INTENSIVE MANAGEMENT. IRRIGATION REQUIRED IN THE AREAS OF CENTRAL MARYLAND AND EASTERN SHORE. RECOMMENDED CERTIFIED KENTUCKY BLUEGRASS CULTIVARS SEEDING RATE: 1.5 TO 2.0 POUNDS PER 1000 SQUARE FEET. CHOOSE A MINIMUM OF THREE KENTUCKY BLUEGRASS CULTIVARS WITH EACH RANGING FROM 10 TO 35 PERCENT OF THE TOTAL MIXTURE BY WEIGHT.
      ii. KENTUCKY BLUEGRASS/PERENNIAL RYE: FULL SUN MIXTURE: FOR USE IN FULL SUN AREAS WHERE RAPID ESTABLISHMENT IS NECESSARY AND WHEN TURF WILL RECEIVE MEDIUM TO INTENSIVE MANAGEMENT. CERTIFIED PERENNIAL RYEGRASS CULTIVARS/CERTIFIED KENTUCKY BLUEGRASS SEEDING RATE: 2 POUNDS MIXTURE PER 1000 SQUARE FEET. CHOOSE A MINIMUM OF THREE KENTUCKY BLUEGRASS CULTIVARS WITH EACH RANGING FROM 10 TO 35 PERCENT OF THE TOTAL MIXTURE BY WEIGHT.
      iii. TALL FESCUE/KENTUCKY BLUEGRASS: FULL SUN MIXTURE: FOR USE IN DROUGHT PRONE AREAS AND/OR FOR AREAS RECEIVING LOW TO MEDIUM MANAGEMENT IN FULL SUN TO MEDIUM SHADE. RECOMMENDED MIXTURE INCLUDES; CERTIFIED TALL FESCUE CULTIVARS 95 TO 100 PERCENT, CERTIFIED KENTUCKY BLUEGRASS CULTIVARS 0 TO 5 PERCENT. SEEDING RATE: 5 TO 8 POUNDS PER 1000 SQUARE FEET. ONE OR MORE CULTIVARS MAY BE BLENDED.
      iv. KENTUCKY BLUEGRASS/FINE FESCUE: SHADE MIXTURE: FOR USE IN AREAS WITH SHADE IN BLUEGRASS LAWNS. FOR ESTABLISHMENT IN HIGH QUALITY, INTENSIVELY MANAGED TURF AREA. MIXTURE INCLUDES; CERTIFIED KENTUCKY BLUEGRASS CULTIVARS 30 TO 40 PERCENT AND CERTIFIED FINE FESCUE AND 60 TO 70 PERCENT. SEEDING RATE: 1½ TO 3 POUNDS PER 1000 SQUARE FEET.

      NOTES:

      SELECT TURFGRASS VARIETIES FROM THOSE LISTED IN THE MOST CURRENT UNIVERSITY OF MARYLAND PUBLICATION, AGRONOMY MEMO #77, "TURFGRASS CULTIVAR RECOMMENDATIONS FOR MARYLAND"

      CHOOSE CERTIFIED MATERIAL. CERTIFIED MATERIAL IS THE BEST GUARANTEE OF CULTIVAR PURITY. THE CERTIFICATION PROGRAM OF THE MARYLAND DEPARTMENT OF AGRICULTURE, TURF AND SEED SECTION, PROVIDES A RELIABLE MEANS OF CONSUMER PROTECTION AND ASSURES A PURE GENETIC LINE
   c. IDEAL TIMES OF SEEDING FOR TURF GRASS MIXTURES

      WESTERN MD: MARCH 15 TO JUNE 1, AUGUST 1 TO OCTOBER 1 (HARDINESS ZONES: 5B, 6A)

      CENTRAL MD: MARCH 1 TO MAY 15, AUGUST 15 TO OCTOBER 15 (HARDINESS ZONE: 6B)

      SOUTHERN MD, EASTERN SHORE: MARCH 1 TO MAY 15, AUGUST 15 TO OCTOBER 15 (HARDINESS ZONES: 7A, 7B)
   d. TILL AREAS TO RECEIVE SEED BY DISKING OR OTHER APPROVED METHODS TO A DEPTH OF 2 TO 4 INCHES, LEVEL AND RAKE THE AREAS TO PREPARE A PROPER SEEDBED. REMOVE STONES AND DEBRIS OVER 1½ INCHES IN DIAMETER. THE RESULTING SEEDBED MUST BE IN SUCH CONDITION THAT FUTURE MOWING OF GRASSES WILL POSE NO DIFFICULTY.
   e. IF SOIL MOISTURE IS DEFICIENT, SUPPLY NEW SEEDINGS WITH ADEQUATE WATER FOR PLANT GROWTH (½ TO 1 INCH EVERY 3 TO 4 DAYS DEPENDING ON SOIL TEXTURE) UNTIL THEY ARE FIRMLY ESTABLISHED. THIS IS ESPECIALLY TRUE WHEN SEEDINGS ARE MADE LATE IN THE PLANTING SEASON, IN ABNORMALLY DRY OR HOT SEASONS, OR ON ADVERSE SITES.

PERMANENT SEEDING SUMMARY

HARDINESS ZONE (from Figure B.3): ZONE 7A SEED MIXTURE (from Table B.3)					FERTILIZER RATE (10-20-20)			LIME RATE
NO.	SPECIES	APPLICATION RATE (LB/AC)	SEEDING DATES	SEEDING DEPTHS	N	P2O5	K2O	
9	TALL FESCUE KENTUCKY BLUEGRASS PERENNIAL RYE GRASS	60 40 20	2/15 - 4/30 8/15 - 11/30	1/4" - 1/2"	45 LB/AC (1.0 LB/1000 SF)	90 LB/AC (2 LB/1000 SF)	90 LB/AC (2 LB/1000 SF)	2 TONS/AC (90 LB/1000 SF)
5	HARD FESCUE PERENNIAL RYE GRASS FLAT PEA	20 10 15	2/15 - 4/30 8/15 - 11/30	1/4" - 1/2"				
1	SWITCH GRASS CREEPING RED FESCUE PARTRIDGE PEA	10 15 4	2/15 - 5/31	1/4" - 1/2"				

B. SOD: TO PROVIDE QUICK COVER ON DISTURBED AREAS (2:1 GRADE OR FLATTER).

1. GENERAL SPECIFICATIONS
   a. CLASS OF TURFGRASS SOD MUST BE MARYLAND STATE CERTIFIED. SOD LABELS MUST BE MADE AVAILABLE TO THE JOB FOREMAN AND INSPECTOR.
   b. SOD MUST BE MACHINE CUT AT A UNIFORM SOIL THICKNESS OF ¾ INCH, PLUS OR MINUS ¼ INCH, AT THE TIME OF CUTTING. MEASUREMENT FOR THICKNESS MUST EXCLUDE TOP GROWTH AND THATCH. BROKEN PADS AND TORN OR UNEVEN ENDS WILL NOT BE ACCEPTABLE.
   c. STANDARD SIZE SECTIONS OF SOD MUST BE STRONG ENOUGH TO SUPPORT THEIR OWN WEIGHT AND RETAIN THEIR SIZE AND SHAPE WHEN SUSPENDED VERTICALLY WITH A FIRM GRASP ON THE UPPER 10 PERCENT OF THE SECTION.
   d. SOD MUST NOT BE HARVESTED OR TRANSPLANTED WHEN MOISTURE CONTENT (EXCESSIVELY DRY OR WET) MAY ADVERSELY AFFECT ITS SURVIVAL.
   e. SOD MUST BE HARVESTED, DELIVERED, AND INSTALLED WITHIN A PERIOD OF 36 HOURS. SOD NOT TRANSPLANTED WITHIN THIS PERIOD MUST BE APPROVED BY AN AGRONOMIST OR SOIL SCIENTIST PRIOR TO ITS INSTALLATION.
2. SOD INSTALLATION
   a. DURING PERIODS OF EXCESSIVELY HIGH TEMPERATURE OR IN AREAS HAVING DRY SUBSOIL, LIGHTLY IRRIGATE THE SUBSOIL IMMEDIATELY PRIOR TO LAYING THE SOD.
   b. LAY THE FIRST ROW OF SOD IN A STRAIGHT LINE WITH SUBSEQUENT ROWS PLACED PARALLEL TO IT AND TIGHTLY WEDGED AGAINST EACH OTHER. STAGGER LATERAL JOINTS TO PROMOTE MORE UNIFORM GROWTH AND STRENGTH. ENSURE THAT SOD IS NOT STRETCHED OR OVERLAPPED AND THAT ALL JOINTS ARE BUTTED TIGHT IN ORDER TO PREVENT VOIDS WHICH WOULD CAUSE AIR DRYING OF THE ROOTS.
   c. WHEREVER POSSIBLE, LAY SOD WITH THE LONG EDGES PARALLEL TO THE CONTOUR AND WITH STAGGERING JOINTS. ROLL AND TAMP, PEG OR OTHERWISE SECURE THE SOD TO PREVENT SLIPPAGE ON SLOPES. ENSURE SOLID CONTACT EXISTS BETWEEN SOD ROOTS AND THE UNDERLYING SOIL SURFACE.
   d. WATER THE SOD IMMEDIATELY FOLLOWING ROLLING AND TAMPING UNTIL THE UNDERSIDE OF THE NEW SOD PAD AND SOIL SURFACE BELOW THE SOD ARE THOROUGHLY WET. COMPLETE THE OPERATIONS OF LAYING, TAMPING AND IRRIGATING FOR ANY PIECE OF SOD WITHIN EIGHT HOURS.
3. SOD MAINTENANCE
   a. IN THE ABSENCE OF ADEQUATE RAINFALL, WATER DAILY DURING THE FIRST WEEK OR AS OFTEN AND SUFFICIENTLY AS NECESSARY TO MAINTAIN MOIST SOIL TO A DEPTH OF 4 INCHES. WATER SOD DURING THE HEAT OF THE DAY TO PREVENT WILTING.
   b. AFTER THE FIRST WEEK, SOD WATERING IS REQUIRED AS NECESSARY TO MAINTAIN ADEQUATE MOISTURE CONTENT.
   c. DO NOT MOW UNTIL THE SOD IS FIRMLY ROOTED. NO MORE THAN ⅓ OF THE GRASS LEAF MUST BE REMOVED BY THE INITIAL CUTTING OR SUBSEQUENT CUTTINGS. MAINTAIN A GRASS HEIGHT OF AT LEAST 3 INCHES UNLESS OTHERWISE SPECIFIED.

B-4-6 STANDARDS AND SPECIFICATIONS FOR SOIL STABILIZATION MATTING

DEFINITION

MATERIAL USED TO TEMPORARILY OR PERMANENTLY STABILIZE CHANNELS OR STEEP SLOPES UNTIL GROUNDCOVER IS ESTABLISHED.

PURPOSE

TO PROTECT THE SOILS UNTIL VEGETATION IS ESTABLISHED.

CONDITIONS WHERE PRACTICE APPLIES

ON NEWLY SEEDED SURFACES TO PREVENT THE APPLIED SEED FROM WASHING OUT; IN CHANNELS AND ON STEEP SLOPES WHERE THE FLOW HAS EROSIVE VELOCITIES OR CONVEYS CLEAR WATER; ON TEMPORARY SWALES, EARTH DIKES, AND PERIMETER DIKE SWALES AS REQUIRED BY THE RESPECTIVE DESIGN STANDARD; AND, ON STREAM BANKS WHERE MOVING WATER IS LIKELY TO WASH OUT NEW VEGETATIVE PLANTINGS.

MAINTENANCE

VEGETATION MUST BE ESTABLISHED AND MAINTAINED SO THAT THE REQUIREMENTS FOR ADEQUATE VEGETATIVE ESTABLISHMENT ARE CONTINUOUSLY MET IN ACCORDANCE WITH SECTION B-4 VEGETATIVE STABILIZATION.

THIS DEVELOPMENT PLAN IS APPROVED FOR SOIL EROSION AND SEDIMENT CONTROL BY THE HOWARD SOIL CONSERVATION DISTRICT.

HOWARD SCD — DATE 12/9/14

BUILDER:	OWNER/DEVELOPER:
CRAFTMARK HOMES, INC. 1355 BEVERLY ROAD, SUITE 330 MCLEAN, VA 22101 CONTACT: DAVID SCHOEN PHONE: (703) 898-0377	CM HIGDON LC 1355 BEVERLY ROAD, SUITE 330 MCLEAN, VA 22101 CONTACT: DAVID SCHOEN PHONE: (703) 898-0377

PERMIT INFORMATION CHART

SUBDIVISION NAME: RESERVOIR ESTATES		SECTION/AREA: N/A		LOT/PARCEL NO.: 56	
PLAT # OR L/F: 15161/365	GRID #: 11	ZONING: R-20	TAX MAP NO.: 46	ELECT DISTR: 6TH	CENSUS TRACT: 606805

PREVIOUS FILE No. : WP-13-048, ECP-13-038, BA-95-028, SP-13-008, 24-4787-D, F-14-003

PROFESSIONAL CERTIFICATION
I, BRANDON R. ROWE, HEREBY CERTIFY THAT THESE DOCUMENTS WERE PREPARED OR APPROVED BY ME, AND THAT I AM A DULY LICENSED PROFESSIONAL ENGINEER UNDER THE LAWS OF THE STATE OF MARYLAND, LICENSE NO. 40808, EXPIRATION DATE: 7/3/2015

BOHLER ENGINEERING
SITE CIVIL AND CONSULTING ENGINEERING
LAND SURVEYING · PROGRAM MANAGEMENT · LANDSCAPE ARCHITECTURE
SUSTAINABLE DESIGN · PERMITTING SERVICES · TRANSPORTATION SERVICES
WARREN, NJ · UPSTATE NEW YORK · BOSTON, MA · NEW YORK METRO · PHILADELPHIA/SOUTHERN NJ · LEHIGH VALLEY, PA · SOUTHEASTERN, PA · BALTIMORE, MD · SOUTHERN MARYLAND · NORTHERN VIRGINIA · CENTRAL VIRGINIA · CHARLOTTE, NC · RALEIGH, NC

THE INFORMATION, DESIGN AND CONTENT OF THIS PLAN ARE PROPRIETARY AND SHALL NOT BE COPIED OR USED FOR ANY PURPOSE WITHOUT PRIOR WRITTEN AUTHORIZATION FROM BOHLER ENGINEERING. ONLY APPROVED, SIGNED AND SEALED PLANS SHALL BE UTILIZED FOR CONSTRUCTION PURPOSES © 2008 BOHLER ENGINEERING.

REVISIONS

REV	DATE	COMMENT	BY

DIG WITH CARE — CALL BEFORE YOU DIG

THE FOLLOWING STATES REQUIRE NOTIFICATION BY EXCAVATORS, DESIGNERS, OR ANY PERSON PREPARING TO DISTURB THE EARTH'S SURFACE ANYWHERE IN THE STATE. IN VIRGINIA, MARYLAND, THE DISTRICT OF COLUMBIA, NORTH CAROLINA AND DELAWARE CALL - 811
(WV 1-800-245-4848) (PA 1-800-242-1776) (DC 1-800-257-7777) (VA 1-800-552-7001) (MD 1-800-257-7777) (DE 1-800-282-8555)

NOT APPROVED FOR CONSTRUCTION

PROJECT No.:	MD122066.1
DRAWN BY:	RLB
CHECKED BY:	BRR
DATE:	11/20/14
SCALE:	AS SHOWN
CAD I.D.:	SD1

PROJECT: SITE DEVELOPMENT PLANS FOR RESERVOIR ESTATES
SINGLE FAMILY DETACHED UNITS
BUILDABLE LOTS 1-20 AND OPEN SPACE LOTS 21-26
PLAT NO. 23120
LOCATION OF SITE
10883 AND 10887 SCAGGSVILLE ROAD
LAUREL, MD. 20723
HOWARD COUNTY

BOHLER ENGINEERING
901 DULANEY VALLEY ROAD, SUITE 801
TOWSON, MARYLAND 21204
Phone: (410) 821-7900
Fax: (410) 821-7987
MD@BohlerEng.com

B R ROWE
STATE OF MARYLAND · BRANDON R. ROWE · PROFESSIONAL ENGINEER · No. 40808

SHEET TITLE: SEDIMENT CONTROL NOTES & DETAILS

SHEET NUMBER: 10 OF 15

SDP-15-012

DETAIL B-4-6-A TEMPORARY SOIL STABILIZATION MATTING CHANNEL APPLICATION

STANDARD SYMBOL: TSSMC – * lb/ft² (* INCLUDE SHEAR STRESS)

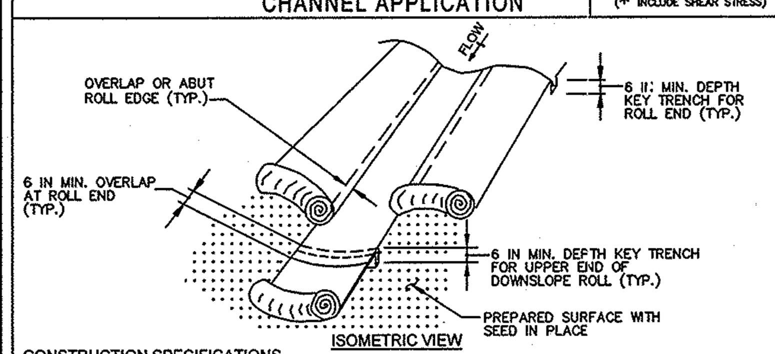

CONSTRUCTION SPECIFICATIONS

1. USE MATTING THAT HAS A DESIGN VALUE FOR SHEAR STRESS EQUAL TO OR HIGHER THAN THE SHEAR STRESS DESIGNATED ON APPROVED PLANS.
2. USE TEMPORARY SOIL STABILIZATION MATTING MADE OF DEGRADABLE (LASTS 6 MONTHS MINIMUM) NATURAL OR MAN-MADE FIBERS (MOSTLY ORGANIC). MAT MUST HAVE UNIFORM THICKNESS AND DISTRIBUTION OF FIBERS THROUGHOUT AND BE SMOLDER RESISTANT. CHEMICALS USED IN THE MAT MUST BE NON-LEACHING AND NON-TOXIC TO VEGETATION AND SEED GERMINATION AND NON-INJURIOUS TO THE SKIN. IF PRESENT, NETTING MUST BE EXTRUDED PLASTIC WITH A MAXIMUM MESH OPENING OF 2x2 INCHES AND SUFFICIENTLY BONDED OR SEWN ON 2 INCH CENTERS ALONG LONGITUDINAL AXIS OF THE MATERIAL TO PREVENT SEPARATION OF THE NET FROM THE PARENT MATERIAL.
3. SECURE MATTING USING STEEL STAPLES, WOOD STAKES, OR BIODEGRADABLE EQUIVALENT. STAPLES MUST BE "U" OR "T" SHAPED STEEL WIRE HAVING A MINIMUM GAUGE OF NO. 11 AND NO. 8 RESPECTIVELY. "U" SHAPED STAPLES MUST AVERAGE 1 TO 1½ INCHES WIDE AND BE A MINIMUM OF 6 INCHES LONG. "T" SHAPED STAPLES MUST HAVE A MINIMUM 8 INCH MAIN LEG, A MINIMUM 1 INCH SECONDARY LEG, AND A MINIMUM 4 INCH HEAD. WOOD STAKES MUST BE ROUGH-SAWN HARDWOOD, 12 TO 24 INCHES IN LENGTH, 1x3 INCH IN CROSS SECTION, AND WEDGE SHAPED AT THE BOTTOM.
4. PERFORM FINAL GRADING, TOPSOIL APPLICATION, SEEDBED PREPARATION, AND PERMANENT SEEDING IN ACCORDANCE WITH SPECIFICATIONS. PLACE MATTING WITHIN 48 HOURS OF COMPLETING SEEDING OPERATIONS UNLESS END OF WORKDAY STABILIZATION IS SPECIFIED ON THE APPROVED EROSION AND SEDIMENT CONTROL PLAN.
5. UNROLL MATTING IN DIRECTION OF WATER FLOW, CENTERING THE FIRST ROLL ON THE CHANNEL CENTERLINE. WORK FROM CENTER OF CHANNEL OUTWARD WHEN PLACING ROLLS. LAY MAT SMOOTHLY AND FIRMLY ON THE SEEDED SURFACE. AVOID STRETCHING THE MATTING.
6. KEY-IN UPSTREAM END OF EACH MAT ROLL BY DIGGING A 6 INCH (MINIMUM) TRENCH AT THE UPSTREAM END OF THE MATTING, PLACING THE ROLL END IN THE TRENCH, STAPLING THE MAT IN PLACE, REPLACING THE EXCAVATED MATERIAL, AND TAMPING TO SECURE THE MAT END.
7. OVERLAP OR ABUT THE ROLL EDGES PER MANUFACTURER RECOMMENDATIONS. OVERLAP ROLL ENDS BY 6 INCHES (MINIMUM), WITH THE UPSTREAM MAT OVERLAPPING ON TOP OF THE NEXT DOWNSTREAM MAT.
8. STAPLE/STAKE MAT IN A STAGGERED PATTERN ON 4 FOOT (MAXIMUM) CENTERS THROUGHOUT AND 2 FOOT (MAXIMUM) CENTERS ALONG SEAMS, JOINTS, AND ROLL ENDS.
9. ESTABLISH AND MAINTAIN VEGETATION SO THAT REQUIREMENTS FOR ADEQUATE VEGETATIVE ESTABLISHMENT ARE CONTINUOUSLY MET IN ACCORDANCE WITH SECTION B-4 VEGETATIVE STABILIZATION.

MARYLAND STANDARDS AND SPECIFICATIONS FOR SOIL EROSION AND SEDIMENT CONTROL

U.S. DEPARTMENT OF AGRICULTURE NATURAL RESOURCES CONSERVATION SERVICE	2011	MARYLAND DEPARTMENT OF ENVIRONMENT WATER MANAGEMENT ADMINISTRATION

DETAIL B-4-6-C PERMANENT SOIL STABILIZATION MATTING CHANNEL APPLICATION

STANDARD SYMBOL: PSSMC – * lb/ft² (* INCLUDE SHEAR STRESS)

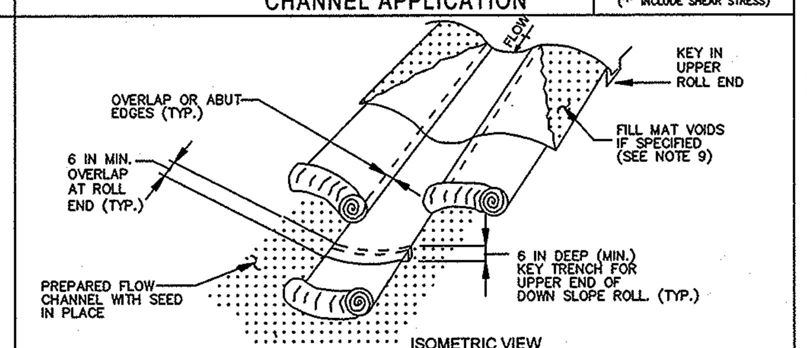

CONSTRUCTION SPECIFICATIONS

1. USE MATTING THAT HAS A DESIGN VALUE FOR SHEAR STRESS EQUAL TO OR HIGHER THAN THE SHEAR STRESS DESIGNATED ON APPROVED PLANS.
2. USE PERMANENT SOIL STABILIZATION MATTING MADE OF OPEN WEAVE SYNTHETIC, NON-DEGRADABLE FIBERS OR ELEMENTS OF UNIFORM THICKNESS AND DISTRIBUTION THROUGHOUT. CHEMICALS USED IN THE MAT MUST BE NON-LEACHING AND NON-TOXIC TO VEGETATION AND SEED GERMINATION AND NON-INJURIOUS TO THE SKIN. IF PRESENT, NETTING MUST BE EXTRUDED PLASTIC WITH A MAXIMUM MESH OPENING OF 2x2 INCHES AND SUFFICIENTLY BONDED OR SEWN ON 2 INCH CENTERS ALONG LONGITUDINAL AXIS OF THE MATERIAL TO PREVENT SEPARATION OF THE NET FROM THE PARENT MATERIAL.
3. SECURE MATTING USING STEEL STAPLES OR WOOD STAKES. STAPLES MUST BE "U" OR "T" SHAPED STEEL WIRE HAVING A MINIMUM GAUGE OF NO. 11 AND NO. 8 RESPECTIVELY. "U" SHAPED STAPLES MUST AVERAGE 1 TO 1½ INCHES WIDE AND BE A MINIMUM OF 6 INCHES LONG. "T" SHAPED STAPLES MUST HAVE A MINIMUM 8 INCH MAIN LEG, A MINIMUM 1 INCH SECONDARY LEG, AND MINIMUM 4 INCH HEAD. WOOD STAKES MUST BE ROUGH-SAWN HARDWOOD, 12 TO 24 INCHES IN LENGTH, 1x3 INCH IN CROSS SECTION, AND WEDGE SHAPE AT THE BOTTOM.
4. PERFORM FINAL GRADING, TOPSOIL APPLICATION, SEEDBED PREPARATION, AND PERMANENT SEEDING IN ACCORDANCE WITH SPECIFICATIONS. PLACE MATTING WITHIN 48 HOURS OF COMPLETING SEEDING OPERATIONS, UNLESS END OF WORKDAY STABILIZATION IS SPECIFIED ON THE APPROVED EROSION AND SEDIMENT CONTROL PLAN.
5. UNROLL MATTING IN DIRECTION OF WATER FLOW, CENTERING THE FIRST ROLL ON THE CHANNEL CENTER LINE. WORK FROM CENTER OF CHANNEL OUTWARD WHEN PLACING ROLLS. LAY MATTING SMOOTHLY AND FIRMLY UPON THE SEEDED SURFACE. AVOID STRETCHING THE MATTING.
6. OVERLAP OR ABUT EDGES OF MATTING ROLLS PER MANUFACTURER RECOMMENDATIONS. OVERLAP ROLL ENDS BY 6 INCHES (MINIMUM), WITH THE UPSTREAM MAT OVERLAPPING ON TOP OF THE NEXT DOWNSTREAM MAT.
7. KEY IN THE TOP OF SLOPE END OF MAT 6 INCHES (MINIMUM) BY DIGGING A TRENCH, PLACING THE MATTING ROLL END IN THE TRENCH, STAPLING THE MAT IN PLACE, REPLACING THE EXCAVATED MATERIAL, AND TAMPING TO SECURE THE MAT END IN THE KEY.
8. STAPLE/STAKE MAT IN A STAGGERED PATTERN ON 4 FOOT (MAXIMUM) CENTERS THROUGHOUT AND 2 FOOT (MAXIMUM) CENTERS ALONG SEAMS, JOINTS, AND ROLL ENDS.
9. IF SPECIFIED BY THE DESIGNER OR MANUFACTURER AND DEPENDING ON THE TYPE OF MAT BEING INSTALLED, ONCE THE MATTING IS KEYED AND STAPLED IN PLACE, FILL THE MAT VOIDS WITH TOP SOIL OR GRANULAR MATERIAL AND LIGHTLY COMPACT OR ROLL TO MAXIMIZE SOIL/MAT CONTACT WITHOUT CRUSHING MAT.
10. ESTABLISH AND MAINTAIN VEGETATION SO THAT REQUIREMENTS FOR ADEQUATE VEGETATIVE ESTABLISHMENT ARE CONTINUOUSLY MET IN ACCORDANCE WITH SECTION B-4 VEGETATIVE STABILIZATION.

MARYLAND STANDARDS AND SPECIFICATIONS FOR SOIL EROSION AND SEDIMENT CONTROL

U.S. DEPARTMENT OF AGRICULTURE NATURAL RESOURCES CONSERVATION SERVICE	2011	MARYLAND DEPARTMENT OF ENVIRONMENT WATER MANAGEMENT ADMINISTRATION

DETAIL B-1 STABILIZED CONSTRUCTION ENTRANCE

STANDARD SYMBOL: SCE

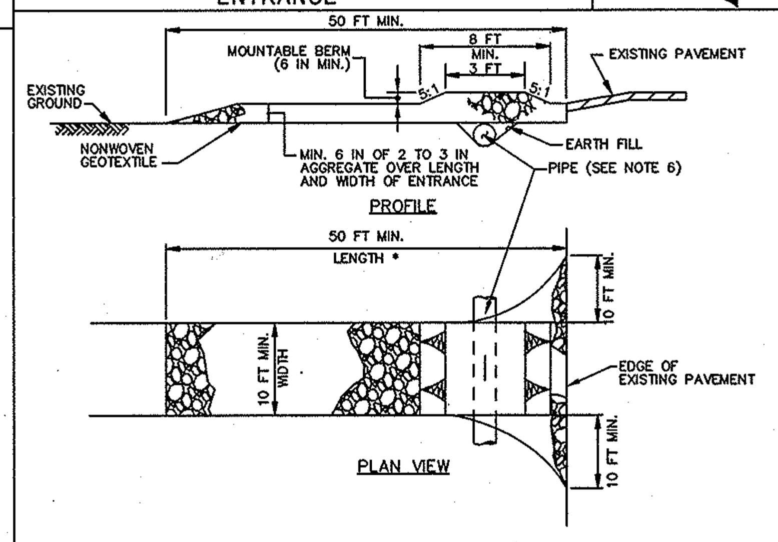

CONSTRUCTION SPECIFICATIONS

1. PLACE STABILIZED CONSTRUCTION ENTRANCE IN ACCORDANCE WITH THE APPROVED PLAN. VEHICLES MUST TRAVEL OVER THE ENTIRE LENGTH OF THE SCE. USE MINIMUM LENGTH OF 50 FEET (*30 FEET FOR SINGLE RESIDENCE LOT). USE MINIMUM WIDTH OF 10 FEET. FLARE SCE 10 FEET MINIMUM AT THE EXISTING ROAD TO PROVIDE A TURNING RADIUS.
2. PIPE ALL SURFACE WATER FLOWING TO OR DIVERTED TOWARD THE SCE UNDER THE ENTRANCE, MAINTAINING POSITIVE DRAINAGE. PROTECT PIPE INSTALLED THROUGH THE SCE WITH A MOUNTABLE BERM WITH 5:1 SLOPES AND A MINIMUM OF 12 INCHES OF STONE OVER THE PIPE. PROVIDE PIPE AS SPECIFIED ON APPROVED PLAN. WHEN THE SCE IS LOCATED AT A HIGH SPOT AND HAS NO DRAINAGE TO CONVEY, A PIPE IS NOT NECESSARY. A MOUNTABLE BERM IS REQUIRED WHEN SCE IS NOT LOCATED AT A HIGH SPOT.
3. PREPARE SUBGRADE AND PLACE NONWOVEN GEOTEXTILE, AS SPECIFIED IN SECTION H-1 MATERIALS.
4. PLACE CRUSHED AGGREGATE (2 TO 3 INCHES IN SIZE) OR EQUIVALENT RECYCLED CONCRETE (WITHOUT REBAR) AT LEAST 6 INCHES DEEP OVER THE LENGTH AND WIDTH OF THE SCE.
5. MAINTAIN ENTRANCE IN A CONDITION THAT MINIMIZES TRACKING OF SEDIMENT. ADD STONE OR MAKE OTHER REPAIRS AS CONDITIONS DEMAND TO MAINTAIN CLEAN SURFACE, MOUNTABLE BERM, AND SPECIFIED DIMENSIONS. IMMEDIATELY REMOVE STONE AND/OR SEDIMENT SPILLED, DROPPED, OR TRACKED ONTO ADJACENT ROADWAY BY VACUUMING, SCRAPING, AND/OR SWEEPING. WASHING ROADWAY TO REMOVE MUD TRACKED ONTO PAVEMENT IS NOT ACCEPTABLE UNLESS WASH WATER IS DIRECTED TO AN APPROVED SEDIMENT CONTROL PRACTICE.

MARYLAND STANDARDS AND SPECIFICATIONS FOR SOIL EROSION AND SEDIMENT CONTROL

U.S. DEPARTMENT OF AGRICULTURE NATURAL RESOURCES CONSERVATION SERVICE	2011	MARYLAND DEPARTMENT OF ENVIRONMENT WATER MANAGEMENT ADMINISTRATION

DETAIL E-1 SILT FENCE

STANDARD SYMBOL: ——SF——

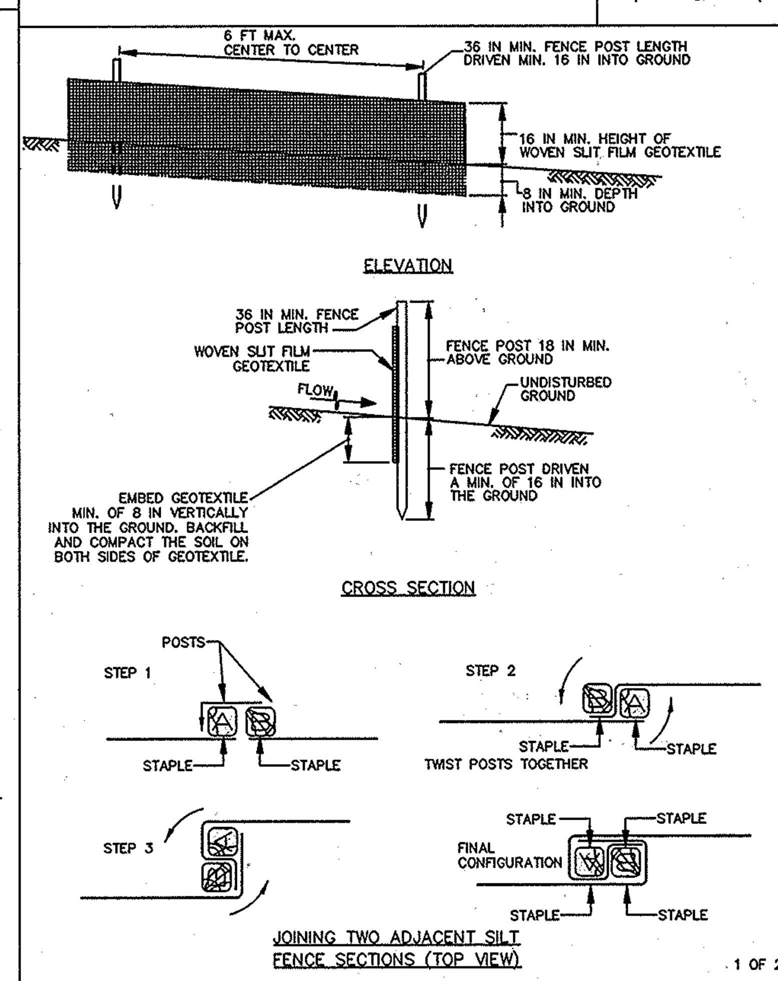

1 OF 2

MARYLAND STANDARDS AND SPECIFICATIONS FOR SOIL EROSION AND SEDIMENT CONTROL

U.S. DEPARTMENT OF AGRICULTURE NATURAL RESOURCES CONSERVATION SERVICE	2011	MARYLAND DEPARTMENT OF ENVIRONMENT WATER MANAGEMENT ADMINISTRATION

DETAIL E-9-1 STANDARD INLET PROTECTION

STANDARD SYMBOL: SIP

TYPE A MAXIMUM DRAINAGE AREA = ¼ ACRE
TYPE B MAXIMUM DRAINAGE AREA = 1 ACRE

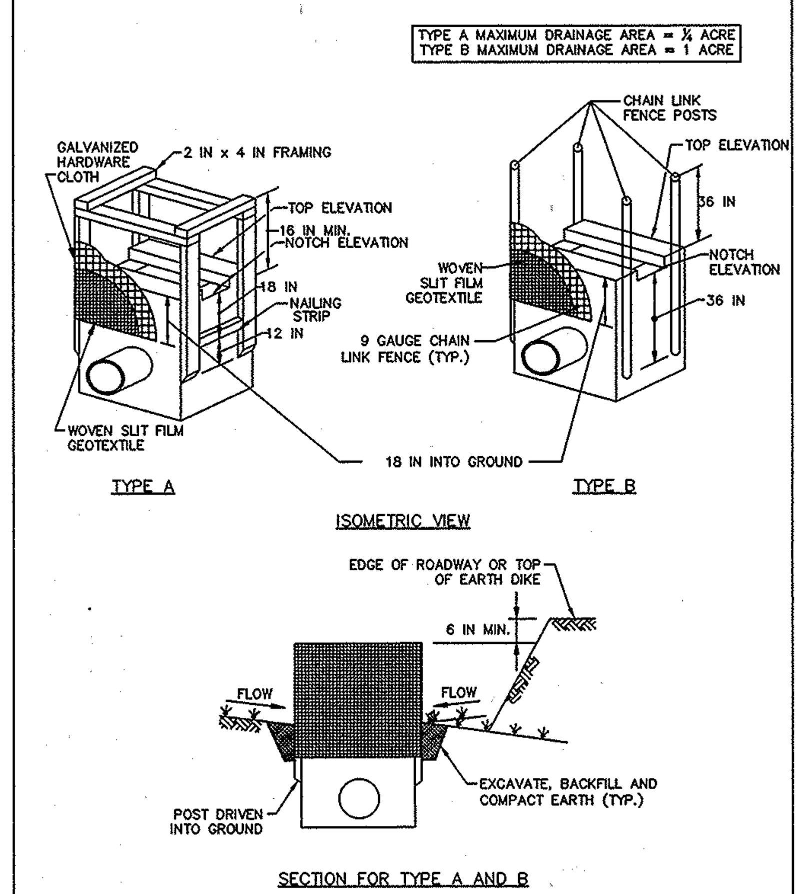

1 OF 2

MARYLAND STANDARDS AND SPECIFICATIONS FOR SOIL EROSION AND SEDIMENT CONTROL

U.S. DEPARTMENT OF AGRICULTURE NATURAL RESOURCES CONSERVATION SERVICE	2011	MARYLAND DEPARTMENT OF ENVIRONMENT WATER MANAGEMENT ADMINISTRATION

DETAIL B-4-6-B TEMPORARY SOIL STABILIZATION MATTING SLOPE APPLICATION

STANDARD SYMBOL: TSSMS – * lb/ft² (* INCLUDE SHEAR STRESS)

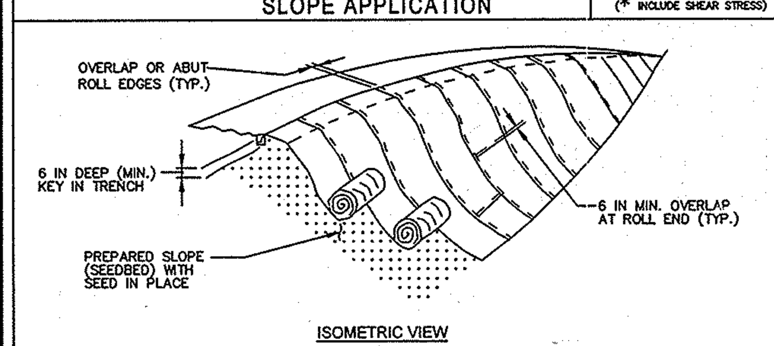

CONSTRUCTION SPECIFICATIONS

1. USE MATTING THAT HAS A DESIGN VALUE FOR SHEAR STRESS EQUAL TO OR HIGHER THAN THE SHEAR STRESS DESIGNATED ON APPROVED PLANS.
2. USE TEMPORARY SOIL STABILIZATION MATTING MADE OF DEGRADABLE (LASTS 6 MONTHS MINIMUM) NATURAL OR MAN-MADE FIBERS (MOSTLY ORGANIC). MAT MUST HAVE UNIFORM THICKNESS AND DISTRIBUTION OF FIBERS THROUGHOUT AND BE SMOLDER RESISTANT. CHEMICALS USED IN THE MAT MUST BE NON-LEACHING AND NON-TOXIC TO VEGETATION AND SEED GERMINATION AND NON-INJURIOUS TO THE SKIN. IF PRESENT, NETTING MUST BE EXTRUDED PLASTIC WITH A MAXIMUM MESH OPENING OF 2x2 INCHES AND SUFFICIENTLY BONDED OR SEWN ON 2 INCH CENTERS ALONG LONGITUDINAL AXIS OF THE MATERIAL TO PREVENT SEPARATION OF THE NET FROM THE PARENT MATERIAL.
3. SECURE MATTING USING STEEL STAPLES, WOOD STAKES, OR BIODEGRADABLE EQUIVALENT. STAPLES MUST BE "U" OR "T" SHAPED STEEL WIRE HAVING A MINIMUM GAUGE OF NO. 11 AND NO. 8 RESPECTIVELY. "U" SHAPED STAPLES MUST AVERAGE 1 TO 1½ INCHES WIDE AND BE A MINIMUM OF 6 INCHES LONG. "T" SHAPED STAPLES MUST HAVE A MINIMUM 8 INCH MAIN LEG, A MINIMUM 1 INCH SECONDARY LEG, AND A MINIMUM 4 INCH HEAD. WOOD STAKES MUST BE ROUGH-SAWN HARDWOOD, 12 TO 24 INCHES IN LENGTH, 1x3 INCH IN CROSS SECTION, AND WEDGE SHAPED AT THE BOTTOM.
4. PERFORM FINAL GRADING, TOPSOIL APPLICATION, SEEDBED PREPARATION, AND PERMANENT SEEDING IN ACCORDANCE WITH SPECIFICATIONS. PLACE MATTING WITHIN 48 HOURS OF COMPLETING SEEDING OPERATIONS UNLESS END OF WORKDAY STABILIZATION IS SPECIFIED ON THE APPROVED EROSION & SEDIMENT CONTROL PLAN.
5. UNROLL MATTING DOWNSLOPE. LAY MAT SMOOTHLY AND FIRMLY UPON THE SEEDED SURFACE. AVOID STRETCHING THE MATTING.
6. OVERLAP OR ABUT ROLL EDGES PER MANUFACTURER RECOMMENDATIONS. OVERLAP ROLL ENDS BY 6 INCHES (MINIMUM), WITH THE UPSLOPE MAT OVERLAPPING ON TOP OF THE DOWNSLOPE MAT.
7. KEY IN THE UPSLOPE END OF MAT 6 INCHES (MINIMUM) BY DIGGING A TRENCH, PLACING THE MATTING ROLL END IN THE TRENCH, STAPLING THE MAT IN PLACE, REPLACING THE EXCAVATED MATERIAL, AND TAMPING TO SECURE THE MAT END IN THE KEY.
8. STAPLE/STAKE MAT IN A STAGGERED PATTERN ON 4 FOOT (MAXIMUM) CENTERS THROUGHOUT AND 2 FOOT (MAXIMUM) CENTERS ALONG SEAMS, JOINTS, AND ROLL ENDS.
9. ESTABLISH AND MAINTAIN VEGETATION SO THAT REQUIREMENTS FOR ADEQUATE VEGETATIVE ESTABLISHMENT ARE CONTINUOUSLY MET IN ACCORDANCE WITH SECTION B-4 VEGETATIVE STABILIZATION.

MARYLAND STANDARDS AND SPECIFICATIONS FOR SOIL EROSION AND SEDIMENT CONTROL

U.S. DEPARTMENT OF AGRICULTURE NATURAL RESOURCES CONSERVATION SERVICE	2011	MARYLAND DEPARTMENT OF ENVIRONMENT WATER MANAGEMENT ADMINISTRATION

DETAIL B-4-6-D PERMANENT SOIL STABILIZATION MATTING SLOPE APPLICATION

STANDARD SYMBOL: PSSMS – * lb/ft² (* INCLUDE SHEAR STRESS)

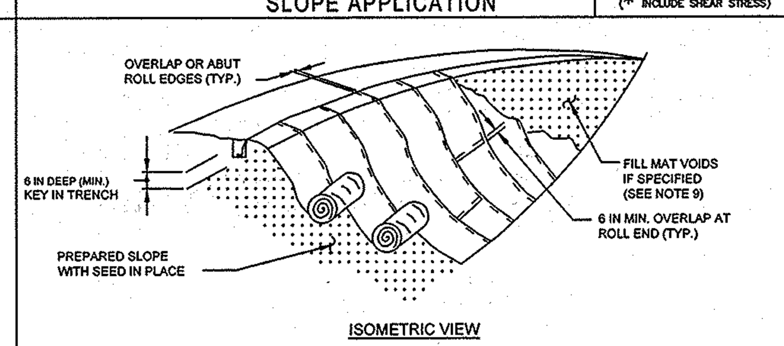

CONSTRUCTION SPECIFICATIONS

1. USE MATTING THAT HAS A DESIGN VALUE FOR SHEAR STRESS EQUAL TO OR HIGHER THAN THE SHEAR STRESS DESIGNATED ON APPROVED PLANS.
2. USE PERMANENT SOIL STABILIZATION MATTING MADE OF OPEN WEAVE SYNTHETIC, NON-DEGRADABLE FIBERS OR ELEMENTS OF UNIFORM THICKNESS AND DISTRIBUTION THROUGHOUT. CHEMICALS USED IN THE MAT MUST BE NON-LEACHING AND NON-TOXIC TO VEGETATION AND SEED GERMINATION AND NON-INJURIOUS TO THE SKIN. IF PRESENT, NETTING MUST BE EXTRUDED PLASTIC WITH A MAXIMUM MESH OPENING OF 2x2 INCHES AND SUFFICIENTLY BONDED OR SEWN ON 2 INCH CENTERS ALONG LONGITUDINAL AXIS OF THE MATERIAL TO PREVENT SEPARATION OF THE NET FROM THE PARENT MATERIAL.
3. SECURE MATTING USING STEEL STAPLES OR WOOD STAKES. STAPLES MUST BE "U" OR "T" SHAPED STEEL WIRE HAVING A MINIMUM GAUGE OF NO. 11 AND NO. 8 RESPECTIVELY. "U" SHAPED STAPLES MUST AVERAGE 1 TO 1 ½ INCHES WIDE AND BE A MINIMUM OF 6 INCHES LONG. "T" SHAPED STAPLES MUST HAVE A MINIMUM 8 INCH MAIN LEG, A MINIMUM 1 INCH SECONDARY LEG, AND MINIMUM 4 INCH HEAD. WOOD STAKES MUST BE ROUGH-SAWN HARDWOOD, 12 TO 24 INCHES IN LENGTH, 1x3 INCH IN CROSS SECTION, AND WEDGE SHAPE AT THE BOTTOM.
4. PERFORM FINAL GRADING, TOPSOIL APPLICATION, SEEDBED PREPARATION, AND PERMANENT SEEDING IN ACCORDANCE WITH SPECIFICATIONS. PLACE MATTING WITHIN 48 HOURS OF COMPLETING SEEDING OPERATIONS, UNLESS END OF WORKDAY STABILIZATION IS SPECIFIED ON THE APPROVED EROSION AND SEDIMENT CONTROL PLAN.
5. UNROLL MATTING DOWN SLOPE. LAY MATTING SMOOTHLY AND FIRMLY UPON THE SEEDED SURFACE. AVOID STRETCHING THE MATTING.
6. OVERLAP OR ABUT EDGES OF MATTING ROLLS PER MANUFACTURER RECOMMENDATIONS. OVERLAP ROLL ENDS BY 6 INCHES (MINIMUM), WITH THE UPSTREAM MAT OVERLAPPING ON TOP OF THE DOWNSLOPE MAT.
7. KEY IN THE TOP OF SLOPE END OF MAT 6 INCHES (MINIMUM) BY DIGGING A TRENCH, PLACING THE MATTING ROLL END IN THE TRENCH, STAPLING THE MAT IN PLACE, REPLACING THE EXCAVATED MATERIAL, AND TAMPING TO SECURE THE MAT END IN THE KEY.
8. STAPLE/STAKE MAT IN A STAGGERED PATTERN ON 4 FOOT (MAXIMUM) CENTERS THROUGHOUT AND 2 FOOT (MAXIMUM) CENTERS ALONG SEAMS, JOINTS, AND ROLL ENDS.
9. IF SPECIFIED BY THE DESIGNER OR MANUFACTURER AND DEPENDING ON THE TYPE OF MAT BEING INSTALLED, ONCE THE MATTING IS KEYED AND STAPLED IN PLACE, FILL THE MAT VOIDS WITH TOP SOIL OR GRANULAR MATERIAL AND LIGHTLY COMPACT OR ROLL TO MAXIMIZE SOIL/MAT CONTACT WITHOUT CRUSHING MAT.
10. ESTABLISH AND MAINTAIN VEGETATION SO THAT REQUIREMENTS FOR ADEQUATE VEGETATIVE ESTABLISHMENT ARE CONTINUOUSLY MET IN ACCORDANCE WITH SECTION B-4 VEGETATIVE STABILIZATION.

MARYLAND STANDARDS AND SPECIFICATIONS FOR SOIL EROSION AND SEDIMENT CONTROL

U.S. DEPARTMENT OF AGRICULTURE NATURAL RESOURCES CONSERVATION SERVICE	2011	MARYLAND DEPARTMENT OF ENVIRONMENT WATER MANAGEMENT ADMINISTRATION

DETAIL E-3 SUPER SILT FENCE

STANDARD SYMBOL: ——SSF——

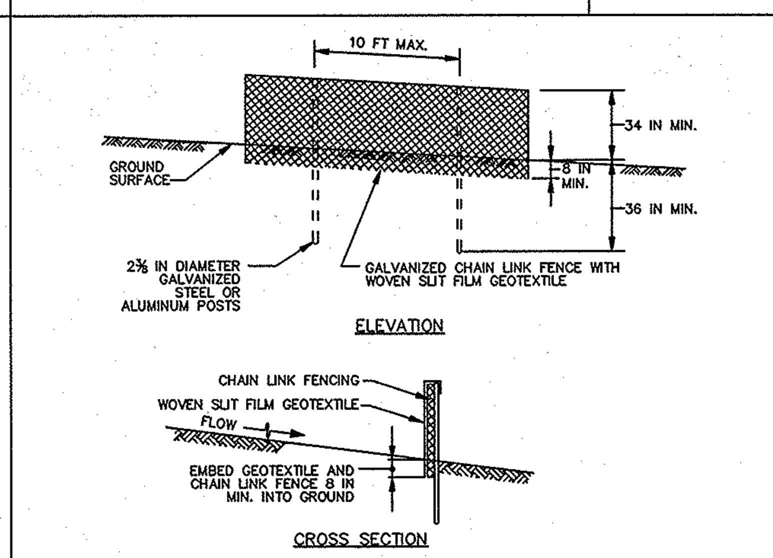

CONSTRUCTION SPECIFICATIONS

1. INSTALL 2⅜ INCH DIAMETER GALVANIZED STEEL POSTS OF 0.095 INCH WALL THICKNESS AND SIX FOOT LENGTH SPACED NO FURTHER THAN 10 FEET APART. DRIVE THE POSTS A MINIMUM OF 36 INCHES INTO THE GROUND.
2. FASTEN 9 GAUGE OR HEAVIER GALVANIZED CHAIN LINK FENCE (2⅜ INCH MAXIMUM OPENING) 42 INCHES IN HEIGHT SECURELY TO THE FENCE POSTS WITH WIRE TIES OR HUG RINGS.
3. FASTEN WOVEN SLIT FILM GEOTEXTILE AS SPECIFIED IN SECTION H-1 MATERIALS, SECURELY TO THE UPSLOPE SIDE OF CHAIN LINK FENCE WITH TIES SPACED EVERY 24 INCHES AT THE TOP AND MID SECTION. EMBED GEOTEXTILE AND CHAIN LINK FENCE A MINIMUM OF 8 INCHES INTO THE GROUND.
4. WHERE ENDS OF THE GEOTEXTILE COME TOGETHER, THE ENDS SHALL BE OVERLAPPED BY 6 INCHES, FOLDED, AND STAPLED TO PREVENT SEDIMENT BY PASS.
5. EXTEND BOTH ENDS OF THE SUPER SILT FENCE A MINIMUM OF FIVE HORIZONTAL FEET UPSLOPE AT 45 DEGREES TO THE MAIN FENCE ALIGNMENT TO PREVENT RUNOFF FROM GOING AROUND THE ENDS OF THE SUPER SILT FENCE.
6. PROVIDE MANUFACTURER CERTIFICATION TO THE INSPECTION/ENFORCEMENT AUTHORITY SHOWING THAT GEOTEXTILE USED MEETS THE REQUIREMENTS IN SECTION H-1 MATERIALS.
7. REMOVE ACCUMULATED SEDIMENT AND DEBRIS WHEN BULGES DEVELOP IN FENCE OR WHEN SEDIMENT REACHES 25% OF FENCE HEIGHT. REPLACE GEOTEXTILE IF TORN. IF UNDERMINING OCCURS, REINSTALL CHAIN LINK FENCING AND GEOTEXTILE.

MARYLAND STANDARDS AND SPECIFICATIONS FOR SOIL EROSION AND SEDIMENT CONTROL

U.S. DEPARTMENT OF AGRICULTURE NATURAL RESOURCES CONSERVATION SERVICE	2011	MARYLAND DEPARTMENT OF ENVIRONMENT WATER MANAGEMENT ADMINISTRATION

DETAIL E-1 SILT FENCE

STANDARD SYMBOL: ——SF——

CONSTRUCTION SPECIFICATIONS

1. USE WOOD POSTS 1¾ X 1¾ ± ⅙ INCH (MINIMUM) SQUARE CUT OF SOUND QUALITY HARDWOOD. AS AN ALTERNATIVE TO WOODEN POST USE STANDARD "T" OR "U" SECTION STEEL POSTS WEIGHING NOT LESS THAN 1 POUND PER LINEAR FOOT.
2. USE 36 INCH MINIMUM POSTS DRIVEN 16 INCH MINIMUM INTO GROUND NO MORE THAN 6 FEET APART.
3. USE WOVEN SLIT FILM GEOTEXTILE AS SPECIFIED IN SECTION H-1 MATERIALS AND FASTEN GEOTEXTILE SECURELY TO UPSLOPE SIDE OF FENCE POSTS WITH WIRE TIES OR STAPLES AT TOP AND MID-SECTION.
4. PROVIDE MANUFACTURER CERTIFICATION TO THE AUTHORIZED REPRESENTATIVE OF THE INSPECTION/ENFORCEMENT AUTHORITY SHOWING THAT THE GEOTEXTILE USED MEETS THE REQUIREMENTS IN SECTION H-1 MATERIALS.
5. EMBED GEOTEXTILE A MINIMUM OF 8 INCHES VERTICALLY INTO THE GROUND. BACKFILL AND COMPACT THE SOIL ON BOTH SIDES OF FABRIC.
6. WHERE TWO SECTIONS OF GEOTEXTILE ADJOIN: OVERLAP, TWIST, AND STAPLE TO POST IN ACCORDANCE WITH THIS DETAIL.
7. EXTEND BOTH ENDS OF THE SILT FENCE A MINIMUM OF FIVE HORIZONTAL FEET UPSLOPE AT 45 DEGREES TO THE MAIN FENCE ALIGNMENT TO PREVENT RUNOFF FROM GOING AROUND THE ENDS OF THE SILT FENCE.
8. REMOVE ACCUMULATED SEDIMENT AND DEBRIS WHEN BULGES DEVELOP IN SILT FENCE OR WHEN SEDIMENT REACHES 25% OF FENCE HEIGHT. REPLACE GEOTEXTILE IF TORN. IF UNDERMINING OCCURS, REINSTALL FENCE.

2 OF 2

MARYLAND STANDARDS AND SPECIFICATIONS FOR SOIL EROSION AND SEDIMENT CONTROL

U.S. DEPARTMENT OF AGRICULTURE NATURAL RESOURCES CONSERVATION SERVICE	2011	MARYLAND DEPARTMENT OF ENVIRONMENT WATER MANAGEMENT ADMINISTRATION

DETAIL E-9-1 STANDARD INLET PROTECTION

STANDARD SYMBOL: SIP

CONSTRUCTION SPECIFICATIONS

1. USE WOVEN SLIT FILM GEOTEXTILE AS SPECIFIED IN SECTION H-1 MATERIALS.
2. EXCAVATE COMPLETELY AROUND THE INLET TO A DEPTH OF 18 INCHES BELOW THE NOTCH ELEVATION.
3. FOR TYPE A, USE NOMINAL 2 INCH X 4 INCH CONSTRUCTION GRADE LUMBER POSTS, DRIVEN 1 FOOT INTO THE GROUND AT EACH CORNER OF THE INLET. PLACE NAIL STRIPS BETWEEN THE POSTS ON THE ENDS OF THE INLET. ASSEMBLE THE TOP PORTION OF THE 2X4 FRAME AS SHOWN. STRETCH ½ INCH GALVANIZED HARDWARE CLOTH TIGHTLY AROUND THE FRAME AND FASTEN SECURELY. FASTEN GEOTEXTILE SECURELY TO THE HARDWARE CLOTH WITH TIES SPACED EVERY 24 INCHES AT THE TOP AND MID SECTION. EMBED GEOTEXTILE AND HARDWARE CLOTH A MINIMUM OF 18 INCHES BELOW THE WEIR CREST. THE ENDS OF THE GEOTEXTILE MUST MEET AT A POST, BE OVERLAPPED AND FOLDED, THEN FASTENED TO THE POST.

   FOR TYPE B, USE 2⅜ INCH DIAMETER GALVANIZED STEEL POSTS OF 0.095 INCH WALL THICKNESS AND 6 FOOT LENGTH, DRIVEN A MINIMUM OF 36 INCHES BELOW THE WEIR CREST AT EACH CORNER OF THE STRUCTURE. FASTEN 9 GAUGE OR HEAVIER CHAIN LINK FENCE, 42 INCHES IN HEIGHT, SECURELY TO THE FENCE POSTS WITH WIRE TIES. FASTEN GEOTEXTILE SECURELY TO THE CHAIN LINK FENCE WITH TIES SPACED EVERY 24 INCHES AT THE TOP AND MID SECTION. EMBED GEOTEXTILE AND CHAIN LINK FENCE A MINIMUM OF 18 INCHES BELOW THE WEIR CREST.
4. BACKFILL AROUND THE INLET IN LOOSE 4 INCH LIFTS AND COMPACT UNTIL SOIL IS LEVEL WITH THE NOTCH ELEVATION ON THE ENDS AND TOP ELEVATION ON THE SIDES.
5. STORM DRAIN INLET PROTECTION REQUIRES FREQUENT MAINTENANCE. REMOVE ACCUMULATED SEDIMENT AFTER EACH RAIN EVENT TO MAINTAIN FUNCTION AND AVOID PREMATURE CLOGGING. IF INLET PROTECTION DOES NOT COMPLETELY DRAIN WITHIN 24 HOURS AFTER A STORM EVENT, IT IS CLOGGED. WHEN THIS OCCURS, REMOVE ACCUMULATED SEDIMENT AND CLEAN, OR REPLACE GEOTEXTILE AND STONE.

2 OF 2

MARYLAND STANDARDS AND SPECIFICATIONS FOR SOIL EROSION AND SEDIMENT CONTROL

U.S. DEPARTMENT OF AGRICULTURE NATURAL RESOURCES CONSERVATION SERVICE	2011	MARYLAND DEPARTMENT OF ENVIRONMENT WATER MANAGEMENT ADMINISTRATION

B-4-7 STANDARDS AND SPECIFICATIONS FOR HEAVY USE AREA PROTECTION

DEFINITION

THE STABILIZATION OF AREAS FREQUENTLY AND INTENSIVELY USED BY SURFACING WITH SUITABLE MATERIALS (E.G., MULCH AND AGGREGATE).

PURPOSE

TO PROVIDE A STABLE, NON-ERODING SURFACE FOR AREAS FREQUENTLY USED AND TO IMPROVE THE WATER QUALITY FROM THE RUNOFF OF THESE AREAS.

CONDITIONS WHERE PRACTICE APPLIES

THIS PRACTICE APPLIES TO INTENSIVELY USED AREAS (E.G., EQUIPMENT AND MATERIAL STORAGE, STAGING AREAS, HEAVILY USED TRAVEL LANES).

CRITERIA

1. A MINIMUM 4-INCH BASE COURSE OF CRUSHED STONE OR OTHER SUITABLE MATERIALS INCLUDING WOOD CHIPS OVER NONWOVEN GEOTEXTILE SHOULD BE PROVIDED AS SPECIFIED IN SECTION H-1 MATERIALS.
2. SELECT THE STABILIZING MATERIAL BASED ON THE INTENDED USE, DESIRED MAINTENANCE FREQUENCY, AND RUNOFF CONTROL.
3. THE TRANSPORT OF SEDIMENTS, NUTRIENTS, OILS, CHEMICALS, PARTICULATE MATTER ASSOCIATED WITH VEHICULAR TRAFFIC AND EQUIPMENT, AND MATERIAL STORAGE NEEDS TO BE CONSIDERED IN THE SELECTION OF MATERIAL. ADDITIONAL CONTROL MEASURES MAY BE NECESSARY TO CONTROL SOME OF THESE POTENTIAL POLLUTANTS.
4. SURFACE EROSION CAN BE A PROBLEM ON LARGE HEAVY USE AREAS. IN THESE SITUATIONS, MEASURES TO REDUCE THE FLOW LENGTH OF RUNOFF OR EROSIVE VELOCITIES NEED TO BE CONSIDERED.

MAINTENANCE

THE HEAVY USE AREAS MUST BE MAINTAINED IN A CONDITION THAT MINIMIZES EROSION. THIS MAY REQUIRE ADDING SUITABLE MATERIAL, AS SPECIFIED ON THE APPROVED PLANS, TO MAINTAIN A CLEAN SURFACE.

B-4-8 STANDARDS AND SPECIFICATIONS FOR STOCKPILE AREA

DEFINITION

A MOUND OR PILE OF SOIL PROTECTED BY APPROPRIATELY DESIGNED EROSION AND SEDIMENT CONTROL MEASURES.

PURPOSE

TO PROVIDE A DESIGNATED LOCATION FOR THE TEMPORARY STORAGE OF SOIL THAT CONTROLS THE POTENTIAL FOR EROSION, SEDIMENTATION, AND CHANGES TO DRAINAGE PATTERNS.

CONDITIONS WHERE PRACTICE APPLIES

STOCKPILE AREAS ARE UTILIZED WHEN IT IS NECESSARY TO SALVAGE AND STORE SOIL FOR LATER USE.

CRITERIA

1. THE STOCKPILE LOCATION AND ALL RELATED SEDIMENT CONTROL PRACTICES MUST BE CLEARLY INDICATED ON THE EROSION AND SEDIMENT CONTROL PLAN.
2. THE FOOTPRINT OF THE STOCKPILE MUST BE SIZED TO ACCOMMODATE THE ANTICIPATED VOLUME OF MATERIAL AND BASED ON A SIDE SLOPE RATIO NO STEEPER THAN 2:1. BENCHING MUST BE PROVIDED IN ACCORDANCE WITH SECTION B-3 LAND GRADING.
3. RUNOFF FROM THE STOCKPILE AREA MUST DRAIN TO A SUITABLE SEDIMENT CONTROL PRACTICE.
4. ACCESS THE STOCKPILE AREA FROM THE UPGRADE SIDE.
5. CLEAR WATER RUNOFF INTO THE STOCKPILE AREA MUST BE MINIMIZED BY USE OF A DIVERSION DEVICE SUCH AS AN EARTH DIKE, TEMPORARY SWALE OR DIVERSION FENCE. PROVISIONS MUST BE MADE FOR DISCHARGING CONCENTRATED FLOW IN A NON-EROSIVE MANNER.
6. WHERE RUNOFF CONCENTRATES ALONG THE TOE OF THE STOCKPILE FILL, AN APPROPRIATE EROSION/SEDIMENT CONTROL PRACTICE MUST BE USED TO INTERCEPT THE DISCHARGE.
7. STOCKPILES MUST BE STABILIZED IN ACCORDANCE WITH THE 3/7 DAY STABILIZATION REQUIREMENT AS WELL AS STANDARD B-4-1 INCREMENTAL STABILIZATION AND STANDARD B-4-4 TEMPORARY STABILIZATION.
8. IF THE STOCKPILE IS LOCATED ON AN IMPERVIOUS SURFACE, A LINER SHOULD BE PROVIDED BELOW THE STOCKPILE TO FACILITATE CLEANUP. STOCKPILES CONTAINING CONTAMINATED MATERIAL MUST BE COVERED WITH IMPERMEABLE SHEETING.

MAINTENANCE

THE STOCKPILE AREA MUST CONTINUOUSLY MEET THE REQUIREMENTS FOR ADEQUATE VEGETATIVE ESTABLISHMENT IN ACCORDANCE WITH SECTION B-4 VEGETATIVE STABILIZATION. SIDE SLOPES MUST BE MAINTAINED AT NO STEEPER THAN A 2:1 RATIO. THE STOCKPILE AREA MUST BE KEPT FREE OF EROSION. IF THE VERTICAL HEIGHT OF A STOCKPILE EXCEEDS 20 FEET FOR 2:1 SLOPES, 30 FEET FOR 3:1 SLOPES, OR 40 FEET FOR 4:1 SLOPES, BENCHING MUST BE PROVIDED IN ACCORDANCE WITH SECTION B-3 LAND GRADING.

DETAIL E-9-3 CURB INLET PROTECTION

STANDARD SYMBOL: CIP

MAXIMUM DRAINAGE AREA = ¼ ACRE

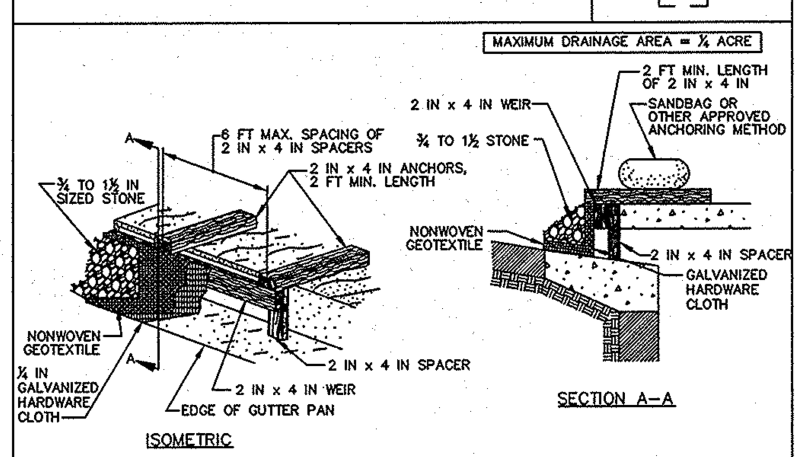

CONSTRUCTION SPECIFICATIONS

1. USE NOMINAL 2 INCH x 4 INCH LUMBER
2. USE NONWOVEN GEOTEXTILE AS SPECIFIED IN SECTION H-1 MATERIALS.
3. NAIL THE 2x4 WEIR TO 9 INCH LONG VERTICAL SPACERS (MAXIMUM 6 FEET APART).
4. ATTACH A CONTINUOUS PIECE OF ¼ INCH GALVANIZED HARDWARE CLOTH, WITH A MINIMUM WIDTH OF 30 INCHES AND A MINIMUM LENGTH OF 4 FEET LONGER THAN THE THROAT OPENING, TO THE 2x4 WEIR, EXTENDING IT 2 FEET BEYOND THROAT ON EACH SIDE.
5. PLACE A CONTINUOUS PIECE OF NONWOVEN GEOTEXTILE OF THE SAME DIMENSIONS AS THE HARDWARE CLOTH OVER THE HARDWARE CLOTH AND SECURELY ATTACH TO THE 2x4 WEIR.
6. PLACE THE ASSEMBLY AGAINST THE INLET THROAT AND NAIL TO 2x4 ANCHORS (MINIMUM 2 FEET LENGTH). EXTEND THE ANCHORS ACROSS THE INLET TOP AND HOLD IN PLACE BY SANDBAGS OR OTHER APPROVED ANCHORING METHOD.
7. INSTALL END SPACERS A MINIMUM OF 1 FOOT BEYOND THE ENDS OF THE THROAT OPENING.
8. FORM THE HARDWARE CLOTH AND THE GEOTEXTILE TO THE CONCRETE GUTTER AND FACE OF CURB TO SPAN THE INLET OPENING. COVER THE HARDWARE CLOTH AND GEOTEXTILE WITH CLEAN ¾ TO 1½ INCH STONE OR EQUIVALENT RECYCLED CONCRETE.
9. AT NON-SUMP LOCATIONS, INSTALL A TEMPORARY SANDBAG OR ASPHALT BERM TO PREVENT INLET BYPASS.
10. STORM DRAIN INLET PROTECTION REQUIRES FREQUENT MAINTENANCE. REMOVE ACCUMULATED SEDIMENT AFTER EACH RAIN EVENT TO MAINTAIN FUNCTION AND AVOID PREMATURE CLOGGING. IF INLET PROTECTION DOES NOT COMPLETELY DRAIN WITHIN 24 HOURS AFTER A STORM EVENT, IT IS CLOGGED. WHEN THIS OCCURS, REMOVE ACCUMULATED SEDIMENT AND CLEAN, OR REPLACE GEOTEXTILE AND STONE.

MARYLAND STANDARDS AND SPECIFICATIONS FOR SOIL EROSION AND SEDIMENT CONTROL

U.S. DEPARTMENT OF AGRICULTURE NATURAL RESOURCES CONSERVATION SERVICE	2011	MARYLAND DEPARTMENT OF ENVIRONMENT WATER MANAGEMENT ADMINISTRATION

SEQUENCE OF CONSTRUCTION

1. NOTIFY HOWARD COUNTY'S SEDIMENT CONTROL INSPECTOR AT 410-313-1855 AT LEAST 48 HOURS PRIOR TO THE START OF CONSTRUCTION. (1 DAY)
2. APPLY FOR A GRADING PERMIT AND SCHEDULE A PRE-CONSTRUCTION MEETING WITH THE HOWARD COUNTY SEDIMENT CONTROL INSPECTOR. OBTAIN GRADING PERMIT FROM THE HOWARD COUNTY SEDIMENT CONTROL INSPECTOR AT THE MEETING. (1 DAY)
3. INSTALL PROPOSED STORM DRAIN SYSTEM FROM MANHOLE M-4 TO INLET I-19, INCLUDING INTERMEDIATE INLETS I-20 AND 1-21. INSTALL INLETS I-26 THROUGH I-31. PROVIDE INLET PROTECTION UPON INSTALLATION OF INLETS.
4. FOR EACH LOT UNDER GOING CONSTRUCTION, INSTALL THE STABILIZED CONSTRUCTION ENTRANCE, SILT FENCE AND SUPER SILT FENCE. UPGRADE OR INSTALL ADDITIONAL SEDIMENT CONTROL MEASURES AS DIRECTED BY THE HOWARD COUNTY SEDIMENT CONTROL INSPECTOR. UPGRADE SILT FENCE TO SUPER SILT FENCE TO INTERCEPT DRAINAGE AREA TO AN EXISTING POROUS DRIVEWAY ON ONE UNDERGOING CONSTRUCTION ON AN ADJACENT LOT. (1 DAY)
5. EXCAVATE AND GRADE THE SITE FOR HOUSE CONSTRUCTION. PROVIDE DUST CONTROL AS NECESSARY. (2 DAYS)
6. CONSTRUCT FOUNDATION, INSTALL UTILITY CONNECTIONS, BUILD THE HOUSE AND INSTALL THE DRYWELLS/MICRO-BIORETENTION FACILITIES. (3-4 MONTHS)

   NOTE: ONCE THE ROOF GUTTER AND DOWNSPOUTS ARE INSTALLED, PIPE THEM TO THE DRYWELLS/MICRO-BIORETENTION FACILITIES. A REGULAR IMPERVIOUS, (NON-POROUS) DRIVEWAY MAY BE INSTALLED AT ANY TIME DURING HOUSE CONSTRUCTION; HOWEVER, DELAY INSTALLING ANY POROUS DRIVEWAY OR POROUS SIDEWALK UNTIL DRAINAGE AREA TO THAT TYPE OF PAVEMENT IS STABILIZED (SEE S.O.C.#7).
7. AS EACH HOUSE NEARS COMPLETION, FINE GRADE THE LOT, INSTALL PLANT MATERIALS AND STABILIZE ALL BARE DIRT AREA WITH PERMANENT SEEDING OR WITH SOD.
8. IF THE "ON-LOT" AREAS DRAINING TO A POROUS DRIVEWAY OR POROUS SIDEWALK SECTION ARE STABILIZED (WITH SOD OR WELL ESTABLISHED TURF FROM PERMANENT SEEDING,) OBTAIN PERMISSIONS FROM THE HOWARD COUNTY SEDIMENT CONTROL INSPECTOR TO INSTALL THE POROUS DRIVEWAY AND APPROPRIATE POROUS SIDEWALK SECTIONS. SEE S.O.C. #4 FOR SUPER SILT FENCE REQUIREMENT WHEN ADJACENT LOT UPHILL OF THE POROUS DRIVEWAY IS NOT STABILIZED. (1-2 DAYS)
9. ONCE THE AREA DRAINING TO THE SEDIMENT CONTROL MEASURES HAVE BEEN STABILIZED, OBTAIN PERMISSION FROM THE HOWARD COUNTY SEDIMENT CONTROL INSPECTOR TO REMOVE THE SEDIMENT CONTROL ITEMS. (1/2 DAY)
10. OBTAIN INSPECTION FOR RELEASE OF SURETY (FOR GRADING AND LANDSCAPING). (1/2 DAY)
11. OBTAIN USE AND OCCUPANCY PERMIT FOR SETTLEMENT.

HOWARD SOIL CONSERVATION DISTRICT STANDARD SEDIMENT CONTROL NOTES

1. A MINIMUM OF 48 HOURS NOTICE MUST BE GIVEN TO THE HOWARD COUNTY DEPARTMENT OF INSPECTIONS, LICENSES AND PERMITS, SEDIMENT CONTROL DIVISION PRIOR TO THE START OF ANY CONSTRUCTION (313-1855).
2. ALL VEGETATIVE AND STRUCTURAL PRACTICES ARE TO BE INSTALLED ACCORDING TO THE PROVISIONS OF THIS PLAN AND ARE TO BE IN CONFORMANCE WITH THE MOST CURRENT MARYLAND STANDARDS AND SPECIFICATIONS FOR SOIL EROSION AND SEDIMENT CONTROL AND REVISIONS THERETO.
3. FOLLOWING INITIAL SOIL DISTURBANCE OR RE-DISTURBANCE, PERMANENT OR TEMPORARY STABILIZATION SHALL BE COMPLETED WITHIN: A) 3 CALENDAR DAYS FOR ALL PERIMETER SEDIMENT CONTROL STRUCTURES, DIKES, PERIMETER SLOPES AND ALL SLOPES GREATER THAN 3:1, B) 7 DAYS AS TO ALL OTHER DISTURBED OR GRADED AREAS ON THE PROJECT SITE.
4. ALL DISTURBED AREAS MUST BE STABILIZED WITHIN THE TIME PERIOD SPECIFIED ABOVE IN ACCORDANCE WITH THE 2011 MARYLAND STANDARDS AND SPECIFICATIONS FOR SOIL EROSION AND SEDIMENT CONTROL FOR PERMANENT SEEDING (SEC. B-4-5), TEMPORARY SEEDING (SEC. B-4-4) AND MULCHING (SEC. B-4-3). TEMPORARY STABILIZATION WITH MULCH ALONE CAN ONLY BE DONE WHEN RECOMMENDED SEEDING DATES DO NOT ALLOW FOR PROPER GERMINATION AND ESTABLISHMENT OF GRASSES.
5. ALL SEDIMENT CONTROL STRUCTURES ARE TO REMAIN IN PLACE AND ARE TO BE MAINTAINED IN OPERATIVE CONDITION UNTIL PERMISSION FOR THEIR REMOVAL HAS BEEN OBTAINED FROM THE HOWARD COUNTY SEDIMENT CONTROL INSPECTOR.
6. SITE ANALYSIS:

TOTAL AREA OF SITE:	11.36 ACRES
AREA DISTURBED:	6.29 ACRES
AREA TO BE ROOFED OR PAVED:	2.12 ACRES
AREA TO BE VEGETATIVELY STABILIZED:	4.17 ACRES
TOTAL CUT:	14,500 CU. YDS. (INCLUDES GRADING FOR 26 LOTS)
TOTAL FILL:	14,500 CU. YDS. (INCLUDES GRADING FOR 26 LOTS)
OFFSITE WASTE/BORROW AREA LOCATION:	N/A

7. ANY SEDIMENT CONTROL PRACTICE WHICH IS DISTURBED BY GRADING ACTIVITY FOR PLACEMENT OF UTILITIES MUST BE REPAIRED ON THE SAME DAY OF DISTURBANCE.
8. ADDITIONAL SEDIMENT CONTROL MUST BE PROVIDED, IF DEEMED NECESSARY BY THE HOWARD COUNTY SEDIMENT CONTROL INSPECTOR.
9. ON ALL SITES WITH DISTURBED AREAS IN EXCESS OF 2 ACRES, APPROVAL OF THE INSPECTION AGENCY SHALL BE REQUESTED UPON COMPLETION OF INSTALLATION OF PERIMETER EROSION AND SEDIMENT CONTROLS, BUT BEFORE PROCEEDING WITH ANY OTHER EARTH DISTURBANCE OR GRADING. OTHER BUILDING OR GRADING INSPECTION APPROVALS MAY NOT BE AUTHORIZED UNTIL THIS INITIAL APPROVAL BY THE INSPECTION AGENCY IS MADE.
10. TRENCHES FOR THE CONSTRUCTION OF UTILITIES IS LIMITED TO THREE PIPE LENGTHS OR THAT WHICH SHALL BE BACK-FILLED AND STABILIZED BY THE END OF EACH WORK DAY, WHICHEVER IS SHORTER.
11. ANY CHANGES OR REVISIONS TO THE SEQUENCE OF CONSTRUCTION MUST BE REVIEWED AND APPROVED BY THE PLAN APPROVAL AUTHORITY PRIOR TO PROCEEDING WITH CONSTRUCTION.
12. A PROJECT IS TO BE SEQUENCED SO THAT GRADING ACTIVITIES BEGIN ON ONE GRADING UNIT (MAXIMUM ACREAGE OF 20 AC. PER GRADING UNIT) AT A TIME. WORK MAY PROCEED TO A SUBSEQUENT GRADING UNIT WHEN AT LEAST 50 PERCENT OF THE DISTURBED AREA IN THE PRECEDING GRADING UNIT HAS BE STABILIZED AND APPROVED BY THE ENFORCEMENT AUTHORITY. UNLESS OTHERWISE SPECIFIED AND APPROVED BY THE APPROVAL AUTHORITY, NO MORE THAN 30 ACRES CUMULATIVELY MAY BE DISTURBED AT A GIVEN TIME.

ENGINEER'S CERTIFICATE

"I HEREBY CERTIFY THAT THIS PLAN FOR EROSION AND SEDIMENT CONTROL REPRESENTS A PRACTICAL AND WORKABLE PLAN BASED ON MY PERSONAL KNOWLEDGE OF THE SITE CONDITIONS AND IT WAS PREPARED IN ACCORDANCE WITH THE REQUIREMENTS OF THE HOWARD SOIL CONSERVATION DISTRICT."

SIGNATURE OF ENGINEER — DATE: 11/25/14
BRANDON R. ROWE, P.E.

DEVELOPER'S CERTIFICATE

"I/WE HEREBY CERTIFY THAT ALL DEVELOPMENT AND CONSTRUCTION WILL BE DONE ACCORDING TO THIS PLAN, AND THAT ANY RESPONSIBLE PERSONNEL INVOLVED IN THE CONSTRUCTION PROJECT WILL HAVE A CERTIFICATE OF ATTENDANCE AT A DEPARTMENT OF THE ENVIRONMENT APPROVED TRAINING PROGRAM FOR THE CONTROL OF SEDIMENT AND EROSION BEFORE BEGINNING THE PROJECT. I ALSO AUTHORIZE PERIODIC ONSITE INSPECTION BY THE HOWARD SOIL CONSERVATION DISTRICT."

NAME: DAVID PASTVA — DATE: 11/24/14
TITLE: VICE PRESIDENT

~~THIS DEVELOPMENT PLAN IS APPROVED FOR SOIL EROSION AND SEDIMENT CONTROL BY THE HOWARD SOIL CONSERVATION DISTRICT.~~

~~HOWARD SCD — DATE~~

APPROVED: DEPARTMENT OF PLANNING AND ZONING

CHIEF, DIVISION OF LAND DEVELOPMENT	DATE 12-19-14
CHIEF, DEVELOPMENT ENGINEERING DIVISION	DATE 12-15-14
DIRECTOR - DEPARTMENT OF PLANNING AND ZONING	DATE 12/18/14

THIS DEVELOPMENT PLAN IS APPROVED FOR SOIL EROSION AND SEDIMENT CONTROL BY THE HOWARD SOIL CONSERVATION DISTRICT.

HOWARD SCD — DATE 12/9/14

BUILDER:	OWNER/DEVELOPER:
CRAFTMARK HOMES, INC. 1355 BEVERLY ROAD, SUITE 330 MCLEAN, VA 22101 CONTACT: DAVID SCHOEN PHONE: (703) 898-0377	CM HIGDON LC 1355 BEVERLY ROAD, SUITE 330 MCLEAN, VA 22101 CONTACT: DAVID SCHOEN PHONE: (703) 898-0377

PERMIT INFORMATION CHART

SUBDIVISION NAME: RESERVOIR ESTATES		SECTION/AREA: N/A		LOT/PARCEL NO.: 56	
PLAT # OR L/F: 15161/365	GRID #: 11	ZONING: R-20	TAX MAP NO.: 46	ELECT DISTR: 6TH	CENSUS TRACT: 606805

PREVIOUS FILE No.: WP-13-048, ECP-13-038, BA-95-028, SP-13-008, 24-4787-D, F-14-003

PROFESSIONAL CERTIFICATION
I, BRANDON R. ROWE, HEREBY CERTIFY THAT THESE DOCUMENTS WERE PREPARED OR APPROVED BY ME, AND THAT I AM A DULY LICENSED PROFESSIONAL ENGINEER UNDER THE LAWS OF THE STATE OF MARYLAND, LICENSE NO. 40808, EXPIRATION DATE: 7/3/2015

B.R. ROWE — PROFESSIONAL ENGINEER — MARYLAND LICENSE No. 40808

BOHLER ENGINEERING™
SITE CIVIL AND CONSULTING ENGINEERING
LAND SURVEYING · PROGRAM MANAGEMENT · LANDSCAPE ARCHITECTURE
SUSTAINABLE DESIGN · PERMITTING SERVICES · TRANSPORTATION SERVICES
WARREN, NJ · UPSTATE NEW YORK · BOSTON, MA · NEW YORK METRO · PHILADELPHIA/SOUTHERN NJ · LEHIGH VALLEY, PA · SOUTHEASTERN, PA · BALTIMORE, MD · SOUTHERN MARYLAND · NORTHERN VIRGINIA · CENTRAL VIRGINIA · CHARLOTTE, NC · RALEIGH, NC

THE INFORMATION, DESIGN AND CONTENT OF THIS PLAN ARE PROPRIETARY AND SHALL NOT BE COPIED OR USED FOR ANY PURPOSE WITHOUT PRIOR WRITTEN AUTHORIZATION FROM BOHLER ENGINEERING. ONLY APPROVED, SIGNED AND SEALED PLANS SHALL BE UTILIZED FOR CONSTRUCTION PURPOSES © 2008 BOHLER ENGINEERING.

REVISIONS

REV	DATE	COMMENT	BY

DIG WITH CARE — CALL BEFORE YOU DIG

THE FOLLOWING STATES REQUIRE NOTIFICATION BY EXCAVATORS, DESIGNERS, OR ANY PERSON PREPARING TO DISTURB THE EARTH'S SURFACE ANYWHERE IN THE STATE. IN VIRGINIA, MARYLAND, THE DISTRICT OF COLUMBIA, NORTH CAROLINA AND DELAWARE CALL - 811
(WV 1-800-245-4848) (PA 1-800-242-1776) (DC 1-800-257-7777) (VA 1-800-552-7001) (MD 1-800-257-7777) (DE 1-800-282-8555)

NOT APPROVED FOR CONSTRUCTION

PROJECT No.:	MD122066.1
DRAWN BY:	RLB
CHECKED BY:	BRR
DATE:	11/20/14
SCALE:	AS SHOWN
CAD I.D.:	SD1

PROJECT:
SITE DEVELOPMENT PLANS
FOR
RESERVOIR ESTATES
SINGLE FAMILY DETACHED UNITS
BUILDABLE LOTS 1-20 AND OPEN SPACE LOTS 21-26
PLAT NO. 23120
LOCATION OF SITE
10883 AND 10887 SCAGGSVILLE ROAD
LAUREL, MD. 20723
HOWARD COUNTY

BOHLER ENGINEERING
901 DULANEY VALLEY ROAD, SUITE 801
TOWSON, MARYLAND 21204
Phone: (410) 821-7900
Fax: (410) 821-7987
MD@BohlerEng.com

SHEET TITLE:
SEDIMENT CONTROL NOTES & DETAILS

SHEET NUMBER:

H:\2012\MD122066.1\DRAWINGS\PLAN SETS\SITE DEVELOPMENT PLANS\MD122066.1SD2.DWG PRINTED BY: RBOWEN 11.25.14 @ 11:05 AM LAST SAVED B

DRAINAGE AREA DATA

DRAINAGE AREA	FAC. NUM.	STRUCTURE NUM.	TOTAL DA S.F.	TOTAL DA AC	IMPERVIOUS AREA S.F.	IMPERVIOUS AREA AC	IMPERVIOUSNESS %	C Value
1A	DRYWELL	I-31	1,208	0.03	1,208	0.03	100%	0.96
1B	DRYWELL	I-21	1,284	0.03	1,284	0.03	100%	0.96
1C	DRYWELL	N/A	1,065	0.02	1,065	0.02	100%	0.96
2	N/A	I-31	2,650	0.06	0	0.00	0%	0.45
3A	DRYWELL	I-30	1,208	0.03	1,208	0.03	100%	0.96
3B	DRYWELL	I-20	1,284	0.03	1,284	0.03	100%	0.96
3C	DRYWELL	I-21	1,065	0.02	1,065	0.02	100%	0.96
4	N/A	I-30	2,413	0.06	0	0.00	0%	0.45
5A	DRYWELL	I-29	1,208	0.03	1,208	0.03	100%	0.96
5B	DRYWELL	I-20	1,284	0.03	1,284	0.03	100%	0.96
5C	DRYWELL	I-20	1,065	0.02	1,065	0.02	100%	0.96
6	N/A	I-29	2,418	0.06	0	0.00	0%	0.45
7A	DRYWELL	I-28	1,208	0.03	1,208	0.03	100%	0.96
7B	DRYWELL	I-19	1,284	0.03	1,284	0.03	100%	0.96
7C	DRYWELL	I-20	1,065	0.02	1,065	0.02	100%	0.96
8	N/A	I-28	2,407	0.06	0	0.00	0%	0.45
9A	DRYWELL	I-27	1,208	0.03	1,208	0.03	100%	0.96
9B	DRYWELL	I-19	1,284	0.03	1,284	0.03	100%	0.96
9C	DRYWELL	I-19	1,065	0.02	1,065	0.02	100%	0.96
10	N/A	I-27	2,690	0.06	0	0.00	0%	0.44
11A	DRYWELL	I-26	1,208	0.03	1,208	0.03	100%	0.96
11B	DRYWELL	I-18	1,284	0.03	1,284	0.03	100%	0.96
11C	DRYWELL	I-19	1,065	0.02	1,065	0.02	100%	0.96
12	N/A	I-26	3,410	0.08	0	0.00	0%	0.42
13A	DRYWELL	N/A	1,208	0.03	1,208	0.03	100%	0.96
13B	DRYWELL	I-18	1,284	0.03	1,284	0.03	100%	0.96
13C	DRYWELL	I-18	1,065	0.02	1,065	0.02	100%	0.96
14A	N/A	I-18	5,954	0.06	0	0.00	0%	0.26
14B	N/A	I-20	17,509	0.03	0	0.03	0%	0.26
14C	N/A	I-21	17,165	0.03	0	0.03	0%	0.26
14D	N/A	I-19	7,995	0.02	0	0.02	0%	0.26
15A	15	I-12	4,145	0.10	1,531	0.04	37%	0.52
15B	15	I-13	647	0.01	647	0.01	100%	0.96
~~16A~~	~~DRYWELL~~	~~I-15~~	~~1,208~~	~~0.03~~	~~1,208~~	~~0.03~~	~~100%~~	~~0.96~~
16B	DRYWELL	N/A	1,284	0.03	1,284	0.03	100%	0.96
16C	DRYWELL	N/A	1,065	0.02	1,065	0.02	100%	0.96
17A	DRYWELL	I-9	1,208	0.03	1,208	0.03	100%	0.96
17B	DRYWELL	N/A	1,284	0.03	1,284	0.03	100%	0.96
17C	DRYWELL	N/A	1,065	0.02	1,065	0.02	100%	0.96
18A	18	I-9	7,606	0.17	0	0.00	0%	0.26
18B	18	I-11	6,143	0.14	4,401	0.10	72%	0.86
18C	18	I-10	6,228	0.14	4,159	0.10	67%	0.74
19	19	N/A	5,073	0.12	3,557	0.08	70%	0.64
20	20	I-8	8,969	0.21	3,001	0.07	33%	0.54
21	21	N/A	5,456	0.13	3,557	0.08	65%	0.71
22A	22	I-6	5,470	0.13	1,069	0.02	20%	0.4
22B	22	I-7	5,420	0.12	3,723	0.09	69%	0.74
23A	DRYWELL	I-6	1,208	0.03	1,208	0.03	100%	0.96
23B	DRYWELL	N/A	1,284	0.03	1,284	0.03	100%	0.96
23C	DRYWELL	N/A	1,065	0.02	1,065	0.02	100%	0.96
24A	DRYWELL	N/A	1,208	0.03	1,208	0.03	100%	0.96
24B	DRYWELL	N/A	1,284	0.03	1,284	0.03	100%	0.96
24C	DRYWELL	N/A	1,065	0.02	1,065	0.02	100%	0.96
25A	DRYWELL	N/A	1,208	0.03	1,208	0.03	100%	0.96
25B	DRYWELL	N/A	1,284	0.03	1,284	0.03	100%	0.96
25C	DRYWELL	N/A	1,065	0.02	1,065	0.02	100%	0.96
26	26	N/A	7,405	0.17	3,049	0.07	41%	0.55
27A	DRYWELL	N/A	1,208	0.03	1,208	0.03	100%	0.96
27B	DRYWELL	N/A	1,284	0.03	1,284	0.03	100%	0.96
27C	DRYWELL	N/A	1,065	0.02	1,065	0.02	100%	0.96
28A	28	I-1	13,100	0.30	5,726	0.13	44%	0.54
28B	28	N/A	3,888	0.09	0	0.00	0%	0.26
29A	DRYWELL	N/A	1,208	0.03	1,208	0.03	100%	0.96
29B	DRYWELL	N/A	1,284	0.03	1,284	0.03	100%	0.96
29C	DRYWELL	N/A	1,065	0.02	1,065	0.02	100%	0.96
30A	DRYWELL	N/A	1,206	0.03	1,208	0.03	100%	0.96
30B	DRYWELL	N/A	1,284	0.03	1,284	0.03	100%	0.96
30C	DRYWELL	N/A	1,065	0.02	1,065	0.02	100%	0.96
31A	DRYWELL	35	1,208	0.03	1,208	0.03	100%	0.96
31B	DRYWELL	N/A	1,284	0.03	1,284	0.03	100%	0.96
31C	DRYWELL	N/A	1,065	0.02	1,065	0.02	100%	0.96
33	N/A	I-35	2,487	0.06	0	0.00	0%	0.26
34A	34	I-2	6,003	0.14	1,352	0.03	23%	0.42
34B	34	I-3	10,985	0.25	6,489	0.15	59%	0.67
35A	35	I-4	3,977	0.09	2,005	0.05	50%	0.61
35B	35	I-5	6,578	0.15	6,078	0.14	92%	0.89
36A	36	I-16	3,991	0.09	200	0.00	5%	0.3
36B	36	I-17	1,672	0.04	1,547	0.04	93%	0.91
37A	37	I-14	4,115	0.09	150	0.00	4%	0.29
37B	37	I-15	286	0.01	286	0.01	100%	0.96
38	Perm. Pav.	N/A	436	0.01	436	0.01	100%	N/A
39	Perm. Pav.	N/A	749	0.02	749	0.02	100%	N/A
40	Perm. Pav.	N/A	436	0.01	436	0.01	100%	N/A
41	Perm. Pav.	N/A	593	0.01	593	0.01	100%	N/A
42	Perm. Pav.	N/A	436	0.01	436	0.01	100%	N/A
43	Perm. Pav.	N/A	593	0.01	593	0.01	100%	N/A
44	Perm. Pav.	N/A	436	0.01	436	0.01	100%	N/A
45	Perm. Pav.	N/A	561	0.01	561	0.01	100%	N/A
46	Perm. Pav.	N/A	436	0.01	436	0.01	100%	N/A
47	Perm. Pav.	N/A	561	0.01	561	0.01	100%	N/A
48	Perm. Pav.	N/A	436	0.01	436	0.01	100%	N/A
49	Perm. Pav.	N/A	883	0.02	883	0.02	100%	N/A
50	Perm. Pav.	N/A	710	0.02	710	0.02	100%	N/A
51	Perm. Pav.	N/A	597	0.01	597	0.01	100%	N/A

131% OF THE REQUIRED ESDv VOLUME HAS BEEN PROVIDED THROUGH THE USE OF 12 MICRO-BIORETENTION FACILITIES, 48 DRYWELLS AND 14 PERMEABLE PAVEMENT AREAS.
TOTAL SITE AREA = 8.64 AC.
TARGET Pe = 1.60"

SOILS

MAP SYMBOL	MAP UNIT NAME	RATING
GhB	GLENELG-URBAN LAND COMPLEX, 0 TO 8 PERCENT SLOPES	B
GmB	GLENVILLE SILT LOAM, 3 TO 8 PERCENT SLOPES	C
GnB	GLENVILLE-BAILE SILT LOAMS, 0 TO 8 PERCENT SLOPES	C
MaB	MANOR LOAM, 3 TO 8 PERCENT SLOPES	B
MaC	MANOR LOAM, 8 TO 15 PERCENT SLOPES	B
MaD	MANOR LOAM, 15 TO 25 PERCENT SLOPES	B

STORMWATER MANAGEMENT PRACTICES

LOT NO.	"PERMEABLE PAVING A-2 (Y / N)"	"ESD FACILITY TYPE AND NUMBER"	"TOTAL AREA (Ac)"	ESDv "REQUIRED (C.F.)"	ESDv "PROVIDED (C.F.)"
1	Y	(3) DRYWELLS (M-5) & PERM. PAVEMENT	0.08	540	894
2	Y	(3) DRYWELLS (M-5) & PERM. PAVEMENT	0.08	526	894
3	N	MICRO-BIO (M-6) FACILITY #19 & #20	0.22	669	707
4	N	MICRO-BIO (M-6) FACILITY #20 & #21	0.23	675	711
5	N	(3) DRYWELLS (M-5) & MICRO-BIO FACILITY #22	0.08	451	732
6	N	(3) DRYWELLS (M-5) & MICRO-BIO FACILITY #22	0.08	451	732
7	N	(3) DRYWELLS (M-5)	0.08	451	732
8	N	MICRO-BIO (M-6) FACILITY #26	0.17	415	452
9	N	(3) DRYWELLS (M-5) & MICRO-BIO FACILITIES #26 & #28	0.08	451	732
10	N	(3) DRYWELLS (M-5) & MICRO-BIO FACILITY #28	0.08	451	732
11	N	(3) DRYWELLS (M-5)	0.08	451	732
12	N	(3) DRYWELLS (M-5)	0.08	451	732
13	N	MICRO-BIO (M-6) FACILITY #34 & #35	0.63	2124	1992
14	N	(3) DRYWELLS (M-5)	0.08	451	732
15	Y	(3) DRYWELLS (M-5) & PERM. PAVEMENT	0.08	545	819
16	Y	(3) DRYWELLS (M-5) & PERM. PAVEMENT	0.08	526	819
17	Y	(3) DRYWELLS (M-5) & PERM. PAVEMENT	0.08	526	819
18	Y	(3) DRYWELLS (M-5) & PERM. PAVEMENT	0.08	522	819
19	Y	(3) DRYWELLS (M-5) & PERM. PAVEMENT	0.08	522	819
20	Y	(3) DRYWELLS (M-5) & PERM. PAVEMENT	0.08	562	819
21	N	---	---	---	---
22	N	---	---	---	---
23	N	MICRO-BIO (M-6) FACILITY #18	0.46	1176	1284
24	N	---	---	---	---
25	N	MICRO-BIO (M-6) FACILITY #37	0.08	74	117
26	N	MICRO-BIO (M-6) FACILITY #36	0.13	355	311
PUBLIC ROAD	N	MICRO-BIO (M-6) FACILITY #15	0.11	294	311
PUBLIC ROAD	N	MICRO-BIO (M-6) FACILITY #22	0.25	653	479
COMMON DRIVE	N	MICRO-BIO (M-6) FACILITY #28	0.28	774	785
SIDEWALKS	Y	PERM. PAVEMENT	0.06	331	522
		TOTALS	3.92	15,413	20,230

SITE AREA = 8.64 AC.
TARGET Pe = 1.60"
% IMPERVIOUS = 29.6% AVG.
TARGET ESDv = 15,413 CU. FT.

APPROVED: DEPARTMENT OF PLANNING AND ZONING

Signature	Date
CHIEF, DIVISION OF LAND DEVELOPMENT	12-19-14
CHIEF, DEVELOPMENT ENGINEERING DIVISION	12-15-14
DIRECTOR - DEPARTMENT OF PLANNING AND ZONING	12/19/14

LEGEND

- IMPERVIOUS AREA
- PERVIOUS AREA
- DRAINAGE AREA DIVIDE
- 11 — DRAINAGE AREA LABEL
- SOIL DIVIDE
- MaB — SOIL LABEL

50 25 12.5 0 50
1"= 50'

7/26/16 FOR REVISION 2 ONLY

BUILDER:	OWNER/DEVELOPER:
CRAFTMARK HOMES, INC. 1355 BEVERLY ROAD, SUITE 330 MCLEAN, VA 22101 CONTACT: DAVID SCHOEN PHONE: (703) 898-0377	CM HIGDON LC 1355 BEVERLY ROAD, SUITE 330 MCLEAN, VA 22101 CONTACT: DAVID SCHOEN PHONE: (703) 898-0377

PERMIT INFORMATION CHART

SUBDIVISION NAME: RESERVOIR ESTATES | SECTION/AREA: N/A | LOT/PARCEL NO.: 56
PLAT # OR L/F: 15161/365 | GRID #: 11 | ZONING: R-20 | TAX MAP NO.: 46 | ELECT DISTR: 6TH | CENSUS TRACT: 606805

PREVIOUS FILE No. : WP-13-048, ECP-13-038, BA-95-028, SP-13-008, 24-4787-D, F-14-003

PROFESSIONAL CERTIFICATION
I, BRANDON R. ROWE, HEREBY CERTIFY THAT THESE DOCUMENTS WERE PREPARED OR APPROVED BY ME, AND THAT I AM A DULY LICENSED PROFESSIONAL ENGINEER UNDER THE LAWS OF THE STATE OF MARYLAND, LICENSE NO. 40808, EXPIRATION DATE: 7/3/2015

STATE OF MARYLAND BRANDON R. ROWE No. 40808 PROFESSIONAL ENGINEER

BOHLER ENGINEERING™
SITE CIVIL AND CONSULTING ENGINEERING
LAND SURVEYING · PROGRAM MANAGEMENT · LANDSCAPE ARCHITECTURE
SUSTAINABLE DESIGN · PERMITTING SERVICES · TRANSPORTATION SERVICES
WARREN, NJ · UPSTATE NEW YORK · BOSTON, MA · NEW YORK METRO · PHILADELPHIA/SOUTHERN NJ · LEHIGH VALLEY, PA · SOUTHEASTERN, PA · BALTIMORE, MD · SOUTHERN MARYLAND · NORTHERN VIRGINIA · CENTRAL VIRGINIA · CHARLOTTE, NC · RALEIGH, NC

THE INFORMATION, DESIGN AND CONTENT OF THIS PLAN ARE PROPRIETARY AND SHALL NOT BE COPIED OR USED FOR ANY PURPOSE WITHOUT PRIOR WRITTEN AUTHORIZATION FROM BOHLER ENGINEERING. ONLY APPROVED, SIGNED AND SEALED PLANS SHALL BE UTILIZED FOR CONSTRUCTION PURPOSES © 2008 BOHLER ENGINEERING

REVISIONS

REV	DATE	COMMENT	BY
1	7/11/16	DRAINAGE AREA 15 A.	MCB

DIG WITH CARE · CALL BEFORE YOU DIG

THE FOLLOWING STATES REQUIRE NOTIFICATION BY EXCAVATORS, DESIGNERS, OR ANY PERSON PREPARING TO DISTURB THE EARTH'S SURFACE ANYWHERE IN THE STATE. IN VIRGINIA, MARYLAND, THE DISTRICT OF COLUMBIA, NORTH CAROLINA AND DELAWARE CALL - 811
(WV 1-800-245-4848) (PA 1-800-242-1776) (DC 1-800-257-7777)
(VA 1-800-552-7001) (MD 1-800-257-7777) (DE 1-800-282-8555)

NOT APPROVED FOR CONSTRUCTION

PROJECT No.:	MD122066.1
DRAWN BY:	RLB
CHECKED BY:	BRR
DATE:	11/20/14
SCALE:	1"=50'
CAD I.D.:	DA2

PROJECT:
SITE DEVELOPMENT PLANS FOR RESERVOIR ESTATES

SINGLE FAMILY DETACHED UNITS
BUILDABLE LOTS 1-20 AND
OPEN SPACE LOTS 21-26
PLAT NO. 23120
LOCATION OF SITE
10883 AND 10887
SCAGGSVILLE ROAD
LAUREL, MD. 20723
HOWARD COUNTY

BOHLER ENGINEERING
901 DULANEY VALLEY ROAD, SUITE 801
TOWSON, MARYLAND 21204
Phone: (410) 821-7900
Fax: (410) 821-7987
MD@BohlerEng.com

B.R. ROWE
PROFESSIONAL ENGINEER MARYLAND LICENSE No. 40808

SHEET TITLE:
STORM DRAIN AND STORMWATER MANAGEMENT DRAINAGE AREA MAP

SHEET NUMBER:

H:\2012\MD122066.1\DRAWINGS\PLAN SETS\SITE DEVELOPMENT PLANS\MD122066.1DA2.DWG PRINTED BY: RBOWEN 11.21.14 @ 11:48 AM LAST SAVED: 8

SDP-15-012

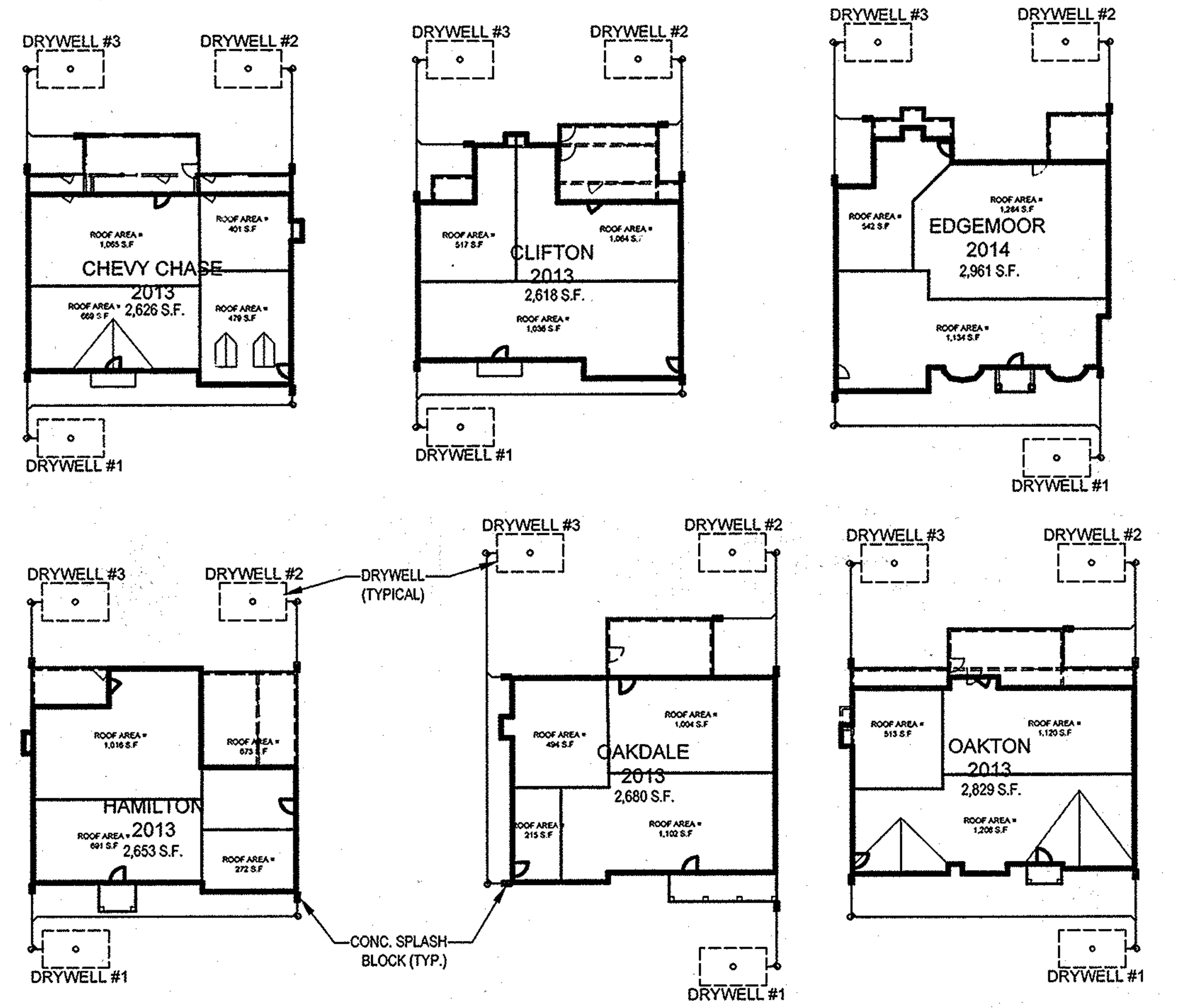

TYPICAL DRYWELL ORIENTATION

NOT TO SCALE

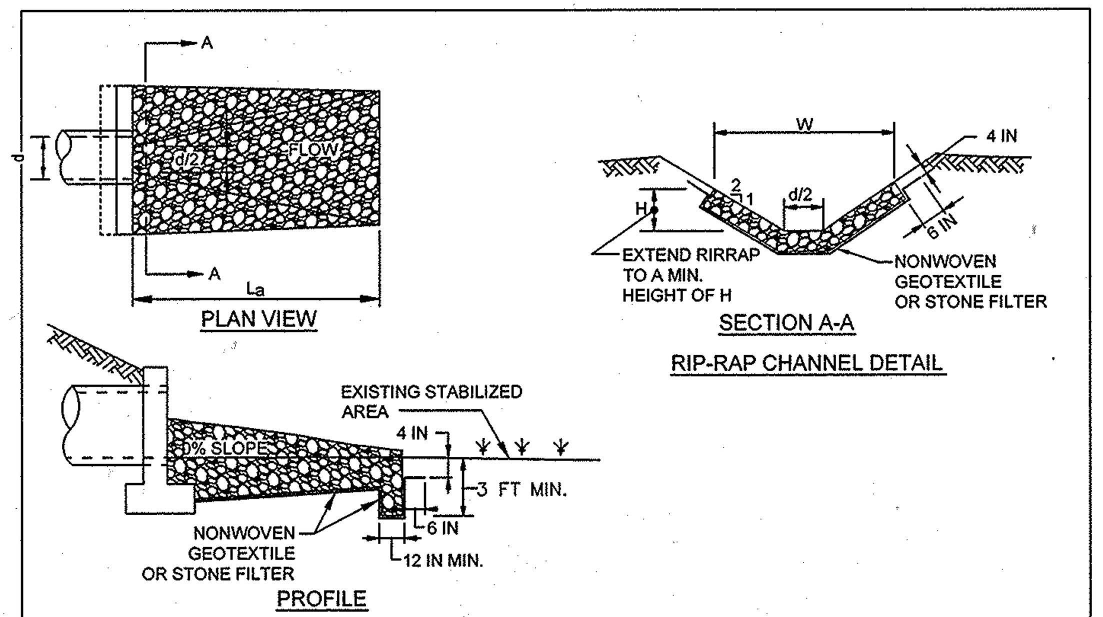

CONSTRUCTION SPECIFICATIONS

1. USE NONWOVEN GEOTEXTILE, AS SPECIFIED IN SECTION H-1 MATERIALS, AND PROTECT FROM PUNCTURING, CUTTING, OR TEARING. REPAIR ANY DAMAGE OTHER THAN AN OCCASIONAL SMALL HOLE BY PLACING ANOTHER PIECE OF GEOTEXTILE OVER THE DAMAGED PART OR BY COMPLETELY REPLACING THE GEOTEXTILE. PROVIDE A MINIMUM OF ONE FOOT OVERLAP FOR ALL REPAIRS AND FOR JOINING TWO PIECES OF GEOTEXTILE TOGETHER.
2. PREPARE THE SUBGRADE FOR GEOTEXTILE OR STONE FILTER (⅜ TO 1½ INCH MINIMUM STONE FOR 6 INCH MINIMUM DEPTH) AND RIPRAP TO THE REQUIRED LINES AND GRADES. COMPACT ANY FILL REQUIRED IN THE SUBGRADE TO A DENSITY OF APPROXIMATELY THAT OF THE SURROUNDING UNDISTURBED MATERIAL.
3. EXTEND GEOTEXTILE AT LEAST 6 INCHES BEYOND EDGES OF RIPRAP AND EMBED AT LEAST 4 INCHES AT SIDES OF RIPRAP.
4. CONSTRUCT RIPRAP OUTLET TO FULL COURSE THICKNESS IN ONE OPERATION AND IN SUCH A MANNER AS TO AVOID DISPLACEMENT OF UNDERLYING MATERIALS. PLACE STONE FOR RIPRAP OUTLET IN A MANNER THAT WILL ENSURE THAT IT IS REASONABLY HOMOGENOUS WITH THE SMALLER STONES AND SPALLS FILLING THE VOIDS BETWEEN THE LARGER STONES. PLACE RIPRAP IN A MANNER TO PREVENT DAMAGE TO THE FILTER BLANKET OR GEOTEXTILE. HAND PLACE TO THE EXTENT NECESSARY.
5. WHERE NO ENDWALL IS USED, CONSTRUCT THE UPSTREAM END OF THE APRON SO THAT THE WIDTH IS TWO TIMES THE DIAMETER OF THE OUTLET PIPE, AND EXTEND THE STONE UNDER THE OUTLET BY A MINIMUM OF 18 INCHES.
6. CONSTRUCT APRON WITH 0% SLOPE ALONG ITS LENGTH AND WITHOUT OBSTRUCTIONS. PLACE STONE SO THAT IT BLENDS IN WITH EXISTING GROUND.
7. MAINTAIN LINE, GRADE, AND CROSS SECTION. KEEP OUTLET FREE OF EROSION. REMOVE ACCUMULATED SEDIMENT AND DEBRIS. AFTER HIGH FLOWS INSPECT FOR SCOUR AND RIPRAP DISLODGED RIPRAP. MAKE NECESSARY REPAIRS IMMEDIATELY.

RIP-RAP CHANNEL DESIGN DATA

STRUCTURE	W	n	V25 (F.P.S.)	Q25 (C.F.S.)	RIP-RAP SIZE D50	RIP-RAP SIZE Dmax	BLANKET THICKNESS	PIPE SIZE	La
E-1	6.25	0.04	8.95	1.58	8"	15"	19"	15"	5'

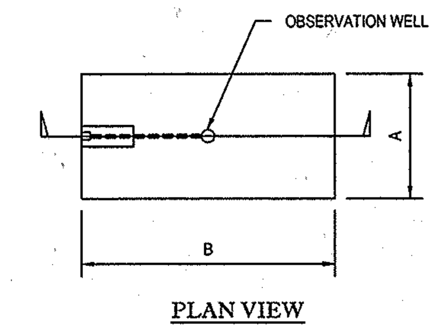

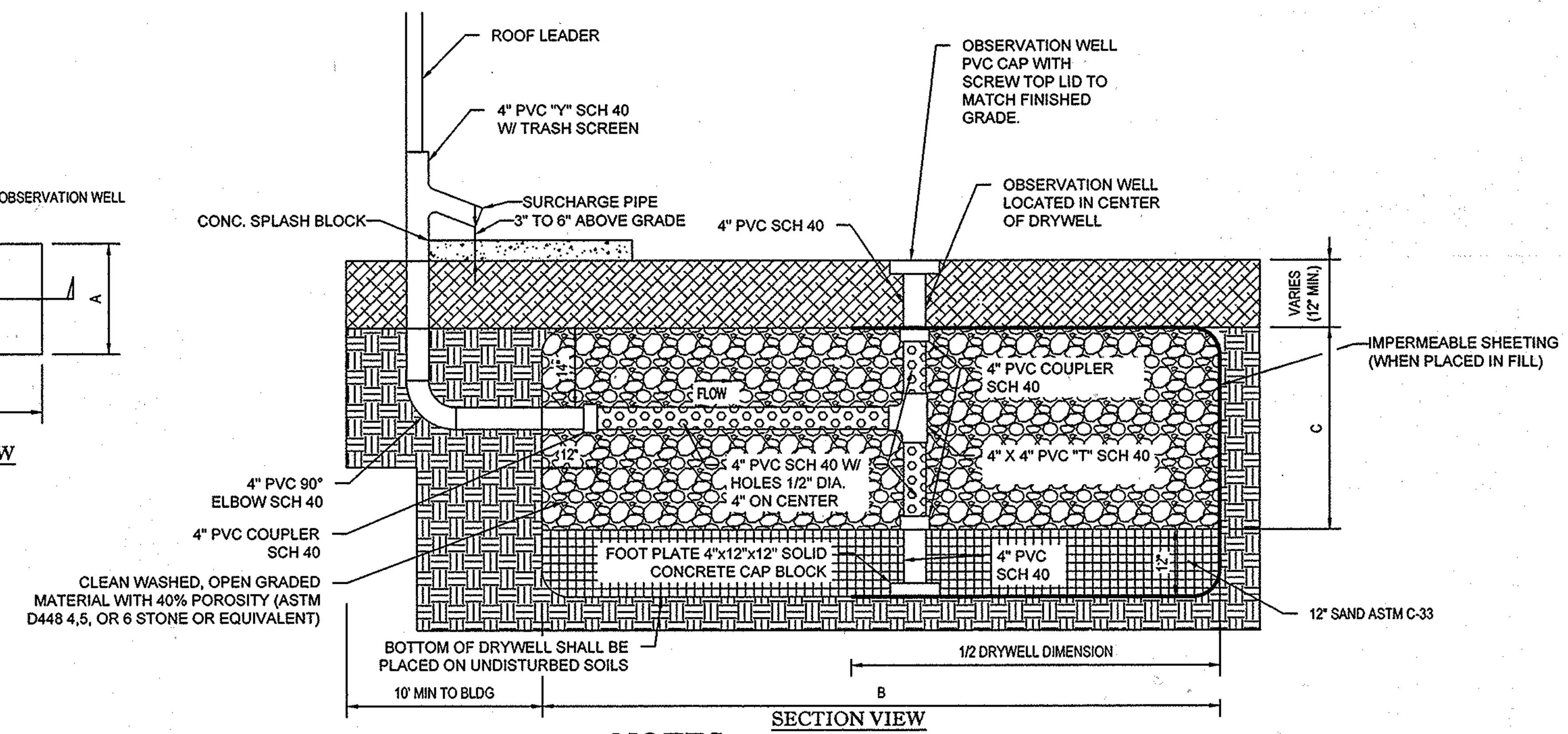

NOTES:

1. FROM THE DOWNSPOUT TO THE DRYWELL THE DRAIN PIPE MUST BE AT LEAST 6" BELOW GRADE.
2. NONWOVEN GEOTEXTILE FABRIC TO BE INSTALLED ON TOP AND SIDES ONLY. THESE GEOTEXTILES ARE AVAILABLE IN FINKSBURG @ ES&G DISTRIBUTORS 2601 EMORY RD. BLDG 8. 866-744-5001, ANY EQUIVALENT GEOTEXTILE IS ACCEPTABLE.
3. DRYWELL BOTTOM TO BE INSTALLED AS LEVEL AS POSSIBLE AND IN UNDISTURBED SOILS.
4. WHEN TOP OF DRYWELL IS PLACED IN FILL WITHIN 100' OF SLOPES 15% OR GREATER, AN IMPERMEABLE LINER SHALL BE PROVIDED ON THE STEEP SLOPE SIDE OF THE FACILITY AS SHOWN ABOVE.
5. ALL ROOF DRAINS LEADING TO A DRYWELL FACILITY SHALL HAVE A GUTTER DRAIN FILTER.
6. CONSTRUCTION OF A DRYWELL SHALL BE PERFORMED WITH A LIGHTWEIGHT WIDE-TRACKED EQUIPMENT TO MINIMIZE DISTURBANCE AND COMPACTION.

DRYWELL SIZE TABLE

DRYWELL NO.	DRYWELL DIMENSIONS A	B	C	DRYWELL ESDv STORAGE PROVIDED (CUBIC FOOT)
#1	9.75'	14.00'	4.67'	254.98
#2	10.25'	14.00'	4.67'	268.06
#3	8.50'	14.00'	4.67'	222.29

STANDARD DRYWELL SECTION

NOT TO SCALE

PLANT MATERIAL MICRO-BIORETENTION FACILITIES

FACILITY	AREA (S.F.)	PONDING DEPTH	BOTANICAL NAME	COMMON NAME	COUNT	SIZE
# 19	217	12"	ASTER NOVAE-ANGLIAE	NEW ENGLAND ASTER	14	PLUG
			IRIS VERSICOLOR	BLUE FLAG	14	PLUG
			LOBELIA CARDINALIS	CARDINAL FLOWER	14	PLUG
			JUNCUS EFFUSUS	SOFT RUSH	28	PLUG
			SCIRPUS ACUTUS	HARDSTEMMED BULLRUSH	28	PLUG

FACILITY	AREA (S.F.)	PONDING DEPTH	BOTANICAL NAME	COMMON NAME	COUNT	SIZE
# 21	219	12"	ASTER NOVAE-ANGLIAE	NEW ENGLAND ASTER	14	PLUG
			IRIS VERSICOLOR	BLUE FLAG	14	PLUG
			LOBELIA CARDINALIS	CARDINAL FLOWER	14	PLUG
			JUNCUS EFFUSUS	SOFT RUSH	28	PLUG
			SCIRPUS ACUTUS	HARDSTEMMED BULLRUSH	28	PLUG

FACILITY	AREA (S.F.)	PONDING DEPTH	BOTANICAL NAME	COMMON NAME	COUNT	SIZE
# 26	221	12"	ASTER NOVAE-ANGLIAE	NEW ENGLAND ASTER	14	PLUG
			IRIS VERSICOLOR	BLUE FLAG	14	PLUG
			LOBELIA CARDINALIS	CARDINAL FLOWER	14	PLUG
			JUNCUS EFFUSUS	SOFT RUSH	28	PLUG
			SCIRPUS ACUTUS	HARDSTEMMED BULLRUSH	28	PLUG

FACILITY	AREA (S.F.)	PONDING DEPTH	BOTANICAL NAME	COMMON NAME	COUNT	SIZE
#28	457	12"	ASTER NOVAE-ANGLIAE	NEW ENGLAND ASTER	30	PLUG
			IRIS VERSICOLOR	BLUE FLAG	30	PLUG
			LOBELIA CARDINALIS	CARDINAL FLOWER	30	PLUG
			JUNCUS EFFUSUS	SOFT RUSH	60	PLUG
			SCIRPUS ACUTUS	HARDSTEMMED BULLRUSH	60	PLUG

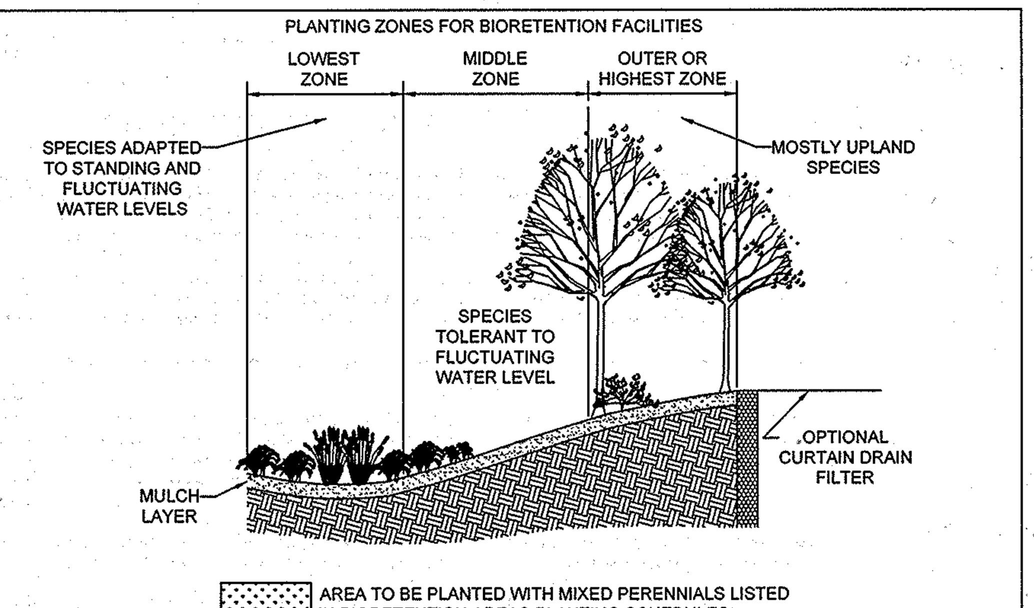

NOTES:
1. HERBACEOUS PERENNIALS TO BE PLANTED 18" O.C. IN GROUPS BETWEEN 15 TO 20 PLUGS
2. LANDSCAPE CONTRACTOR TO GROUP LIKE PLANTS TOGETHER IN EACH BED AS SHOWN IN PLANTING DISTRIBUTION PATTERN DETAIL.
3. ALL BIORETENTION AREAS ARE TO BE MULCHED WITH A 4" LAYER OF DOUBLE SHREDDED HARDWOOD BARK MULCH.
4. PLACEMENT OF THE PLANTING SOIL SHOULD BE IN 12" TO 18" LIFTS THAT ARE LOOSELY COMPACTED (TAMPED LIGHTLY WITH A BACKHOE BUCKET OR TRAVERSED BY DOZER TRACKS.

TYPICAL PLANTING FOR BIORETENTION AREAS

NOT TO SCALE

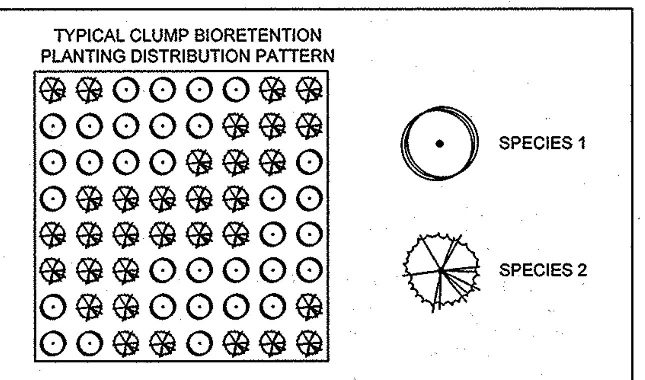

NOTE:
NATURALLY OCCURRING POPULATIONS TEND TO BE FOUND IN INFORMAL GROUPINGS. A CLUSTER OF PLANTS IS REALLY A MOSAIC OF DIFFERENT SPECIES GROUPS. THE OBJECTIVE IS TO SELECT THE APPROPRIATE SPECIES AND DISTRIBUTION PATTERN FOR A CHOSEN SITE THAT MIMIC NATURAL PATTERNS.

PLANTING DISTRIBUTION PATTERN DETAIL

NOT TO SCALE

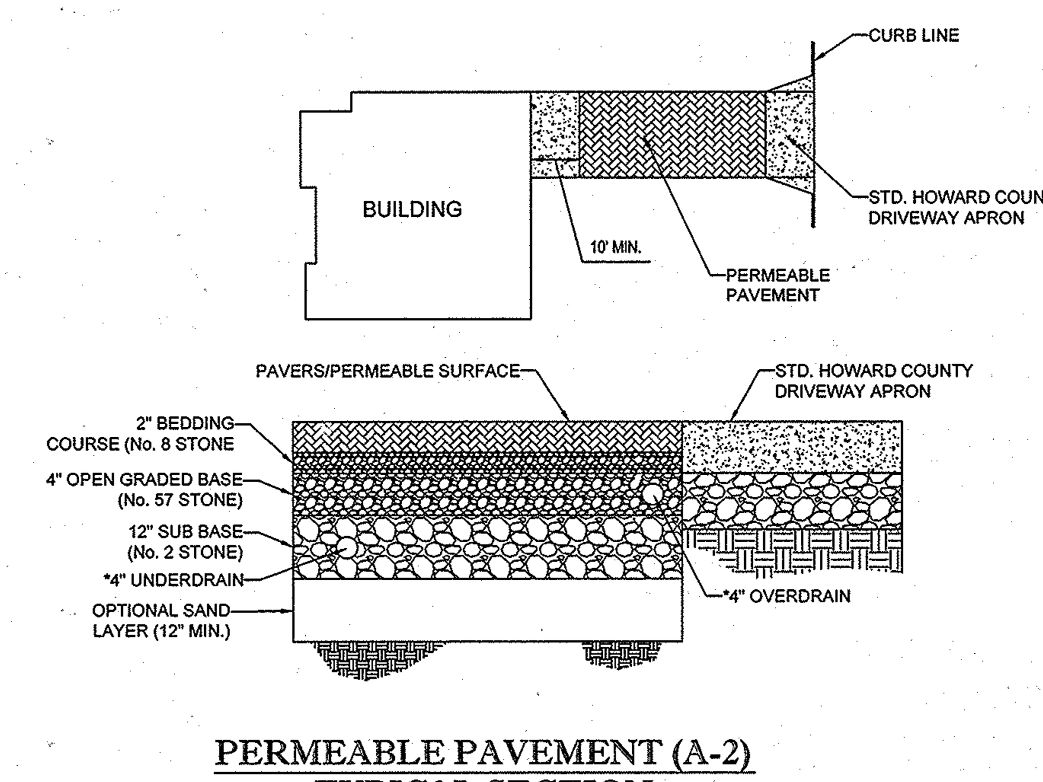

PERMEABLE PAVEMENT (A-2) TYPICAL SECTION (LOTS 1, 2 & 15-20)

NOT TO SCALE

NOTES:
*1. UNDERDRAIN SHALL BE LOCATED SUCH THAT IT CAN DAYLIGHT TO THE CURB, INTO A BIO-RETENTION FACILITY TO THE REAR OF THE LOT, OR CONNECT TO A PRIVATE YARD INLET.

*2. OVERDRAIN SHALL COMBINE WITH UNDERDRAIN OR DAYLIGHT AS DETAILED FOR UNDERDRAIN.

OPERATION AND MAINTENANCE SCHEDULE FOR PRIVATELY OWNED AND MAINTAINED PERMEABLE PAVEMENT (A-2)

1. THE OWNER SHALL PERIODICALLY SWEEP (OR VACUUM POROUS CONCRETE PAVEMENT) THE PAVEMENT SURFACE TO REDUCE SEDIMENT ACCUMULATION AND INSURE CONTINUED SURFACE POROSITY. SWEEPING SHOULD BE PERFORMED AT LEAST TWICE ANNUALLY WITH A COMMERCIAL LEANING UNIT. WASHING OR COMPRESSED AIR UNITS SHOULD NOT BE USED TO PERFORM SURFACE CLEANING.
2. THE OWNER SHALL PERIODICALLY CLEAN DRAINAGE PIPES, INLETS, STONE EDGE DRAINS AND OTHER STRUCTURES WITHIN OR DRAINING TO THE SUBBASE.
3. THE OWNER SHALL SHALL USE DEICERS IN MODERATION. DEICERS SHOULD BE NON-TOXIC AND BE APPLIED EITHER AS CALCIUM MAGNESIUM ACETATE OR AS PRETREATED SALT.
4. THE OWNER SHALL ENSURE SNOW PLOWING IS PERFORMED CAREFULLY WITH BLADES SET ONE INCH ABOVE THE SURFACE. PLOWED SNOW PILES AND SNOWMELT SHOULD NOT BE DIRECTED TO PERMEABLE PAVEMENT.

OPERATION AND MAINTENANCE SCHEDULE FOR BIO-RETENTION AREAS (M-6)

(FACILITY NOS. 19, 21, 26, & 28)

1. THE OWNER SHALL MAINTAIN THE PLANT MATERIAL, MULCH LAYER AND SOIL LAYER ANNUALLY. MAINTENANCE OF MULCH AND SOIL IS LIMITED TO CORRECTING AREAS OF EROSION OR WASH OUT. ANY MULCH REPLACEMENT SHALL BE DONE IN THE SPRING. PLANT MATERIAL SHALL BE CHECKED FOR DISEASE AND INSECT INFESTATION AND MAINTENANCE WILL ADDRESS DEAD MATERIAL AND PRUNING. ACCEPTABLE REPLACEMENT PLANT MATERIAL IS LIMITED TO THE FOLLOWING: 2000 MARYLAND STORMWATER DESIGN MANUAL VOLUME II, TABLE A.4.1 AND 2.
2. THE OWNER SHALL PERFORM A PLANT IN THE SPRING AND IN THE FALL EACH YEAR. DURING THE INSPECTION, THE OWNER SHALL REMOVE DEAD AND DISEASED VEGETATION CONSIDERED BEYOND TREATMENT, REPLACE DEAD PLANT MATERIAL WITH ACCEPTABLE REPLACEMENT PLAN MATERIAL, TREAT DISEASED TREES AND SHRUBS AND REPLACE DEFICIENT STAKES AND WIRES.
3. THE OWNER SHALL INSPECT THE MULCH EACH SPRING. THE MULCH SHALL BE REPLACED EVERY TWO TO THREE YEARS. THE PREVIOUS MULCH LAYER SHALL BE REMOVED BEFORE THE NEW LAYER IS APPLIED.
4. THE OWNER SHALL CORRECT SOIL EROSION ON AN AS NEEDED BASIS, WITH A MINIMUM OF ONCE PER MONTH AND AFTER EACH HEAVY STORM.

DRY WELL CONSTRUCTION SPECIFICATIONS

REGULAR INSPECTIONS SHALL BE DURING THE FOLLOWING STAGES OF CONSTRUCTION:

- DURING EXCAVATION TO SUBGRADE
- DURING PLACEMENT OF BACKFILL AND PERFORATED INLET PIPE AND OBSERVATION WELL
- DURING PLACEMENT OF GEOTEXTILES AND ALL FILTER MEDIA
- DURING CONSTRUCTION OF THE APPURTENANT CONVEYANCE
- UPON COMPLETION OF FINAL GRADING AND ESTABLISHMENT OF PERMANENT STABILIZATION.

OPERATION AND MAINTENANCE SCHEDULE FOR PRIVATELY OWNED DRY WELLS

1. PRIVATELY OWNED PRACTICES SHALL HAVE A MAINTENANCE PLAN AND SHALL BE PROTECTED BY EASEMENT, DEED RESTRICTION, ORDINANCE, OR OTHER LEGAL MEASURES PREVENTING ITS NEGLECT, ADVERSE ALTERATION, AND REMOVAL.
2. DRY WELLS SHALL BE INSPECTED AND CLEANED ANNUALLY BY THE OWNER. THIS INCLUDES GUTTERS, DOWNSPOUTS, AND ALL FILTERS.
3. PONDING, STANDING WATER, OR ALGAL GROWTH ON THE TOP OF A DRY WELL MAY INDICATE FAILURE DUE TO SEDIMENTATION IN THE GRAVEL MEDIA. IF WATER PONDS FOR MORE THAN 48 HOURS AFTER A MAJOR STORM OR MORE THAN SIX INCHES OF SEDIMENT HAS ACCUMULATED, THE GRAVEL MEDIA SHOULD BE EXCAVATED AND REPLACED.

ENGINEER'S CERTIFICATE

"I HEREBY CERTIFY THAT THIS PLAN FOR EROSION AND SEDIMENT CONTROL REPRESENTS A PRACTICAL AND WORKABLE PLAN BASED ON MY PERSONAL KNOWLEDGE OF THE SITE CONDITIONS AND IT WAS PREPARED IN ACCORDANCE WITH THE REQUIREMENTS OF THE HOWARD SOIL CONSERVATION DISTRICT."

SIGNATURE OF ENGINEER — DATE 11/25/14
BRANDON R. ROWE, P.E.

DEVELOPER'S CERTIFICATE

"I/WE HEREBY CERTIFY THAT ALL DEVELOPMENT AND CONSTRUCTION WILL BE DONE ACCORDING TO THIS PLAN, AND THAT ANY RESPONSIBLE PERSONNEL INVOLVED IN THE CONSTRUCTION PROJECT WILL HAVE A CERTIFICATE OF ATTENDANCE AT A DEPARTMENT OF THE ENVIRONMENT APPROVED TRAINING PROGRAM FOR THE CONTROL OF SEDIMENT AND EROSION BEFORE BEGINNING THE PROJECT. I ALSO AUTHORIZE PERIODIC ONSITE INSPECTION BY THE HOWARD SOIL CONSERVATION DISTRICT."

NAME: DAVID PASTVA — DATE
TITLE: VICE PRESIDENT

THIS DEVELOPMENT PLAN IS APPROVED FOR SOIL EROSION AND SEDIMENT CONTROL BY THE HOWARD SOIL CONSERVATION DISTRICT.

HOWARD SCD — DATE 12/9/14

BUILDER:	OWNER/DEVELOPER:
CRAFTMARK HOMES, INC. 1355 BEVERLY ROAD, SUITE 330 MCLEAN, VA 22101 CONTACT: DAVID SCHOEN PHONE: (703) 898-0377	CM HIGDON LC 1355 BEVERLY ROAD, SUITE 330 MCLEAN, VA 22101 CONTACT: DAVID SCHOEN PHONE: (703) 898-0377

PERMIT INFORMATION CHART

SUBDIVISION NAME: RESERVOIR ESTATES	SECTION/AREA: N/A	LOT/PARCEL NO.: 56	
PLAT # OR L/F: 15161/365	GRID #: 11	ZONING: R-20	TAX MAP NO.: 46
ELECT DISTR: 6TH	CENSUS TRACT: 606805		

PREVIOUS FILE No. : WP-13-048, ECP-13-038, BA-95-028, SP-13-008, 24-4787-D, F-14-003

PROFESSIONAL CERTIFICATION
I, BRANDON R. ROWE, HEREBY CERTIFY THAT THESE DOCUMENTS WERE PREPARED OR APPROVED BY ME, AND THAT I AM A DULY LICENSED PROFESSIONAL ENGINEER UNDER THE LAWS OF THE STATE OF MARYLAND, LICENSE NO. 40808, EXPIRATION DATE: 7/3/2015

APPROVED: DEPARTMENT OF PLANNING AND ZONING

CHIEF, DIVISION OF LAND DEVELOPMENT — DATE 12-19-14
CHIEF, DEVELOPMENT ENGINEERING DIVISION — DATE 12-15-14
DIRECTOR - DEPARTMENT OF PLANNING AND ZONING — DATE 12/19/14

BOHLER ENGINEERING™
SITE CIVIL AND CONSULTING ENGINEERING · LAND SURVEYING · PROGRAM MANAGEMENT · LANDSCAPE ARCHITECTURE · SUSTAINABLE DESIGN · PERMITTING SERVICES · TRANSPORTATION SERVICES
WARREN, NJ · UPSTATE NEW YORK · BOSTON, MA · NEW YORK METRO · PHILADELPHIA/SOUTHERN NJ · LEHIGH VALLEY, PA · SOUTHEASTERN, PA · BALTIMORE, MD · SOUTHERN MARYLAND · NORTHERN VIRGINIA · CENTRAL VIRGINIA · CHARLOTTE, NC · RALEIGH, NC

THE INFORMATION, DESIGN AND CONTENT OF THIS PLAN ARE PROPRIETARY AND SHALL NOT BE COPIED OR USED FOR ANY PURPOSE WITHOUT PRIOR WRITTEN AUTHORIZATION FROM BOHLER ENGINEERING. ONLY APPROVED, SIGNED AND SEALED PLANS SHALL BE UTILIZED FOR CONSTRUCTION PURPOSES. © 2008 BOHLER ENGINEERING.

REVISIONS

REV	DATE	COMMENT	BY

THE FOLLOWING STATES REQUIRE NOTIFICATION BY EXCAVATORS, DESIGNERS, OR ANY PERSON PREPARING TO DISTURB THE EARTH'S SURFACE ANYWHERE IN THE STATE. IN VIRGINIA, MARYLAND, THE DISTRICT OF COLUMBIA, NORTH CAROLINA AND DELAWARE CALL - 811 (WV 1-800-245-4848) (PA 1-800-242-1776) (DC 1-800-257-7777) (VA 1-800-552-7001) (MD 1-800-257-7777) (DE 1-800-282-8555)

NOT APPROVED FOR CONSTRUCTION

PROJECT No.:	MD122066.1
DRAWN BY:	RLB
CHECKED BY:	BRR
DATE:	11/20/14
SCALE:	AS SHOWN
CAD I.D.:	SD1

PROJECT: SITE DEVELOPMENT PLANS FOR RESERVOIR ESTATES
SINGLE FAMILY DETACHED UNITS
BUILDABLE LOTS 1-20 AND OPEN SPACE LOTS 21-26
PLAT NO. 23120
LOCATION OF SITE
10883 AND 10887 SCAGGSVILLE ROAD
LAUREL, MD. 20723
HOWARD COUNTY

BOHLER ENGINEERING
901 DULANEY VALLEY ROAD, SUITE 801
TOWSON, MARYLAND 21204
Phone: (410) 821-7900
Fax: (410) 821-7987
MD@BohlerEng.com

B R ROWE
PROFESSIONAL ENGINEER

SHEET TITLE: STORMWATER MANAGEMENT NOTES & DETAILS

SHEET NUMBER: 13 OF 15

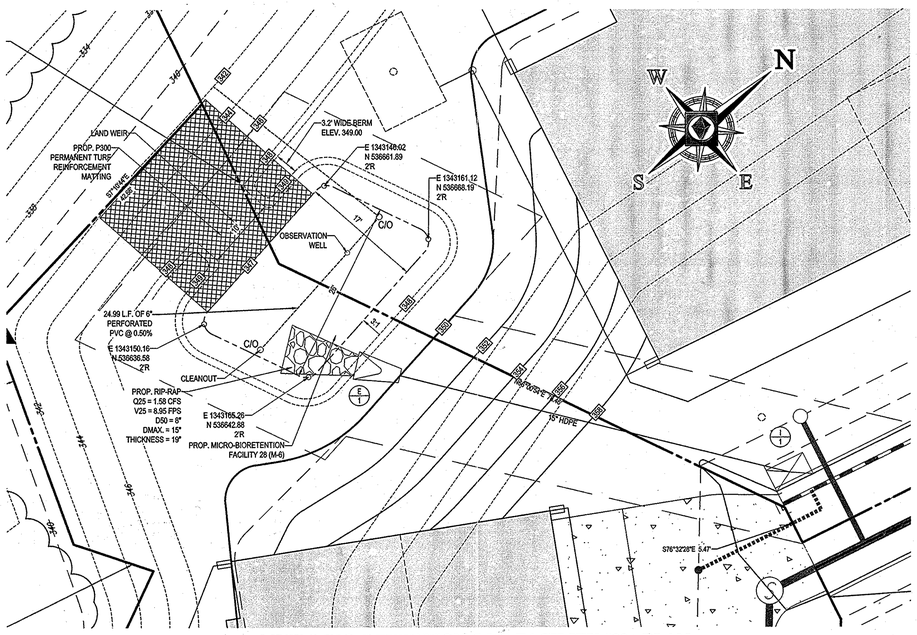

MICRO BIO-RETENTION (M-6) FACILITY #28 - PLAN

SCALE : 1" = 10'

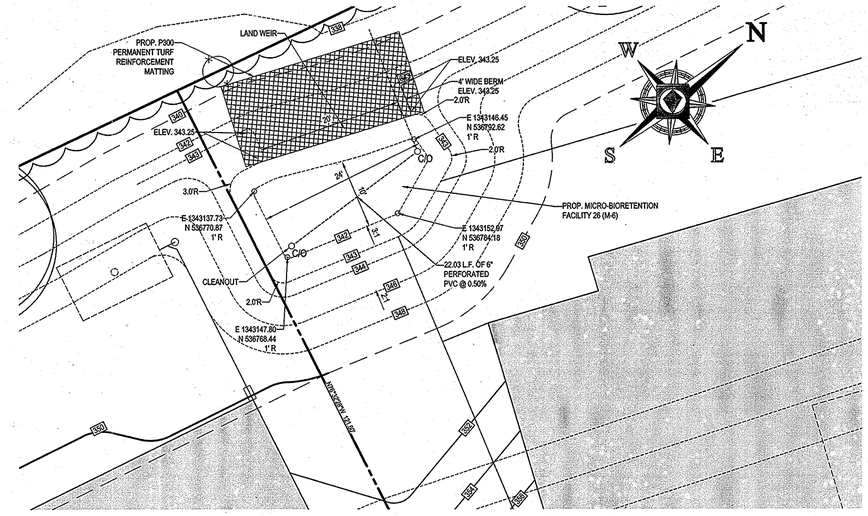

MICRO BIO-RETENTION (M-6) FACILITY #26 - PLAN

SCALE : 1" = 10'

MICRO-BIORETENTION FACILITY DIMENSIONS						
FACILITY NO.	LENGTH (FT.)	WIDTH (FT.)	BOTTOM (FT.)	UNDERDRAIN INV. (EL.)	LAND WEIR (EL.)	OVERFLOW INLET (EL.)
19	27.5	8	360.00	356.67	361.00	N/A
21	27.75	8	360.00	356.67	361.00	N/A
26	24	10	342.00	338.67	343.00	N/A
28	26	17	347.00	343.67	348.00	N/A

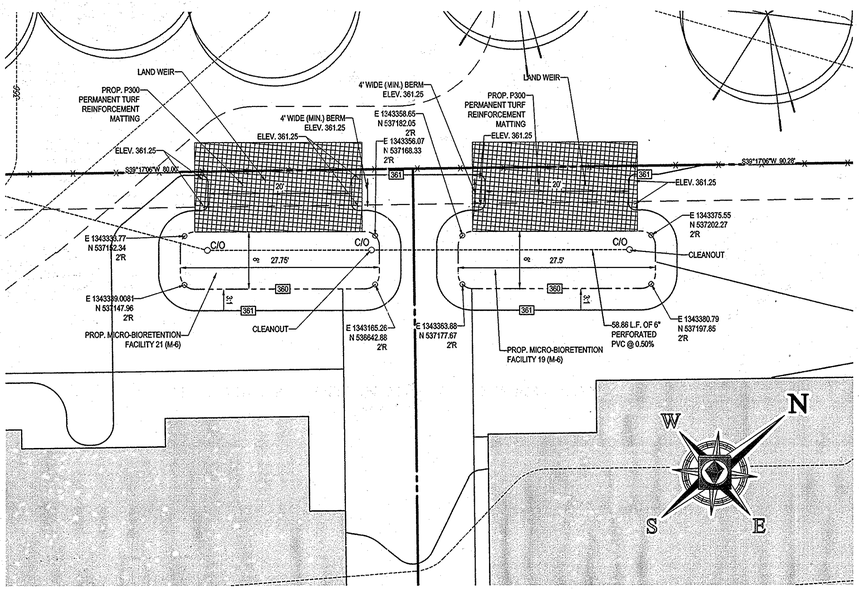

MICRO BIO-RETENTION (M-6) FACILITY #19 & #21 - PLAN

SCALE : 1" = 10'

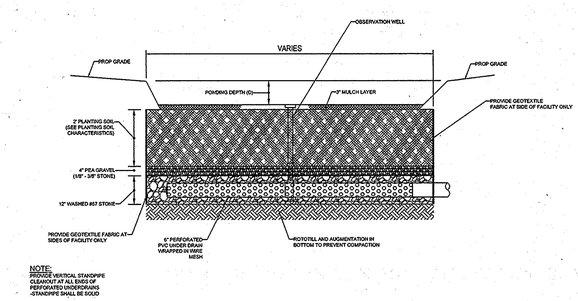

NOTE:
-PROVIDE VERTICAL STANDPIPE CLEANOUT AT ALL ENDS OF PERFORATED UNDERDRAINS
-STANDPIPE SHALL BE SOLID

TYPICAL MICRO-BIORETENTION FACILITY SECTION

NTS

APPROVED: DEPARTMENT OF PLANNING AND ZONING

CHIEF, DIVISION OF LAND DEVELOPMENT	DATE 12-19-14
CHIEF, DEVELOPMENT ENGINEERING DIVISION	DATE 12-15-14
DIRECTOR - DEPARTMENT OF PLANNING AND ZONING	DATE 12/19/14

ENGINEER'S CERTIFICATE

"I HEREBY CERTIFY THAT THIS PLAN FOR EROSION AND SEDIMENT CONTROL REPRESENTS A PRACTICAL AND WORKABLE PLAN BASED ON MY PERSONAL KNOWLEDGE OF THE SITE CONDITIONS AND IT WAS PREPARED IN ACCORDANCE WITH THE REQUIREMENTS OF THE HOWARD SOIL CONSERVATION DISTRICT."

SIGNATURE OF ENGINEER BRANDON R. ROWE, P.E. — DATE 11/25/14

DEVELOPER'S CERTIFICATE

"I/WE HEREBY CERTIFY THAT ALL DEVELOPMENT AND CONSTRUCTION WILL BE DONE ACCORDING TO THIS PLAN, AND THAT ANY RESPONSIBLE PERSONNEL INVOLVED IN THE CONSTRUCTION PROJECT WILL HAVE A CERTIFICATE OF ATTENDANCE AT A DEPARTMENT OF THE ENVIRONMENT APPROVED TRAINING PROGRAM FOR THE CONTROL OF SEDIMENT AND EROSION BEFORE BEGINNING THE PROJECT. I ALSO AUTHORIZE PERIODIC ONSITE INSPECTION BY THE HOWARD SOIL CONSERVATION DISTRICT."

NAME: DAVID PASTVA
TITLE: VICE PRESIDENT — DATE 11/24/14

THIS DEVELOPMENT PLAN IS APPROVED FOR SOIL EROSION AND SEDIMENT CONTROL BY THE HOWARD SOIL CONSERVATION DISTRICT.

HOWARD SCD — DATE 12/9/14

BUILDER:	OWNER/DEVELOPER:
CRAFTMARK HOMES, INC. 1355 BEVERLY ROAD, SUITE 330 MCLEAN, VA 22101 CONTACT: DAVID SCHOEN PHONE: (703) 898-0377	CM HOGDON LC 1355 BEVERLY ROAD, SUITE 330 MCLEAN, VA 22101 CONTACT: DAVID SCHOEN PHONE: (703) 898-0377

PERMIT INFORMATION CHART

SUBDIVISION NAME: RESERVOIR ESTATES		SECTION/AREA: N/A	LOT/PARCEL NO.: 56	
PLAT # OR L/F: 15161/365	GRID #: 11	ZONING: R-20	TAX MAP NO.: 46	ELECT DISTR: 6TH / CENSUS TRACT: 606805

PREVIOUS FILE No. : WP-13-048, ECP-13-038, BA-95-028, SP-13-008, 24-4787-D, F-14-003

PROFESSIONAL CERTIFICATION
I, BRANDON R. ROWE, HEREBY CERTIFY THAT THESE DOCUMENTS WERE PREPARED OR APPROVED BY ME, AND THAT I AM A DULY LICENSED PROFESSIONAL ENGINEER UNDER THE LAWS OF THE STATE OF MARYLAND, LICENSE NO. 40809, EXPIRATION DATE: 7/03/2015

BOHLER™ ENGINEERING
SITE CIVIL AND CONSULTING ENGINEERING
LAND SURVEYING — SUSTAINABLE DESIGN — NEW JERSEY
LANDSCAPE ARCHITECTURE — PROGRAM MANAGEMENT — TRANSPORTATION SERVICES — PERMITTING SERVICES
NEW JERSEY
SOUTHERN MARYLAND
NORTHERN VIRGINIA
CENTRAL VIRGINIA
CHARLOTTE, NC
RALEIGH, NC
THE REPRODUCTION, DISTRIBUTION AND/OR USE OF THESE PLANS AND SPECIFICATIONS FOR ANY PURPOSE, WITHOUT PRIOR WRITTEN AUTHORIZATION FROM BOHLER ENGINEERING, IS STRICTLY PROHIBITED.

REVISIONS

REV	DATE	COMMENT	BY

THE FOLLOWING STATES REQUIRE NOTIFICATION BY EXCAVATORS, DESIGNERS, OR ANY PERSON PREPARING TO DISTURB THE EARTH'S SURFACE ANYWHERE IN THE STATE. IN VIRGINIA, MARYLAND, THE DISTRICT OF COLUMBIA, NORTH CAROLINA AND DELAWARE CALL - 811
(NV 1-800-245-6648) (PA 1-800-242-1776) (DC 1-800-257-7777)
(VA 1-800-552-7001) (MD 1-800-257-7777) (DE 1-800-282-8555)

NOT APPROVED FOR CONSTRUCTION

PROJECT No.:	MD122066.1
DRAWN BY:	RLB
CHECKED BY:	BRR
DATE:	11/20/14
SCALE:	AS SHOWN
CAD I.D.:	SM0

PROJECT: SITE DEVELOPMENT PLANS FOR RESERVOIR ESTATES
SINGLE FAMILY DETACHED UNITS
BUILDABLE LOTS 1-20 AND OPEN SPACE LOTS 21-26
PLAT NO. 23120
LOCATION OF SITE
10883 AND 10887 SCAGGSVILLE ROAD
LAUREL, MD. 20723
HOWARD COUNTY

BOHLER ENGINEERING
901 DULANEY VALLEY ROAD, SUITE 801
TOWSON, MARYLAND 21204
Phone: (410) 821-7900
Fax: (410) 821-7987
MD@BohlerEng.com

STATE OF MARYLAND — BRANDON R. ROWE — No. 40809 — PROFESSIONAL ENGINEER — 7/03/2015

SHEET TITLE: STORMWATER MANAGEMENT NOTES & DETAILS

SHEET NUMBER: 14 OF 15

SDP-15-012

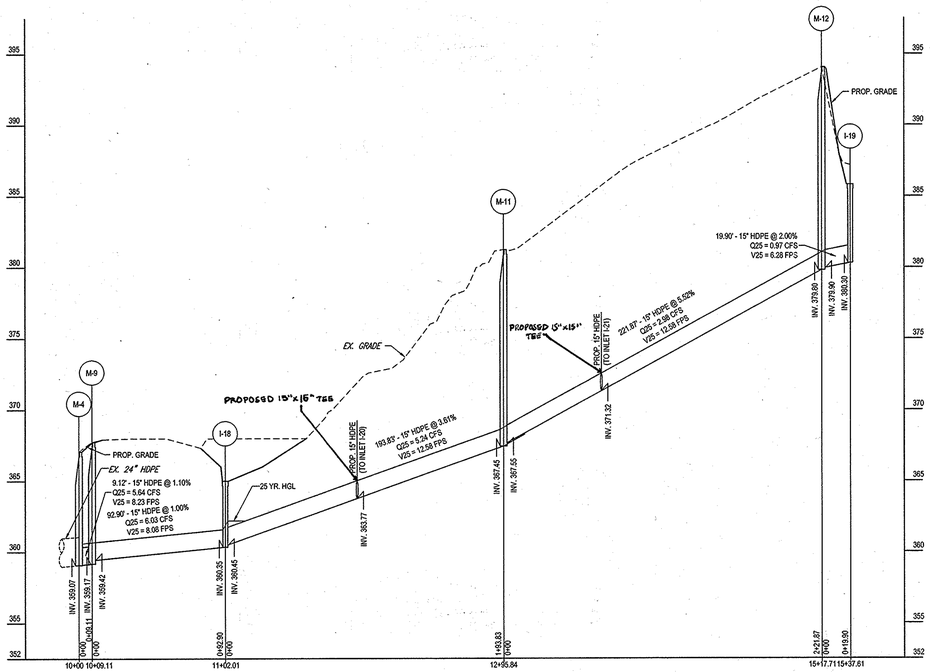

PROPOSED STORM DRAIN PROFILE

SCALE: 1"= 50' HORIZONTAL
1"= 5' VERTICAL

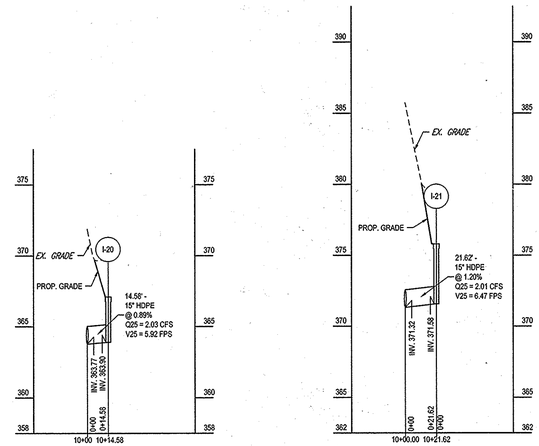

PROPOSED STORM DRAIN PROFILE

SCALE: 1"= 50' HORIZONTAL
1"= 5' VERTICAL

PROPOSED STORM DRAIN PROFILE

SCALE: 1"= 50' HORIZONTAL
1"= 5' VERTICAL

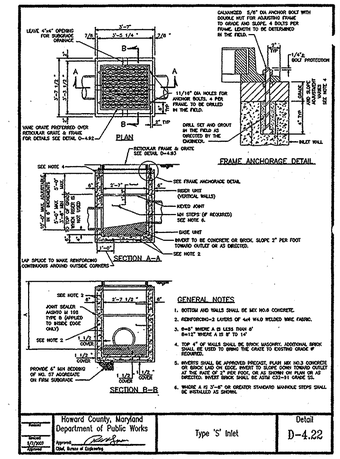

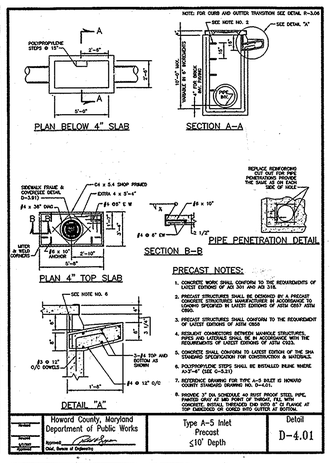

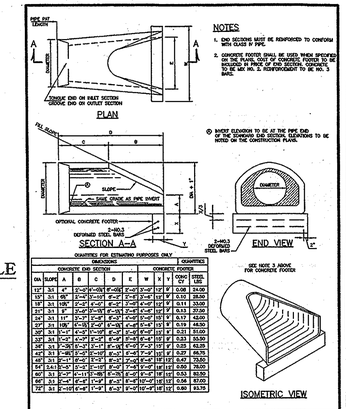

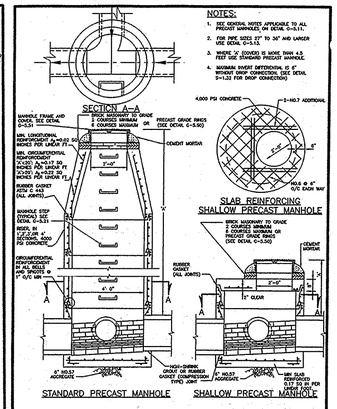

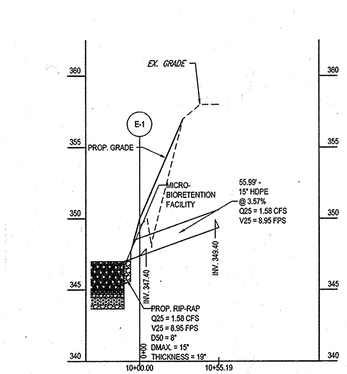

PROPOSED STORM DRAIN PROFILE

SCALE: 1"= 50' HORIZONTAL
1"= 5' VERTICAL

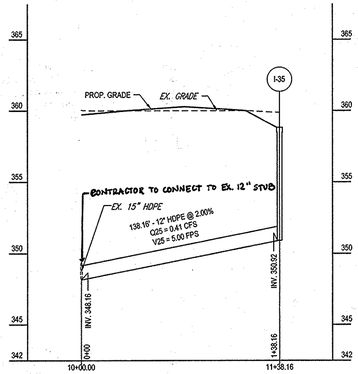

PROPOSED STORM DRAIN PROFILE

SCALE: 1"= 50' HORIZONTAL
1"= 5' VERTICAL

STORM STRUCTURE SCHEDULE

NAME	TYPE	RIM ELEV. (FT.)	INVERTS	COMMENTS	NORTHING EASTING
E-1	END SECTION	N/A	INV IN = 347.40		N 536652.76 E 1343173.31
I-1	A-5 INLET	350.94	INV OUT = 349.40		N 536685.66 E 1343218.61
I-18	TYPE 'S' INLET	365.00	INV IN = 360.45 INV OUT = 360.35		N 536780.25 E 1343541.20
I-19	NYLOPLAST DRAIN BASIN	385.80	INV OUT = 380.30	SEE NOTE BELOW	N 537103.71 E 1343801.82
I-20	NYLOPLAST DRAIN BASIN	367.10	INV OUT = 363.90	SEE NOTE BELOW	N 536856.82 E 1343593.78
I-21	NYLOPLAST DRAIN BASIN	375.80	INV OUT = 371.58	SEE NOTE BELOW	N 536996.99 E 1343701.84
I-26	NYLOPLAST DRAIN BASIN	366.00	INV OUT = 360.01	SEE NOTE BELOW	N 536936.55 E 1343497.38
I-27	NYLOPLAST DRAIN BASIN	369.90	INV OUT = 361.64	SEE NOTE BELOW	N 536998.83 E 1343552.14
I-28	NYLOPLAST DRAIN BASIN	374.40	INV OUT = 368.07	SEE NOTE BELOW	N 537047.27 E 1343606.88
I-29	NYLOPLAST DRAIN BASIN	378.90	INV OUT = 372.07	SEE NOTE BELOW	N 537109.91 E 1343657.34
I-30	NYLOPLAST DRAIN BASIN	383.40	INV OUT = 376.52	SEE NOTE BELOW	N 537172.49 E 1343706.06
I-31	NYLOPLAST DRAIN BASIN	389.40	INV OUT = 381.79	SEE NOTE BELOW	N 537253.31 E 1343770.82
I-35	NYLOPLAST DRAIN BASIN	358.83	INV OUT = 350.92	SEE NOTE BELOW	N 536749.25 E 1343256.71
M-4	EX. 48" MANHOLE	367.08	INV IN = 359.07		N 536841.66 E 1343461.04
M-9	48" MANHOLE	367.76	INV IN = 359.42 INV OUT = 359.17		N 536839.90 E 1343469.98
M-11	48" MANHOLE	381.25	INV IN = 367.55 INV OUT = 367.45		N 536920.83 E 1343674.64
M-12	48" MANHOLE	394.06	INV IN = 379.90 INV OUT = 379.80		N 537090.94 E 1343817.08

NOTE: NYLOPLAST DRAIN BASIN, SIZE = 15" W/ 15" DOME GRATE

STORM DRAIN SCHEDULE

FROM	PIPE NO.	LOWER INVERT	UPPER INVERT	LENGTH (FT.)	SLOPE (%)	SIZE (in.)	MATERIAL	TO
M-4	SD1	359.07	359.17	9.11	1.10%	15"	HDPE	M-9
M-9	SD2	359.42	360.35	92.90	1.00%	15"	HDPE	I-18
I-18	SD3	360.45	367.45	193.83	3.61%	15"	HDPE	M-11
M-11	SD4	367.55	379.80	221.87	5.52%	15"	HDPE	M-12
M-12	SD5	379.90	380.30	19.90	2.00%	15"	HDPE	I-19
PIPE	SD6	363.76	363.90	14.58	0.93%	15"	HDPE	I-20
PIPE	SD7	371.32	371.58	21.62	1.20%	15"	HDPE	I-21
E-1	SD8	347.40	349.40	55.99	3.57%	15"	HDPE	I-1
PIPE	SD9	348.16	350.92	138.16	2.00%	12"	HDPE	I-35

APPROVED: DEPARTMENT OF PLANNING AND ZONING

CHIEF, DIVISION OF LAND DEVELOPMENT	DATE 12-19-14
CHIEF, DEVELOPMENT ENGINEERING DIVISION	DATE 12-15-14
DIRECTOR - DEPARTMENT OF PLANNING AND ZONING	DATE 12/19/14

THIS DEVELOPMENT PLAN IS APPROVED FOR SOIL EROSION AND SEDIMENT CONTROL BY THE HOWARD SOIL CONSERVATION DISTRICT.

HOWARD SCD — DATE 12/9/14

BUILDER:	OWNER/DEVELOPER:
CRAFTMARK HOMES, INC. 1355 BEVERLY ROAD, SUITE 330 MCLEAN, VA 22101 CONTACT: DAVID SCHOEN PHONE: (703) 898-0377	CM HIGDON LC 1355 BEVERLY ROAD, SUITE 330 MCLEAN, VA 22101 CONTACT: DAVID SCHOEN PHONE: (703) 898-0377

PERMIT INFORMATION CHART

SUBDIVISION NAME: RESERVOIR ESTATES	SECTION/AREA: N/A	LOT/PARCEL NO.: 56
PLAT # OR L/F: 15161/365 GRID #: 11	ZONING: R-20 TAX MAP NO.: 46	ELECT DISTR: 6TH CENSUS TRACT: 606805

PREVIOUS FILE No.: WP-13-048, ECP-13-038, BA-95-028, SP-13-008, 24-4787-D, F-14-003

PROFESSIONAL CERTIFICATION
I, BRANDON R. ROWE, HEREBY CERTIFY THAT THESE DOCUMENTS WERE PREPARED OR APPROVED BY ME, AND THAT I AM A DULY LICENSED PROFESSIONAL ENGINEER UNDER THE LAWS OF THE STATE OF MARYLAND, LICENSE NO. 40808, EXPIRATION DATE: 7/3/2015.

BOHLER ENGINEERING
SITE CIVIL AND CONSULTING ENGINEERING
LAND SURVEYING / SUSTAINABLE DESIGN / PROGRAM MANAGEMENT / PERMITTING SERVICES / LANDSCAPE ARCHITECTURE / TRANSPORTATION SERVICES
WASHINGTON, DC
SOUTHERN MARYLAND
NORTHERN VIRGINIA
CENTRAL VIRGINIA
CHARLOTTE, NC
RALEIGH, NC
UPSTATE NEW YORK
BOSTON, MA
PHILADELPHIA/SOUTHERN NJ
CINCINNATI, OH
SOUTHWESTERN, PA

THE INFORMATION, DESIGNS AND CONCEPTS ON THIS PLAN ARE PROPRIETARY AND SHALL NOT BE COPIED OR USED FOR ANY PURPOSE WITHOUT WRITTEN AUTHORIZATION FROM BOHLER ENGINEERING. THE PLAN MAY BE REPRODUCED FOR REVIEW AND INFORMATIONAL PURPOSES WITHOUT THE ABOVE RESTRICTIONS.

REVISIONS

REV	DATE	COMMENT	BY

THE FOLLOWING STATES REQUIRE NOTIFICATION BY EXCAVATORS, DESIGNERS, OR ANY PERSON PREPARING TO DISTURB THE EARTH'S SURFACE ANYWHERE IN THE STATE: IN VIRGINIA, MARYLAND, THE DISTRICT OF COLUMBIA, NORTH CAROLINA AND DELAWARE CALL 811
(WV 1-800-245-4848) (PA 1-800-242-1776) (DC 1-800-257-7777) (VA 1-800-552-7001) (MD 1-800-257-7777) (DE 1-800-282-8555)

NOT APPROVED FOR CONSTRUCTION

PROJECT No.:	MD122066.1
DRAWN BY:	RLB
CHECKED BY:	BRR
DATE:	11/20/14
SCALE:	AS SHOWN
CAD I.D.:	PDO

PROJECT: SITE DEVELOPMENT PLANS FOR RESERVOIR ESTATES
SINGLE FAMILY DETACHED UNITS
BUILDABLE LOTS 1-20 AND OPEN SPACE LOTS 21-26
PLAT NO. 23/20
LOCATION OF SITE
10883 AND 10887 SCAGGSVILLE ROAD
LAUREL, MD. 20723
HOWARD COUNTY

BOHLER ENGINEERING
901 DULANEY VALLEY ROAD, SUITE 801
TOWSON, MARYLAND 21204
Phone: (410) 821-7900
Fax: (410) 821-7987
MD@BohlerEng.com

B.R. ROWE — PROFESSIONAL ENGINEER

SHEET TITLE: STORM DRAIN PROFILES

SHEET NUMBER: 15 OF 15

SDP-15-012