# SITE DEVELOPMENT PLAN
# FOR
# NAPA WASHINGTON
# HOWARD COUNTY, MARYLAND

## GENERAL NOTES

1. BENCHMARK: CAPPED REBAR SET; ELEVATION = 215.11 (NAVD-88 DATUM).
2. NOTHING SHALL BE PLACED, PLANTED, SET OR PUT WITHIN AN AREA OF AN EASEMENT THAT WOULD ADVERSELY AFFECT THE FUNCTION OF THE EASEMENT.
3. BOUNDARY AND TOPOGRAPHIC SURVEY BY RETTEW ASSOCIATES, INC. DATED NOVEMBER 2013.
4. THE EXISTING TOPOGRAPHY IS TAKEN FROM FIELD RUN SURVEY WITH MAXIMUM TWO FOOT CONTOUR INTERVALS PREPARED BY RETTEW ASSOCIATES DATED.
5. ALL CONSTRUCTION SHALL BE IN ACCORDANCE WITH THE LATEST STANDARDS AND SPECIFICATIONS OF HOWARD COUNTY PLUS MSHA STANDARDS AND SPECIFICATIONS IF APPLICABLE.
6. THE CONTRACTOR SHALL NOTIFY THE DEPARTMENT OF PUBLIC WORKS/BUREAU OF ENGINEERING/CONSTRUCTION INSPECTION DIVISION AT (410) 313-1880 AT LEAST FIVE (5) WORKING DAYS PRIOR TO THE START OF WORK.
7. THE CONTRACTOR SHALL NOTIFY "MISS UTILITY" AT 1-800-257-7777 AT LEAST 48 HOURS PRIOR TO ANY EXCAVATION WORK BEING DONE.
8. THE SITE SHALL BE SERVED WITH PUBLIC WATER AND PUBLIC SANITARY SEWER FACILITIES.
9. THE CONTRACTOR SHALL NOTIFY ALL APPROPRIATE UTILITIES AT LEAST 72 HOURS PRIOR TO THE START OF ANY CONSTRUCTION. ALL UTILITIES HAVE BEEN IDENTIFIED BASED ON THE BEST AVAILABLE INFORMATION AND LISTED ON THESE PLANS IN ACCORDANCE WITH ACT 187 REQUIREMENTS. THE CONTRACTOR SHALL VERIFY THE LOCATIONS OF EXISTING UTILITIES AND ALL EFFORTS SHALL BE UNDERTAKEN TO PROTECT EXISTING UTILITIES AND MAINTAIN UNINTERRUPTED SERVICE. ANY DAMAGE TO UTILITIES BY THE CONTRACTOR SHALL BE REPAIRED IMMEDIATELY AT THE CONTRACTOR'S EXPENSE. RESTORATION OF ALL EXISTING SURFACE IMPROVEMENTS DAMAGED OR ALTERED DURING CONSTRUCTION, INCLUDING LANDSCAPING, SHALL ALSO BE THE RESPONSIBILITY OF THE CONTRACTOR.
10. THE CONTRACTOR SHALL MAKE PROVISIONS FOR MAINTAINING THE SAFE FLOW OF TRAFFIC DURING CONSTRUCTION WITHIN THE SITE AND THE EXISTING ROAD RIGHTS-OF-WAY WHILE ENTERING AND LEAVING THE SITE.
11. THE CONTRACTOR SHALL BE RESPONSIBLE FOR OBTAINING ANY PERMITS RELATIVE TO THE CONSTRUCTION PROPOSED ON THIS PLAN.
12. ALL STORM SEWERS AND APPURTENANCES SHALL BE CONSTRUCTED IN ACCORDANCE WITH THE APPROVED PLANS AND TO THE STANDARDS OF THE HOWARD COUNTY ORDINANCES, PLUS MSHA STANDARDS AND SPECIFICATIONS IF APPLICABLE.
13. THERE SHALL BE NO CHANGES OR DEVIATION FROM THESE PLANS UNLESS APPROVED BY THE ENGINEER. SUCH PLAN CHANGES, SHOULD THEY BECOME NECESSARY, ARE SUBJECT TO HOWARD COUNTY ORDINANCES.
14. THE CONTRACTOR SHALL INSPECT EXISTING SITE/PROJECT AREA CONDITIONS AND VERIFY ALL QUANTITIES AND MATERIALS PRIOR TO THE START OF CONSTRUCTION.
15. STORMWATER FACILITIES, INCLUDING SWALES, STORM PIPING, AND APPURTENANCES SHALL BE MAINTAINED IN GOOD WORKING CONDITION BY THE DEVELOPER OR THE SUCCESSIVE LAND OWNER. HOWARD COUNTY SHALL HAVE THE RIGHT TO INSPECT THE FACILITIES AT ANY TIME; REQUIRE THE OWNER TO TAKE CORRECTIVE MEASURES AND ASSIGN THE OWNER REASONABLE TIME PERIODS FOR ANY NECESSARY ACTION; AUTHORIZE MAINTENANCE TO BE DONE AND LIEN ALL COST OF THE WORK AGAINST THE PROPERTIES OF THE OWNER RESPONSIBLE FOR MAINTENANCE.
16. THE STREET, CURBS, AND SIDEWALKS SHALL BE CONSTRUCTED IN ACCORDANCE WITH THE STANDARDS AND SPECIFICATIONS OF HOWARD COUNTY AS APPLICABLE.
17. NO PORTION OF THIS TRACT IS INTENDED FOR DEDICATION TO THE HOWARD COUNTY.
18. THE DEVELOPER SHALL BE RESPONSIBLE FOR PROVIDING ALL PAVEMENT MARKINGS, STREET SIGNS, TRAFFIC DIRECTIONAL AND CONTROL SIGNS SHOWN ON THIS PLAN IN ACCORDANCE WITH APPLICABLE STATE OR HOWARD COUNTY REGULATIONS AND SPECIFICATIONS. ALL SIGNAGE SHALL BE CONSISTENT WITH EXISTING SIGNAGE WITHIN THE HOWARD COUNTY.
19. NO OBJECT SHALL BE PERMITTED WHICH OBSCURES VISION WITHIN THE CLEAR SIGHT TRIANGLE.
20. HOWARD COUNTY SHALL NOT BE RESPONSIBLE FOR THE CONSTRUCTION OR MAINTENANCE OF ANY AREA NOT DEDICATED FOR THE PUBLIC USE.
21. ISSUANCE OF THE ACCESS PERMIT FROM EAPD IS REQUIRED BEFORE SHA WILL SIGN OFF ON ISSUANCE OF BUILDING PERMIT(S).
22. THE WETLAND LINES SHOWN ON THIS PLAN ARE BASED UPON THE FINDING WITHIN "WETLAND DELINEATION REPORT FOR WASHINGTON NAPA FACILITY EXPANSION, CITY OF LAUREL, HOWARD COUNTY, MARYLAND," DATED NOVEMBER 2013, BY RETTEW ASSOCIATES, INC.
23. ALL EXISTING OR PROPOSED SURFACE DRAINAGE FACILITIES SUCH AS SWALES, STREAMS, STORMWATER MANAGEMENT FACILITIES, UNPAVED OR PAVED CHANNELS, ETC., LOCATED WITHIN PRIVATELY OWNED EASEMENTS OR ON PRIVATELY OWNED LAND WITH NO PUBLIC EASEMENT SHALL BE THE LEGAL RESPONSIBILITY OF THE PROPERTY OWNER, EASEMENT HOLDER AND/OR HOME OWNERS ASSOCIATION FOR OPERATION AND MAINTENANCE IN ACCORDANCE WITH COUNTY REGULATIONS.
24. STORMWATER MANAGEMENT FACILITIES SHALL BE MAINTAINED BY THE PROPERTY OWNER.
25. CERTIFICATION SHALL BE SUBMITTED BY THE APPROPRIATE DESIGN PROFESSIONAL LICENSED IN THE STATE OF MARYLAND TO ENSURE THAT CONSTRUCTED STORMWATER MANAGEMENT PRACTICES AND CONVEYANCE SYSTEMS COMPLY WITH THE SPECIFICATIONS CONTAINED IN THE APPROVED PLANS. AT A MINIMUM, AS-BUILT CERTIFICATION SHALL INCLUDE A SET OF DRAWINGS COMPARING THE APPROVED STORMWATER MANAGEMENT PLAN WITH WHAT WAS CONSTRUCTED. THE COUNTY RESERVES THE RIGHT TO REQUIRE ADDITIONAL INFORMATION IT DEEMS NECESSARY TO ENSURE COMPLIANCE WITH THE APPROVED PLANS.
26. NO PERSON SHALL GRADE, STRIP, EXCAVATE, OR FILL LAND, EXCEPT FOR FARMING, WITHOUT FIRST HAVING OBTAINED APPROVAL OF THE DEPARTMENT OF INSPECTIONS, LICENSES AND PERMITS PURSUANT TO THE REQUIREMENTS OF SUBTITLE 4 OF TITLE 3 OF SUBDIVISION AND LAND DEVELOPMENT REGULATIONS, HOWARD COUNTY, MARYLAND, LATEST EDITION.
27. A TABULATED ESTIMATE OF ALL QUANTITIES AND COSTS, INCLUDING CONTINGENT ITEMS RELATED TO THE CONSTRUCTION OF ALL REQUIRED PUBLIC IMPROVEMENTS SHALL BE SUBMITTED TO THE DEPARTMENT OF PLANNING AND ZONING PRIOR TO PLAN APPROVAL.
28. PROPERTY BOUNDARIES, LANDOWNER INFORMATION AND EXISTING STRUCTURES, TREE LINES AND ROADWAYS SHOWN BEYOND THE BOUNDARIES OF PARCEL 442 ARE BASED ON AVAILABLE COUNTY GIS PARCEL DATA.
29. NO GRADING, REMOVAL OF VEGETATIVE COVER OR TREES, PAVING AND NEW STRUCTURES SHALL BE PERMITTED WITHIN THE REQUIRED WETLANDS, STREAM(S) OR THEIR BUFFERS, FOREST CONSERVATION EASEMENT AREAS AND 100 YEAR FLOODPLAIN.
30. THE SUBJECT PROPERTY IS ZONED CE/CLI PER THE OCTOBER 6, 2013 COMPREHENSIVE ZONING PLAN.
31. THE BUILDING WILL HAVE AN AUTOMATIC FIRE PROTECTION SPRINKLING SYSTEM.
32. LANDSCAPE SURETY SHALL BE IN ACCORDANCE WITH HOWARD COUNTY LANDSCAPE MANUAL, ADOPTED JANUARY 4, 1993 AND AMENDED MARCH 2, 1998, SECTION ii, INSTALLATION, SURETY AND CERTIFICATION. THIS PLAN HAS BEEN PREPARED IN ACCORDANCE WITH THE PROVISIONS OF SECTION 16.124 OF THE HOWARD COUNTY CODE AND THE LANDSCAPE MANUAL. FINANCIAL SURETY IN THE AMOUNT OF $5,400 FOR THE REQUIRED 11 SHADE, 14 EVERGREENS, & 0 SHRUBS WILL BE POSTED WITH THE DEVELOPER AGREEMENT.
33. THE REQUIREMENTS OF THE UNDERLYING CE DISTRICT FOR ACCESSORY USES, BULK REQUIREMENTS AND COMPLIANCE WITH THE ROUTE 1 MANUAL SHALL APPLY TO IMPROVEMENTS TO PROPERTIES UTILIZING THE CLI OVERLAY DISTRICT PROVISIONS.
    BUILDING AND SITE IMPROVEMENT EXPANSIONS OF UP TO 50% OF THE SQUARE FOOT AREA EXISTING OR APPROVED ON APRIL 13, 2004 ARE PERMITTED FOR WAREHOUSE AND INDUSTRIAL USES. GREATER EXPANSIONS MAY BE AUTHORIZED UNDER THE NONCONFORMING USE PROVISION OF SECTION 129.0. EXPANSIONS FOR USES PERMITTED IN THE CE DISTRICT ARE NOT RESTRICTED, BUT SHALL CONFORM TO THE CE DISTRICT REGULATIONS.
    OUTDOOR STORAGE AREAS SHALL NOT EXCEED 5% OF THE SITE AND ALL OUTDOOR STORAGE MUST BE SCREENED IN ACCORDANCE WITH THE ROUTE 1 MANUAL.
34. ALL TRAFFIC CONTROL DEVICES AND THEIR LOCATIONS SHALL BE IN ACCORDANCE WITH THE LATEST EDITION OF THE "MARYLAND MANUAL ON UNIFORM TRAFFIC CONTROL DEVICES" (MDMUTCD). THE R1-1 ("STOP") SIGN AND THE STREET NAME SIGN (SNS) ASSEMBLY FOR THE DEVELOPMENT MUST BE INSTALLED BEFORE THE BASE PAVING IS COMPLETE.
35. THE DEVELOPER SHALL CONSTRUCT AND PLACE A MONUMENT AT EACH STREET INTERSECTION. MONUMENTATION SHALL BE IN ACCORDANCE WITH THE REQUIREMENTS OF COMAR. MONUMENTS SHALL BE SET SO THAT THE TOP IS LEVEL WITH THE SURFACE OF THE SURROUNDING GROUND AT FINAL FINISHED GRADE. MONUMENTS SHALL BE CONCRETE, FOUR INCHES BY FOUR INCHES TOP, SIX INCHES BY SIX INCHES BOTTOM, THREE FEET LONG AND STRENGTHENED BY A THREE-EIGHTHS INCH OR GREATER STEEL REINFORCING ROD, AT LEAST 30 INCHES LONG, THROUGH THEIR CENTERS.
36. THE DEVELOPER SHALL CONSTRUCT AND PLACE A MARKER ON ALL POINTS OF CURVATURE AND POINTS OF TANGENCY ALONG THE STREET LINE AND AT ALL ANGLE BREAKS. MARKERS SHALL BE STEEL BARS OR IRON PIPES AT LEAST THREE-EIGHTHS OF AN INCH IN DIAMETER AND 30 INCHES LONG.
37. SETTING OF MONUMENTS AND MARKERS. MONUMENTS AND MARKERS SHALL HAVE BEEN INSTALLED AT THE TIME THE DEVELOPER APPLIES TO THE COUNTY FOR INSPECTION AND ACCEPTANCE OF THE STREETS IN HIS SUBDIVISION. MONUMENTS AND MARKERS SHALL EACH HAVE AN IDENTIFYING CAP BEARING THE MARYLAND REGISTRATION NUMBER OF THE LICENSED PROFESSIONAL LAND SURVEYOR, PROPERTY LINE SURVEYOR, CORPORATION, OR PARTNERSHIP RESPONSIBLE FOR SETTING THE MONUMENTS AND MARKERS IN ACCORDANCE WITH THE ANNOTATED CODE OF MARYLAND. MARKERS AND MONUMENTS SHALL BE IDENTIFIED AS DESCRIBED IN THE ANNOTATED CODE OF MARYLAND, TITLE 9, SUBTITLE 13, CHAPTER 3, SECTION 3.
38. RECORDATION OF A FINAL PLAT WILL BE REQUIRED PRIOR TO SIGNATURE APPROVAL OF THE SDP FOR THE ESTABLISHMENT OF A FOREST CONSERVATION EASEMENT. THE ADDITION OF A PUBLIC OR PRIVATE EASEMENT MUST BE PROCESSED AS A PLAT AND RECORDED IN THE LAND RECORDS OF HOWARD COUNTY.
39. FOREST CONSERVATION OBLIGATION FOR THIS PROJECT IN THE AMOUNT OF 2.68 ACRES SHALL BE FULFILLED IN ACCORDANCE WITH SECTION 16.1200 OF THE FOREST CONSERVATION MANUAL UNDER SDP-15-005 BY PROVIDING 1.26 ACRES OF FOREST RETENTION EASEMENT AND BY PROVIDING 1.42 ACRES OF FOREST RETENTION EASEMENT FROM SDP-15-035, MILL CREEK FOREST MITIGATION BANK.
40. PER THE LANDSCAPE MANUAL, LANDSCAPING IS PROVIDED ONLY FOR THE ADDITIONAL DEVELOPMENT SINCE THIS PLAN DOES NOT INCREASE THE AREA BY MORE THAN 50%.

APPROVED: HOWARD COUNTY DEPARTMENT OF PLANNING AND ZONING

(signature) 5-11-16
CHIEF, DIVISION OF LAND DEVELOPMENT — DATE

(signature) 5.4.16
CHIEF, DEVELOPMENT ENGINEERING DIVISION — DATE

(signature) 5-16-16
DIRECTOR — DATE

**MD MISS UTILITY TICKET # 14422847**
DATED: 07/11/14

## LIST OF UTILITIES

| DISTRICT | COMPANY NAME | PHONE NUMBER |
|---|---|---|
| ACSI03 | TIME WARNER TELEPHONE/STAKE CENTER | (801) 364-1063 |
| ATM01 | AT&T TRANSMISSION | (800) 252-1133 |
| BGEHW | BGE ELECTRIC-USIC | (800) 778-9140 |
| BGEHWG | BGE GAS-USIC | (800) 778-9140 |
| FBLM01 | FIBERLIGHT/SUNBELT TELECOM | (727) 596-1500 |
| HCU01 | HOWARD COUNTY WATER/SEWER | (410) 313-4982 |
| HTV01 | COMCAST/UTILIQUEST | (410) 536-0070 |
| HTV02 | COMCAST-FIBER/UTILIQUEST | (410) 536-0070 |
| MCI01 | MCI | (800) 289-3427 |
| MFN04 | ZAYO/STAKE CENTER LOCATING | (888) 267-1063 |
| TMN01 | 24/7 MID-ATLANTIC | (410) 553-2605 |
| TPC03 | AT&T TRANSMISSION TCG | (800) 252-1133 |
| VHW | VERIZON-LAMBERT CABLE | (410) 536-0070 |

## FIRE AND RESCUE NOTES

1. A KNOX BOX (FIRE DEPT. ACCESS BOX) IS REQUIRED TO BE PLACED IN FRONT OF THE BUILDING. IT SHALL BE PLACED TO THE RIGHT OF THE MAIN ENTRANCE AT A RANGE OF 4-5' IN HEIGHT AND NO MORE THAN 6' LATERALLY FROM THE DOOR. THE BOX SHALL BE ELECTRONICALLY SUPERVISED TO NOTIFY THE OWNER THAT IT IS BEING ACCESSED (NFPA-1 18.2.2.5.I.1 AMENDED IN TITLE 17).
2. MAINTAIN A MINIMUM CANOPY HEIGHT OF 13 FEET, 6 INCHES FOR EMERGENCY EQUIPMENT ACCESS (NFPA-1 18.2.2.5.I.1 AMENDED IN TITLE 17).
3. PROVIDE SIGNAGE ON THE BUILDING IDENTIFYING BUILDING ACCESS.

## WAIVERS GRANTED

THE DIRECTOR OF THE DEPARTMENT OF PLANNING AND ZONING APPROVED ON OCTOBER 21, 2014 THE FOLLOWING WAIVER FROM THE HOWARD COUNTY SUBDIVISION AND LAND DEVELOPMENT REGULATIONS.

SECTION 16.155(A)(1)(I) OF THE SUBDIVISION REGULATIONS TO ALLOW A WAIVER OF THE SITE DEVELOPMENT PLAN REQUIREMENT FOR NEW OR EXPANDED NONRESIDENTIAL DEVELOPMENT, INCLUDING COMMERCIAL, INDUSTRIAL, INSTITUTIONAL AND UTILITY DEVELOPMENT, TO ALLOW FOR MASS GRADING OF THE SITE PRIOR TO THE SDP BEING APPROVED. APPROVAL IS SUBJECT TO THE FOLLOWING CONDITIONS:

1. APPROVAL FROM THE HOWARD SOIL CONSERVATION DISTRICT AND THE DEPARTMENT OF INSPECTIONS, LICENSES AND PERMITS IS REQUIRED FOR THE ASSOCIATED GRADING PLAN PRIOR TO THE ISSUANCE OF ANY REQUIRED PERMITS. THIS WAIVER APPROVAL APPLIES ONLY TO THE LIMIT OF DISTURBANCE AND GRADING PERMIT LIMITS AS SHOWN ON THE WAIVER PLAN EXHIBIT, SHEET 5 OF 17 FOR SDP-15-005.
2. COMPLIANCE WITH ALL APPLICABLE COUNTY AND STATE REGULATIONS AND OBTAIN ALL NECESSARY PERMITS FROM THE DEPARTMENT OF INSPECTIONS, LICENSES AND PERMITS PRIOR TO INITIATING DEVELOPMENT ON-SITE.
3. COMPLIANCE WITH THE DED COMMENTS DATED OCTOBER 2, 2014.
4. IN ACCORDANCE WITH THE HOWARD COUNTY SUBDIVISION AND LAND DEVELOPMENT REGULATIONS, NO GRADING, REMOVAL OF VEGETATIVE COVER OR TREES, PAVING AND NEW STRUCTURES SHALL BE PERMITTED WITHIN THE REQUIRED WETLANDS, STREAMS OR THEIR ASSOCIATED BUFFERS, AND 100-YEAR FLOODPLAIN.
5. SHOULD MASS GRADING OF THE SITE BE INITIATED AND PROCESSING OF SDP-15-005 CEASE FOR ANY REASON, OR IS NOT COMPLETED IN, A TIMELY MANNER, THE PETITIONER WILL BE REQUIRED TO ADDRESS FOREST CONSERVATION OBLIGATION REQUIREMENTS FOR THE LIMIT OF DISTURBANCE FOR THE MASS GRADING IN ACCORDANCE WITH THE HOWARD COUNTY CODE AND FOREST CONSERVATION MANUAL WITH THE PAYMENT OF A FEE-IN-LIEU AND / OR RECORDING OF A PLAT OF FOREST CONSERVATION EASEMENT FOR FOREST RETENTION.

## LIST OF DRAWINGS


1 OF 17 . . . . . . . COVER SHEET
2 OF 17 . . . . . . . EXISTING CONDITIONS PLAN: SLOPE ANALYSIS
3 OF 17 . . . . . . . EXISTING CONDITIONS PLAN: DEMOLITION
4 OF 17 . . . . . . . LAYOUT PLAN
5 OF 17 . . . . . . . GRADING AND UTILITY PLAN
6 OF 17 . . . . . . . ROUTE 1 ACCESS PERMIT PLAN
7 OF 17 . . . . . . . LANDSCAPE PLAN
8 OF 17 . . . . . . . PROFILES & CROSS-SECTIONS: STORMWATER
9 OF 17 . . . . . . . DETAILS: SITE CONSTRUCTION
10 OF 17 . . . . . . . POST CONSTRUCTION STORMWATER MANAGEMENT PLAN
11 OF 17 . . . . . . . DETAILS: STORMWATER MANAGEMENT
12 OF 17 . . . . . . . DETAILS: STORMWATER MANAGEMENT
13 OF 17 . . . . . . . EROSION AND SEDIMENTATION CONTROL PLAN
14 OF 17 . . . . . . . DETAILS: EROSION CONTROL NOTES
15 OF 17 . . . . . . . DETAILS: EROSION CONTROL
16 OF 17 . . . . . . . DETAILS: EROSION CONTROL
17 OF 17 . . . . . . . FOREST CONSERVATION PLAN AND EXISTING CONDITIONS


## LANDOWNER

QUAKER CITY MOTOR PARTS CO. INC.
P.O. BOX 5000
MIDDLETOWN DE 19709-5000
PHONE NO, (302) 378-9834

## EQUITABLE OWNER/DEVELOPER

GENUINE PARTS COMPANY
2999 CIRCLE 75 PARKWAY
ATLANTA, GA 30326
PHONE NO. (404) 995-6598

## SOURCE OF TITLE

| | |
|---|---|
| DEED REFERENCE | 00920/00494 |
| TAX MAP NUMBER | 50 |
| PARCEL NUMBER | 0442 |

## SITE DATA

| | | | |
|---|---|---|---|
| TOTAL AREA: | 10.943 ACRES | ADDRESS: | 9941 WASHINGTON BLVD. |
| TOTAL NO. OF LOTS: | 1 | ZONING DISTRICT: | CE-CLI |
| PRIMARY STRUCTURE BUILT: | 1981 | | DENSITY: N/A |
| EXISTING USE: | INDUSTRIAL | PROPOSED USE: | INDUSTRIAL |

## ZONING DATA
CE, CORRIDOR EMPLOYMENT DISTRICT
CLI, CONTINUING LIGHT INDUSTRY OVERLAY DISTRICT

| | REQUIRED |
|---|---|
| MAXIMUM BUILDING HEIGHT | 60 FT. |
| FRONT YARD BUILDING | 10 FT. |
| FRONT YARD PARKING | 40 FT. |
| FRONT YARD LOADING DOCKS, OUTDOOR STORAGE, DUMPSTERS AND ASSOCIATED FENCING | 60 FT. |

## NOTES:

1. PROPOSED BUILDING EXPANSION IS 49.1% OR LESS OF THE EXISTING SQUARE FOOT AREA, A MAXIMUM OF 50% IS ALLOWED. (127.3.D.2).
2. PROPOSED RETAIL USE CONFORMS TO THE REQUIREMENTS OF SECTION 127.3.C.4. THE FLOOR AREA DEDICATED TO RETAIL USE IS 1.9% OF THE TOTAL FLOOR AREA (30% IS PERMITTED BY ORDINANCE). NO MORE THAN 30 % OF THE FLOOR SPACE OF THE FIRST FLOOR OF THE MAIN STRUCTURE MAY BE DEVOTED TO THE RETAIL SALES OF ARTICLES MADE OR DISTRIBUTED ON THE PREMISES.

## SITE ANALYSIS DATA

| | | |
|---|---|---|
| AREA OF THE SITE | 10.94± ACRES; 476,677± SQFT | |
| LIMIT OF DISTURBANCE AREA | 4.7 ACRES | |
| ZONING DESIGNATION | CE / CLI | |
| PROPOSED SITE USES | INDUSTRIAL (WAREHOUSE, RETAIL & OFFICE)<br>SQUARE FOOTAGE FOR EACH OF THE BUILDING USES:<br>RETAIL . . . . . . 1,761 SQUARE FEET<br>OFFICE . . . . . . 5,456 SQUARE FEET<br>WAREHOUSE . . . 84,151 SQUARE FEET | |
| GROSS FLOOR AREA | 91,368 SQ FT | |
| ANTICIPATED NUMBER OF EMPLOYEES | 45 | |
| NUMBER OF PARKING SPACES | REQUIRED: 69 | PROPOSED: 69 (SEE PARKING DATA BELOW) |
| OPEN SPACE ON SITE | 6.68± ACRES | (61% OF TOTAL SITE AREA) |
| BUILDING COVERAGE ON SITE | 2.08± ACRES | (19% OF TOTAL SITE AREA) |
| WETLANDS AND THEIR BUFFERS | 0.60± ACRES | |
| STREAMS AND THEIR BUFFERS | N/A | |
| FLOODPLAINS AND THEIR BUFFERS | N/A | |
| FORESTS | 4.6± ACRES | |
| STEEP SLOPES 15% AND GREATER | 1.61± ACRES | |
| ERODIBLE SOILS PROJECT AREA | N/A | |

## PARKING DATA

REQUIREMENTS:
RETAIL: 5 SPACES PER 1,000 S.F. OF GROSS FLOOR AREA
OFFICE: 3.3 SPACES PER 1,000 S.F. OF GROSS FLOOR AREA
WAREHOUSE: 0.75 SPACES PER 1,000 S.F. OF GROSS FLOOR AREA

CALCULATIONS:
1,761 SQUARE FEET OF RETAIL: 8.8 SPACE PER 1,000 SQUARE FEET = 8.8 SPACES (9 SPACES)
5,456 SQUARE FEET OF OFFICE: 3.3 SPACE PER 1,000 SQUARE FEET = 18.0 SPACES (18 SPACES)
84,151 SQUARE FEET OF WAREHOUSE: 0.75 SPACE PER 1,000 SQUARE FEET = 63.1 SPACES (63 SPACES)

PROPOSED: 69* (INCLUDES 5 ADA SPACES)

* HOWARD COUNTY DEPARTMENT OF PLANNING AND ZONING AGREES TO REDUCE THE REQUIRED NUMBER OF PARKING SPACES TO 69 BASED ON A DETAILED PARKING ANALYSIS DATED SEPTEMBER 19, 2014.

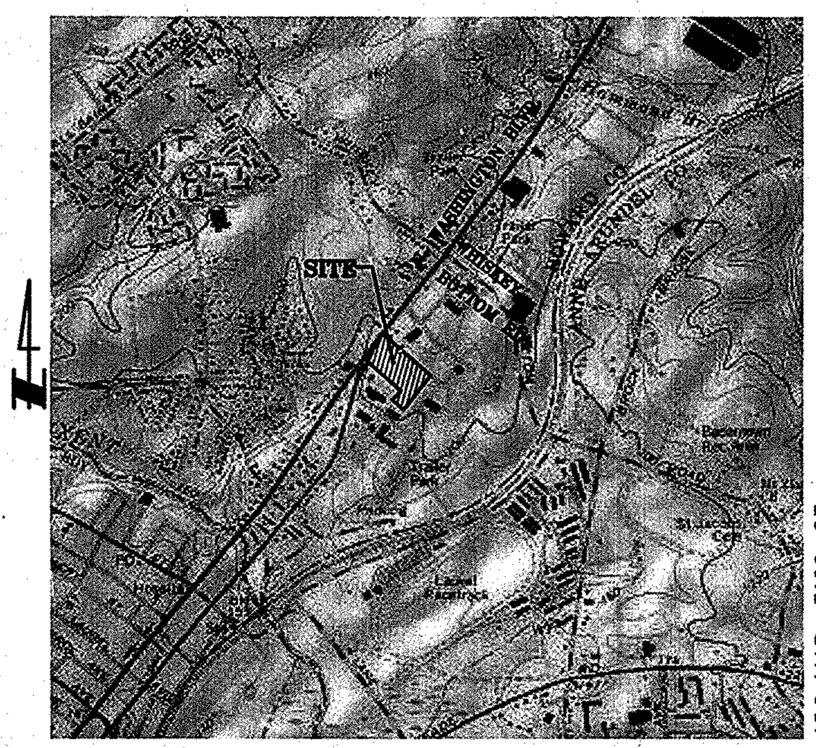


ADC MAP: 5169-G3

## LOCATION MAP
SCALE: 1"=2000'

## BENCHMARKS

GEODETIC BENCHMARK: 50BM1
GEODETIC STATION: 50BD

| ADDRESS CHART | |
|---|---|
| PARCEL # | STREET ADDRESS |
| 0442 | 9941 WASHINGTON BLVD., LAUREL, MD 20723-0000 |

| PERMIT INFORMATION CHART | | | | |
|---|---|---|---|---|
| SUBDIVISION NAME N/A | | SECTION/AREA N/A | | |
| L/F | GRID # | ZONING | TAX MAP DISTRICT | ELEC DISTRICT |
| 00920 - 00494 | 0010 | CE / CLI | 50 | 6TH |

PLAT NO. 23773

REVISION | NO. | DATE

FOR RETTEW ASSOCIATES BY: 3-2-16

MANAGER: DAVID D. MILLER, P.E.
XREFS: 099812001-LD-TBLK, 099812001-LD-CVNT, 099812001-LD-USGS
DESIGN BY: JAR | CHKD BY: DEW
SURV. CHIEF: | FIELDBOOK NO. DATA COLLECTOR
DRAWN BY: DCW | CHKD BY: DEW
DRAWING REFERENCE: C:_RettewVault\WIP\099812001-Washington NAPA\Sheets\LD\099812001-01_COVR.dwg

CLIENT
GENUINE PARTS COMPANY
2999 CIRCLE 75 PARKWAY
ATLANTA, GA 30339
PHONE: (770) 953-1700

SCALE: AS NOTED

RETTEW[SM]
RETTEW Associates, Inc.
3020 Columbia Ave., Lancaster, PA 17603
Phone (717) 394-3721 · Fax (717) 394-1063
Email: rettew@rettew.com
Website: www.rettew.com
Engineers · Planners · Surveyors · Landscape Architects
Environmental Consultants

COVER SHEET
SITE DEVELOPMENT PLAN
FOR
NAPA WASHINGTON
HOWARD COUNTY, MD

DATE: MARCH 2, 2016
SHEET NO. 1 OF 17
DWG. NO. 099812001

SDP-15-005, ~~GP-15-074~~

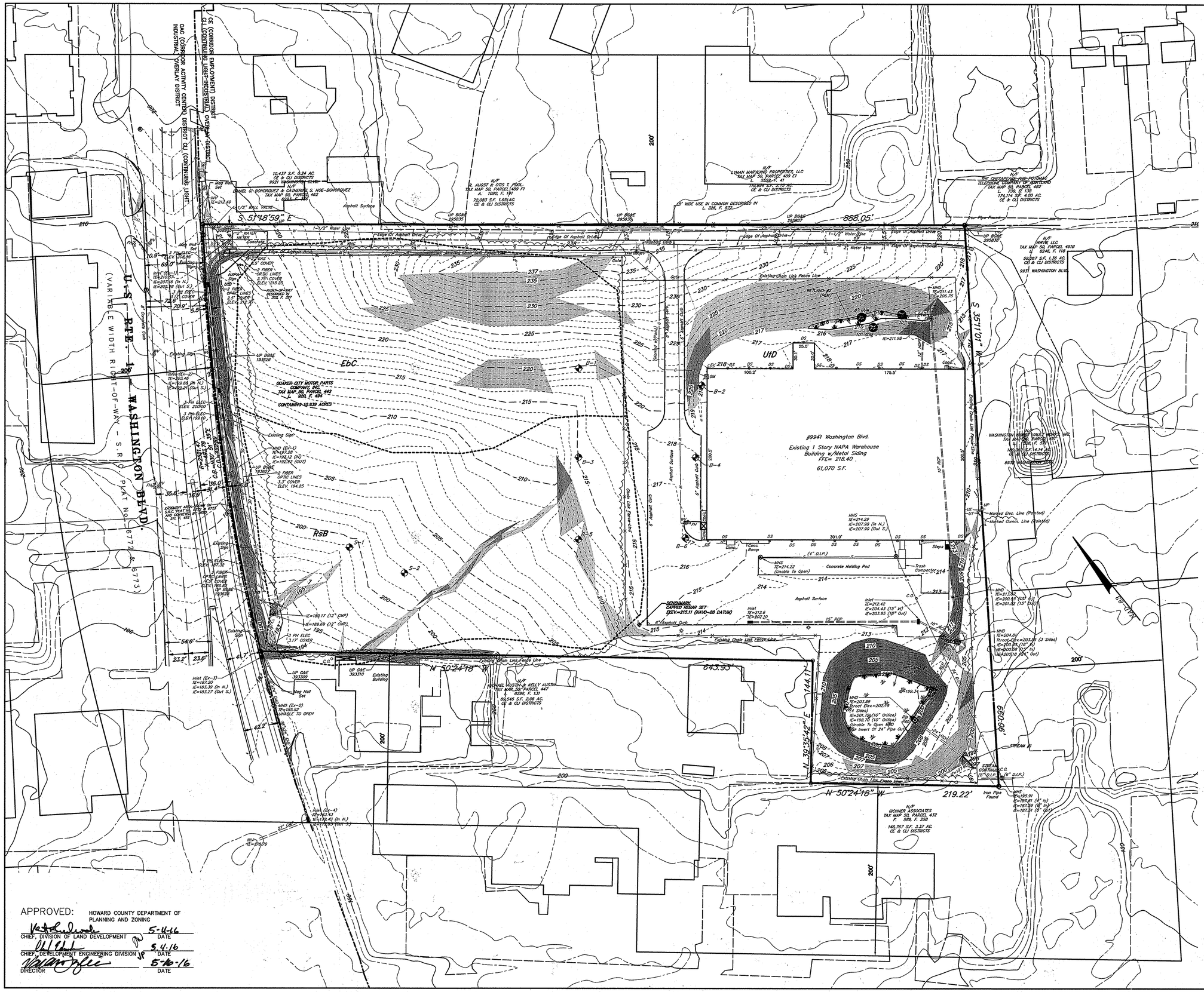


## LEGEND

- EXISTING BOUNDARY LINE
- EXISTING RIGHT-OF-WAY LINE
- EXISTING EASEMENT LINE
- EXISTING SETBACK LINE
- EXISTING CURB
- EXISTING PAVEMENT
- EXISTING ZONING BOUNDARY
- EXISTING VEGETATION — DECIDUOUS TREE / EVERGREEN TREE
- EXISTING TREELINE
- EXISTING FENCE
- EXISTING UTILITY POLE
- EXISTING OVERHEAD TELEPHONE LINE — OT
- EXISTING UNDERGROUND TELEPHONE LINE — UT
- EXISTING OVERHEAD ELECTRIC LINE — OE
- EXISTING WELL
- EXISTING WATER VALVE — WV
- EXISTING FIRE HYDRANT
- EXISTING WATER LINE — W
- EXISTING SANITARY SEWER MANHOLE
- EXISTING SANITARY SEWER LINE — S
- EXISTING SANITARY SEWER FORCEMAIN — FM
- EXISTING TELEPHONE BOX
- EXISTING GAS LINE — G
- EXISTING GAS VALVE — GV
- EXISTING STORM MANHOLE
- EXISTING STORM INLET
- EXISTING STORM HEADWALL/ENDWALL
- EXISTING STORM PIPE — 18" RCP
- EXISTING STREAM
- EXISTING WETLAND
- TEST BORINGS

## SLOPE ANALYSIS:

- SLOPES = 15–25%
- SLOPES = >25%

## SOILS CLASSIFICATION

EbC: EVESBORE LOAMY SAND, 2 TO 10 PERCENT SLOPES

RsB: RUSSET FINE SANDY LOAM, 2 TO 5 PERCENT SLOPES

UtD: URBAN LAND–UDORTHENTS COMPLEX, 0 TO 15 PERCENT SLOPES.

ALL SOILS ARE NON–HYDRIC, WITHOUT HYDRIC INCLUSIONS, AND DO NOT EXHIBIT ANY SIGNIFICANT EROSION POTENTIAL.

APPROVED: HOWARD COUNTY DEPARTMENT OF PLANNING AND ZONING

| | |
|---|---|
| CHIEF, DIVISION OF LAND DEVELOPMENT | DATE 5-11-16 |
| CHIEF, DEVELOPMENT ENGINEERING DIVISION | DATE 5.4.16 |
| DIRECTOR | DATE 5-10-16 |

| NO. | DATE | REVISION |
|---|---|---|
| | | |

FOR RETTEW ASSOCIATES BY:

STEVEN J. MILLER, PROFESSIONAL ENGINEER, STATE OF MARYLAND, NO. 28827

XREFS: 099812001-LD-TBLK, 099812001-SV-BASE, 099812001-LD-BASE, 099812001-LD-GRID, 099812001-LD-HYDR, 099812001-LD-HCAD, 099812001-LD-CONT

| | |
|---|---|
| MANAGER: DAVID D. MILLER, P.E. | |
| DESIGN BY: JAR | CHKD BY: DEW |
| SURV. CHIEF: | FIELDBOOK NO. DATA COLLECTOR |
| DRAWN BY: DCW | CHKD BY: DEW |

DRAWING REFERENCE: C:_ProjectFiles\099812001-Washington NAPA\Sheets\LD\099812001-02_EXSD.dwg

CLIENT
GENUINE PARTS COMPANY
2999 CIRCLE 75 PARKWAY
ATLANTA, GA 30339
PHONE: (770) 953-1700

SCALE: 1"=50' — 0 25' 50' 100' 150'

RETTEW
RETTEW Associates, Inc.
Lancaster • Harrisburg • Lancaster, PA 17603
Phone (717) 394-3721 • Fax (717) 394-1063
Email: rettew@rettew.com
Website: www.rettew.com
Engineers • Planners • Surveyors • Landscape Architects
Environmental Consultants

EXISTING CONDITIONS PLAN: SLOPE ANALYSIS

SITE DEVELOPMENT PLAN
FOR
# NAPA WASHINGTON

HOWARD COUNTY, MD

DATE: MARCH 2, 2016

SHEET NO. 2 OF 17

DWG. NO. 099812001

SDP-15-005, ~~SP-15-074~~

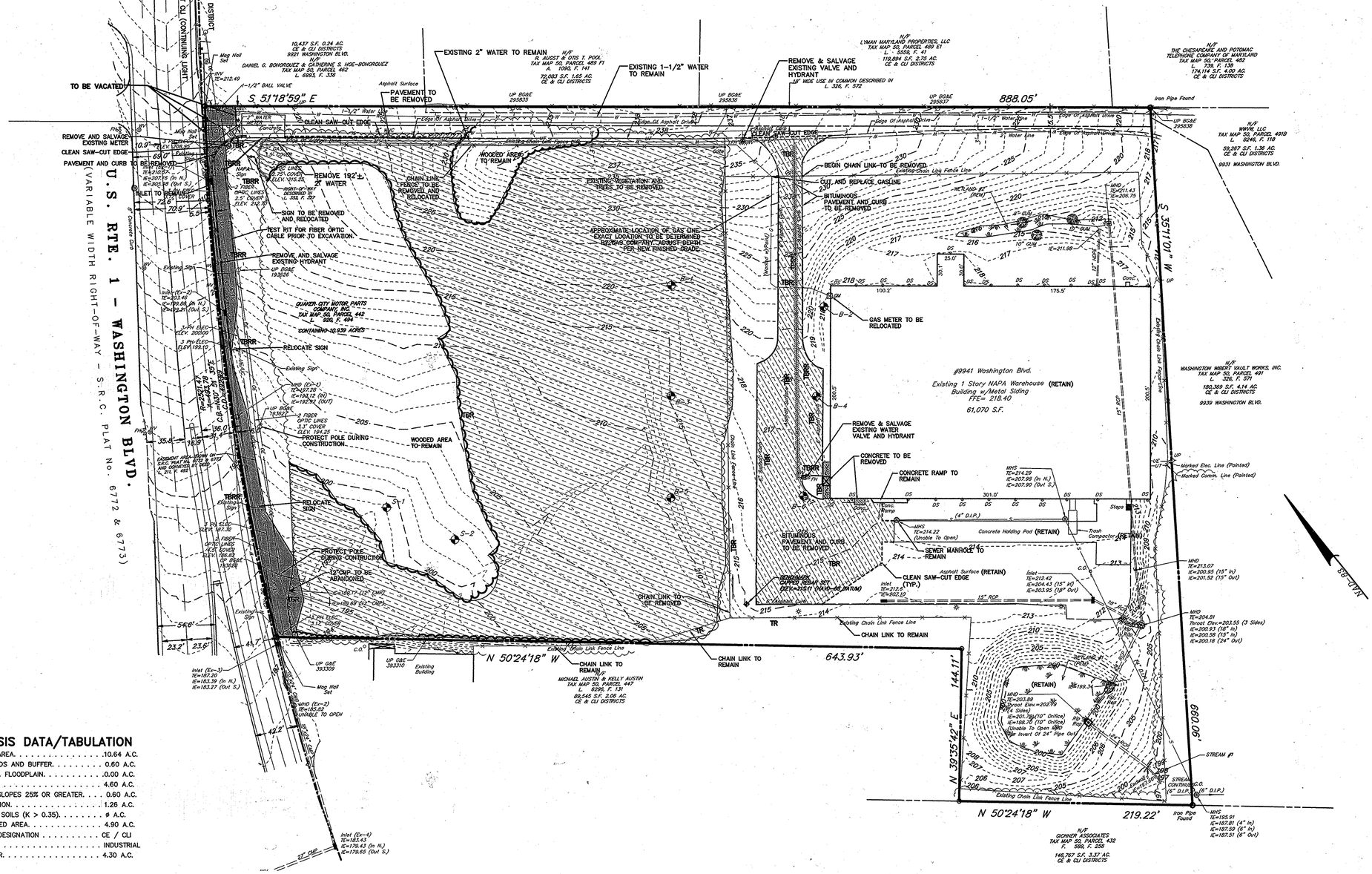


## SITE ANALYSIS DATA/TABULATION

A) TOTAL PROJECT AREA. . . . . .10.64 A.C.
B) AREA OF WETLANDS AND BUFFER. . . . . 0.60 A.C.
C) AREA OF 100-YR. FLOODPLAIN. . . . . .0.00 A.C.
D) AREA OF FOREST. . . . . 4.60 A.C.
E) AREA OF STEEP SLOPES 25% OR GREATER. . . . 0.60 A.C.
F) AREA OF DEDICATION. . . . . 1.26 A.C.
G) HIGHLY ERODIBLE SOILS (K > 0.35). . . . . ø A.C.
H) LIMIT OF DISTURBED AREA. . . . . 4.90 A.C.
I) PRESENT ZONING DESIGNATION . . . . . CE / CLI
K) PROPOSED USE: . . . . . INDUSTRIAL
L) IMPERVIOUS COVER. . . . . 4.30 A.C.

## SPECIMEN TREE CHART

| TAG | SPECIES, SIZE (DBH) | COMMENT | STATUS |
|---|---|---|---|
| N/A | NONE | NO SPECIMEN TREES OR SPECIMENS GREATER THAN 30"DIAMETER BREAST HEIGHT (DBH) WERE OBSERVED WITHIN THE STAND. | N/A |

## FOREST STAND ANALYSIS TABLE

| KEY | A. TYPE OF COMMUNITY | B. AREA | C. SOIL INFORMATION | | | D. EXISTING VEGETATION | E. STAND CHARACTERISTICS KEY | | | F. FOREST AREA IN SEN. ENV | G. HABITAT VALUE |
|---|---|---|---|---|---|---|---|---|---|---|---|
| | | | 1. SOILS KEY | 2. TYPICAL FOREST COVER FOR SOILS TYPE | 3. WOODLAND SUITABILITY INDEX | | 1. SIZE (DIA) | 2. AGE (YRS) | 3. GENERAL CONDITION | | |
| F-1 | MIXED DECIDUOUS | 6.4 AC. | EbC RsB | HARDWOODS | – | OAKS, MAPLES, BLACK GUM | 2.20 | 40 | GOOD | N/A | GOOD |

## LEGEND

EXISTING BOUNDARY LINE
EXISTING RIGHT-OF-WAY LINE
EXISTING EASEMENT LINE
EXISTING SETBACK LINE
EXISTING CURB
EXISTING PAVEMENT
EXISTING ZONING BOUNDARY
EXISTING VEGETATION — DECIDUOUS TREE; EVERGREEN TREE
EXISTING TREELINE
EXISTING FENCE
EXISTING MAILBOX
EXISTING UTILITY POLE
EXISTING OVERHEAD TELEPHONE LINE
EXISTING UNDERGROUND TELEPHONE LINE
EXISTING OVERHEAD ELECTRIC LINE
EXISTING TELEPHONE BOX
EXISTING GAS LINE
EXISTING GAS VALVE
EXISTING WELL
EXISTING WATER VALVE
EXISTING FIRE HYDRANT
EXISTING WATER LINE
EXISTING SANITARY SEWER MANHOLE
EXISTING SANITARY SEWER LINE
EXISTING SANITARY SEWER FORCEMAIN
EXISTING STORM MANHOLE
EXISTING STORM INLET
EXISTING STORM HEADWALL/ENDWALL
EXISTING STORM PIPE — 18" RCP
TEST BORINGS
TREES TO BE REMOVED
TO REMAIN
TO BE REMOVED
TO BE REMOVED AND RELOCATED
PAVING TO BE REMOVED
CONCRETE TO BE REMOVED
VEGETATION TO BE REMOVED
EASEMENTS TO BE VACATED

## GENERAL NOTES

1. A FOREST STAND DELINEATION WAS PREPARED BY RETTEW ASSOCIATES, INC., DATED JANUARY, 2014. NO SPECIMEN TREES WERE OBSERVED ON THE SITE.
2. TO THE BEST OF OUR KNOWLEDGE THERE ARE NO CEMETERIES OR HISTORIC STRUCTURES LOCATED ON THIS SITE.
3. THERE ARE NO FLOODPLAIN ON THIS PROPERTY.

APPROVED: HOWARD COUNTY DEPARTMENT OF PLANNING AND ZONING

CHIEF, DIVISION OF LAND DEVELOPMENT — DATE 5-11-16
CHIEF, DEVELOPMENT ENGINEERING DIVISION — DATE 5-4-16
DIRECTOR — DATE 5-16-16

| NO. | DATE | REVISION |
|---|---|---|

FOR RETTEW ASSOCIATES BY:

MANAGER: DAVID D. MILLER, P.E.
DESIGN BY: JAR — CHKD BY: DEW
SURV. CHIEF: — FIELDBOOK NO. DATA COLLECTOR
DRAWN BY: DCW — CHKD BY: DEW
DRAWING REFERENCE: C:_PwWorkingDir\00981200\Washington NAPA\Sheets\LD\099812001-D_EXISTING.dwg
XREFS: 099812001-SV-BASE, 099812001-TB-BASE, 099812001-LD-LOAD, 099812001-SD-LOAD, 099812001-CV-CNPT, 099812001-LD-BASE

CLIENT
GENUINE PARTS COMPANY
2999 CIRCLE 75 PARKWAY
ATLANTA, GA 30339
PHONE: (770) 953-1700

SCALE: 1"=50' — 0, 25', 50', 100', 150'

RETTEW
RETTEW Associates, Inc.
3020 Columbia Ave., Lancaster, PA 17603
Phone (717) 394-3721 · Fax (717) 394-1063
Email: rettew@rettew.com
Website: www.rettew.com
Engineers • Planners • Surveyors • Landscape Architects
Environmental Consultants

EXISTING CONDITIONS PLAN: DEMOLITION
SITE DEVELOPMENT PLAN
FOR
# NAPA WASHINGTON
HOWARD COUNTY, MD

DATE: MARCH 2, 2016
SHEET NO. 3 OF 17
DWG. NO. 099812001

SDP-15-005, ~~CP-15-074~~

| PUBLIC FOREST CONSERVATION EASEMENT CURVE TABLE | | | | |
|---|---|---|---|---|
| CURVE # | RADIUS | ARC | CHORD BEARING | CHORD |
| CF1 | 162.47' | 66.82' | S20° 26' 40"W | 66.35' |
| CF2 | 18.90' | 24.01' | N87° 58' 21"E | 22.42' |

| PUBLIC FOREST CONSERVATION EASEMENT LINE TABLE | | |
|---|---|---|
| LINE # | DIRECTION | LENGTH |
| L31 | S06° 15' 00"E | 30.18' |
| L32 | S08° 35' 39"W | 47.92' |
| L33 | S17° 05' 26"W | 32.41' |
| L34 | N83° 28' 06"W | 14.02' |
| L35 | S12° 51' 32"W | 40.13' |
| L36 | S36° 39' 38"W | 24.47' |
| L37 | S29° 25' 34"W | 73.95' |
| L38 | S24° 47' 09"W | 11.60' |
| L39 | S14° 49' 46"W | 35.90' |
| L40 | S06° 23' 56"W | 20.56' |
| L41 | S87° 02' 47"W | 14.49' |
| L42 | S23° 33' 21"W | 16.16' |
| L43 | S89° 21' 52"W | 35.00' |
| L44 | N21° 15' 00"W | 39.80' |
| L45 | N35° 32' 26"W | 40.11' |
| L46 | N24° 11' 09"E | 21.81' |
| L47 | N02° 11' 24"W | 39.07' |
| L48 | N29° 23' 51"W | 15.71' |
| L49 | N02° 09' 53"E | 31.76' |
| L50 | N28° 08' 51"W | 28.98' |
| L51 | N32° 41' 09"E | 62.87' |
| L52 | N19° 32' 45"E | 26.53' |
| L53 | N33° 39' 12"E | 139.07' |
| L54 | N49° 53' 45"E | 41.46' |
| L55 | S51° 26' 47"E | 75.58' |

| 20' PUBLIC WATER & UTILITY EASEMENT LINE TABLE | | |
|---|---|---|
| LINE # | DIRECTION | LENGTH |
| L56 | N51° 15' 00"W | 29.00' |
| L57 | N35° 45' 00"E | 17.28' |
| L58 | N51° 15' 00"W | 831.52' |
| L59 | N35° 11' 01"E | 20.04' |
| L60 | S51° 15' 00"E | 672.55' |
| L61 | N83° 45' 00"E | 28.25' |
| L62 | N06° 14' 59"W | 78.53' |
| L63 | N51° 15' 00"W | 154.40' |
| L64 | N38° 45' 00"E | 263.29' |
| L65 | N51° 15' 02"W | 15.01' |
| L66 | N38° 44' 58"E | 30.00' |
| L67 | S51° 15' 02"E | 35.01' |
| L68 | S38° 45' 00"W | 273.29' |
| L69 | S51° 15' 00"E | 6.67' |
| L70 | N38° 45' 00"E | 16.08' |
| L71 | S51° 15' 00"E | 20.00' |
| L72 | S38° 45' 00"W | 16.08' |
| L73 | S51° 15' 00"E | 116.02' |
| L74 | S06° 15' 00"E | 135.06' |
| L75 | S51° 15' 00"E | 118.12' |

| 20' PUBLIC WATER & UTILITY EASEMENT CURVE TABLE | | | | |
|---|---|---|---|---|
| CURVE # | RADIUS | ARC | CHORD BEARING | CHORD |
| CW1 | 5246.20' | 37.39' | S34° 21' 18"W | 37.39' |

| ULTIMATE RIGHT-OF-WAY CURVE TABLE | | | | |
|---|---|---|---|---|
| CURVE | RADIUS | ARC | CHORD BEARING | CHORD LENGTH |
| C1 | 2521.46' | 493.78' | N30° 51' 35"E | 492.99' |
| C2 | 2968.37' | 53.49' | N27° 18' 55"E | 53.49' |
| C3 | 2138.31' | 44.52' | N25° 47' 52"E | 44.52' |

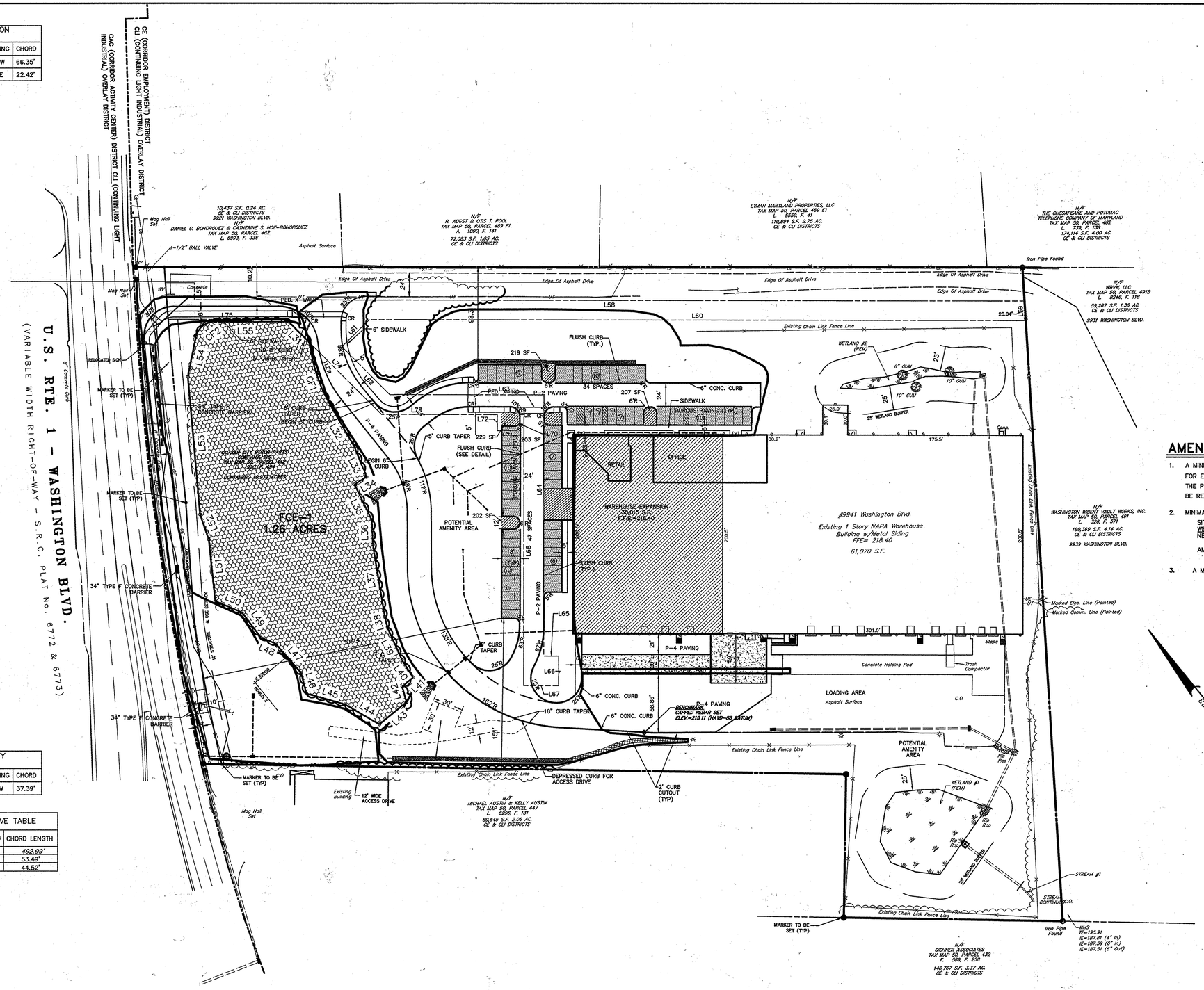


## LEGEND

- EXISTING BOUNDARY LINE
- PROPOSED LOT LINE
- EXISTING RIGHT-OF-WAY LINE
- PROPOSED SETBACK LINE
- EXISTING CURB
- PROPOSED CURB
- EXISTING PAVEMENT
- PROPOSED PAVEMENT
- PROPOSED CLEAR SITE TRIANGLE (C.S.T.)
- EXISTING ZONING BOUNDARY
- EXISTING VEGETATION — DECIDUOUS TREE; EVERGREEN TREE
- EXISTING TREELINE
- PROPOSED TREELINE
- EXISTING FENCE
- PROPOSED FENCE
- PROPOSED PAVING (P-2)
- POROUS PAVING
- PROPOSED PAVING (P-4)
- PROPOSED CONCRETE
- EXISTING EASEMENTS
- ADA CURB RAMP — CR

## LAYOUT NOTES:

1. REFER TO MSHA ACCESS PERMIT PLANS, DATED DEC. 11, 2015, FOR WORK WITHIN SHA RIGHT-OF-WAY.

## AMENITY AREA NOTES

1. A MINIMAL AREA OF 22,660 SQUARE FEET (SF) IS REQUIRED AS AN AMENITY AREA FOR EMPLOYEES AND VISITORS. SEATING AND LANDSCAPING SHALL BE PROVIDED. THE POTENTIAL AMENITY AREAS SHOWN ON THIS PLAN ARE SUGGESTIONS, AND CAN BE RELOCATED AS DIRECTED BY THE OWNER.
2. MINIMAL AREA CALCULATION:
   SITE AREA: 10.94 ACRES
   WETLANDS AND BUFFERS: 0.6 ACRES
   NET AREA: 10.34 ACRES
   AMENITY AREA: 0.52 ACRE (22,660 SF) (5% OF NET AREA)
3. A MINIMAL OF 0.25 ACRE PER AMENITY AREA IS REQUIRED.

APPROVED: HOWARD COUNTY DEPARTMENT OF PLANNING AND ZONING

CHIEF, DIVISION OF LAND DEVELOPMENT — DATE 5-4-16
CHIEF, DEVELOPMENT ENGINEERING DIVISION — DATE 5-4-16
DIRECTOR — DATE 5-10-16

| NO. | DATE | REVISION |
|---|---|---|

FOR RETTEW ASSOCIATES BY:

MANAGER: DAVID D. MILLER, P.E.
DESIGN BY: JAR
CHKD BY: DEW
SURV. CHIEF: FIELDBOOK NO. DATA COLLECTOR
DRAWN BY: DCW
CHKD BY: DEW
DRAWING REFERENCE: C:_Rettew\Proj\MP\099812001-Washington NAPA\Sheets\LD\099812001-DA_LAYOUT.dwg
XREFS: 099812001-D-BASE, 099812001-D-TBLK, 099812001-D-TBLD, 099812001-D-CONT, 099812001-D-TOPO, 099812001-D-BASE, 099812001_LMDA

CLIENT
GENUINE PARTS COMPANY
2999 CIRCLE 75 PARKWAY
ATLANTA, GA 30339
PHONE: (770) 953-1700

SCALE: 1"=50' — 0, 25', 50', 100', 150'


RETTEW
RETTEW Associates, Inc.
3020 Columbia Ave., Lancaster, PA 17603
Phone (717) 394-3721 Fax (717) 394-1063
Email: rettew@rettew.com
Website: www.rettew.com
Engineers • Planners • Surveyors • Landscape Architects
Environmental Consultants


LAYOUT PLAN
SITE DEVELOPMENT PLAN
FOR
# NAPA WASHINGTON
HOWARD COUNTY, MD

DATE: MARCH 2, 2016
SHEET NO. 4 OF 17
DWG. NO. 099812001

SDP-15-005, ~~CP 15-074~~

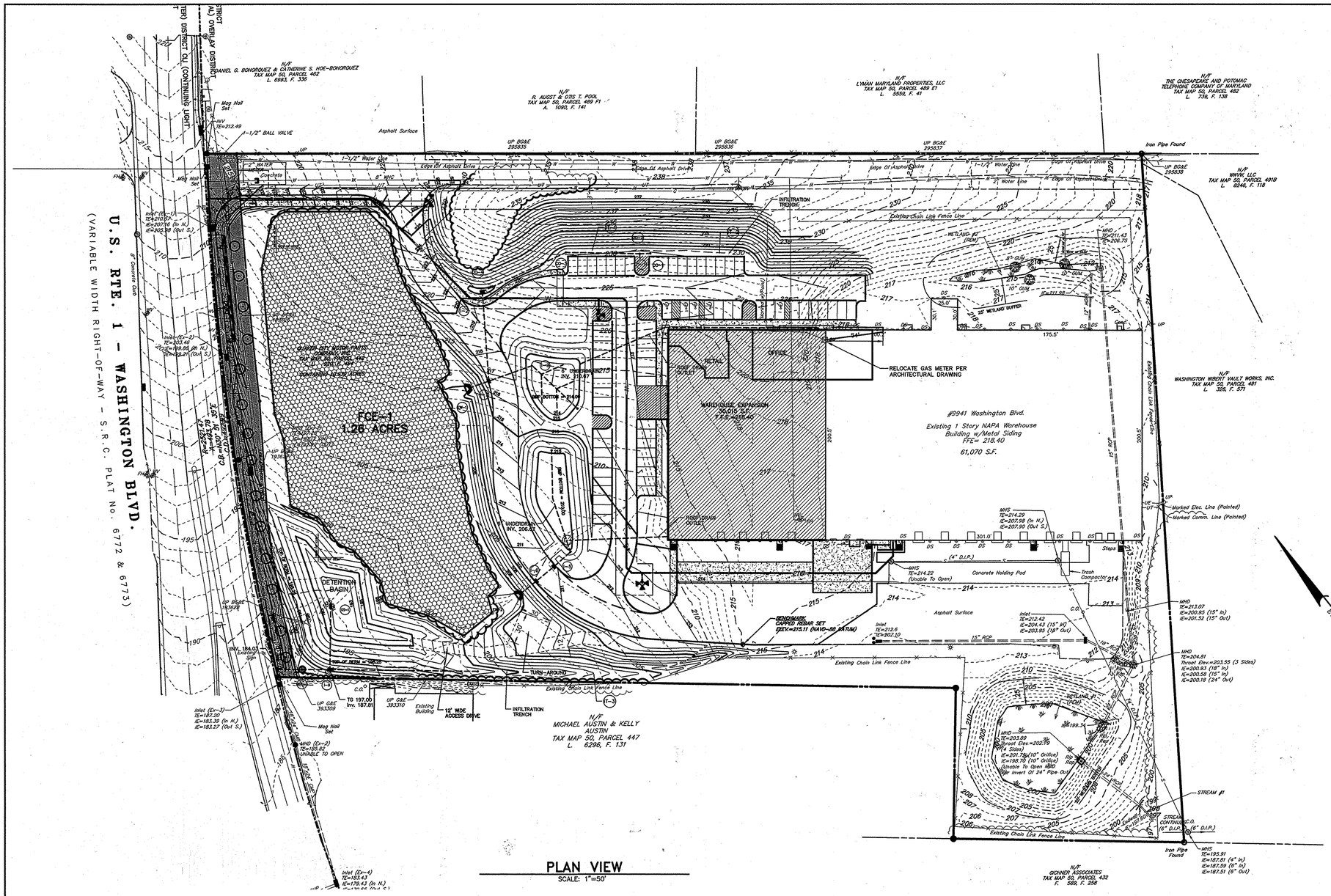


## PLAN VIEW

SCALE: 1"=50'

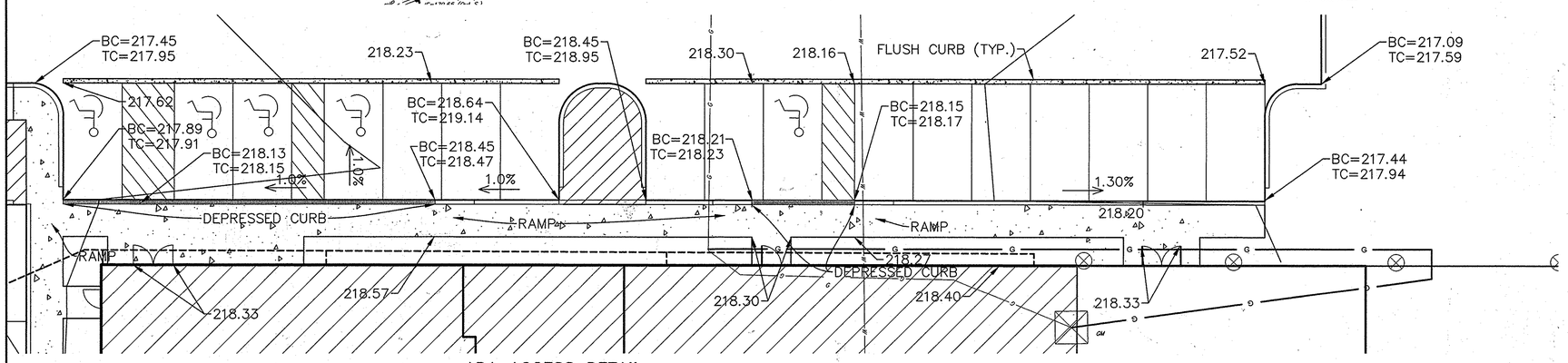


## ADA ACCESS DETAIL

SCALE: 1"=10'

## LEGEND

| | |
|---|---|
| EXISTING BOUNDARY LINE | |
| PROPOSED LOT LINE | |
| EXISTING RIGHT-OF-WAY LINE | |
| EXISTING CURB | |
| PROPOSED CURB | |
| EXISTING PAVEMENT | |
| PROPOSED PAVEMENT | |
| EXISTING ZONING BOUNDARY | |
| EXISTING VEGETATION | DECIDUOUS TREE |
| | EVERGREEN TREE |
| EXISTING TREELINE | |
| PROPOSED TREELINE | |
| EXISTING CONTOUR LINE | 500 |
| PROPOSED CONTOUR LINE | 500 |
| PROPOSED SPOT ELEVATION | +500.00 |
| PROPOSED FINISHED FLOOR ELEVATION | F.E.=500.00 |
| EXISTING STORM MANHOLE | |
| PROPOSED STORM MANHOLE | |
| EXISTING STORM INLET | |
| PROPOSED STORM INLET | |
| EXISTING STORM HEADWALL/ENDWALL | |
| PROPOSED STORM HEADWALL/ENDWALL | |
| PROPOSED PIPE OUTLET PROTECTION | |
| EXISTING STORM PIPE | 14" RCP |
| PROPOSED STORM PIPE | |
| PROPOSED STORM STRUCTURE LABEL | 1–2 |
| EXISTING FENCE | |
| EXISTING UTILITY POLE | |
| EXISTING OVERHEAD TELEPHONE LINE | OT |
| EXISTING UNDERGROUND TELEPHONE LINE | UT |
| EXISTING OVERHEAD ELECTRIC LINE | OE |
| EXISTING TELEPHONE BOX | T |
| EXISTING GAS LINE | G |
| EXISTING GAS VALVE | GV |
| EXISTING WELL | W |
| EXISTING WATER VALVE | WV |
| EXISTING FIRE HYDRANT | |
| EXISTING WATER LINE | W |
| PROPOSED FIRE HYDRANT | |
| PROPOSED WATER VALVE | |
| PROPOSED THRUST BLOCK | |
| PROPOSED WATER LINE | W |
| EXISTING SANITARY SEWER MANHOLE | S |
| EXISTING SANITARY SEWER LINE | S |
| EXISTING SANITARY SEWER FORCEMAIN | FM |
| PROPOSED SANITARY SEWER FLOW ARROW | |
| PROPOSED SANITARY SEWER MANHOLE | |
| PROPOSED SANITARY SEWER LINE | S |
| PROPOSED SANITARY SEWER STRUCTURE LABEL | MH |

## LIGHTING AND LANDSCAPING NOTES:

1. ALL LIGHTING SHALL BE WALL-MOUNTED AS PER ARCHITECTURAL PLANS.

## WATER AND SEWER NOTES:

1. REFER TO CONTRACT No. 44-4884-D, NAPA WASHINGTON, NOV. 24, 2015, FOR WATER AND SEWER PLANS.

## MSHA NOTES:

1. REFER TO MSHA ACCESS PERMIT PLANS, DATED DEC. 11, 2015, FOR WORK WITHIN SHA RIGHT-OF-WAY.

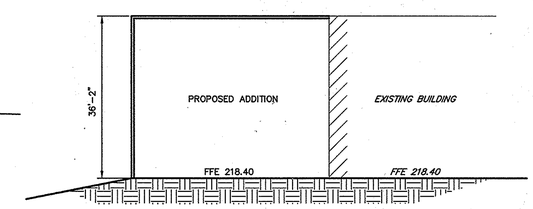


NOTE:
REFER TO ARCHITECTURAL PLANS FOR DETAILED INFORMATION.

## BUILDING ELEVATION

NOT TO SCALE

APPROVED: HOWARD COUNTY DEPARTMENT OF PLANNING AND ZONING

| | |
|---|---|
| CHIEF, DIVISION OF LAND DEVELOPMENT | DATE 5-4-16 |
| CHIEF, DEVELOPMENT ENGINEERING DIVISION | DATE 5-4-16 |
| DIRECTOR | DATE 5-16-16 |

| NO. | DATE | REVISION |
|---|---|---|

FOR RETTEW ASSOCIATES BY:

MANAGER: DAVID D. MILLER, P.E.
DESIGN BY: JAR | CHKD BY: DEW
SURV. CHIEF: | FIELDBOOK NO. / DATA COLLECTOR
DRAWN BY: DCW | CHKD BY: DEW
DRAWING REFERENCE: C:_RettewVault\WP\099812001-Washington NAPA\Sheets\LD\099812001-05_GRADING.dwg
XREFS: 099812001-SV-BASE, 099812001-TBLK, 099812001-TOPO, 099812001-UTIL, 099812001-SV-UTIL, 099812001-BNDY, 099812001-SITE, 099812001-SITE-PROP

CLIENT
GENUINE PARTS COMPANY
2999 CIRCLE 75 PARKWAY
ATLANTA, GA 30339
PHONE: (770) 953-1700

SCALE: AS NOTED

RETTEW
RETTEW Associates, Inc.
3020 Columbia Ave., Lancaster, PA 17603
Phone (717) 394-3721 - Fax (717) 394-1063
Email: rettew@rettew.com
Website: www.rettew.com
Engineers · Planners · Surveyors · Landscape Architects
Environmental Consultants

# GRADING AND UTILITY PLAN
SITE DEVELOPMENT PLAN
FOR
# NAPA WASHINGTON
HOWARD COUNTY, MD

DATE: MARCH 2, 2016
SHEET NO. 5 OF 17
DWG. NO. 099812001

SDP-15-005, ~~CP-15-074~~

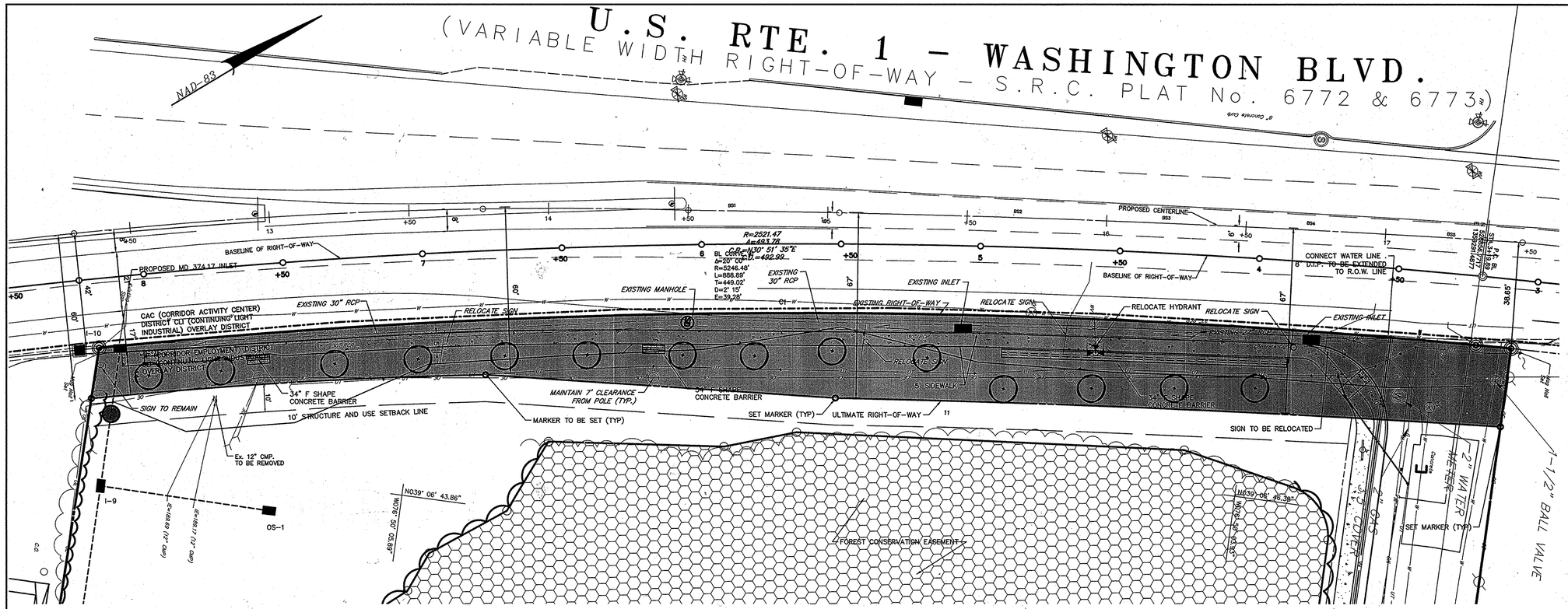


## ROUTE 1 ACCESS PERMIT LAYOUT PLAN

SCALE : 1"=20'

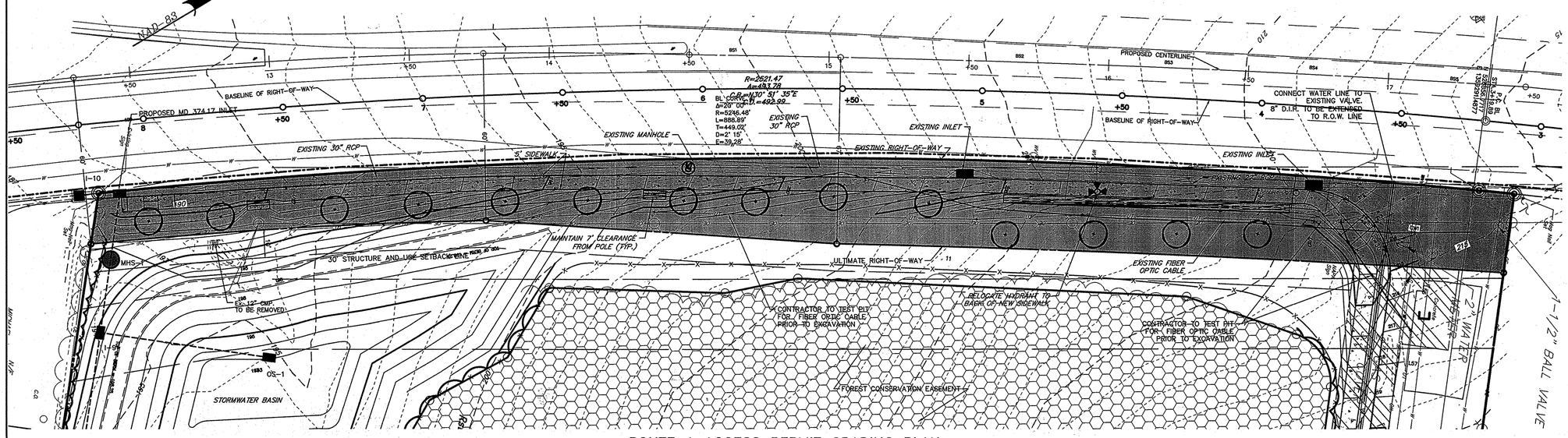


## ROUTE 1 ACCESS PERMIT GRADING PLAN

SCALE : 1"=20'

## LEGEND

| | |
|---|---|
| EXISTING BOUNDARY LINE | |
| PROPOSED LOT LINE | |
| EXISTING RIGHT-OF-WAY LINE | |
| EXISTING CURB | |
| PROPOSED CURB | |
| EXISTING PAVEMENT | |
| PROPOSED PAVEMENT | |
| EXISTING ZONING BOUNDARY | |
| EXISTING VEGETATION | DECIDUOUS TREE |
| | EVERGREEN TREE |
| EXISTING TREELINE | |
| PROPOSED TREELINE | |
| EXISTING CONTOUR LINE | 500 |
| PROPOSED CONTOUR LINE | 500 |
| PROPOSED SPOT ELEVATION | + 500.00 |
| PROPOSED FINISHED FLOOR ELEVATION | F.E.=500.00 |
| EXISTING STORM MANHOLE | |
| PROPOSED STORM MANHOLE | |
| EXISTING STORM INLET | |
| PROPOSED STORM INLET | |
| EXISTING STORM HEADWALL/ENDWALL | |
| PROPOSED STORM HEADWALL/ENDWALL | |
| PROPOSED PIPE OUTLET PROTECTION | RIP RAP |
| EXISTING STORM PIPE | |
| PROPOSED STORM PIPE | |
| PROPOSED STORM STRUCTURE LABEL | I-2 |
| EXISTING FENCE | |
| EXISTING UTILITY POLE | |
| EXISTING OVERHEAD TELEPHONE LINE | OT |
| EXISTING UNDERGROUND TELEPHONE LINE | UT |
| EXISTING OVERHEAD ELECTRIC LINE | OE |
| EXISTING TELEPHONE BOX | T |
| EXISTING GAS LINE | G |
| EXISTING GAS VALVE | GV |
| EXISTING WELL | W |
| EXISTING WATER VALVE | WV |
| EXISTING FIRE HYDRANT | |
| EXISTING WATER LINE | W |
| PROPOSED FIRE HYDRANT | |
| PROPOSED WATER VALVE | WV |
| PROPOSED THRUST BLOCK | TB |
| PROPOSED WATER LINE | W |
| EXISTING SANITARY SEWER MANHOLE | S |
| EXISTING SANITARY SEWER LINE | S |
| EXISTING SANITARY SEWER FORCEMAIN | FM |
| PROPOSED SANITARY SEWER FLOW ARROW | |
| PROPOSED SANITARY SEWER MANHOLE | |
| PROPOSED SANITARY SEWER LINE | S |
| PROPOSED SANITARY SEWER STRUCTURE LABEL | MH |
| PROPOSED AREA TO BE DEDICATED AS RIGHT-OF-WAY | |

## NOTES

1. REFER TO CONTRACT No. 44-4884-D, NAPA WASHINGTON WATER PLAN, DATED APR. 27, 2015, FOR WATER LINE CONNECTION.
2. THE PROTECTION AND OR RELOCATION OF UTILITY POLES, RELOCATION AND OR INSTALLATION OF SIGNS, RELOCATION OF FIRE HYDRANT, AND CONNECTION OF WATER LINE TO EXISTING MAIN LINE WITHIN ROUTE 1 RIGHT-OF-WAY MUST CONFORM TO THE CONDITIONS OF A SHA UTILITY PERMIT.
3. ALL SIGNS SHALL CONFORM SECTION 821, BREAKAWAY BASE SUPPORT SYSTEM.
4. EXISTING SIGNS MAY BE RELOCATED DURING CONSTRUCTION. REMOVE EXISTING AND RELOCATED SIGNS WHEN THE NEW SIGNING SYSTEM IS COMPLETE. ALL NEW SIGNS IN A PARTICULAR SEQUENCE GIVING SIMILAR DIRECTIONS SHALL BE INSTALLED BEFORE EXISTING SIGNS ARE REMOVED. AFTER REMOVING THE SIGN STRUCTURE, REMOVE THE REMAINING CONCRETE FOUNDATIONS AS SPECIFIED IN 207.03.01. HOLES LEFT AFTER SIGN REMOVAL SHALL BE BACKFILLED, COMPACTED, AND RESTORED TO CONDITIONS SIMILAR TO THE SURROUNDING AREA.
5. SIDEWALK CONSTRUCTION SHALL BE IN ACCORDANCE WITH SECTION 603, SIDEWALK.
6. THE DETECTABLE WARNING SURFACE SHALL CONFORM TO THE MOST RECENT ACCESSIBILITY GUIDELINES OF THE AMERICANS WITH DISABILITIES ACT (ADA).
7. REFER TO MSHA ACCESS PERMIT PLAN, BY RETTEW ASSOCIATES, INC., DATED DECEMBER 11, 2015 FOR DETAILS AND SITE INFORMATION FOR WORK PERFORMED IN MHSA RIGHT-OF-WAY

APPROVED: HOWARD COUNTY DEPARTMENT OF PLANNING AND ZONING

| | |
|---|---|
| CHIEF, DIVISION OF LAND DEVELOPMENT | DATE 5-11-16 |
| CHIEF, DEVELOPMENT ENGINEERING DIVISION | DATE 5-4-16 |
| DIRECTOR | DATE 5-10-16 |

| NO. | DATE | REVISION |
|---|---|---|
| | | |

FOR RETTEW ASSOCIATES BY: STATE OF MARYLAND REGISTERED PROFESSIONAL ENGINEER No. 37179 CHRISTOPHER W. WEIGHT

XREF'S:
0981300-SV-BASE
0981300-TB3X
0981300-TOPO
0981300-SIGNS
0981300-ROW
0981300-ROW-FILL
0981300-ROW-CUT
0981300-SIGNS-Proof

| | |
|---|---|
| MANAGER: DAVID D. MILLER, P.E. | |
| DESIGN BY: JAR | CHKD BY: DEW |
| SURV. CHIEF: | FIELDBOOK NO. DATA COLLECTOR |
| DRAWN BY: DCW | CHKD BY: DEW |

DRAWING REFERENCE: G:_Retteew\Work\099812001-Washington NAPA\Sheets\LD\099812001-05_GRP.dwg

CLIENT
GENUINE PARTS COMPANY
2999 CIRCLE 75 PARKWAY
ATLANTA, GA 30339
PHONE: (770) 953-1700

SCALE
AS NOTED

RETTEW
RETTEW Associates, Inc.
3020 Columbia Avenue, Lancaster, PA 17603
Phone (717) 394-3721 Fax (717) 394-1063
Email: rettew@rettew.com
Website: www.rettew.com
Engineers • Planners • Surveyors • Landscape Architects
Environmental Consultants

ROUTE 1 ACCESS PERMIT PLAN
SITE DEVELOPMENT PLAN
FOR
# NAPA WASHINGTON
HOWARD COUNTY, MD

| | |
|---|---|
| DATE: | MARCH 2, 2016 |
| SHEET NO. | 6 OF 17 |
| DWG. NO. | 099812001 |

SDP-15-005, ~~CP-15-074~~

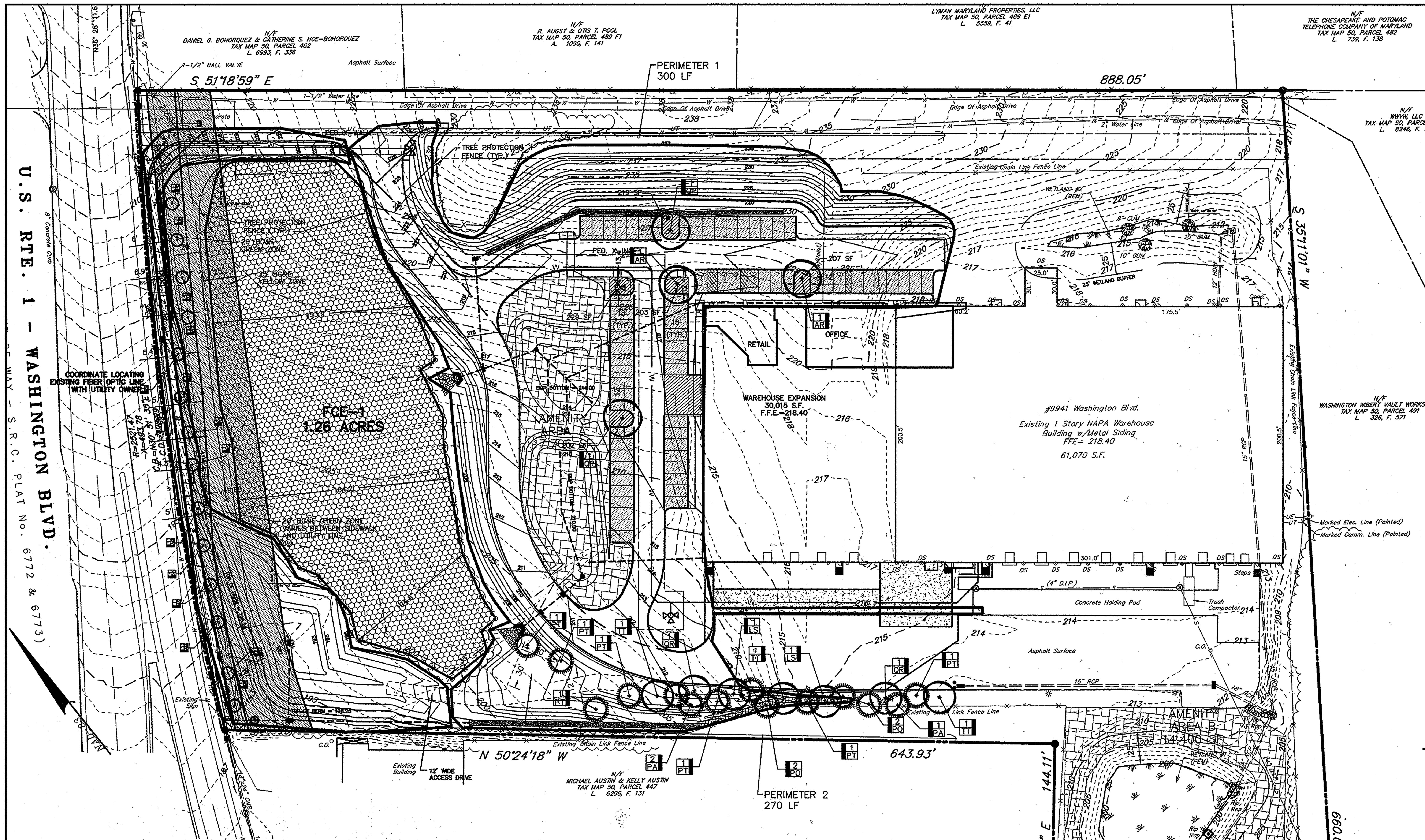


## LANDSCAPING REQUIREMENTS:

EXISTING TREE PROTECTION:

- THE AREA BELOW THE DRIPLINE OF AN EXISTING TREE TO REMAIN SHOULD BE UNDISTURBED EITHER BY CUTTING OR FILLING IN THE DEVELOPMENT PROCESS. NO IMPERVIOUS MATERIAL SHOULD BE PLACED UNDER THE DRIPLINE AND A TREE PROTECTION FENCE WILL BE REQUIRED TO BE INSTALLED AROUND TREES AT THE LIMIT OF DISTURBANCE. SPECIFIC GUIDELINE FOR TREE PROTECTION DURING CONSTRUCTION PROCESS CAN BE FOUND IN THE FOREST CONSERVATION MANUAL.

MAINTENANCE:

- THE DEVELOPER IS RESPONSIBLE FOR MAINTENANCE OF THE LANDSCAPING DURING CONSTRUCTION AND IS RESPONSIBLE FOR OBTAINING A 1 YEAR GUARANTEE THAT ENSURES THE SURVIVAL OR REPLACEMENT OF ALL REQUIRED PLANT MATERIALS FOR 1 YEAR FROM DATE ON THE LANDSCAPE CERTIFICATION.
- AT THE END OF THE MAINTENANCE PERIOD, IT IS THE DEVELOPER'S RESPONSIBILITY TO TRANSFER FORMALLY THE LONG TERM RESPONSIBILITY FOR THE REQUIRED LANDSCAPING TO THE OWNER, OR OTHER AGENT, RESPONSIBLE FOR THE LONG TERM MAINTENANCE OF THE DEVELOPMENT. MAINTENANCE RESPONSIBILITIES INCLUDE, BUT ARE NOT LIMITED TO, PRUNING, FERTILIZING, WATERING, MOWING, WEEDING, AND OTHER SUCH ACTIVITIES NECESSARY TO THE HEALTH AND SURVIVAL OF THE LANDSCAPING. THE REQUIRED PLANTINGS SHOULD BE MAINTAINED IN GOOD GROWING CONDITION AND, WHENEVER NECESSARY, REPLACED WITH NEW PLANT MATERIALS TO ENSURE CONTINUED COMPLIANCE WITH LANDSCAPE REGULATIONS.
- IN ADDITION TO PLANTING, BERMS, AND OTHER LANDFORMS INSTALLED AS PART OF THE LANDSCAPE REQUIREMENTS SHOULD BE PERMANENTLY MAINTAINED IN GOOD CONDITION AND, WHENEVER NECESSARY, REPAIRED OR REPLACED.

PLANTING GUIDELINES:

- SHADE TREES SHALL BE A MINIMUM OF 2-1/2" CALIPER UNLESS OTHERWISE NOTED.
- SMALL DECIDUOUS TRESS MUST BE AT LEAST 8 – 10 FEET TALL.
- EVERGREEN TREES SHALL BE 6 – 8 FEET TALL.

GENERAL:

- THIS PLAN HAS BEEN PREPARED IN ACCORDANCE WITH THE PROVISIONS OF SECTION 16.124 OF THE HOWARD COUNTY CODE AND LANDSCAPE MANUEL.

### PLANT SCHEDULE C – ROUTE 1 STREET TREE LANDSCAPING

| SYM. KEY | QTY. | BOTANICAL NAME | COMMON NAME | SIZE | REMARKS |
|---|---|---|---|---|---|
| AG | 4 | ACER GRISEUM | PAPERBARK MAPLE | 2.5" – 3" CAL. | SEE ABOVE NOTES |
| CF | 5 | PRUNUS CERASIFERA ATROPURPUREA 'THUNDERCLOUD' | THUNDERCLOUD PURPLEAF PLUM | 2.5" – 3" CAL. | SEE ABOVE NOTES |
| MS | 5 | MALUS X 'SNOWDRIFT' | SNOWDRIFT CRABAPPLE | 2.5" – 3" CAL. | SEE ABOVE NOTES |

### PLANT SCHEDULE B – PARKING LOT INTERIOR LANDSCAPING

| SYM. KEY | QTY. | BOTANICAL NAME | COMMON NAME | SIZE | REMARKS |
|---|---|---|---|---|---|
| AR | 2 | ACER RUBRUM 'RED SUNSET' | RED SUNSET RED MAPLE | 2.5" – 3" CAL. | SEE ABOVE NOTES |
| QP | 2 | QUERCUS PHELLOS | WILLOW OAK | 2.5" – 3" CAL. | SEE ABOVE NOTES |

### PLANT SCHEDULE A – PERIMETER LANDSCAPE EDGE

| SYM. KEY | QTY. | BOTANICAL NAME | COMMON NAME | SIZE | REMARKS |
|---|---|---|---|---|---|
| LS | 2 | LIQUIDAMBAR STYRACIFLUA | AMERICAN SWEETGUM | 2.5" – 3" CAL. | SEE ABOVE NOTES |
| QR | 2 | QUERCUS RUBRA | NORTHERN RED OAK | 2.5" – 3" CAL. | SEE ABOVE NOTES |
| TT | 3 | TILIA TOMENTOSA | SILVER LINDEN | 2.5" – 3" CAL. | SEE ABOVE NOTES |
| PA | 3 | PICEA ABIES | NORWAY SPRUCE | 6' – 8' HT. | SEE ABOVE NOTES |
| PO | 4 | PICEA OMORIKA | SERBIAN SPRUCE | 6' – 8' HT. | SEE ABOVE NOTES |
| PT | 7 | PINUS THUNBERGINIA | JAPANESE BLACK PINE | 6' – 8' HT. | SEE ABOVE NOTES |

## GENERAL NOTES:

1. PER THE LANDSCAPE MANUAL, LANDSCAPING IS PROVIDED ONLY FOR THE ADDITIONAL DEVELOPMENT SINCE THIS PLAN DOES NOT INCREASE THE AREA BY MORE THAN 50%.
2. AT THE TIME OF PLANT INSTALLATION, ALL SHRUBS AND TREES LISTED AND APPROVED ON THE LANDSCAPE PLAN, SHALL COMPLY WITH THE PROPER HEIGHT REQUIREMENTS IN ACCORDANCE WITH THE HOWARD COUNTY LANDSCAPE MANUAL. IN ADDITION, NO SUBSTITUTIONS OR RELOCATIONS OF THE REQUIRED PLANTINGS MAY BE MADE WITHOUT PRIOR REVIEW AND APPROVAL FROM THE DEPARTMENT OF PLANNING AND ZONING. ANY DEVIATION FROM THE APPROVED LANDSCAPE PLAN MAY RESULT IN THE DENIAL OR DELAY IN THE RELEASE OF THE LANDSCAPE SURETY UNTIL SUCH TIME AS ALL REQUIRED MATERIALS ARE PLANTED AND/OR REVISIONS ARE MADE TO THE APPLICABLE PLANS.
3. THE OWNER, TENANTS, AND/OR THEIR AGENTS SHALL BE RESPONSIBLE FOR MAINTENANCE OF THE REQUIRED LANDSCAPING INCLUDING PLANT MATERIALS AND BEAMS, FENCES AND WALLS. ALL PLANT MATERIALS SHALL BE MAINTAINED IN GOOD GROWING CONDITION, AND WHEN NECESSARY REPLACED WITH NEW MATERIALS TO ENSURE CONTINUED COMPLIANCE WITH APPLICABLE REGULATIONS. ALL OTHER REQUIRED LANDSCAPING SHALL BE PERMANENTLY MAINTAINED IN GOOD CONDITION, AND WHEN NECESSARY, REPAIRED OR REPLACED.
4. LANDSCAPE SURETY SHALL BE IN ACCORDANCE WITH HOWARD COUNTY LANDSCAPE MANUAL, ADOPTED JANUARY 4, 1993 AND AMENDED MARCH 2, 1998, SECTION ii, INSTALLATION, SURETY AND CERTIFICATION. THIS PLAN HAS BEEN PREPARED IN ACCORDANCE WITH THE PROVISIONS OF SECTION 16.124 OF THE HOWARD COUNTY CODE AND THE LANDSCAPE MANUAL. FINANCIAL SURETY IN THE AMOUNT OF $5,400 FOR THE REQUIRED 11 SHADE, 14 EVERGREENS, & 0 SHRUBS WILL BE POSTED WITH THE DEVELOPER AGREEMENT.

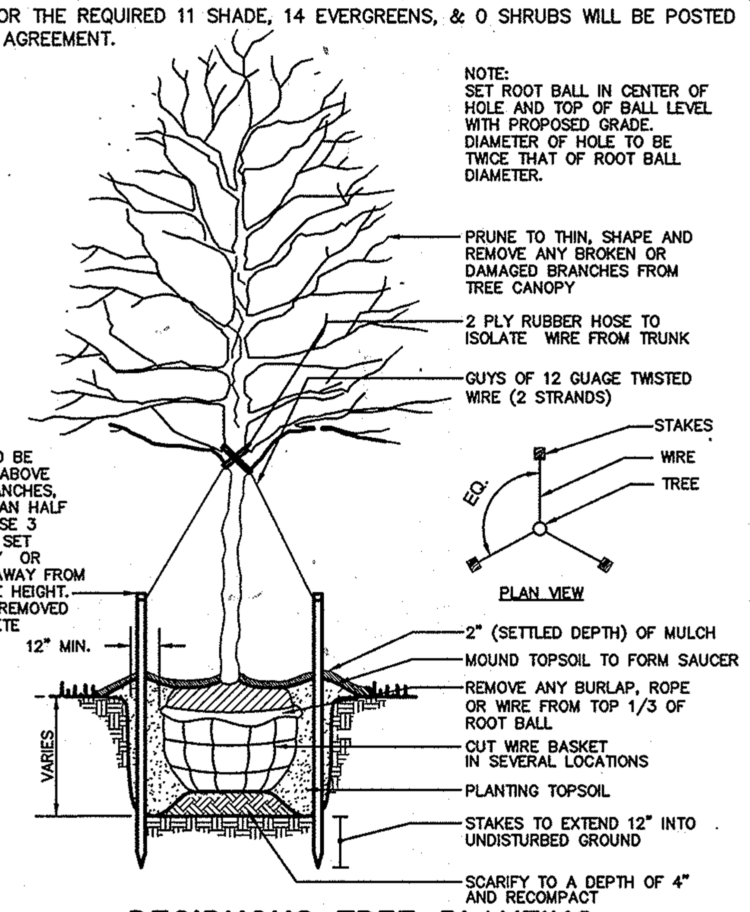


### DECIDUOUS TREE PLANTING
NOT TO SCALE
LS\LS003

## AMENITY AREA NOTES

1. A MINIMAL AREA OF 22,520 SQUARE FEET (SF) IS REQUIRED AS AN AMENITY AREA FOR EMPLOYEES AND VISITORS. SEATING AND LANDSCAPING SHALL BE PROVIDED. THE POTENTIAL AMENITY AREAS SHOWN ON THIS PLAN ARE SUGGESTIONS, AND CAN BE RELOCATED AS DIRECTED BY THE OWNER.
2. MINIMAL AREA CALCULATION:
   SITE AREA: 10.94 ACRES
   WETLANDS AND BUFFERS: – 0.6 ACRES
   NET AREA: 10.34 ACRES
   AMENITY AREA = 10.34 ACRE * 0.05 (5% OF NET AREA) = 0.517 ACRE (22,520 SF)
3. A MINIMAL OF 0.25 ACRE PER AMENITY AREA IS REQUIRED.

### SCEDULE A: PERIMETER LANDSCAPE EDGE

| PERIMETER No. | 1 | 2 |
|---|---|---|
| USE SITUATION | PARKING ADJACENT TO ROADWAY | ADJACENT TO PERIMETER PROPERTIES – LOADING |
| LANDSCAPE TYPE | E | C |
| LINEAR FEET OR ROADWAY FRONTAGE/PERIMETER | 300 L.F. | 270 L.F. |
| CREDIT FOR EXISTING VEGETATION | NO | NO |
| CREDIT FOR WALL, FENCE, BERM, OR GRADE CHANGE | GRADE CHANGE THAT CAUSES THE PARKING LOT TO BE LOCATED LOWER THAN THE ADJACENT ROADWAY BY 3 FEET OR MORE TO BE SUBSTITUTED FOR SHRUB PLANTING | NO |
| NUMBER OF PLANTS REQUIRED<br>SHADE TREES<br>EVERGREEN TREES<br>SHRUBS | NONE. | <br>1:40 ........ 7 EA<br>1:20 ........ 14 EA<br>0 |
| NUMBER OF PLANTS PROVIDED<br>SHADE TREES<br>EVERGREEN TREES<br>SHRUBS | NONE. | <br>1:40 ........ 7 EA<br>1:20 ........ 14 EA<br>0 |

## LEGEND

- EXISTING BOUNDARY LINE
- PROPOSED LOT LINE
- EXISTING RIGHT-OF-WAY LINE
- EXISTING CURB
- PROPOSED CURB
- EXISTING PAVEMENT
- PROPOSED PAVEMENT
- EXISTING ZONING BOUNDARY
- EXISTING VEGETATION — DECIDUOUS TREE; EVERGREEN TREE
- EXISTING TREELINE
- PROPOSED TREELINE
- TREE PROTECTION FENCE
- PROPOSED EVERGREEN TREE
- PROPOSED DECIDUOUS TREE
- PROPOSED SHRUB
- LANDSCAPING TAG — 15 QUANTITY; PO IDENTIFICATION SYMBOL
- PROPOSED AMENITY AREA
- PROPOSED LIGHTS

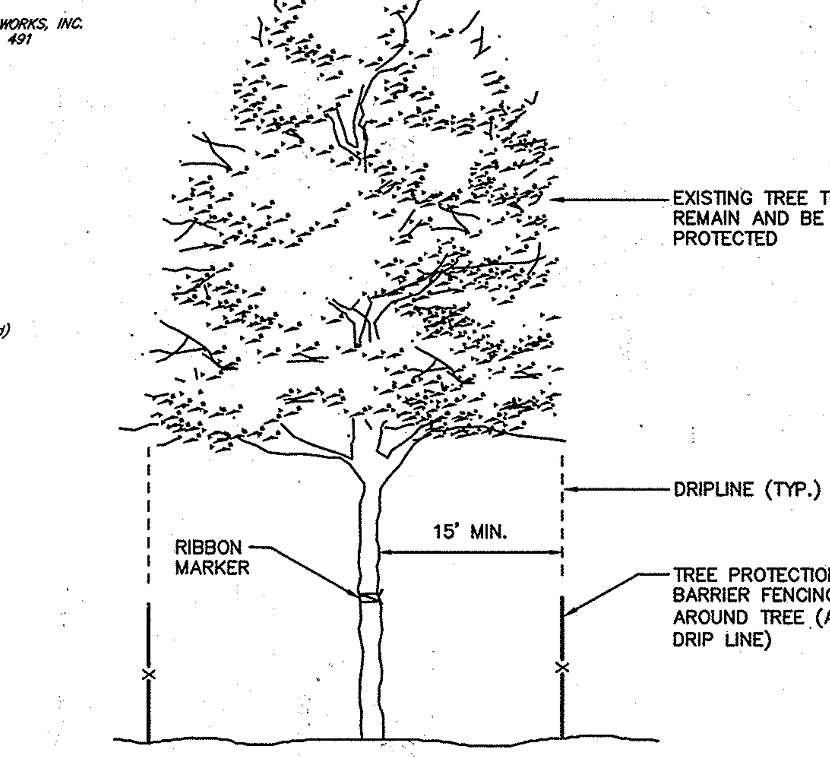


### TREE PROTECTION DETAIL
NOT TO SCALE

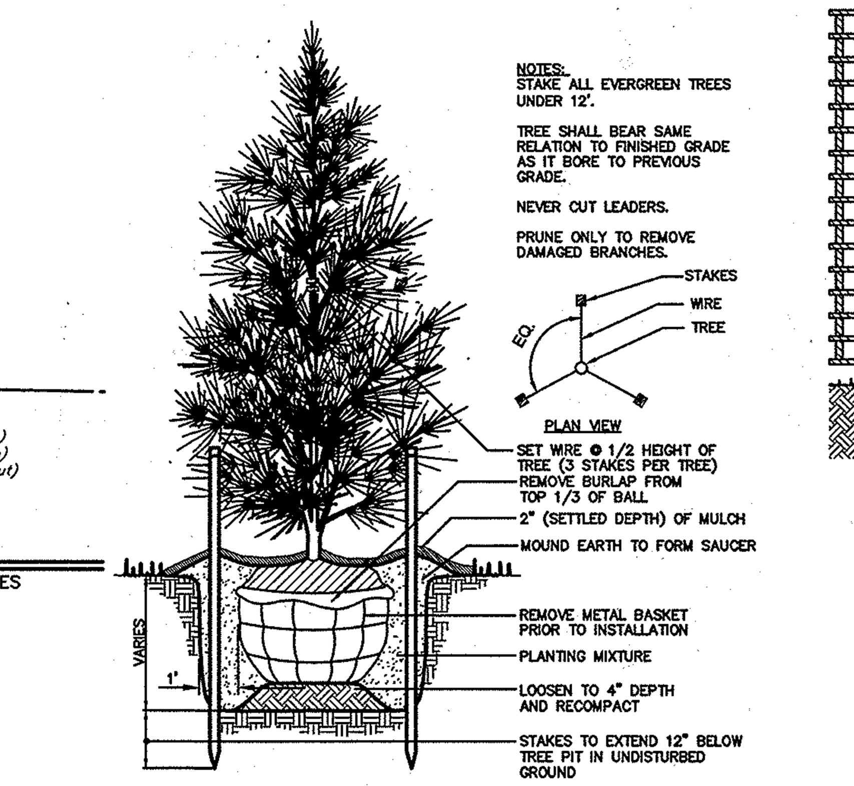


### EVERGREEN TREE PLANTING
NOT TO SCALE
LS\LS001

1. GRADE CHANGES AND EXCAVATIONS SHALL NOT ENCROACH UPON THE TREE PROTECTION ZONE.
2. TREES BEING REMOVED SHALL NOT BE FELLED, PUSHED, OR PULLED INTO A TREE PROTECTION ZONE OR INTO TREES TO BE RETAINED.
3. NO TOXIC MATERIALS, INCLUDING PETROLEUM BASED AND DERIVED PRODUCTS SHALL BE STORED WITHIN ONE HUNDRED (100) FEET OF A TREE PROTECTION ZONE.
4. THE AREA WITHIN THE TREE PROTECTION ZONE SHALL NOT BE BUILT UPON, NOR SHALL ANY MATERIALS BE STORED THERE EITHER TEMPORARILY OR PERMANENTLY. VEHICLES AND EQUIPMENT SHALL NOT BE PARKED IN THE TREE PROTECTION ZONE.
5. SEDIMENT, RETENTION AND DETENTION BASINS SHALL NOT BE LOCATED WITHIN THE TREE PROTECTION ZONE, NOR SHALL THEY DISCHARGE INTO THE TREE PROTECTION ZONE.
6. WHEN TREE STUMPS ARE LOCATE WITHIN TEN (10) FEET OF THE TREE PROTECTION ZONE, THE STUMPS SHALL ONLY BE REMOVED BY MEANS OF A STUMP GRINDER TO MINIMIZE THE EFFECT ON THE SURROUNDING ROOT SYSTEMS.
7. TREE ROOTS WHICH MUST BE SEVERED SHALL BE CUT BY A BACKHOE OR SIMILAR REQUIPMENT ALIGNED RADICALLY TO THE TREE. (THIS METHOD REDUCES THE LATERAL MOVEMENT OF THE ROOTS DURING EXCAVATION, WHICH IF DONE BY OTHER METHODS, COULD DAMAGE THE INTERTWINED ROOTS OF ADJACENT TREES.)
8. WITHIN FOUR (4) HOURS OF ANY SEVERANCE OF ROOTS, ALL TREE ROOTS THAT HAVE BEEN EXPOSED AND/OR DAMAGED SHALL BE TRIMMED CLEANLY AND COVERED TEMPORARILY WITH MOIST PEAT MOSS, MOIST BURLAP OR OTHER BIODEGRADABLE MATERIAL TO KEEP THEM FROM DRYING OUT UNTIL PERMANENT COVER CAN BE INSTALLED.
9. IF THERE IS NO ALTERNATIVE BUT TO LOCATE A UTILITY LINE THROUGH A TREE PROTECTION ZONE, TUNNELING SHALL BE USED INSTEAD OF TRENCHING, EXCEPT WHERE IN THE OPINION OF THE TOWNSHIP, SURVIVAL OF THE TREE WOULD NOT BE AFFECTED BY EITHER METHOD. THE TOWNSHIP SHALL DETERMINE THE MOST DESIRABLE LOCATION FOR THE UTILITY LINE. TRENCHES SHALL BE FILLED AS SOON AS POSSIBLE, AND TAMPED LIGHTLY TO AVOID AIR SPACES.
10. MARKING THE TREE PROTECTION ZONE ON THE SITE PRIOR TO CONSTRUCTION, THE TREE PROTECTION ZONE SHALL BE DELINEATED BY THE FOLLOWING METHODS:
    A) THE TREE PROTECTION ZONE THAT IS DELINEATED ON THE SITE PRIOR TO CONSTRUCTION SHALL CONFORM TO THE APPROVED DEVELOPMENT PLANS.
    B) ALL TREES SCHEDULED TO REMAIN SHALL BE MARKED; WHERE GROUPS OF TREES EXIST, ONLY THE TREES ON THE EDGE NEED TO BE MARKED.
    C) A SUITABLE FENCE MOUNTED ON STEEL POSTS, LOCATED EIGHT FEET ON CENTER, SHALL BE PLACED ALONG THE BOUNDARY OF THE TREE PROTECTION ZONE. THE FENCING ALONG THE ZONE SHALL BE MAINTAINED UNTIL ALL CONSTRUCTION AND OTHER WORK HAS BEEN COMPLETED. ANY DAMAGES TO THE PROTECTIVE FENCING SHALL BE REPLACED AND REPAIRED BEFORE FURTHER CONSTRUCTION COMMENCES.
    D) IN ADDITION TO THE TREE PROTECTION ZONE, TREES MAY BE LEFT STANDING AS PROTECTION BETWEEN THE TRUNKS OF THE TREES TO BE RETAINED AND THE LIMITS OF GRADING WHEN ADDITIONAL TREES ARE USED AS PROTECTION, THE TREE PROTECTION ZONE ON THE APPROVED PLAN SHALL BE MARKED IN THE FIELD SO THAT THE ADDITIONAL BUFFER AREA IS DELINEATED. WHEN THIS METHOD OF PROTECTION IS USED, THESE ADDITIONAL TREES SHALL BE REMOVED AT THE TIME OF COMPLETION OF THE PROJECT.
11. WHERE A TREE DESIGNATED FOR PRESERVATION IS SEVERELY DAMAGED BY CONSTRUCTION (OR IS CLEARLY NOT GOING TO SURVIVE) WITHIN ONE (1) YEAR OF THE END DATE OF CONSTRUCTION, TREE REPLACEMENT SHALL OCCUR AS PROVIDED FOR IN SUBSECTION D, BELOW.

### TREE PROTECTION NOTES
NOT TO SCALE

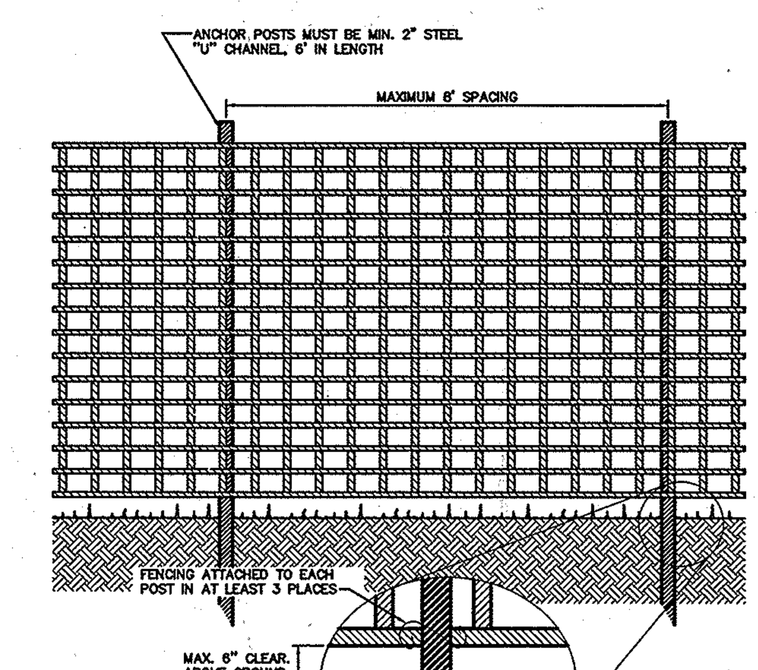


NOTES:
1. PROTECTION BARRIER SHALL BE 4' HIGH, CONSTRUCTED OF DURABLE AND HIGHLY VISIBLE MATERIAL (PLASTIC ORANGE CONSTRUCTION FENCE AND SNOW-FENCE MAY BE USED).
2. PROTECTION BARRIERS SHALL BE MAINTAINED THROUGHOUT THE DURATION OF THE WORK AT THE SITE.
3. ADDITIONAL WARNING SIGNS SHOULD ALSO BE PLACED ON THE FENCING AND IN APPROPRIATE AREAS NEAR THE WORK ZONE.

### TREE PROTECTION BARRIER FENCING
NOT TO SCALE
LS/LS010

| SCHEDULE B – PARKING LOT INTERNAL LANDSCAPING | |
|---|---|
| NUMBER OF PARKING SPACES | 69 SPACES |
| NUMBER OF TREES REQUIRED | 4 (1 SHADE TREE PER 20 PARKING SPACES) |
| NUMBER OF TREES PROVIDED | |
| SHADE TREES | 4 |
| OTHER TREES (2:1 substitution) | N/A |

APPROVED: HOWARD COUNTY DEPARTMENT OF PLANNING AND ZONING

CHIEF, DIVISION OF LAND DEVELOPMENT — DATE 5-11-16

CHIEF, DEVELOPMENT ENGINEERING DIVISION — DATE 5.4.16

DIRECTOR — DATE 5-16-16

I/WE CERTIFY THAT THE LANDSCAPING SHOWN ON THIS PLAN WILL BE DONE ACCORDING TO THE PLAN, SECTION 16.124 OF THE HOWARD COUNTY CODE AND THE LANDSCAPE MANUAL. I/WE FURTHER CERTIFY THAT UPON COMPLETION A LETTER OF LANDSCAPE INSTALLATION, ACCOMPANIED BY AN EXECUTED ONE YEAR GUARANTEE OF PLAN MATERIALS WILL BE SUBMITTED TO THE DEPARTMENT OF PLANNING AND ZONING.

GENUINE PARTS COMPANY (NAME) — TITLE — DATE 3/7/2016

| NO. | DATE | REVISION |
|---|---|---|
| | | |

FOR RETTEW ASSOCIATES BY: 3-2-16

MANAGER: DAVID D. MILLER, P.E.
XREFS: 099812001-SV-BASE, 099812001-LD-BASE, 099812001-LD-TBLK, 099812001-LD-LGND, 099812001-SV-TOPO, 099812001-LD-LDSP, 099812001-LD-CVNT, 099812001-LD-UTIL, 099812001-LD-GRAD
DESIGN BY: JAR — CHKD BY: DEW
SURV. CHIEF: — FIELDBOOK NO. DATA COLLECTOR
DRAWN BY: DCW — CHKD BY: DEW
DRAWING REFERENCE: c:_RettewVaultWIP\099812001-Washington NAPA\Sheets\LD\099812001-12_LDSP.dwg

CLIENT
GENUINE PARTS COMPANY
2999 CIRCLE 75 PARKWAY
ATLANTA, GA 30339
PHONE: (770) 953-1700

SCALE 1"=50'
0 25' 50' 100' 150'

RETTEW
RETTEW Associates, Inc.
3020 Columbia Ave., Lancaster, PA 17603
Phone (717) 394-3721 · Fax (717) 394-1063
Email: rettew@rettew.com
Website: www.rettew.com
Engineers · Planners · Surveyors · Landscape Architects
Environmental Consultants

# LANDSCAPING PLAN
## SITE DEVELOPMENT PLAN FOR NAPA WASHINGTON
HOWARD COUNTY, MD

DATE: MARCH 2, 2016
SHEET NO. 7 OF 17
DWG. NO. 099812001

SDP-15-005, ~~GP-15-074~~

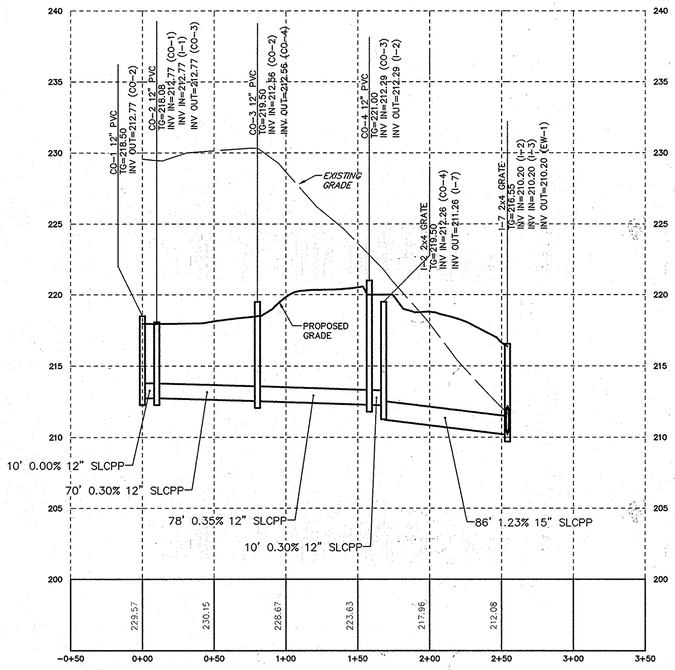


"CENTERLINE PROFILE OF CO-1 TO I-7"
HORIZONTAL SCALE – 1"=50'
VERTICAL SCALE – 1"=5'

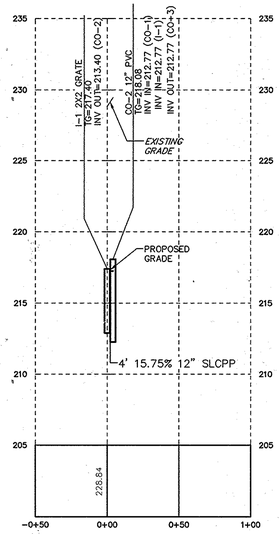


"CENTERLINE PROFILE OF I-1 TO CO-2"
HORIZONTAL SCALE – 1"=50'
VERTICAL SCALE – 1"=5'

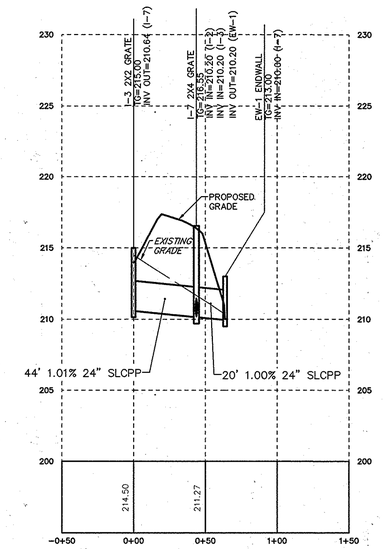


"CENTERLINE PROFILE OF I-3 TO EW-1"
HORIZONTAL SCALE – 1"=50'
VERTICAL SCALE – 1"=5'

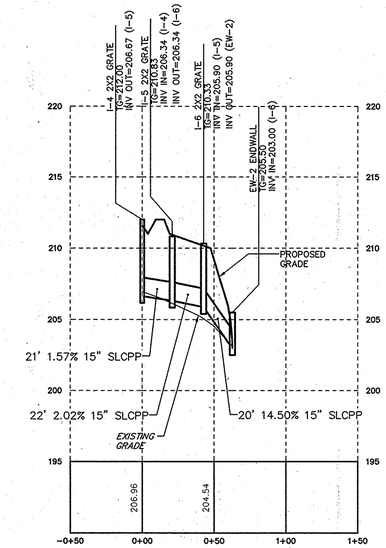


"CENTERLINE PROFILE OF I-4 TO EW-2"
HORIZONTAL SCALE – 1"=50'
VERTICAL SCALE – 1"=5'

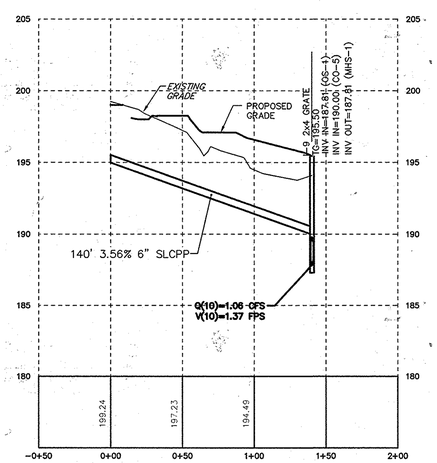


"CENTERLINE PROFILE OF CO-5 TO I-9"
HORIZONTAL SCALE – 1"=50'
VERTICAL SCALE – 1"=5'

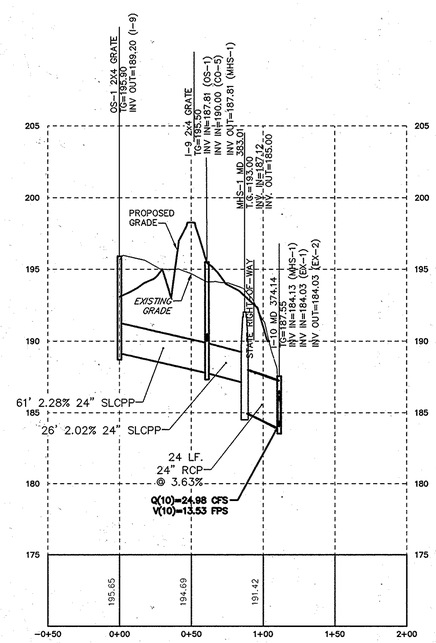


"CENTERLINE PROFILE OF OS-1 TO I-10"
HORIZONTAL SCALE – 1"=50'
VERTICAL SCALE – 1"=5'

APPROVED: HOWARD COUNTY DEPARTMENT OF PLANNING AND ZONING

| | |
|---|---|
| CHIEF, DIVISION OF LAND DEVELOPMENT | DATE 5-11-16 |
| CHIEF, DEVELOPMENT ENGINEERING DIVISION | DATE 5-4-16 |
| DIRECTOR | DATE 5-16-16 |

| NO. | DATE | REVISION |
|---|---|---|

FOR RETTEW ASSOCIATES BY:
STATE OF MARYLAND
WILLIAM H. HERSHEY
No. 37191
PROFESSIONAL ENGINEER

MANAGER: DAVID D. MILLER, P.E.
DESIGN BY: JAR
CHKD BY: DEW
SURV. CHIEF:
FIELDBOOK NO./ DATA COLLECTOR
DRAWN BY: DCW
CHKD BY: DEW
XREFS: 098812001-LD-TBLK 098812001-LD-PROF 098812001-LD-CONT
DRAWING REFERENCE: C:_Bettew\root\MP\098812001-Washington NAPA\Sheets\LD\098812001-06_Prof.dwg

CLIENT
GENUINE PARTS COMPANY
2999 CIRCLE 75 PARKWAY
ATLANTA, GA 30339
PHONE: (770) 953-1700

SCALE
AS NOTED

RETTEW
RETTEW Associates, Inc.
3020 Columbia Ave., Lancaster, PA 17603
Phone (717) 394-3721 · Fax (717) 394-1063
Email: rettew@rettew.com
Website: www.rettew.com
Engineers • Planners • Surveyors • Landscape Architects
Environmental Consultants

PROFILES: STORMWATER
SITE DEVELOPMENT PLAN
FOR
NAPA WASHINGTON
HOWARD COUNTY, MD

DATE: MARCH 2, 2016
SHEET NO. 8 OF 17
DWG. NO. 099812001

SDP-15-005, ~~GP-15-074~~

## DETAILS: SITE CONSTRUCTION

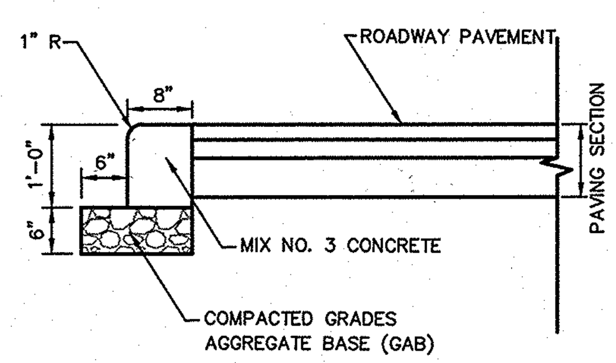


### CURB FLUSH (CONC. CURB ONLY)
NOT TO SCALE

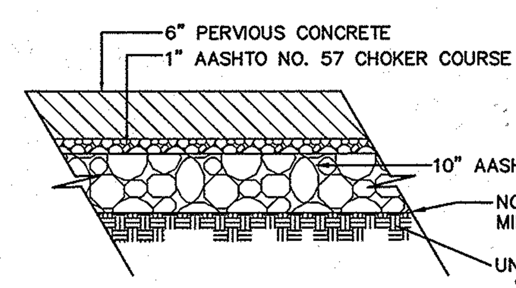


### PERVIOUS PAVING SECTION
NOT TO SCALE
SD/SD081

**NOTES:**
1. SEAL ALL JOINTS WITH AC-20 SEALANT
2. SEE PLAN FOR LOCATION OF P-2 AND P-4 PAVING.

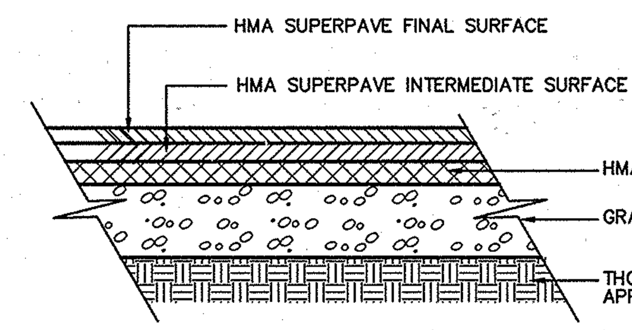


### BITUMINOUS PAVEMENT
NOT TO SCALE

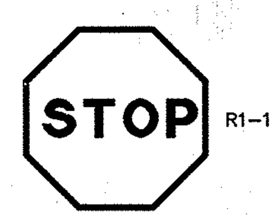


NOTE: SIGN CODES REFERENCED IN THESE PLANS ARE PER SIGN STANDARDS OF THE "MANUAL ON UNIFORM TRAFFIC CONTROL DEVICES".

### STOP SIGN – R1-1
NOT TO SCALE

**NOTE:**
SEE MD HSA HOP PLANS FOR DETAILS WITHIN STATE ROAD R.O.W.

| SECTION NUMBER | ROAD AND STREET CLASSIFICATION | CALIFORNIA BEARING RATIO (CBR) / PAVEMENT MATERIAL (INCHES) | 3 TO <5 (MIN HMA WITH GAB) | 5 TO <7 (MIN HMA WITH GAB) | ≥ 7 (MIN HMA WITH GAB) | 3 TO <5 (HMA WITH CONSTANT GAB) | 5 TO <7 (HMA WITH CONSTANT GAB) | ≥ 7 (HMA WITH CONSTANT GAB) |
|---|---|---|---|---|---|---|---|---|
| P-1 | PARKING BAYS: RESIDENTIAL AND NON-RESIDENTIAL; PARKING DRIVE AISLES: RESIDENTIAL AND NON-RESIDENTIAL WITH NO MORE THAN 2 HEAVY TRUCKS PER DAY | HMA SUPERPAVE FINAL SURFACE 9.5 MM PG 64-22, LEVEL 1 (ESAL) | 1.5 | 1.5 | 1.5 | 1.5 | 1.5 | 1.5 |
| | | HMA SUPERPAVE INTERMEDIATE SURFACE (NA) | NA | NA | NA | NA | NA | NA |
| | | HMA SUPERPAVE BASE 19.0 MM, PG 64-22, LEVEL 1 (ESAL) | 2.0 | 2.0 | 2.0 | 3.5 | 3.0 | 2.5 |
| | | GRADED AGGREGATE BASE (GAB) | 8.5 | 7.0 | 5.0 | 4.0 | 4.0 | 4.0 |
| P-2 | PARKING DRIVE AISLES: RESIDENTIAL AND NON-RESIDENTIAL WITH NO MORE THAN 10 HEAVY TRUCKS PER DAY; LOCAL ROADS: ACESS PLACE, ACCESS STREET; CUL-DE-SACS: RESIDENTIAL | HMA SUPERPAVE FINAL SURFACE 9.5 MM, PG 64-22, LEVEL 1 (ESAL) | 1.5 | 1.5 | 1.5 | 1.5 | 1.5 | 1.5 |
| | | HMA SUPERPAVE INTERMEDIATE SURFACE 9.5 MM, PG 64-22, LEVEL 1 (ESAL) | 1.0 | 1.0 | 1.0 | 1.0 | 1.0 | 1.0 |
| | | HMA SUPERPAVE BASE 19.0 MM, PG 64-22, LEVEL 1 (ESAL) | 2.0 | 2.0 | 2.0 | 3.5 | 2.0 | 2.0 |
| | | GRADED AGGREGATE BASE (GAB) | 8.0 | 4.0 | 3.0 | 4.0 | 4.0 | 4.0 |
| P-3 | PARKING DRIVE AISLES: RESIDENTIAL AND NON-RESIDENTIAL WITH NO MORE THAN 10 HEAVY TRUCKS PER DAY; LOCAL ROADS: ACCESS PLACE, ACCESS STREET; CUL-DE-SACS: NON-RESIDENTIAL; MINOR COLLECTORS: RESIDENTIAL | HMA SUPERPAVE FINAL SURFACE 9.5 MM, PG 64-22, LEVEL 1 (ESAL) | 1.5 | 1.5 | 1.5 | 1.5 | 1.5 | 1.5 |
| | | HMA SUPERPAVE INTERMEDIATE SURFACE 9.5 MM, PG 64-22, LEVEL 1 (ESAL) | 1.0 | 1.0 | 1.0 | 1.0 | 1.0 | 1.0 |
| | | HMA SUPERPAVE BASE 19.0 MM, PG 64-22, LEVEL 1 (ESAL) | 3.0 | 3.0 | 3.0 | 4.5 | 3.0 | 2.0 |
| | | GRADED AGGREGATE BASE (GAB) | 10.0 | 6.0 | 3.0 | 6.0 | 6.0 | 6.0 |
| P-4 | MINOR COLLECTORS: NON-RESIDENTIAL; MAJOR COLLECTORS | HMA SUPERPAVE FINAL SURFACE 12.5 MM, PG 64-22, LEVEL 2 (LOW ESAL) | 2.0 | 2.0 | 2.0 | 2.0 | 2.0 | 2.0 |
| | | HMA SUPERPAVE INTERMEDIATE SURFACE 12.5 MM, PG 64-22, LEVEL 2 (LOW ESAL) | 2.0 | 2.0 | 2.0 | 2.0 | 2.0 | 2.0 |
| | | HMA SUPERPAVE BASE 19.0 MM, PG 64-22, LEVEL 2 (LOW ESAL) | 4.0 | 4.0 | 3.0 | 6.0 | 5.0 | 3.0 |
| | | GRADED AGGREGATE BASE (GAB) | 13.0 | 7.0 | 4.0 | 6.0 | 6.0 | 6.0 |

**Notes:**
1) HEAVY TRUCKS ARE DEFINED AS THOSE WITH SIX (6) WHEELS OR MORE INCLUDING GARBAGE TRUCKS.
2) HMA SUPERPAVE LAYERS SHALL BE PLACED IN APPROPRIATE COMPACTED LIFT THICKNESS: 19.0 MM BASE (2.0" MIN TO 4.0" MAX), 12.5 MM SURFACE (1.5" MIN TO 3.0" MAX), AND 9.5 MM SURFACE (1.0" MIN TO 2.0" MAX)
3) GRADED AGGREGATE BASE (GAB) TO BE PLACED AND COMPACTED IN 6" MAX COMPACTED THICKNESS LAYERS.
4) THE INTERMEDIATE SURFACE COURSE LAYER MUST BE PLACED WITHIN 2 WEEKS OF PLACEMENT OF BASE COURSE, AND IS REQUIRED PRIOR TO SUBSTANTIAL COMPLETION INSPECTION AND BOND REDUCTION.
5) IN LIEU OF PLACING THE INTERMEDIATE SURFACE COURSE LAYER FOR COMMERCIAL/INDUSTRIAL ENTRANCE APRONS WITHIN THE COUNTY RIGHT-OF-WAY WHERE AUXILIARY LANES ARE NOT REQUIRED, THE THICKNESS OF THE INTERMEDIATE PAVEMENT LAYER CAN BE ADDED TO THE REQUIRED THICKNESS OF THE BASE ASPHALT LAYER.
6) THE CONSTRUCTION DRAWINGS SHALL SHOW THE PAVING SECTION, ROAD CLASSIFICATION AND CRB VALUE FOR EACH ROADWAY

HMA SUPERPAVE FINAL SURFACE / HMA SUPERPAVE INTERMEDIATE SURFACE / HMA SUPERPAVE BASE / GRADED AGGREGATE BASE (GAB)

Howard County, Maryland Department of Public Works — Revised / Revised / 5/7/2007 Approved — Approved: Chief, Bureau of Engineering — PAVING SECTIONS P-1 to P-4 — Detail R-2.01

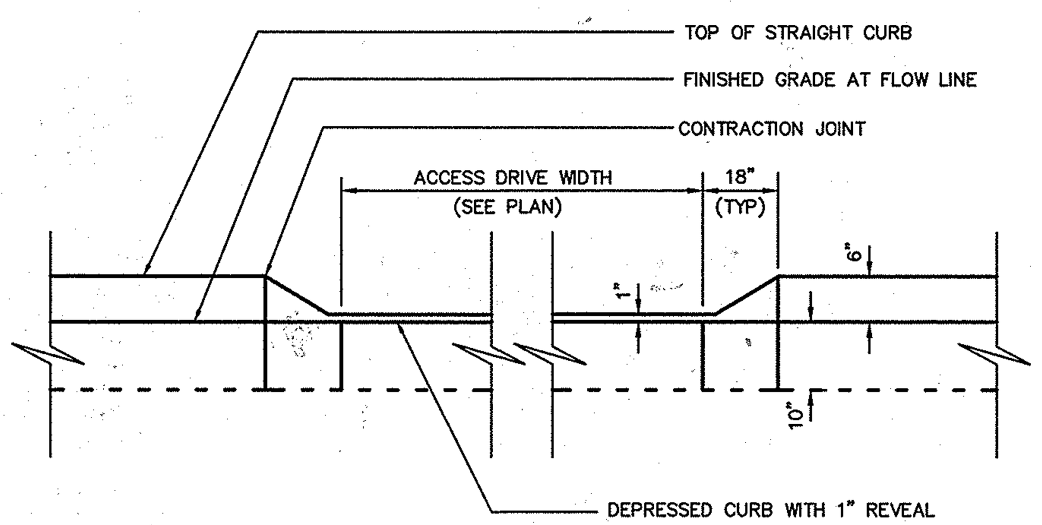


### ACCESS DRIVE CURB CUT
NOT TO SCALE
CU\CU009

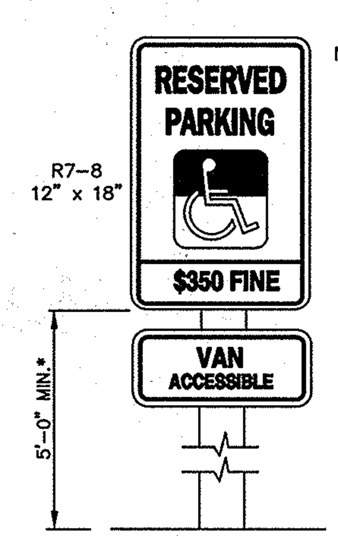


NOTE: RESERVED PARKING SIGNS SHALL BE INSTALLED PER THE SPECIFICATIONS FOUND IN THE MANUAL ON UNIFORM TRAFFIC CONTROL DEVICES. SIGN TYPE USED SHALL BE R7-8 12"x18" AS SHOWN. THE SIGN SHALL BE ABOVE GRADE WITH THE BOTTOM OF THE SIGN A MINIMUM OF 5'-0" ABOVE GRADE(*). THE HANDICAP PARKING SPACES SHALL BE FURTHER IDENTIFIED BY HAVING AT LEAST THE PERIMETERS OF THE SPACES PAINTED BLUE.

*WHEN THE SIGN IS LOCATED ADJACENT TO AND PERPENDICULAR TO SIDEWALK THE BOTTOM OF THE SIGN SHALL BE A MINIMUM OF 7'-0" ABOVE GRADE.

SIGNAGE

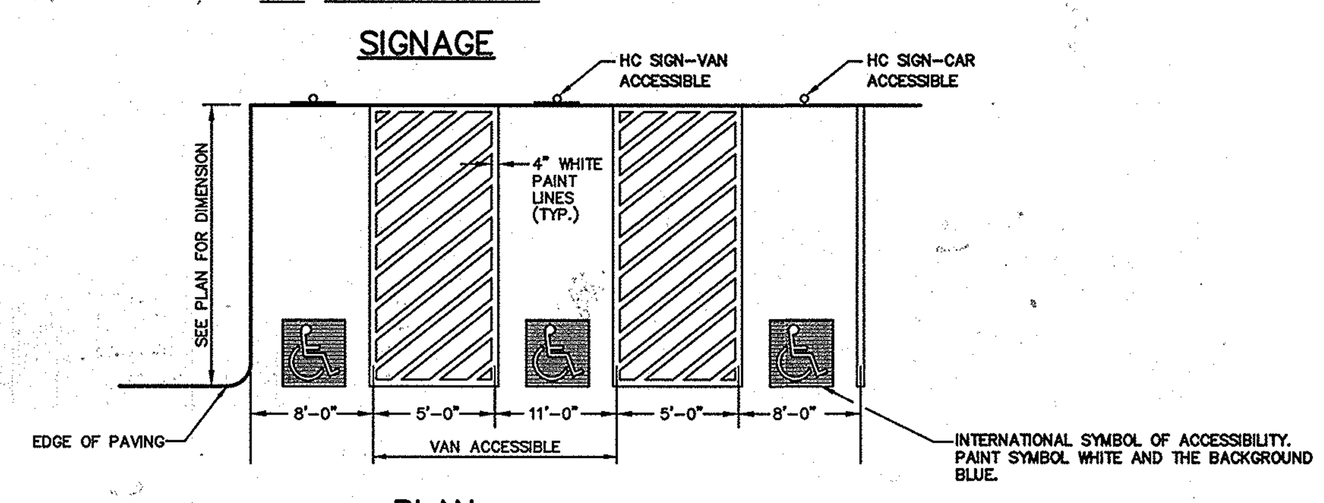


PLAN

**NOTE:** PER SECTION 502.3 OF ADA STANDARDS – TWO PARKING SPACES SHALL BE PERMITTED TO SHARE A COMMON ACCESS AISLE.

**NOTE:** SEE PLAN FOR LAYOUT AND DIMENSIONS OF THE ACCESSIBLE PARKING SPACES

### HANDICAPPED PARKING STALL DETAIL
NOT TO SCALE

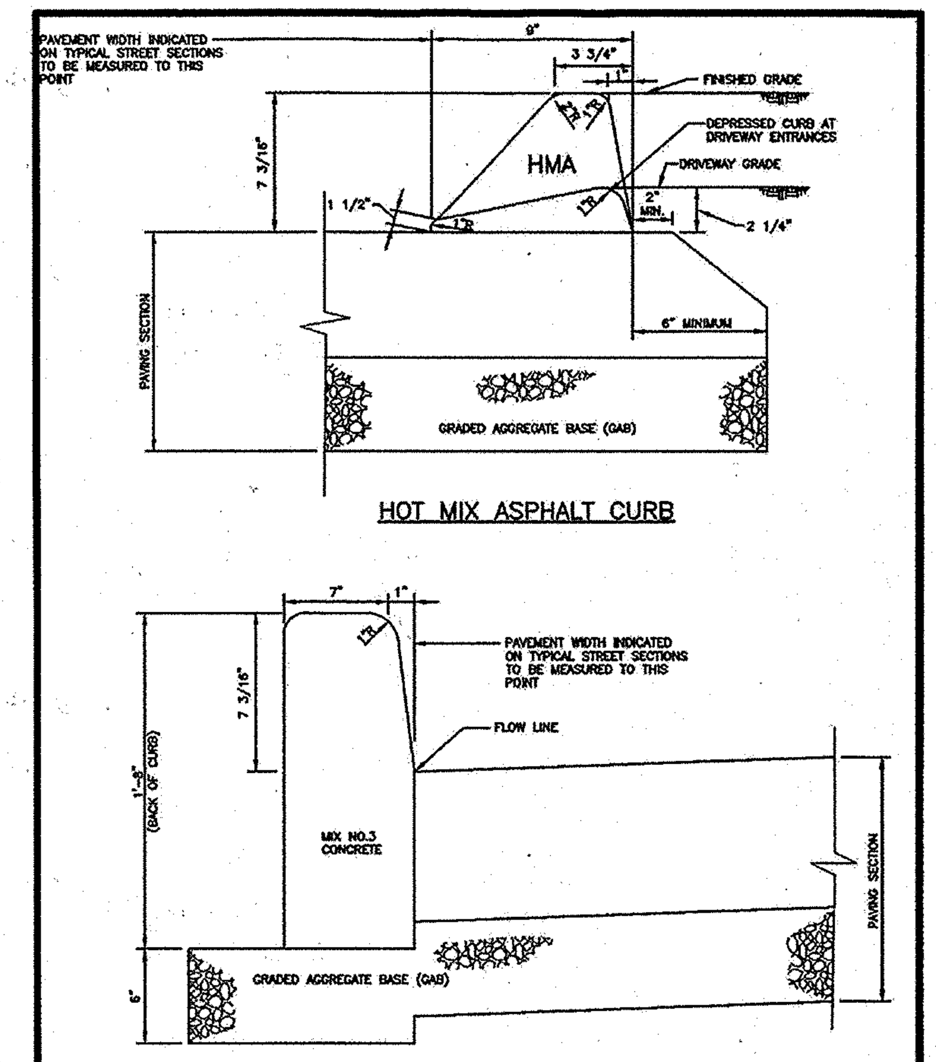


**NOTES:**
1. A MINIMUM OF TWO (2) FEET OF COMPACTED STABILIZED EARTH, OR EQUIVALENT, SHALL SUPPORT THE ENTIRE BACK OF CURB.
2. POSITIVE DRAINAGE SHALL BE PROVIDED BOTH BEHIND THE CURB AND ALONG THE GUTTER AND FLOW LINE.

Howard County, Maryland Department of Public Works — Revised / Revised / 5/7/2007 Approved — Approved: Chief, Bureau of Engineering — CURBS Hot Mix Asphalt & Concrete Barrier — Detail R-3.03

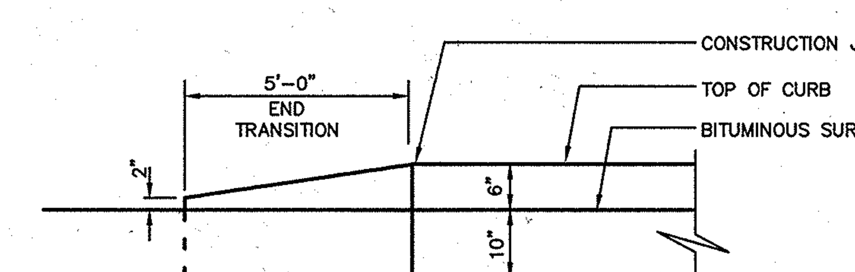


### END CURB TRANSITION DETAIL (CONC. CURB ONLY)
NOT TO SCALE
CU\CU013

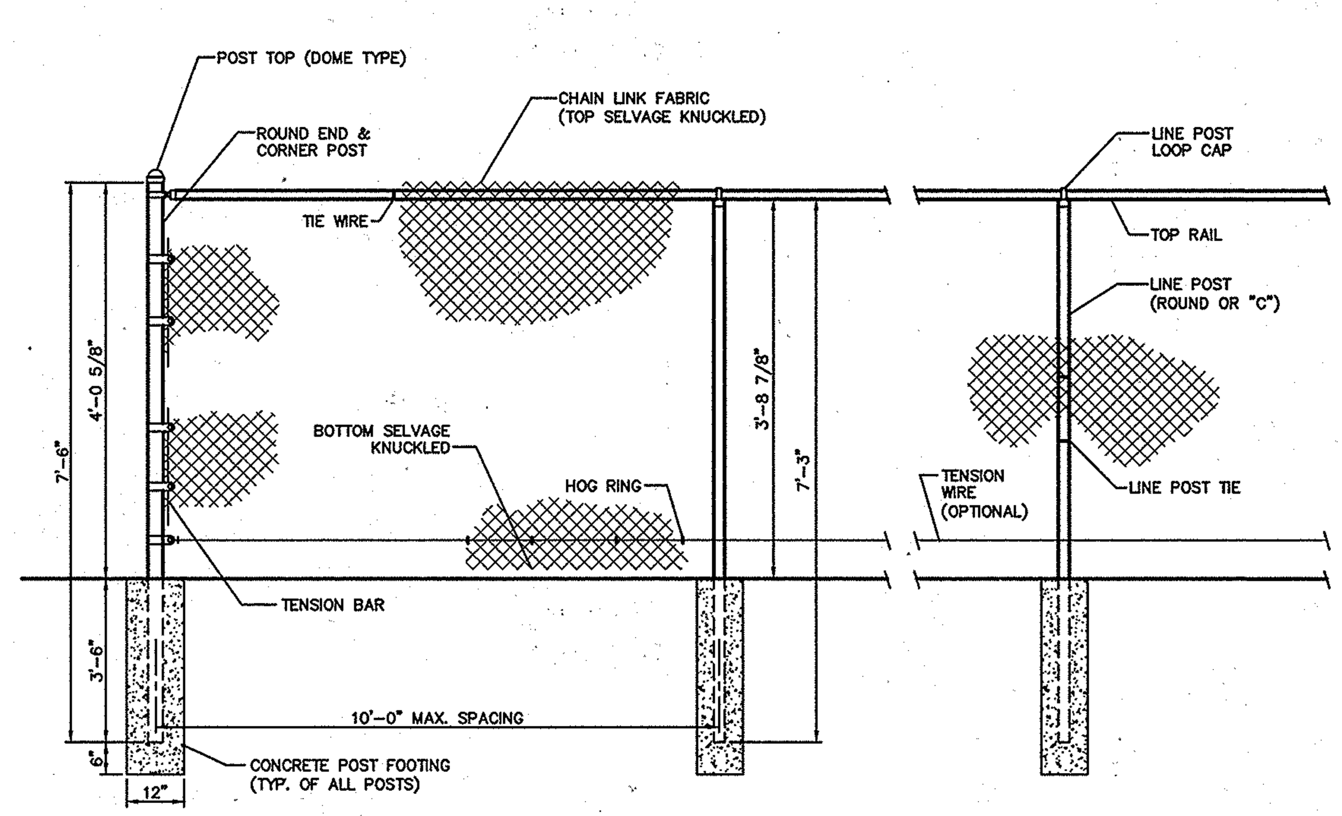


### CHAIN LINK FENCE DETAIL – 4'-0"
NOT TO SCALE
SF\SF030

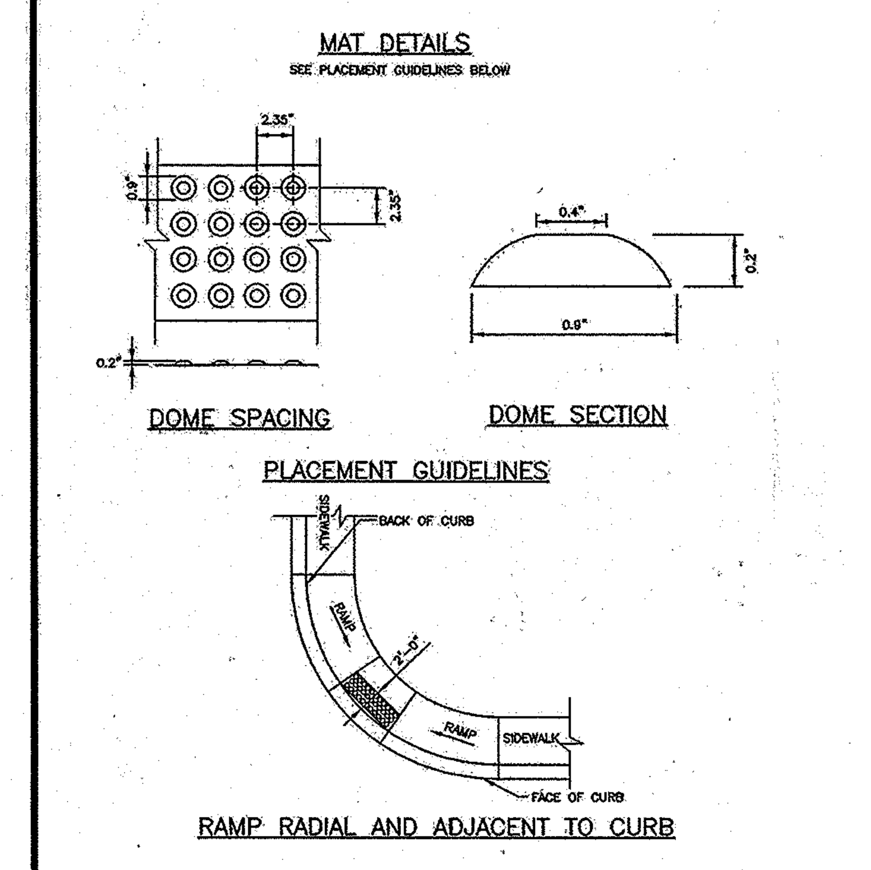


**NOTES:**
1. THE DETECTABLE WARNING SURFACE SHALL BE LOCATED SO THAT THE EDGE NEAREST THE CURB LINE IS 6 TO 8 INCHES FROM THE FACE OF THE CURB.
2. FOR SKEWED APPLICATIONS DETECTABLE WARNING SHALL BE PLACED SUCH THAT THE DOMES CLOSEST TO THE BACK OF THE CURB ARE NO LESS THAN 0.5" AND NO MORE 3.0" FROM THE BACK OF THE CURB. TRUNCATED DOME SURFACES SHALL BE FABRICATED TO PROVIDE FULL DOMES ONLY.

Howard County, Maryland Department of Public Works — Revised / Revised / 5/7/2007 Approved — Approved: Chief, Bureau of Engineering — SIDEWALK RAMP Detectable Warning Truncated Domes — Detail R-4.07

**NOTES:**
1. ALL RAMPS SHALL HAVE A WARNING TEXTURE EXTENDING THE FULL WIDTH AND DEPTH OF RAMP. SEE DETAIL R-4.07.
2. GRASS AREA ADJACENT TO SIDEWALK MUST BE SLOPED TO MEET RAMP.
3. 4'-0" SIDEWALK REQUIRES PASSING AREA (SEE DETAIL R-4.01).

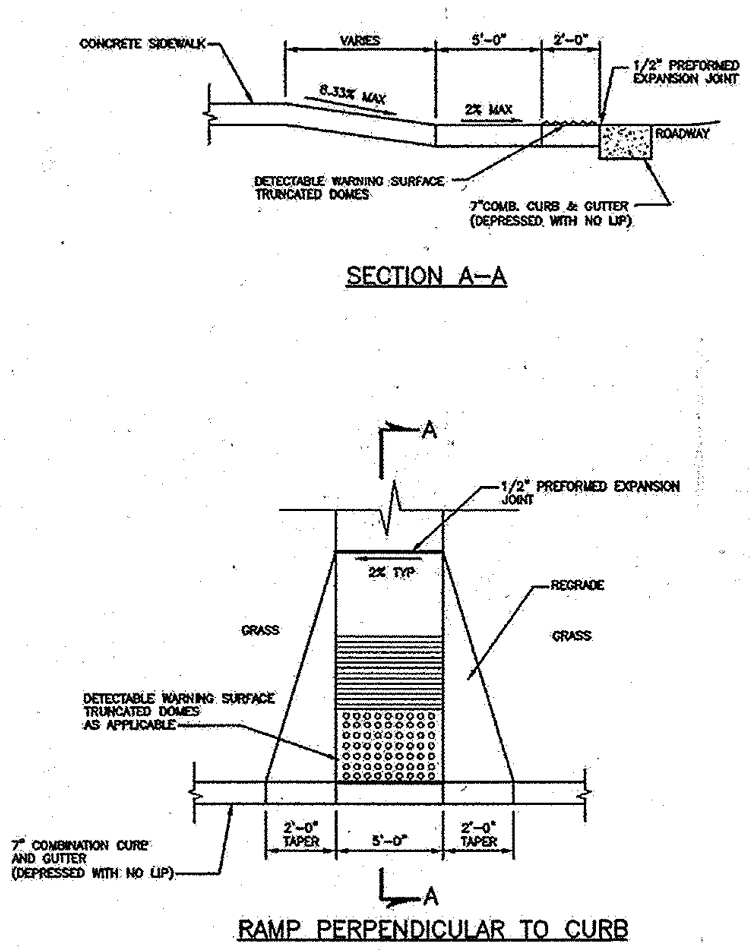


Howard County, Maryland Department of Public Works — Revised / Revised / 5/7/2007 Approved — Approved: Chief, Bureau of Engineering — SIDEWALK RAMP Layout & Grading Perpendicular to Curb — Detail R-4.05

APPROVED: HOWARD COUNTY DEPARTMENT OF PLANNING AND ZONING

CHIEF, DIVISION OF LAND DEVELOPMENT — DATE 5-4-16

CHIEF, DEVELOPMENT ENGINEERING DIVISION — DATE 5.4.16

DIRECTOR — DATE 5-16-16

| | |
|---|---|
| REVISION | NO. / DATE |
| FOR RETTEW ASSOCIATES BY: | (State of Maryland Professional Engineer seal: Eric W. Hershey, No. 37119) |
| XREFS: | 099812001-LD-DETL, 099812001-LD-TBLK, 099812001-LD-CVNT |
| MANAGER: | DAVID D. MILLER, P.E. |
| DESIGN BY: JAR | CHKD BY: DEW |
| SURV. CHIEF: | FIELDBOOK NO. DATA COLLECTOR |
| DRAWN BY: DCW | CHKD BY: DEW |
| DRAWING REFERENCE: | C:_RettewVault\WIP\099812001-Washington NAPA\Sheets\LD\099812001-07_DET-SITE.dwg |
| CLIENT | GENUINE PARTS COMPANY, 2999 CIRCLE 75 PARKWAY, ATLANTA, GA 30339, PHONE: (770) 953-1700 |
| SCALE | AS NOTED |


RETTEW
RETTEW Associates, Inc.
3020 Columbia Ave., Lancaster, PA 17603
Phone (717) 394-3721 · Fax (717) 394-1063
Email: rettew@rettew.com
Website: www.rettew.com
Engineers · Planners · Surveyors · Landscape Architects
Environmental Consultants


DETAILS: SITE CONSTRUCTION
SITE DEVELOPMENT PLAN
FOR
# NAPA WASHINGTON
HOWARD COUNTY, MD

DATE: MARCH 2, 2016
SHEET NO. 9 OF 17
DWG. NO. 099812001

SDP-15-005, ~~SP-15-074~~

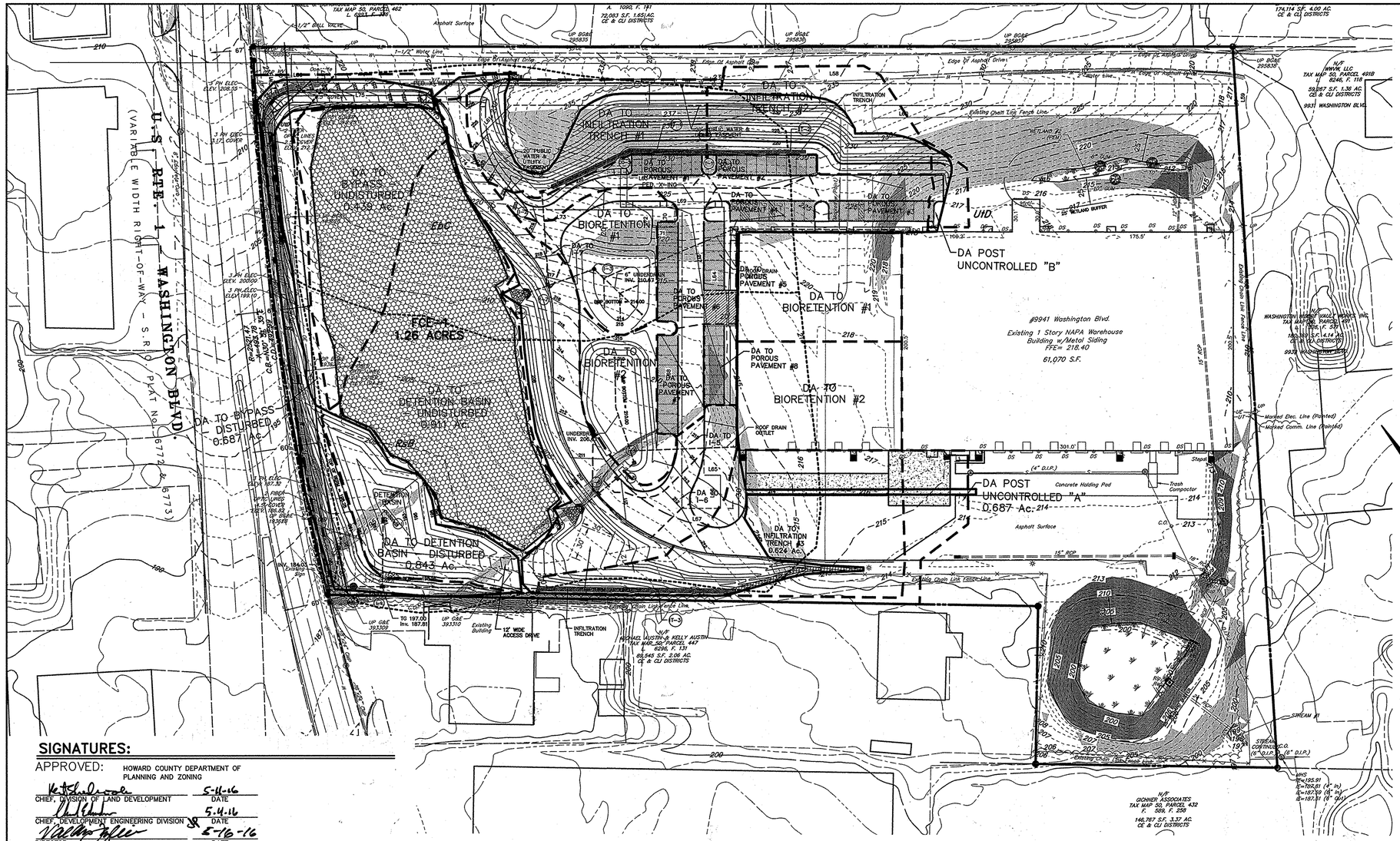


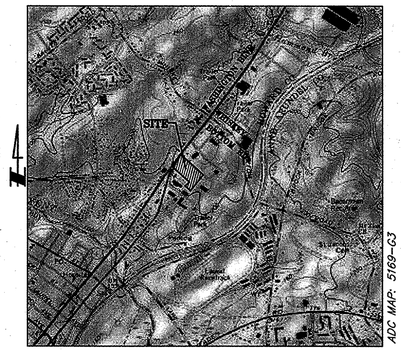


## LOCATION MAP

SCALE: 1"=2000'

## BENCHMARKS

GEODETIC BENCHMARK: 50BM1

GEODETIC STATION: 50BD

## LEGEND

EXISTING BOUNDARY LINE
PROPOSED LOT LINE
EXISTING RIGHT-OF-WAY LINE
EXISTING CURB
PROPOSED CURB
EXISTING PAVEMENT
PROPOSED PAVEMENT
EXISTING ZONING BOUNDARY
EXISTING VEGETATION — DECIDUOUS TREE; EVERGREEN TREE
EXISTING TREELINE
PROPOSED TREELINE
EXISTING CONTOUR LINE — 500
PROPOSED CONTOUR LINE — 500
PROPOSED SPOT ELEVATION — +500.00
PROPOSED FINISHED FLOOR ELEVATION — F.E.=500.00
EXISTING STORM MANHOLE
PROPOSED STORM MANHOLE
EXISTING STORM INLET
PROPOSED STORM INLET
EXISTING STORM HEADWALL/ENDWALL
PROPOSED STORM HEADWALL/ENDWALL
PROPOSED PIPE OUTLET PROTECTION
EXISTING STORM PIPE — 14" RCP
PROPOSED STORM PIPE
PROPOSED STORM STRUCTURE LABEL — 1-2
EXISTING FENCE
EXISTING UTILITY POLE
EXISTING OVERHEAD TELEPHONE LINE — OT
EXISTING UNDERGROUND TELEPHONE LINE — UT
EXISTING OVERHEAD ELECTRIC LINE — OE
EXISTING TELEPHONE BOX
EXISTING GAS LINE — G
EXISTING GAS VALVE — GV
EXISTING WELL
EXISTING WATER VALVE — WV
EXISTING FIRE HYDRANT
EXISTING WATER LINE — W
PROPOSED FIRE HYDRANT
PROPOSED WATER VALVE
PROPOSED THRUST BLOCK
PROPOSED WATER LINE — W
EXISTING SANITARY SEWER MANHOLE
EXISTING SANITARY SEWER LINE — S
EXISTING SANITARY SEWER FORCEMAIN — FM
PROPOSED SANITARY SEWER FLOW ARROW
PROPOSED SANITARY SEWER MANHOLE
PROPOSED SANITARY SEWER LINE — S
PROPOSED SANITARY SEWER STRUCTURE LABEL — MH
SOIL TYPE BOUNDARY LINE
SOIL TYPE DESIGNATION — EbC
DRAINAGE AREA LINE

## GRADING & UTILITY NOTES:

1. ALL SPOT GRADES IN PARKING AREAS & DRIVES ARE SHOWN AS BOTTOM OF CURB ELEVATIONS.

## SLOPE ANALYSIS:

SLOPES = 15–25%

SLOPES = >25%

## SOILS CLASSIFICATION

EbC: EVESBORE LOAMY SAND, 2 TO 10 PERCENT SLOPES

RsB: RUSSET FINE SANDY LOAM, 2 TO 5 PERCENT SLOPES

UID: URBAN LAND–UDORTHENTS COMPLEX, 0 TO 15 PERCENT SLOPES.

ALL SOILS ARE NON–HYDRIC, WITHOUT HYDRIC INCLUSIONS, AND DO NOT EXHIBIT ANY SIGNIFICANT EROSION POTENTIAL.

## SIGNATURES:

APPROVED: HOWARD COUNTY DEPARTMENT OF PLANNING AND ZONING

CHIEF, DIVISION OF LAND DEVELOPMENT — DATE 5-11-16

CHIEF, DEVELOPMENT ENGINEERING DIVISION — DATE 5-11-16

DIRECTOR — DATE 5-16-16

## STORMWATER MANGEMENT PROVIDED

### ESD Practices Summary

| ESD Practice | Drainage Area (SF) | Drainage Area (Acre) | Imp. Area (SF) | Perv. Area (SF) | Woods (SF) | QE (inches) | ESDv (cf) | Volume Provided in ESD Practice (cf) |
|---|---|---|---|---|---|---|---|---|
| Infiltration Trench #1 * | 18,231 | 0.42 | 1,278 | 16,953 | 0 | 0.71 | 1,086 | 612 |
| Infiltration Trench #2 ** | 15,960 | 0.37 | 2,464 | 13,496 | 0 | 0.71 | 951 | 924 |
| Infiltration Trench #3 *** | 27,161 | 0.62 | 15,586 | 11,575 | 0 | 0.71 | 1,618 | 945 |
| Bioretention #1 ***** | 23,730 | 0.54 | 17,450 | 6,280 | 0 | 0.71 | 1,414 | 2,142 |
| Bioretention #2 ***** | 21,800 | 0.50 | 15,008 | 6,792 | 0 | 0.71 | 1,299 | 2,161 |
| Porous Pavement #1 ****** | 3,070 | 0.07 | 2,050 | 1,020 | 0 | 0.71 | 183 | 255 |
| Porous Pavement #2 ****** | 2,693 | 0.06 | 2,693 | 0 | 0 | 0.71 | 160 | 365 |
| Porous Pavement #3 ****** | 5,050 | 0.12 | 4,476 | 574 | 0 | 0.71 | 301 | 365 |
| Porous Pavement #4 ****** | 3,274 | 0.08 | 3,034 | 240 | 0 | 0.71 | 195 | 308 |
| Porous Pavement #5 ****** | 2,200 | 0.05 | 1,477 | 723 | 0 | 0.71 | 131 | 255 |
| Porous Pavement #6 ****** | 6,350 | 0.15 | 6,350 | 0 | 0 | 0.71 | 378 | 365 |
| Porous Pavement #7 ****** | 3,900 | 0.09 | 3,900 | 0 | 0 | 0.71 | 232 | 365 |
| Porous Pavement #8 ****** | 2,220 | 0.05 | 1,790 | 430 | 0 | 0.71 | 132 | 292 |

* Volume provided by 48" of stone with 30% voids along the entire lenth of the trench

** Volume provided by 44" of stone with 30% voids along the entire lenth of the trench

*** Volume provided by 45" of stone with 30% voids along the entire lenth of the trench

**** Volume provided by 78" of stone with 30% voids along the entire lenth of the trench

***** Volume provided by 1' ponding depth over surface area of bioretenion

****** Volume provided by 9" of stone with 30% voids under porous paving

| NO. | DATE | REVISION |
|---|---|---|

FOR RETTEW ASSOCIATES BY:

MANAGER: DAVID D. MILLER, P.E.
DESIGN BY: JAR | CHKD BY: DEW
SURV. CHIEF: FIELDBOOK NO. DATA COLLECTOR | CHKD BY: DEW
DRAWN BY: DCW

XREFS: 0998120001-CV-BASE, 0998120001-BASE, 0998120001-BLOCK, 0998120001-SURVEY, 0998120001-TOPO, 0998120001-ROAD

DRAWING REFERENCE: C:_Rettew\Local\NPA\099812001-Washington NAPA\Sheets\LD\099812001-11_PCSM.dwg

CLIENT: GENUINE PARTS COMPANY, 2999 CIRCLE 75 PARKWAY, ATLANTA, GA 30339, PHONE: (770) 953-1700

SCALE: 1"=50' (0, 25', 50', 100', 150')

RETTEW Associates, Inc.
Lancaster: Phone (717) 394-3721 · Fax (717) 394-1063
Email: rettew@rettew.com
Website: www.rettew.com
Engineers · Planners · Surveyors · Landscape Architects · Environmental Consultants

POST CONSTRUCTION STORMWATER MANAGEMENT PLAN

SITE DEVELOPMENT PLAN FOR

# NAPA WASHINGTON

HOWARD COUNTY, MD

DATE: MARCH 2, 2016

SHEET NO. 10 OF 17

DWG. NO. 099812001

SDP-15-005, ~~CP 15-074~~

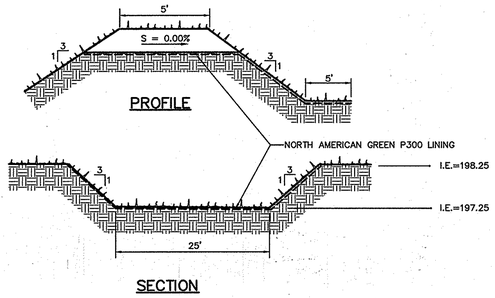


## EMERGENCY SPILLWAY

NOT TO SCALE
SD\S0007

NOTE
CLAY DIKE SHALL CONSIST OF CLAY CONTAINING NO MORE THAN 15% (BY VOLUME) STONE NO LARGER THAN TWO (2) INCHES IN DIAMETER. CLAY SHALL BE PLACED IN SIX (6) INCH LIFTS AND COMPACTED BY A MECHANICAL TAMPER TO NOT LESS THAN 95% OF MAXIMUM DENSITY AT OPTIMUM MOISTURE CONTENT.

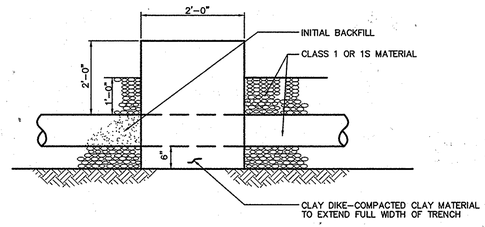


## CLAY DIKE DETAIL

NOT TO SCALE
CI\S0052

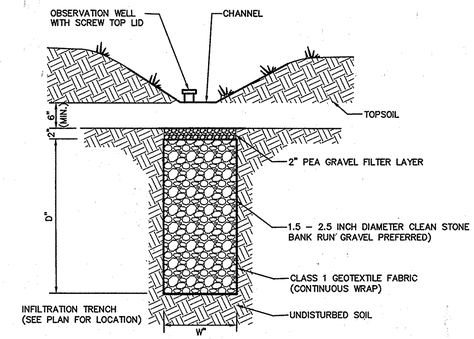


## SWALE INFILTRATION TRENCH

NOT TO SCALE

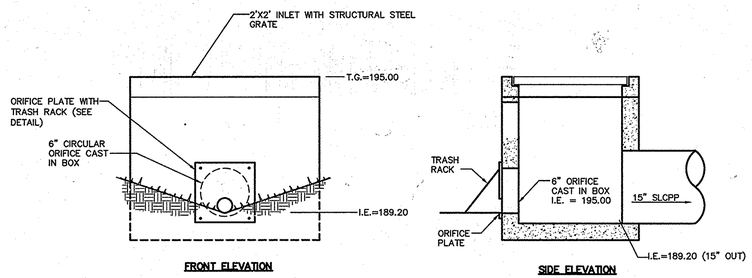


## DETENTION BASIN OUTLET STRUCTURE

NOT TO SCALE
SD\S0032

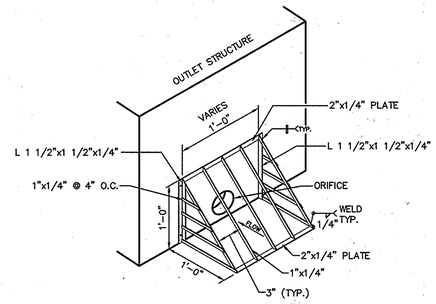


NOTES:

1. MATERIAL TO BE STAINLESS STEEL.
2. ATTACH WITH 1/2" DIA. 2" STAINLESS STEEL ANCHOR BOLTS. 12" O.C.
3. BOLT TRASH RACK TO INLET BOX OR ORIFICE PLATE AS REQUIRED.

## TRASH RACK

NOT TO SCALE
SD\S0045

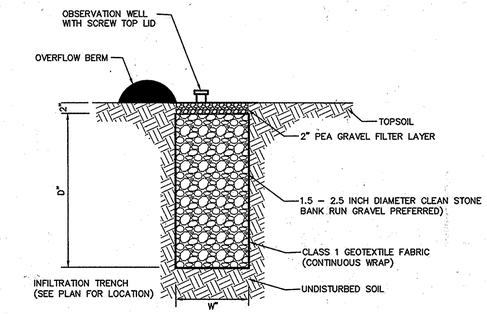


| INFILTRATION TRENCH NUMBER | PIPE DIAMETER (IN) | TRENCH DIMENSIONS | | | BOTTOM OF TRENCH ELEV. |
|---|---|---|---|---|---|
| | | LENGTH (FT) | WIDTH (FT) | DEPTH (FT) | |
| IT-1 | N/A | 174 | 3.0 | 4.0 | 212.77 |
| IT-2 | 12 | 210 | 4.0 | 3.67 | 213.10 |
| IT-3 | N/A | 180 | 4.0 | 3.75 | 199.33 |

## INFILTRATION TRENCH

NOT TO SCALE

MAINTENANCE NOTES:

1. REMOVAL OF SEDIMENT WHEN ACCUMULATION EXCEEDS 30% OF THE DESIGN STORAGE VOLUME. IN FOREBAYS, REMOVAL OF SEDIMENT SHALL OCCUR WHEN THE ACCUMULATION EXCEEDS 50% OF THE FOREBAY VOLUME.
2. REMOVAL OF ACCUMULATED PAPER, TRASH AND DEBRIS AS NECESSARY.
3. VEGETATION GROWING ON THE EMBANKMENT TOP AND FACES IS NOT ALLOWED TO EXCEED 18 INCHES IN HEIGHT AT ANY TIME.
4. ANNUAL INSPECTION AND REPAIR OF THE STRUCTURE.
5. CORRECTIVE MAINTENANCE IS REQUIRED ANY TIME THE FOREBAY DOES NOT DRAIN DOWN COMPLETELY WITHIN 60 HOURS (I.E., NO STANDING WATER IS ALLOWED).
6. MAINTENANCE OF POND LANDSCAPING SHALL INCLUDE REPLACEMENT OF DEAD OR DYING VEGETATION, AS NECESSARY.

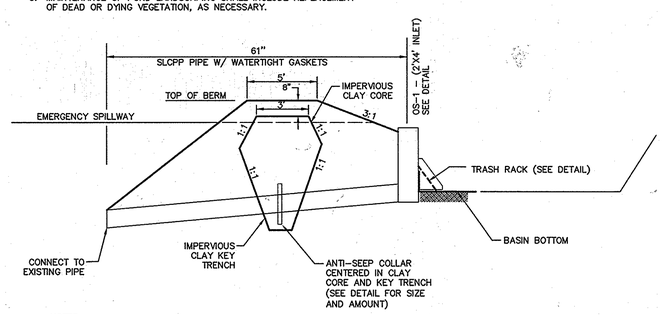


NOTES:

1. CLAY CORE & KEY TRENCH SHALL BE CONSTRUCTED TO 95% STD. PROCTOR DENSITY WITH CL OR ML SOILS.
2. EXTEND CLAY CORE & KEY TRENCH THE FULL LENGTH OF THE BASIN EMBANKMENT.

| BASIN BOTTOM | TOP OF BERM | SPILLWAY INVERT | OUTLET PIPE SIZE | OUTLET PIPE SLOPE | UPSTREAM PIPE INVERT | DOWNSTREAM PIPE INVERT |
|---|---|---|---|---|---|---|
| 193.00 | 198.25 | 197.25 | 24" | 2.28% | 189.20 | 187.81 |

## DETENTION BASIN - OUTLET AND EMBANKMENT

NOT TO SCALE

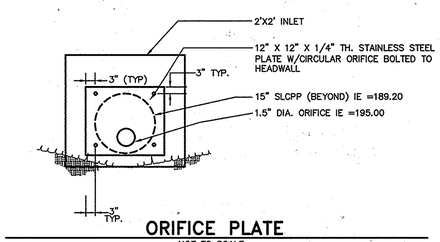


## ORIFICE PLATE

NOT TO SCALE
SD\S0051

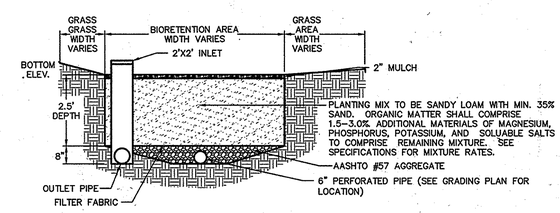


NOTE: SEED BIORETENTION AREA WITH ERNST SEED MIX PER SUPPLIERS RECOMMENDATION.

| BIORETENTION NUMBER | BOTTOM ELEV. | TOP OF BERM | TOP OF GRATE | OUTLET PIPE SIZE | UPSTREAM PIPE INVERT | DOWNSTREAM PIPE INVERT |
|---|---|---|---|---|---|---|
| #1 | 214.00 | 216.00 | 215.00 | 24" | 210.64 | 210.20 |
| #2 | 210.00 | 212.00 | 211.50 | 15" | 206.67 | 206.34 |

## BIORETENTION

NOT TO SCALE
SD\S0076

APPROVED: HOWARD COUNTY DEPARTMENT OF PLANNING AND ZONING

| | |
|---|---|
| CHIEF, DIVISION OF LAND DEVELOPMENT | DATE 5-11-16 |
| CHIEF, DEVELOPMENT ENGINEERING DIVISION | DATE 5.4.16 |
| DIRECTOR | DATE 5-10-16 |

| NO. | DATE | REVISION |
|---|---|---|
| | | |

FOR RETTEW ASSOCIATES BY:

MANAGER: DAVID D. MILLER, P.E.
DESIGN BY: JAR
CHKD BY: DEW
SURV. CHIEF:
FIELDBOOK NO. DATA COLLECTOR
DRAWN BY: DCW
CHKD BY: DEW
XREFS: 099812001-LD-DETL, 099812001-LD-TBLK, 099812001-LD-CHRT
DRAWING REFERENCE: C:_RettewVault\MP\099812001-Washington NAPA\Sheets\LD\099812001-05_DET1-STRM.dwg

CLIENT
GENUINE PARTS COMPANY
2999 CIRCLE 75 PARKWAY
ATLANTA, GA 30339
PHONE: (770) 953-1700

SCALE
AS NOTED


RETTEW
RETTEW Associates, Inc.
3020 Columbia Ave., Lancaster, PA 17603
Phone (717) 394-3721 · Fax (717) 394-1063
Email: rettew@rettew.com
Website: www.rettew.com
Engineers • Planners • Surveyors • Landscape Architects
Environmental Consultants


DETAILS: STORMWATER MANAGEMENT
SITE DEVELOPMENT PLAN
FOR
# NAPA WASHINGTON
HOWARD COUNTY, MD

DATE: MARCH 2, 2016
SHEET NO. 11 OF 17
DWG. NO. 099812001

SDP-15-005, ~~OP 15-074~~

## NOTES:

1. CONTRACTOR SHALL PROVIDE 3"-45° BEVEL AROUND PIPE OPENINGS UPSTREAM HEADWALLS.

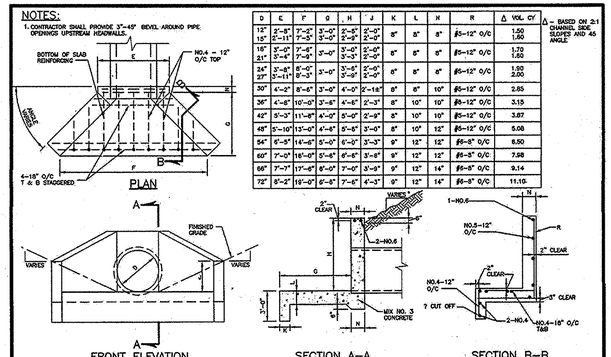


| D | E | F | G | H | J | K | L | M | R | Δ VOL. CY |
|---|---|---|---|---|---|---|---|---|---|---|
| 12" | 2'-8" | 7'-0" | 3'-0" | 2'-6" | 2'-0" | 8" | 8" | 8" | #5-12" O/C | 1.50 |
| 15" | 2'-11" | 7'-3" | 3'-0" | 2'-6" | 2'-0" | | | | | 1.60 |
| 18" | 3'-0" | 7'-6" | 3'-0" | 3'-0" | 2'-0" | 8" | 8" | 8" | #5-12" O/C | 1.70 |
| 21" | 3'-6" | 7'-9" | | 3'-3" | 2'-0" | | | | | 1.80 |
| 24" | 3'-8" | 8'-0" | 3'-0" | 3'-6" | 2'-0" | 8" | 8" | 8" | #5-12" O/C | 1.90 |
| 27" | 3'-11" | 8'-3" | | 3'-9" | 2'-0" | | | | | 2.00 |
| 30" | 4'-2" | 8'-6" | 3'-0" | 4'-0" | 2'-18" | 8" | 8" | 10" | #5-12" O/C | 2.85 |
| 36" | 4'-8" | 10'-0" | 3'-6" | 4'-6" | 2'-3" | 8" | 10" | 10" | #5-12" O/C | 3.15 |
| 42" | 5'-3" | 11'-6" | 4'-0" | 5'-0" | 2'-3" | 8" | 10" | 10" | #5-12" O/C | 3.87 |
| 48" | 5'-10" | 13'-0" | 4'-6" | 5'-6" | 2'-3" | 8" | 10" | 12" | #5-12" O/C | 5.08 |
| 54" | 6'-5" | 14'-6" | 5'-0" | 6'-0" | 2'-3" | 9" | 12" | 12" | #6-8" O/C | 6.50 |
| 60" | 7'-0" | 16'-0" | 5'-6" | 6'-6" | 2'-6" | 9" | 12" | 12" | #6-8" O/C | 7.98 |
| 66" | 7'-7" | 17'-6" | 6'-0" | 7'-0" | 2'-9" | 9" | 12" | 14" | #6-8" O/C | 9.14 |
| 72" | 8'-2" | 19'-0" | 6'-6" | 7'-6" | 4'-3" | 9" | 12" | 14" | #6-8" O/C | 11.10 |

Δ – BASED ON 2:1 CHANNEL SIDE SLOPES AND 45 ANGLE

| Revised | Howard County, Maryland Department of Public Works | TYPE 'A' Headwall Circular Pipe | Detail D-5.11 |
|---|---|---|---|
| Revised 5/1/2007 Approved | Approved: Chief, Bureau of Engineering | | |

## GENERAL NOTES

1. CONCRETE TO BE MIX NO. 2 (3000PSI).
2. REINFORCING – 2 LAYERS OF 6X6-W-4XW4 WELDED WIRE FABRIC.
3. THREADED PLASTIC INSERTS TO BE PROVIDED FOR HANDLING.
4. PIPE OPENINGS TO BE PROVIDED AS REQUIRED. FOR SIZE, LOCATION, AND INVERT ELEVATIONS, REFER TO CONSTRUCTION PLANS.
5. GRATE IS TO BE OF STEEL CONSTRUCTION AND SHALL BE SQUARE, FLAT, AND TRUE. RECTANGULAR GRATE TO BE GALVANIZED AFTER FABRICATION IN ACCORDANCE WT ASTM A123. VANE GRATE AND FRAME IS PREFERRED

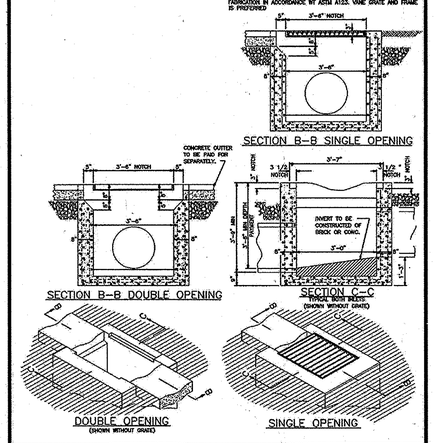


| Revised | Howard County, Maryland Department of Public Works | Open End Grate Precast | Detail D-4.36 |
|---|---|---|---|
| Revised 5/1/2007 Approved | Approved: Chief, Bureau of Engineering | | |

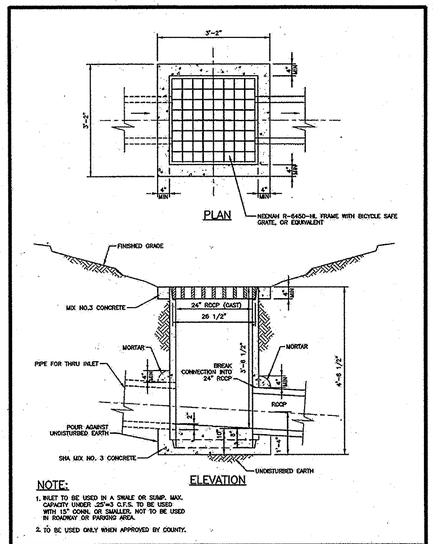


## NOTE:

1. INLET TO BE USED IN A SWALE OR SUMP. MAX. CAPACITY UNDER 20CFS TO BE USED WITH 15" CONC OR SMALLER. NOT TO BE USED IN ROADWAY OR PARKING AREA.
2. TO BE USED ONLY WHEN APPROVED BY COUNTY.

| Revised | Howard County, Maryland Department of Public Works | Yard Inlet | Detail D-4.14 |
|---|---|---|---|
| Revised 5/1/2007 Approved | Approved: Chief, Bureau of Engineering | | |

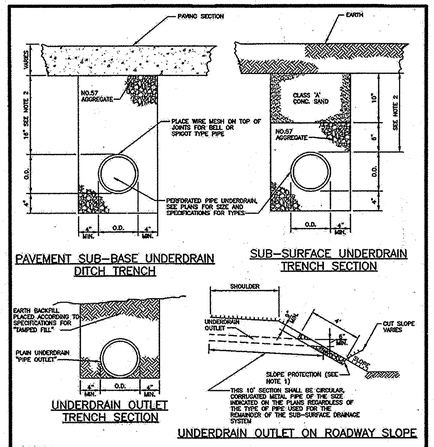


## NOTES:

1. SLOPE PROTECTION USING 4" TO 7" STONE SHALL BE USED. THE WIDTH OF STONE PROTECTION TO BE 3'.
2. WITH THE APPROVAL OF THE ENGINEER, THE DIMENSIONS SHOWN MAY BE VARIED WHERE UNDERDRAIN DISCHARGES INTO AN INLET OR WHERE OTHER UNUSUAL CONDITIONS PREVAIL. SEE SPECIFICATIONS PERTAINING TO PAVEMENT FOR EXTRA TRENCH DEPTH.
3. UNDERDRAIN SHALL BE LAID ON A MINIMUM 0.5% GRADE UNLESS OTHERWISE APPROVED BY THE ENGINEER.
4. UNDERDRAINS SHALL BE DISCHARGED INTO INLETS AND MANHOLES WHERE POSSIBLE AND SHALL BE DISCHARGED ONTO THE ROADWAY SLOPES ONLY WHERE NO INLETS OR MANHOLES ARE AVAILABLE FOR CONNECTION.
5. FOR JOINTS, REFER TO SPECIFICATIONS.

| Revised | Howard County, Maryland Department of Public Works | Underdrain | Detail R-1.09 |
|---|---|---|---|
| Revised 5/1/2007 Approved | Approved: Chief, Bureau of Engineering | | |

APPROVED: HOWARD COUNTY DEPARTMENT OF PLANNING AND ZONING

| | |
|---|---|
| CHIEF, DIVISION OF LAND DEVELOPMENT | DATE 5-16-16 |
| CHIEF, DEVELOPMENT ENGINEERING DIVISION | DATE 5-4-16 |
| DIRECTOR | DATE 5-10-16 |

| NO. | DATE | REVISION |
|---|---|---|
| | | |

FOR RETTEW ASSOCIATES BY: SAMUEL J. SCHUCK, JR. STATE OF MARYLAND REGISTERED PROFESSIONAL ENGINEER No. 19331

XREFS: 098812001-LD-DETL 098812001-LD-TBLK 098812001-LD-CONT

MANAGER: DAVID D. MILLER, P.E.
DESIGN BY: JAR | CHKD BY: DEW
SURV. CHIEF: | FIELDBOOK NO. DATA COLLECTOR
DRAWN BY: DOW | CHKD BY: DEW
DRAWING REFERENCE: C:_Pattervoutnt\V098812001-Washington NAPA\Sheets\LD\098812001-08_DETL-STRM.dwg

CLIENT
GENUINE PARTS COMPANY
2999 CIRCLE 75 PARKWAY
ATLANTA, GA 30339
PHONE: (770) 953-1700

SCALE: AS NOTED


RETTEW
RETTEW Associates, Inc.
3020 Columbia Ave. Lancaster, PA 17603
Phone (717) 394-3721 Fax (717) 394-1063
Email: rettew@rettew.com
Website: www.rettew.com
Engineers • Planners • Surveyors • Landscape Architects
Environmental Consultants


DETAILS: STORMWATER MANAGEMENT
SITE DEVELOPMENT PLAN
FOR
# NAPA WASHINGTON
HOWARD COUNTY, MD

DATE: MARCH 2, 2016
SHEET NO. 12 OF 17
DWG. NO. 099812001

SDP-15-005, ~~GP-15-074~~

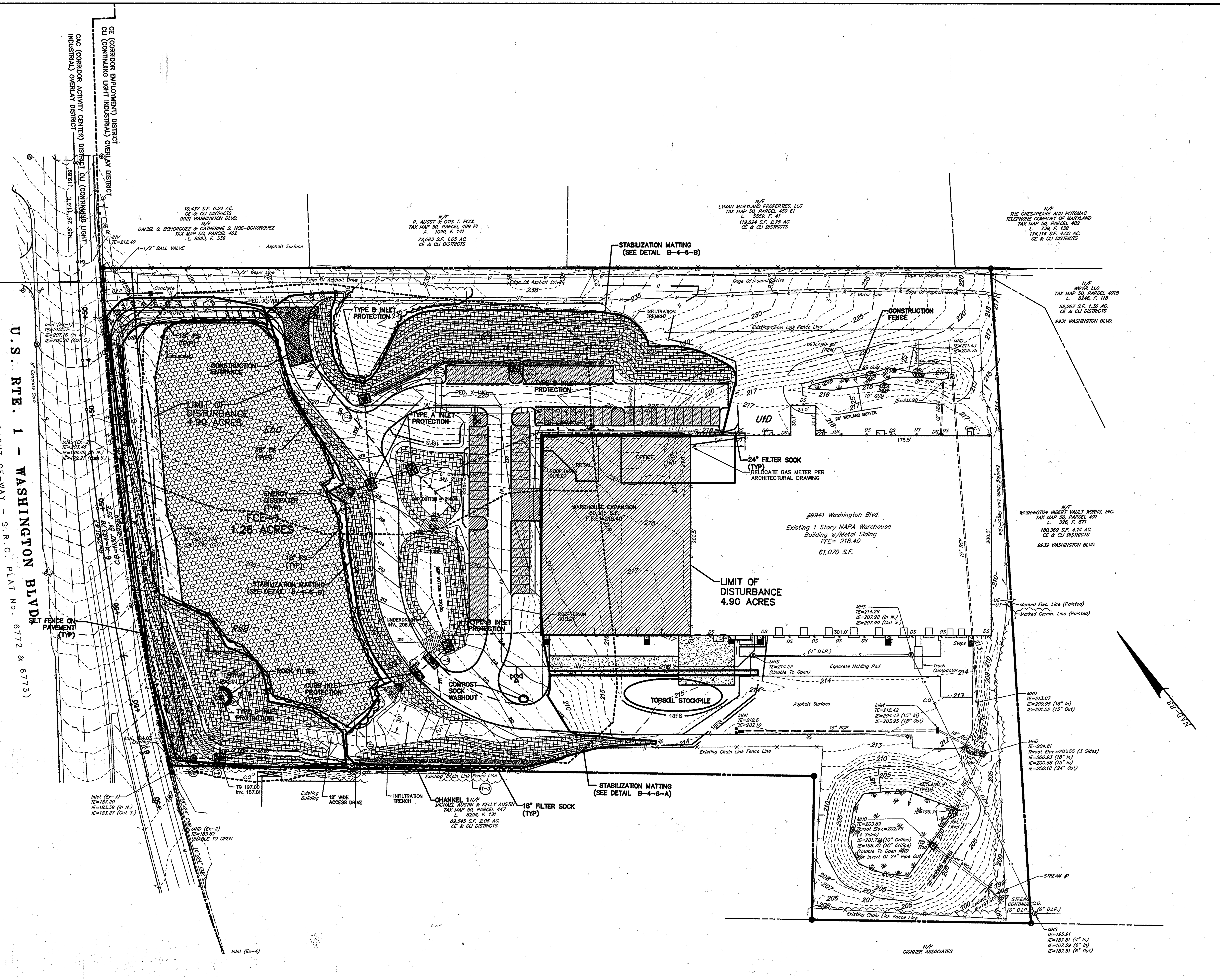


## LEGEND

- EXISTING BOUNDARY LINE
- PROPOSED LOT LINE
- EXISTING RIGHT-OF-WAY LINE
- EXISTING CURB
- PROPOSED CURB
- EXISTING PAVEMENT
- PROPOSED PAVEMENT
- EXISTING VEGETATION — DECIDUOUS TREE; EVERGREEN TREE
- EXISTING TREELINE
- PROPOSED TREELINE
- EXISTING CONTOUR LINE — 500
- PROPOSED CONTOUR LINE — 500
- PROPOSED SPOT ELEVATION — +500.00
- EXISTING FENCE
- EXISTING STORM MANHOLE
- PROPOSED STORM MANHOLE
- EXISTING STORM INLET
- PROPOSED STORM INLET
- EXISTING STORM HEADWALL/ENDWALL
- PROPOSED STORM HEADWALL/ENDWALL
- PROPOSED PIPE OUTLET PROTECTION
- EXISTING STORM PIPE — 18" RCP
- PROPOSED STORM PIPE
- NPDES BOUNDARY
- LIMITS OF DISTURBANCE
- ROCK FILTER
- STANDARD INLET PROTECTION
- CURB INLET PROTECTION
- 12" FILTREXX SILT SOXX — 12FS
- 18" FILTREXX SILT SOXX — 18FS
- ROCK CONSTRUCTION ENTRANCE — RCE
- COMPOST SOCK WASHOUT
- STABILIZATION MATTING
- SOIL TYPE BOUNDARY LINE
- SOIL TYPE DESIGNATION — EbC

## SOILS CLASSIFICATION

EbC: EVESBORE LOAMY SAND, 2 TO 10 PERCENT SLOPES

RsB: RUSSET FINE SANDY LOAM, 2 TO 5 PERCENT SLOPES

UtD: URBAN LAND-UDORTHENTS COMPLEX, 0 TO 15 PERCENT SLOPES.

ALL SOILS ARE NON-HYDRIC, WITHOUT HYDRIC INCLUSIONS, AND DO NOT EXHIBIT ANY SIGNIFICANT EROSION POTENTIAL.

## RECEIVING WATER CLASSIFICATION WATER QUALITY DESIGNATION

- UNNAMED TRIBUTARY TO UPPER PATUXENT RIVER WATERSHED
- TROUT STOCK FISHERY (TSF)
- MIGRATORY FISHERY (MF)

## HOWARD SOIL CONSERVATION NOTES

1. TEMPORARY AND PERMANENT SEEDING IS TO BE PERFORMED AT THE DIRECTION OF THE SEDIMENT CONTROL INSPECTOR OR AT THE TIME INTERVALS REQUIRED BY THE 2011 MARYLAND STANDARDS AND SPECIFICATIONS FOR SOIL EROSION AND SEDIMENT CONTROL.
2. "SUPER" SILT FENCE IS TO BE INSTALLED AT THE DIRECTION OF THE SEDIMENT CONTROL INSPECTOR.

## REFERENCE

SITE DEVELOPMENT PLAN, DATED DECEMBER 11, 2014
STORMWATER MANAGEMENT REPORT, DATED JULY 11, 2014
ECP PLAN, DATED APR. 3, 2014.

## NOTES

AT THE DIRECTION OF THE SEDIMENT CONTROL INSPECTOR, FILTER SOCKS ARE TO BE REPLACED BY EITHER SILT FENCE OR "SUPER" SILT FENCE.

### ENGINEER'S CERTIFICATE

"I certify that this plan for sediment and erosion control represents a practical and workable plan based on my personal knowledge of the site conditions and that it was prepared in accordance with the requirements of the Howard Soil Conservation District."

[signature] — Signature of Engineer (print name below signature) — Date 4/14/2016

### DEVELOPER'S CERTIFICATE

"I/We certify that all development and construction will be done according to this plan for sediment and erosion control, and that all responsible personnel involved in the construction project will have a Certificate of Attendance at a Department of the Environment Approved Training Program for the Control of Sediment and Erosion before beginning the project. I also authorize periodic on-site inspection by the Howard Soil Conservation District."

[signature] — Signature of Developer (print name below signature) — Date 4/16/2016

Rick Borman

This development plan is approved for soil erosion and sediment control by the HOWARD SOIL CONSERVATION DISTRICT

[signature] Howard SCD — Date 4/20/16

APPROVED: HOWARD COUNTY DEPARTMENT OF PLANNING AND ZONING

CHIEF, DIVISION OF LAND DEVELOPMENT — DATE 5-11-16

CHIEF, DEVELOPMENT ENGINEERING DIVISION — DATE 5.4.16

DIRECTOR — DATE 5-16-16

| NO. | DATE | REVISION |
|---|---|---|
| | | |

FOR RETTEW ASSOCIATES BY: 4-14-16 [seal: STATE OF MARYLAND, ERIC M. HERSHEY, PROFESSIONAL ENGINEER, No. 37111]

XREFS: 099812001-SV-BASE, 099812001-LD-TBLK, 099812001-LD-LGND, 099812001-LD-EROS, 099812001-SV-TOPO, 099812001-LD-CVNT, 099812001-LD-BASE, 099812001-LD-GRAD, 099812001-LD-UTIL

MANAGER: DAVID D. MILLER, P.E.
DESIGN BY: JAR — CHKD BY: DEW
SURV. CHIEF: — FIELDBOOK NO. DATA COLLECTOR
DRAWN BY: DCW — CHKD BY: DEW

DRAWING REFERENCE: C:_RettewVaultWP\099812001-Washington NAPA\Sheets\LD\099812001-09_EROS.dwg

CLIENT
GENUINE PARTS COMPANY
2999 CIRCLE 75 PARKWAY
ATLANTA, GA 30339
PHONE: (770) 953-1700

SCALE 1"=50' (0 25' 50' 100' 150')


RETTEW
RETTEW Associates, Inc.
3020 Columbia Ave., Lancaster, PA 17603
Phone (717) 394-3721 · Fax (717) 394-1063
Email: rettew@rettew.com
Website: www.rettew.com
Engineers · Planners · Surveyors · Landscape Architects · Environmental Consultants


# EROSION AND SEDIMENTATION CONTROL PLAN
## SITE DEVELOPMENT PLAN FOR NAPA WASHINGTON
HOWARD COUNTY, MD

DATE: MARCH 2, 2016
SHEET NO. 13 OF 17
DWG. NO. 099812001

SDP-15-005, ~~GP-15-074~~

# GRADING AND SEDIMENT CONTROL NOTES:

## GENERAL NOTES:

1. ALL PLANS, DESIGNS AND COMPUTATIONS FOR GRADING AND SEDIMENT CONTROL WHICH ARE SUBMITTED TO THE HOWARD SOIL CONSERVATION DISTRICT FOR REVIEW AND APPROVAL ARE TO BE IN CONFORMANCE WITH THE CRITERIA ESTABLISHED IN THE MOST CURRENT MARYLAND STANDARDS AND SPECIFICATIONS FOR SOIL EROSION AND SEDIMENT CONTROL, AND REVISIONS THERETO.

2. ALL VEGETATIVE AND STRUCTURAL PRACTICES ARE TO BE INSTALLED ACCORDING TO THE PROVISIONS OF THIS PLAN AND ARE TO BE IN CONFORMANCE WITH THE MOST CURRENT MARYLAND STANDARDS AND SPECIFICATIONS FOR SOIL EROSION AND SEDIMENT CONTROL, AND REVISIONS THERETO.

## STANDARD E&S PLAN NOTES

1. ALL EARTH DISTURBANCES, INCLUDING CLEARING AND GRUBBING AS WELL AS CUTS AND FILLS SHALL BE DONE IN ACCORDANCE WITH THE APPROVED E&S PLAN. A COPY OF THE APPROVED DRAWINGS MUST BE AVAILABLE AT THE PROJECT SITE AT ALL TIMES. THE REVIEWING AGENCY SHALL BE NOTIFIED OF ANY CHANGES TO THE APPROVED PLAN PRIOR TO IMPLEMENTATION OF THOSE CHANGES. THE REVIEWING AGENCY MAY REQUIRE A WRITTEN SUBMITTAL OF THOSE CHANGES FOR REVIEW AND APPROVAL AT ITS DISCRETION.
2. AT LEAST 3 DAYS PRIOR TO STARTING ANY EARTH DISTURBANCE ACTIVITIES, OR EXPANDING INTO AN AREA PREVIOUSLY UNMARKED, THE MARYLAND ONE CALL SYSTEM INC. SHALL BE NOTIFIED AT 1-800-257-7777 FOR THE LOCATION OF EXISTING UNDERGROUND UTILITIES.
3. ALL EARTH DISTURBANCE ACTIVITIES SHALL PROCEED IN ACCORDANCE WITH THE SEQUENCE PROVIDED ON THE PLAN DRAWINGS. DEVIATION FROM THAT SEQUENCE MUST BE APPROVED IN WRITING FROM THE LOCAL APPROVING AGENCY.
4. AREAS TO BE FILLED ARE TO BE CLEARED, GRUBBED, AND STRIPPED OF TOPSOIL TO REMOVE TREES, VEGETATION, ROOTS AND OTHER OBJECTIONABLE MATERIAL.
5. CLEARING, GRUBBING, AND TOPSOIL STRIPPING SHALL BE LIMITED TO THOSE AREAS DESCRIBED IN EACH STAGE OF THE CONSTRUCTION SEQUENCE. GENERAL SITE CLEARING, GRUBBING AND TOPSOIL STRIPPING MAY NOT COMMENCE IN ANY STAGE OR PHASE OF THE PROJECT UNTIL THE E&S BMPS SPECIFIED BY THE BMP SEQUENCE FOR THAT STAGE OR PHASE HAVE BEEN INSTALLED AND ARE FUNCTIONING AS DESCRIBED IN THIS E&S PLAN.
6. AT NO TIME SHALL CONSTRUCTION VEHICLES BE ALLOWED TO ENTER AREAS OUTSIDE THE LIMIT OF DISTURBANCE BOUNDARIES SHOWN ON THE PLAN MAPS. THESE AREAS MUST BE CLEARLY MARKED AND FENCED OFF BEFORE CLEARING AND GRUBBING OPERATIONS BEGIN.
7. TOPSOIL REQUIRED FOR THE ESTABLISHMENT OF VEGETATION SHALL BE STOCKPILED AT THE LOCATION(S) SHOWN ON THE PLAN MAPS(S) IN THE AMOUNT NECESSARY TO COMPLETE THE FINISH GRADING OF ALL EXPOSED AREAS THAT ARE TO BE STABILIZED BY VEGETATION. EACH STOCKPILE SHALL BE PROTECTED IN THE MANNER SHOWN ON THE PLAN DRAWINGS. STOCKPILE HEIGHTS SHALL NOT EXCEED 35 FEET. STOCKPILE SLOPES SHALL BE 2H:1V OR FLATTER.
8. IMMEDIATELY UPON DISCOVERING UNFORESEEN CIRCUMSTANCES POSING THE POTENTIAL FOR ACCELERATED EROSION AND/OR SEDIMENT POLLUTION, THE OPERATOR SHALL IMPLEMENT APPROPRIATE BEST MANAGEMENT PRACTICES TO MINIMIZE THE POTENTIAL FOR EROSION AND SEDIMENT POLLUTION AND NOTIFY THE LOCAL APPROVING AGENCY.
9. ALL BUILDING MATERIALS AND WASTES SHALL BE REMOVED FROM THE SITE AND RECYCLED OR DISPOSED OF IN ACCORDANCE WITH LOCAL REGULATIONS. NO BUILDING MATERIALS OR WASTES OR UNUSED BUILDING MATERIALS SHALL BE BURNED, BURIED, DUMPED, OR DISCHARGED AT THE SITE.
10. ALL PUMPING OF WATER FROM ANY WORK AREA SHALL BE DONE ACCORDING TO THE PROCEDURE DESCRIBED IN THIS PLAN, OVER UNDISTURBED VEGETATED AREAS.
11. UNTIL THE SITE IS STABILIZED, ALL EROSION AND SEDIMENT BMPS SHALL BE MAINTAINED PROPERLY. MAINTENANCE SHALL INCLUDE INSPECTIONS OF ALL EROSION AND SEDIMENT BMPS AFTER EACH RUNOFF EVENT AND ON A WEEKLY BASIS. ALL PREVENTATIVE AND REMEDIAL MAINTENANCE WORK, INCLUDING CLEAN OUT, REPAIR, REPLACEMENT, REGRADING, RESEEDING, REMULCHING AND RENETTING MUST BE PERFORMED IMMEDIATELY. IF THE E&S BMPS FAIL TO PERFORM AS EXPECTED, REPLACEMENT BMPS, OR MODIFICATIONS OF THOSE INSTALLED WILL BE REQUIRED.
12. A LOG SHOWING DATES THAT E&S BMPS WERE INSPECTED AS WELL AS ANY DEFICIENCIES FOUND AND THE DATE THEY WERE CORRECTED SHALL BE MAINTAINED ON THE SITE AND BE MADE AVAILABLE TO REGULATORY AGENCY OFFICIALS AT THE TIME OF INSPECTION.
13. SEDIMENT TRACKED ONTO ANY PUBLIC ROADWAY OR SIDEWALK SHALL BE RETURNED TO THE CONSTRUCTION SITE BY THE END OF EACH WORK DAY AND DISPOSED IN THE MANNER DESCRIBED IN THIS PLAN. IN NO CASE SHALL THE SEDIMENT BE WASHED, SHOVELED, OR SWEPT INTO ANY ROADSIDE DITCH, STORM SEWER, OR SURFACE WATER.
14. ALL SEDIMENT REMOVED FROM BMPS SHALL BE DISPOSED OF IN THE MANNER DESCRIBED ON THE PLAN DRAWINGS.
15. AREAS WHICH ARE TO BE TOPSOILED SHALL BE SCARIFIED TO A MINIMUM DEPTH OF 3 TO 5 INCHES -- 6 TO 12 INCHES ON COMPACTED SOILS -- PRIOR TO PLACEMENT OF TOPSOIL. AREAS TO BE VEGETATED SHALL HAVE A MINIMUM 4 INCHES OF TOPSOIL IN PLACE PRIOR TO SEEDING AND MULCHING. FILL OUTSLOPES SHALL HAVE A MINIMUM OF 2 INCHES OF TOPSOIL.
16. ALL FILLS SHALL BE COMPACTED AS REQUIRED TO REDUCE EROSION, SLIPPAGE, SETTLEMENT, SUBSIDENCE OR OTHER RELATED PROBLEMS. FILL INTENDED TO SUPPORT BUILDINGS, STRUCTURES AND CONDUITS, ETC. SHALL BE COMPACTED IN ACCORDANCE WITH LOCAL REQUIREMENTS OR CODES.
17. ALL EARTHEN FILLS SHALL BE PLACED IN COMPACTED LAYERS NOT TO EXCEED 9 INCHES IN THICKNESS.
18. FILL MATERIALS SHALL BE FREE OF FROZEN PARTICLES, BRUSH, ROOTS, SOD, OR OTHER FOREIGN OR OBJECTIONABLE MATERIALS THAT WOULD INTERFERE WITH OR PREVENT CONSTRUCTION OF SATISFACTORY FILLS.
19. FROZEN MATERIALS OR SOFT, MUCKY, OR HIGHLY COMPRESSIBLE MATERIALS SHALL NOT BE INCORPORATED INTO FILLS.
20. FILL SHALL NOT BE PLACED ON SATURATED OR FROZEN SURFACES.
21. SEEPS OR SPRINGS ENCOUNTERED DURING CONSTRUCTION SHALL BE HANDLED IN ACCORDANCE WITH THE STANDARD AND SPECIFICATION FOR SUBSURFACE DRAIN OR OTHER APPROVED METHOD.
22. ALL GRADED AREAS SHALL BE PERMANENTLY STABILIZED IMMEDIATELY UPON REACHING FINISHED GRADE. CUT SLOPES IN COMPETENT BEDROCK AND ROCK FILLS NEED NOT BE VEGETATED. SEEDED AREAS WITHIN 50 FEET OF A SURFACE WATER, OR AS OTHERWISE SHOWN ON THE PLAN DRAWINGS, SHALL BE BLANKETED ACCORDING TO THE STANDARDS OF THIS PLAN.
23. IMMEDIATELY AFTER EARTH DISTURBANCE ACTIVITIES CEASE IN ANY AREA OR SUBAREA OF THE PROJECT, THE OPERATOR SHALL STABILIZE ALL DISTURBED AREAS. DURING NON-GERMINATING MONTHS, MULCH OR PROTECTIVE BLANKETING SHALL BE APPLIED AS DESCRIBED IN THE PLAN. AREAS NOT AT FINISHED GRADE, WHICH WILL BE REACTIVATED WITHIN 1 YEAR, MAY BE STABILIZED IN ACCORDANCE WITH THE TEMPORARY STABILIZATION SPECIFICATIONS. THOSE AREAS WHICH WILL NOT BE REACTIVATED WITHIN 1 YEAR SHALL BE STABILIZED IN ACCORDANCE WITH THE PERMANENT STABILIZATION SPECIFICATIONS.
24. PERMANENT STABILIZATION IS DEFINED AS A MINIMUM UNIFORM, PERENNIAL 70% VEGETATIVE COVER OR OTHER PERMANENT NON-VEGETATIVE COVER WITH A DENSITY SUFFICIENT TO RESIST ACCELERATED EROSION. CUT AND FILL SLOPES SHALL BE CAPABLE OF RESISTING FAILURE DUE TO SLUMPING, SLIDING, OR OTHER MOVEMENTS.
25. E&S BMPS SHALL REMAIN FUNCTIONAL AS SUCH UNTIL ALL AREAS TRIBUTARY TO THEM ARE PERMANENTLY STABILIZED OR UNTIL THEY ARE REPLACED BY ANOTHER BMP APPROVED BY THE LOCAL APPROVING AGENCY.
26. AFTER FINAL SITE STABILIZATION HAS BEEN ACHIEVED, TEMPORARY EROSION AND SEDIMENT BMPS MUST BE REMOVED OR CONVERTED TO PERMANENT POST CONSTRUCTION STORMWATER MANAGEMENT BMPS. AREAS DISTURBED DURING REMOVAL OR CONVERSION OF THE BMPS SHALL BE STABILIZED IMMEDIATELY. IN ORDER TO ENSURE RAPID REVEGETATION OF DISTURBED AREAS, SUCH REMOVAL/CONVERSIONS ARE TO BE DONE ONLY DURING THE GERMINATING SEASON.
27. CONCRETE WASH WATER SHALL BE HANDLED IN THE MANNER DESCRIBED ON THE PLAN DRAWINGS. IN NO CASE SHALL IT BE ALLOWED TO ENTER ANY SURFACE WATERS OR GROUNDWATER SYSTEMS.
28. ALL CHANNELS SHALL BE KEPT FREE OF OBSTRUCTIONS INCLUDING BUT NOT LIMITED TO FILL, ROCKS, LEAVES, WOODY DEBRIS, ACCUMULATED SEDIMENT, EXCESS VEGETATION, AND CONSTRUCTION MATERIAL/WASTES.
29. EROSION CONTROL BLANKETING SHALL BE INSTALLED ON ALL SLOPES 3H:1V OR STEEPER WITHIN 50 FEET OF A SURFACE WATER AND ON ALL OTHER DISTURBED AREAS SPECIFIED ON THE PLAN MAPS AND/OR DETAIL SHEETS.
30. FILL MATERIAL FOR EMBANKMENTS SHALL BE FREE OF ROOTS, OR OTHER WOODY VEGETATION, ORGANIC MATERIAL, LARGE STONES, AND OTHER OBJECTIONABLE MATERIALS. THE EMBANKMENT SHALL BE COMPACTED IN MAXIMUM 9"LAYERED LIFTS AT 95% DENSITY.
31. STOCKPILES MUST BE STABILIZED IN ACCORDANCE WITH THE 3/7 DAY STABILIZATION REQUIREMENT AS WELL AS STANDARD B-4-1 INCREMENTAL STABILIZATION AND STANDARD B-4-4 TEMPORARY STABILIZATION.
32. IF THE STOCKPILE IS LOCATED ON AN IMPERVIOUS SURFACE, A LINER SHOULD BE PROVIDED BELOW THE STOCKPILE TO FACILITATE CLEANUP. STOCKPILES CONTAINING CONTAMINATED MATERIAL MUST BE COVERED WITH IMPERMEABLE SHEETING.

## HOWARD SOIL CONSERVATION DISTRICT STANDARD SEDIMENT CONTROL NOTES

1. A MINIMUM OF 48 HOURS' NOTICE MUST BE GIVEN TO THE HOWARD COUNTY DEPARTMENT OF INSPECTIONS, LICENSES AND PERMITS, SEDIMENT CONTROL DIVISION PRIOR TO THE START OF ANY CONSTRUCTION (313-1855).
2. ALL VEGETATIVE AND STRUCTURAL PRACTICES ARE TO BE INSTALLED ACCORDING TO THE PROVISIONS OF THIS PLAN AND ARE TO BE IN CONFORMANCE WITH THE MOST CURRENT MARYLAND STANDARDS AND SPECIFICATIONS FOR SOIL EROSION AND SEDIMENT CONTROL AND REVISIONS THERETO.
3. FOLLOWING INITIAL SOIL DISTURBANCE OR RE-DISTURBANCE, PERMANENT OR TEMPORARY STABILIZATION SHALL BE COMPLETED WITHIN: A) 3 CALENDAR DAYS FOR ALL PERIMETER SEDIMENT CONTROL STRUCTURES, DIKES, PERIMETER SLOPES AND ALL SLOPES GREATER THAN 3:1, B) 7 DAYS AS TO ALL OTHER DISTURBED OR GRADED AREAS ON THE PROJECT SITE.
4. ALL DISTURBED AREAS MUST BE STABILIZED WITHIN THE TIME PERIOD SPECIFIED ABOVE IN ACCORDANCE WITH THE 2011 MARYLAND STANDARDS AND SPECIFICATIONS FOR SOIL EROSION AND SEDIMENT CONTROL FOR PERMANENT SEEDING (SEC. B-4-5), TEMPORARY SEEDING (SEC. B-4-4) AND MULCHING (SEC.B-4-3). TEMPORARY STABILIZATION WITH MULCH ALONE CAN ONLY BE DONE WHEN RECOMMENDED SEEDING DATES DO NOT ALLOW FOR PROPER GERMINATION AND ESTABLISHMENT OF GRASSES.
5. ALL SEDIMENT CONTROL STRUCTURES ARE TO REMAIN IN PLACE AND ARE TO BE MAINTAINED IN OPERATIVE CONDITION UNTIL PERMISSION FOR THEIR REMOVAL HAS BEEN OBTAINED FROM THE HOWARD COUNTY SEDIMENT CONTROL INSPECTOR.
6. SITE ANALYSIS:

| | | | |
|---|---|---|---|
| TOTAL AREA OF SITE: | 10.93 ACRES | AREA TO BE VEGETATIVELY STABILIZED: | 3.2 ACRES |
| AREA DISTURBED: | 5.1 ACRES | TOTAL CUT: | 10,100 CU. YDS. |
| AREA TO BE ROOFED OR PAVED: | 1.9 ACRES | TOTAL FILL: | 9,680 CU. YDS. |
| OFFSITE WASTE/BORROW ARE LOCATION: | N/A | | |

7. ANY SEDIMENT CONTROL PRACTICE THAT IS DISTURBED BY GRADING ACTIVITY FOR PLACEMENT OF UTILITIES MUST BE REPAIRED ON THE SAME DAY OF DISTURBANCE.
8. ADDITIONAL SEDIMENT CONTROL MUST BE PROVIDED, IF DEEMED NECESSARY BY THE HOWARD COUNTY SEDIMENT CONTROL INSPECTOR.
9. ON ALL SITES WITH DISTURBED AREAS IN EXCESS OF 2 ACRES, APPROVAL OF THE INSPECTION AGENCY SHALL BE REQUESTED UPON COMPLETION OF INSTALLATION OF PERIMETER EROSION AND SEDIMENT CONTROLS, BUT BEFORE PROCEEDING WITH ANY OTHER EARTH DISTURBANCE OR GRADING. OTHER BUILDING OR GRADING INSPECTION APPROVALS MAY NOT BE AUTHORIZED UNTIL THIS INITIAL APPROVAL BY THE INSPECTION AGENCY IS MADE.
10. TRENCHES FOR THE CONSTRUCTION OF UTILITIES IS LIMITED TO THREE PIPE LENGTHS OR THAT WHICH SHALL BE BACK-FILLED AND STABILIZED BY THE END OF EACH WORKDAY, WHICHEVER IS SHORTER.
11. ANY CHANGES OR REVISIONS TO THE SEQUENCE OF CONSTRUCTION MUST BE REVIEWED AND APPROVED BY THE PLAN APPROVAL AUTHORITY PRIOR TO PROCEEDING WITH CONSTRUCTION.
12. A PROJECT IS TO BE SEQUENCED SO THAT GRADING ACTIVITIES BEGIN ON ONE GRADING UNIT (MAXIMUM ACREAGE OF 20 AC. PER GRADING UNIT) AT A TIME. WORK MAY PROCEED TO A SUBSEQUENT GRADING UNIT WHEN AT LEAST 50 PERCENT OF THE DISTURBED AREA IN THE PRECEDING GRADING UNIT HAS BEEN STABILIZED AND APPROVED BY THE ENFORCEMENT AUTHORITY. UNLESS OTHERWISE SPECIFIED AND APPROVED BY THE APPROVAL AUTHORITY, NO MORE THAN 30 ACRES CUMULATIVELY MAY BE DISTURBED AT A GIVEN TIME.

## CONSTRUCTION SEQUENCE

ALL EARTH DISTURBANCE ACTIVITIES SHALL BE IN ACCORDANCE WITH THE FOLLOWING CONSTRUCTION SEQUENCE. EACH STAGE SHALL BE COMPLETED BEFORE THE FOLLOWING STAGE IS INITIATED. CLEARING AND GRUBBING SHALL BE LIMITED ONLY TO THOSE AREA DESCRIBED IN EACH STAGE.

IMMEDIATELY UPON DISCOVERING UNFORESEEN CIRCUMSTANCES POSING THE POTENTIAL FOR ACCELERATED EROSION AND/OR SEDIMENT POLLUTION, THE OPERATOR SHALL IMPLEMENT APPROPRIATE BEST MANAGEMENT PRACTICES TO ELIMINATE THE POTENTIAL FOR ACCELERATED EROSION AND/OR SEDIMENT POLLUTION.

THE CONTRACTOR SHALL HAVE A PRE-CONSTRUCTION MEETING WITH THE HOWARD SOIL CONSERVATION DISTRICT (HSCD) THAT SHALL TAKE PLACE AT THE SITE WITH THE DEVELOPER, THE CONTRACTOR, AND THE COUNTY ENGINEER AT LEAST 10 DAYS PRIOR TO BEGINNING ANY EARTH MOVING ACTIVITIES.

BEFORE IMPLEMENTING ANY REVISIONS TO THE APPROVED EROSION AND SEDIMENTATION CONTROL PLAN (OR REVISIONS TO OTHER PLANS THAT WILL AFFECT THE EFFECTIVENESS OF THE APPROVED E&S PLAN) THE OPERATOR MUST RECEIVE APPROVAL OF THE REVISION FROM THE LOCAL APPROVING AUTHORITY.

1. OBTAIN GRADING PERMIT.
2. THE CONTRACTOR SHALL FIELD MARK THE LIMITS OF DISTURBANCE FOR CONSTRUCTION ACTIVITIES.
3. INSTALL THE ROCK CONSTRUCTION ENTRANCE AT THE PROPOSED LOCATION. ALL CONSTRUCTION VEHICLES ENTERING AND EXITING THE SITE SHALL DO SO VIA THE ROCK CONSTRUCTION ENTRANCE. ALL MUD AND SEDIMENT TRACKED ONTO THE EXISTING ROADWAY SHALL BE REMOVED BY THE SITE CONTRACTOR AT THE END OF EACH WORKDAY. WASHING OF THE ROADWAY IS NOT PERMITTED.
4. THE CONTRACTOR IS TO VERIFY THE LOCATIONS AND DEPTHS OF ALL EXISTING UTILITIES. CONFLICTS SHALL BE IDENTIFIED AND ANY RELOCATION REQUIRED SHALL BE COORDINATED WITH THE UTILITY OWNER(S).
5. INSTALL ALL THE PERIMETER FILTER LOGS AT THE LOCATIONS SHOWN ON THE PLANS. CARE SHOULD BE TAKEN TO PROTECT THE WETLANDS FROM ANY SEDIMENT POLLUTION. THE CONTRACTOR SHALL MAINTAIN THE FILTER LOGS IN WORKING ORDER THROUGHOUT THE COURSE OF CONSTRUCTION, MAKING INSPECTIONS AFTER EACH RAINFALL EVENT AND MAKING ANY NECESSARY REPAIRS. IN THE EVENT THAT ANY FILTER LOG SHOULD FAIL IN THE COURSE OF CONSTRUCTION, SUPER SILT FENCE MAY BE INSTALLED AS A REPAIR MEASURE.
6. DEMOLISH EXISTING STRUCTURES TO BE REMOVED.
7. STRIP AND STOCKPILE TOPSOIL AT LOCATION SHOWN. STOCKPILES AND ANY EARTH DISTURBANCE THAT EXPERIENCE CESSATION OF CONSTRUCTION ACTIVITIES LONGER THAN 3 DAYS SHOULD BE TEMPORARILY SEEDED AND MULCHED. STOCKPILE TOPSOIL TO BE RETAINED ON THE SITE IN THE APPROXIMATE LOCATION SHOWN ON THE PLANS. IMMEDIATELY INSTALL FILTER LOGS AROUND STOCKPILES, SOW TEMPORARY SEED AND MULCH STOCKPILES.
8. ROUGH GRADE THE SITE. AS AREAS ARE BROUGHT TO FINISHED GRADE STABILIZE WITH TOPSOIL, SEED, AND MULCH OR STONE BASE AS SOON AS POSSIBLE. SPECIAL CARE MUST BE TAKEN TO AVOID COMPACTION OF THE BIORETENTION AREAS, THE PERVIOUS PAVING, AND THE INFILTRATION TRENCHES.
9. BEGIN CONSTRUCTION OF THE BIORETENTION AREAS, THE PERVIOUS PAVING, INFILTRATION TRENCH, AND STORM SEWER SYSTEM. PLACE INLET PROTECTION AS DESIGNATED ON PLAN SHEET 13 ON THE INLETS IMMEDIATELY. INTENT IS TO KEEP THE INLETS CLEAN UNTIL THE BIORETENTION AREAS HAVE BEEN PERMANENTLY STABILIZED.
10. BEGIN BUILDING CONSTRUCTION. INSTALL FILTER LOGS UPSLOPE OF BIORETENTION AREAS TO PREVENT SEDIMENT FROM ENTERING.
11. CONSTRUCT THE DETENTION BASIN, OUTLET STRUCTURE, AND OUTFALL CULVERT. INSTALL ROCK FILTER AROUND OUTLET STRUCTURE. APPLY TOPSOIL, SEED, EROSION CONTROL MAT, AND MULCH TO THE AREAS DISTURBED BY THE CONSTRUCTION OF THE BASIN. FINISH THE PARKING LOT AND BUILDING. SEDIMENT BASIN MUST BE PROTECTED FROM UNAUTHORIZED ACTS OF THIRD PARTIES.
12. UNTIL SUCH TIME AS THE SITE IS PERMANENTLY STABILIZED, ALL EROSION AND SEDIMENTATION AND SEDIMENTATION CONTROL DEVICES SHALL BE MAINTAINED IN WORKING ORDER. MAINTENANCE SHALL INCLUDE THE INSPECTION OF ALL EROSION AND SEDIMENTATION CONTROL DEVICES AFTER EACH RUNOFF EVENT, AS WELL AS ON A WEEKLY BASIS.
12. NOTIFY HOWARD SOIL CONSERVATION DISTRICT OF COMPLETION OF WORK.
13. UPON RECEIVING PERMISSION FROM THE HO. CO. SEDIMENT CONTROL INSPECTOR, REMOVE ALL TEMPORARY EROSION AND SEDIMENT CONTROL DEVICES, CUT OPEN COMPOST FILTER LOG AND SPREAD MATERIAL. ANY REMAINING EARTH DISTURBANCE SHALL BE PERMANENT STABILIZED WITH SEED AND MULCH OR EROSION CONTROL BLANKET.

## OPERATION AND MAINTENANCE NOTES:

### OPEN CHANNEL SWALE:

- THE OPEN CHANNEL SWALE SHALL BE INSPECTED ANNUALLY AND AFTER MAJOR STORM EVENTS. INSPECTION SHALL BE IN WET WEATHER TO DETERMINE IF FACILITY IS FUNCTIONING.
- REPAIR EROSION AND MAINTAIN ACCESS SURFACE IN GOOD CONDITION.
- CHECK FOR DEWATERING WITHIN 48 HOURS OF RAINFALL, NOTICEABLE ODORS, WATER STAINS ON THE FILTER SURFACE OR AT THE OUTLET AND PRESENCE OF ALGAE OR AQUATIC VEGETATION.
- REMOVE AND REPLACE FILTER MEDIA AS NEEDED.
- THE OPEN CHANNEL SWALE SHALL BE MOWED TO MAINTAIN A MAXIMUM GRASS HEIGHT OF LESS THAN 6 INCHES.
- MONITOR CHECK DAMS AND WEIRS FOR FLOW GOING AROUND STRUCTURE, EROSION AT THE DOWNSTREAM TOE AND STRUCTURAL DETERIORATION.

### INFILTRATION TRENCH:

- CHECK ACCESSIBILITY TO TRENCH AREA AND OUTLETS, IF ANY.
- CHECK FOR WOODY VEGETATION IN THE TRENCH AND TRENCH PERIMETER.
- CHECK FOR DISPLACEMENT OF STONE OR OTHER TRENCH MATERIAL, STABLE CONVEYANCE AND EROSION BELOW THE OUTLET.
- REPAIR EROSION, CLEAN DEBRIS AND LITTER. MOW GRAS DURING GROWING SEASON TO MAINTAIN 4 TO 8 INCH HEIGHT.
- WHEN DEWATERING FAILS WITHIN 48 HOURS, REMOVE THE TOP 3 TO 6 INCHES OF SOIL/SEDIMENT AND REPLACE WITH SUITABLE MATERIAL PER PLAN. FOLLOW UP INSPECTIONS SHALL CONFIRM ADEQUATE DEWATERING.
- WITH OBSERVATION WELLS, CHECK FOR PRESENCE OF WATER. REPAIR AS NEEDED.

### PERMEABLE PAVEMENT:

- PAVEMENTS SHOULD ONLY BE USED WHERE REGULAR MAINTENANCE CAN BE PERFORMED. MAINTENANCE AGREEMENTS SHOULD CLEARLY SPECIFY HOW TO CONDUCT ROUTINE TASKS TO ENSURE LONG TERM PERFORMANCE.
- PAVEMENT SURFACES SHOULD BE SWEPT AND VACUUMED TO REDUCE SEDIMENT ACCUMULATION AND ENSURE CONTINUED SURFACE POROSITY. SWEEPING SHOULD BE PERFORMED AT LEAST TWICE ANNUALLY WITH A COMMERCIAL CLEANING UNIT. WASHING SYSTEMS AND COMPRESSED AIR UNITS SHOULD NOT BE USED TO PERFORM SURFACE CLEANING.
- DRAINAGE PIPES, INLETS, STONE EDGE DRAINS AND OTHER STRUCTURES WITHIN THE DRAINAGE TO THE SUBBASE SHOULD BE CLEANED OUT AT REGULAR INTERVALS.
- TRUCKS AND OTHER HEAVY VEHICLES CAN GRIND DIRT AND GRIT INTO POROUS SURFACES, LEADING TO CLOGGING AND PREMATURE FAILURE. THESE VEHICLES SHOULD BE PREVENTED FROM TRACKING AND SPILLING MATERIAL ONTO THE PAVEMENT.
- DEICERS SHOULD BE USED IN MODERATION. WHEN USED, DEICERS SHOULD BE NON-TOXIC AND ORGANIC AND CAN BE APPLIED EITHER AS A BLENDED MAGNESIUM CHLORIDE-BASED LIQUID OR AS PRETREATED SALT. SNOW PLOWING SHOULD BE DONE CAREFULLY WITH BLADES SET ONE INCH HIGHER THAN NORMAL. PLOWED SNOW PILES AND SNOWMELT SHOULD NOT BE DIRECTED TO PERMEABLE PAVEMENT.

### DRY POND:

- FACILITY SHOULD BE INSPECTED ANNUALLY AND AFTER MAJOR STORM EVENTS. INSPECTION SHALL BE PERFORMED DURING WET WEATHER TO DETERMINE IF POND IS FUNCTIONING PROPERLY.
- CHECK FOR WOODY VEGETATION ON DAM AND WITHIN 25 FEET OF RISER.
- VISIBLE SIGNS OF EROSION IN THE POND AS WELL AS THE RIPRAP STONES OUTLET AREA SHALL BE REPAIRED.
- STRUCTURAL COMPONENTS OF THE POND SUCH AS THE DAM, RISER AND PIPES SHALL BE REPAIRED UPON DETECTION OF ANY FAILURE. CHECK FOR MISSING MANHOLE COVERS OR GRATES; CONDITION OF CONCRETE AND METAL; OVERALL STRUCTURAL INTEGRITY. GRASS SHOULD BE MAINTAINED AND IN GOOD CONDITION AND BE LESS THAN 12" IN MOWING HEIGHT.
- DEBRIS AND LITTER SHALL BE REMOVED DURING REGULAR MOWING OPERATIONS.
- SEDIMENT SHALL BE REMOVED FROM POND WHEN 30% OF STORAGE LOSS HAS BEEN ACHIEVED OR WHEN NECESSARY FOR AESTHETIC REASONS.

### BIO-RETENTION:

- ANNUAL MAINTENANCE OF PLANT MATERIAL, MULCH LAYER, SAND MEDIA AND SOIL LAYER IS REQUIRED. MAINTENANCE OF MULCH AND SOIL IS LIMITED TO CORRECTION AREAS OF EROSION AND WASHOUT. CHECK FOR DEWATERING WITHIN 48 HOURS. WHEN NECESSARY, REPLACE FILTER MEDIA PER PLAN.
- SCHEDULE OF PLANT INSPECTION WILL BE TWICE A YEAR IN SPRING AND FALL. THIS INSPECTION WILL INCLUDE REMOVAL OF DEAD, DISEASED, AND EXCESSIVE VEGETATION CONSIDERED BEYOND TREATMENT. REPLACEMENT OF ALL DISEASED TREES, SHRUBS, DEFICIENT STAKES AND WIRES WILL BE REQUIRED.
- MULCH LAYERS SHALL BE INSPECTED EACH SPRING. ONCE EVERY 3 TO 3 YEARS, REMOVE PREVIOUS MULCH LAYERS AND APPLY NEW 2 TO 3 INCH LAYER.
- SOIL EROSION AND FLOW BLOCKAGES TO BE ADDRESSED ON AN AS NEEDED BASIS WITH A MINIMUM OF ONCE PER MONTH AND AFTER HEAVY STORMS. INSPECT CLEANOUTS AND OBSERVATION WELLS ALONG WITH THE OVERFLOW/OUTFALL/EXIT PIPES.

### STOCKPILE AREA::

- THE STOCKPILE AREA MUST CONTINUOUSLY MEET THE REQUIREMENTS FOR ADEQUATE VEGETATIVE ESTABLISHMENT IN ACCORDANCE WITH SECTION B-4 VEGETATIVE STABILIZATION.
- SIDE SLOPES MUST BE MAINTAINED AT NO STEEPER THAN A 2:1 RATIO.
- THE STOCKPILE AREA MUST BE KEPT FREE OF EROSION.
- IF THE VERTICAL HEIGHT OF A STOCKPILE EXCEEDS 20 FEET FOR 2:1 SLOPES, 30 FEET FOR 3:1 SLOPES, OR 40 FEET FOR 4:1 SLOPES, BENCHING MUST BE PROVIDED IN ACCORDANCE WITH SECTION B-3 LAND GRADING.

## SEEDING NOTES: TEMPORARY

TEMPORARY SEEDING SUMMARY

| HARDINESS ZONE: ZONE 6B 0 TO -5 / SEED MIXTURE: | | APPLICATION RATE | | SEEDING DATES | SEEDING DEPTHS | MINIMUM PURITY | MINIMUM GERMINATION | FERTILIZER RATE (10-20-20) | | LIME RATE | |
|---|---|---|---|---|---|---|---|---|---|---|---|
| NO. | SPECIES | LB/AC | LB/1000 FT² | | | | | LB/AC | LB/1000 FT² | TONS/AC | LB/1000 FT² |
| | COOL-SEASON GRASSES | | | | | | | | | | |
| 1 | ANNUAL RYEGRASS (LOLIUM PERENNE SSP. MULTIFLORUM | 40 | 1.0 | MAR 1 TO MAY 15; AUG 1 TO OCT 15 | 0.5" | 97% | 85% | 436 | 10.0 | 2 | 90 |
| | WARM-SEASON GRASSES | | | | | | | | | | |
| 2 | FOXTAIL MILLET (SETARIA ITALICA) | 30 [1] | 0.7 [1] | MAY 16 TO JULY 31 | 0.5" | 98% | 80% | 436 | 10.0 | 2 | 90 |
| 3 | PEARL MILLET (PENNISETIUM GLAUCUM) | 20 [1] | 0.5 [1] | MAY 16 TO JULY 31 | 0.5" | | | | | | |

NOTES:

[1] SEEDING RATES ARE IN POUNDS OF PURE LIVE SEED (PLS). ACTUAL PLANTING RATES SHALL BE ADJUSTED TO REFLECT PERCENT SEED GERMINATION AND PURITY, AS TESTED.

[2] FOR SANDY SOILS, PLANT SEEDS AT TWICE THE DEPTH LISTED ABOVE.

[3] THE PLANTING DATES ARE AVERAGES FOR SAID ZONE AND MAY REQUIRE ADJUSTMENT TO REFLECT LOCAL CONDITIONS, ESPECIALLY NEAR THE BOUNDARIES OF THE ZONE.

GENERAL TEMPORARY SEEDING NOTES:

1. ALL AREAS TO BE SEEDED SHALL BE LOOSENED TO A DEPTH OF AT LEAST TWO INCHES BY MECHANICAL MEANS.
2. MULCH SEEDED AREAS IMMEDIATELY AFTER SEEDING.
3. UNLESS OTHERWISE DIRECTED BY THE ENGINEER, MULCH (HAY OR STRAW) SHALL BE APPLIED AT A RATE OF 3 TONS PER ACRE DURING NON-GERMINATION PERIOD OF OCTOBER 15 – MARCH 1.
4. SEED MIXTURE SHALL BEAR A GUARANTEED STATEMENT OF ANALYSIS AND SHALL BE COMPOSED OF THE VARIETIES SHOWN ON THIS PLAN.
5. MULCH – CLEAN OAT OR WHEAT STRAW SHALL BE FREE FROM MATURE SEED-BEARING STALKS OR ROOTS OF PROHIBITED OR NOXIOUS WEEDS. APPLY AT A RATE OF 3 TONS PER ACRE. PRECAUTION SHALL BE TAKEN TO STABILIZE THE MULCH UNTIL THE VEGETATIVE COVER IS ESTABLISHED.

## SEEDING NOTES: PERMANENT

PERMANENT SEEDING SUMMARY

| HARDINESS ZONE: ZONE 6B 0 TO -5 / SEED MIXTURE: 11 | | SEEDING RATE [1] | | SEEDING DEPTHS (INCH) | RECOMMENDED CULTIVAR | SEEDING DATES | MINIMUM PURITY | MINIMUM GERMINATION | FERTILIZER RATE (10-20-20) | | | LIME RATE | |
|---|---|---|---|---|---|---|---|---|---|---|---|---|---|
| NO. | SPECIES | | | | | | | | N | $P_2O_5$ | $K_2O$ | TONS/AC | LB/1000 FT² |
| 1 | CREEPING RED FESCUE (FESTUCA RUBRA VAR. RUBRA) | 30 | 0.69 | 1/4" TO 1/2" | DAWSON, PENNLAWN, FLYER, FORTESS, RUBY, OR SALEM | MAR 1 TO MAY 15; AUG 1 TO OCT 15 | 97% | 85% | 45 lb/ac; 1 lb/1000 sf | 90 lb/ac; 2 lb/1000 sf | 90 lb/ac; 2 lb/1000 sf | 2 | 90 |
| 2 | CHEWINGS FESCUE (FESTUCA RUBRA SSP. COMMUTATA) | 30 | 0.69 | 1/4" TO 1/2" | COMMON | MAR 1 TO MAY 15; AUG 1 TO OCT 15 | 97% | 85% | | | | | |
| 3 | KENTUCKY BLUEGRASS (POA PRATENSIS) | 20 | 0.46 | 1/4" TO 1/2" | RECOMMENDED MD TURF-TYPES [4] | MAR 1 TO MAY 15; AUG 1 TO OCT 15 | 97% | 80% | | | | | |

NOTES:

[1] SEEDING RATES FOR THE WARM-SEASON GRASSES ARE IN POUNDS OF PURE LIVE SEED (PLS). ACTUAL PLANTING RATES SHALL BE ADJUSTED TO REFLECT PERCENT SEED GERMINATION AND PURITY, AS TESTED. ADJUSTMENTS ARE NOT USUALLY NEEDED FOR THE COOL-SEASON GRASSES, LEGUMES, OR WILDFLOWERS. ALL LEGUMES SEEDS MUST BE INOCULATED BEFORE PLANTING WITH THE APPROPRIATE RHIZOBIUM BACTERIA. WHEN FEASIBLE, HARD-SEEDED LEGUMES SHOULD BE SCARIFIED TO IMPROVE GERMINATION.

[2] FOR SANDY SOILS, PLANT SEEDS AT TWICE THE DEPTH LISTED ABOVE.

[3] THE PLANTING DATES ARE AVERAGES FOR SAID ZONE AND MAY REQUIRE ADJUSTMENT TO REFLECT LOCAL CONDITIONS, ESPECIALLY NEAR THE BOUNDARIES OF THE ZONE.

GENERAL PERMANENT SEEDING NOTES:

1. ALL AREAS TO BE SEEDED SHALL BE LOOSENED TO A DEPTH OF AT LEAST TWO INCHES BY MECHANICAL MEANS.
2. MULCH OF LONG-STEM STRAW SHALL BE APPLIED AT EVEN APPLICATION OF 3 TONS PER ACRE WITH A SURFACE COVERAGE OF 80% TO 90%.
3. LIMESTONE AND FERTILIZER SHALL BE APPLIED UNIFORMLY TO AREAS TO BE SEEDED AND WORKED INTO SOIL TO A DEPTH OF 6".
4. UNLESS OTHERWISE DIRECTED BY THE ENGINEER, MULCH (LONG-STEM STRAW) SHALL BE APPLIED IMMEDIATELY AFTER SEEDING AND AT A RATE OF 3 TONS PER ACRE DURING NON-GERMINATION PERIOD OF OCTOBER 15 – MARCH 1.
5. SEED MIXTURE SHALL BEAR A GUARANTEED STATEMENT OF ANALYSIS AND SHALL BE COMPOSED OF THE VARIETIES SHOWN ON THIS PLAN.

## INSPECTION NOTES:

INSPECTION:

INSPECTION SCHEDULE AND REPORTS

1. THE DEVELOPER SHALL NOTIFY THE COUNTY AT LEAST 48 HOURS BEFORE COMMENCING ANY WORK IN CONJUNCTION WITH THE STORMWATER MANAGEMENT PLAN AND UPON COMPLETION OF A PROJECT WHEN A FINAL INSPECTION WILL BE CONDUCTED.
2. REGULAR INSPECTIONS SHALL BE MADE AND DOCUMENTED FOR EACH ESD PLANNING TECHNIQUE AND PRACTICE AT THE STAGES OF CONSTRUCTION SPECIFIED IN THE DESIGN MANUAL BY HOWARD COUNTY, ITS AUTHORIZED REPRESENTATIVE, OR CERTIFIED BY A PROFESSIONAL ENGINEER LICENSED IN THE STATE OF MARYLAND. AT A MINIMUM, ALL ESD AND OTHER NONSTRUCTURAL PRACTICES SHALL BE INSPECTED UPON COMPLETION OF FINAL GRADING, THE ESTABLISHMENT OF PERMANENT STABILIZATION, AND BEFORE ISSUANCE OF USE AND OCCUPANCY APPROVAL.
3. WRITTEN INSPECTION REPORTS SHALL INCLUDE:
   (A) DATE AND LOCATION OF THE INSPECTION;
   (B) WHETHER CONSTRUCTION WAS IN COMPLIANCE WITH THE APPROVED STORMWATER MANAGEMENT PLAN;
   (C) ANY VARIATIONS FROM THE APPROVED CONSTRUCTION SPECIFICATIONS; AND
   (D) ANY VIOLATIONS THAT EXIST.
4. THE OWNER/DEVELOPER AND ON-SITE PERSONNEL SHALL BE NOTIFIED IN WRITING WHEN VIOLATIONS ARE OBSERVED. WRITTEN NOTIFICATION SHALL DESCRIBE THE NATURE OF THE VIOLATION AND THE REQUIRED CORRECTIVE ACTION.
5. NO WORK SHALL PROCEED UNTIL THE COUNTY INSPECTS AND APPROVES THE WORK PREVIOUSLY COMPLETED AND FURNISHES THE DEVELOPER WITH THE RESULTS OF THE INSPECTION REPORTS AFTER COMPLETION OF EACH REQUIRED INSPECTION.

INSPECTION REQUIREMENTS DURING CONSTRUCTION:

1. AT A MINIMUM, REGULAR INSPECTIONS SHALL BE MADE AND DOCUMENTED AT THE FOLLOWING SPECIFIED STAGES OF CONSTRUCTION:
   (A) PONDS
   (I) UPON COMPLETION OF EXCAVATION TO SUB-FOUNDATION AND WHEN REQUIRED, INSTALLATION OF STRUCTURAL SUPPORTS OR REINFORCEMENT FOR STRUCTURES, INCLUDING BUT NOT LIMITED TO CORE TRENCHES FOR STRUCTURAL EMBANKMENTS, INLET AND OUTLET STRUCTURES, ANTI-SEEP COLLARS OR FILTER DIAPHRAGMS, WATERTIGHT CONNECTORS ON PIPES AND TRENCHES FOR ENCLOSED STORM DRAIN FACILITIES;
   (II) DURING PLACEMENT OF STRUCTURAL FILL, CONCRETE AND INSTALLATION OF PIPING AND CATCH BASINS;
   (III) DURING BACKFILL OF FOUNDATION AND TRENCHES;
   (IV) DURING EMBANKMENT CONSTRUCTION; AND
   (V) UPON REMOVAL OF ANY TEMPORARY SEDIMENT CONTROL FEATURE OR DEVICES; AND
   (VI) UPON COMPLETION OF FINAL GRADING AND ESTABLISHMENT OF PERMANENT STABILIZATION.
   (B) WETLANDS
   (I) AT STAGES SPECIFIED FOR POND CONSTRUCTION;
   (II) DURING AND AFTER WETLAND RESERVOIR PLANTINGS; AND
   (III) DURING THE SECOND GROWING SEASON TO VERIFY A VEGETATION SURVIVAL RATE OF AT LEAST 50 PERCENT.
   (C) INFILTRATION TRENCHES
   (I) DURING EXCAVATION TO SUBGRADE;
   (II) DURING PLACEMENT OF BACKFILL OF UNDERDRAIN SYSTEMS AND OBSERVATION WELLS;
   (III) DURING PLACEMENT OF GEOTEXTILES AND ALL FILTER MEDIA;
   (IV) DURING CONSTRUCTION OF APPURTENANT CONVEYANCE SYSTEMS SUCH AS DIVERSION STRUCTURES, PRE-FILTERS, FILTERS, OUTLETS AND FLOW DISTRIBUTION STRUCTURES; AND
   (V) UPON COMPLETION OF FINAL GRADING AND ESTABLISHMENT OF PERMANENT STABILIZATION.
   (D) INFILTRATION BASINS
   (I) AT STAGES SPECIFIED FOR POND CONSTRUCTION; AND
   (II) DURING PLACEMENT AND BACKFILL OF UNDERDRAIN SYSTEM.
   (E) FILTERING SYSTEMS
   (I) DURING EXCAVATION TO SUBGRADE;
   (II) DURING PLACEMENT AND BACKFILL OF UNDERDRAIN SYSTEM:
   (III) DURING PLACEMENT OF GEOTEXTILES AND ALL FILTER MEDIA:
   (IV) DURING CONSTRUCTION OF APPURTENANT CONVEYANCE SYSTEMS SUCH AS DIVERSION STRUCTURES, PRE-FILTERS, FILTERS, OUTLETS AND FLOW DISTRIBUTION STRUCTURES; AND
   (V) UPON COMPLETION OF FINAL GRADING AND ESTABLISHMENT OF PERMANENT STABILIZATION.
   (F) OPEN CHANNEL SYSTEMS
   (I) DURING EXCAVATION TO SUBGRADE;
   (II) DURING PLACEMENT AND BACKFILL OF UNDERDRAIN SYSTEMS FOR DRY SWALES:
   (III) DURING INSTALLATION OF DIAPHRAGMS, CHECK DAMS, OR WEIRS; AND
   (IV) UPON COMPLETION OF FINAL GRADING AND ESTABLISHMENT OF PERMANENT STABILIZATION.

## DETAIL F-4 FILTER BAG

STANDARD SYMBOL: ☒FB

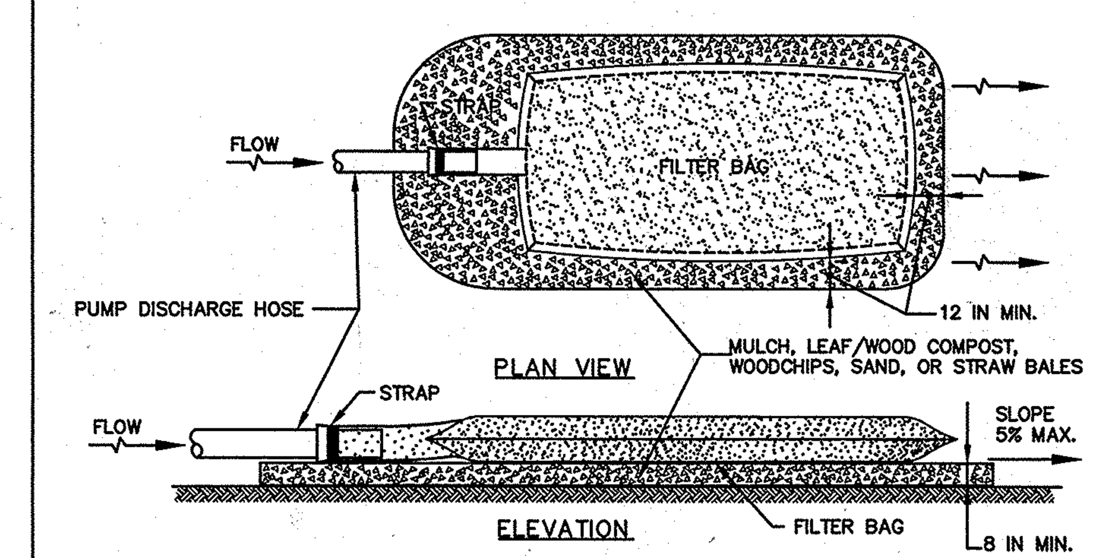


CONSTRUCTION SPECIFICATIONS

1. TIGHTLY SEAL SLEEVE AROUND THE PUMP DISCHARGE HOSE WITH A STRAP OR SIMILAR DEVICE.
2. PLACE FILTER BAG ON SUITABLE BASE (E.G., MULCH, LEAF/WOOD COMPOST, WOODCHIPS, SAND, OR STRAW BALES) LOCATED ON A LEVEL OR 5% MAXIMUM SLOPING SURFACE. DISCHARGE TO A STABILIZED AREA. EXTEND BASE A MINIMUM OF 12 INCHES FROM EDGES OF BAG.
3. CONTROL PUMPING RATE TO PREVENT EXCESSIVE PRESSURE WITHIN THE FILTER BAG IN ACCORDANCE WITH THE MANUFACTURER RECOMMENDATIONS. AS THE BAG FILLS WITH SEDIMENT, REDUCE PUMPING RATE.
4. REMOVE AND PROPERLY DISPOSE OF FILTER BAG UPON COMPLETION OF PUMPING OPERATIONS OR AFTER BAG HAS REACHED CAPACITY, WHICHEVER OCCURS FIRST. SPREAD THE DEWATERED SEDIMENT FROM THE BAG IN AN APPROVED UPLAND AREA AND STABILIZE WITH SEED AND MULCH BY THE END OF THE WORK DAY. RESTORE THE SURFACE AREA BENEATH THE BAG TO ORIGINAL CONDITION UPON REMOVAL OF THE DEVICE.
5. USE NONWOVEN GEOTEXTILE WITH DOUBLE STITCHED SEAMS USING HIGH STRENGTH THREAD. SIZE SLEEVE TO ACCOMMODATE A MAXIMUM 4 INCH DIAMETER PUMP DISCHARGE HOSE. THE BAG MUST BE MANUFACTURED FROM A NONWOVEN GEOTEXTILE THAT MEETS OR EXCEEDS MINIMUM AVERAGE ROLL VALUES (MARV) FOR THE FOLLOWING:

| | | |
|---|---|---|
| GRAB TENSILE | 250 LB | ASTM D-4632 |
| PUNCTURE | 150 LB | ASTM D-4833 |
| FLOW RATE | 70 GAL/MIN/FT² | ASTM D-4491 |
| PERMITTIVITY ($SEC^{-1}$) | 1.2 $SEC^{-1}$ | ASTM D-4491 |
| UV RESISTANCE | 70% STRENGTH @ 500 HOURS | ASTM D-4355 |
| APPARENT OPENING SIZE (AOS) | 0.15–0.18 MM | ASTM D-4751 |
| SEAM STRENGTH | 90% | ASTM D-4632 |

6. REPLACE FILTER BAG IF BAG CLOGS OR HAS RIPS, TEARS, OR PUNCTURES. DURING OPERATION KEEP CONNECTION BETWEEN PUMP HOSE AND FILTER BAG WATER TIGHT. REPLACE BEDDING IF IT BECOMES DISPLACED.

MARYLAND STANDARDS AND SPECIFICATIONS FOR SOIL EROSION AND SEDIMENT CONTROL

| | | |
|---|---|---|
| U.S. DEPARTMENT OF AGRICULTURE NATURAL RESOURCES CONSERVATION SERVICE | 2011 | MARYLAND DEPARTMENT OF ENVIRONMENT WATER MANAGEMENT ADMINISTRATION |

## DETAIL D-4-1-A ROCK OUTLET PROTECTION I

STANDARD SYMBOL: ROP1

DISCHARGE TO SEMI CONFINED CHANNEL SECTION

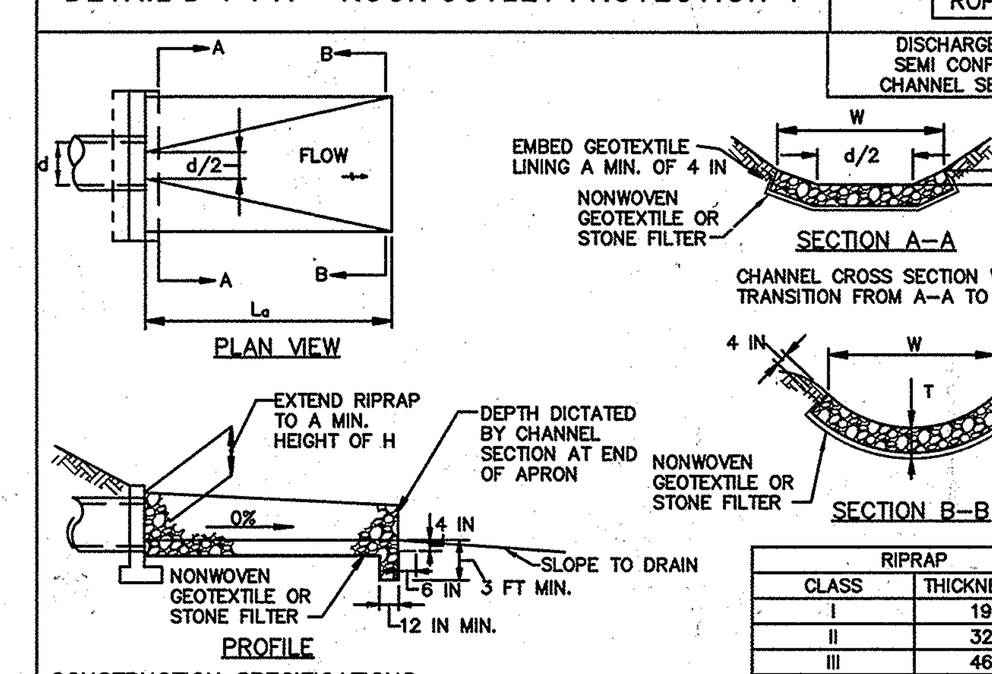


| RIPRAP | |
|---|---|
| CLASS | THICKNESS (T) |
| I | 19 IN |
| II | 32 IN |
| III | 46 IN |

CONSTRUCTION SPECIFICATIONS

1. RIPRAP AND STONE MUST CONFORM TO THE SPECIFIED CLASS.
2. USE NONWOVEN GEOTEXTILE AS SPECIFIED IN SECTION H-1 MATERIALS, AND PROTECT FROM PUNCTURING, CUTTING, OR TEARING. REPAIR ANY DAMAGE OTHER THAN AN OCCASIONAL SMALL HOLE BY PLACING ANOTHER PIECE OF GEOTEXTILE OVER THE DAMAGED PART OR BY COMPLETELY REPLACING THE GEOTEXTILE. PROVIDE A MINIMUM OF ONE FOOT OVERLAP FOR ALL REPAIRS AND FOR JOINING TWO PIECES OF GEOTEXTILE TOGETHER.
3. PREPARE THE SUBGRADE FOR GEOTEXTILE OR STONE FILTER (⅜ TO 1½ INCH STONE FOR 6 INCH MINIMUM DEPTH) AND RIPRAP TO THE REQUIRED LINES AND GRADES. COMPACT ANY FILL REQUIRED IN THE SUBGRADE TO A DENSITY OF APPROXIMATELY THAT OF THE SURROUNDING UNDISTURBED MATERIAL.
4. EXTEND GEOTEXTILE AT LEAST 6 INCHES BEYOND EDGES OF RIPRAP AND EMBED AT LEAST 4 INCHES AT SIDES OF THE RIPRAP.
5. CONSTRUCT RIPRAP OUTLET TO FULL COURSE THICKNESS IN ONE OPERATION AND IN SUCH A MANNER AS TO AVOID DISPLACEMENT OF UNDERLYING MATERIALS. PLACE STONE FOR RIPRAP OUTLET IN A MANNER THAT WILL ENSURE THAT IT IS REASONABLY HOMOGENOUS WITH THE SMALLER STONES AND SPALLS FILLING THE VOIDS BETWEEN THE LARGER STONES. PLACE RIPRAP IN A MANNER TO PREVENT DAMAGE TO THE STONE FILTER BLANKET OR GEOTEXTILE. HAND PLACE TO THE EXTENT NECESSARY.
6. WHERE NO ENDWALL IS USED, CONSTRUCT THE UPSTREAM END OF THE APRON SO THAT THE WIDTH IS TWO TIMES THE DIAMETER OF THE OUTLET PIPE, AND EXTEND THE STONE UNDER THE OUTLET BY A MINIMUM OF 18 INCHES.
7. CONSTRUCT APRON WITH 0% SLOPE ALONG ITS LENGTH AND WITHOUT OBSTRUCTIONS. PLACE STONE SO THAT IT BLENDS IN WITH EXISTING GROUND.
8. MAINTAIN LINE, GRADE, AND CROSS SECTION. KEEP OUTLET FREE OF EROSION. REMOVE ACCUMULATED SEDIMENT AND DEBRIS. AFTER HIGH FLOWS INSPECT FOR SCOUR AND DISLODGED RIPRAP. MAKE NECESSARY REPAIRS IMMEDIATELY.

MARYLAND STANDARDS AND SPECIFICATIONS FOR SOIL EROSION AND SEDIMENT CONTROL

| | | |
|---|---|---|
| U.S. DEPARTMENT OF AGRICULTURE NATURAL RESOURCES CONSERVATION SERVICE | 2011 | MARYLAND DEPARTMENT OF ENVIRONMENT WATER MANAGEMENT ADMINISTRATION |

This development plan is approved for soil erosion and sediment control by the HOWARD SOIL CONSERVATION DISTRICT

Howard SCD — [signature] — Date 4/20/16

APPROVED: HOWARD COUNTY DEPARTMENT OF PLANNING AND ZONING

CHIEF, DIVISION OF LAND DEVELOPMENT — [signature] — DATE 5-11-16

CHIEF, DEVELOPMENT ENGINEERING DIVISION — [signature] — DATE 5.4.16

DIRECTOR — [signature] — DATE 5-16-16

REVISION | DATE | NO.

FOR RETTEW ASSOCIATES BY: 4-14-16 [seal: STATE OF MARYLAND, ERIC M. HERSHEY, NO. 37119, PROFESSIONAL ENGINEER] [signature]

MANAGER: DAVID D. MILLER, P.E.
XREFS: 099812001-LD-DETL, 099812001-LD-TBLK, 099812001-LD-CVNT
DESIGN BY: JAR | CHKD BY: DEW
SURV. CHIEF: | FIELDBOOK NO. DATA COLLECTOR
DRAWN BY: DCW | CHKD BY: DEW
DRAWING REFERENCE: C:_RettewVault\WP\099812001-Washington NAPA\Sheets\LD\099812001-10_DETL-EROS.dwg

CLIENT: GENUINE PARTS COMPANY, 2999 CIRCLE 75 PARKWAY, ATLANTA, GA 30339, PHONE: (770) 953-1700

SCALE: AS NOTED

RETTEW Associates, Inc.
3020 Columbia Ave., Lancaster, PA 17603
Phone (717) 394-3721 · Fax (717) 394-1063
Email: rettew@rettew.com
Website: www.rettew.com
Engineers · Planners · Surveyors · Landscape Architects · Environmental Consultants

DETAILS: EROSION CONTROL NOTES

SITE DEVELOPMENT PLAN FOR NAPA WASHINGTON

HOWARD COUNTY, MD

DATE: MARCH 2, 2016

SHEET NO. 14 OF 17

DWG. NO. 099812001

SDP-15-005, ~~CP-15-074~~

## DETAIL B-1 STABILIZED CONSTRUCTION ENTRANCE

STANDARD SYMBOL: SCE

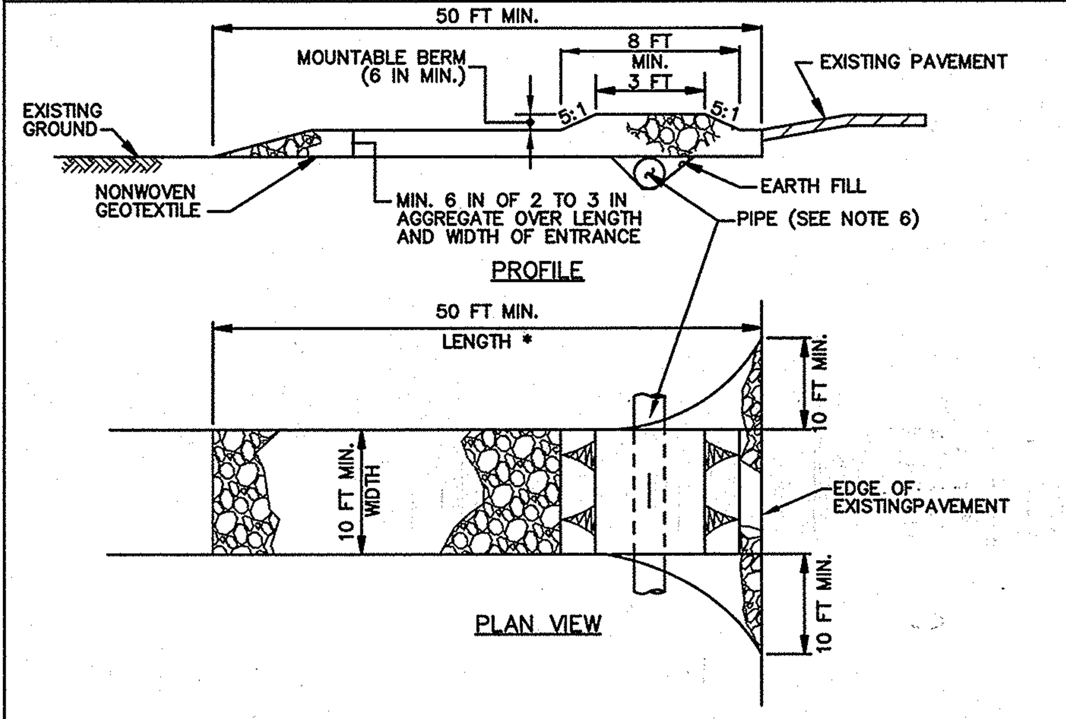


CONSTRUCTION SPECIFICATIONS

1. PLACE STABILIZED CONSTRUCTION ENTRANCE IN ACCORDANCE WITH THE APPROVED PLAN. VEHICLES MUST TRAVEL OVER THE ENTIRE LENGTH OF THE SCE. USE MINIMUM LENGTH OF 50 FEET (*30 FEET FOR SINGLE RESIDENCE LOT). USE MINIMUM WIDTH OF 10 FEET. FLARE SCE 10 FEET MINIMUM AT THE EXISTING ROAD TO PROVIDE A TURNING RADIUS.
2. PIPE ALL SURFACE WATER FLOWING TO OR DIVERTED TOWARD THE SCE UNDER THE ENTRANCE, MAINTAINING POSITIVE DRAINAGE. PROTECT PIPE INSTALLED THROUGH THE SCE WITH A MOUNTABLE BERM WITH 5:1 SLOPES AND A MINIMUM OF 12 INCHES OF STONE OVER THE PIPE. PROVIDE PIPE AS SPECIFIED ON APPROVED PLAN. WHEN THE SCE IS LOCATED AT A HIGH SPOT AND HAS NO DRAINAGE TO CONVEY, A PIPE IS NOT NECESSARY. A MOUNTABLE BERM IS REQUIRED WHEN SCE IS NOT LOCATED AT A HIGH SPOT.
3. PREPARE SUBGRADE AND PLACE NONWOVEN GEOTEXTILE, AS SPECIFIED IN SECTION H-1 MATERIALS.
4. PLACE CRUSHED AGGREGATE (2 TO 3 INCHES IN SIZE) OR EQUIVALENT RECYCLED CONCRETE (WITHOUT REBAR) AT LEAST 6 INCHES DEEP OVER THE LENGTH AND WIDTH OF THE SCE.
5. MAINTAIN ENTRANCE IN A CONDITION THAT MINIMIZES TRACKING OF SEDIMENT. ADD STONE OR MAKE OTHER REPAIRS AS CONDITIONS DEMAND TO MAINTAIN CLEAN SURFACE, MOUNTABLE BERM, AND SPECIFIED DIMENSIONS. IMMEDIATELY REMOVE STONE AND/OR SEDIMENT SPILLED, DROPPED, OR TRACKED ONTO ADJACENT ROADWAY BY VACUUMING, SCRAPING, AND/OR SWEEPING. WASHING ROADWAY TO REMOVE MUD TRACKED ONTO PAVEMENT IS NOT ACCEPTABLE UNLESS WASH WATER IS DIRECTED TO AN APPROVED SEDIMENT CONTROL PRACTICE.

MARYLAND STANDARDS AND SPECIFICATIONS FOR SOIL EROSION AND SEDIMENT CONTROL

| U.S. DEPARTMENT OF AGRICULTURE NATURAL RESOURCES CONSERVATION SERVICE | 2011 | MARYLAND DEPARTMENT OF ENVIRONMENT WATER MANAGEMENT ADMINISTRATION |
|---|---|---|

## DETAIL B-4-6-A TEMPORARY SOIL STABILIZATION MATTING CHANNEL APPLICATION

STANDARD SYMBOL: TSSMC – * lb/ft² (* INCLUDE SHEAR STRESS)

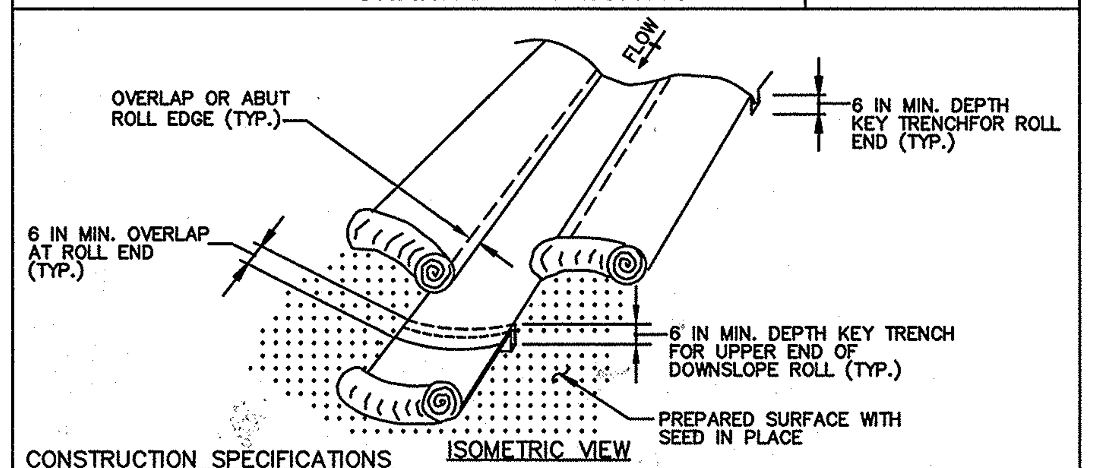


CONSTRUCTION SPECIFICATIONS

1. USE MATTING THAT HAS A DESIGN VALUE FOR SHEAR STRESS EQUAL TO OR HIGHER THAN THE SHEAR STRESS DESIGNATED ON APPROVED PLANS.
2. USE TEMPORARY SOIL STABILIZATION MATTING MADE OF DEGRADABLE (LASTS 6 MONTHS MINIMUM) NATURAL OR MAN-MADE FIBERS (MOSTLY ORGANIC). MAT MUST HAVE UNIFORM THICKNESS AND DISTRIBUTION OF FIBERS THROUGHOUT AND BE SMOLDER RESISTANT. CHEMICALS USED IN THE MAT MUST BE NON-LEACHING AND NON-TOXIC TO VEGETATION AND SEED GERMINATION AND NON-INJURIOUS TO THE SKIN. IF PRESENT, NETTING MUST BE EXTRUDED PLASTIC WITH A MAXIMUM MESH OPENING OF 2x2 INCHES AND SUFFICIENTLY BONDED OR SEWN ON 2 INCH CENTERS ALONG LONGITUDINAL AXIS OF THE MATERIAL TO PREVENT SEPARATION OF THE NET FROM THE PARENT MATERIAL.
3. SECURE MATTING USING STEEL STAPLES, WOOD STAKES, OR BIODEGRADABLE EQUIVALENT. STAPLES MUST BE "U" OR "T" SHAPED STEEL WIRE HAVING A MINIMUM GAUGE OF NO. 11 AND NO. 8 RESPECTIVELY. "U" SHAPED STAPLES MUST AVERAGE 1 TO 1½ INCHES WIDE AND BE A MINIMUM OF 6 INCHES LONG. "T" SHAPED STAPLES MUST HAVE A MINIMUM 8 INCH MAIN LEG, A MINIMUM 1 INCH SECONDARY LEG, AND A MINIMUM 4 INCH HEAD. WOOD STAKES MUST BE ROUGH-SAWN HARDWOOD, 12 TO 24 INCHES IN LENGTH, 1x3 INCH IN CROSS SECTION, AND WEDGE SHAPED AT THE BOTTOM.
4. PERFORM FINAL GRADING, TOPSOIL APPLICATION, SEEDBED PREPARATION, AND PERMANENT SEEDING IN ACCORDANCE WITH SPECIFICATIONS. PLACE MATTING WITHIN 48 HOURS OF COMPLETING SEEDING OPERATIONS UNLESS END OF WORKDAY STABILIZATION IS SPECIFIED ON THE APPROVED EROSION AND SEDIMENT CONTROL PLAN.
5. UNROLL MATTING IN DIRECTION OF WATER FLOW, CENTERING THE FIRST ROLL ON THE CHANNEL CENTERLINE. WORK FROM CENTER OF CHANNEL OUTWARD WHEN PLACING ROLLS. LAY MAT SMOOTHLY AND FIRMLY ON THE SEEDED SURFACE. AVOID STRETCHING THE MATTING.
6. KEY-IN UPSTREAM END OF EACH MAT ROLL BY DIGGING A 6 INCH (MINIMUM) TRENCH AT THE UPSTREAM END OF THE MATTING, PLACING THE ROLL END IN THE TRENCH, STAPLING THE MAT IN PLACE, REPLACING THE EXCAVATED MATERIAL, AND TAMPING TO SECURE THE MAT END.
7. OVERLAP OR ABUT THE ROLL EDGES PER MANUFACTURER RECOMMENDATIONS. OVERLAP ROLL ENDS BY 6 INCHES (MINIMUM), WITH THE UPSTREAM MAT OVERLAPPING ON TOP OF THE NEXT DOWNSTREAM MAT.
8. STAPLE/STAKE MAT IN A STAGGERED PATTERN ON 4 FOOT (MAXIMUM) CENTERS THROUGHOUT AND 2 FOOT (MAXIMUM) CENTERS ALONG SEAMS, JOINTS, AND ROLL ENDS.
9. ESTABLISH AND MAINTAIN VEGETATION SO THAT REQUIREMENTS FOR ADEQUATE VEGETATIVE ESTABLISHMENT ARE CONTINUOUSLY MET IN ACCORDANCE WITH SECTION B-4 VEGETATIVE STABILIZATION.

MARYLAND STANDARDS AND SPECIFICATIONS FOR SOIL EROSION AND SEDIMENT CONTROL

| U.S. DEPARTMENT OF AGRICULTURE NATURAL RESOURCES CONSERVATION SERVICE | 2011 | MARYLAND DEPARTMENT OF ENVIRONMENT WATER MANAGEMENT ADMINISTRATION |
|---|---|---|

## DETAIL B-4-6-B TEMPORARY SOIL STABILIZATION MATTING SLOPE APPLICATION

STANDARD SYMBOL: TSSMS – * lb/ft² (* INCLUDE SHEAR STRESS)

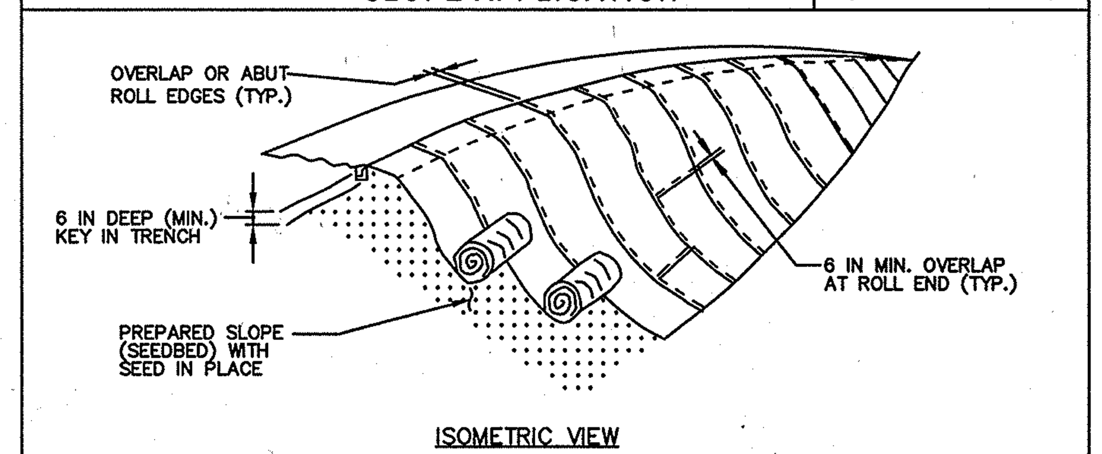


CONSTRUCTION SPECIFICATIONS

1. USE MATTING THAT HAS A DESIGN VALUE FOR SHEAR STRESS EQUAL TO OR HIGHER THAN THE SHEAR STRESS DESIGNATED ON APPROVED PLANS.
2. USE TEMPORARY SOIL STABILIZATION MATTING MADE OF DEGRADABLE (LASTS 6 MONTHS MINIMUM) NATURAL OR MAN-MADE FIBERS (MOSTLY ORGANIC). MAT MUST HAVE UNIFORM THICKNESS AND DISTRIBUTION OF FIBERS THROUGHOUT AND BE SMOLDER RESISTANT. CHEMICALS USED IN THE MAT MUST BE NON-LEACHING AND NON-TOXIC TO VEGETATION AND SEED GERMINATION AND NON-INJURIOUS TO THE SKIN. IF PRESENT, NETTING MUST BE EXTRUDED PLASTIC WITH A MAXIMUM MESH OPENING OF 2x2 INCHES AND SUFFICIENTLY BONDED OR SEWN ON 2 INCH CENTERS ALONG LONGITUDINAL AXIS OF THE MATERIAL TO PREVENT SEPARATION OF THE NET FROM THE PARENT MATERIAL.
3. SECURE MATTING USING STEEL STAPLES, WOOD STAKES, OR BIODEGRADABLE EQUIVALENT. STAPLES MUST BE "U" OR "T" SHAPED STEEL WIRE HAVING A MINIMUM GAUGE OF NO. 11 AND NO. 8 RESPECTIVELY. "U" SHAPED STAPLES MUST AVERAGE 1 TO 1½ INCHES WIDE AND BE A MINIMUM OF 6 INCHES LONG. "T" SHAPED STAPLES MUST HAVE A MINIMUM 8 INCH MAIN LEG, A MINIMUM 1 INCH SECONDARY LEG, AND A MINIMUM 4 INCH HEAD. WOOD STAKES MUST BE ROUGH-SAWN HARDWOOD, 12 TO 24 INCHES IN LENGTH, 1x3 INCH IN CROSS SECTION, AND WEDGE SHAPED AT THE BOTTOM.
4. PERFORM FINAL GRADING, TOPSOIL APPLICATION, SEEDBED PREPARATION, AND PERMANENT SEEDING IN ACCORDANCE WITH SPECIFICATIONS. PLACE MATTING WITHIN 48 HOURS OF COMPLETING SEEDING OPERATIONS UNLESS END OF WORKDAY STABILIZATION IS SPECIFIED ON THE APPROVED EROSION & SEDIMENT CONTROL PLAN.
5. UNROLL MATTING DOWNSLOPE. LAY MAT SMOOTHLY AND FIRMLY UPON THE SEEDED SURFACE. AVOID STRETCHING THE MATTING.
6. OVERLAP OR ABUT ROLL EDGES PER MANUFACTURER RECOMMENDATIONS. OVERLAP ROLL ENDS BY 6 INCHES (MINIMUM), WITH THE UPSLOPE MAT OVERLAPPING ON TOP OF THE DOWNSLOPE MAT.
7. KEY IN THE UPSLOPE END OF MAT 6 INCHES (MINIMUM) BY DIGGING A TRENCH, PLACING THE MATTING ROLL END IN THE TRENCH, STAPLING THE MAT IN PLACE, REPLACING THE EXCAVATED MATERIAL, AND TAMPING TO SECURE THE MAT END IN THE KEY.
8. STAPLE/STAKE MAT IN A STAGGERED PATTERN ON 4 FOOT (MAXIMUM) CENTERS THROUGHOUT AND 2 FOOT (MAXIMUM) CENTERS ALONG SEAMS, JOINTS, AND ROLL ENDS.
9. ESTABLISH AND MAINTAIN VEGETATION SO THAT REQUIREMENTS FOR ADEQUATE VEGETATIVE ESTABLISHMENT ARE CONTINUOUSLY MET IN ACCORDANCE WITH SECTION B-4 VEGETATIVE STABILIZATION.

MARYLAND STANDARDS AND SPECIFICATIONS FOR SOIL EROSION AND SEDIMENT CONTROL

| U.S. DEPARTMENT OF AGRICULTURE NATURAL RESOURCES CONSERVATION SERVICE | 2011 | MARYLAND DEPARTMENT OF ENVIRONMENT WATER MANAGEMENT ADMINISTRATION |
|---|---|---|

## DETAIL B-4-6-D PERMANENT SOIL STABILIZATION MATTING SLOPE APPLICATION

STANDARD SYMBOL: PSSMS – * lb/ft² (* INCLUDE SHEAR STRESS)

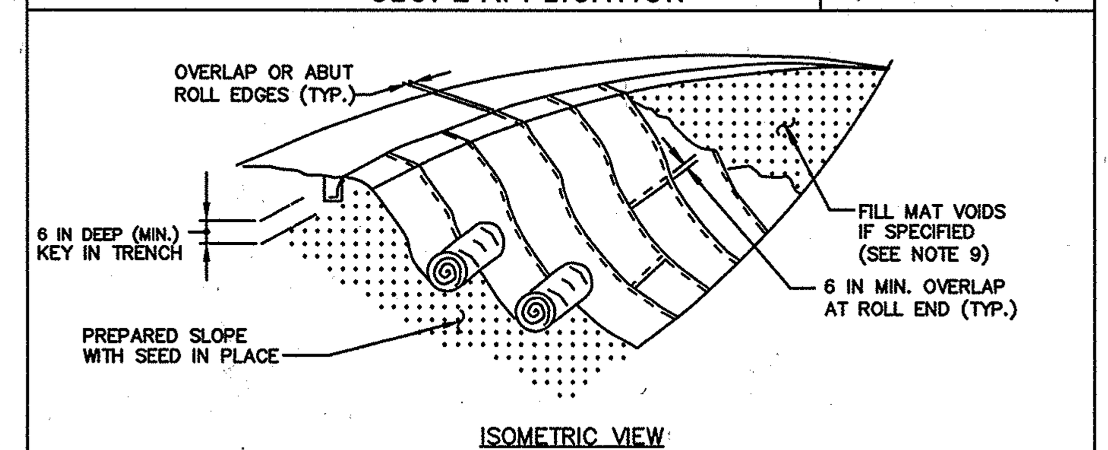


CONSTRUCTION SPECIFICATIONS

1. USE MATTING THAT HAS A DESIGN VALUE FOR SHEAR STRESS EQUAL TO OR HIGHER THAN THE SHEAR STRESS DESIGNATED ON APPROVED PLANS.
2. USE PERMANENT SOIL STABILIZATION MATTING MADE OF OPEN WEAVE SYNTHETIC, NON-DEGRADABLE FIBERS OR ELEMENTS OF UNIFORM THICKNESS AND DISTRIBUTION THROUGHOUT. CHEMICALS USED IN THE MAT MUST BE NON-LEACHING AND NON-TOXIC TO VEGETATION AND SEED GERMINATION AND NON-INJURIOUS TO THE SKIN. IF PRESENT, NETTING MUST BE EXTRUDED PLASTIC WITH A MAXIMUM MESH OPENING OF 2x2 INCHES AND SUFFICIENTLY BONDED OR SEWN ON 2 INCH CENTERS ALONG LONGITUDINAL AXIS OF THE MATERIAL TO PREVENT SEPARATION OF THE NET FROM THE PARENT MATERIAL.
3. SECURE MATTING USING STEEL STAPLES OR WOOD STAKES. STAPLES MUST BE "U" OR "T" SHAPED STEEL WIRE HAVING A MINIMUM GAUGE OF NO. 11 AND NO. 8 RESPECTIVELY. "U" SHAPED STAPLES MUST AVERAGE 1 TO 1½ INCHES WIDE AND BE A MINIMUM OF 6 INCHES LONG. "T" SHAPED STAPLES MUST HAVE A MINIMUM 8 INCH MAIN LEG, A MINIMUM 1 INCH SECONDARY LEG, AND MINIMUM 4 INCH HEAD. WOOD STAKES MUST BE ROUGH-SAWN HARDWOOD, 12 TO 24 INCHES IN LENGTH, 1x3 INCH IN CROSS SECTION, AND WEDGE SHAPE AT THE BOTTOM.
4. PERFORM FINAL GRADING, TOPSOIL APPLICATION, SEEDBED PREPARATION, AND PERMANENT SEEDING IN ACCORDANCE WITH SPECIFICATIONS. PLACE MATTING WITHIN 48 HOURS OF COMPLETING SEEDING OPERATIONS, UNLESS END OF WORKDAY STABILIZATION IS SPECIFIED ON THE APPROVED EROSION AND SEDIMENT CONTROL PLAN.
5. UNROLL MATTING DOWN SLOPE. LAY MATTING SMOOTHLY AND FIRMLY UPON THE SEEDED SURFACE. AVOID STRETCHING THE MATTING.
6. OVERLAP OR ABUT EDGES OF MATTING ROLLS PER MANUFACTURER RECOMMENDATIONS. OVERLAP ROLL ENDS BY 6 INCHES (MINIMUM), WITH THE UPSTREAM MAT OVERLAPPING ON TOP OF THE DOWNSLOPE MAT.
7. KEY IN THE TOP OF SLOPE END OF MAT 6 INCHES (MINIMUM) BY DIGGING A TRENCH, PLACING THE MATTING ROLL END IN THE TRENCH, STAPLING THE MAT IN PLACE, REPLACING THE EXCAVATED MATERIAL, AND TAMPING TO SECURE THE MAT END IN THE KEY.
8. STAPLE/STAKE MAT IN A STAGGERED PATTERN ON 4 FOOT (MAXIMUM) CENTERS THROUGHOUT AND 2 FOOT (MAXIMUM) CENTERS ALONG SEAMS, JOINTS, AND ROLL ENDS.
9. IF SPECIFIED BY THE DESIGNER OR MANUFACTURER AND DEPENDING ON THE TYPE OF MAT BEING INSTALLED, ONCE THE MATTING IS KEYED AND STAPLED IN PLACE, FILL THE MAT VOIDS WITH TOP SOIL OR GRANULAR MATERIAL AND LIGHTLY COMPACT OR ROLL TO MAXIMIZE SOIL/MAT CONTACT WITHOUT CRUSHING MAT.
10. ESTABLISH AND MAINTAIN VEGETATION SO THAT REQUIREMENTS FOR ADEQUATE VEGETATIVE ESTABLISHMENT ARE CONTINUOUSLY MET IN ACCORDANCE WITH SECTION B-4 VEGETATIVE STABILIZATION.

MARYLAND STANDARDS AND SPECIFICATIONS FOR SOIL EROSION AND SEDIMENT CONTROL

| U.S. DEPARTMENT OF AGRICULTURE NATURAL RESOURCES CONSERVATION SERVICE | 2011 | MARYLAND DEPARTMENT OF ENVIRONMENT WATER MANAGEMENT ADMINISTRATION |
|---|---|---|

## COMPOST SOCK WASHOUT DETAIL

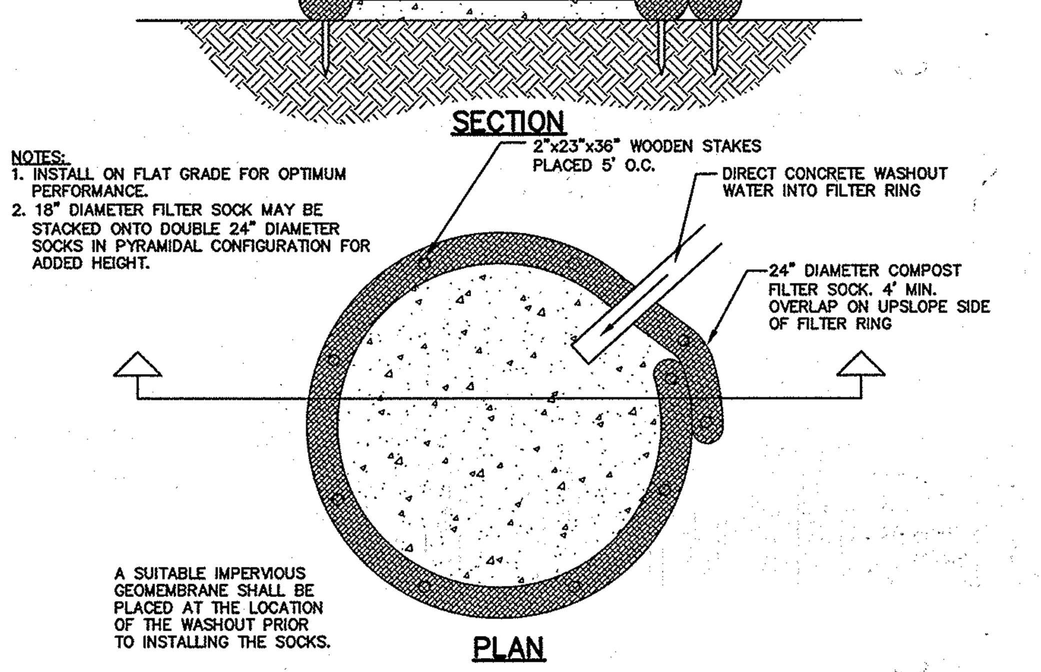


NOTES:
1. INSTALL ON FLAT GRADE FOR OPTIMUM PERFORMANCE.
2. 18" DIAMETER FILTER SOCK MAY BE STACKED ONTO DOUBLE 24" DIAMETER SOCKS IN PYRAMIDAL CONFIGURATION FOR ADDED HEIGHT.

COMPOST SOCK WASHOUT DETAIL

NOT TO SCALE

## DETAIL E-6 FILTER LOG

STANDARD SYMBOL: FL-18 — DESIGNATION FL-18 REFERS TO 18 INCH DIAMETER FILTER LOG.

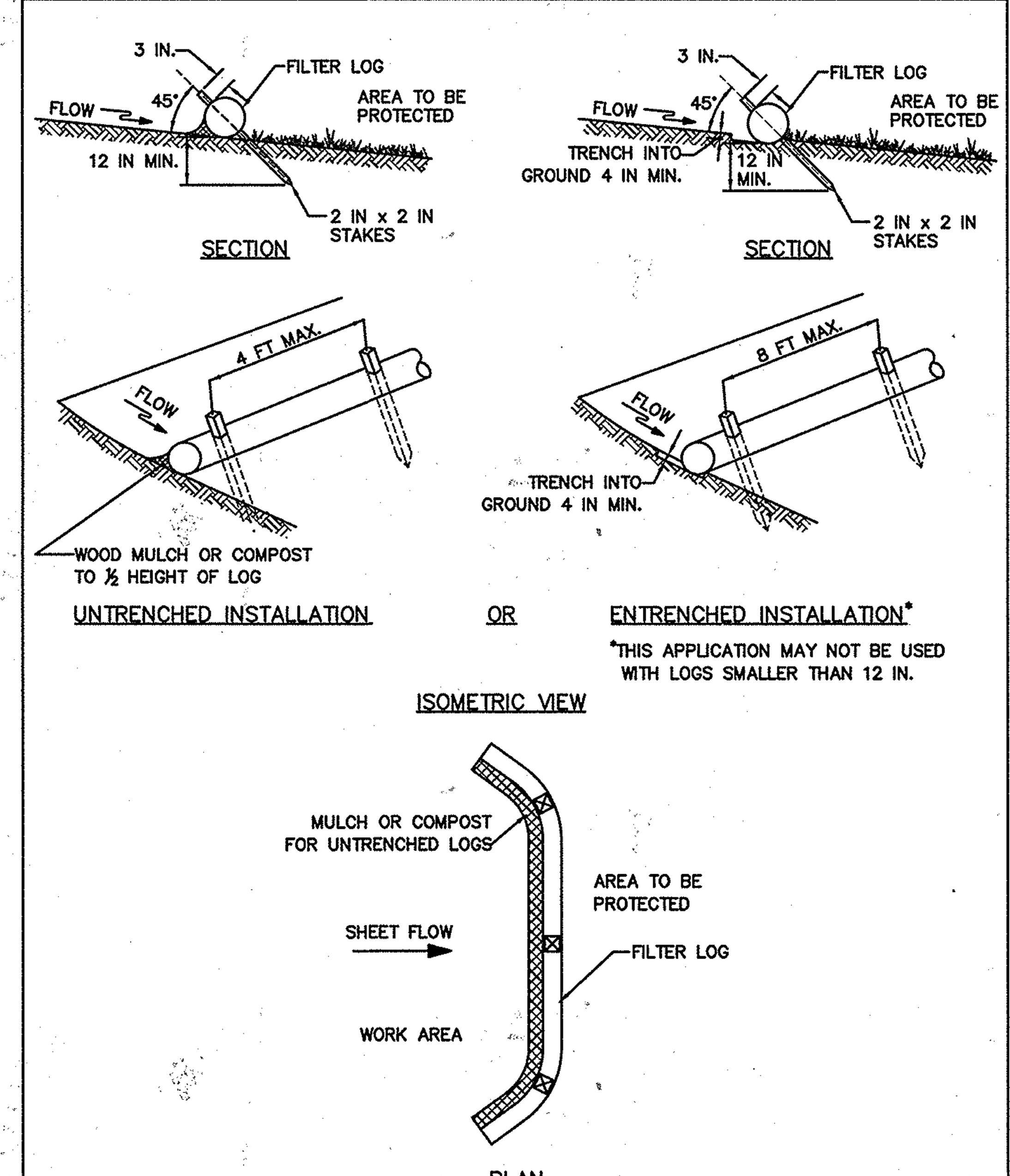


1 OF 2

MARYLAND STANDARDS AND SPECIFICATIONS FOR SOIL EROSION AND SEDIMENT CONTROL

| U.S. DEPARTMENT OF AGRICULTURE NATURAL RESOURCES CONSERVATION SERVICE | 2011 | MARYLAND DEPARTMENT OF ENVIRONMENT WATER MANAGEMENT ADMINISTRATION |
|---|---|---|

## DETAIL E-6 FILTER LOG

STANDARD SYMBOL: FL-18 — DESIGNATION FL-18 REFERS TO 18 INCH DIAMETER FILTER LOG.

CONSTRUCTION SPECIFICATIONS

1. PRIOR TO INSTALLATION, CLEAR ALL OBSTRUCTIONS INCLUDING ROCKS, CLODS, AND DEBRIS GREATER THAN ONE INCH THAT MAY INTERFERE WITH PROPER FUNCTION OF FILTER LOG.
2. FILL LOG NETTING UNIFORMLY WITH COMPOST (IN ACCORDANCE WITH SECTION H-1 MATERIALS), OR OTHER APPROVED BIODEGRADABLE MATERIAL TO DESIRED LENGTH SUCH THAT LOGS DO NOT DEFORM.
3. INSTALL FILTER LOGS PERPENDICULAR TO THE FLOW DIRECTION AND PARALLEL TO THE SLOPE WITH THE BEGINNING AND END OF THE INSTALLATION POINTING SLIGHTLY UP THE SLOPE CREATING A "J" SHAPE AT EACH END TO PREVENT BYPASS.
4. FOR UNTRENCHED INSTALLATION BLOW OR HAND PLACE MULCH OR COMPOST ON UPHILL SIDE OF THE SLOPE ALONG LOG.
5. STAKE FILTER LOG EVERY 4 FEET OR CLOSER ALONG ENTIRE LENGTH OF LOG OR TRENCH LOG INTO GROUND A MINIMUM OF 4 INCHES AND STAKE LOG EVERY 8 FEET OR CLOSER.
6. USE STAKES WITH A MINIMUM NOMINAL CROSS SECTION OF 2X2 INCH AND OF SUFFICIENT LENGTH TO ATTAIN A MINIMUM OF 12 INCHES INTO THE GROUND AND 3 INCHES PROTRUDING ABOVE LOG.
7. WHEN MORE THAN ONE LOG IS NEEDED, OVERLAP ENDS 12 INCHES MINIMUM AND STAKE.
8. REMOVE SEDIMENT WHEN IT HAS ACCUMULATED TO A DEPTH OF ½ THE EXPOSED HEIGHT OF LOG AND REPLACE MULCH. REPLACE FILTER LOG IF TORN. REINSTALL FILTER LOG IF UNDERMINING OR DISLODGING OCCURS. REPLACE CLOGGED FILTER LOGS. FOR PERMANENT APPLICATIONS, ESTABLISH AND CONTINUOUSLY MEET REQUIREMENTS FOR ADEQUATE VEGETATIVE ESTABLISHMENT IN ACCORDANCE WITH SECTION B-4 VEGETATIVE STABILIZATION.

2 OF 2

MARYLAND STANDARDS AND SPECIFICATIONS FOR SOIL EROSION AND SEDIMENT CONTROL

| U.S. DEPARTMENT OF AGRICULTURE NATURAL RESOURCES CONSERVATION SERVICE | 2011 | MARYLAND DEPARTMENT OF ENVIRONMENT WATER MANAGEMENT ADMINISTRATION |
|---|---|---|

## DETAIL E-9-3 CURB INLET PROTECTION

STANDARD SYMBOL: CIP

MAXIMUM DRAINAGE AREA = ¼ ACRE

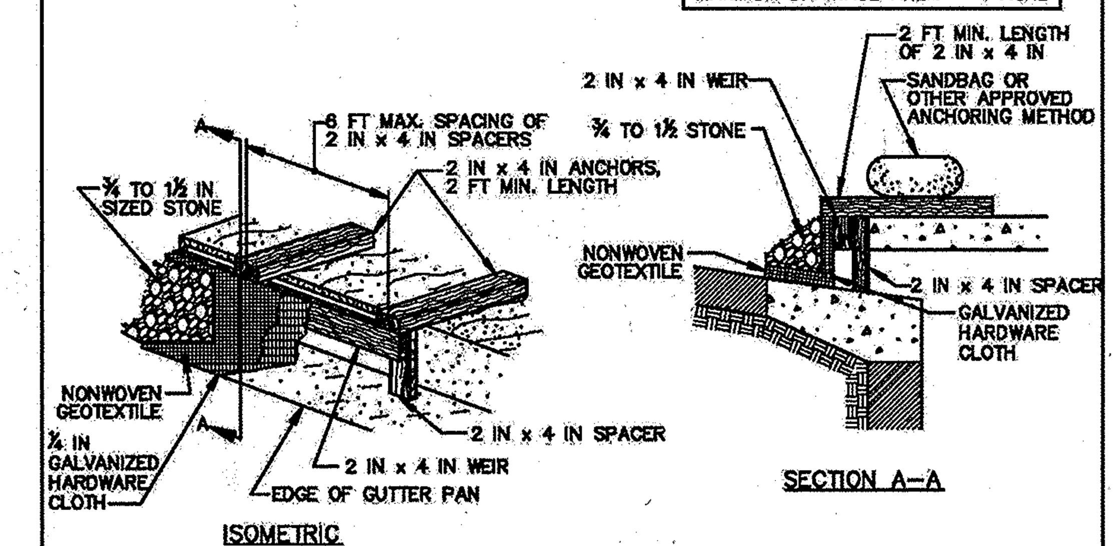


CONSTRUCTION SPECIFICATIONS

1. USE NOMINAL 2 INCH x 4 INCH LUMBER
2. USE NONWOVEN GEOTEXTILE AS SPECIFIED IN SECTION H-1 MATERIALS.
3. NAIL THE 2x4 WEIR TO 9 INCH LONG VERTICAL SPACERS (MAXIMUM 6 FEET APART).
4. ATTACH A CONTINUOUS PIECE OF ¼ INCH GALVANIZED HARDWARE CLOTH, WITH A MINIMUM WIDTH OF 30 INCHES AND A MINIMUM LENGTH OF 4 FEET LONGER THAN THE THROAT OPENING, TO THE 2x4 WEIR, EXTENDING IT 2 FEET BEYOND THROAT ON EACH SIDE.
5. PLACE A CONTINUOUS PIECE OF NONWOVEN GEOTEXTILE OF THE SAME DIMENSIONS AS THE HARDWARE CLOTH OVER THE HARDWARE CLOTH AND SECURELY ATTACH TO THE 2x4 WEIR.
6. PLACE THE ASSEMBLY AGAINST THE INLET THROAT AND NAIL TO 2x4 ANCHORS (MINIMUM 2 FEET LENGTH). EXTEND THE ANCHORS ACROSS THE INLET TOP AND HOLD IN PLACE BY SANDBAGS OR OTHER APPROVED ANCHORING METHOD.
7. INSTALL END SPACERS A MINIMUM OF 1 FOOT BEYOND THE ENDS OF THE THROAT OPENING.
8. FORM THE HARDWARE CLOTH AND THE GEOTEXTILE TO THE CONCRETE GUTTER AND FACE OF CURB TO SPAN THE INLET OPENING. COVER THE HARDWARE CLOTH AND GEOTEXTILE WITH CLEAN ¾ TO 1½ INCH STONE OR EQUIVALENT RECYCLED CONCRETE.
9. AT NON-SUMP LOCATIONS, INSTALL A TEMPORARY SANDBAG OR ASPHALT BERM TO PREVENT INLET BYPASS.
10. STORM DRAIN INLET PROTECTION REQUIRES FREQUENT MAINTENANCE. REMOVE ACCUMULATED SEDIMENT AFTER EACH RAIN EVENT TO MAINTAIN FUNCTION AND AVOID PREMATURE CLOGGING. IF INLET PROTECTION DOES NOT COMPLETELY DRAIN WITHIN 24 HOURS AFTER A STORM EVENT, IT IS CLOGGED. WHEN THIS OCCURS, REMOVE ACCUMULATED SEDIMENT AND CLEAN, OR REPLACE GEOTEXTILE AND STONE.

MARYLAND STANDARDS AND SPECIFICATIONS FOR SOIL EROSION AND SEDIMENT CONTROL

| U.S. DEPARTMENT OF AGRICULTURE NATURAL RESOURCES CONSERVATION SERVICE | 2011 | MARYLAND DEPARTMENT OF ENVIRONMENT WATER MANAGEMENT ADMINISTRATION |
|---|---|---|

This development plan is approved for soil erosion and sediment control by the HOWARD SOIL CONSERVATION DISTRICT

Howard SCD — Date 4/30/16

APPROVED: HOWARD COUNTY DEPARTMENT OF PLANNING AND ZONING

CHIEF, DIVISION OF LAND DEVELOPMENT — DATE 5-6-16

CHIEF, DEVELOPMENT ENGINEERING DIVISION — DATE 5.4.16

DIRECTOR — DATE 5-16-16

| NO. | DATE | REVISION |
|---|---|---|

FOR RETTEW ASSOCIATES BY:

| MANAGER: DAVID D. MILLER, P.E. | XREFS: 099812001-LD-DETL, 099812001-LD-TBLK, 099812001-LD-CVNT |
|---|---|
| DESIGN BY: JAR | CHKD BY: DEW |
| SURV. CHIEF: | FIELDBOOK NO. DATA COLLECTOR |
| DRAWN BY: DCW | CHKD BY: DEW |

DRAWING REFERENCE: C:_RettewVault\WIP\099812001-Washington NAPA\Sheets\LD\099812001-10_DETL-EROS.dwg

CLIENT: GENUINE PARTS COMPANY, 2999 CIRCLE 75 PARKWAY, ATLANTA, GA 30339, PHONE: (770) 953-1700

SCALE: AS NOTED

RETTEW℠
RETTEW Associates, Inc.
3020 Columbia Ave., Lancaster, PA 17603
Phone (717) 394-3721 · Fax (717) 394-1063
Email: rettew@rettew.com
Website: www.rettew.com
Engineers · Planners · Surveyors · Landscape Architects · Environmental Consultants

DETAILS: EROSION CONTROL

SITE DEVELOPMENT PLAN FOR

# NAPA WASHINGTON

HOWARD COUNTY, MD

DATE: MARCH 2, 2016

SHEET NO. 15 OF 17

DWG. NO. 099812001

SDP-15-005, ~~SP-15-074~~

SOIL PREPARATION, TOPSOILING, AND SOIL AMENDMENTS

A. SOIL PREPARATION

1. TEMPORARY STABILIZATION

a. SEEDBED PREPARATION CONSISTS OF LOOSENING SOIL TO A DEPTH OF 3 TO 5 INCHES BY MEANS OF SUITABLE AGRICULTURAL OR CONSTRUCTION EQUIPMENT, SUCH AS DISC HARROWS OR CHISEL PLOWS OR RIPPERS MOUNTED ON CONSTRUCTION EQUIPMENT. AFTER THE SOIL IS LOOSENED, IT MUST NOT BE ROLLED OR DRAGGED SMOOTH BUT LEFT IN THE ROUGHENED CONDITION. SLOPES 3:1 OR FLATTER ARE TO BE TRACKED WITH RIDGES RUNNING PARALLEL TO THE CONTOUR OF THE SLOPE.

b. APPLY FERTILIZER AND LIME AS PRESCRIBED ON THE PLANS.

c. INCORPORATE LIME AND FERTILIZER INTO THE TOP 3 TO 5 INCHES OF SOIL BY DISKING OR OTHER SUITABLE MEANS.

2. PERMANENT STABILIZATION

a. A SOIL TEST IS REQUIRED FOR ANY EARTH DISTURBANCE OF 5 ACRES OR MORE. THE MINIMUM SOIL CONDITIONS REQUIRED FOR PERMANENT VEGETATIVE ESTABLISHMENT ARE:

i. SOIL PH BETWEEN 6.0 AND 7.0.

ii. SOLUBLE SALTS LESS THAN 500 PARTS PER MILLION (PPM).

iii. SOIL CONTAINS LESS THAN 40 PERCENT CLAY BUT ENOUGH FINE GRAINED MATERIAL (GREATER THAN 30 PERCENT SILT PLUS CLAY) TO PROVIDE THE CAPACITY TO HOLD A MODERATE AMOUNT OF MOISTURE. AN EXCEPTION: IF LOVEGRASS WILL BE PLANTED, THEN A SANDY SOIL (LESS THAN 30 PERCENT SILT PLUS CLAY) WOULD BE ACCEPTABLE.

iv. SOIL CONTAINS 1.5 PERCENT MINIMUM ORGANIC MATTER BY WEIGHT.

v. SOIL CONTAINS SUFFICIENT PORE SPACE TO PERMIT ADEQUATE ROOT PENETRATION.

b. APPLICATION OF AMENDMENTS OR TOPSOIL IS REQUIRED IF ON-SITE SOILS DO NOT MEET THE ABOVE CONDITIONS.

c. GRADED AREAS MUST BE MAINTAINED IN A TRUE AND EVEN GRADE AS SPECIFIED ON THE APPROVED PLAN, THEN SCARIFIED OR OTHERWISE LOOSENED TO A DEPTH OF 3 TO 5 INCHES.

d. APPLY SOIL AMENDMENTS AS SPECIFIED ON THE APPROVED PLAN OR AS INDICATED BY THE RESULTS OF A SOIL TEST.

e. MIX SOIL AMENDMENTS INTO THE TOP 3 TO 5 INCHES OF SOIL BY DISKING OR OTHER SUITABLE MEANS. RAKE LAWN AREAS TO SMOOTH THE SURFACE, REMOVE LARGE OBJECTS LIKE STONES AND BRANCHES, AND READY THE AREA FOR SEED APPLICATION. LOOSEN SURFACE SOIL BY DRAGGING WITH A HEAVY CHAIN OR OTHER EQUIPMENT TO ROUGHEN THE SURFACE WHERE SITE CONDITIONS WILL NOT PERMIT NORMAL SEEDBED PREPARATION. TRACK SLOPES 3:1 OR FLATTER WITH TRACKED EQUIPMENT LEAVING THE SOIL IN AN IRREGULAR CONDITION WITH RIDGES RUNNING PARALLEL TO THE CONTOUR OF THE SLOPE. LEAVE THE TOP 1 TO 3 INCHES OF SOIL LOOSE AND FRIABLE. SEEDBED LOOSENING MAY BE UNNECESSARY ON NEWLY DISTURBED AREAS.

B. TOPSOILING

1. TOPSOIL IS PLACED OVER PREPARED SUBSOIL PRIOR TO ESTABLISHMENT OF PERMANENT VEGETATION. THE PURPOSE IS TO PROVIDE A SUITABLE SOIL MEDIUM FOR VEGETATIVE GROWTH. SOILS OF CONCERN HAVE LOW MOISTURE CONTENT, LOW NUTRIENT LEVELS, LOW PH, MATERIALS TOXIC TO PLANTS, AND/OR UNACCEPTABLE SOIL GRADATION.

2. TOPSOIL SALVAGED FROM AN EXISTING SITE MAY BE USED PROVIDED IT MEETS THE STANDARDS AS SET FORTH IN THESE SPECIFICATIONS. TYPICALLY, THE DEPTH OF TOPSOIL TO BE SALVAGED FOR A GIVEN SOIL TYPE CAN BE FOUND IN THE REPRESENTATIVE SOIL PROFILE SECTION IN THE SOIL SURVEY PUBLISHED BY USDA-NRCS.

3. TOPSOILING IS LIMITED TO AREAS HAVING 2:1 OR FLATTER SLOPES WHERE:

a. THE TEXTURE OF THE EXPOSED SUBSOIL/PARENT MATERIAL IS NOT ADEQUATE TO PRODUCE VEGETATIVE GROWTH.

b. THE SOIL MATERIAL IS SO SHALLOW THAT THE ROOTING ZONE IS NOT DEEP ENOUGH TO SUPPORT PLANTS OR FURNISH CONTINUING SUPPLIES OF MOISTURE AND PLANT NUTRIENTS.

c. THE ORIGINAL SOIL TO BE VEGETATED CONTAINS MATERIAL TOXIC TO PLANT GROWTH.

d. THE SOIL IS SO ACIDIC THAT TREATMENT WITH LIMESTONE IS NOT FEASIBLE.

4. AREAS HAVING SLOPES STEEPER THAN 2:1 REQUIRE SPECIAL CONSIDERATION AND DESIGN.

5. TOPSOIL SPECIFICATIONS: SOIL TO BE USED AS TOPSOIL MUST MEET THE FOLLOWING CRITERIA:

a. TOPSOIL MUST BE A LOAM, SANDY LOAM, CLAY LOAM, SILT LOAM, SANDY CLAY LOAM, OR LOAMY SAND. OTHER SOILS MAY BE USED IF RECOMMENDED BY AN AGRONOMIST OR SOIL SCIENTIST AND APPROVED BY THE APPROPRIATE APPROVAL AUTHORITY. TOPSOIL MUST NOT BE A MIXTURE OF CONTRASTING TEXTURED SUBSOILS AND MUST CONTAIN LESS THAN 5 PERCENT BY VOLUME OF CINDERS, STONES, SLAG, COARSE FRAGMENTS, GRAVEL, STICKS, ROOTS, TRASH, OR OTHER MATERIALS LARGER THAN 11/2 INCHES IN DIAMETER.

b. TOPSOIL MUST BE FREE OF NOXIOUS PLANTS OR PLANT PARTS SUCH AS BERMUDA GRASS, QUACK GRASS, JOHNSON GRASS, NUT SEDGE, POISON IVY, THISTLE, OR OTHERS AS SPECIFIED.

c. TOPSOIL SUBSTITUTES OR AMENDMENTS, AS RECOMMENDED BY A QUALIFIED AGRONOMIST OR SOIL SCIENTIST AND APPROVED BY THE APPROPRIATE APPROVAL AUTHORITY, MAY BE USED IN LIEU OF NATURAL TOPSOIL.

6. TOPSOIL APPLICATION

a. EROSION AND SEDIMENT CONTROL PRACTICES MUST BE MAINTAINED WHEN APPLYING TOPSOIL.

b. UNIFORMLY DISTRIBUTE TOPSOIL IN A 5 TO 8 INCH LAYER AND LIGHTLY COMPACT TO A MINIMUM THICKNESS OF 4 INCHES. SPREADING IS TO BE PERFORMED IN SUCH A MANNER THAT SODDING OR SEEDING CAN PROCEED WITH A MINIMUM OF ADDITIONAL SOIL PREPARATION AND TILLAGE. ANY IRREGULARITIES IN THE SURFACE RESULTING FROM TOPSOILING OR OTHER OPERATIONS MUST BE CORRECTED IN ORDER TO PREVENT THE FORMATION OF DEPRESSIONS OR WATER POCKET.

c. TOPSOIL MUST NOT BE PLACED IF THE TOPSOIL OR SUBSOIL IS IN A FROZEN OR MUDDY CONDITION, WHEN THE SUBSOIL IS EXCESSIVELY WET OR IN A CONDITION THAT MAY OTHERWISE BE DETRIMENTAL TO PROPER GRADING AND SEEDBED PREPARATION.

C. SOIL AMENDMENTS (FERTILIZER AND LIME SPECIFICATIONS)

1. SOIL TESTS MUST BE PERFORMED TO DETERMINE THE EXACT RATIOS AND APPLICATION RATES FOR BOTH LIME AND FERTILIZER ON SITES HAVING DISTURBED AREAS OF 5 ACRES OR MORE. SOIL ANALYSIS MAY BE PERFORMED BY A RECOGNIZED PRIVATE OR COMMERCIAL LABORATORY. SOIL SAMPLES TAKEN FOR ENGINEERING PURPOSES MAY ALSO BE USED FOR CHEMICAL ANALYSES.

2. FERTILIZERS MUST BE UNIFORM IN COMPOSITION, FREE FLOWING AND SUITABLE FOR ACCURATE APPLICATION BY APPROPRIATE EQUIPMENT. MANURE MAY BE SUBSTITUTED FOR FERTILIZER WITH PRIOR APPROVAL FROM THE APPROPRIATE APPROVAL AUTHORITY. FERTILIZERS MUST ALL BE DELIVERED TO THE SITE FULLY LABELED ACCORDING TO THE APPLICABLE LAWS AND MUST BEAR THE NAME, TRADE NAME OR TRADEMARK AND WARRANTY OF THE PRODUCER.

3. LIME MATERIALS MUST BE GROUND LIMESTONE (HYDRATED OR BURNT LIME MAY BE SUBSTITUTED EXCEPT WHEN HYDROSEEDING) WHICH CONTAINS AT LEAST 50 PERCENT TOTAL OXIDES (CALCIUM OXIDE PLUS MAGNESIUM OXIDE). LIMESTONE MUST BE GROUND TO SUCH FINENESS THAT AT LEAST 50 PERCENT WILL PASS THROUGH A #100 MESH SIEVE AND 98 TO 100 PERCENT WILL PASS THROUGH A #20 MESH SIEVE.

4. LIME AND FERTILIZER ARE TO BE EVENLY DISTRIBUTED AND INCORPORATED INTO THE TOP 3 TO 5 INCHES OF SOIL BY DISKING OR OTHER SUITABLE MEANS.

5. WHERE THE SUBSOIL IS EITHER HIGHLY ACIDIC OR COMPOSED OF HEAVY CLAYS, SPREAD GROUND LIMESTONE AT THE RATE OF 4 TO 8 TONS/ACRE (200-400 POUNDS PER 1,000 SQUARE FEET) PRIOR TO THE PLACEMENT OF TOPSOIL.

INSTALLATION, SURETY AND CERTIFICATION INSTALLATION

SURETY FOR LANDSCAPE INSTALLATION

- BONDING OR POSTING OF OTHER SURETY FOR REQUIRED LANDSCAPING IS MANDATORY. THE BONDING FOR REQUIRED LANDSCAPING MAY BE ADDED TO THE DEVELOPER'S AGREEMENT FOR ROAD AND STORM DRAIN IMPROVEMENTS OR THE DEVELOPER'S AGREEMENT FOR THE SITE DEVELOPMENT PLAN.
- IF NO BOND OR DEVELOPER'S AGREEMENT IS REQUIRED FOR A PROJECT THAT REQUIRES A LANDSCAPE PLAN, THE GRADING PERMIT AGREEMENT AND SURETY SHALL BE MODIFIED TO INCORPORATE SURETY FOR THE LANDSCAPING REQUIREMENTS.
- RELEASE OF SURETY WILL NOT BE GRANTED UNTIL ALL LANDSCAPING SHOWN ON THE APPROVED FINAL PLAN OR SITE DEVELOPMENT PLAN HAS BEEN COMPLETED IN ACCORDANCE WITH THE APPROVED LANDSCAPE PLAN. SURETY FOR LANDSCAPING SHALL BE BASED ON THE TOTAL NUMBER OF REQUIRED NEW TREES (SHADE, ORNAMENTAL AND EVERGREEN) OR COMPARABLE ELEMENTS SHOWN ON THE LANDSCAPE PLAN. THE UNIT PRICES TO BE USED FOR ESTABLISHING SURETY REQUIREMENTS SHALL BE APPROVED BY THE COUNTY COUNCIL. IN THE INTERIM, UNTIL THE COUNCIL HAS APPROVED SUCH UNIT PRICES, THE VALUE OF EACH LANDSCAPE TREE, FOR THE PURPOSE OF THE DEVELOPER'S AGREEMENT COST ESTIMATE, SHALL BE ONE HUNDRED DOLLARS ($100,00). THE VALUE OF EACH STREET TREE FOR THE PURPOSE OF THE DEVELOPERS AGREEMENT COST ESTIMATE SHALL BE TWO HUNDRED DOLLARS ($200.00). NO SURETY IS REQUIRED FOR EXISTING LANDSCAPING THAT IS CREDITED TOWARDS LANDSCAPING REQUIREMENTS. THE COST ESTIMATE FOR FENCING PROVIDED TO MEET THE LANDSCAPING REQUIREMENTS SHALL BE TEN DOLLARS ($10.00) PER LINEAR FOOT AND THE VALUE OF WALLS SHALL BE TWENTY DOLLARS ($20.00) PER LINEAR FOOT.

CERTIFICATION

- TO OBTAIN A RELEASE OF SURETY, A PROFESSIONAL QUALIFIED TO PREPARE A LANDSCAPING PLAN MUST SUBMIT WRITTEN CERTIFICATION TO THE DEPARTMENT OF PLANNING AND ZONING THAT HEALTHY PLANT MATERIALS WERE PROPERLY INSTALLED IN ACCORDANCE WITH THE APPROVED LANDSCAPED PLAN AND THAT A 1 YEAR GUARANTEE HAS BEEN EXECUTED.
- IF THE ORIGINAL LANDSCAPE PLAN PREPARER IS NOT ABLE TO PROVIDE THE REQUIRED CERTIFICATION, ANOTHER QUALIFIED PROFESSIONAL MAY BE APPROVED BY THE DEPARTMENT OF PLANNING AND ZONING TO SUBMIT THE REQUIRED CERTIFICATION.

MAINTENANCE

- THE DEVELOPER IS RESPONSIBLE FOR MAINTENANCE OF THE LANDSCAPING DURING CONSTRUCTION AND IS RESPONSIBLE FOR OBTAINING A 1 YEAR GUARANTEE THAT ENSURES THE SURVIVAL OR REPLACEMENT OF ALL REQUIRED PLANT MATERIALS FOR 1 YEAR FROM THE DATE ON THE LANDSCAPE CERTIFICATION.
- AT THE END OF THE MAINTENANCE PERIOD, IT IS THE DEVELOPER'S RESPONSIBILITY TO TRANSFER FORMALLY THE LONG TERM RESPONSIBILITY FOR THE REQUIRED LANDSCAPING TO THE OWNER, TENANT, HOMEOWNERS ASSOCIATION, OR OTHER AGENT RESPONSIBLE FOR LONG TERM MAINTENANCE OF THE DEVELOPMENT. MAINTENANCE RESPONSIBILITIES INCLUDE, BUT NOT ARE NOT LIMITED TO, PRUNING, FERTILIZING, WATERING, MOWING, WEEDING, AND OTHER SUCH ACTIVITIES NECESSARY TO THE HEALTH AND SURVIVAL OF THE LANDSCAPING. THE REQUIRED PLANTINGS SHOULD BE MAINTAINED IN GOOD GROWING CONDITION AND, WHENEVER NECESSARY, REPLACED WITH NEW PLANT MATERIALS TO ENSURE CONTINUED COMPLIANCE WITH LANDSCAPE REGULATIONS.

A. SEEDING

1. SPECIFICATIONS

A. ALL SEED MUST MEET THE REQUIREMENTS OF THE MARYLAND STATE SEED LAW. ALL SEED MUST BE SUBJECT TO RE-TESTING BY A RECOGNIZED SEED LABORATORY. ALL SEED USED MUST HAVE BEEN TESTED WITHIN THE 6 MONTHS IMMEDIATELY PRECEDING THE DATE OF SOWING SUCH MATERIAL ON ANY PROJECT. REFER TO TABLE B.4 REGARDING THE QUALITY OF SEED. SEED TAGS MUST BE AVAILABLE UPON REQUEST TO THE INSPECTOR TO VERIFY TYPE OF SEED AND SEEDING RATE.

B. MULCH ALONE MAY BE APPLIED BETWEEN THE FALL AND SPRING SEEDING DATES ONLY IF THE GROUND IS FROZEN. THE APPROPRIATE SEEDING MIXTURE MUST BE APPLIED WHEN THE GROUND THAWS.

C. INOCULANTS: THE INOCULANT FOR TREATING LEGUME SEED IN THE SEED MIXTURES MUST BE A PURE CULTURE OF NITROGEN FIXING BACTERIA PREPARED SPECIFICALLY FOR THE SPECIES. INOCULANTS MUST NOT BE USED LATER THAN THE DATE INDICATED ON THE CONTAINER. ADD FRESH INOCULANTS AS DIRECTED ON THE PACKAGE. USE FOUR TIMES THE RECOMMENDED RATE WHEN HYDROSEEDING. NOTE: IT IS VERY IMPORTANT TO KEEP INOCULANT AS COOL AS POSSIBLE UNTIL USED. TEMPERATURES ABOVE 75 TO 80 DEGREES FAHRENHEIT CAN WEAKEN BACTERIA AND MAKE THE INOCULANT LESS EFFECTIVE.

D. SOD OR SEED MUST NOT BE PLACED ON SOIL WHICH HAS BEEN TREATED WITH SOIL STERILANTS OR CHEMICALS USED FOR WEED CONTROL UNTIL SUFFICIENT TIME HAS ELAPSED (14 DAYS MIN.) TO PERMIT DISSIPATION OF PHYTO-TOXIC MATERIALS.

2. APPLICATION

A. DRY SEEDING: THIS INCLUDES USE OF CONVENTIONAL DROP OR BROADCAST SPREADERS.

i. INCORPORATE SEED INTO THE SUBSOIL AT THE RATES PRESCRIBED ON TEMPORARY SEEDING TABLE B.1, PERMANENT SEEDING TABLE B.3, OR SITE-SPECIFIC SEEDING SUMMARIES.

ii. APPLY SEED IN TWO DIRECTIONS, PERPENDICULAR TO EACH OTHER. APPLY HALF THE SEEDING RATE IN EACH DIRECTION. ROLL THE SEEDED AREA WITH A WEIGHTED ROLLER TO PROVIDE GOOD SEED TO SOIL CONTACT.

B. DRILL OR CULTIPACKER SEEDING: MECHANIZED SEEDERS THAT APPLY AND COVER SEED WITH SOIL.

i. CULTIPACKING SEEDERS ARE REQUIRED TO BURY THE SEED IN SUCH A FASHION AS TO PROVIDE AT LEAST 1/4 INCH OF SOIL COVERING. SEEDBED MUST BE FIRM AFTER PLANTING.

ii. APPLY SEED IN TWO DIRECTIONS, PERPENDICULAR TO EACH OTHER. APPLY HALF THE SEEDING RATE IN EACH DIRECTION.

C. HYDROSEEDING: APPLY SEED UNIFORMLY WITH HYDROSEEDER (SLURRY INCLUDES SEED AND FERTILIZER).

i. IF FERTILIZER IS BEING APPLIED AT THE TIME OF SEEDING, THE APPLICATION RATES SHOULD NOT EXCEED THE FOLLOWING: NITROGEN, 100 POUNDS PER ACRE TOTAL OF SOLUBLE NITROGEN; P205 (PHOSPHOROUS), 200 POUNDS PER ACRE; K20 (POTASSIUM), 200 POUNDS PER ACRE.

ii. LIME: USE ONLY GROUND AGRICULTURAL LIMESTONE (UP TO 3 TONS PER ACRE MAY BE APPLIED BY HYDROSEEDING). NORMALLY, NOT MORE THAN 2 TONS ARE APPLIED BY HYDROSEEDING AT ANY ONE TIME. DO NOT USE BURNT OR HYDRATED LIME WHEN HYDROSEEDING.

iii. MIX SEED AND FERTILIZER ON SITE AND SEED IMMEDIATELY AND WITHOUT INTERRUPTION.

iv. WHEN HYDROSEEDING DO NOT INCORPORATE SEED INTO THE SOIL.

B. MULCHING

1. MULCH MATERIALS (IN ORDER OF PREFERENCE)

A. STRAW CONSISTING OF THOROUGHLY THRESHED WHEAT, RYE, OAT, OR BARLEY AND REASONABLY BRIGHT IN COLOR. STRAW IS TO BE FREE OF NOXIOUS WEED SEEDS AS SPECIFIED IN THE MARYLAND SEED LAW AND NOT MUSTY, MOLDY, CAKED, DECAYED, OR EXCESSIVELY DUSTY. NOTE: USE ONLY STERILE STRAW MULCH IN AREAS WHERE ONE SPECIES OF GRASS IS DESIRED.

B. WOOD CELLULOSE FIBER MULCH (WCFM) CONSISTING OF SPECIALLY PREPARED WOOD CELLULOSE PROCESSED INTO A UNIFORM FIBROUS PHYSICAL STATE.

i. WCFM IS TO BE DYED GREEN OR CONTAIN A GREEN DYE IN THE PACKAGE THAT WILL PROVIDE AN APPROPRIATE COLOR TO FACILITATE VISUAL INSPECTION OF THE UNIFORMLY SPREAD SLURRY.

ii. WCFM, INCLUDING DYE, MUST CONTAIN NO GERMINATION OR GROWTH INHIBITING FACTORS.

iii. WCFM MATERIALS ARE TO BE MANUFACTURED AND PROCESSED IN SUCH A MANNER THAT THE WOOD CELLULOSE FIBER MULCH WILL REMAIN IN UNIFORM SUSPENSION IN WATER UNDER AGITATION AND WILL BLEND WITH SEED, FERTILIZER AND OTHER ADDITIVES TO FORM A HOMOGENEOUS SLURRY. THE MULCH MATERIAL MUST FORM A BLOTTER-LIKE GROUND COVER, ON APPLICATION, HAVING MOISTURE ABSORPTION AND PERCOLATION PROPERTIES AND MUST COVER AND HOLD GRASS SEED IN CONTACT WITH THE SOIL WITHOUT INHIBITING THE GROWTH OF THE GRASS SEEDLINGS.

iv. WCFM MATERIAL MUST NOT CONTAIN ELEMENTS OR COMPOUNDS AT CONCENTRATION LEVELS THAT WILL BE PHYTO-TOXIC.

v. WCFM MUST CONFORM TO THE FOLLOWING PHYSICAL REQUIREMENTS: FIBER LENGTH OF APPROXIMATELY 10 MILLIMETERS, DIAMETER APPROXIMATELY 1 MILLIMETER, PH RANGE OF 4.0 TO 8.5, ASH CONTENT OF 1.6 PERCENT MAXIMUM AND WATER HOLDING CAPACITY OF 90 PERCENT MINIMUM.

2. APPLICATION

A. APPLY MULCH TO ALL SEEDED AREAS IMMEDIATELY AFTER SEEDING.

B. WHEN STRAW MULCH IS USED, SPREAD IT OVER ALL SEEDED AREAS AT THE RATE OF 2 TONS PER ACRE TO A UNIFORM LOOSE DEPTH OF 1 TO 2 INCHES. APPLY MULCH TO ACHIEVE A UNIFORM DISTRIBUTION AND DEPTH SO THAT THE SOIL SURFACE IS NOT EXPOSED. WHEN USING A MULCH ANCHORING TOOL, INCREASE THE APPLICATION RATE TO 2.5 TONS PER ACRE.

C. WOOD CELLULOSE FIBER USED AS MULCH MUST BE APPLIED AT A NET DRY WEIGHT OF 1500 POUNDS PER ACRE. MIX THE WOOD CELLULOSE FIBER WITH WATER TO ATTAIN A MIXTURE WITH A MAXIMUM OF 50 POUNDS OF WOOD CELLULOSE FIBER PER 100 GALLONS OF WATER.

3. ANCHORING

A. PERFORM MULCH ANCHORING IMMEDIATELY FOLLOWING APPLICATION OF MULCH TO MINIMIZE LOSS BY WIND OR WATER. THIS MAY BE DONE BY ONE OF THE FOLLOWING METHODS (LISTED BY PREFERENCE), DEPENDING UPON THE SIZE OF THE AREA AND EROSION HAZARD:

i. A MULCH ANCHORING TOOL IS A TRACTOR DRAWN IMPLEMENT DESIGNED TO PUNCH AND ANCHOR MULCH INTO THE SOIL SURFACE A MINIMUM OF 2 INCHES. THIS PRACTICE IS MOST EFFECTIVE ON LARGE AREAS, BUT IS LIMITED TO FLATTER SLOPES WHERE EQUIPMENT CAN OPERATE SAFELY. IF USED ON SLOPING LAND, THIS PRACTICE SHOULD FOLLOW THE CONTOUR.

ii. WOOD CELLULOSE FIBER MAY BE USED FOR ANCHORING STRAW. APPLY THE FIBER BINDER AT A NET DRY WEIGHT OF 750 POUNDS PER ACRE. MIX THE WOOD CELLULOSE FIBER WITH WATER AT A MAXIMUM OF 50 POUNDS OF WOOD CELLULOSE FIBER PER 100 GALLONS OF WATER.

iii. SYNTHETIC BINDERS SUCH AS ACRYLIC DLR (AGRO-TACK), DCA-70, PETROSET, TERRA TAX II, TERRA TACK AR OR OTHER APPROVED EQUAL MAY BE USED. FOLLOW APPLICATION RATES AS SPECIFIED BY THE MANUFACTURER. APPLICATION OF LIQUID BINDERS NEEDS TO BE HEAVIER AT THE EDGES WHERE WIND CATCHES MULCH, SUCH AS IN VALLEYS AND ON CRESTS OF BANKS. USE OF ASPHALT BINDERS IS STRICTLY PROHIBITED.

iv. LIGHTWEIGHT PLASTIC NETTING MAY BE STAPLED OVER THE MULCH ACCORDING TO MANUFACTURER RECOMMENDATIONS. NETTING IS USUALLY AVAILABLE IN ROLLS 4 TO 15 FEET WIDE AND 300 TO 3,000 FEET LONG.

**DETAIL E-2 SILT FENCE ON PAVEMENT** — STANDARD SYMBOL: SFOP

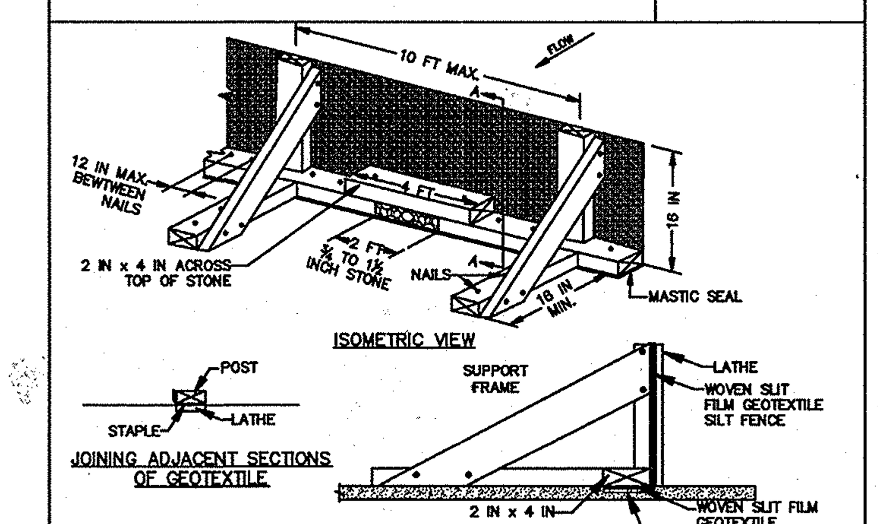


CONSTRUCTION SPECIFICATIONS

1. USE NOMINAL 2 INCH X 4 INCH LUMBER.
2. USE WOVEN SLIT FILM GEOTEXTILE, AS SPECIFIED IN SECTION H-1 MATERIALS.
3. PROVIDE MANUFACTURER CERTIFICATION TO THE AUTHORIZED REPRESENTATIVE OF THE INSPECTION/ENFORCEMENT AUTHORITY SHOWING THAT THE GEOTEXTILE USED MEETS THE REQUIREMENTS IN SECTION H-1 MATERIALS.
4. SPACE UPRIGHT SUPPORTS NO MORE THAN 10 FEET APART.
5. PROVIDE A TWO FOOT OPENING BETWEEN EVERY SET OF SUPPORTS AND PLACE STONE IN THE OPENING OVER GEOTEXTILE.
6. KEEP SILT FENCE TAUT AND SECURELY STAPLE TO THE UPSLOPE SIDE OF UPRIGHT SUPPORTS. EXTEND GEOTEXTILE UNDER 2x4.
7. WHERE TWO SECTIONS OF GEOTEXTILE ADJOIN: OVERLAP, FOLD, AND STAPLE TO POST IN ACCORDANCE WITH THIS DETAIL. ATTACH LATHE.
8. PROVIDE A MASTIC SEAL BETWEEN PAVEMENT, GEOTEXTILE, AND 2x4 TO PREVENT SEDIMENT-LADEN WATER FROM ESCAPING BENEATH SILT FENCE INSTALLATION.
9. SECURE BOARDS TO PAVEMENT WITH 40D 5 INCH MINIMUM LENGTH NAILS.
10. REMOVE ACCUMULATED SEDIMENT AND DEBRIS WHEN BULGES DEVELOP IN SILT FENCE OR WHEN SEDIMENT REACHES 25% OF FENCE HEIGHT. REPLACE GEOTEXTILE IF TORN. MAINTAIN WATER TIGHT SEAL ALONG BOTTOM. REPLACE STONE IF DISPLACED.

MARYLAND STANDARDS AND SPECIFICATIONS FOR SOIL EROSION AND SEDIMENT CONTROL

**DETAIL E-1 SILT FENCE** — STANDARD SYMBOL: SF

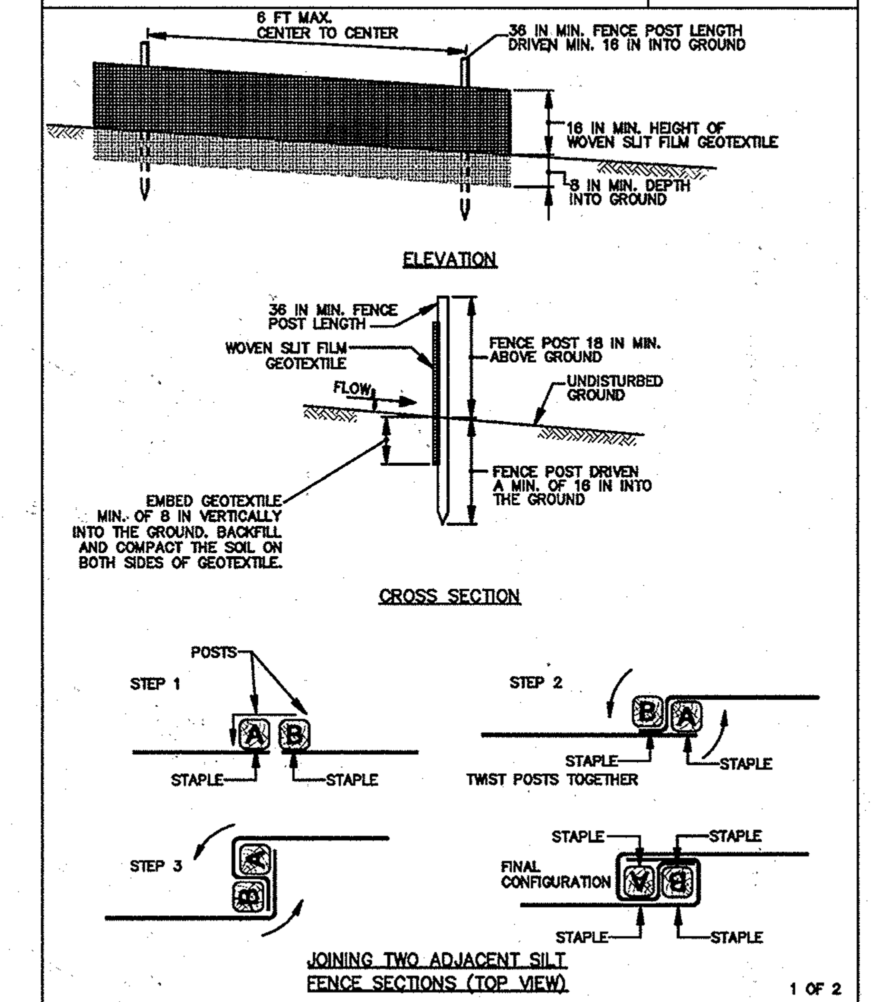


1 OF 2

MARYLAND STANDARDS AND SPECIFICATIONS FOR SOIL EROSION AND SEDIMENT CONTROL

U.S. DEPARTMENT OF AGRICULTURE NATURAL RESOURCES CONSERVATION SERVICE | 2011 | MARYLAND DEPARTMENT OF ENVIRONMENT WATER MANAGEMENT ADMINISTRATION

CONSTRUCTION SPECIFICATIONS

1. USE WOOD POSTS 1¾ X 1¾ ± 146 INCH (MINIMUM) SQUARE CUT OF SOUND QUALITY HARDWOOD. AS AN ALTERNATIVE TO WOODEN POST USE STANDARD "T" OR "U" SEC11ON STEEL POSTS WEIGHING NOT LESS 11-IAN 1 POUND PER LINEAR FOOT.
2. USE 36 INCH MINIMUM POSTS DRIVEN 16 INCH MINIMUM INTO GROUND NO MORE THAN 6 FEET APART.
3. USE WOVEN SLIT FILM GEOTEXTILE AS SPECIFIED IN SECTION H-1 MATERIALS AND FASTEN GEOTEXTILE SECURELY TO UPSLOPE SIDE OF FENCE POSTS WITH WIRE 11ES OR STAPLES AT TOP AND MID-SECTION.
4. PROVIDE MANUFACTURER CERTIFICAIION TO THE AUTHORIZED REPRESENTATIVE OF THE INSPECTION/ENFORCEMENT AUTHORITY SHOWING THAT THE GEOTEXTILE USED MEETS THE REQUIREMENTS IN SECTION H-1 MATERIALS.
5. EMBED GEOTEX11LE A MINIMUM OF 8 INCHES VERTICALLY INTO THE GROUND. BACKFILL AND COMPACT THE SOIL ON BOTH SIDES OF FABRIC.
6. WHERE TWO SECTIONS OF GEOTEXT1LE ADJOIN: OVERLAP, TWIST, AND STAPLE TO POST IN ACCORDANCE WITH THIS DETAIL
7. EXTEND BOTH ENDS OF THE SILT FENCE A MINIMUM OF FIVE HORIZONTAL FEET UPSLOPE AT 45 DEGREES TO THE MAIN FENCE ALIGNMENT TO PREVENT RUNOFF FROM GOING AROUND THE ENDS OF THE SILT FENCE.
8. REMOVE ACCUMULATED SEDIMENT AND DEBRIS WHEN BULGES DEVELOP IN SILT FENCE OR WHEN SEDIMENT REACHES 25% OF FENCE HEIGHT. REPLACE GEOTEX11LE IF TORN. IF UNDERMINING OCCURS, REINSTALL FENCE.

INCREMENTAL STABILIZATION - CUT SLOPES

1. EXCAVATE AND STABILIZE CUT SLOPES IN INCREMENTS NOT TO EXCEED 15 FEET IN HEIGHT. PREPARE SEED BED AND APPLY SEED AND MULCH ON ALL CUT SLOPES AS THE WORK PROGRESSES.
2. CONSTRUCTION SEQUENCE.
   a. CONSTRUCT AND STABILIZE ALL TEMPORARY SWALES OR DIKES THAT WILL BE USED TO CONVEY RUNOFF AROUND THE EXCAVATION.
   b. PERFORM PHASE 1 EXCAVATION (FROM TOP OF CUT TO 15' DEPTH), PREPARE SEEDBED, AND STABILIZE.
   c. PERFORM PHASE 2 EXCAVATION (FROM 15' DEPTH TO BOTTOM OF CUT), PREPARE SEEDBED, AND STABILIZE. OVERSEED PHASE 1 AREAS AS NECESSARY.
   d. PERFORM FINAL PHASE EXCAVATION, PREPARE SEEDBED, AND STABILIZE. OVERSEED PREVIOUSLY SEEDED AREAS AS NECESSARY.

NOTE: ONCE EXCAVATION HAS BEGUN THE OPERATION SHOULD BE CONTINUOUS FROM GRUBBING THROUGH THE COMPLETION OF GRADING AND PLACEMENT OF TOPSOIL (IF REQUIRED) AND PERMANENT SEED AND MULCH. ANY INTERRUPTIONS IN THE OPERATION OR COMPLETING THE OPERATION OUT OF THE SEEDING SEASON WILL NECESSITATE THE APPLICATION OF TEMPORARY STABILIZATION.

3.

**DETAIL E-3 SUPER SILT FENCE** — STANDARD SYMBOL: SSF

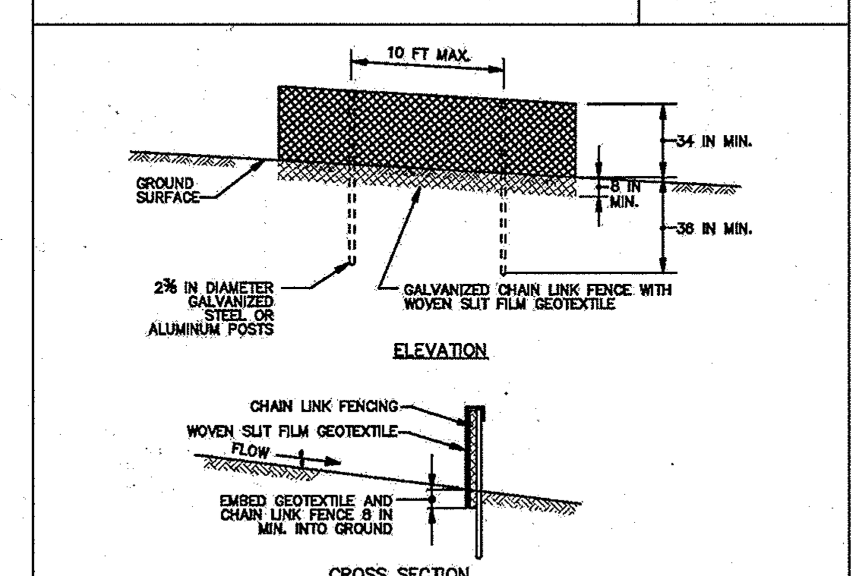


CONSTRUCTION SPECIFICATIONS

1. INSTALL 2⅜ INCH DIAMETER GALVANIZED STEEL POSTS OF 0.095 INCH WALL THICKNESS AND SIX FOOT LENGTH SPACED NO FURTHER THAN 10 FEET APART. DRIVE THE POSTS A MINIMUM OF 36 INCHES INTO THE GROUND.
2. FASTEN 9 GAUGE OR HEAVIER GALVANIZED CHAIN LINK FENCE (2⅜ INCH MAXIMUM OPENING) 42 INCHES IN HEIGHT SECURELY TO THE FENCE POSTS WITH WIRE TIES OR HUG RINGS.
3. FASTEN WOVEN SLIT FILM GEOTEXTILE AS SPECIFIED IN SECTION H-1 MATERIALS, SECURELY TO THE UPSLOPE SIDE OF CHAIN LINK FENCE WITH TIES SPACED EVERY 24 INCHES AT THE TOP AND MID SECTION. EMBED GEOTEXTILE AND CHAIN LINK FENCE A MINIMUM OF 8 INCHES INTO THE GROUND.
4. WHERE ENDS OF THE GEOTEXTILE COME TOGETHER, THE ENDS SHALL BE OVERLAPPED BY 6 INCHES, FOLDED, AND STAPLED TO PREVENT SEDIMENT BY PASS.
5. EXTEND BOTH ENDS OF THE SUPER SILT FENCE A MINIMUM OF FIVE HORIZONTAL FEET UPSLOPE AT 45 DEGREES TO THE MAIN FENCE ALIGNMENT TO PREVENT RUNOFF FROM GOING AROUND THE ENDS OF THE SUPER SILT FENCE.
6. PROVIDE MANUFACTURER CERTIFICATION TO THE INSPECTION/ENFORCEMENT AUTHORITY SHOWING THAT GEOTEXTILE USED MEETS THE REQUIREMENTS IN SECTION H-1 MATERIALS.
7. REMOVE ACCUMULATED SEDIMENT AND DEBRIS WHEN BULGES DEVELOP IN FENCE OR WHEN SEDIMENT REACHES 25% OF FENCE HEIGHT. REPLACE GEOTEXTILE IF TORN. IF UNDERMINING OCCURS, REINSTALL CHAIN LINK FENCING AND GEOTEXTILE.

MARYLAND STANDARDS AND SPECIFICATIONS FOR SOIL EROSION AND SEDIMENT CONTROL

**DETAIL E-9-1 STANDARD INLET PROTECTION** — STANDARD SYMBOL: SIP

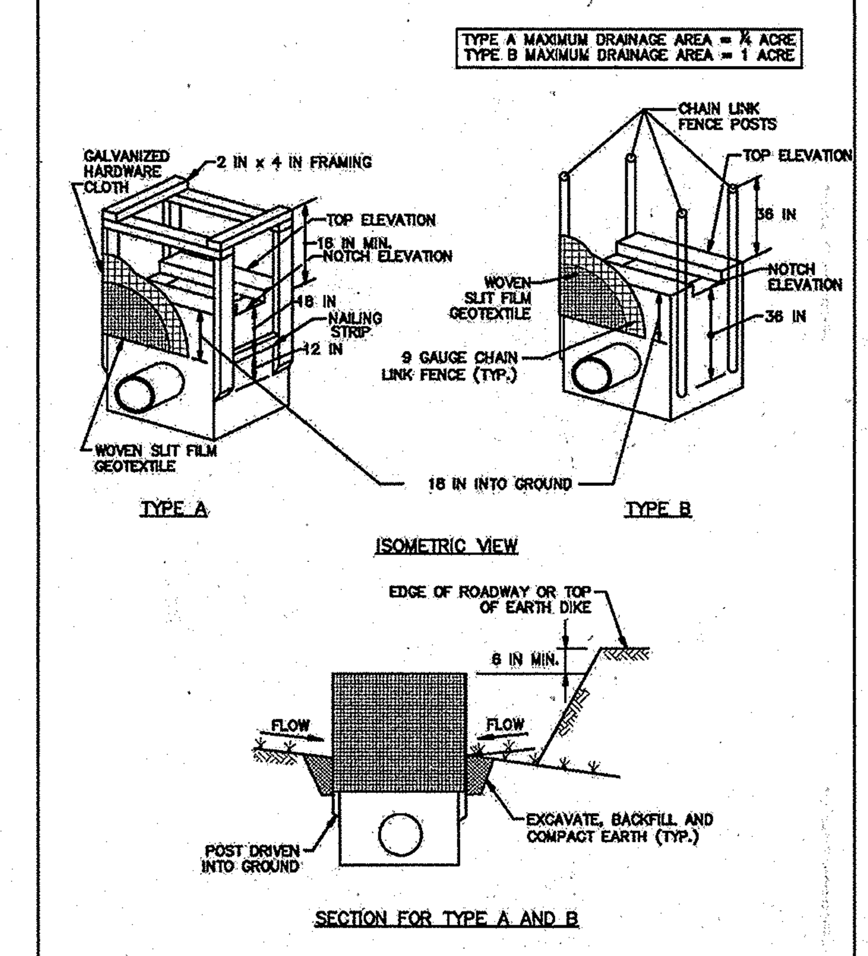


1 OF 2

MARYLAND STANDARDS AND SPECIFICATIONS FOR SOIL EROSION AND SEDIMENT CONTROL

U.S. DEPARTMENT OF AGRICULTURE NATURAL RESOURCES CONSERVATION SERVICE | 2011 | MARYLAND DEPARTMENT OF ENVIRONMENT WATER MANAGEMENT ADMINISTRATION

E.24

CONSTRUCTION SPECIFICATIONS

1. USE WOVEN SLIT FILM GEOTEXTILE AS SPECIFIED IN SECTION H-1 MATERIALS.
2. EXCAVATE COMPLETELY AROUND THE INLET TO A DEPTH OF 18 INCHES BELOW THE NOTCH ELEVATION.
3. FOR TYPE A, USE NOMINAL 2 INCH X 4 INCH CONSTRUCTION GRADE LUMBER POSTS, DRIVEN 1 FOOT INTO THE GROUND AT EACH CORNER OF THE INLET. PLACE NAIL STRIPS BETWEEN THE POSTS ON THE ENDS OF THE INLET. ASSEMBLE THE TOP PORTION OF THE 2X4 FRAME AS SHOWN. STRETCH ) INCH GALVANIZED HARDWARE CLOTH TIGHTLY AROUND THE FRAME AND FASTEN SECURELY. FASTEN GEOTEXTILE SECURELY TO THE HARDWARE CLOTH WITH TIES SPACED EVERY 24 INCHES AT THE TOP AND MID SECTION. EMBED GEOTEXTILE AND HARDWARE CLOTH A MINIMUM OF 18 INCHES BELOW THE WEIR CREST. THE ENDS OF THE GEOTEXTILE MUST MEET AT A POST, BE OVERLAPPED AND FOLDED, THEN FASTENED TO THE POST.

   FOR TYPE B, USE 2⅜ INCH DIAMETER GALVANIZED STEEL POSTS OF 0.095 INCH WALL THICKNESS AND 6 FOOT LENGTH, DRIVEN A MINIMUM OF 36 INCHES BELOW THE WEIR CREST AT EACH CORNER OF THE STRUCTURE. FASTEN 9 GAUGE OR HEAVIER CHAIN LINK FENCE, 42 INCHES IN HEIGHT, SECURELY TO THE FENCE POSTS WITH WIRE TIES. FASTEN GEOTEXTILE SECURELY TO THE CHAIN LINK FENCE WITH TIES SPACED EVERY 24 INCHES AT THE TOP AND MID SECTION. EMBED GEOTEXTILE AND CHAIN LINK FENCE A MINIMUM OF 18 INCHES BELOW THE WEIR CREST.
4. BACKFILL AROUND THE INLET IN LOOSE 4 INCH LIFTS AND COMPACT UNTIL SOIL IS LEVEL WITH THE NOTCH ELEVATION ON THE ENDS AND TOP ELEVATION ON THE SIDES.
5. STORM DRAIN INLET PROTECTION REQUIRES FREQUENT MAINTENANCE. REMOVE ACCUMULATED SEDIMENT AFTER EACH RAIN EVENT TO MAINTAIN FUNCTION AND AVOID PREMATURE CLOGGING. IF INLET PROTECTION DOES NOT COMPLETELY DRAIN WITHIN 24 HOURS AFTER A STORM EVENT, IT IS CLOGGED. WHEN THIS OCCURS, REMOVE ACCUMULATED SEDIMENT AND CLEAN, OR REPLACE GEOTEXTILE AND STONE.

This development plan is approved for soil erosion and sediment control by the HOWARD SOIL CONSERVATION DISTRICT.

Howard SCD — 4/20/16 — Date

APPROVED: HOWARD COUNTY DEPARTMENT OF PLANNING AND ZONING

CHIEF, DIVISION OF LAND DEVELOPMENT — DATE 5-11-16

CHIEF, DEVELOPMENT ENGINEERING DIVISION — DATE 5.4.16

DIRECTOR — DATE 5-16-16

REVISION | DATE | NO.

FOR RETTEW ASSOCIATES BY: (seal: STATE OF MARYLAND, ERIC M. HERSHEY, PROFESSIONAL ENGINEER, No. 37116)

XREFS: 099812001-LD-DETL, 099812001-LD-TBLK, 099812001-LD-CVNT

MANAGER: DAVID D. MILLER, P.E.
DESIGN BY: JAR | CHKD BY: DEW
SURV. CHIEF: | FIELDBOOK NO. DATA COLLECTOR
DRAWN BY: DCW | CHKD BY: DEW

DRAWING REFERENCE: C:_RettewVault\WIP\099812001-Washington NAPA\Sheets\LD\099812001-10_DETL-EROS.dwg

CLIENT
GENUINE PARTS COMPANY
2999 CIRCLE 75 PARKWAY
ATLANTA, GA 30339
PHONE: (770) 953-1700

SCALE: AS NOTED


RETTEW
RETTEW Associates, Inc.
3020 Columbia Ave., Lancaster, PA 17603
Phone (717) 394-3721 · Fax (717) 394-1063
Email: rettew@rettew.com
Website: www.rettew.com
Engineers · Planners · Surveyors · Landscape Architects · Environmental Consultants


DETAILS: EROSION CONTROL

SITE DEVELOPMENT PLAN FOR

NAPA WASHINGTON

HOWARD COUNTY, MD

DATE: MARCH 2, 2016

SHEET NO. 16 OF 17

DWG. NO. 099812001

SDP-15-005, ~~GP-15-074~~

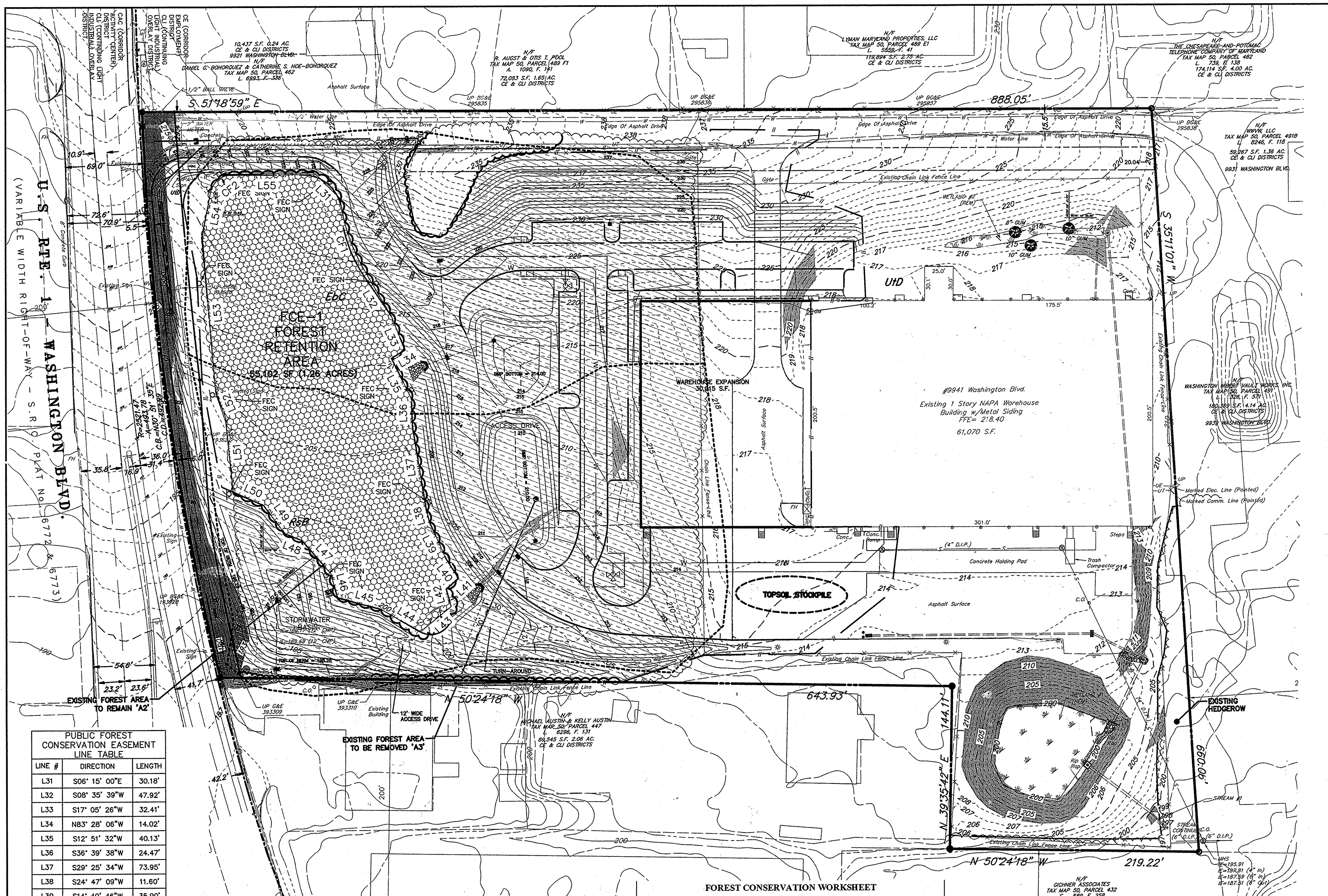


## SOILS LEGEND

| MAP SYMBOL | SOIL GROUP | SOIL TYPE |
|---|---|---|
| EbC | X | EVESBORE LOAMY SAND, 2 TO 10 PERCENT SLOPES |
| RsB | X | RUSSET FINE SANDY LOAM, 2 TO 5 PERCENT SLOPES |
| UtD | X | URBAN LAND-UDORTHENTS COMPLEX, 0 TO 15 PERCENT SLOPES |

ALL SOILS SRE NON-HYDRIC, WITHOUT HYDRIC INCLUSIONS, AND DO NOT EXHIBIT ANY SIGNIFICANT EROSION POTENTIAL.

GRID NORTH

## LEGEND

FEC SIGN — FOREST CONSERVATION EASEMENT SIGN

SLOPES GREATER THAN 25%

PROPOSED FOREST RETENTION AREA

EXISTING FOREST AREA TO BE REMOVED

LIMIT OF DISTURBANCE = 4.90 ACRES.

SOIL TYPE BOUNDARY LINE

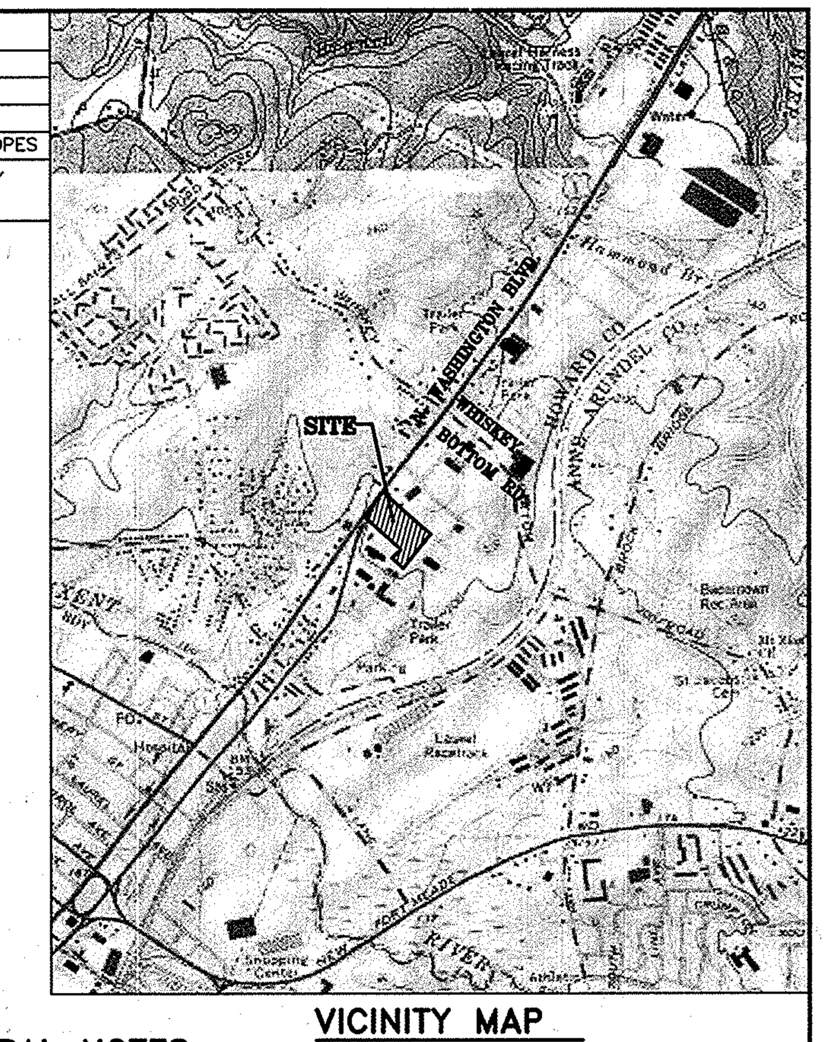


## VICINITY MAP

SCALE: 1"=2000'

## SITE ANALYSIS DATA/TABULATION

A) TOTAL (GROSS) PROJECT AREA. . . . . . . . . . 10.62 A.C.
B) AREA OF WETLANDS AND BUFFER. . . . . . . . . 0.60 A.C.
C) AREA OF 100-YR. FLOODPLAIN. . . . . . . . . . .0.00 A.C.
D) AREA OF FOREST. . . . . . . . . . . . . . . . . 4.71 A.C.
E) AREA OF STEEP SLOPES 25% OR GREATER. . . . 0.60 A.C.
F) AREA OF DEDICATION. . . . . . . . . . . . . . . 1.26 A.C.
G) HIGHLY ERODIBLE SOILS (K > 0.35). . . . . . . . ø A.C.
H) LIMIT OF DISTURBED AREA. . . . . . . . . . . . . 4.90 A.C.
I) PRESENT ZONING DESIGNATION . . . . . . . . . . CE / CLI
K) PROPOSED USE: . . . . . . . . . . . . . . . . . INDUSTRIAL
L) IMPERVIOUS COVER. . . . . . . . . . . . . . . . 4.30 A.C.

## SUPPLEMENTAL INFORMATION

| | |
|---|---|
| GROSS SITE AREA | 10.621 ACRES ± |
| ZONED | CE / CLI |
| PROPOSED USE | INDUSTRIAL |
| WATERSHED | PATUXENT RIVER |
| DNR NO. | 02-13-11-04 |

## PRE AND POST MANAGEMENT PROGRAM

PRE & POST MANAGEMENT PROGRAM
PRE-CONSTRUCTION PHASE: PRIOR TO THE START OF CONSTRUCTION, THE CONTRACTOR SHALL:

1. READ AND BECOME FAMILIAR WITH THE SITE DEVELOPMENT PLANS INCLUDING, BUT NOT LIMITED TO, THE FOREST CONSERVATION PLAN.
2. ATTEND A PRE-CONSTRUCTION MEETING TO REVIEW THE LOCATION OF THE TREES TO BE REMOVED AND THE TREES TO REMAIN.
3. CLEARLY MARK THE LIMIT OF DISTURBANCE AND THE FOREST CONSERVATION EASEMENT.
4. CLEARLY MARK THE LOCATION OF EMPLOYEE/CONTRACTOR PARKING AREAS, MATERIAL LAYDOWN AREAS AND EQUIPMENT STAGING AREAS. AREA DESIGNATED AS WITHIN THE FOREST CONSERVATION AREA SHALL NOT BE UTILIZED FOR ANY OF THE ABOVE ACTIVITIES.

DURING CONSTRUCTION PHASE:

1. AT THE EDGE OF THE FOREST CONSERVATION AREA THE CONTRACTOR SHALL TAKE STEPS TO REDUCE STRESS ON THE VEGETATION TO REMAIN.
2. NO VEHICLE SHALL ENTER THE FOREST CONSERVATION AREA INCLUDING, BUT LIMITED TO, EMPLOYEE/CONTRACTOR VEHICLES, CONSTRUCTION EQUIPMENT AND TRAILERS.
3. MATERIALS SHALL NOT BE STORED IN THE FOREST CONSERVATION AREA INCLUDING, BUT NOT LIMITED TO, BUILDING MATERIALS, FUEL, EROSION CONTROL SUPPLIES, TRASH OR SANITARY FACILITIES
4. EQUIPMENT WORKING ADJACENT TO THE FOREST CONSERVATION AREA SHALL TAKE CARE NOT TO DAMAGE OVERHANGING LIMBS. SHOULD THERE BE A NEED, A LIMB SHALL BE PRUNED TO AVOID INJURY.

POST CONSTRUCTION PHASE:

THE PROTECTION AND MANAGEMENT PRACTICES FOR THE CONSTRUCTION PERIOD MUST BE CONTINUED FOR AT LEAST 2 GROWING SEASONS FOLLOWING OFFICIAL NOTIFICATION OF COMPLETION OF THE DEVELOPMENT (OR A SPECIFIC PHASE OF THE OVERALL DEVELOPMENT IF PHASING HAS BEEN APPROVED).

IMPLEMENTATION OF THE POST-CONSTRUCTION MANAGEMENT PROGRAM MUST BE SUPERVISED BY A QUALIFIED PROFESSIONAL WHO SHOULD INSPECT THE STATUS OF ALL FOREST RETENTION AREAS AT SPECIFIED TIMES DURING THE LIFE OF THE POST CONSTRUCTION AGREEMENT AND WHO MUST CERTIFY THAT THE REQUIRED SURVIVAL RATES HAVE BEEN ACHIEVED IN ACCORDANCE WITH THE AGREEMENT PRIOR TO RELEASE OF BONDS.

1. REMOVE ANY TREE PROTECTION/LIMIT OF DISTURBANCE MATERIALS
2. INSPECT THE TREES FOR DAMAGE AND REPAIR AS NEEDED
3. INSPECT THE FOREST CONSERVATION AREA AT LEAST TWICE A YEAR.
4. MONITOR THE FOREST CONSERVATION AREA FOR UNAUTHORIZED USE.
5. REPLACE ANY DEAD OR DAMAGED TREES
6. REQUEST A FINAL INSPECTION ONCE THE MAINTENANCE PERIOD IS OVER.

## GENERAL NOTES

1. BENCHMARK: CAPPED REBAR SET; ELEVATION = 215.11 (NAVD-88 DATUM).
2. NOTHING SHALL BE PLACED, PLANTED, SET OR PUT WITHIN AN AREA OF AN EASEMENT THAT WOULD ADVERSELY AFFECT THE FUNCTION OF THE EASEMENT.
3. BOUNDARY AND TOPOGRAPHIC SURVEY BY RETTEW ASSOCIATES, INC. DATED NOVEMBER 2013.
4. THE SITE SHALL BE SERVED WITH PUBLIC WATER AND PUBLIC SANITARY SEWER FACILITIES.
5. SUBJECT PROPERTY ZONED CE/CLI PER THE 10-6-13 COMPREHENSIVE ZONING PLAN.
6. THIS PROJECT IS SUBJECT TO THE AMENDED FIFTH EDITION OF THE SUBDIVISION AND LAND DEVELOPMENT REGULATIONS AND THE ZONING REGULATIONS EFFECTIVE APRIL 13, 2004.
7. THE COORDINATES SHOWN HEREON ARE BASED UPON THE HOWARD COUNTY GEODETIC CONTROL WHICH IS BASED UPON THE MARYLAND STATE PLAN COORDINATE SYSTEM. GPS RECEIVERS WERE USED TO ESTABLISH THE CONTROL FOR THIS PROJECT.
8. NO GRADING, REMOVAL OF VEGETATIVE COVER OR TREES, PAVING AND NEW STRUCTURES SHALL BE PERMITTED WITHIN THE LIMITS OF WETLANDS, STREAM, OR THEIR REQUIRED BUFFERS UNLESS DEEMED NECESSARY BY THE DEPARTMENT OF PLANNING AND ZONING.
9. A FOREST STAND DELINEATION WAS PREPARED BY RETTEW ASSOCIATES, INC., DATED JANUARY, 2014. NO SPECIMEN TREES WERE OBSERVED ON THE SITE.
10. THERE IS NO NEED FOR A PRELIMINARY FLOOD STUDY FOR THIS PROJECT. THERE ARE NO FLOODPLAIN ON THIS PROPERTY.
11. TO THE BEST OF OUR KNOWLEDGE THERE ARE NO CEMETERIES OR HISTORIC STRUCTURES LOCATED ON THIS SITE.
12. A NOISE STUDY IS NOT REQUIRED FOR THIS PLAN. AS THIS PROJECT IS NOT A RESIDENTIAL PLAN.
13. THE WETLAND LINES SHOWN ON THIS PLAN ARE BASED UPON THE FINDING WITHIN "WETLAND DELINEATION REPORT FOR WASHINGTON NAPA FACILITY EXPANSION, CITY OF LAUREL, HOWARD COUNTY, MARYLAND," DATED NOVEMBER 2013, BY RETTEW ASSOCIATES, INC.
14. NO GRADING, REMOVAL OF VEGETATIVE COVER OR TREES, PAVING AND NEW STRUCTURES SHALL BE PERMITTED WITHIN THE LIMITS OF WETLANDS, STREAM(S), OR THEIR REQUIRED BUFFERS, FLOODPLAIN AND FOREST CONSERVATION EASEMENT AREAS.
15. THERE ARE NO WETLANDS ON SITE THAT WILL BE DISTURBED OR THAT WILL REQUIRE 401 AND 404 WETLAND PERMITS FROM THE STATE OF MARYLAND.
16. THE PREVIOUS DPZ FILE FOR THIS SITE IS SDP-80-05, WP-15-043, AND WP-15-084.
18. THE FOREST CONSERVATION EASEMENT HAS BEEN ESTABLISHED TO FULFILL THE REQUIREMENTS OF SECTION 16.1200 OF THE HOWARD COUNTY CODE AND FOREST CONSERVATION ACT. NO CLEARING, GRADING OR CONSTRUCTION IS PERMITTED WITHIN THE FOREST CONSERVATION EASEMENT, HOWEVER FOREST MANAGEMENT PRACTICES AS DEFINED IN THE DEED OF FOREST CONSERVATION EASEMENT ARE ALLOWED.
19. FOREST CONSERVATION OBLIGATION FOR THIS PROJECT IN THE AMOUNT OF 2.68 ACRES SHALL BE FULFILLED IN ACCORDANCE WITH SECTION 16.1200 OF THE FOREST CONSERVATION MANUAL UNDER SDP-15-005 BY PROVIDING 1.26 ACRES OF FOREST RETENTION EASEMENT AND BY PROVIDING 1.42 ACRES OF FOREST RETENTION EASEMENT FROM SDP-15-035, MILL CREEK FOREST MITIGATION BANKTHE FOREST CONSERVATION EASEMENT HAS BEEN ESTABLISHED TO FULFILL THE REQUIREMENTS OF SECTION 16.1200 OF THE HOWARD COUNTY CODE AND FOREST CONSERVATION ACT. NO CLEARING, GRADING OR CONSTRUCTION IS PERMITTED WITHIN THE FOREST CONSERVATION EASEMENT, HOWEVER FOREST MANAGEMENT PRACTICES AS DEFINED IN THE DEED OF FOREST CONSERVATION EASEMENT ARE ALLOWED.
20. TEMPORARY FENCING SHALL BE USED TO PROTECT FOREST RESOURCES DURING CONSTRUCTION. THE FENCING SHALL BE PLACED ALONG ALL FCE BOUNDARIES WHICH OCCUR WITHIN 15 FEET OF THE PROPOSED LIMITS OF DISTURBANCE.
21. PERMANENT SIGNAGE SHALL BE PLACED 50'-100' APART ALONG THE BOUNDARIES OF ALL AREAS INCLUDED IN FOREST CONSERVATION EASEMENTS.
22. ANY FOREST CONSERVATION EASEMENT (FCE) AREA SHOWN HEREON IS SUBJECT TO PROTECTIVE COVENANTS WHICH MY BE FOUND IN THE LAND RECORDS OF HOWARD COUNTY WHICH RESTRICT THE DISTURBANCE AND USE OF THESE AREAS.

## ADDRESS CHART

| LOT | STREET ADDRESS |
|---|---|
| 1 | 9941 WASHINGTON BLVD. |

## PERMIT INFORMATION CHART

| SUBDIVISION NAME: | | | SECTION/AREA: | | LOT/PARCEL # |
|---|---|---|---|---|---|
| N/A | | | N/A | | 0442 |
| PLAT No. OR L/F | GRID No. | ZONE | TAX MAP NO | ELECTION DISTRICT | CENSUS TRACT |
| 00920-00494 | 0010 | CE/CL1 | 50 | 6 | N/A |

## PUBLIC FOREST CONSERVATION EASEMENT LINE TABLE

| LINE # | DIRECTION | LENGTH |
|---|---|---|
| L31 | S06° 15' 00"E | 30.18' |
| L32 | S08° 35' 39"W | 47.92' |
| L33 | S17° 05' 26"W | 32.41' |
| L34 | N83° 28' 06"W | 14.02' |
| L35 | S12° 51' 32"W | 40.13' |
| L36 | S36° 39' 38"W | 24.47' |
| L37 | S29° 25' 34"W | 73.95' |
| L38 | S24° 47' 09"W | 11.60' |
| L39 | S14° 49' 46"W | 35.90' |
| L40 | S06° 23' 56"W | 20.56' |
| L41 | S87° 02' 47"W | 14.49' |
| L42 | S23° 33' 21"W | 16.16' |
| L43 | S89° 21' 52"W | 35.00' |
| L44 | N21° 15' 00"W | 39.80' |
| L45 | N35° 32' 26"W | 40.11' |
| L46 | N24° 11' 09"E | 21.81' |
| L47 | N02° 11' 24"W | 39.07' |
| L48 | N29° 23' 51"W | 15.71' |
| L49 | N02° 09' 53"E | 31.76' |
| L50 | N28° 08' 51"W | 28.98' |
| L51 | N32° 41' 09"E | 62.87' |
| L52 | N19° 32' 45"E | 26.53' |
| L53 | N33° 39' 12"E | 139.07' |
| L54 | N49° 53' 45"E | 41.46' |
| L55 | S51° 26' 47"E | 75.58' |

## PUBLIC FOREST CONSERVATION EASEMENT CURVE TABLE

| CURVE # | RADIUS | ARC | CHORD BEARING | CHORD |
|---|---|---|---|---|
| CF1 | 162.47' | 66.82' | S20° 26' 40"W | 66.35' |
| CF2 | 18.90' | 24.01' | N87° 58' 21"E | 22.42' |

## GRAPHIC SCALE

(IN FEET)

50 0 25 50 100 200

1 inch = 50 ft.

APPROVED: HOWARD COUNTY DEPARTMENYT OF PLANNING AND ZONING

| | |
|---|---|
| CHIEF, DEVELOPMENT ENGINEERING DIVISION | 5.4.16 DATE |
| CHIEF, DIVISION OF LAND DEVELOPMENT | 5-11-16 DATE |
| DIRECTOR | 5-16-16 DATE |

FOREST
CONSERVATION
AREA
DO NOT
DISTURB
NATURAL RESOURCES
DIVISION OF THE HOWARD
COUNTY DEPT. OF
RECREATION AND PARKS
(410) 313-6201

FCE SIGN
NO SCALE

## FOREST CONSERVATION WORKSHEET
VERSION 1.0

NET TRACT AREA:

| | | |
|---|---|---|
| A. Total tract area | = | 10.6 |
| B. Area within 100 year floodplain | = | 0.0 |
| C. Area to remain in agricultural production | = | 0.0 |
| D. Net tract area | = | 10.6 |

LAND USE CATEGORY: (from table 3.2.1, page 40, Manual)

Input the number "1" under the appropriate land use zoning, and limit to only one entry.

| ARA | MDR | IDA | HDR | MPD | CIA |
|---|---|---|---|---|---|
| 0 | 0 | 0 | 0 | 0 | 1 |

| | | |
|---|---|---|
| E. Afforestation Threshold | 15% x D = | 1.6 |
| F. Conservation Threshold | 15% x D = | 1.6 |

EXISTING FOREST COVER:

| | | |
|---|---|---|
| G. Existing forest cover (excluding floodplain) | = | 4.7 |
| H. Area of forest above afforestaion threshold | = | 3.1 |
| I. Area of forest above conservation threshold | = | 3.1 |

BREAK EVEN POINT:

| | | |
|---|---|---|
| J. Forest retention above threshold with no mitigation | = | 2.2 |
| K. Clearing permitted without mitigation | = | 2.5 |

PROPOSED FOREST CLEARING:

| | | |
|---|---|---|
| L. Total area of forest to be cleared | = | 3.5 |
| M. Total area of forest to be retained | = | 1.3 |

PLANTING REQUIREMENTS:

| | | |
|---|---|---|
| N. Reforestation for clearing above conservation threshold | = | 0.8 |
| P. Reforestation for clearing below conservation threshold | = | 0.7 |
| Q. Credit for retention above conservation threshold | = | 0.0 |
| R. Total reforestation required | = | 1.4 |
| S. Total afforestation required | = | 0.0 |
| T. Total reforestation and afforestation required | = | 1.4 |

## REASON FOR CLEARING

THIS PROJECT PROPOSES TO EXPAND AN EXISTING WAREHOUSE. AS PART OF THIS EXPANSION ADDITIONAL PARKING IS REQUIRED AND THE ORIGINAL ACCESS ROAD WILL NOT FUNCTION DUE TO GRADE FOR THE NEW FACILITY. IN ORDER TO ACCOMMODATE THE NEW IMPERVIOUS, STORMWATER MANAGEMENT PRACTICES ARE PROPOSED IN ORDER TO ACCOMMODATE THE ADDITIONAL RATE AND VOLUME. THE SIZE, LOCATION AND QUANTITY OF THESE FACILITIES IS BASED ON GRADE AND COUNTY REQUIREMENTS. THE LIMIT OF DISTURBANCE TO THE EXISTING FOREST HAS BEEN MINIMIZED TO THE FULLEST PRACTICAL MEASURES IN ORDER TO PROTECT THE EXISTING FOREST.

NOTE: THIS PLAN HAS BEEN REVIEWED AND CERTIFIED BY BOHLER ENGINEERING, VA. FOR THE PURPOSE OF FOREST CONSERVATION ONLY. THIS PLAN IS BASED ON THE BOUNDARY AND TOPOGRAPHIC SURVEY BY RETTEW ASSOCIATES, INC. DATED NOVEMBER 2013, AND AN APPROVED FSD BY RETTEW ASSOCIATES, INC.

### PROFESSIONAL CERTIFICATION

I HEREBY CERTIFY THAT THESE DOCUMENTS WERE PREPARED OR APPROVED BY ME AND THAT I AM A DULY LICENSED LANDSCAPE ARCHITECT UNDER THE LAWS OF THE STATE OF MARYLAND LICENSE

NO. 3697, EXPIRATION DATE: 9.20.2016

5.13.2016
DATE

5.13.16

| NO. | DATE | REVISION |
|---|---|---|
| | | |
| | | |

RETTEW
RETTEW Associates, Inc.
3020 Columbia Ave., Lancaster, PA 17603
Phone (717) 394-3721 · Fax (717) 394-1063
Email: rettew@rettew.com
Website: www.rettew.com
Engineers · Planners · Surveyors · Landscape Architects · Environmental Consultants

BOHLER ENGINEERING
901 DULANEY VALLEY ROAD, SUITE 801 TOWSON, MD 21204
PHONE: (410) 821-7900 FAX: (410) 821-7987

OWNER:
GENUINE PARTS COMPANY
2999 CIRCLE 75 PARKWAY
ATLANTA, GA 30339
PHONE: (770) 953-1700

PROJECT:
# NAPA WASHINGTON

LOCATION: 9941 WASHINGTON BLVD.
LAUREL, MD 20723
PHONE: 301-776-9600
HOWARD COUNTY, MARYLAND, 21043

TITLE: SITE DEVELOPMENT PLAN
FOREST CONSERVATION PLAN
AND EXISTING CONDITIONS

| | | | |
|---|---|---|---|
| DATE: MARCH 2, 2016 | | PROJECT NO. 099812001 | |
| DESIGN: | DRAFT: CAD | SCALE: 1"=50' | SHEET NO. 17 OF 17 |

NOT FOR CONSTRUCTION/NOT FOR BIDDING SDP-15-005

C:_RettewVault\WP\099812001-Washington NAPA\Sheets\LD\099812001-01_FCEP.dwg