SHEET INDEX	
SHEET NO.	DESCRIPTION
1	TITLE SHEET
2	SITE DEVELOPMENT PLAN
3	SEDIMENT AND EROSION CONTROL PLAN, LANDSCAPE AND SOILS MAP
4	SEDIMENT AND EROSION CONTROL PLAN NOTES AND DETAILS
5	SITE DETAILS
6	SWM DETAILS – MICRO BIO-RETENTION FACILITIES #1 THRU #3
7	FOREST CONSERVATION PLAN & DETAILS

SITE DEVELOPMENT PLAN

HOWARD COUNTY LIVING FARM HERITAGE MUSEUM

KNOWN AS WEST FRIENDSHIP PARK

PARKING LOT ADDITION

ZONED: RC-DEO

TAX MAP No. 15 GRID No. 9, 10, 15, AND 16 PARCEL 142

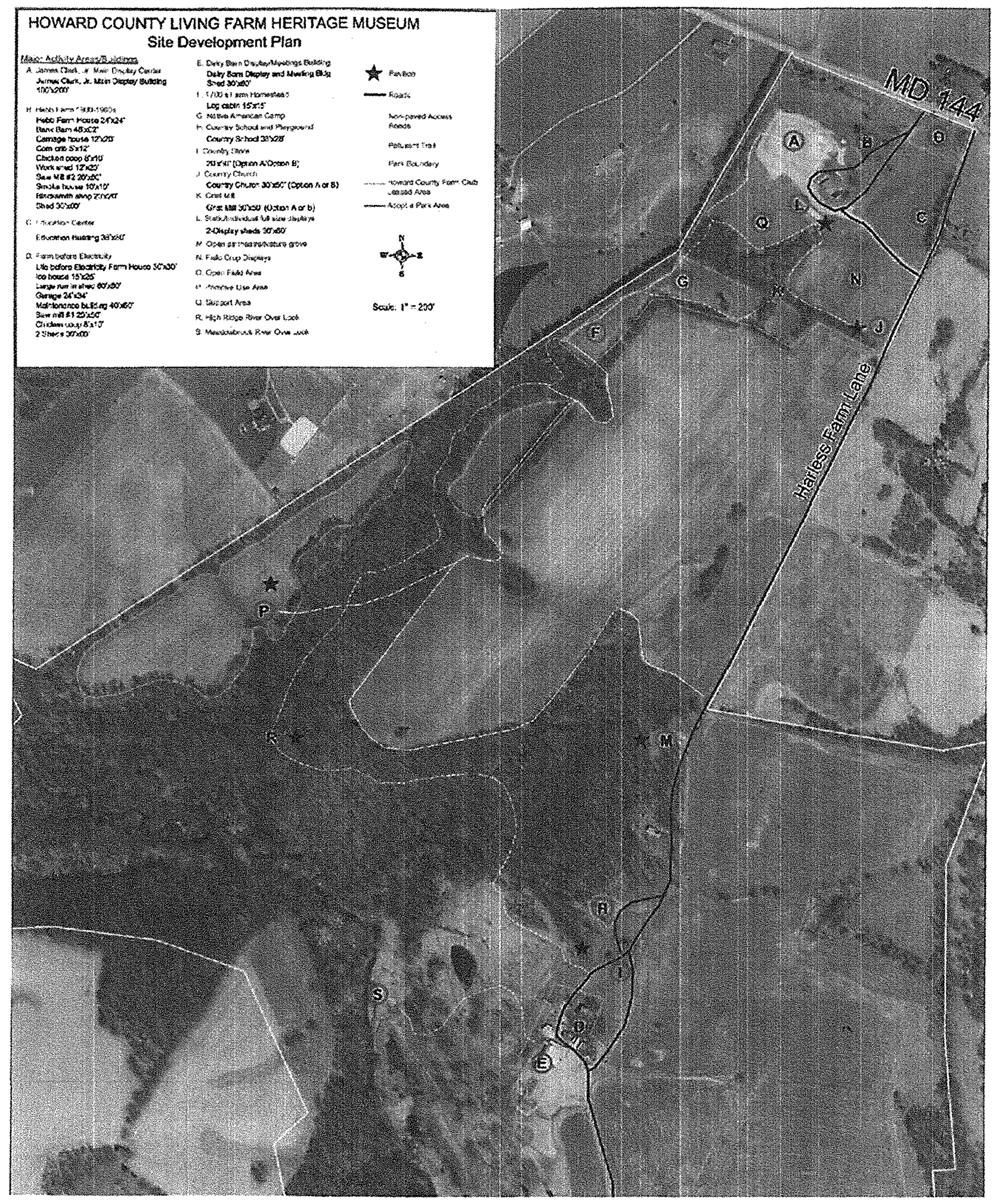

PROPERTY USE MAP

NOT TO SCALE

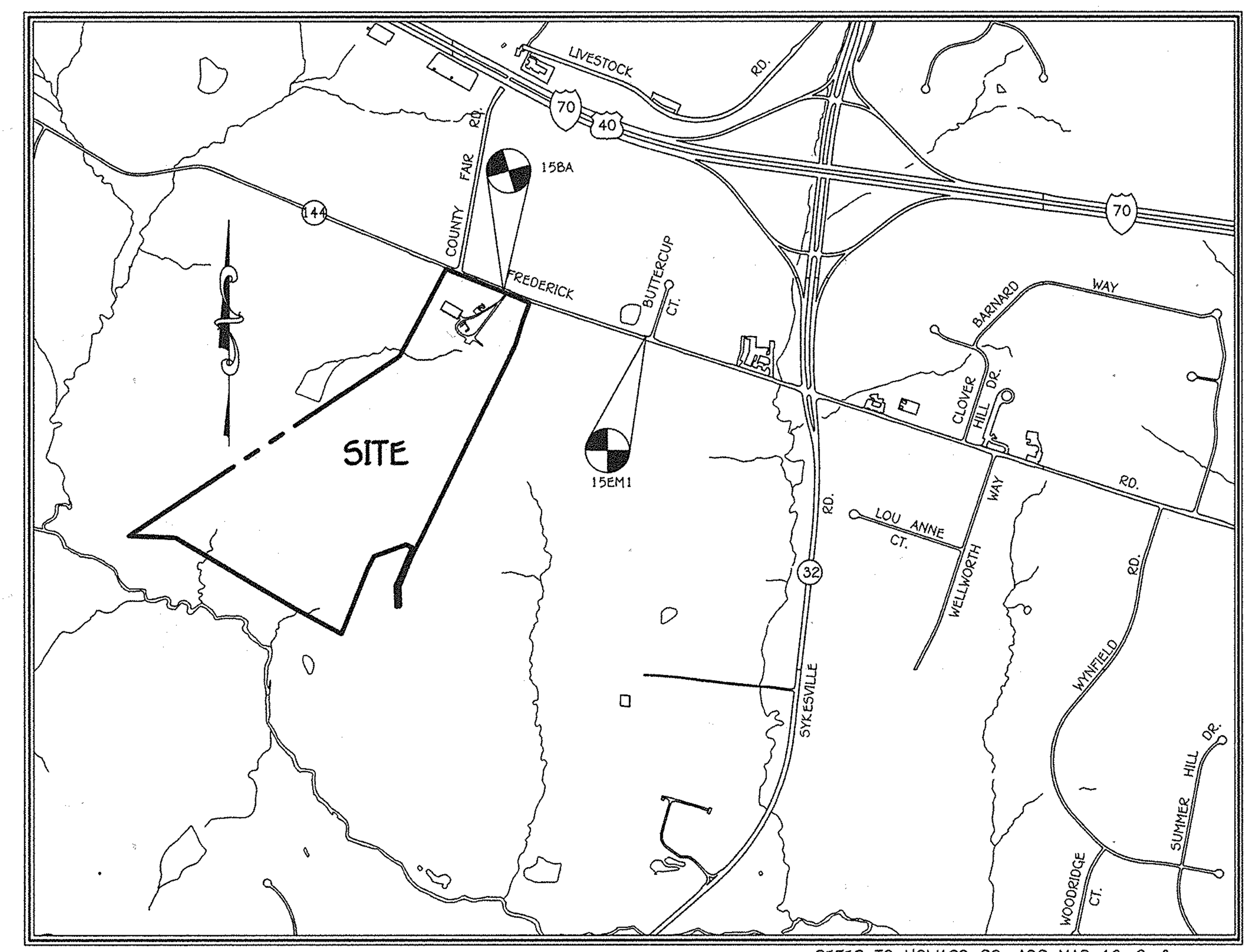

REFER TO HOWARD CO. ADC MAP 18, B-3

VICINITY MAP

SCALE: 1" = 1200'

THIRD ELECTION DISTRICT
HOWARD COUNTY, MARYLAND

GENERAL NOTES

1. ALL CONSTRUCTION SHALL BE IN ACCORDANCE WITH THE LATEST STANDARDS AND SPECIFICATIONS OF HOWARD COUNTY PLUS MSHA STANDARDS AND SPECIFICATIONS IF APPLICABLE.

2. THE CONTRACTOR SHALL NOTIFY THE DEPARTMENT OF PUBLIC WORKS / BUREAU OF ENGINEERING / CONSTRUCTION INSPECTION DIVISION AT 410-313-1880 AT LEAST (5) WORKING DAYS PRIOR TO THE START OF WORK.

3. THE CONTRACTOR SHALL NOTIFY "MISS UTILITY" AT 1-800-257-7777 AT LEAST 48 HOURS PRIOR TO ANY EXCAVATION WORK BEING DONE.

4. THIS SUBDIVISION PLAN IS SUBJECT TO THE AMENDED FIFTH EDITION OF THE SUBDIVISION AND LAND DEVELOPMENT REGULATIONS AND THE 2004 ZONING REGULATIONS PER COUNCIL BILL NO. 45-2003 AND THE ZONING REGULATIONS AS AMENDED BY COUNCIL BILL NO. 44-2013 AND THE COMPREHENSIVE ZONING REGULATION EFFECTIVE 10/6/13 ADOPTED AS CB 32-2013. DEVELOPMENT OR CONSTRUCTION ON THESE LOTS OR PARCELS MUST COMPLY WITH SETBACKS AND BUFFER REGULATIONS IN EFFECT AT THE TIME OF SUBMISSION OF A BUILDING OR GRADING PERMIT APPLICATION.

5. COORDINATES BASED ON NAD'83 MARYLAND COORDINATE SYSTEM AS PROJECTED BY HOWARD COUNTY GEODETIC CONTROL STATIONS NO 15BA AND NO. 15EM1
Station No. 15BA N 597228 E 1321719 Elev. = 590.20
Station No. 15EM1 N 596410 E 1323958 Elev. = 513.20

6. THE SUBJECT PROPERTY IS ZONED RC-DEO PER THE 10/6/13 COMPREHENSIVE ZONING PLAN.

7. BACKGROUND INFORMATION:

a. PROPERTY NAME: HOWARD COUNTY LIVING FARM HERITAGE MUSEUM
b. TAX MAP NO.: 15
c. PARCELS NOS.: 142
d. ZONING: RC-DEO
e. ELECTION DISTRICT: THIRD
f. GROSS AREA OF THIS PROPERTY = 135.4 Ac.±
g. NUMBER OF PARCELS: 1
h. NUMBER OF OPEN SPACE LOTS: n/a
i. AREA OF PARCELS: 135.4 Ac.±
j. AREA OF NON-CREDITED OPEN SPACE LOTS = n/a
k. AREA OF PUBLIC ROADWAY TO BE DEDICATED: 0.00 ACRES
l. PREVIOUS FILE NUMBERS: WP-15-125
m. AREA OF FLOODPLAIN = 0.00 Ac.±
n. AREA OF 25% OR GREATER SLOPES = 0.00 Ac.±
o. NET AREA OF SUBMISSION = 135.4 Ac.±
p. REQUIRED PARKING PER DEPARTMENT OF RECREATION AND PARKS 84.
q. PROVIDED PARKING FOR THE SITE IS: 6 STANDARD SPACES, 4 HANDICAP SPACES AND 74 GRASS PARKING SPACES = 84 TOTAL.

8. ALL FILL AREAS WITHIN ROADWAYS AND UNDER STRUCTURES SHALL BE COMPACTED TO A MINIMUM OF 95% COMPACTION OF AASHTO T-180.

9. EXISTING WATER IS PRIVATE AND THE EXISTING SEWER IS PRIVATE.

10. BOUNDARY OUTLINE BASED ON MSDAT INFORMATION DATED MAY 15, 2013.

11. TOPOGRAPHIC CONTOURS BASED ON A FIELD RUN SURVEY PERFORMED BY FISHER, COLLINS AND CARTER, INC. DATED AUGUST 16, 2012.

12. STORMWATER MANAGEMENT WILL BE PROVIDED IN ACCORDANCE WITH THE 2007 MDE, CHAPTER 5 REGULATIONS AND THE LATEST HOWARD COUNTY DESIGN MANUAL, VOL. I, CHAPTER 5 ADOPTED ON OR AROUND MAY 4, 2010. WATER QUALITY AND CHANNEL PROTECTION VOLUME WILL BE PROVIDED BY ROOFTOP DISCONNECTION AREAS AND RAINWATER HARVESTING. WE ARE PROVIDING THE REQUIRED VOLUMES BY A PLANNED CISTERN (M-1) AND A MICRO-BIO RETENTION FACILITY (M-6). THE CISTERN IS TREATING THE ROOFTOP RUNOFF AND THE MICRO BIO-RETENTION FACILITY IS TREATING THE PROPOSED TAR AND CHIP PARKING AREA. OVERBANK FLOOD PROTECTION VOLUME AND EXTREME FLOOD VOLUMES ARE NOT REQUIRED FOR THIS SITE. ALL ROOFTOP AND RAIN HARVESTING STORMWATER MANAGEMENT FACILITIES WILL BE PRIVATELY OWNED AND MAINTAINED BY THE H.O.A. OR COMMERCIAL ASSOCIATION.

13. SEVERAL SPECIMEN TREES ARE KNOWN TO BE LOCATED WITHIN THE EXISTING FOREST; HOWEVER THEY WERE NOT SURVEYED BECAUSE THERE WILL BE NO PROPOSED DISTURBANCES WITHIN THE EXISTING FOREST.

14. THERE ARE NO FLOODPLAIN AREAS LOCATED ON THIS PARCEL OF LAND.

15. THE FOREST CONSERVATION EASEMENT HAS BEEN ESTABLISHED TO FULFILL THE REQUIREMENTS OF SECTION 16.1200 OF THE HOWARD COUNTY CODE AND FOREST ACT. NO CLEARING, GRADING OR CONSTRUCTION IS PERMITTED WITHIN THE FOREST CONSERVATION EASEMENT; HOWEVER FOREST MANAGEMENT PRACTICES AS DEFINED IN THE DEED OF FOREST CONSERVATION EASEMENT ARE ALLOWED. THE FOREST CONSERVATION OBLIGATION OF 0.32 ACRES HAS BEEN FULFILLED BY THE RETENTION OF 0.64 ACRES LOCATED ON THE WEST FRIENDSHIP PARK SITE OUTSIDE OF THE PROPOSED LIMIT OF DISTURBANCE. NO SURETY IS REQUIRED FOR FOREST RETENTION.

16. THE ENVIRONMENTAL REPORT WAS PREPARED BY ECO-SCIENCE PROFESSIONALS, INC. DATED JUNE 18, 2013.

17. THIS PROPERTY IS NOT LOCATED WITHIN THE METROPOLITAN DISTRICT.

18. NO CEMETERIES EXISTS ONSITE. HOWEVER THE EXISTING HOUSE WAS BUILT IN THE 1920'S AND IS CONSIDERED AN HISTORIC STRUCTURE WITHIN THIS SUBDIVISION.

19. THIS PROJECT DOES NOT REQUIRE AN APFO REPORT OR TRAFFIC REPORT.

20. NO GRADING REMOVAL OF VEGETATIVE COVER OR TREES, PAVING AND NEW STRUCTURES SHALL BE PERMITTED WITHIN THE WETLANDS, STREAMS, THEIR BUFFERS, FOREST CONSERVATION EASEMENT OR AREAS OF 100-YEAR FLOODPLAIN.

21. LANDSCAPING HAS BEEN SHOWN IN ACCORDANCE WITH SECTION 16.124 OF THE SUBDIVISION AND LAND DEVELOPMENT REGULATIONS AND THE LANDSCAPE MANUAL. PERIMETER LANDSCAPING HAS BEEN MET BY TAKING CREDIT FOR EXISTING VEGETATION. NO SURETY IS REQUIRED.

22. [hatched symbol] THIS AREA DESIGNATES A PRIVATE SEWAGE AREA OF AT LEAST 10,000 SQUARE FEET AS REQUIRED BY THE MARYLAND STATE DEPARTMENT OF THE ENVIRONMENT FOR INDIVIDUAL SEWAGE DISPOSAL. IMPROVEMENTS OF ANY NATURE IN THIS AREA ARE RESTRICTED UNTIL PUBLIC SEWERAGE IS AVAILABLE. THESE AREAS SHALL BECOME NULL AND VOID UPON CONNECTION TO A PUBLIC SEWERAGE SYSTEM. THE COUNTY HEALTH OFFICER SHALL HAVE THE AUTHORITY TO GRANT ADJUSTMENTS TO THE PRIVATE SEWAGE AREA. RECORDATION OF A MODIFIED SEWAGE AREA SHALL NOT BE NECESSARY.

23. THIS PLAN IS SUBJECT TO WAIVER PETITION WP-15-125. THIS WAIVER APPROVED ON MAY 5, 2015, PERTAINED TO SUBSECTION 16.1201(n) OF THE HOWARD COUNTY SUBDIVISION AND LAND DEVELOPMENT REGULATIONS WHICH REQUIRES THAT FOREST CALCULATIONS BE BASED ON "NET AREA". THIS WAIVER IS TO ALLOW THE FOREST CONSERVATION CALCULATIONS TO BE BASED ON THE LIMITS OF DISTURBANCE INSTEAD OF THE NET TRACT AREA. THE WAIVER APPROVAL IS SUBJECT TO THE FOLLOWING CONDITIONS:

1. A GRANT OF EASEMENT TO ESTABLISH A 0.64 ACRE FOREST RETENTION EASEMENT AREA ON THE WEST FRIENDSHIP PARK SITE MUST BE PROCESSED THROUGH THE DEPARTMENT OF PUBLIC WORKS, REAL ESTATE SERVICES DIVISION PRIOR TO SUBMITTING THE ORIGINAL SDP MYLAR FOR FINAL SIGNATURE.
2. COMPLIANCE WITH THE COMMENTS GENERATED WITH THE REVIEW OF SDP-14-079.

24. THE SDA MUST BE FENCED OFF TO PREVENT VEHICLE TRAFFIC FROM DAMAGING THE AREA. DAMAGE FROM ADDITIONAL VEHICLE TRAFFIC MAY RENDER THE AREA UNUSABLE THUS PREVENTING THE HEALTH DEPARTMENT FROM SIGNING OFF ON ANY FUTURE BUILDING PERMITS UNTIL A NEW SDA IS ESTABLISHED.

STATE OF MARYLAND — PROFESSIONAL ENGINEER — No. 20748 [seal and signature] 8-12-15

APPROVED: For Private Water And Private Sewerage Systems Howard County Health Department.

B Wilson for Maura Rossman 9/21/2015
Howard County Health Officer H.O. 9 Date

FISHER, COLLINS & CARTER, INC.
CIVIL ENGINEERING CONSULTANTS & LAND SURVEYORS
CENTENNIAL SQUARE OFFICE PARK – 10272 BALTIMORE NATIONAL PIKE
ELLICOTT CITY, MARYLAND 21042
(410) 461 – 2855

"Professional Certification. I hereby certify that these documents were prepared or approved by me, and that I am a duly licensed professional engineer under the laws of the State of Maryland, License No. 20748, Expiration Date: March 22, 2015."

[signature] ALDO M. VITUCCI, P.E. 8/12/15 DATE

DATE	DESCRIPTION
	REVISION BLOCK

APPROVED: DEPARTMENT OF PLANNING AND ZONING

[signature] Director – Department of Planning and Zoning	10-13-15 Date
[signature] Chief, Division of Land Development	10-13-15 Date
[signature] Chief, Development Engineering Division	10-1-15 Date

OWNER

HOWARD COUNTY RECREATION AND PARKS
C/O MR. JOHN R. BYRD, DIRECTOR
7120 OAKLAND MILLS ROAD
COLUMBIA, MARYLAND 21046-1677
PHONE: (410) 313-4640

DEVELOPER

HOWARD COUNTY LIVING FARM HERITAGE MUSEUM
C/O MR. JOHN FRANK
12985 ROUTE 144
WEST FRIENDSHIP, MARYLAND 21794
PHONE: (410) 489-2345

Address Chart

BUILDING NO.	STREET ADDRESS
	12985 FREDERICK ROAD
	WEST FRIENDSHIP, MARYLAND 21794

PROJECT	SECTION/AREA	PARCELS	LOT
HOWARD COUNTY LIVING FARM HERITAGE MUSEUM	–	142	–

DEED REF.	BLOCK NO.	ZONE	TAX MAP	ELEC. DIST.	CENSUS TR.
L.635, F.331	9,10,15,16	RC-DEO	15	THIRD	6030
-------			----		

TITLE SHEET

HOWARD COUNTY LIVING FARM HERITAGE MUSEUM
KNOWN AS WEST FRIENDSHIP PARK
PARKING LOT ADDITION
TAX MAP No. 15 GRID No. 9, 10, 15, AND 16
PARCEL 142
THIRD ELECTION DISTRICT HOWARD COUNTY, MARYLAND
SCALE: AS SHOWN DATE: MAY 13, 2015

 SDP-14-079

I:\2009\09032\dwg\09032-4001 sheet 1 site plan.dwg, sheet 1, 5/13/2015 12:01:08 PM, 1:1

LEGEND

SYMBOL	DESCRIPTION
402	EXISTING CONTOUR 2' INTERVAL
400	EXISTING CONTOUR 10' INTERVAL
402	PROPOSED CONTOUR 2' INTERVAL
400	PROPOSED CONTOUR 10' INTERVAL
+ 74.10	SPOT ELEVATION
s	EXISTING STORM DRAIN LINE
s	EXISTING SEWER MAIN
w	EXISTING WATER MAIN
	EXISTING ELECTRIC LINE
g	EXISTING GAS LINE
RCCP	REINFORCED CIRCULAR CONCRETE PIPE
LOD	DENOTES LIMITS OF DISTURBANCE
	PROPOSED STORM DRAIN PIPE
	PROPOSED CONCRETE WALK
	EXISTING TREE
P-2	P-2 PAVING
	DENOTES EXISTING WETLANDS
	DENOTES EXISTING BUILDING
	DENOTES 15% - 25% STEEP SLOPES
	DENOTES 25% AND GREATER SLOPES

SOILS LEGEND

SOIL	NAME	K-W VAL.	CLASS
GgB	Glenville Loam, 3-8% slopes	0.30	B
GnB	Glenville - Baile Loams, 3-8% slopes	0.37	C
MaC	Manor Loam, 8-15% slopes	0.24	B

NOTES:
* Hydric soils and/or contains hydric inclusions
** May contain hydric inclusions
† Generally only within 100-year floodplain areas

NOTE: FOR INVERTS OF PIPES IN FACILITIES, SEE DETAILS SHEET 6.

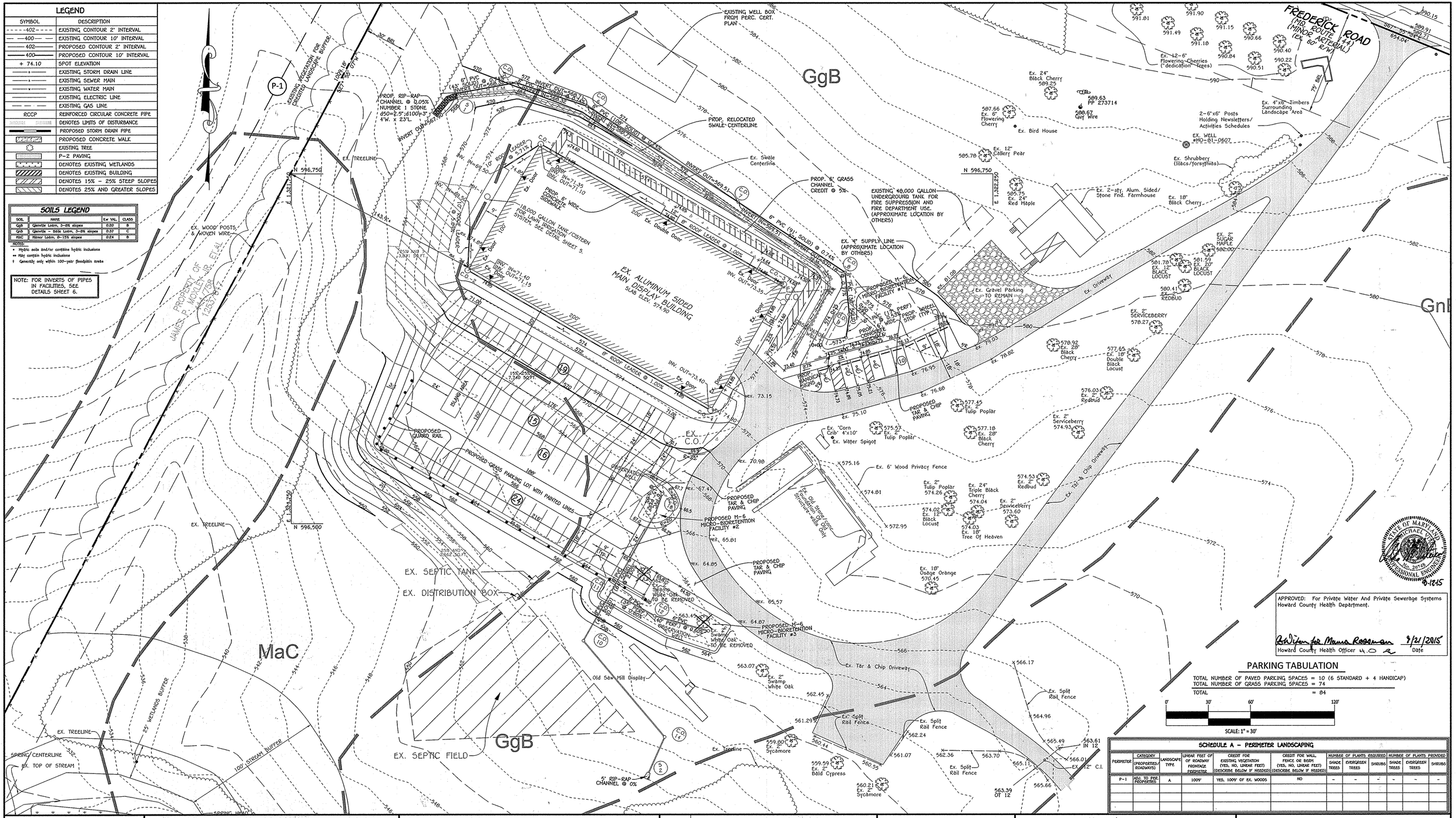

APPROVED: For Private Water And Private Sewerage Systems Howard County Health Department.

for Maura Rossman 9/21/2015
Howard County Health Officer Date

STATE OF MARYLAND MICHAEL PAUL ZOLLICKOFER No. 20748 PROFESSIONAL ENGINEER
8-12-15

PARKING TABULATION

TOTAL NUMBER OF PAVED PARKING SPACES = 10 (6 STANDARD + 4 HANDICAP)
TOTAL NUMBER OF GRASS PARKING SPACES = 74
TOTAL = 84

0' 30' 60' 120'
SCALE: 1" = 30'

SCHEDULE A - PERIMETER LANDSCAPING

PERIMETER	CATEGORY (PROPERTIES/ROADWAYS)	LANDSCAPE TYPE	LINEAR FEET OF ROADWAY FRONTAGE PERIMETER	CREDIT FOR EXISTING VEGETATION (YES, NO, LINEAR FEET) (DESCRIBE BELOW IF NEEDED)	CREDIT FOR WALL, FENCE OR BERM (YES, NO, LINEAR FEET) (DESCRIBE BELOW IF NEEDED)	NUMBER OF PLANTS REQUIRED SHADE TREES	EVERGREEN TREES	SHRUBS	NUMBER OF PLANTS PROVIDED SHADE TREES	EVERGREEN TREES	SHRUBS
P-1	ADJ. TO PER. PROPERTIES	A	1009'	YES, 1009' OF EX. WOODS	NO	-	-	-	-	-	-

FISHER, COLLINS & CARTER, INC.
CIVIL ENGINEERING CONSULTANTS & LAND SURVEYORS
CENTENNIAL SQUARE OFFICE PARK - 10272 BALTIMORE NATIONAL PIKE
ELLICOTT CITY, MARYLAND 21042
(410) 461 - 2855

ENGINEER'S CERTIFICATE

"I certify that this plan for sediment and erosion control represents a practical and workable plan, based on my personal knowledge of the site conditions and that it was prepared in accordance with the requirements of the Howard Soil Conservation District."

Signature of Engineer — Date 8-12-15

"Professional Certification. I hereby certify that these documents were prepared or approved by me, and that I am a duly licensed professional engineer under the laws of the State of Maryland, License No. 20748, Expiration Date: March 22, 2016."

ALDO M. VERCELLI, P.E. — DATE 8/12/15

DEVELOPER'S CERTIFICATE

"I/We certify that all development and construction will be done according to this plan for sediment and erosion control, and that all responsible personnel involved in the construction project will have a Certificate of Attendance at a Department of the Environment Approved Training Program for the Control of Sediment and Erosion before beginning the project. I also authorize periodic on-site inspection by the Howard Soil Conservation District."

Signature of Developer — Date 8-12-15

This development plan is approved for soil erosion and sediment control by the HOWARD SOIL CONSERVATION DISTRICT.

Howard SCD — Date 8/31/15

DATE	DESCRIPTION

REVISION BLOCK

APPROVED: DEPARTMENT OF PLANNING AND ZONING

Director - Department of Planning and Zoning — Date 10-13-15
Chief, Division of Land Development — Date 10-13-15
Chief, Development Engineering Division — Date 10-1-15

OWNER

HOWARD COUNTY RECREATION AND PARKS
C/O MR. JOHN R. BYRD, DIRECTOR
7120 OAKLAND MILLS ROAD
COLUMBIA, MARYLAND 21046-1677
PHONE: (410) 313-4640

DEVELOPER

HOWARD COUNTY LIVING FARM HERITAGE MUSEUM
C/O MR. JOHN FRANK
12985 ROUTE 144
WEST FRIENDSHIP, MARYLAND 21794
PHONE: (410) 489-2345

Address Chart

BUILDING NO.	STREET ADDRESS
	12985 FREDERICK ROAD
	WEST FRIENDSHIP, MARYLAND 21794

PROJECT	SECTION/AREA	PARCELS	LOT
HOWARD COUNTY LIVING FARM HERITAGE MUSEUM	-	142	-

DEED REF.	BLOCK NO.	ZONE	TAX MAP	ELEC. DIST.	CENSUS TR.
L.635, F.331	9,10,15,16	RC-DEO	15	THIRD	6030
-------			----		

SITE DEVELOPMENT, LANDSCAPE AND SOILS MAP

HOWARD COUNTY LIVING FARM HERITAGE MUSEUM

KNOWN AS WEST FRIENDSHIP PARK PARKING LOT ADDITION

TAX MAP No. 15 GRID No. 9, 10, 15, AND 16
PARCEL 142
THIRD ELECTION DISTRICT HOWARD COUNTY, MARYLAND

SCALE: AS SHOWN DATE: MAY 13, 2015

SHEET 2 OF 7 SDP-14-079

I:\2009\09032\dwg\09032-4001 sheet 2-3 site plan.dwg, SDP sheet 2, 5/13/2015 1:10:15 PM, 1:1

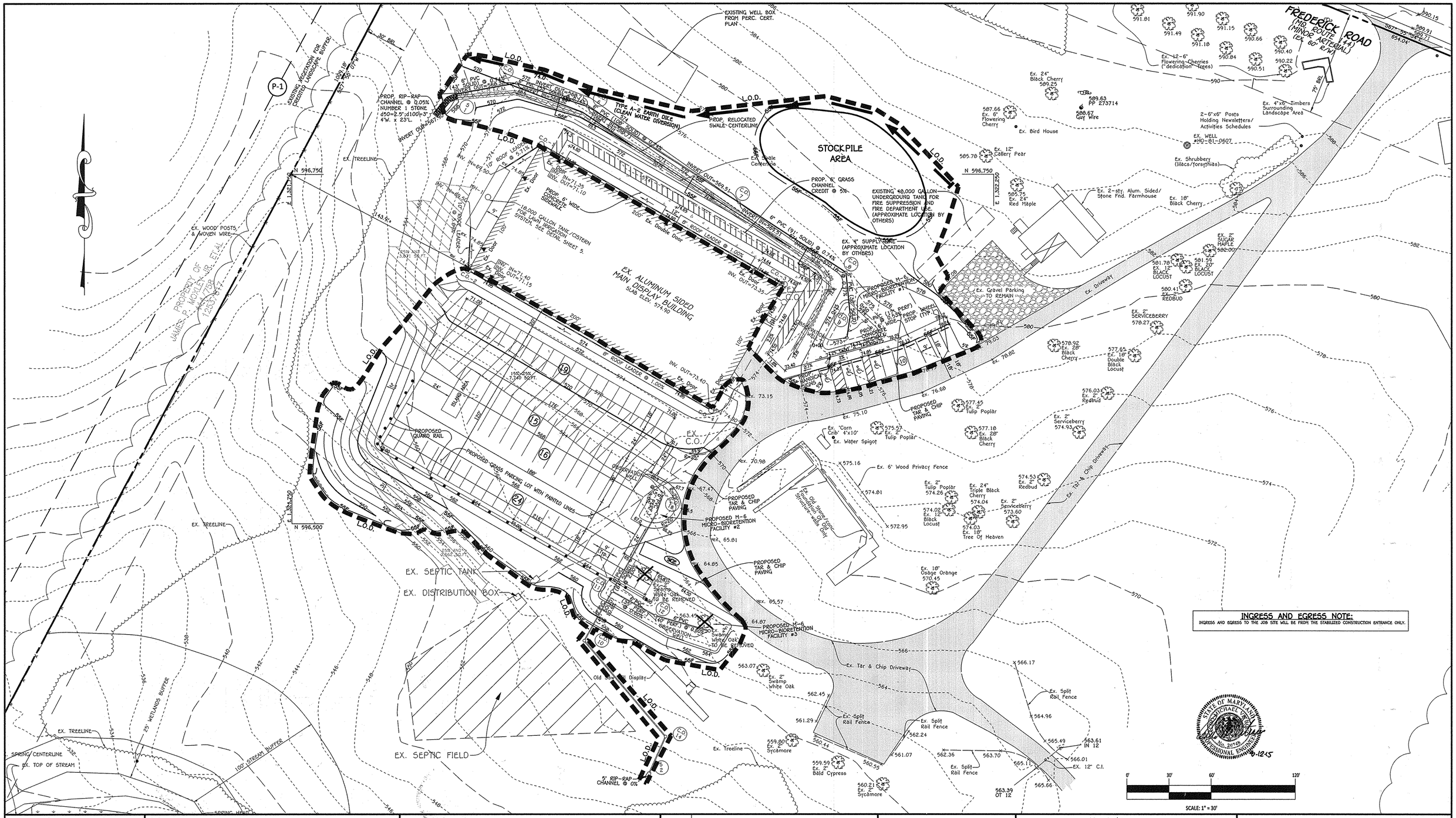

INGRESS AND EGRESS NOTE:
INGRESS AND EGRESS TO THE JOB SITE WILL BE FROM THE STABILIZED CONSTRUCTION ENTRANCE ONLY.

STATE OF MARYLAND — MICHAEL V. VOLPE — No. 20748 — PROFESSIONAL ENGINEER — 8-12-15

FISHER, COLLINS & CARTER, INC.
CIVIL ENGINEERING CONSULTANTS & LAND SURVEYORS
CENTENNIAL SQUARE OFFICE PARK – 10272 BALTIMORE NATIONAL PIKE
ELLICOTT CITY, MARYLAND 21042
(410) 461 – 2855

ENGINEER'S CERTIFICATE

"I certify that the MAJOR sediment and erosion control represents a practical and workable plan, based on my personal knowledge of the site conditions and that it was prepared in accordance with the requirements of the Howard Soil Conservation District."

Signature of Engineer — Date: 8-12-15

"Professional Certification. I hereby certify that these documents were prepared or approved by me, and that I am a duly licensed professional engineer under the laws of the State of Maryland, License No. 20748, Expiration Date: March 30, 2016."

ALDO M. VOLPOCI, P.E. — DATE: 8-12-15

DEVELOPER'S CERTIFICATE

"I/We certify that all development and construction will be done according to this plan for sediment and erosion control, and that all responsible personnel involved in the construction project will have a Certificate of Attendance at a Department of the Environment Approved Training Program for the Control of Sediment and Erosion before beginning the project. I also authorize periodic on-site inspection by the Howard Soil Conservation District."

Signature of Developer — Date: 8-12-15

This development plan is approved for soil erosion and sediment control by the HOWARD SOIL CONSERVATION DISTRICT.

Howard SCD — Date: 8/31/15

DATE	DESCRIPTION
	REVISION BLOCK

APPROVED: DEPARTMENT OF PLANNING AND ZONING

Director – Department of Planning and Zoning	Date: 10-13-15
Chief, Division of Land Development	Date: 10-13-15
Chief, Development Engineering Division	Date: 10-1-15

OWNER
HOWARD COUNTY RECREATION AND PARKS
C/O MR. JOHN R. BYRD, DIRECTOR
7120 OAKLAND MILLS ROAD
COLUMBIA, MARYLAND 21046-1677
PHONE: (410) 313-4640

DEVELOPER
HOWARD COUNTY LIVING FARM HERITAGE MUSEUM
C/O MR. JOHN FRANK
12985 ROUTE 144
WEST FRIENDSHIP, MARYLAND 21794
PHONE: (410) 489-2345

Address Chart

BUILDING NO.	STREET ADDRESS
	12985 FREDERICK ROAD
	WEST FRIENDSHIP, MARYLAND 21794

PROJECT		SECTION/AREA	PARCELS	LOT
HOWARD COUNTY LIVING FARM HERITAGE MUSEUM		–	142	–
DEED REF.	BLOCK NO. / ZONE	TAX MAP	ELEC. DIST.	CENSUS TR.
L.635, F.331	9,10,15,16 / RC-DEO	15	THIRD	6030
-------		----		

SEDIMENT CONTROL PLAN

HOWARD COUNTY LIVING FARM HERITAGE MUSEUM

KNOWN AS WEST FRIENDSHIP PARK PARKING LOT ADDITION

TAX MAP No. 15 GRID No. 9, 10, 15, AND 16
PARCEL 142
THIRD ELECTION DISTRICT HOWARD COUNTY, MARYLAND

SCALE: AS SHOWN DATE: MAY 13, 2015

SHEET 3 OF 7 SDP-14-079

I:\2009\09032\dwg\09032-4001 sheet 2-3 site plan.dwg, SDP SED CON sheet 3, 5/13/2015 12:16:04 PM, 1:1

SOIL PREPARATION, TOPSOILING AND SOIL AMENDMENTS (B-4-2)

A. Soil Preparation

1. Temporary Stabilization

a. Seedbed preparation consists of loosening soil to a depth of 3 to 5 inches by means of suitable agricultural or construction equipment, such as disc harrows or chisel plows or rippers mounted on construction equipment. After the soil is loosened, it must not be rolled or dragged smooth but left in the roughened condition. Slopes 3:1 or flatter are to be tracked with ridges running parallel to the contour of the slope.

b. Apply fertilizer and lime as prescribed on the plans.

c. Incorporate lime and fertilizer into the top 3 to 5 inches of soil by disking or other suitable means.

2. Permanent Stabilization

a. A soil test is required for any earth disturbance of 5 acres or more. The minimum soil conditions required for permanent vegetative establishment are:

i. Soil pH between 6.0 and 7.0.
ii. Soluble salts less than 500 parts per million (ppm).
iii. Soil contains less than 40 percent clay but enough fine grained material (greater than 30 percent silt plus clay) to provide the capacity to hold a moderate amount of moisture. An exception: if lovegrass will be planted, then a sandy soil (less than 30 percent silt plus clay) would be acceptable.
iv. Soil contains 1.5 percent minimum organic matter by weight.
v. Soil contains sufficient pore space to permit adequate root penetration.

b. Application of amendments or topsoil is required if on-site soils do not meet the above conditions.

c. Graded areas must be maintained in a true and even grade as specified on the approved plan, then scarified or otherwise loosened to a depth of 3 to 5 inches.

d. Apply soil amendments as specified on the approved plan or as indicated by the results of a soil test.

e. Mix soil amendments into the top 3 to 5 inches of soil by disking or other suitable means. Rake lawn areas to smooth the surface, remove large objects like stones and branches, and ready the area for seed application. Loosen surface soil by dragging with a heavy chain or other equipment to roughen the surface where site conditions will not permit normal seedbed preparation. Track slopes 3:1 or flatter with tracked equipment leaving the soil in an irregular condition with ridges running parallel to the contour of the slope. Leave the top 1 to 3 inches of soil loose and friable. Seedbed loosening may be unnecessary on newly disturbed areas.

B. Topsoiling

1. Topsoil is placed over prepared subsoil prior to establishment of permanent vegetation. The purpose is to provide a suitable soil medium for vegetative growth. Soils of concern have low moisture content, low nutrient levels, low pH, materials toxic to plants, and/or unacceptable soil gradation.

2. Topsoil salvaged from an existing site may be used provided it meets the standards as set forth in these specifications. Typically, the depth of topsoil to be salvaged for a given soil type can be found in the representative soil profile section in the Soil Survey published by USDA-NRCS.

3. Topsoiling is limited to areas having 2:1 or flatter slopes where:

a. The texture of the exposed subsoil/parent material is not adequate to produce vegetative growth.

b. The soil material is so shallow that the rooting zone is not deep enough to support plants or furnish continuing supplies of moisture and plant nutrients.

c. The original soil to be vegetated contains material toxic to plant growth.

d. The soil is so acidic that treatment with limestone is not feasible.

4. Areas having slopes steeper than 2:1 require special consideration and design.

5. Topsoil Specifications: Soil to be used as topsoil must meet the following criteria:

a. Topsoil must be a loam, sandy loam, clay loam, silt loam, sandy clay loam, or loamy sand. Other soils may be used if recommended by an agronomist or soil scientist and approved by the appropriate approval authority. Topsoil must not be a mixture of contrasting textured subsoils and must contain less than 5 percent by volume of cinders, stones, slag, coarse fragments, gravel, sticks, roots, trash, or other materials larger than 1 1/2 inches in diameter.

b. Topsoil must be free of noxious plants or plant parts such as Bermuda grass, quack grass, Johnson grass, nut sedge, poison ivy, thistle, or others as specified.

c. Topsoil substitutes or amendments, as recommended by a qualified agronomist or soil scientist and approved by the appropriate approval authority, may be used in lieu of natural topsoil.

6. Topsoil Application

a. Erosion and sediment control practices must be maintained when applying topsoil.

b. Uniformly distribute topsoil in a 5 to 8 inch layer and lightly compact to a minimum thickness of 4 inches. Spreading is to be performed in such a manner that sodding or seeding can proceed with a minimum of additional soil preparation and tillage. Any irregularities in the surface resulting from topsoiling or other operations must be corrected in order to prevent the formation of depressions or water pockets.

c. Topsoil must not be placed if the topsoil or subsoil is in a frozen or muddy condition, when the subsoil is excessively wet or in a condition that may otherwise be detrimental to proper grading and seedbed preparation.

C. Soil Amendments (Fertilizer and Lime Specifications)

1. Soil tests must be performed to determine the exact ratios and application rates for both lime and fertilizer on sites having disturbed areas of 5 acres or more. Soil analysis may be performed by a recognized private or commercial laboratory. Soil samples taken for engineering purposes may also be used for chemical analyses.

2. Fertilizers must be uniform in composition, free flowing and suitable for accurate application by appropriate equipment. Manure may be substituted for fertilizer with prior approval from the appropriate approval authority. Fertilizers must all be delivered to the site fully labeled according to the applicable laws and must bear the name, trade name or trademark and warranty of the producer.

3. Lime materials must be ground limestone (hydrated or burnt lime may be substituted except when hydroseeding) which contains at least 50 percent total oxides (calcium oxide plus magnesium oxide). Limestone must be ground to such fineness that at least 50 percent will pass through a #100 mesh sieve and 98 to 100 percent will pass through a #20 mesh sieve.

4. Lime and fertilizer are to be evenly distributed and incorporated into the top 3 to 5 inches of soil by disking or other suitable means.

5. Where the subsoil is either highly acidic or composed of heavy clays, spread ground limestone at the rate of 4 to 8 tons/acre (200-400 pounds per 1,000 square feet) prior to the placement of topsoil.

TEMPORARY SEEDING NOTES (B-4-4)

Definition

To stabilize disturbed soils with vegetation for up to 6 months.

Purpose

To use fast growing vegetation that provides cover on disturbed soils.

Conditions Where Practice Applies

Exposed soils where ground cover is needed for a period of 6 months or less. For longer duration of time, permanent stabilization practices are required.

Criteria

1. Select one or more of the species or seed mixtures listed in Table B.1 for the appropriate Plant Hardiness Zone (from Figure B.3), and enter them in the Temporary Seeding Summary below along with application rates, seeding dates and seeding depths. If this Summary is not put on the plan and completed, then Table B.1 plus fertilizer and lime rates must be put on the plan.
2. For sites having soil tests performed, use and show the recommended rates by the testing agency. Soil tests are not required for Temporary Seeding.

3. When stabilization is required outside of a seeding season, apply seed and mulch or straw mulch alone as prescribed in Section B-4-3.A.1.b and maintain until the next seeding season.

Temporary Seeding Summary

Hardiness Zone (from Figure B.3): 6b Seed Mixture (from Table B.1):				Fertilizer Rate (10-20-20)	Lime Rate
Species	Application Rate (lb/ac)	Seeding Dates	Seeding Depths		
BARLEY	96	3/1 - 5/15, 8/15 - 10/15	1"	436 lb/ac (10 lb/ 1000 sf)	2 tons/ac (90 lb/ 1000 sf)
OATS	72		1"		
RYE	112		1"		

PERMANENT SEEDING NOTES (B-4-5)

A. Seed Mixtures

1. General Use

a. Select one or more of the species or mixtures listed in Table B.3 for the appropriate Plant Hardiness Zone (from Figure B.3) and based on the site condition or purpose found on Table B.2. Enter selected mixture(s), application rates, and seeding dates in the Permanent Seeding Summary. The Summary is to be placed on the plan.

b. Additional planting specifications for exceptional sites such as shorelines, stream banks, or dunes or for special purposes such as wildlife or aesthetic treatment may be found in USDA-NRCS Technical Field Office Guide, Section 342 - Critical Area Planting.

c. For sites having disturbed area over 5 acres, use and show the rates recommended by the soil testing agency. d. For areas receiving low maintenance, apply urea form fertilizer (46-0-0) at 3 1/2 pounds per 1000 square feet (150 pounds per acre) at the time of seeding in addition to the soil amendments shown in the Permanent Seeding Summary .

2. Turfgrass Mixtures

a. Areas where turfgrass may be desired include lawns, parks, playgrounds, and commercial sites which will receive a medium to high level of maintenance.

b. Select one or more of the species or mixtures listed below based on the site conditions or purpose. Enter selected mixture(s), application rates, and seeding dates in the Permanent Seeding Summary. The summary is to be placed on the plan.

i. Kentucky Bluegrass: Full Sun Mixture: For use in areas that receive intensive management. Irrigation required in the areas of central Maryland and Eastern Shore. Recommended Certified Kentucky Bluegrass Cultivars Seeding Rate: 1.5 to 2.0 pounds per 1000 square feet. Choose a minimum of three Kentucky bluegrass cultivars with each ranging from 10 to 35 percent of the total mixture by weight.

ii. Kentucky Bluegrass/Perennial Rye: Full Sun Mixture: For use in full sun areas where rapid establishment is necessary and when turf will receive medium to intensive management. Certified Perennial Ryegrass Cultivars/Certified Kentucky Bluegrass Seeding Rate: 2 pounds mixture per 1000 square feet. Choose a minimum of three Kentucky bluegrass cultivars with each ranging from 10 to 35 percent of the total mixture by weight.

iii. Tall Fescue/Kentucky Bluegrass: Full Sun Mixture: For use in drought prone areas and/or for areas receiving low to medium management in full sun to medium shade. Recommended mixture includes; Certified Tall Fescue Cultivars 95 to 100 percent, Certified Kentucky Bluegrass Cultivars 0 to 5 percent. Seeding Rate: 5 to 8 pounds per 1000 square feet. One or more cultivars may be blended.

iv. Kentucky Bluegrass/Fine Fescue: Shade Mixture: For use in areas with shade in Bluegrass lawns. For establishment in high quality, intensively managed turf area. Mixture includes; Certified Kentucky Bluegrass Cultivars 30 to 40 percent and Certified Fine Fescue and 60 to 70 percent. Seeding Rate: 1 1/2 to 3 pounds per 1000 square feet.

Notes:
Select turfgrass varieties from those listed in the most current University of Maryland Publication, Agronomy Memo #77, "Turfgrass Cultivar Recommendations for Maryland"

Choose certified material. Certified material is the best guarantee of cultivar purity. The certification program of the Maryland Department of Agriculture, Turf and Seed Section, provides a reliable means of consumer protection and assures a pure genetic line

c. Ideal Times of Seeding for Turf Grass Mixtures Western MD: March 15 to June 1, August 1 to October 1 (Hardiness Zones: 5b, 6a) Central MD: March 1 to May 15, August 15 to October 15 (Hardiness Zone: 6b) Southern MD, Eastern Shore: March 1 to May 15, August 15 to October 15 (Hardiness Zones: 7a, 7b)

d. Till areas to receive seed by disking or other approved methods to a depth of 2 to 4 inches, level and rake the areas to prepare a proper seedbed. Remove stones and debris over 1 1/2 inches in diameter. The resulting seedbed must be in such condition that future mowing of grasses will pose no difficulty.

e. If soil moisture is deficient, supply new seedings with adequate water for plant growth (1/2 to 1 inch every 3 to 4 days depending on soil texture) until they are firmly established. This is especially true when seedings are made late in the planting season, in abnormally dry or hot seasons, or on adverse sites.

Permanent Seeding Summary

Hardiness Zone (from Figure B.3): 6b Seed Mixture (from Table B.3): 8					Fertilizer Rate (10-20-20)			Lime Rate
No.	Species	Application Rate (lb/ac)	Seeding Dates	Seeding Depths	N	P_2O_5	K_2O	
8	TALL FESCUE	100	Mar. 1-May 15 Aug. 15-Oct. 15	1/4-1/2 in.	45 lbs. per acre (1.0 lb/ 1000 sf)	90 lb/ac (2 lb/ 1000 sf)	90 lb/ac (2 lb/ 1000 sf)	2 tons/ac (90 lb/ 1000 sf)

DETAIL B-4-6-C PERMANENT SOIL STABILIZATION MATTING CHANNEL APPLICATION

STANDARD SYMBOL: PSSMC - * lb/ft² (* INCLUDE SHEAR STRESS)

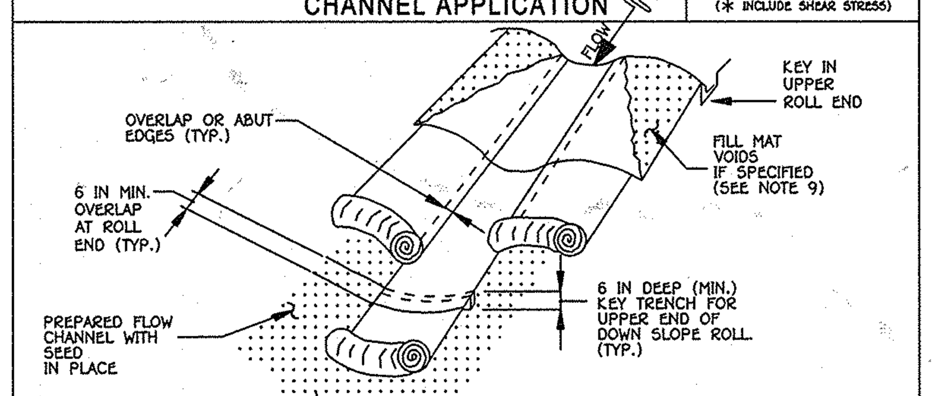

ISOMETRIC VIEW

CONSTRUCTION SPECIFICATIONS

1. USE MATTING THAT HAS A DESIGN VALUE FOR SHEAR STRESS EQUAL TO OR HIGHER THAN THE SHEAR STRESS DESIGNATED ON APPROVED PLANS.

2. USE PERMANENT SOIL STABILIZATION MATTING MADE OF OPEN WEAVE SYNTHETIC, NON-DEGRADABLE FIBERS OR ELEMENTS OF UNIFORM THICKNESS AND DISTRIBUTION THROUGHOUT. CHEMICALS USED IN THE MAT MUST BE NON-LEACHING AND NON-TOXIC TO VEGETATION AND SEED GERMINATION AND NON-INJURIOUS TO THE SKIN. IF PRESENT, NETTING MUST BE EXTRUDED PLASTIC WITH A MAXIMUM MESH OPENING OF 2x2 INCHES AND SUFFICIENTLY BONDED OR SEWN ON 2 INCH CENTERS ALONG LONGITUDINAL AXIS OF THE MATERIAL TO PREVENT SEPARATION OF THE NET FROM THE PARENT MATERIAL.

3. SECURE MATTING USING STEEL STAPLES OR WOOD STAKES. STAPLES MUST BE "U" OR "T" SHAPED STEEL WIRE HAVING A MINIMUM GAUGE OF NO. 11 AND NO. 8 RESPECTIVELY. "U" SHAPED STAPLES MUST AVERAGE 1 TO 1 ½ INCHES WIDE AND BE A MINIMUM OF 6 INCHES LONG. "T" SHAPED STAPLES MUST HAVE A MINIMUM 8 INCH MAIN LEG, A MINIMUM 1 INCH SECONDARY LEG, AND MINIMUM 4 INCH HEAD. WOOD STAKES MUST BE ROUGH-SAWN HARDWOOD, 12 TO 24 INCHES IN LENGTH, 1x3 INCH IN CROSS SECTION, AND WEDGE SHAPE AT THE BOTTOM.

4. PERFORM FINAL GRADING, TOPSOIL APPLICATION, SEEDBED PREPARATION, AND PERMANENT SEEDING IN ACCORDANCE WITH SPECIFICATIONS. PLACE MATTING WITHIN 48 HOURS OF COMPLETING SEEDING OPERATIONS, UNLESS END OF WORKDAY STABILIZATION IS SPECIFIED ON THE APPROVED EROSION AND SEDIMENT CONTROL PLAN.

5. UNROLL MATTING IN DIRECTION OF WATER FLOW, CENTERING THE FIRST ROLL ON THE CHANNEL CENTER LINE. WORK FROM CENTER OF CHANNEL OUTWARD WHEN PLACING ROLLS. LAY MATTING SMOOTHLY AND FIRMLY UPON THE SEEDED SURFACE. AVOID STRETCHING THE MATTING.

6. OVERLAP OR ABUT EDGES OF MATTING ROLLS PER MANUFACTURER RECOMMENDATIONS. OVERLAP ROLL ENDS BY 6 INCHES (MINIMUM), WITH THE UPSTREAM MAT OVERLAPPING ON TOP OF THE NEXT DOWNSTREAM MAT.

7. KEY IN THE TOP OF SLOPE END OF MAT 6 INCHES (MINIMUM) BY DIGGING A TRENCH, PLACING THE MATTING ROLL END IN THE TRENCH, STAPLING THE MAT IN PLACE, REPLACING THE EXCAVATED MATERIAL, AND TAMPING TO SECURE THE MAT END IN THE KEY.

8. STAPLE/STAKE MAT IN A STAGGERED PATTERN ON 4 FOOT (MAXIMUM) CENTERS THROUGHOUT AND 2 FOOT (MAXIMUM) CENTERS ALONG SEAMS, JOINTS, AND ROLL ENDS.

9. IF SPECIFIED BY THE DESIGNER OR MANUFACTURER AND DEPENDING ON THE TYPE OF MAT BEING INSTALLED, ONCE THE MATTING IS KEYED AND STAPLED IN PLACE, FILL THE MAT VOIDS WITH TOP SOIL OR GRANULAR MATERIAL AND LIGHTLY COMPACT OR ROLL TO MAXIMIZE SOIL/MAT CONTACT WITHOUT CRUSHING MAT.

10. ESTABLISH AND MAINTAIN VEGETATION SO THAT REQUIREMENTS FOR ADEQUATE VEGETATIVE ESTABLISHMENT ARE CONTINUOUSLY MET IN ACCORDANCE WITH SECTION B-4 VEGETATIVE STABILIZATION.

MARYLAND STANDARDS AND SPECIFICATIONS FOR SOIL EROSION AND SEDIMENT CONTROL

U.S. DEPARTMENT OF AGRICULTURE NATURAL RESOURCES CONSERVATION SERVICE | 2011 | MARYLAND DEPARTMENT OF ENVIRONMENT WATER MANAGEMENT ADMINISTRATION

DETAIL E-1 SILT FENCE

STANDARD SYMBOL: ⊢—SF—⊣

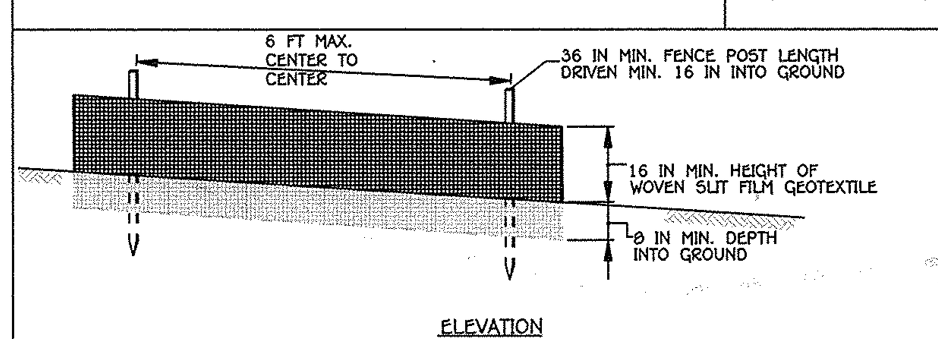

ELEVATION

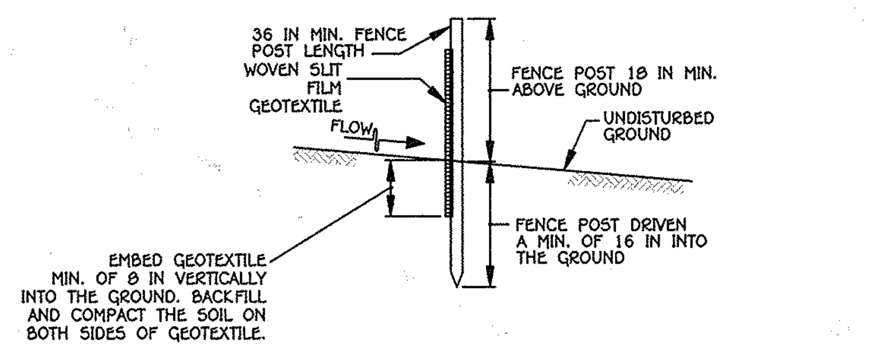

CROSS SECTION

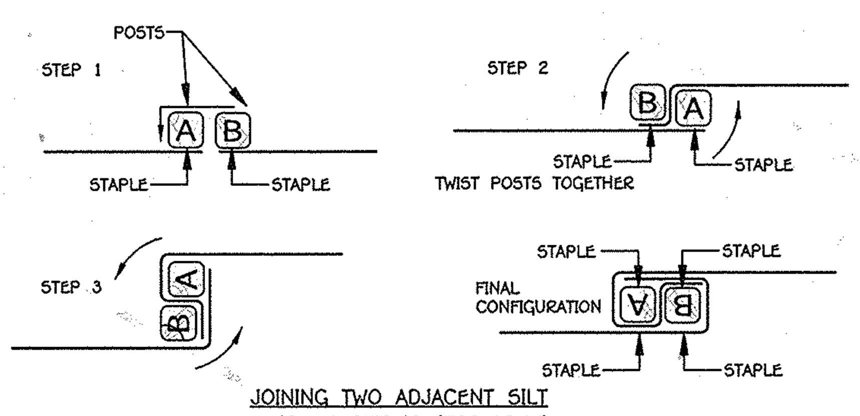

JOINING TWO ADJACENT SILT FENCE SECTIONS (TOP VIEW)

CONSTRUCTION SPECIFICATIONS

1. USE WOOD POSTS 1¾ X 1¾ ± 1/16 INCH (MINIMUM) SQUARE CUT OF SOUND QUALITY HARDWOOD. AS AN ALTERNATIVE TO WOODEN POST USE STANDARD "T" OR "U" SECTION STEEL POSTS WEIGHING NOT LESS THAN 1 POUND PER LINEAR FOOT.
2. USE 36 INCH MINIMUM POSTS DRIVEN 16 INCH MINIMUM INTO GROUND NO MORE THAN 6 FEET APART.
3. USE WOVEN SLIT FILM GEOTEXTILE AS SPECIFIED IN SECTION H-1 MATERIALS AND FASTEN GEOTEXTILE SECURELY TO UPSLOPE SIDE OF FENCE POSTS WITH WIRE TIES OR STAPLES AT TOP AND MID-SECTION.
4. PROVIDE MANUFACTURER CERTIFICATION TO THE AUTHORIZED REPRESENTATIVE OF THE INSPECTION/ENFORCEMENT AUTHORITY SHOWING THAT THE GEOTEXTILE USED MEETS THE REQUIREMENTS IN SECTION H-1 MATERIALS.
5. EMBED GEOTEXTILE A MINIMUM OF 8 INCHES VERTICALLY INTO THE GROUND. BACKFILL AND COMPACT THE SOIL ON BOTH SIDES OF FABRIC.
6. WHERE TWO SECTIONS OF GEOTEXTILE ADJOIN: OVERLAP, TWIST, AND STAPLE TO POST IN ACCORDANCE WITH THIS DETAIL.
7. EXTEND BOTH ENDS OF THE SILT FENCE A MINIMUM OF FIVE HORIZONTAL FEET UPSLOPE AT 45 DEGREES TO THE MAIN FENCE ALIGNMENT TO PREVENT RUNOFF FROM GOING AROUND THE ENDS OF THE SILT FENCE.
8. REMOVE ACCUMULATED SEDIMENT AND DEBRIS WHEN BULGES DEVELOP IN SILT FENCE OR WHEN SEDIMENT REACHES 25% OF FENCE HEIGHT. REPLACE GEOTEXTILE IF TORN. IF UNDERMINING OCCURS, REINSTALL FENCE.

MARYLAND STANDARDS AND SPECIFICATIONS FOR SOIL EROSION AND SEDIMENT CONTROL

U.S. DEPARTMENT OF AGRICULTURE NATURAL RESOURCES CONSERVATION SERVICE | 2011 | MARYLAND DEPARTMENT OF ENVIRONMENT WATER MANAGEMENT ADMINISTRATION

SEQUENCE OF CONSTRUCTION

1. OBTAIN GRADING PERMIT. (1 DAY)
2. NOTIFY MISS UTILITY (1-800-257-7777) 48 HOURS BEFORE STARTING WORK. NOTIFY THE HOWARD COUNTY CONSTRUCTION INSPECTION DIVISION (410-313-1855) 24 HOURS BEFORE STARTING WORK, AND NOTIFY THE BALTIMORE GAS ELECTRIC CO. (410-291-5739) FIVE (5) WORKING DAYS PRIOR TO STARTING WORK. (1 WEEK)
3. CLEAR AND GRUB FOR SEDIMENT CONTROL MEASURES ONLY. INSTALL STABILIZED CONSTRUCTION ENTRANCE, SUPER SILT FENCE & CLEAN WATER DIVERSION EARTH DIKE. (1 DAY)
4. BEGIN GRADING OF PARKING AREAS. (2 WEEKS)
5. INSTALL TAR & CHIP PAVING. (1 WEEK)
6. INSTALL ROOF LEADER SYSTEM AND ASSOCIATED CLEANOUTS CO-1 THRU CO-4. INSTALL UNDERGROUND CISTERN FOR RAIN WATER HARVESTING AND CONNECT THE ROOF LEADER SYSTEM TO THE CISTERN. INSTALL STORM DRAIN SYSTEM FROM BIO-RETENTION FACILITY #1 FROM THE OUTFALL AT S-1 THRU CO-8. GRADE IN THE PROPOSED SWALE & STABILIZE THE AREA WITH PERMANENT SEEDING (6 WEEKS)
7. INSTALL SIDEWALKS. (1 WEEK)
8. INSTALL MICRO BIO-RETENTION FACILITIES #1, #2 AND #3 AND ASSOCIATED UNDERDRAIN SYSTEMS INCLUDING CLEANOUTS CO-9 AND CO-10 THRU 13. IN ADDITION INSTALL THE PROPOSED OBSERVATION WELLS FOR ALL 3 BIO-RETENTION FACILITIES. (2 WEEKS)
9. STABILIZE ALL DISTURBED AREAS IN ACCORDANCE WITH THE PERMANENT SEEDING SPECIFICATIONS. (1 DAY)
10. WITH APPROVAL FROM THE SEDIMENT CONTROL INSPECTOR, REMOVE SEDIMENT CONTROLS, FINE GRADE ALL DISTURBED AREAS AND STABILIZE IN ACCORDANCE WITH THE PERMANENT SEEDING SPECIFICATIONS. (1 WEEK)

EROSION AND SEDIMENT CONTROL NOTE:
THE CONTRACTOR SHALL INSPECT AND PROVIDE THE NECESSARY MAINTENANCE ON ALL SEDIMENT CONTROL DEVICES/PRACTICES ON A DAILY BASIS, AND IMMEDIATELY AFTER EACH RAINFALL.

DETAIL E-3 SUPER SILT FENCE

STANDARD SYMBOL: ⊢—SSF—⊣

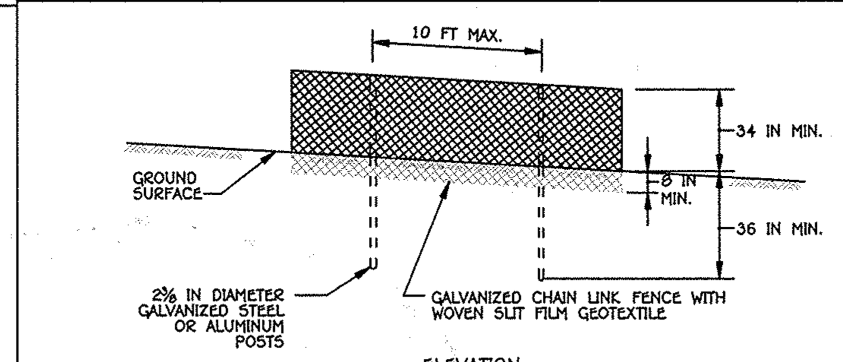

ELEVATION

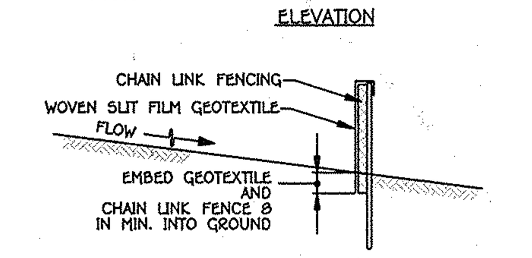

CROSS SECTION

CONSTRUCTION SPECIFICATIONS

1. INSTALL 2⅜ INCH DIAMETER GALVANIZED STEEL POSTS OF 0.095 INCH WALL THICKNESS AND SIX FOOT LENGTH SPACED NO FURTHER THAN 10 FEET APART. DRIVE THE POSTS A MINIMUM OF 36 INCHES INTO THE GROUND.
2. FASTEN 9 GAUGE OR HEAVIER GALVANIZED CHAIN LINK FENCE (2⅜ INCH MAXIMUM OPENING) 42 INCHES IN HEIGHT SECURELY TO THE FENCE POSTS WITH WIRE TIES OR HUG RINGS.
3. FASTEN WOVEN SLIT FILM GEOTEXTILE AS SPECIFIED IN SECTION H-1 MATERIALS, SECURELY TO THE UPSLOPE SIDE OF CHAIN LINK FENCE WITH TIES SPACED EVERY 24 INCHES AT THE TOP AND MID SECTION. EMBED GEOTEXTILE AND CHAIN LINK FENCE A MINIMUM OF 8 INCHES INTO THE GROUND.
4. WHERE ENDS OF THE GEOTEXTILE COME TOGETHER, THE ENDS SHALL BE OVERLAPPED BY 6 INCHES, FOLDED, AND STAPLED TO PREVENT SEDIMENT BY PASS.
5. EXTEND BOTH ENDS OF THE SUPER SILT FENCE A MINIMUM OF FIVE HORIZONTAL FEET UPSLOPE AT 45 DEGREES TO THE MAIN FENCE ALIGNMENT TO PREVENT RUNOFF FROM GOING AROUND THE ENDS OF THE SUPER SILT FENCE.
6. PROVIDE MANUFACTURER CERTIFICATION TO THE INSPECTION/ENFORCEMENT AUTHORITY SHOWING THAT GEOTEXTILE USED MEETS THE REQUIREMENTS IN SECTION H-1 MATERIALS.
7. REMOVE ACCUMULATED SEDIMENT AND DEBRIS WHEN BULGES DEVELOP IN FENCE OR WHEN SEDIMENT REACHES 25% OF FENCE HEIGHT. REPLACE GEOTEXTILE IF TORN. IF UNDERMINING OCCURS, REINSTALL CHAIN LINK FENCING AND GEOTEXTILE.

MARYLAND STANDARDS AND SPECIFICATIONS FOR SOIL EROSION AND SEDIMENT CONTROL

U.S. DEPARTMENT OF AGRICULTURE NATURAL RESOURCES CONSERVATION SERVICE | 2011 | MARYLAND DEPARTMENT OF ENVIRONMENT WATER MANAGEMENT ADMINISTRATION

DETAIL B-1 STABILIZED CONSTRUCTION ENTRANCE

STANDARD SYMBOL: SCE

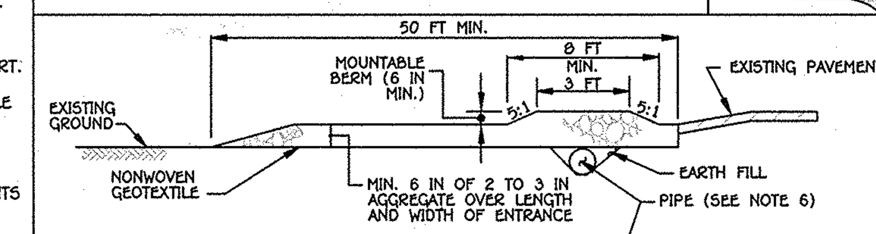

PROFILE

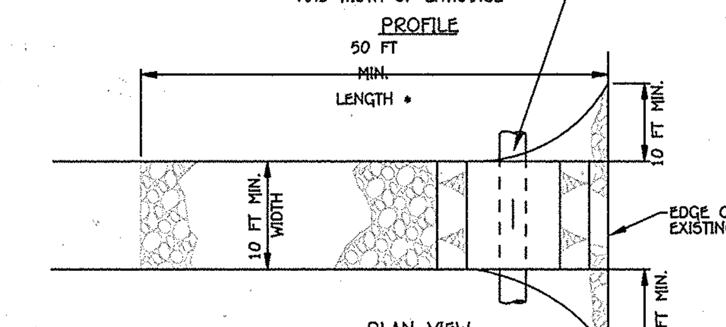

PLAN VIEW

CONSTRUCTION SPECIFICATIONS

1. PLACE STABILIZED CONSTRUCTION ENTRANCE IN ACCORDANCE WITH THE APPROVED PLAN. VEHICLES MUST TRAVEL OVER THE ENTIRE LENGTH OF THE SCE. USE MINIMUM LENGTH OF 50 FEET (*30 FEET FOR SINGLE RESIDENCE LOT). USE MINIMUM WIDTH OF 10 FEET. FLARE SCE 10 FEET MINIMUM AT THE EXISTING ROAD TO PROVIDE A TURNING RADIUS.
2. PIPE ALL SURFACE WATER FLOWING TO OR DIVERTED TOWARD THE SCE UNDER THE ENTRANCE, MAINTAINING POSITIVE DRAINAGE. PROTECT PIPE INSTALLED THROUGH THE SCE WITH A MOUNTABLE BERM WITH 5:1 SLOPES AND A MINIMUM OF 12 INCHES OF STONE OVER THE PIPE. PROVIDE PIPE AS SPECIFIED ON APPROVED PLAN. WHEN THE SCE IS LOCATED AT A HIGH SPOT AND HAS NO DRAINAGE TO CONVEY, A PIPE IS NOT NECESSARY. A MOUNTABLE BERM IS REQUIRED WHEN SCE IS NOT LOCATED AT A HIGH SPOT.
3. PREPARE SUBGRADE AND PLACE NONWOVEN GEOTEXTILE, AS SPECIFIED IN SECTION H-1 MATERIALS.
4. PLACE CRUSHED AGGREGATE (2 TO 3 INCHES IN SIZE) OR EQUIVALENT RECYCLED CONCRETE (WITHOUT REBAR) AT LEAST 6 INCHES DEEP OVER THE LENGTH AND WIDTH OF THE SCE.
5. MAINTAIN ENTRANCE IN A CONDITION THAT MINIMIZES TRACKING OF SEDIMENT. ADD STONE OR MAKE OTHER REPAIRS AS CONDITIONS DEMAND TO MAINTAIN CLEAN SURFACE, MOUNTABLE BERM, AND SPECIFIED DIMENSIONS. IMMEDIATELY REMOVE STONE AND/OR SEDIMENT SPILLED, DROPPED, OR TRACKED ONTO ADJACENT ROADWAY BY VACUUMING, SCRAPING, AND/OR SWEEPING. WASHING ROADWAY TO REMOVE MUD TRACKED ONTO PAVEMENT IS NOT ACCEPTABLE UNLESS WASH WATER IS DIRECTED TO AN APPROVED SEDIMENT CONTROL PRACTICE.

MARYLAND STANDARDS AND SPECIFICATIONS FOR SOIL EROSION AND SEDIMENT CONTROL

U.S. DEPARTMENT OF AGRICULTURE NATURAL RESOURCES CONSERVATION SERVICE | 2011 | MARYLAND DEPARTMENT OF ENVIRONMENT WATER MANAGEMENT ADMINISTRATION

STANDARD STABILIZATION NOTE

FOLLOWING INITIAL SOIL DISTURBANCE OR RE-DISTURBANCE, PERMANENT OR TEMPORARY STABILIZATION MUST BE COMPLETED WITHIN:

a.) THREE (3) CALENDAR DAYS AS TO THE SURFACE OF ALL PERIMETER DIKES, SWALES, DITCHES, PERIMETER SLOPES AND ALL SLOPES STEEPER THAN 3 HORIZONTAL TO 1 VERTICAL (3:1); AND

b.) SEVEN (7) CALENDAR DAYS AS TO ALL OTHER DISTURBED OR GRADED AREAS ON THE PROJECT SITE NOT UNDER ACTIVE GRADING.

0' 20' 40' 60'
SCALE: 1" = 20'

DETAIL C-1 EARTH DIKE

STANDARD SYMBOL: A-1 (PLACE DESIGNATION (E.G. A-1) ON FLOW CHANNEL SIDE OF DIKE.)

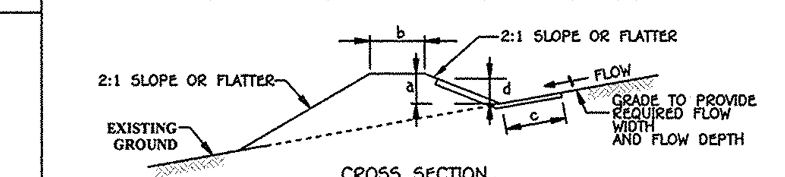

CROSS SECTION

CONTINUOUS GRADE 0.5% MIN. TO 10% MAX. SLOPE

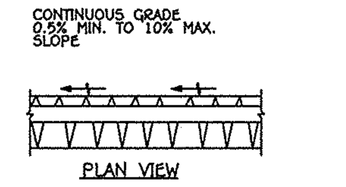

PLAN VIEW

DIKE TYPE

	A	B
a - DIKE HEIGHT	18 IN MIN.	30 IN MIN.
b - DIKE WIDTH	24 IN MIN.	36 IN MIN.
c - FLOW WIDTH	4 FT MIN.	6 FT MIN.
d - FLOW DEPTH	12 IN MIN.	24 IN MIN.

FLOW CHANNEL STABILIZATION

A-1 SEED WITH STRAW MULCH AND TACK. (NOT ALLOWED FOR CLEAR WATER DIVERSION.)
A-2/B-2 SEED WITH SOIL STABILIZATION MATTING OR LINE WITH SOD.
A-3/B-3 4 TO 7 INCH STONE OR EQUIVALENT RECYCLED CONCRETE PRESSED INTO SOIL A MINIMUM OF 7 INCHES AND FLUSH WITH GROUND.

CONSTRUCTION SPECIFICATIONS

1. REMOVE AND DISPOSE OF ALL TREES, BRUSH, STUMPS, OBSTRUCTIONS, AND OTHER OBJECTIONABLE MATERIAL SO AS NOT TO INTERFERE WITH PROPER FUNCTION OF EARTHDIKE.
2. EXCAVATE OR SHAPE EARTH DIKE TO LINE, GRADE, AND CROSS SECTION AS SPECIFIED. BANK PROJECTIONS OR OTHER IRREGULARITIES ARE NOT ALLOWED.
3. COMPACT FILL.
4. CONSTRUCT FLOW CHANNEL ON AN UNINTERRUPTED, CONTINUOUS GRADE, ADJUSTING THE LOCATION DUE TO FIELD CONDITIONS AS NECESSARY TO MAINTAIN POSITIVE DRAINAGE.
5. PROVIDE OUTLET PROTECTION AS REQUIRED ON APPROVED PLAN.
6. STABILIZE EARTH DIKE WITHIN THREE DAYS OF INSTALLATION. STABILIZE FLOW CHANNEL FOR CLEAR WATER DIVERSION WITHIN 24 HOURS OF INSTALLATION.
7. MAINTAIN LINE, GRADE, AND CROSS SECTION. REMOVE ACCUMULATED SEDIMENT AND DEBRIS, AND MAINTAIN POSITIVE DRAINAGE. KEEP EARTH DIKE AND POINT OF DISCHARGE FREE OF EROSION, AND CONTINUOUSLY MEET REQUIREMENTS FOR ADEQUATE VEGETATIVE ESTABLISHMENT IN ACCORDANCE WITH SECTION B-4 VEGETATIVE STABILIZATION.
8. UPON REMOVAL OF EARTH DIKE, GRADE AREA FLUSH WITH EXISTING GROUND. WITHIN 24 HOURS OF REMOVAL STABILIZE DISTURBED AREA WITH TOPSOIL, SEED, AND MULCH, OR AS SPECIFIED ON APPROVED PLAN.

MARYLAND STANDARDS AND SPECIFICATIONS FOR SOIL EROSION AND SEDIMENT CONTROL

U.S. DEPARTMENT OF AGRICULTURE NATURAL RESOURCES CONSERVATION SERVICE | 2011 | MARYLAND DEPARTMENT OF ENVIRONMENT WATER MANAGEMENT ADMINISTRATION

B-4-8 STANDARDS AND SPECIFICATIONS FOR STOCKPILE AREA

Definition
A mound or pile of soil protected by appropriately designed erosion and sediment control measures.

Purpose
To provide a designated location for the temporary storage of soil that controls the potential for erosion, sedimentation, and changes to drainage patterns.

Conditions Where Practice Applies
Stockpile areas are utilized when it is necessary to salvage and store soil for later use.

Criteria
1. The stockpile location and all related sediment control practices must be clearly indicated on the erosion and sediment control plan.
2. The footprint of the stockpile must be sized to accommodate the anticipated volume of material and based on a side slope ratio no steeper than 2:1. Benching must be provided in accordance with Section B-3 Land Grading.
3. Runoff from the stockpile area must drain to a suitable sediment control practice.
4. Access the stockpile area from the upgrade side.
5. Clear water runoff into the stockpile area must be minimized by use of a diversion device such as an earth dike, temporary swale or diversion fence. Provisions must be made for discharging concentrated flow in a non-erosive manner.
6. Where runoff concentrates along the toe of the stockpile fill, an appropriate erosion/sediment control practice must be used to intercept the discharge.
7. Stockpiles must be stabilized in accordance with the 3/7 day stabilization requirement as well as Standard B-4-1 Incremental Stabilization and Standard B-4-4 Temporary Stabilization. 8. If the stockpile is located on an impervious surface, a liner should be provided below the stockpile to facilitate cleanup. Stockpiles containing contaminated material must be covered with impermeable sheeting.

Maintenance
The stockpile area must continuously meet the requirements for Adequate Vegetative Establishment in accordance with Section B-4 Vegetative Stabilization. Side slopes must be maintained at no steeper than a 2:1 ratio. The stockpile area must be kept free of erosion. If the vertical height of a stockpile exceeds 20 feet for 2:1 slopes, 30 feet for 3:1 slopes, or 40 feet for 4:1 slopes, benching must be provided in accordance with Section B-3 Land Grading.

HOWARD SOIL CONSERVATION DISTRICT STANDARD SEDIMENT CONTROL NOTES

1) A MINIMUM OF 48 HOURS NOTICE MUST BE GIVEN TO THE HOWARD COUNTY DEPARTMENT OF INSPECTIONS, LICENSES AND PERMITS, SEDIMENT CONTROL DIVISION PRIOR TO THE START OF ANY CONSTRUCTION (410-313-1855).
2) ALL VEGETATIVE AND STRUCTURAL PRACTICES ARE TO BE INSTALLED ACCORDING TO THE PROVISIONS OF THIS PLAN AND ARE TO BE IN CONFORMANCE WITH THE MOST CURRENT MARYLAND STANDARDS AND SPECIFICATIONS FOR SOIL EROSION AND SEDIMENT CONTROL AND REVISIONS THERETO.
3) FOLLOWING INITIAL SOIL DISTURBANCE OR RE-DISTURBANCE, PERMANENT OR TEMPORARY STABILIZATION SHALL BE COMPLETED WITHIN: a) 3 CALENDAR DAYS FOR ALL PERIMETER SEDIMENT CONTROL STRUCTURES, DIKES, PERIMETER SLOPES AND ALL SLOPES GREATER THAN 3:1, b) 7 DAYS AS TO ALL OTHER DISTURBED OR GRADED AREAS ON THE PROJECT SITE.
4) ALL DISTURBED AREAS MUST BE STABILIZED WITHIN THE TIME PERIOD SPECIFIED ABOVE IN ACCORDANCE WITH THE 2011 MARYLAND STANDARDS AND SPECIFICATIONS FOR SOIL EROSION AND SEDIMENT CONTROL FOR PERMANENT SEEDING (SEC. B-4-5), TEMPORARY SEEDING (SEC. B-4-4) AND MULCHING (SEC. B-4-3). TEMPORARY STABILIZATION WITH MULCH ALONE CAN ONLY BE DONE WHEN RECOMMENDED SEEDING DATES DO NOT ALLOW FOR PROPER GERMINATION AND ESTABLISHMENT OF GRASSES.
5) ALL SEDIMENT CONTROL STRUCTURES ARE TO REMAIN IN PLACE AND ARE TO BE MAINTAINED IN OPERATIVE CONDITION UNTIL PERMISSION FOR THEIR REMOVAL HAS BEEN OBTAINED FROM THE HOWARD COUNTY SEDIMENT CONTROL INSPECTOR.
6) SITE ANALYSIS:

TOTAL AREA OF SITE	135.4 ACRES
AREA DISTURBED	2.10 ACRES
AREA TO BE ROOFED OR PAVED	0.16 ACRES
AREA TO BE VEGETATIVELY STABILIZED	1.94 ACRES
TOTAL CUT	8,584 CU.YDS.
TOTAL FILL	4,729 CU.YDS.
OFFSITE WASTE/BORROW AREA LOCATION	N/A

7) ANY SEDIMENT CONTROL PRACTICE THAT IS DISTURBED BY GRADING ACTIVITY FOR PLACEMENT OF UTILITIES MUST BE REPAIRED ON THE SAME DAY OF DISTURBANCE.
8) ADDITIONAL SEDIMENT CONTROL MUST BE PROVIDED, IF DEEMED NECESSARY BY THE HOWARD COUNTY SEDIMENT CONTROL INSPECTOR.
9) ON ALL SITES WITH DISTURBED AREAS IN EXCESS OF 2 ACRES, APPROVAL OF THE INSPECTION AGENCY SHALL BE REQUESTED UPON COMPLETION OF INSTALLATION OF PERIMETER EROSION AND SEDIMENT CONTROLS, BUT BEFORE PROCEEDING WITH ANY OTHER EARTH DISTURBANCE OR GRADING. OTHER BUILDING OR GRADING INSPECTION APPROVALS MAY NOT BE AUTHORIZED UNTIL THIS INITIAL APPROVAL BY THE INSPECTION AGENCY IS MADE.
10) TRENCHES FOR THE CONSTRUCTION OF UTILITIES IS LIMITED TO THREE PIPE LENGTHS OR THAT WHICH SHALL BE BACK-FILLED AND STABILIZED BY THE END OF EACH WORKDAY, WHICHEVER IS SHORTER.
11) ANY CHANGES OR REVISIONS TO THE SEQUENCE OF CONSTRUCTION MUST BE REVIEWED AND APPROVED BY THE PLAN APPROVAL AUTHORITY PRIOR TO PROCEEDING WITH CONSTRUCTION.
12) A PROJECT IS TO BE SEQUENCED SO THAT GRADING ACTIVITIES BEGIN ON ONE GRADING UNIT (MAXIMUM ACREAGE OF 20 ACRE PER GRADING UNIT) AT A TIME. WORK MAY PROCEED TO A SUBSEQUENT GRADING UNIT WHEN AT LEAST 50 PERCENT OF THE DISTURBED AREA IN THE PROCEEDING GRADING UNIT HAS BEEN STABILIZED AND APPROVED BY THE ENFORCEMENT AUTHORITY. UNLESS OTHERWISE SPECIFIED AND APPROVED BY THE APPROVAL AUTHORITY, NO MORE THAN 30 ACRES CUMULATIVELY MAY BE DISTURBED AT A GIVEN TIME.

FISHER, COLLINS & CARTER, INC.
CIVIL ENGINEERING CONSULTANTS & LAND SURVEYORS
CENTENNIAL SQUARE OFFICE PARK - 10272 BALTIMORE NATIONAL PIKE
ELLICOTT CITY, MARYLAND 21042
(410) 461 - 2855

ENGINEER'S CERTIFICATE

"I certify that the plan for sediment and erosion control represents a practical and workable plan based on my personal knowledge of the site conditions and that it was prepared in accordance with the requirements of the Howard Soil Conservation District."

Signature of Engineer — 9-12-15 Date

"Professional Certification. I hereby certify that these documents were prepared or approved by me, and that I am a duly licensed professional engineer under the laws of the State of Maryland, License No. 20748, Expiration Date: March 22, 2015."

ALDO M. VITUCCI, P.E. — 9-12-15 DATE

DEVELOPER'S CERTIFICATE

"I/We certify that all development and construction will be done according to this plan for sediment and erosion control, and that all responsible personnel involved in the construction project will have a Certificate of Attendance at a Department of the Environment Approved Training Program for the Control of Sediment and Erosion before beginning the project. I also authorize periodic on-site inspection by the Howard Soil Conservation District."

Signature of Developer — 8-12-15 Date

This development plan is approved for soil erosion and sediment control by the HOWARD SOIL CONSERVATION DISTRICT.

Howard SCD — 8/31/15 Date

DATE	DESCRIPTION
	REVISION BLOCK

APPROVED: DEPARTMENT OF PLANNING AND ZONING

Director - Department of Planning and Zoning — 10-13-15 Date
Chief, Division of Land Development — 10-13-15 Date
Chief, Development Engineering Division — 10-1-15 Date

OWNER
HOWARD COUNTY RECREATION AND PARKS
C/O MR. JOHN R. BYRD, DIRECTOR
7120 OAKLAND MILLS ROAD
COLUMBIA, MARYLAND 21046-1677
PHONE: (410) 313-4640

DEVELOPER
HOWARD COUNTY LIVING FARM HERITAGE MUSEUM
C/O MR. JOHN FRANK
12985 ROUTE 144
WEST FRIENDSHIP, MARYLAND 21794
PHONE: (410) 489-2345

Address Chart

BUILDING NO.	STREET ADDRESS
	12985 FREDERICK ROAD
	WEST FRIENDSHIP, MARYLAND 21794

PROJECT			SECTION/AREA	PARCELS	LOT
HOWARD COUNTY LIVING FARM HERITAGE MUSEUM			-	142	-
DEED REF.	BLOCK NO.	ZONE	TAX MAP	ELEC. DIST.	CENSUS TR.
L.635, F.331	9,10,15,16	RC-DEO	15	THIRD	6030
-------			----		

SEDIMENT AND EROSION CONTROL NOTES AND DETAILS

HOWARD COUNTY LIVING FARM HERITAGE MUSEUM

KNOWN AS WEST FRIENDSHIP PARK
PARKING LOT ADDITION

TAX MAP No. 15 GRID No. 9, 10, 15, AND 16
PARCEL 142
THIRD ELECTION DISTRICT HOWARD COUNTY, MARYLAND

SCALE: AS SHOWN DATE: MAY 13, 2015

I:\2009\09032\dwg\09032-4001 sheet 4 SDP Sediment Control Details.dwg, NOTES AND DETAILS, 5/13/2015 12:17:49 PM, 1:1

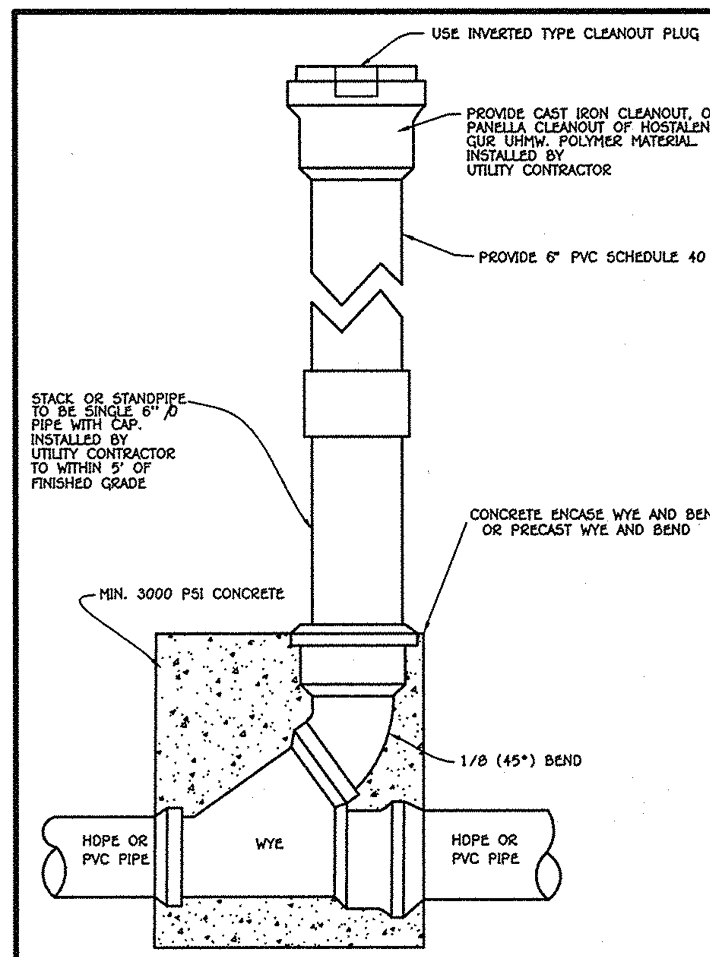

TYPICAL CLEAN-OUT FOR C.O. #1 THRU #8 & #10
NO SCALE

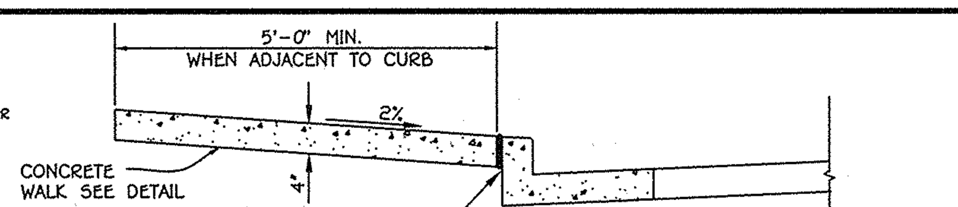

NOTES:
1. SIDEWALK TO BE SCRIBED IN EQUALLY 5'-0" MAXIMUM SQUARES.
2. EXPANSION JOINTS ACROSS THE SIDEWALK NOT TO MORE THAN 15' APART.
3. 1/2" PREFORMED BITUMINOUS EXPANSION MATERIAL IN EXPANSION JOINTS TO BE KEPT 1/4" BELOW SURFACE OF SIDEWALK. FILL WITH SEALANT.
4. 4000 PSI AIR ENTRAINED CONCRETE SHALL BE USED.
5. WHEN SIDEWALK ABUTS CURB, WALK SHALL BE 1/4" ABOVE CURB WITH 1/2" PREFORMED BITUMINOUS EXPANSION MATERIAL BETWEEN SIDEWALK AND CURB.
6. ON LONGITUDINAL SIDEWALK GRADES OF 5% OR GREATER, A CONCRETE HEADER, 6" THICK AND 6" DEEP BELOW THE NORMAL 4" SIDEWLAK THICKNESS SHALL BE CONSTRUCTED FOR THE FULL WIDTH OF THE SIDEWALK AT INTERVALS OF 48 FEET. THE HEADERS SHALL BE PLACED AT EXPANSION JOINT LOCATIONS AND SHALL BE MONOLITHIC WITH THE SIDEWALK.
7. SIDEWALK WIDTH ADJACENT TO CURB SHALL BE 5'-0" MIN.
8. SIDEWALK LOCATED 2' OR MORE FROM CURB MAY BE 4'-0" IN WIDTH WITH A 5' X 5' PAVED SECTION PLACED 200' APART.
9. PROVIDE 1/2" EXPANSION JOINT WHERE WALKS ABUT EXISTING CONCRETE SURFACES TO REMAIN.

HOWARD COUNTY STANDARD DETAIL R-3.05

CONCRETE SIDEWALK DETAIL
NO SCALE

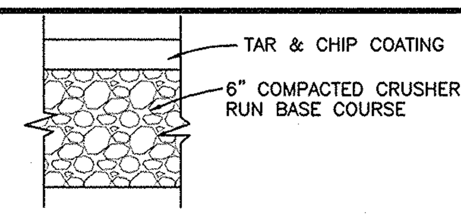

TAR & CHIP PAVING SECTION
NO SCALE

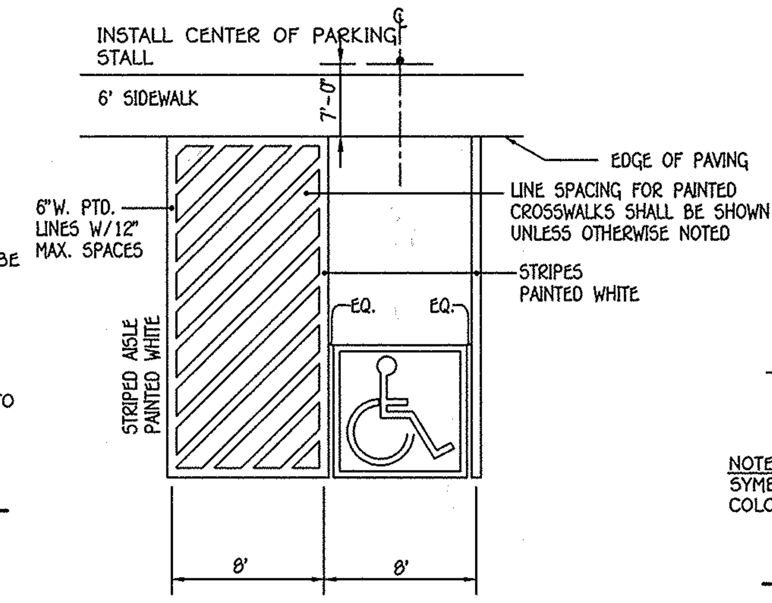

ACCESSIBLE SPACE LAYOUT
NO SCALE

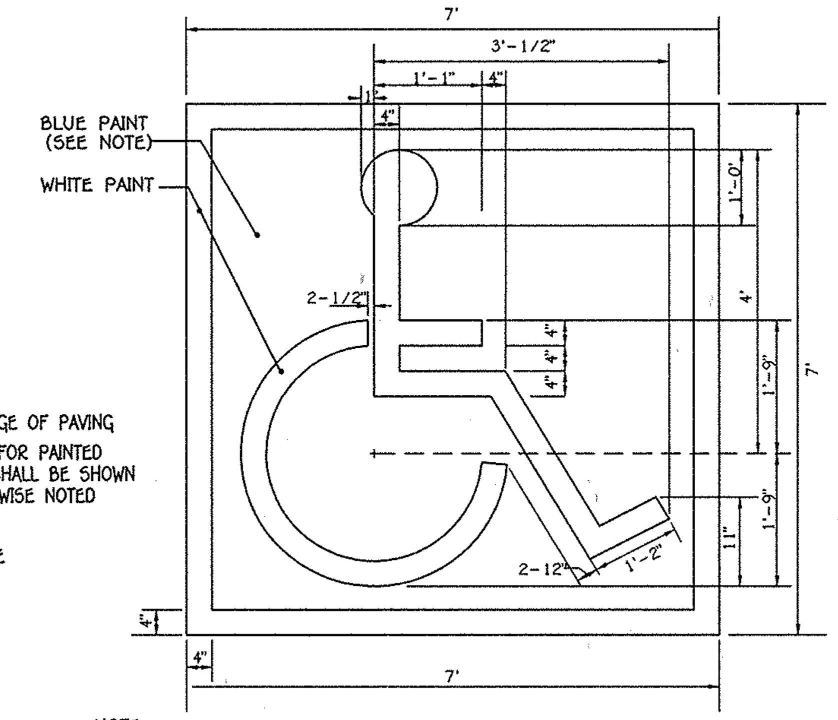

NOTE:
SYMBOL IS REQUIRED TO CONTRAST WITH BACKGROUND (WHITE ON BLUE: COLOR NO. 105090 IN FED. STANDARD 5952-DOUBLE COAT TYP.)

HANDICAP SPACE STENCIL LAYOUT
SCALE: 1" = 20'

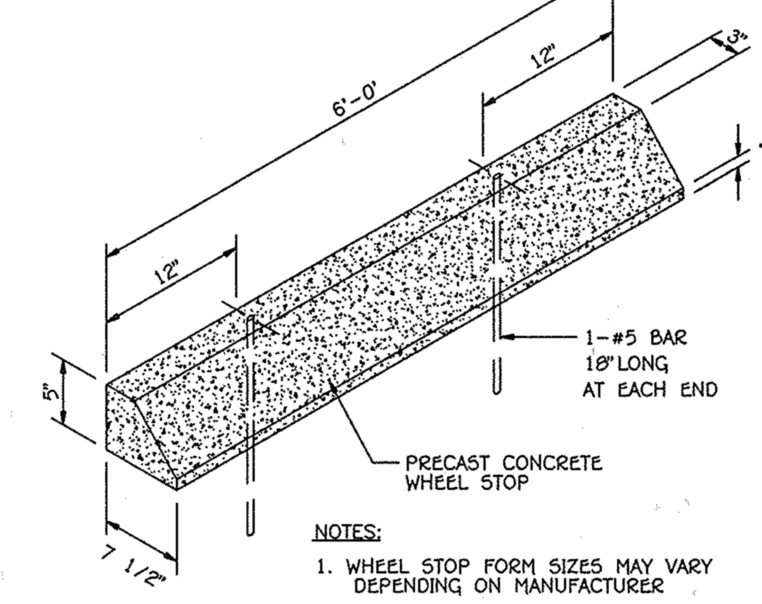

NOTES:
1. WHEEL STOP FORM SIZES MAY VARY DEPENDING ON MANUFACTURER
2. CONCRETE STRENGTH SHALL BE 4,000 P.S.I. AIR ENTRAINED

WHEEL STOP DETAIL
NO SCALE

GENERAL NOTES:

1. SIGNS SHALL MEET DESIGN STANDARDS OF THE FEDERAL HIGHWAY ADMINISTRATION AND CONFORM TO THE STATE OF MARYLAND STANDARD HIGHWAY SIGN BOOKLET DETAIL R7-8.
2. ONE SIGN IS REQUIRED PER SPACE PLACED AS SHOWN ON SITE IMPROVEMENT PLAN.
3. SIGNS SHALL BE POLE MOUNTED WITH HOT DIPPED GALVANIZED COUNTY APPROVED PERFORATED CHANNEL POSTS W/TOP OF SIGNS 9'-1" ABOVE FINISHED GRADE OR AS INDICATED ON SITE DRAWINGS.
4. SIGN SHALL BE ATTACHED TO FLANGED SIDE OF POST. POST SHALL EXTEND INTO GROUND 2'-6" MIN.
5. COLORS: LEGEND AND BORDER-GREEN
SYMBOL-WHITE ON BLUE BACKGROUND
BACKGROUND-WHITE
6. CONTRACTOR SHALL COORDINATE ARROW DIRECTION WITH LOCATION OF ADJACENT AISLE.
7. SPACES INDICATED ON SITE DEVELOPMENT PLANS AS "VAN ACCESSIBLE" SHALL BE SIGNED ACCORDINGLY.

HANDICAP PARKING SIGN DETAIL
NOT TO SCALE

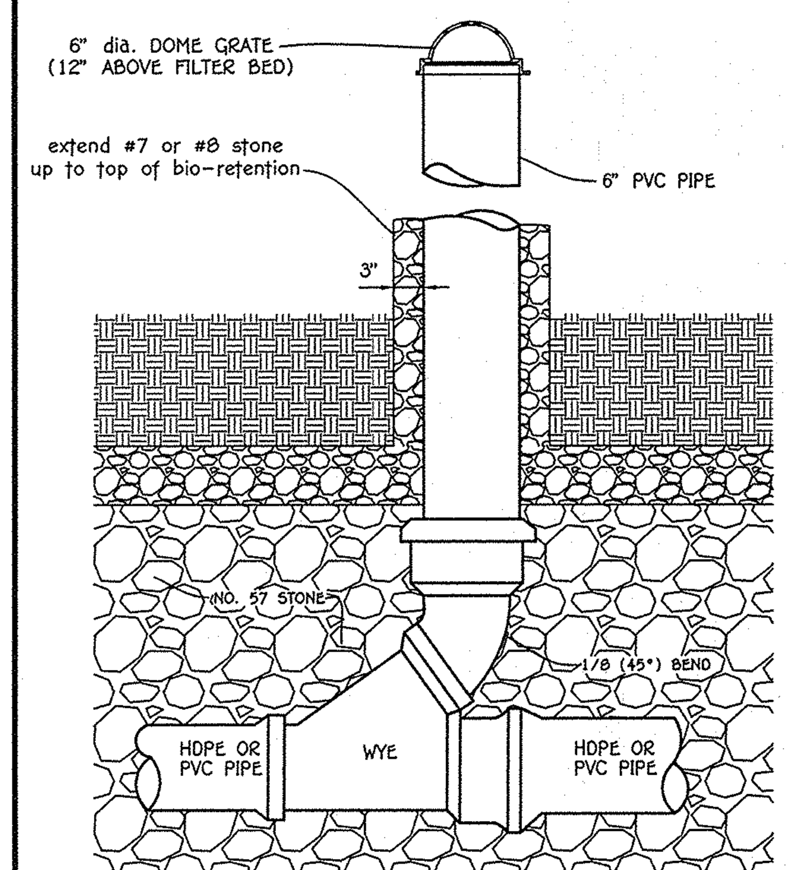

CLEAN-OUT DETAIL FOR C.O.'S #9, #11, #12 & #13
NO SCALE

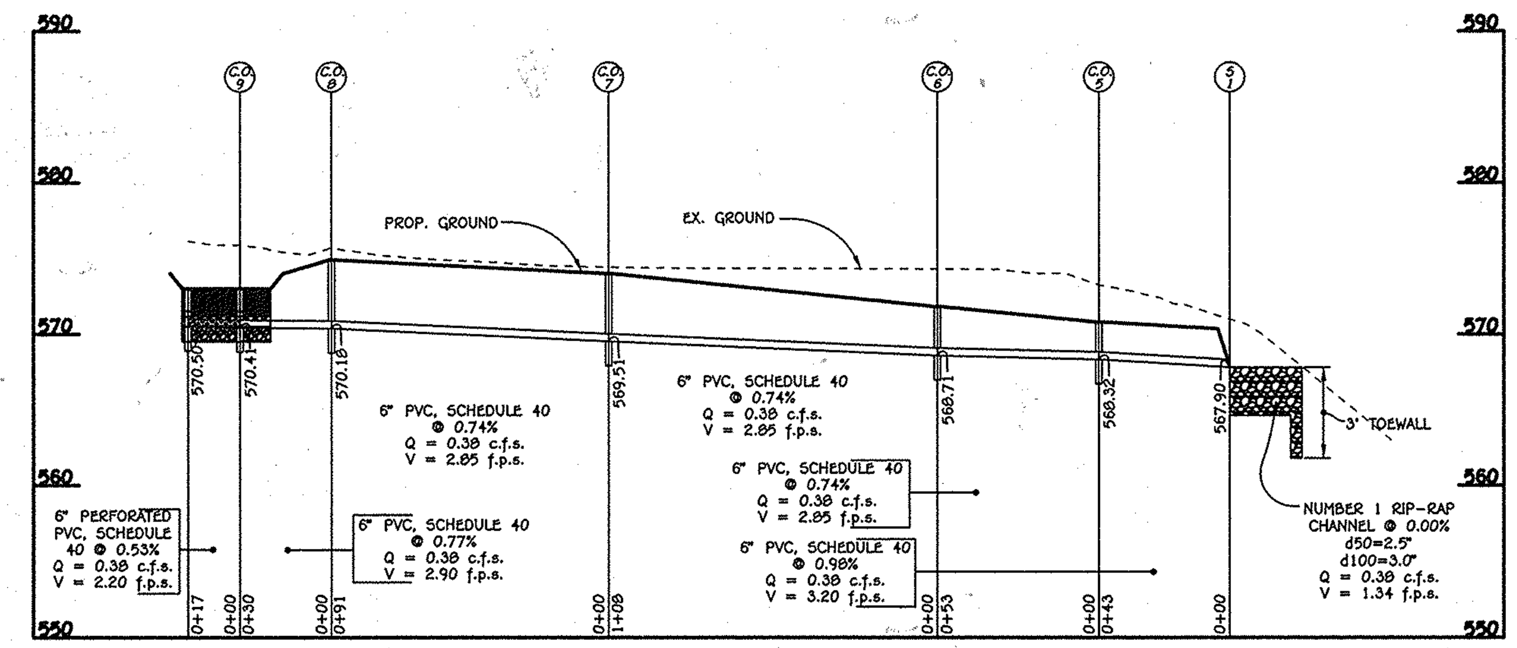

PROFILE THRU MICRO BIORETENTION FACILITY #1
SCALE: 1" = 50' HOR. 1" = 5' VERT.

PIPE SCHEDULE

SIZE	CLASS	LENGTH
6"	PERF. PVC	17'
6"	PVC	325'
8"	PVC	400'
10"	PVC	62'

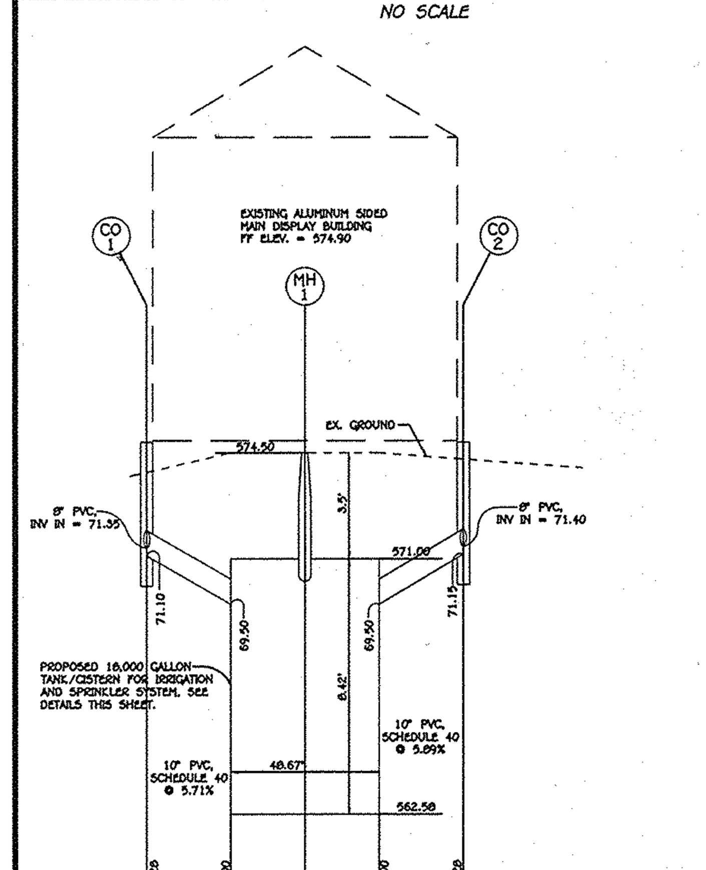

RAIN WATER HARVESTING PROFILE
SCALE: 1" = 50' HOR. 1" = 5' VERT.

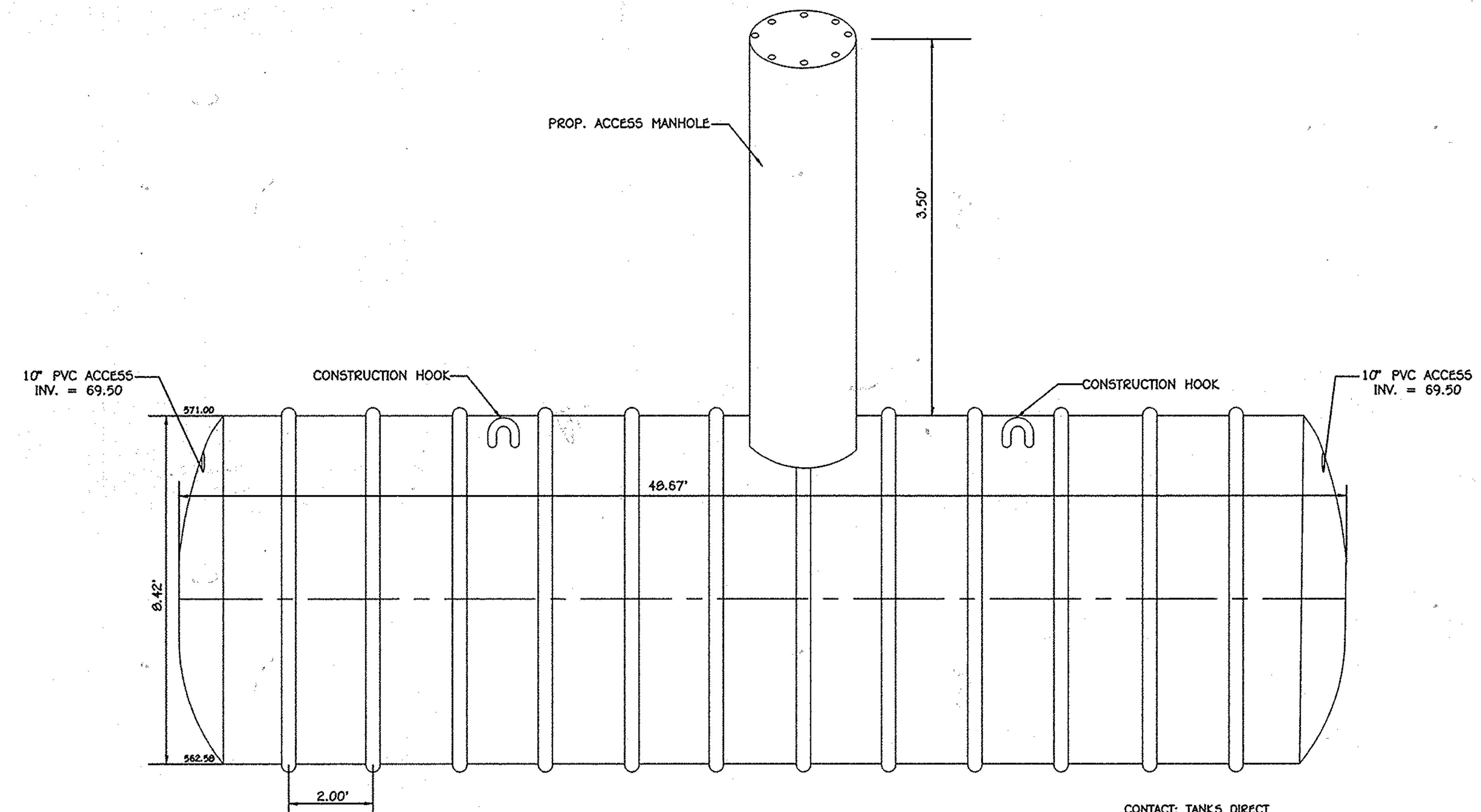

CONTACT: TANKS DIRECT
8580 LAURELDALE DRIVE
LAUREL, MD. 20724
PH: 1-800-865-5555
LOCAL: 301-317-6000
FAX: 301-317-8265
WEBSITE: WWW.TANKSDIRECT.COM

UNDERGROUND WATER TANK/CISTERN
NOT TO SCALE

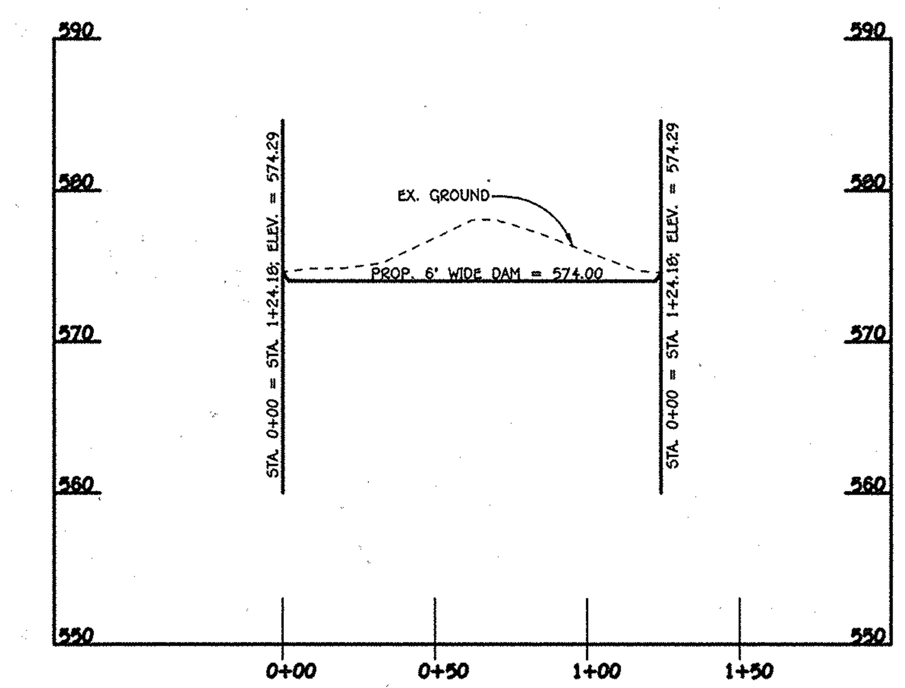

TOP OF DAM PROFILE - FACILITY #1
SCALE: 1" = 50' HOR. 1" = 5' VERT.

Operation And Maintenance Schedule For Commercial Association Owned & Maintained Bio-Retention Areas (M-6)

1. The owner shall maintain the plant material, mulch layer and soil layer annually. maintenance of mulch and soil is limited to correcting areas of erosion or wash out. Any mulch replacement shall be done in the spring. Plant material shall be checked for disease and insect infestation and maintenance will address dead material and pruning. Acceptable replacement plant material is limited to the following: 2000 Maryland stormwater design manual volume II, table A.4.1 and 2.
2. The owner shall perform a plant in the spring and in the fall each year. during the inspection, the owner shall remove dead and diseased vegetation considered beyond treatment, replace dead plant material with acceptable replacement plant material. Treat diseased trees and shrubs and replace all deficient stakes and wires.
3. The owner shall inspect the mulch each spring. The mulch shall be replaced every two to three years. The previous mulch layer shall be removed before the new layer is applied.
4. The owner shall correct soil erosion on an as needed basis, with a minimum of once per month and after each heavy storm.
5. The owner shall maintain all observation wells, clean-outs and perforated underdrains.
6. Filter material must be replaced when water remains on the surface of the filter bed for more than 24 hours following a 1 or 2 year storm event or more than 48 hours following a 10 year storm event.

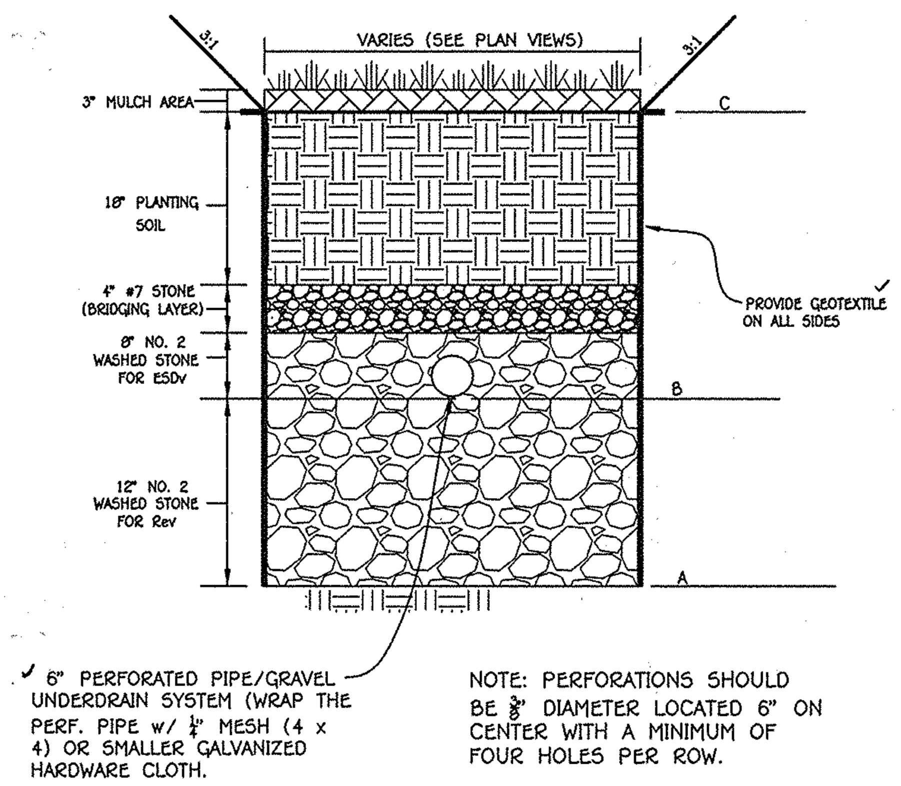

6" PERFORATED PIPE/GRAVEL UNDERDRAIN SYSTEM (WRAP THE PERF. PIPE w/ 1/4" MESH (4 x 4) OR SMALLER GALVANIZED HARDWARE CLOTH.

NOTE: PERFORATIONS SHOULD BE 3/8" DIAMETER LOCATED 6" ON CENTER WITH A MINIMUM OF FOUR HOLES PER ROW.

(FACILITY Nos. 1,2 & 3) MICRO BIO-RETENTION (M-6) SECTION
NO SCALE

FACILITY No. 1		
A - 569.50	- BOTTOM	
B - 570.50	- INV. 6" PERF.	
C - 573.00	- TOP PLANTING SOIL	

FACILITY No. 2		
A - 561.50	- BOTTOM	
B - 562.50	- INV. 6" PERF.	
C - 565.00	- TOP PLANTING SOIL	

FACILITY No. 3		
A - 559.55	- BOTTOM	
B - 560.55	- INV. 6" PERF.	
C - 563.50	- TOP PLANTING SOIL	

0' 50' 100' 150'
SCALE: 1" = 50'

FISHER, COLLINS & CARTER, INC.
CIVIL ENGINEERING CONSULTANTS & LAND SURVEYORS
CENTENNIAL SQUARE OFFICE PARK - 10272 BALTIMORE NATIONAL PIKE
ELLICOTT CITY, MARYLAND 21042
(410) 461 - 2855

"Professional Certification. I hereby certify that these documents were prepared or approved by me, and that I am a duly licensed professional engineer under the laws of the State of Maryland, License No. 20748, Expiration Date: March 22, 2015."

ALDO M. VITUCCI, P.E. — 9-12-15 DATE

DATE	DESCRIPTION
	REVISION BLOCK

APPROVED: DEPARTMENT OF PLANNING AND ZONING
Director - Department of Planning and Zoning — Date 10-13-15
Chief, Division of Land Development — Date 10-13-15
Chief, Development Engineering Division — Date 10-1-15

OWNER
HOWARD COUNTY RECREATION AND PARKS
C/O MR. JOHN R. BYRD, DIRECTOR
7120 OAKLAND MILLS ROAD
COLUMBIA, MARYLAND 21046-1677
PHONE: (410) 313-4640

DEVELOPER
HOWARD COUNTY LIVING FARM HERITAGE MUSEUM
C/O MR. JOHN FRANK
12985 ROUTE 144
WEST FRIENDSHIP, MARYLAND 21794
PHONE: (410) 489-2345

Address Chart

BUILDING NO.	STREET ADDRESS
	12985 FREDERICK ROAD
	WEST FRIENDSHIP, MARYLAND 21794

PROJECT	SECTION/AREA	PARCELS	LOT
HOWARD COUNTY LIVING FARM HERITAGE MUSEUM	-	142	-

DEED REF.	BLOCK NO.	ZONE	TAX MAP	ELEC. DIST.	CENSUS TR.
L.635, F.331	9,10,15,16	RC-DEO	15	THIRD	6030

DETAIL SHEET

HOWARD COUNTY LIVING FARM HERITAGE MUSEUM
KNOWN AS WEST FRIENDSHIP PARK
PARKING LOT ADDITION
TAX MAP No. 15 GRID No. 9, 10, 15, AND 16
PARCEL 142
THIRD ELECTION DISTRICT HOWARD COUNTY, MARYLAND
SCALE: AS SHOWN DATE: MAY 13, 2015
SHEET 5 OF 7 SDP-14-079

I:\2009\09032\dwg\09032-4001 sheet 5 site plan details.dwg, DETAIL SHEET, 5/13/2015 12:19:41 PM, 1:1

MICRO-BIORETENTION FACILITIES #2 & #3 PLAN

SCALE: 1" = 10'

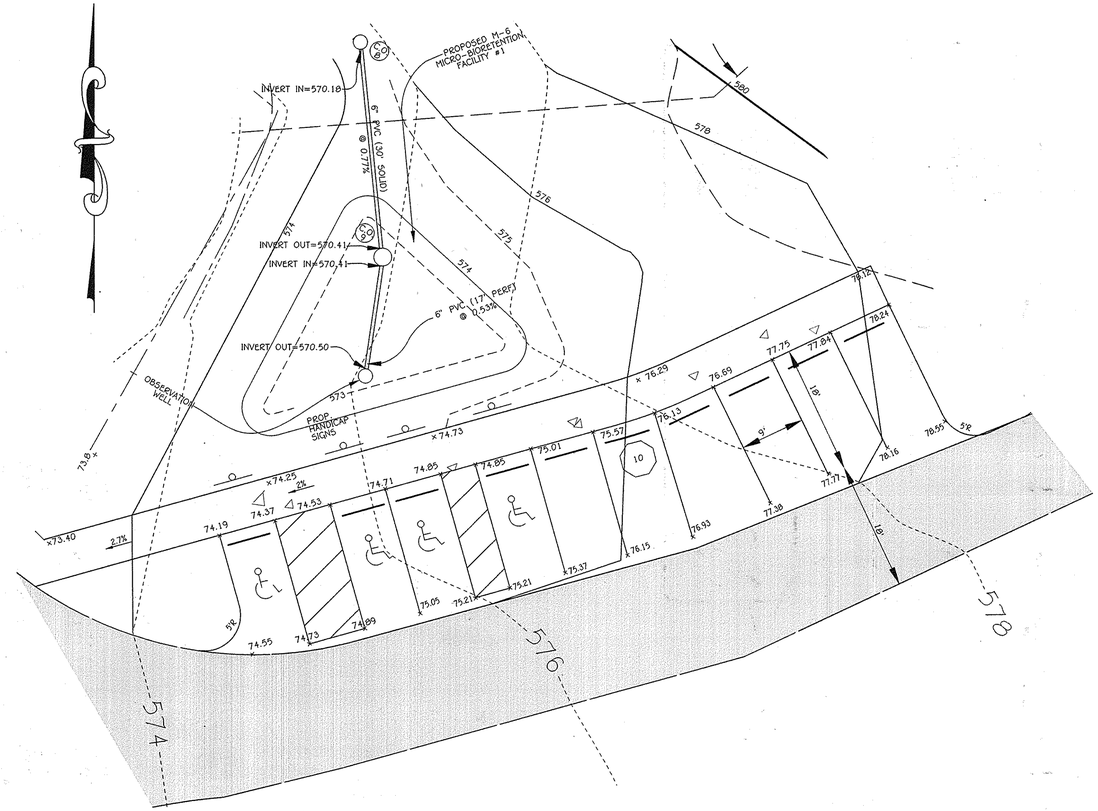

MICRO-BIORETENTION FACILITY #1 PLAN - HANDICAP PLAN

SCALE: 1" = 10'

SCALE: 1" = 10'

STATE OF MARYLAND MICHAEL J. WEALY No. 21748 PROFESSIONAL ENGINEER 8-12-15

FISHER, COLLINS & CARTER, INC.
CIVIL ENGINEERING CONSULTANTS & LAND SURVEYORS
CENTENNIAL SQUARE OFFICE PARK - 10272 BALTIMORE NATIONAL PIKE
ELLICOTT CITY, MARYLAND 21042
(410) 461 - 2855

ENGINEER'S CERTIFICATE

"I certify that this plan for sediment and erosion control represents a practical and workable plan based on my personal knowledge of the site conditions and that it was prepared in compliance with the requirements of the Howard Soil Conservation District."

Signature of Engineer — Date: 8-12-15

DEVELOPER'S CERTIFICATE

"I/We certify that all development and construction will be done according to this plan for sediment and erosion control, and that all responsible personnel involved in the construction project will have a Certificate of Attendance at a Department of the Environment Approved Training Program for the Control of Sediment and Erosion before beginning the project. I also authorize periodic on-site inspection by the Howard Soil Conservation District."

Signature of Developer — Date: 8-12-15

"Professional Certification. I hereby certify that these documents were prepared or approved by me, and that I am a duly licensed professional engineer under the laws of the State of Maryland, License No. 20748, Expiration Date: March 22, 2015."

ALDO M. LAVORATO, P.E. — DATE: 8-12-15

This development plan is approved for soil erosion and sediment control by the HOWARD SOIL CONSERVATION DISTRICT.

Howard SCD — Date: 8/31/15

DATE	DESCRIPTION

REVISION BLOCK

APPROVED: DEPARTMENT OF PLANNING AND ZONING

Director - Department of Planning and Zoning — Date: 10-13-15

Chief, Division of Land Development — Date: 10-13-15

Chief, Development Engineering Division — Date: 10-8-15

OWNER

HOWARD COUNTY RECREATION AND PARKS
C/O MR. JOHN R. BYRD, DIRECTOR
7120 OAKLAND MILLS ROAD
COLUMBIA, MARYLAND 21046-1677
PHONE: (410) 313-4640

DEVELOPER

HOWARD COUNTY LIVING FARM HERITAGE MUSEUM
C/O MR. JOHN FRANK
12985 ROUTE 144
WEST FRIENDSHIP, MARYLAND 21794
PHONE: (410) 489-2345

Address Chart

BUILDING NO.	STREET ADDRESS
	12985 FREDERICK ROAD
	WEST FRIENDSHIP, MARYLAND 21794

PROJECT			SECTION/AREA	PARCELS	LOT
HOWARD COUNTY LIVING FARM HERITAGE MUSEUM			-	142	-
DEED REF.	BLOCK NO.	ZONE	TAX MAP	ELEC. DIST.	CENSUS TR.
L.635, F.331	9,10,15,16	RC-DEO	15	THIRD	6030
-------			----		

SWM DETAILS

HOWARD COUNTY LIVING FARM HERITAGE MUSEUM

KNOWN AS WEST FRIENDSHIP PARK PARKING LOT ADDITION

TAX MAP No. 15 GRID No. 9, 10, 15, AND 16
PARCEL 142
THIRD ELECTION DISTRICT HOWARD COUNTY, MARYLAND

SCALE: AS SHOWN DATE: MAY 12, 2015

SHEET 6 OF 7 SDP-14-079

I:\2009\09032\dwg\09032-4001 sheet 6 SWM Details.dwg, SDP sheet 6 SWM Details, 5/13/2015 12:21:59 PM, 1:1

FOREST CONSERVATION WORKSHEET
VERSION 1.0

PROJECT: HOWARD COUNTY LIVING FARM HERITAGE MUSEUM
DATE: FEBRUARY 25, 2015

NET TRACT AREA	ACRES
A. TOTAL TRACT AREA	2.1
B. DEDUCTIONS (AREA WITHIN 100 YEAR FLOODPLAIN)	0.0
C. AREA TO REMAIN IN AGRICULTURAL PRODUCTION	0.0
D. NET TRACT AREA	2.10
LAND USE CATEGORY: MEDIUM DENSITY RESIDENTIAL	
E. AFFORESTATION THRESHOLD (NET TRACT AREA [D] x 15%)	0.32
F. CONSERVATION THRESHOLD (NET TRACT AREA [D] x 20%)	0.42
EXISTING FOREST COVER	
G. EXISTING FOREST COVER WITHIN THE NET TRACT AREA	0
H. AREA OF FOREST ABOVE AFFORESTATION TRESHOLD	0
I. AREA OF FOREST ABOVE CONSERVATION TRESHOLD	0
BREAKEVEN POINT	
J. FOREST RETENTION ABOVE THRESHOLD WITH NO MITIGATION	0
BREAKEVEN POINT	
K. CLEARING PERMITTED WITHOUT MITIGATION	0
PROPOSED FOREST CLEARING	
L. TOTAL AREA OF FOREST TO BE CLEARED OR RETAINED OUTSIDE FCE	0
M. TOTAL AREA OF FOREST TO BE RETAINED	0
PLANTING REQUIREMENTS	
N. REFORESTATION FOR CLEARING ABOVE THE CONSERVATION TRESHOLD	0
P. REFORESTATION FOR CLEARING BELOW THE CONSERVATION TRESHOLD	0
Q. CREDIT FOR RETENTION ABOVE THE CONSERVATION TRESHOLD	0
R. TOTAL REFORESTATION REQUIRED	0
S. TOTAL AFFORESTATION REQUIRED	0.32
T. TOTAL PLANTING REQUIREMENT	0.32

Forest Conservation Plan Notes:

1. Limits of disturbance shall be restricted to areas outside the limit of temporary fencing or the FCE boundary, whichever is greater.
2. There shall be no clearing, grading, construction, or disturbance of vegetation in the forest conservation easement, except as permitted by Howard County.
3. No stockpiles, parking areas, equipment areas, etc. shall occur within areas designated as forest conservation easements.
4. Temporary fencing shall be used to protect forest resources during construction. Fencing shall be installed along the limits of 4. disturbance occurring within 50 feet of the proposed FCE limits. Permanent signage will be posted at 50-100 foot intervals along all FCE limits, as shown heron.
5. WP-15-125 was approved to allow the Applicant to use the limit of disturbance, instead of the net tract area of the site, for forest conservation calculation purposes.
6. The forest conservation easement has been established to fulfill requirements of Section 16.1200 of the Howard County Code and Forest Act. No clearing, grading or construction is permitted within the forest conservation easement; however forest management practices as defined in the Deed of Forest Conservation Easement area allowed. The forest conservation obligation of 0.32 Acres has been fulfilled by the retention of 0.64 Acres located on the West Friendship Park site outside of the proposed limit of disturbance. No surety is required for forest conservation.
7. Since the forest conservation easement is on County Parkland the forest conservation easement has been recorded via a Grant of Easement through DPW, Real Estate Services (instead of a formal record plat).

FOREST CONSERVATION EASEMENT		
POINT #	NORTH	EAST
1	595,483.94	1,320,589.37
2	595,637.00	1,320,822.61

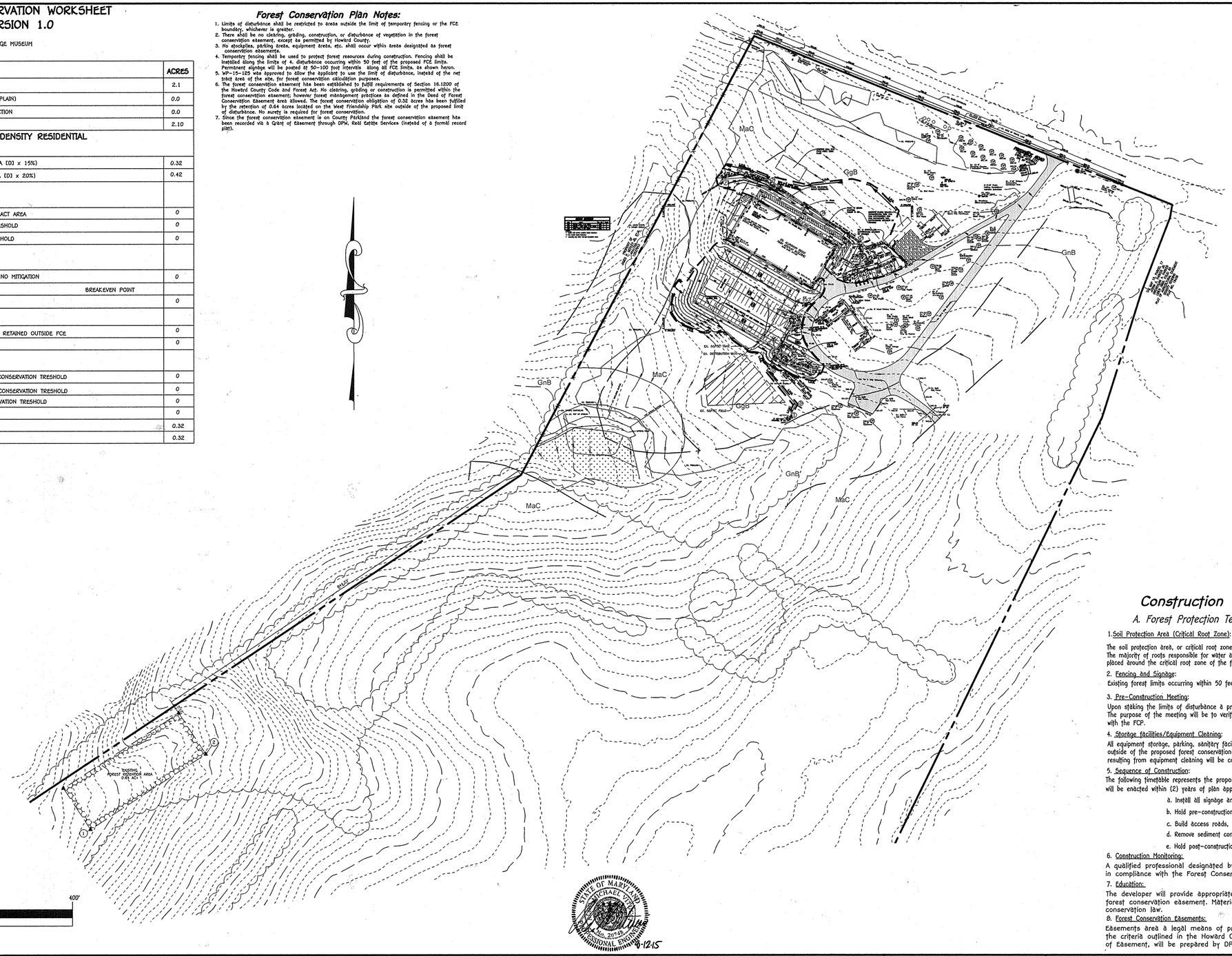

15" MINIMUM

FOREST RETENTION AREA

MACHINERY, DUMPING OR STORAGE OF ANY MATERIALS IS **PROHIBITED**

VIOLATORS ARE SUBJECT TO FINES AS IMPOSED BY THE MARYLAND FOREST CONSERVATION ACT OF 1991

11" MINIMUM

Construction Period Protection Program

A. Forest Protection Techniques

1. Soil Protection Area (Critical Root Zone):

The soil protection area, or critical root zone, of a tree is that portion of the soil column where most of its roots may be found. The majority of roots responsible for water and nutrient uptake are located just below the soil surface. Temporary fencing shall be placed around the critical root zone of the forest in areas where the forest limits occur within 50 feet of the limits of disturbance.

2. Fencing and Signage:

Existing forest limits occurring within 50 feet of the limits of disturbance shall be protected using temporary protective fencing.

3. Pre-Construction Meeting:

Upon staking the limits of disturbance a pre-construction meeting shall be held between the developer, contractor and appropriate county inspector. The purpose of the meeting will be to verify that all sediment control is in order, and to notify the contractor of possible penalties for non-compliance with the FCP.

4. Storage facilities/Equipment Cleaning:

All equipment storage, parking, sanitary facilities, material stockpiling, etc. associated with the construction of the project will be restricted to those areas outside of the proposed forest conservation easement. Cleaning of equipment will be limited to area within the LOD of the proposed site. Wastewater resulting from equipment cleaning will be controlled to prevent runoff into environmentally sensitive areas.

5. Sequence of Construction:

The following timetable represents the proposed timetable for construction of the subject property. The items outlined in the forest conservation plan will be enacted within (2) years of plan approval:

a. Install all signage and sediment control devices.
b. Hold pre-construction meeting between developer, contractor and County inspector.
c. Build access roads, install water and sewer, and construct improvements. Stabilize all disturbed areas accordingly.
d. Remove sediment control.
e. Hold post-construction meeting with County inspectors to assure compliance with FCP. Submit certification of retention.

6. Construction Monitoring:

A qualified professional designated by the developer, will monitor construction of the project to ensure that all activities are in compliance with the Forest Conservation Plan.

7. Education:

The developer will provide appropriate materials to property owners informing them of the location and purpose of the forest conservation easement. Materials may include site plans and information explaining the intent of the forest conservation law.

8. Forest Conservation Easements:

Easements area a legal means of providing permanent protection of forest, farmland and open space. In accordance with the criteria outlined in the Howard County Forest Conservation Manual, a forest conservation easement, via a Grant of Easement, will be prepared by DPW, Real Estate Services prior to commencement of construction activities.

FISHER, COLLINS & CARTER, INC.
CIVIL ENGINEERING CONSULTANTS & LAND SURVEYORS
CENTENNIAL SQUARE OFFICE PARK - 10272 BALTIMORE NATIONAL PIKE
ELLICOTT CITY, MARYLAND 21042
(410) 461 - 2855

ENGINEER'S CERTIFICATE

"I certify that this plan for sediment and erosion control represents a practical and workable plan based on my personal knowledge of the site conditions and that it was prepared in accordance with the requirements of the Howard Soil Conservation District."

Signature of Engineer — Date 9-12-15

"Professional Certification. I hereby certify that these documents were prepared or approved by me, and that I am a duly licensed professional engineer under the laws of the State of Maryland, License No. 20740, Expiration Date: March 22, 2015."

ALDO M. SCARPULLI, P.E. — DATE 9-12-15

DEVELOPER'S CERTIFICATE

"I/We certify that all development and construction will be done according to this plan for sediment and erosion control, and that all responsible personnel involved in the construction project will have a Certificate of Attendance at a Department of the Environment Approved Training Program for the Control of Sediment and Erosion before beginning the project. I also authorize periodic on-site inspection by the Howard Soil Conservation District."

Signature of Developer — Date 8-12-15

This development plan is approved for soil erosion and sediment control by the HOWARD SOIL CONSERVATION DISTRICT.

Howard SCD — Date 8/31/15

DATE	DESCRIPTION

REVISION BLOCK

APPROVED: DEPARTMENT OF PLANNING AND ZONING

Director - Department of Planning and Zoning	Date 10-13-15
Chief, Division of Land Development	Date 10-13-15
Chief, Development Engineering Division	Date 10-8-15

OWNER

HOWARD COUNTY RECREATION AND PARKS
C/O MR. JOHN R. BYRD, DIRECTOR
7120 OAKLAND MILLS ROAD
COLUMBIA, MARYLAND 21046-1677
PHONE: (410) 313-4640

DEVELOPER

HOWARD COUNTY LIVING FARM HERITAGE MUSEUM
C/O MR. JOHN FRANK
12985 ROUTE 144
WEST FRIENDSHIP, MARYLAND 21794
PHONE: (410) 489-2345

Address Chart

BUILDING NO.	STREET ADDRESS
	12985 FREDERICK ROAD
	WEST FRIENDSHIP, MARYLAND 21794

PROJECT			SECTION/AREA	PARCELS	LOT
HOWARD COUNTY LIVING FARM HERITAGE MUSEUM			-	142	-
DEED REF.	BLOCK NO.	ZONE	TAX MAP	ELEC. DIST.	CENSUS TR.
L.635, F.331	9,10,15,16	RC-DEO	15	THIRD	6030
-------			----		

FOREST CONSERVATION PLAN & DETAILS

HOWARD COUNTY LIVING FARM HERITAGE MUSEUM

KNOWN AS WEST FRIENDSHIP PARK PARKING LOT ADDITION

TAX MAP No. 15 GRID No. 9, 10, 15, AND 16
PARCEL 142
THIRD ELECTION DISTRICT HOWARD COUNTY, MARYLAND

SCALE: AS SHOWN DATE: MAY 19, 2015

SHEET 7 OF 7 SDP-14-079

I:\2009\09032\dwg\09032-4001 sheet 7 Forest Conservation Plan.dwg, SDP sheet 7 Forest Conservation Plan, 5/13/2015 12:24:06 PM, 1:1