SHEET INDEX

SHEET NO.	DESCRIPTION
1	TITLE SHEET
2	BUILDING ELEVATIONS
3-4	GEOMETRY PLAN
5-6	SITE DEVELOPMENT PLAN
7-8	STORMWATER MANAGEMENT NOTES AND DETAILS
9-12	STORMWATER MANAGEMENT PLAN VIEWS
13-14	SEDIMENT AND EROSION CONTROL PLAN
15-16	SEDIMENT AND EROSION CONTROL NOTES AND DETAILS
17-18	STREET TREE AND LANDSCAPE PLAN
19	LANDSCAPE NOTES AND DETAILS
20-21	STORM DRAIN PROFILES
22	ROADWAY DETAILS
23	SITE DETAILS
24-25	DRAINAGE AREA MAP
26-27	GREEN NEIGHBORHOOD PLANS
28-30	PRIVATE WATER PROFILES

ROAD CLASSIFICATION CHART

ROAD NAME	CLASSIFICATION	PAVING WIDTH
DUNSTEAD STREET	PRIVATE ACCESS STREET	22'
* BEAUMONT PLACE (5)	PRIVATE ACCESS STREET	16'
ISLIP WAY	PRIVATE ACCESS STREET	22'
HARLOW COURT	PRIVATE ACCESS STREET	22'

* DENOTES ONE-WAY ROAD

PRIVATE STREET SIGN CHART

STREET NAME	STATION	OFFSET	POSTED SIGN	SIGN CODE
DUNSTEAD STREET	0+34	15' L	STOP	R1-1
DUNSTEAD STREET	0+91	15' R	STOP	R1-1
DUNSTEAD STREET	0+34	15' L	STOP	R1-1
DUNSTEAD STREET	0+91	15' R	STOP	R1-1
BEAUMONT PLACE (5)	0+53	10' R	DO NOT ENTER	R5-1
BEAUMONT PLACE (5)	3+79	11' R	ONE WAY	R6-1R
BEAUMONT PLACE (5)	6+70	10' L	SPEED LIMIT 25	R2-1
ISLIP WAY	N 553130.88	E 1386442.76	STOP	R1-1
ISLIP WAY	N 553227.48	E 1386308.60	STOP	R1-1
HARLOW COURT	N 552715.93	E 1386254.16	STOP	R1-1
HARLOW COURT	N 552812.52	E 1386120.00	STOP	R1-1

PRIVATE STREET LIGHT CHART

STREET NAME	STATION	OFFSET	FIXTURE/POLE TYPE
BEAUMONT PLACE (5)	3+47	12' R	175 watt METAL HALIDE TEAR DROP FIXTURE MOUNTED AT 20' ON A 23' BLACK FIBERGLASS POLE WITH SHROUD USING A 4' ARM
	6+75	12' L	
BEAUMONT PLACE (5)	0+98	11' R	100 watt METAL HALIDE HAVRE DE GRACE ACORN POST TOP FIXTURE MOUNTED ON A 14' BLACK FIBERGLASS FLUTED POLE WITH SHROUD
	1+27	19' L	
	1+86	11' R	
	2+17	19' L	
	2+48	11' R	
	3+02	19' L	
	4+02	11' R	
	4+35	19' L	
	4+93	11' R	
	5+22	19' L	
	5+55	11' R	
	6+12	19' L	
	6+42	11' R	
DUNSTEAD STREET	0+87	14' R	WEST
	0+92	19' L	EAST
	3+73	15' L	WEST
	3+76	14' R	EAST

STREET ADDRESS CHART

BLDG. No.	STREET ADDRESS		BLDG. No.	STREET ADDRESS	
1	7103, 7105, 7107, 7109, 7111	BEAUMONT PLACE	9	7210, 7212, 7214, 7216, 7218, 7220	ISLIP WAY
2	7115, 7117, 7119, 7121, 7123	BEAUMONT PLACE	10	7075, 7077, 7079, 7081, 7083, 7085, 7087	BANBURY DRIVE
3	7131, 7133, 7135, 7137, 7139	BEAUMONT PLACE	11	7324, 7326, 7328	HARLOW WAY
4	7143, 7145, 7147, 7149, 7151	BEAUMONT PLACE	12	7202, 7204, 7206	ISLIP WAY
5	7432, 7434, 7436, 7438, 7440, 7442, 7444	SAINT MARGARETS BOULEVARD	13	7543, 7545, 7547, 7549, 7551	CROWLEY STREET
6	7310, 7312, 7314, 7316, 7318, 7320	HARLOW WAY	14	7531, 7533, 7535, 7537, 7539	CROWLEY STREET
7	7302, 7304, 7306	HARLOW WAY	15	7515, 7517, 7519, 7521, 7523	CROWLEY STREET
8	7224, 7226, 7228	ISLIP WAY	16	7503, 7505, 7507, 7509, 7511	CROWLEY STREET

SITE DEVELOPMENT PLAN
OXFORD SQUARE
"A Howard County Green Neighborhood"
PARCEL 'Y'
"EXETER PARK"
(Residential Condominium Townhouse Buildings 1 Thru 16, Units 1 Thru 156)

ZONED: TOD

TAX MAP No. 44 GRID No. 1 & 2 PARCEL No. 761

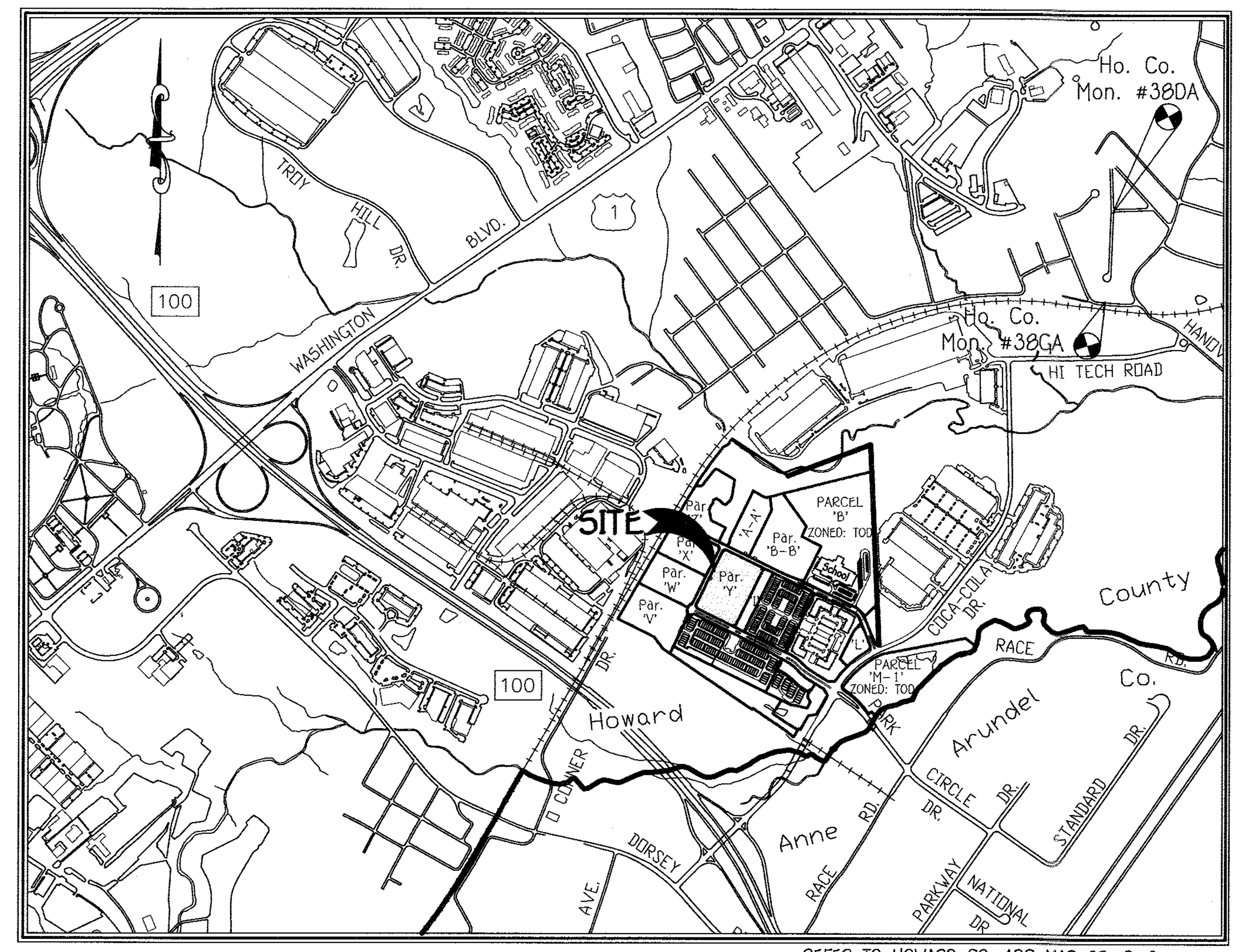

REFER TO HOWARD CO. ADC MAP 35, D-6

VICINITY MAP
SCALE: 1" = 1200'

FIRST ELECTION DISTRICT
HOWARD COUNTY, MARYLAND

GENERAL NOTES

1. ALL CONSTRUCTION SHALL BE IN ACCORDANCE WITH THE LATEST STANDARDS AND SPECIFICATIONS OF HOWARD COUNTY PLUS MSHA STANDARDS AND SPECIFICATIONS IF APPLICABLE.

2. THE CONTRACTOR SHALL NOTIFY THE DEPARTMENT OF PUBLIC WORKS / BUREAU OF ENGINEERING / CONSTRUCTION INSPECTION DIVISION AT 410-313-1880 AT LEAST (5) WORKING DAYS PRIOR TO THE START OF WORK.

3. THE CONTRACTOR SHALL NOTIFY "MISS UTILITY" AT 1-800-257-7777 AT LEAST 48 HOURS PRIOR TO ANY EXCAVATION WORK BEING DONE.

4. THIS SUBDIVISION PLAN IS SUBJECT TO THE AMENDED FIFTH EDITION OF THE SUBDIVISION AND LAND DEVELOPMENT REGULATIONS AND THE 10-06-13 ZONING REGULATIONS PER COUNCIL BILL NO. 32-2013. DEVELOPMENT OR CONSTRUCTION ON THESE LOTS OR PARCELS MUST COMPLY WITH SETBACKS AND BUFFER REGULATIONS IN EFFECT AT THE TIME OF SUBMISSION OF A BUILDING OR GRADING PERMIT APPLICATION.

5. COORDINATES BASED ON NAD'83 MARYLAND COORDINATE SYSTEM AS PROJECTED BY HOWARD COUNTY GEODETIC CONTROL STATIONS NO. 38DA AND NO. 38GA
Station No. 38DA N 556,796.3221 E 1,390,221.4576 Elev. = 126.08
Station No. 38GA N 555,897.3373 E 1,390,132.0933 Elev. = 80.78

6. SUBJECT PROPERTY ZONED TOD PER ZB-1086 M DATED 9/13/10, ZRA-140 DATED 8/1/12 and ZB-1102 M.

7. BACKGROUND INFORMATION:

a. SUBDIVISION NAME: OXFORD SQUARE - "EXETER PARK"
b. TAX MAP NO.: 38 & 44
c. PARCELS NOS.: 761
d. ZONING: TOD
e. ELECTION DISTRICT: FIRST
f. GROSS AREA OF THIS SUBMISSION = 6.963 ACRES - PARCEL 'Y' (Previously PARCEL 'E')
g. NUMBER OF PARCELS: 1
h. NUMBER OF OPEN SPACE LOTS: 0
i. AREA OF PARCELS: 6.963 ACRES
j. AREA OF NON-CREDITED OPEN SPACE LOTS = 0
k. AREA OF PUBLIC ROADWAY TO BE DEDICATED: 0.00 ACRES
l. PREVIOUS FILE NUMBERS: S-87-066, P-87-070, F-88-055, F-89-085, SDP-89-275, F-90-125, F-91-069, SDP-90-041, F-93-023, SDP-93-055, ZB-1086M, WP-11-130, F-11-057, WP-11-147, S-11-001, ECP-11-046, SDP-12-075, F-12-026, F-13-095, F-13-108, ZB-1102 M, S-14-001, SDP-13-068, F-14-011, SDP-14-019, SDP-14-027, SDP-14-071 & F-15-008.
m. AREA OF FLOODPLAIN = 0.00 AC.± (THIS SUBMISSION)
n. AREA OF 25% OR GREATER SLOPES = 0.00 AC.± (THIS SUBMISSION)
o. "MODERATELY INCOME HOUSING UNITS" ARE REQUIRED WITH THIS SUBDIVISION.
p. TOTAL NUMBER OF "MODERATELY INCOME HOUSING UNITS" PROVIDED UNDER THIS PLAN (SDP 14-072) = 156 UNITS x 0.15 = 24 MIHU.
q. "THE MODERATE INCOME HOUSING UNIT (MIHU) DECLARATION OF COVENANTS AND RESTRICTIONS WAS RECORDED IN THE HOWARD COUNTY LAND RECORDS IN LIBER 17024, FOLIO 251. THE MIHU AGREEMENT WAS SIGNED BY THE DEPARTMENT OF HOUSING AND COMMUNITY DEVELOPMENT ON 5/17/16."

8. AMENITY REQUIREMENTS: T.O.D. DEVELOPMENT SHALL INCLUDE AN AMENITY AREA PER SECTION 127.4.F.I. OF THE ZONING REGULATIONS AND THE ROUTE 1 MANUAL.
a. AMENITY AREA REQUIRED: 10.2 ACRES FOR THE ENTIRE PROJECT (101.689 x 10%)
b. TOTAL AMENITY AREA PROVIDED: = 0.45 ac.± + (1.57 ac.± UNDER SDP-13-068, 1.07 AC.± UNDER SDP-14-019, 0.78 ac. UNDER SDP-14-027 & 1.72 AC. UNDER SDP-14-071) = 5.59 AC. total

9. ALL FILL AREAS WITHIN ROADWAYS AND UNDER STRUCTURES SHALL BE COMPACTED TO A MINIMUM OF 95% COMPACTION OF AASHTO T-180.

10. NOISE STUDY WAS PREPARED BY MARS GROUP DATED NOVEMBER, 2009 (S-11-001) AND UPDATED OCTOBER, 2013 (S-14-001). THE 65DBA NOISE CONTOUR LINE DRAWN ON THIS PLAN IS ADVISORY AS REQUIRED BY THE HOWARD COUNTY DESIGN MANUAL. CHAPTER 5, REVISED FEBRUARY, 1992, AND CANNOT BE CONSIDERED TO EXACTLY LOCATE THE 65DBA NOISE EXPOSURE. THE 65DBA NOISE LINE WAS ESTABLISHED BY HOWARD COUNTY TO ALERT DEVELOPERS, BUILDERS AND FUTURE RESIDENTS THAT AREAS BEYOND THIS THRESHOLD MAY EXCEED GENERALLY ACCEPTED NOISE LEVELS ESTABLISHED BY THE U.S. DEPARTMENT OF HOUSING AND URBAN DEVELOPMENT.

11. EXISTING WATER IS PUBLIC (CONTRACT NO. 14-4836-D) EXISTING SEWER IS PUBLIC (CONTRACT NO. 14-4836-D)

12. SOILS INFORMATION TAKEN ECS SOIL SURVEY DATED NOVEMBER 2, 2009. THE PROPERTY LIES WITHIN THE DEEP RUN TRIBUTARY TO THE PATAPSCO RIVER WATERSHED (2130906). MOST OF THE PARCEL 'Q' CONSISTS OF OVERGROWN FIELD HABITAT THAT DEVELOPED ON A PORTION OF THE SITE THAT WAS MASS GRADED IN THE LATE 1980'S. IT IS DUE TO THIS PREVIOUSLY MASS GRADED CONDITION THAT THE NORMAL HOWARD COUNTY SOIL SURVEY MAPS DATED JULY 1968 DO NOT APPLY. AS A RESULT OF THIS SITE CONDITION,THE OWNER/DEVELOPER HAVE CONTRACTED ECS-MID ATLANTIC, LLC OF HANOVER, MARYLAND. THE SOIL REPORT IS DATED NOVEMBER 2009 WITH AN ADDENDUM DATED FEBRUARY 2010 THAT SUMMARIZED THE SOIL GROUPS REQUIRED FOR THIS SWM REPORT.

13. BOUNDARY OUTLINE BASED ON FIELD RUN SURVEY PERFORMED BY FISHER COLLINS AND CARTER, INC. DATED OCTOBER, 2009.

14. TOPOGRAPHIC CONTOURS BASED ON AERIAL SURVEY PERFORMED BY HARFORD AERIAL SURVEYS, INC. DATED JANUARY, 2008 AND SUPPLEMENTED WITH FIELD RUN TOPOGRAPHY PREPARED BY FISHER, COLLINS AND CARTER, INC. DATED MAY, 2010.

15. THE MARYLAND AVIATION ADMINISTRATION (MAA) APPROVED THIS PLAN ON 05/04/16 FOR SEDIMENT AND EROSION CONTROL, STORMWATER MANAGEMENT AND LANDSCAPING. PRIOR TO THE ISSUANCE OF ANY BUILDING PERMIT, AN APPROVED AIRPORT ZONING PERMIT MUST BE OBTAINED. THE MAA ALSO DETERMINED THAT ALTHOUGH OUTSIDE THE AIRPORT NOISE ZONE, OCCUPANTS OF THIS SUBDIVISION WILL EXPERIENCE NOISE FROM AIRCRAFT OVERFLIGHTS AND OTHER OPERATIONS DUE TO THE PROXIMITY OF THIS SITE TO THE AIRPORT.

16. STORMWATER MANAGEMENT WILL BE PROVIDED IN ACCORDANCE WITH THE 2007 MDE, CHAPTER 5 REGULATIONS AND THE LATEST HOWARD COUNTY DESIGN MANUAL, VOL. I, CHAPTER 5 ADOPTED ON OR AROUND MAY 4, 2010. RECHARGE VOLUME WILL BE PROVIDED THROUGH THE USE OF A STONE RESERVOIRS. WATER QUALITY AND CHANNEL PROTECTION VOLUME WILL BE PROVIDED BY MICRO BIO-RETENTION FACILITIES. OVERBANK FLOOD PROTECTION VOLUME AND EXTREME FLOOD VOLUMES ARE NOT REQUIRED FOR THIS SITE. ALL STONE RESERVOIR & MICRO BIO-RETENTION STORMWATER MANAGEMENT FACILITIES WILL BE PRIVATELY OWNED AND MAINTAINED BY THE H.O.A. OR COMMERCIAL ASSOCIATION. THE STREET TREES, PERFORATED UNDERDRAINS, FEEDERS, PLANTINGS AND SWALES WILL BE PRIVATELY OWNED AND MAINTAINED BY OXFORD SQUARE COMMERCIAL ASSOCIATION. HOWARD COUNTY WILL ONLY MAINTAIN THE INLET STRUCTURE WITHIN THE MICRO BIO-RETENTION FACILITIES ADJACENT TO THE RIGHT-OF-WAY.

17. SEVERAL SPECIMEN TREES ARE KNOWN TO BE LOCATED WITHIN THE EXISTING FOREST; HOWEVER THEY WERE NOT SURVEYED BECAUSE THERE WILL BE NO PROPOSED DISTURBANCES WITHIN THE EXISTING FOREST. THERE ARE NO SPECIMEN TREES ON PARCEL 'E'.

18. FLOODPLAIN LIMITS SHOWN FOR THE OVERALL OXFORD SQUARE PROJECT WAS PREPARED BY WHITMAN REQUARDT AND ASSOCIATES AND IS DELINEATED ON PLAT 9924 (F-91-069). FOR THE LIMITS OF THIS SUBMISSION, NO FLOODPLAIN LIMITS ARE DELINEATED.

19. THE FOREST CONSERVATION ACT REQUIREMENTS FOR THIS PROJECT HAVE BEEN MET WITH PHASE ONE OF THIS PROJECT (F-12-026).

20. THE FOREST STAND DELINEATION AND WETLAND DELINEATION FOR THIS PROJECT WAS PREPARED BY ECO-SCIENCE PROFESSIONALS, INC. DATED MARCH 17, 2011 AND APPROVED UNDER S-11-001.

21. THIS PROPERTY IS LOCATED WITHIN THE METROPOLITAN DISTRICT.

22. NO CEMETERIES OR HISTORIC STRUCTURES EXIST WITHIN THIS SUBDIVISION.

23. STREET LIGHT PLACEMENT AND THE TYPE OF FIXTURES AND POLES SHALL BE IN ACCORDANCE WITH THE HOWARD COUNTY DESIGN MANUAL, VOLUME III (2006), SECTION 5.5.A. A MINIMUM SPACING OF 20' SHALL BE MAINTAINED BETWEEN ANY STREET LIGHT AND ANY STREET TREE.

24. TRAFFIC CONTROL DEVICES:

a) THE R1-1 (STOP) SIGNS AND THE STREET NAME SIGN (SNS) ASSEMBLIES FOR THIS DEVELOPMENT MUST BE INSTALLED BEFORE THE BASE PAVING IS COMPLETED.
b) THE TRAFFIC CONTROL DEVICE LOCATIONS (SIGNS & PAVING MARKINGS) SHOWN ON THE PLANS ARE APPROXIMATE AND MUST BE FIELD APPROVED BY THE HOWARD COUNTY TRAFFIC DIVISION (410-313-5752) PRIOR TO THE INSTALLATION OF ANY OF THESE TRAFFIC CONTROL DEVICES.
c) ALL TRAFFIC CONTROL DEVICES AND THEIR LOCATIONS SHALL BE IN ACCORDANCE WITH THE LATEST EDITION OF THE "MARYLAND MANUAL ON UNIFORM TRAFFIC CONTROL DEVICES" (MdMUTCD).
d) ALL SIGN POSTS USED FOR TRAFFIC CONTROL SIGNS INSTALLED IN THE COUNTY RIGHT-OF-WAY SHALL BE MOUNTED ON A 2" GALVANIZED STEEL, PERFORATED, SQUARE TUBE POST (14 GAUGE) INSERTED INTO A 2-1/2" GALVANIZED STEEL, PERFORATED, SQUARE TUBE SLEEVE (12 GAUGE) - 3' LONG. A GALVANIZED STEEL POLE CAP SHALL BE MOUNTED ON TOP OF EACH POST.

25. THE TRAFFIC STUDY FOR THIS PROJECT WAS PREPARED BY THE TRAFFIC GROUP, DATED MARCH 2011 FOR S-11-001 AND AMENDED FOR S-14-001. PER THIS STUDY, ONCE THE TOTAL WEEKDAY EVENING PEAK HOUR TRIP GENERATION EXCEEDS 1100 TRIPS, THE ULTIMATE ROAD IMPROVEMENTS ARE NEEDED AT THE INTERSECTION OF COLA COLA DRIVE & PARK CIRCLE DRIVE. AN ADEQUATE ROAD RE-EVALUATION WILL BE PREFORMED FOR PARK CIRCLE DRIVE & COCA COLA DRIVE IN 2017 FOR EVENING PEAK HOUR.

26. NO CLEARING, GRADING OR CONSTRUCTION IS PERMITTED WITHIN THE WETLANDS, STREAMS, THEIR REQUIRED BUFFERS OR THEIR EXTENDED GREEN NEIGHBORHOOD BUFFERS, UNLESS THE ACTIVITIES ARE CONSIDERED NECESSARY OR WAIVERS ARE APPROVED BY THE DEPARTMENT OF PLANNING AND ZONING. ACTIVITIES PROPOSED IN WETLANDS, STREAMS, THEIR BUFFERS, AND THEIR EXTENDED GREEN NEIGHBORHOOD BUFFERS AS PART OF THE APPROVED STREAM AND WETLAND RESTORATION AND HABITAT MANAGEMENT PLANS ARE CONSIDERED NECESSARY BY THE DEPARTMENT OF PLANNING AND ZONING.

27. FINANCIAL SURETY FOR THE REQUIRED LANDSCAPING TREES (26 SHADE & 52 ORNAMENTAL TREES) SHALL BE POSTED AS PART OF THE DEVELOPER'S AGREEMENT IN THE AMOUNT OF $15,600.00. IN ADDITION, FINANCIAL SURETY FOR THE 22 SHADE TREES SHALL BE POSTED AS PART OF THE DEVELOPER'S AGREEMENT IN THE AMOUNT OF $6,600.00 TO MEET THE GN CREDIT E-1.

28. ON JANUARY 13, 2012, A LETTER WAS RECEIVED FROM HOWARD COUNTY PLANNING AND ZONING REGARDING A DESIGN MANUAL WAIVER FOR THE FOLLOWING SECTIONS OF DMV III (AS IT PERTAINS TO S-11-001); 2.2.G (BUS STOP TURNOUT LANE), SECTIONS 2.3.A.1.a (MINIMUM RADIUS BASED ON DESIGN SPEED), 2.3.A.3.c (HORIZONTAL DESIGN/DIVIDED HIGHWAYS), 2.4.B.1&2 (RIGHT-OF-WAY WIDTH & PAVEMENT WIDTH AND CROSS SLOPE), 2.5.B.1&4 (INTERSECTION SPACING & MINIMUM CURVATURE), 2.6.D. (SPACING AND CORNER CLEARANCE), 2.9.B. (OVERFLOW GUEST PARKING), 2.9.C. (24' DIVE LANE WIDTH), AND 2.10.E. (REFUSE STORAGE AREA LOCATION). THE FOLLOWING ARE THE RESPONSES AND CONDITIONS OF APPROVAL FROM PUBLIC WORKS, LAND DEVELOPMENT AND DEVELOPMENT ENGINEERING:

(1) SECTION 2.2.G, BUS STOPS - APPROVED FOR STA. 7+00 (SAINT MARGARETS BLVD.) AND STA. 21+00 (BANBURY DRIVE)
(2) SECTION 2.3.A.1.a., DESIGN SPEED/MINIMUM RADII - REQUEST TO REDUCE THE DESIGN SPEED FROM 40 MPH TO 30 MPH (POSTED SPEED = 25 MPH) WAS APPROVED. THE REQUEST TO REDUCE MINIMUM CENTERLINE RADII WAS APPROVED FOR SAINT MARGARETS BLVD., STA. 3+20, 4+50 AND 19+50. FOR BANBURY DRIVE, STA. 4+00, THE SIGHT DISTANCE EASEMENT WAS ADDED, GIVING APPROVAL FOR THIS LOCATION. FOR BANBURY DRIVE, STA. 19+25, THE DECISION WAS APPROVED SUBJECT TO THE REQUIRED SIGHT DISTANCE EASEMENT BEING ADDED AS PART OF PHASE 2.
(3) SECTION 2.3.A.3.c., DIVIDED ROADWAYS - REQUEST MODIFICATIONS TO ALLOW DIVIDED ROADWAY ON A MAJOR COLLECTOR AND REDUCTION OF MEDIAN WIDTH FROM 16' TO 14'. THESE REQUESTS ARE ACCEPTABLE WITH THE SWM DEVICES WITHIN THE ISLANDS TO BE MAINTAINED BY HOA OR COMMERCIAL ASSOC. ALONG SAINT MARGARETS BLVD. THE MEDIAN FOR BANBURY DRIVE WAS APPROVED SUBJECT TO ADJUSTING MEDIAN GRADES TO PROVIDE A SUMP CONDITION. THIS WAS PROVIDED ON THE PLAN.
(4) SECTION 2.4.B.1., RIGHT-OF-WAY WIDTHS-REQUEST A VARIABLE RIGHT-OF-WAY WIDTH TO EXTEND ONE FOOT BEHIND FACE OF CURB. THIS WAS APPROVED CONTINGENT ON PROVIDING AN EASEMENT ALONG SAINT MARGARETS BLVD. AND AN EASEMENT ALONG BANBURY DRIVE. THE EASEMENTS WERE PROVIDED.
(5) SECTION 2.4.B.2., PAVEMENT WIDTHS AND CROSS SLOPE-REQUEST THAT SAINT MARGARETS BLVD. HAVE LANE WIDTHS OF 16' AND ALL OTHER ROADS HAVE A TOTAL WITH OF 18' FOR ONE WAY AND 22' FOR TWO WAY TRAFFIC. APPROVED FOR ALL LOCATIONS EXCEPT THREE ALONG BANBURY DRIVE AT STA. 15+75, THE REFUGE ISLAND WAS PROVIDED. THE OTHER TWO LOCATIONS NEAR THE TRAFFIC CIRCLE AND COMMUNITY CENTER ARE DEFERRED UNTIL A FUTURE SITE PLAN PHASE, WHEN FINAL PLANS AND TURNING MOVEMENTS WILL BE PROVIDED.
(6) SECTION 2.5, TABLE 2.07, INTERSECTION SPACING-REQUEST A MINIMUM INTERSECTION SPACING OF 100 FEET. DPW RECOMMENDS APPROVAL OF THE ENTRANCES ALONG BANBURY DRIVE FOR FUTURE BUILDINGS 8, 29 & 30 (S-11-001). AND APPROVED.
(7) SECTION 2.5, TABLE 2.08, CURB FILLET RADIUS-REQUEST A REDUCTION IN THE MINIMUM CURB FILLET RADII WAS APPROVED FOR SAINT MARGARETS LANE AND BANBURY DRIVE.
(8) SECTION 2.6.D., DRIVEWAY SPACING AND CORNER CLEARANCE-REQUEST THAT THE CORNER CLEARANCE BE REDUCED FROM 75' TO 25' AND SPACING BETWEEN INTERSECTIONS BE REDUCED FROM 250' TO 100'. THE SPACING BETWEEN INTERSECTIONS REDUCTION TO 100' IS ACCEPTABLE. THE CORNER CLEARANCE REDUCTION TO 25' IS ACCEPTABLE.
(9) SECTION 2.9, TABLE 2.11, OVERFLOW/GUEST PARKING-REQUEST THAT OFF-SITE PARKING BE REDUCED FROM 2.3 SPACES PER DWELLING UNIT TO 2.0 SPACES PER DWELLING UNIT. THIS REQUEST WAS DEFERRED UNTIL FUTURE SITE PLAN PHASE ON A PARCEL BASIS.
(10) SECTION 2.10.E., SOLID WASTE STORAGE LOCATION-REQUEST THAT THE DISTANCE FROM A CENTRALIZED REFUSE STORAGE AREA TO A MULTI-FAMILY AREA BE INCREASED FROM 200' TO 300'. APPROVAL WAS GRANTED.
(11) SECTION 2.9.C., OFF STREET PARKING LOTS-REQUEST THAT THE MINIMUM AISLE WIDTHS BETWEEN ROWS OF PARKING BE REDUCED FROM 24' TO 22'. DED HAS DENIED THIS REQUEST.
(12) SECTION 5.5.A.2, STREET LIGHT LOCATION HAS BEEN APPROVED BASED ON MEETINGS WITH B.G.&E. AND HOWARD COUNTY DPW - TRAFFIC ENGINEERING.

29. IN ACCORDANCE WITH THE DESIGN MANUAL WAIVERS OUTLINED IN GENERAL NOTE No. 28 FOR REDUCED PUBLIC ROAD R/W, ALL PUBLIC ROADS SHALL PROVIDE A "PUBLIC SIGNAGE, STREET LIGHT AND UTILITY EASEMENT".

30. STREAM AND WETLAND RESTORATION AND THE HABITAT MANAGEMENT PLAN PER S-11-001 AND S-14-001 SHALL BE IMPLEMENTED WITHIN 3 YEARS OF FINAL APPROVAL OF THE SITE DEVELOPMENT PLAN (SDP-14-019) ASSOCIATED WITH CONSTRUCTION OF THE 190th RESIDENTIAL UNIT. A COPY OF THE JOINT FEDERAL/STATE APPLICATION FOR AUTHORIZATION OF REGULATED ACTIVITIES ASSOCIATED WITH THE STREAM AND WETLAND RESTORATION AND HABITAT MANAGEMENT PLAN SHALL BE SUBMITTED TO DPZ AS PART OF THE SITE DEVELOPMENT PLAN APPLICATION ASSOCIATED WITH CONSTRUCTION OF THE 190th RESIDENTIAL UNIT.

31. THIS PLAN IS SUBJECT TO WAIVER PETITION WP-11-147 TO WAIVE SUBSECTIONS 16.144(g) AND 16.144(u) OF THE HOWARD COUNTY CODE. THIS ACTION RELIEVES THE REQUIREMENT TO SUBMIT A PRELIMINARY SUBDIVISION PLAN OR A PRELIMINARY EQUIVALENT SKETCH PLAN FOLLOWING S-11-001 IN ORDER TO RECEIVE A GREEN NEIGHBORHOOD ALLOCATION. WAIVER PETITION WP-11-147 WAS APPROVED ON APRIL 27, 2011 BY THE DEPARTMENT OF PLANNING AND ZONING.

32. A PRIVATE ROAD STREET NAME SIGN ASSEMBLY FOR ALL PRIVATE ROADWAYS THAT INTERSECT A PUBLIC ROADWAY SHALL BE FABRICATED AND INSTALLED BY HOWARD COUNTY BUREAU OF HIGHWAYS AT THE DEVELOPERS/OWNERS EXPENSE. CONTACT HOWARD COUNTY TRAFFIC DIVISION AT 410-313-5752 FOR DETAILS AND COST ESTIMATES.

33. SEVERAL DESIGN MANUAL WAIVERS HAVE BEEN REQUEST FOR THIS SITE DEVELOPMENT PLAN. THEY ARE AS FOLLOWS:
(1) DESIGN MANUAL VOLUME I, SECTION 5.2.4.1 WHICH REQUIRES A MINIMUM OF 10-FEET BETWEEN A STRUCTURE AND ESD PRACTICE.
(2) DESIGN MANUAL VOLUME III, SECTION 2.4.B.2 WHICH REQUIRES THAT ROADWAYS BE CONSTRUCTED WITH A CROWNED CENTERLINE AS SHOWN ON THE HOWARD COUNTY STANDARD DETAILS.
(3) DESIGN MANUAL VOLUME III, SECTION 2.9.C WHICH REQUIRES THAT STANDARD PARKING SPACES MUST BE 9' x 18'.

BASED ON THE INFORMATION PROVIDED TO HOWARD COUNTY, THE FOLLOWING REQUESTS HAVE BEEN APPROVED:
(1) DESIGN MANUAL VOLUME III, SECTION 2.4.B.2 BECAUSE OF THE LIMITED USE AND LOW SPEED OF THE PROPOSED ROADWAY. IN ADDITION, THE ROADWAY SHALL BE PRIVATELY OWNED AND MAINTAINED.
(2) DESIGN MANUAL VOLUME III, SECTION 2.9.C SUBJECT TO THE FOLLOWING:
(a) THE REDUCED PARKING SPACE CAN NOT BE USED WHERE A VEHICLE WILL OVERHANG A SIDEWALK.
(b) IT IS RECOMMENDED THAT MODIFIED CURB BE USED WHERE IS EXPECTED AT SMALLER PARKING SPACES.
(c) THIS WAIVER ONLY APPLIES TO A LIMITED NUMBER OF SPACES AS SHOWN ON SDP-14-072.

BASED ON THE INFORMATION PROVIDED TO HOWARD COUNTY, THE FOLLOWING REQUEST HAS BEEN DENIED:
(1) DESIGN MANUAL VOLUME I, SECTION 5.2.4.1 BASED ON THE FOLLOWING:
(a) A REDUCED OFFSET INCREASES THE PROBABILITY OF SATURATING TO A SLAB AND/OR FOUNDATION. THE SATURATED CONDITIONS COULD CAUSE PROBLEMS WITH SETTLEMENT AND/OR SHIFTING DUE TO FREEZE/THAW CYCLING.
(b) THE SWM FACILITY COULD BE MODIFIED TO MEET THE MINIMUM STANDARDS WHILE MAINTAINING THE 10-FOOT OFFSET.

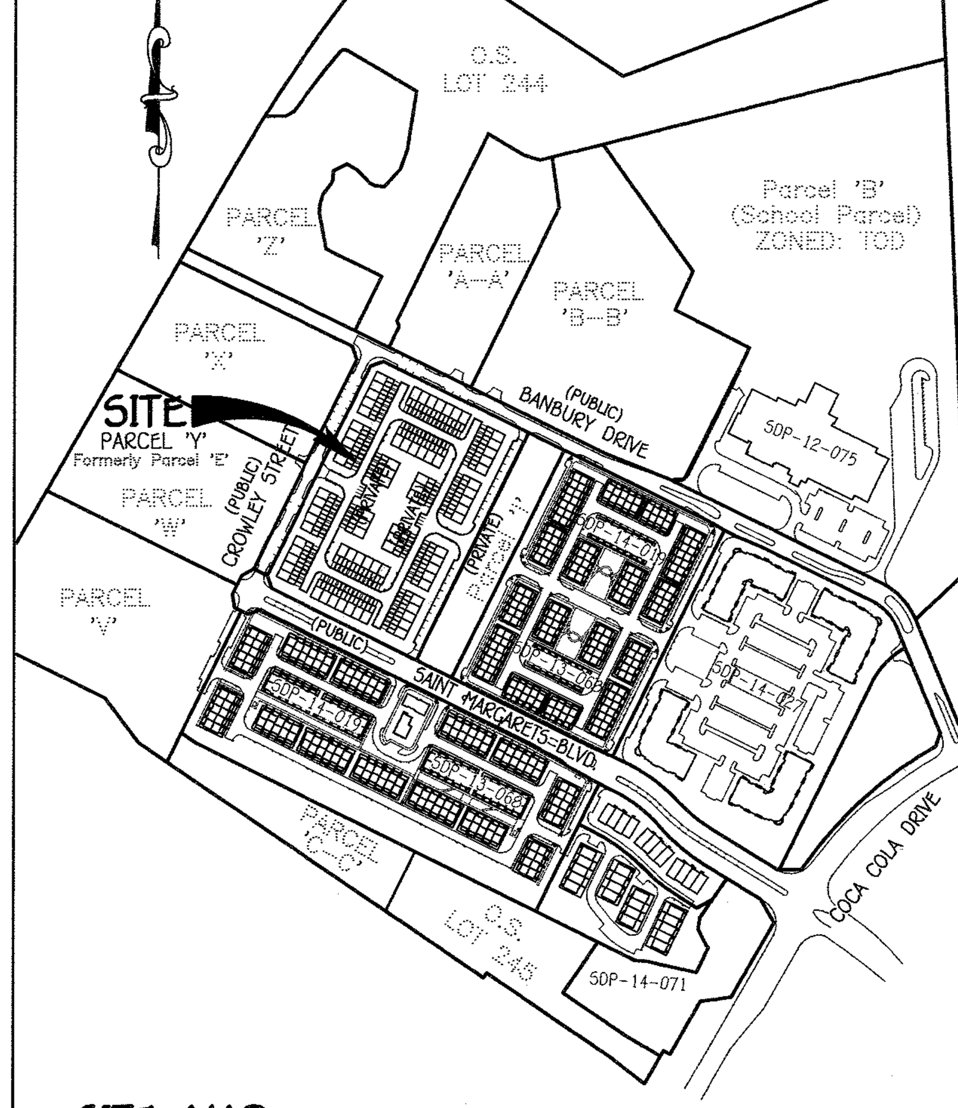

SITE MAP
SCALE: 1" = 400'

LEGEND

SYMBOL	DESCRIPTION
---102---	EXISTING CONTOUR 2' INTERVAL
---100---	EXISTING CONTOUR 10' INTERVAL
—102—	PROPOSED CONTOUR 2' INTERVAL
—100—	PROPOSED CONTOUR 10' INTERVAL
-SF—SF-	SILT FENCE
	DRAINAGE LIMITS
L.O.D.	LIMIT OF DISTURBANCE
	EXISTING TREELINE
	WETLANDS BUFFER
	WETLANDS LIMITS
— FP —	FLOODPLAIN LIMITS
	PROPOSED CROSSWALK
ESD #E-1	STORMWATER MANAGEMENT DEVICE
	STORM DRAIN
	STREET LIGHT (proposed) STREET LIGHT (existing)
	STREET TREE (proposed)
	STREET TREE (existing)
	PROPOSED GARDEN BENCH
	PROPOSED BRICK PEIR & SITE WALL
	PROPOSED MAILBOX BANK
B-12A	BORING LOCATION
---●	PROPOSED WHC
	PROPOSED SHC

PARKING REQUIREMENTS FOR PARCEL 'Y'

LAND USE	MINIMUM PARKING REQUIRED	PARKING PROVIDED
CONDOMINIUM TOWNHOUSES	312 (156 @ 2 SPACES / UNIT)	312 GARAGE UNITS = 156 UNITS W/1 CAR GARAGE = 156
OVERFLOW PARKING (0.5 PARKING SPACES PER CONDO UNIT)	156 x 0.5 = 78	63 [13 spaces Along Saint Margarets Blvd. 6 spaces Along Banbury Drive 14 spaces Along Crowley Street 22 spaces Along Beaumont Place (5) 8 spaces Along Harlow/Islip Way]
TOTAL	390 (2.5 spaces/unit)	375 (2.4 spaces/unit)

NOTE: A PARKING NEEDS ANALYSIS WAS APPROVED BY HOWARD COUNTY FOR THIS REDUCED NUMBER

FISHER, COLLINS & CARTER, INC.
CIVIL ENGINEERING CONSULTANTS & LAND SURVEYORS
CENTENNIAL SQUARE OFFICE PARK - 10272 BALTIMORE NATIONAL PIKE
ELLICOTT CITY, MARYLAND 21042
(410) 461 - 2855

NO.	REVISION	DATE

STATE OF MARYLAND MICHAEL ... No. 20748 PROFESSIONAL ENGINEER 5/4/16

Owner/Builder
U.S. Home Corp. dba Lennar
7035 Albert Einstein Drive, Suite 200
Columbia, Maryland 21046
Ph# 410-997-5522

Developer
U.S. Home Corp. dba Lennar
7035 Albert Einstein Drive, Suite 200
Columbia, Maryland 21046
Ph# 410-997-5522

APPROVED: HOWARD COUNTY DEPARTMENT OF PLANNING AND ZONING

Chief, Division of Land Development — Date 8-9-16

Chief, Development Engineering Division — Date 6-13-16

Director - Department of Planning and Zoning — Date 8-9-16

SUBDIVISION			SECTION/AREA		PARCEL No.
OXFORD SQUARE			----		'Y' (Formerly 'E')
PLAT NO.	BLOCK NO.	ZONE	TAX/ZONE	ELEC. DIST.	CENSUS TR.
23791 - 23792	---	TOD	44	1st.	601101

TITLE SHEET

OXFORD SQUARE
"A Howard County Green Neighborhood"
Parcel 'Y'
"EXETER PARK"
(Residential Condominium Townhouse Buildings 1 Thru 16, Units 1 Thru 156)
Zoned: TOD
Tax Map No.: 38 Grid No.: 20 Parcel No.: 761
First Election District Howard County, Maryland
Scale: As Shown
Date: April 18, 2016
Sheet 1 Of 30

SDP-14-072

I:\2009\09014\dwg\SDP (Lennar) Parcel 'E'\09014 Sheet 1 Title Sheet.dwg, 5/4/2016 10:51:40 AM, 1:1

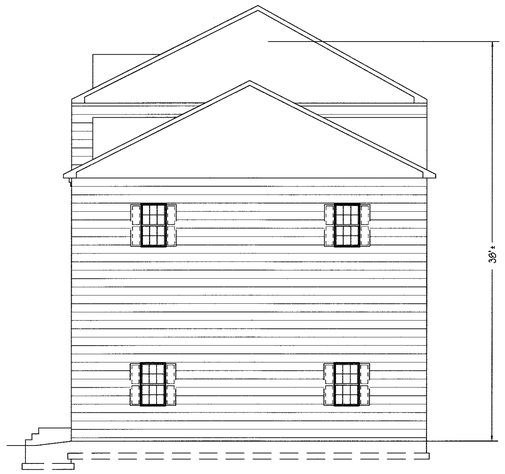

SIDE ELEVATION

NO SCALE

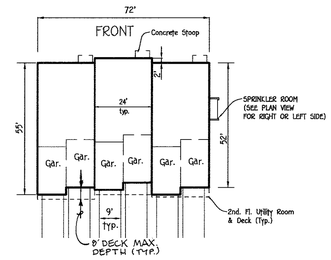

6 UNIT CONDO BUILDING

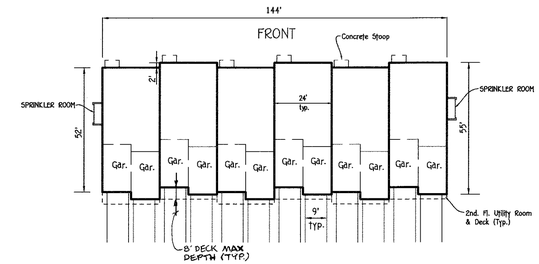

12 UNIT CONDO BUILDING

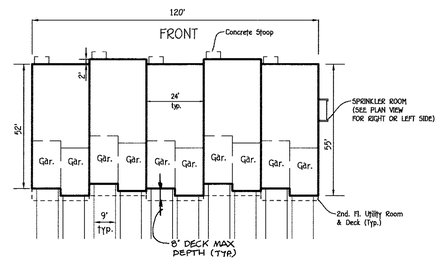

10 UNIT CONDO BUILDING

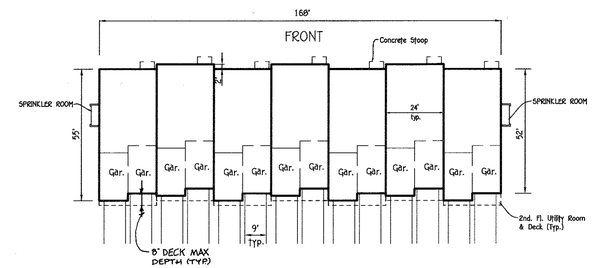

14 UNIT CONDO BUILDING

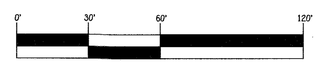

SCALE: 1" = 30'

FISHER, COLLINS & CARTER, INC.
CIVIL ENGINEERING CONSULTANTS & LAND SURVEYORS
CENTENNIAL SQUARE OFFICE PARK - 10272 BALTIMORE NATIONAL PIKE
ELLICOTT CITY, MARYLAND 21042
(410) 461 - 2855

NO.	REVISION	DATE

STATE OF MARYLAND
MICHAEL E. FISHER
No. 20748
PROFESSIONAL ENGINEER
7/14/16

Owner/Builder

U.S. Home Corp. dba Lennar
7035 Albert Einstein Drive, Suite 200
Columbia, Maryland 21046
Ph# 410-997-5522

Developer

U.S. Home Corp. dba Lennar
7035 Albert Einstein Drive, Suite 200
Columbia, Maryland 21046
Ph# 410-997-5522

APPROVED: HOWARD COUNTY DEPARTMENT OF PLANNING AND ZONING

Chief, Division of Land Development — Date 8-9-16

Chief, Development Engineering Division — Date 6.13.16

Director - Department of Planning and Zoning — Date 8-9-16

SUBDIVISION	SECTION/AREA	PARCEL No.
OXFORD SQUARE	----	"Y" (Formerly "E")

PLAT NO.	BLOCK NO.	ZONE	TAX/ZONE	ELEC. DIST.	CENSUS TR.
23791-23792	---	TOD	44	1st.	601101

BUILDING ELEVATIONS

OXFORD SQUARE

"A Howard County Green Neighborhood"

Parcel 'Y'

"EXETER PARK"

(Residential Condominium Townhouse Buildings 1 Thru 16, Units 1 Thru 156)

Zoned: TOD

Tax Map No.: 38 Grid No.: 20 Parcel No.: 761

First Election District Howard County, Maryland

Scale: As Shown

Date: April 18, 2016

Sheet 2 Of 30

SDP-14-072

I:\2005\09014\dwg\SDP (Lennar) Parcel 'E'\09014 Sheet 2 bldg elevations.dwg, 7/14/2016 2:04:16 PM, 1:1

LEGEND

SYMBOL	DESCRIPTION
(7502)	ADDRESS
ESD #E-1	STORMWATER MANAGEMENT DEVICE
	STORM DRAIN
	PROPOSED GARDEN BENCH
	PROPOSED BRICK PEIR & SITE WALL
	PROPOSED WHC
	PROPOSED SHC
	STREET LIGHT (proposed) STREET LIGHT (existing)
	STREET TREE (existing)
	PROPOSED SIDEWALK
Gar.	Garage

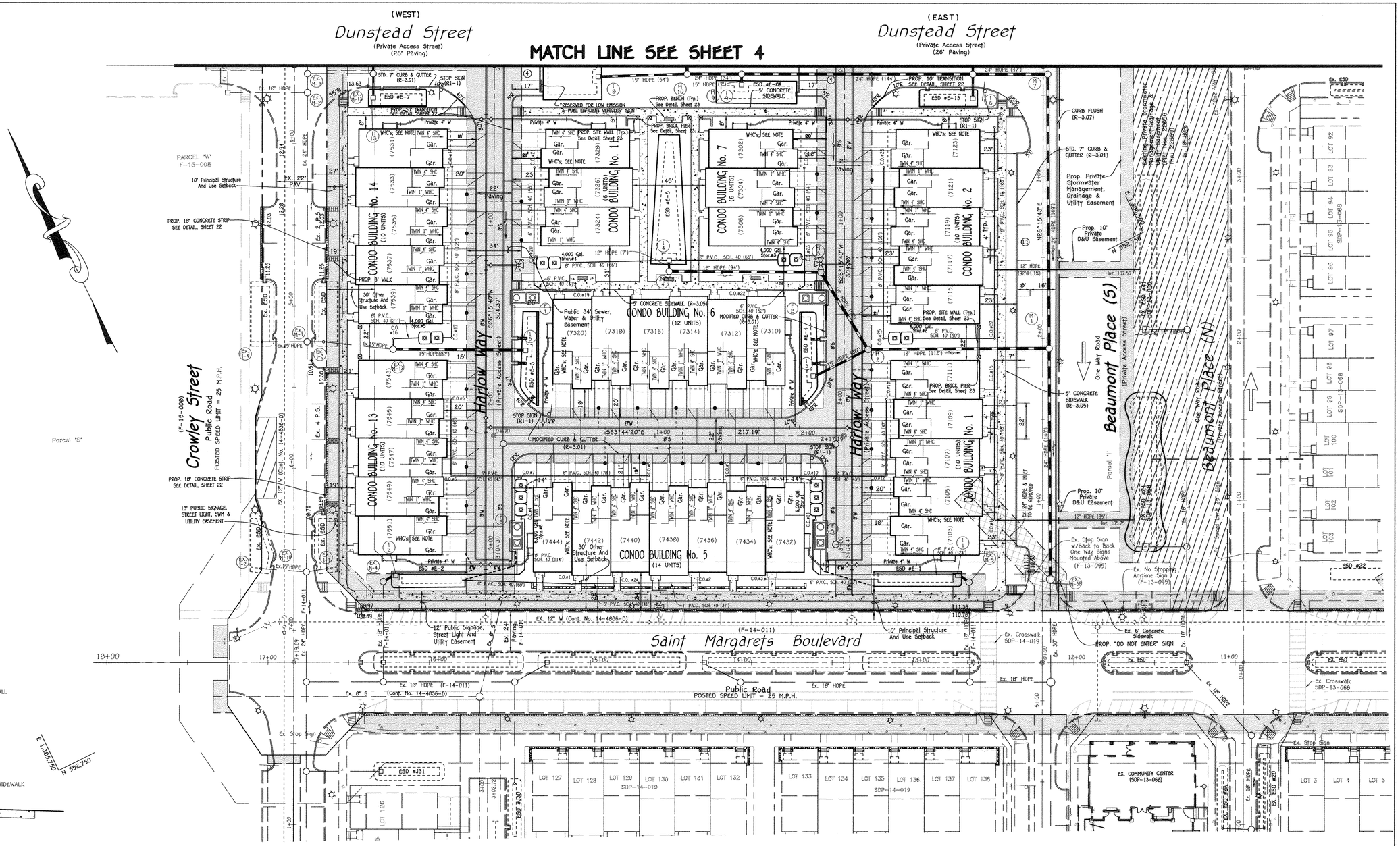

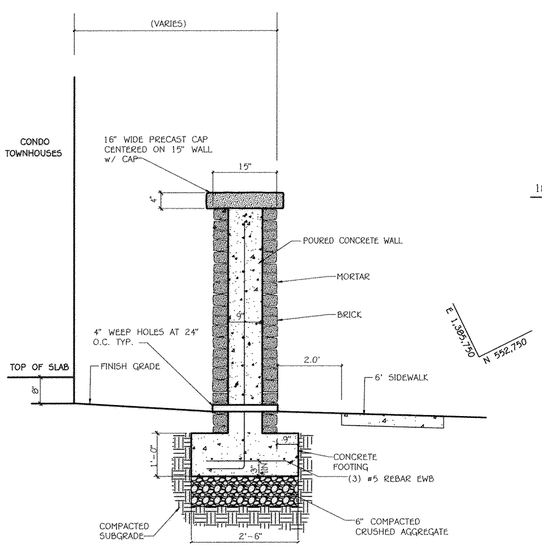

2'-0" HIGH LANDSCAPE WALL SECTION
FOR UNITS FACING SAINT MARGARETS BLVD.
NOT TO SCALE

STORMWATER MANAGEMENT MAINTENANCE NOTE

ALL STORMWATER MANAGEMENT FACILITIES WILL BE PRIVATELY OWNED AND MAINTAINED BY THE OXFORD SQUARE COMMERCIAL ASSOCIATION, INC. THE STREET TREES, PERFORATED UNDERDRAINS, FEEDERS, PLANTINGS AND SWALES WILL ALSO BE PRIVATELY OWNED AND MAINTAINED BY THE OXFORD SQUARE COMMERCIAL ASSOCIATION. HOWARD COUNTY WILL ONLY MAINTAIN THE INLET STRUCTURE WITHIN THE MICRO BIO-RETENTION FACILITIES ADJACENT TO A PUBLIC RIGHT-OF-WAY.

PLAN

0' 30' 60' 120'

SCALE: 1" = 30'

FISHER, COLLINS & CARTER, INC.
CIVIL ENGINEERING CONSULTANTS & LAND SURVEYORS
CENTENNIAL SQUARE OFFICE PARK - 10272 BALTIMORE NATIONAL PIKE
ELLICOTT CITY, MARYLAND 21042
(410) 461 - 2855

NO.	REVISION	DATE

STATE OF MARYLAND MICHAEL VITTORIO CHIEFFO No. 20748 PROFESSIONAL ENGINEER
5/4/16

Owner/Builder
U.S. Home Corp. dba Lennar
7035 Albert Einstein Drive, Suite 200
Columbia, Maryland 21046
Ph# 410-997-5522

Developer
U.S. Home Corp. dba Lennar
7035 Albert Einstein Drive, Suite 200
Columbia, Maryland 21046
Ph# 410-997-5522

APPROVED: HOWARD COUNTY DEPARTMENT OF PLANNING AND ZONING

Chief, Division of Land Development — Date: 8-9-16

Chief, Development Engineering Division — Date: 6-13-16

Director - Department of Planning and Zoning — Date: 8-9-16

SUBDIVISION	SECTION/AREA	PARCEL No.
OXFORD SQUARE	----	'Y' (Formerly 'E')

PLAT NO.	BLOCK NO.	ZONE	TAX/ZONE	ELEC. DIST.	CENSUS TR.
23791-23792	---	TOD	44	1st.	601101

GEOMETRY PLAN

OXFORD SQUARE

"A Howard County Green Neighborhood"

Parcel 'Y'

"EXETER PARK"

(Residential Condominium Townhouse Buildings 1 Thru 16, Units 1 Thru 156)

Zoned: TOD
Tax Map No.: 30 Grid No.: 20 Parcel No.: 761
First Election District Howard County, Maryland
Scale: As Shown
Date: April 18, 2016
Sheet 3 Of 30

SDP-14-072

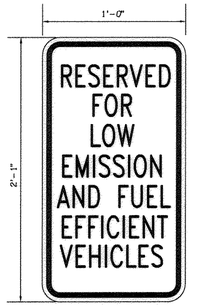

LE & FE SIGN DETAIL
NOT TO SCALE

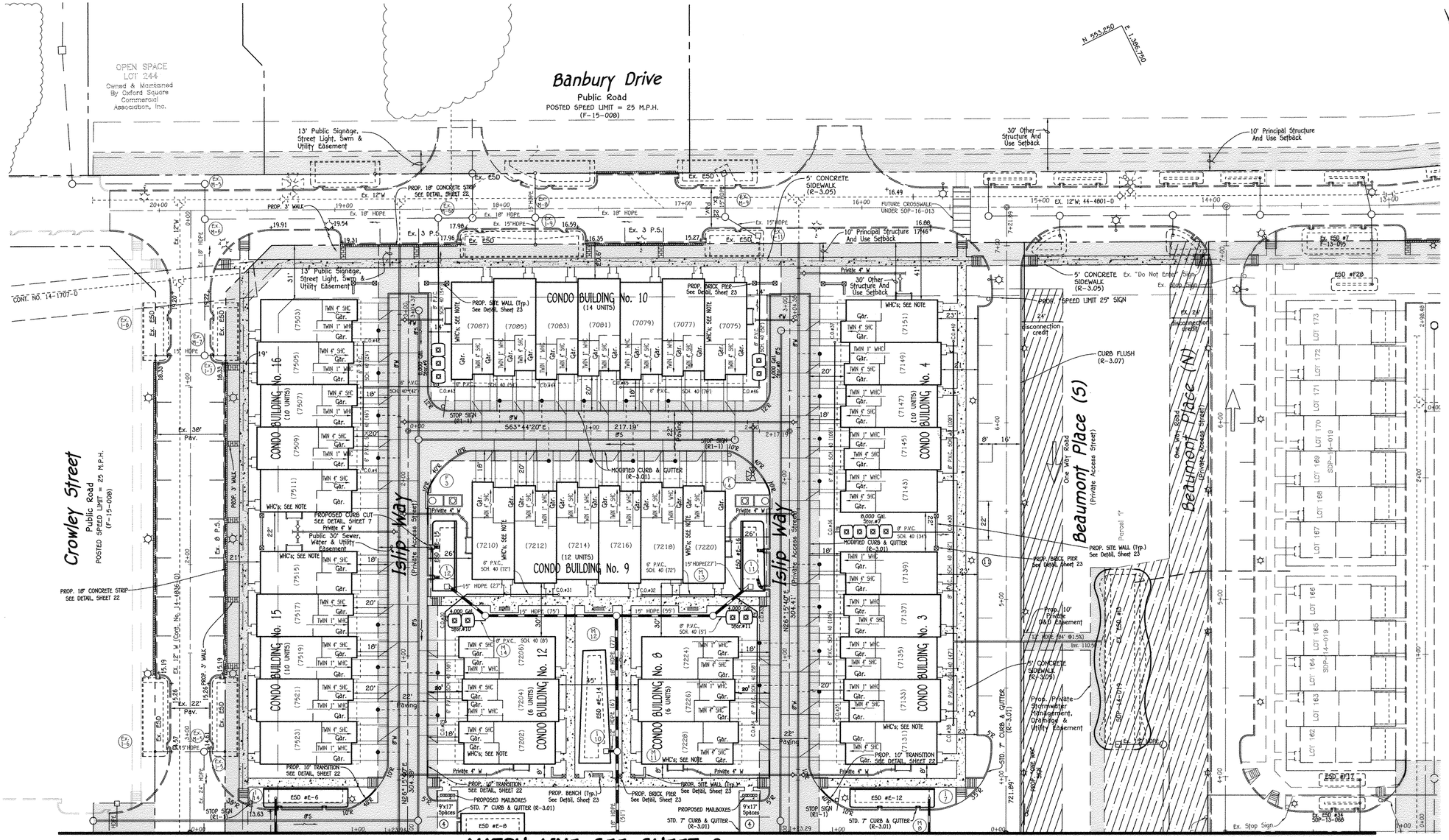

MATCH LINE SEE SHEET 3

Dunstead Street
(Private Access Street)
(26' Paving)
(WEST)

Dunstead Street
(Private Access Street)
(26' Paving)
(EAST)

PLAN

0' 30' 60' 120'

SCALE: 1" = 30'

STORMWATER MANAGEMENT MAINTENANCE NOTE

ALL STORMWATER MANAGEMENT FACILITIES WILL BE PRIVATELY OWNED AND MAINTAINED BY THE OXFORD SQUARE COMMERCIAL ASSOCIATION, INC. THE STREET TREES, PERFORATED UNDERDRAINS, FEEDERS, PLANTINGS AND SWALES WILL ALSO BE PRIVATELY OWNED AND MAINTAINED BY THE OXFORD SQUARE COMMERCIAL ASSOCIATION. HOWARD COUNTY WILL ONLY MAINTAIN THE INLET STRUCTURE WITHIN THE MICRO BIO-RETENTION FACILITIES ADJACENT TO A PUBLIC RIGHT-OF-WAY.

FISHER, COLLINS & CARTER, INC.
CIVIL ENGINEERING CONSULTANTS & LAND SURVEYORS
CENTENNIAL SQUARE OFFICE PARK - 10272 BALTIMORE NATIONAL PIKE
ELLICOTT CITY, MARYLAND 21042
(410) 461 - 2855

NO.	REVISION	DATE

STATE OF MARYLAND
MICHAEL VILLA
No. 20748
PROFESSIONAL ENGINEER
5/4/16

Owner/Builder
U.S. Home Corp. dba Lennar
7035 Albert Einstein Drive, Suite 200
Columbia, Maryland 21046
Ph# 410-997-5522

Developer
U.S. Home Corp. dba Lennar
7035 Albert Einstein Drive, Suite 200
Columbia, Maryland 21046
Ph# 410-997-5522

APPROVED: HOWARD COUNTY DEPARTMENT OF PLANNING AND ZONING

Chief, Division of Land Development — Date: 8-9-16

Chief, Development Engineering Division — Date: 6.13.16

Director - Department of Planning and Zoning — Date: 8-9-16

SUBDIVISION	SECTION/AREA	PARCEL No.
OXFORD SQUARE	----	'Y' (Formerly 'E')

PLAT NO.	BLOCK NO.	ZONE	TAX/ZONE	ELEC. DIST.	CENSUS TR.
23791-23792	---	TOD	44	1st.	601101

GEOMETRY PLAN

OXFORD SQUARE

"A Howard County Green Neighborhood"

Parcel 'Y'

"EXETER PARK"

(Residential Condominium Townhouse Buildings 1 Thru 16, Units 1 Thru 156)

Zoned: TOD
Tax Map No.: 38 Grid No.: 20 Parcel No.: 761
First Election District Howard County, Maryland
Scale: As Shown
Date: April 18, 2016
Sheet 4 Of 30

SDP-14-072

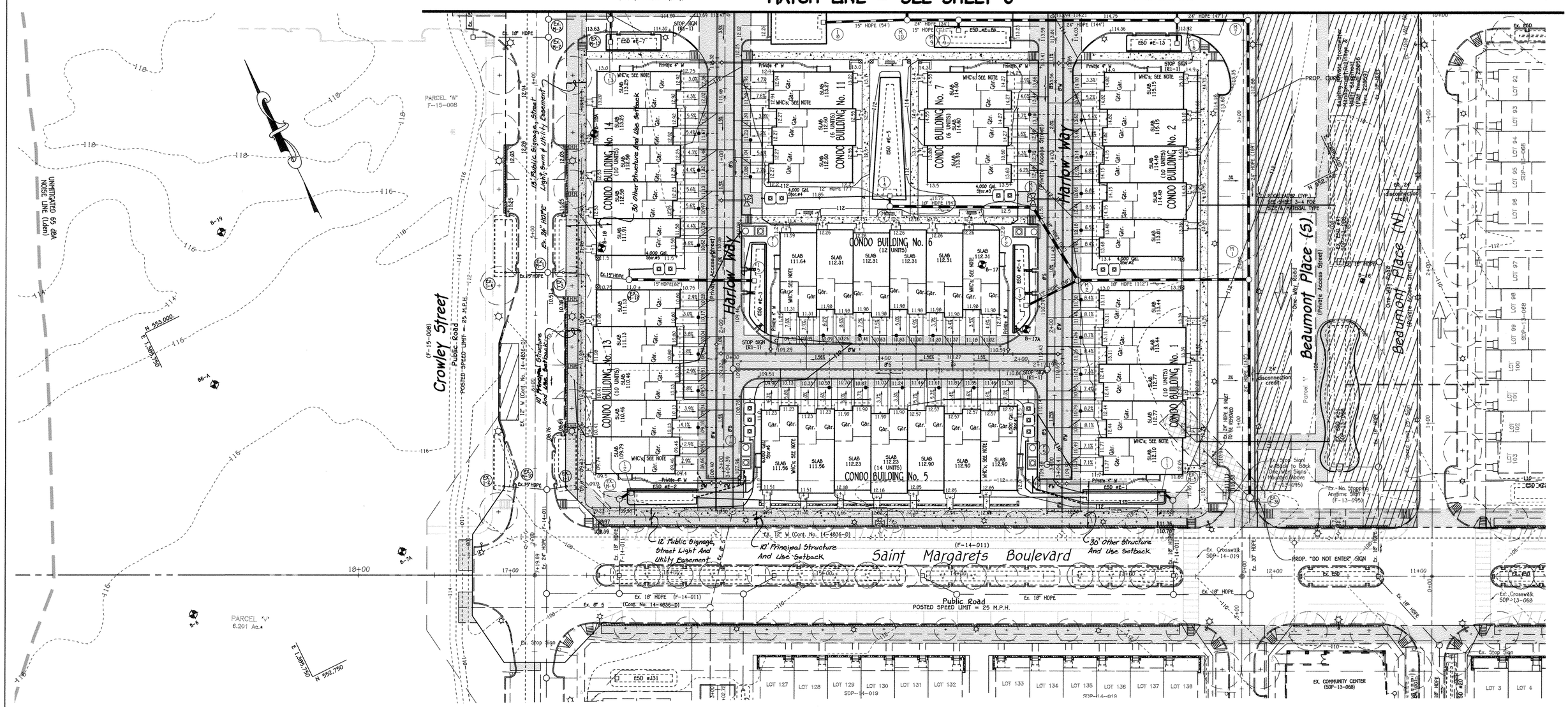

0' 30' 60' 120'

SCALE: 1" = 30'

NOTE: EACH DOWNSPOUT THAT IS CONNECTED TO A ROOFLEADER SHALL HAVE AN OVERFLOW AND HAVE AN GUTTER DRAIN FILTER.

- DENOTES UNDERGROUND RAINWATER TANK SEE DETAILS, SHEET 7

- DENOTES FILTERRA PRECAST w/SEDIMENTATION CHAMBER SEE DETAILS, SHEET 7

WHC NOTE: THE DOMESTIC WATER HOUSE CONNECTIONS FOR THE FOLLOWING INDIVIDUAL CONDOMINIUM UNITS SHALL BE "SPLIT" FROM THE 4" INSIDE COMBINED FIRE / DOMESTIC WATER MAIN WITHIN THE EXTERIOR SPRINKLER ROOM & SHALL HAVE 3/4" INSIDE METER SETTINGS:

CONDO BUILDING NO. 1: 7103
CONDO BUILDING NO. 2: 7123
CONDO BUILDING NO. 5: 7432 & 7444
CONDO BUILDING NO. 6: 7310 & 7320
CONDO BUILDING NO. 7: 7302
CONDO BUILDING NO. 11: 7328
CONDO BUILDING NO. 13: 7551
CONDO BUILDING NO. 14: 7531

FISHER, COLLINS & CARTER, INC.
CIVIL ENGINEERING CONSULTANTS & LAND SURVEYORS
CENTENNIAL SQUARE OFFICE PARK - 10272 BALTIMORE NATIONAL PIKE
ELLICOTT CITY, MARYLAND 21042
(410) 461 - 2855

NO.	REVISION	DATE

STATE OF MARYLAND
MICHAEL VITT
No. 20748
PROFESSIONAL ENGINEER
5/4/16

Owner/Builder
U.S. Home Corp. dba Lennor
7035 Albert Einstein Drive, Suite 200
Columbia, Maryland 21046
Ph# 410-997-5522

Developer
U.S. Home Corp. dba Lennor
7035 Albert Einstein Drive, Suite 200
Columbia, Maryland 21046
Ph# 410-997-5522

APPROVED: HOWARD COUNTY DEPARTMENT OF PLANNING AND ZONING

Chief, Division of Land Development — Date 8-5-16

Chief, Development Engineering Division — Date 6-13-16

Director - Department of Planning and Zoning — Date 8-9-16

SUBDIVISION	SECTION/AREA	PARCEL No.
OXFORD SQUARE	----	'Y' (Formerly 'E')

PLAT NO.	BLOCK NO.	ZONE	TAX/ZONE	ELEC. DIST.	CENSUS TR.
23791-23792	---	TOD	44	1st.	601101

SITE DEVELOPMENT PLAN

OXFORD SQUARE

"A Howard County Green Neighborhood"

Parcel 'Y'

"EXETER PARK"

(Residential Condominium Townhouse Buildings 1 Thru 16, Units 1 Thru 156)

Zoned: TOD
Tax Map No.: 38 Grid No.: 20 Parcel No.: 761
First Election District Howard County, Maryland
Scale: As Shown
Date: April 18, 2016
Sheet 5 Of 30

SDP-14-072

I:\2009\09014\dwg\SDP (Lennar) Parcel 'E'\09014 Sheet 5-6 sdp.dwg, 4/18/2016 7:25:32 AM, 1:1

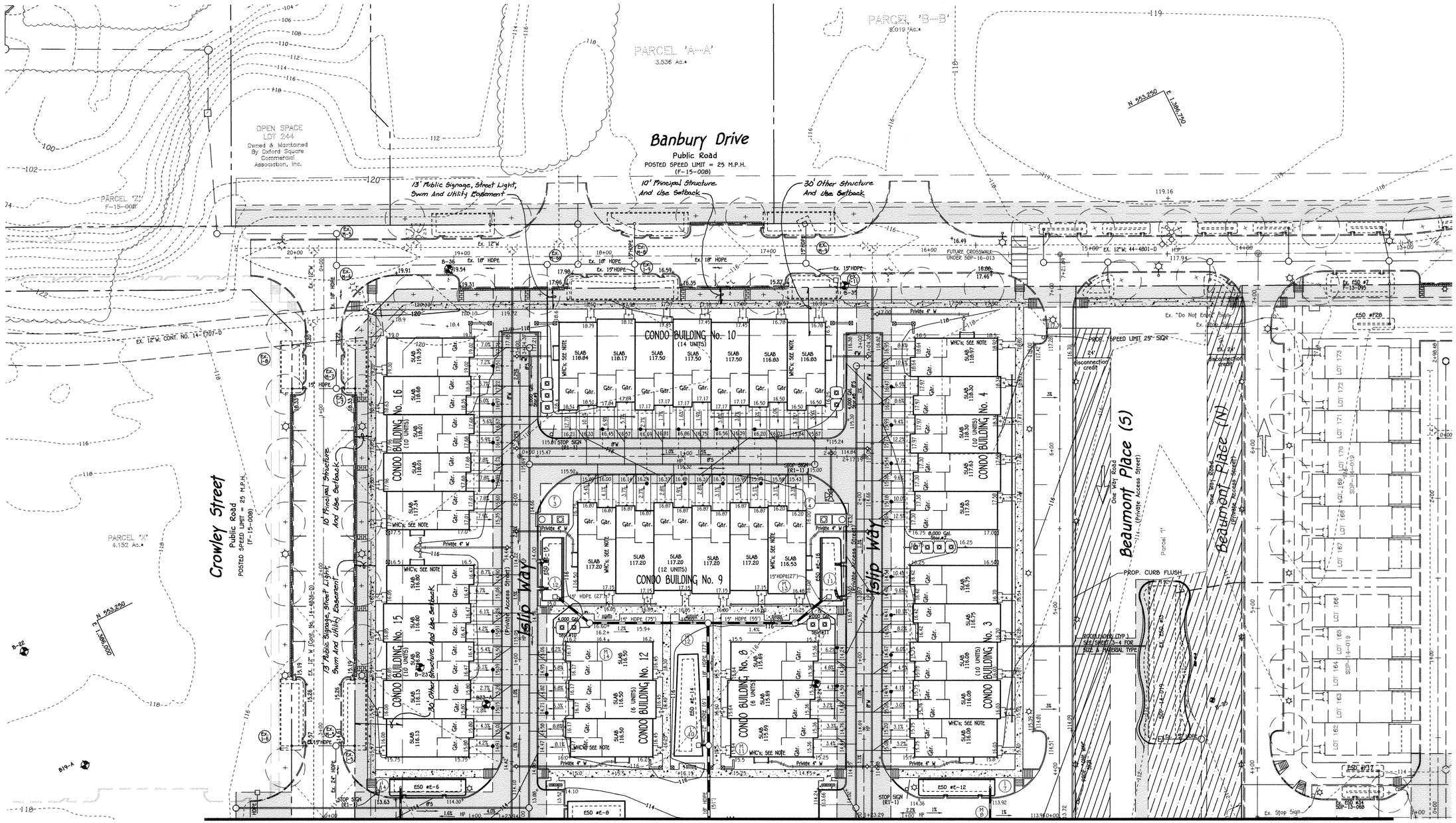

MATCH LINE - SEE SHEET 5

0' 30' 60' 120'

SCALE: 1" = 30'

WHC NOTE: THE DOMESTIC WATER HOUSE CONNECTIONS FOR THE FOLLOWING INDIVIDUAL CONDOMINIUM UNITS SHALL BE "SPLIT" FROM THE 4" INSIDE COMBINED FIRE / DOMESTIC WATER MAIN WITHIN THE EXTERIOR SPRINKLER ROOM & SHALL HAVE 3/4" INSIDE METER SETTINGS:

CONDO BUILDING NO. 3: 7131
CONDO BUILDING NO. 4: 7151
CONDO BUILDING NO. 8: 7228
CONDO BUILDING NO. 9: 7210 & 7220
CONDO BUILDING NO. 10: 7075 & 7087
CONDO BUILDING NO. 12: 7202
CONDO BUILDING NO. 15: 7515
CONDO BUILDING NO. 16: 7511

- DENOTES UNDERGROUND RAINWATER TANK SEE DETAILS, SHEET 7

- DENOTES FILTERRA PRECAST w/SEDIMENTATION CHAMBER SEE DETAILS, SHEET 7

NOTE: EACH DOWNSPOUT THAT IS CONNECTED TO A ROOFLEADER SHALL HAVE AN OVERFLOW AND HAVE AN GUTTER DRAIN FILTER.

FISHER, COLLINS & CARTER, INC.
CIVIL ENGINEERING CONSULTANTS & LAND SURVEYORS
CENTENNIAL SQUARE OFFICE PARK - 10272 BALTIMORE NATIONAL PIKE
ELLICOTT CITY, MARYLAND 21042
(410) 461 - 2855

NO.	REVISION	DATE

STATE OF MARYLAND
MICHAEL VICTOR
No. 20748
PROFESSIONAL ENGINEER
5/4/16

Owner/Builder
U.S. Home Corp. dba Lennar
7035 Albert Einstein Drive, Suite 200
Columbia, Maryland 21046
Ph# 410-997-5522

Developer
U.S. Home Corp. dba Lennar
7035 Albert Einstein Drive, Suite 200
Columbia, Maryland 21046
Ph# 410-997-5522

APPROVED: HOWARD COUNTY DEPARTMENT OF PLANNING AND ZONING

Chief, Division of Land Development — Date: 8-9-16

Chief, Development Engineering Division — Date: 6.13.16

Director - Department of Planning and Zoning — Date: 8-9-16

SUBDIVISION	SECTION/AREA	PARCEL No.
OXFORD SQUARE	----	'Y' (Formerly 'E')

PLAT NO.	BLOCK NO.	ZONE	TAX/ZONE	ELEC. DIST.	CENSUS TR.
23791 - 23792	---	TOD	44	1st.	601101

SITE DEVELOPMENT PLAN

OXFORD SQUARE

"A Howard County Green Neighborhood"

Parcel 'Y'

"EXETER PARK"

(Residential Condominium Townhouse Buildings 1 Thru 16, Units 1 Thru 156)

Zoned: TOD
Tax Map No.: 38 Grid No.: 20 Parcel No.: 761
First Election District Howard County, Maryland
Scale: As Shown
Date: April 18, 2016
Sheet 6 Of 30

SDP-14-072

I:\2009\09014\dwg\SDP (Lennar) Parcel 'E'\09014 Sheet 5-6 sdp.dwg, 4/18/2016 7:26:04 AM, 1:1

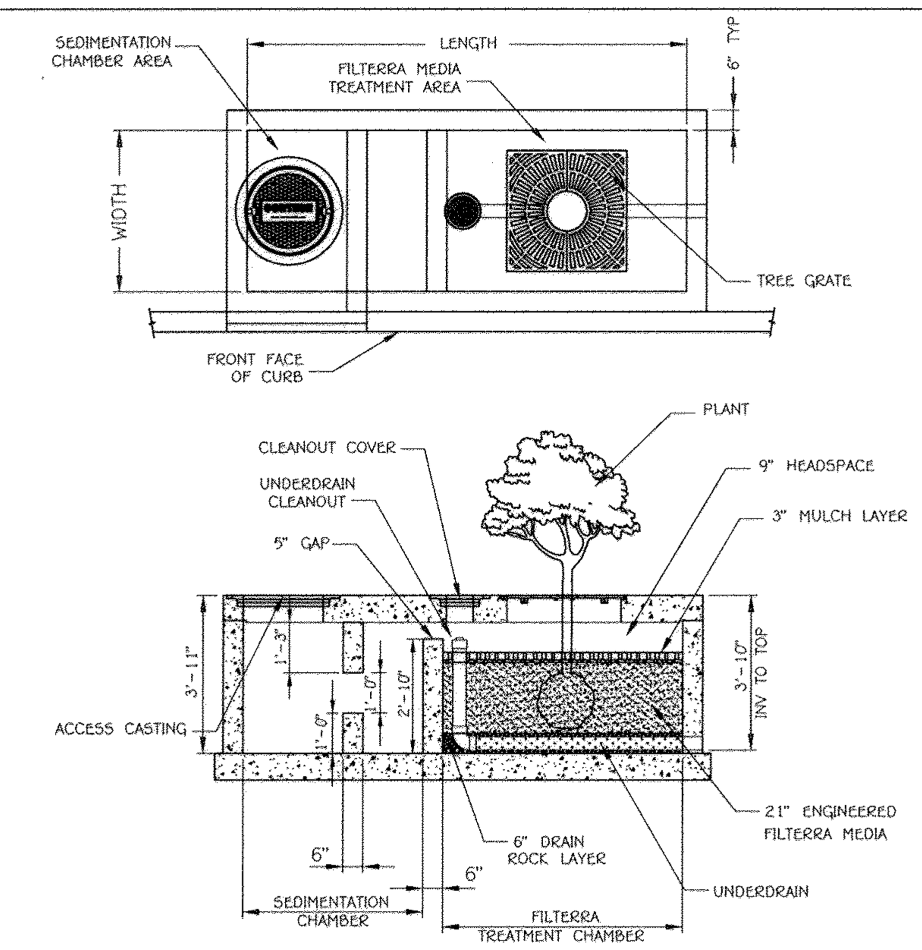

UNIT DESIGNATION	INSIDE VAULT DIMENSIONS	FILTERRA TREATMENT AREA	MAXIMUM DRAINAGE AREA TREATED (SF)	WQv STORAGE CAPACITY (CF)
FTSC 6' x 4'	12' x 4'	6' x 4'	5,216	103
FTSC 8' x 4'	16' x 4'	8' x 4'	7,141	141
FTSC 6' x 6'	12' x 6'	6' x 6'	7,847	155
FTSC 8' x 6'	16' x 6'	8' x 6'	10,734	212
FTSC 10' x 6'	19' x 6'	10' x 6'	12,638	250
FTSC 10' x 8'	20' x 8'	10' x 8'	18,178	360
FTSC 11' x 8'	22' x 8'	11' x 8'	20,000	398

NOTE:
1. MAXIMUM DRAINAGE AREA TREATED ASSUMES 25% WQv AND FILTER SURFACE AREA REQUIREMENTS ARE BOTH MET.
2. STORAGE CAPACITY ASSUMES 40% VOIDS IN UNDERDRAIN STONE AND 30% VOIDS IN MULCH AND MEDIA.
3. ALL INFORMATION IS BASED ON STANDARD 3.83' RIM TO OUTLET DEPTH. CONTACT CONTECH FOR CUSTOM SIZING IF DEPTH IS NOT 3.83'. ACCEPTABLE DEPTH IS 3.33' MIN. TO 5.00' MAX. RIM TO INVERT OUT.

filterra®

CONTECH® ENGINEERED SOLUTIONS LLC
www.ContechES.com

FILTERRA® WITH SEDIMENTATION CHAMBER

Operation And Maintenance Schedule For Filterra System

- Annual maintenance consists of a maximum of (2) scheduled visits. The visits are scheduled seasonally; the spring visit aims to clean up after winter loads including salts and sands. The fall visit helps the system by removing excessive leaf litter.
- Each maintenance inspection consists of the following tasks:

1. Filterra unit inspection
2. Foreign debris, silt, mulch and trash removal
3. Filter media evaluation and recharge as necessary
4. Plant health evaluation and pruning or replacement as necessary
5. Replacement of mulch
6. Disposal of all maintenance refuse items
7. Maintenance records updated and stored

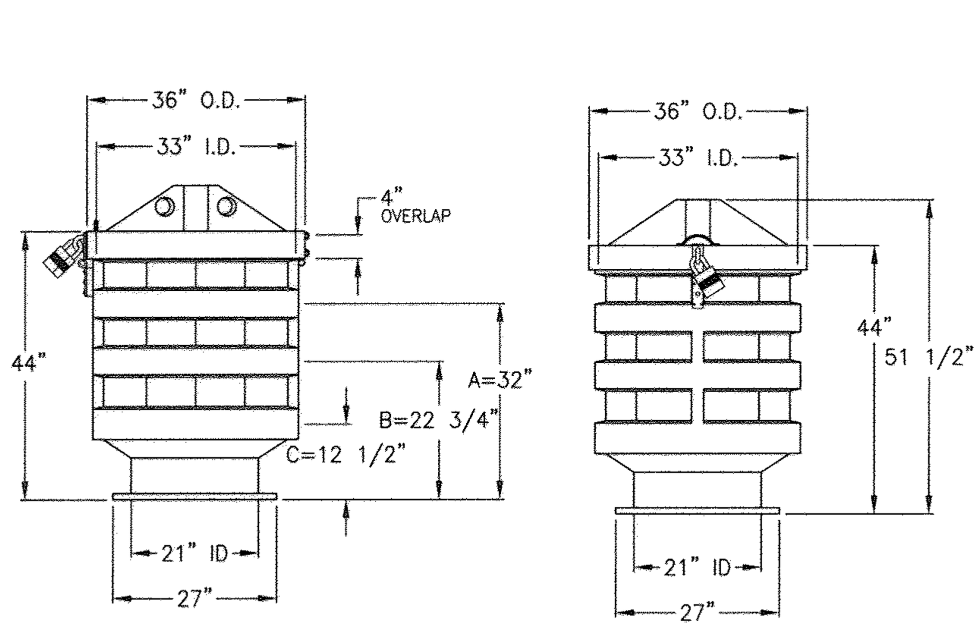

20" x 30" I.D. Polyethylene manway extension

FILTERRA STANDARD PLAN NOTES

Construction & Installation

A. Each unit shall be constructed at the locations and elevations according to the sizes shown on the approved drawings. Any modifications to the elevation or location shall be at the direction of and approved by the Engineer.

B. If the Filterra® is stored before installation, the top slab must be placed on the box using the 2x4 wood provided, to prevent any contamination from the site. All internal fittings supplied (if any), must be left in place as per the delivery.

C. The unit shall be placed on a compacted sub-grade with a minimum 6-inch gravel base matching the final grade of the curb line in the area of the unit. The unit is to be placed such that the unit and top slab match the grade of the curb in the area of the unit. Compact undisturbed sub-grade materials to 95% of maximum density at +1- 2% of optimum moisture. Unsuitable material below sub-grade shall be replaced to the site engineer's approval.

D. Outlet connections shall be aligned and sealed to meet the approved drawings with modifications necessary to meet site conditions and local regulations.

E. Once the unit is set, the internal wooden forms and protective mesh cover must be left intact. Remove only the temporary wooden shipping blocks between the box and top slab. The top lid should be sealed onto the box section before backfilling, using a non-shrink grout, butyl rubber or similar waterproof seal. The boards on top of the lid and boards sealed in the unit's throat must NOT be removed. The Supplier (Americast or its authorized dealer) will remove these sections at the time of activation. Backfilling should be performed in a careful manner, bringing the appropriate fill material up in 6" lifts on all sides. Precast sections shall be set in a manner that will result in a watertight joint. In all instances, installation of Filterra® unit shall conform to ASTM specification C891 "Standard Practice for Installation of Underground Precast Utility Structures", unless directed otherwise in contract documents.

F. The contractor is responsible for inlet protection/sediment control and cleaning around each Filterra unit.

G. Curb and gutter construction (where present) shall ensure that the flow-line of the Filterra® units is at a greater elevation than the flow-line of the bypass structure or relief (drop inlet, curb cut or similar). Failure to comply with this guideline may cause failure and/or damage to the Filterra® environmental device.

H. Each Filterra® unit must receive adequate irrigation to ensure survival of the living system during periods of drier weather. This may be achieved through a piped system, gutter flow or through the tree grate.

Activation

A. Activation of the Filterra® unit is performed ONLY by the Supplier. Purchaser is responsible for Filterra® inlet protection and subsequent clean out cost. This process cannot commence until the project site is fully stabilized and cleaned (full landscaping, grass cover, final paving and street sweeping completed), negating the chance of construction materials contaminating the Filterra® system. Care shall be taken during construction not to damage the protective throat and top plates.

B. Activation includes installation of plant(s) and mulch layers as necessary.

Included Maintenance

A. Each correctly installed Filterra® unit is to be maintained by the Supplier, or a Supplier approved contractor for a minimum period of 1 year. The cost of this service is to be included in the price of each Filterra® unit. Extended maintenance contracts are available at extra cost upon request.

B. Annual included maintenance consists of a maximum of (2) scheduled visits. The visits are scheduled seasonally; the spring visit aims to clean up after winter loads that may include salts and sands. The fall visit helps the system by removing excessive leaf litter.

C. Each Included Maintenance visit consists of the following tasks.

1. Filterra® unit inspection
2. Foreign debris, silt, mulch & trash removal
3. Filter media evaluation and recharge as necessary
4. Plant health evaluation and pruning or replacement as necessary
5. Replacement of mulch
6. Disposal of all maintenance refuse items
7. Maintenance records updated and stored (reports available upon request)

D. The beginning and ending date of Supplier's obligation to maintain the installed system shall be determined by the Supplier at the time the system is activated. Owners must promptly notify the Supplier of any damage to the plant(s), which constitute(s) an integral part of the bioretention technology.

DESIGN GUIDELINES FOR USING FILTERRA

1. Do not place in a sump condition. The Standard Filterra® cannot be used as a stand alone inlet - it will need effective bypass during higher intensity rainfall events. For sump conditions please contact Filterra®.

Plans MUST show Filterra® Top Curb (TC) and Flow Line (FL) spot elevations and also bypass TC (where applicable) and bypass FL spot elevations.

The Filterra® TC and FL elevations MUST be higher than the bypass TC and FL elevations for effective bypass. Use Drawing FLP-2 (p.24) as a detail on the project plans.

2. For proper trash collection ensure a minimum 4" and maximum 6" Filterra® throat opening depth and use Drawing CGT-5 (p.25) as a detail on the project plans.

3. Do not direct surface flow to the standard Filterra® in a "head-on" configuration. Refer to Guidelines GU1-A (p.13) and GU2 (p.18) for grading design that encourages flow to enter a Filterra® in a cross linear flow - left-to-right or right to-left in the gutter in front of the throat, as per a wet curb which prevents system damage. During extreme storm events the excess flow should continue past the Filterra® to a bypass inlet or other means of relief. Guideline GU3, Parking Lot Corners, shows common situations (p.19).

4. To calculate which size Filterra® is required, use Table 1, Filterra® Quick Sizing Table, appropriate to the project's geographical region and target treatment regime (p.12). The entire contributing drainage aread to the Filterra should be considered and the minimum allowable C factors noted. the maximum contributing drainage area iwll vary with site conditions. for further information relating to sizing please contact Filterra.

5. To ensure correct installation, include the Standard Filterra® Plan Notes (p.26-27) on your Filterra® detail project sheet, as well as detailed drawings FLP-2 and CGT-5 (p.24,25).

6. Positive drainage of each Filterra® unit's effluent treatment pipe is required to prevent free standing water from accumulating in the system or underdrain. This could occur due to tidal influences or improper connection of Filterra's effluent pipe to a bypass structure or other outfall.

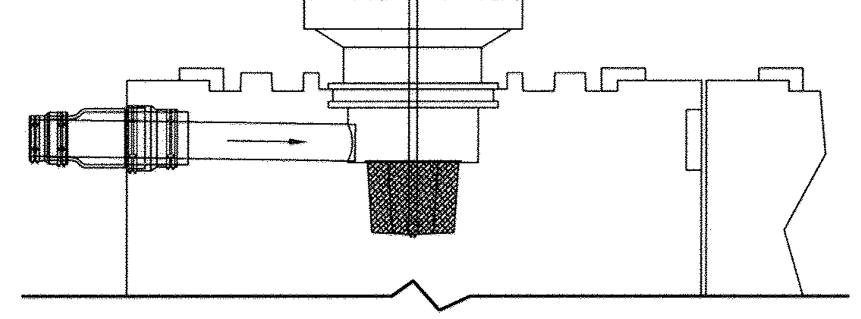

Clarifier with silt dam and debris basket

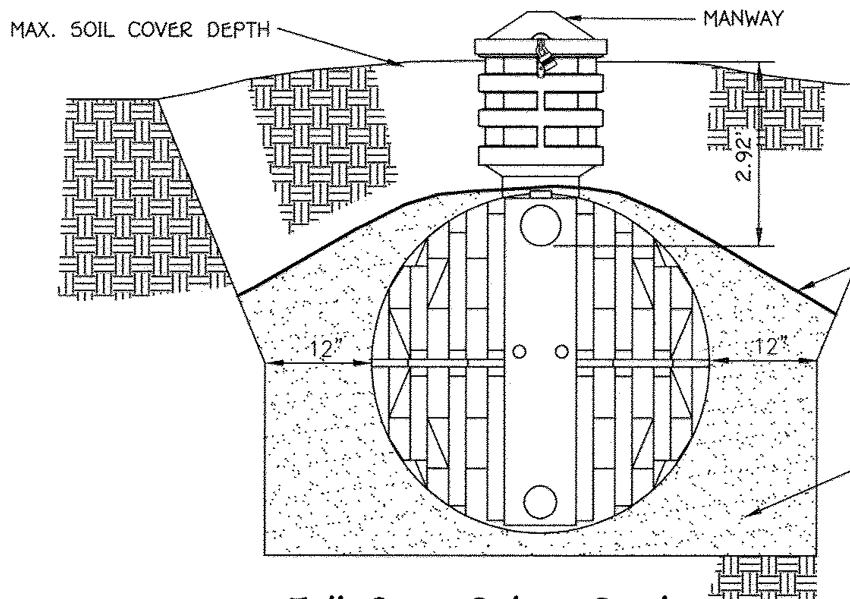

Full Bury Below Grade

ACCESSORIES

(A) - 20" I.D. POLYETHYLENE SPOOL TYPE MANWAY EXTENSION TO GRADE w/MESH BASKET ASSEMBLY AND INFLOW PIPE.

(B) - PVC VENT WITH GUARD AND STAINLESS STEEL INSECT SCREEN.

ALL DIMENSIONS ARE NOMINAL AND MAY VARY SLIGHTLY.

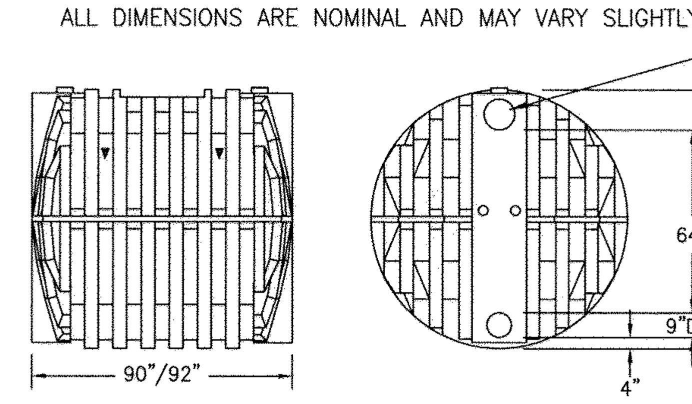

SINGLE 2,000 GAL. MODULE

2000 Gallon OcTank

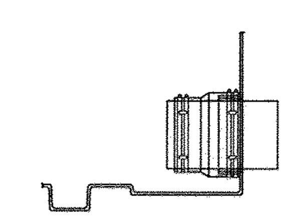

8" Inlet/outlet

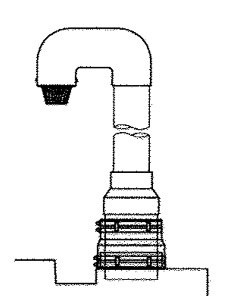

4" PVC vent head with a 6" x 4" top hub adapter

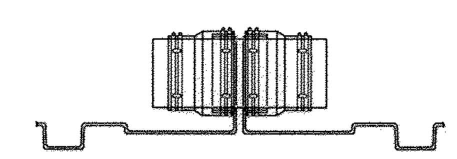

8" Interconnect fitting assembly

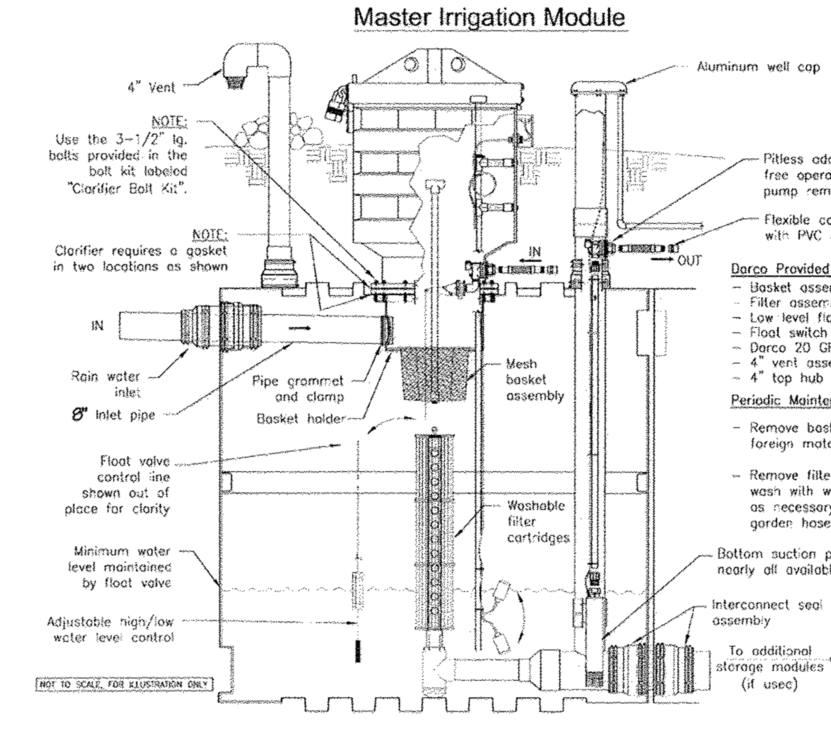

NOTE: EACH DOWNSPOUT THAT IS CONNECTED TO THE OCTANKS SHALL HAVE AN OVERFLOW AND HAVE AN GUTTER DRAIN FILTER. SEE DETAIL, SHEET 20

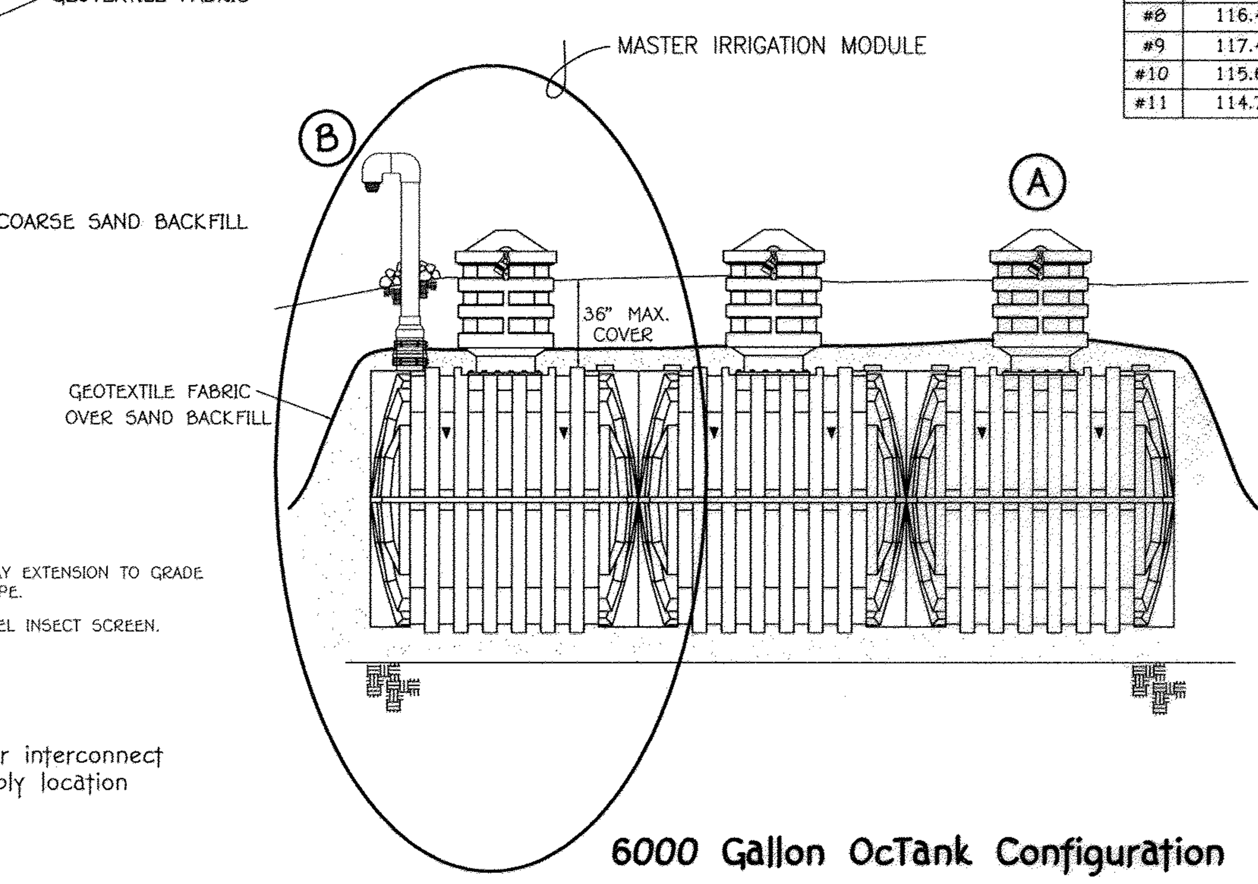

6000 Gallon OcTank Configuration

Operation And Maintenance Schedule For Rainwater Harvesting System (M-1)

THE RAINWATER HARVESTING SYSTEM (UNDERGROUND CHAMBERS) SHALL BE INSPECTED AT LEAST TWICE PER YEAR (ONCE EACH IN THE SPRING AND FALL) THE OWNER IS RESPONSIBLE FOR MAINTAINING A DETAILED LOG OF THE MAINTENANCE INSPECTION FINDINGS AND A HISTORY OF THE COMPLETED WORK. THE LOG SHALL BE MADE AVAILABLE TO HOWARD COUNTY DPZ AND/OR THE MARYLAND DEPARTMENT OF THE ENVIRONMENT UPON REQUEST.

SPECIFIC COMPONENTS TO BE INSPECTED AND MAINTAINED INCLUDE THE ITEMS AS FOLLOWS:

1. REMOVE DEBRIS.
2. EXAMINE STRUCTURES FOR SIGNS OF STRUCTURAL ISSUES (DAMAGE, CORROSION, ETC).
3. REMOVE AND PROPERLY DISPOSE ACCUMULATED SEDIMENT GREATER THAN ONE (1) INCH.
4. THE HOMEOWNER SHALL VERIFY INTEGRITY OF LEAF SCREENS, GUTTERS & DOWNSPOUTS AND CLEAN AND REMOVE ANY DEBRIS.

NOTE:
1. THE RAINWATER HARVESTING STORAGE SHALL BE 80% EMPTIED MINIMUM, WHEN A 2" OR GREATER RAINFALL EVENT IS FORECASTED. THIS IS TO ALLOW STORAGE TO PROVIDE QUANTITY MANAGEMENT NEEDED TO PROTECT DOWNSTREAM WATERWAYS.

Manway Extensions, Blank Cover, & Interconnect Detail

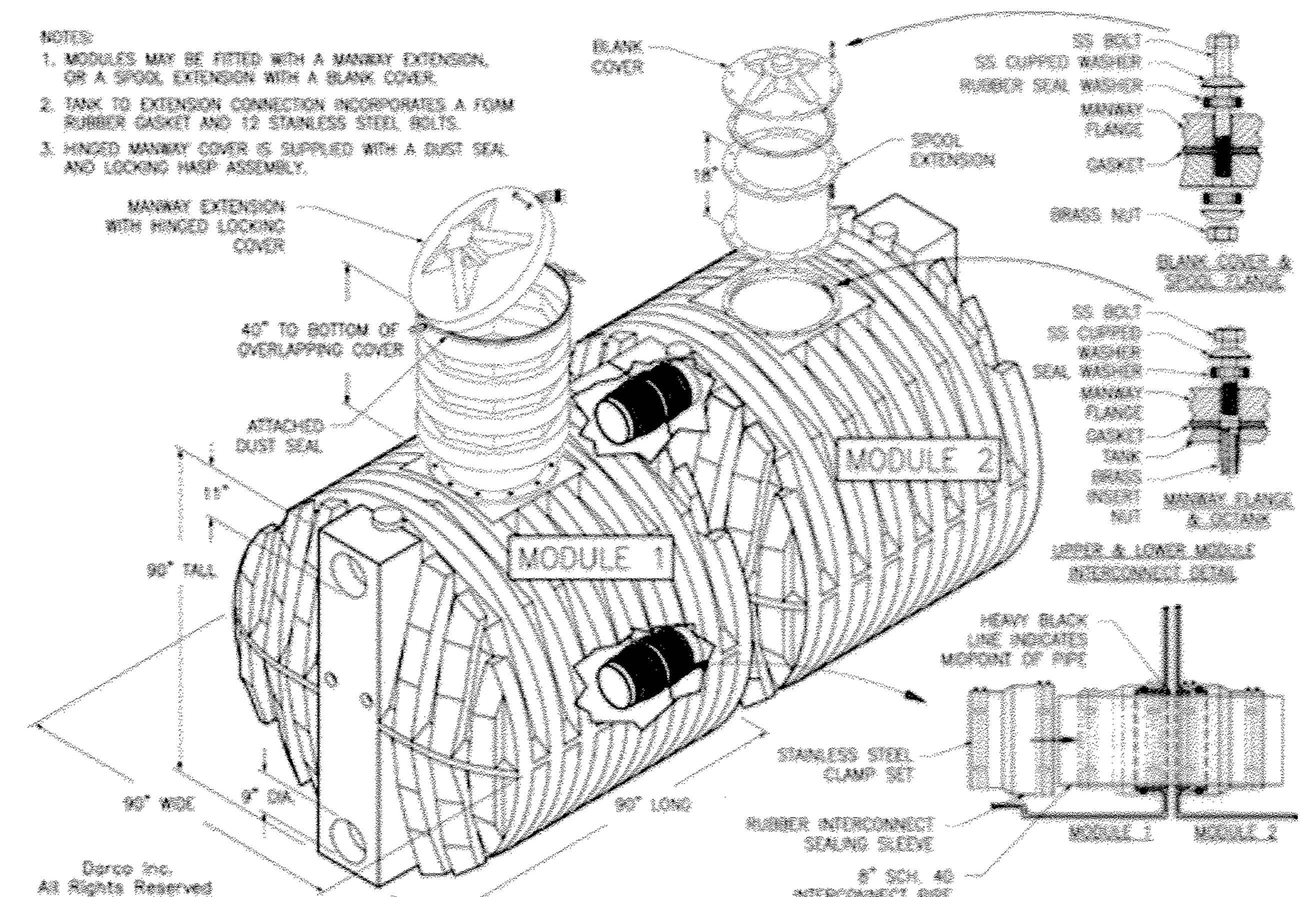

RAINWATER HARVESTING DATA			
TANK NO.	MANWAY ELEVATION	INLET/OUTLET ELEVATION	SIZE (Gallons)
#1	111.3	108.38	6,000
#2	112.5	109.58	4,000
#3	112.9	109.98	4,000
#4	111.75	108.83	4,000
#5	110.6	107.68	4,000
#6	110.0	107.08	6,000
#7	115.75	112.83	8,000
#8	116.43	113.51	4,000
#9	117.4	114.48	6,000
#10	115.6	112.68	4,000
#11	114.7	111.78	4,000

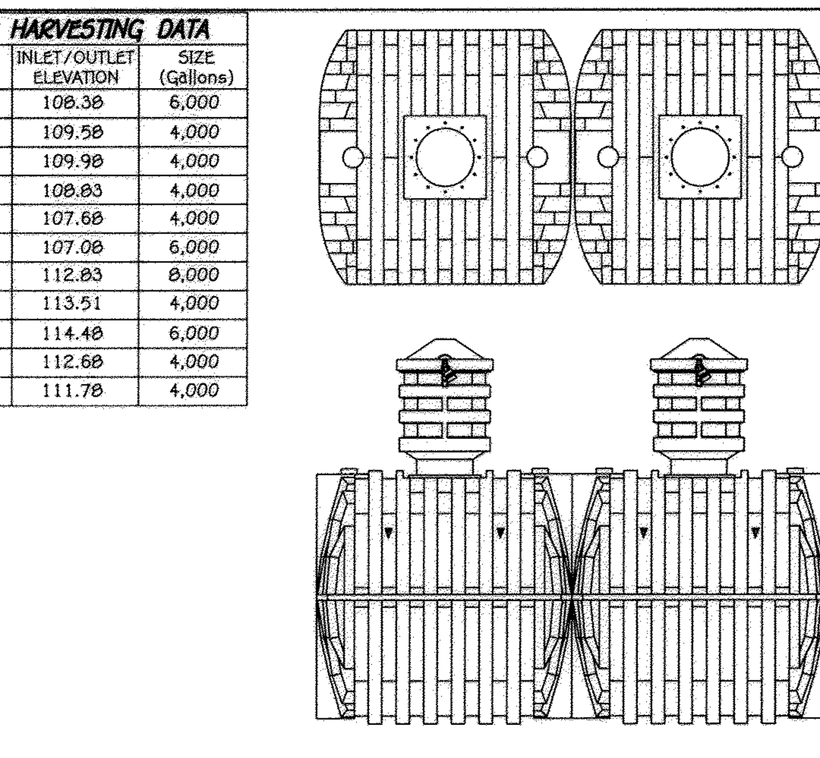

4,000 GAL. OCTANK CONFIGURATION

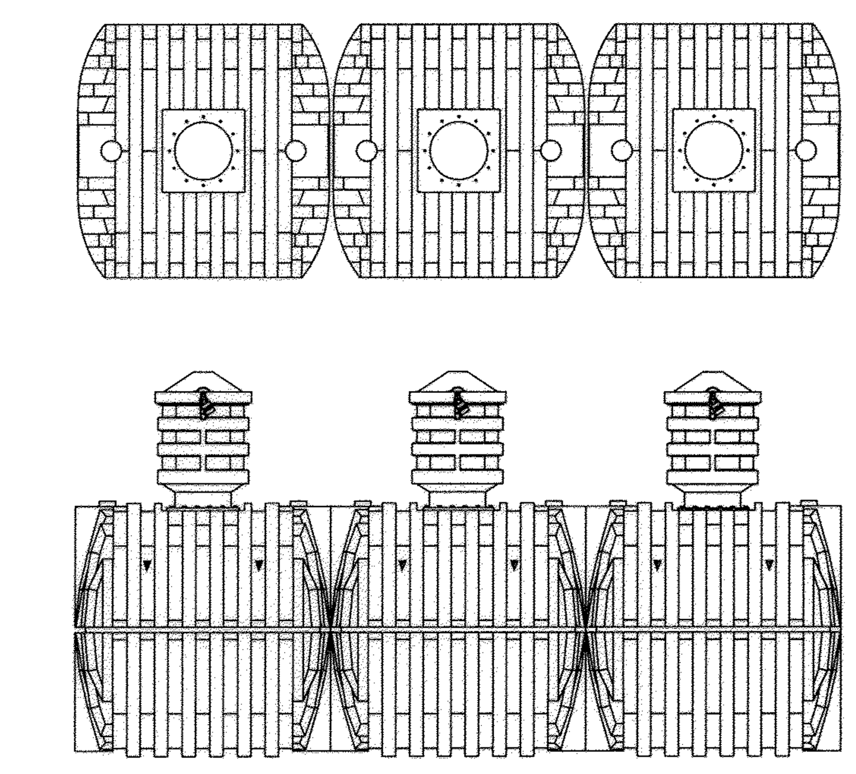

6,000 GAL. OCTANK CONFIGURATION

4000 & 6000 Gallon OcTank Configuration (shown with optional manway extension)

SPECIFICATIONS FOR POLYETHYLENE UNDERGROUND WATER TANKS QUALITY ASSURANCE

Manufacturer: Darco Inc. 980 Darco Dr. - P.O. Box 779 - Bennett, CO 80102 Or Equal

Phone number 800-232-8660, Fax 303-644-5001, Internet - www.darcoinc.com

GENERAL GOVERNING STANDARDS

1. ASTM 1998-93, Polyethylene Storage Tanks, those specific sections considered germane and prudent as applied to underground water storage tanks only.

- Section 4 : Type 2 high density virgin linear polyethylene resin
- Section 5 : Material standards for food contact grade polyethylene resin
- Section 7 : Fittings for polyethylene water tanks
- Section 8 : Performance requirements based on impact testing
- Section 9 : Dimensions and tolerances
- Section 10 : Workmanship

DESIGN STANDARDS / DARCO MODULAR POLYETHYLENE OCTANK SYSTEMS

1. External Hydrostatic Loading : The empty tank system with manway risers, when anchored into a sand backfilled excavation at a 3 foot bury depth and flooded with water to spring line, must maintain its structural shape and 100% water tightness.

2. Traffic Loading : Tank systems, when properly installed and incorporating an approved concrete surface slab, must withstand automotive and H20 truck traffic loads.

3. Dry Bury Installation : Tank systems must have sufficient wall strength and structural integrity to be installed and completely backfilled to a 3 foot bury depth without the addition of water during the backfill process. Furthermore, tank systems must maintain their structural shape and full storage capacity when left empty for extended periods.

TANK FITTINGS

All fittings shall be of polyolefin or PVC construction and incorporate only 300 series stainless steel hardware. Compatible and warranted tank-to-pipe flexible couplers must be made available along with the tank system at the time of purchase. Fittings, gaskets, and hardware must be available specifically for domestic water use.

POTABLE WATER APPLICATIONS

The virgin polyethylene resin used for construction of potable water storage tanks must be NSF listed and comply with FDA Title 21 when in contact with drinking water.

ACCESSORIES

The accessory package provided with any storage tank system must contain only fully approved accessories and appurtenances which meet all performance standards and warranty coverage guidelines of tank manufacturer.

CAPACITY AND SIZE REQUIREMENTS

1. The nominal volume of the tank system shall be ______ gallons.

2. The nominal tank diameter shall be ______ feet by a nominal length of ______ feet.

LIMITED WARRANTY
A standard 2 year structural and corrosion warranty shall become effective upon tank delivery. An optional extended warranty program must be available at time of purchase.

FISHER, COLLINS & CARTER, INC.
CIVIL ENGINEERING CONSULTANTS & LAND SURVEYORS
CENTENNIAL SQUARE OFFICE PARK - 10272 BALTIMORE NATIONAL PIKE
ELLICOTT CITY, MARYLAND 21042
(410) 461 - 2855

NO.	REVISION	DATE

STATE OF MARYLAND — MICHAEL VITO — No. 20748 — PROFESSIONAL ENGINEER — 5/4/16

0' 5' 10' 20'
SCALE: 1" = 5'

Owner/Builder
U.S. Home Corp. dba Lennar
7035 Albert Einstein Drive, Suite 200
Columbia, Maryland 21046
Ph# 410-997-5522

Developer
U.S. Home Corp. dba Lennar
7035 Albert Einstein Drive, Suite 200
Columbia, Maryland 21046
Ph# 410-997-5522

APPROVED: HOWARD COUNTY DEPARTMENT OF PLANNING AND ZONING

Chief, Division of Land Development — Date 8-9-16
Chief, Development Engineering Division — Date 6-13-16
Director - Department of Planning and Zoning — Date 8-9-16

SUBDIVISION			SECTION/AREA		PARCEL No.
OXFORD SQUARE			----		'Y' (Formerly 'E')
PLAT NO.	BLOCK NO.	ZONE	TAX/ZONE	ELEC. DIST.	CENSUS TR.
23791-23792	---	TOD	44	1st.	601101

STORMWATER MANAGEMENT NOTES & DETAILS

OXFORD SQUARE

"A Howard County Green Neighborhood"
Parcel 'Y'
"EXETER PARK"
(Residential Condominium Townhouse Buildings 1 Thru 16, Units 1 Thru 156)
Zoned: TOD
Tax Map No.: 38 Grid No.: 20 Parcel No.: 761
First Election District Howard County, Maryland
Scale: As Shown
Date: April 18, 2016
Sheet 7 Of 30

SDP-14-072

I:\2009\09014\dwg\SDP (Lennar) Parcel 'E'\09014 Sheet 7-8 swm details.dwg, 5/4/2016 11:16:09 AM, 1:1

Infiltration and Filter System Construction Specifications

Infiltration and filter systems either take advantage of existing permeable soils or create a permeable medium such as sand for WC), and Re v. In some instances where permeability is great, these facilities may be used for Qp as well. The most common systems include infiltration trenches, infiltration basins, sand filters, and organic filters.

When properly planted, vegetation will thrive and enhance the functioning of these systems. For example, pre-treatment buffers will trap sediments that often are bound with phosphorous and metals. Vegetation planted in the facility will aid in nutrient uptake and water storage. Additionally, plant roots will provide arteries for stormwater to permeate soil for groundwater recharge. Finally, successful plantings provide aesthetic value and wildlife habitat making these facilities more desirable to the public.

Design Constraints:

> Planting buffer strips of at least 20 feet will cause sediments to settle out before reaching the facility, thereby reducing the possibility of clogging.
> Determine areas that will be saturated with water and water table depth so that appropriate plants may be selected (hydrology will be similar to bioretention facilities, see figure A.5 and Table A.4 for planting material guidance).
> Plants known to send down deep taproots should be avoided in systems where filter fabric is used as part of facility design.
> Test soil conditions to determine if soil amendments are necessary.
> Plants shall be located so that access is possible for structure maintenance.
> Stabilize heavy flow areas with erosion control mats or sod.
> Temporarily divert flows from seeded areas until vegetation is established.
> See Table A.5 for additional design considerations.

Bio-retention

Soil Bed Characteristics

The characteristics of the soil for the bioretention facility are perhaps as important as the facility location, size, and treatment volume. The soil must be permeable enough to allow runoff to filter through the media, while having characteristics suitable to promote and sustain a robust vegetative cover crop. In addition, much of the nutrient pollutant uptake (nitrogen and phosphorus) is accomplished through absorption and microbial activity within the soil profile. Therefore, soils must balance their chemical and physical properties to support biotic communities above and below ground.

The planting soil should be a sandy loam, loamy sand, loam (USDA), or a loam/sand mix (should contain a minimum 35 to 60% sand, by volume). The clay content for these soils should be less than 25% by volume [Environmental Quality Resources (EQR), 1996; Engineering Technology Inc. and Biohabitats, Inc. (ETAB), 1993]. Soils should fall within the SM, ML, SC classifications or the Unified Soil Classification System (USCS). A permeability of at least 1.0 feet per day (0.5"/hr) is required (a conservative value of 0.5 feet per day is used for design). The soil should be free of stones, stumps, roots, or other woody material over 1" in diameter. Brush or seeds from noxious weeds (e.g., Johnson Grass, Mugwort, Nutsedge, and Canada Thistle or other noxious weeds as specified under COMAR 15.08.01.05.) should not be present in the soils. Placement of the planting soil should be in 12 to 18 lifts that are loosely compacted (tamped lightly with a backhoe bucket or traversed by dozer tracks). The specific characteristics are presented in Table A.3.

Table A.3 Planting Soil Characteristics

Parameter	Value
pH range	5.2 to 7.00
Organic matter	1.5 to 4.0% (by weight)
Magnesium	35 lbs. per acre, minimum
Phosphorus (phosphate – P2O5)	75 lbs. per acre, minimum
Potassium (potash – 1(K20)	85 lbs. per acre, minimum
Soluble salts	500 ppm
Clay	10 to 25 %
Silt	30 to 55 %
Sand	35 to 60%

Mulch Layer

The mulch layer plays an important role in the performance of the bioretention system. The mulch layer helps maintain soil moisture and avoids surface sealing, which reduces permeability. Mulch helps prevent erosion, and provides a microenvironment suitable for soil biota at the mulch/soil interface. It also serves as a pretreatment layer, trapping the finer sediments, which remain suspended after the primary pretreatment.

The mulch layer should be standard landscape style, single or double shredded hardwood mulch or chips. The mulch layer should be well aged (stockpiled or stored for at least 12 months), uniform in color, and free of other materials, such as weed seeds, soil, roots, etc. The mulch should be applied to a maximum depth of three inches. Grass clippings should not be used as a mulch material.

Planting Guidance

Plant material selection should be based on the goal of simulating a terrestrial forested community of native species. Bioretention simulates an upland-species ecosystem. The community should be dominated by trees, but have a distinct community of understory trees, shrubs and herbaceous materials. By creating a diverse, dense plant cover, a bioretention facility will be able to treat stormwater runoff and withstand urban stresses from insects, disease, drought, temperature, wind, and exposure.
The proper selection and installation of plant materials is key to a successful system. There are essentially three zones within a bioretention facility (Figure A.5). The lowest elevation supports plant species adapted to standing and fluctuating water levels. The middle elevation supports plants that like drier soil conditions, but can still tolerate occasional inundation by water. The outer edge
is the highest elevation and generally supports plants adapted to dryer conditions. For appropriate plant materials for bioretention facilities, Refer To MAA Approved Species List. The layout of plant material should be flexible, but should follow the general principals described in Table A.5. The objective is to have a system, which resembles a random, and natural plant layout, while maintaining optimal conditions for plant establishment and growth. For a more extensive bioretention plan, consult ETAB, 1993 or Claytor and Schueler, 1997.

Operation And Maintenance Schedule For Commercial Association Owned & Maintained Bio-Retention Areas (M-6)

1. The owner shall maintain the plant material, mulch layer and soil layer annually. maintenance of mulch and soil is limited to correcting areas of erosion or wash out. Any mulch replacement shall be done in the spring. Plant material shall be checked for disease and insect infestation and maintenance will address dead material and pruning. Acceptable replacement plant material is limited to the following: 2000 Maryland stormwater design manual volume II, table A.4.1 and 2.

2. The owner shall perform a plant in the spring and in the fall each year. during the inspection, the owner shall remove dead and diseased vegetation considered beyond treatment, replace dead plant material with acceptable replacement plant material, Treat diseased trees and shrubs and replace all deficient stakes and wires.

3. The owner shall inspect the mulch each spring. The mulch shall be replaced every two to three years. The previous mulch layer shall be removed before the new layer is applied.

4. The owner shall correct soil erosion on an as needed basis, with a minimum of once per month and after each heavy storm.

5. The owner shall maintain all observation wells, clean-outs and perforated underdrains.

6. Filter material must be replaced when water remains on the surface of the filter bed for more than 24 hours following a 1 or 2 year storm event or more than 48 hours following a 10 year storm event.

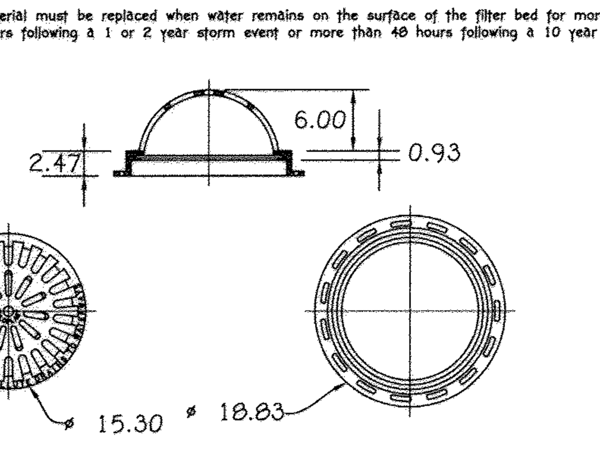

ALL DIMENSIONS IN INCHES UNLESS NOTED OTHERWISE
QUALITY: MATERIAL SHALL CONFORM TO ASTM A536 GRADE 70-50-05
PAINT: CASTINGS ARE FURNISHED WITH A BLACK PAINT
LOCKING DEVICE AVAILABLE UPON REQUEST
SEE DRAWING NO. 7001-110-230

Nyloplast
3130 VERONA AVE
BUFORD, GA 30518
PHN (770) 932-2443
FAX (770) 932-2490
www.nyloplast-us.com

15" DOME GRATE ASSEMBLY

NYLOPLAST OR EQUAL

B.4.C Specifications for Micro-Bioretention. Rain Gardens, Landscape Infiltration & Infiltration Berms

1. Material Specifications

The allowable materials to be used in these practices are detailed in Table B.4.1.

2. Filtering Media or Planting Soil

The soil shall be a uniform mix, free of stones, stumps, roots or other similar objects larger than two inches. No other materials or substances shall be mixed or dumped within the micro-bioretention practice that may be harmful to plant growth, or prove a hindrance to the planting or maintenance operations. The planting soil shall be free of Bermuda grass, Quackgrass, Johnson grass, or other noxious weeds as specified under COMAR 15.08.01.05.

The planting soil shall be tested and shall meet the following criteria:

Soil Component – Loamy Sand or Sandy Loam (USDA Soil Textural Classification)

Organic Content – Minimum 10% by dry weight (ASTM D 2974). In general, this can be met with a mixture of loamy sand (60%-65%) and compost (35% to 40%) or sandy loam (30%), coarse sand (30%), and compost (40%).

Clay Content – Media shall have a clay content of less than 5%.

pH Range –Should be between 5.5 – 7.0. Amendments (e.g., lime, iron sulfate plus sulfur) may be mixed into the soil to increase or decrease pH.

There shall be at least one soil test per project. Each test shall consist of both the standard soil test for pH, and additional tests of organic matter, and soluble salts. A textural analysis is required from the site stockpiled topsoil. If topsoil is imported, then a texture analysis shall be performed for each location where the topsoil was excavated.

3. Compaction

It is very important to minimize compaction of both the base of bioretention practices and the required backfill. When possible, use excavation hoes to remove original soil. If practices are excavated using a loader, the contractor should use wide track or marsh track equipment, or light equipment with turf type tires. Use of equipment with narrow tracks or narrow tires, rubber tires with large lugs, or high-pressure tires will cause excessive compaction resulting in reduced infiltration rates and is not acceptable. Compaction will significantly contribute to design failure.

Compaction can be alleviated at the base of the bioretention facility by using a primary tilling operation such as a chisel plow, ripper, or subsoiler. These tilling operations are to refracture the soil profile through the 12 inch compaction zone. Substitute methods must be approved by the engineer. Rototillers typically do not till deep enough to reduce the effects of compaction from heavy equipment.

Rototill 2 to 3 inches of sand into the base of the bioretention facility before backfilling the optional sand layer. Pump any ponded water before preparing (rototilling) base.

When backfilling the topsoil over the sand layer, first place 3 to 4 inches of topsoil over the sand, then rototill the sand/topsoil to create a gradation zone. Backfill the remainder of the topsoil to final grade.

When backfilling the bioretention facility, place soil in lifts 12" to 18". Do not use heavy equipment within the bioretention basin. Heavy equipment can be used around the perimeter of the basin to supply soils and sand. Grade bioretention materials with light equipment such as a compact loader or a dozer/loader with marsh tracks.

4. Plant Material

Recommended plant material for micro-bioretention practices can be found in Appendix A, Section A.2.3.

5. Plant Installation

Compost is a better organic material source, is less likely to float, and should be placed in the invert and other low areas. Mulch should be placed in surrounding to a uniform thickness of 2" to 3". Shredded or chipped hardwood mulch is the only accepted mulch. Pine mulch and wood chips will float and move to the perimeter of the bioretention area during a storm event and are not acceptable. Shredded mulch must be well aged (6 to 12 months) for acceptance.

Rootstock of the plant material shall be kept moist during transport and on-site storage. The plant root ball should be planted so 1/8 th of the ball is above final grade surface. The diameter of the planting pit shall be at least six inches larger than the diameter of the planting ball. Set and maintain the plant straight during the entire planting process. Thoroughly water ground bed cover after installation.

Trees shall be braced using 2" by 2" stakes only as necessary and for the first growing season only. Stakes are to be equally spaced on the outside of the tree ball.

Grasses and legume seed should be drilled into the soil to a depth of at least one inch. Grass and legume plugs shall be planted following the non-grass ground cover planting specifications.

The topsoil specifications provide enough organic material to adequately supply nutrients from natural cycling. The primary function of the bioretention structure is to improve water quality. Adding fertilizers defeats, or at a minimum, impedes this goal. Only add fertilizer if wood chips or mulch are used to amend the soil. Rototill urea fertilizer at a rate of 2 pounds per 1000 square feet.

6. Underdrains

Underdrains should meet the following criteria:

Pipe– Should be 4?to 6?diameter, slotted or perforated rigid plastic pipe (ASTMF 758, Type PS 28, or AASHTO-M-278) in a gravel layer. The preferred material is slotted, 4" rigid pipe (e.g., PVC or HDPE).

Perforations – If perforated pipe is used, perforations should be 3/8" diameter located 6" on center with a minimum of four holes per row. Pipe shall be wrapped with a 1/4" (No. 4 or 4x4) galvanized hardware cloth.

Gravel – The gravel layer (No. 57 stone preferred) shall be at least 3" thick above and below the underdrain.

The main collector pipe shall be at a minimum 0.5% slope.

A rigid, non-perforated observation well must be provided (one per every 1,000 square feet) to provide a clean-out port and monitor performance of the filter.

A 4" layer of pea gravel (1/4" to 3/8" stone) shall be located between the filter media and underdrain to prevent migration of fines into the underdrain. This layer may be considered part of the filter bed when bed thickness exceeds 24".

The main collector pipe for underdrain systems shall be constructed at a minimum slope of 0.5%. Observation wells and/or clean-out pipes must be provided (one minimum per every 1000 square feet of surface area).

7. Miscellaneous

These practices may not be constructed until all contributing drainage area has been stabilized

STORMWATER MANAGEMENT MAINTENANCE NOTE

ALL STORMWATER MANAGEMENT FACILITIES WILL BE PRIVATELY OWNED
AND MAINTAINED BY THE OXFORD SQUARE COMMERCIAL ASSOCIATION, INC. THE STREET TREES, PERFORATED UNDERDRAINS, FEEDERS, PLANTINGS AND SWALES WILL ALSO BE PRIVATELY OWNED AND MAINTAINED BY THE OXFORD SQUARE COMMERCIAL ASSOCIATION. HOWARD COUNTY WILL ONLY MAINTAIN THE INLET STRUCTURE WITHIN THE MICRO BIO-RETENTION FACILITIES ADJACENT TO THE RIGHT-OF-WAY.

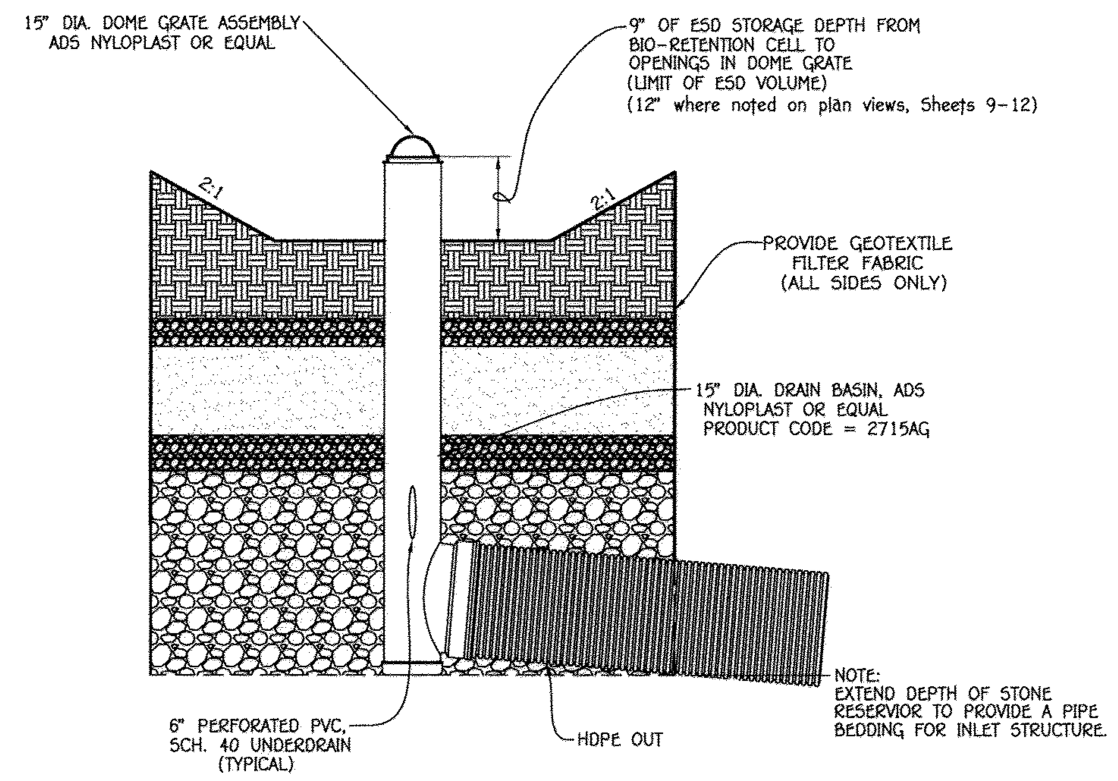

TYPICAL 15" BASIN INLET STRUCTURE DETAIL @ BIO-RETENTION

NO SCALE

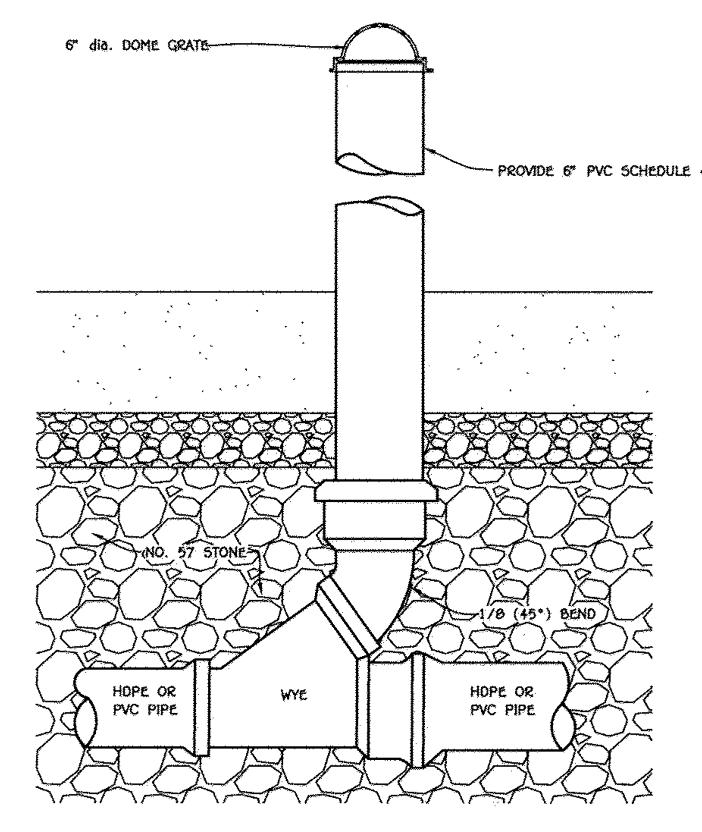

TYPICAL CLEAN-OUT DETAIL

NO SCALE

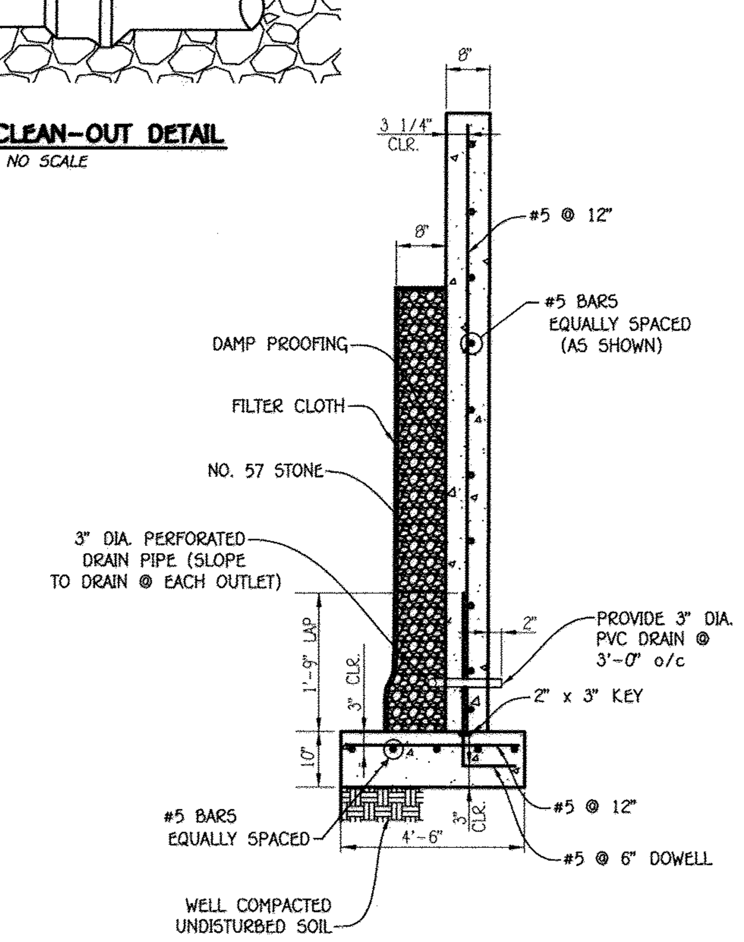

TYPICAL BIO-RETENTION CONCRETE RETAINING WALL

NO SCALE

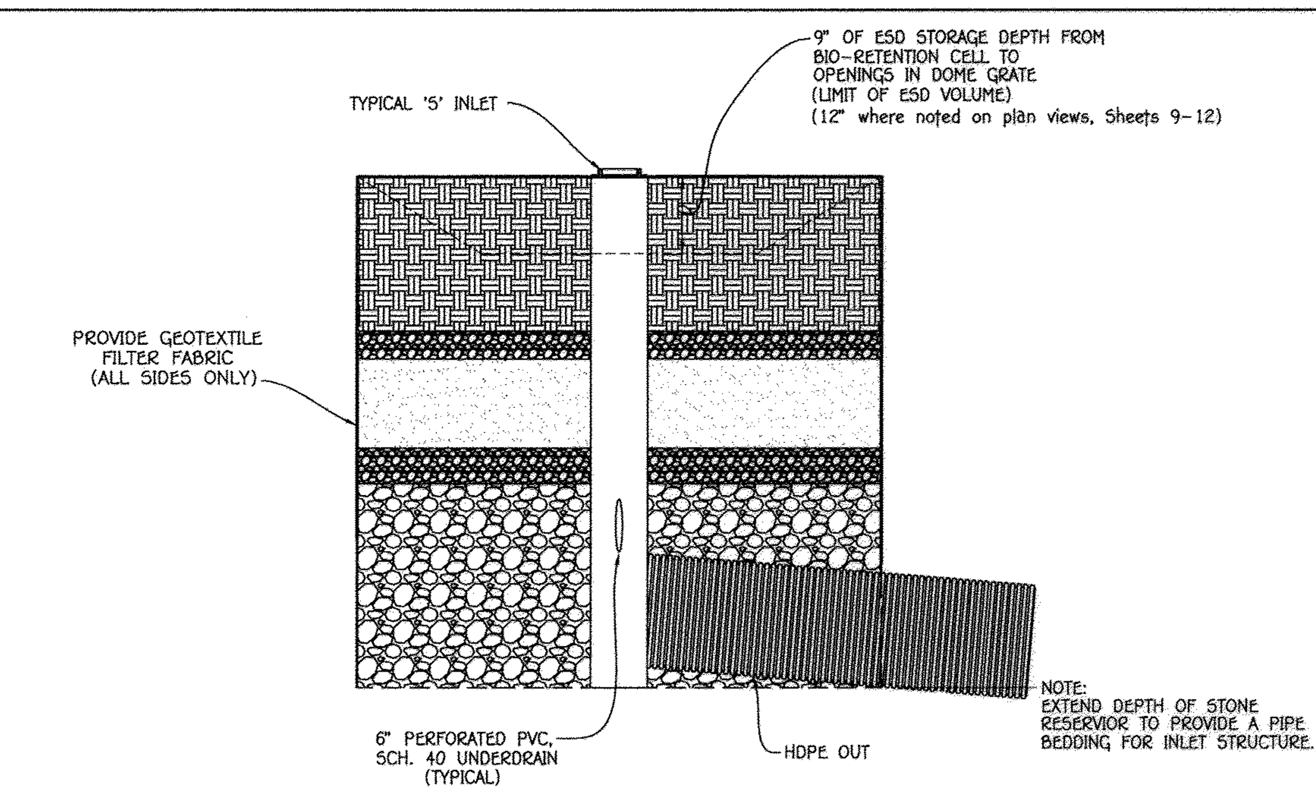

TYPICAL 'S' INLET STRUCTURE DETAIL @ BIO-RETENTION

NO SCALE

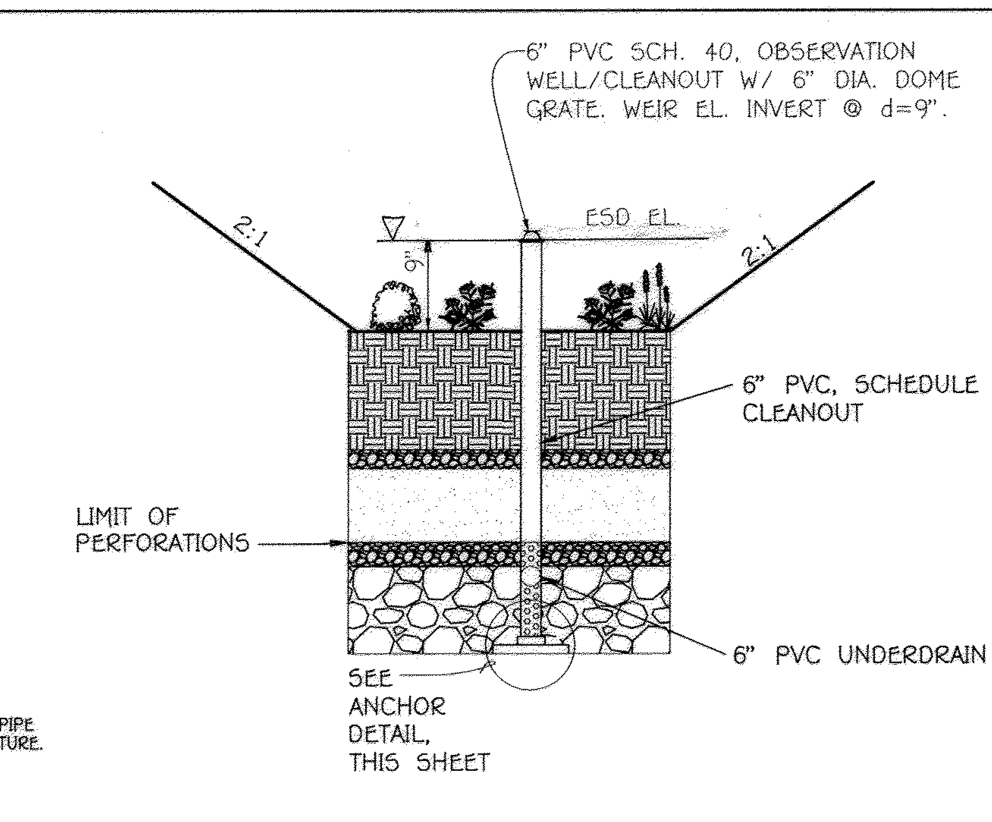

SECTION @ OBSERVATION WELL LOCATION

NOT TO SCALE

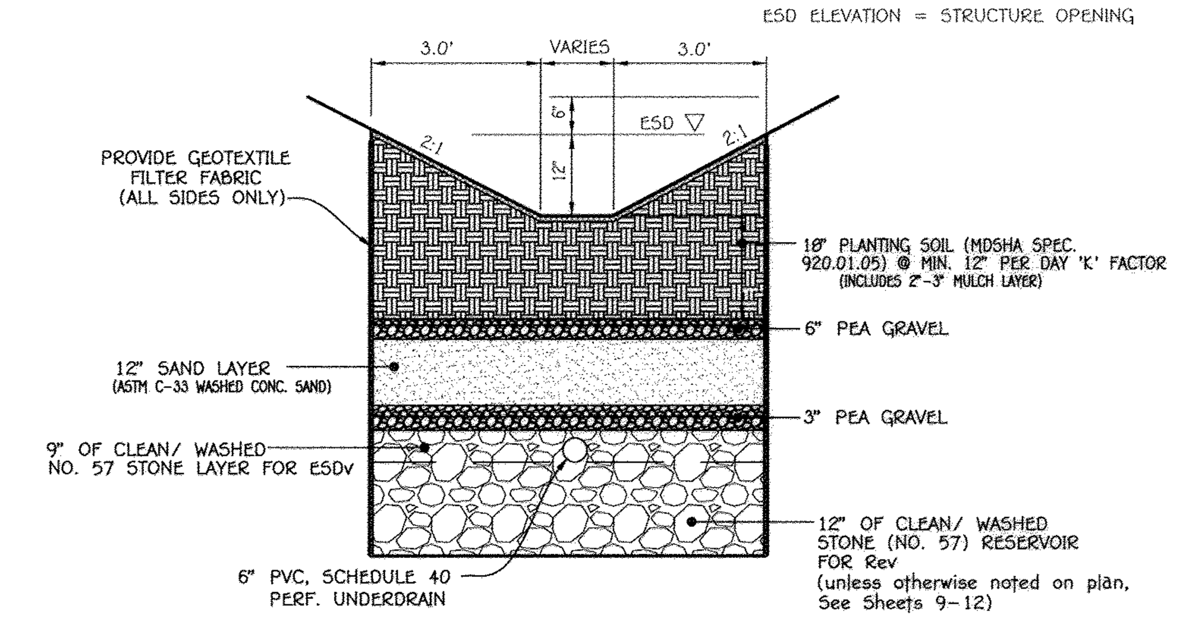

TYPICAL BIO-RETENTION (M-6) (WITHIN PARCEL)

NO SCALE

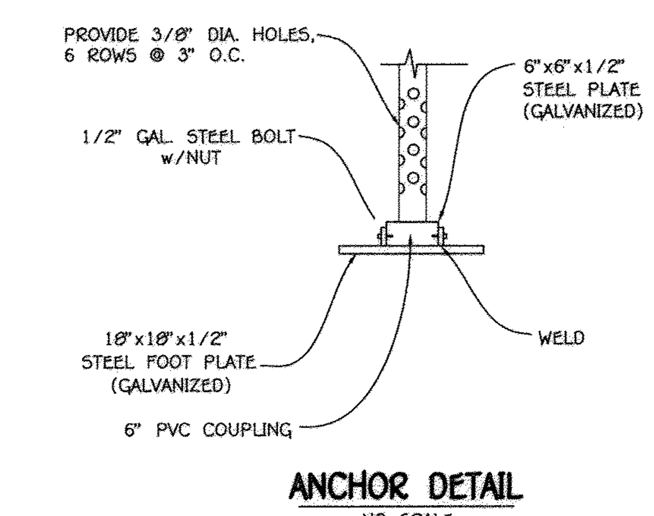

ANCHOR DETAIL

NO SCALE

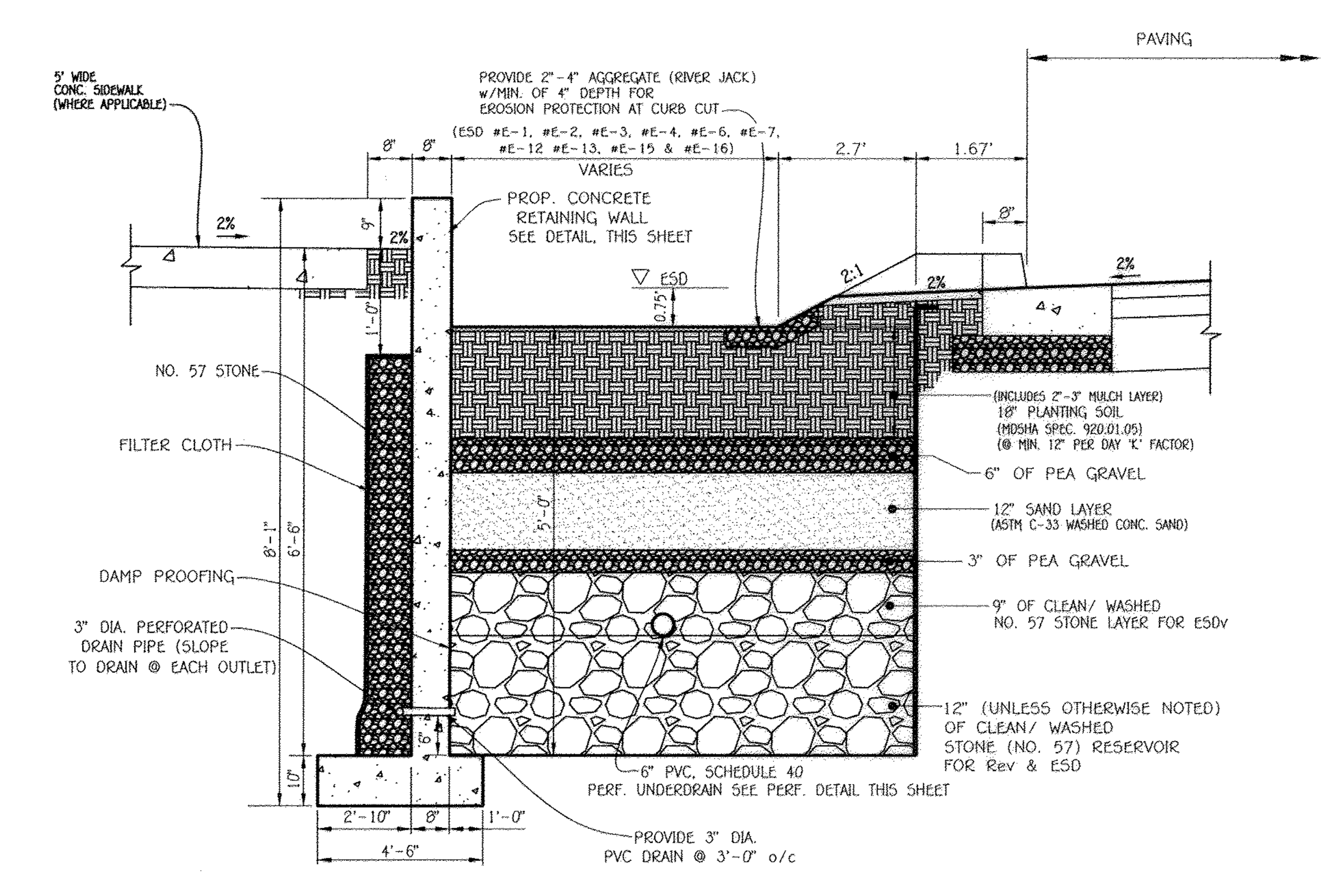

TYPICAL BIO-RETENTION (M-8) ADJACENT TO ROADWAY @ CURB CUT

NO SCALE

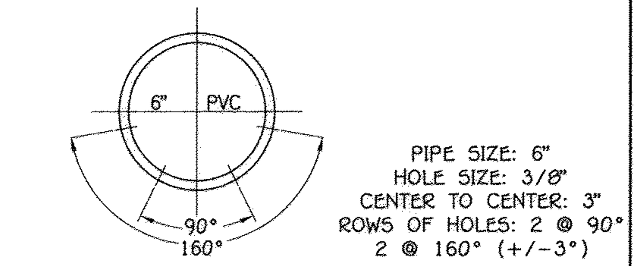

PIPE SIZE: 6"
HOLE SIZE: 3/8"
CENTER TO CENTER: 3"
ROWS OF HOLES: 2 @ 90°
2 @ 160° (+/-3°)

SCH 40 PVC PERFORATED UNDERDRAIN PIPE DETAIL FOR HORIZONTAL DRAIN PIPE

NO SCALE

NOTES:
UNDERDRAIN PIPE SHALL BE 4" TO 6" DIAMETER, SLOTTED OR PERFORATED RIGID PLASTIC PIPE (ASTMF 758, TYPE PS 28 OR AASHTO-M- 278) IN A GRAVEL LAYER. THE PREFERRED MATERIAL IS SLOTTED 4" RIGID PIPE (e.g., PVC OR HDPE).

PERFORATIONS SHALL BE 3/8" DIAMETER LOCATED 6" ON CENTER WITH A MINIMUM OF FOUR HOLES PER ROW. PIPE SHALL BE WRAPPED WITH A 1/4" (No. 4 OR 4 x 4) GALVANIZED HARDWARE CLOTH.

GRAVEL LAYER SHALL BE (No. 57 STONE PREFERRED) AT LEAST 3" THICK ABOVE AND BELOW THE UNDERDRAIN.

THE MAIN COLLECTOR PIPE SHALL BE AT A MINIMUM 0.5% SLOPE.

A RIGID, NON PERFORATED OBERSERVATION WELL MUST BE PROVIDED (ONE PER EVERY 1,000 SQ.FT.) TO PROVIDE A CLEANOUT PORT AND MONITOR PERFORMANCE OF THE FILTER.

A 4" LAYER OF PEA GRAVEL (1/8" TO 3/8" STONE) SHALL BE LOCATED BETWEEN THE FILTER MEDIA AND UNDERDRAIN TO PREVENT MIGRATION OF FINES INTO THE UNDERDRAIN. THIS LAYER MAY BE CONSIDERED PART OF THE FILTER BED WHEN BED THICKNESS EXCEEDS 24".

FISHER, COLLINS & CARTER, INC.
CIVIL ENGINEERING CONSULTANTS & LAND SURVEYORS
CENTENNIAL SQUARE OFFICE PARK - 10272 BALTIMORE NATIONAL PIKE
ELLICOTT CITY, MARYLAND 21042
(410) 461 - 2855

NO.	REVISION	DATE

STATE OF MARYLAND · MICHAEL ... · No. 20748 · PROFESSIONAL ENGINEER
5/4/16

Owner/Builder
U.S. Home Corp. dba Lennar
7035 Albert Einstein Drive, Suite 200
Columbia, Maryland 21046
Ph# 410-997-5522

Developer
U.S. Home Corp. dba Lennar
7035 Albert Einstein Drive, Suite 200
Columbia, Maryland 21046
Ph# 410-997-5522

APPROVED: HOWARD COUNTY DEPARTMENT OF PLANNING AND ZONING

Chief, Division of Land Development — Date 8.9.16
Chief, Development Engineering Division — Date 6.13.16
Director – Department of Planning and Zoning — Date 8-9-16

SUBDIVISION			SECTION/AREA		PARCEL No.
OXFORD SQUARE			----		'Y' (Formerly 'E')
PLAT NO.	BLOCK NO.	ZONE	TAX/ZONE	ELEC. DIST.	CENSUS TR.
23791-23792	---	TOD	44	1st.	601101

STORMWATER MANAGEMENT NOTES & DETAILS

OXFORD SQUARE

"A Howard County Green Neighborhood"
Parcel 'Y'
"EXETER PARK"
(Residential Condominium Townhouse Buildings 1 Thru 16, Units 1 Thru 156)
Zoned: TOD
Tax Map No.: 38 Grid No.: 20 Parcel No.: 761
First Election District Howard County, Maryland
Scale: As Shown
Date: April 18, 2016
Sheet 8 Of 30

SDP-14-072

I:\2009\09014\dwg\SDP (Lennar) Parcel 'E'\09014 Sheet 7-8 swm details.dwg, 5/4/2016 11:21:06 AM, 1:1

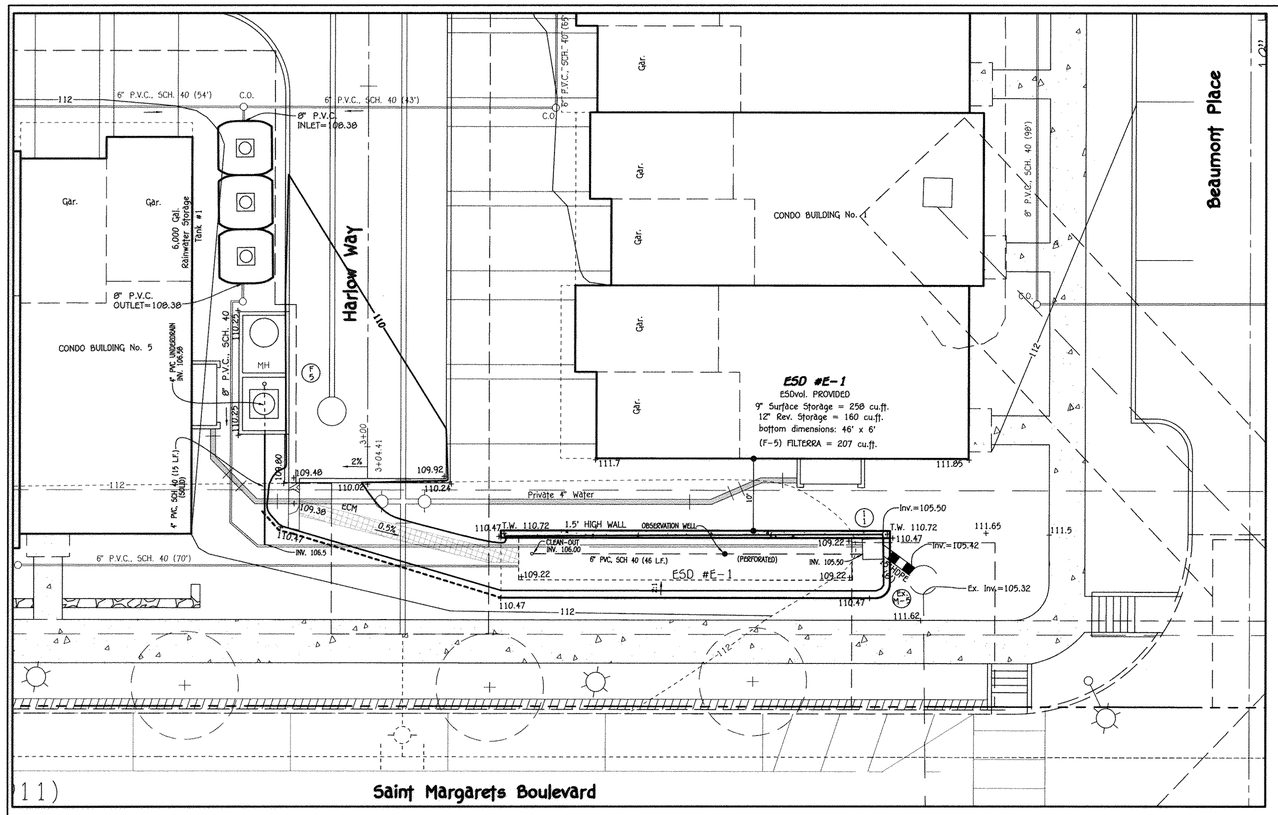

NOTE: SEE SHEETS 24 & 25 FOR DRAINAGE AREAS TO RAINWATER TANKS.

PROPOSED MICRO BIO-RETENTION (M-6) ESD No. E-1 PLAN VIEW

SCALE: 1" = 10'

NOTE: SEE SHEETS 24 & 25 FOR DRAINAGE AREAS TO RAINWATER TANKS.

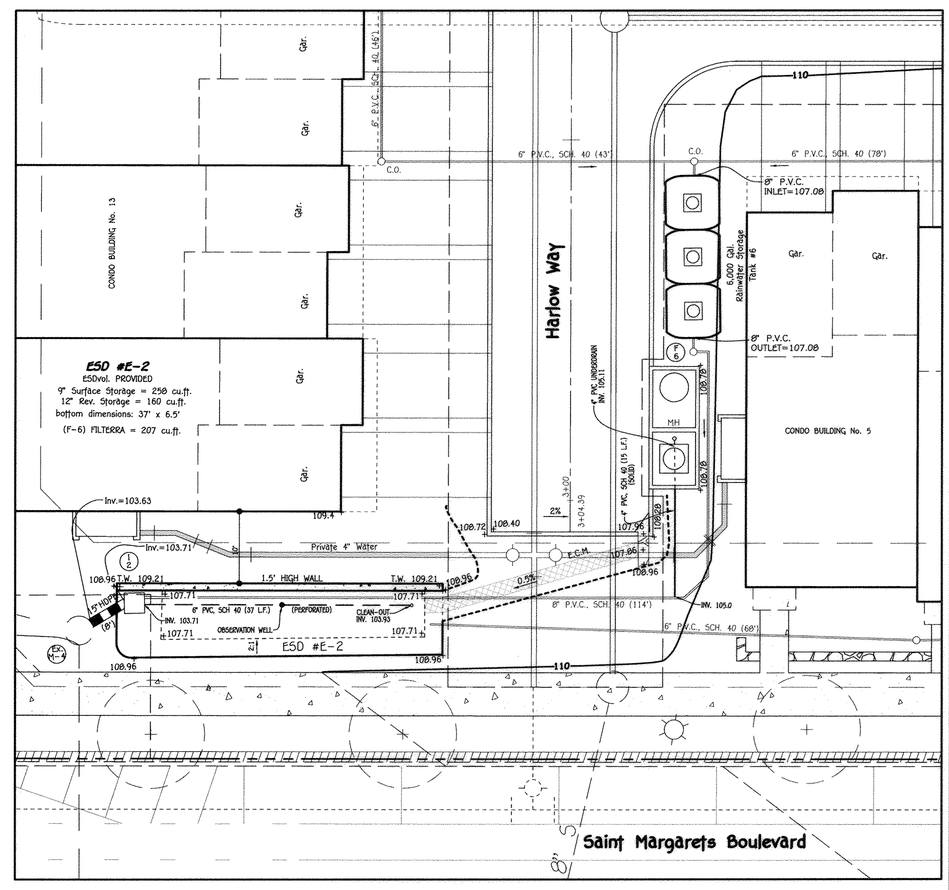

PROPOSED MICRO BIO-RETENTION (M-6) ESD No. E-2 PLAN VIEW

SCALE: 1" = 10'

NOTE: SEE SHEET 8 FOR MICRO BIO-RETENTION WITH CONCRETE GRAVITY WALL DETAIL. (ESD #E-1, #E-2, #E-3, #E-4, #E-6, #E-7, #E-12 #E-13, #E-15 & #E-16)

STORMWATER MANAGEMENT MAINTENANCE NOTE

ALL STORMWATER MANAGEMENT FACILITIES WILL BE PRIVATELY OWNED AND MAINTAINED BY THE OXFORD SQUARE COMMERCIAL ASSOCIATION, INC. THE STREET TREES, PERFORATED UNDERDRAINS, FEEDERS, PLANTINGS AND SWALES WILL ALSO BE PRIVATELY OWNED AND MAINTAINED BY THE OXFORD SQUARE COMMERCIAL ASSOCIATION. HOWARD COUNTY WILL ONLY MAINTAIN THE INLET STRUCTURE WITHIN THE MICRO BIO-RETENTION FACILITIES ADJACENT TO THE RIGHT-OF-WAY.

6,000 Gal. Rainwater Stor. – DENOTES UNDERGROUND RAINWATER TANK. SEE DETAILS, SHEET 7

0' 10' 15' 20'
Scale: 1" = 10'

FISHER, COLLINS & CARTER, INC.
CIVIL ENGINEERING CONSULTANTS & LAND SURVEYORS
CENTENNIAL SQUARE OFFICE PARK – 10272 BALTIMORE NATIONAL PIKE
ELLICOTT CITY, MARYLAND 21042
(410) 461 – 2855

NO.	REVISION	DATE

STATE OF MARYLAND – MICHAEL T. FISHER – No. 20720 – PROFESSIONAL ENGINEER – 7/14/16

Owner/Builder
U.S. Home Corp. dba Lennar
7035 Albert Einstein Drive, Suite 200
Columbia, Maryland 21046
Ph# 410-997-5522

Developer
U.S. Home Corp. dba Lennar
7035 Albert Einstein Drive, Suite 200
Columbia, Maryland 21046
Ph# 410-997-5522

APPROVED: HOWARD COUNTY DEPARTMENT OF PLANNING AND ZONING

Chief, Division of Land Development — Date 8-9-16
Chief, Development Engineering Division — Date 6-13-16
Director – Department of Planning and Zoning — Date 8-9-16

SUBDIVISION			SECTION/AREA		PARCEL No.
OXFORD SQUARE			----		'Y' (Formerly 'E')
PLAT NO.	BLOCK NO.	ZONE	TAX/ZONE	ELEC. DIST.	CENSUS TR.
23791-23792	---	TOD	44	1st.	601101

STORMWATER MANAGEMENT PLAN VIEWS

OXFORD SQUARE

"A Howard County Green Neighborhood"

Parcel 'Y'

"EXETER PARK"

(Residential Condominium Townhouse Buildings 1 Thru 16, Units 1 Thru 156)

Zoned: TOD
Tax Map No.: 30 Grid No.: 20 Parcel No.: 761
First Election District Howard County, Maryland
Scale: As Shown
Date: April 18, 2016
Sheet 9 Of 30

SDP-14-072

I:\2005\0901\dwg\SDP (Lennar) Parcel 'E'\09014 Sheet 9-12 swm plans.dwg, 7/14/2016 2:13:14 PM, 1:1

STORMWATER MANAGEMENT MAINTENANCE NOTE

ALL STORMWATER MANAGEMENT FACILITIES WILL BE PRIVATELY OWNED AND MAINTAINED BY THE OXFORD SQUARE COMMERCIAL ASSOCIATION, INC. THE STREET TREES, PERFORATED UNDERDRAINS, FEEDERS, PLANTINGS AND SWALES WILL ALSO BE PRIVATELY OWNED AND MAINTAINED BY THE OXFORD SQUARE COMMERCIAL ASSOCIATION. HOWARD COUNTY WILL ONLY MAINTAIN THE INLET STRUCTURE WITHIN THE MICRO BIO-RETENTION FACILITIES ADJACENT TO THE RIGHT-OF-WAY.

NOTE: SEE SHEET 8 FOR MICRO BIO-RETENTION WITH CONCRETE GRAVITY WALL DETAIL. (ESD #E-1, #E-2, #E-3, #E-4, #E-6, #E-7, #E-12 #E-13, #E-15 & #E-16)

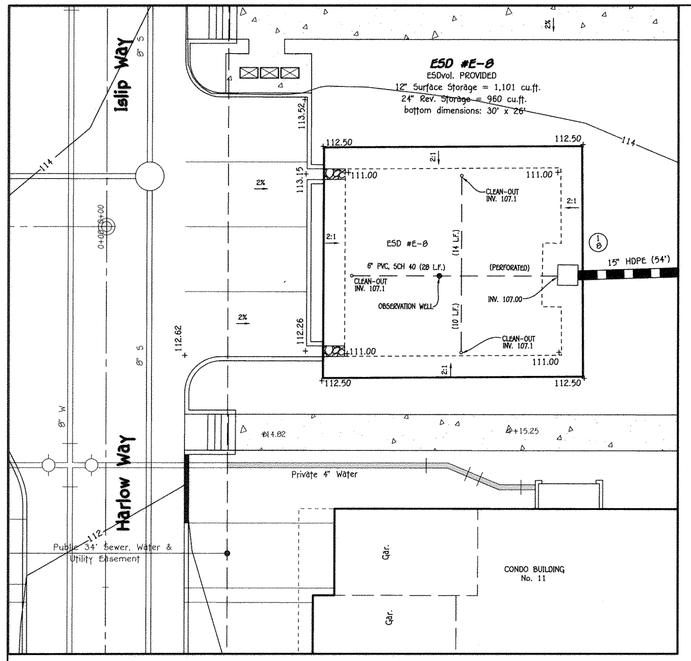

PROPOSED MICRO BIO-RETENTION (M-6)
ESD No. E-8 PLAN VIEW
SCALE: 1" = 10'

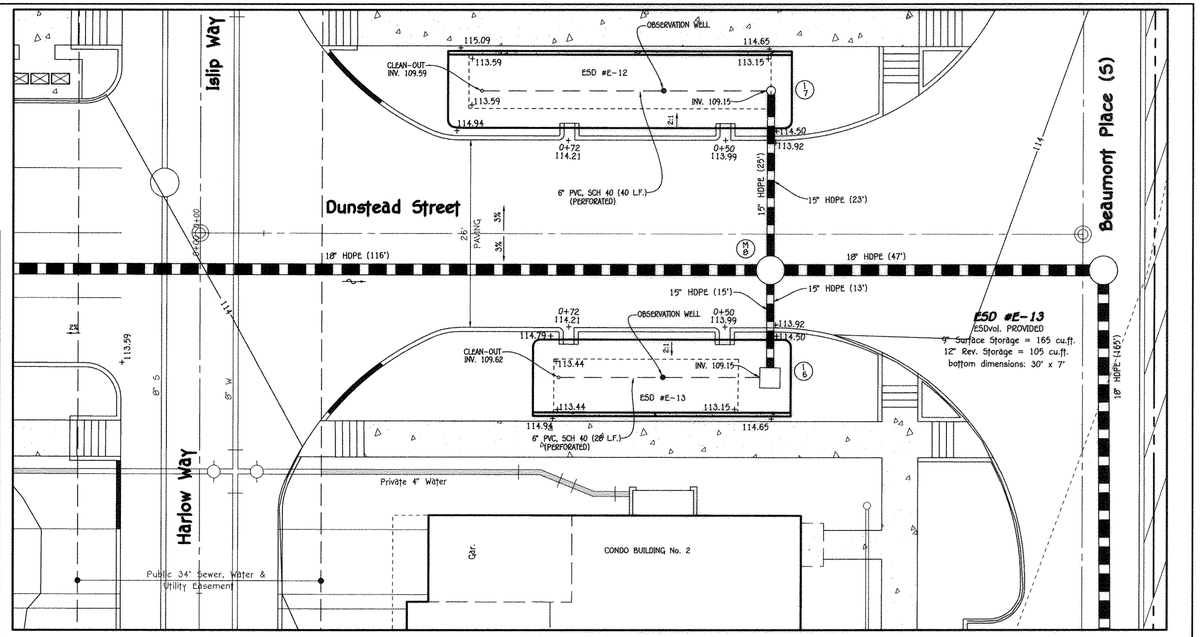

PROPOSED MICRO BIO-RETENTION (M-6)
ESD Nos. E-12 & E-13 PLAN VIEW
SCALE: 1" = 10'

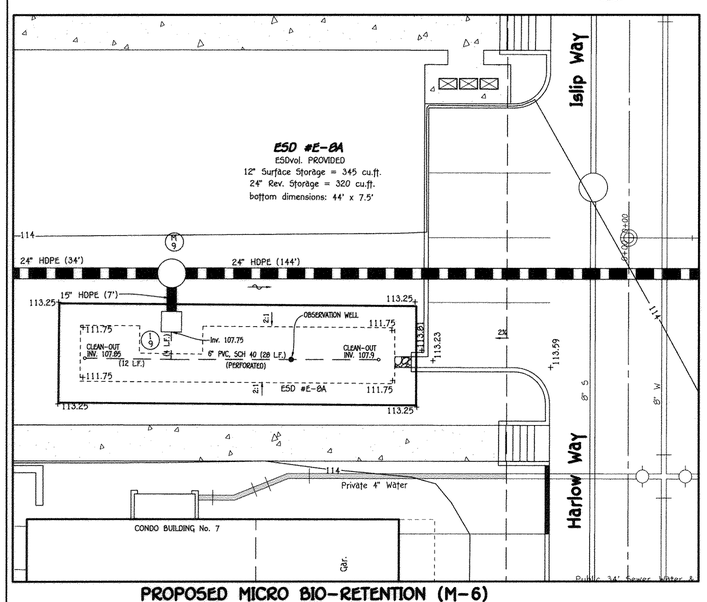

PROPOSED MICRO BIO-RETENTION (M-6)
ESD No. E-8A PLAN VIEW
SCALE: 1" = 10'

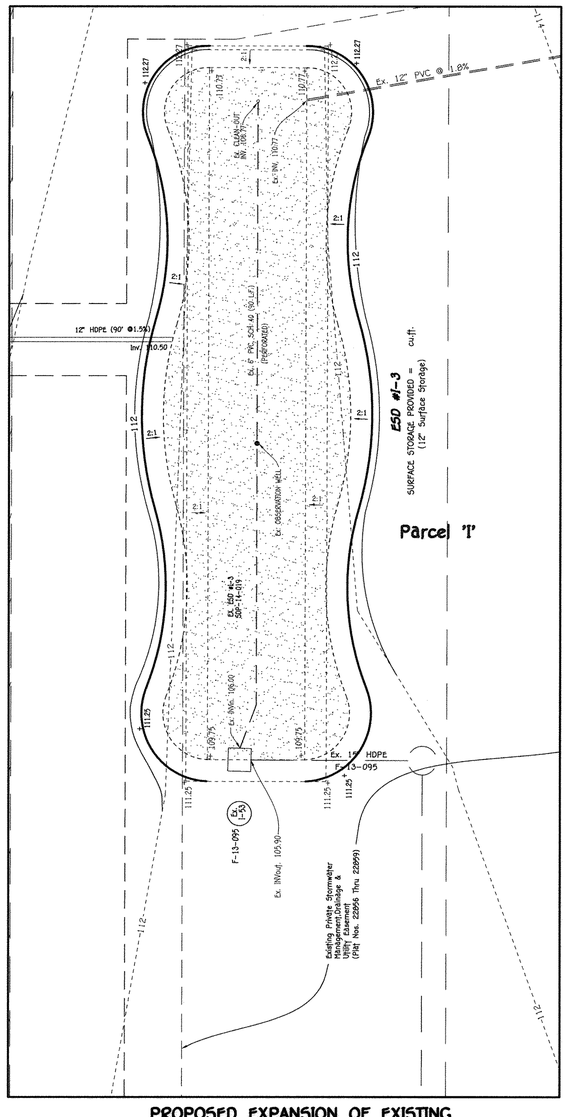

PROPOSED EXPANSION OF EXISTING
BIO-RETENTION (F-6)
ESD No. I-3 PLAN VIEW
SCALE: 1" = 10'

DENOTES NEW BOTTOM

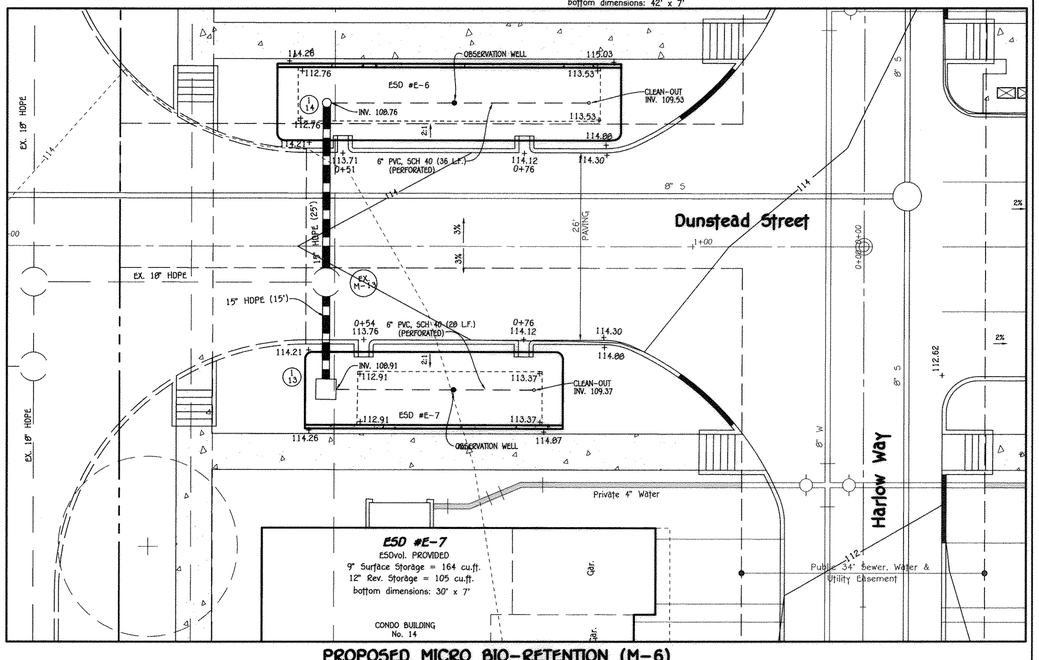

PROPOSED MICRO BIO-RETENTION (M-6)
ESD Nos. E-6 & E-7 PLAN VIEW
SCALE: 1" = 10'

FISHER, COLLINS & CARTER, INC.
CIVIL ENGINEERING CONSULTANTS & LAND SURVEYORS
CENTENNIAL SQUARE OFFICE PARK - 10272 BALTIMORE NATIONAL PIKE
ELLICOTT CITY, MARYLAND 21042
(410) 461 - 2855

NO.	REVISION	DATE

STATE OF MARYLAND — MICHAEL A. PAPPAS — No. 20748 — PROFESSIONAL ENGINEER — 7/14/16

0' 10' 15' 20'
Scale: 1" = 10'

Owner/Builder
U.S. Home Corp. dba Lennar
7035 Albert Einstein Drive, Suite 200
Columbia, Maryland 21046
Ph# 410-997-5522

Developer
U.S. Home Corp. dba Lennar
7035 Albert Einstein Drive, Suite 200
Columbia, Maryland 21046
Ph# 410-997-5522

APPROVED: HOWARD COUNTY DEPARTMENT OF PLANNING AND ZONING

Chief, Division of Land Development — Date 8-9-16
Chief, Development Engineering Division — Date 6-17-16
Director - Department of Planning and Zoning — Date 8-9-16

SUBDIVISION	SECTION/AREA	PARCEL No.
OXFORD SQUARE	---	'Y' (Formerly 'E')

PLAT NO.	BLOCK NO.	ZONE	TAX/ZONE	ELEC. DIST.	CENSUS TR.
23791 - 23792	---	TOD	44	1st.	601101

STORMWATER MANAGEMENT PLAN VIEWS

OXFORD SQUARE

"A Howard County Green Neighborhood"

Parcel 'Y'

"EXETER PARK"

(Residential Condominium Townhouse Buildings 1 Thru 16, Units 1 Thru 156)

Zoned: TOD
Tax Map No.: 30 Grid No.: 20 Parcel No.: 761
First Election District Howard County, Maryland
Scale: As Shown
Date: April 18, 2016
Sheet 10 Of 30

SDP-14-072

E:\2009\09014\dwg\SDP (Lennar) Parcel E\09014 Sheet 9-12 swm plans.dwg, 7/14/2016 2:15:07 PM, 1:1

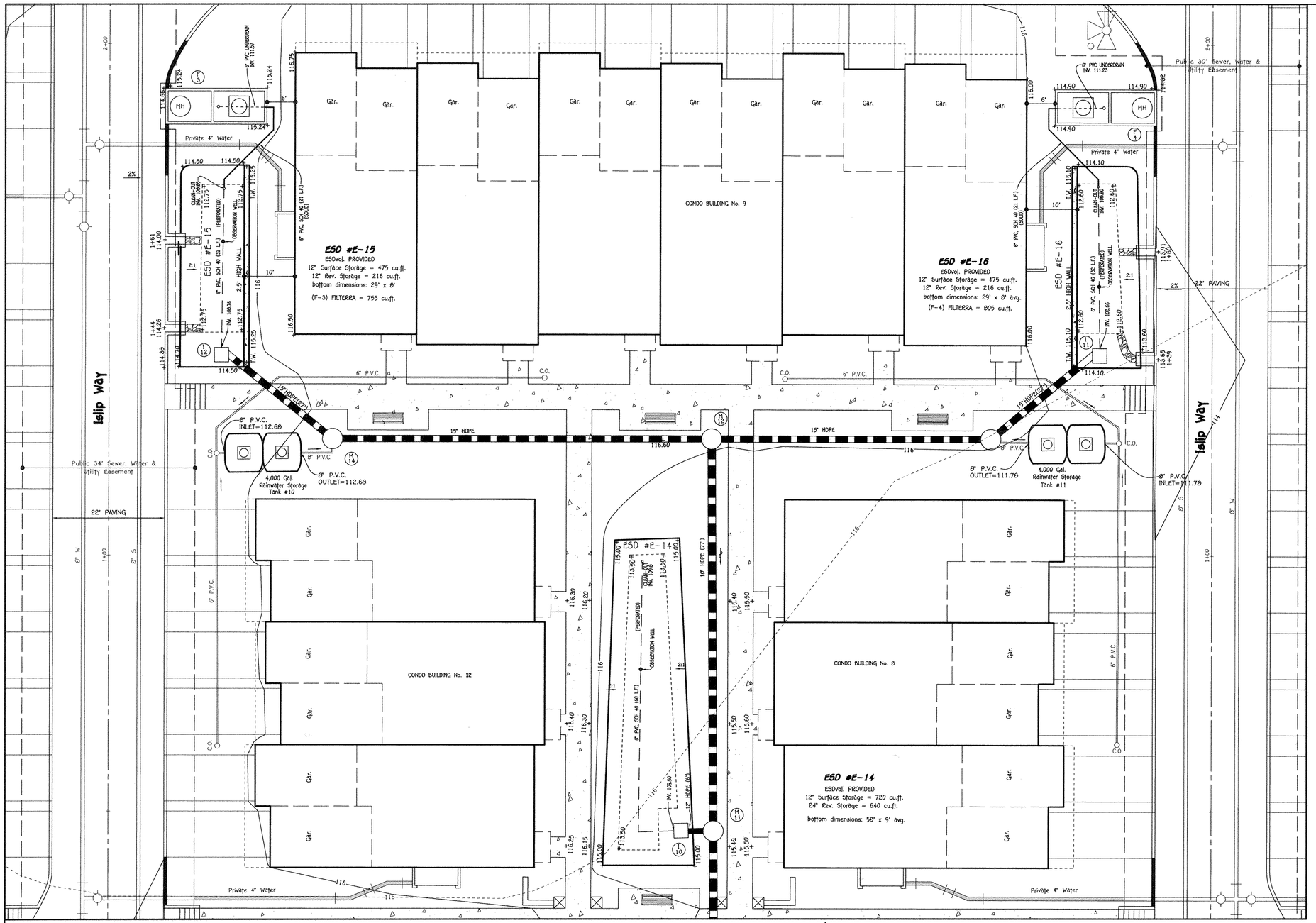

PROPOSED MICRO BIO-RETENTION (M-6) ESD Nos. E-14 THRU E-16 & FILTERRA Nos. F-3 THRU F-4 PLAN VIEW

SCALE: 1" = 10'

NOTE: SEE SHEETS 24 & 25 FOR DRAINAGE AREAS TO RAINWATER TANKS.

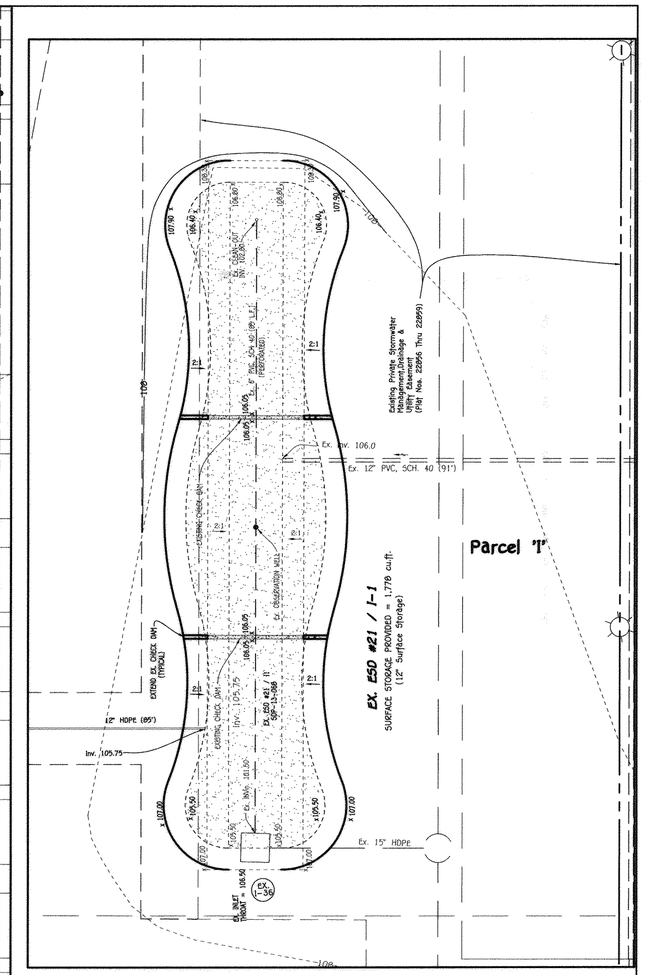

PROPOSED EXPANSION OF EXISTING BIO-RETENTION (F-6) ESD No. I-1 PLAN VIEW

SCALE: 1" = 10'

DENOTES NEW BOTTOM

6,000 Gal. Rainwater Stor. – DENOTES UNDERGROUND RAINWATER TANK SEE DETAILS, SHEET 7

STORMWATER MANAGEMENT MAINTENANCE NOTE

ALL STORMWATER MANAGEMENT FACILITIES WILL BE PRIVATELY OWNED AND MAINTAINED BY THE OXFORD SQUARE COMMERCIAL ASSOCIATION, INC. THE STREET TREES, PERFORATED UNDERDRAINS, FEEDERS, PLANTINGS AND SWALES WILL ALSO BE PRIVATELY OWNED AND MAINTAINED BY THE OXFORD SQUARE COMMERCIAL ASSOCIATION. HOWARD COUNTY WILL ONLY MAINTAIN THE INLET STRUCTURE WITHIN THE MICRO BIO-RETENTION FACILITIES ADJACENT TO THE RIGHT-OF-WAY.

FISHER, COLLINS & CARTER, INC.
CIVIL ENGINEERING CONSULTANTS & LAND SURVEYORS
CENTENNIAL SQUARE OFFICE PARK – 10272 BALTIMORE NATIONAL PIKE
ELLICOTT CITY, MARYLAND 21042
(410) 461 – 2855

NO.	REVISION	DATE

STATE OF MARYLAND MICHAEL D. FISHER No. 20768 PROFESSIONAL ENGINEER
7/14/16

Owner/Builder
U.S. Home Corp. dba Lennar
7035 Albert Einstein Drive, Suite 200
Columbia, Maryland 21046
Ph# 410-997-5522

Developer
U.S. Home Corp. dba Lennar
7035 Albert Einstein Drive, Suite 200
Columbia, Maryland 21046
Ph# 410-997-5522

APPROVED: HOWARD COUNTY DEPARTMENT OF PLANNING AND ZONING

Chief, Division of Land Development — Date 8-9-16
Chief, Development Engineering Division — Date 6-13-16
Director – Department of Planning and Zoning — Date 8-9-16

SUBDIVISION			SECTION/AREA		PARCEL No.
OXFORD SQUARE			----		'Y' (Formerly 'E')
PLAT NO.	BLOCK NO.	ZONE	TAX/ZONE	ELEC. DIST.	CENSUS TR.
23791 - 23792	---	TOD	44	1st.	601101

STORMWATER MANAGEMENT PLAN VIEWS

OXFORD SQUARE

"A Howard County Green Neighborhood"

Parcel 'Y'

"EXETER PARK"

(Residential Condominium Townhouse Buildings 1 Thru 16, Units 1 Thru 156)
Zoned: TOD
Tax Map No.: 38 Grid No.: 20 Parcel No.: 761
First Election District Howard County, Maryland
Scale: As Shown
Date: April 18, 2016
Sheet 11 Of 30

SDP-14-072

I:\2009\09014\dwg\SDP (Lennar) Parcel 'E'\09014 Sheet 9-12 mm plan.dwg, 7/24/2016 2:18:22 PM, 1:1

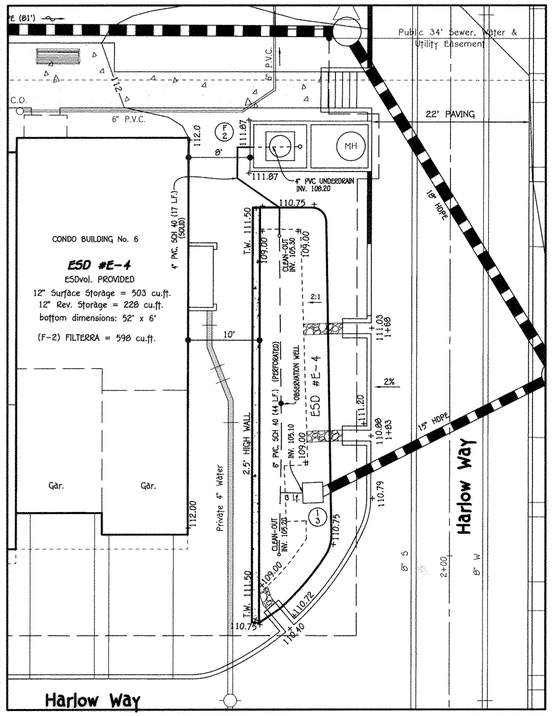

PROPOSED MICRO BIO-RETENTION (M-6)
ESD No. E-4 & FILTERRA No. F-2 PLAN VIEW

SCALE: 1" = 10'

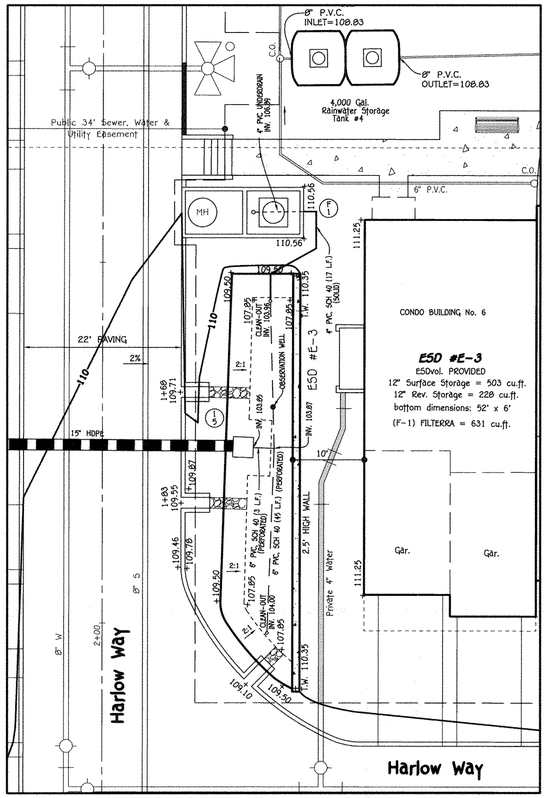

PROPOSED MICRO BIO-RETENTION (M-6)
ESD No. E-3 & FILTERRA No. F-1 PLAN VIEW

SCALE: 1" = 10'

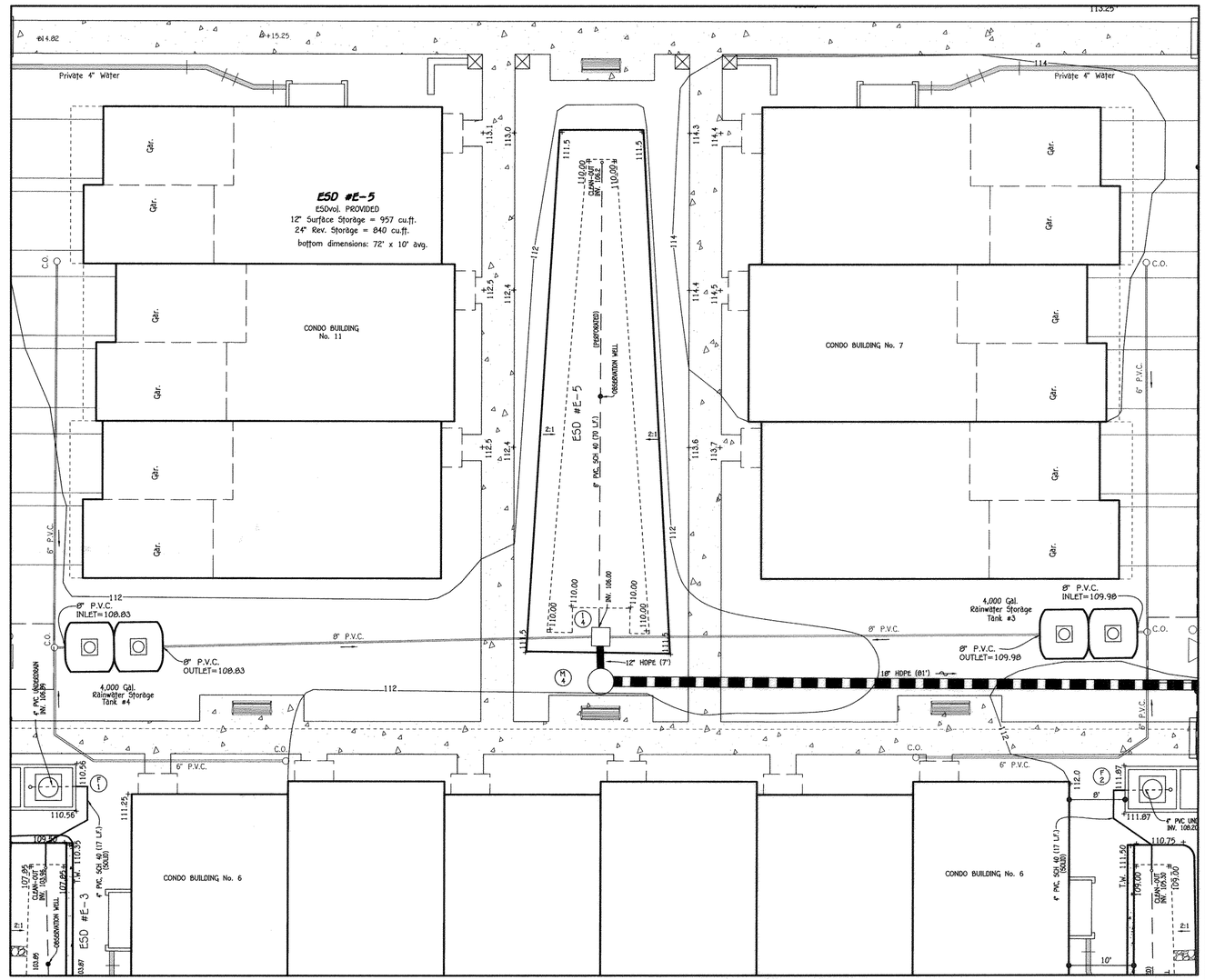

NOTE: SEE SHEETS 24 & 25 FOR DRAINAGE AREAS TO RAINWATER TANKS.

PROPOSED MICRO BIO-RETENTION (M-6)
ESD No. E-5 PLAN VIEW

SCALE: 1" = 10'

STORMWATER MANAGEMENT MAINTENANCE NOTE

ALL STORMWATER MANAGEMENT FACILITIES WILL BE PRIVATELY OWNED AND MAINTAINED BY THE OXFORD SQUARE COMMERCIAL ASSOCIATION, INC. THE STREET TREES, PERFORATED UNDERDRAINS, FEEDERS, PLANTINGS AND SWALES WILL ALSO BE PRIVATELY OWNED AND MAINTAINED BY THE OXFORD SQUARE COMMERCIAL ASSOCIATION. HOWARD COUNTY WILL ONLY MAINTAIN THE INLET STRUCTURE WITHIN THE MICRO BIO-RETENTION FACILITIES ADJACENT TO THE RIGHT-OF-WAY.

6,000 Gal. Rainwater Stor. – DENOTES UNDERGROUND RAINWATER TANK SEE DETAILS, SHEET 7

0' 10' 15' 20'
Scale: 1" = 10'

FISHER, COLLINS & CARTER, INC.
CIVIL ENGINEERING CONSULTANTS & LAND SURVEYORS
CENTENNIAL SQUARE OFFICE PARK – 10272 BALTIMORE NATIONAL PIKE
ELLICOTT CITY, MARYLAND 21042
(410) 461 – 2855

NO.	REVISION	DATE

STATE OF MARYLAND – MICHAEL VAN VALKENBURG – No. 20734 – PROFESSIONAL ENGINEER – 8/9/16

Owner/Builder
U.S. Home Corp. dba Lennar
7035 Albert Einstein Drive, Suite 200
Columbia, Maryland 21046
Ph# 410-997-5522

Developer
U.S. Home Corp. dba Lennar
7035 Albert Einstein Drive, Suite 200
Columbia, Maryland 21046
Ph# 410-997-5522

APPROVED: HOWARD COUNTY DEPARTMENT OF PLANNING AND ZONING

Chief, Division of Land Development — Date 8-9-16
Chief, Development Engineering Division — Date 6-13-16
Director – Department of Planning and Zoning — Date 8-9-16

SUBDIVISION			SECTION/AREA		PARCEL No.
OXFORD SQUARE			----		'Y' (Formerly 'E')
PLAT NO.	BLOCK NO.	ZONE	TAX/ZONE	ELEC. DIST.	CENSUS TR.
23791 - 23792	---	TOD	44	1st.	601101

STORMWATER MANAGEMENT PLAN VIEWS

OXFORD SQUARE

"A Howard County Green Neighborhood"

Parcel 'Y'

"EXETER PARK"

(Residential Condominium Townhouse Buildings 1 Thru 16, Units 1 Thru 156)

Zoned: TOD

Tax Map No.: 30 Grid No.: 20 Parcel No.: 761
First Election District Howard County, Maryland
Scale: As Shown
Date: April 18, 2016
Sheet 12 Of 30

SDP-14-072

I:\2009\09014\dwg\SDP (Lennar) Parcel 'E'\09014 Sheet 9-12 swm plans.dwg 7/14/2016 2:29:11 PM, 11

PIPE OUTLET SEDIMENT TRAP ST-I

TRAP NO.	TRAP NO. 1	TRAP NO. 2	
DRAINAGE AREA – INTIAL	1.77	1.90	ACRES
DRAINAGE AREA – INTERIM	N/A	N/A	ACRES
DRAINAGE AREA – FINAL	1.55	1.38	ACRES
TOTAL STORAGE REQUIRED	6,372	6,840	CF
TOTAL STORAGE PROVIDED	6,372	6,840	CF
WET STORAGE REQUIRED	3,186	3,420	CF
WET STORAGE PROVIDED	3,186	3,420	CF
DRY STORAGE REQUIRED	3,186	3,420	CF
DRY STORAGE PROVIDED	6,372	6,820	CF
TRAP BOTTOM ELEVATION	107.00	107.00	FT
TRAP BOTTOM DIMENSIONS	35' X 70'	35' X 70'	FT x FT
RISER CREST (DRY STORAGE) ELEVATION	109.25	109.25	FT
OUTLET (WET STORAGE) ELEVATION	108.15	108.25	FT
CLEANOUT ELEVATION	107.60	107.65	FT
TOP OF EMBANKMENT ELEVATION	111.50	111.50	FT
SIDE SLOPE	2:1	2:1	H:V RATIO
EMBANKMENT TOP WIDTH	4'	4'	FT
PRINCIPAL SPILLWAY MATERIAL (BARREL, RISER, ANTI-SEEP COLLAR)	CMP	CMP	
RISER DIAMETER	27"	27"	IN
BARREL DIAMETER	18"	18"	IN
TRASH RACK DIAMETER	54"	54"	IN
TRASH RACK HEIGHT	18"	18"	IN
ANTI-SEEP COLLAR DIMENSIONS	6.2' X 6.2'	5.2' X 5.2'	FT
OUTLET PROTECTION – LENGTH	N/A	N/A	FT
OUTLET PROTECTION – WIDTH	N/A	N/A	FT
OUTLET PROTECTION – DEPTH	N/A	N/A	IN

SEDIMENT CONTROL LEGEND

- SUPER-SILT FENCE
- SILT FENCE
- STABILIZED CONSTRUCTION ENTRANCE
- S.I.P. (A) — STANDARD INLET PROTECTION, INLET TYPE ('A' or 'B')
- TYPE A-2 — EARTH DIKE
- L.O.D. — LIMIT OF DISTURBANCE
- RPS — REMOVABLE PUMPING STATION
- F.B. — FILTER BAG

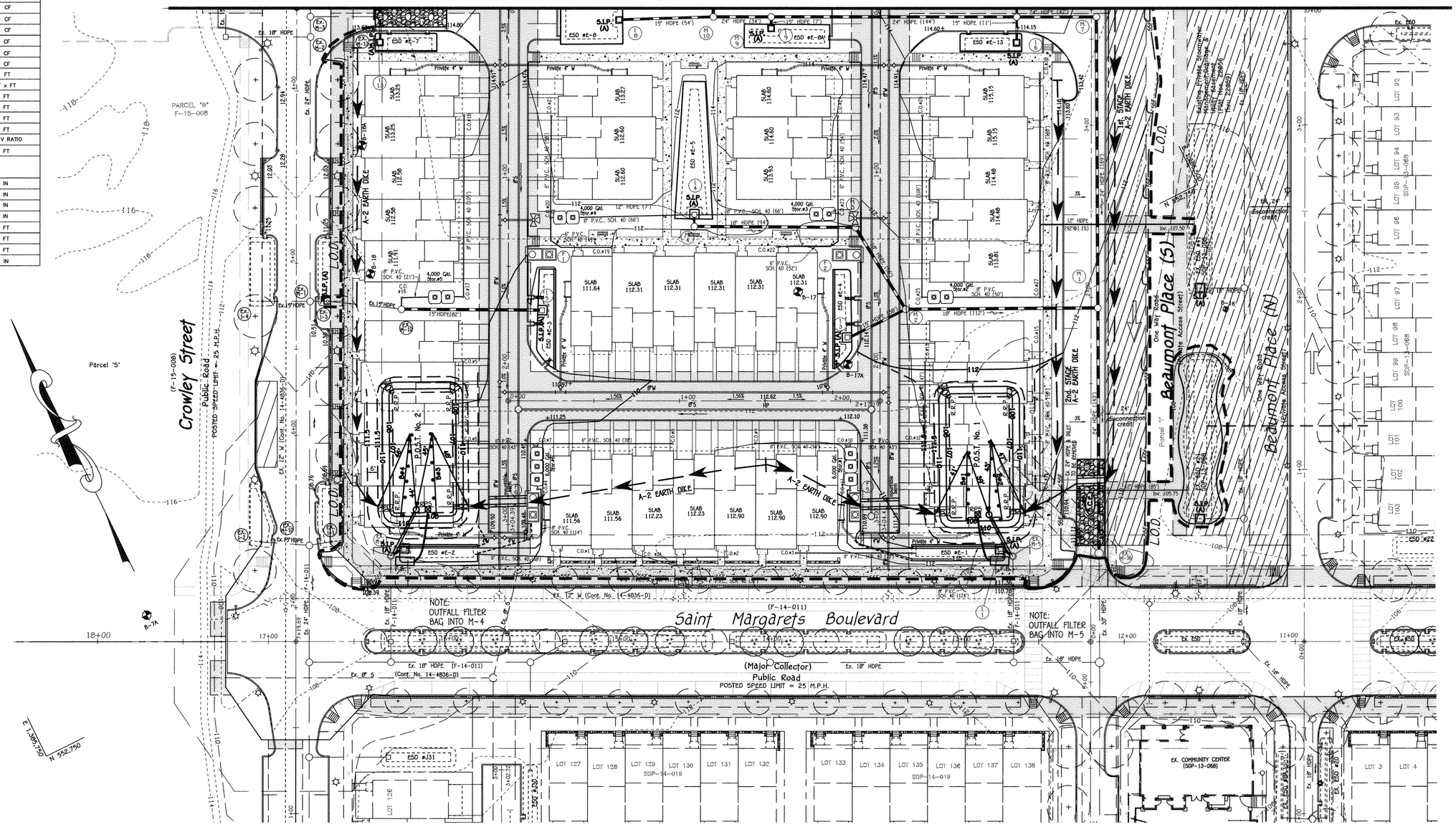

P.O.S.T. #1	
B#1	B#2
A = 3,099 Cu.Ft.	A = 3,099 Cu.Ft.
We = 39.36'	We = 39.36'
D = 32"	D = 20"
We x Z = 79'	We x Z = 79'
L1+L2....= 80'	L1+L2.....= 90'

P.O.S.T. #2	
B#3	B#4
A = 3,099 Cu.Ft.	A = 3,099 Cu.Ft.
We = 39.36'	We = 39.36'
D = 30"	D = 22"
We x Z = 79'	We x Z = 79'
L1+L2....= 93'	L1+L2.....= 90'

0' 30' 60' 120'

SCALE: 1" = 30'

MAA SEDIMENT CONTROL NOTE:

THE CONTRACTOR IS RESPONSIBLE FOR PUMPING ALL STANDING WATER THOUGH A FILTERING DEVICE TO A CLEAR WATER OUTFALL WITHIN 24 HOURS FOLLOWING ANY RAINFALL EVENT.

NOTE:
THOSE BUILDINGS AFFECTED BY THE INSTALLATION OF THE SHOWN SEDIMENT CONTROLS MAY NOT BEGIN CONSTRUCTION UNTIL PERMISSION IS RECEIVED FROM THE SEDIMENT CONTROL INSPECTOR.

NOTE:
CONTRACTOR TO REPAIR ANY SEDIMENT CONTROL DEVICES INTERRUPTED BY THE INSTALLATION OF STORM DRAINS AND ARE TO BE REPAIRED IMMEDIATELY.

FISHER, COLLINS & CARTER, INC.
CIVIL ENGINEERING CONSULTANTS & LAND SURVEYORS
CENTENNIAL SQUARE OFFICE PARK – 10272 BALTIMORE NATIONAL PIKE
ELLICOTT CITY, MARYLAND 21042
(410) 461 – 2855

NO.	REVISION	DATE

STATE OF MARYLAND — ALDO MICHAEL TURCO — No. 20248 — PROFESSIONAL ENGINEER

ENGINEER'S CERTIFICATE

"I certify that this plan for sediment and erosion control represents a practical and workable plan based on my personal knowledge of the site conditions and that it was prepared in accordance with the requirements of the Howard Soil Conservation District."

Aldo M. Turco — 5/4/16
Signature of Engineer (print name below signature) — Date

DEVELOPER'S CERTIFICATE

"I/We certify that all development and construction will be done according to this plan for sediment and erosion control, and that all responsible personnel involved in the construction project will have a Certificate of Attendance at a Department of the Environment Approved Training Program for the Control of Sediment and Erosion before beginning the project. I also authorize periodic on-site inspection by the Howard Soil Conservation District."

U.S. HOME CORP. dba LENNAR
JOSEPH PORTINO
VICE PRESIDENT
4/28/16
Signature of Developer (print name below signature) — Date

This development plan is approved for soil erosion and sediment control by the HOWARD SOIL CONSERVATION DISTRICT.

Howard SCD — 5/24/16 Date

Owner/Builder
U.S. Home Corp. dba Lennar
7035 Albert Einstein Drive, Suite 200
Columbia, Maryland 21046
Ph# 410-997-5522

Developer
U.S. Home Corp. dba Lennar
7035 Albert Einstein Drive, Suite 200
Columbia, Maryland 21046
Ph# 410-997-5522

APPROVED: HOWARD COUNTY DEPARTMENT OF PLANNING AND ZONING

Chief, Division of Land Development — 8-9-16 Date
Chief, Development Engineering Division — 6.13.16 Date
Director – Department of Planning and Zoning — 8-9-16 Date

SUBDIVISION	SECTION/AREA	PARCEL No.
OXFORD SQUARE	----	'Y' (Formerly 'E')

PLAT NO.	BLOCK NO.	ZONE	TAX/ZONE	ELEC. DIST.	CENSUS TR.
23791 - 23792	---	TOD	44	1st.	601101

SEDIMENT AND EROSION CONTROL PLAN

OXFORD SQUARE

"A Howard County Green Neighborhood"

Parcel 'Y'

"EXETER PARK"

(Residential Condominium Townhouse Buildings 1 Thru 16, Units 1 Thru 156)

Zoned: TOD
Tax Map No.: 38 Grid No.: 20 Parcel No.: 761
First Election District Howard County, Maryland
Scale: As Shown
Date: April 18, 2016
Sheet 13 Of 30

SDP-14-072

I:\2009\09014\dwg\SDP (Lennar) Parcel 'E'\09014 Sheet 13-14 sec plan.dwg, 4/18/2016 7:42:16 AM 1:1

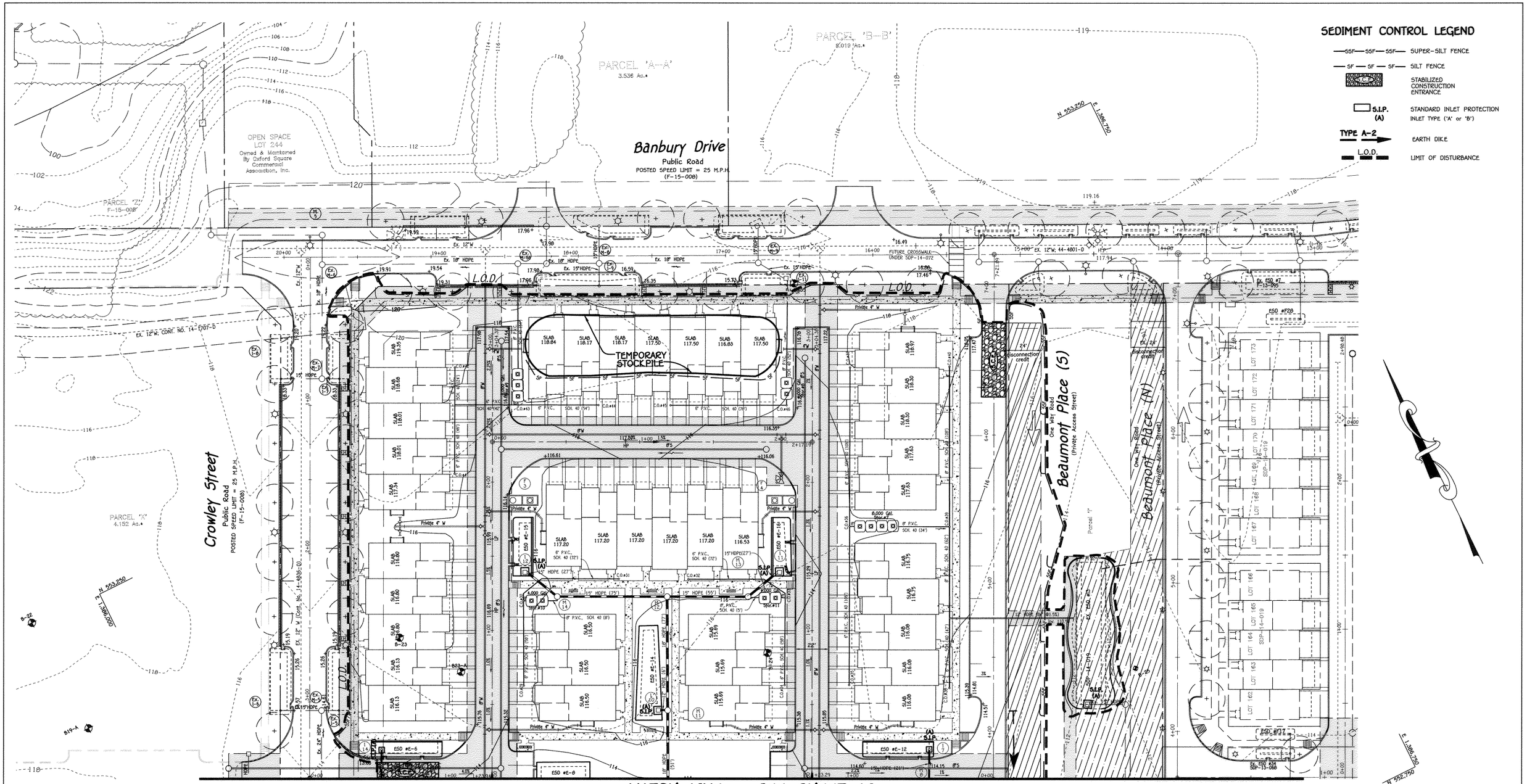

0' 30' 60' 120'

SCALE: 1" = 30'

MAA SEDIMENT CONTROL NOTE:

THE CONTRACTOR IS RESPONSIBLE FOR PUMPING ALL STANDING WATER THOUGH A FILTERING DEVICE TO A CLEAR WATER OUTFALL WITHIN 24 HOURS FOLLOWING ANY RAINFALL EVENT.

NOTE:
THOSE BUILDINGS AFFECTED BY THE INSTALLATION OF THE SHOWN SEDIMENT CONTROLS MAY NOT BEGIN CONSTRUCTION UNTIL PERMISSION IS RECEIVED FROM THE SEDIMENT CONTROL INSPECTOR.

NOTE:
CONTRACTOR TO REPAIR ANY SEDIMENT CONTROL DEVICES INTERRUPTED BY THE INSTALLATION OF STORM DRAINS AND ARE TO BE REPAIRED IMMEDIATELY.

FISHER, COLLINS & CARTER, INC.
CIVIL ENGINEERING CONSULTANTS & LAND SURVEYORS
CENTENNIAL SQUARE OFFICE PARK - 10272 BALTIMORE NATIONAL PIKE
ELLICOTT CITY, MARYLAND 21042
(410) 461 - 2855

NO.	REVISION	DATE

STATE OF MARYLAND — ALDO MICHAEL VITALI — No. 20728 — PROFESSIONAL ENGINEER

ENGINEER'S CERTIFICATE

"I certify that this plan for sediment and erosion control represents a practical and workable plan based on my personal knowledge of the site conditions and that it was prepared in accordance with the requirements of the Howard Soil Conservation District."

Aldo M. Vitali — 5/4/16
Signature of Engineer (print name below signature) — Date

DEVELOPER'S CERTIFICATE

"I/We certify that all development and construction will be done according to this plan for sediment and erosion control, and that all responsible personnel involved in the construction project will have a Certificate of Attendance at a Department of the Environment Approved Training Program for the Control of Sediment and Erosion before beginning the project. I also authorize periodic on-site inspection by the Howard Soil Conservation District."

U.S. Home Corp. dba/ LENNAR
JOSEPH PORTINO
VICE PRESIDENT — 4/28/16
Signature of Developer (print name below signature) — Date

This development plan is approved for soil erosion and sediment control by the HOWARD SOIL CONSERVATION DISTRICT.

John R. Robertson — 5/24/16
Howard SCD — Date

Owner/Builder

U.S. Home Corp. dba Lennar
7035 Albert Einstein Drive, Suite 200
Columbia, Maryland 21046
Ph# 410-997-5522

Developer

U.S. Home Corp. dba Lennar
7035 Albert Einstein Drive, Suite 200
Columbia, Maryland 21046
Ph# 410-997-5522

APPROVED: HOWARD COUNTY DEPARTMENT OF PLANNING AND ZONING

Kent Sheubrooks — 8-9-16
Chief, Division of Land Development — Date

6-13-16
Chief, Development Engineering Division — Date

Valdis Lazdins — 8-9-16
Director - Department of Planning and Zoning — Date

SUBDIVISION	SECTION/AREA	PARCEL No.
OXFORD SQUARE	----	'Y' (Formerly 'E')

PLAT NO.	BLOCK NO.	ZONE	TAX/ZONE	ELEC. DIST.	CENSUS TR.
23791 - 23792	---	TOD	44	1st.	601101

SEDIMENT AND EROSION CONTROL PLAN

OXFORD SQUARE

"A Howard County Green Neighborhood"

Parcel 'Y'

"EXETER PARK"

(Residential Condominium Townhouse Buildings 1 Thru 16, Units 1 Thru 156)

Zoned: TOD

Tax Map No.: 38 Grid No.: 20 Parcel No.: 761

First Election District Howard County, Maryland

Scale: As Shown

Date: April 18, 2016

Sheet 14 Of 30

SDP-14-072

I:\2009\09014\dwg\SDP (Lennar) Parcel E\09014 Sheet 13-14 sec plan.dwg, 4/18/2016 7:40:20 AM, 1:1

SOIL PREPARATION, TOPSOILING AND SOIL AMENDMENTS (B-4-2)

A. Soil Preparation

1. Temporary Stabilization

a. Seedbed preparation consists of loosening soil to a depth of 3 to 5 inches by means of suitable agricultural or construction equipment, such as disc harrows or chisel plows or rippers mounted on construction equipment. After the soil is loosened, it must not be rolled or dragged smooth but left in the roughened condition. Slopes 3:1 or flatter are to be tracked with ridges running parallel to the contour of the slope.

b. Apply fertilizer and lime as prescribed on the plans.

c. Incorporate lime and fertilizer into the top 3 to 5 inches of soil by disking or other suitable means.

2. Permanent Stabilization

a. A soil test is required for any earth disturbance of 5 acres or more. The minimum soil conditions required for permanent vegetative establishment are:

i. Soil pH between 6.0 and 7.0.
ii. Soluble salts less than 500 parts per million (ppm).
iii. Soil contains less than 40 percent clay but enough fine grained material (greater than 30 percent silt plus clay) to provide the capacity to hold a moderate amount of moisture. An exception: if lovegrass will be planted, then a sandy soil (less than 30 percent silt plus clay) would be acceptable.
iv. Soil contains 1.5 percent minimum organic matter by weight.
v. Soil contains sufficient pore space to permit adequate root penetration.

b. Application of amendments or topsoil is required if on-site soils do not meet the above conditions.

c. Graded areas must be maintained in a true and even grade as specified on the approved plan, then scarified or otherwise loosened to a depth of 3 to 5 inches.

d. Apply soil amendments as specified on the approved plan or as indicated by the results of a soil test.

e. Mix soil amendments into the top 3 to 5 inches of soil by disking or other suitable means. Rake lawn areas to smooth the surface, remove large objects like stones and branches, and ready the area for seed application. Loosen surface soil by dragging with a heavy chain or other equipment to roughen the surface where site conditions will not permit normal seedbed preparation. Track slopes 3:1 or flatter with tracked equipment leaving the soil in an irregular condition with ridges running parallel to the contour of the slope. Leave the top 1 to 3 inches of soil loose and friable. Seedbed loosening may be unnecessary on newly disturbed areas.

B. Topsoiling

1. Topsoil is placed over prepared subsoil prior to establishment of permanent vegetation. The purpose is to provide a suitable soil medium for vegetative growth. Soils of concern have low moisture content, low nutrient levels, low pH, materials toxic to plants, and/or unacceptable soil gradation.

2. Topsoil salvaged from an existing site may be used provided it meets the standards as set forth in these specifications. Typically, the depth of topsoil to be salvaged for a given soil type can be found in the representative soil profile section in the Soil Survey published by USDA-NRCS.

3. Topsoiling is limited to areas having 2:1 or flatter slopes where:

a. The texture of the exposed subsoil/parent material is not adequate to produce vegetative growth.

b. The soil material is so shallow that the rooting zone is not deep enough to support plants or furnish continuing supplies of moisture and plant nutrients.

c. The original soil to be vegetated contains material toxic to plant growth.

d. The soil is so acidic that treatment with limestone is not feasible.

4. Areas having slopes steeper than 2:1 require special consideration and design.

5. Topsoil Specifications: Soil to be used as topsoil must meet the following criteria:

a. Topsoil must be a loam, sandy loam, clay loam, silt loam, sandy clay loam, or loamy sand. Other soils may be used if recommended by an agronomist or soil scientist and approved by the appropriate approval authority. Topsoil must not be a mixture of contrasting textured subsoils and must contain less than 5 percent by volume of cinders, stones, slag, coarse fragments, gravel, sticks, roots, trash, or other materials larger than 1 1/2 inches in diameter.

b. Topsoil must be free of noxious plants or plant parts such as Bermuda grass, quack grass, Johnson grass, nut sedge, poison ivy, thistle, or others as specified.

c. Topsoil substitutes or amendments, as recommended by a qualified agronomist or soil scientist and approved by the appropriate approval authority, may be used in lieu of natural topsoil.

6. Topsoil Application

a. Erosion and sediment control practices must be maintained when applying topsoil.

b. Uniformly distribute topsoil in a 5 to 8 inch layer and lightly compact to a minimum thickness of 4 inches. Spreading is to be performed in such a manner that sodding or seeding can proceed with a minimum of additional soil preparation and tillage. Any irregularities in the surface resulting from topsoiling or other operations must be corrected in order to prevent the formation of depressions or water pockets.

c. Topsoil must not be placed if the topsoil or subsoil is in a frozen or muddy condition, when the subsoil is excessively wet or in a condition that may otherwise be detrimental to proper grading and seedbed preparation.

C. Soil Amendments (Fertilizer and Lime Specifications)

1. Soil tests must be performed to determine the exact ratios and application rates for both lime and fertilizer on sites having disturbed areas of 5 acres or more. Soil analysis may be performed by a recognized private or commercial laboratory. Soil samples taken for engineering purposes may also be used for chemical analyses.

2. Fertilizers must be uniform in composition, free flowing and suitable for accurate application by appropriate equipment. Manure may be substituted for fertilizer with prior approval from the appropriate approval authority. Fertilizers must all be delivered to the site fully labeled according to the applicable laws and must bear the name, trade name or trademark and warranty of the producer.

3. Lime materials must be ground limestone (hydrated or burnt lime may be substituted except when hydroseeding) which contains at least 50 percent total oxides (calcium oxide plus magnesium oxide). Limestone must be ground to such fineness that at least 50 percent will pass through a #100 mesh sieve and 98 to 100 percent will pass through a #20 mesh sieve.

4. Lime and fertilizer are to be evenly distributed and incorporated into the top 3 to 5 inches of soil by disking or other suitable means.

5. Where the subsoil is either highly acidic or composed of heavy clays, spread ground limestone at the rate of 4 to 8 tons/acre (200-400 pounds per 1,000 square feet) prior to the placement of topsoil.

TEMPORARY SEEDING NOTES (B-4-4)

Definition

To stabilize disturbed soils with vegetation for up to 6 months.

Purpose

To use fast growing vegetation that provides cover on disturbed soils.

Conditions Where Practice Applies

Exposed soils where ground cover is needed for a period of 6 months or less. For longer duration of time, permanent stabilization practices are required.

Criteria

1. Select one or more of the species or seed mixtures listed in Table B.1 for the appropriate Plant Hardiness Zone (from Figure B.3), and enter them in the Temporary Seeding Summary below along with application rates, seeding dates and seeding depths. If this Summary is not put on the plan and completed, then Table B.1 plus fertilizer and lime rates must be put on the plan.

2. For sites having soil tests performed, use and show the recommended rates by the testing agency. Soil tests are not required for Temporary Seeding.

3. When stabilization is required outside of a seeding season, apply seed and mulch or straw mulch alone as prescribed in Section B-4-3.A.1.b and maintain until the next seeding season.

Temporary Seeding Summary

Hardiness Zone (from Figure B.3): 6b Seed Mixture (from Table B.1):				Fertilizer Rate (10-20-20)	Lime Rate
Species	Application Rate (lb/ac)	Seeding Dates	Seeding Depths		
BARLEY	96	3/1 - 5/15, 8/15 - 10/15	1"	436 lb/ac (10 lb/ 1000 sf)	2 tons/ac (90 lb/ 1000 sf)
OATS	72	3/1 - 5/15, 8/15 - 10/15	1"		
RYE	112	3/1 - 5/15, 8/15 - 10/15	1"		

PERMANENT SEEDING NOTES (B-4-5)

A. Seed Mixtures

1. General Use

a. Select one or more of the species or mixtures listed in Table B.3 for the appropriate Plant Hardiness Zone (from Figure B.3) and based on the site condition or purpose found on Table B.2. Enter selected mixture(s), application rates, and seeding dates in the Permanent Seeding Summary. The Summary is to be placed on the plan.

b. Additional planting specifications for exceptional sites such as shorelines, stream banks, or dunes or for special purposes such as wildlife or aesthetic treatment may be found in USDA-NRCS Technical Field Office Guide, Section 342 - Critical Area Planting.

c. For sites having disturbed area over 5 acres, use and show the rates recommended by the soil testing agency. d. For areas receiving low maintenance, apply urea form fertilizer (46-0-0) at 3 1/2 pounds per 1000 square feet (150 pounds per acre) at the time of seeding in addition to the soil amendments shown in the Permanent Seeding Summary .

2. Turfgrass Mixtures

a. Areas where turfgrass may be desired include lawns, parks, playgrounds, and commercial sites which will receive a medium to high level of maintenance.

b. Select one or more of the species or mixtures listed below based on the site conditions or purpose. Enter selected mixture(s), application rates, and seeding dates in the Permanent Seeding Summary. The summary is to be placed on the plan.

i. Kentucky Bluegrass: Full Sun Mixture: For use in areas that receive intensive management. Irrigation required in the areas of central Maryland and Eastern Shore. Recommended Certified Kentucky Bluegrass Cultivars Seeding Rate: 1.5 to 2.0 pounds per 1000 square feet. Choose a minimum of three Kentucky bluegrass cultivars with each ranging from 10 to 35 percent of the total mixture by weight.

ii. Kentucky Bluegrass/Perennial Rye: Full Sun Mixture: For use in full sun areas where rapid establishment is necessary and when turf will receive medium to intensive management. Certified Perennial Ryegrass Cultivars/Certified Kentucky Bluegrass Seeding Rate: 2 pounds mixture per 1000 square feet. Choose a minimum of three Kentucky bluegrass cultivars with each ranging from 10 to 35 percent of the total mixture by weight.

iii. Tall Fescue/Kentucky Bluegrass: Full Sun Mixture: For use in drought prone areas and/or for areas receiving low to medium management in full sun to medium shade. Recommended mixture includes; Certified Tall Fescue Cultivars 95 to 100 percent, Certified Kentucky Bluegrass Cultivars 0 to 5 percent. Seeding Rate: 5 to 8 pounds per 1000 square feet. One or more cultivars may be blended.

iv. Kentucky Bluegrass/Fine Fescue: Shade Mixture: For use in areas with shade in Bluegrass lawns. For establishment in high quality, intensively managed turf area. Mixture includes; Certified Kentucky Bluegrass Cultivars 30 to 40 percent and Certified Fine Fescue and 60 to 70 percent. Seeding Rate: 1 1/2 to 3 pounds per 1000 square feet.

Notes:
Select turfgrass varieties from those listed in the most current University of Maryland Publication, Agronomy Memo #77, "Turfgrass Cultivar Recommendations for Maryland"

Choose certified material. Certified material is the best guarantee of cultivar purity. The certification program of the Maryland Department of Agriculture, Turf and Seed Section, provides a reliable means of consumer protection and assures a pure genetic line

c. Ideal Times of Seeding for Turf Grass Mixtures Western MD: March 15 to June 1, August 1 to October 1 (Hardiness Zones: 5b, 6a) Central MD: March 1 to May 15, August 15 to October 15 (Hardiness Zone: 6b) Southern MD, Eastern Shore: March 1 to May 15, August 15 to October 15 (Hardiness Zones: 7a, 7b)

d. Till areas to receive seed by disking or other approved methods to a depth of 2 to 4 inches, level and rake the areas to prepare a proper seedbed. Remove stones and debris over 1 1/2 inches in diameter. The resulting seedbed must be in such condition that future mowing of grasses will pose no difficulty.

e. If soil moisture is deficient, supply new seedings with adequate water for plant growth (1/2 to 1 inch every 3 to 4 days depending on soil texture) until they are firmly established. This is especially true when seedings are made late in the planting season, in abnormally dry or hot seasons, or on adverse sites.

Permanent Seeding Summary

Hardiness Zone (from Figure B.3): 6b Seed Mixture (from Table B.3): 8					Fertilizer Rate (10-20-20)			Lime Rate
No.	Species	Application Rate (lb/ac)	Seeding Dates	Seeding Depths	N	P_2O_5	K_2O	
8	TALL FESCUE	100	Mar. 1-May 15 Aug. 1-Oct. 15	1/4-1/2 in.	45 lbs. per acre (1.0 lb/ 1000 sf)	90 lb/ac (2 lb/ 1000 sf)	90 lb/ac (2 lb/ 1000 sf)	2 tons/ac (90 lb/ 1000 sf)

STANDARD STABILIZATION NOTE

FOLLOWING INITIAL SOIL DISTURBANCE OR RE-DISTURBANCE, PERMANENT OR TEMPORARY STABILIZATION MUST BE COMPLETED WITHIN:

a.) THREE (3) CALENDAR DAYS AS TO THE SURFACE OF ALL PERIMETER DIKES, SWALES, DITCHES, PERIMETER SLOPES AND ALL SLOPES STEEPER THAN 3 HORIZONTAL TO 1 VERTICAL (3:1); AND

b.) SEVEN (7) CALENDAR DAYS AS TO ALL OTHER DISTURBED OR GRADED AREAS ON THE PROJECT SITE NOT UNDER ACTIVE GRADING.

STANDARDS AND SPECIFICATIONS FOR STOCKPILE AREA (B-4-8)

Definition

The mound or pile of soil protected by appropriately designed erosion and sediment control measures.

Purpose

To provide a designated location for the temporary storage of soil that controls the potential for erosion, sedimentation, and changes to drainage patterns.

Conditions Where Practice Applies

Stockpile areas are utilized when it is necessary to salvage and store soil for later use.

Criteria

1. The stockpile location and all related sediment control practices must be clearly indicated on the erosion and sediment control plan.
2. The footprint of the stockpile must be sized to accommodate the anticipated volume of material and based on a side slope ratio no steeper tha 2:1. Benching must be provided in accordance with Section B-3 Land Grading.
3. Runoff from the stockpile area must drain to a suitable sediment control practice.
4. Access the stockpile area from the upgrade side.
5. Clear water runoff into the stockpile area must be minimized by use of a diversion device such as an earth dike, temporary swale or diversion fence. Provisions must be made for discharging concentrated flow in a non-erosive manner.
6. Where runoff concentrates along the toe of the stockpile fill, an appropriate erosion/sediment control practice must be used to intercept the discharge.
7. Stockpiles must be stabilized in accordance with the 3/7 day stabilization requirement as well as Standard B-4-1 Incremental Stabilization and Standard B-4-4 Temporary Stabilization.
8. If the stockpile is located on an impervious surface, a liner should be provided below the stockpile to facilitate cleanup. Stockpiles containing contaminated material must be covered with impermeable sheeting.

Maintenance

The stockpile area must continuously meet the requirements for Adequate Vegetative Establishment in accordance with Section B-4 Vegetative Stabilization. Side slopes must be maintained at no steeper than a 2:1 ratio. The stockpile area must be kept free of erosion. If the vertical height of a stockpile exceeds 20 feet for 2:1 slopes, 30 feet for 3:1 slopes, or 40 feet for 4:1 slopes, benching must be provided in accordance with Section B-3 Land Grading.

STANDARDS AND SPECIFICATIONS FOR SEEDING AND MULCHING (B-4-3)

Definition

The application of seed and mulch to establish vegetative cover.

Purpose

To protect disturbed soils from erosion during and at the end of construction.

Conditions Where Practice Applies

To the surface of all perimeter controls, slopes, and any disturbed area not under active grading.

Criteria

A. Seeding
1. Specifications
a. All seed must meet the requirement of the Maryland State Seed Law. All seed must be subject to re-testing by a recognized seed laboratory. All seed used must have been tested within the 6 months immediately preceding the date of sowing such material on any project. Refer to Table B.4 regarding the quality of seed. Seed tags must be available upon request to the inspector to verify type of seed and seeding rate.
b. Mulch alone may be applied between the fall and spring seeding dates only if the ground is frozen. The appropriate seeding mixture must be applied when the ground thaws.
c. Inoculants: The inoculant for treating legume seed in the seed mixtures must be a pure culture of nitrogen fixing bacteria prepared specifically for the species. Inoculants must not be used later than the date indicated on the container. Add fresh inoculants as directed on the package. Use four times the recommended rate when hydroseeding. Note: It is very important to keetp inoculant as cook as possible until used. Temperatures above 75 to 80 degrees Fahrenheit can weaken bacteria and make the inoculant less effective.
d. Sod or seed must not be placed on soil which has been treated with soil sterilants or chemicals used for weedcontrol until sufficient time has elapsed (14 days min.) to permit dissipation of phyto-toxic materials.

2. Application
a. Dry Seeding: This includes use of conventional drop or broadcast spreaders.
i. Incorporate seed into the subsoil at the rates prescribed on Temporary Seeding Table B.1, Permanent Seeding Table B.3, or site-specific seeding summaries.
ii. Apply seed in two directions, perpendicular to each other. Apply half the seeding rate in each direction. Roll the seeded area with weighted roller to provide good seed to soil contact.
b. Drill or Cultipacker Seeding: Mechanized seeders that apply and cover seed with soil.
i. Cultipacking seeders are required to bury the seed in such a fashion as to provide at least 1/4 inch of soil covering. Seedbed must be firm after planting.
ii. Apply seed in two directions, perpendicular to each other. Apply half the seeding rate in each direction.
c. Hydroseeding: Apply seed uniformly with hydroseeder (slurry includes seed and fertilizer).
i. If fertilizer is being applied at the time of seeding, the application rates should not exceed the following: nitrogen, 100 pounds per acre total of soluble nitrogen; P_2O_5 (phosphorus), 200 pounds per acre; K O (potassium), 200 pounds per acre.
ii. Lime: Use only ground agricultural limestone (up to 3 tons per acre may be applied by hydroseeding). Normally, not more than 2 tons are applied by hydroseeding at any one time. Do not use burnt or hydrated lime when hydroseeding.
iii. Mix seed and fertilizer on site and seed immediately and without interruption.
iv. When hydroseeding do not incorporate seed into the soil.

B. Mulching
1. Mulch Materials (in order of preference)
a. Straw consisting of thoroughly threshed wheat, rye, oat, or barley and reasonably bright in color. Straw is to be free of noxious weed seeds as specified in the Maryland Seed Law and not musty, moldy, caked, decayed, or excessively dusty. Note: Use only sterile straw mulch in areas where one species of grass is desired.
b. Wood Cellulose Fiber Mulch (WCFM) consisting of specially prepared wood cellulose processed into uniform fibrous physical state.
i. WCFM is to be dyed green or contain a green dye in the package that will provide an appropriate colot to facilitate visual inspection of the uniformly spread slurry.
ii. WCFM, including dye, must contain no germination or growth inhibiting factors.
iii. WCFM materials are to be manufactured and processed in such a manner that the wood cellulose fiber mulch will remain in uniform suspension in water under agitation and will blend with seed, fertilizer and other additives to form a homogeneous slurry. The mulch material must form a blotter-like ground cover, on application, having moisture absorption and percolation properties and must cover and hold grass seed in contact with the soil without inhibiting the growth of the grass seedlings.
iv. WCFM material must not contain elements or compounds at concentration levels that will by phyto-toxic.
v. WCFM must conform to the following physical requirements: fiber length of approximately 10 millimeters, diameter approximately 1 millimeter, pH range of 4.0 to 8.5, ash content of 1.6 percent maximum and water holding capacity of 90 percent minimum.
2. Application
a. Apply mulch to all seeded areas immediately after seeding.
b. When straw mulch is used, spread it over all seeded areas at the rate of 2 tons per acre to a uniform loose depth of 1 to 2 inches. Apply mulch to achieve a uniform distribution and depth so that the soil surface is not exposed. When using a mulch anchoring tool, increase the application rate to 2.5 tons per acre.
c. Wood cellulose fiber used as mulch must be applied to a net dry weight of 1500 pounds per acre. Mix the wood cellulose fiber with water to attain a mixture with a maximum of 50 pounds of wood cellulose fiber per 100 gallons of water.
3. Anchoring
a. Perform mulch anchoring immediately following application of mulch to minimize loss by wind or water. This may be done by one of the following methods (listed by preference), depending upon the size of the area and erosion hazard:
i. A mulch anchoring tool is a tractor drawn implement designed to punch and anchor mulch into the soil surface a minimum of 2 inches. This practice is most effective on large areas, but is limited to flatter slopes where equipment can operate safely. If used on sloping land, this practice should follow the contour.
ii. Wood cellulose fiber may be used for anchoring straw. Apply the fiber binder at a net dry weight of 750 pounds per acre. Mix the wood cellulose fiber with water at a maximum of 50 pounds of wood cellulose fiber per 100 gallons of water.
iii. Synthetic binders such as Acrylic DLR (Agro-Tack), DCA-70, Petroset, Terra Tax II, Terra Tack AR or other approved equal may be used. Follow application rates as specified by the manufacturer. Application of liquid binders needs to be heavier at the edges where wind catches mulch, such as in valleys and on crests of banks. Use of asphalt binders is strictly prohibited.
iv. Lightweight plastic netting may be stapled over the mulch according to manufacturer recommendations. Netting is usually available in rolls 4-15 feet wide and 300 to 3,000 feet long.

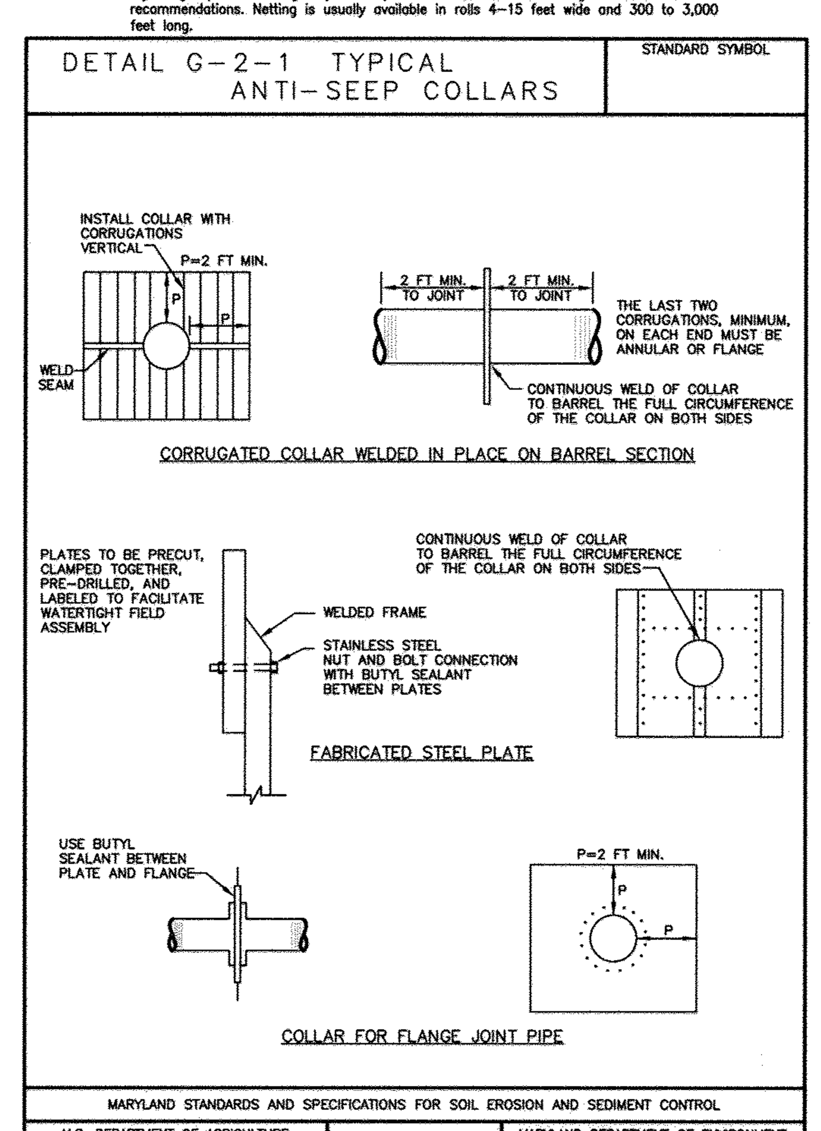

B-4-1 STANDARDS AND SPECIFICATIONS FOR INCREMENTAL STABILIZATION

Definition

Establishment of vegetative cover on cut and fill slopes.

Purpose

To provide timely vegetative cover on cut and fill slopes as work progresses.

Conditions Where Practice Applies

Any cut or fill slope greater than 15 feet in height. This practice also applies to stockpiles.

Criteria

A. Incremental Stabilization - Cut Slopes
1. Excavate and stabilize cut slopes in increments not to exceed 15 feet in height. Prepare seedbed and apply seed and mulch on all cut slopes as the work progresses.
2. Construction sequence example (Refer to Figure B.1):
a. Construct and stabilize all temporary swales or dikes that will be used to convey runoff around the excavation.
b. Perform Phase 1 excavation, prepare seedbed, and stabilize.
c. Perform Phase 2 excavation, prepare seedbed, and stabilize. Overseed Phase 1 areas as necessary.
d. Perform final phase excavation, prepare seedbed, and stabilize. Overseed previously seeded areas as necessary.

Note: Once excavation has begun the operation should be continuous from grubbing through the completion of grading and placement of topsoil (if required) and permanent seed and mulch. Any interruptions in the operation or completing the operation out of the seeding season will necessitate the application of temporary stabilization.

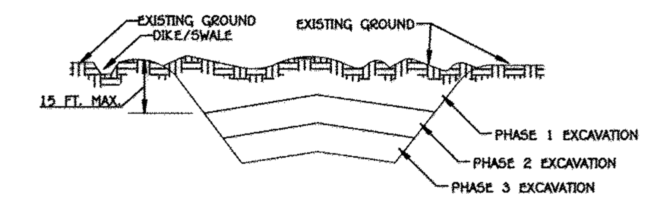

Figure B.1: Incremental Stabilization - Cut

B. Incremental Stabilization - Fill Slopes
1. Construct and stabilize fill slopes in increments not to exceed 15 feet in height. Prepare seedbed and apply seed and mulch on all slopes as the work progresses.
2. Stabilize slopes immediately when the vertical height of a lift reaches 15 feet, or when the grading operation ceases as prescribed in the plans.
3. At the end of each day, install temporary water conveyance practice(s), as necessary, to intercept surface runoff and convey it down the slope in a non-erosive manner.
4. Construction sequence example (Refer to Figure B.2):
a. Construct and stabilize all temporary swales or dikes that will be used to divert runoff around the fill. Construct silt fence on low side of fill unless other methods shown on the plans address this area.
b. At the end of each day, install temporary water conveyance practice(s), as necessary, to intercept surface runoff and convey it down the slope in a non-erosive manner.
c. Place Phase 1 fill, prepare seedbed, and stabilize.
d. Place Phase 2 fill, prepare seedbed, and stabilize.
e. Place final phase fill, prepare seedbed, and stabilize. Overseed previously seeded areas as necessary.

Note: Once the placement of fill has begun the operation should be continuous from grubbing through the completion of grading and placement of topsoil (if required) and permanent seed and mulch. Any interruptions in the operation or completing the operation out of the seeding season will necessitate the application of temporary stabilization.

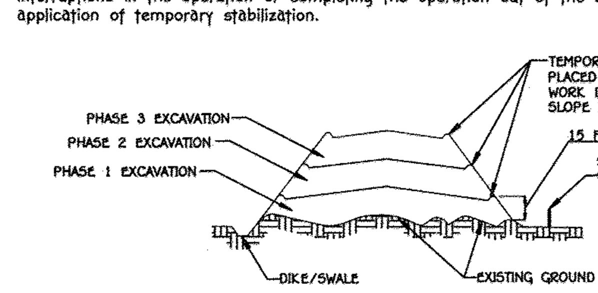

Figure B.2: Incremental Stabilization - Fill

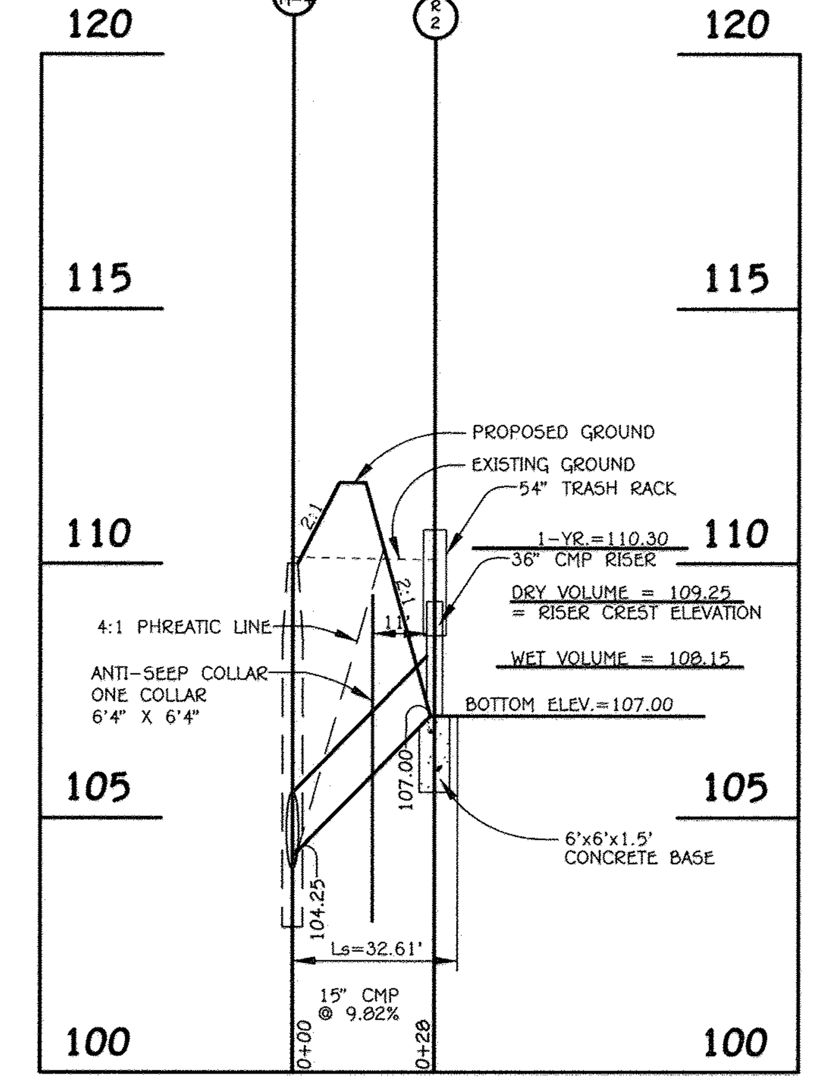

P.O.S.T. #2

SCALE: 1" = 30' HOR.
1" = 3' VERT.

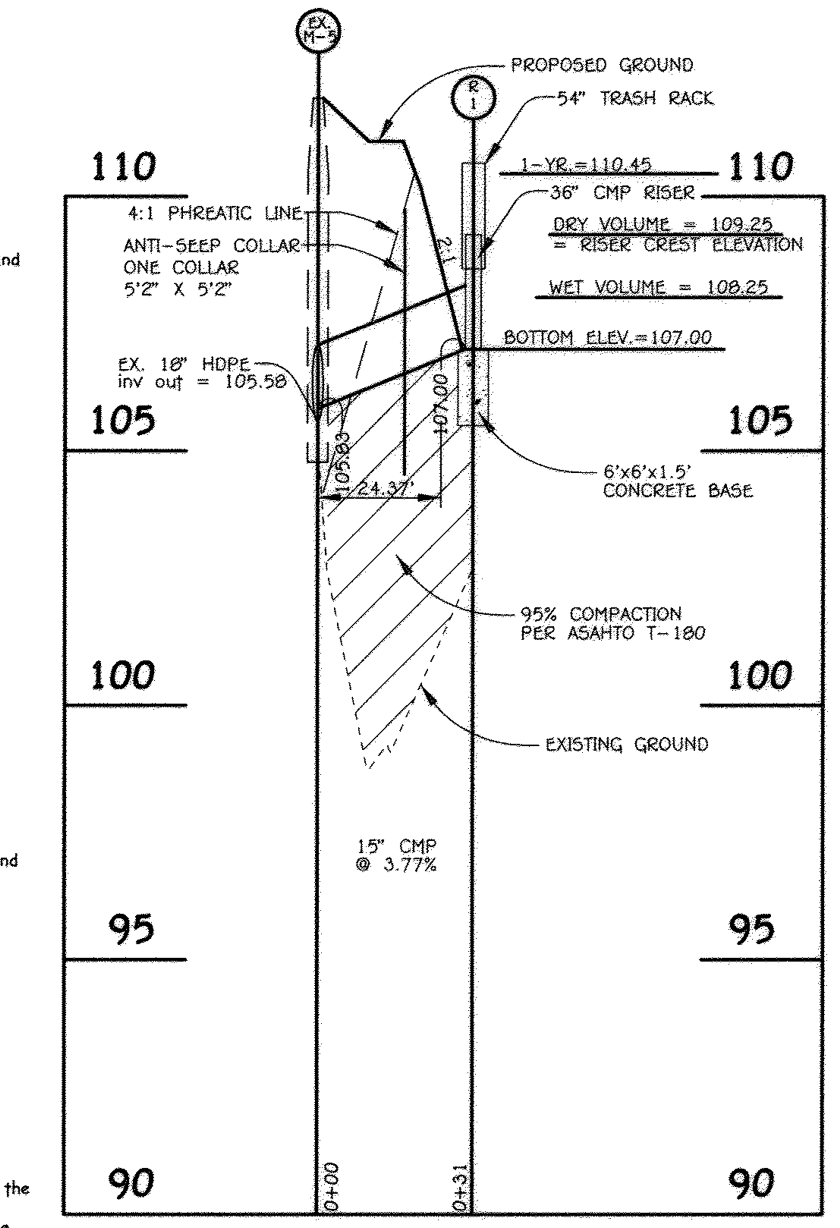

P.O.S.T. #1

SCALE: 1" = 30' HOR.
1" = 3' VERT.

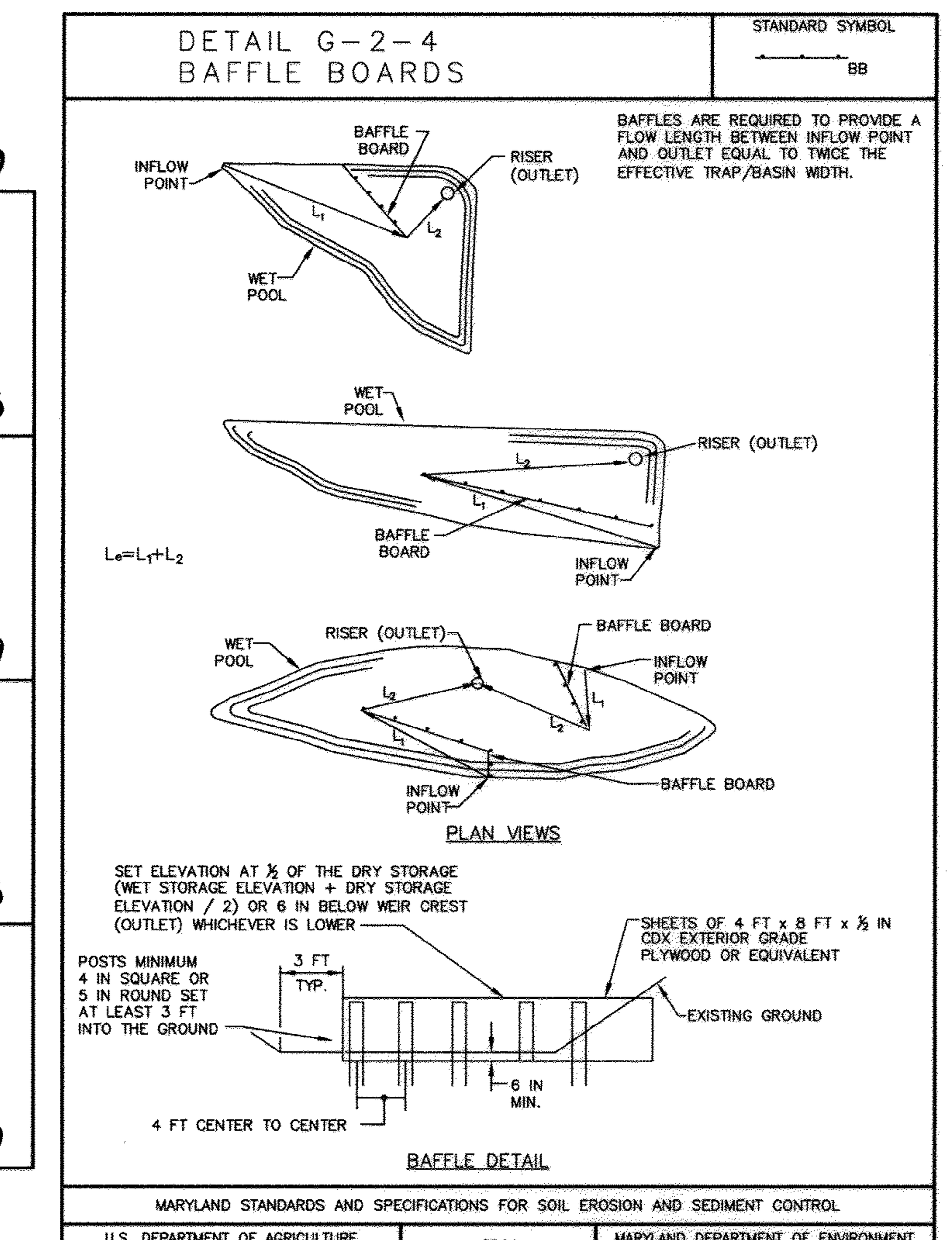

SEQUENCE OF CONTSRUCTION - STAGE 1

1. OBTAIN GRADING PERMITS. (2 WEEKS)
2. NOTIFY "MISS UTILITY" AT LEAST 48 HOURS BEFORE ANY WORK AT 1-800-257-7777. NOTIFY HOWARD COUNTY OFFICE OF CONSTRUCTION/INSPECTION DIVISION AT 410-313-1870 AT LEAST 24-HOURS BEFORE STARTING ANY WORK.
3. INSTALL THE STABILIZED CONSTRUCTION ENTRANCES, PERIMETER SUPER SILT AS SHOWN ON THE PLANS. CLEAR AND GRUB WHERE NECESSARY FOR THE CONSTRUCTION OF P.O.S.T #1 AND #2 INSTALL STAGE 1 EARTH DIKE PER PLAN. (3 DAYS)

SEQUENCE OF CONSTRUCTION - STAGE 2

1. GRADE SITE TO MASS GRADING CONTOURS FOR THE PRIVATE ROADS AND BUILDING PADS. THE CONTRACTOR SHALL HAVE THE OPTION TO GRADE SOME AREAS PRIOR TO OTHERS TO ALLOW FOR FLEXIBILITY ON WHICH PORTION OF THE PRIVATE ROADS OR WHICH CONDO. BUILDING IS TO BE CONSTRUCTED FIRST. OBTAIN PERMISSION FROM THE SEDIMENT CONTROL INSPECTOR BEFORE PROCEEDING.
2. INSTALL THE PROPOSED STORM DRAIN SYSTEMS INCLUDING CONNECTIONS FOR EACH OF THE SWM-ESD FACILITIES. INSTALL PUBLIC WATER MAINS AND PUBLIC/PRIVATE SEWER MAINS AS SHOWN ON THE PLANS. AS FOR THE SWM BIO-RETENTION CELLS, THE CONSTRUCTION OF THE FILTER MEDIA, STONE LAYERS, UNDERDRAIN AND PLANTINGS FOR EACH BIO-RETENTION CELL SHALL BE DELAYED UNTIL THE CONTRIBUTING DRAINAGE AREA FOR EACH FACILITY IS PERMANENTLY STABILIZED.
3. INSTALL THE PROPOSED SEWER AND WATER MAINS IN CONJUNCTION WITH THE ABOVE STORM DRAIN SYSTEM, INSTALL STAGE 2 EARTH DIKE AS SHOWN ON THE PLANS.
4. UPON PERMISSION FROM THE SEDIMENT CONTROL INSPECTOR TO PROCEED, INSTALL CONCRETE CURB AND GUTTER, BASE COURSE PAVING.
5. INSTALL INLET PROTECTION ON THOSE INLETS AS INTENDED TO PROTECT EACH SWM FACILITY. BEGIN CONSTRUCTION OF THE CONDOMINIUM BUILDINGS WITH THE ORDER OF CONSTRUCTION BEING UP TO THE DEVELOPER/CONTRACTOR. ONCE THE CONTRIBUTING DRAINAGE AREA TO THE PERIMETER DEVICES IS CONSTRUCTED AND STABILIZED THE SUPER SILT FENCE CAN BE REMOVED.
6. STABILIZE ALL REMAINING AREAS DISTURBED AREAS ONSITE WITH PERMANENT SEEDING OR OPTIONAL SODDING. THE FINAL CONSTRUCTION OF THE BIO-RETENTION FACILITIES CAN BE COMPLETED WITH THE FILTER MEDIA AND PLANTINGS.
7. WITH THE APPROVAL OF THE SEDIMENT CONTROL INSPECTOR START REMOVING THE PERIMETER SEDIMENT CONTROL MEASURES AND STABILIZE WITH PERMANENT SEEDING OR OPTIONAL SODDING. THIS TASK SHOULD BE COORDINATED WITH THE PHASED CONSTRUCTION OF EACH OF THE FOUR BUILDINGS.
8. STANDARD NOTE: THE CONTRACTOR SHALL COORDINATE WITH THE INSPECTOR IN REGARDS TO THE REQUIREMENT THAT NO MORE THAN 20-ACRES OF "OPEN" GROUND SHALL BE DISTURBED AT ANY GIVEN TIME, IF REQUIRED. THIS PARCEL "E" AND ASSOCIATED L.O.D. IS LESS THAN 20-ACRES IN SIZE.
9. THE CONTRACTOR SHALL INSPECT AND PROVIDE NECESSARY MAINTENANCE ON ALL SEDIMENT AND EROSION CONTROL STRUCTURES SHOWN HEREON AFTER EACH RAINFALL AND ON A DAILY BASIS.
10. GREEN NEIGHBORHOOD NOTE: ALL CONSTRUCTION WASTE WILL BE MANAGED IN ACCORDANCE WITH THE APPROVED GREEN NEIGHBORHOOD WASTE MANAGEMENT PLAN.

NOTE: ALL CONSTRUCTION WASTE MUST BE MANAGED IN ACCORDANCE WITH THE CONSTRUCTION WASTE MANAGEMENT PLAN PER GREEN NEIGHBORHOOD CREDIT H-3.

HOWARD SOIL CONSERVATION DISTRICT (HSCD) STANDARD SEDIMENT CONTROL NOTES

1. A pre-construction meeting must occur with the Howard County Department of Public Works, Construction Inspection Division (CID), 410-313-1855 after the future LOD and protected areas are marked clearly in the field. A minimum of 48 hour notice to CID must be given at the following stages: a. Prior to the start of earth disturbance.

b. Upon completion of the installation of perimeter erosion and sediment controls, but before proceeding with any other earth disturbance or grading.

c. Prior to the start of another phase of construction or opening of another grading unit. d. Prior to the removal or modification of sediment control practices.

Other building or grading inspection approvals may not be authorized until this initial approval by the inspection agency is made. Other related state and federal permits shall be referenced, to ensure coordination and to avoid conflicts with this plan.

2. All vegetative and structural practices are to be installed according to the provisions of this plan and are to be in conformance with the 2011 MARYLAND STANDARDS AND SPECIFICATIONS FOR SOIL EROSION AND SEDIMENT CONTROL, and revisions thereto.

3. Following initial soil disturbance or re-disturbance, permanent or temporary stabilization is required within three (3) calendar days as to the surface of all perimeter controls, dikes, swales, ditches, perimeter slopes, and all slopes steeper than 3 horizontal to 1 vertical (3:1); and seven (7) calendar days as to all other disturbed areas on the project site except for those areas under active grading.

4. All disturbed areas must be stabilized within the time period specified above in accordance with the 2011 MARYLAND STANDARDS AND SPECIFICATIONS FOR SOIL EROSION AND SEDIMENT CONTROL for topsoil (Sec. B-4-2), permanent seeding (Sec. B-4-5), temporary seeding (Sec. B-4-4) and mulching (Sec. B-4-3). Temporary stabilization with mulch alone can only be applied between the fall and spring seeding dates if the ground is frozen. Incremental stabilization (Sec. B-4-1) specifications shall be enforced in areas with >15' of cut and/or fill. Stockpiles (Sec. B-4-8) in excess of 20 ft. must be benched with stable outlet. All concentrated flow, steep slope, and highly erodible areas shall receive soil stabilization matting (Sec. B-4-6).

5. All sediment control structures are to remain in place, and are to be maintained in operative condition until permission for their removal has been obtained from the CID.

6. Site Analysis:

Total Area of Site:	6.96	Acres
Area Disturbed:	7.20	Acres
Area to be roofed or paved:	5.39	Acres
Area to be vegetatively stabilized:	1.81	Acres
Total Cut:	6940	Cu. Yds. (Unadjusted)
Total Fill:	3760	Cu. Yds. (Unadjusted)
waste/borrow area location:	ON-SITE OF OXFORD PROJECT	

7. Any sediment control practice which is disturbed by grading activity for placement of utilities must be repaired on the same day of disturbance.

8. Additional sediment control must be provided, if deemed necessary by the CID. The site and all controls shall be inspected by the contractor weekly; and the next day after each rain event. A written report by the contractor, made available upon request, is part of every inspection and should include.

- Inspection date
- Inspection type (routine, pre-storm event, during rain event)
- Name and title of inspector
- Weather information (current conditions as well as time and amount of last recorded precipitation)
- Brief description of project's status (e.g., percent complete) and/or current activities
- Evidence of sediment discharges
- Identification of plan deficiencies
- Identification of sediment controls that require maintenance
- Identification of missing or improperly installed sediment controls
- Compliance status regarding the sequence of construction and stabilization requirements
- Photographs
- Monitoring/sampling
- Maintenance and/or corrective action performed
- Other inspection items as required by the General Permit for Stormwater Associated with Construction Activities (NPDES, MDE).

9. Trenches for the construction of utilities is limited to three pipe lengths or that which can and shall be back-filled and stabilized by the end of each workday, whichever is shorter.

10. Any major changes or revisions to the plan or sequence of construction must be reviewed and approved by the HSCD prior to proceeding with construction. Minor revisions may allowed by the CID per the list of HSCD-approved field changes.

11. Disturbance shall not occur outside the L.O.D. A project is to be sequenced so that grading activities begin on one grading unit (maximum acreage of 20 ac. per grading unit) at a time. Work may proceed to a subsequent grading unit when at least 50 percent of the disturbed area in the preceding grading unit has been stabilized and approved by the CID. Unless otherwise specified and approved by the CID, no more than 30 acres cumulatively may be disturbed at a given time.

12. Wash water from any equipment, vehicles, wheels, pavement, and other sources must be treated in a sediment basin or other approved washout structure.

13. Topsoil shall be stockpiled and preserved on-site for redistribution onto final grade.

14. All Silt Fence and Super Silt Fence shall be placed on-the-contour, and be imbricated at 25' minimum intervals, with lower ends curled uphill by 2' in elevation.

15. Stream channels must not be disturbed during the following restricted time periods (inclusive):

- Use I and IP March 1 - June 15
- Use III and IIIP October 1 - April 30
- Use IV March 1 - May 31

16. A copy of this plan, the 2011 MARYLAND STANDARDS AND SPECIFICATIONS FOR SOIL EROSION AND SEDIMENT CONTROL, and associated permits shall be on-site and available when the site is active.

FISHER, COLLINS & CARTER, INC.
CIVIL ENGINEERING CONSULTANTS & LAND SURVEYORS
CENTENNIAL SQUARE OFFICE PARK - 10272 BALTIMORE NATIONAL PIKE
ELLICOTT CITY, MARYLAND 21042
(410) 461 - 2855

NO.	REVISION	DATE

ENGINEER'S CERTIFICATE

"I certify that this plan for sediment and erosion control represents a practical and workable plan based on my personal knowledge of the site conditions and that it was prepared in accordance with the requirements of the Howard Soil Conservation District."

Signature of Engineer (print name below signature) — Date 5/4/16

DEVELOPER'S CERTIFICATE

"I/We certify that all development and construction will be done according to this plan for sediment and erosion control, and that all responsible personnel involved in the construction project will have a Certificate of Attendance at a Department of the Environment Approved Training Program for the Control of Sediment and Erosion before beginning the project. I also authorize periodic on-site inspection by the Howard Soil Conservation District."

U.S. HOME CORP. dba LENNAR
Signature of Developer (print name below signature) — Date 4/28/16
JOSEPH FORTINO
VICE PRESIDENT

This development plan is approved for soil erosion and sediment control by the HOWARD SOIL CONSERVATION DISTRICT.

Howard SCD — Date 5/24/16

Owner/Builder

U.S. Home Corp. dba Lennar
7035 Albert Einstein Drive, Suite 200
Columbia, Maryland 21046
Ph# 410-997-5522

Developer

U.S. Home Corp. dba Lennar
7035 Albert Einstein Drive, Suite 200
Columbia, Maryland 21046
Ph# 410-997-5522

APPROVED: HOWARD COUNTY DEPARTMENT OF PLANNING AND ZONING

Chief, Division of Land Development — Date 8-9-16

Chief, Development Engineering Division — Date 6.13.16

Director - Department of Planning and Zoning — Date 8-9-16

SUBDIVISION			SECTION/AREA		PARCEL No.
OXFORD SQUARE			----		'Y' (Formerly 'E')
PLAT NO.	BLOCK NO.	ZONE	TAX/ZONE	ELEC. DIST.	CENSUS TR.
23791-23792	---	TOD	44	1st.	601101

SEDIMENT AND EROSION CONTROL NOTES & DETAILS

OXFORD SQUARE

"A Howard County Green Neighborhood"

Parcel 'Y'

"EXETER PARK"

(Residential Condominium Townhouse Buildings 1 Thru 16, Units 1 Thru 156)
Zoned: TOD
Tax Map No.: 38 Grid No.: 20 Parcel No.: 761
First Election District Howard County, Maryland
Scale: As Shown
Date: April 18, 2016
Sheet 15 Of 30

SDP-14-072

I:\2009\09014\dwg\SDP (Lennar) Parcel 'E'\09014 Sheet 15-16 Sediment control details.dwg, 4/18/2016 7:45:53 AM, 1:1

DETAIL E-1 SILT FENCE

STANDARD SYMBOL
—SF—

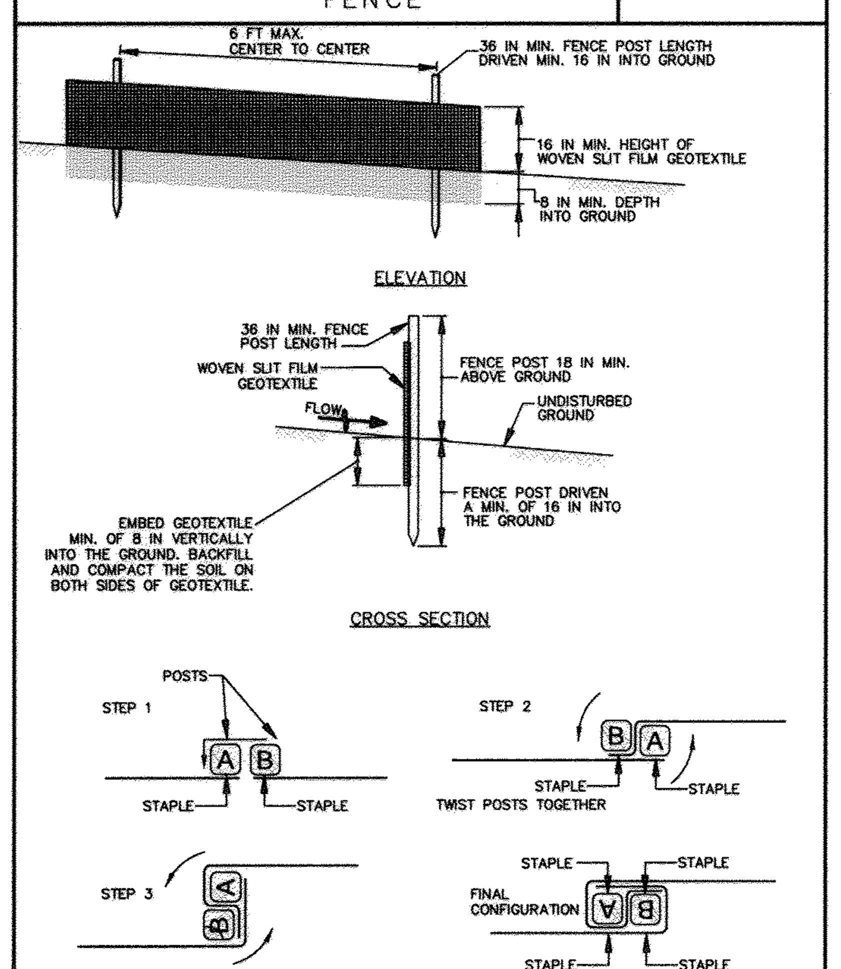

CONSTRUCTION SPECIFICATIONS

1. USE WOOD POSTS 1¾ X 1¾ ± 1/16 INCH (MINIMUM) SQUARE CUT OF SOUND QUALITY HARDWOOD. AS AN ALTERNATIVE TO WOODEN POST USE STANDARD "T" OR "U" SECTION STEEL POSTS WEIGHING NOT LESS THAN 1 POUND PER LINEAR FOOT.
2. USE 36 INCH MINIMUM POSTS DRIVEN 16 INCH MINIMUM INTO GROUND NO MORE THAN 6 FEET APART.
3. USE WOVEN SLIT FILM GEOTEXTILE AS SPECIFIED IN SECTION H-1 MATERIALS AND FASTEN GEOTEXTILE SECURELY TO UPSLOPE SIDE OF FENCE POSTS WITH WIRE TIES OR STAPLES AT TOP AND MID-SECTION.
4. PROVIDE MANUFACTURER CERTIFICATION TO THE AUTHORIZED REPRESENTATIVE OF THE INSPECTION/ENFORCEMENT AUTHORITY SHOWING THAT THE GEOTEXTILE USED MEETS THE REQUIREMENTS IN SECTION H-1 MATERIALS.
5. EMBED GEOTEXTILE A MINIMUM OF 8 INCHES VERTICALLY INTO THE GROUND. BACKFILL AND COMPACT THE SOIL ON BOTH SIDES OF FABRIC.
6. WHERE TWO SECTIONS OF GEOTEXTILE ADJOIN: OVERLAP, TWIST, AND STAPLE TO POST IN ACCORDANCE WITH THIS DETAIL.
7. EXTEND BOTH ENDS OF THE SILT FENCE A MINIMUM OF FIVE HORIZONTAL FEET UPSLOPE AT 45 DEGREES TO THE MAIN FENCE ALIGNMENT TO PREVENT RUNOFF FROM GOING AROUND THE ENDS OF THE SILT FENCE.
8. REMOVE ACCUMULATED SEDIMENT AND DEBRIS WHEN BULGES DEVELOP IN SILT FENCE OR WHEN SEDIMENT REACHES 25% OF FENCE HEIGHT. REPLACE GEOTEXTILE IF TORN. IF UNDERMINING OCCURS, REINSTALL FENCE.

MARYLAND STANDARDS AND SPECIFICATIONS FOR SOIL EROSION AND SEDIMENT CONTROL

U.S. DEPARTMENT OF AGRICULTURE NATURAL RESOURCES CONSERVATION SERVICE	2011	MARYLAND DEPARTMENT OF ENVIRONMENT WATER MANAGEMENT ADMINISTRATION

DETAIL F-1 REMOVABLE PUMPING STATION

STANDARD SYMBOL
☒RPS

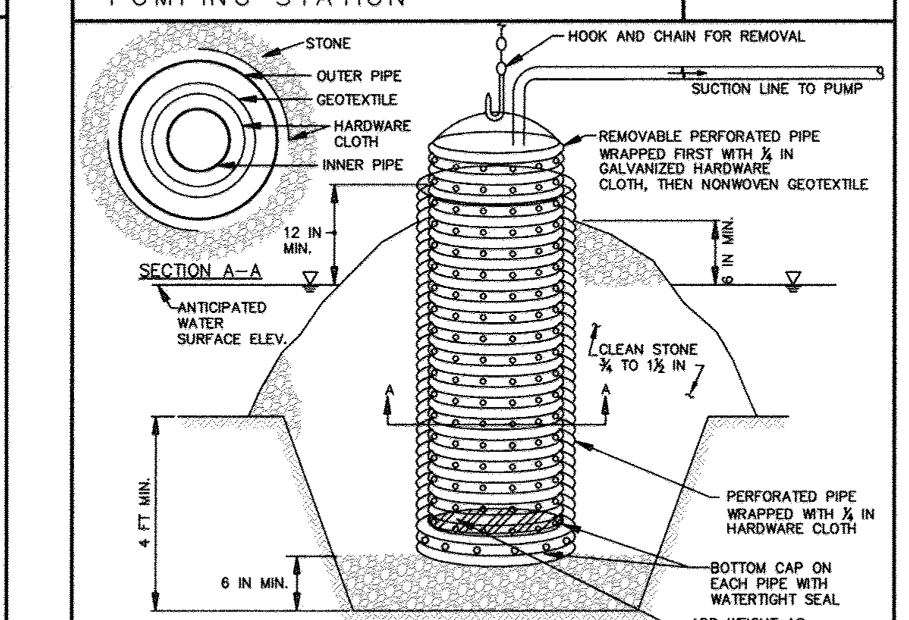

CONSTRUCTION SPECIFICATIONS

1. USE CORRUGATED METAL OR PLASTIC PIPE WITH 1 INCH DIAMETER PERFORATIONS 6 INCHES ON CENTER.
2. USE A MINIMUM 12 INCH DIAMETER INNER PIPE WITH AN OUTER PIPE A MINIMUM 6 INCHES LARGER IN DIAMETER. BOTTOM OF EACH PIPE MUST BE CAPPED WITH WATERTIGHT SEAL.
3. WRAP EACH PIPE WITH ¼ INCH GALVANIZED HARDWARE CLOTH. ON INNER PIPE WRAP NONWOVEN GEOTEXTILE, AS SPECIFIED IN SECTION H-1 MATERIALS, OVER THE HARDWARE CLOTH.
4. EXCAVATE 8 FEET X 8 FEET X 4 FEET DEEP PIT FOR PIPE PLACEMENT. PLACE CLEAN ¾ TO 1½ INCH STONE OR EQUIVALENT RECYCLED CONCRETE, 6 INCHES IN DEPTH PRIOR TO PIPE PLACEMENT.
5. SET TOP OF INNER AND OUTER PIPES MINIMUM 12 INCHES ABOVE ANTICIPATED WATER SURFACE ELEVATION (OR RISER CREST ELEVATION WHEN DEWATERING A BASIN).
6. BACKFILL PIT AROUND THE OUTER PIPE WITH ¾ TO 1½ INCH CLEAN STONE OR EQUIVALENT RECYCLED CONCRETE AND EXTEND STONE A MINIMUM OF 6 INCHES ABOVE ANTICIPATED WATER SURFACE ELEVATION.
7. DISCHARGE TO A STABLE AREA AT A NONEROSIVE RATE.
8. A REMOVABLE PUMPING STATION REQUIRES FREQUENT MAINTENANCE. IF SYSTEM CLOGS, PULL OUT INNER PIPE AND REPLACE GEOTEXTILE. KEEP POINT OF DISCHARGE FREE OF EROSION.

MARYLAND STANDARDS AND SPECIFICATIONS FOR SOIL EROSION AND SEDIMENT CONTROL

U.S. DEPARTMENT OF AGRICULTURE NATURAL RESOURCES CONSERVATION SERVICE	2011	MARYLAND DEPARTMENT OF ENVIRONMENT WATER MANAGEMENT ADMINISTRATION

DETAIL C-8 MOUNTABLE BERM

STANDARD SYMBOL
MB

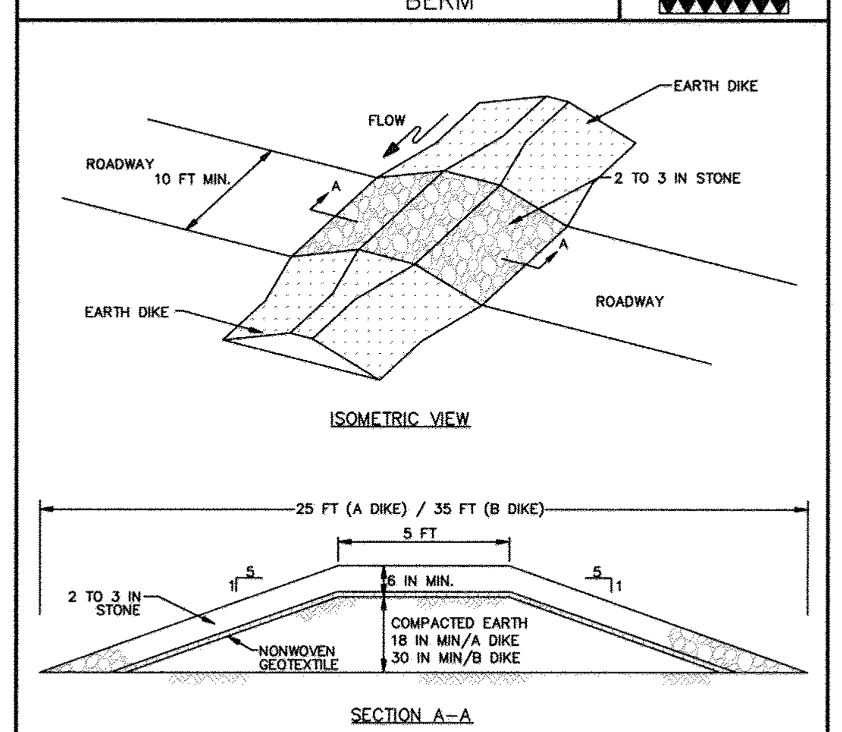

CONSTRUCTION SPECIFICATIONS

1. USE MINIMUM WIDTH OF 10 FEET TO ALLOW FOR VEHICULAR PASSAGE.
2. PLACE NONWOVEN GEOTEXTILE, AS SPECIFIED IN SECTION H-1 MATERIALS, OVER THE EARTH MOUND PRIOR TO PLACING STONE.
3. PLACE 2 TO 3 INCH STONE OR EQUIVALENT RECYCLED CONCRETE AT LEAST 6 INCHES DEEP OVER THE LENGTH AND WIDTH OF THE MOUNTABLE BERM.
4. MAINTAIN LINE, GRADE, AND CROSS SECTION. ADD STONE OR MAKE OTHER REPAIRS AS CONDITIONS DEMAND TO MAINTAIN SPECIFIED DIMENSIONS. REMOVE ACCUMULATED SEDIMENT AND DEBRIS. MAINTAIN POSITIVE DRAINAGE.

MARYLAND STANDARDS AND SPECIFICATIONS FOR SOIL EROSION AND SEDIMENT CONTROL

U.S. DEPARTMENT OF AGRICULTURE NATURAL RESOURCES CONSERVATION SERVICE	2011	MARYLAND DEPARTMENT OF ENVIRONMENT WATER MANAGEMENT ADMINISTRATION

DETAIL E-3 SUPER SILT FENCE

STANDARD SYMBOL
—SSF—

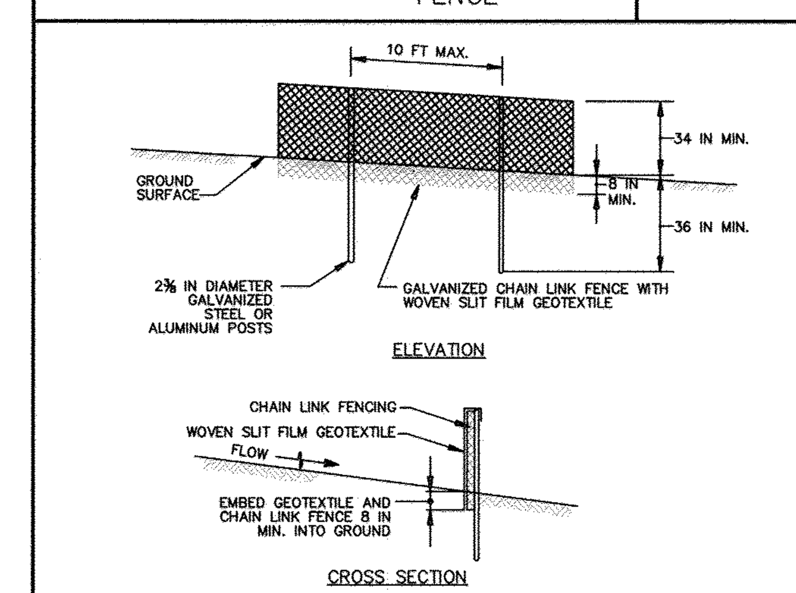

CONSTRUCTION SPECIFICATIONS

1. INSTALL 2⅜ INCH DIAMETER GALVANIZED STEEL POSTS OF 0.095 INCH WALL THICKNESS AND SIX FOOT LENGTH SPACED NO FURTHER THAN 10 FEET APART. DRIVE THE POSTS A MINIMUM OF 36 INCHES INTO THE GROUND.
2. FASTEN 9 GAUGE OR HEAVIER GALVANIZED CHAIN LINK FENCE (2⅜ INCH MAXIMUM OPENING) 42 INCHES IN HEIGHT SECURELY TO THE FENCE POSTS WITH WIRE TIES OR HUG RINGS.
3. FASTEN WOVEN SLIT FILM GEOTEXTILE AS SPECIFIED IN SECTION H-1 MATERIALS, SECURELY TO THE UPSLOPE SIDE OF CHAIN LINK FENCE WITH TIES SPACED EVERY 24 INCHES AT THE TOP AND MID SECTION. EMBED GEOTEXTILE AND CHAIN LINK FENCE A MINIMUM OF 8 INCHES INTO THE GROUND.
4. WHERE ENDS OF THE GEOTEXTILE COME TOGETHER, THE ENDS SHALL BE OVERLAPPED BY 6 INCHES, FOLDED, AND STAPLED TO PREVENT SEDIMENT BY PASS.
5. EXTEND BOTH ENDS OF THE SUPER SILT FENCE A MINIMUM OF FIVE HORIZONTAL FEET UPSLOPE AT 45 DEGREES TO THE MAIN FENCE ALIGNMENT TO PREVENT RUNOFF FROM GOING AROUND THE ENDS OF THE SUPER SILT FENCE.
6. PROVIDE MANUFACTURER CERTIFICATION TO THE INSPECTION/ENFORCEMENT AUTHORITY SHOWING THAT GEOTEXTILE USED MEETS THE REQUIREMENTS IN SECTION H-1 MATERIALS.
7. REMOVE ACCUMULATED SEDIMENT AND DEBRIS WHEN BULGES DEVELOP IN FENCE OR WHEN SEDIMENT REACHES 25% OF FENCE HEIGHT. REPLACE GEOTEXTILE IF TORN. IF UNDERMINING OCCURS, REINSTALL CHAIN LINK FENCING AND GEOTEXTILE.

MARYLAND STANDARDS AND SPECIFICATIONS FOR SOIL EROSION AND SEDIMENT CONTROL

U.S. DEPARTMENT OF AGRICULTURE NATURAL RESOURCES CONSERVATION SERVICE	2011	MARYLAND DEPARTMENT OF ENVIRONMENT WATER MANAGEMENT ADMINISTRATION

DETAIL B-1 STABILIZED CONSTRUCTION ENTRANCE

STANDARD SYMBOL
SCE

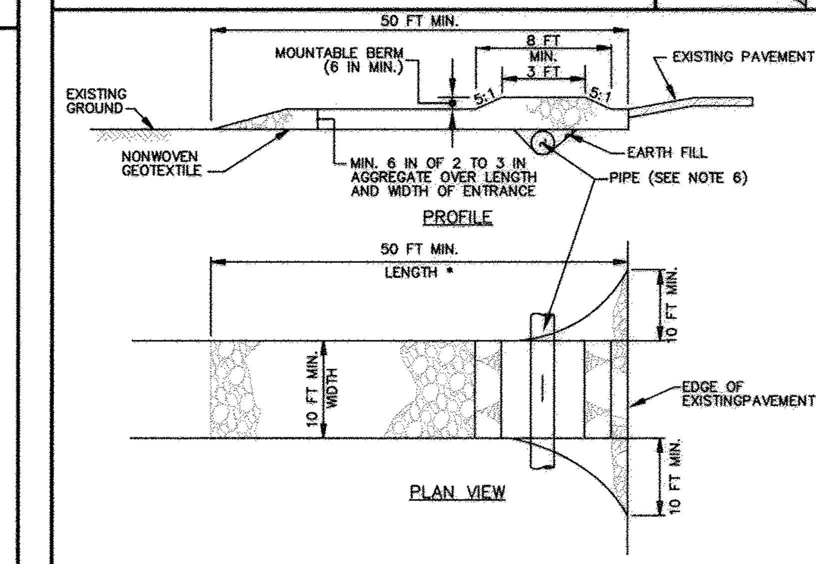

CONSTRUCTION SPECIFICATIONS

1. PLACE STABILIZED CONSTRUCTION ENTRANCE IN ACCORDANCE WITH THE APPROVED PLAN. VEHICLES MUST TRAVEL OVER THE ENTIRE LENGTH OF THE SCE. USE MINIMUM LENGTH OF 50 FEET (*30 FEET FOR SINGLE RESIDENCE LOT). USE MINIMUM WIDTH OF 10 FEET. FLARE SCE 10 FEET MINIMUM AT THE EXISTING ROAD TO PROVIDE A TURNING RADIUS.
2. PIPE ALL SURFACE WATER FLOWING TO OR DIVERTED TOWARD THE SCE UNDER THE ENTRANCE, MAINTAINING POSITIVE DRAINAGE. PROTECT PIPE INSTALLED THROUGH THE SCE WITH A MOUNTABLE BERM WITH 5:1 SLOPES AND A MINIMUM OF 12 INCHES OF STONE OVER THE PIPE. PROVIDE PIPE AS SPECIFIED ON APPROVED PLAN. WHEN THE SCE IS LOCATED AT A HIGH SPOT AND HAS NO DRAINAGE TO CONVEY, A PIPE IS NOT NECESSARY. A MOUNTABLE BERM IS REQUIRED WHEN SCE IS NOT LOCATED AT A HIGH SPOT.
3. PREPARE SUBGRADE AND PLACE NONWOVEN GEOTEXTILE, AS SPECIFIED IN SECTION H-1 MATERIALS.
4. PLACE CRUSHED AGGREGATE (2 TO 3 INCHES IN SIZE) OR EQUIVALENT RECYCLED CONCRETE (WITHOUT REBAR) AT LEAST 6 INCHES DEEP OVER THE LENGTH AND WIDTH OF THE SCE.
5. MAINTAIN ENTRANCE IN A CONDITION THAT MINIMIZES TRACKING OF SEDIMENT. ADD STONE OR MAKE OTHER REPAIRS AS CONDITIONS DEMAND TO MAINTAIN CLEAN SURFACE, MOUNTABLE BERM, AND SPECIFIED DIMENSIONS. IMMEDIATELY REMOVE STONE AND/OR SEDIMENT SPILLED, DROPPED, OR TRACKED ONTO ADJACENT ROADWAY BY VACUUMING, SCRAPING, AND/OR SWEEPING. WASHING ROADWAY TO REMOVE MUD TRACKED ONTO PAVEMENT IS NOT ACCEPTABLE UNLESS WASH WATER IS DIRECTED TO AN APPROVED SEDIMENT CONTROL PRACTICE.

MARYLAND STANDARDS AND SPECIFICATIONS FOR SOIL EROSION AND SEDIMENT CONTROL

U.S. DEPARTMENT OF AGRICULTURE NATURAL RESOURCES CONSERVATION SERVICE	2011	MARYLAND DEPARTMENT OF ENVIRONMENT WATER MANAGEMENT ADMINISTRATION

DETAIL C-1 EARTH DIKE

STANDARD SYMBOL
A-1
PLACE DESIGNATION (e.g. A-1) ON FLOW CHANNEL SIDE OF DIKE.

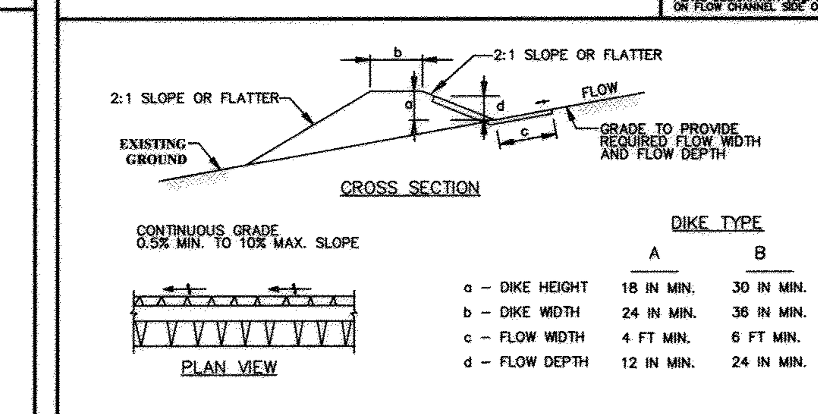

	DIKE TYPE A	DIKE TYPE B
a – DIKE HEIGHT	18 IN MIN.	30 IN MIN.
b – DIKE WIDTH	24 IN MIN.	36 IN MIN.
c – FLOW WIDTH	4 FT MIN.	6 FT MIN.
d – FLOW DEPTH	12 IN MIN.	24 IN MIN.

FLOW CHANNEL STABILIZATION

A-1 SEED WITH STRAW MULCH AND TACK. (NOT ALLOWED FOR CLEAR WATER DIVERSION.)

A-2/B-2 SEED WITH SOIL STABILIZATION MATTING OR LINE WITH SOD.

A-3/B-3 4 TO 7 INCH STONE OR EQUIVALENT RECYCLED CONCRETE PRESSED INTO SOIL A MINIMUM OF 7 INCHES AND FLUSH WITH GROUND.

CONSTRUCTION SPECIFICATIONS

1. REMOVE AND DISPOSE OF ALL TREES, BRUSH, STUMPS, OBSTRUCTIONS, AND OTHER OBJECTIONABLE MATERIAL SO AS NOT TO INTERFERE WITH PROPER FUNCTION OF EARTHDIKE.
2. EXCAVATE OR SHAPE EARTH DIKE TO LINE, GRADE, AND CROSS SECTION AS SPECIFIED. BANK PROJECTIONS OR OTHER IRREGULARITIES ARE NOT ALLOWED.
3. COMPACT FILL.
4. CONSTRUCT FLOW CHANNEL ON AN UNINTERRUPTED, CONTINUOUS GRADE, ADJUSTING THE LOCATION DUE TO FIELD CONDITIONS AS NECESSARY TO MAINTAIN POSITIVE DRAINAGE.
5. PROVIDE OUTLET PROTECTION AS REQUIRED ON APPROVED PLAN.
6. STABILIZE EARTH DIKE WITHIN THREE DAYS OF INSTALLATION. STABILIZE FLOW CHANNEL FOR CLEAR WATER DIVERSION WITHIN 24 HOURS OF INSTALLATION.
7. MAINTAIN LINE, GRADE, AND CROSS SECTION. REMOVE ACCUMULATED SEDIMENT AND DEBRIS, AND MAINTAIN POSITIVE DRAINAGE. KEEP EARTH DIKE AND POINT OF DISCHARGE FREE OF EROSION, AND CONTINUOUSLY MEET REQUIREMENTS FOR ADEQUATE VEGETATIVE ESTABLISHMENT IN ACCORDANCE WITH SECTION B-4 VEGETATIVE STABILIZATION.
8. UPON REMOVAL OF EARTH DIKE, GRADE AREA FLUSH WITH EXISTING GROUND. WITHIN 24 HOURS OF REMOVAL STABILIZE DISTURBED AREA WITH TOPSOIL, SEED, AND MULCH, OR AS SPECIFIED ON APPROVED PLAN.

MARYLAND STANDARDS AND SPECIFICATIONS FOR SOIL EROSION AND SEDIMENT CONTROL

U.S. DEPARTMENT OF AGRICULTURE NATURAL RESOURCES CONSERVATION SERVICE	2011	MARYLAND DEPARTMENT OF ENVIRONMENT WATER MANAGEMENT ADMINISTRATION

DETAIL E-9-1 STANDARD INLET PROTECTION

STANDARD SYMBOL
SIP

TYPE A MAXIMUM DRAINAGE AREA = ¼ ACRE
TYPE B MAXIMUM DRAINAGE AREA = 1 ACRE

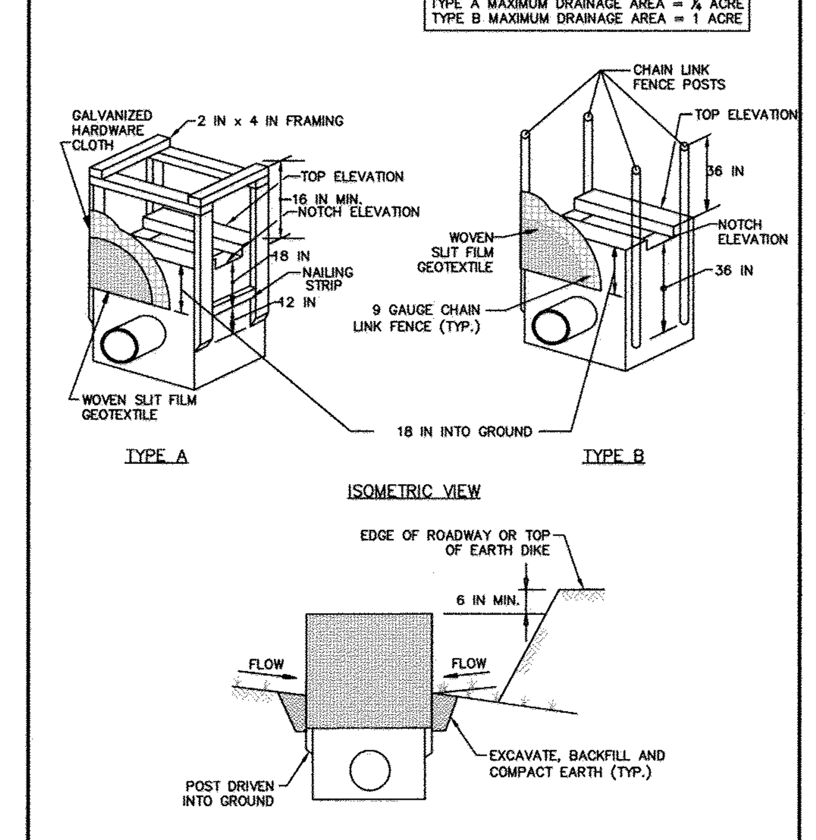

CONSTRUCTION SPECIFICATIONS

1. USE WOVEN SLIT FILM GEOTEXTILE AS SPECIFIED IN SECTION H-1 MATERIALS.
2. EXCAVATE COMPLETELY AROUND THE INLET TO A DEPTH OF 18 INCHES BELOW THE NOTCH ELEVATION.
3. FOR TYPE A, USE NOMINAL 2 INCH X 4 INCH CONSTRUCTION GRADE LUMBER POSTS, DRIVEN 1 FOOT INTO THE GROUND AT EACH CORNER OF THE INLET. PLACE NAIL STRIPS BETWEEN THE POSTS ON THE ENDS OF THE INLET. ASSEMBLE THE TOP PORTION OF THE 2X4 FRAME AS SHOWN. STRETCH ½ INCH GALVANIZED HARDWARE CLOTH TIGHTLY AROUND THE FRAME AND FASTEN SECURELY. FASTEN GEOTEXTILE SECURELY TO THE HARDWARE CLOTH WITH TIES SPACED EVERY 24 INCHES AT THE TOP AND MID SECTION. EMBED GEOTEXTILE AND HARDWARE CLOTH A MINIMUM OF 18 INCHES BELOW THE WEIR CREST. THE ENDS OF THE GEOTEXTILE MUST MEET AT A POST, BE OVERLAPPED AND FOLDED, THEN FASTENED TO THE POST.

   FOR TYPE B, USE 2⅜ INCH DIAMETER GALVANIZED STEEL POSTS OF 0.095 INCH WALL THICKNESS AND 6 FOOT LENGTH, DRIVEN A MINIMUM OF 36 INCHES BELOW THE WEIR CREST AT EACH CORNER OF THE STRUCTURE. FASTEN 9 GAUGE OR HEAVIER CHAIN LINK FENCE, 42 INCHES IN HEIGHT, SECURELY TO THE FENCE POSTS WITH WIRE TIES. FASTEN GEOTEXTILE SECURELY TO THE CHAIN LINK FENCE WITH TIES SPACED EVERY 24 INCHES AT THE TOP AND MID SECTION. EMBED GEOTEXTILE AND CHAIN LINK FENCE A MINIMUM OF 18 INCHES BELOW THE WEIR CREST.
4. BACKFILL AROUND THE INLET IN LOOSE 4 INCH LIFTS AND COMPACT UNTIL SOIL IS LEVEL WITH THE NOTCH ELEVATION ON THE ENDS AND TOP ELEVATION ON THE SIDES.
5. STORM DRAIN INLET PROTECTION REQUIRES FREQUENT MAINTENANCE. REMOVE ACCUMULATED SEDIMENT AFTER EACH RAIN EVENT TO MAINTAIN FUNCTION AND AVOID PREMATURE CLOGGING. IF INLET PROTECTION DOES NOT COMPLETELY DRAIN WITHIN 24 HOURS AFTER A STORM EVENT, IT IS CLOGGED. WHEN THIS OCCURS, REMOVE ACCUMULATED SEDIMENT AND CLEAN, OR REPLACE GEOTEXTILE AND STONE.

MARYLAND STANDARDS AND SPECIFICATIONS FOR SOIL EROSION AND SEDIMENT CONTROL

U.S. DEPARTMENT OF AGRICULTURE NATURAL RESOURCES CONSERVATION SERVICE	2011	MARYLAND DEPARTMENT OF ENVIRONMENT WATER MANAGEMENT ADMINISTRATION

DETAIL G-1-1 PIPE OUTLET SEDIMENT TRAP ST-I

STANDARD SYMBOL
ST-I

MAXIMUM DRAINAGE AREA = 5 ACRES

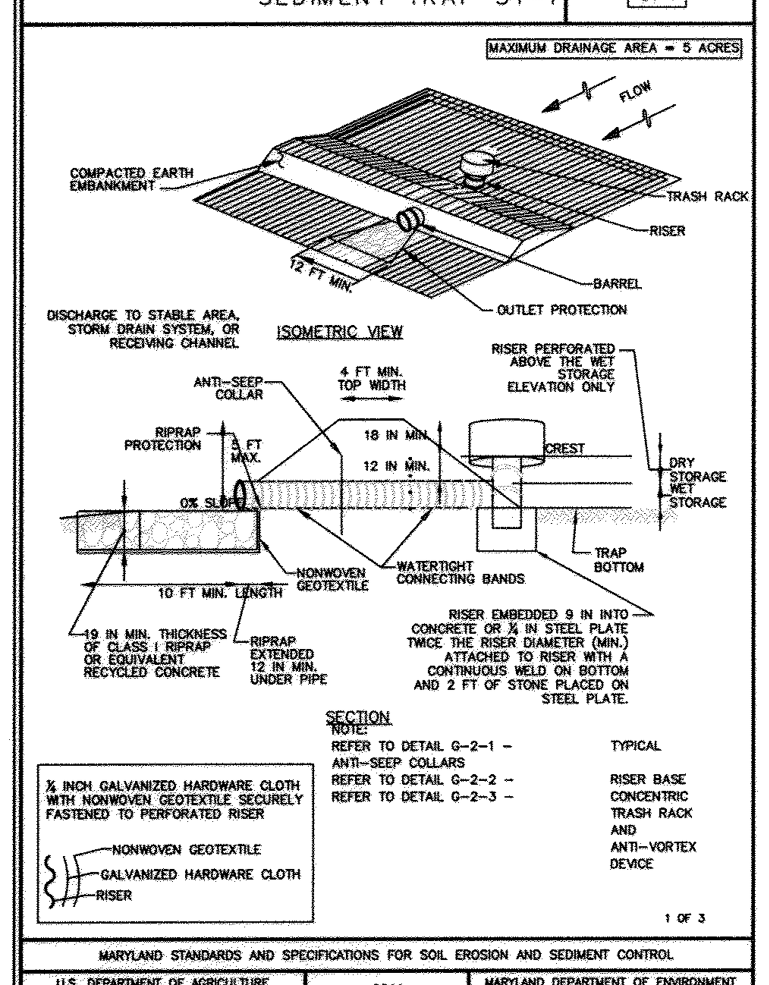

NOTE:

REFER TO DETAIL G-2-1 – ANTI-SEEP COLLARS	TYPICAL
REFER TO DETAIL G-2-2 –	RISER BASE CONCENTRIC TRASH RACK AND ANTI-VORTEX DEVICE
REFER TO DETAIL G-2-3 –	

1 OF 3

MARYLAND STANDARDS AND SPECIFICATIONS FOR SOIL EROSION AND SEDIMENT CONTROL

U.S. DEPARTMENT OF AGRICULTURE NATURAL RESOURCES CONSERVATION SERVICE	2011	MARYLAND DEPARTMENT OF ENVIRONMENT WATER MANAGEMENT ADMINISTRATION

DETAIL G-1-1 PIPE OUTLET SEDIMENT TRAP ST-I

STANDARD SYMBOL
ST-I

CONSTRUCTION SPECIFICATIONS

1. CONSTRUCT TRAP IN SUCH A MANNER THAT EROSION AND WATER POLLUTION ARE AVOIDED.
2. CLEAR, GRUB, AND STRIP ANY VEGETATION AND ROOT MAT FROM THE AREA UNDER THE EMBANKMENT AND TRAP BOTTOM.
3. PERFORATE THE RISER WITH 1 INCH DIAMETER HOLES SPACED 6 INCHES ON CENTER WITH THE LOWEST PERFORATIONS AT THE WET STORAGE ELEVATION OR PROVIDE A HORIZONTAL OR VERTICAL DRAW-DOWN DEVICE PERFORATED ACCORDING TO APPROVED PLAN. DO NOT PERFORATE THE RISER WITHIN 6 INCHES OF THE TOP OF THE HORIZONTAL BARREL.
4. SET RISER/BARREL ASSEMBLY PRIOR TO EMBANKMENT CONSTRUCTION. MAKE ALL PIPE CONNECTIONS WATERTIGHT. OFFSET RISER FROM EMBANKEMENT TO ACCOMODATE PLACEMENT OF THE TRASH RACK. ANCHOR THE RISER WITH EITHER A REINFORCED CONCRETE BASE OR STEEL PLATE BASE TO PREVENT FLOTATION. MAKE CONCRETE BASES AT LEAST TWICE THE RISER DIAMETER AND 18 INCHES THICK WITH THE RISER EMBEDDED 9 INCHES.
5. USE FILL MATERIAL FREE OF ROOTS, WOODY VEGETATION, OVERSIZED STONES, ROCKS, ORGANIC MATERIAL, OR OTHER OBJECTIONABLE MATERIAL FOR THE EMBANKMENT.
6. HAND COMPACT IN 4 INCH LAYERS FILL MATERIAL AROUND THE PIPE SPILLWAY. PLACE A MINIMUM OF 2 FEET OF HAND COMPACTED BACKFILL OVER THE PIPE SPILLWAY BEFORE CROSSING IT WITH CONSTRUCTION EQUIPMENT.
7. CONSTRUCT TOP OF EMBANKMENT 1 FOOT MINIMUM ABOVE RISER CREST. COMPACT THE EMBANKMENT BY TRAVERSING WITH EQUIPMENT WHILE IT IS BEING CONSTRUCTED.
8. MAKE ALL CUT AND FILL SLOPES 2:1 OR FLATTER.
9. WRAP THE RISER WITH ¼ INCH GALVANIZED HARDWARE CLOTH THEN WRAP WITH NONWOVEN GEOTEXTILE. DO NOT WRAP WITH MORE THAN ONE LAYER OF GEOTEXTILE. EXTEND HARDWARE CLOTH AND GEOTEXTILE AT LEAST 6 INCHES ABOVE THE HIGHEST PERFORATIONS AND AT LEAST 6 INCHES BELOW THE LOWEST PERFORATIONS. OVERLAP, FOLD AND FASTEN WHERE ENDS OF GEOTEXTILE COME TOGETHER TO PREVENT BYPASS. REPLACE GEOTEXTILE AS NECESSARY TO PREVENT CLOGGING.
10. USE STRAPS OR CONNECTING BANDS AT THE TOP AND BOTTOM OF THE GEOTEXTILE TO HOLD THE GEOTEXTILE AND HARDWARE CLOTH IN PLACE.
11. USE NONWOVEN GEOTEXTILE AS SPECIFIED IN SECTION H-1 MATERIALS.
12. STABILIZE THE EMBANKMENT AND INTERIOR SLOPES WITH SEED AND MULCH. STABILIZE POINTS OF CONCENTRATED INFLOW AS SHOWN ON APPROVED PLAN.
13. CONSTRUCT AND MAINTAIN THE OUTLET ACCORDING TO THE APPROVED PLAN AND IN SUCH A MANNER THAT EROSION AT OR BELOW THE OUTLET DOES NOT OCCUR.
14. REMOVE SEDIMENT AND RESTORE TRAP TO ORIGINAL DIMENSIONS WHEN SEDIMENT HAS ACCUMULATED TO CLEANOUT ELEVATION (50% OF WET STORAGE DEPTH). DEPOSIT REMOVED SEDIMENT IN AN APPROVED AREA AND IN SUCH A MANNER THAT IT WILL NOT ERODE. KEEP POINTS OF INFLOW AND OUTFLOW AS WELL AS INTERIOR OF THE TRAP FREE FROM EROSION, AND REMOVE ACCUMULATED DEBRIS. MAINTAIN EMBANKMENTS TO CONTINUOUSLY MEET REQUIREMENTS FOR ADEQUATE VEGETATIVE ESTABLISHMENT IN ACCORDANCE WITH SECTION B-4 VEGETATIVE STABILIZATION. REMOVE ANY TREES, BRUSH, OR OTHER WOODY VEGETATION GROWING ON EMBANKMENT OR NEAR PRINCIPAL SPILLWAY. MAINTAIN LINE, GRADE, AND CROSS SECTION. MAINTAIN WATER TIGHT CONNECTIONS. REPLACE GEOTEXTILE AROUND PERFORATED RISER IF DRY STORAGE VOLUME DOES NOT DRAW DOWN WITHIN 10 HOURS.
15. WHEN DEWATERING TRAP, PASS REMOVED WATER THROUGH AN APPROVED SEDIMENT CONTROL PRACTICE.
16. UPON REMOVAL, GRADE AND STABILIZE THE AREA OCCUPIED BY TRAP.

2 OF 3

MARYLAND STANDARDS AND SPECIFICATIONS FOR SOIL EROSION AND SEDIMENT CONTROL

U.S. DEPARTMENT OF AGRICULTURE NATURAL RESOURCES CONSERVATION SERVICE	2011	MARYLAND DEPARTMENT OF ENVIRONMENT WATER MANAGEMENT ADMINISTRATION

DETAIL F-4 FILTER BAG

STANDARD SYMBOL
☒FB

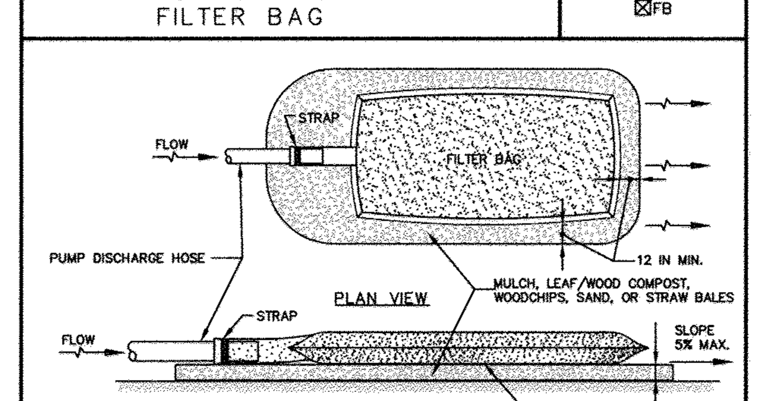

CONSTRUCTION SPECIFICATIONS

1. TIGHTLY SEAL SLEEVE AROUND THE PUMP DISCHARGE HOSE WITH A STRAP OR SIMILAR DEVICE.
2. PLACE FILTER BAG ON SUITABLE BASE (E.G., MULCH, LEAF/WOOD COMPOST, WOODCHIPS, SAND, OR STRAW BALES) LOCATED ON A LEVEL OR 5% MAXIMUM SLOPING SURFACE. DISCHARGE TO A STABILIZED AREA. EXTEND BASE A MINIMUM OF 12 INCHES FROM EDGES OF BAG.
3. CONTROL PUMPING RATE TO PREVENT EXCESSIVE PRESSURE WITHIN THE FILTER BAG IN ACCORDANCE WITH THE MANUFACTURER RECOMMENDATIONS. AS THE BAG FILLS WITH SEDIMENT, REDUCE PUMPING RATE.
4. REMOVE AND PROPERLY DISPOSE OF FILTER BAG UPON COMPLETION OF PUMPING OPERATIONS OR AFTER BAG HAS REACHED CAPACITY, WHICHEVER OCCURS FIRST. SPREAD THE DEWATERED SEDIMENT FROM THE BAG IN AN APPROVED UPLAND AREA AND STABILIZE WITH SEED AND MULCH BY THE END OF THE WORK DAY. RESTORE THE SURFACE AREA BENEATH THE BAG TO ORIGINAL CONDITION UPON REMOVAL OF THE DEVICE.
5. USE NONWOVEN GEOTEXTILE WITH DOUBLE STITCHED SEAMS USING HIGH STRENGTH THREAD. SIZE SLEEVE TO ACCOMMODATE A MAXIMUM 4 INCH DIAMETER PUMP DISCHARGE HOSE. THE BAG MUST BE MANUFACTURED FROM A NONWOVEN GEOTEXTILE THAT MEETS OR EXCEEDS MINIMUM AVERAGE ROLL VALUES (MARV) FOR THE FOLLOWING:

GRAB TENSILE	250 LB	ASTM D-4632
PUNCTURE	150 LB	ASTM D-4833
FLOW RATE	70 GAL/MIN/FT²	ASTM D-4491
PERMITTIVITY (SEC^{-1})	1.2 SEC^{-1}	ASTM D-4491
UV RESISTANCE	70% STRENGTH @ 500 HOURS	ASTM D-4355
APPARENT OPENING SIZE (AOS)	0.15–0.18 MM	ASTM D-4751
SEAM STRENGTH	90%	ASTM D-4632

6. REPLACE FILTER BAG IF BAG CLOGS OR HAS RIPS, TEARS, OR PUNCTURES. DURING OPERATION KEEP CONNECTION BETWEEN PUMP HOSE AND FILTER BAG WATER TIGHT. REPLACE BEDDING IF IT BECOMES DISPLACED.

MARYLAND STANDARDS AND SPECIFICATIONS FOR SOIL EROSION AND SEDIMENT CONTROL

U.S. DEPARTMENT OF AGRICULTURE NATURAL RESOURCES CONSERVATION SERVICE	2011	MARYLAND DEPARTMENT OF ENVIRONMENT WATER MANAGEMENT ADMINISTRATION

DETAIL B-4-6-A TEMPORARY SOIL STABILIZATION MATTING CHANNEL APPLICATION

STANDARD SYMBOL
TSSMC – * lb/ft²
(* INCLUDE SHEAR STRESS)

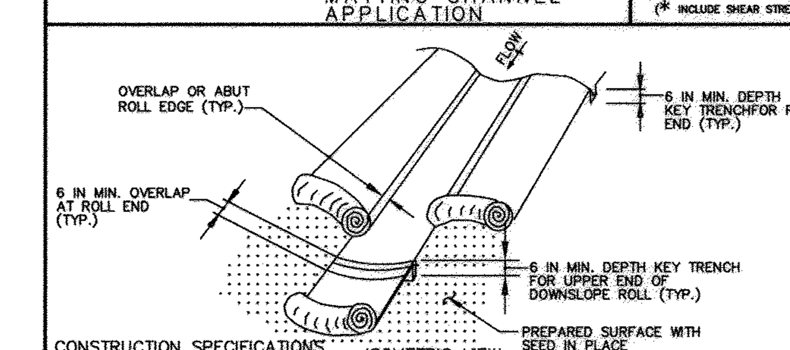

CONSTRUCTION SPECIFICATIONS

1. USE MATTING THAT HAS A DESIGN VALUE FOR SHEAR STRESS EQUAL TO OR HIGHER THAN THE SHEAR STRESS DESIGNATED ON APPROVED PLANS.
2. USE TEMPORARY SOIL STABILIZATION MATTING MADE OF DEGRADABLE (LASTS 6 MONTHS MINIMUM) NATURAL OR MAN-MADE FIBERS (MOSTLY ORGANIC). MAT MUST HAVE UNIFORM THICKNESS AND DISTRIBUTION OF FIBERS THROUGHOUT AND BE SMOLDER RESISTANT. CHEMICALS USED IN THE MAT MUST BE NON-LEACHING AND NON-TOXIC TO VEGETATION AND SEED GERMINATION AND NON-INJURIOUS TO THE SKIN. IF PRESENT, NETTING MUST BE EXTRUDED PLASTIC WITH A MAXIMUM MESH OPENING OF 2x2 INCHES AND SUFFICIENTLY BONDED OR SEWN ON 2 INCH CENTERS ALONG LONGITUDINAL AXIS OF THE MATERIAL TO PREVENT SEPARATION OF THE NET FROM THE PARENT MATERIAL.
3. SECURE MATTING USING STEEL STAPLES, WOOD STAKES, OR BIODEGRADABLE EQUIVALENT. STAPLES MUST BE "U" OR "T" SHAPED STEEL WIRE HAVING A MINIMUM GAUGE OF NO. 11 AND NO. 8 RESPECTIVELY. "U" SHAPED STAPLES MUST AVERAGE 1 TO 1 ½ INCHES WIDE AND BE A MINIMUM OF 6 INCHES LONG. "T" SHAPED STAPLES MUST HAVE A MINIMUM 8 INCH MAIN LEG, A MINIMUM 1 INCH SECONDARY LEG, AND A MINIMUM 4 INCH HEAD. WOOD STAKES MUST BE ROUGH-SAWN HARDWOOD, 12 TO 24 INCHES IN LENGTH, 1x3 INCH IN CROSS SECTION, AND WEDGE SHAPED AT THE BOTTOM.
4. PERFORM FINAL GRADING, TOPSOIL APPLICATION, SEEDBED PREPARATION, AND PERMANENT SEEDING IN ACCORDANCE WITH SPECIFICATIONS. PLACE MATTING WITHIN 48 HOURS OF COMPLETING SEEDING OPERATIONS UNLESS END OF WORKDAY STABILIZATION IS SPECIFIED ON THE APPROVED EROSION AND SEDIMENT CONTROL PLAN.
5. UNROLL MATTING IN DIRECTION OF WATER FLOW, CENTERING THE FIRST ROLL ON THE CHANNEL CENTERLINE. WORK FROM CENTER OF CHANNEL OUTWARD WHEN PLACING ROLLS. LAY MAT SMOOTHLY AND FIRMLY ON THE SEEDED SURFACE. AVOID STRETCHING THE MATTING.
6. KEY-IN UPSTREAM END OF EACH MAT ROLL BY DIGGING A 6 INCH (MINIMUM) TRENCH AT THE UPSTREAM END OF THE MATTING, PLACING THE ROLL END IN THE TRENCH, STAPLING THE MAT IN PLACE, REPLACING THE EXCAVATED MATERIAL, AND TAMPING TO SECURE THE MAT END.
7. OVERLAP OR ABUT THE ROLL EDGES PER MANUFACTURER RECOMMENDATIONS. OVERLAP ROLL ENDS BY 6 INCHES (MINIMUM), WITH THE UPSTREAM MAT OVERLAPPING ON TOP OF THE NEXT DOWNSTREAM MAT.
8. STAPLE/STAKE MAT IN A STAGGERED PATTERN ON 4 FOOT (MAXIMUM) CENTERS THROUGHOUT AND 2 FOOT (MAXIMUM) CENTERS ALONG SEAMS, JOINTS, AND ROLL ENDS.
9. ESTABLISH AND MAINTAIN VEGETATION SO THAT REQUIREMENTS FOR ADEQUATE VEGETATIVE ESTABLISHMENT ARE CONTINUOUSLY MET IN ACCORDANCE WITH SECTION B-4 VEGETATIVE STABILIZATION.

MARYLAND STANDARDS AND SPECIFICATIONS FOR SOIL EROSION AND SEDIMENT CONTROL

U.S. DEPARTMENT OF AGRICULTURE NATURAL RESOURCES CONSERVATION SERVICE	2011	MARYLAND DEPARTMENT OF ENVIRONMENT WATER MANAGEMENT ADMINISTRATION

DETAIL B-4-6-C PERMANENT SOIL STABILIZATION MATTING CHANNEL APPLICATION

STANDARD SYMBOL
PSSMC – * lb/ft²
(* INCLUDE SHEAR STRESS)

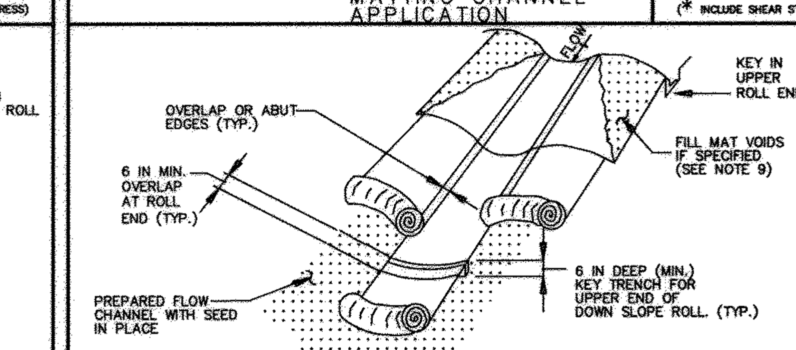

CONSTRUCTION SPECIFICATIONS

1. USE MATTING THAT HAS A DESIGN VALUE FOR SHEAR STRESS EQUAL TO OR HIGHER THAN THE SHEAR STRESS DESIGNATED ON APPROVED PLANS.
2. USE PERMANENT SOIL STABILIZATION MATTING MADE OF OPEN WEAVE SYNTHETIC, NON-DEGRADABLE FIBERS OR ELEMENTS OF UNIFORM THICKNESS AND DISTRIBUTION THROUGHOUT. CHEMICALS USED IN THE MAT MUST BE NON-LEACHING AND NON-TOXIC TO VEGETATION AND SEED GERMINATION AND NON-INJURIOUS TO THE SKIN. IF PRESENT, NETTING MUST BE EXTRUDED PLASTIC WITH A MAXIMUM MESH OPENING OF 2x2 INCHES AND SUFFICIENTLY BONDED OR SEWN ON 2 INCH CENTERS ALONG LONGITUDINAL AXIS OF THE MATERIAL TO PREVENT SEPARATION OF THE NET FROM THE PARENT MATERIAL.
3. SECURE MATTING USING STEEL STAPLES OR WOOD STAKES. STAPLES MUST BE "U" OR "T" SHAPED STEEL WIRE HAVING A MINIMUM GAUGE OF NO. 11 AND NO. 8 RESPECTIVELY. "U" SHAPED STAPLES MUST AVERAGE 1 TO 1 ½ INCHES WIDE AND BE A MINIMUM OF 6 INCHES LONG. "T" SHAPED STAPLES MUST HAVE A MINIMUM 8 INCH MAIN LEG, A MINIMUM 1 INCH SECONDARY LEG, AND MINIMUM 4 INCH HEAD. WOOD STAKES MUST BE ROUGH-SAWN HARDWOOD, 12 TO 24 INCHES IN LENGTH, 1x3 INCH IN CROSS SECTION, AND WEDGE SHAPE AT THE BOTTOM.
4. PERFORM FINAL GRADING, TOPSOIL APPLICATION, SEEDBED PREPARATION, AND PERMANENT SEEDING IN ACCORDANCE WITH SPECIFICATIONS. PLACE MATTING WITHIN 48 HOURS OF COMPLETING SEEDING OPERATIONS, UNLESS END OF WORKDAY STABILIZATION IS SPECIFIED ON THE APPROVED EROSION AND SEDIMENT CONTROL PLAN.
5. UNROLL MATTING IN DIRECTION OF WATER FLOW, CENTERING THE FIRST ROLL ON THE CHANNEL CENTER LINE. WORK FROM CENTER OF CHANNEL OUTWARD WHEN PLACING ROLLS. LAY MATTING SMOOTHLY AND FIRMLY UPON THE SEEDED SURFACE. AVOID STRETCHING THE MATTING.
6. OVERLAP OR ABUT EDGES OF MATTING ROLLS PER MANUFACTURER RECOMMENDATIONS. OVERLAP ROLL ENDS BY 6 INCHES (MINIMUM), WITH THE UPSTREAM MAT OVERLAPPING ON TOP OF THE NEXT DOWNSTREAM MAT.
7. KEY IN THE TOP OF SLOPE END OF MAT 6 INCHES (MINIMUM) BY DIGGING A TRENCH, PLACING THE MATTING ROLL END IN THE TRENCH, STAPLING THE MAT IN PLACE, REPLACING THE EXCAVATED MATERIAL, AND TAMPING TO SECURE THE MAT END IN THE KEY.
8. STAPLE/STAKE MAT IN A STAGGERED PATTERN ON 4 FOOT (MAXIMUM) CENTERS THROUGHOUT AND 2 FOOT (MAXIMUM) CENTERS ALONG SEAMS, JOINTS, AND ROLL ENDS.
9. IF SPECIFIED BY THE DESIGNER OR MANUFACTURER AND DEPENDING ON THE TYPE OF MAT BEING INSTALLED, ONCE THE MATTING IS KEYED AND STAPLED IN PLACE, FILL THE MAT VOIDS WITH TOP SOIL OR GRANULAR MATERIAL AND LIGHTLY COMPACT OR ROLL TO MAXIMIZE SOIL/MAT CONTACT WITHOUT CRUSHING MAT.
10. ESTABLISH AND MAINTAIN VEGETATION SO THAT REQUIREMENTS FOR ADEQUATE VEGETATIVE ESTABLISHMENT ARE CONTINUOUSLY MET IN ACCORDANCE WITH SECTION B-4 VEGETATIVE STABILIZATION.

MARYLAND STANDARDS AND SPECIFICATIONS FOR SOIL EROSION AND SEDIMENT CONTROL

U.S. DEPARTMENT OF AGRICULTURE NATURAL RESOURCES CONSERVATION SERVICE	2011	MARYLAND DEPARTMENT OF ENVIRONMENT WATER MANAGEMENT ADMINISTRATION

FISHER, COLLINS & CARTER, INC.
CIVIL ENGINEERING CONSULTANTS & LAND SURVEYORS
CENTENNIAL SQUARE OFFICE PARK – 10272 BALTIMORE NATIONAL PIKE
ELLICOTT CITY, MARYLAND 21042
(410) 461 – 2855

NO.	REVISION	DATE

ENGINEER'S CERTIFICATE

"I certify that this plan for sediment and erosion control represents a practical and workable plan based on my personal knowledge of the site conditions and that it was prepared in accordance with the requirements of the Howard Soil Conservation District."

Signature of Engineer (print name below signature) — Date 5/4/16

DEVELOPER'S CERTIFICATE

"I/We certify that all development and construction will be done according to this plan for sediment and erosion control, and that all responsible personnel involved in the construction project will have a Certificate of Attendance at a Department of the Environment Approved Training Program for the Control of Sediment and Erosion before beginning the project. I also authorize periodic on-site inspection by the Howard Soil Conservation District."

U.S. HOME CORP. dba LENNAR

Signature of Developer (print name below signature) — Date 4/28/16

JOSEPH FORTINO
VICE PRESIDENT

This development plan is approved for soil erosion and sediment control by the HOWARD SOIL CONSERVATION DISTRICT.

Howard SCD — Date 5/24/16

Owner/Builder

U.S. Home Corp. dba Lennar
7035 Albert Einstein Drive, Suite 200
Columbia, Maryland 21046
Ph# 410-997-5522

Developer

U.S. Home Corp. dba Lennar
7035 Albert Einstein Drive, Suite 200
Columbia, Maryland 21046
Ph# 410-997-5522

APPROVED: HOWARD COUNTY DEPARTMENT OF PLANNING AND ZONING

Chief, Division of Land Development — Date 8-9-16

Chief, Development Engineering Division — Date 6-13-16

Director – Department of Planning and Zoning — Date 8-9-16

SUBDIVISION			SECTION/AREA		PARCEL No.
OXFORD SQUARE			----		'Y' (Formerly 'E')
PLAT NO.	BLOCK NO.	ZONE	TAX/ZONE	ELEC. DIST.	CENSUS TR.
23791 - 23792	---	TOD	44	1st.	601101

SEDIMENT AND EROSION CONTROL NOTES & DETAILS

OXFORD SQUARE

"A Howard County Green Neighborhood"

Parcel 'Y'

"EXETER PARK"

(Residential Condominium Townhouse Buildings 1 Thru 16, Units 1 Thru 156)

Zoned: TOD

Tax Map No.: 38 Grid No.: 20 Parcel No.: 761

First Election District Howard County, Maryland

Scale: As Shown

Date: April 18, 2016

Sheet 16 Of 30

SDP-14-072

I:\2009\09014\dwg\SDP (Lennar) Parcel 'E'\09014 Sheet 15-16 Sediment control details.dwg, 4/18/2016 7:46:39 AM, 1:1

NOTES:

1. "At the time of plant installation, all shrubs and trees listed and approved on the landscape Plan, shall comply with the proper height requirement in accordance with the Howard County Landscape Manual. In addition, no subtitutions or relocations of the required plantings may be made without prior review and approval from the Department of Planning and Zoning. Any deviation from the approved Landscape Plan may result in denial or delay in the release of landscape surety until such time as all required materials are planted and/or revisions are made to the applicable plans".

2. "The Owner, tenants and/or their agents shall be responsible for maintenace of the required perimeter landscaping including both plant materials and berms, fences and walls. All plant materials shall be maintained in good growing condition, and when necessary, replaced with new materials to ensure continued compliance with applicable regulations. All the other required landscaping shall be permanently maintained in good condition, and when necessary, repaired or replaced".

3. This plan has been prepared in accordance with Section 16.124 of the Howard County Code and the landscape manual with XX required landscaping trees. A landscape surety in the amount of $XX,XXX.XX will be posted with the DPW, Developer's Agreement. (The Developer is proposing XX shade, XX evergreen and X ornamental trees.)

FISHER, COLLINS & CARTER, INC.
CIVIL ENGINEERING CONSULTANTS & LAND SURVEYORS
CENTENNIAL SQUARE OFFICE PARK - 10272 BALTIMORE NATIONAL PIKE
ELLICOTT CITY, MARYLAND 21042
(410) 461 - 2855

NO.	REVISION	DATE

STATE OF MARYLAND — MICHAEL ... — No. 20748 — PROFESSIONAL ENGINEER — 5/4/16

LANDSCAPE DEVELOPER'S CERTIFICATE

I/We certify that the landscaping shown on this plan will be done according to the plan, Section 16.124 of the Howard County Code and the Howard County Landscape Manual. I/We further certify that upon completion a letter of landscape installation accompanied by an executed one year guarantee of plant materials will be submitted to the Department of Planning and Zoning.

U.S. Home Corp. dba Lennar
Name: Joseph Fortino, Vice President — Date: 4/28/16

Owner/Builder
U.S. Home Corp. dba Lennar
7035 Albert Einstein Drive, Suite 200
Columbia, Maryland 21046
Ph# 410-997-5522

Developer
U.S. Home Corp. dba Lennar
7035 Albert Einstein Drive, Suite 200
Columbia, Maryland 21046
Ph# 410-997-5522

APPROVED: HOWARD COUNTY DEPARTMENT OF PLANNING AND ZONING

Chief, Division of Land Development — Date: 8-9-16
Chief, Development Engineering Division — Date: 6.13.16
Director - Department of Planning and Zoning — Date: 8-9-16

SUBDIVISION			SECTION/AREA		PARCEL No.
OXFORD SQUARE			----		'Y' (Formerly 'E')
PLAT NO.	BLOCK NO.	ZONE	TAX/ZONE	ELEC. DIST.	CENSUS TR.
23791 - 23792	---	TOD	44	1st.	601101

STREET TREE & LANDSCAPING PLAN

OXFORD SQUARE

"A Howard County Green Neighborhood"

Parcel 'Y'

"EXETER PARK"

(Residential Condominium Townhouse Buildings 1 Thru 16, Units 1 Thru 156)
Zoned: TOD
Tax Map No.: 38 Grid No.: 20 Parcel No.: 761
First Election District Howard County, Maryland
Scale: As Shown
Date: April 18, 2016
Sheet 17 Of 30

SDP-14-072

I:\2009\09014\dwg\SDP (Lennar) Parcel 'E'\09014 Sheet 17-19 landscaping plans.dwg, 4/18/2016 8:08:48 AM, 1:1

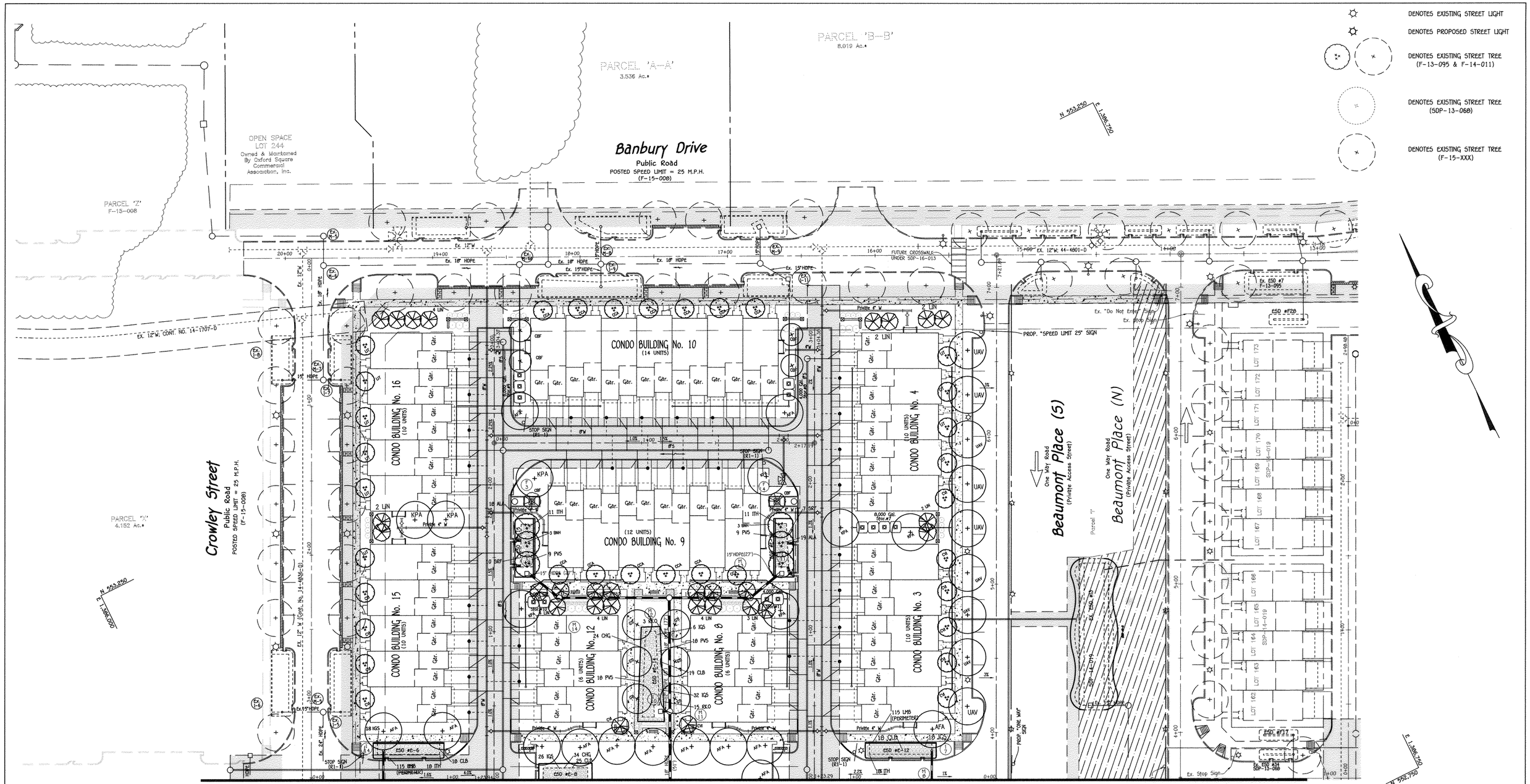

FISHER, COLLINS & CARTER, INC.
CIVIL ENGINEERING CONSULTANTS & LAND SURVEYORS
CENTENNIAL SQUARE OFFICE PARK - 10272 BALTIMORE NATIONAL PIKE
ELLICOTT CITY, MARYLAND 21042
(410) 461 - 2855

NO.	REVISION	DATE

STATE OF MARYLAND
MICHAEL W. CARR
No. 20748
PROFESSIONAL ENGINEER
5/4/16

LANDSCAPE DEVELOPER'S CERTIFICATE

I/We certify that the landscaping shown on this plan will be done according to the plan, Section 16.124 of the Howard County Code and the Howard County Landscape Manual. I/We further certify that upon completion a letter of landscape installation accompanied by an executed one year guarantee of plant materials will be submitted to the Department of Planning and Zoning.

U.S. Home Corp. dba Lennar

Name: JOSEPH FORINO
Title: VICE PRESIDENT

4/28/16
Date

Owner/Builder
U.S. Home Corp. dba Lennar
7035 Albert Einstein Drive, Suite 200
Columbia, Maryland 21046
Ph# 410-997-5522

Developer
U.S. Home Corp. dba Lennar
7035 Albert Einstein Drive, Suite 200
Columbia, Maryland 21046
Ph# 410-997-5522

APPROVED: HOWARD COUNTY DEPARTMENT OF PLANNING AND ZONING

Chief, Division of Land Development — Date 8-9-16
Chief, Development Engineering Division — Date 6.13.16
Director - Department of Planning and Zoning — Date 8-9-16

SUBDIVISION		SECTION/AREA		PARCEL No.
OXFORD SQUARE		----		'Y' (Formerly 'E')
PLAT NO.	BLOCK NO.	ZONE	TAX/ZONE	ELEC. DIST.	CENSUS TR.
23791 - 23792	---	TOD	44	1st.	601101

STREET TREE & LANDSCAPING PLAN

OXFORD SQUARE

"A Howard County Green Neighborhood"

Parcel 'Y'

"EXETER PARK"

(Residential Condominium Townhouse Buildings 1 Thru 16, Units 1 Thru 156)
Zoned: TOD
Tax Map No.: 30 Grid No.: 20 Parcel No.: 761
First Election District Howard County, Maryland
Scale: As Shown
Date: April 18, 2016
Sheet 18 Of 30

SDP-14-072

I:\2009\09014\dwg\SDP (Lennar) Parcel 'E'\09014 Sheet 17-19 landscaping plans.dwg, 4/18/2016 8:17:24 AM, 1:1

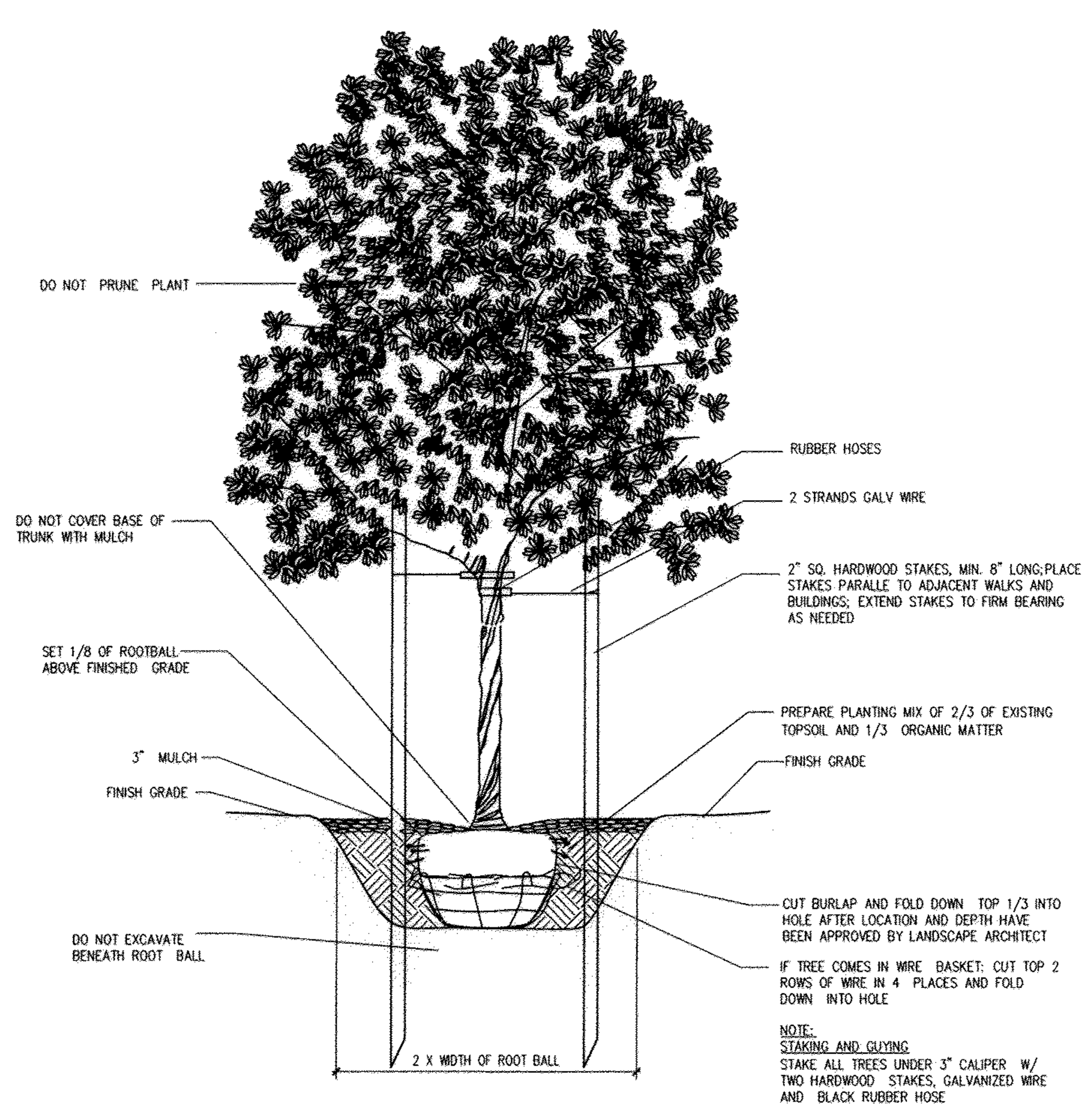

DECIDUOUS TREE - TYPICAL PLANTING DETAIL

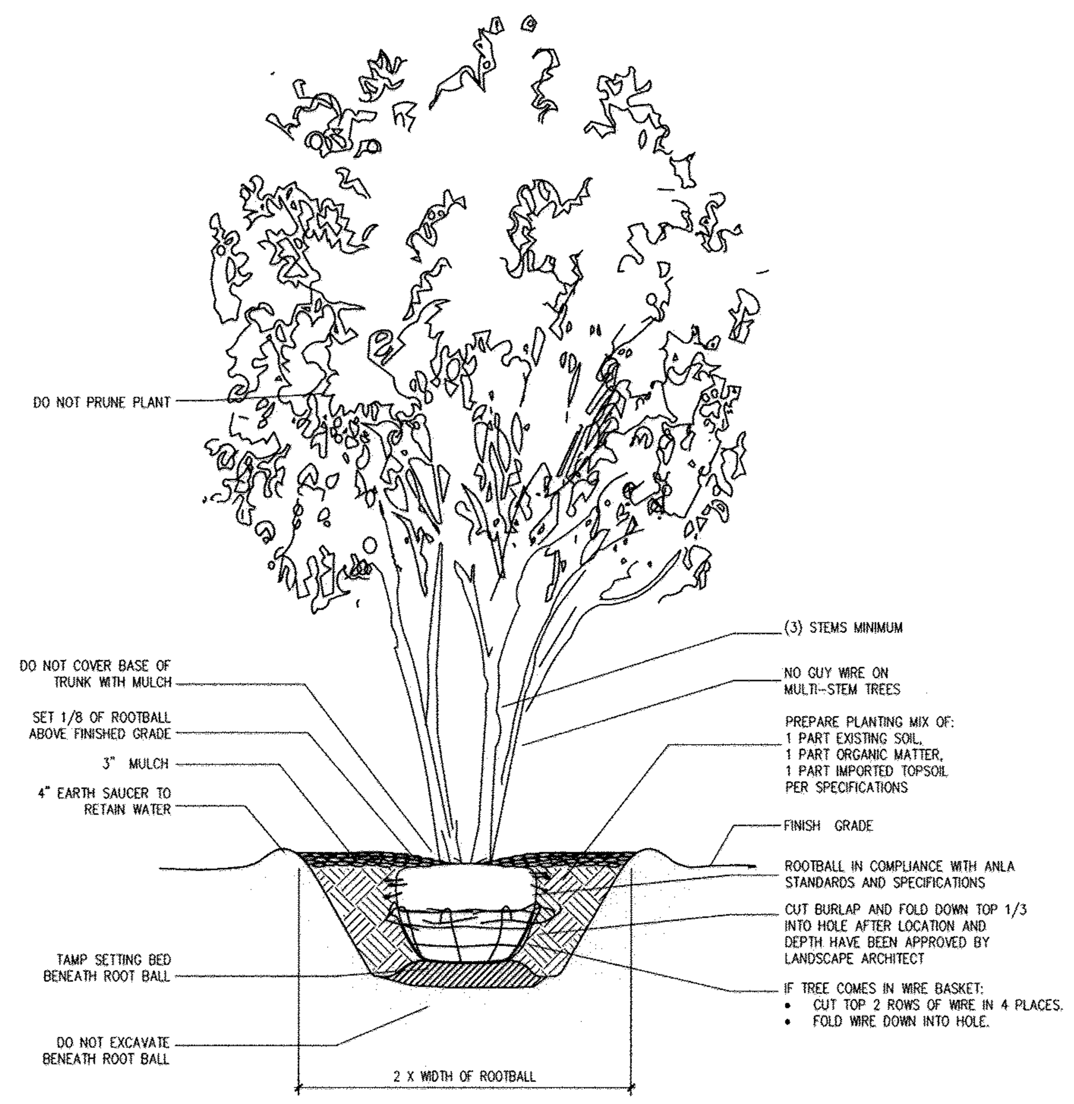

MULTISTEM TREE - TYPICAL PLANTING DETAIL

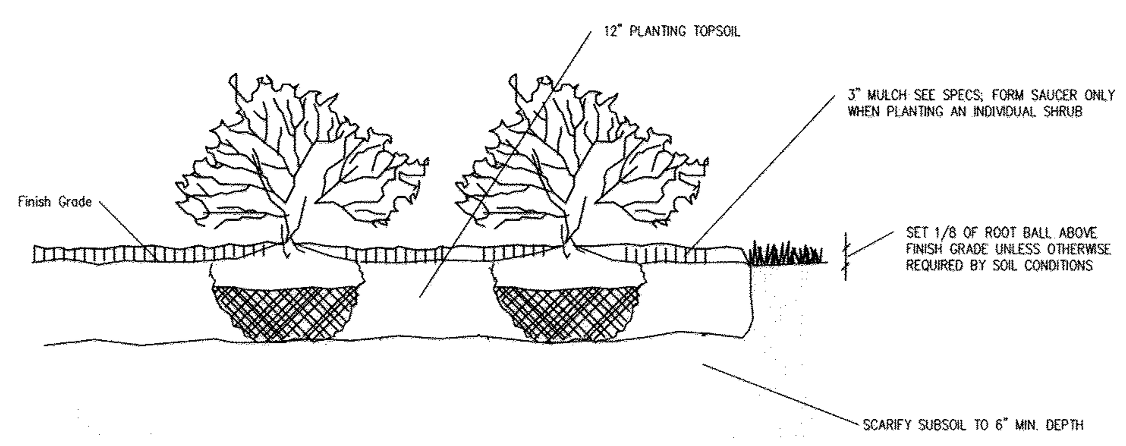

SHRUB AND HEDGEROW - TYPICAL PLANTING DETAIL

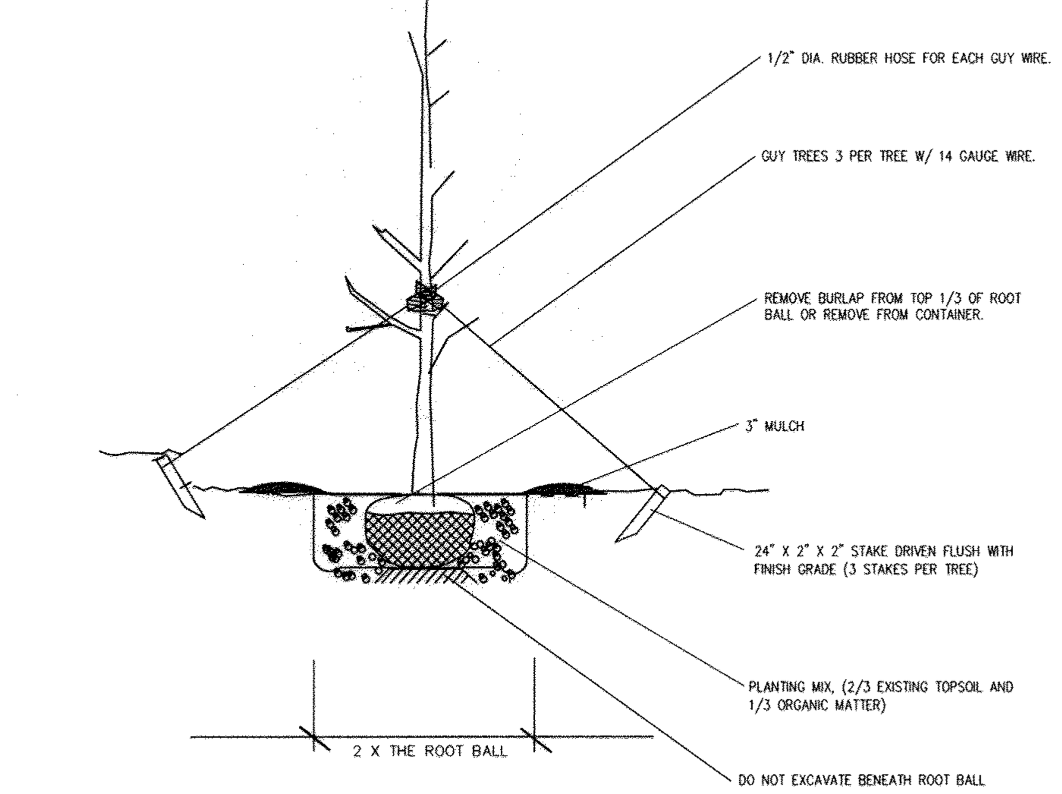

EVERGREEN TREE - TYPICAL PLANTING DETAIL

ESD SHRUBS/PERENNIALS/TREES

QTY.	SYM.	BOTANICAL/COMMON NAME	SIZE	CONT.	REMARKS
95	ALA	Aster laevis 'Bluebird' Smooth Aster	#1	Cont.	18" O.C.
32	AST	Asclepias tuberosa Butterfly Weed	#1	Cont.	24" O.C.
102	CHG	Chelone glabra White Turtlehead	#1	Cont.	24" O.C.
149	CLB	Caryopteris x clandonensis 'Longwood Blues' Caryopteris	#1	Cont.	30" O.C.
52	HHR	Hemorocallis 'Happy Returns' Yellow Daylily	#1	3 Gal.	24" o.c. min.
269	IGS	Ilex glabra 'Shamrock' Inkberry	24"–30" Ht.	Cont.	30" o.c./Male Cultivar
147	ITH	Itea virginica 'Little Henry' Dwarf Virginia Sweetspire	18" – 24" Ht.	3 Gal.	30" o.c. min.
414	LMB	Liriope muscari 'Big Blue' Lilyturf	1 Gal.	Cont.	15" O.C.
7	MVI	Magnolia virginiana Sweetbay Magnolia	8'–10' ht. min.	B & B	Multistem/4 canes min.
106	PVS	Panicum virgatum 'Shenandoh' Switchgrass	18" – 24" Ht.	3 Gal.	36" o.c. min.
82	RKO	Rosa x Knockout Knockout Rose (Blush Pink)	18" – 24" Ht.	3 Gal.	36" o.c. min.
18	SRF	Solidago rugosa sp. 'Fireworks' Goldenrod	#1	Cont.	36" o.c. min.

SCHEDULE C RESIDENTAL DEVELOPMENT INTERNAL LANDSCAPING

NUMBER OF DWELLING UNITS (SFA) (CONDOS)	-- 156
NUMBER OF TREES REQUIRED (1:DU SFA) (1:3 DU CONDOS)	-- 52
NUMBER OF TREES PROVIDED SHADE TREES OTHER TREES (2:1 SUBSTITUTION)	52

STREET TREE SCHEDULE

SYMBOL	QTY. REQ'D.	QTY. PROV'D.	BOTANICAL AND COMMON NAME	SIZE	COMMENTS
AFA	8	16	Acer x Fremmanii 'Autumn Blaze' Autumn Blaze Freeman Maple (seedless only)	2½"CAL. min.	ALONG PRIVATE ROAD DUNSTEAD STREET (SEE PLAN)
UAV	18	18	Ulmus americana 'Valley Forge' Valley Forge American Elm	2½"CAL. min.	ALONG PRIVATE ROAD BEAUMONT PLACE (S) (SEE PLAN)

NOTE: FINAL PLACEMENT OF STREET TREES WILL OCCUR IN THE FIELD AND BE PLACED A MINIMUM OF 30 FEET FROM ALL SIGNS AND INTERSECTIONS WHEN PLANTED BETWEEN SIDEWALK AND CURB, BE LOCATED WITH CONSIDERATION OF UNDERGROUND UTILITIES AND STRUCTURES AND MAINTAIN A MINIMUM 5 FEET DISTANCE ON CENTER FROM A DRAIN INLET STRUCTURE, 5 FEET FROM AN OPEN SPACE ACCESS STRIP AND 10 FEET FROM A DRIVEWAY.

FINANCIAL SURETY FOR THE 26 STREET TREES SHALL BE POSTED AS PART OF THE DEVELOPER'S AGREEMENT IN THE AMOUNT OF $7,800.00.

IN ADDITION, FINANCIAL SURETY FOR 7 SHADE TREES SHALL BE POSTED AS PART OF THE DEVELOPER'S AGREEMENT IN THE AMOUNT OF $2,100.00 TO MEET THE GN CREDIT E-1.

STREET TREE LOCATION REQUIREMENTS (per Ho. Co. Landscaping Manual)

The following standards shall govern the placement of street trees in public rights-of-way:

When the distance between the curb and sidewalk is 6 feet or greater, trees shall be located within the right-of-way and shall be centered between the curb and the sidewalk.

When the distance between the curb and the sidewalk is less than 6 feet, and where trees are planted closer than 3 feet to the sidewalk, a biologic root inhibitor barrier or physical container barrier shall be required.

When the distance between the curb and the sidewalk is less than 6 feet, trees may be planted 3 feet from the sidewalk in the direction away from the road. A 10 foot wide tree maintenance easement shall be required if the right-of-way is limited.

Trees shall be planted 6 feet behind the curb when there are no sidewalks.

Trees shall be placed a minimum of 30 feet from all signs and intersections when planted between sidewalk and curb, and be located with consideration of underground utilities and structures. Street trees may not be planted within 5 feet of a drain inlet structure, 5 feet of an open space access strip, or 10 feet of a driveway.

PLANTING SPECIFICATIONS

1. CLEAR & GRUB ALL PLANTING AREAS AS INDICATED ON THE DRAWINGS.
2. PROVIDE PROTECTION FOR TREES, SHRUBS, AND PERENNIALS/GROUND COVERS THAT ARE TO BE PRESERVED.
3. CONTRACTOR SHALL VERIFY THE CORRECT LOCATION OF ALL UNDERGROUND UTILITIES IN THE FIELD PRIOR TO INSTALLATION OF ANY PLANT MATERIALS.
4. ALL PLANTING SHALL BE DONE AS PER PLANTING DETAILS AND SPECIFICATIONS.
5. NO CHANGES SHALL BE MADE WITHOUT WRITTEN CONSENT OF THE OWNER OR LANDSCAPE ARCHITECT.
6. PRIOR TO CONSTRUCTION OF PLANTING BEDS, THE CONTRACTOR SHALL STAKE OUT PLANTING BED LINES IN THE FIELD FOR REVIEW BY THE LANDSCAPE ARCHITECT. LANDSCAPE ARCHITECT SHALL MAKE ADJUSTMENTS IN THE FIELD AS NECESSARY. ALL FINAL PLANTING BED LOCATIONS ARE TO BE APPROVED BY THE LANDSCAPE ARCHITECT. FOR LAYOUT REVIEW, CONTRACTOR SHALL NOTIFY LANDSCAPE ARCHITECT A MINIMUM OF THREE DAYS IN ADVANCE.
7. INSTALL ALL REQUIRED PLANTING AND LAWN SOILS AS PER DETAILS AND SPECIFICATIONS, AND ALL SHRUBS, GROUND COVERS, AND PERENNIALS SHALL BE PLANTED IN PLANTING BEDS PREPARED AS REQUIRED BY THE DETAILS AND SPECIFICATIONS.
8. MAINTAIN POSITIVE DRAINAGE OUT OF PLANTING BEDS AT A MINIMUM 2% SLOPE AND MAINTAIN POSITIVE DRAINAGE OF ALL LAWN AREAS, UNLESS OTHERWISE NOTED ON DRAWINGS. ALL GRADES, DIMENSIONS, AND EXISTING CONDITIONS SHALL BE VERIFIED BY THE CONTRACTOR ON SITE BEFORE CONSTRUCTION BEGINS. ANY DISCREPANCIES SHALL BE BROUGHT TO THE ATTENTION OF THE LANDSCAPE ARCHITECT OR OWNER.
9. ALL PLANT BEDS SHALL BE CONTAINED WITH A SPADED EDGE UNLESS OTHERWISE NOTED ON DRAWINGS.
10. IN THE EVENT OF A DISCREPANCY BETWEEN QUANTITIES SHOWN ON THE DRAWINGS AND QUANTITIES SHOWN ON THE PLANT LIST, THE QUANTITIES ON THE DRAWINGS SHALL APPLY. REPORT DISCREPANCIES TO THE LANDSCAPE ARCHITECT FOR CLARIFICATION PRIOR TO BIDDING.
11. ALL PLANTS SHALL CONFORM TO THE SIZES GIVEN IN THE PLANT LIST AND SHALL BE NURSERY GROWN IN ACCORDANCE WITH THE "AMERICAN STANDARD FOR NURSERY STOCK" (ANSI Z60.1), LATEST EDITION.
12. PLANTS SHALL BE LOCATED AS SHOWN ON THE DRAWINGS. PRIOR TO PLANTING, THE CONTRACTOR SHALL STAKE OUT THE LOCATIONS OF ALL PLANTS IN THE FIELD FOR REVIEW BY THE LANDSCAPE ARCHITECT. LANDSCAPE ARCHITECT SHALL MAKE ADJUSTMENTS IN THE FIELD AS NECESSARY. ALL FINAL PLANT LOCATIONS ARE TO BE APPROVED BY THE LANDSCAPE ARCHITECT. FOR LAYOUT REVIEW, CONTRACTOR SHALL NOTIFY LANDSCAPE ARCHITECT A MINIMUM OF THREE DAYS IN ADVANCE.
13. ALL DISTURBED AREAS SHALL BE FINE GRADED AND SEEDED OR SODDED; SEE PLAN FOR LOCATIONS.
14. CONTRACTOR SHALL BE RESPONSIBLE FOR WATERING AND MAINTAINING ALL PLANTS DURING THE WARRANTY PERIOD; REFER TO SPECIFICATIONS.

PLANTING SCHEDULE - PLANTINGS

QTY.	KEY	BOTANICAL NAME COMMON NAME	SIZE	CONT.	REMARKS
TREES - DECIDUOUS SHADE					
12	BNH	Betula nigra 'Heritage' River Birch	10'–12' ht.	B & B	Multistem (3 stems min.)
12	GTI	Gleditsia triacanthos var. inermis 'Skyline' Skyline Honeylocust	2-1/2" cal. min.	B & B	Thornless
14	KPA	Koelreutarea paniculata Golden Raintree	2-1/2" cal. min.	B & B	
10	AFA	Acer x Freemanii 'Autumn Blaze' Autumn Blaze Freeman Maple	2-1/2" cal. min.	B & B	Seedless Only
TREES - ORNAMENTAL					
13	CCA	Cercis canadensis Eastern Redbud	6'–8' ht.	B & B	Multistem/3 stems min.
24	CVI	Chionanthus virginicus 'Floyd' Fringe Tree	2" - 2-1/2" cal. min.	B & B	Male only
30	LIN	Lagerstroemia 'Natchez'	6'–8' ht.	B & B	Multistem/3 stems min.
41	LIT	Lagerstroemia indica 'Tuskeegee'	6'–8' ht.	B & B	Multistem/3 stems min.
14	MVI	Magnolia virginiana Sweetbay Magnolia	6'–8' ht.	B & B	Multistem/3 stems min.
10*	CBF	Carpinus Betula 'Fastigiata' European Aurnbeam	2-1/2" cal. min.	B & B	

*6 CBF ARE PLANTED WITHIN THE FILTERRA STRUCTURES (1 EACH)

FINANCIAL SURETY FOR THE REQUIRED LANDSCAPING TREES (26 SHADE TREES & 52 ORNAMENTAL) SHALL BE POSTED AS PART OF THE DEVELOPER'S AGREEMENT IN THE AMOUNT OF $15,600.00

IN ADDITION, FINANCIAL SURETY FOR THE 22 SHADE TREES SHALL BE POSTED AS PART OF THE DEVELOPER'S AGREEMENT IN THE AMOUNT OF $6,600.00 TO MEET THE GN CREDIT E-1.

THE DEVELOPER IS PROPOSING 48 SHADE & 132 ORNAMENTAL TREES.

0' 30' 60' 120'

SCALE: 1" = 30'

FISHER, COLLINS & CARTER, INC.
CIVIL ENGINEERING CONSULTANTS & LAND SURVEYORS
CENTENNIAL SQUARE OFFICE PARK - 10272 BALTIMORE NATIONAL PIKE
ELLICOTT CITY, MARYLAND 21042
(410) 461 - 2855

NO.	REVISION	DATE

5/4/16

LANDSCAPE DEVELOPER'S CERTIFICATE

I/We certify that the landscaping shown on this plan will be done according to the plan, Section 16.124 of the Howard County Code and the Howard County Landscape Manual. I/We further certify that upon completion a letter of landscape installation accompanied by an executed one year guarantee of plant materials will be submitted to the Department of Planning and Zoning.

U.S. HOME CORP. dba LENNAR

Name JOSEPH FORTINO VICE PRESIDENT — 4/28/16 Date

Owner/Builder
U.S. Home Corp. dba Lennar
7035 Albert Einstein Drive, Suite 200
Columbia, Maryland 21046
Ph# 410-997-5522

Developer
U.S. Home Corp. dba Lennar
7035 Albert Einstein Drive, Suite 200
Columbia, Maryland 21046
Ph# 410-997-5522

APPROVED: HOWARD COUNTY DEPARTMENT OF PLANNING AND ZONING

Chief, Division of Land Development — 3-9-16 Date

Chief, Development Engineering Division — 6.13.16 Date

Director - Department of Planning and Zoning — 8-9-16 Date

SUBDIVISION			SECTION/AREA		PARCEL No.
OXFORD SQUARE			----		'Y' (Formerly 'E')
PLAT NO.	BLOCK NO.	ZONE	TAX/ZONE	ELEC. DIST.	CENSUS TR.
23791 - 23792	---	TOD	44	1st.	601101

LANDSCAPING NOTES & DETAILS

OXFORD SQUARE

"A Howard County Green Neighborhood"

Parcel 'Y'

"EXETER PARK"

(Residential Condominium Townhouse Buildings 1 Thru 16, Units 1 Thru 156)
Zoned: TOD
Tax Map No.: 38 Grid No.: 20 Parcel No.: 761
First Election District Howard County, Maryland
Scale: As Shown
Date: April 18, 2016
Sheet 19 Of 30

SDP-14-072

I:\2009\09014\dwg\SDP (Lennar) Parcel 'E'\09014 Sheet 17-19 landscaping plans.dwg, 4/18/2016 8:17:59 AM, 1:1

STRUCTURE SCHEDULE

STRUCTURE NO.	TOP ELEVATION	INV.IN	INV.OUT	ROAD NAME	ROAD STA.	OFFSET	TYPE	REMARKS
I-1	109.97	105.50 (6"), 105.50 (8")	105.50 (15")	N 552,765.47 E 1,385,990.64	------	----	'S' INLET	SD 4.22
I-2	108.46	103.71 (6"), 103.71 (8")	103.71 (15")	N 552,611.11 E 1,386,303.21	------	----	'S' INLET	SD 4.22
I-3	110.00	105.10 (6")	105.10 (15")	N 552,761.01 E 1,386,277.19	------	----	'S' INLET	SD 4.22
I-4	111.00	107.34 (8"), 107.34 (8"), 106.00 (6")	106.00 (12")	N 552,864.54 E 1,386,228.46	------	----	'S' INLET	SD 4.22
I-5	108.85	103.85 (6")	103.85 (15")	N 552,854.06 E 1,386,124.07	------	----	'S' INLET	SD 4.22
I-6	113.90	109.15 (6")	109.15 (15")	N 552,872.77 E 1,386,442.43	------	----	'S' INLET	SD 4.22
I-7	113.90	109.15 (6")	109.15 (15")	N 552,904.83 E 1,386,458.26	------	----	'ADS' INLET	PART#3215
I-8	112.00	107.00 (6")	107.00 (15")	N 552,976.72 E 1,386,233.94	------	----	'S' INLET	SD 4.22
I-9	112.75	107.75 (6")	107.75 (15")	N 552,937.13 E 1,386,314.18	------	----	'S' INLET	SD 4.22
I-10	114.50	109.50 (6")	109.50 (12")	N 552,011.66 E 1,386,305.86	------	----	'S' INLET	SD 4.22
I-11	113.50	108.66 (6")	108.66 (15")	N 552,058.72 E 1,386,420.71	------	----	'S' INLET	SD 4.22
I-12	113.75	108.76 (6")	108.76 (15")	N 552,135.17 E 1,386,265.64	------	----	'S' INLET	SD 4.22
I-13	113.66	108.91 (6")	108.91 (15")	N 552,037.35 E 1,386,108.89	------	----	'S' INLET	SD 4.22
I-14	113.51	108.76 (6")	108.76 (15")	N 552,069.41 E 1,386,124.70	------	----	'ADS' INLET	PART#3215
M-1	111.73	104.06 (18"), 104.06 (24")	103.77 (24")	N 552,715.29 E 1,386,417.78	------	----	STD. MH	G 5.12
M-2	112.00	104.90 (15"), 104.90 (15")	104.65 (18")	N 552,764.62 E 1,386,316.53	------	----	STD. MH	G 5.12
M-3	112.00	105.28 (15")	105.18 (15")	N 552,822.29 E 1,386,297.65	------	----	STD. MH	G 5.12
M-4	111.85	105.96 (12")	105.75 (15")	N 552,858.43 E 1,386,225.46	------	----	STD. MH	G 5.12
M-7	113.57	105.00 (24")	104.91 (24")	N 552,863.74 E 1,386,489.85	------	----	STD. MH	G 5.12
M-8	114.16	105.36 (24"), 108.90 (15"), 108.90 (15")	105.26 (24")	N 552,884.33 E 1,386,448.13	------	----	STD. MH	G 5.12
M-9	113.90	107.62 (15"), 106.32 (24")	106.22 (24")	N 552,947.81 E 1,386,319.45	------	----	STD. MH	G 5.12
M-10	113.50	106.62 (15"), 107.02 (18")	106.52 (24")	N 552,962.76 E 1,386,289.15	------	----	STD. MH	G 5.12
M-11	115.20	107.53 (18"), 109.44 (12")	107.43 (18")	N 552,008.87 E 1,386,311.55	------	----	STD. MH	G 5.12
M-12	116.50	108.09 (15"), 108.09 (15")	107.99 (18")	N 552,077.74 E 1,386,345.00	------	----	STD. MH	G 5.12
M-13	116.10	108.52 (15"), 111.58 (8")	108.42 (15")	N 553,053.50 E 1,386,394.27	------	----	STD. MH	G 5.12
M-14	116.25	108.62 (15"), 112.36 (8")	108.52 (15")	N 553,110.78 E 1,386,278.04	------	----	STD. MH	G 5.12
F-1	110.56	------	106.89 (4")	N 552,886.99 E 1,386,130.73	------	----	PRECAST FILTERRA w/SEDIMENTATION CHAMBER	FTSC 16' x 6'
F-2	111.87	------	108.20 (4")	N 552,800.49 E 1,386,305.71	------	----	PRECAST FILTERRA w/SEDIMENTATION CHAMBER	FTSC 16' x 6'
F-3	115.24	------	111.57 (6")	N 553,183.66 E 1,386,277.10	------	----	PRECAST FILTERRA w/SEDIMENTATION CHAMBER	FTSC 19' x 6'
F-4	114.90	------	111.23 (6")	N 553,097.31 E 1,386,452.15	------	----	PRECAST FILTERRA w/SEDIMENTATION CHAMBER	FTSC 19' x 6'
F-5	110.25	------	106.58 (4")	N 552,670.00 E 1,386,241.35	------	----	PRECAST FILTERRA w/SEDIMENTATION CHAMBER	FTSC 16' x 6'
F-6	108.78	------	105.11 (4")	N 552,756.17 E 1,386,066.18	------	----	PRECAST FILTERRA w/SEDIMENTATION CHAMBER	FTSC 16' x 6'

NOTE: ALL STORM DRAIN STRUCTURES & PIPE WITHIN THIS SUBMISSION ARE PRIVATE.
NOTE: SEE SHEET 7 FOR FILTERRA NOTES AND DETAILS.

STORMWATER MANAGEMENT MAINTENANCE NOTE

ALL STORMWATER MANAGEMENT FACILITIES WILL BE PRIVATELY OWNED AND MAINTAINED BY THE OXFORD SQUARE COMMERCIAL ASSOCIATION, INC. THE STREET TREES, PERFORATED UNDERDRAINS, FEEDERS, PLANTINGS AND SWALES WILL ALSO BE PRIVATELY OWNED AND MAINTAINED BY THE OXFORD SQUARE COMMERCIAL ASSOCIATION. HOWARD COUNTY WILL ONLY MAINTAIN THE INLET STRUCTURE WITHIN THE MICRO BIO-RETENTION FACILITIES ADJACENT TO A PUBLIC RIGHT-OF-WAY.

PIPE SCHEDULE

SIZE	CLASS	LENGTH
4"	PVC, SCH. 40 (PERFORATED)	28 l.f.
4"	PVC, SCH. 40	105 l.f.
6"	PVC, SCH. 40 (PERFORATED)	612 l.f.
6"	PVC, SCH. 40	1,513 l.f.
8"	PVC, SCH. 40	1,203 l.f.
12"	HDPE	287 l.f.
15"	HDPE	461 l.f.
18"	HDPE	390 l.f.
24"	HDPE	537 l.f.

NOTES: HDPE PIPE MAY BE SUBSTITUTED WITH RCCP, CL. IV PIPE.

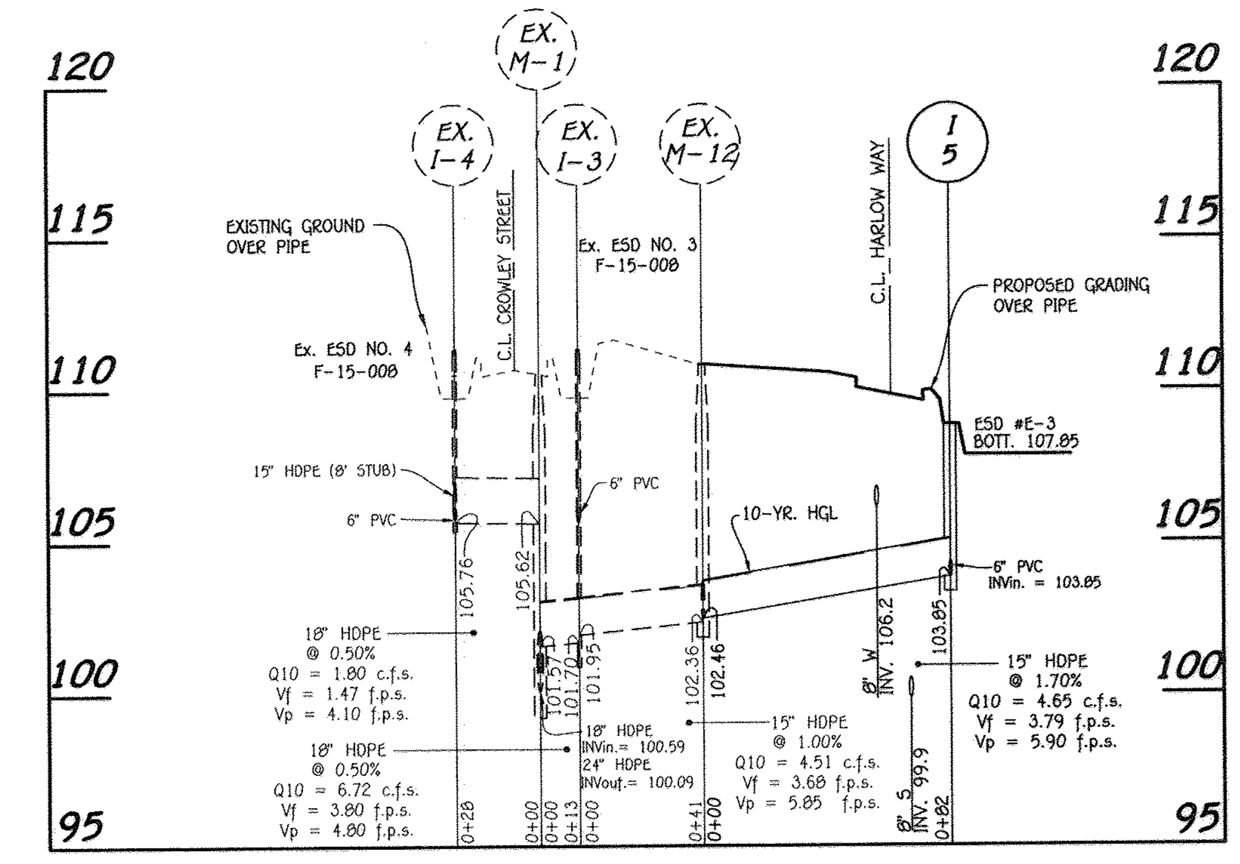

PROFILE

SCALE: HORIZ. : 1" = 50'
VERT. : 1" = 5'

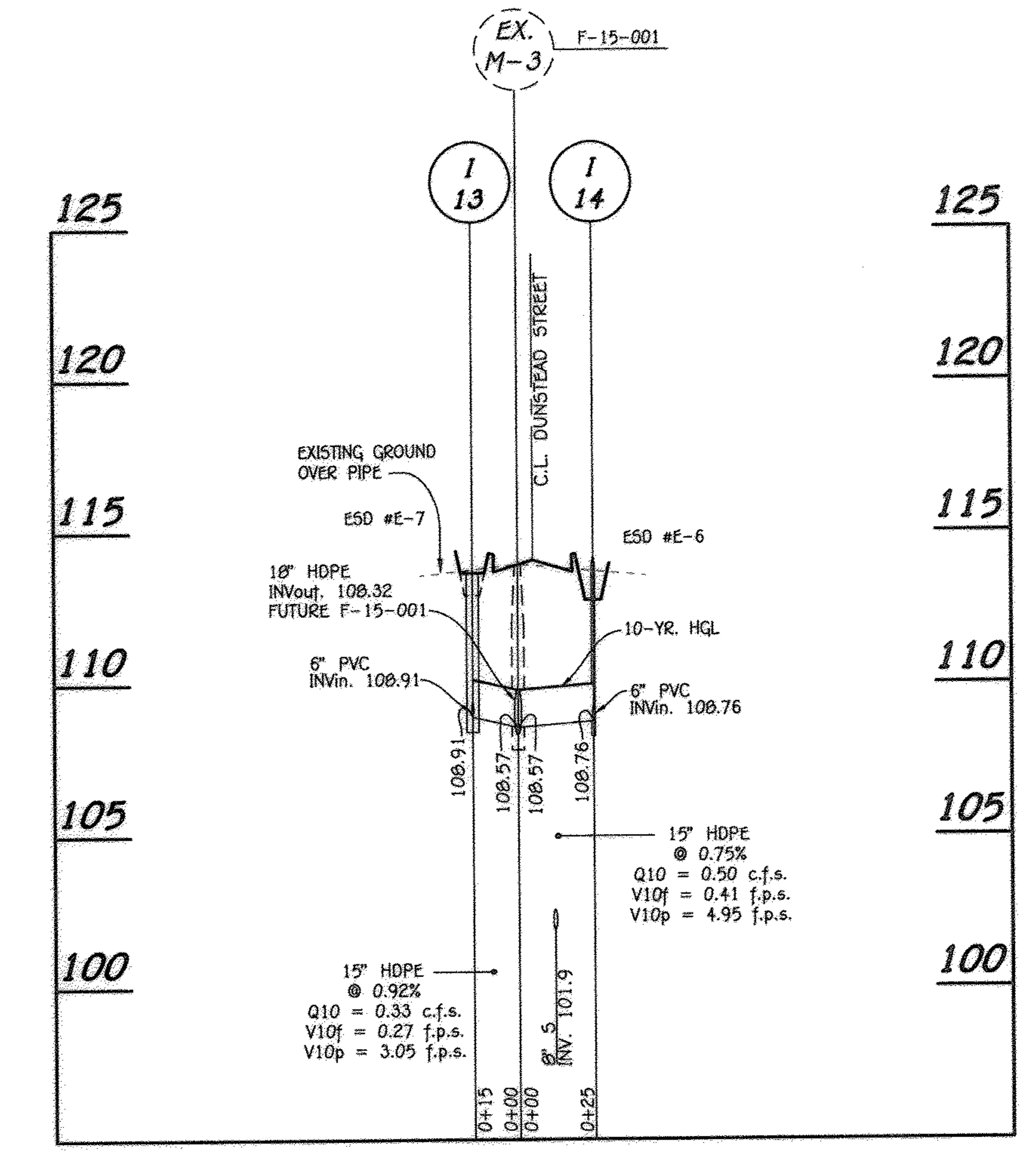

PROFILE

SCALE: HORIZ. : 1" = 50'
VERT. : 1" = 5'

ROOFDRAIN CLEAN-OUT DATA

STRUCTURE NO.	TOP ELEVATION	INVERT
C.O. #1	111.5	108.5
C.O. #2	112.4	110.4
C.O. #2A	112.0	110.0
C.O. #3	112.8	109.9
C.O. #4	110.0	107.04
C.O. #5	110.6	108.13
C.O. #6	109.95	107.67
C.O. #7	110.0	107.24
C.O. #8	111.7	108.7
C.O. #9	112.4	109.0
C.O. #10	111.2	108.45
C.O. #11	111.3	108.36
C.O. #12	112.0	108.9
C.O. #13	112.7	109.4
C.O. #14	112.1	108.0
C.O. #15	113.0	110.5
C.O. #16	110.6	107.4
C.O. #17	110.6	107.8
C.O. #18	112.7	110.2
C.O. #19	112.0	109.9
C.O. #20	111.7	108.83
C.O. #21	112.7	110.0
C.O. #22	112.2	110.4
C.O. #23	112.9	110.0
C.O. #24	114.1	111.1
C.O. #25	112.5	109.7
C.O. #26	114.6	111.6
C.O. #27	113.25	109.15
C.O. #28	114.8	109.8
C.O. #29	115.8	113.3
C.O. #30	115.5	112.7
C.O. #31	117.0	114.5
C.O. #32	116.9	114.4
C.O. #33	114.6	111.8
C.O. #34	115.2	112.7
C.O. #35	115.6	113.64
C.O. #36	115.7	112.85
C.O. #37	118.3	115.8
C.O. #38	115.6	113.0
C.O. #39	116.9	112.5
C.O. #40	118.1	115.5
C.O. #41	116.8	115.2
C.O. #42	118.1	115.3
C.O. #43	117.0	114.5
C.O. #44	117.3	115.1
C.O. #45	117.0	114.3
C.O. #46	116.2	113.55

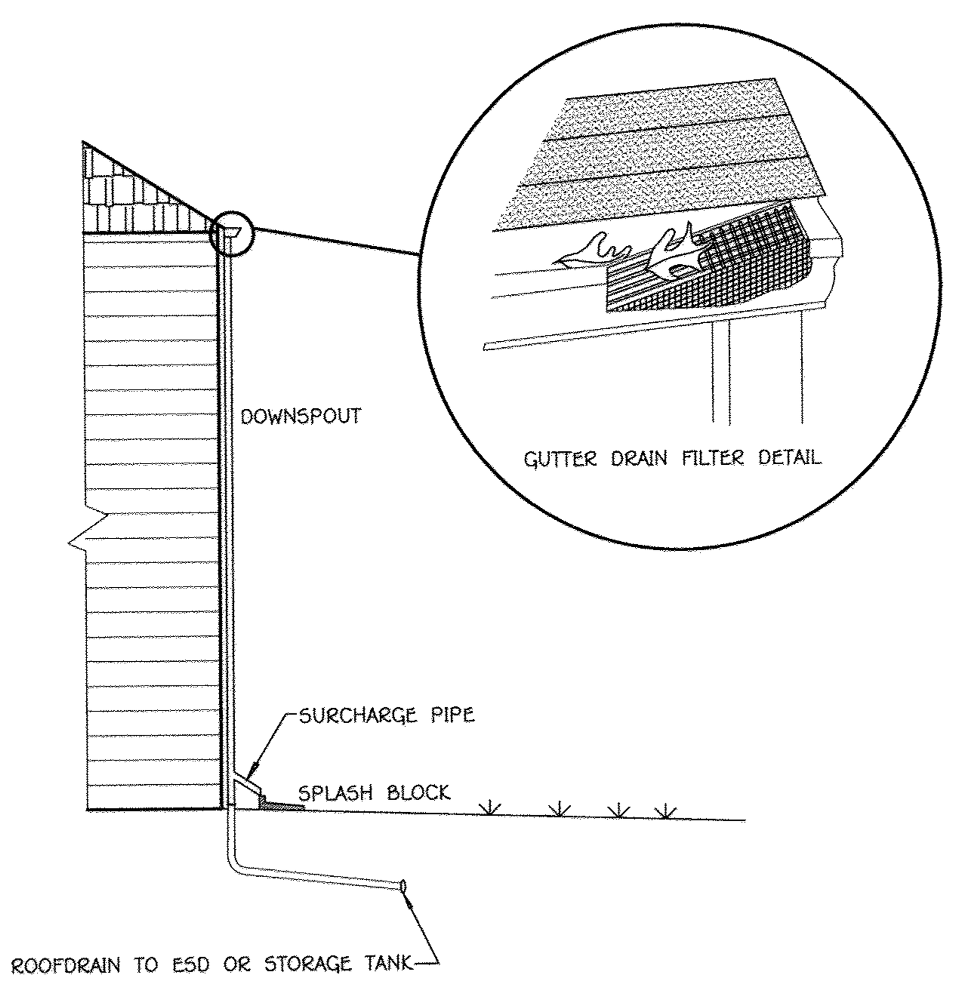

TYPICAL DOWNSPOUT FOR UNITS USING A ROOFDRAIN

NO SCALE

NOTE: EACH DOWNSPOUT THAT DRAINS TO AN ESD OR OCTANK SHALL HAVE AN OVERFLOW AND HAVE AN GUTTER DRAIN FILTER.

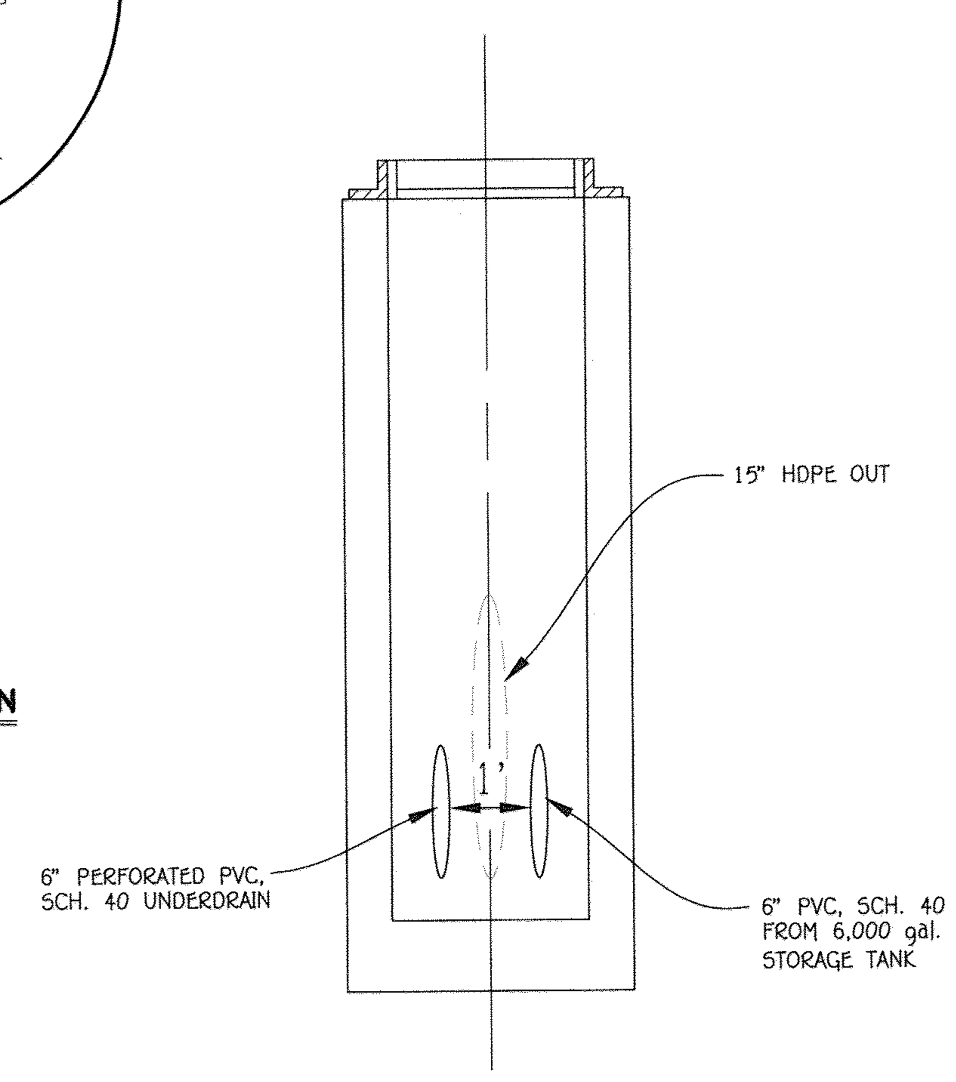

INLET STRUCTURE DETAIL (I-1 & I-2)

NO SCALE

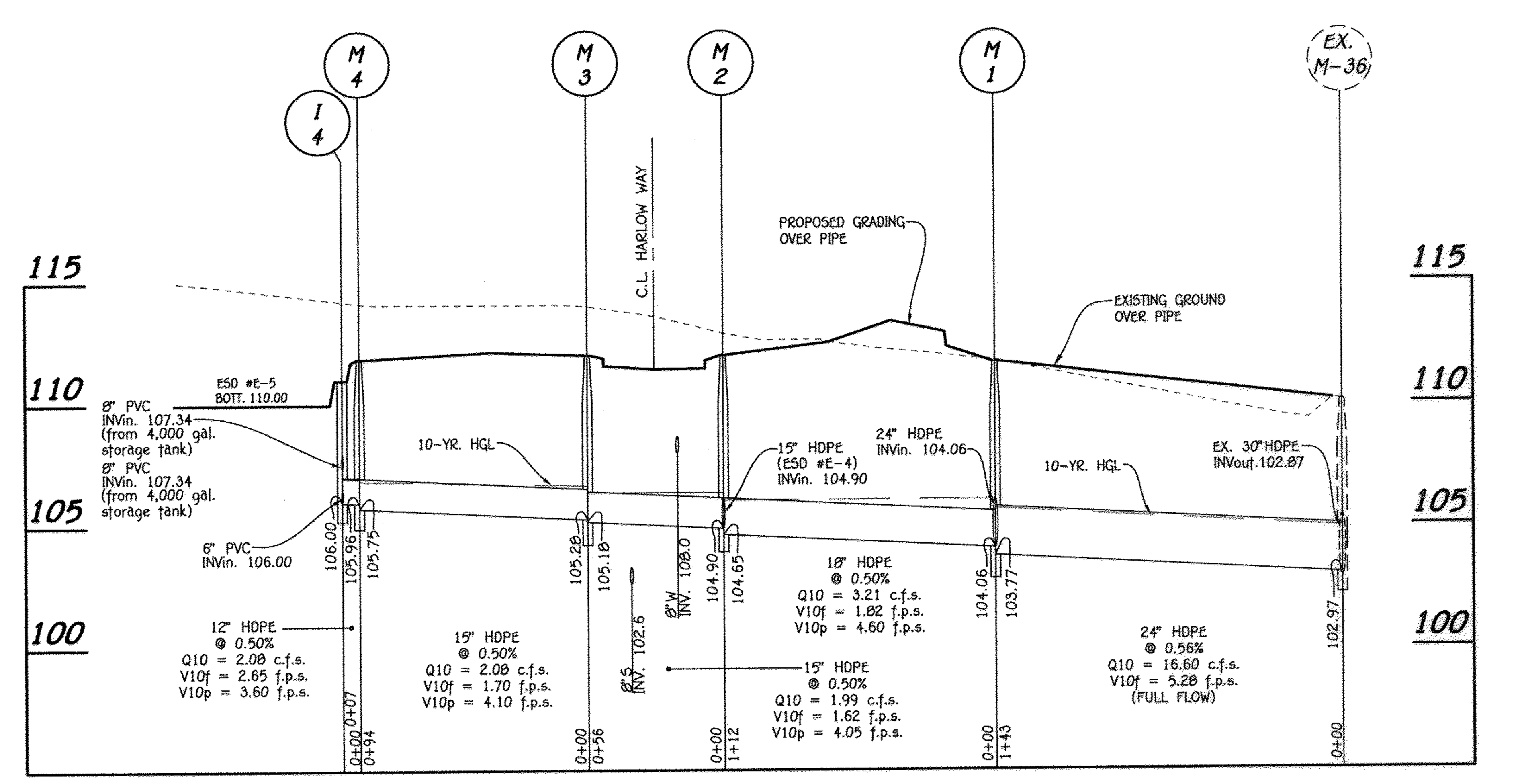

PROFILE

SCALE: HORIZ. : 1" = 50'
VERT. : 1" = 5'

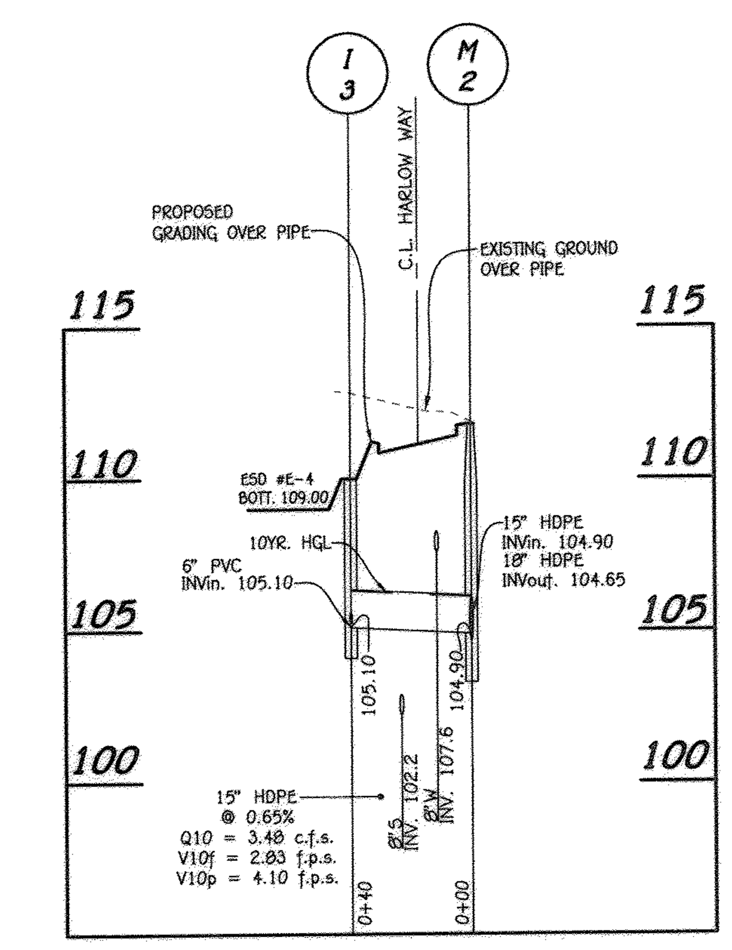

PROFILE

SCALE: HORIZ. : 1" = 50'
VERT. : 1" = 5'

FISHER, COLLINS & CARTER, INC.
CIVIL ENGINEERING CONSULTANTS & LAND SURVEYORS
CENTENNIAL SQUARE OFFICE PARK - 10272 BALTIMORE NATIONAL PIKE
ELLICOTT CITY, MARYLAND 21042
(410) 461 - 2855

NO.	REVISION	DATE

STATE OF MARYLAND MICHAEL VITI No. 20748 PROFESSIONAL ENGINEER 5/4/16

Owner/Builder
U.S. Home Corp. dba Lennar
7035 Albert Einstein Drive, Suite 200
Columbia, Maryland 21046
Ph# 410-997-5522

Developer
U.S. Home Corp. dba Lennar
7035 Albert Einstein Drive, Suite 200
Columbia, Maryland 21046
Ph# 410-997-5522

APPROVED: HOWARD COUNTY DEPARTMENT OF PLANNING AND ZONING

Chief, Division of Land Development — Date 8-9-16
Chief, Development Engineering Division — Date 6-13-16
Director - Department of Planning and Zoning — Date 8-9-16

SUBDIVISION			SECTION/AREA		PARCEL No.
OXFORD SQUARE			----		'Y' (Formerly 'E')
PLAT NO.	BLOCK NO.	ZONE	TAX/ZONE	ELEC. DIST.	CENSUS TR.
23791 - 23792	---	TOD	44	1st.	601101

STORM DRAIN PROFILES

OXFORD SQUARE

"A Howard County Green Neighborhood"
Parcel 'Y'
"EXETER PARK"
(Residential Condominium Townhouse Buildings 1 Thru 16, Units 1 Thru 156)
Zoned: TOD
Tax Map No.: 38 Grid No.: 20 Parcel No.: 761
First Election District Howard County, Maryland
Scale: As Shown
Date: April 18, 2016
Sheet 20 Of 30

SDP-14-072

I:\2009\09014\dwg\SDP (Lennar) Parcel 'E'\09014 Sheet 20-21 storm drain profiles.dwg, 5/4/2016 1:19:25 PM, 1:1

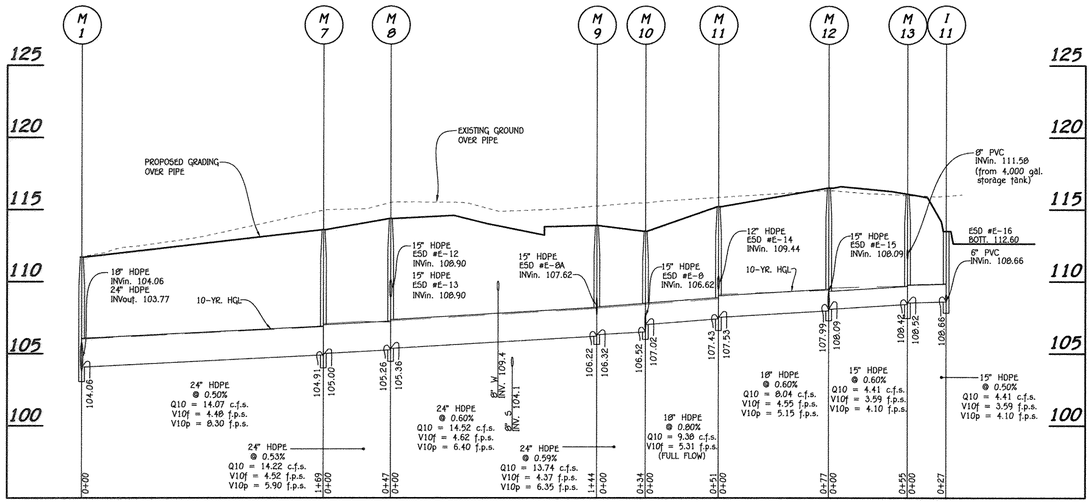

PROFILE

SCALE: HORIZ. : 1" = 50'
VERT. : 1" = 5'

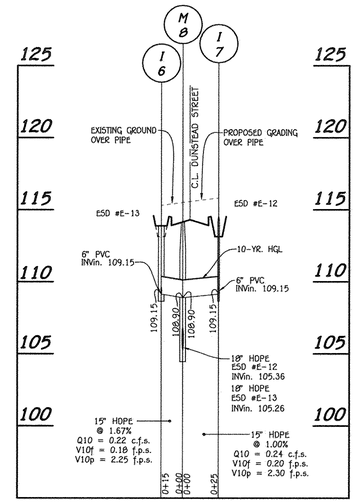

PROFILE

SCALE: HORIZ. : 1" = 50'
VERT. : 1" = 5'

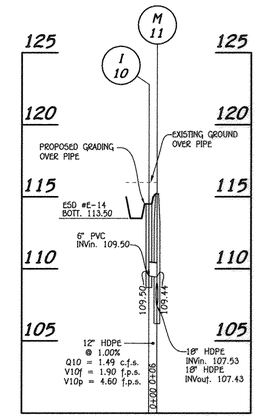

PROFILE

SCALE: HORIZ. : 1" = 50'
VERT. : 1" = 5'

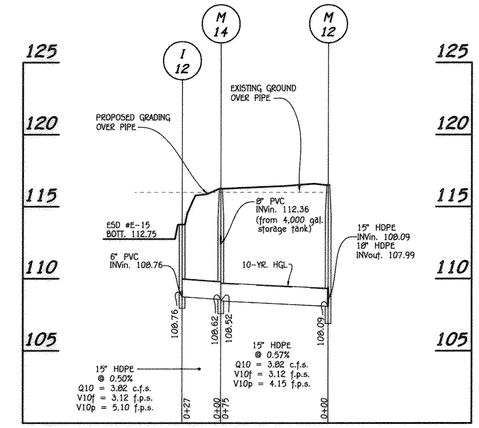

PROFILE

SCALE: HORIZ. : 1" = 50'
VERT. : 1" = 5'

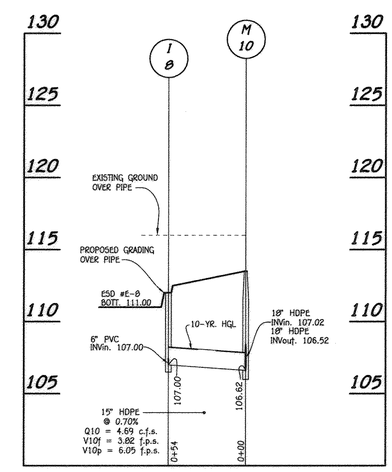

PROFILE

SCALE: HORIZ. : 1" = 50'
VERT. : 1" = 5'

STORMWATER MANAGEMENT MAINTENANCE NOTE

ALL STORMWATER MANAGEMENT FACILITIES WILL BE PRIVATELY OWNED AND MAINTAINED BY THE OXFORD SQUARE COMMERCIAL ASSOCIATION, INC. THE STREET TREES, PERFORATED UNDERDRAINS, FEEDERS, PLANTINGS AND SWALES WILL ALSO BE PRIVATELY OWNED AND MAINTAINED BY THE OXFORD SQUARE COMMERCIAL ASSOCIATION. HOWARD COUNTY WILL ONLY MAINTAIN THE INLET STRUCTURE WITHIN THE MICRO BIO-RETENTION FACILITIES ADJACENT TO A PUBLIC RIGHT-OF-WAY.

FISHER, COLLINS & CARTER, INC.
CIVIL ENGINEERING CONSULTANTS & LAND SURVEYORS
CENTENNIAL SQUARE OFFICE PARK - 10272 BALTIMORE NATIONAL PIKE
ELLICOTT CITY, MARYLAND 21042
(410) 461 - 2855

NO.	REVISION	DATE

STATE OF MARYLAND — CHARLES W. FISHER, JR. — REG. No. 20243 — PROFESSIONAL ENGINEER — 5/4/16

Owner/Builder

U.S. Home Corp. dba Lennar
7035 Albert Einstein Drive, Suite 200
Columbia, Maryland 21046
Ph# 410-997-5522

Developer

U.S. Home Corp. dba Lennar
7035 Albert Einstein Drive, Suite 200
Columbia, Maryland 21046
Ph# 410-997-5522

APPROVED: HOWARD COUNTY DEPARTMENT OF PLANNING AND ZONING

Chief, Division of Land Development — Date 8-9-16

Chief, Development Engineering Division — Date 6-13-16

Director - Department of Planning and Zoning — Date 8-9-16

SUBDIVISION			SECTION/AREA		PARCEL No.
OXFORD SQUARE			----		"Y" (formerly "E")
PLAT NO.	BLOCK NO.	ZONE	TAX/ZONE	ELEC. DIST.	CENSUS TR.
23791 - 23792	---	TOD	44	1st.	601101

STORM DRAIN PROFILES

OXFORD SQUARE

"A Howard County Green Neighborhood"

Parcel 'Y'

"EXETER PARK"

(Residential Condominium Townhouse Buildings 1 Thru 16, Units 1 Thru 156)

Zoned: TOD

Tax Map No.: 30 Grid No.: 20 Parcel No.: 761

First Election District Howard County, Maryland

Scale: As Shown

Date: April 18, 2016

Sheet 21 Of 30

SDP-14-072

I:\2009\09014\dwg\SDP (Lennar) Parcel 'E'\09014 Sheet 20-21 storm drain profiles.dwg, 5/4/2016 1:28:12 PM, 11

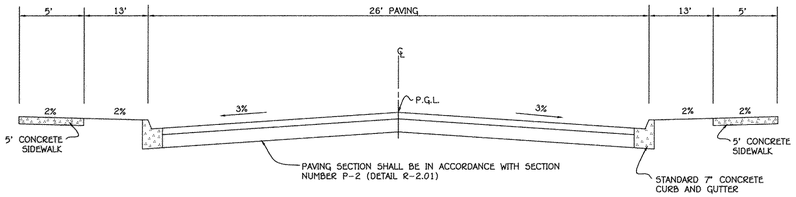

TYPICAL ROADWAY SECTION (DUNSTEAD STREET)

NO SCALE

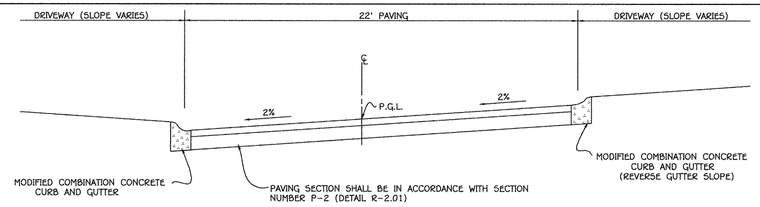

TYPICAL ROADWAY SECTION (ISLIP WAY & HARLOW WAY)

NO SCALE

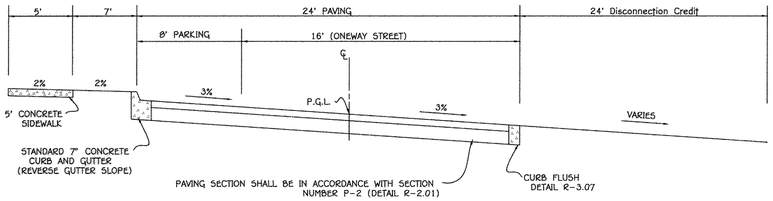

TYPICAL ROADWAY SECTION (BEAUMONT PLACE (S)) @ CENTRAL LAWN AREA (PARCEL 'T')

NO SCALE

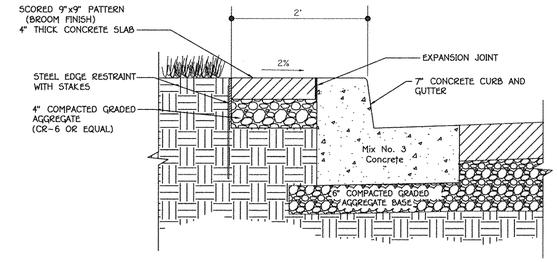

18" CONCRETE STRIP AT PARALLEL PARKING (BANBURY DRIVE & CROWLEY STREET)

NO SCALE

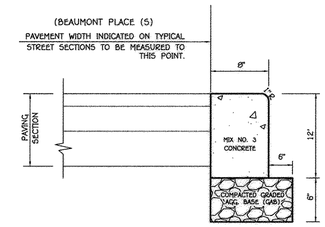

CURB FLUSH

NO SCALE DETAIL R-3.07

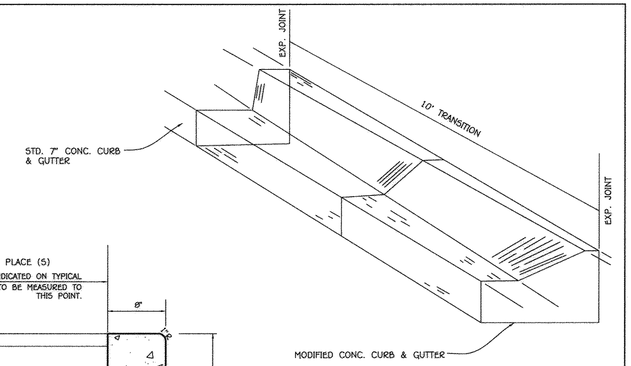

CONCRETE CURB & GUTTER TRANSITION

NO SCALE

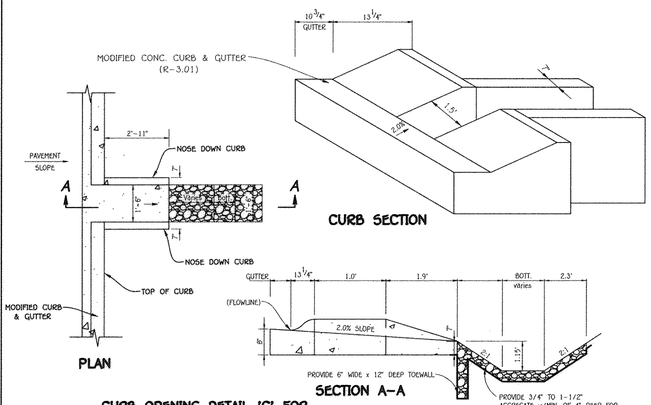

CURB OPENING DETAIL 'C' FOR MODIFIED CURB & GUTTER ALONG ROADWAY

NO SCALE

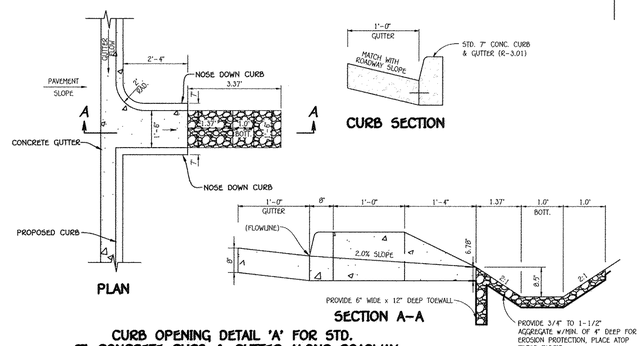

CURB OPENING DETAIL 'A' FOR STD. 7" CONCRETE CURB & GUTTER ALONG ROADWAY

NO SCALE

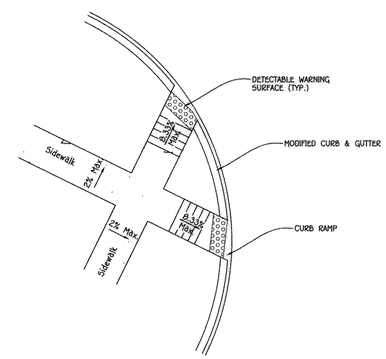

MODIFIED CURB & GUTTER

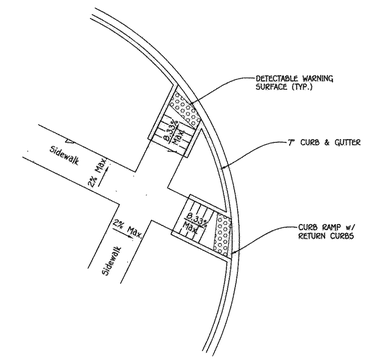

7" CURB & GUTTER

SIDEWALK RAMP DETAIL

NO SCALE

(MATT DETAILS OR OPTIONAL 12"x12" TILE TECH PAVERS(RED))

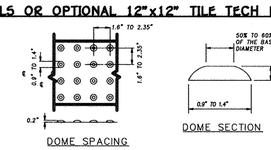

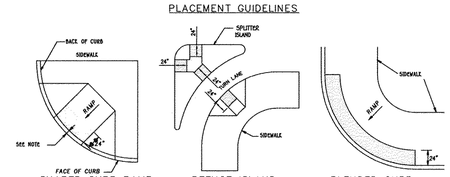

WHERE ISLANDS OR MEDIANS ARE LESS THAN 6 FEET WIDE, THE DETECTABLE WARNING SHOULD EXTEND ACROSS THE FULL LENGTH OF THE CUT THROUGH THE ISLAND OR MEDIAN

NOTES

1. THE DETECTABLE WARNING SURFACE SHALL BE LOCATED SO THAT THE EDGE NEAREST THE CURB LINE IS 6 TO 8 INCHES FROM THE FACE OF CURB.
2. FOR SEEWED APPLICATIONS DETECTABLE WARNING SHALL BE PLACED SUCH THAT THE DOMES CLOSEST TO THE BACK OF CURB ARE NO LESS THAN 0.5" AND NO MORE THAN 3.0" FROM THE BACK OF CURB. TRUNCATED DOME SURFACES SHALL BE FABRICATED TO PROVIDE FULL DOMES ONLY.
3. DETECTABLE WARNING SURFACE SHALL BE PAID FOR IN ACCORDANCE WITH SECTION 611 OF THE SPECIFICATIONS.
4. DETECTABLE WARNING SURFACES ARE REQUIRED AT STREET CROSSING & SIGNALIZED INTERSECTIONS.

DETECTABLE WARNING SURFACE GUIDELINES

STD. DETAIL MD. 655-40

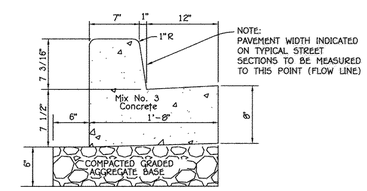

STD. 7" CONC. CURB AND GUTTER

NO SCALE DETAIL R-3.01

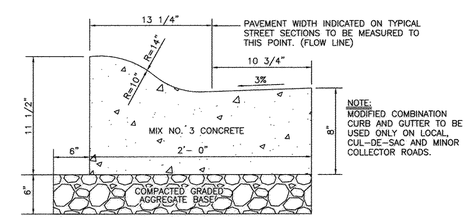

MODIFIED COMBINATION CURB AND GUTTER

NO SCALE DETAIL R-3.01

DETAIL R-2.01

SECTION NUMBER	ROAD AND STREET CLASSIFICATION	CALIFORNIA BEARING RATIO (CBR)	3 TO <5	5 TO <7	≥7	3 TO <5	5 TO <7	≥7
		PAVEMENT MATERIAL (INCHES)	MIN HMA WITH GAB			HMA WITH CONSTANT GAB		
P-1	PARKING BAYS: RESIDENTIAL AND NON-RESIDENTIAL PARKING DRIVE AISLES: RESIDENTIAL AND NON-RESIDENTIAL WITH NO MORE THAN 2 HEAVY TRUCKS PER DAY	HMA SUPERPAVE FINAL SURFACE 9.5 MM, PG 64-22, LEVEL 1 (ESAL)	1.5	1.5	1.5	1.5	1.5	1.5
		HMA SUPERPAVE INTERMEDIATE SURFACE N/A	N/A	N/A	N/A	N/A	N/A	N/A
		HMA SUPERPAVE BASE 19.0 MM. PG 64-22, LEVEL 1 (ESAL)	2.0	2.0	2.0	3.5	3.0.	2.5
		GRADED AGGREGATE BASE (GAB)	8.5	7.0	5.0	4.0	4.0	4.0
P-2	PARKING DRIVE AISLES: RESIDENTIAL AND NON-RESIDENTIAL WITH NO MORE THAN 10 HEAVY TRUCKS PER DAY LOCAL ROADS: ACCESS PLACE, ACCESS STREET CUL-DE-SACS: RESIDENTIAL	HMA SUPERPAVE FINAL SURFACE 9.5 MM, PG 64-22, LEVEL 1 (ESAL)	1.5	1.5	1.5	1.5	1.5	1.5
		HMA SUPERPAVE INTERMEDIATE SURFACE 9.5 MM, PG 64-22, LEVEL 1 (ESAL)	1.0	1.0	1.0	1.0	1.0	1.0
		HMA SUPERPAVE BASE 19.0 MM. PG 64-22, LEVEL 1 (ESAL)	2.0	2.0	2.0	3.5	2.0	2.0
		GRADED AGGREGATE BASE (GAB)	8.0	4.0	3.0	4.0	4.0	4.0

FISHER, COLLINS & CARTER, INC.
CIVIL ENGINEERING CONSULTANTS & LAND SURVEYORS
CENTENNIAL SQUARE OFFICE PARK - 10272 BALTIMORE NATIONAL PIKE
ELLICOTT CITY, MARYLAND 21042
(410) 461 - 2855

NO.	REVISION	DATE

STATE OF MARYLAND — MICHAEL V. CLARK — No. 20743 — PROFESSIONAL ENGINEER — 5/4/16

Owner/Builder

U.S. Home Corp. dba Lennar
7035 Albert Einstein Drive, Suite 200
Columbia, Maryland 21046
Ph# 410-997-5522

Developer

U.S. Home Corp. dba Lennar
7035 Albert Einstein Drive, Suite 200
Columbia, Maryland 21046
Ph# 410-997-5522

APPROVED: HOWARD COUNTY DEPARTMENT OF PLANNING AND ZONING

Chief, Division of Land Development — Date 8-8-16

Chief, Development Engineering Division — Date 6.13.16

Director - Department of Planning and Zoning — Date 8-9-16

SUBDIVISION	SECTION/AREA	PARCEL No.
OXFORD SQUARE	----	'Y' (Formerly 'E')

PLAT NO.	BLOCK NO.	ZONE	TAX/ZONE	ELEC. DIST.	CENSUS TR.
23791-23792	---	TOD	44	1st.	601101

ROADWAY DETAILS

OXFORD SQUARE

"A Howard County Green Neighborhood"

Parcel 'Y'

"EXETER PARK"

(Residential Condominium Townhouse Buildings 1 Thru 16, Units 1 Thru 156)

Zoned: TOD

Tax Map No.: 30 Grid No.: 20 Parcel No.: 761

First Election District Howard County, Maryland

Scale: As Shown

Date: April 18, 2016

Sheet 22 Of 30

SDP-14-072

I:\2009\09014\dwg\SDP (Lennar) Parcel 'E'\09014 Sheet 22 roadway details.dwg, 5/4/2016 2:06:33 PM, 1:1

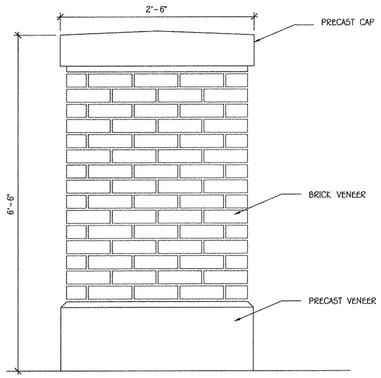

BRICK PIER - TYPICAL SECTION

NO SCALE

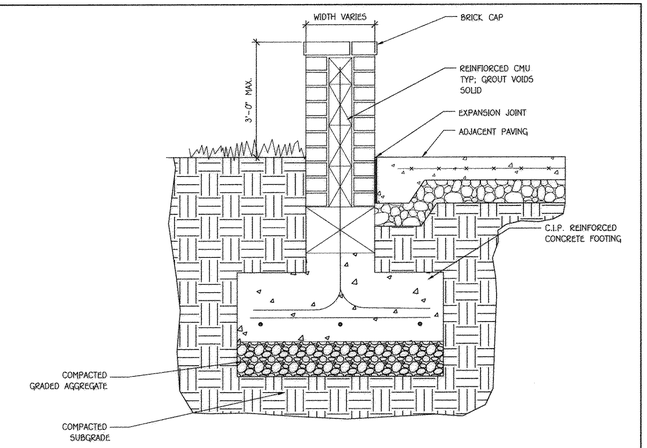

SITE WALL - TYPICAL SECTION

NO SCALE

Plainwell™ **Product Drawing** landscapeforms®

Bench, 72" Length, with Aluminum Seat, Freestanding / Surface Mount — www.landscapeforms.com Ph: 800.521.2546

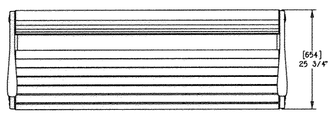

NOTE:
FREESTANDING OR SURFACE MOUNT OPTIONS. CORROSION-RESISTANT ANCHORING HARDWARE SUPPLIED BY OTHERS. Ø13/32" HOLES WITH COUNTERBORE PROVIDED FOR SOCKET HEAD CAP SCREWS.

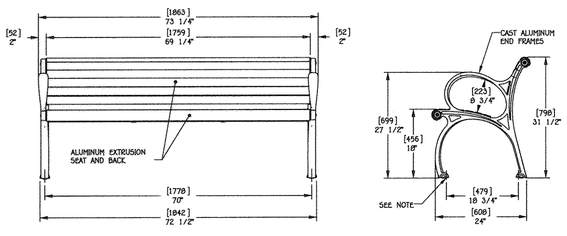

Drawing: PL271-01
Date: 4/9/2010
Dimensions are in inches[mm]
U.S. Patent No. D419,341

CONFIDENTIAL DRAWING INFORMATION CONTAINED HEREIN IS THE PROPERTY OF LANDSCAPE FORMS, INC. INTENDED USE IS LIMITED TO DESIGN PROFESSIONALS SPECIFYING LANDSCAPE FORMS, INC. PRODUCTS AND THEIR DIRECT CLIENTS. DRAWING IS NOT TO BE COPIED OR DISCLOSED TO OTHERS WITHOUT THE CONSENT OF LANDSCAPE FORMS, INC. ©2010 LANDSCAPE FORMS, INC. ALL RIGHTS RESERVED.

GARDEN BENCH DETAIL

NO SCALE

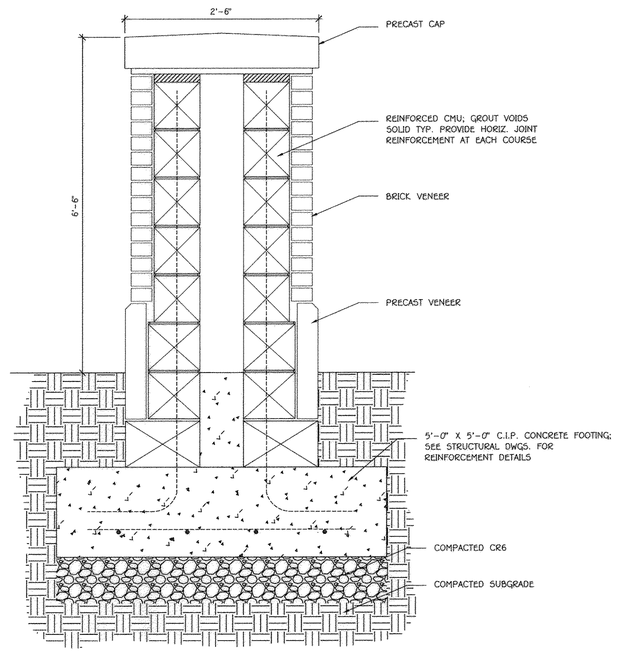

BRICK PIER - TYPICAL SECTION

NO SCALE

FISHER, COLLINS & CARTER, INC.
CIVIL ENGINEERING CONSULTANTS & LAND SURVEYORS
CENTENNIAL SQUARE OFFICE PARK - 10272 BALTIMORE NATIONAL PIKE
ELLICOTT CITY, MARYLAND 21042
(410) 461 - 2855

NO.	REVISION	DATE

STATE OF MARYLAND — MICHAEL E. PAGE — No. 20738 — PROFESSIONAL ENGINEER — 5/4/16

Owner/Builder
U.S. Home Corp. dbà Lennàr
7035 Albert Einstein Drive, Suite 200
Columbia, Maryland 21046
Ph# 410-997-5522

Developer
U.S. Home Corp. dbà Lennàr
7035 Albert Einstein Drive, Suite 200
Columbia, Maryland 21046
Ph# 410-997-5522

APPROVED: HOWARD COUNTY DEPARTMENT OF PLANNING AND ZONING

Chief, Division of Land Development — Date 8-9-16
Chief, Development Engineering Division — Date 6-13-16
Director - Department of Planning and Zoning — Date 8-9-16

SUBDIVISION			SECTION/AREA		PARCEL No.
OXFORD SQUARE			---		'Y' (Formerly 'E')
PLAT NO.	BLOCK NO.	ZONE	TAX/ZONE	ELEC. DIST.	CENSUS TR.
23791-23792	---	TOD	44	1st.	601101

SITE DETAILS

OXFORD SQUARE

"A Howard County Green Neighborhood"

Parcel 'Y'

"EXETER PARK"

(Residential) Condominium Townhouse Buildings 1 Thru 16, Units 1 Thru 156)
Zoned: TOD
Tax Map No.: 38 Grid No.: 20 Parcel No.: 761
First Election District Howard County, Maryland
Scale: As Shown
Date: April 18, 2016
Sheet 23 of 30

SDP-14-072

I:\2009\0910\dwg\SDP (Lennar) Parcel 'E'\09014 Sheet 23 site details.dwg, 5/4/2016 2:17:36 PM, 1:1

DRAINAGE AREA DATA					
STRUCTURE NO.	DRAINAGE AREA	AREA	'C'	ZONED	% IMP.
I-1	A	0.16 AC.	0.79	TOD	77%
I-2	B	0.17 AC.	0.72	TOD	67%
I-3	C	0.78 AC.	0.82	TOD	81%
I-4	D	0.45 AC.	0.63	TOD	54%
I-5	E	0.58 AC.	0.67	TOD	60%
I-6	F	0.04 AC.	0.69	TOD	63%
I-7	G	0.07 AC.	0.69	TOD	63%
I-8	H	0.29 AC.	0.74	TOD	70%
I-9	O	0.15 AC.	0.63	TOD	54%
I-10	J	0.25 AC.	0.74	TOD	70%
I-11	K	0.55 AC.	0.77	TOD	74%
I-12	L	0.46 AC.	0.73	TOD	69%
I-13	M	0.05 AC.	0.61	TOD	51%
I-14	N	0.08 AC.	0.74	TOD	70%

RAINWATER HARVESTING DATA			
TANK NO.	AREA	ROOF AREA SQ.FT.	SIZE (Gallons)
#1	RH-1	4,620	6,000
#2	RH-2	3,300	4,000
#3	RH-3	3,228	4,000
#4	RH-4	3,228	4,000
#5	RH-5	3,300	4,000
#6	RH-6	5,280	6,000
#7	RH-7	6,600	8,000
#8	RH-8	2,640	4,000
#9	RH-9	5,280	6,000
#10	RH-10	3,852	4,000
#11	RH-11	3,852	4,000

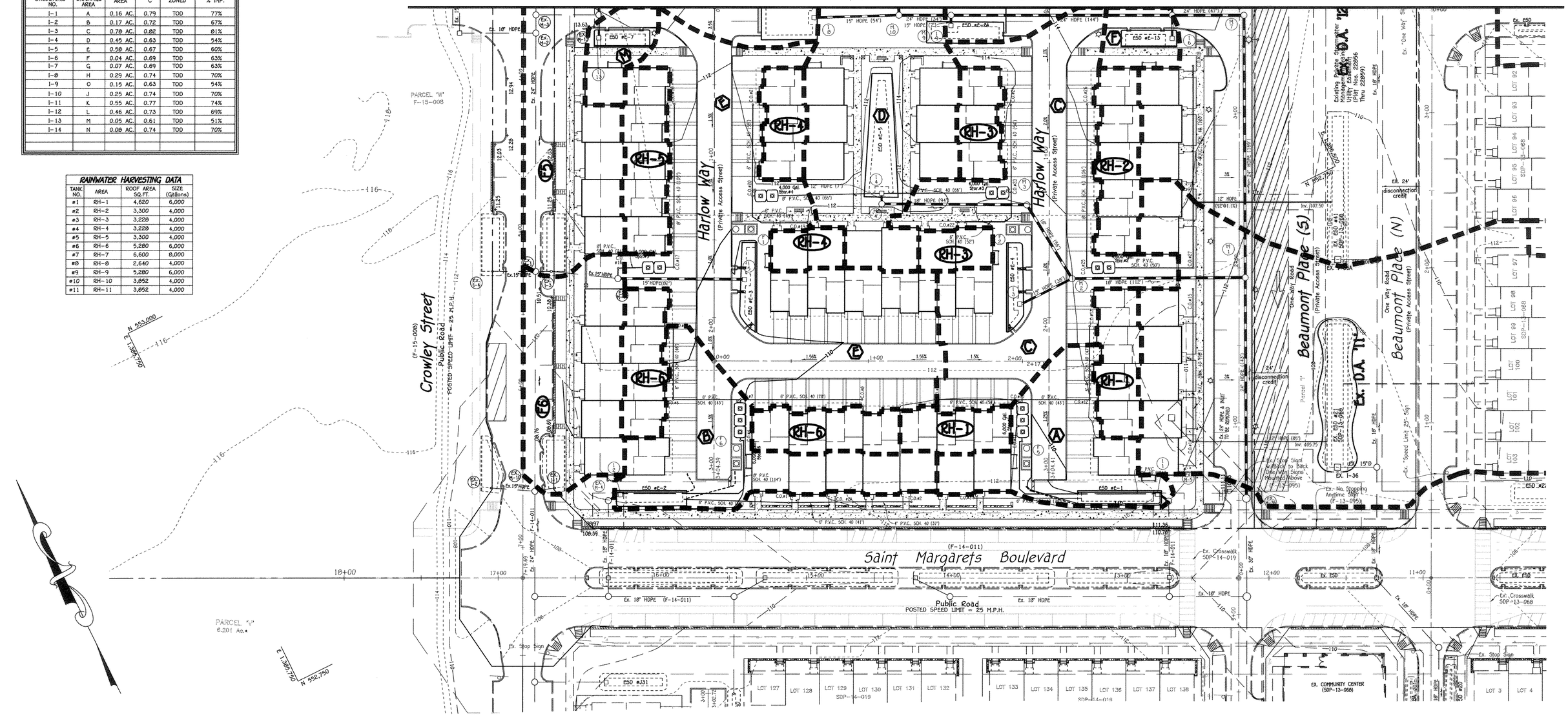

RH-1 - DENOTES RAINWATER HARVESTING AREA

0' 30' 60' 120'

SCALE: 1" = 30'

FISHER, COLLINS & CARTER, INC.
CIVIL ENGINEERING CONSULTANTS & LAND SURVEYORS
CENTENNIAL SQUARE OFFICE PARK - 10272 BALTIMORE NATIONAL PIKE
ELLICOTT CITY, MARYLAND 21042
(410) 461 - 2855

NO.	REVISION	DATE

STATE OF MARYLAND
MICHAEL V. VICKS
No. 20748
PROFESSIONAL ENGINEER
5/4/16

Owner/Builder
U.S. Home Corp. dba Lennar
7035 Albert Einstein Drive, Suite 200
Columbia, Maryland 21046
Ph# 410-997-5522

Developer
U.S. Home Corp. dba Lennar
7035 Albert Einstein Drive, Suite 200
Columbia, Maryland 21046
Ph# 410-997-5522

APPROVED: HOWARD COUNTY DEPARTMENT OF PLANNING AND ZONING

Chief, Division of Land Development — Date 8-9-16

Chief, Development Engineering Division — Date 6.13.16

Director - Department of Planning and Zoning — Date 8-9-16

SUBDIVISION	SECTION/AREA	PARCEL No.
OXFORD SQUARE	----	'Y' (Formerly 'E')

PLAT NO.	BLOCK NO.	ZONE	TAX/ZONE	ELEC. DIST.	CENSUS TR.
23791-23792	---	TOD	44	1st.	601101

STORM DRAIN DRAINAGE AREA MAP

OXFORD SQUARE

"A Howard County Green Neighborhood"

Parcel 'Y'

"EXETER PARK"

(Residential Condominium Townhouse Buildings 1 Thru 16, Units 1 Thru 156)

Zoned: TOD

Tax Map No.: 38 Grid No.: 20 Parcel No.: 761

First Election District Howard County, Maryland

Scale: As Shown

Date: April 18, 2016

Sheet 24 Of 30

SDP-14-072

I:\2009\09014\dwg\SDP (Lennar) Parcel 'E'\09014 Sheet 24-25 da map.dwg, 5/4/2016 2:34:11 PM, 1:1

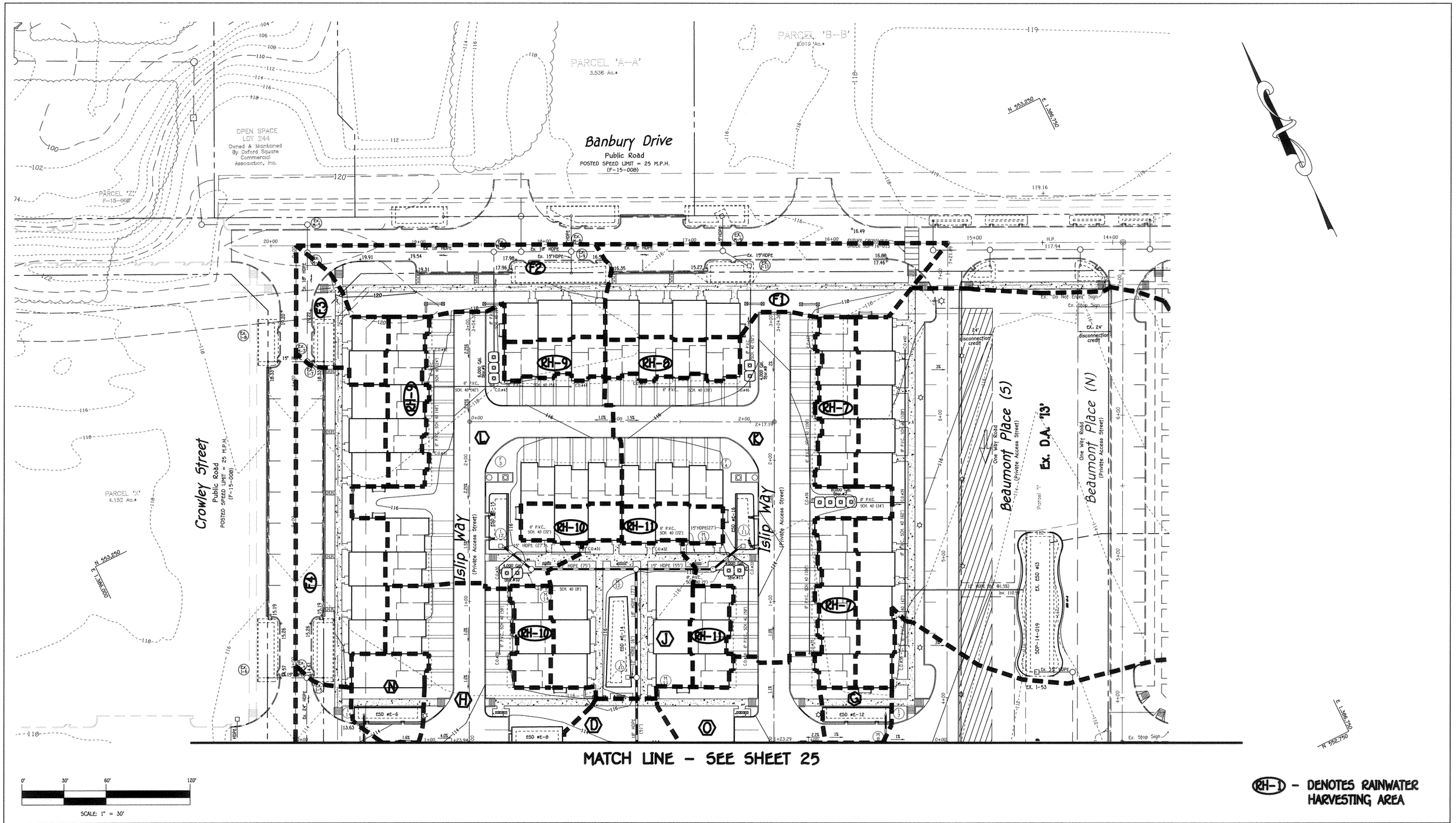

RH-1 - DENOTES RAINWATER HARVESTING AREA

FISHER, COLLINS & CARTER, INC.
CIVIL ENGINEERING CONSULTANTS & LAND SURVEYORS
CENTENNIAL SQUARE OFFICE PARK - 10272 BALTIMORE NATIONAL PIKE
ELLICOTT CITY, MARYLAND 21042
(410) 461 - 2855

NO.	REVISION	DATE

STATE OF MARYLAND
MICHAEL VITT
No. 20748
PROFESSIONAL ENGINEER
5/4/16

Owner/Builder
U.S. Home Corp. dba Lennar
7035 Albert Einstein Drive, Suite 200
Columbia, Maryland 21046
Ph# 410-997-5522

Developer
U.S. Home Corp. dba Lennar
7035 Albert Einstein Drive, Suite 200
Columbia, Maryland 21046
Ph# 410-997-5522

APPROVED: HOWARD COUNTY DEPARTMENT OF PLANNING AND ZONING

Chief, Division of Land Development — Date 8-9-16

Chief, Development Engineering Division — Date 6-13-16

Director - Department of Planning and Zoning — Date 8-9-16

SUBDIVISION	SECTION/AREA	PARCEL No.
OXFORD SQUARE	----	'Y' (Formerly 'E')

PLAT NO.	BLOCK NO.	ZONE	TAX/ZONE	ELEC. DIST.	CENSUS TR.
23791-23792	---	TOD	44	1st.	601101

STORM DRAIN DRAINAGE AREA MAP

OXFORD SQUARE

"A Howard County Green Neighborhood"

Parcel 'Y'

"EXETER PARK"

(Residential Condominium Townhouse Buildings 1 Thru 16, Units 1 Thru 156)

Zoned: TOD

Tax Map No.: 38 Grid No.: 20 Parcel No.: 761

First Election District Howard County, Maryland

Scale: As Shown

Date: April 18, 2016

Sheet 25 Of 30

SDP-14-072

I:\2009\09014\dwg\SDP (Lennar) Parcel 'E'\09014 Sheet 24-25 da map.dwg, 5/4/2016 3:13:37 PM, 1:1

GREEN NEIGHBORHOOD CHECKLIST:

Credit No.	Credit	Champion (Name, Role)	Requirement	Site Development Plan GN Strategies	Documentation Location	Max Points	Requested Points
A	**Innovative / Integrated Design Process**					**4**	**4**
A-1	Green Development Plan	PCM/Petitoner; HCM/Planners	Shows how plans meet criteria, includes checklist, natural resource inventory and energy analysis	Provide documentation	GN Report GN Plan	REQ'D	
A-2	Interdisciplinary Project Team	PCM/Petitoner	Includes U.S. Green Building Council Leadership in Energy and Environmental Design (LEED) Accredited professional, ecologist / environmental professional / landscape architect, and engineer	The design team includes a LEED AP professional, an ecologist, a civil engineer, an architect and landscape architect.	GN Plan	REQ'D	
A-3	Third Party Certification	PCM/Petitoner	Certification of credits by independent LEED accredited professional	Alexander Design Studio	GN Plan	REQ'D	
A-4a	Innovative Design A	HCM/Planners	Green Streets	Green Streets	GN Report SDP (SDP-14-072) Sheet 3,4, 22 Reference: Sketch Plan (S-14-001)	1	1
A-4b	Innovative Design B	HCM/Planners	Priority Parking for Fuel Efficient Cars	Reserve 5% for Priority Parking for Fuel Efficient Cars	SDP (SDP-14-072) Sheets 3, 4 References: Sketch Plan (S-14-001)	1	1
A-4c	Innovative Design C	HCM/Planners	Compact Development	Residential Development will exceed 20 DU /AC	GN Report GN Plan References: Sketch Plan (S-14-001)	1	1
A-4d	Innovative Design D	HCM/Planners	Walkable Streets	More than 80% building frontage oriented towards public spaces; Less than 20% service and garage openings to public spaces.	GN Plan GN Report SDP (SDP-14-072) Sheet 2, 3, 4 Reference: Sketch Plan (S-14-001)	1	1
B	**Location, Linkages & Community Context**					**27**	**8**
B-1a	Redevelopment Site	HCM/Planners FCC/Civil	Reuse of previously developed site (minimum 25% existing impervious, with sliding scale for credits based on amount or % impervious)	More than 25% area previously developed (former sand and gravel operation).	GN Plan Reference: Sketch Plan (S-14-001)	4	2
B-1b	Redevelopment Site (Brownfield)	N/A	Brownfield cleanup of redevelopment site	N/A	N/A	8	0
B-2	Historic Buildings	N/A	Preserve, restore or rehabilitate historic properties	N/A	N/A	4	0
B-3a	Transit Access & Amenities for Reduced Auto Dependence (Stop)	HCM/Planners	Site is served by transit stop within 1/2 mile (1 point) or 1/4 mile (2 points) walk from property	Private Shuttle Service with 2 stops (100% DU within 1/4 mile walking distance)	GN Plan Reference: Sketch Plan (S-14-001) and F Plan (F-13-095)	2	2
B-3b	Transit Access & Amenities for Reduced Auto Dependence (Shelter)	HCM/Planners	Provide county-specified transit shelter with benches and lighting at transit stop within 1/2 mile of property and provided pedestrian link to stop if none currently exists	Provide HoCo transit approved shelter for private shuttle service	Reference: Sketch Plan (S-14-001) SDP (SDP-13-068)	4	4
B-4	Proximity to Community Resources	N/A	Credit for 1/2 mile proximity to existing or proposed community resources such as schools, parks, library, post office, etc.	N/A	N/a	5	0
C	**Compact, Complete & Connected Development**					**27**	**25**
C-1	Diversity of Uses	HCM/Planners	1 point per different landuse; minimum 100 sf for ech non-residential per DU. Minimum of 116,700 SF each of office, instituional and civic use, per 1,167 DU	Provide 3 Uses: Institutional, Civic and Office	GN Plan References: Sketch Plan (S-14-001) SDP (SDP-12-075)	3	3
C-2	Planned Service Area	HCM/Planners	Locate the project within the Planned Service Area	The project is within the Planned Service Area	GN Plan	5	5
C-3a	Pedestrian System (Path)	HCM/Planners	Provide an off-site pathway/trail system with 2 connections to internal or external sidewalks, with minimal environmental impacts, long-term maintenance	Provide a shared use path system.	GN Plan References: Sketch Plan (S-14-001) SDP (SDP-14-071) SDP (SDP-14-019) SDP (SDP-13-068) SDP (SDP-12-075)	2	2
C-3b	Pedestrian System (Connections)	N/A	Provide an off-site pathway/trail connection	N/A	N/A	2	0
C-3c	Pedestrian System (Amenities)	HCM/Planners	Provide at least two different pedestrian experience features	Provide pedestrian amenities at trailheads, the lawn, school and residential mews	SDP (SDP-14-072) Sheets 17,18 GN Plan References: Sketch Plan (S-14-001)	2	2
C-4	Connected On-site Street Network	HCM/Planners	Provide a gridded street network	More than 75% connected streets	GN Plan GN Report SDP (SDP-14-072) Sheet 3,4 References: Sketch Plan (S-14-001)	2	2
C-5	Parking does not exceed Required Minimum	HCM/Planners	Surface parking lots do not exceed required parking ratios (1 point); plan takes advantage of shared parking provisions parking structure provided (in deck or beneath building; does not include garages within individual units) (4 points)	Provide common parking structures (4 points)	GN Plan References: Sketch Plan (S-14-001)	4	4
C-6	Exceed Minimum Open Space Requirements	HCM/Planners	1 point for every 5% above required minimum open space for the TOD zone. 1 point for every 10% of non-buildable HOA parcels above 50% of the site (up tp 3 points).	Provide more than 25% increase in amenity space above the required minimum amenity space (TOD zoning regulations)	GN Report GNPlan SDP (SDP-14-072) Sheets 1, 27 References: Sketch Plan (S-14-001)	5	5
C-7	Green Spaces and Amenity Areas	HCM/Planners	Open space along public/private roads available for public use	Publically accessible open space will be provided at the nature trail and clubhouse and pool.	GN Plan References: Sketch Plan (S-14-001) SDP (SDP-13-068)	2	2
D	**Environmental Preservation**					**62**	**39**
D-1	Stream Restoration or Wetland Creation or Restoration	EcoScience	Restoration of degraded on-site stream channel; on-site restoration of degraded wetland or creation of additional wetlands (sliding scale based on % or length of stream restored and % or acres of wetland created or restored)	Provide wetland restoration for 91,000 SF and Stream restoration for intermittent stream segment ST-2 (100-120 FT of channel).	References: Sketch Plan (S-14-001) Skech Plan (S-11-001) SDP (SDP-14-019)	16	16
D-2	Habitat Management Plan	EcoScience	Prepare and implement plan that identifies, conserves and enhances natural resources and ecological communities (may include clean up of debris, removal of invasives, etc.)	Provide Habitat Management Plan	Reference: Sketch Plan (S-14-001) Sketch Plan (S-11-001) SDP (SDP-14-019)	4	4
D-3	25% Steep Slope Preservation	N/A	Protect all existing steep slopes as defined by County regulations required; provide 25' minimum buffer at top of 25% slope (2 points)	N/A	N/A	2	0
D-4	15% Slope Preservation	FCC/Civil; HCM/Planners	Protect existing 15%+ slopes (protect minimum 1/2 acre, with sliding scale based on area or % protected)	Preserve between 51-75% of 15%-24.9% slopes	GN Plan References: Sketch Plan (S-14-001)	4	3
D-5	Minimize Grading and Site Disturbance	FCC/Civil; HCM/Planners	Minimize limit of disturbance: leave at least 20% of site undisturbed (1 point), 30% (2 points), 40% (3 points); balancecut and fill on site (2 points); retaining walls 3-5.9' (deduct 1 point) retaining walls 6-8.9' (deduct 2 points), walls 9' and higher (deduct 3 points), no new created steep slopes over 25% (1 point); amend soil nutrients in turf and planting areas (1 point)	Balance Cut and Fill on entire site-- 2 points Minimize Retaining Walls-- 0 points No new > 25% Steep slopes- 1 point Leave more than 30% of site undisturbed -- 2 points	GN Plan GN Report References: Sketch Plan (S-14-001)	5	5
D-6	Exceed Minimum Forest Conservation Requirements	EcoScience FCC/Civil; HCM/Planners	1 point for every 10% of existing forest retained above break even point; 1 point for every 10% of on-site forest planted in excess of afforestation obligation	Provide 5.25 acres of planting area (50% over afforestation obligation)	Reference: Sketch Plan (S-14-001) F Plan (F-12-026)	5	5
D-7	Save Trees above 12" Minimum Caliper	N/A	1 point for protecting each 25% of all specimen trees (does not include specimen trees within forest conservation area or within forests that are being cleared)	N/A	N/A	4	0
D-8a	Exceed Minimum Stream Buffer Requirements	FCC/Civil;	75' buffer required for perennial and intermittent streams inside PSA, 100' buffer required for perennial and intermittent streams outside PSA	75' buffer required for perennial and intermittent streams inside PSA,	Reference: Sketch Plan (S-14-001) F Plan (F-12-026)	REQ'D	
D-8b	Exceed Minimum Stream Buffer Requirements	EcoScience FCC/Civil; HCM/Planners	2 points for each additional 25' of buffer provided in excess of requirements in D-8a outside wetland buffer or floodplain	Provide 150 FT Stream Buffer (75 FT enhanced buffer)-- 6 points	Reference: Sketch Plan (S-14-001) F Plan (F-12-026)	6	6
D-9	Exceed Minimum Wetland Buffer Requirements	EcoScience FCC/Civil; HCM/Planners	2 points for each additional 25' of wetland buffer buffer outside stream buffer or floodplain	N/A	N/A	4	0
D-10	Floodplain Buffer	N/A	1 point for each 25' of buffer to floodplain outside required or provided wetland or stream buffer	N/A	N/A	2	0
E	**Site Landscape Improvements**					**10**	**3**
E-1	Landscaping exceeds Minimum Requirements and Reduces Heat Island Effect	N/A	1 point for each 10% increase in number of plants (must be native plants) provided above total minimum required in Landscape Manual; retain or plant trees on south and west sides of buildings and increase trees within parking areas and along sidewalks and paths	Provide 20% increase in Landscape Requirements	GN Plan GN Report SDP (SDP-14-072) Sheets 17-19	5	2
E-2	Native Plants	N/A	1 point for 80%, 2 points for 90%, 3 points for 100% of all plants native to within 200 miles of site	N/A	N/A	3	0
E-3	No Invasive Plants	HCM/Planners	No plants that are on DNR, USDA or Cooperative Extension Service lists of invasive plants	Will not plant invasive plants	GN Plan Sheets 17-19	REQ'D	
E-4	Limit Turf	HCM/Planners	Turf does not exceed 30% of unpaved site (1 point); no turf on new created steep slopes 25%+ or in densely shaded areas (1 point); nonturf areas must be planted in native vegetation	Will not plant conventional turf in densely shaded areas and on newly created >25% steep slopes	GN Plan GN Report References: Sketch Plan (S-14-001)	2	1
F	**Water Conservation / Efficiency / Management**					**17**	**11**
F-1	Rainwater Harvesting System	Straughan	Collect and make use of water runoff from minimum 50% of roof area; provide storage system and monitoring device and maintenance / management program	Provide rainwater harvesting for school and recreational fields	Reference: SDP (SDP-12-075)	5	5
F-2	Water-Permeable Walkways	N/A	Use water-permeable materials in 50% or more of pathways; provide maintenance program	N/A	N/A	4	0
F-3a	Low Impact Development (LID) Stormwater Treatment	FCC/Civil	Meets minimum Design Manual requirements; no dry ponds allowed	No dry ponds	GN Plan SDP (SDP-14-072) Sheets 7-12 Reference: Sketch Plan (S-14-001)	REQ'D	
F-3b	Low Impact Development (LID) Stormwater Treatment	FCC/Civil	Exceeds Design Manual requirements; maximize use of bioretention (esp. for parking lots), rain gardens, rain barrels, stormwater wetlands, green roof, etc.	Will provide 51% water quality volume stored and infiltrated/re-used On-Site	GN Plan GN Report SDP (SDP-14-072) Sheets 7-12 Reference: Sketch Plan (S-14-001)	8	6
G	**Energy Efficiency**					**13**	**0**
G-1	Light Pollution Reduction	FCC/Civil; HCM/Planners	Shield all site lighting fixtures to reduce light and spillover below county code requirements; install sensors or timers on all exterior site lighting fixtures	N/A	N/A	4	0
G-2	Solar Orientation	N/A	Orient 50% (1 point) or 75% (2 points) or 100% (3 points) of buildings to make available for solar strategies	N/A	N/A	3	0
G-3	Infrastructure Energy Efficiency	N/A	Select high efficiency fixtures for parking lot and other site light fixtures	N/A	N/A	6	0
H	**Materials Beneficial to the Environment / Waste Management**					**17**	**7**
H-1	Environmentally Preferable Site Products	Straughan FCC/Civil; HCM/Planners	Select products from a list including: recycled materials (concrete, asphalt, tires, plastic, etc.), materials with recycled content, salvaged or engineered materials;	Use 26-50% environmentally preferrable materials	GN Report	8	0
H-2	Reduce Heat-Island Effect of Paving	N/A	Use light-colored or high albedo materials and/or porous paving with a minimum Solar Reflective Index of 0.6 or over for at least 30% of the site hardscape	N/A	N/A	2	0
H-3	Site Construction Waste Management	Straughan	Develop and implement a construction waste management plan to divert, reuse, recycle or reduce the amount of site material sent to the landfill by 25% (2 points) or 50% (3 points) or 75% (4 points)	Divert 75% or more site construction waste	GN Report	4	4
H-4	Regionally Provided Materials	Straughan FCC/Civil; HCM/Planners	20% of common and public infrastructure materials from within 200 miles	Use regionally produced materials for 20% of total site materials	GN Report	3	3
I	**Operations and Maintenance Education**					**0**	**0**
I-1	HOA Documents	Straughan;	Include information about green site features and maintenance requirements in HOA documents	Provide HOA document	Under review with SDP-13-068	REQ'D	
I-2	Maintenance Manual for Owner / HOA / Manager	Straughan	Provide a manual that includes information on how to maintain the green features of the site, including paving materials, landscaping and stormwater management LID and encourages additional green activities such as recycling, gardening, etc.	Provide manual	Under review with SDP-13-068	REQ'D	
I-3	Public Awareness of Sustainable Community	Straughan; HCM	Develop a program to advertise the environmental benefits of the community	Implement public awareness strategy	GN Report	REQ'D	
	TOTAL GREEN NEIGHBORHOOD SITE POINTS					**167**	97
	Number of points required to obtain Green Neighborhood Allocations					**90**	

Third Party Certification

By affixing my signature below, the undersigned does hereby declare and affirm to Howard County that the targeted Green Neighborhood Site credits and point total, as specified in this Green Neighborhood Site Compliance Checklist, are reasonable and achievable.

Signature: [signature] Title: PRESIDENT No. 10439200

Name: CHARLES ALEXANDER Organization: ALEXANDER DESIGN STUDIO Date: 5.9.16

Submission (mark "X" where applicable): X SDP (SDP-14-072)

APPROVED
HOWARD COUNTY DEPARTMENT OF PLANNING & ZONING
GREEN NEIGHBORHOOD PLAN FOR SITES

[signature] 7-27-16
CHIEF, RESOURCE CONSERVATION DIVISION — DATE

LEED ACCREDITED PROFESSIONAL CERTIFICATE
GREEN NEIGHBORHOOD PLAN FOR SITES

I hereby certify that this plan represnets a practical and workable plan for achieving the targeted credits and point total shown on the Green Neighborhood for Sites Compliance Checklist.

[signature] 10007912 5/13/16
MATTHEW J FITZSIMMONS, LEED AP — LEED ACCREDITATION NUMBER — DATE

hord | coplan | macht
750 E. Pratt Street, Suite 1100 Baltimore MD 21202
410.837.7311 | www.hcm2.com
Hord Coplan Macht, Inc. 2014

FISHER, COLLINS & CARTER, INC.
CIVIL ENGINEERING CONSULTANTS & LAND SURVEYORS
CENTENNIAL SQUARE OFFICE PARK - 10272 BALTIMORE NATIONAL PIKE
ELLICOTT CITY, MARYLAND 21042
(410) 461 - 2855

NO.	REVISION	DATE

STATE OF MARYLAND — MICHAEL VITA... — No. 20748 — PROFESSIONAL ENGINEER — 5/4/16

Owner/Builder
U.S. Home Corp. dba Lennar
7035 Albert Einstein Drive, Suite 200
Columbia, Maryland 21046
Ph# 410-997-5522

Developer
U.S. Home Corp. dba Lennar
7035 Albert Einstein Drive, Suite 200
Columbia, Maryland 21046
Ph# 410-997-5522

APPROVED: HOWARD COUNTY DEPARTMENT OF PLANNING AND ZONING

[signature] 8-9-16
Chief, Division of Land Development — Date

[signature] 6.13.16
Chief, Development Engineering Division — Date

[signature] 8-9-16
Director - Department of Planning and Zoning — Date

SUBDIVISION			SECTION/AREA		PARCEL No.
OXFORD SQUARE			----		'Y' (Formerly 'E')
PLAT NO.	BLOCK NO.	ZONE	TAX/ZONE	ELEC. DIST.	CENSUS TR.
23791-23792	---	TOD	44	1st.	601101

GREEN NEIGHBORHOOD PLAN

OXFORD SQUARE

"A Howard County Green Neighborhood"

Parcel 'Y'

"EXETER PARK"

(Residential Condominium Townhouse Buildings 1 Thru 16, Units 1 Thru 156)
Zoned: TOD
Tax Map No.: 38 Grid No.: 20 Parcel No.: 761
First Election District Howard County, Maryland
Scale: As Shown
Date: April 18, 2016
Sheet 26 Of 30

SDP-14-072

I:\2009\09014\dwg\SDP (Lennar) Parcel 'E'\09014 Sheet 26-27 gn plans.dwg, 5/4/2016 3:15:18 PM, 1:1

GREEN NEIGHBORHOOD NOTES:

A-2 THE DESIGN AND DEVELOPMENT TEAM INCLUDES A LEED AP (MATTHEW FITZSIMMONS- HORD COPLAN MACHT), ENVIRONMENTAL PROFESSIONAL (JOHN CANOLES- ECO-SCIENCE PROFESSIONALS, INC.), LANDSCAPE ARCHITECT (JOSH KILRAIN- HORD COPLAN MACHT) AND AN ENGINEER (ALDO VITUCCI PE- FISHER COLLINS & CARTER)

A-3 THE THIRD PARTY CERTIFICATION IS PROVIDED BY CHARLES ALEXANDER, LEED-AP OF ALEXANDER DESIGN STUDIOS.

B-1a THE 111.1 ACRE DEVELOPMENT CONSISTS OF 28.4 ACRES OF PREVIOUSLY DEVELOPED LAND (25.6% OF THE OXFORD SQUARE DEVELOPMENT).

B-3a OXFORD SQUARE WILL PROVIDE TWO TRANSIT STOPS FOR THE PROPOSED PRIVATE SHUTTLE SERVICE CONNECTING OXFORD SQUARE TO THE DORSEY MARC COMMUTER RAIL STATION. THE STOPS WILL BE WITHIN 1/4 WALKING DISTANCE TO ALL DWELLING UNITS.

B-3b OXFORD SQUARE WILL PROVIDE ONE SHELTER AT ONE OF THE PRIVATE SHUTTLE STOPS. THE SHELTER WILL COMPLY WITH COUNTY -APPROVED CRITERIA INCLUDING BENCHES AND LIGHTING.

C-1 OXFORD SQUARE WILL PROVIDE THREE DIVERSE USES OTHER THAN RESIDENTIAL: INSTITUTIONAL (MIDDLE SCHOOL BUILDING AND OUTDOOR CLASSROOM SPACE, ELEMENTARY SCHOOL), CIVIC (SCHOOL'S RECREATIONAL PLAYING FIELDS AND SHARED-USE PATH) AND OFFICE.

C-2 OXFORD SQUARE IS LOCATED WITHIN THE EXISTING PLANNED WATER AND SEWER SERVICE AREA.

C-3c OXFORD SQUARE WILL PROVIDE A MINIMUM OF TWO PEDESTRIAN SYSTEM AMENITY EXPERIENCES: 1) SHARED USE PATH AND NATURE TRAIL (TRAIL SIGNS AND MARKERS, BENCHES, LITTER RECEPTACLES, INFORMATIONAL SIGNS, BIKE RACKS), 2) THE LAWN (BENCHES, EXTERIOR LIGHTING, SHADE TREES, INFORMATIONAL SIGNS), 3) RESIDENTIAL COURTYARDS AND MEWS (BENCHES), AND 4) SCHOOL SITES (PLAYING FIELDS, BENCHES, BIKE RACKS)

D-8b OXFORD SQUARE WILL PROVIDE A MINIMUM 75 FT ENHANCED STREAM BUFFER.

E-3 OXFORD SQUARE WILL NOT PLANT INVASIVE PLANTS.

E-4 OXFORD SQUARE WILL NOT PLANT TURF IN DENSELY SHADED AREAS.

F-3b OXFORD SQUARE WILL PROVIDE AT LEAST 51% WATER QUALITY VOLUME STORED AND INFILTRATED/RE-USED ON-SITE.

B-3a & B-3b VICINITY MAP (Scale: 1": 200')

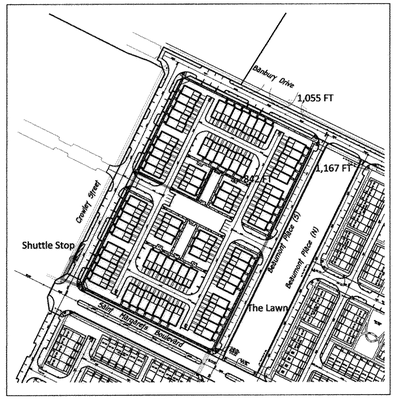

GREEN NEIGHBORHOOD CALCULATIONS & TABLES:

A-4b Priority Parking for Low-Emitting and Fuel Efficient Vehicles

Total Number of Off-Street Parking Spaces:	8 Spaces
Total Number of Proposed Preferred Parking Spaces:	1 Spaces
Percent of Preferred Parking Spaces:	**12.5%**

A-4c Compact Development

	Complete Build-Out	SDP
Total Dwelling Units:	1,167 DU	156 DU
Residential Land Area:	42.4 AC	6.96 AC
Residential Density:	**27.51 DU/AC**	**22.41 DU/AC**

Note: This SDP expands the Residential Land Area by 0.34 Acres and SDP-14-071 increases the Residential Land Area by 1.05 Acres in comparison to the Sketch Plan (S-14-001). The Residential Land Area of this SDP is equal to the gross land area of this submission. Additionally this SDP reduces the quantity of units on Parcel 'E' by 322 DU, and SDP-14-071 reduces the 3 dwelling units on Parcel 'C' when compared to Sketch Plan (S-14-001).

A-4d Walkable Streets

	Complete Build-Out	SDP
Length of Buildings Frontage Oriented Towards the Public Space:	10,710 FT[1]	1,872 FT
Total Length of Building Frontage:	11,657 FT	1,872 FT
% of Building Frontage Oriented Towards the Public Spaces:	**91.9%**	**100.0%**
Length of Building Frontage with Service or Garage Openings:	446 FT	- FT
Length of Building Frontage Oriented Towards Public Spaces (including Service and Garage openings):	11,156 FT[1]	1,872 FT
% of Building Frontage with Service or Garage Openings:	**4.0%**	**0.0%**

Note: [1] In comparison to the Sketch Plan (S-14-001) this SDP reduces the the 'Length of Building Frontage Oriented towards the Public Space' by 311 linear feet, and reduces 'Length of Building Frontage with Service or Garage Openings' by 308 linear feet.

B-1a Redevelopment Site

Gross Site Area (Parcel Q):	111.1 Acres
Area of Existing Development (Acres):	28.4 Acres
Percent of Previously Developed:	**25.6%**

B-3a Transit Access & Amenities for Reduced Auto Dependence (Stop)

	Total Number of Qualifying Units	Percent of all Units
Residential Buildings within 1/4 Mile (<1,320 FT)	1,167 DU	**100%**
All Buildings		

C-1 Diversity of Uses

Residential Uses	Number of Units	Percent of Total Units
Apartments & Townhouses	1,167 DU	**100%**

Nonresidential Uses	Area	SF per Dwelling Unit
Office:	154,000 SF	**132 SF/DU**

Institutional:	Middle School[1]	95,747 SF	
	Middle School Outdoor Classroom Space[1]	2,500 SF	
	Elementary School	101,014 SF	
	Institutional Subtotal:	**199,261 SF**	**171 SF/DU**
Civic:	Recreational Playing Fields (School Site)[1]	236,139 SF	
	Northern Loop Shared- Use Path (8 FT wide)	19,504 SF	
	Southern Loop Shared-Use Path (8 FT wide)	9,240 SF	
	Civic Subtotal:	**264,883 SF**	**227 SF/DU**

Note: [1] Revised per the approved Middle School SDP (SDP-12-075)

C-3a Pedestrian System (Paths and Trails)

Northern Shared Use Path:	Width of Path: 8 FT *Length:* 2,438 FT (0.46 Miles)
Southern Shared Use Path:	Width of Path: 8 FT *Length:* 1,155 FT (0.22 Miles)
Mulch Nature Trail	Width of Path: 5 FT *Length:* 595 FT

C-4 Street Connections

Street Name / ID	Street Length	Qualifying Street
Saint Margarets Boulevard	1,684 FT	Yes
Banbury Drive	2,674 FT	Yes
Road A	220 FT	No
Road B	514 FT	No
Road C	228 FT	No
Road D	740 FT	Yes
Beaumont Place (Road E) (North and South)	1,450 FT	Yes
Dunstead Street (Road F)	791 FT	No
Road G	120 FT	No
Road H	120 FT	No
Road J	465 FT	Yes
Road I	245 FT	No

Summary	
Total Street Length:	**9,251** FT
Total Connected Street Length:	7,013 FT
Percent Connected Streets:	**75.8%**

Note: 1. This SDP straightens Banbury Drive into two perpendicular alignments, rather than a curving alignment, to increase the efficiency of the Parcel 'E'. This change in Banbury Drive increases its length by 85 Feet.
2. This SDP truncates the vehicular street length of Dunstead Street (Road 'F' on S-14-001) to 240 linear feet (120 linear feet on both sides of the mews).

C-6 Exceed Minimum Open Space

Net Acreage:	101.6 AC
Required Amenity Space (TOD: 10% of Net Acreage):	10.2 AC
Provided Amenity Space:	15.70 AC
Percent Increase above the Minimum Required:	**53.9 %**

Note: 1. This SDP submission contributes 0.45 Acres of Amenity Space to the Complete Build-Out goal .

C-7 Green Spaces and Amenity Areas

Parcel	Road Frontage	Amenity Type	Amenity Area
Open Space 1: The Nature Trail (future SDP)	160 FT	Nature Trail, Benches, Trail Signage, Educational Signage	31,266 SF (0.72 AC)
Open Space 2: Pool House and Pool (O.S. Lot #107 on SDP-13-068)	+/-138 FT (length along Private Road 'B'	Pool house, Pool, Fitness Room, and Warming Kitchen	11282 SF (0.26 AC)

D-4 15% Slope Preservation

	GN Boundary
Total Area of Slopes 15-24.9%:	504,072 SF
Area of Undisturbed Slopes 15-24.9%:	287,273 SF
Percent of Undisturbed Slopes:	**57.0 %**

Note: 1. The area of undisturbed slopes is the summation of slopes impacted by the greatest extent of LODs accumulated from the entire development (Approved Sketch Plan (S-14-001), Approved Final Plan (F-12-026), Approved Middle School SDP (SDP-12-075), future environmental restoration work, and this SDP indirectly).

D-5 Minimize Grading and Site Disturbance

	Complete Build Out
Gross Area of Site	111.1 AC
Existing Impervious Cover	28.4 AC
Area of Site	82.7 AC
Area of Site to Remain Undisturbed	28.32 AC
Precent of Site to Remain Undistrubed:	**34.2 %**
Ratio of Cut to Fill:	**1.13 Ratio**
Retaining Wall:	**<3 FT**

Note: 1. Complete Build Out Calculations are based on the aggregate greatest extent of LOD's from the submitted Sketch Plan (S-14-001), Approved Final Plan (F-12-026) , Approved Middle School SDP (SDP-12-075) and this SDP.

2. Dirt will not be imported or exported from Oxford Square .

D-6 Exceed Minimum Forest Conservation Requirements

Afforestation Obligation:	3.50 AC
Afforestation Provided in Excess of Obligation:	1.75 AC
Percentage of Provided in Excess of Obligation:	**50.00 %**

Note: Forest Conservation Easement #3 to be revised with the Final Plan associated with Banbury Drive.

D-8b Exceed Minimum Stream Buffer Requirements

Total Stream Buffer Width:	150 FT
Width of Buffer Exceeding Requirements:	75 FT
Total Length of Stream Buffer:	1,984.2 FT
Length of Stream Buffer Outside Other Buffers:	1,352.3 FT
Percent of Stream Buffer Outside Other Buffers:	**68.2 %**

APPROVED
HOWARD COUNTY DEPARTMENT OF PLANNING & ZONING
GREEN NEIGHBORHOOD PLAN FOR SITES

CHIEF, RESOURCE CONSERVATION DIVISION — DATE 7-27-16

LEED ACCREDITED PROFESSIONAL CERTIFICATE
GREEN NEIGHBORHOOD PLAN FOR SITES

I hereby certify that this plan represents a practical and workable plan for achieving the targeted credits and point total shown on the Green Neighborhood for Sites Compliance Checklist.

MATTHEW J FITZSIMMONS, LEED AP — LEED ACCREDITATION NUMBER 10007912 — DATE 5/13/16

E-1 Landscaping

Plants Required	Shade Trees	Evergreen	Shrubs	Total	Percent
Number of Plants Required by Landscape Manual	78	0	0	78	
Number Excess Plants Required for GN Credit	16	0	0	16	**20.5**
Landscape Manual and GN Requirements	94	0	0	94	

Plants Provided

Plants Provided	Shade Trees	Shade Tree (Substitute)	Evergreen	Evergreen (Substitute)	Other Trees (Substitute)	Shrubs	Shrub (Substitute)	Total
Number of Plants Provided to Meet Landscape Manual	52	26	0	0			0	78
Number of Plants Provided to Meet GN Credits	**29**	--	0	0	0	0	0	73
Total Number of Plants Provided	**81**	26	0	0	0	0	0	151

Notes: 1. Shade Tree Substitution (52 Ornamental/2= 26 Required Shade Trees)
2. Native Shade Trees: (**17** UAV, 12 BNH=**29**)
* (UAV) Dirr, Michael Manual of Woody Landscape Plants
3. Native Ornamental Trees: (13 CCA, 14 MVII=27)
4. This plan provides **13** surplus native trees above the project's 20% goal.

C-6 Green Spaces & Amenity Area (Scale: 1": 100')

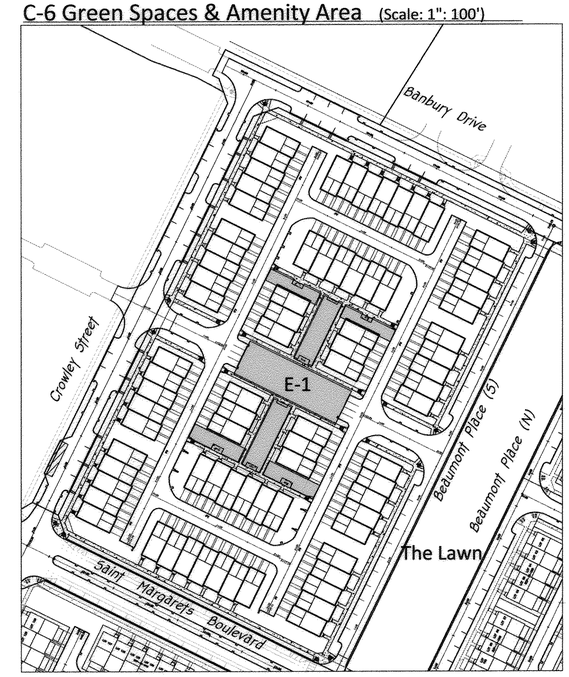

hord | coplan | macht
750 E. Pratt Street, Suite 1100 Baltimore MD 21202
410.837.7311 | www.hcm2.com
Hord Coplan Macht, Inc. 2014

FISHER, COLLINS & CARTER, INC.
CIVIL ENGINEERING CONSULTANTS & LAND SURVEYORS
CENTENNIAL SQUARE OFFICE PARK - 10272 BALTIMORE NATIONAL PIKE
ELLICOTT CITY, MARYLAND 21042
(410) 461 - 2855

NO.	REVISION	DATE

STATE OF MARYLAND — MICHAEL T. VITUCCI — No. 20248 — PROFESSIONAL ENGINEER — 5/4/16

Owner/Builder
U.S. Home Corp. dba Lennar
7035 Albert Einstein Drive, Suite 200
Columbia, Maryland 21046
Ph# 410-997-5522

Developer
U.S. Home Corp. dba Lennar
7035 Albert Einstein Drive, Suite 200
Columbia, Maryland 21046
Ph# 410-997-5522

APPROVED: HOWARD COUNTY DEPARTMENT OF PLANNING AND ZONING

Chief, Division of Land Development — Date 8-9-16
Chief, Development Engineering Division — Date 6-13-16
Director - Department of Planning and Zoning — Date 8-9-16

SUBDIVISION			SECTION/AREA		PARCEL No.
OXFORD SQUARE			----		'Y' (Formerly 'E')
PLAT NO.	BLOCK NO.	ZONE	TAX/ZONE	ELEC. DIST.	CENSUS TR.
23791 - 23792	---	TOD	44	1st.	601101

GREEN NEIGHBORHOOD PLAN

OXFORD SQUARE

"A Howard County Green Neighborhood"

Parcel 'Y'

"EXETER PARK"

(Residential Condominium Townhouse Buildings 1 Thru 16, Units 1 Thru 156)

Zoned: TOD

Tax Map No.: 38 Grid No.: 20 Parcel No.: 761
First Election District Howard County, Maryland
Scale: As Shown
Date: April 18, 2016
Sheet 27 Of 30

SDP-14-072

I:\2009\09014\dwg\SDP (Lennar) Parcel 'E'\09014 Sheet 26-27 grn plans.dwg, 5/4/2016 3:16:39 PM, 1:1

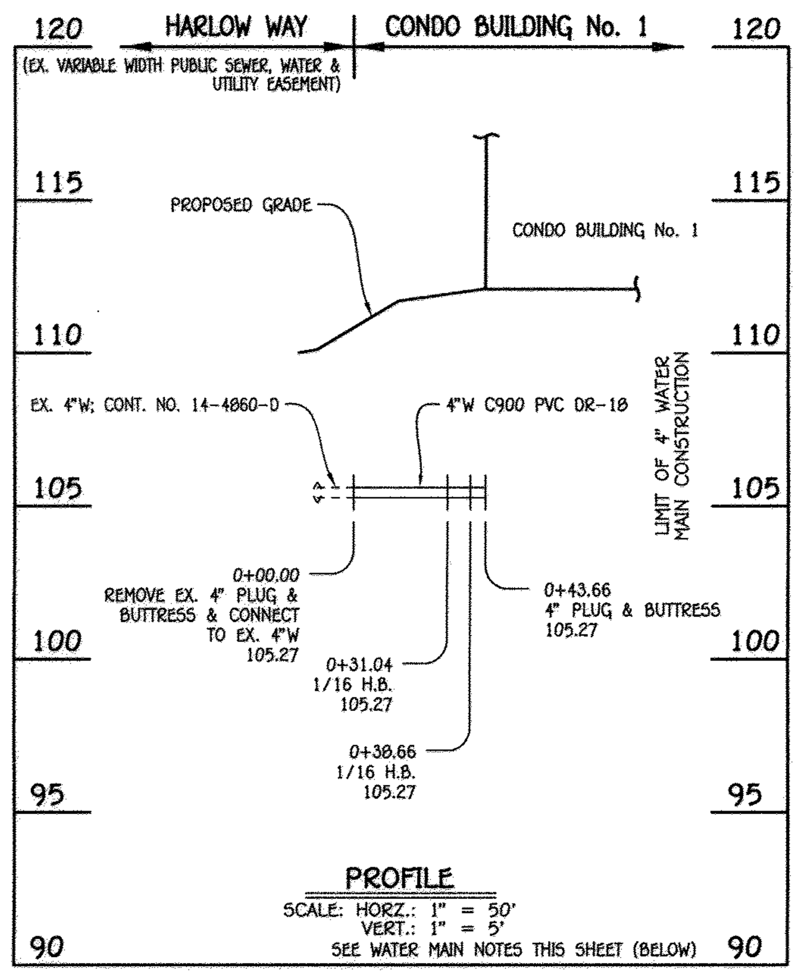

4" WATER MAIN: CONDO BUILDING No. 1

WATER MAIN TABULATION CHART			
W.M. STA.	APPURTENANCE	NORTHING	EASTING
4" WATER MAIN: CONDO BUILDING No. 1			
0+00.00	EX. 4" PLUG & BUTTRESS	552640.72	1386258.10
0+31.04	1/16 H.B.	552626.98	1386285.94
0+38.66	1/16 H.B.	552626.58	1386293.54
0+43.66	4" PLUG & BUTTRESS	552624.37	1386298.03

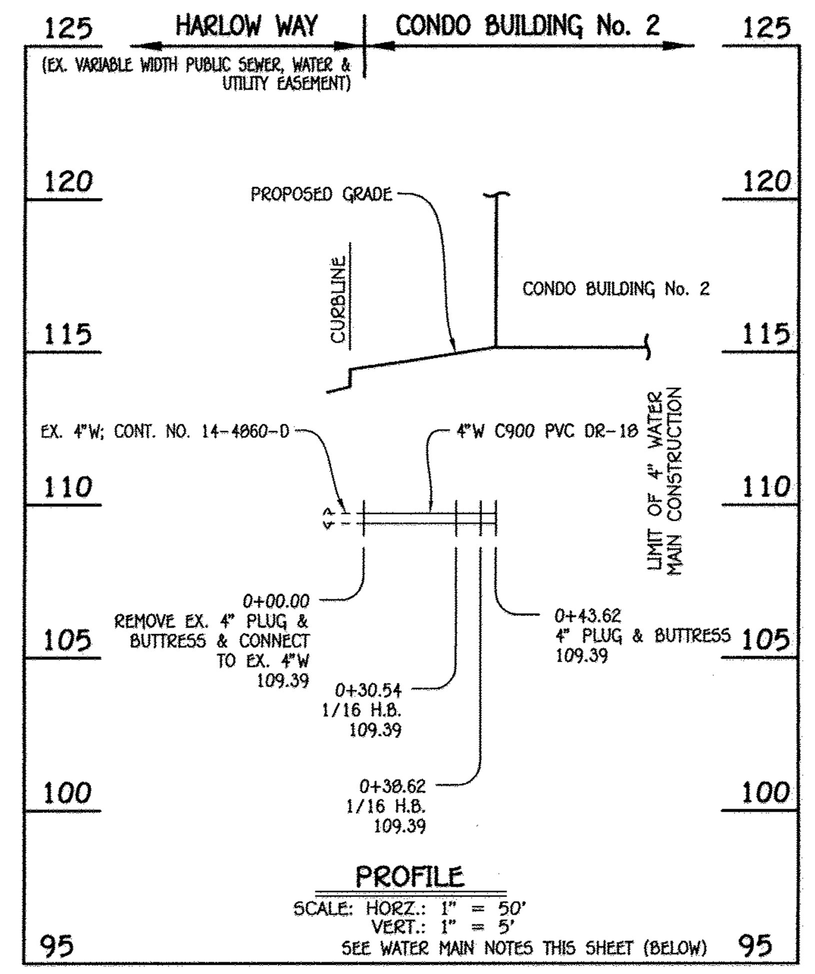

4" WATER MAIN: CONDO BUILDING No. 2

WATER MAIN TABULATION CHART			
W.M. STA.	APPURTENANCE	NORTHING	EASTING
4" WATER MAIN: CONDO BUILDING No. 2			
0+00.00	EX. 4" PLUG & BUTTRESS	552886.86	1386379.54
0+30.54	1/16 H.B.	552873.34	1386406.93
0+38.62	1/16 H.B.	552867.33	1386412.33
0+43.62	4" PLUG & BUTTRESS	552865.12	1386416.82

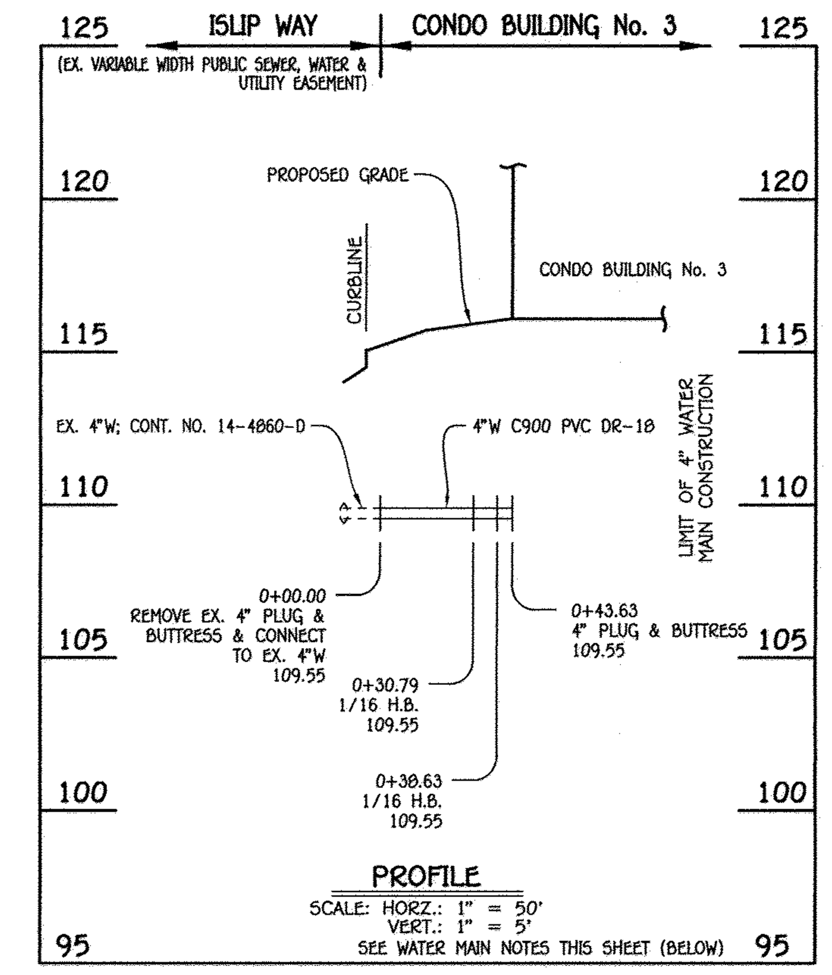

4" WATER MAIN: CONDO BUILDING No. 3

WATER MAIN TABULATION CHART			
W.M. STA.	APPURTENANCE	NORTHING	EASTING
4" WATER MAIN: CONDO BUILDING No. 3			
0+00.00	EX. 4" PLUG & BUTTRESS	552946.10	1386408.77
0+30.79	1/16 H.B.	552932.47	1386436.38
0+38.63	1/16 H.B.	552931.96	1386444.21
0+43.63	4" PLUG & BUTTRESS	552929.74	1386448.69

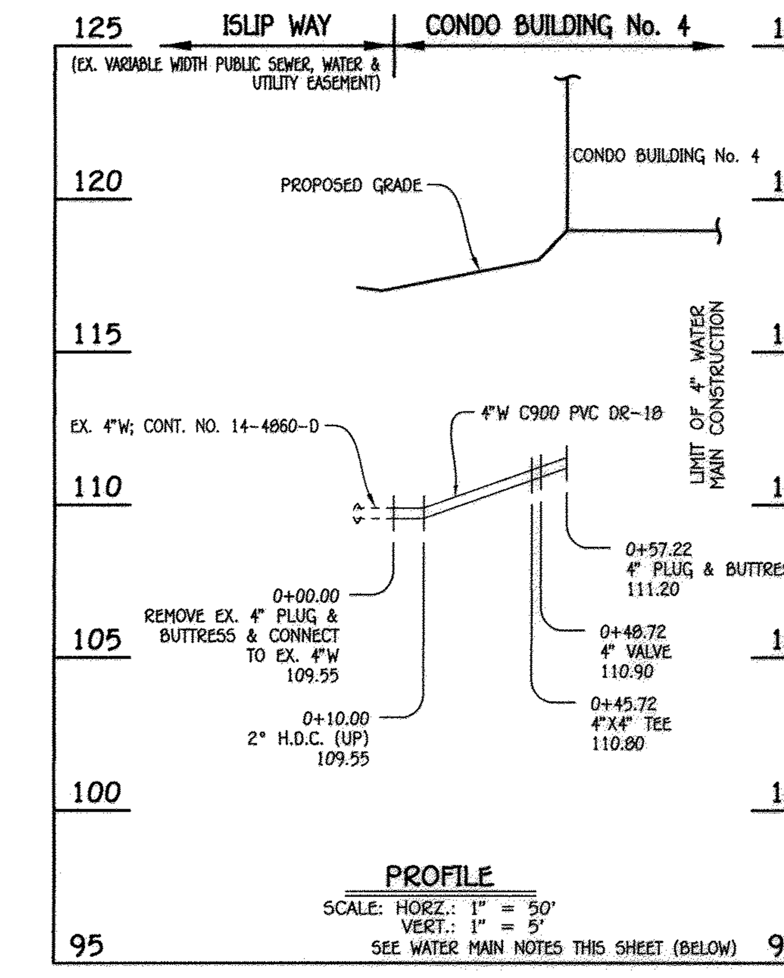

4" WATER MAIN: CONDO BUILDING No. 4

WATER MAIN TABULATION CHART			
W.M. STA.	APPURTENANCE	NORTHING	EASTING
4" WATER MAIN: CONDO BUILDING No. 4			
0+00.00	EX. 4" PLUG & BUTTRESS	553200.31	1386534.19
0+45.72	4"X4" TEE	553180.08	1386575.19
0+48.72	4" VALVE	553177.39	1386573.86
0+57.22	4" PLUG & BUTTRESS	553169.75	1386570.10

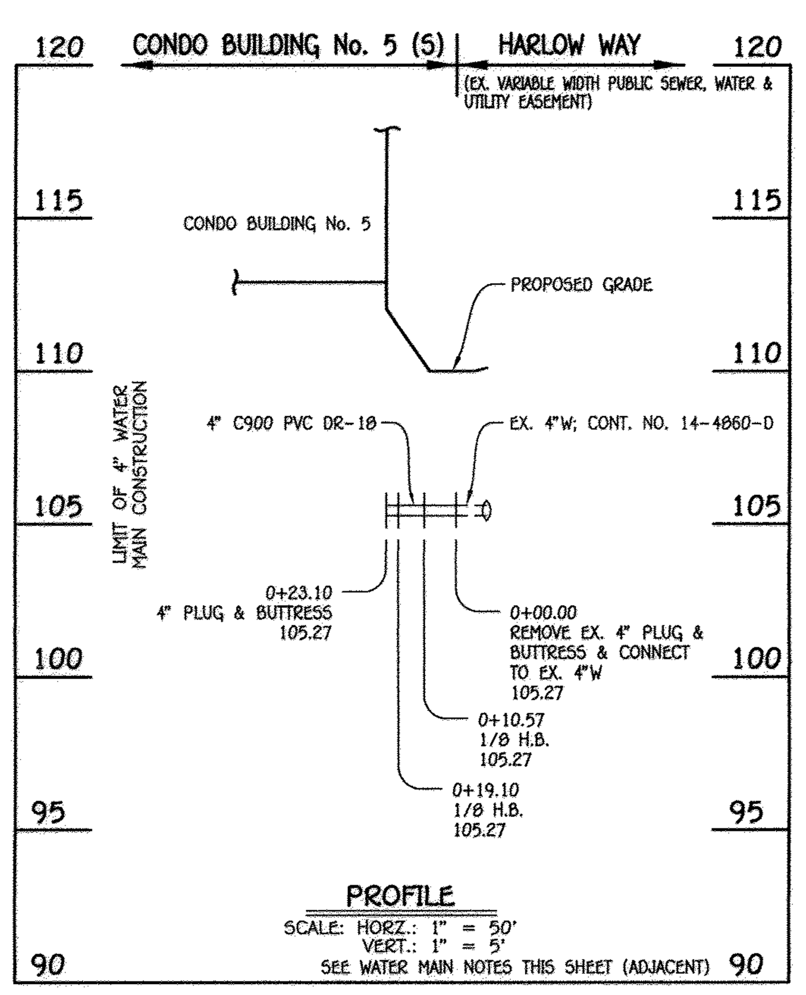

4" WATER MAIN: CONDO BUILDING No. 5 (S)

WATER MAIN TABULATION CHART			
W.M. STA.	APPURTENANCE	NORTHING	EASTING
4" WATER MAIN: CONDO BUILDING No. 5 (S)			
0+00.00	EX. 4" PLUG & BUTTRESS	552650.45	1386238.37
0+10.57	1/8 H.B.	552655.13	1386228.89
0+19.10	1/8 H.B.	552663.21	1386226.15
0+23.10	4" PLUG & BUTTRESS	552666.79	1386227.92

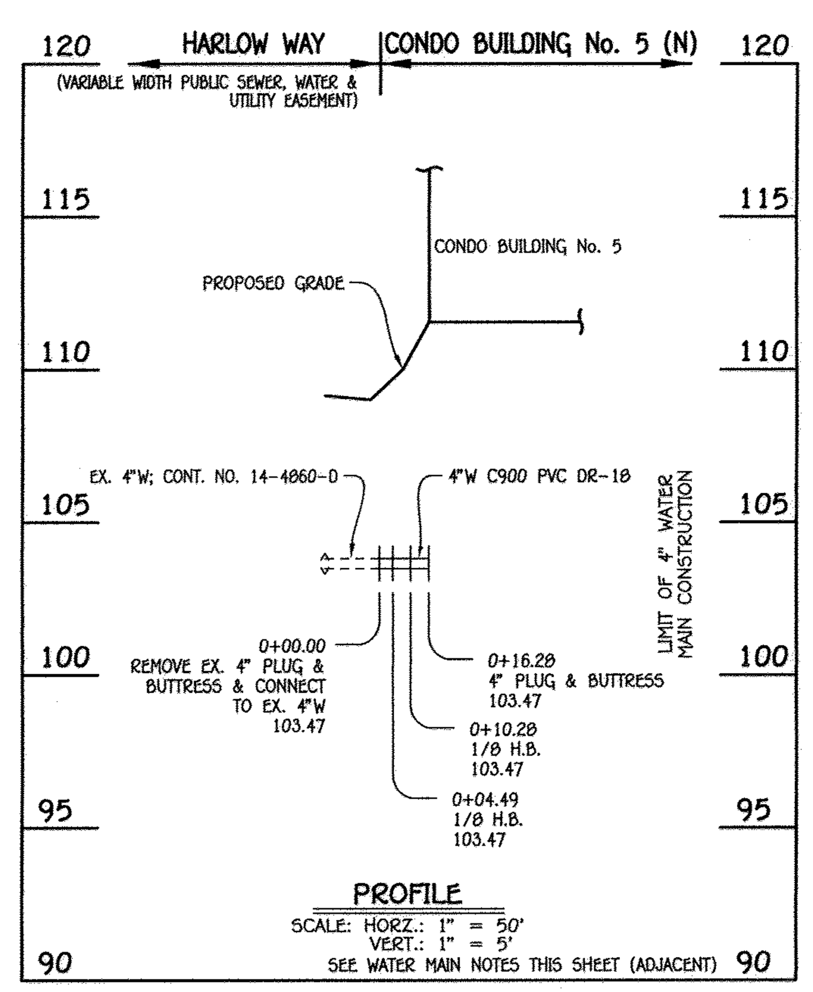

4" WATER MAIN: CONDO BUILDING No. 5 (N)

WATER MAIN TABULATION CHART			
W.M. STA.	APPURTENANCE	NORTHING	EASTING
4" WATER MAIN: CONDO BUILDING No. 5 (N)			
0+00.00	EX. 4" PLUG & BUTTRESS	552738.53	1386059.72
0+04.49	1/8 H.B.	552736.55	1386063.75
0+10.28	1/8 H.B.	552738.40	1386069.22
0+16.28	4" PLUG & BUTTRESS	552743.78	1386071.88

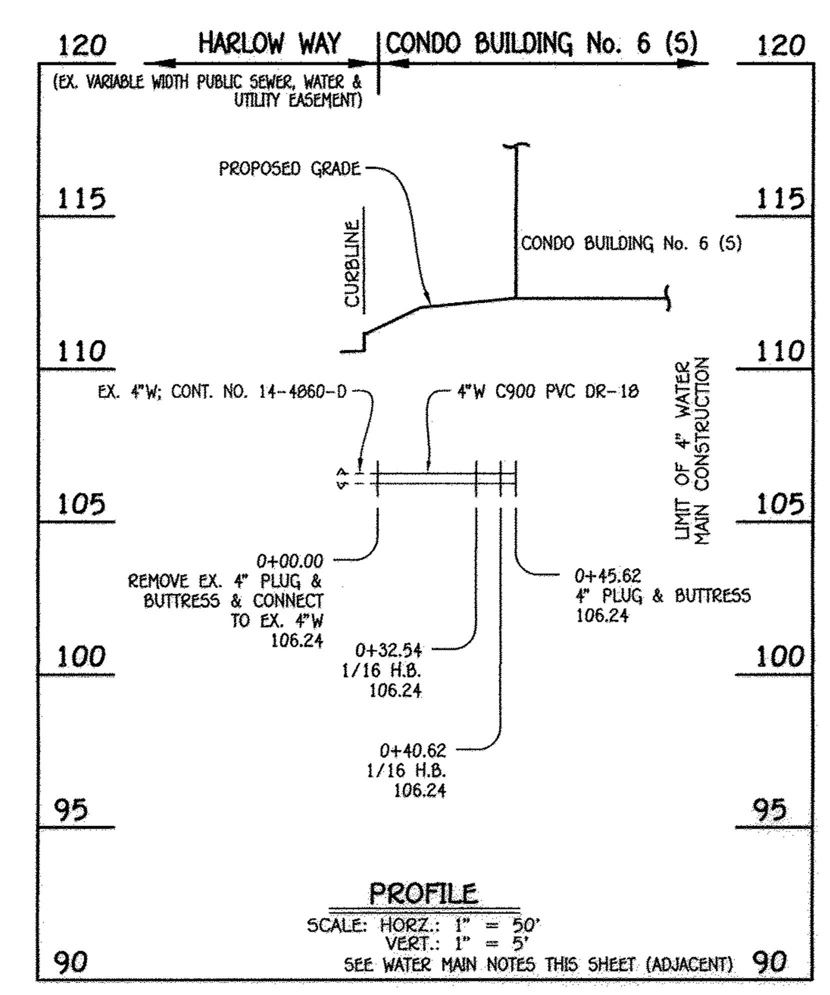

4" WATER MAIN: CONDO BUILDING No. 6 (S)

WATER MAIN TABULATION CHART			
W.M. STA.	APPURTENANCE	NORTHING	EASTING
4" WATER MAIN: CONDO BUILDING No. 6 (S)			
0+00.00	EX. 4" PLUG & BUTTRESS	552748.32	1386258.10
0+32.54	1/16 H.B.	552777.50	1386272.50
0+40.62	1/16 H.B.	552785.55	1386273.13
0+45.62	4" PLUG & BUTTRESS	552790.03	1386275.35

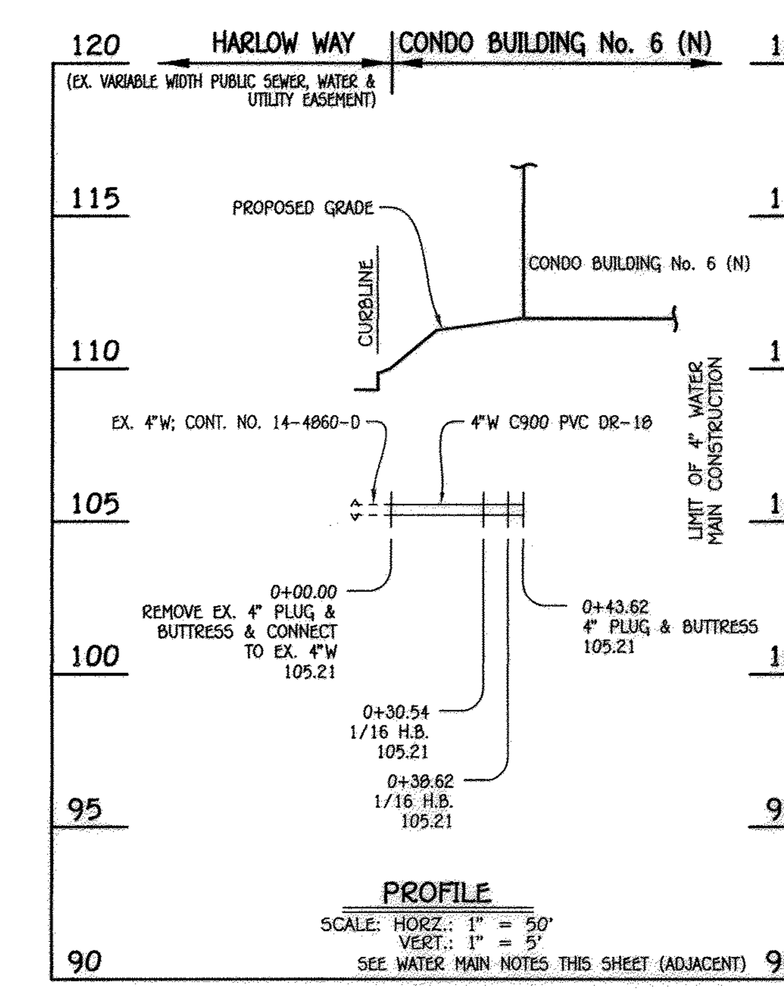

4" WATER MAIN: CONDO BUILDING No. 6 (N)

WATER MAIN TABULATION CHART			
W.M. STA.	APPURTENANCE	NORTHING	EASTING
4" WATER MAIN: CONDO BUILDING No. 6 (N)			
0+00.00	EX. 4" PLUG & BUTTRESS	552817.34	1386118.21
0+30.54	1/16 H.B.	552844.73	1386131.72
0+38.62	1/16 H.B.	552850.13	1386137.73
0+43.62	4" PLUG & BUTTRESS	552854.61	1386139.94

WATER MAIN NOTES:

1. ALL WATER MAINS SHALL BE AWWA C900 PVC PIPE; DR-18.
2. ALL PIPE BEDDING, TRACER WIRE, LOCATING TAPE AND OTHER APPURTENANCES SHALL BE IN ACCORDANCE WITH THE HOWARD COUNTY DESIGN MANUAL, VOLUME IV – WATER AND SEWER STANDARDS FOR AWWA C900 PVC WATER PIPE INSTALLATION.
3. DEFLECTION COUPLINGS SHALL BE CERTAIN-TEED PVC HIGH DEFLECTION COUPLINGS.
4. ALL WATER HOUSE CONNECTIONS AND TAPS SHALL BE PERFORMED USING A SADDLE.

FISHER, COLLINS & CARTER, INC.
CIVIL ENGINEERING CONSULTANTS & LAND SURVEYORS
CENTENNIAL SQUARE OFFICE PARK – 10272 BALTIMORE NATIONAL PIKE
ELLICOTT CITY, MARYLAND 21042
(410) 461 – 2855

NO.	REVISION	DATE

STATE OF MARYLAND · MICHAEL ... · No. 20748 · PROFESSIONAL ENGINEER · 5/4/16

Owner/Builder
U.S. Home Corp. dba Lennar
7035 Albert Einstein Drive, Suite 200
Columbia, Maryland 21046
Ph# 410-997-5522

Developer
U.S. Home Corp. dba Lennar
7035 Albert Einstein Drive, Suite 200
Columbia, Maryland 21046
Ph# 410-997-5522

APPROVED: HOWARD COUNTY DEPARTMENT OF PLANNING AND ZONING

Chief, Division of Land Development — Date 8-9-16

Chief, Development Engineering Division — Date 6.13.16

Director – Department of Planning and Zoning — Date 8-9-16

SUBDIVISION				SECTION/AREA	PARCEL No.
OXFORD SQUARE				----	'Y' (Formerly 'E')
PLAT NO.	BLOCK NO.	ZONE	TAX/ZONE	ELEC. DIST.	CENSUS TR.
23791 - 23792	---	TOD	44	1st.	601101

WATER MAIN PROFILES, CHARTS & NOTES

OXFORD SQUARE

"A Howard County Green Neighborhood"

Parcel 'Y'

"EXETER PARK"

(Residential Condominium Townhouse Buildings 1 Thru 16, Units 1 Thru 156)
Zoned: TOD
Tax Map No.: 38 Grid No.: 20 Parcel No.: 761
First Election District Howard County, Maryland
Scale: As Shown
Date: April 18, 2016
Sheet 28 Of 30

SDP-14-072

I:\2009\09014\dwg\Water & Sewer Contracts\3010 - Contract No. 14-4860-d (SDP-14-072)(F-14)(E)\Finals\09014-3010 Water and Sewer Contract Plan.dwg, 5/4/2016 3:25:45 PM, Upstairs 1500 (temporary).pc3

I:\2009\09014\dwg\Water & Sewer Contracts\3010 - Contract No. 14-4860-d (SDP-14-072)(F-14)(E)\Finals\09014-3010 Water and Sewer Contract Plan.dwg, 5/4/2016 3:28:51 PM, Upstairs 1500 (temporary).pc3

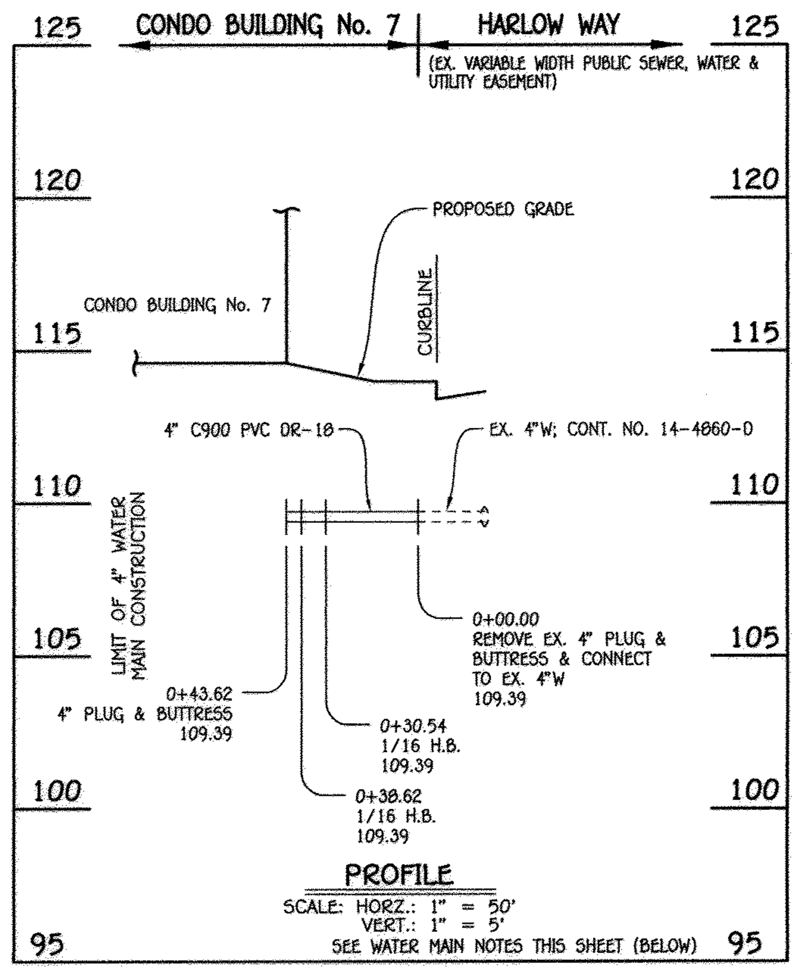

4" WATER MAIN: CONDO BUILDING No. 7

WATER MAIN TABULATION CHART

W.M. STA.	APPURTENANCE	NORTHING	EASTING
4" WATER MAIN: CONDO BUILDING No. 7			
0+00.00	EX. 4" PLUG & BUTTRESS	552901.91	1386349.06
0+30.54	1/16 H.B.	552915.42	1386321.67
0+38.62	1/16 H.B.	552916.04	1386313.61
0+43.62	4" PLUG & BUTTRESS	552918.25	1386309.12

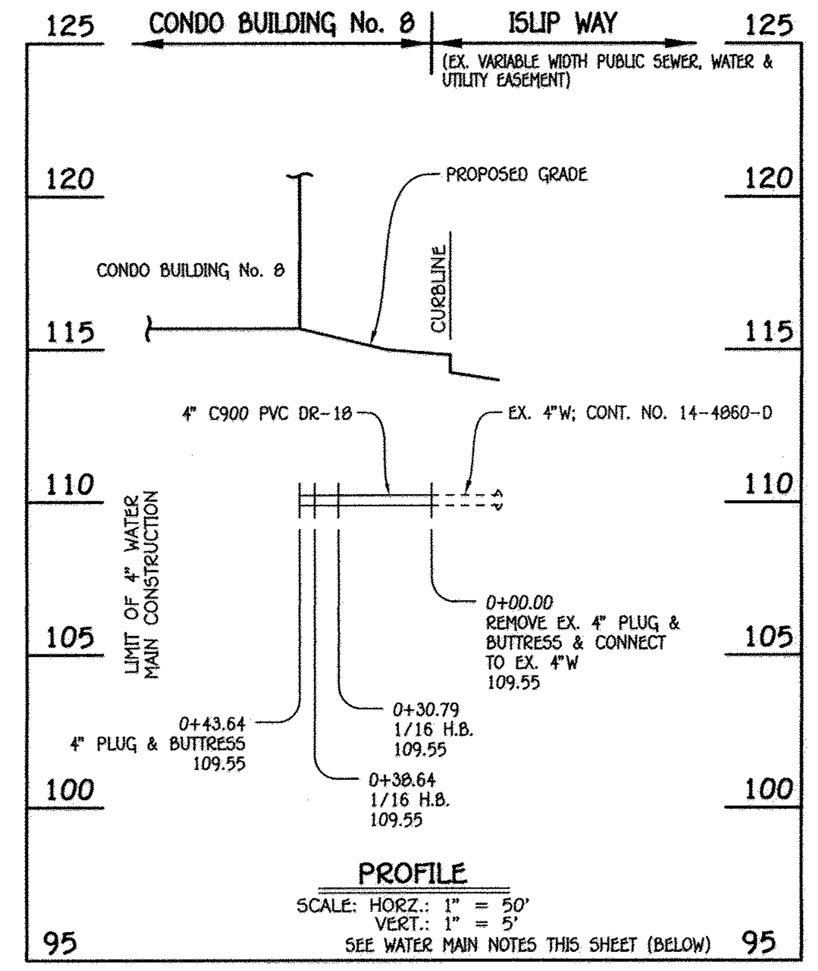

4" WATER MAIN: CONDO BUILDING No. 8

WATER MAIN TABULATION CHART

W.M. STA.	APPURTENANCE	NORTHING	EASTING
4" WATER MAIN: CONDO BUILDING No. 8			
0+00.00	EX. 4" PLUG & BUTTRESS	552961.14	1386378.28
0+30.79	1/16 H.B.	552974.76	1386350.67
0+38.64	1/16 H.B.	552980.66	1386345.49
0+43.64	4" PLUG & BUTTRESS	552982.88	1386341.01

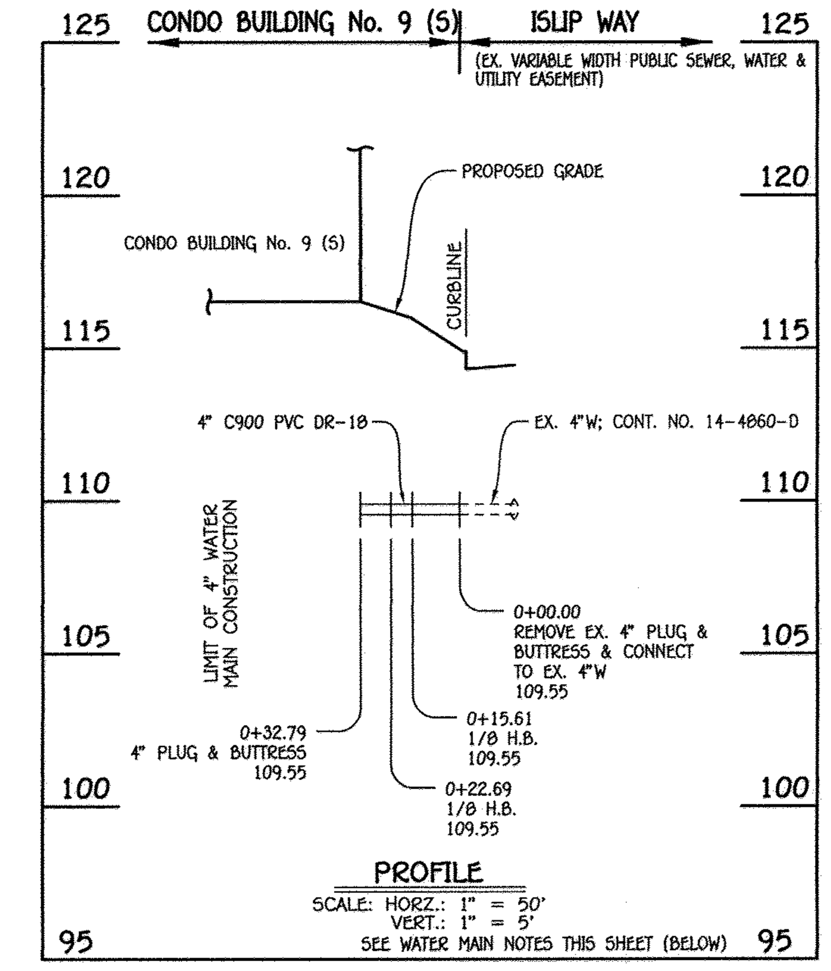

4" WATER MAIN: CONDO BUILDING No. 9 (S)

WATER MAIN TABULATION CHART

W.M. STA.	APPURTENANCE	NORTHING	EASTING
4" WATER MAIN: CONDO BUILDING No. 9 (S)			
0+00.00	EX. 4" PLUG & BUTTRESS	553091.47	1386447.04
0+15.61	1/8 H.B.	553098.38	1386433.04
0+22.69	1/8 H.B.	553096.11	1386426.34
0+32.79	4" PLUG & BUTTRESS	553087.04	1386421.87

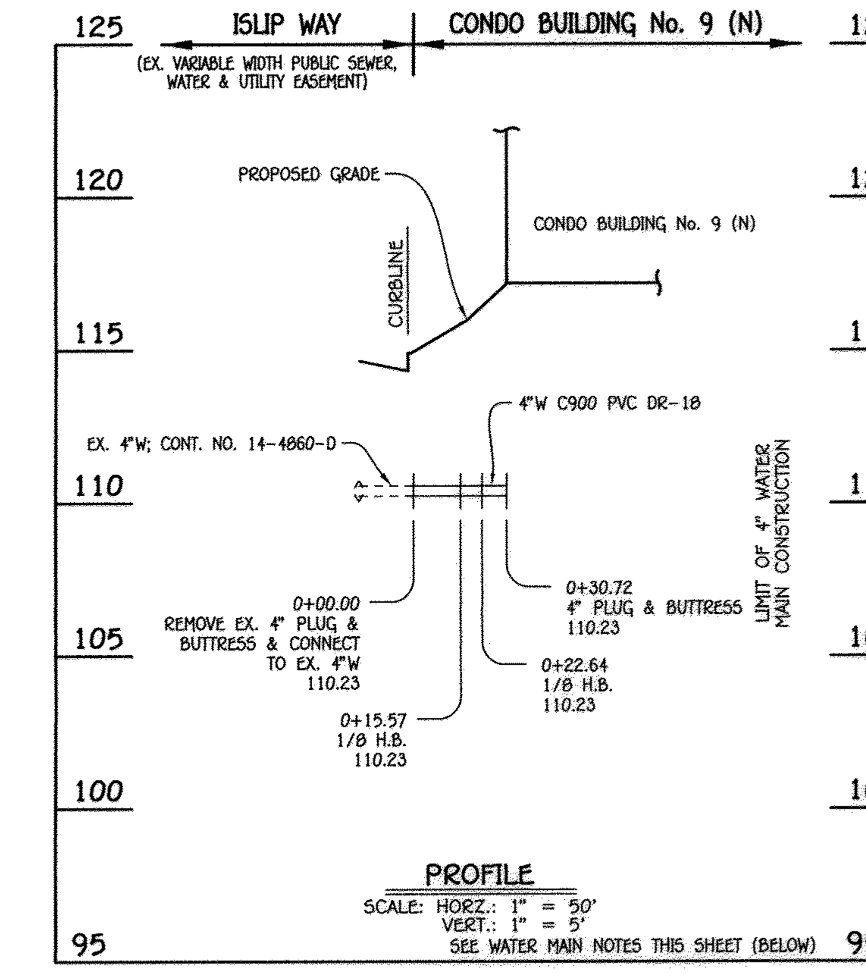

4" WATER MAIN: CONDO BUILDING No. 9 (N)

WATER MAIN TABULATION CHART

W.M. STA.	APPURTENANCE	NORTHING	EASTING
4" WATER MAIN: CONDO BUILDING No. 9 (N)			
0+00.00	EX. 4" PLUG & BUTTRESS	553176.04	1386275.58
0+15.57	1/8 H.B.	553169.15	1386289.54
0+22.64	1/8 H.B.	553162.46	1386291.81
0+30.72	4" PLUG & BUTTRESS	553155.21	1386288.24

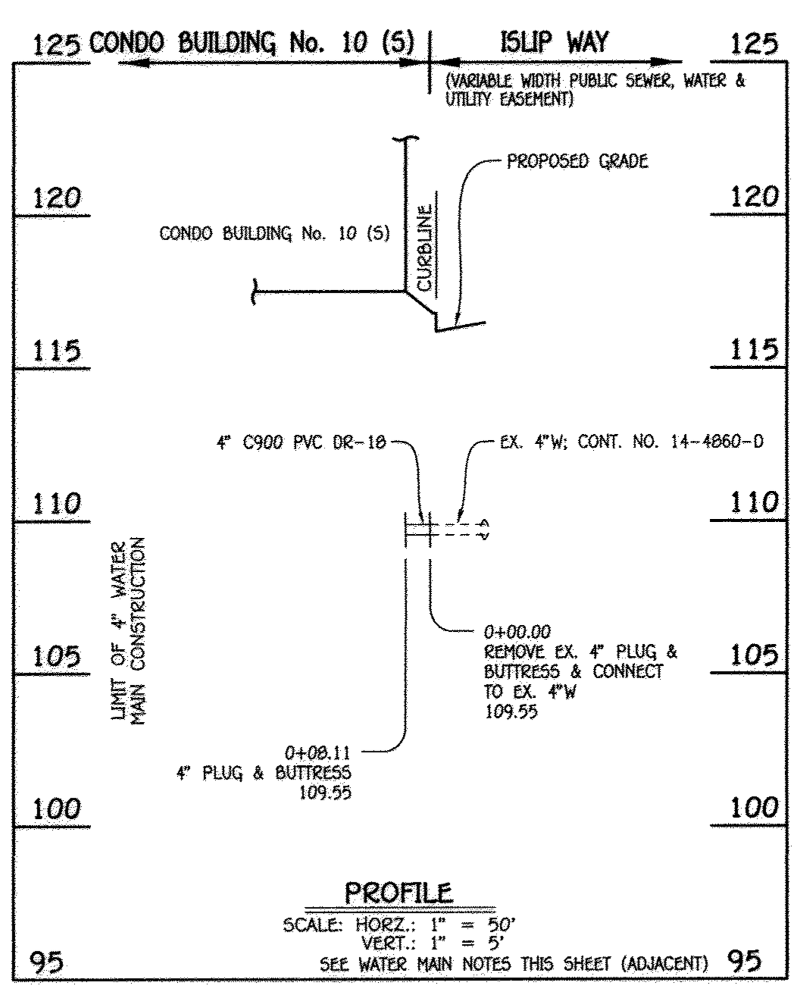

4" WATER MAIN: CONDO BUILDING No. 10 (S)

WATER MAIN TABULATION CHART

W.M. STA.	APPURTENANCE	NORTHING	EASTING
4" WATER MAIN: CONDO BUILDING No. 10 (S)			
0+00.00	EX. 4" PLUG & BUTTRESS	553189.84	1386495.58
0+08.11	4" PLUG & BUTTRESS	553193.43	1386488.30

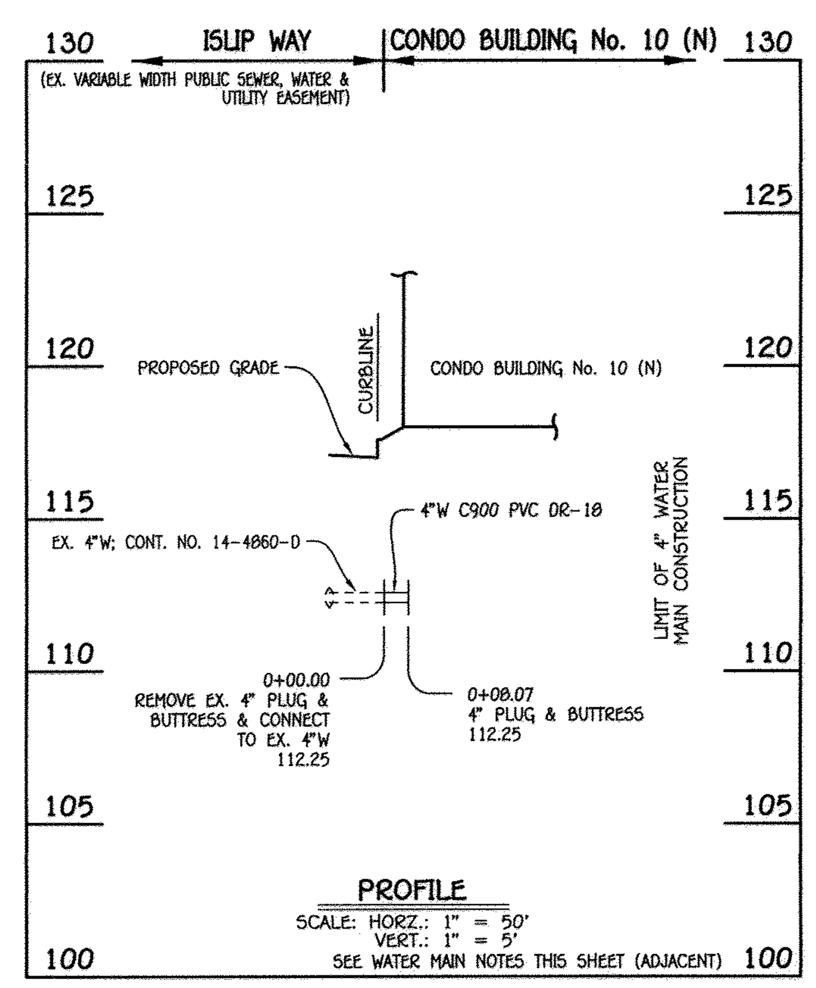

4" WATER MAIN: CONDO BUILDING No. 10 (N)

WATER MAIN TABULATION CHART

W.M. STA.	APPURTENANCE	NORTHING	EASTING
4" WATER MAIN: CONDO BUILDING No. 10 (N)			
0+00.00	EX. 4" PLUG & BUTTRESS	553274.43	1386324.12
0+08.07	4" PLUG & BUTTRESS	553270.86	1386331.36

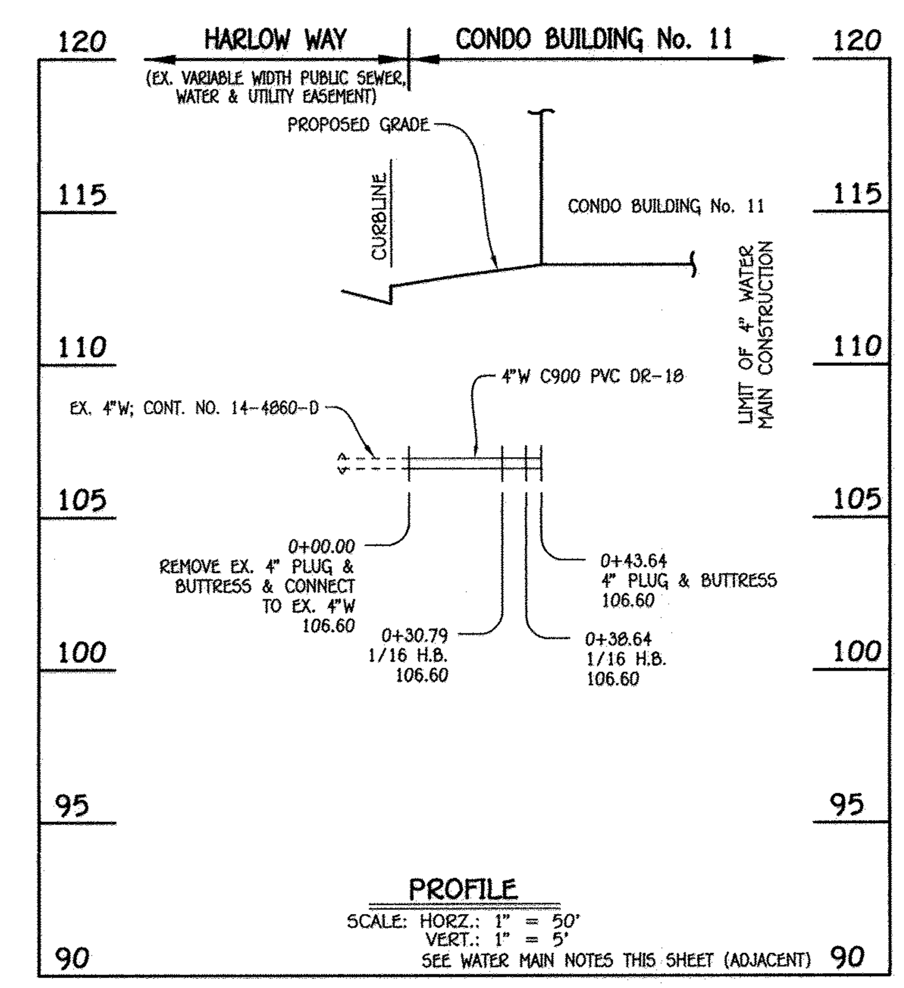

4" WATER MAIN: CONDO BUILDING No. 11

WATER MAIN TABULATION CHART

W.M. STA.	APPURTENANCE	NORTHING	EASTING
4" WATER MAIN: CONDO BUILDING No. 11			
0+00.00	EX. 4" PLUG & BUTTRESS	552982.96	1386184.77
0+30.79	1/16 H.B.	552969.33	1386212.38
0+38.64	1/16 H.B.	552963.42	1386217.56
0+43.64	4" PLUG & BUTTRESS	552961.22	1386222.04

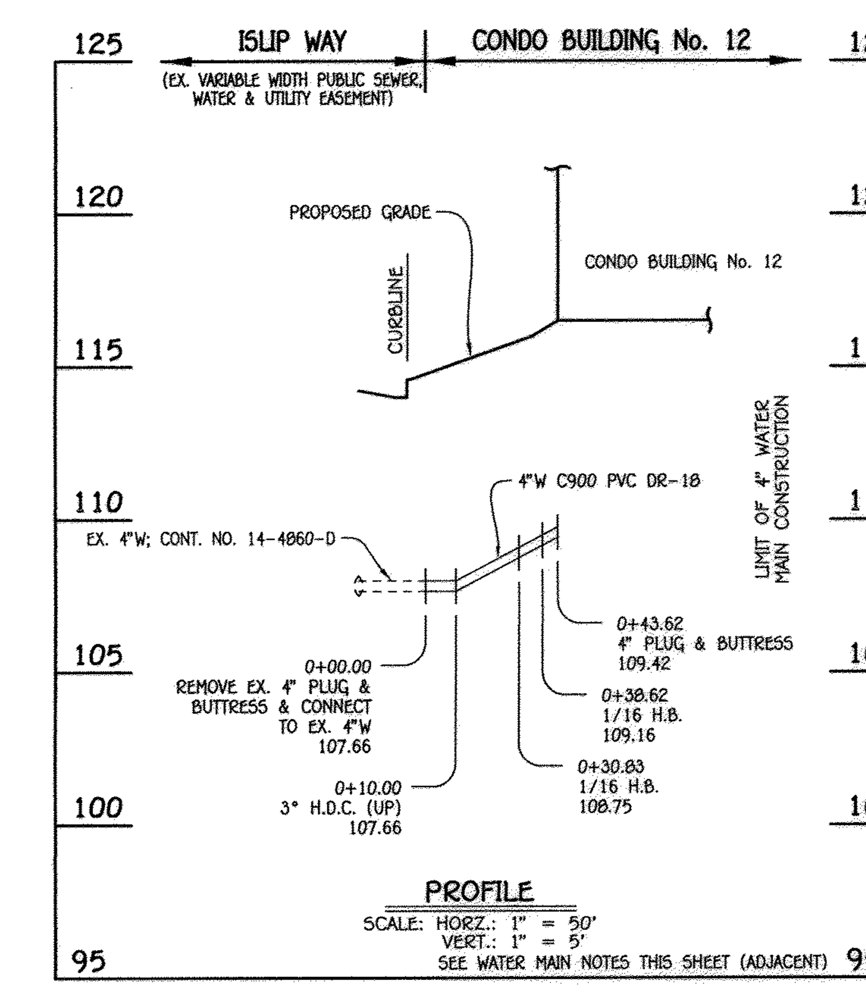

4" WATER MAIN: CONDO BUILDING No. 12

WATER MAIN TABULATION CHART

W.M. STA.	APPURTENANCE	NORTHING	EASTING
4" WATER MAIN: CONDO BUILDING No. 12			
0+00.00	EX. 4" PLUG & BUTTRESS	553042.19	1386214.00
0+30.83	1/16 H.B.	553028.55	1386241.65
0+38.62	1/16 H.B.	553028.04	1386249.42
0+43.62	4" PLUG & BUTTRESS	553025.83	1386253.90

WATER MAIN NOTES:

1. ALL WATER MAINS SHALL BE AWWA C900 PVC PIPE; DR-18.
2. ALL PIPE BEDDING, TRACER WIRE, LOCATING TAPE AND OTHER APPURTENANCES SHALL BE IN ACCORDANCE WITH THE HOWARD COUNTY DESIGN MANUAL, VOLUME IV - WATER AND SEWER STANDARDS FOR AWWA C900 PVC WATER PIPE INSTALLATION.
3. DEFLECTION COUPLINGS SHALL BE CERTAIN-TEED PVC HIGH DEFLECTION COUPLINGS.
4. ALL WATER HOUSE CONNECTIONS AND TAPS SHALL BE PERFORMED USING A SADDLE.

FISHER, COLLINS & CARTER, INC.
CIVIL ENGINEERING CONSULTANTS & LAND SURVEYORS
CENTENNIAL SQUARE OFFICE PARK - 10272 BALTIMORE NATIONAL PIKE
ELLICOTT CITY, MARYLAND 21042
(410) 461 - 2855

NO.	REVISION	DATE

STATE OF MARYLAND · MICHAEL VITUS · No. 20748 · PROFESSIONAL ENGINEER
5/4/16

Owner/Builder
U.S. Home Corp. dba Lennar
7035 Albert Einstein Drive, Suite 200
Columbia, Maryland 21046
Ph# 410-997-5522

Developer
U.S. Home Corp. dba Lennar
7035 Albert Einstein Drive, Suite 200
Columbia, Maryland 21046
Ph# 410-997-5522

APPROVED: HOWARD COUNTY DEPARTMENT OF PLANNING AND ZONING

Chief, Division of Land Development — Date 8-9-16
Chief, Development Engineering Division — Date 6-13-16
Director - Department of Planning and Zoning — Date 8-9-16

SUBDIVISION			SECTION/AREA		PARCEL No.
OXFORD SQUARE			----		'Y' (Formerly 'E')
PLAT NO.	BLOCK NO.	ZONE	TAX/ZONE	ELEC. DIST.	CENSUS TR.
23791 - 23792	---	TOD	44	1st.	601101

WATER MAIN PROFILES, CHARTS & NOTES

OXFORD SQUARE

"A Howard County Green Neighborhood"

Parcel 'Y'

"EXETER PARK"

(Residential Condominium Townhouse Buildings 1 Thru 16, Units 1 Thru 156)
Zoned: TOD
Tax Map No.: 38 Grid No.: 20 Parcel No.: 761
First Election District Howard County, Maryland
Scale: As Shown
Date: April 18, 2016
Sheet 29 Of 30

SDP-14-072

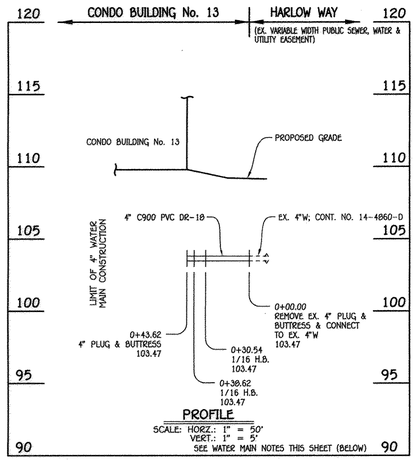

4" WATER MAIN: CONDO BUILDING No. 13

WATER MAIN TABULATION CHART			
W.M. STA.	APPURTENANCE	NORTHING	EASTING
4" WATER MAIN: CONDO BUILDING No. 13			
0+00.00	EX. 4" PLUG & BUTTRESS	552751.81	1386032.82
0+30.54	1/16 H.B.	552765.33	1386005.43
0+38.62	1/16 H.B.	552771.33	1386000.03
0+43.62	4" PLUG & BUTTRESS	552773.55	1385995.54

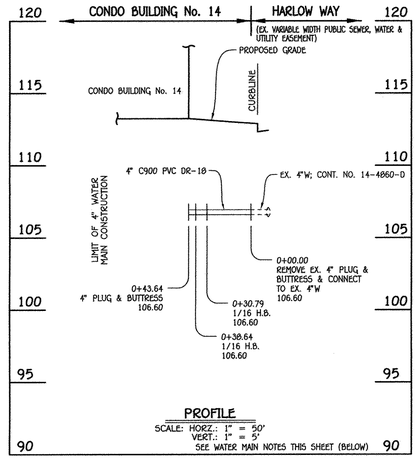

4" WATER MAIN: CONDO BUILDING No. 14

WATER MAIN TABULATION CHART			
W.M. STA.	APPURTENANCE	NORTHING	EASTING
4" WATER MAIN: CONDO BUILDING No. 14			
0+00.00	EX. 4" PLUG & BUTTRESS	552998.00	1386154.28
0+30.79	1/16 H.B.	553011.63	1386126.67
0+38.64	1/16 H.B.	553012.14	1386118.84
0+43.64	4" PLUG & BUTTRESS	553014.35	1386114.36

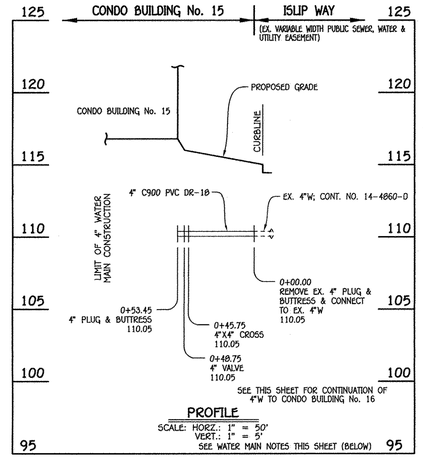

4" WATER MAIN: CONDO BUILDING No. 15 & 16

WATER MAIN TABULATION CHART			
W.M. STA.	APPURTENANCE	NORTHING	EASTING
4" WATER MAIN: CONDO BUILDING No. 15 & 16			
0+00.00	EX. 4" PLUG & BUTTRESS	553180.28	1386244.22
0+45.75	4"X4" CROSS	553200.52	1386203.19
0+48.75	4" VALVE	553197.83	1386201.86
0+53.45	4" PLUG & BUTTRESS	553193.62	1386199.78

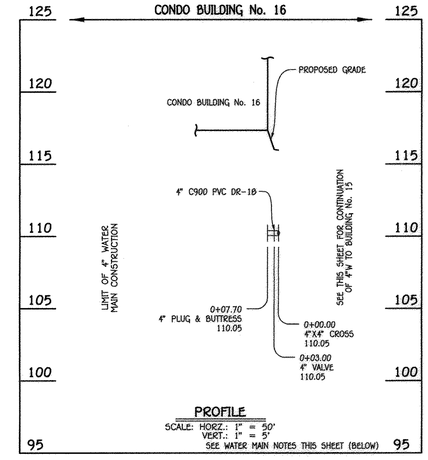

4" WATER MAIN: CONDO BUILDING No. 16

WATER MAIN TABULATION CHART			
W.M. STA.	APPURTENANCE	NORTHING	EASTING
4" WATER MAIN: CONDO BUILDING No. 16			
0+00.00	4"X4" CROSS	553200.52	1386203.19
0+03.00	4" VALVE	553203.22	1386204.51
0+07.70	4" PLUG & BUTTRESS	553207.43	1386206.59

WATER MAIN NOTES:

1. ALL WATER MAINS SHALL BE AWWA C900 PVC PIPE; DR-18.
2. ALL PIPE BEDDING; TRACER WIRE, LOCATING TAPE AND OTHER APPURTENANCES SHALL BE IN ACCORDANCE WITH THE HOWARD COUNTY DESIGN MANUAL, VOLUME IV - WATER AND SEWER STANDARDS FOR AWWA C900 PVC WATER PIPE INSTALLATION.
3. DEFLECTION COUPLINGS SHALL BE CERTAIN-TEED PVC HIGH DEFLECTION COUPLINGS.
4. ALL WATER HOUSE CONNECTIONS AND TAPS SHALL BE PERFORMED USING A SADDLE.

FISHER, COLLINS & CARTER, INC.
CIVIL ENGINEERING CONSULTANTS & LAND SURVEYORS
CENTENNIAL SQUARE OFFICE PARK - 10272 BALTIMORE NATIONAL PIKE
ELLICOTT CITY, MARYLAND 21042
(410) 461 - 2855

NO.	REVISION	DATE

STATE OF MARYLAND — MICHAEL E. KAHL — No. 20738 — PROFESSIONAL ENGINEER — 5/4/16

Owner/Builder

U.S. Home Corp. dbà Lennàr
7035 Albert Einstein Drive, Suite 200
Columbia, Màryland 21046
Ph# 410-997-5522

Developer

U.S. Home Corp. dbà Lennàr
7035 Albert Einstein Drive, Suite 200
Columbia, Màryland 21046
Ph# 410-997-5522

APPROVED: HOWARD COUNTY DEPARTMENT OF PLANNING AND ZONING

Chief, Division of Land Development	Date 8-9-16
Chief, Development Engineering Division	Date 6-13-16
Director - Department of Planning and Zoning	Date 8-9-16

SUBDIVISION	SECTION/AREA	PARCEL No.
OXFORD SQUARE	----	"Y" (Formerly "E")

PLAT NO.	BLOCK NO.	ZONE	TAX/ZONE	ELEC. DIST.	CENSUS TR.
23791 - 23792	---	TOD	44	1st.	601101

WATER MAIN PROFILES, CHARTS & NOTES

OXFORD SQUARE

"A Howard County Green Neighborhood"

Parcel "Y"

"EXETER PARK"

(Residential Condominium Townhouse Buildings 1 Thru 16, Units 1 Thru 156)

Zoned: TOD

Tax Map No.: 38 Grid No.: 20 Parcel No.: 761

First Election District Howard County, Maryland

Scale: As Shown

Date: April 18, 2016

Sheet 30 Of 30

SDP-14-072

I:\2009\09014\dwg\Water & Sewer Contracts\300 - Contract No. 14-4860-d (SDP-14-072 WF-14 XE)\Finals\09014-3010 Water and Sewer Contract Plan.dwg, 5/4/2016 3:30:07 PM, Upstairs 1500 (temporary).pc3