MARYLAND FOOD CENTER AUTHORITY

PARCEL B-1 & E-1
7901 OCEANO AVENUE &
7775 CHESAPEAKE BAY COURT
JESSUP, MARYLAND 20794

GENERAL CONSTRUCTION NOTES

1. ALL CONSTRUCTION ON SITE SHALL BE DONE IN ACCORDANCE WITH ALL LOCAL CODES, INCLUDING:
   - HOWARD COUNTY DEPARTMENT OF PUBLIC WORKS STANDARD SPECIFICATIONS FOR CONSTRUCTION AND MATERIALS, MAY 2007, REVISED JULY 2011.
   - MARYLAND DEPARTMENT OF TRANSPORTATION STATE HIGHWAY ADMINISTRATION, STANDARD SPECIFICATIONS FOR CONSTRUCTION AND MATERIAL, JULY 2008.
   - HOWARD COUNTY PLUMBING CODE, EXCEPT WHERE NOTED.
   - HOWARD COUNTY BUILDING CODE, EXCEPT WHERE NOTE.
2. CONTRACTOR SHALL NOTIFY THE FOLLOWING AT LEAST 48 HOURS PRIOR TO BEGINNING ANY WORK ON THE PROJECT:
   MISS UTILITY (800) 257-7777
   VERIZON (410) 860-8104
   COMCAST CABLEVISION (800)787-3611
   HOWARD COUNTY, DEPT. OF PUBLIC WORKS / BUREAU OF ENGINEERING (410) 313-2414
   HOWARD COUNTY, CONSTRUCTION INSPECTION DIVISION (410) 313-3800
   ENGINEER IN CHARGE (410) 229-9851
3. CONTRACTOR SHALL BE RESPONSIBLE TO MAKE SURE THAT ALL REQUIRED PERMITS AND APPROVALS HAVE BEEN OBTAINED PRIOR TO STARTING CONSTRUCTION. NO CONSTRUCTION OR FABRICATION SHALL BEGIN UNTIL CONTRACTOR HAS RECEIVED AND THOROUGHLY REVIEWED ALL PLANS AND OTHER DOCUMENTS APPROVED BY ALL PERMITTING AUTHORITIES.
4. ALL WORK SHALL BE PERFORMED IN ACCORDANCE WITH THESE PLANS, SPECIFICATIONS AND REQUIREMENTS AND STANDARDS OF LOCAL GOVERNING AUTHORITY. GEOTECHNICAL REPORT AND RECOMMENDATIONS SET FORTH THEREIN ARE PART OF REQUIRED CONSTRUCTION DOCUMENTS AND TAKE PRECEDENCE UNLESS SPECIFICALLY NOTED OTHERWISE ON PLANS. CONTRACTOR SHALL NOTIFY MERRITT'S CONSTRUCTION MANAGER OF ANY DISCREPANCY BETWEEN GEOTECHNICAL REPORT, PLANS, AND OTHER DOCUMENTS.
5. THESE PLANS AND SPECIFICATIONS ARE SUBJECT TO MODIFICATION DURING CONSTRUCTION WHEN CONDITIONS DEVELOP THAT WERE NOT APPARENT DURING DESIGN AND PREPARATION OF THESE PLANS. ALL MODIFICATIONS MUST BE APPROVED BY LOCAL JURISDICTION PRIOR TO CONSTRUCTION AND/OR IMPLEMENTATION.
6. SHOULD IT APPEAR THAT THE WORK TO BE DONE OR ANY MATTER RELATIVE THERETO IS NOT SUFFICIENTLY DETAILED OR EXPLANED ON THESE PLANS, CONTRACTOR SHALL CONTACT ENGINEER FOR SUCH FURTHER EXPLANATIONS AS MAY BE NECESSARY.
7. DEVIATION FROM THESE PLANS AND SPECIFICATIONS WITHOUT PRIOR WRITTEN CONSENT FROM ENGINEER AND MERRITT'S CONSTRUCTION MANAGER MAY CAUSE WORK TO BE UNACCEPTABLE.
8. FAILURE TO MENTION SPECIFICALLY ANY WORK WHICH WOULD NORMALLY BE REQUIRED TO COMPLETE THIS PROJECT SHALL NOT RELIEVE CONTRACTOR FROM PERFORMING SUCH WORK.
9. CONTRACTOR SHALL NOTIFY ENGINEER OR MERRITT'S CONSTRUCTION MANAGER IN CASE OF ANY DISCREPANCY OCCURRING BETWEEN INFORMATION CONTAINED ON THESE PLANS AND OTHER DOCUMENTS.
10. A.L.T.A. SURVEY SHALL BE CONSIDERED PART OF THESE PLANS. CONTRACTOR IS RESPONSIBLE FOR LOCATING IMPROVEMENTS PER THESE PLANS.
11. BALTIMORE LAND DESIGN GROUP, INC. SHALL NOT BE HELD RESPONSIBLE FOR CONSTRUCTION, MEANS, METHODS, TECHNIQUES OR PROCEDURES UTILIZED BY CONTRACTOR, NOR FOR SAFETY OF PUBLIC OR CONTRACTOR'S EMPLOYEES OR FOR FAILURE OF CONTRACTOR TO CARRY OUT WORK IN ACCORDANCE WITH CONTRACT DOCUMENTS AND STANDARD CONSTRUCTION PRACTICES.
12. LOCATIONS OF UNDERGROUND FACILITIES AND UTILITIES SHOWN ON THESE PLANS ARE BASED ON FIELD SURVEYS AND LOCAL UTILITY COMPANY RECORDS. THEY ARE SHOWN FOR CONVENIENCE OF CONTRACTOR AND COMPLETENESS OR ACCURACY OF SAME IS NOT GUARANTEED. IT SHALL BE CONTRACTOR'S FULL RESPONSIBILITY TO CONTACT APPROPRIATE UTILITY COMPANY. NO COMPENSATION SHALL BE PAID TO CONTRACTOR FOR DAMAGE AND REPAIR TO THESE FACILITIES CAUSED BY HIS/HER WORK FORCE. CONTRACTOR SHALL DETERMINE LOCATION AND ELEVATION OF EXISTING UTILITIES BEFORE ORDERING ANY STRUCTURE AND BEFORE STARTING TRENCH EXCAVATION.
13. CONTRACTOR SHALL TAKE ALL NECESSARY PRECAUTIONS TO PROTECT EXISTING UTILITIES WHICH ARE TO REMAIN FREE FROM DAMAGE AND MAINTAIN UNINTERRUPTED SERVICE TO ALL USERS. PROTECT WITH SAFETY FENCE OR ADEQUATE FLAGGING AS NECESSARY. ANY DAMAGE INCURRED DUE TO CONTRACTOR'S OR SUBCONTRACTOR'S ACTIONS SHALL BE REPAIRED IMMEDIATELY AT CONTRACTOR'S EXPENSE.
14. BEFORE COMMENCEMENT OF WORK, CONTRACTOR SHALL REVIEW ALL PLANS AND SPECIFICATIONS AND JOB SITE. ALL DIMENSIONS AND GRADES SHOWN ON THESE PLANS SHALL BE FIELD VERIFIED BY CONTRACTOR PRIOR TO CONSTRUCTION. CONTRACTOR SHALL NOTIFY MERRITT'S CONSTRUCTION MANAGER IF ANY DISCREPANCIES EXIST, PRIOR TO PROCEEDING WITH CONSTRUCTION, FOR NECESSARY PLAN OR GRADE CHANGES. NO EXTRA COMPENSATION SHALL BE PAID TO CONTRACTOR FOR WORK HAVING TO BE REDONE DUE TO DIMENSIONS OR GRADES SHOWN INCORRECTLY ON THESE PLANS IF SUCH NOTIFICATION HAS NOT BEEN GIVEN.
15. CONTRACTOR SHALL INSPECT SITE TO DETERMINE IF ANY TREES, PAVING, STRUCTURES, ETC. ARE TO BE REMOVED PRIOR TO PLACING BIDS ON SUCH ITEMS.
16. CONTRACTOR SHALL CLEAR PROJECT SITE OF ALL TREES, PAVING, STRUCTURES, ETC. WITHIN CONSTRUCTION AREA AS SHOWN ON EXISTING CONDITION / DEMOLITION PLAN.
17. WHERE REQUIRED BY ENCOUNTERED SEEPAGE CONDITIONS, DEWATERING SYSTEM CONSISTING OF SERIES OF INTERCEPTOR TRENCHES, SUMPS, AND PUMPS MAY BE USED DURING CONSTRUCTION.
18. CONTRACTOR SHALL MAINTAIN ALL SEDIMENT CONTROL DEVICES WITHIN LIMITS OF DISTURBANCE DURING CONSTRUCTION OF SITE IMPROVEMENTS. CONTRACTOR SHALL PROVIDE ADDITIONAL EROSION AND SEDIMENT CONTROL MEASURES AS MAY BE NECESSARY DURING CONSTRUCTION AND/OR BY GOVERNING AGENCIES.
19. STANDARD MANUFACTURERS LENGTH OF PIPE SHALL BE USED FOR ALL WATER, SEWER, STORM DRAIN PIPES DURING CONSTRUCTION.
20. ALL PIPE ELEVATIONS ARE TO INVERT OF PIPE.
21. CONTRACTOR SHALL PROVIDE MINIMUM OF TWO FEET OF PROTECTIVE FILL OVER STORM DRAIN PIPES DURING CONSTRUCTION.
22. CONTRACTOR SHALL PLACE WITNESS POST AT TERMINUS OF ALL UTILITY STUBS.
23. CONTRACTOR SHALL VERIFY SIZE, LOCATION, AND ELEVATION OF ALL WATER, SEWER AND STORM DRAIN CONNECTIONS AT BUILDING WITH MECHANICAL AND PLUMBING CONTRACTORS BEFORE BEGINNING CONSTRUCTION OF SERVICE CONNECTIONS TO SERVE BUILDING.
24. WATER MAINS SHALL HAVE MINIMUM OF 4.0' COVER, EXCEPT WHERE DIFFERENT DEPTHS ARE INDICATED.
25. IN THE EVENT OF ANY DISCREPANCY BETWEEN ANY PLANS AND FIGURES WRITTEN THEREON, FIGURES SHALL BE TAKEN AS CORRECT.
26. CONTRACTOR SHALL FURNISH OWNER A LETTER STATING THAT ALL WATER MAINS HAVE BEEN STERILIZED AND PRESSURE TESTED IN ACCORDANCE WITH HOWARD COUNTY PLUMBING CODE AND PROCEDURES ESTABLISHED BY HOWARD COUNTY FIRE DEPARTMENT.
27. CONTRACTOR SHALL OBTAIN FIRE LINE PERMIT FOR ALL EXTERIOR FIRE LINES/SPRINKLER LINES PRIOR TO INSTALLATION OF ANY PIPE. FIRE LINE PERMIT REQUIREMENTS SHALL BE STRICTLY ADHERED TO. ALL FIRE LINE PIPING SHALL MEET THE REQUIREMENTS OF THE NFPA. PIPE SHALL BE UL LISTED, FM APPROVED AND MEET THE AWWA STANDARDS FOR FIRE PROTECTION USE. FITTINGS SHALL HAVE PRESSURE CLASS RATINGS COMPATIBLE WITH THE PIPE USED.
28. CONTRACTOR SHALL MAINTAIN MINIMUM OF TWO FEET WIDE BENCH BEHIND ALL PROPOSED CURB IN FILL AREAS, UNLESS OTHERWISE NOTED.
29. UNLESS OTHERWISE NOTED, ALL CONCRETE CURB & GUTTER SHALL BE STANDARD 7" COMBINATION CONCRETE CURB AND GUTTER AS PER HOWARD COUNTY, PLATE R-3.01.
30. UNLESS OTHERWISE NOTED, SIDEWALKS SHALL CONFORM TO AFOREMENTIONED HOWARD COUNTY STANDARDS, PLATE R-3.05. SLOPES, WIDTH, AND LOCATION SHALL BE AS SHOWN ON THESE PLANS. IN ADDITION, SIDEWALKS SHALL BE PLACED ON MIN. 4" CRUSHED STONE BASE (No.57) AND ARE TO BE REINFORCED WITH WIRE MESH.
31. CONCRETE STAIRS AND PIPE HANDRAILS, IF REQUIRED, SHALL CONFORM TO AFOREMENTIONED HOWARD COUNTY STANDARDS, PLATE G-7.01 & G-7.02.
32. UNLESS OTHERWISE NOTED, PAVEMENT MARKINGS SHALL BE TRAFFIC WHITE. ALL PARKING SPACES SHALL BE PAVED WITH DURABLE DUSTLESS SURFACE, PROPERLY DRAINED AND ALL PARKING SPACES SHALL BE STRIPPED PERMANENTLY.
33. CONTRACTOR SHALL PROVIDE ALL PAVEMENT MARKINGS AND SIGNAGE FOR HANDICAP SPACES INDICATED ON HEREON IN ACCORDANCE WITH ALL APPLICABLE CODES.
34. HANDICAP SPACES AND CURB RAMPS SHALL COMPLY WITH CURRENT A.D.A. GUIDELINES FOR SLOPE, LINE PAINTING, MATERIAL, AND SIGNAGE.
35. THE R1-1 (STOP) SIGN AND THE STREET NAME SIGN (SNS) ASSEMBLY FOR THIS DEVELOPMENT MUST BE INSTALLED BEFORE THE BASE PAVING IS COMPLETED.
36. THE TRAFFIC CONTROL DEVICE LOCATIONS SHOWN ON THE PLANS ARE APPROXIMATE AND MUST BE FIELD APPROVED BY HOWARD COUNTY TRAFFIC DIVISION (410-313-2430) PRIOR TO THE INSTALLATION OF ANY OF THE TRAFFIC CONTROL DEVICES.
37. ALL TRAFFIC CONTROL DEVICES AND THEIR LOCATIONS SHALL BE IN ACCORDANCE WITH THE LATEST EDITION OF THE 2011 MARYLAND MANUAL ON UNIFORM TRAFFIC CONTROL DEVICES (MdMUTCD).
38. ALL SIGN POSTS USED FOR TRAFFIC CONTROL SIGNS INSTALLED IN THE COUNTY RIGHT-OF-WAY SHALL BE MOUNTED ON A 2" GALVANIZED STEEL, PERFORATED (QUICK PUNCH TYPE), SQUARE TUBE POST (14 GAUGE) INSERTED INTO A 2 - 1/2 " GALVANIZED STEEL, PERFORATED, SQUARE TUBE POST (12 GAUGE) - 3' LONG. THE ANCHOR SHALL NOT EXTEND MORE THAN TWO QUICK PUNCH HOLES ABOVE GROUND LEVEL. A GALVANIZED STEEL POLE CAP SHALL BE MOUNTED ON TOP OF EACH POST.
39. ALL DISTURBED AREAS NOT TO RECEIVE PAVING SHALL BE STABILIZED WITH MINIMUM OF 6" TOPSOIL, SEED AND MULCH, UNLESS SPECIFIED OTHERWISE ON SEDIMENT CONTROL OR LANDSCAPE PLANS.
40. CONTRACTOR SHALL FINE GRADE LANDSCAPE AREAS TO 6" BELOW TOP OF CURB AND SIDEWALK. OWNER / OPERATOR SHALL FINISH GRADING AND PROVIDE TOPSOIL.
41. IF REQUIRED, CONCRETE WHEEL STOPS SHALL BE INSTALLED WHERE SHOWN ON PLAN AND SHALL BE PRECAST, STANDARD CONCRETE, ANCHORED TO PAVEMENT WITH 2 STEEL RODS PER EACH WHEEL STOP DRIVEN MINIMUM OF 8" INTO BITUMINOUS CONCRETE PAVEMENT OR TWO DOWELLS PER EACH WHEEL STOP GROUTED MINIMUM OF 4" INTO CEMENT CONCRETE PAVEMENT.
42. A 5' PATH AT 2% (MAX.) CROSS SLOPE MUST BE MAINTAINED ACROSS ALL ENTRANCES.
43. IF REQUIRED, GUARDRAIL SHALL BE INSTALLED WHERE SHOWN ON PLAN AND SHALL BE STATE OF MARYLAND STATE HIGHWAY ADMINISTRATION GUARDRAIL WITH BEAN, STANDARD NO. 660.00 SERIES INCLUDING END SECTION AT ALL TERMINUS.
44. SEE SPECIFIC PLANS (DEMOLITION, GRADING, ETC.) FOR ADDITIONAL GENERAL NOTES.
45. SEE ARCHITECTURAL PLANS FOR EXACT BUILDING DIMENSIONS, DOOR AND STEP LOCATIONS, OR OTHER ITEMS ADJACENT TO THE BUILDING.
46. THE SUBJECT PROPERTY IS ZONED M-2 PER THE OCTOBER 6, 2013 COMPREHENSIVE ZONING PLAN.
47. NO GRADING, REMOVAL OF VEGETATIVE COVER OR TREES, PAVING AND NEW STRUCTURES SHALL BE PERMITTED WITHIN THE REQUIRED WETLANDS, STREAM(S) OR THEIR BUFFERS, FOREST CONSERVATION EASEMENT AREAS AND 100 YEAR FLOODPLAIN.

SITE NOTES

1. MINIMUM SETBACK REQUIREMENT:
   FROM ANY EXTERNAL PUBLIC STREET RIGHT-OF-WAY: 50 FT
   EXCEPT FOR PARKING USES AND FENCES ADJOINING PARKING USES: 30 FT

   FROM ANY INTERNAL PUBLIC STREET RIGHT OF WAY: 50 FT
   EXCEPT FOR PARKING USES AND FENCES ADJOINING PARKING USES: 10 FT

   FROM ANY RESIDENTIAL DISTRICT: 150 FT
   ADMINISTRATIVE ADJUSTMENT REQUEST AA14-002 TO REDUCE THE REQUIRED 150 FT STRUCTURE AND USE SETBACK FROM A RESIDENTIAL DISTRICT (ZONING REGULATIONS SECTION 123.0D.2.C) TO 120 FT FOR A PARKING AREA WAS APPROVED ON MARCH 12, 1014 SUBJECT TO THE FOLLOWING CONDITIONS:
   1. THE PETITIONER SHALL COMPLY WITH ALL FEDERAL, STATE AND COUNTY LAWS AND REGULATIONS.
   2. THE GRANTED ADMINISTRATIVE ADJUSTMENT SHALL APPLY SOLELY TO THE PARKING DRIVE AISLE AS DEPICTED ON THE ADMINISTRATIVE ADJUSTMENT PLAN SUBMITTED BY THE PETITIONER AND NOT TO ANY OTHER STRUCTURE, ADDITION, BUILDING OR USE. *
   3. THIS DECISION AND ORDER SHALL BE MAINTAINED IN THE OWNERS' PROPERTY RECORDS AND SHALL BE TRANSFERRED TO ANY SUCCEEDING OWNER OF THE PROPERTY.

   *THIS DECISION AND ORDER HAD ORIGINALLY BEEN SIGNED BY THE PLANNING DIRECTOR ON MARCH 5, 2014. SUBSEQUENT TO THE ISSUANCE OF THAT DECISION, IT WAS DISCOVERED THAT APPROVAL CONDITION •2 CONTAINED AN ERRONEOUS REFERENCE TO RETAINING WALL. THIS REVISED DECISION AND ORDER CORRECTS AND SUPERSEDES THAT OF MARCH 5, 2014.
2. LANDSCAPE REQUIREMENTS:
   THIS PLAN HAS BEEN PREPARED IN ACCORDANCE WITH THE PROVISIONS OF SECTION 16.124 OF THE HOWARD COUNTY CODE AND LANDSCAPE MANUAL. LANDSCAPE SURETY IS BASED ON REQUIRED PLANTING ONLY AND NO SURETY IS REQUIRED FOR EXISTING LANDSCAPING THAT IS CREDITED TOWARD LANDSCAPING REQUIREMENTS. FINANCIAL SURETY FOR THE REQUIRED LANDSCAPING HAS BEEN POSTED AS PART OF THE DPW DEVELOPER'S AGREEMENT IN THE AMOUNT OF $24,300. (35 SHADE TREES AT $10,500 AND 92 EVERGREEN TREES AT $13,800 ARE BEING PROVIDED FOR A TOTAL SURETY OF $24,300).
3. STORM WATER MANAGEMENT (SWM):
   SWM SHALL BE ADDRESSED ACCORDING TO NEW DEVELOPMENT REQUIREMENTS. SIX (6) SWM FACILITIES: TWO (2) MICRO-BIORETENTION, THREE (3) SUBMERGED GRAVEL WETLANDS AND PERVIOUS CONCRETE HAVE BEEN PROVIDED ONSITE TO FULFILL ESD VOLUME REQUIREMENTS. RECHARGE REQUIREMENTS ARE BEING FULFILLED THROUGH A STONE TRENCH UNDER ESD PRACTICE •2 AND •3. ALL SWM DEVICES SHALL BE PRIVATELY OWNED AND MAINTAINED.
4. THE SUBSURFACE EXPLORATION AND GEOTECHNICAL ENGINEERING ANALYSIS FOR THIS PROJECT WAS MADE ON AUGUST, 2013 BY RUELING ASSOCIATES, INC.
5. A TRAFFIC STUDY WAS PREFORMED BY TRAFFIC CONCEPTS, INC. DATED JANUARY, 2014. A NOISE STUDY IS NOT REQUIRED FOR THIS INDUSTRIAL ZONED PROPERTY.
6. ALL ON-SITE DRIVEWAYS AND PARKING AREAS TO BE PRIVATELY MAINTAINED.
7. THERE ARE NO EXISTING OR PROPOSED WELL OR SEPTIC AREAS.
8. EXISTING PUBLIC WATER AND PUBLIC SEWER PROVIDED BY CONTRACT NUMBERS: 664-D, 24-3519-D & F-83-62. PROPOSED ON-SITE PUBLIC WATER AND SEWER PROVIDED BY CONTRACT NO. 24-4861-D.
9. THERE ARE NO KNOWN WETLANDS REQUIRING REGULATION, CRITICAL AREAS, ARCHEOLOGICAL SITES, ENDANGERED SPECIES HABITATS, OR HAZARDOUS MATERIALS ON SITE.
10. FOREST CONSERVATION REQUIREMENTS:
    THIS PROJECT COMPLIES WITH THE REQUIREMENTS OF SECTION 16.1200 OF THE HOWARD COUNTY CODE FOR FOREST CONSERVATION BY PROVIDING 4.0 ACRES OF REFORESTATION AND THE RETENTION OF 1.66 ACRES OF ONSITE FOREST. THE PLANTING WILL BE PROVIDED WITH 0.05 ACRES ONSITE AND 3.95 ACRES OFFSITE ON THE HAY MEDOW FARM PROPERTY. A SURETY FOR THE ONSITE/OFFSITE PLANTING WILL BE REQUIRED TO BE POSTED AS PART OF THE DPW DEVELOPER'S AGREEMENT. THE SURETY WILL BE BASED ON $0.50 PER SQUARE FOOT OF PLANTING. THE SURETY FOR ONSITE PLANTING WILL BE $1,089.00 AND FOR OFFSITE PLANTING WILL BE $86,031.00.
11. THERE ARE NO HISTORIC BUILDINGS ON THIS PROPERTY.
12. FLOOD MAP INFORMATION:
    SITE IS SHOWN ON MAP ENTITLED "FIRM FLOOD INSURANCE RATE MAP, HOWARD COUNTY, MARYLAND, UNINCORPORATED AREAS, PANEL 170 OF 235, COMMUNITY PANEL NUMBER 24027C0170D, MAP REVISED NOVEMBER 6, 2013" AND IS LOCATED IN ZONE X (AREAS DETERMINED TO BE OUTSIDE THE 0.2% ANNUAL CHANCE FLOODPLAIN).
13. THIS SITE IS NOT LOCATED WITHIN THE CHESAPEAKE BAY CRITICAL AREA.
14. LIGHTING SHALL BE ERECTED AS NOT TO REFLECT INTO ANY ADJOINING RESIDENTIAL AREAS AND PUBLIC ROADS.

    ALL EXTERIOR LIGHTING SHALL COMPLY WITH SECTION 134 OF THE HOWARD COUNTY ZONING REGULATIONS. LIGHT TRESPASS ONTO ADJACENT RESIDENTIAL PROPERTIES SHALL BE LIMITED TO 0.1 FOOT CANDLES PER SECTION 134.D.
15. THE BOUNDARY SHOWN HEREON WAS TAKEN FROM ALTA/ACSM LAND TITLE SURVEY PREPARED BY MTPLS LAND SURVEYORS, LLC ON JULY 4, 2013.

    THE EXISTING FIELD RUN TOPOGRAPHY WITH TWO FOOT CONTOUR INTERVALS WAS PREPARED BY MTPLS LAND SURVEYORS, LLC ON JULY 4, 2013.
16. THERE ARE NO KNOWN CEMETERIES OR BURIAL GROUNDS ON THIS SITE. HOWEVER, UPON DISCOVERY OF ANY EVIDENCE OF BURIAL OR GRAVES, THE DEVELOPER WILL BE SUBJECT TO SECTION 16.118 OF THE HOWARD COUNTY SUBDIVISION AND LAND DEVELOPMENT REGULATIONS.
17. THERE ARE NO SLOPES 15 - 24.9%, SLOPES 25% OR GREATER, WETLANDS, WETLAND BUFFERS, STREAMS, STREAM BUFFERS AND 100-YR FLOODPLAIN WITHIN THE NET TRACT AREA.
18. THIS SDP IS SUBJECT TO THE AMENDED FIFTH EDITION OF THE SUBDIVISION AND LAND DEVELOPMENT REGULATIONS PER COUNCIL BILL NO. 45-2003 AND THE AMENDED ZONING REGULATIONS PER COUNCIL NO. 75-2003 AND THE "COMP LITE" ZONING AMENDMENTS EFFECTIVE AUGUST, 2007. DEVELOPMENT OR CONSTRUCTION ON THIS PROPERTY MUST COMPLY WITH SETBACK AND BUFFER REGULATIONS IN EFFECT AT THE TIME OF SUBMISSION OF THE SITE DEVELOPMENT PLAN, WAIVER PETITION APPLICATION OR BUILDING/GRADING PERMIT APPLICATIONS.
19. THE ENVIRONMENTAL CONCEPT PLAN (ECP-14-004) WAS APPROVED ON DEC. 20, 2013.
20. PROPOSED BUILDINGS WILL HAVE AUTOMATIC FIRE PROTECTION SPRINKLER SYSTEMS.
21. THIS PROPERTY IS LOCATED WITHIN THE METROPOLITAN DISTRICT.
22. HEALTH DEPARTMENT APPROVAL OF THIS SITE DEVELOPMENT PLAN (SDP-14-068) DOES NOT ENSURE APPROVAL OF BUILDING PERMIT APPLICATIONS ASSOCIATED WITH THIS PLAN. PLANS FOR THE WAREHOUSE FACILITY TO BE CONSTRUCTED WITHIN THE LIMITS OF DESCRIBED BY SDP-14-068 WILL REQUIRE REVIEW AND APPROVAL BY THE STATE DEPARTMENT OF HEALTH AND MENTAL HYGIENE, FOOD PROTECTION PROGRAM (410-767-8400).
23. A COMMUNITY PRE-SUBMISSION MEETING WAS CONDUCTED ON JANUARY 13, 2014 AT THE DEEP RUN ELEMENTARY AT 6:30PM.
24. A KNOX BOX (FIRE DEPARTMENT ACCESS BOX) IS REQUIRED TO BE PLACED ON THE FRONT OF THE BUILDING. IT SHALL BE PLACED TO THE RIGHT OF THE MAIN ENTRANCE AT A RANGE OF 4' TO 5' IN HEIGHT AND NO MORE THAN 6' LATERALLY FROM THE DOOR. THE BOX SHALL BE ELECTRONICALLY SUPERVISED TO NOTIFY THE OWNER THAT IT IS BEING ACCESSED (INTEGRATED WITH THE FIRE ALARM SYSTEM).
25. IN ACCORDANCE TO THE MITIGATION PROPOSAL FOR THE MARYLAND FOOD CENTER AUTHORITY ADDRESSING THE EVENING CRITICAL LANE VOLUME DEFICIENCY AT THE US 1/MD 175 INTERSECTION, A FEE-IN-LIEU IN THE AMOUNT OF $33,621.59 HAS BEEN POSTED.
26. THIS SDP WILL BE REDLINED PRIOR TO THE RELEASE OF THE USE AND OCCUPANCY PERMIT FOR BUILDING I TO SHOW PROPOSED IMPROVEMENTS AT THE INTERSECTION OF OCEANO AVE AND CHESAPEAKE BAY COURT. THESE PUBLIC IMPROVEMENTS (SIDEWALK AND 'UNMARKED' CROSSWALKS) ARE BASED ON THE MARKED-UP PLAN GENERATED BY THE DEVELOPMENT ENGINEERING DIVISION DATED APRIL 17, 2014. △4

SHEET INDEX

1 OF 57	C-1	COVER SHEET
2 OF 57	C-2	SOILS MAP & EXISTING CONDITION PLAN
3 OF 57	C-3	PARKING EXHIBIT
4 OF 57	C-4	PROPOSED BUILDING CROSS SECTIONS
5 OF 57	C-5	SITE PLAN - PLAN VIEW I
6 OF 57	C-6	SITE PLAN - PLAN VIEW II
7 OF 57	C-7	SITE PLAN - PLAN VIEW III
8 OF 57	C-8	GRADING PLAN - PLAN VIEW I
9 OF 57	C-9	GRADING PLAN - PLAN VIEW II
10 OF 57	C-10	GRADING PLAN - PLAN VIEW III
11 OF 57	C-11	UTILITY PLAN - PLAN VIEW I
12 OF 57	C-12	UTILITY PLAN - PLAN VIEW II
13 OF 57	C-13	UTILITY PLAN - PLAN VIEW III
14 OF 57	C-14	UTILITY PLAN - DRAINAGE AREA MAP & STRUCTURE SCHEDULE
15 OF 57	C-15	UTILITY PROFILES - STORM DRAIN
16 OF 57	C-16	UTILITY PROFILES - STORM DRAIN
17 OF 57	C-17	UTILITY PROFILES - STORM DRAIN
18 OF 57	C-18	UTILITY PROFILES - SANITARY SEWER
19 OF 57	C-19	EROSION AND SEDIMENT CONTROL PLAN - OVERALL PLAN
20 OF 57	C-20	EROSION AND SEDIMENT CONTROL PLAN - PLAN VIEW I
21 OF 57	C-21	EROSION AND SEDIMENT CONTROL PLAN - PLAN VIEW II
22 OF 57	C-22	EROSION AND SEDIMENT CONTROL PLAN - PLAN VIEW III
23 OF 57	C-23	EROSION AND SEDIMENT CONTROL PLAN - SEDIMENT BASIN •1
24 OF 57	C-24	EROSION AND SEDIMENT CONTROL PLAN - EXISTING DRAINAGE AREA MAP
25 OF 57	C-25	EROSION AND SEDIMENT CONTROL PLAN - PROPOSED DRAINAGE AREA MAP
26 OF 57	C-26	EROSION AND SEDIMENT CONTROL PLAN - SPECIFICATIONS
27 OF 57	C-27	EROSION AND SEDIMENT CONTROL PLAN - DETAILS
28 OF 57	C-28	STORM WATER MANAGEMENT PLAN - PROPOSED DRAINAGE AREA MAP
29 OF 57	C-29	STORM WATER MANAGEMENT PLAN - ESD •1 & •5
30 OF 57	C-30	STORM WATER MANAGEMENT PLAN - ESD •2, •3 & PERVIOUS CONCRETE
31 OF 57	C-31	STORM WATER MANAGEMENT PLAN - ESD •4
32 OF 57	C-32	STORM WATER MANAGEMENT PLAN - DETAILS - ESD •1 & •5
33 OF 57	C-33	STORM WATER MANAGEMENT PLAN - DETAILS - ESD•4
34 OF 57	C-34	STORM WATER MANAGEMENT PLAN - CONSTRUCTION SPECS & NOTES
35 OF 57	C-35	STORM WATER MANAGEMENT PLAN - CONSTRUCTION SPECS & NOTES
36 OF 57	C-36	STORM WATER MANAGEMENT PLAN - LANDSCAPE PLAN I
37 OF 57	C-37	STORM WATER MANAGEMENT PLAN - LANDSCAPE PLAN II
38 OF 57	C-38	LANDSCAPE PLAN - PLAN VIEW I
39 OF 57	C-39	LANDSCAPE PLAN - PLAN VIEW II
40 OF 57	C-40	LANDSCAPE PLAN - PLAN VIEW III
41 OF 57	C-41	SITE DETAILS I
42 OF 57	C-42	SITE DETAILS II - HANDICAP ACCESSIBLE ROUTES FOR BUILDINGS 1 & 2
43 OF 57	C-43	SITE DETAILS III - HANDICAP ACCESSIBLE ROUTES FOR BUILDINGS 3 & 4
44 OF 57	C-44	FOREST CONSERVATION PLAN - PLAN VIEW I
45 OF 57	C-45	FOREST CONSERVATION PLAN - PLAN VIEW II
46 OF 57	C-46	FOREST CONSERVATION PLAN - PLAN VIEW III
47 OF 57	C-47	FOREST CONSERVATION PLAN - NOTES, DETAILS AND SPECIFICATIONS
48 OF 57	C-48	FOREST CONSERVATION PLAN - OFFSITE PLANTING PLAN
49 OF 57	C-49	SCHEMATIC PROFILE OF PROPOSED BUILDINGS - BUILDING I
50 OF 57	C-50	SCHEMATIC PROFILE OF PROPOSED BUILDINGS - BUILDING II
51 OF 57	C-51	SCHEMATIC PROFILE OF PROPOSED BUILDINGS - BUILDING III
52 OF 57	C-52	SCHEMATIC PROFILE OF PROPOSED BUILDINGS - BUILDING IV
53 OF 57	C-53	LIGHTING PLAN - PLAN VIEW I
54 OF 57	C-54	LIGHTING PLAN - PLAN VIEW II
55 OF 57	C-55	LIGHTING PLAN - PLAN VIEW III
56 OF 57	C-56	RETAINING WALL PLAN - PLAN AND DETAILS
57 OF 57	C-57	RETAINING WALL PLAN - ELEVATION

LEGEND

RIGHT-OF-WAY LINE	
PROPERTY LINE	
EX. EASEMENT	
ZONING LINE	M-2 / R-20
EX. CONCRETE CURB AND GUTTER	EX.C&G
EX. CONCRETE	
TO BE REMOVED DESIGNATION	(TBR)
EX. BUILDING	
EX. CHAINLINK FENCE	—X—X—X—
EX. STORM DRAIN, MANHOLE & INLET	EX.15"D
EX. SANITARY SEWER, MANHOLE & CLEANOUT	EX.8"S
EX. WATER MAIN, VALVE & FIRE HYDRANT	EX.8"W
EX. LIGHT	
EX. INDEX CONTOURS	210
EX. INTERMEDIATE CONTOURS	212
EX. TREE LINE	
EX. SOIL LINE	UtD (D) / UsD (D)
"EXISTING" DESIGNATION	EX.
BUILDING RESTRICTION LINE	BRL
LANDSCAPE RESTRICTION LINE	LRL
PR. EASEMENT	
PR. CONCRETE CURB & GUTTER	PR.C&G
PR. LIGHT & HEAVY DUTY PAVING	
PR. CONCRETE	
PR. RIP-RAP	
PR. STORM DRAIN, MANHOLE & INLET	PR.15"D
PR. UNDERDRAIN	PR.4"D
PR. SANITARY SEWER & CLEANOUT	PR.6"S
PR. WATER MAIN, VALVE & FIRE HYDRANT	PR.6"W
PR. INDEX CONTOURS	210
PR. INTERMEDIATE CONTOURS	212
PR. RETAINING WALL	
PR. PARKING COUNT	(8)
"PROPOSED" DESIGNATION	PR.
LIMIT OF DISTURBANCE	
SOIL BORINGS	SWM-1
PR. TREE LINE	
PR. ONSITE LIGHTS:	
TWIN (ST2-HS)	
SINGLE (S1-HS)	
BACK-BACK (S2)	
SINGLE (SWP)	

MORRIS & RITCHIE ASSOCIATES, INC.
ENGINEERS, PLANNERS, SURVEYORS AND LANDSCAPE ARCHITECTS
14280 PARK CENTER DRIVE - LAUREL, MD 20707
(410) 792-9792 / (301) 776-1690 FAX: (410) 792-7395
MRAGTA.COM

COPYRIGHT MORRIS & RITCHIE ASSOCIATES, INC. 2015

FOR REVISION #3 ONLY #4

MD PROFESSIONAL CERTIFICATION:
I HEREBY CERTIFY THAT THESE DOCUMENTS WERE PREPARED OR APPROVED BY ME, AND THAT I AM A DULY LICENSED PROFESSIONAL ENGINEER UNDER THE LAWS OF THE STATE OF MARYLAND,
LICENSE NO.: 29203
EXPIRATION DATE: 06/16/2017

STATE OF MARYLAND — THOMAS C. NEUGEBAUER — 29203 — PROFESSIONAL ENGINEER — 11-30-15

BENCH MARK

ELEVATIONS ARE BASED ON NAD '83/'91 AS PROJECTED BY HOWARD COUNTY CONTROL POINTS:

CONTROL POINT: 43HA
N 540,761.71; E 1,373,837.33
EL.224.21

CONTROL POINT: 43HC
N 543,386.16; E 1,374,935.81
EL.253.87

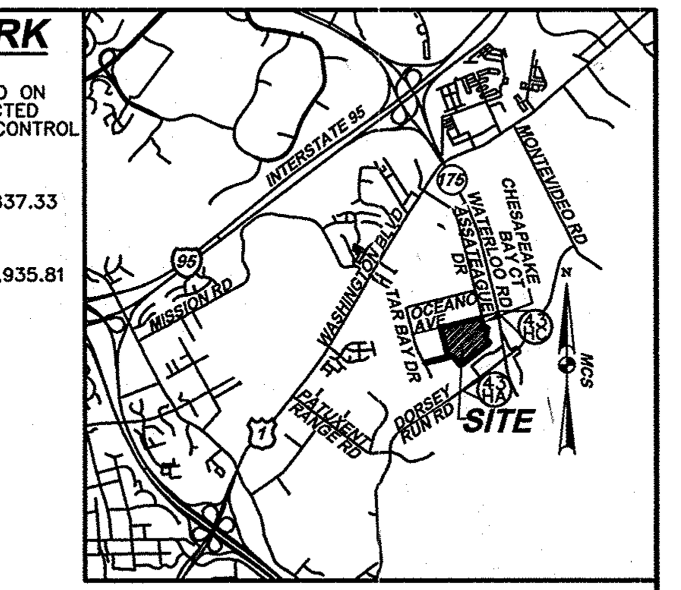

VICINITY MAP

SCALE: 1" = 2000'

ADC MAP NUMBER: 41, GRID: 1D AND 2D
ADC MAP COORDINATES: 76° 47'00" / 39° 08'30"

SITE DATA

I. GENERAL SITE DATA:

1. TOTAL SITE AREA: 35.97 Ac
   PARCEL B-1: 29.54 Ac
   PARCEL E-1: 6.43 Ac
2. DEED REFERENCES:
   PARCEL B: 506/782
   PARCEL E: 510/205
3. TAX ACCOUNT NUMBERS:
   PARCEL B: 06-478859
   PARCEL E: 06-554318
4. PRESENT ZONING: M-2
5. APPLICABLE DPZ FILE REFERENCES:
   F-82-120, F-83-062, F-15-027, SDP-83-188, SDP-87-001, ECP-14-004
6. EXISTING USE: WAREHOUSE/OFFICE
7. PROPOSED USE: WAREHOUSE/OFFICE
8. EXISTING WATER: PUBLIC (CONTRACT •664-D)
9. EXISTING SEWER: PUBLIC (CONTRACT •664-D)
10. MAXIMUM BUILDING HEIGHT:
    ALLOWED: 50'
    PROPOSED: 26'

II. AREA TABULATION:

1. TOTAL SITE AREA: 1,566,820 SF or 35.969 Ac
2. TOTAL DISTURBED AREA: 1,075,950 SF or 24.70 Ac
3. TOTAL IMPERVIOUS AREA: 787,492 SF or 18.08 Ac
   (73.2% - BASED ON LIMIT OF DISTURBANCE)
4. BUILDING COVERAGE TO OVERALL SITE: 23.9%
   (TOTAL BUILDING AREA - 374,321 SF or 8.59 Ac) △3

III. PARKING SPACE DATA:

1. EXISTING BUILDINGS AS PER SDP-83-188
   A. PARKING SPACES REQUIRED:
      69,068 SF WAREHOUSE @ 1 PS / 500 SF = 138
      * 4,300 SF RETAIL SALES @ 1 PS / 150 SF = 29
      17,731 SF OFFICE - 70 EMPLOYEES @ 7PS / 10 EMPL. = 49
      TOTAL 216

      RESTAURANT:
      12 EMPLOYEES @ 1 PS / 2 EMPLOYEES 6
      84 SEATS @ 1 PS / 3 SEATS 28
      TOTAL 34

      MAINTENANCE BUILDING:
      10 EMPLOYEES @ 1 PS / 2 EMPLOYEES 5

   TOTAL PARKING SPACES REQUIRED: 255

   B. PARKING SPACES PROVIDED: 319
      TOTAL INCLUDES:
      STANDARD SPACES @ 9' x 18': 311
      VAN ACCESSIBLE HC SPACES @ 24' x 18': 4
      HANDICAP SPACES @ 13' x 18': 4
2. PROPOSED BUILDINGS (ALL PROP. BLDGS ARE 1-STORY HIGH):
   A. PARKING SPACES REQUIRED:

      BUILDING I (88,338 SF)
      WAREHOUSE - 75,138 SF @ 0.75 PS/1,000 SF = 57 PS
      OFFICE - 13,200 SF @ 3.3 PS/1,000 SF = 45 PS
      BUILDING II (70,000 SF)
      WAREHOUSE - 59,500 SF @ 0.75 PS/1,000 SF = 45 PS
      OFFICE - 10,500 SF @ 3.3 PS/1,000 SF = 35 PS
      BUILDING III (104,450 SF: EXPANSION/ADDITION)
      WAREHOUSE - 99,227.50 SF @ 0.75 PS/1,000 SF = 75 PS
      OFFICE - 5,222.50 SF @ 3.3 PS/1,000 SF = 18 PS
      TRUCK WASH-OUT STATION (3,921 SF)
      NO PARKING REQUIRED

   △3 TOTAL PARKING SPACES REQUIRED = 275

   B. PARKING SPACES PROVIDED: 283
      TOTAL INCLUDES:
      STANDARD SPACES @ 9' x 18': 268
      VAN ACCESSIBLE HC SPACES @ 24' x 18' (TWO SIDE BY SIDE): 6
      HANDICAP SPACE @ 13' x 18': 9

APPROVED: FOR PUBLIC WATER AND PUBLIC SEWERAGE

BNelson for Maura Rossman 11/17/2014
County Health Officer — Date
Howard County Health Department

APPROVED: DEPARTMENT OF PLANNING AND ZONING

Chief, Development Engineering Division — 11.6.14 — Date
Chief, Division of Land Development — 11-20-14 — Date
Director — 11/21/14 — Date

ADDRESS CHART

LOT / PARCEL NO.	STREET ADDRESS
PARCEL B-1	7901 OCEANO AVENUE
PARCEL E-1	7775 CHESAPEAKE BAY COURT
PARCEL B-1	7725 CHESAPEAKE BAY COURT (TRUCK WASH FACILITY)

PERMIT INFORMATION CHART

SUBDIVISION NAME			SECTION / AREA		LOT / PARCEL NO.
MARYLAND FOOD CENTER AUTHORITY			3		B-1/662 & E-1/696
PLAT NO. or L/F	GRID NO.	ZONING	TAX MAP NO.	ELEC. DIST.	CENSUS TRACT
23017-23021	21	M-2	43	6TH	6069.01

THE COORDINATE SYSTEM OF ALL DRAWINGS IS BASED ON THE NORTH AMERICAN DATUM OF 1983. THE ELEVATION SYSTEM OF ALL DRAWINGS IS BASED ON THE NORTH AMERICAN VERTICAL DATUM OF 1988.
HORZ: NAD 83/91; VERT: NAVD 88

50 30 0 50

REVISIONS

DATE	NO.	DESCRIPTION	BY
9/18/15	3	REPLACED BUILDING IV WITH TRUCK WASH-OUT STATION	MRA
6/1/2016	4	REVISED GREASE TRAP FOR TRUCK WASHOUT STATION	MRA

BLDG
Baltimore Land Design Group Inc.
Consulting Engineers
230 SCHILLING CIRCLE, SUITE 364 • HUNT VALLEY, MARYLAND 21031
PHONE: 410.229.9851 • FAX: 410.229.9865 • BLDG@BLDGINC.COM

STATE OF MARYLAND — BOARD FOR PROFESSIONAL ENGINEERS — ROSTEK-ZARSKI — 21245 — 10/15/14

PROFESSIONAL CERTIFICATION

I HEREBY CERTIFY THAT THESE DOCUMENTS WERE PREPARED OR APPROVED BY ME, AND THAT I AM A DULY LICENSED PROFESSIONAL ENGINEER UNDER THE LAWS OF THE STATE OF MARYLAND, LICENSE NO. 21245, EXPIRATION DATE: JUNE 9, 2016.

OWNER

MARYLAND FOOD CENTER AUTHORITY
7801 OCEANO AVE
JESSUP, MD 20794
PHONE (410) 379-5760
FAX (410) 379-5773

DEVELOPER / APPLICANT

MERRITT PROPERTIES, LLC
2066 LORD BALTIMORE DRIVE
BALTIMORE, MD 21244
PHONE (410) 298-2600
FAX (410) 298-9644

REVISED SITE DEVELOPMENT PLAN
COVER SHEET

MARYLAND FOOD CENTER AUTHORITY

PARCEL B-1 & E-1
(WAREHOUSE & OFFICE)

HOWARD COUNTY, MARYLAND
SCALE: 1" = 50'

DATE: OCTOBER, 2014

DRAWING NO.
C-1

SDP-14-068

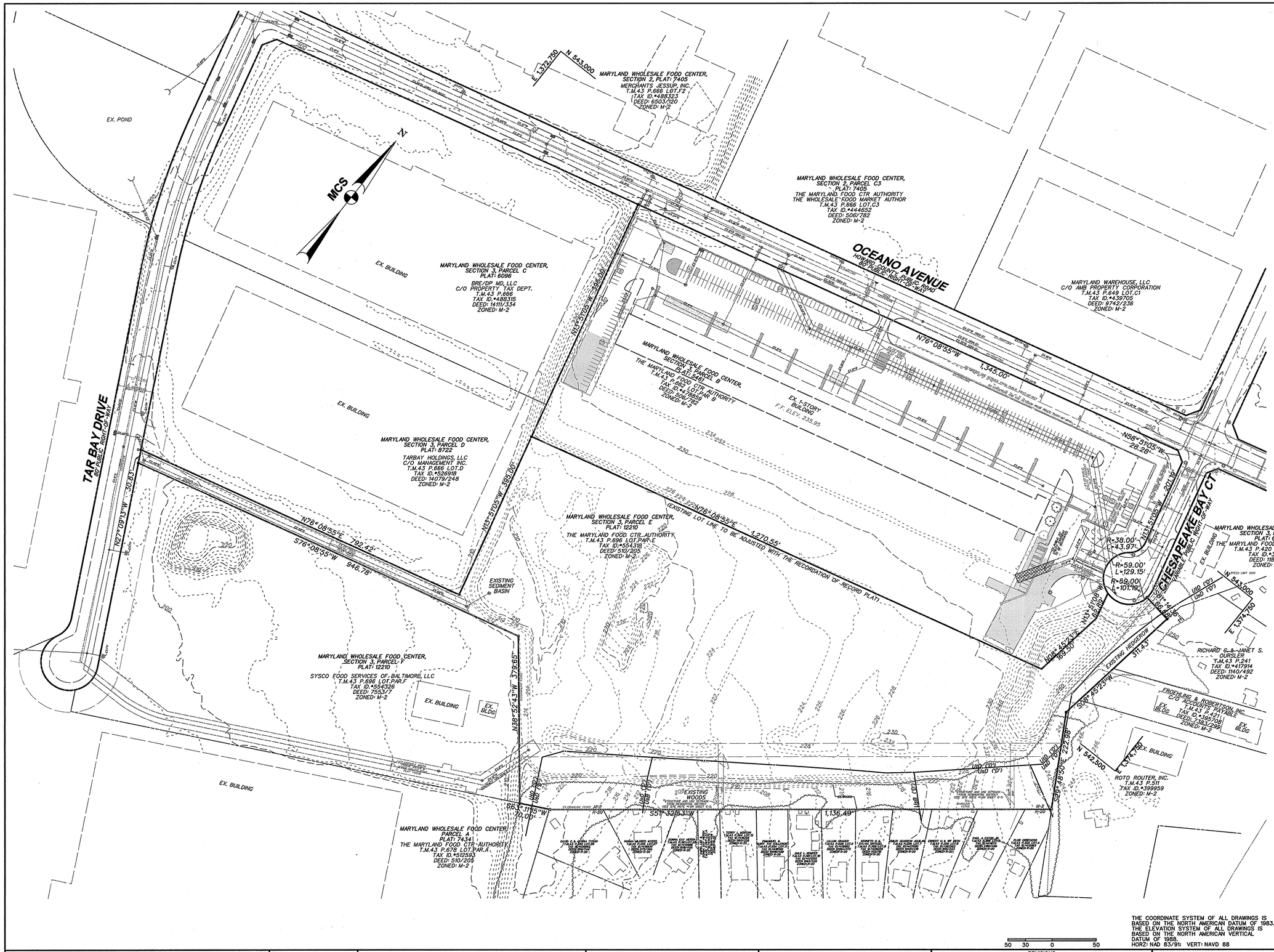

SOIL CLASSIFICATION		
UtD	Urban Land - Udorthents complex, 0 to 15 percent slopes	D

NOTE: THIS SOIL TYPE IS NOT HYDRIC.

EXISTING IMPERVIOUS AREA WITHIN LOD

APPROVED: DEPARTMENT OF PLANNING AND ZONING

Chief, Development Engineering Division — Date 11-6-14

Chief, Division of Land Development — Date 11-20-14

Director — Date 11/20/14

ADDRESS CHART	
LOT / PARCEL NO.	STREET ADDRESS
PARCEL B-1	7901 OCEANO AVENUE
PARCEL E-1	7775 CHESAPEAKE BAY COURT

THE COORDINATE SYSTEM OF ALL DRAWINGS IS BASED ON THE NORTH AMERICAN DATUM OF 1983. THE ELEVATION SYSTEM OF ALL DRAWINGS IS BASED ON THE NORTH AMERICAN VERTICAL DATUM OF 1988.
HORZ: NAD 83/91; VERT: NAVD 88

50 30 0 50

PERMIT INFORMATION CHART

SUBDIVISION NAME	SECTION / AREA	LOT / PARCEL NO.
MARYLAND FOOD CENTER AUTHORITY	3	B-1/662 & E-1/696

PLAT NO. or L/F	GRID NO.	ZONING	TAX MAP NO.	ELEC. DIST.	CENSUS TRACT
23017-23021	21	M-2	43	6TH	6069.01

BLDG
Baltimore Land Design Group Inc.
Consulting Engineers
230 SCHILLING CIRCLE, SUITE 364 • HUNT VALLEY, MARYLAND 21031
PHONE: 410.229.9851 • FAX: 410.229.9865 • BLDG@BLDGINC.COM

STATE OF MARYLAND — REGISTERED PROFESSIONAL ENGINEER — 21245 — STEVEN ROSTEK-ZARSKY — 10/15/14

PROFESSIONAL CERTIFICATION

I HEREBY CERTIFY THAT THESE DOCUMENTS WERE PREPARED OR APPROVED BY ME, AND THAT I AM A DULY LICENSED PROFESSIONAL ENGINEER UNDER THE LAWS OF THE STATE OF MARYLAND, LICENSE NO. 21245, EXPIRATION DATE: JUNE 9, 2016.

OWNER
MARYLAND FOOD CENTER AUTHORITY
7801 OCEANO AVE
JESSUP, MD 20794
PHONE (410) 379-5760
FAX (410) 379-5773

DEVELOPER / APPLICANT
MERRITT PROPERTIES, LLC
2066 LORD BALTIMORE DRIVE
BALTIMORE, MD 21244
PHONE (410) 298-2600
FAX (410) 298-9644

REVISIONS

DATE	NO.	DESCRIPTION	BY

SOILS MAP & EXISTING CONDITION PLAN

MARYLAND FOOD CENTER AUTHORITY
PARCEL B-1 & E-1
(WAREHOUSE & OFFICE)

HOWARD COUNTY, MARYLAND
SCALE: 1" = 100'
DATE: OCTOBER, 2014

DRAWING NO.
C-2

SHEET 2 OF 57

SDP-14-068

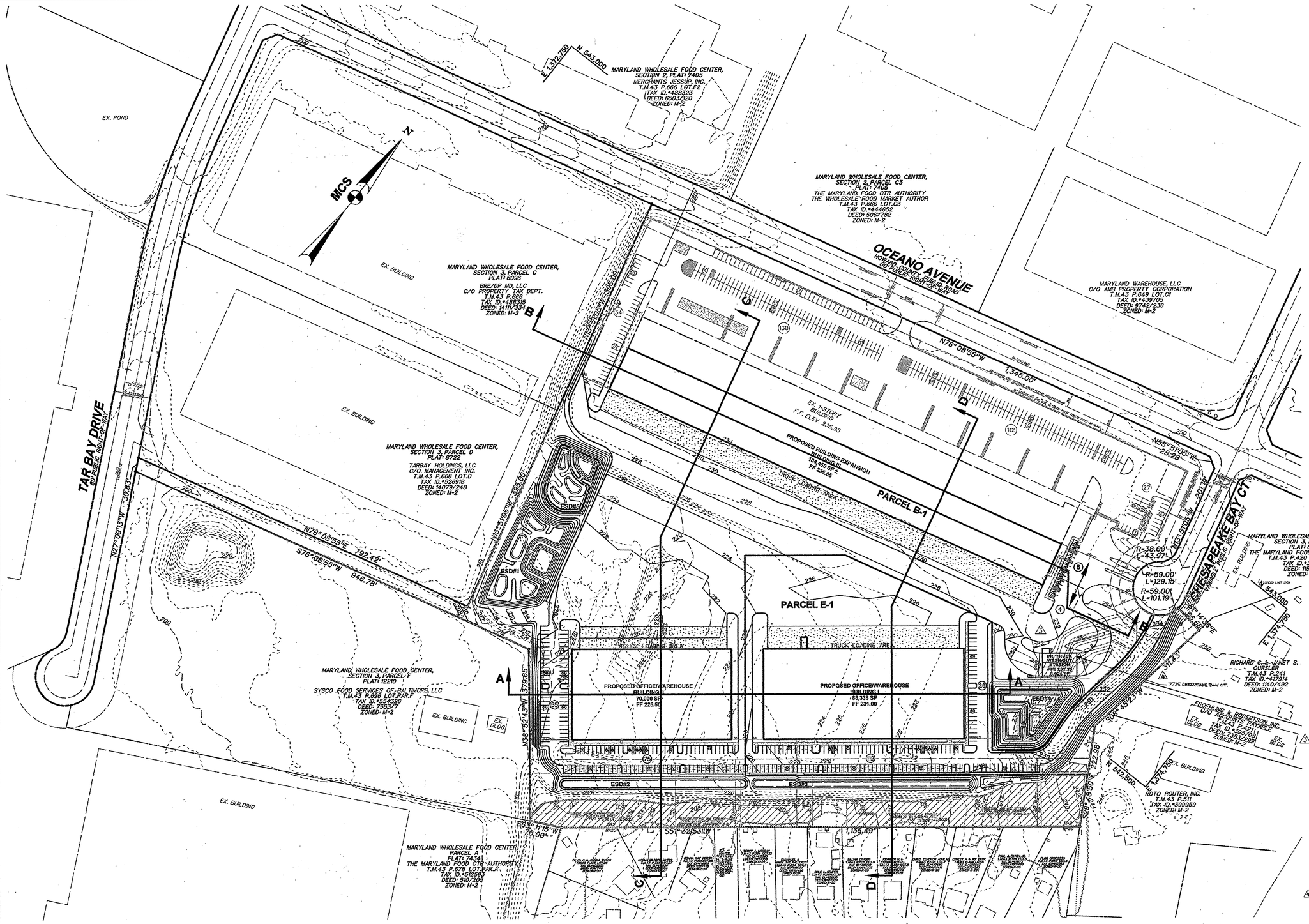

MORRIS & RITCHIE ASSOCIATES, INC.
ENGINEERS, PLANNERS, SURVEYORS AND LANDSCAPE ARCHITECTS
14280 PARK CENTER DRIVE - LAUREL, MD 20707
(410) 792-9792 / (301) 776-1680 FAX: (410) 792-7395
MRAGTA.COM

COPYRIGHT 2015 MORRIS & RITCHIE ASSOCIATES

FOR REVISION AS ONLY 4 #4

MD. PROFESSIONAL CERTIFICATION:

I HEREBY CERTIFY THAT THESE DOCUMENTS WERE PREPARED OR APPROVED BY ME, AND THAT I AM A DULY LICENSED PROFESSIONAL ENGINEER UNDER THE LAWS OF THE STATE OF MARYLAND, LICENSE NO. 29203, EXPIRATION DATE: 06/16/2017.

12-7-15

APPROVED: HOWARD COUNTY DEPARTMENT OF PLANNING AND ZONING

CHIEF, DEVELOPMENT ENGINEERING DIVISION	12-29-15 DATE
CHIEF, DIVISION OF LAND DEVELOPMENT	12-31-15 DATE
DIRECTOR, DEPARTMENT OF PLANNING AND ZONING	1-3-16 DATE

ADDRESS CHART	
LOT / PARCEL NO.	STREET ADDRESS
PARCEL B-1	7901 OCEANO AVENUE
PARCEL E-1	7775 CHESAPEAKE BAY COURT
PARCEL B-1	7725 CHESAPEAKE BAY COURT (TRUCK WASH FACILITY)

PERMIT INFORMATION CHART					
SUBDIVISION NAME			SECTION / AREA		LOT / PARCEL NO.
MARYLAND FOOD CENTER AUTHORITY			3		B-1/682 & E-1/696
PLAT NO. or L/F	GRID NO.	ZONING	TAX MAP NO.	ELEC. DIST.	CENSUS TRACT
23021-23022	21	M-2	43	6TH	6069.01

THE COORDINATE SYSTEM OF ALL DRAWINGS IS BASED ON THE NORTH AMERICAN DATUM OF 1983. THE ELEVATION SYSTEM OF ALL DRAWINGS IS BASED ON THE NORTH AMERICAN VERTICAL DATUM OF 1988.
HORZ: NAD 83/91 VERT: NAVD 88

50 30 0 50

BLDG
Baltimore Land Design Group Inc.
Consulting Engineers
230 SCHILLING CIRCLE, SUITE 364 • HUNT VALLEY, MARYLAND 21031
PHONE: 410.229.9851 • FAX: 410.229.9865 • BLDG@BLDGINC.COM

21245 — MICHAEL JOSEPH ROSTEK-ZARKOWSKI — STATE OF MARYLAND — PROFESSIONAL ENGINEER

PROFESSIONAL CERTIFICATION
I HEREBY CERTIFY THAT THESE DOCUMENTS WERE PREPARED OR APPROVED BY ME, AND THAT I AM A DULY LICENSED PROFESSIONAL ENGINEER UNDER THE LAWS OF THE STATE OF MARYLAND, LICENSE NO. 21245, EXPIRATION DATE: JUNE 9, 2016.

OWNER
MARYLAND FOOD CENTER AUTHORITY
7801 OCEANO AVE
JESSUP, MD 20794
PHONE (410) 379-5760
FAX (410) 379-5773

DEVELOPER / APPLICANT
MERRITT PROPERTIES, LLC
2066 LORD BALTIMORE DRIVE
BALTIMORE, MD 21244
PHONE (410) 298-2600
FAX (410) 298-9644

REVISIONS

DATE	NO.	DESCRIPTION	BY
9/18/15	3	REPLACED BUILDING IV WITH TRUCK WASH-OUT STATION	MRA
10/1/2015	4	REVISED GREASE TRAP FOR TRUCK WASHOUT STATION	MRA

REVISED SITE DEVELOPMENT PLAN
PARKING EXHIBIT AND BUILDING CROSS-SECTIONS
MARYLAND FOOD CENTER AUTHORITY
PARCEL B-1 & E-1
(WAREHOUSE & OFFICE)
HOWARD COUNTY, MARYLAND
SCALE: 1" = 100'
DATE: OCTOBER, 2014

DRAWING NO.
C-3
SHEET 3 OF 57

SDP-14-068

P:\PROJ\17620 MFCA Expansion\PLANS\LDP\SEAFOOD MARKET\REDLINES\PLOT\2015-04-07-MFCA-SEAFOOD-REDLINE-03.dwg, 12/7/2015 10:35:35 AM, CheQueen
(c) Copyright 2015 Morris & Ritchie Associates, Inc.

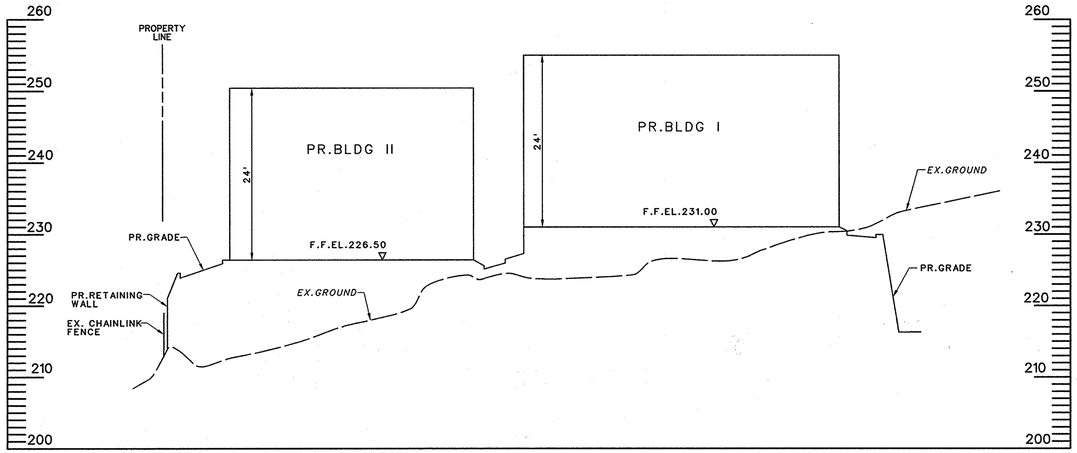

SECTION A-A

SCALE: H: 1" = 100'
V: 1" = 10'

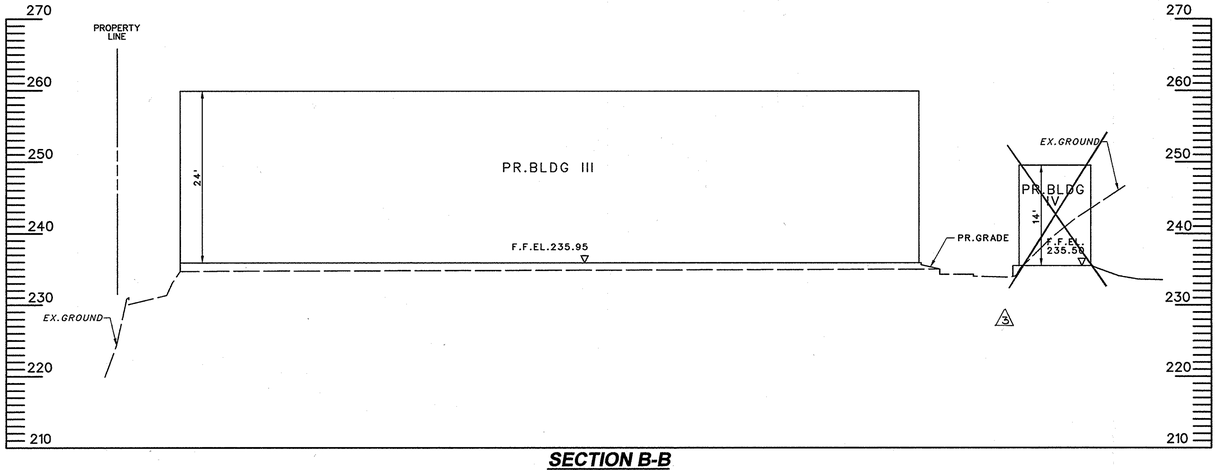

SECTION B-B

SCALE: H: 1" = 100'
V: 1" = 10'

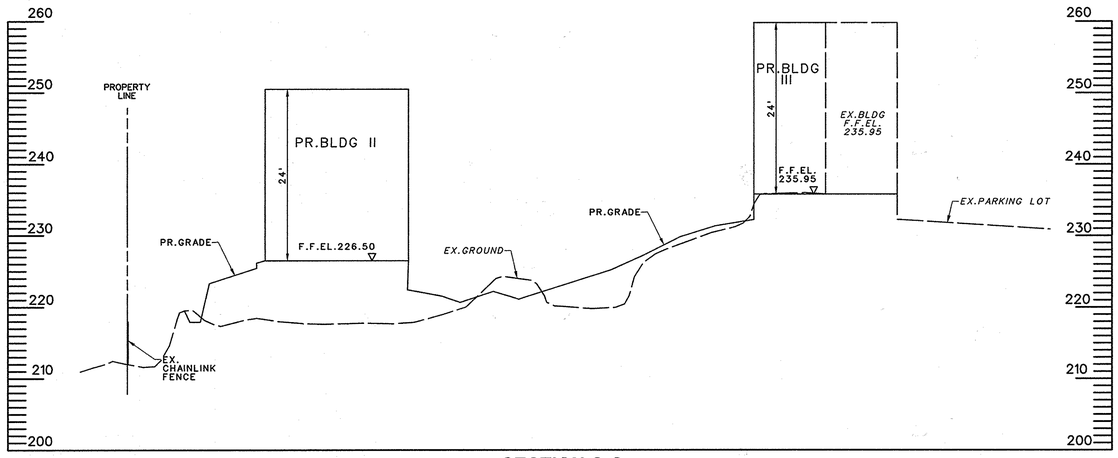

SECTION C-C

SCALE: H: 1" = 100'
V: 1" = 10'

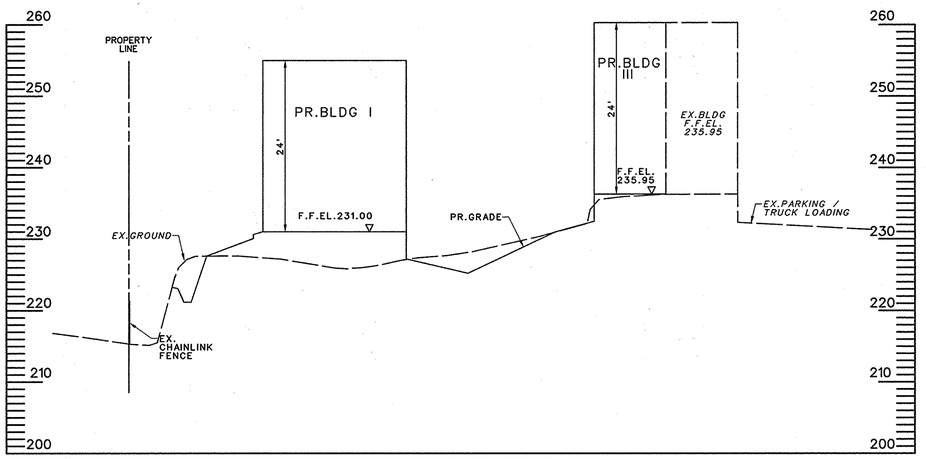

SECTION D-D

SCALE: H: 1" = 100'
V: 1" = 10'

MORRIS & RITCHIE ASSOCIATES, INC.
ENGINEERS, PLANNERS, SURVEYORS AND LANDSCAPE ARCHITECTS
14280 PARK CENTER DRIVE - LAUREL, MD 20707
(410) 792-0750 / (301) 776-1550 FAX: (410) 792-7395
MRAMD.COM

COPYRIGHT MORRIS & RITCHIE ASSOCIATES, INC. 2015

FOR REVISION #3 ONLY

STATE OF MARYLAND — ERIC NEUBERGER — 29203 — PROFESSIONAL ENGINEER — 11-3-15

MD PROFESSIONAL CERTIFICATION:
I HEREBY CERTIFY THAT THESE DOCUMENTS WERE PREPARED OR APPROVED BY ME, AND THAT I AM A DULY LICENSED PROFESSIONAL ENGINEER UNDER THE LAWS OF THE STATE OF MARYLAND.
LICENSE NO: 29203
EXPIRATION DATE: 06/16/2017

APPROVED: DEPARTMENT OF PLANNING AND ZONING

Chief, Development Engineering Division — Date: 11-6-14
Chief, Division of Land Development — Date: 11-20-14
Director — Date: 11/24/14

ADDRESS CHART

LOT / PARCEL NO.	STREET ADDRESS
PARCEL B-1	7901 OCEANO AVENUE
PARCEL E-1	7775 CHESAPEAKE BAY COURT

PERMIT INFORMATION CHART

SUBDIVISION NAME			SECTION / AREA		LOT / PARCEL NO.
MARYLAND FOOD CENTER AUTHORITY			3		B-1/662 & E-1/696
PLAT NO. or L/F	GRID NO.	ZONING	TAX MAP NO.	ELEC. DIST.	CENSUS TRACT
23017-23021	21	M-2	43	6TH	6069.01

THE COORDINATE SYSTEM OF ALL DRAWINGS IS BASED ON THE NORTH AMERICAN DATUM OF 1983. THE ELEVATION SYSTEM OF ALL DRAWINGS IS BASED ON THE NORTH AMERICAN VERTICAL DATUM OF 1988.
HORZ: NAD 83/91 VERT: NAVD 88

50 30 0 50

REVISIONS

DATE	NO.	DESCRIPTION	BY
9/18/15	3	REPLACED BUILDING V WITH TRUCK WASH-OUT STATION	MRA

REVISED SITE DEVELOPMENT PLAN

PROPOSED BUILDING CROSS SECTIONS

MARYLAND FOOD CENTER AUTHORITY

PARCEL B-1 & E-1
(WAREHOUSE & OFFICE)

HOWARD COUNTY, MARYLAND
SCALE: AS SHOWN
DATE: OCTOBER, 2014

DRAWING NO.

C-4

SHEET 4 OF 57

BLDG
Baltimore Land Design Group Inc.
Consulting Engineers
230 SCHILLING CIRCLE, SUITE 364 • HUNT VALLEY, MARYLAND 21031
PHONE: 410.229.9851 • FAX: 410.229.9865 • BLDG@BLDGINC.COM

BOARD FOR PROFESSIONAL ENGINEERS — #21245 — WILLIE HOSTEK-ZARGES — STATE OF MARYLAND — 10/15/14

PROFESSIONAL CERTIFICATION

I HEREBY CERTIFY THAT THESE DOCUMENTS WERE PREPARED OR APPROVED BY ME, AND THAT I AM A DULY LICENSED PROFESSIONAL ENGINEER UNDER THE LAWS OF THE STATE OF MARYLAND, LICENSE NO. 21245, EXPIRATION DATE: JUNE 9, 2016.

OWNER
MARYLAND FOOD CENTER AUTHORITY
7801 OCEANO AVE
JESSUP, MD 20794
PHONE (410) 379-5760
FAX (410) 379-5773

DEVELOPER / APPLICANT
MERRITT PROPERTIES, LLC
2066 LORD BALTIMORE DRIVE
BALTIMORE, MD 21244
PHONE (410) 298-2600
FAX (410) 298-9644

SDP-14-068

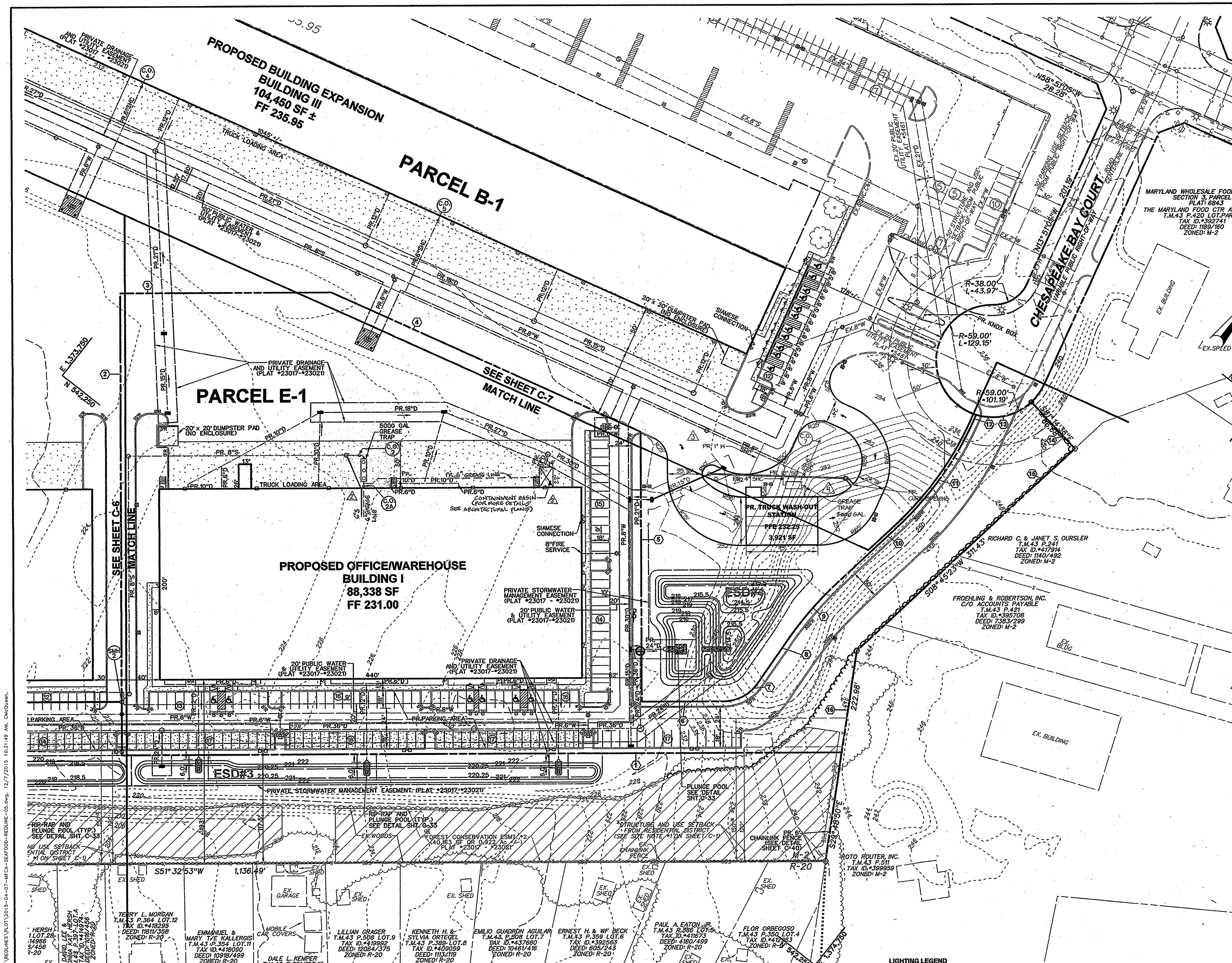

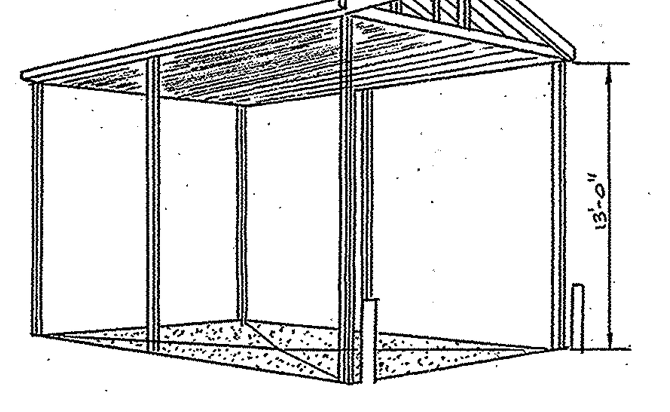

CONTAINMENT BASIN
(NOT TO SCALE)

*DEPRESSED CURB SHALL BE 3' WIDE WITH 2' TAPERS ON EITHER SIDE

LIGHTING LEGEND

TWIN	(ST2-HS)	☐-☐
SINGLE	(S1-HS)	☒
BACK-BACK	(S2)	☒-☒
SINGLE	(SWP)	⊡

FOR MORE DETAILED INFORMATION, SEE SHEETS C-41, C-53, C-54 AND C-55.

PARCEL E-1
BEARING AND DISTANCES

	BEARING	DISTANCE
1	S 51° 32'53" W	750.78'
2	N 38° 27'07" W	485.00'
3	N 51° 32'53" E	219.79'
4	N 76° 09'12" E	354.39'
5	S 38° 27'07" E	283.44'
6	N 51° 32'53" E	85.33'
7	R=44.0'	42.48'
8	N 03° 46'06" W	54.55'
9	R=356.00'	77.82'
10	N 08° 45'23" E	87.35'
11	R=344.00'	135.74'
12	N 13° 51'05" W	9.70'
13	R=59.00'	61.77'
14	S 81° 14'36" E	66.68'
15	S 08° 45'23" W	311.43'
16	S 29° 48'50" E	107.67'

THE COORDINATE SYSTEM OF ALL DRAWINGS IS BASED ON THE NORTH AMERICAN DATUM OF 1983. THE ELEVATION SYSTEM OF ALL DRAWINGS IS BASED ON THE NORTH AMERICAN VERTICAL DATUM OF 1988.
HORZ: NAD 83/91; VERT: NAVD 88

50 30 0 50

MORRIS & RITCHIE ASSOCIATES, INC.
ENGINEERS, PLANNERS, SURVEYORS AND LANDSCAPE ARCHITECTS
14280 PARK CENTER DRIVE - LAUREL, MD 20707
(410) 792-9792 / (301) 776-1690 FAX: (410) 792-7395
MRAGTA.COM

COPYRIGHT 2015 MORRIS & RITCHIE ASSOCIATES

FOR REVISION #3 ONLY #4
STATE OF MARYLAND THOMAS C. NEUGEBAUER 29203 PROFESSIONAL ENGINEER
12-7-15

MD PROFESSIONAL CERTIFICATION:
I HEREBY CERTIFY THAT THESE DOCUMENTS WERE PREPARED OR APPROVED BY ME, AND THAT I AM A DULY LICENSED PROFESSIONAL ENGINEER UNDER THE LAWS OF THE STATE OF MARYLAND, LICENSE NO. 29203, EXPIRATION DATE: 06/16/2017.

△3 APPROVED: HOWARD COUNTY DEPARTMENT OF PLANNING AND ZONING

CHIEF, DEVELOPMENT ENGINEERING DIVISION	12-29-15 DATE
CHIEF, DIVISION OF LAND DEVELOPMENT	12-31-15 DATE
DIRECTOR, DEPARTMENT OF PLANNING AND ZONING	1-3-16 DATE

ADDRESS CHART

LOT / PARCEL NO.	STREET ADDRESS
PARCEL B-1	7901 OCEANO AVENUE
PARCEL E-1	7775 CHESAPEAKE BAY COURT
PARCEL B-1 (△4)	7725 CHESAPEAKE BAY COURT (TRUCK WASH FACILITY)

PERMIT INFORMATION CHART

SUBDIVISION NAME			SECTION / AREA		LOT / PARCEL NO.
MARYLAND FOOD CENTER AUTHORITY			3		B-1/662 & E-1/696
PLAT NO. or L/F	GRID NO.	ZONING	TAX MAP NO.	ELEC. DIST.	CENSUS TRACT
23017-23021	21	M-2	43	6TH	6069.01

BLDG
Baltimore Land Design Group Inc.
Consulting Engineers
230 SCHILLING CIRCLE, SUITE 364 • HUNT VALLEY, MARYLAND 21031
PHONE: 410.229.9851 • FAX: 410.229.9865 • BLDG@BLDGINC.COM

STATE OF MARYLAND BOARD FOR PROFESSIONAL ENGINEERS 21245 ROSTEK-ZARSKA

PROFESSIONAL CERTIFICATION
I HEREBY CERTIFY THAT THESE DOCUMENTS WERE PREPARED OR APPROVED BY ME, AND THAT I AM A DULY LICENSED PROFESSIONAL ENGINEER UNDER THE LAWS OF THE STATE OF MARYLAND, LICENSE NO. 21245, EXPIRATION DATE: JUNE 9, 2016.

OWNER
MARYLAND FOOD CENTER AUTHORITY
7801 OCEANO AVE
JESSUP, MD 20794
PHONE (410) 379-5760
FAX (410) 379-5773

DEVELOPER / APPLICANT
MERRITT PROPERTIES, LLC
2066 LORD BALTIMORE DRIVE
BALTIMORE, MD 21244
PHONE (410) 298-2600
FAX (410) 298-9644

REVISIONS

DATE	NO.	DESCRIPTION	BY
12/01/14	1	ADDED DOORS, SIDEWALK AND ROOF DRAINS.	BLDG
		RELOCATED HANDICAP SPACES AND PRIVATE	
		SEWER LINE FOR BUILDING I.	
05/01/15	2	ADDITION OF A CONTAINMENT BASIN AND	BLDG
		RE-ALIGNING PRIVATE GREASE TRAP.	
9/18/15	3	REPLACED BUILDING IV WITH TRUCK WASH-OUT STATION	MRA
6/1/2016	4	REVISED GREASE TRAP FOR TRUCK WASHOUT STATION	MRA

REVISED SITE DEVELOPMENT PLAN
SITE PLAN
PLAN VIEW I

MARYLAND FOOD CENTER AUTHORITY

PARCEL B-1 & E-1
(WAREHOUSE & OFFICE)

HOWARD COUNTY, MARYLAND
SCALE: 1" = 50'

DATE: DECEMBER, 2014

DRAWING NO.
C-5

SDP-14-068

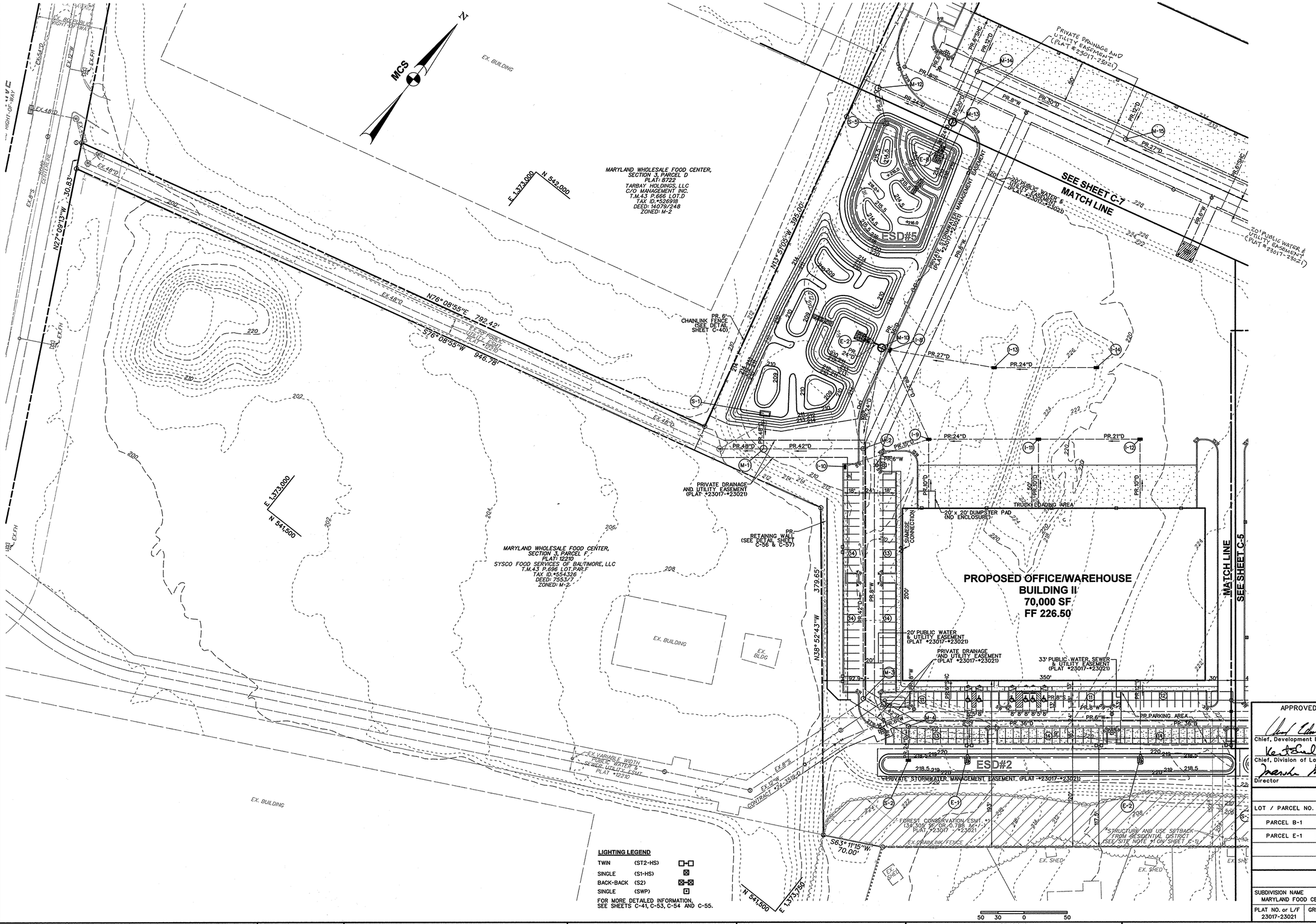

LIGHTING LEGEND

TWIN	(ST2-HS)	
SINGLE	(S1-HS)	
BACK-BACK	(S2)	
SINGLE	(SWP)	

FOR MORE DETAILED INFORMATION, SEE SHEETS C-41, C-53, C-54 AND C-55.

APPROVED: DEPARTMENT OF PLANNING AND ZONING

Chief, Development Engineering Division — Date 11.6.14

Chief, Division of Land Development — Date 11-20-14

Director — Date 11/20/14

ADDRESS CHART

LOT / PARCEL NO.	STREET ADDRESS
PARCEL B-1	7901 OCEANO AVENUE
PARCEL E-1	7775 CHESAPEAKE BAY COURT

PERMIT INFORMATION CHART

SUBDIVISION NAME			SECTION / AREA	LOT / PARCEL NO.
MARYLAND FOOD CENTER AUTHORITY			3	B-1/662 & E-1/696
PLAT NO. or L/F	GRID NO.	ZONING	TAX MAP NO.	ELEC. DIST.	CENSUS TRACT
23017-23021	21	M-2	43	6TH	6069.01

BLDG
Baltimore Land Design Group Inc.
Consulting Engineers
230 SCHILLING CIRCLE, SUITE 364 • HUNT VALLEY, MARYLAND 21031
PHONE: 410.229.9851 • FAX: 410.229.9865 • BLDG@BLDGINC.COM

MARYLAND FOR PROFESSIONAL ENGINEERS — 21245 — JOHN LOUIS ROSTEK — STATE OF MARYLAND — 10/27/14

PROFESSIONAL CERTIFICATION

I HEREBY CERTIFY THAT THESE DOCUMENTS WERE PREPARED OR APPROVED BY ME, AND THAT I AM A DULY LICENSED PROFESSIONAL ENGINEER UNDER THE LAWS OF THE STATE OF MARYLAND, LICENSE NO. 21245, EXPIRATION DATE: JUNE 9, 2016.

OWNER
MARYLAND FOOD CENTER AUTHORITY
7801 OCEANO AVE
JESSUP, MD 20794
PHONE (410) 379-5760
FAX (410) 379-5773

DEVELOPER / APPLICANT
MERRITT PROPERTIES, LLC
2066 LORD BALTIMORE DRIVE
BALTIMORE, MD 21244
PHONE (410) 298-2600
FAX (410) 298-9644

REVISIONS

DATE	NO.	DESCRIPTION	BY

SITE PLAN
PLAN VIEW II
MARYLAND FOOD CENTER AUTHORITY
PARCEL B-1 & E-1
(WAREHOUSE & OFFICE)
HOWARD COUNTY, MARYLAND
SCALE: 1" = 50'
DATE: OCTOBER, 2014

DRAWING NO.
C-6
SHEET 6 OF 57

SDP-14-068

MARYLAND WHOLESALE FOOD CENTER, SECTION 2, PARCEL C3
PLAT: 7405
THE MARYLAND FOOD CTR. AUTHORITY
THE WHOLESALE FOOD MARKET AUTHOR
T.M.43 P.666 LOT.C3
TAX ID.#444652
DEED: 506/782
ZONED: M-2

N 543,000
E 1373,350

OCEANO AVENUE
HOWARD COUNTY PUBLIC ROAD
80' PUBLIC RIGHT-OF-WAY

ROAD CENTERLINE

N76° 08'55"W 1,345.00'

30' PARKING USE SETBACK FROM PUBLIC RIGHT-OF-WAY

50' STRUCTURE AND USE SETBACK FROM PUBLIC RIGHT-OF-WAY

EX.CONC.C&G

EX. 1-STORY BUILDING

F.F. ELEV. 235.95

EX.20' PUBLIC UTILITY ESMT. PLAT #5461

N58° 51'05"W 28.28'

60' PUBLIC R/W

MARYLAND WHOLESALE FOOD CENTER, SECTION 3, PARCEL A
PLAT: 6843
THE MARYLAND FOOD CTR AUTHORITY
T.M.43 P.420 LOT/PAR A
TAX ID.#392741
DEED: 1189/180
ZONED: M-2

EX. BUILDING

N13° 51'05"W 201.19'

CHESAPEAKE BAY COURT
VARIABLE PUBLIC RIGHT-OF-WAY

N13° 51'05"W 369.00'

N 543,000
E 1374,750

EX.SPEED LIMIT SIGN

PROPOSED BUILDING EXPANSION
BUILDING III
104,450 SF ±
FF 235.95

PARCEL B-1

PR. KNOX BOX

R=38.00'
L=43.97'

R=59.00'
L=129.15'

R=59.00'
L=101.19'

EX.20' PUBLIC UTILITY EASEMENT PLAT #5461

S81° 14'36"E 66.68'

S08° 45'23"W 311.43'

RICHARD C. & JANET S. OURSLER
T.M.43 P.241
TAX ID.#417916
DEED: 1140/492
ZONED: M-2

FROEHLING & ROBERTSON, INC.
C/O ACCOUNTS PAYABLE
T.M.43 P.421
TAX ID.#395708
DEED: 7393/299
ZONED: M-2

EX. BLDG

PRIVATE DRAINAGE AND UTILITY EASEMENT (PLAT #23017-23021)

1045' +/-
TRUCK LOADING AREA

SIAMESE CONNECTION

20'x 20' DUMPSTER PAD (NO ENCLOSURE)

PR. 6" SHC

PR. 6" W

PR. 8" W

PR. 8" S

PR. 8" SHC

PR. 12" D

PR. 15" D

PR. 18" D

PR. 21" D

PR. 24" D

PR. 27" D

PR. 30" D

PR. 36" D

20' PUBLIC WATER & UTILITY EASEMENT (PLAT #23017-23021)

PRIVATE STORMWATER MANAGEMENT EASEMENT (PLAT #23017-23021)

PRIVATE DRAINAGE AND UTILITY EASEMENT (PLAT #23017-23021)

PARCEL E-1

TRUCK LOADING AREA

PR. 6" GREASE LINE

4" GREASE TRAP

PR. TRUCK WASH-OUT STATION
FFE 239.25
3,941 SF

SIAMESE CONNECTION 8" FIRE SERVICE

WATER METER

GREASE TRAP 3,000 GAL

*DEPRESSED CURB SHALL BE 3' WIDE WITH 2' TAPERS ON EITHER SIDE

MATCH LINE
SEE SHEET C-6

MATCH LINE
SEE SHEET C-5

PARCEL E-1
BEARING AND DISTANCES

	BEARING	DISTANCE
1	S 51° 32'53" W	760.78'
2	N 38° 27'07" W	485.00'
3	N 51° 32'53" E	219.79'
4	N 76° 09'12" E	354.39'
5	S 38° 27'07" E	283.44'
6	N 51° 32'53" E	85.33'
7	R=44.0'	42.48'
8	N 03° 46'06" W	54.55'
9	R=356.00'	77.82'
10	N 08° 45'23" E	87.35'
11	R=344.00'	135.74'
12	N 13° 51'05" W	9.70'
13	R=59.00'	61.77'
14	S 81° 14'36" E	66.68'
15	S 08° 45'23" W	311.43'
16	S 29° 48'50" E	107.67'

LIGHTING LEGEND

TWIN	(ST2-HS)	
SINGLE	(S1-HS)	
BACK-BACK	(S2)	
SINGLE	(SWP)	

FOR MORE DETAILED INFORMATION, SEE SHEETS C-41, C-53, C-54 AND C-55.

50 30 0 50

THE COORDINATE SYSTEM OF ALL DRAWINGS IS BASED ON THE NORTH AMERICAN DATUM OF 1983. THE ELEVATION SYSTEM OF ALL DRAWINGS IS BASED ON THE NORTH AMERICAN VERTICAL DATUM OF 1988. HORZ: NAD 83/91 VERT: NAVD 88

APPROVED: HOWARD COUNTY DEPARTMENT OF PLANNING AND ZONING

CHIEF, DEVELOPMENT ENGINEERING DIVISION — DATE 12.29.15

CHIEF, DIVISION OF LAND DEVELOPMENT — DATE 12.31.15

DIRECTOR, DEPARTMENT OF PLANNING AND ZONING — DATE 1-3-16

ADDRESS CHART

LOT / PARCEL NO.	STREET ADDRESS
PARCEL B-1	7901 OCEANO AVENUE
PARCEL E-1	7775 CHESAPEAKE BAY COURT
PARCEL B-1	7725 CHESAPEAKE BAY COURT (TRUCK WASH FACILITY)

PERMIT INFORMATION CHART

SUBDIVISION NAME		SECTION / AREA		LOT / PARCEL NO.
MARYLAND FOOD CENTER AUTHORITY		3		B-1/662 & E-1/696
PLAT NO. or L/F	GRID NO.	ZONING	TAX MAP NO.	ELEC. DIST.	CENSUS TRACT
23017-23021	21	M-2	43	6TH	6069.01

MORRIS & RITCHIE ASSOCIATES, INC.
ENGINEERS, PLANNERS, SURVEYORS AND LANDSCAPE ARCHITECTS
14280 PARK CENTER DRIVE - LAUREL, MD 20707
(410) 792-9792 / (301) 776-1690 FAX: (410) 792-7395
MRAGTA.COM

COPYRIGHT 2015 MORRIS & RITCHIE ASSOCIATES

FOR REVISION #3 ONLY

STATE OF MARYLAND — THOMAS C. NEUBERGER — 29203 — PROFESSIONAL ENGINEER — 12-17

MD PROFESSIONAL CERTIFICATION:

I HEREBY CERTIFY THAT THESE DOCUMENTS WERE PREPARED OR APPROVED BY ME, AND THAT I AM A DULY LICENSED PROFESSIONAL ENGINEER UNDER THE LAWS OF THE STATE OF MARYLAND, LICENSE NO. 29203, EXPIRATION DATE: 09/18/2017.

BLDG
Baltimore Land Design Group Inc.
Consulting Engineers
230 SCHILLING CIRCLE, SUITE 364 • HUNT VALLEY, MARYLAND 21031
PHONE: 410.229.9851 • FAX: 410.229.9865 • BLDG@BLDGINC.COM

REGISTERED PROFESSIONAL ENGINEER — 21245 — LAURA LEE ROSTEK ZARKOWSKI — STATE OF MARYLAND — 10/27/14

PROFESSIONAL CERTIFICATION

I HEREBY CERTIFY THAT THESE DOCUMENTS WERE PREPARED OR APPROVED BY ME, AND THAT I AM A DULY LICENSED PROFESSIONAL ENGINEER UNDER THE LAWS OF THE STATE OF MARYLAND, LICENSE NO. 21245, EXPIRATION DATE: JUNE 9, 2016.

OWNER
MARYLAND FOOD CENTER AUTHORITY
7801 OCEANO AVE
JESSUP, MD 20794
PHONE (410) 379-5760
FAX (410) 379-5773

DEVELOPER / APPLICANT
MERRITT PROPERTIES, LLC
2066 LORD BALTIMORE DRIVE
BALTIMORE, MD 21244
PHONE (410) 298-2600
FAX (410) 298-9644

REVISIONS

DATE	NO.	DESCRIPTION	BY
05/01/15	2	ADDITION OF A CONTAINMENT BASIN AND RE-ALIGNING PRIVATE GREASE TRAP	BLDG
9/18/15	3	REPLACED BUILDING IV WITH TRUCK WASH-OUT STATION	MRA
6/1/2016	4	REVISED GREASE TRAP FOR TRUCK WASHOUT STATION	MRA

REVISED SITE DEVELOPMENT PLAN
SITE PLAN
PLAN VIEW III

MARYLAND FOOD CENTER AUTHORITY
PARCEL B-1 & E-1
(WAREHOUSE & OFFICE)

HOWARD COUNTY, MARYLAND
SCALE: 1" = 50'
DATE: OCTOBER, 2014

DRAWING NO.
C-7
SHEET 7 OF 57

SDP-14-068

Copyright 2015 Morris & Ritchie Associates, Inc.

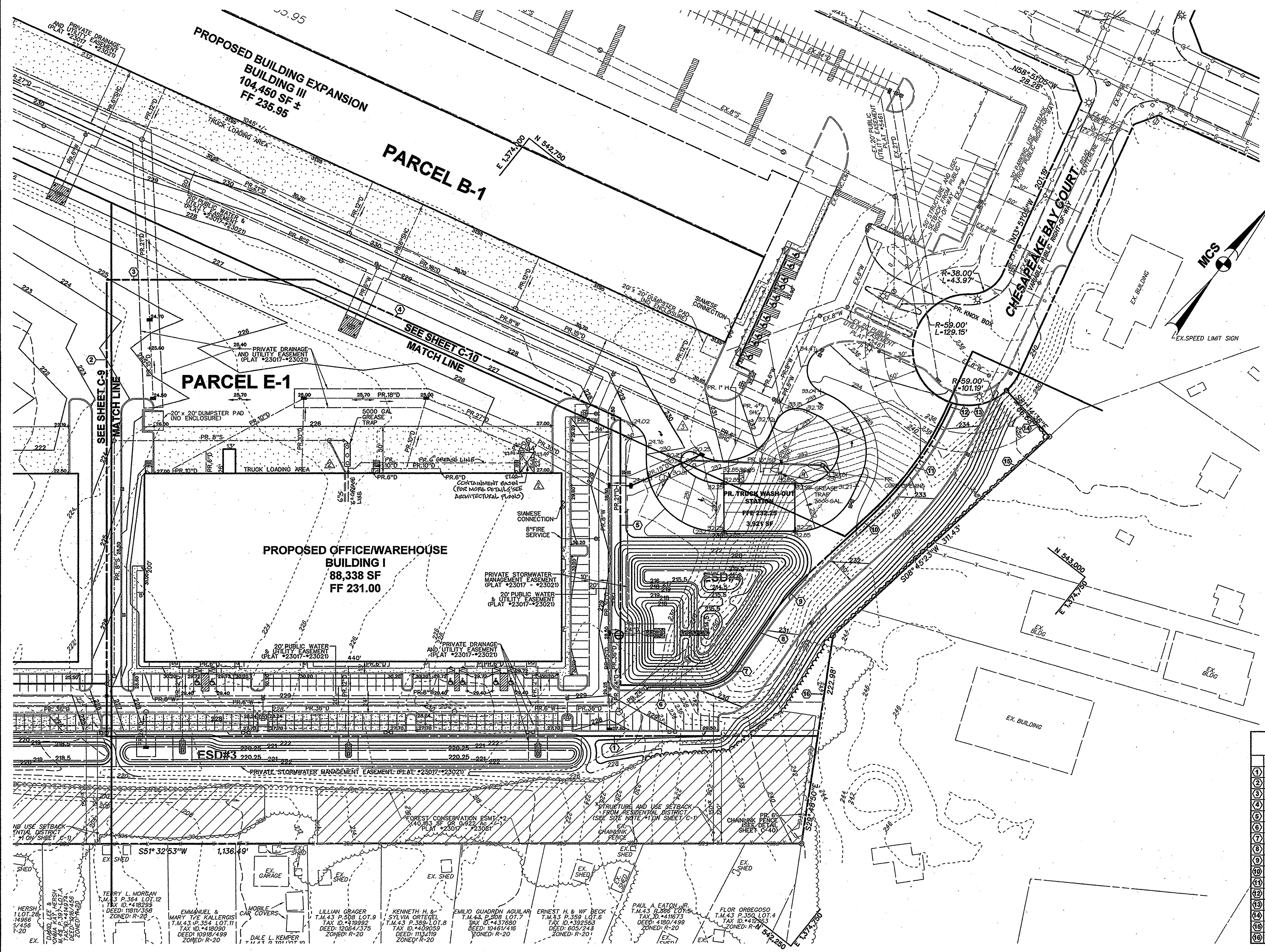

*DEPRESSED CURB SHALL BE 3' WIDE WITH 2' TAPERS ON EITHER SIDE

MORRIS & RITCHIE ASSOCIATES, INC.
ENGINEERS, PLANNERS, SURVEYORS AND LANDSCAPE ARCHITECTS
14280 PARK CENTER DRIVE - LAUREL, MD 20707
(410) 792-9792 / (301) 776-1690 FAX: (410) 792-7395
MRAGTA.COM

COPYRIGHT 2015 MORRIS & RITCHIE ASSOCIATES

FOR REVISION #3 ONLY & #4

MD PROFESSIONAL CERTIFICATION:

I HEREBY CERTIFY THAT THESE DOCUMENTS WERE PREPARED OR APPROVED BY ME, AND THAT I AM A DULY LICENSED PROFESSIONAL ENGINEER UNDER THE LAWS OF THE STATE OF MARYLAND, LICENSE NO. 29203, EXPIRATION DATE: 06/16/2017.

12-7-15

PARCEL E-1 BEARING AND DISTANCES

	BEARING	DISTANCE
1	S 51° 32'53" W	750.78'
2	N 38° 27'07" W	485.00'
3	N 51° 32'53" E	219.79'
4	N 76° 09'12" E	354.39'
5	S 38° 27'07" E	283.44'
6	N 51° 32'53" E	85.33'
7	R-44.0'	42.48'
8	N 03° 46'06" W	54.55'
9	R-356.00'	77.82'
10	N 08° 45'23" E	87.35'
11	R-344.00'	135.74'
12	N 13° 51'05" W	9.70'
13	R-59.00'	61.77'
14	S 81° 14'36" E	66.68'
15	S 08° 45'23" W	311.43'
16	S 29° 48'50" E	107.67'

APPROVED: HOWARD COUNTY DEPARTMENT OF PLANNING AND ZONING

CHIEF, DEVELOPMENT ENGINEERING DIVISION — DATE 12-29-15

CHIEF, DIVISION OF LAND DEVELOPMENT — DATE 12-31-15

DIRECTOR, DEPARTMENT OF PLANNING AND ZONING — DATE 1-3-16

ADDRESS CHART

LOT / PARCEL NO.	STREET ADDRESS
PARCEL B-1	7901 OCEANO AVENUE
PARCEL E-1	7775 CHESAPEAKE BAY COURT
4 PARCEL B-1	7725 CHESAPEAKE BAY COURT (TRUCK WASH FACILITY)

PERMIT INFORMATION CHART

SUBDIVISION NAME			SECTION / AREA		LOT / PARCEL NO.
MARYLAND FOOD CENTER AUTHORITY			3		B-1/662 & E-1/696
PLAT NO. or L/F	GRID NO.	ZONING	TAX MAP NO.	ELEC. DIST.	CENSUS TRACT
23017-23021	21	M-2	43	6TH	6069.01

THE COORDINATE SYSTEM OF ALL DRAWINGS IS BASED ON THE NORTH AMERICAN DATUM OF 1983. THE ELEVATION SYSTEM OF ALL DRAWINGS IS BASED ON THE NORTH AMERICAN VERTICAL DATUM OF 1988.
HORZ: NAD 83/91: VERT: NAVD 88

50 30 0 50

REVISIONS

DATE	NO.	DESCRIPTION	BY
12/01/14	1	ADDED DOORS, SIDEWALK AND ROOF DRAINS. RELOCATED HANDICAP SPACES AND PRIVATE SEWER LINE FOR BUILDING I.	BLDG
05/01/15	2	ADDITION OF A CONTAINMENT BASIN AND RE-ALIGNING PRIVATE GREASE TRAP	BLDG
9/18/15	3	REPLACED BUILDING IV WITH TRUCK WASH-OUT STATION	MRA
6/1/2016	4	REVISED GREASE TRAP FOR TRUCK WASHOUT STATION	MRA

BLDG
Baltimore Land Design Group Inc.
Consulting Engineers
230 SCHILLING CIRCLE, SUITE 364 • HUNT VALLEY, MARYLAND 21031
PHONE: 410.229.9851 • FAX: 410.229.9865 • BLDG@BLDGINC.COM

PROFESSIONAL CERTIFICATION

I HEREBY CERTIFY THAT THESE DOCUMENTS WERE PREPARED OR APPROVED BY ME, AND THAT I AM A DULY LICENSED PROFESSIONAL ENGINEER UNDER THE LAWS OF THE STATE OF MARYLAND, LICENSE NO. 21245, EXPIRATION DATE: JUNE 9, 2016.

OWNER
MARYLAND FOOD CENTER AUTHORITY
7801 OCEANO AVE
JESSUP, MD 20794
PHONE (410) 379-5760
FAX (410) 379-5773

DEVELOPER / APPLICANT
MERRITT PROPERTIES, LLC
2066 LORD BALTIMORE DRIVE
BALTIMORE, MD 21244
PHONE (410) 298-2600
FAX (410) 298-9644

REVISED SITE DEVELOPMENT PLAN
GRADING PLAN
PLAN VIEW I

MARYLAND FOOD CENTER AUTHORITY

PARCEL B-1 & E-1
(WAREHOUSE & OFFICE)

HOWARD COUNTY, MARYLAND
SCALE: 1" = 50'

DATE: DECEMBER, 2014

DRAWING NO.
C-8

SDP-14-068

P:\PROJ\17620 MFCA Expansion\PLANS\LDE\SEAFOOD MARKET\REDLINES\PLOT\2015-04-07-MFCA-SEAFOOD-REDLINE-08.dwg, 12/7/2015 10:33:04 AM, CMcQueen.
(c) Copyright 2015 Morris & Ritchie Associates, Inc.

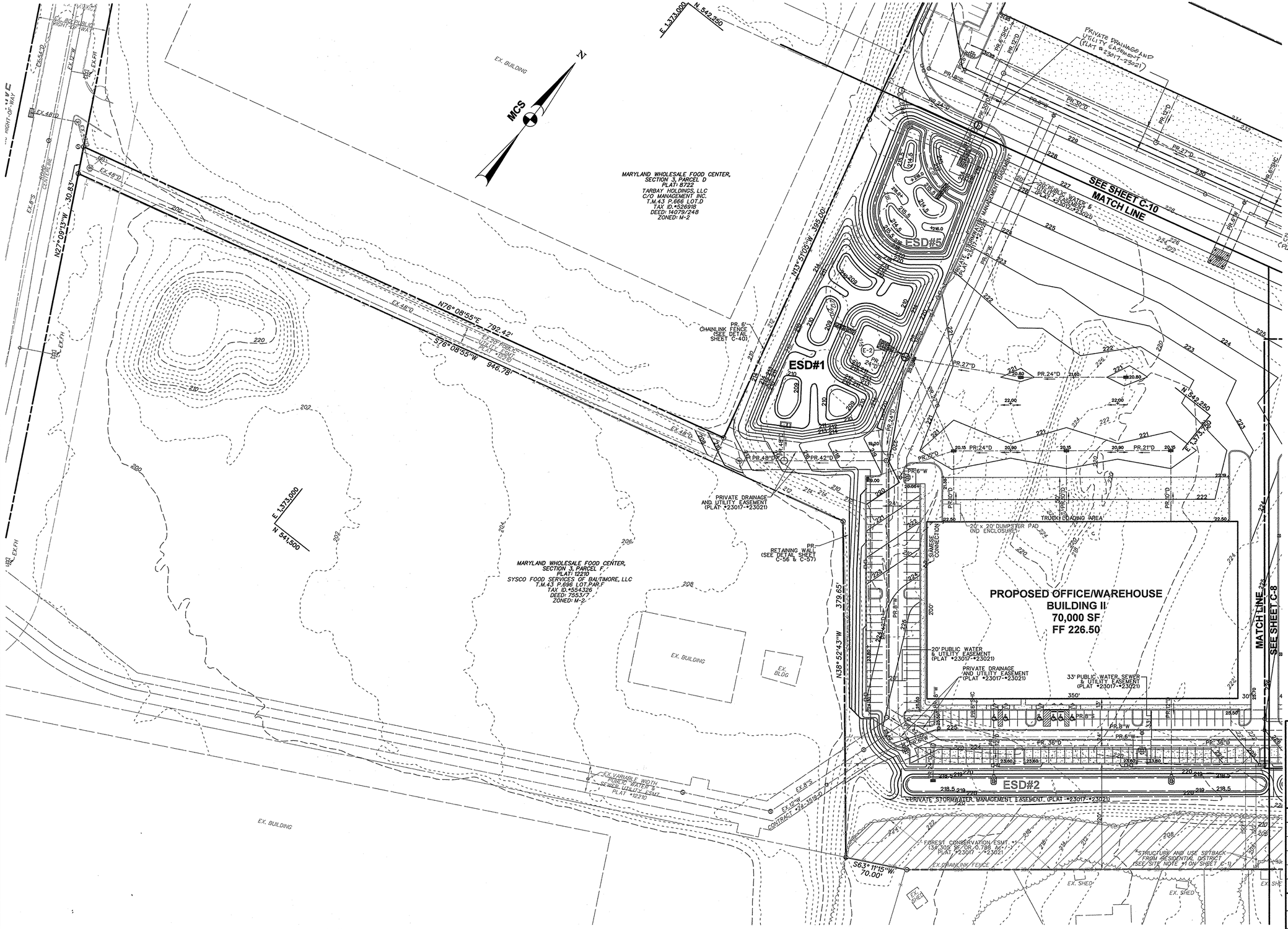

THE COORDINATE SYSTEM OF ALL DRAWINGS IS BASED ON THE NORTH AMERICAN DATUM OF 1983. THE ELEVATION SYSTEM OF ALL DRAWINGS IS BASED ON THE NORTH AMERICAN VERTICAL DATUM OF 1988. HORZ: NAD 83/91; VERT: NAVD 88

APPROVED: DEPARTMENT OF PLANNING AND ZONING

Chief, Development Engineering Division	Date 11-6-14
Chief, Division of Land Development	Date 11-20-14
Director	Date 11/24/14

ADDRESS CHART	
LOT / PARCEL NO.	STREET ADDRESS
PARCEL B-1	7901 OCEANO AVENUE
PARCEL E-1	7775 CHESAPEAKE BAY COURT

PERMIT INFORMATION CHART

SUBDIVISION NAME			SECTION / AREA		LOT / PARCEL NO.
MARYLAND FOOD CENTER AUTHORITY			3		B-1/662 & E-1/696
PLAT NO. or L/F	GRID NO.	ZONING	TAX MAP NO.	ELEC. DIST.	CENSUS TRACT
23017-23021	21	M-2	43	6TH	6069.01

BLDG
Baltimore Land Design Group Inc.
Consulting Engineers
230 SCHILLING CIRCLE, SUITE 364 • HUNT VALLEY, MARYLAND 21031
PHONE: 410.229.9851 • FAX: 410.229.9865 • BLDG@BLDGINC.COM

REGISTERED PROFESSIONAL ENGINEER 21345 JOHN ROSTEK-ZARKESH STATE OF MARYLAND 10/27/14

PROFESSIONAL CERTIFICATION
I HEREBY CERTIFY THAT THESE DOCUMENTS WERE PREPARED OR APPROVED BY ME, AND THAT I AM A DULY LICENSED PROFESSIONAL ENGINEER UNDER THE LAWS OF THE STATE OF MARYLAND, LICENSE NO. 21245, EXPIRATION DATE: JUNE 9, 2016.

OWNER
MARYLAND FOOD CENTER AUTHORITY
7801 OCEANO AVE
JESSUP, MD 20794
PHONE (410) 379-5760
FAX (410) 379-5773

DEVELOPER / APPLICANT
MERRITT PROPERTIES, LLC
2066 LORD BALTIMORE DRIVE
BALTIMORE, MD 21244
PHONE (410) 298-2600
FAX (410) 298-9644

REVISIONS

DATE	NO.	DESCRIPTION	BY

GRADING PLAN
PLAN VIEW II
MARYLAND FOOD CENTER AUTHORITY
PARCEL B-1 & E-1
(WAREHOUSE & OFFICE)
HOWARD COUNTY, MARYLAND
SCALE: 1" = 50'
DATE: OCTOBER, 2014

DRAWING NO.
C-9
SHEET 9 OF 57

SDP-14-068

PARCEL E-1
BEARING AND DISTANCES

	BEARING	DISTANCE
1	S 51° 32'53" W	750.78'
2	N 38° 27'07" W	485.00'
3	N 51° 32'53" E	219.79'
4	N 76° 09'12" E	354.39'
5	S 38° 27'07" E	283.44'
6	N 51° 32'53" E	85.33'
7	R=44.0'	42.48'
8	N 03° 46'06" W	54.55'
9	R=356.00'	77.82'
10	N 08° 45'23" E	87.35'
11	R=344.00'	135.74'
12	N 13° 51'05" W	9.70'
13	R=59.00'	61.77'
14	S 81° 14'36" E	66.68'
15	S 08° 45'23" W	311.43'
16	S 29° 48'50" E	107.67'

APPROVED: HOWARD COUNTY DEPARTMENT OF PLANNING AND ZONING

CHIEF, DEVELOPMENT ENGINEERING DIVISION	DATE 12-29-15
CHIEF, DIVISION OF LAND DEVELOPMENT	DATE 12-31-15
DIRECTOR, DEPARTMENT OF PLANNING AND ZONING	DATE 1-3-16

ADDRESS CHART

LOT / PARCEL NO.	STREET ADDRESS
PARCEL B-1	7901 OCEANO AVENUE
PARCEL E-1	7775 CHESAPEAKE BAY COURT
4 PARCEL B-1	7725 CHESAPEAKE BAY COURT (TRUCK WASH FACILITY)

*DEPRESSED CURB SHALL BE 3' WIDE WITH 2' TAPERS ON EITHER SIDE

THE COORDINATE SYSTEM OF ALL DRAWINGS IS BASED ON THE NORTH AMERICAN DATUM OF 1983. THE ELEVATION SYSTEM OF ALL DRAWINGS IS BASED ON THE NORTH AMERICAN VERTICAL DATUM OF 1988.
HORZ: NAD 83/91: VERT: NAVD 88

PERMIT INFORMATION CHART

SUBDIVISION NAME			SECTION / AREA		LOT / PARCEL NO.
MARYLAND FOOD CENTER AUTHORITY			3		B-1/662 & E-1/696
PLAT NO. or L/F	GRID NO.	ZONING	TAX MAP NO.	ELEC. DIST.	CENSUS TRACT
23017-23021	21	M-2	43	6TH	6069.01

MORRIS & RITCHIE ASSOCIATES, INC.
ENGINEERS, PLANNERS, SURVEYORS AND LANDSCAPE ARCHITECTS
14280 PARK CENTER DRIVE - LAUREL, MD 20707
(410) 792-9792 / (301) 776-1690 FAX: (410) 792-7395
MRAGTA.COM
COPYRIGHT 2015 MORRIS & RITCHIE ASSOCIATES

FOR REVISION #3 ONLY #-4
STATE OF MARYLAND THOMAS C. NEUGEBAUER 29203 PROFESSIONAL ENGINEER 12-7-15

MD PROFESSIONAL CERTIFICATION:
I HEREBY CERTIFY THAT THESE DOCUMENTS WERE PREPARED OR APPROVED BY ME, AND THAT I AM A DULY LICENSED PROFESSIONAL ENGINEER UNDER THE LAWS OF THE STATE OF MARYLAND, LICENSE NO. 29203, EXPIRATION DATE: 06/16/2017.

50 30 0 50

BLDG
Baltimore Land Design Group Inc.
Consulting Engineers
230 SCHILLING CIRCLE, SUITE 364 • HUNT VALLEY, MARYLAND 21031
PHONE: 410.229.9851 • FAX: 410.229.9865 • BLDG@BLDGINC.COM

BOARD FOR PROFESSIONAL ENGINEERS 21245 ROSTEK-ZARSK STATE OF MARYLAND 10/27/14

PROFESSIONAL CERTIFICATION
I HEREBY CERTIFY THAT THESE DOCUMENTS WERE PREPARED OR APPROVED BY ME, AND THAT I AM A DULY LICENSED PROFESSIONAL ENGINEER UNDER THE LAWS OF THE STATE OF MARYLAND, LICENSE NO. 21245, EXPIRATION DATE: JUNE 9, 2016.

OWNER
MARYLAND FOOD CENTER AUTHORITY
7801 OCEANO AVE
JESSUP, MD 20794
PHONE (410) 379-5760
FAX (410) 379-5773

DEVELOPER / APPLICANT
MERRITT PROPERTIES, LLC
2066 LORD BALTIMORE DRIVE
BALTIMORE, MD 21244
PHONE (410) 298-2600
FAX (410) 298-9644

REVISIONS

DATE	NO.	DESCRIPTION	BY
05/01/15	2	ADDITION OF A CONTAINMENT BASIN AND RE-ALIGNING PRIVATE GREASE TRAP	BLDG
9/18/15	3	REPLACED BUILDING IV WITH TRUCK WASH-OUT STATION	MRA
6/1/2016	4	REVISED GREASE TRAP FOR TRUCK WASHOUT STATION	MRA

REVISED SITE DEVELOPMENT PLAN
GRADING PLAN
PLAN VIEW III
MARYLAND FOOD CENTER AUTHORITY
PARCEL B-1 & E-1
(WAREHOUSE & OFFICE)

HOWARD COUNTY, MARYLAND
SCALE: 1" = 50'
DATE: OCTOBER, 2014

DRAWING NO.
C-10
SHEET 10 OF 57
SDP-14-068

P:\PROJ\17620 MFCA Expansion\PLANS\LDE\SEAFOOD MARKET\REDLINES\PLOT\2015-04-07-MFCA-SEAFOOD-REDLINE-10.dwg, 12/7/2015 10:43:06 AM, CMcQueen,
Copyright 2015 Morris & Ritchie Associates, Inc.

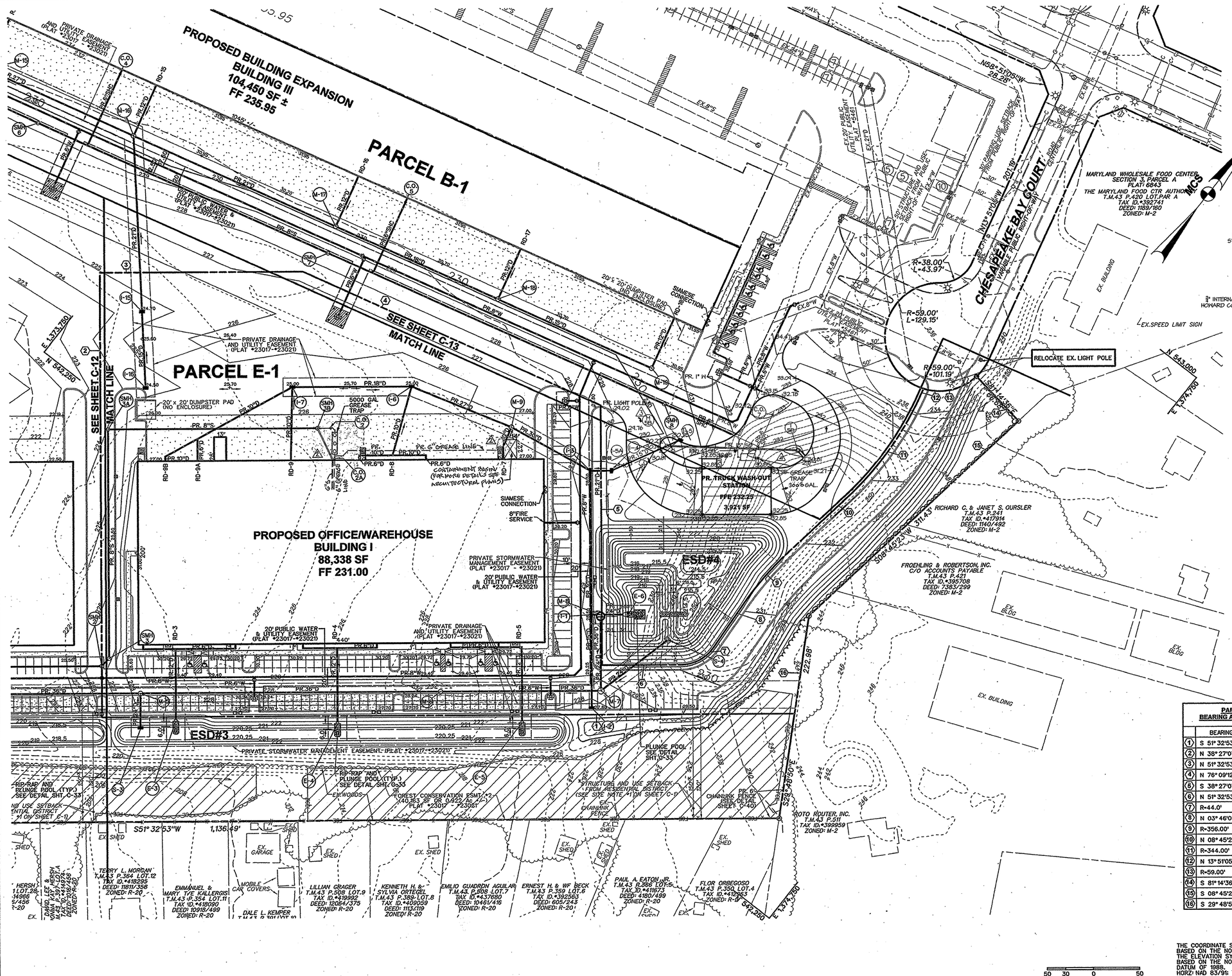

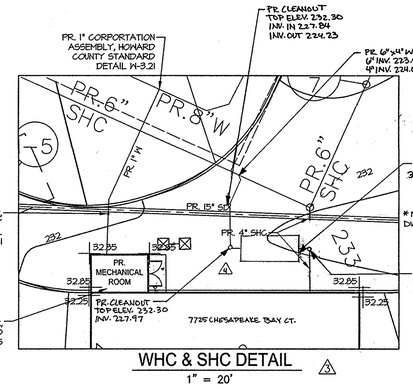

WHC & SHC DETAIL
1" = 20'

PARCEL E-1 BEARING AND DISTANCES

	BEARING	DISTANCE
1	S 51° 32'53" W	750.78'
2	N 38° 27'07" W	485.00'
3	N 51° 32'53" E	219.79'
4	N 76° 09'12" E	354.39'
5	S 38° 27'07" E	283.44'
6	N 51° 32'53" E	85.33'
7	R=44.0'	42.48'
8	N 03° 46'08" W	54.55'
9	R=356.00'	77.82'
10	N 08° 45'23" E	87.35'
11	R=344.00'	135.74'
12	N 13° 51'05" W	9.70'
13	R=59.00'	61.77'
14	S 81° 14'36" E	66.68'
15	S 08° 45'23" W	311.43'
16	S 29° 48'50" E	107.67'

MORRIS & RITCHIE ASSOCIATES, INC.
ENGINEERS, PLANNERS, SURVEYORS AND LANDSCAPE ARCHITECTS
14280 PARK CENTER DRIVE - LAUREL, MD 20707
(410) 792-9792 / (301) 776-1690 FAX: (410) 792-7395
MRAGTA.COM

COPYRIGHT 2015 MORRIS & RITCHIE ASSOCIATES

FOR REVISION #5 ONLY

MD. PROFESSIONAL CERTIFICATION:
I HEREBY CERTIFY THAT THESE DOCUMENTS WERE PREPARED OR APPROVED BY ME, AND THAT I AM A DULY LICENSED PROFESSIONAL ENGINEER UNDER THE LAWS OF THE STATE OF MARYLAND, LICENSE NO. 29203, EXPIRATION DATE: 06/16/2017.

12-7-15

APPROVED: HOWARD COUNTY DEPARTMENT OF PLANNING AND ZONING

CHIEF, DEVELOPMENT ENGINEERING DIVISION	12-29-15 DATE
CHIEF, DIVISION OF LAND DEVELOPMENT	12-31-15 DATE
DIRECTOR, DEPARTMENT OF PLANNING AND ZONING	1-5-16 DATE

ADDRESS CHART

LOT / PARCEL NO.	STREET ADDRESS
PARCEL B-1	7901 OCEANO AVENUE
PARCEL E-1	7775 CHESAPEAKE BAY COURT
PARCEL B-1	7725 CHESAPEAKE BAY COURT (TRUCK WASH FACILITY)

PERMIT INFORMATION CHART

SUBDIVISION NAME			SECTION / AREA	LOT / PARCEL NO.
MARYLAND FOOD CENTER AUTHORITY			3	B-1/662 & E-1/696
PLAT NO. or L/F	GRID NO.	ZONING	TAX MAP NO.	ELEC. DIST.	CENSUS TRACT
23017-23021	21	M-2	43	6TH	6069.01

THE COORDINATE SYSTEM OF ALL DRAWINGS IS BASED ON THE NORTH AMERICAN DATUM OF 1983. THE ELEVATION SYSTEM OF ALL DRAWINGS IS BASED ON THE NORTH AMERICAN VERTICAL DATUM OF 1988.
HORZ: NAD 83/91; VERT: NAVD 88

50 30 0 50

REVISIONS

DATE	NO.	DESCRIPTION	BY
12/01/14	1	ADDED DOORS, SIDEWALK AND ROOF DRAINS.	BLDG
		RELOCATED HANDICAP SPACES AND PRIVATE	
		SEWER LINE FOR BUILDING I.	
05/01/15	2	ADDITION OF A CONTAINMENT BASIN AND	BLDG
		RE-ALIGNING PRIVATE GREASE TRAP	
9/18/15	3	REPLACED BUILDING IV WITH TRUCK WASH-OUT STATION	MRA
6/11/2016	4	REVISED GREASE TRAP FOR TRUCK WASHOUT STATION	MRA

REVISED SITE DEVELOPMENT PLAN
UTILITY PLAN
PLAN VIEW I

MARYLAND FOOD CENTER AUTHORITY

PARCEL B-1 & E-1
(WAREHOUSE & OFFICE)

HOWARD COUNTY, MARYLAND
SCALE: 1" = 50'
DATE: DECEMBER, 2014

DRAWING NO.
C-11
SHEET 11 OF 57
SDP-14-068

BLDG
Baltimore Land Design Group Inc.
Consulting Engineers
230 SCHILLING CIRCLE, SUITE 364 • HUNT VALLEY, MARYLAND 21031
PHONE: 410.229.9851 • FAX: 410.229.9865 • BLDG@BLDGINC.COM

PROFESSIONAL CERTIFICATION
I HEREBY CERTIFY THAT THESE DOCUMENTS WERE PREPARED OR APPROVED BY ME, AND THAT I AM A DULY LICENSED PROFESSIONAL ENGINEER UNDER THE LAWS OF THE STATE OF MARYLAND, LICENSE NO. 21245, EXPIRATION DATE: JUNE 9, 2016.

OWNER
MARYLAND FOOD CENTER AUTHORITY
7801 OCEANO AVE
JESSUP, MD 20794
PHONE (410) 379-5760
FAX (410) 379-5773

DEVELOPER / APPLICANT
MERRITT PROPERTIES, LLC
2066 LORD BALTIMORE DRIVE
BALTIMORE, MD 21244
PHONE (410) 298-2600
FAX (410) 298-9644

P:\PROJ\17620 MFCA Expansion\PLANS\LDE\SEAFOOD MARKET\REDLINES\PLOT\2015-04-07-MFCA-SEAFOOD-REDLINE-11.dwg, 12/7/2015 10:38:40 AM, CMcQueen
(c) Copyright 2015 Morris & Ritchie Associates, Inc.

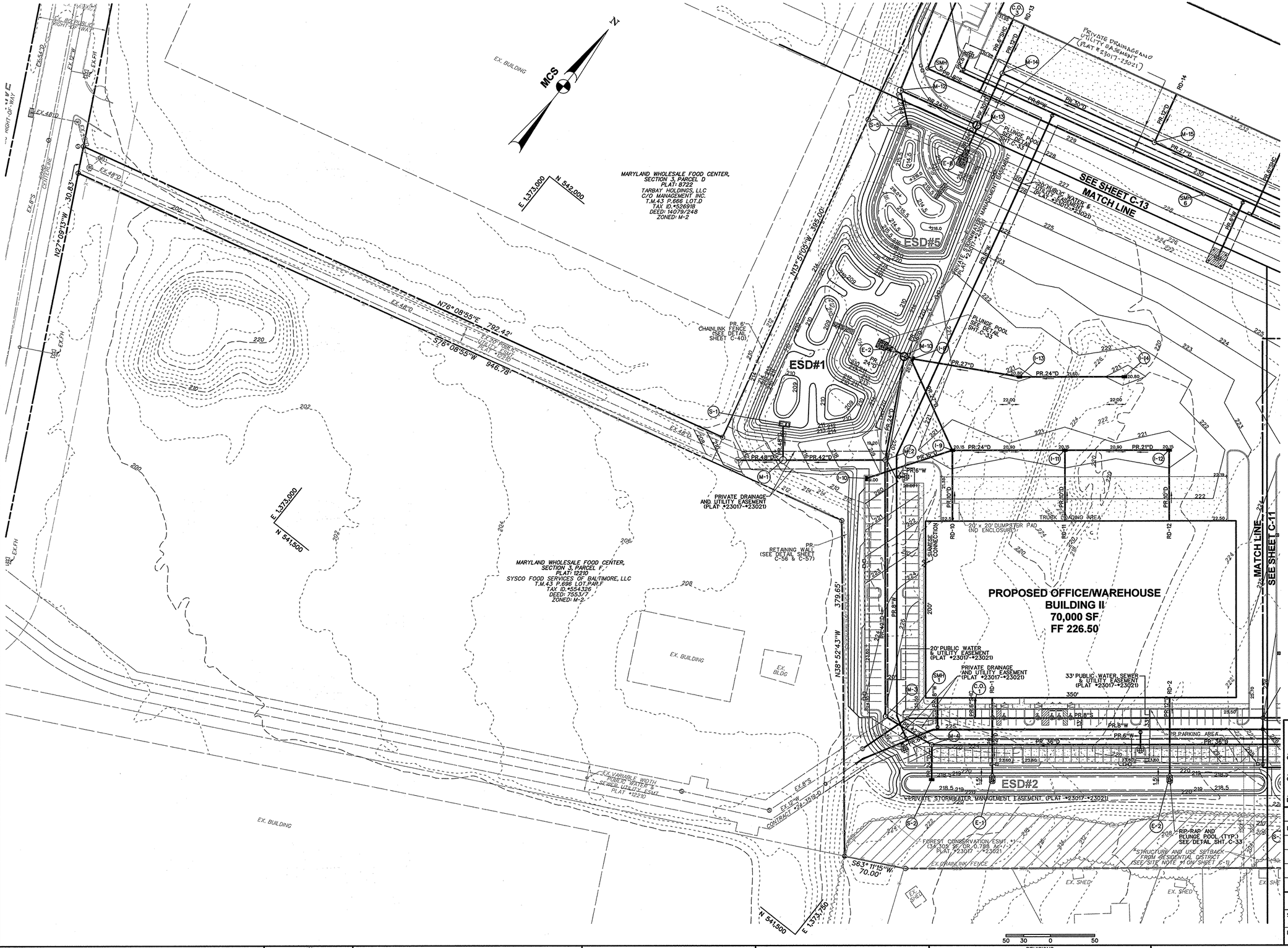

THE COORDINATE SYSTEM OF ALL DRAWINGS IS BASED ON THE NORTH AMERICAN DATUM OF 1983. THE ELEVATION SYSTEM OF ALL DRAWINGS IS BASED ON THE NORTH AMERICAN VERTICAL DATUM OF 1988. HORZ: NAD 83/91: VERT: NAVD 88

APPROVED: DEPARTMENT OF PLANNING AND ZONING

Chief, Development Engineering Division	Date 11.6.14
Chief, Division of Land Development	Date 11-20-14
Director	Date 11/24/14

ADDRESS CHART

LOT / PARCEL NO.	STREET ADDRESS
PARCEL B-1	7901 OCEANO AVENUE
PARCEL E-1	7775 CHESAPEAKE BAY COURT

PERMIT INFORMATION CHART

SUBDIVISION NAME			SECTION / AREA		LOT / PARCEL NO.
MARYLAND FOOD CENTER AUTHORITY			3		B-1/662 & E-1/696
PLAT NO. or L/F	GRID NO.	ZONING	TAX MAP NO.	ELEC. DIST.	CENSUS TRACT
23017-23021	21	M-2	43	6TH	6069.01

BLDG
Baltimore Land Design Group Inc.
Consulting Engineers
230 SCHILLING CIRCLE, SUITE 364 • HUNT VALLEY, MARYLAND 21031
PHONE: 410.229.9851 • FAX: 410.229.9865 • BLDG@BLDGINC.COM

LICENSED PROFESSIONAL ENGINEER — 21245 — JOHN ROSTEK-ZARKOS — STATE OF MARYLAND — 10/27/14

PROFESSIONAL CERTIFICATION

I HEREBY CERTIFY THAT THESE DOCUMENTS WERE PREPARED OR APPROVED BY ME, AND THAT I AM A DULY LICENSED PROFESSIONAL ENGINEER UNDER THE LAWS OF THE STATE OF MARYLAND, LICENSE NO. 21245, EXPIRATION DATE: JUNE 9, 2016.

OWNER
MARYLAND FOOD CENTER AUTHORITY
7801 OCEANO AVE
JESSUP, MD 20794
PHONE (410) 379-5760
FAX (410) 379-5773

DEVELOPER / APPLICANT
MERRITT PROPERTIES, LLC
2066 LORD BALTIMORE DRIVE
BALTIMORE, MD 21244
PHONE (410) 298-2600
FAX (410) 298-9644

REVISIONS

DATE	NO.	DESCRIPTION	BY

UTILITY PLAN
PLAN VIEW II

MARYLAND FOOD CENTER AUTHORITY

PARCEL B-1 & E-1
(WAREHOUSE & OFFICE)

HOWARD COUNTY, MARYLAND
SCALE: 1" = 50'
DATE: OCTOBER, 2014

DRAWING NO.
C-12
SHEET 12 OF 57

SDP-14-068

MARYLAND WHOLESALE FOOD CENTER, SECTION 2, PARCEL C3
PLAT: 7405
THE MARYLAND FOOD CTR AUTHORITY
THE WHOLESALE FOOD MARKET AUTHOR
T.M.43 P.666 LOT.C3
TAX ID #444655
DEED: 506/782
ZONED: M-2

N 543,000
E 1373.250

OCEANO AVENUE
HOWARD COUNTY PUBLIC ROAD
80' PUBLIC RIGHT-OF-WAY

ROAD CENTERLINE

N76° 08'55"W 1,345.00'

30' PARKING USE SETBACK FROM PUBLIC RIGHT-OF-WAY

50' STRUCTURE AND USE SETBACK FROM PUBLIC RIGHT-OF-WAY

EX.20' PUBLIC UTILITY ESMT PLAT #5461

EX. 1-STORY BUILDING

F.F. ELEV. 235.95

PROPOSED BUILDING EXPANSION
BUILDING III
104,450 SF ±
FF 235.95

PARCEL B-1

PRIVATE DRAINAGE AND UTILITY EASEMENT (PLAT #23017-23021)

1045' +/- TRUCK LOADING AREA

20' x 20' DUMPSTER PAD AND ENCLOSURE

SIAMESE CONNECTION

20' PUBLIC WATER & UTILITY EASEMENT (PLAT #23017-#23021)

MATCH LINE SEE SHEET C-12

MATCH LINE SEE SHEET C-11

20' PUBLIC WATER & UTILITY EASEMENT (PLAT #23017-#23021)

PRIVATE STORMWATER MANAGEMENT EASEMENT (PLAT #23017-23021)

PRIVATE DRAINAGE AND UTILITY EASEMENT (PLAT #23017-23021)

PARCEL E-1

PR. 6" GREASE LINE

SIAMESE CONNECTION B/FIRE SERVICE

FR. LIGHT POLE NO.02

FR. TRUCK WASH-OUT STATION FFE 232.55 3,972 SF

TRAP SIZE: 31.2'L x 10'W x 4'D 3,000 GAL

CHESAPEAKE BAY COURT
VARIABLE PUBLIC RIGHT-OF-WAY

N58° 51'05"W 26.28'

N13° 51'05"W 201.19'

30' PARKING USE SETBACK FROM PUBLIC RIGHT-OF-WAY

50' STRUCTURE AND USE SETBACK FROM PUBLIC RIGHT-OF-WAY

EX. 60' PUBLIC ROAD CENTERLINE

EX. PAVING

EX. BUILDING

R=38.00' L=43.97'

R=59.00' L=129.15'

R=59.00' L=101.19'

S84° 14'36"E 66.68'

S08° 45'23"W 311.43'

MARYLAND WHOLESALE FOOD CENTER, SECTION 3, PARCEL A
PLAT: 8843
THE MARYLAND FOOD CTR. AUTHORITY
T.M.43 P.420 LOT.PAR A
TAX ID #393741
DEED: 1189/180
ZONED: M-2

RICHARD C. & JANET S. OURSLER
T.M.43 P.241
TAX ID.#417914
DEED: 1140/492
ZONED: M-2

FROEHLING & ROBERTSON, INC.
C/O ACCOUNTS PAYABLE
T.M.43 P.421
TAX ID.#398708
DEED: 7383/299
ZONED: M-2

EX. BLDG

N

IMCS

EX. SPEED LIMIT SIGN

N 542,250
E 1374.250

50 30 0 50

THE COORDINATE SYSTEM OF ALL DRAWINGS IS BASED ON THE NORTH AMERICAN DATUM OF 1983. THE ELEVATION SYSTEM OF ALL DRAWINGS IS BASED ON THE NORTH AMERICAN VERTICAL DATUM OF 1988.
HORIZ: NAD 83/91; VERT: NAVD 88

PARCEL E-1 BEARING AND DISTANCES

	BEARING	DISTANCE
1	S 51° 32'53" W	750.78'
2	N 38° 27'07" W	485.00'
3	N 51° 32'53" E	219.79'
4	N 76° 09'12" E	354.39'
5	S 38° 27'07" E	283.44'
6	N 51° 32'53" E	85.33'
7	R=44.0'	42.48'
8	N 03° 46'08" W	54.55'
9	R=356.00'	77.82'
10	N 08° 45'23" E	87.35'
11	R=344.00'	135.74'
12	N 13° 51'05" W	9.70'
13	R=59.00'	61.77'
14	S 81° 14'36" E	66.68'
15	S 08° 45'23" W	311.43'
16	S 29° 48'50" E	107.67'

MORRIS & RITCHIE ASSOCIATES, INC.
ENGINEERS, PLANNERS, SURVEYORS AND LANDSCAPE ARCHITECTS
14280 PARK CENTER DRIVE - LAUREL, MD 20707
(410) 792-9792 / (301) 776-1990 FAX: (410) 792-7395
MRAGTA.COM

COPYRIGHT 2015 MORRIS & RITCHIE ASSOCIATES

FOR REVISIONS (5) ONLY: [illegible]

STATE OF MARYLAND — JOSEPH C. NEUBERG — 29203 — PROFESSIONAL ENGINEER — 12-7-15

MD PROFESSIONAL CERTIFICATION:
I HEREBY CERTIFY THAT THESE DOCUMENTS WERE PREPARED OR APPROVED BY ME, AND THAT I AM A DULY LICENSED PROFESSIONAL ENGINEER UNDER THE LAWS OF THE STATE OF MARYLAND, LICENSE NO. 29203, EXPIRATION DATE: 05/16/2017.

APPROVED: HOWARD COUNTY DEPARTMENT OF PLANNING AND ZONING

CHIEF, DEVELOPMENT ENGINEERING DIVISION	DATE 12-29-15
CHIEF, DIVISION OF LAND DEVELOPMENT	DATE 12-31-15
DIRECTOR, DEPARTMENT OF PLANNING AND ZONING	DATE 1-3-16

ADDRESS CHART

LOT / PARCEL NO.	STREET ADDRESS
PARCEL B-1	7901 OCEANO AVENUE
PARCEL E-1	7775 CHESAPEAKE BAY COURT
PARCEL B-1	7725 CHESAPEAKE BAY COURT (TRUCK WASH FACILITY)

PERMIT INFORMATION CHART

SUBDIVISION NAME			SECTION / AREA		LOT / PARCEL NO.
MARYLAND FOOD CENTER AUTHORITY			3		B-1/662 & E-1/696
PLAT NO. or L/F	GRID NO.	ZONING	TAX MAP NO.	ELEC. DIST.	CENSUS TRACT
23017-23021	21	M-2	43	6TH	6069.01

BLDG
Baltimore Land Design Group Inc.
Consulting Engineers
230 SCHILLING CIRCLE, SUITE 364 • HUNT VALLEY, MARYLAND 21031
PHONE: 410.229.9851 • FAX: 410.229.9865 • BLDG@BLDGINC.COM

REGISTERED FOR PROFESSIONAL ENGINEERS — 21245 — HOSTEK-ZARKESH — STATE OF MARYLAND — 6/7/14

PROFESSIONAL CERTIFICATION
I HEREBY CERTIFY THAT THESE DOCUMENTS WERE PREPARED OR APPROVED BY ME, AND THAT I AM A DULY LICENSED PROFESSIONAL ENGINEER UNDER THE LAWS OF THE STATE OF MARYLAND, LICENSE NO. 21245, EXPIRATION DATE: JUNE 9, 2016.

OWNER
MARYLAND FOOD CENTER AUTHORITY
7801 OCEANO AVE
JESSUP, MD 20794
PHONE (410) 379-5760
FAX (410) 379-5773

DEVELOPER / APPLICANT
MERRITT PROPERTIES, LLC
2066 LORD BALTIMORE DRIVE
BALTIMORE, MD 21244
PHONE (410) 298-2600
FAX (410) 298-9644

REVISIONS

DATE	NO.	DESCRIPTION	BY
05/01/15	2	ADDITION OF A CONTAINMENT BASIN AND RE-ALIGNING PRIVATE GREASE TRAP.	BLDG
9/18/15	1	REPLACED BUILDING IV WITH TRUCK WASH-OUT STATION	MRA
6/11/2014	1	REVISED GREASE TRAP FOR TRUCK WASHOUT STATION.	MRA

REVISED SITE DEVELOPMENT PLAN
UTILITY PLAN
PLAN VIEW III

MARYLAND FOOD CENTER AUTHORITY
PARCEL B-1 & E-1
(WAREHOUSE & OFFICE)

HOWARD COUNTY, MARYLAND
SCALE: 1" = 50'
DATE: OCTOBER, 2014

DRAWING NO.
C-13
SHEET 13 OF 57

SDP-14-068

P:\BBDU\14001 MFC\ Expansion\PLANS\VEGETATION MARKET\SDP\INCS\PLAN VIEWS - IN PROGRESS\SEAFOOD BUILDING\14-001 - SEAFOOD BUILDING - 1.dwg, 12/7/2015 10:45:51 AM, chris.hahn
T:\ Copyright 2015 Morris & Ritchie Associates, Inc.

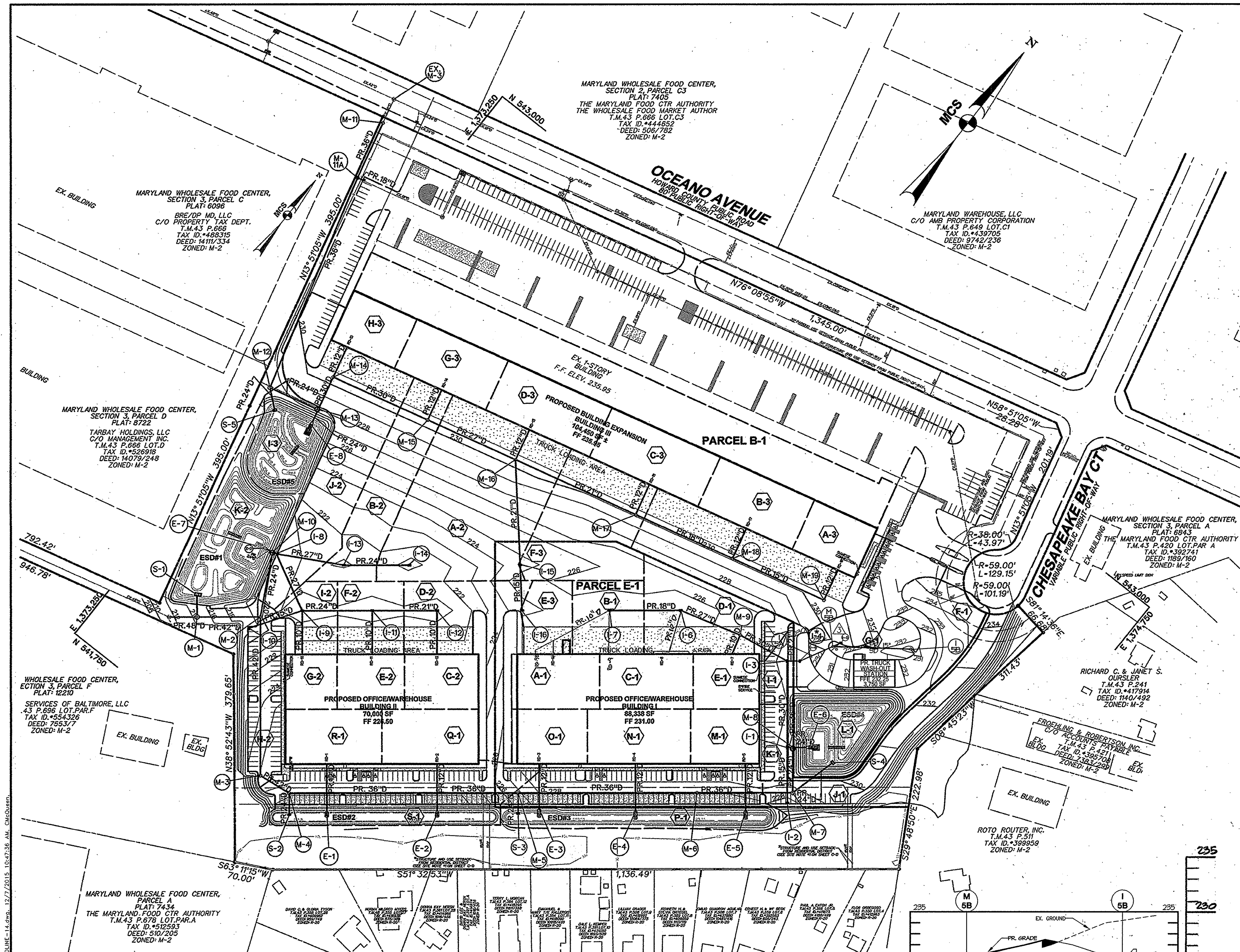

DRAINAGE AREA MAP

SCALE: 1"-100'

PIPE SCHEDULE

SIZE	TYPE	ESTIMATED QUANTITY
15"	RCCP CL. IV	639 LF
18"	RCCP CL. IV	323 LF
21"	RCCP CL. IV	573 LF
24"	RCCP CL. IV	695 LF
27"	RCCP CL. IV	568 LF
30"	RCCP CL. IV	511 LF
36"	RCCP CL. IV	1506 LF
42"	RCCP CL. IV	465 LF
48"	RCCP CL. IV	50 LF
12"	PVC SCHEDULE 40	423 LF

INLET SCHEDULE

NO.	TYPE	INV. IN	INV. OUT	GRATE ELEV.	REMARKS
I-1	DOUBLE WR INLET PRECAST	219.76 / 218.76	218.66	228.50	HOWARD CO. STD. DETAIL PLATE D-4.35
I-2	TYPE 'S' COMBINATION INLET	-----	223.00	227.80	HOWARD CO. STD. DETAIL PLATE D-4.32
I-3	DOUBLE WR INLET PRECAST	220.40 / 219.65	219.55	228.50	HOWARD CO. STD. DETAIL PLATE D-4.35
* I-4	DOUBLE WR INLET PRECAST	221.00	220.52	230.30	HOWARD CO. STD. DETAIL PLATE D-4.35
I-5	TYPE 'S' COMBINATION INLET	226.42	226.00	230.50	HOWARD CO. STD. DETAIL PLATE D-4.32
I-6	DOUBLE TYPE 'S' INLET	221.60 / 220.93	220.83	225.00	HOWARD CO. STD. DETAIL PLATE D-4.23
I-7	DOUBLE TYPE 'S' INLET	221.58 / 221.58	221.58	225.00	HOWARD CO. STD. DETAIL PLATE D-4.23
I-8	DOUBLE WR INLET PRECAST	214.09 / 214.09	212.05	220.20	HOWARD CO. STD. DETAIL PLATE D-4.35
I-9	DOUBLE TYPE 'S' INLET	214.85/214.85 / 216.02	214.65	220.15	HOWARD CO. STD. DETAIL PLATE D-4.23
I-10	TYPE 'S' COMBINATION INLET	-----	215.56	219.00	HOWARD CO. STD. DETAIL PLATE D-4.32
I-11	TYPE 'S' INLET	216.64 / 215.73	215.48	220.15	HOWARD CO. STD. DETAIL PLATE D-4.22
I-12	DOUBLE TYPE 'S' INLET	217.23	216.32	220.15	HOWARD CO. STD. DETAIL PLATE D-4.23
I-13	DOUBLE TYPE 'S' INLET	216.21	215.96	220.80	HOWARD CO. STD. DETAIL PLATE D-4.23
I-14	DOUBLE TYPE 'S' INLET	-----	216.80	220.80	HOWARD CO. STD. DETAIL PLATE D-4.23
I-15	DOUBLE TYPE 'S' INLET	221.08	220.58	224.70	HOWARD CO. STD. DETAIL PLATE D-4.23
I-16	TYPE 'S' INLET	-----	221.50	224.50	HOWARD CO. STD. DETAIL PLATE D-4.22
S-1	MODIFIED TYPE 'A-10' INLET SEE SHT. C-32 FOR DETAILS	-----	202.70	213.33	HOWARD CO. STD. DETAIL PLATE D-4.04
S-2	TYPE 'S' INLET SEE SHT. C-30 FOR DETAILS	-----	214.10	219.00	HOWARD CO. STD. DETAIL PLATE D-4.22
S-3	TYPE 'S' INLET SEE SHT. C-30 FOR DETAILS	-----	215.45	221.00	HOWARD CO. STD. DETAIL PLATE D-4.22
S-4	MODIFIED TYPE 'A-5' INLET SEE SHT. C-33 FOR DETAILS	-----	215.17	220.33	HOWARD CO. STD. DETAIL PLATE D-4.02
S-5	MODIFIED TYPE 'A-5' INLET SEE SHT. C-32 FOR DETAILS	-----	215.17	218.83	HOWARD CO. STD. DETAIL PLATE D-4.02
I-5A	DOUBLE WR INLET PRECAST	222.26	222.44	229.40	HOWARD CO. STD. DETAIL PLATE D-4.35
I-5B	TYPE 'D' INLET PRECAST	-----	225.73	229.78	HOWARD CO. STD. DETAIL PLATE D-4.10

MANHOLE SCHEDULE

NO.	TYPE	INV. IN	INV. OUT	TOP ELEV.	REMARKS
M-1	84" DIA. PRECAST	203.00 / 202.50	201.50	214.50	SHA STANDARD NO. MD-384.07
M-2	84" DIA. PRECAST	208.73 / 206.87	206.67	219.90	SHA STANDARD NO. MD-384.07
M-3	72" DIA. PRECAST	208.52	208.32	225.00	SHA STANDARD NO. MD-384.05
M-4	72" DIA. PRECAST	212.70 / 209.32	208.82	224.25	SHA STANDARD NO. MD-384.05
M-5	STANDARD 5'-0" PRECAST	214.62 / 211.60	211.40	226.85	HOWARD CO. STD. DETAIL PLATE G-5.13
M-6	STANDARD 5'-0" PRECAST	213.43	213.23	228.20	HOWARD CO. STD. DETAIL PLATE G-5.13
M-7	84" DIA. PRECAST	215.30 / 214.5	214.3	228.50	SHA STANDARD NO. MD-384.07
M-8	MODIFIED 96" DIA. PRECAST SEE SHT. C-33 FOR DETAILS	218.61	218.41 / 218.21	229.00	SHA STANDARD NO. MD-384.09
M-9	STANDARD 5'-0" PRECAST	221.66 / 220.24	220.14	226.50	HOWARD CO. STD. DETAIL PLATE G-5.13
M-10	MODIFIED 96" DIA. PRECAST SEE SHT. C-32 FOR DETAILS	211.90	211.70 / 211.50	220.00	SHA STANDARD NO. MD-384.09
M-11	STANDARD 5'-0" PRECAST	212.20	212.07	221.00	HOWARD CO. STD. DETAIL PLATE G-5.13
M-11A	STANDARD 5'-0" PRECAST	218.30 / 212.84	212.64	228.00	HOWARD CO. STD. DETAIL PLATE G-5.13
M-12	84" DIA. PRECAST	215.77 / 214.70	214.50	227.50	SHA STANDARD NO. MD-384.07
M-13	MODIFIED 96" DIA. PRECAST SEE SHT. C-32 FOR DETAILS	217.48	216.80 / 216.60	229.00	SHA STANDARD NO. MD-384.09
M-14	STANDARD 5'-0" PRECAST	219.25 / 217.95	217.75	230.50	HOWARD CO. STD. DETAIL PLATE G-5.13
M-15	STANDARD 5'-0" PRECAST	218.91 / 220.16	218.71	230.50	HOWARD CO. STD. DETAIL PLATE G-5.13
M-16	STANDARD 5'-0" PRECAST	219.91 / 219.81 / 220.86	219.61	230.50	HOWARD CO. STD. DETAIL PLATE G-5.13
M-17	STANDARD 4'-0" PRECAST	222.43 / 221.36	221.11	230.15	HOWARD CO. STD. DETAIL PLATE G-5.12
M-18	STANDARD 4'-0" PRECAST	223.15 / 222.57	222.32	230.15	HOWARD CO. STD. DETAIL PLATE G-5.12
M-19	STANDARD 4'-0" PRECAST	223.83	223.58	230.50	HOWARD CO. STD. DETAIL PLATE G-5.12
M-5B	STANDARD 4'-0" PRECAST	225.15/225.02	224.90	230.92	HOWARD CO. STD. DETAIL PLATE D-5.12

STRUCTURE SCHEDULE

NO.	TYPE	SIZE	INV. IN	INV. OUT	TOP ELEV.	REMARKS
E-1	FLARED END SECTION (ADS-HDPE)	12"	219.02	-----	-----	ADS, INC. DRAINAGE HANDBOOK
E-2	FLARED END SECTION (ADS-HDPE)	12"	219.02	-----	-----	ADS, INC. DRAINAGE HANDBOOK
E-3	FLARED END SECTION (ADS-HDPE)	12"	222.72	-----	-----	ADS, INC. DRAINAGE HANDBOOK
E-4	FLARED END SECTION (ADS-HDPE)	12"	222.72	-----	-----	ADS, INC. DRAINAGE HANDBOOK
E-5	FLARED END SECTION (ADS-HDPE)	12"	222.72	-----	-----	ADS, INC. DRAINAGE HANDBOOK
E-6	CONC. END SECTION	24"	218.08	-----	-----	HOWARD CO. STD. DETAIL PLATE D-5.51
E-7	CONC. END SECTION	24"	211.56	-----	-----	HOWARD CO. STD. DETAIL PLATE D-5.51
E-8	CONC. END SECTION	24"	216.56	-----	-----	HOWARD CO. STD. DETAIL PLATE D-5.51

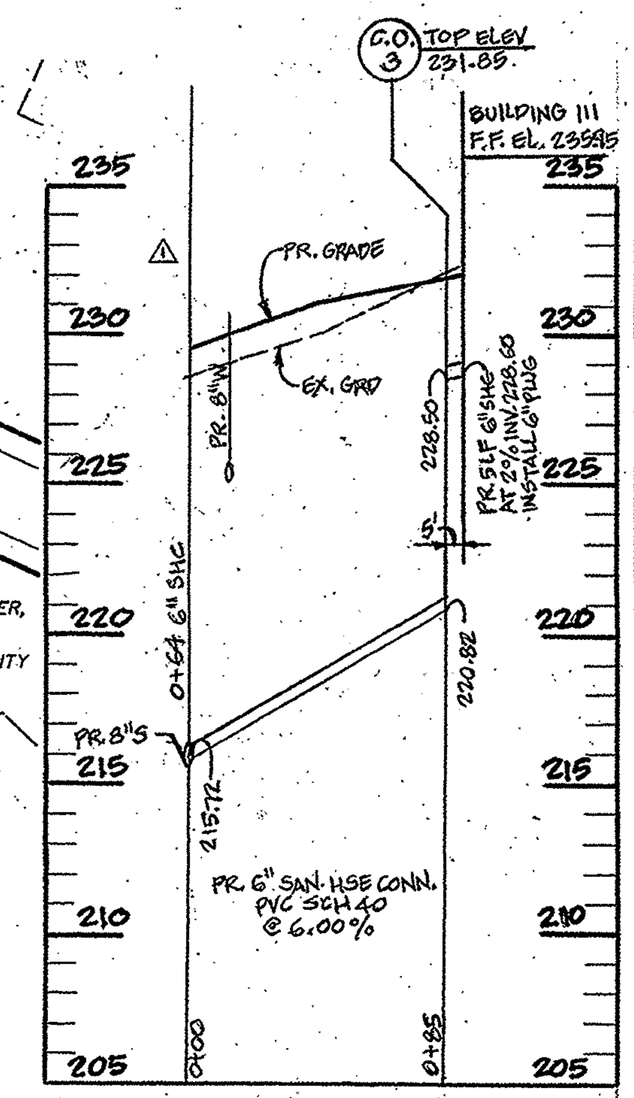

SANITARY SEWER PROFILE

SCALE: H= 1" = 50' V= 1" = 5'

DRAINAGE AREA

NO.	ACRES (AC)	COEFF. "C"	IMP. (%)
A-1	0.37	0.95	100
B-1	0.40	0.95	100
C-1	0.39	0.95	100
D-1	1.88	0.90	92
E-1	0.28	0.95	100
F-1	0.14	0.95	100
G-1	0.05	0.80	88
H-1	0.87	0.86	73
I-1	0.11	0.90	72
J-1	1.20	0.54	36
K-1	0.16	0.88	87
L-1	0.99	0.30	0
M-1	0.29	0.95	100
N-1	0.43	0.95	100
O-1	0.31	0.95	100
P-1	1.41	0.60	49
Q-1	0.40	0.95	100
R-1	0.40	0.95	100
S-1	1.11	0.67	58

DRAINAGE AREA

NO.	ACRES (AC)	COEFF. "C"	IMP. (%)
A-2	1.73	0.95	100
B-2	0.71	0.95	100
C-2	0.31	0.95	100
D-2	0.94	0.80	83
E-2	0.28	0.95	100
F-2	0.37	0.95	100
G-2	0.22	0.95	100
H-2	0.48	0.85	92
I-2	0.29	0.90	90
J-2	1.44	0.93	96
K-2	0.82	0.30	0

DRAINAGE AREA

NO.	ACRES (AC)	COEFF. "C"	IMP. (%)
A-3	0.29	0.95	100
B-3	0.43	0.95	100
C-3	0.50	0.95	100
D-3	0.48	0.95	100
E-3	0.27	0.95	100
F-3	0.92	0.90	91
G-3	0.40	0.95	100
H-3	0.29	0.95	100
I-3	0.52	0.30	0

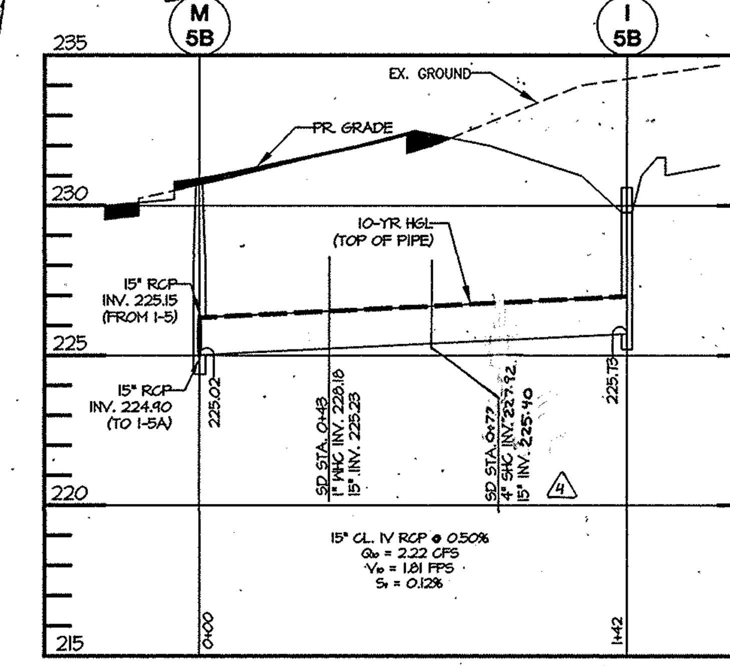

STORM DRAIN PROFILE (PRIVATE)

I-5B TO M-5B

HOR. 1" = 50'
VERT. 1" = 5'

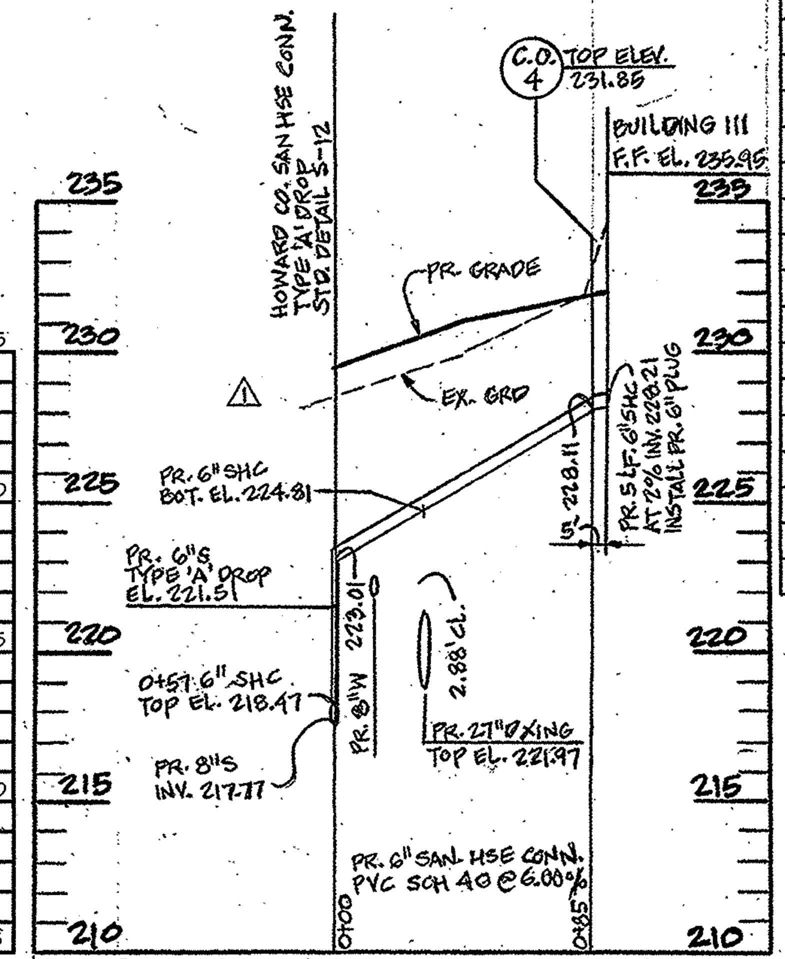

SANITARY SEWER PROFILE

SCALE: H= 1" = 50' V= 1" = 5'

50 30 0 50

THE COORDINATE SYSTEM OF ALL DRAWINGS IS BASED ON THE NORTH AMERICAN DATUM OF 1983. THE ELEVATION SYSTEM OF ALL DRAWINGS IS BASED ON THE NORTH AMERICAN VERTICAL DATUM OF 1988.
HORZ: NAD 83/91; VERT: NAVD 88

ADDRESS CHART	
LOT / PARCEL NO.	STREET ADDRESS
PARCEL B-1	7901 OCEANO AVENUE
PARCEL E-1	7775 CHESAPEAKE BAY COURT
PARCEL B-1	7725 CHESAPEAKE BAY COURT (TRUCK WASH FACILITY)

PERMIT INFORMATION CHART

SUBDIVISION NAME			SECTION / AREA		LOT / PARCEL NO.
MARYLAND FOOD CENTER AUTHORITY			3		B-1/662 & E-1/696
PLAT NO. or L/F	GRID NO.	ZONING	TAX MAP NO.	ELEC. DIST.	CENSUS TRACT
23017-23021	21	M-2	43	6TH	6069.01

*INLET 1-4: REMOVE INLET FRAME & HEAD PIECE AND REPLACE WITH CONCRETE SLAB & MANHOLE FRAME AND COVER PER HOWARD COUNTY DETAILS G-9.05 & G-5.51.

APPROVED: HOWARD COUNTY DEPARTMENT OF PLANNING AND ZONING

CHIEF, DEVELOPMENT ENGINEERING DIVISION	DATE 12.29.15
CHIEF, DIVISION OF LAND DEVELOPMENT	DATE 12-31-15
DIRECTOR, DEPARTMENT OF PLANNING AND ZONING	DATE 1-3-16

MORRIS & RITCHIE ASSOCIATES, INC.
ENGINEERS, PLANNERS, SURVEYORS AND LANDSCAPE ARCHITECTS
14280 PARK CENTER DRIVE - LAUREL, MD 20707
(410) 792-9792 / (301) 776-1690 FAX: (410) 792-7395
MRAGTA.COM

COPYRIGHT 2015 MORRIS & RITCHIE ASSOCIATES

FOR REVISION #3 ONLY #4

MD PROFESSIONAL CERTIFICATION:
I HEREBY CERTIFY THAT THESE DOCUMENTS WERE PREPARED OR APPROVED BY ME, AND THAT I AM A DULY LICENSED PROFESSIONAL ENGINEER UNDER THE LAWS OF THE STATE OF MARYLAND, LICENSE NO. 29203, EXPIRATION DATE: 06/16/2017.

12-7-15

BLDG
Baltimore Land Design Group Inc.
Consulting Engineers
230 SCHILLING CIRCLE, SUITE 364 • HUNT VALLEY, MARYLAND 21031
PHONE: 410.229.9851 • FAX: 410.229.9865 • BLDG@BLDGINC.COM

PROFESSIONAL CERTIFICATION

I HEREBY CERTIFY THAT THESE DOCUMENTS WERE PREPARED OR APPROVED BY ME, AND THAT I AM A DULY LICENSED PROFESSIONAL ENGINEER UNDER THE LAWS OF THE STATE OF MARYLAND, LICENSE NO. 21245, EXPIRATION DATE: JUNE 9, 2016.

OWNER

MARYLAND FOOD CENTER AUTHORITY
7801 OCEANO AVE
JESSUP, MD 20794
PHONE (410) 379-5760
FAX (410) 379-5773

DEVELOPER / APPLICANT

MERRITT PROPERTIES, LLC
2066 LORD BALTIMORE DRIVE
BALTIMORE, MD 21244
PHONE (410) 298-2600
FAX (410) 298-9644

REVISIONS

DATE	NO.	DESCRIPTION	BY
12/01/14	1	RELOCATED SANITARY SEWER HSE CONNECTION PROFILES C.O. #3 AND C.O. #4 FROM SHEET C-18	BLDG
9/18/15	3	REPLACED BUILDING IV WITH TRUCK WASH-OUT STATION	MRA
6/1/2016	4	REVISED GREASE TRAP FOR TRUCK WASHOUT STATION	MRA

REVISED SITE DEVELOPMENT PLAN

UTILITY PLAN

DRAINAGE AREA MAP AND STRUCTURE SCHEDULES

MARYLAND FOOD CENTER AUTHORITY

PARCEL B-1 & E-1
(WAREHOUSE & OFFICE)

HOWARD COUNTY, MARYLAND
SCALE: 1" = 100'

DATE: OCTOBER, 2014

DRAWING NO. C-14

SDP-14-068

P:\PROJ\17620 MFCA Exspansion\PLANS\LDE\SEAFOOD MARKET\REDLINES\PLOT\2015-04-07-MFCA-SEAFOOD-REDLINE-14.dwg, 12/7/2015 10:47:36 AM, CMcQueen, Copyright 2015 Morris & Ritchie Associates, Inc.

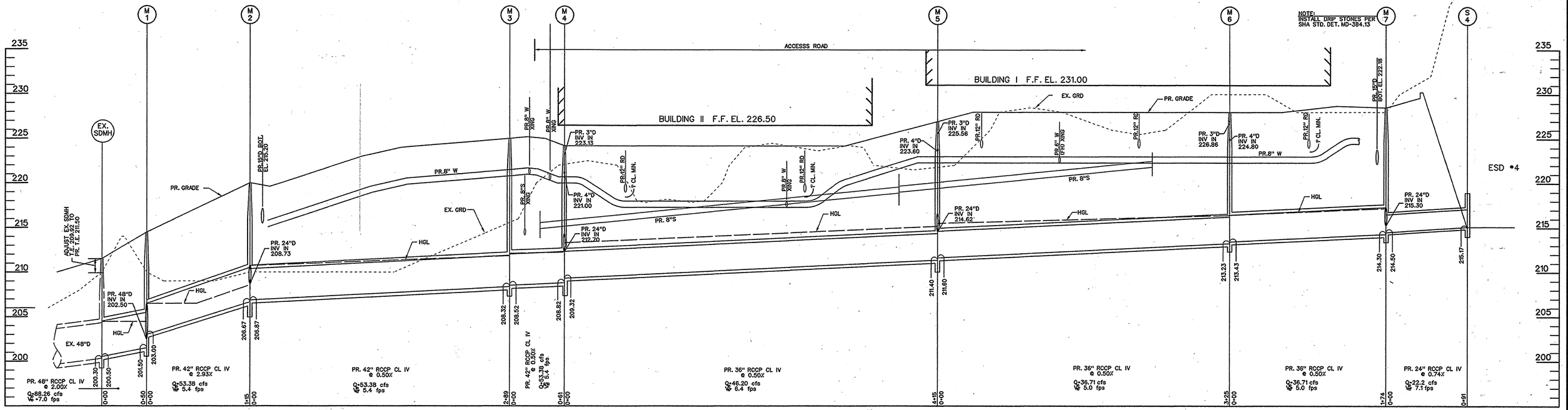

STORM DRAIN PROFILE

SCALE: H: 1" = 50'
V: 1" = 5'

△3 *INLET 1-4: REMOVE INLET FRAME & HEAD PIECE AND REPLACE WITH CONCRETE SLAB & MANHOLE FRAME AND COVER PER HOWARD COUNTY DETAILS G-9.05 & G-5.51.

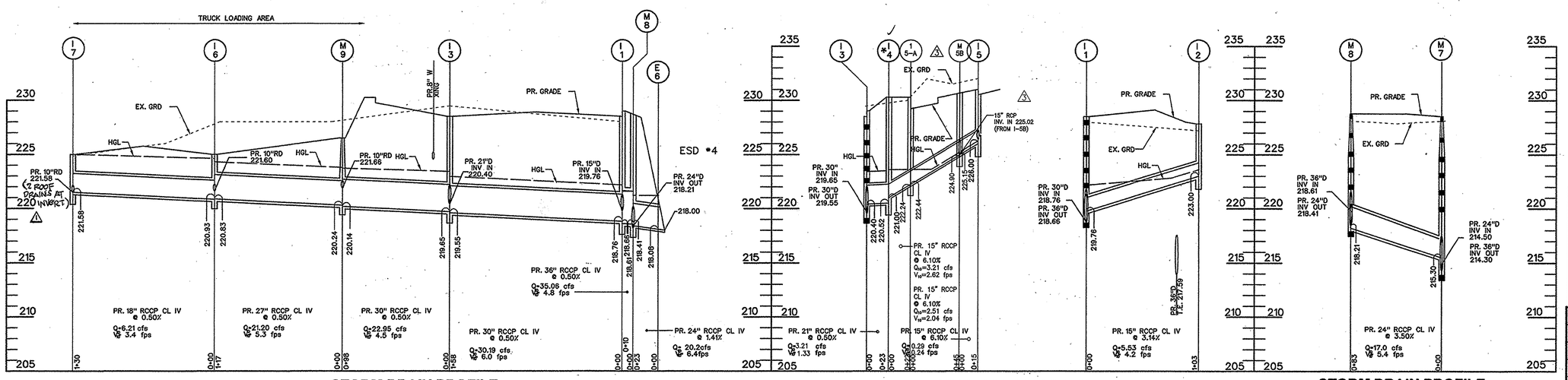

STORM DRAIN PROFILE

SCALE: H: 1" = 50'
V: 1" = 5'

STORM DRAIN PROFILE

SCALE: H: 1" = 50'
V: 1" = 5'

50 30 0 50

THE COORDINATE SYSTEM OF ALL DRAWINGS IS BASED ON THE NORTH AMERICAN DATUM OF 1983. THE ELEVATION SYSTEM OF ALL DRAWINGS IS BASED ON THE NORTH AMERICAN VERTICAL DATUM OF 1988.
HORZ: NAD 83/91; VERT: NAVD 88

MORRIS & RITCHIE ASSOCIATES, INC.
ENGINEERS, PLANNERS, SURVEYORS AND LANDSCAPE ARCHITECTS
14280 PARK CENTER DRIVE - LAUREL, MD 20707
(410) 792-9792 / (301) 776-1690 FAX: (410) 792-7395
MRA@TA.COM

COPYRIGHT 2015 MORRIS & RITCHIE ASSOCIATES

FOR PERMITTING ONLY
STATE OF MARYLAND — THOMAS C. NEUBERGER — 29203 — PROFESSIONAL ENGINEER
12-7-15

MD. PROFESSIONAL CERTIFICATION:

I HEREBY CERTIFY THAT THESE DOCUMENTS WERE PREPARED OR APPROVED BY ME, AND THAT I AM A DULY LICENSED PROFESSIONAL ENGINEER UNDER THE LAWS OF THE STATE OF MARYLAND, LICENSE NO. 29203, EXPIRATION DATE: 06/16/2017.

△3

APPROVED: HOWARD COUNTY DEPARTMENT OF PLANNING AND ZONING

CHIEF, DEVELOPMENT ENGINEERING DIVISION — DATE 12-29-15

CHIEF, DIVISION OF LAND DEVELOPMENT — DATE 12-31-15

DIRECTOR, DEPARTMENT OF PLANNING AND ZONING — DATE 1-3-16

ADDRESS CHART	
LOT / PARCEL NO.	STREET ADDRESS
PARCEL B-1	7901 OCEANO AVENUE
PARCEL E-1	7775 CHESAPEAKE BAY COURT

PERMIT INFORMATION CHART

SUBDIVISION NAME			SECTION / AREA		LOT / PARCEL NO.
MARYLAND FOOD CENTER AUTHORITY			3		B-1/662 & E-1/696
PLAT NO. or L/F	GRID NO.	ZONING	TAX MAP NO.	ELEC. DIST.	CENSUS TRACT
23017-23021	21	M-2	43	6TH	6069.01

BLDG
Baltimore Land Design Group Inc.
Consulting Engineers
230 SCHILLING CIRCLE, SUITE 364 • HUNT VALLEY, MARYLAND 21031
PHONE: 410.229.9851 • FAX: 410.229.9865 • BLDG@BLDGINC.COM

STATE OF MARYLAND — ROBERT ZAFFOS — 21245 — REGISTERED PROFESSIONAL ENGINEER
10/15/14

PROFESSIONAL CERTIFICATION

I HEREBY CERTIFY THAT THESE DOCUMENTS WERE PREPARED OR APPROVED BY ME, AND THAT I AM A DULY LICENSED PROFESSIONAL ENGINEER UNDER THE LAWS OF THE STATE OF MARYLAND, LICENSE NO. 21245, EXPIRATION DATE: JUNE 9, 2016.

OWNER
MARYLAND FOOD CENTER AUTHORITY
7801 OCEANO AVE
JESSUP, MD 20794
PHONE (410) 379-5760
FAX (410) 379-5773

DEVELOPER / APPLICANT
MERRITT PROPERTIES, LLC
2066 LORD BALTIMORE DRIVE
BALTIMORE, MD 21244
PHONE (410) 298-2600
FAX (410) 298-9644

REVISIONS

DATE	NO.	DESCRIPTION	BY
12/01/14	△1	MOVED ADDITIONAL ROOF DRAINS AT I-7.	BLDG
9/18/15	△3	REPLACED BUILDING IV WITH TRUCK WASH-OUT STATION	MRA

REVISED SITE DEVELOPMENT PLAN
UTILITY PROFILES
STORM DRAIN

MARYLAND FOOD CENTER AUTHORITY

PARCEL B-1 & E-1
(WAREHOUSE & OFFICE)

HOWARD COUNTY, MARYLAND
SCALE: 1" = 50'
DATE: OCTOBER, 2014

DRAWING NO.
C-15
SHEET 15 OF 57

SDP-14-068

P:\PROJECTS\2620 MFCA Expansion\PLANS\UTILS\FOOD MARKET\UTILITIES\PLOT\2015-04-07-MFCA-SEAFOOD-REDLINE-15.dwg, 12/7/2015 10:48:24 AM, CheDuesen

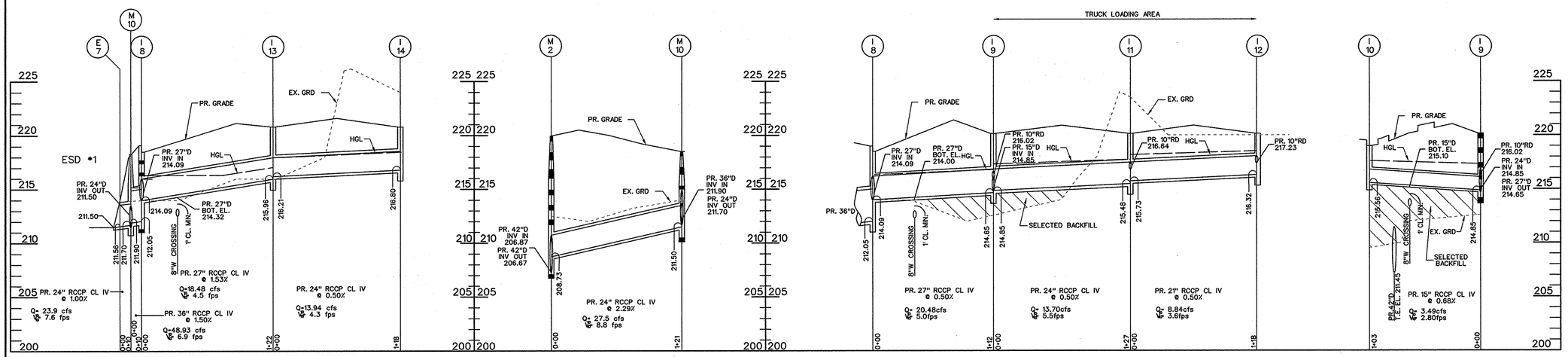

STORM DRAIN PROFILE

SCALE: H: 1" = 50'
V: 1" = 5'

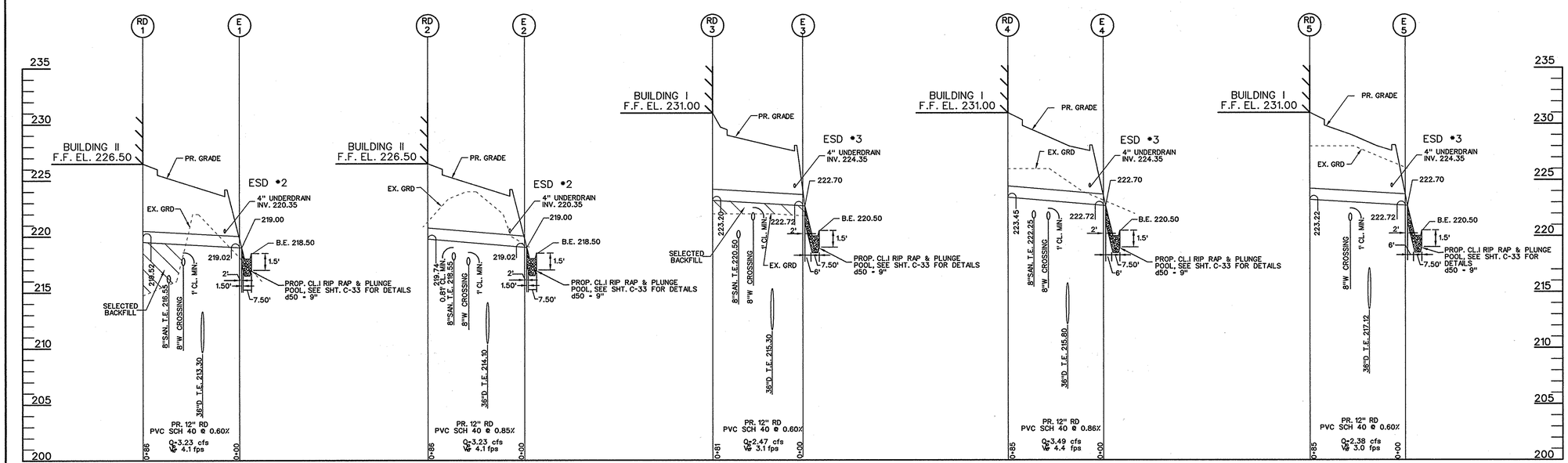

ROOF DRAIN PROFILES

SCALE: H: 1" = 50'
V: 1" = 5'

50 30 0 50

THE COORDINATE SYSTEM OF ALL DRAWINGS IS BASED ON THE NORTH AMERICAN DATUM OF 1983. THE ELEVATION SYSTEM OF ALL DRAWINGS IS BASED ON THE NORTH AMERICAN VERTICAL DATUM OF 1988.
HORZ: NAD 83/91; VERT: NAVD 88

APPROVED: DEPARTMENT OF PLANNING AND ZONING

Chief, Development Engineering Division — Date 11.6.14

Chief, Division of Land Development — Date 11-20-14

Director — Date 11/24/14

ADDRESS CHART

LOT / PARCEL NO.	STREET ADDRESS
PARCEL B-1	7901 OCEANO AVENUE
PARCEL E-1	7775 CHESAPEAKE BAY COURT

PERMIT INFORMATION CHART

SUBDIVISION NAME			SECTION / AREA	LOT / PARCEL NO.
MARYLAND FOOD CENTER AUTHORITY			3	B-1/662 & E-1/696
PLAT NO. or L/F	GRID NO.	ZONING	TAX MAP NO.	ELEC. DIST. / CENSUS TRACT
23017-23021	21	M-2	43	6TH / 6069.01

BLDG
Baltimore Land Design Group Inc.
Consulting Engineers
230 SCHILLING CIRCLE, SUITE 364 • HUNT VALLEY, MARYLAND 21031
PHONE: 410.229.9851 • FAX: 410.229.9865 • BLDG@BLDGINC.COM

LICENSED PROFESSIONAL ENGINEER — 21245 — LAURA LORD ZAMROSTEK — STATE OF MARYLAND — 10/15/14

PROFESSIONAL CERTIFICATION
I HEREBY CERTIFY THAT THESE DOCUMENTS WERE PREPARED OR APPROVED BY ME, AND THAT I AM A DULY LICENSED PROFESSIONAL ENGINEER UNDER THE LAWS OF THE STATE OF MARYLAND, LICENSE NO. 21245, EXPIRATION DATE: JUNE 9, 2016.

OWNER
MARYLAND FOOD CENTER AUTHORITY
7801 OCEANO AVE
JESSUP, MD 20794
PHONE (410) 379-5760
FAX (410) 379-5773

DEVELOPER / APPLICANT
MERRITT PROPERTIES, LLC
2066 LORD BALTIMORE DRIVE
BALTIMORE, MD 21244
PHONE (410) 298-2600
FAX (410) 298-9644

REVISIONS

DATE	NO.	DESCRIPTION	BY

UTILITY PROFILES
STORM DRAIN

MARYLAND FOOD CENTER AUTHORITY

PARCEL B-1 & E-1
(WAREHOUSE & OFFICE)

HOWARD COUNTY, MARYLAND
SCALE: 1" = 20'
DATE: OCTOBER, 2014

DRAWING NO.
C-16
SHEET 16 OF 57

SDP-14-068

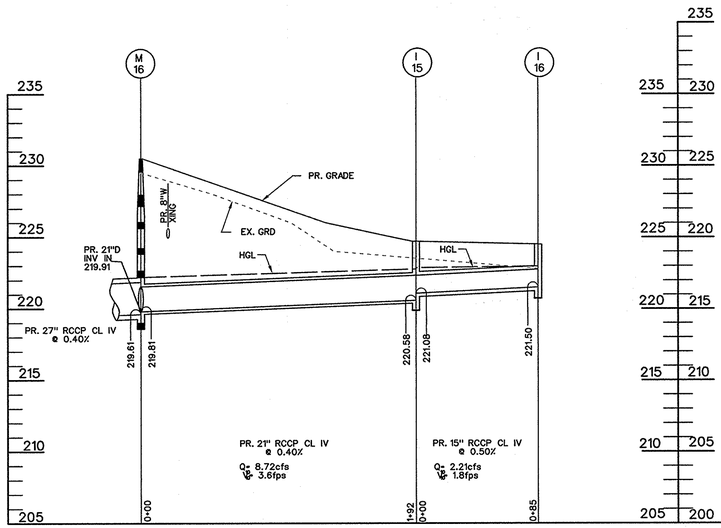

STORM DRAIN PROFILE

SCALE: H: 1" = 50'
V: 1" = 5'

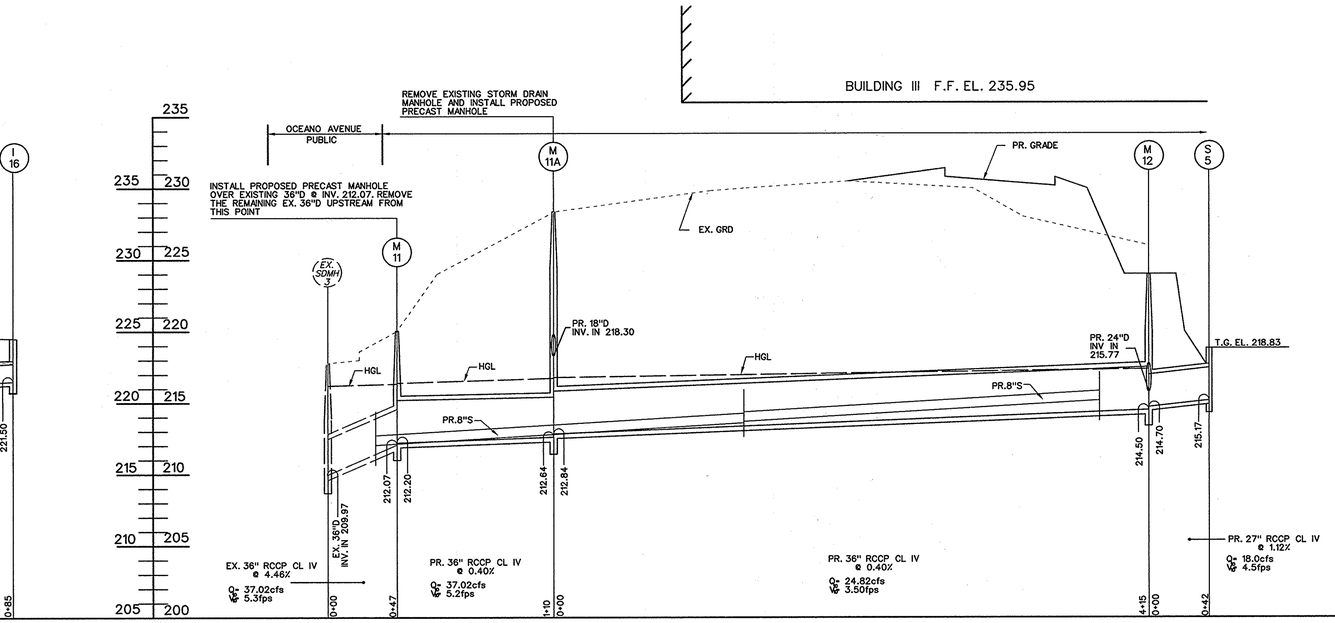

STORM DRAIN PROFILE

SCALE: H: 1" = 50'
V: 1" = 5'

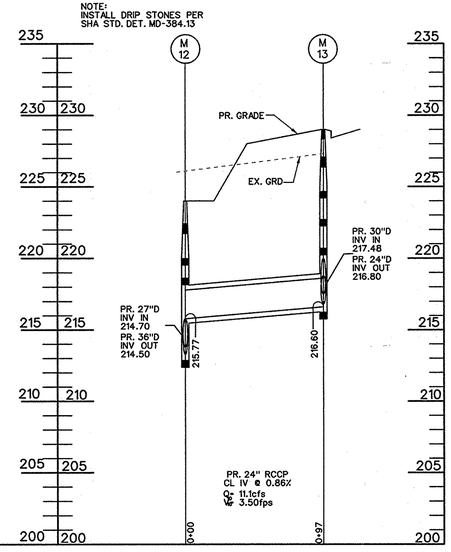

STORM DRAIN PROFILE

SCALE: H: 1" = 50'
V: 1" = 5'

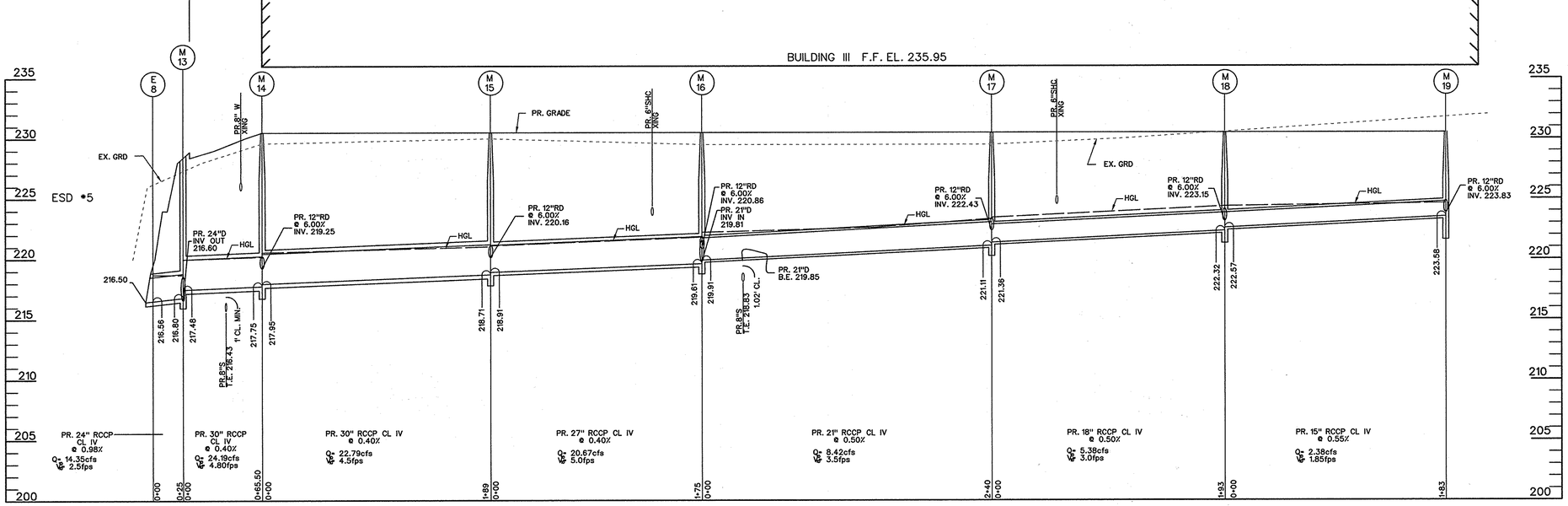

STORM DRAIN PROFILE

SCALE: H: 1" = 50'
V: 1" = 5'

THE COORDINATE SYSTEM OF ALL DRAWINGS IS BASED ON THE NORTH AMERICAN DATUM OF 1983. THE ELEVATION SYSTEM OF ALL DRAWINGS IS BASED ON THE NORTH AMERICAN VERTICAL DATUM OF 1988.
HORZ: NAD 83/91; VERT: NAVD 88

50 30 0 50

APPROVED: DEPARTMENT OF PLANNING AND ZONING

Chief, Development Engineering Division — Date 11-6-14

Chief, Division of Land Development — Date 11-20-14

Director — Date 11/21/14

ADDRESS CHART	
LOT / PARCEL NO.	STREET ADDRESS
PARCEL B-1	7901 OCEANO AVENUE
PARCEL E-1	7775 CHESAPEAKE BAY COURT

PERMIT INFORMATION CHART

SUBDIVISION NAME			SECTION / AREA		LOT / PARCEL NO.
MARYLAND FOOD CENTER AUTHORITY			3		B-1/662 & E-1/696
PLAT NO. or L/F	GRID NO.	ZONING	TAX MAP NO.	ELEC. DIST.	CENSUS TRACT
23017-23021	21	M-2	43	6TH	6069.01

BLDG
Baltimore Land Design Group Inc.
Consulting Engineers
230 SCHILLING CIRCLE, SUITE 364 • HUNT VALLEY, MARYLAND 21031
PHONE: 410.229.9851 • FAX: 410.229.9865 • BLDG@BLDGINC.COM

LICENSED FOR PROFESSIONAL ENGINEERING — 21245 — LARRY JOSTEK ZARFOS — STATE OF MARYLAND — 10/15/14

PROFESSIONAL CERTIFICATION

I HEREBY CERTIFY THAT THESE DOCUMENTS WERE PREPARED OR APPROVED BY ME, AND THAT I AM A DULY LICENSED PROFESSIONAL ENGINEER UNDER THE LAWS OF THE STATE OF MARYLAND, LICENSE NO. 21245, EXPIRATION DATE: JUNE 9, 2016.

OWNER
MARYLAND FOOD CENTER AUTHORITY
7801 OCEANO AVE
JESSUP, MD 20794
PHONE (410) 379-5760
FAX (410) 379-5773

DEVELOPER / APPLICANT
MERRITT PROPERTIES, LLC
2066 LORD BALTIMORE DRIVE
BALTIMORE, MD 21244
PHONE (410) 298-2600
FAX (410) 298-9644

REVISIONS

DATE	NO.	DESCRIPTION	BY

UTILITY PROFILES
STORM DRAIN

MARYLAND FOOD CENTER AUTHORITY

PARCEL B-1 & E-1
(WAREHOUSE & OFFICE)

HOWARD COUNTY, MARYLAND
SCALE: 1" = 50'
DATE: OCTOBER, 2014

DRAWING NO.
C-17
SHEET 17 OF 57

SDP-14-068

MORRIS & RITCHIE ASSOCIATES, INC.
ENGINEERS, PLANNERS, SURVEYORS AND LANDSCAPE ARCHITECTS
(410) 821-1690 (301) 776-1690 FAX (410) 821-1748
MRAGTA.COM
COPYRIGHT 2014 MORRIS & RITCHIE ASSOCIATES, 2015

FOR REVISION #3 ONLY
STATE OF MARYLAND — GREGORY C. NEUBERGER — 29203 — PROFESSIONAL ENGINEER
11-30-15

MD PROFESSIONAL CERTIFICATION:
I HEREBY CERTIFY THAT THESE DOCUMENTS WERE PREPARED OR APPROVED BY ME, AND THAT I AM A DULY LICENSED PROFESSIONAL ENGINEER UNDER THE LAWS OF THE STATE OF MARYLAND.
LICENSE NO.: 29203
EXPIRATION DATE: 06/16/2017

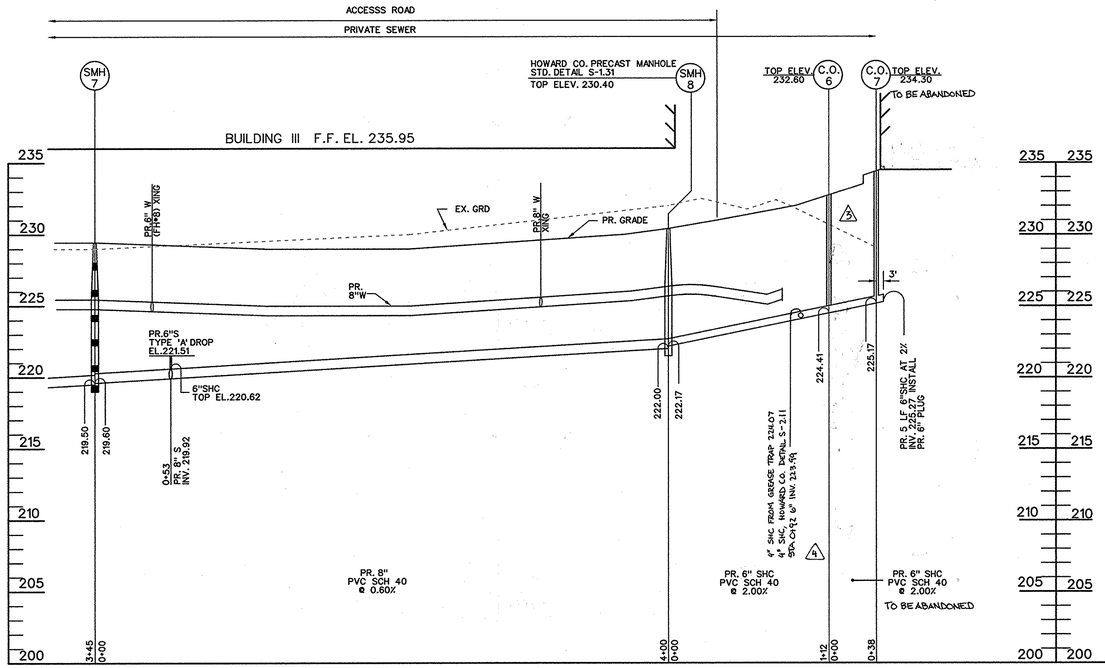

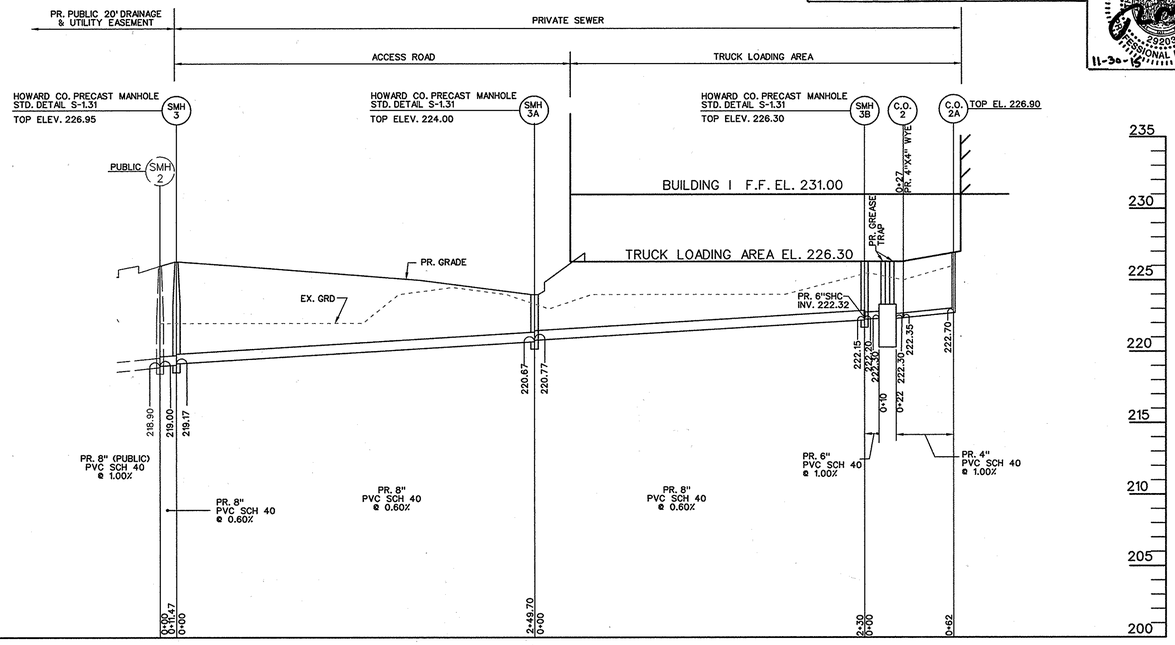

SANITARY SEWER PROFILE

SCALE: H: 1" = 50'
V: 1" = 5'

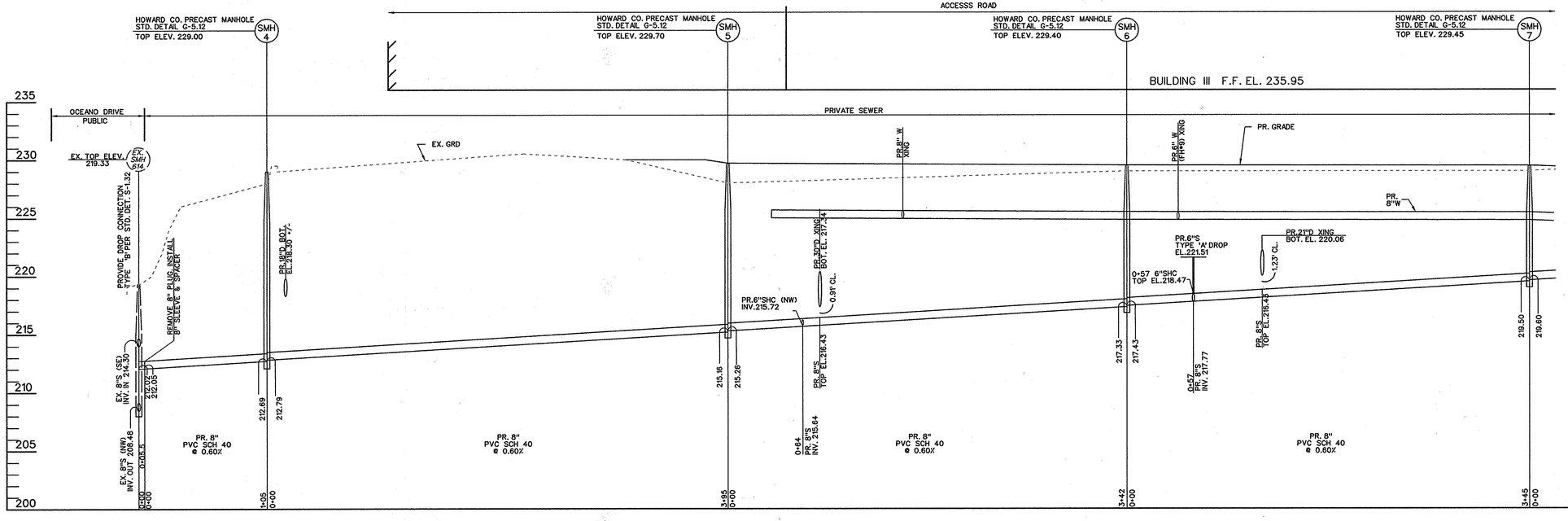

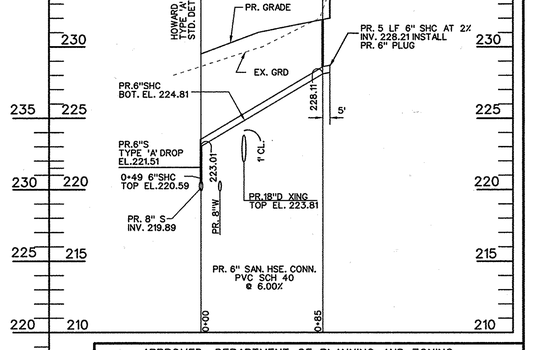

SANITARY SEWER PROFILE

SCALE: H: 1" = 50'
V: 1" = 5'

APPROVED: DEPARTMENT OF PLANNING AND ZONING

Chief, Development Engineering Division — Date 2.9.15
Chief, Division of Land Development — Date 2-12-15
Director — Date 2/13/15

ADDRESS CHART	
LOT / PARCEL NO.	STREET ADDRESS
PARCEL B-1	7901 OCEANO AVENUE
PARCEL E-1	7775 CHESAPEAKE BAY COURT
PARCEL B-1	7725 CHESAPEAKE BAY COURT (TRUCK WASH FACILITY)

PERMIT INFORMATION CHART						
SUBDIVISION NAME			SECTION / AREA		LOT / PARCEL NO.	
MARYLAND FOOD CENTER AUTHORITY			3		B-1/662 & E-1/696	
PLAT NO. or L/F	GRID NO.	ZONING	TAX MAP NO.	ELEC. DIST.	CENSUS TRACT	
23017-23021	21	M-2	43	6TH	6069.01	

THE COORDINATE SYSTEM OF ALL DRAWINGS IS BASED ON THE NORTH AMERICAN DATUM OF 1983. THE ELEVATION SYSTEM OF ALL DRAWINGS IS BASED ON THE NORTH AMERICAN VERTICAL DATUM OF 1988.
HORZ: NAD 83/91 VERT: NAVD 88

50 30 0 50

REVISIONS			
DATE	NO.	DESCRIPTION	BY
12/01/14	1	RELOCATED PRIVATE SEWER LINE ALONG BUILDING I. MOVED TWO (2) SEWER PROFILES FROM THIS SHEET TO SHEET C-14.	BLDG
9/18/15	3	REPLACED BUILDING IV WITH TRUCK WASH-OUT STATION	MRA
6/1/2016	4	REVISED GREASE TRAP FOR TRUCK WASHOUT STATION	MRA

BLDG
Baltimore Land Design Group Inc.
Consulting Engineers
230 SCHILLING CIRCLE, SUITE 364 • HUNT VALLEY, MARYLAND 21031
PHONE: 410.229.9851 • FAX: 410.229.9865 • BLDG@BLDGINC.COM

STATE OF MARYLAND — 21245 — MARK ROSTEK-ZAPISEK — REGISTERED PROFESSIONAL ENGINEER — 11/12/15

PROFESSIONAL CERTIFICATION
I HEREBY CERTIFY THAT THESE DOCUMENTS WERE PREPARED OR APPROVED BY ME, AND THAT I AM A DULY LICENSED PROFESSIONAL ENGINEER UNDER THE LAWS OF THE STATE OF MARYLAND, LICENSE NO. 21245, EXPIRATION DATE: JUNE 9, 2016.

OWNER
MARYLAND FOOD CENTER AUTHORITY
7801 OCEANO AVE
JESSUP, MD 20794
PHONE (410) 379-5760
FAX (410) 379-5773

DEVELOPER / APPLICANT
MERRITT PROPERTIES, LLC
2066 LORD BALTIMORE DRIVE
BALTIMORE, MD 21244
PHONE (410) 298-2600
FAX (410) 298-9644

REVISED SITE DEVELOPMENT PLAN
REVISED UTILITY PROFILES
SANITARY SEWER

MARYLAND FOOD CENTER AUTHORITY

PARCEL B-1 & E-1
(WAREHOUSE & OFFICE)

HOWARD COUNTY, MARYLAND
SCALE: 1" = 50'
DATE: DECEMBER, 2014

DRAWING NO.
C-18
SHEET 18 OF 57

SDP-14-068

PARCEL E-1 BEARING AND DISTANCES		
	BEARING	DISTANCE
(1)	S 51° 32'53" W	750.78'
(2)	N 38° 27'07" W	485.00'
(3)	N 51° 32'53" E	219.79'
(4)	N 76° 09'12" E	354.39'
(5)	S 38° 27'07" E	283.44'
(6)	N 51° 32'53" E	85.33'
(7)	R=44.0'	42.48'
(8)	N 03° 46'06" W	54.55'
(9)	R=356.00'	77.82'
(10)	N 08° 45'23" E	87.35'
(11)	R=344.00'	135.74'
(12)	N 13° 51'05" W	9.70'
(13)	R=59.00'	61.77'
(14)	S 81° 14'36" E	66.68'
(15)	S 08° 45'23" W	311.43'
(16)	S 29° 48'50" E	107.67'

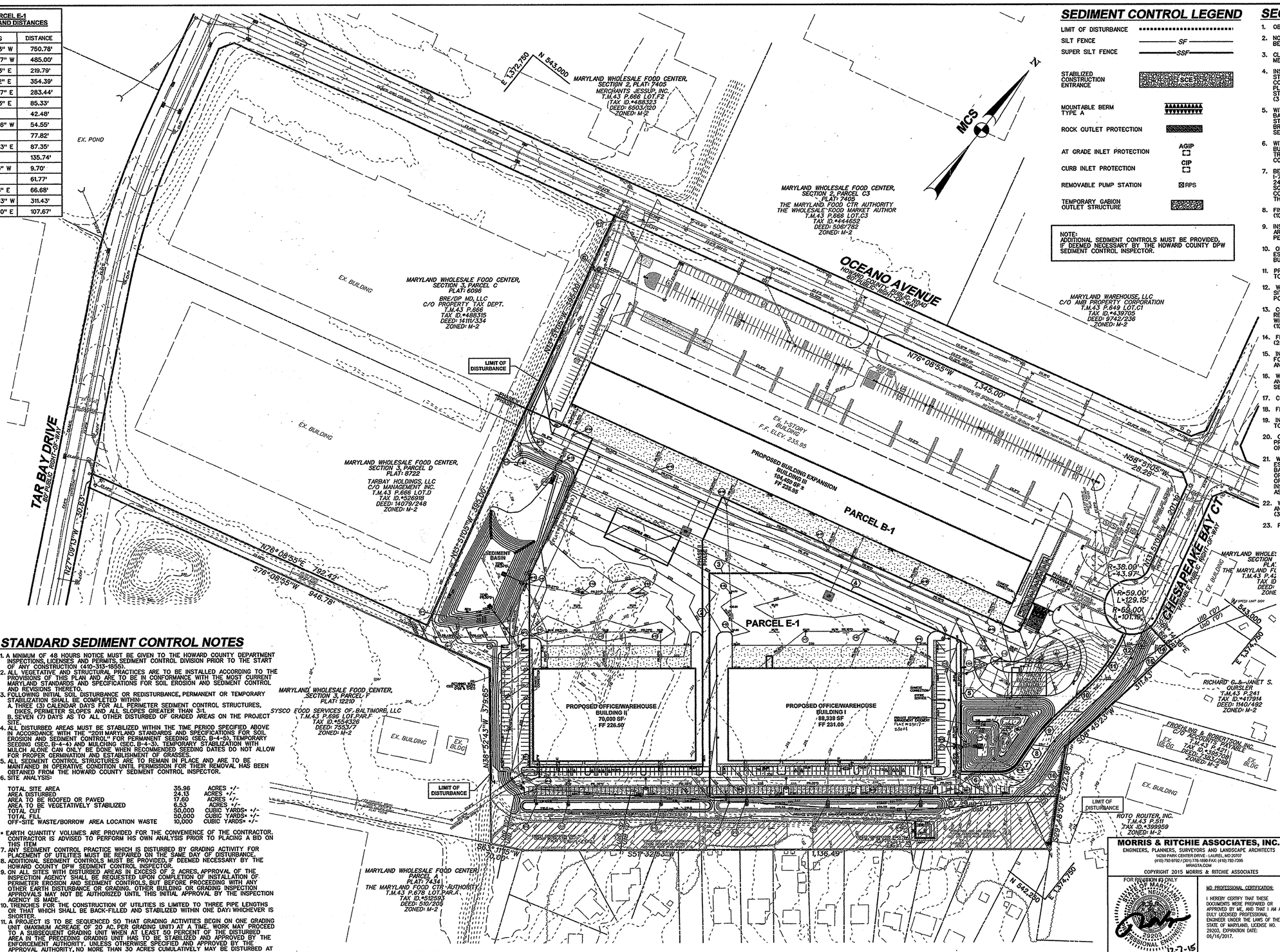

SEDIMENT CONTROL LEGEND

- LIMIT OF DISTURBANCE
- SILT FENCE — SF
- SUPER SILT FENCE — SSF
- STABILIZED CONSTRUCTION ENTRANCE — SCE
- MOUNTABLE BERM TYPE A
- ROCK OUTLET PROTECTION
- AT GRADE INLET PROTECTION — AGIP
- CURB INLET PROTECTION — CIP
- REMOVABLE PUMP STATION — RPS
- TEMPORARY GABION OUTLET STRUCTURE

NOTE:
ADDITIONAL SEDIMENT CONTROLS MUST BE PROVIDED, IF DEEMED NECESSARY BY THE HOWARD COUNTY DPW SEDIMENT CONTROL INSPECTOR.

SEQUENCE OF OPERATION

1. OBTAIN GRADING PERMIT.
2. NOTIFY HOWARD COUNTY DEPARTMENT OF PERMITS AND LICENSES 48 HOURS PRIOR TO BEGINNING WORK. (1 DAY)
3. CLEAR AND GRUB FOR INSTALLATION OF ALL PERIMETER SEDIMENT AND EROSION CONTROL MEASURES AND DEVICES. (2 DAYS)
4. INSTALL ALL PERIMETER SEDIMENT AND EROSION CONTROL MEASURES AND DEVICES INCLUDING STABILIZED CONSTRUCTION ENTRANCE (SCE), SILT FENCE, SUPER SILT FENCE, ORANGE CONSTRUCTION FENCE AND TEMPORARY GABION OUTLET STRUCTURE AS SHOWN ON THE PLAN. PLEASE NOTE THAT WORK ON THE SEDIMENT BASIN MAY NOT BEGIN UNTIL THE NECESSARY STRUCTURES TO BUILD THE SEDIMENT BASIN ARE ON SITE AND READY TO BE INSTALLED. (3 DAYS)
5. WITH PERMISSION FROM THE SEDIMENT CONTROL INSPECTOR, CLEAN/GRADE EXISTING SEDIMENT BASIN AS SHOWN ON THE PLAN. REPLACE EXISTING METAL RISER WITH PROPOSED RELEASE STRUCTURE S-1 AS SHOWN ON SHEET C-33. INSTALL STORM DRAIN SYSTEM FROM M-1 TO S-4. BRICK BULKHEAD 42" DRAIN FROM M-2 TO M-1. PROVIDE TEMPORARY PIPE FROM M-2 TO SEDIMENT BASIN. (5 DAYS)
6. WITH PERMISSION FROM THE SEDIMENT CONTROL INSPECTOR, BEGIN GRADING OPERATIONS FOR BUILDING I ONLY AS WELL AS SUPPORTING PARKING SPACES IN FRONT OF THE BUILDING AND TRUCK LOADING AREA AT THE REAR OF THE BUILDING. MAINTAIN POSITIVE DRAINAGE TO SEDIMENT CONTROL MEASURES AND DEVICES AT ALL TIMES. (10 DAYS)
7. BEGIN CONSTRUCTION OF BUILDING I ONLY. AS WORK PROGRESSES, INSTALL STORM DRAIN SYSTEM I-7 TO E-6 (BRICK BULKHEAD 24" DRAIN FROM M-8 TO E-6), AND I-16 TO E-8 (BRICK BULKHEAD 24" DRAIN FROM M-13 TO M-12). INSTALL SANITARY SEWER LINE FROM EX. SEWER MANHOLE SOUTHWEST OF BUILDING II AND WATER LINE FROM EX.8" WATER LINE NEXT TO CHESAPEAKE BAY COURT TO THE FRONT OF BUILDING I. NO GRADING IS TO BE PERFORMED BEYOND THE LIMITS OF THE TRUCK LOADING AREA AND PARKING ASSOCIATED WITH BUILDING I. (30 DAYS)
8. FINE GRADE AREA ADJACENT TO BUILDING I ONLY. CONTINUE WITH BUILDING CONSTRUCTION. (10 DAYS)
9. INSTALL STONE SUBBASE AND CONCRETE CURB & GUTTER FOR PARKING AND TRUCK LOADING AREA SUPPORTING BUILDING I ONLY. STABILIZE THE REMAINING AREAS NEXT TO BUILDING I WITH PERMANENT SEED AND MULCH. (15 DAYS).
10. ONCE CONTRIBUTING DRAINAGE AREAS ARE STABILIZED WITH ESTABLISHED VEGETATION, INSTALL ESD PRACTICES #3 & #4 AS SHOWN ON THE STORM WATER MANAGEMENT PLANS. REMOVE BRICK BULKHEAD 24" DRAIN FROM M-8 TO E-6 (20 DAYS).
11. PROCEED WITH PAVING AND LANDSCAPING INSTALLATIONS FOR AREAS IMMEDIATELY ADJACENT TO BUILDING I ONLY. (5 DAYS)
12. WITH PERMISSION FROM THE SEDIMENT CONTROL INSPECTOR, BEGIN GRADING THE REST OF THE SITE EXCEPT AREA UNDER AND ADJACENT TO BUILDING II AS SHOWN ON THE PLAN. MAINTAIN POSITIVE DRAINAGE TO SEDIMENT CONTROL MEASURES AND DEVICES AT ALL TIMES. (15 DAYS)
13. CONTINUE WITH GRADING OPERATIONS. BEGIN CONSTRUCTION OF BUILDING II & IV ONLY. INSTALL RETAINING WALL. AS WORK PROGRESSES, INSTALL ALL REMAINING UTILITIES EXCEPT FOR UTILITIES WITHIN ESD PRACTICE #2 & #5. PROVIDE TEMPORARY PIPE FROM M-10 TO SEDIMENT BASIN. (10 DAYS)
14. FINE GRADE AREA ADJACENT TO BUILDINGS II & IV ONLY. CONTINUE WITH BUILDING CONSTRUCTION. (25 DAYS)
15. INSTALL STONE SUBBASE AND CONCRETE CURB & GUTTER WITHIN AREAS TO BE PAVED EXCEPT FOR AREA ADJACENT TO BUILDING III. STABILIZE THE REMAINING AREAS WITH PERMANENT SEED AND MULCH. (12 DAYS)
16. WITH PERMISSION FROM THE SEDIMENT CONTROL INSPECTOR, BEGIN GRADING THE AREA UNDER AND ADJACENT TO BUILDING III AS SHOWN ON THE PLAN. MAINTAIN POSITIVE DRAINAGE TO SEDIMENT CONTROL MEASURES AND DEVICES AT ALL TIMES. (5 DAYS)
17. CONTINUE WITH GRADING OPERATIONS. BEGIN CONSTRUCTION OF BUILDING III.
18. FINE GRADE AREA ADJACENT TO BUILDING III. CONTINUE WITH BUILDING CONSTRUCTION.
19. INSTALL STONE SUBBASE AND CONCRETE CURB & GUTTER WITHIN AREAS TO BE PAVED ADJACENT TO BUILDING III. STABILIZE THE REMAINING AREAS WITH PERMANENT SEED AND MULCH. (12 DAYS)
20. ONCE CONTRIBUTING DRAINAGE AREAS ARE STABILIZED WITH ESTABLISHED VEGETATION, FLUSH PROPOSED STORM DRAIN SYSTEM, INSTALL ESD PRACTICE #2 AND #5. REMOVE BRICK BULKHEAD OF 24" DRAIN FROM M-13 TO M-12. (3 DAYS)
21. WITH PERMISSION FROM THE SEDIMENT CONTROL INSPECTOR, CONVERT SEDIMENT BASIN INTO ESD PRACTICE #1 AS SHOWN ON THE STORM WATER MANAGEMENT PLANS. INSTALL CONCRETE BAFFLE WALL WITHIN RELEASE STRUCTURE AS SHOWN ON SHEET C-32. CAP / UNBLOCK ANY OPENINGS MADE DURING CONSTRUCTION AS SHOWN ON SHEET C-32. REMOVE BRICK BULKHEAD OF 42" DRAIN FROM M-2 TO M-1 AND CAP/BLOCK ANY OPENINGS MADE IN RELATION TO THE INSTALLATION OF TEMPORARY DIVERSION PIPES. INSTALL ALL UTILITIES WITHIN ESD PRACTICE #1 AS SHOWN ON THE STORMWATER MANAGEMENT PLANS. (2 DAYS)
22. WITH PERMISSION FROM THE SEDIMENT CONTROL INSPECTOR, REMOVE ALL REMAINING SEDIMENT AND EROSION CONTROL MEASURES AND DEVICES. STABILIZE ANY REMAINING DISTURBED AREAS. (3 DAYS)
23. PROCEED WITH PAVING AND LANDSCAPING INSTALLATIONS FOR ALL REMAINING AREAS. (10 DAYS)

STANDARD SEDIMENT CONTROL NOTES

1. A MINIMUM OF 48 HOURS NOTICE MUST BE GIVEN TO THE HOWARD COUNTY DEPARTMENT INSPECTIONS, LICENSES AND PERMITS, SEDIMENT CONTROL DIVISION PRIOR TO THE START OF ANY CONSTRUCTION (410-313-1855).
2. ALL VEGETATIVE AND STRUCTURAL PRACTICES ARE TO BE INSTALLED ACCORDING TO THE PROVISIONS OF THIS PLAN AND ARE TO BE IN CONFORMANCE WITH THE MOST CURRENT MARYLAND STANDARDS AND SPECIFICATIONS FOR SOIL EROSION AND SEDIMENT CONTROL AND REVISIONS THERETO.
3. FOLLOWING INITIAL SOIL DISTURBANCE OR REDISTURBANCE, PERMANENT OR TEMPORARY STABILIZATION SHALL BE COMPLETED WITHIN:
   A. THREE (3) CALENDAR DAYS FOR ALL PERIMETER SEDIMENT CONTROL STRUCTURES, DIKES, PERIMETER SLOPES AND ALL SLOPES GREATER THAN 3:1,
   B. SEVEN (7) DAYS AS TO ALL OTHER DISTURBED OF GRADED AREAS ON THE PROJECT SITE.
4. ALL DISTURBED AREAS MUST BE STABILIZED WITHIN THE TIME PERIOD SPECIFIED ABOVE IN ACCORDANCE WITH THE "2011 MARYLAND STANDARDS AND SPECIFICATIONS FOR SOIL EROSION AND SEDIMENT CONTROL" FOR PERMANENT SEEDING (SEC. B-4-5), TEMPORARY SEEDING (SEC. B-4-4) AND MULCHING (SEC. B-4-3). TEMPORARY STABILIZATION WITH MULCH ALONE CAN ONLY BE DONE WHEN RECOMMENDED SEEDING DATES DO NOT ALLOW FOR PROPER GERMINATION AND ESTABLISHMENT OF GRASSES.
5. ALL SEDIMENT CONTROL STRUCTURES ARE TO REMAIN IN PLACE AND ARE TO BE MAINTAINED IN OPERATIVE CONDITION UNTIL PERMISSION FOR THEIR REMOVAL HAS BEEN OBTAINED FROM THE HOWARD COUNTY SEDIMENT CONTROL INSPECTOR.
6. SITE ANALYSIS:

TOTAL SITE AREA	35.98	ACRES +/-
AREA DISTURBED	24.13	ACRES +
AREA TO BE ROOFED OR PAVED	17.60	ACRES +/-
AREA TO BE VEGETATIVELY STABILIZED	6.53	ACRES +
TOTAL CUT	50,000	CUBIC YARDS* +/-
TOTAL FILL	50,000	CUBIC YARDS* +/-
OFF-SITE WASTE/BORROW AREA LOCATION	10,000	CUBIC YARDS* +/-

* EARTH QUANTITY VOLUMES ARE PROVIDED FOR THE CONVENIENCE OF THE CONTRACTOR. CONTRACTOR IS ADVISED TO PERFORM HIS OWN ANALYSIS PRIOR TO PLACING A BID ON THIS ITEM

7. ANY SEDIMENT CONTROL PRACTICE WHICH IS DISTURBED BY GRADING ACTIVITY FOR PLACEMENT OF UTILITIES MUST BE REPAIRED ON THE SAME DAY OF DISTURBANCE.
8. ADDITIONAL SEDIMENT CONTROLS MUST BE PROVIDED, IF DEEMED NECESSARY BY THE HOWARD COUNTY DPW SEDIMENT CONTROL INSPECTOR.
9. ON ALL SITES WITH DISTURBED AREAS IN EXCESS OF 2 ACRES, APPROVAL OF THE INSPECTION AGENCY SHALL BE REQUESTED UPON COMPLETION OF INSTALLATION OF PERIMETER EROSION AND SEDIMENT CONTROLS, BUT BEFORE PROCEEDING WITH ANY OTHER EARTH DISTURBANCE OR GRADING. OTHER BUILDING OR GRADING INSPECTION APPROVALS MAY NOT BE AUTHORIZED UNTIL THIS INITIAL APPROVAL BY THE INSPECTION AGENCY IS MADE.
10. TRENCHES FOR THE CONSTRUCTION OF UTILITIES IS LIMITED TO THREE PIPE LENGTHS OR TWO WHICH SHALL BE BACK-FILLED AND STABILIZED WITHIN ONE DAY; WHICHEVER IS SHORTER.
11. A PROJECT IS TO BE SEQUENCED SO THAT GRADING ACTIVITIES BEGIN ON ONE GRADING UNIT (MAXIMUM ACREAGE OF 20 AC. PER GRADING UNIT) AT A TIME. WORK MAY PROCEED TO A SUBSEQUENT GRADING UNIT WHEN AT LEAST 50 PERCENT OF THE DISTURBED AREA IN THE PRECEDING GRADING UNIT HAS TO BE STABILIZED AND APPROVED BY THE ENFORCEMENT AUTHORITY. UNLESS OTHERWISE SPECIFIED AND APPROVED BY THE APPROVAL AUTHORITY, NO MORE THAN 30 ACRES CUMULATIVELY MAY BE DISTURBED AT A GIVEN TIME.
12. THE STOCKPILE MUST BE BENCHED IF IT EXCEEDS 15 FEET IN HEIGHT.

PHASING LEGEND

PHASING LINE
PHASE I = 16.39 Ac
PHASE II = 7.74 Ac
TOTAL LIMIT OF DISTURBANCE = 24.13 Ac

NO MORE THAN 20 ACRES OF GRADING MAY BE "OPEN" AT ANY ONE TIME WITHOUT PRIOR WRITTEN ALLOWANCE FROM HOWARD SCD.

50 30 0 50

This development plan is approved for soil erosion and sediment control by the HOWARD SOIL CONSERVATION DISTRICT

Howard Co. SCD — Date 12/3/15

DEVELOPER'S CERTIFICATE

" I/We certify that all development and construction will be done according to this plan for sediment and erosion control, and that all responsible personnel involved in the construction project will have a Certificate of Attendance at a Department of the Environment Approved Training Program for the Control of Sediment and Erosion before beginning the project. I also authorize periodic on-site inspection by the Howard Soil Conservation District"

Stuart Foard — Date 10-15-14

ENGINEER'S CERTIFICATE

" I certify that this plan for sediment and erosion control represents a practical and workable plan based on my personal knowledge of the site conditions and that it was prepared in accordance with the requirements of the Howard Soil Conservation District"

Iwona Rostek-Zarska, P.E. 21245 — Date 10-15-14

APPROVED: HOWARD COUNTY DEPARTMENT OF PLANNING AND ZONING

CHIEF, DEVELOPMENT ENGINEERING DIVISION — DATE 12.29.15

CHIEF, DIVISION OF LAND DEVELOPMENT — DATE 12-21-15

DIRECTOR, DEPARTMENT OF PLANNING AND ZONING — DATE 1-3-16

MORRIS & RITCHIE ASSOCIATES, INC.
ENGINEERS, PLANNERS, SURVEYORS AND LANDSCAPE ARCHITECTS
14280 PARK CENTER DRIVE, LAUREL, MD. 20707
(410) 792-9792 / (301) 776-1990 FAX: (410) 792-7395
WWW.MRAMD.COM

COPYRIGHT 2015 MORRIS & RITCHIE ASSOCIATES

FOR REVISION #3 ONLY
STATE OF MARYLAND — IWONA ROSTEK-ZARSKA — 21245 — PROFESSIONAL ENGINEER — 12-7-15

MD PROFESSIONAL CERTIFICATION:
I HEREBY CERTIFY THAT THESE DOCUMENTS WERE PREPARED OR APPROVED BY ME, AND THAT I AM A DULY LICENSED PROFESSIONAL ENGINEER UNDER THE LAWS OF THE STATE OF MARYLAND, LICENSE NO. 29203, EXPIRATION DATE: 08/16/2017.

THE COORDINATE SYSTEM OF ALL DRAWINGS IS BASED ON THE NORTH AMERICAN DATUM OF 1983. THE ELEVATION SYSTEM OF ALL DRAWINGS IS BASED ON THE NORTH AMERICAN VERTICAL DATUM OF 1988.
HORZ: NAD 83/91 VERT: NAVD 88

ADDRESS CHART

LOT / PARCEL NO.	STREET ADDRESS
PARCEL B-1	7901 OCEANO AVENUE
PARCEL E-1	7775 CHESAPEAKE BAY COURT

PERMIT INFORMATION CHART

SUBDIVISION NAME		SECTION / AREA	LOT / PARCEL NO.
MARYLAND FOOD CENTER AUTHORITY		3	B-1/662 & E-1/696
PLAT NO. or L/F	GRID NO.	ZONING	TAX MAP NO.
25017-23021	21	M-2	43
ELEC. DIST.	CENSUS TRACT		
6TH	6069.01		

BLDG
Baltimore Land Design Group Inc.
Consulting Engineers
230 SCHILLING CIRCLE, SUITE 364 • HUNT VALLEY, MARYLAND 21031
PHONE: 410.229.9851 • FAX: 410.229.9865 • BLDG@BLDGINC.COM

IWONA ROSTEK-ZARSKA — 21245 — PROFESSIONAL ENGINEER — STATE OF MARYLAND — 10/13/15

PROFESSIONAL CERTIFICATION
I HEREBY CERTIFY THAT THESE DOCUMENTS WERE PREPARED OR APPROVED BY ME, AND THAT I AM A DULY LICENSED PROFESSIONAL ENGINEER UNDER THE LAWS OF THE STATE OF MARYLAND, LICENSE NO. 21245, EXPIRATION DATE: JUNE 9, 2016.

OWNER
MARYLAND FOOD CENTER AUTHORITY
7801 OCEANO AVE
JESSUP, MD 20794
PHONE (410) 379-5760
FAX (410) 379-5773

DEVELOPER / APPLICANT
MERRITT PROPERTIES, LLC
2066 LORD BALTIMORE DRIVE
BALTIMORE, MD 21244
PHONE (410) 298-2600
FAX (410) 298-9644

REVISIONS

DATE	NO.	DESCRIPTION	BY
9/18/15	3	REPLACED BUILDING IV WITH TRUCK WASH-OUT STATION	MRA

REVISED SITE DEVELOPMENT PLAN
EROSION AND SEDIMENT CONTROL PLAN
OVERALL PLAN
MARYLAND FOOD CENTER AUTHORITY
PARCEL B-1 & E-1
(WAREHOUSE & OFFICE)
HOWARD COUNTY, MARYLAND
SCALE: 1" = 100'
DATE: OCTOBER, 2014

DRAWING NO.
C-19
SHEET 19 OF 57
SDP-14-068

P:\PROJ\17620 MFCA Expansion\PLANS\DEVELOPER\SEAFOOD MARKET\REVLINES\PLOT\2015-04-07-MFCA-SEAFOOD-REVLINE-19.dwg, 12/7/2015 10:53:31 AM, CMcQueen
TM: Copyright 2015 Morris & Ritchie Associates, Inc.

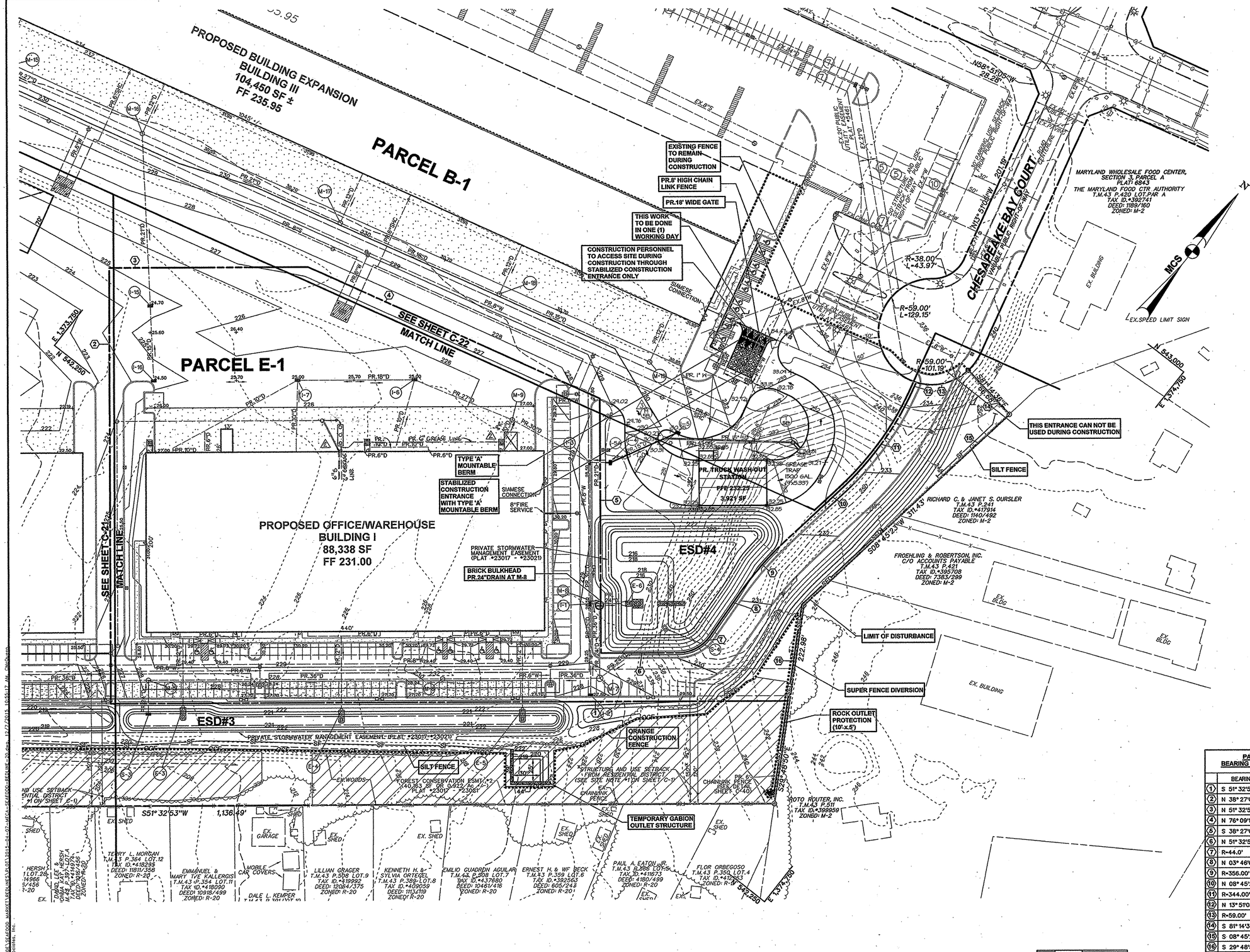

PARCEL E-1 BEARING AND DISTANCES		
	BEARING	DISTANCE
1	S 51° 32'53" W	750.78'
2	N 38° 27'07" W	485.00'
3	N 51° 32'53" E	219.79'
4	N 76° 09'12" E	354.39'
5	S 38° 27'07" E	283.44'
6	N 51° 32'53" E	85.33'
7	R=44.0'	42.48'
8	N 03° 46'06" W	54.55'
9	R=356.00'	77.82'
10	N 08° 45'23" E	87.35'
11	R=344.00'	135.74'
12	N 13° 51'05" W	9.70'
13	R=59.00'	61.77'
14	S 81° 14'36" E	66.68'
15	S 08° 45'23" W	311.43'
16	S 29° 48'50" E	107.67'

ADDRESS CHART	
LOT / PARCEL NO.	STREET ADDRESS
PARCEL B-1	7901 OCEANO AVENUE
PARCEL E-1	7775 CHESAPEAKE BAY COURT

PERMIT INFORMATION CHART					
SUBDIVISION NAME: MARYLAND FOOD CENTER AUTHORITY			SECTION / AREA: 3		LOT / PARCEL NO.: B-1/662 & E-1/696
PLAT NO. or L/F: 23017-23021	GRID NO.: 21	ZONING: M-2	TAX MAP NO.: 43	ELEC. DIST.: 6TH	CENSUS TRACT: 6069.01

APPROVED: HOWARD COUNTY DEPARTMENT OF PLANNING AND ZONING

CHIEF, DEVELOPMENT ENGINEERING DIVISION — DATE: 12-29-15

CHIEF, DIVISION OF LAND DEVELOPMENT — DATE: 12-31-15

DIRECTOR, DEPARTMENT OF PLANNING AND ZONING — DATE: 1-3-16

MORRIS & RITCHIE ASSOCIATES, INC.
ENGINEERS, PLANNERS, SURVEYORS AND LANDSCAPE ARCHITECTS
14280 PARK CENTER DRIVE - LAUREL, MD 20707
(410) 792-9792 / (301) 776-1090 FAX: (410) 792-7395
MRAGTA.COM

COPYRIGHT 2015 MORRIS & RITCHIE ASSOCIATES

FOR REVIEWING ONLY — STATE OF MARYLAND — STEVEN C. NEUBERGER — 29203 — PROFESSIONAL ENGINEER — 12-7-15

MD PROFESSIONAL CERTIFICATION:

I HEREBY CERTIFY THAT THESE DOCUMENTS WERE PREPARED OR APPROVED BY ME, AND THAT I AM A DULY LICENSED PROFESSIONAL ENGINEER UNDER THE LAWS OF THE STATE OF MARYLAND, LICENSE NO. 29203, EXPIRATION DATE: 06/16/2017.

THE COORDINATE SYSTEM OF ALL DRAWINGS IS BASED ON THE NORTH AMERICAN DATUM OF 1983. THE ELEVATION SYSTEM OF ALL DRAWINGS IS BASED ON THE NORTH AMERICAN VERTICAL DATUM OF 1988. HORZ: NAD 83/91 VERT: NAVD 88

This development plan is approved for soil erosion and sediment control by the HOWARD SOIL CONSERVATION DISTRICT.

Howard Co. SCD — Date: 12/15/15

DEVELOPER'S CERTIFICATE

" I/We certify that all development and construction will be done according to this plan for sediment and erosion control, and that all responsible personnel involved in the construction project will have a Certificate of Attendance at a Department of the Environment Approved Training Program for the Control of Sediment and Erosion before beginning the project. I also authorize periodic on-site inspection by the Howard Soil Conservation District"

Stuart Foard — Date: 1/12/15

ENGINEER'S CERTIFICATE

" I certify that this plan for sediment and erosion control represents a practical and workable plan based on my personal knowledge of the site conditions and that it was prepared in accordance with the requirements of the Howard Soil Conservation District"

Iwona Rostek-Zarska, P.E. 21245 — Date: 1/12/15

REVISIONS			
DATE	NO.	DESCRIPTION	BY
12/01/14	1	ADDED DOORS, SIDEWALK AND ROOF DRAINS. RELOCATED HANDICAP SPACES AND PRIVATE SEWER LINE FOR BUILDING I.	BLDG
05/01/15	2	ADDITION OF A CONTAINMENT BASIN AND RE-ALIGNING PRIVATE GREASE TRAP	BLDG
9/18/15	3	REPLACED BUILDING IV WITH TRUCK WASH-OUT STATION	MRA

BLDG
Baltimore Land Design Group Inc.
Consulting Engineers
230 SCHILLING CIRCLE, SUITE 364 • HUNT VALLEY, MARYLAND 21031
PHONE: 410.229.9851 • FAX: 410.229.9865 • BLDG@BLDGINC.COM

P:\2012\12630 MFCA Expansion\PLANS\LDP\SEAFOOD MARKET\REVISIONS\12630-01-07-MFCA-SEAFOOD-REVLINE-20.dwg, 12/7/2015 10:55:17 AM, chadsen
(C) Copyright 2015 Morris & Ritchie Associates, Inc.

PROFESSIONAL CERTIFICATION

I HEREBY CERTIFY THAT THESE DOCUMENTS WERE PREPARED OR APPROVED BY ME, AND THAT I AM A DULY LICENSED PROFESSIONAL ENGINEER UNDER THE LAWS OF THE STATE OF MARYLAND, LICENSE NO. 21245, EXPIRATION DATE: JUNE 9, 2016.

OWNER
MARYLAND FOOD CENTER AUTHORITY
7801 OCEANO AVE
JESSUP, MD 20794
PHONE (410) 379-5760
FAX (410) 379-5773

DEVELOPER / APPLICANT
MERRITT PROPERTIES, LLC
2066 LORD BALTIMORE DRIVE
BALTIMORE, MD 21244
PHONE (410) 298-2600
FAX (410) 298-9644

REVISED SITE DEVELOPMENT PLAN
EROSION AND SEDIMENT CONTROL PLAN
PLAN VIEW I
MARYLAND FOOD CENTER AUTHORITY
PARCEL B-1 & E-1
(WAREHOUSE & OFFICE)
HOWARD COUNTY, MARYLAND
SCALE: 1" = 50'
DATE: DECEMBER, 2014

DRAWING NO.
C-20
SHEET 20 OF 57

SDP-14-068

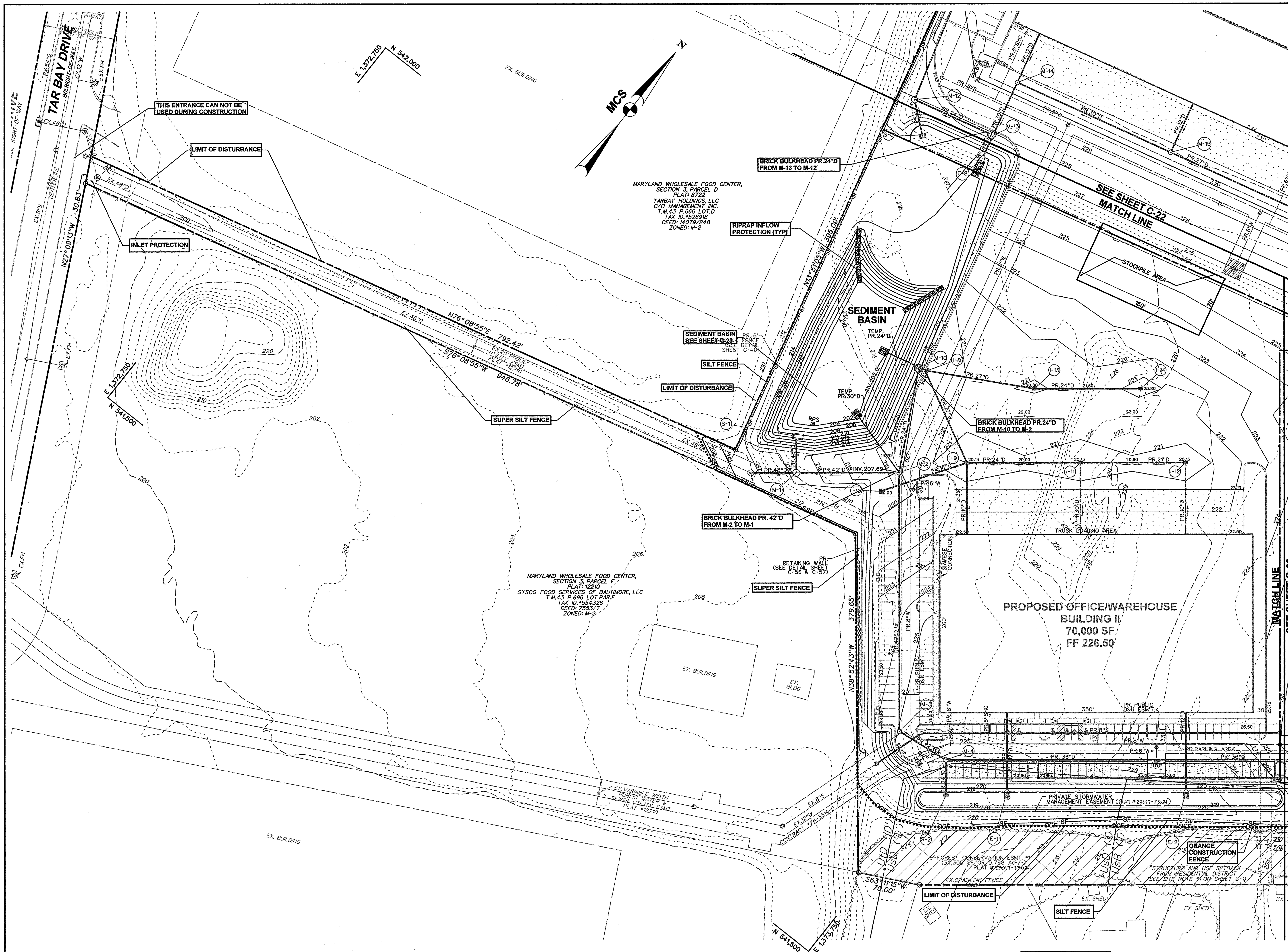

THE COORDINATE SYSTEM OF ALL DRAWINGS IS BASED ON THE NORTH AMERICAN DATUM OF 1983. THE ELEVATION SYSTEM OF ALL DRAWINGS IS BASED ON THE NORTH AMERICAN VERTICAL DATUM OF 1988.
HORZ: NAD 83/91; VERT: NAVD 88

This development plan is approved for soil erosion and sediment control by the HOWARD SOIL CONSERVATION DISTRICT.

Howard Co. SCD — Date 10/30/14

DEVELOPER'S CERTIFICATE

" I/We certify that all development and construction will be done according to this plan for sediment and erosion control, and that all responsible personnel involved in the construction project will have a Certificate of Attendance at a Department of the Environment Approved Training Program for the Control of Sediment and Erosion before beginning the project. I also authorize periodic on-site inspection by the Howard Soil Conservation District"

Stuart Foard — Date 10.15.14

ENGINEER'S CERTIFICATE

" I certify that this plan for sediment and erosion control represents a practical and workable plan based on my personal knowledge of the site conditions and that it was prepared in accordance with the requirements of the Howard Soil Conservation District"

Iwona Rostek-Zarska, P.E. 21245 — Date 10-15-14

APPROVED: DEPARTMENT OF PLANNING AND ZONING

Chief, Development Engineering Division — Date 11-6-14

Chief, Division of Land Development — Date 11-20-14

Director — Date 11/21/14

ADDRESS CHART

LOT / PARCEL NO.	STREET ADDRESS
PARCEL B-1	7901 OCEANO AVENUE
PARCEL E-1	7775 CHESAPEAKE BAY COURT

PERMIT INFORMATION CHART

SUBDIVISION NAME			SECTION / AREA		LOT / PARCEL NO.
MARYLAND FOOD CENTER AUTHORITY			3		B-1/662 & E-1/696
PLAT NO. or L/F	GRID NO.	ZONING	TAX MAP NO.	ELEC. DIST.	CENSUS TRACT
23017-23021	21	M-2	43	6TH	6069.01

BLDG

Baltimore Land Design Group Inc.

Consulting Engineers

230 SCHILLING CIRCLE, SUITE 364 • HUNT VALLEY, MARYLAND 21031
PHONE: 410.229.9851 • FAX: 410.229.9865 • BLDG@BLDGINC.COM

STATE OF MARYLAND — ROSTEK-ZARSKA — 21245 — BOARD FOR PROFESSIONAL ENGINEERS — 10/15/14

PROFESSIONAL CERTIFICATION

I HEREBY CERTIFY THAT THESE DOCUMENTS WERE PREPARED OR APPROVED BY ME, AND THAT I AM A DULY LICENSED PROFESSIONAL ENGINEER UNDER THE LAWS OF THE STATE OF MARYLAND, LICENSE NO. 21245, EXPIRATION DATE: JUNE 9, 2016.

OWNER

MARYLAND FOOD CENTER AUTHORITY
7801 OCEANO AVE
JESSUP, MD 20794
PHONE (410) 379-5760
FAX (410) 379-5773

DEVELOPER / APPLICANT

MERRITT PROPERTIES, LLC
2066 LORD BALTIMORE DRIVE
BALTIMORE, MD 21244
PHONE (410) 298-2600
FAX (410) 298-9644

REVISIONS

DATE	NO.	DESCRIPTION	BY

EROSION AND SEDIMENT CONTROL PLAN

PLAN VIEW II

MARYLAND FOOD CENTER AUTHORITY

PARCEL B-1 & E-1
(WAREHOUSE & OFFICE)

HOWARD COUNTY, MARYLAND
SCALE: 1" = 50'

DATE: OCTOBER, 2014

DRAWING NO.

C-21

SDP-14-068

MARYLAND WHOLESALE FOOD CENTER, SECTION 2, PARCEL C3, PLAT: 7405, THE MARYLAND FOOD CTR AUTHORITY, THE WHOLESALE FOOD MARKET AUTHOR, T.M.43 P.666 LOT.C3, TAX ID.#4446652, DEED: 506/782, ZONED: M-2

N 543,000
E 1373.250

OCEANO AVENUE
HOWARD COUNTY PUBLIC ROAD
80' PUBLIC RIGHT-OF-WAY

ROAD CENTERLINE

N76° 08'55"W 1,345.00'

30' PARKING USE SETBACK FROM PUBLIC RIGHT-OF-WAY

50' STRUCTURE AND USE SETBACK FROM PUBLIC RIGHT-OF-WAY

EX.20' PUBLIC UTILITY ESMT. PLAT #5461

LIMIT OF DISTURBANCE

COIP

CONTRACTOR SHALL ONLY DISTURB THAT AREA WHICH CAN BE COMPLETED AND STABILIZED BY THE END OF EACH WORKING DAY.

EX. 1-STORY BUILDING

F.F. ELEV. 235.95

SILT FENCE

N 542,500
E 1373.250

N15° 51'05"W 586.00'

PROPOSED BUILDING EXPANSION
BUILDING III
104,450 SF ±
FF 235.95

PARCEL B-1

1045' +/-
TRUCK LOADING AREA

MATCH LINE
SEE SHEET C-21

MATCH LINE
SEE SHEET C-20

STOCKPILE AREA
150' x 70'

PARCEL E-1

TRUCK LOADING AREA

PR. PUBLIC D&U ESMT.

PR. TRUCK WASH-OUT STATION
FF=232.25
ELEV=231.97

PROP. GREASE TRAP (500 GAL. 1750 SF)

PROP. 4" GREASE LINE

PROP. 6" GREASE LINE

EX. 24' PUBLIC UTILITY EASEMENT PLAT #5461

SIAMESE CONNECTION

8" FIRE SERVICE

WATER EASEMENT

ESD #5

PRIVATE STORMWATER MANAGEMENT EASEMENT (PLAT # 23017-23021)

N58° 51'05"W 28.28'

N33° 51'05"W 201.19'

MARYLAND WHOLESALE FOOD CENTER, SECTION 3, PARCEL A, PLAT: 6843, THE MARYLAND FOOD CTR AUTHORITY, T.M.43 P.420 LOT.PAR A, TAX ID.#392741, DEED: 1189/160, ZONED: M-2

CHESAPEAKE BAY COURT
VARIABLE PUBLIC RIGHT-OF-WAY

EX. BUILDING

EX. SPEED LIMIT SIGN

N 543,000
E 1374.750

N

MCS

R=36.00'
L=43.97'

R=59.00'
L=129.15'

R=59.00'
L=101.19'

S51° 14'15"E
101.05'

PARCEL E-1 BEARING AND DISTANCES

	BEARING	DISTANCE
(1)	S 51° 32'53" W	750.78'
(2)	N 38° 27'07" W	485.00'
(3)	N 51° 32'53" E	219.79'
(4)	N 76° 09'12" E	354.39'
(5)	S 38° 27'07" E	283.44'
(6)	N 51° 32'53" E	85.33'
(7)	R=44.0'	42.48'
(8)	N 03° 46'06" W	54.55'
(9)	R=356.00'	77.82'
(10)	N 08° 45'23" E	87.35'
(11)	R=344.00'	135.74'
(12)	N 13° 51'05" W	9.70'
(13)	R=59.00'	61.77'
(14)	S 81° 14'36" E	66.68'
(15)	S 08° 45'23" W	311.43'
(16)	S 29° 48'50" E	107.67'

MORRIS & RITCHIE ASSOCIATES, INC.
ENGINEERS, PLANNERS, SURVEYORS AND LANDSCAPE ARCHITECTS
14280 PARK CENTER DRIVE - LAUREL, MD 20707
(410) 792-9792 / (301) 776-1090 FAX: (410) 792-7395
MRAGTA.COM

COPYRIGHT 2015 MORRIS & RITCHIE ASSOCIATES

FOR REVIEW #3 ONLY
STATE OF MARYLAND — THOMAS C. NEUBERT — 29203 — PROFESSIONAL ENGINEER
12-7-15

MD PROFESSIONAL CERTIFICATION:
I HEREBY CERTIFY THAT THESE DOCUMENTS WERE PREPARED OR APPROVED BY ME, AND THAT I AM A DULY LICENSED PROFESSIONAL ENGINEER UNDER THE LAWS OF THE STATE OF MARYLAND, LICENSE NO. 29203, EXPIRATION DATE: 08/16/2017.

This development plan is approved for soil erosion and sediment control by the HOWARD SOIL CONSERVATION DISTRICT.
Howard Co. SCD — Date 12/15/15

DEVELOPER'S CERTIFICATE
" I/We certify that all development and construction will be done according to this plan for sediment and erosion control, and that all responsible personnel involved in the construction project will have a Certificate of Attendance at a Department of the Environment Approved Training Program for the Control of Sediment and Erosion before beginning the project. I also authorize periodic on-site inspection by the Howard Soil Conservation District"

Stuart Foard — Date 10.15.14

ENGINEER'S CERTIFICATE
" I certify that this plan for sediment and erosion control represents a practical and workable plan based on my personal knowledge of the site conditions and that it was prepared in accordance with the requirements of the Howard Soil Conservation District"

Iwona Rostek-Zarska P.E. 21245 — Date 10-15-14

APPROVED: HOWARD COUNTY DEPARTMENT OF PLANNING AND ZONING

CHIEF, DEVELOPMENT ENGINEERING DIVISION — DATE 12-29-15
CHIEF, DIVISION OF LAND DEVELOPMENT — DATE 12-31-15
DIRECTOR, DEPARTMENT OF PLANNING AND ZONING — DATE 1-3-16

ADDRESS CHART

LOT / PARCEL NO.	STREET ADDRESS
PARCEL B-1	7901 OCEANO AVENUE
PARCEL E-1	7775 CHESAPEAKE BAY COURT

PERMIT INFORMATION CHART

SUBDIVISION NAME		SECTION / AREA	LOT / PARCEL NO.
MARYLAND FOOD CENTER AUTHORITY		3	B-1/662 & E-1/696
PLAT NO. or L/F	GRID NO.	ZONING	TAX MAP NO.	ELEC. DIST.	CENSUS TRACT
23017-23021	21	M-2	43	6TH	6069.01

THE COORDINATE SYSTEM OF ALL DRAWINGS IS BASED ON THE NORTH AMERICAN DATUM OF 1983. THE ELEVATION SYSTEM OF ALL DRAWINGS IS BASED ON THE NORTH AMERICAN VERTICAL DATUM OF 1988.
HORZ: NAD 83/91 VERT: NAVD 88

50 30 0 50

REVISIONS

DATE	NO.	DESCRIPTION	BY
05/01/15	2	ADDITION OF A CONTAINMENT BASIN AND	BLDG
		RE-ALIGNING PRIVATE GREASE TRAP	
9/18/15	3	REPLACED BUILDING IV WITH TRUCK WASH-OUT STATION	MRA

BLDG
Baltimore Land Design Group Inc.
Consulting Engineers
230 SCHILLING CIRCLE, SUITE 364 • HUNT VALLEY, MARYLAND 21031
PHONE: 410.229.9851 • FAX: 410.229.9865 • BLDG@BLDGINC.COM

STATE OF MARYLAND — IWONA ROSTEK-ZARSKA — 21245 — REGISTERED PROFESSIONAL ENGINEER
10/15/14

PROFESSIONAL CERTIFICATION
I HEREBY CERTIFY THAT THESE DOCUMENTS WERE PREPARED OR APPROVED BY ME, AND THAT I AM A DULY LICENSED PROFESSIONAL ENGINEER UNDER THE LAWS OF THE STATE OF MARYLAND, LICENSE NO. 21245, EXPIRATION DATE: JUNE 9, 2016.

OWNER
MARYLAND FOOD CENTER AUTHORITY
7801 OCEANO AVE
JESSUP, MD 20794
PHONE (410) 379-5760
FAX (410) 379-5773

DEVELOPER / APPLICANT
MERRITT PROPERTIES, LLC
2066 LORD BALTIMORE DRIVE
BALTIMORE, MD 21244
PHONE (410) 298-2600
FAX (410) 298-9644

REVISED SITE DEVELOPMENT PLAN
EROSION AND SEDIMENT CONTROL PLAN
PLAN VIEW III
MARYLAND FOOD CENTER AUTHORITY
PARCEL B-1 & E-1
(WAREHOUSE & OFFICE)
HOWARD COUNTY, MARYLAND
SCALE: 1" = 50'
DATE: OCTOBER, 2014

DRAWING NO.
C-22
SHEET 22 OF 57

SDP-14-068

P:\PROJ\17420 MFSA Expansion\PLANS\DEVSEAFOOD MARKET\REDLINES\PLOT\2015-04-07-MFSA-SEAFOOD-REDLINE-22.dwg, 12/7/2015 10:57:22 AM, CMcQueen,
1:1 Copyright 2015 Morris & Ritchie Associates, Inc.

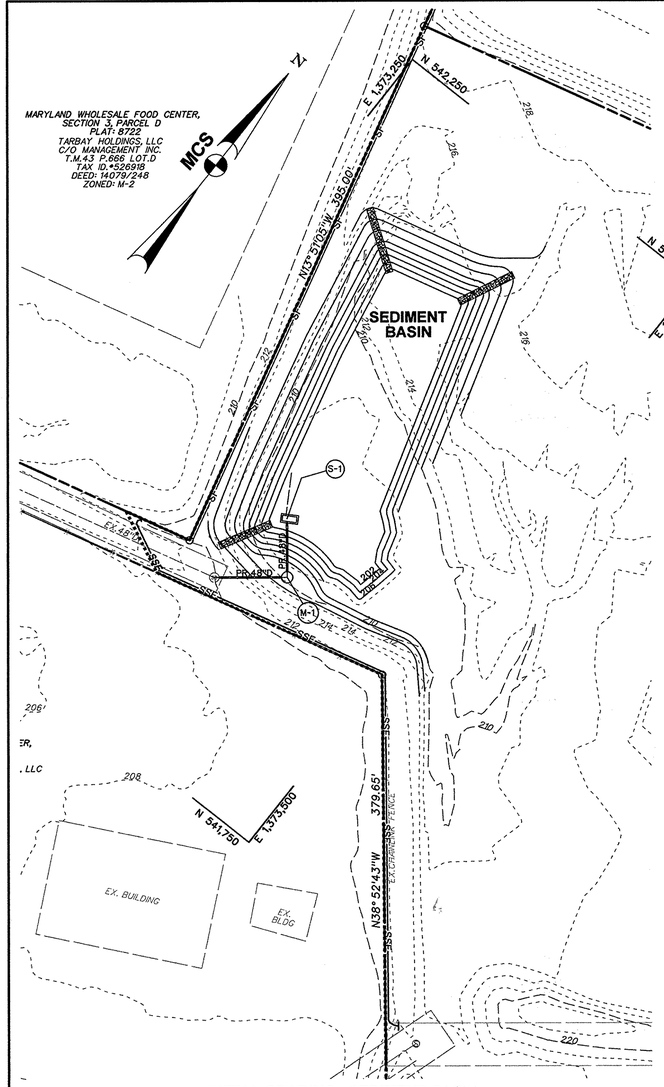

INITIAL GRADING - SEDIMENT BASIN

SCALE: 1" = 50'

CONSTRUCTION SPECIFICATIONS

1. Install sediment control practices necessary to construct basin. Clear and grub to remove trees, vegetation, roots or other objectionable material from the areas where the embankment is to be placed. Do not clear the pool area until completion of the embankment unless the pool area is to be used for borrow. Salvage topsoil for later use.
2. Excavate cut-off trench along centerline of proposed embankment a minimum depth of 4 feet and a bottom (min. 4 feet) wide enough to permit operation of excavation and compaction equipment. Construct side slopes 1:1 or flatter. Cut-off trench must be continuous and extend the entire length of embankment. Compaction requirements are the same as those for the embankment. Dewater the trench during the backfilling compaction operations, using an approved practice.
3. Construct embankment of clean soil free of roots, woody vegetation, oversized stones, rocks, or other objectionable material. Fill material for impervious core and cut-off trench must conform to Unified Soil Classification GC, SC, CH, or CL and must have at least 30 percent passing the #200 sieve. Use fill material containing sufficient moisture so that the soil can be formed by hand into a ball without crumbling. If water can be squeezed out of the ball, it is too wet for proper compaction. Place fill material in six-inch to eight inch thick continuous lifts over the entire length of the fill. Obtain compaction by passing construction equipment or compactor over the fill, so that the entire surface of each layer of fill is traversed at least four times. Construct the embankment to an elevation a minimum of 10 percent higher than the design height to allow for settlement.
4. Install principal spillway prior to, or concurrently with, fill placement. Do not excavate embankment for placement of spillway. All pipe connections, including anti-seep collars must be completely watertight. Install filter diaphragm when specified on plan. Barrel connection to riser must be welded all around when the pipe and riser are metal. Attach barrel stub to riser at the same percent (slope) of grade as the barrel. For concrete riser/barrel assembly, pour riser with barrel in place or set pre-cast riser and install projection collar for watertight connection. Place fill material around the pipe spillway in four (4) inch lifts and hand compact around the pipe to a depth of 1.5 times the pipe diameter (minimum). Securely install anti-vortex device and trash rack as shown on plan.
5. Install the emergency spillway in undisturbed natural ground. Construct spillway within a tolerance of + 0.2 feet.
6. Stabilize embankment and associated disturbed areas within three (3) days of completion with seed and mulch. Monitor embankment and maintain erosion free during the life of the basin.
7. Install fencing and signage in accordance with the approved plan.
8. Remove sediment when accumulated material has reached 25 percent of the total storage depth. Restore basin to original design volume. Place removed sediments in a controlled area and stabilize. Do not deposit sediment downstream of the embankment, adjacent to a stream or floodplain.
9. When the contributing drainage area is stable, the basin can be removed in accordance with the approved sediment control plan.
10. A sediment basin designed, built, and certified as a stormwater management structure, may be converted when the contributory drainage area is stable. Properly dewater basin, modify outlet structure, perform additional grading, and provide required storage volume in accordance with approved stormwater management plans.

TABLE G.6: TEMPORARY SEDIMENT BASIN DESIGN DATA SHEET

Computed by: KU Date: 04/23/14 Checked by: VZ Date: 04/23/14
Project name: MFCA Basin #: 1
Location: 7801 OCEANO AVE

Design Volumes and Elevations

1. Total area draining to basin = 22.10 acres (ac)
2. Required total storage volume = 3600 cf/ac x 22.10 ac. drainage = 79,560 cf
3. Required wet storage volume = 1800 cf/ac x 22.10 ac. drainage = 39,780 cf
4. Required dry storage volume = 1800 cf/ac x 22.10 ac. drainage = 39,780 cf
5. Basin bottom elevation = 202.00 ft
6. Riser or weir crest (total storage) elevation = 211.00 ft
7. Provided total storage volume = 80,659 cf
8. Wet storage (permanent pool/draw-down) elevation = 205.30 ft
9. Provided wet storage volume = 40,276 cf
10. Provided dry storage volume = 40,383 cf
11. Basin cleanout elevation (located at ½ wet storage depth) = 203.75 ft
12. Distance from riser crest elevation to cleanout elevation = 7.25 ft

Surface Area Design

13. Q_{10} = 103.54 cfs (peak inflow from 10 yr, 24 hr storm event, attach computations)
14. Min. basin surface area ≥ 0.0035 x Q_{10} = 0.36 ac required ≤ 0.57 ac provided

Principal Spillway (Qps)

15. Design Qps for barrel = 103.54 cfs (min. 10% of Q_{10})
16. Barrel head, H = 7.37 ft; Barrel length, L = 36 ft
17. Barrel dia. = 48 in (min. 10 inch); Qps = 178 (Q from Table G.7 or G.8) x 1.04 (length correction factor) = 185 cfs. Note: Qps must equal or exceed Design Qps
18. Riser dia. = n/a in; Riser height = 211.00 ft; Riser head (h) = 0.87 ft
19. Trash rack dia. = n/a in; Trash rack height = n/a in. (see release structure S-1)

Emergency Spillway (Qes) (N/A)

20. Emergency spillway capacity, Qes = Q_{10} - Qps = _____ - _____ = _____ cfs
21. Width = _____ ft; Hp = _____ ft
22. Exit channel slope = _____ %
23. Emergency spillway crest = _____ ft
24. Design High Water = _____ ft
25. Settled top of embankment elevation = _____ ft

Anti-Seep Collar Design (If Required)

26. y = _____ ft; z = _____ :1; pipe slope = _____ %; Lc = _____ ft
27. Use _____ collars, _____ ft - _____ in. square; projection = _____ ft

Draw-down Device

28. Q_{d-d} = 1.1 cfs
29. Calculated A_o = 0.1 ft^2
30. Calculated d_o = 4.3 in
31. Maximum diameter from Table G.10 = 8 in
32. Design d_o = smaller of line 30 or line 31 = 4.3 in
33. Draw-down device pipe diameter = 10 in
34. Minimum A_t = total area of perforations = $4A_o$ = 0.40 ft^2
35. Perforation diameter = 76 in
36. Minimum number of perforations = 36
37. Number of longitudinal rows = 4
38. Perforated pipe length = 10 ft
39. Actual A_t = (0.0055 ft) x (line 37 / 0.5 ft) x (line 38) = 0.44 ft^2 (must be ≥ line 34)

Baffle Board Design

40. A = surface area at wet storage elevation = 13,700 ft^2
41. Effective width, W_e = $(A/2)^{2/3}$ = 83 ft
42. Flow length from inflow point to outlet = 147 ft
43. If line 42 is less than W_e x 2, provide baffle boards to lengthen flow path
44. Effective flow length, L_e = L_1 + L_2 + L_3 = 179 ft (must be ≥ W_e x 2 = 166 ft)

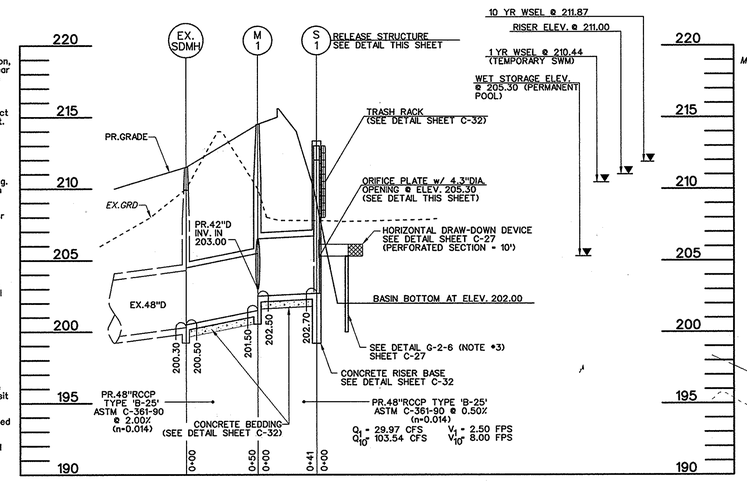

SECTION B-B

SCALE: H: 1" = 50'
V: 1" = 5'

SECTION A-A

SCALE: H: 1" = 50'
V: 1" = 5'

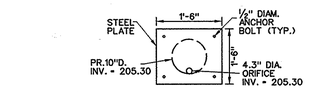

ORIFICE PLATE WITHIN RELEASE STRUCTURE S-1

NOT TO SCALE

STEEL PLATE SHALL BE HOT DIPPED GALVANIZED AFTER SHOP FABRICATION (CONNECTION BETWEEN ORIFICE PLATE AND RELEASE STRUCTURE SHALL BE WATERTIGHT)

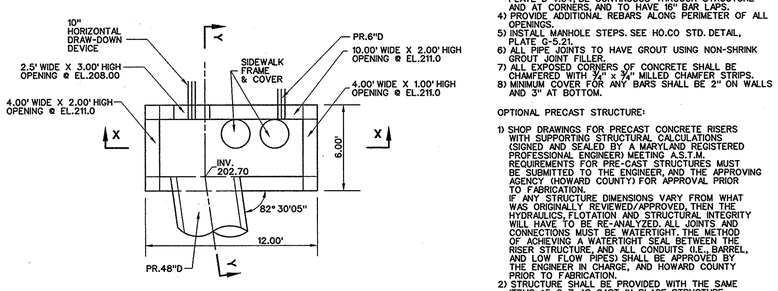

RELEASE STRUCTURE S-1 DETAIL

SCALE 1"=5'

50 30 0 50

STRUCTURE NOTES

CAST IN PLACE STRUCTURE:

1) UNLESS OTHERWISE NOTED, INLET SHALL BE BUILT IN ACCORDANCE WITH HO. CO. STD. DETAIL, PLATE D-4.04, TYPE A-10 INLET.
2) STRUCTURE TO BE CAST IN PLACE REINFORCED CONCRETE MIX NO.6.
3) REINFORCING SHALL BE IN ACCORDANCE WITH STD. DETAIL, PLATE D-4.04, BE CONTINUOUS THROUGH STRUCTURE AND AT CORNERS, AND TO HAVE 16" BAR LAPS.
4) PROVIDE ADDITIONAL REBARS ALONG PERIMETER OF ALL OPENINGS.
5) INSTALL MANHOLE STEPS. SEE HO.CO STD. DETAIL, PLATE G-5.21.
6) ALL PIPE JOINTS TO HAVE GROUT USING NON-SHRINK GROUT JOINT FILLER.
7) ALL EXPOSED CORNERS OF CONCRETE SHALL BE CHAMFERED WITH ¾" x ¾" MILLED CHAMFER STRIPS.
8) MINIMUM COVER FOR ANY BARS SHALL BE 2" ON WALLS AND 3" AT BOTTOM.

OPTIONAL PRECAST STRUCTURE:

1) SHOP DRAWINGS FOR PRECAST CONCRETE RISERS WITH SUPPORTING STRUCTURAL CALCULATIONS (SIGNED AND SEALED BY A MARYLAND REGISTERED PROFESSIONAL ENGINEER) MEETING A.S.T.M. REQUIREMENTS FOR PRE-CAST STRUCTURES MUST BE SUBMITTED TO THE ENGINEER, AND THE APPROVING AGENCY (HOWARD COUNTY) FOR APPROVAL PRIOR TO FABRICATION.
IF ANY STRUCTURE DIMENSIONS VARY FROM WHAT WAS ORIGINALLY REVIEWED/APPROVED, THEN THE HYDRAULICS, FLOTATION AND STRUCTURAL INTEGRITY WILL HAVE TO BE RE-ANALYZED. ALL JOINTS AND CONNECTIONS MUST BE WATERTIGHT. THE METHOD OF ACHIEVING A WATERTIGHT SEAL BETWEEN THE RISER STRUCTURE, AND ALL CONDUITS (I.E., BARREL, AND LOW FLOW PIPES) SHALL BE APPROVED BY THE ENGINEER IN CHARGE, AND HOWARD COUNTY PRIOR TO FABRICATION.
2) STRUCTURE SHALL BE PROVIDED WITH THE SAME ITEMS: #5, 6, 7 AS CAST IN PLACE STRUCTURE.
3) CONCRETE COLLAR MUST BE PLACED AROUND OUTFALL PIPE AND ATTACHED TO RELEASE STRUCTURE WHEN PRECAST STRUCTURE IS USED. SEE DETAIL THIS SHEET.

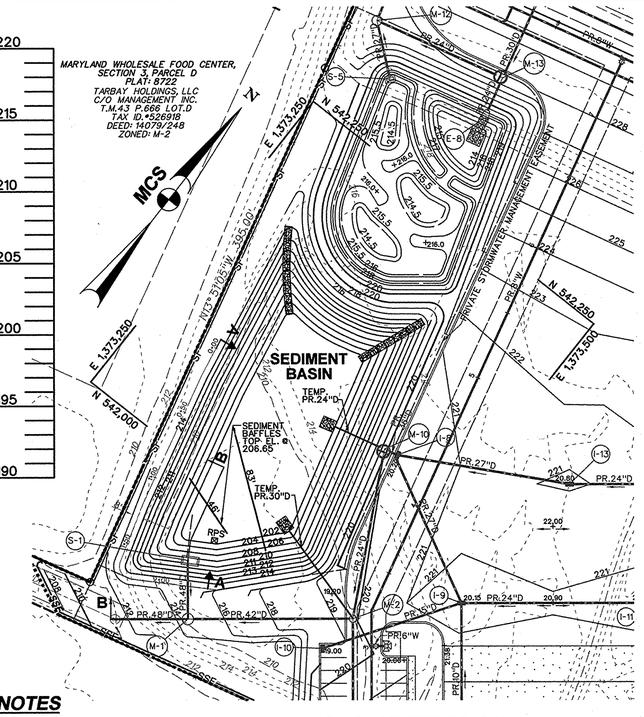

PROPOSED GRADING - SEDIMENT BASIN

SCALE: 1" = 50'

This development plan is approved for soil erosion and sediment control by the HOWARD SOIL CONSERVATION DISTRICT.

Howard Co. SCD — 10/30/14 Date

DEVELOPER'S CERTIFICATE

" I/We certify that all development and construction will be done according to this plan for sediment and erosion control, and that all responsible personnel involved in the construction project will have a Certificate of Attendance at a Department of the Environment Approved Training Program for the Control of Sediment and Erosion before beginning the project. I also authorize periodic on-site inspection by the Howard Soil Conservation District"

Stuart Foard — 10-15-14 Date

ENGINEER'S CERTIFICATE

" I certify that this plan for sediment and erosion control represents a practical and workable plan based on my personal knowledge of the site conditions and that it was prepared in accordance with the requirements of the Howard Soil Conservation District"

Iwona Rostek-Zarska, P.E. 21245 — 10-15-14 Date

APPROVED: DEPARTMENT OF PLANNING AND ZONING

Chief, Development Engineering Division — 11-6-14 Date

Chief, Division of Land Development — 11-20-14 Date

Director — 11/21/14 Date

ADDRESS CHART

LOT / PARCEL NO.	STREET ADDRESS
PARCEL B-1	7901 OCEANO AVENUE
PARCEL E-1	7775 CHESAPEAKE BAY COURT

PERMIT INFORMATION CHART

SUBDIVISION NAME			SECTION / AREA	LOT / PARCEL NO.
MARYLAND FOOD CENTER AUTHORITY			3	B-1/662 & E-1/696
PLAT NO. or L/F	GRID NO.	ZONING	TAX MAP NO.	ELEC. DIST.	CENSUS TRACT
23017-23021	21	M-2	43	6TH	6069.01

THE COORDINATE SYSTEM OF ALL DRAWINGS IS BASED ON THE NORTH AMERICAN DATUM OF 1983. THE ELEVATION SYSTEM OF ALL DRAWINGS IS BASED ON THE NORTH AMERICAN VERTICAL DATUM OF 1988.
HORZ: NAD 83/91 VERT: NAVD 88

BLDG
Baltimore Land Design Group Inc.
Consulting Engineers
230 SCHILLING CIRCLE, SUITE 364 • HUNT VALLEY, MARYLAND 21031
PHONE: 410.229.9851 • FAX: 410.229.9865 • BLDG@BLDGINC.COM

COMMONWEALTH OF MARYLAND — 21245 — IWONA ROSTEK-ZARSKA — STATE OF MARYLAND — 10/15/14

PROFESSIONAL CERTIFICATION

I HEREBY CERTIFY THAT THESE DOCUMENTS WERE PREPARED OR APPROVED BY ME, AND THAT I AM A DULY LICENSED PROFESSIONAL ENGINEER UNDER THE LAWS OF THE STATE OF MARYLAND, LICENSE NO. 21245, EXPIRATION DATE: JUNE 9, 2016.

OWNER
MARYLAND FOOD CENTER AUTHORITY
7801 OCEANO AVE
JESSUP, MD 20794
PHONE (410) 379-5760
FAX (410) 379-5773

DEVELOPER / APPLICANT
MERRITT PROPERTIES, LLC
2066 LORD BALTIMORE DRIVE
BALTIMORE, MD 21244
PHONE (410) 298-2600
FAX (410) 298-9644

REVISIONS

DATE	NO.	DESCRIPTION	BY

EROSION AND SEDIMENT CONTROL PLAN
SEDIMENT BASIN #1

MARYLAND FOOD CENTER AUTHORITY

PARCEL B-1 & E-1
(WAREHOUSE & OFFICE)

HOWARD COUNTY, MARYLAND
SCALE: 1" = 50'
DATE: OCTOBER, 2014

DRAWING NO.
C-23
SHEET 23 OF 57

SDP-14-068

PARCEL E-1 BEARING AND DISTANCES		
	BEARING	DISTANCE
1	S 51° 32'53" W	750.78'
2	N 38° 27'07" W	485.00'
3	N 51° 32'53" E	219.79'
4	N 76° 09'12" E	354.39'
5	S 38° 27'07" E	283.44'
6	N 51° 32'53" E	85.33'
7	R=44.0'	42.48'
8	N 03° 46'08" W	54.55'
9	R=356.00'	77.82'
10	N 08° 45'23" E	87.35'
11	R=344.00'	135.74'
12	N 13° 51'05" W	9.70'
13	R=59.00'	61.77'
14	S 81° 14'36" E	66.68'
15	S 08° 45'23" W	311.43'
16	S 29° 48'50" E	107.67'

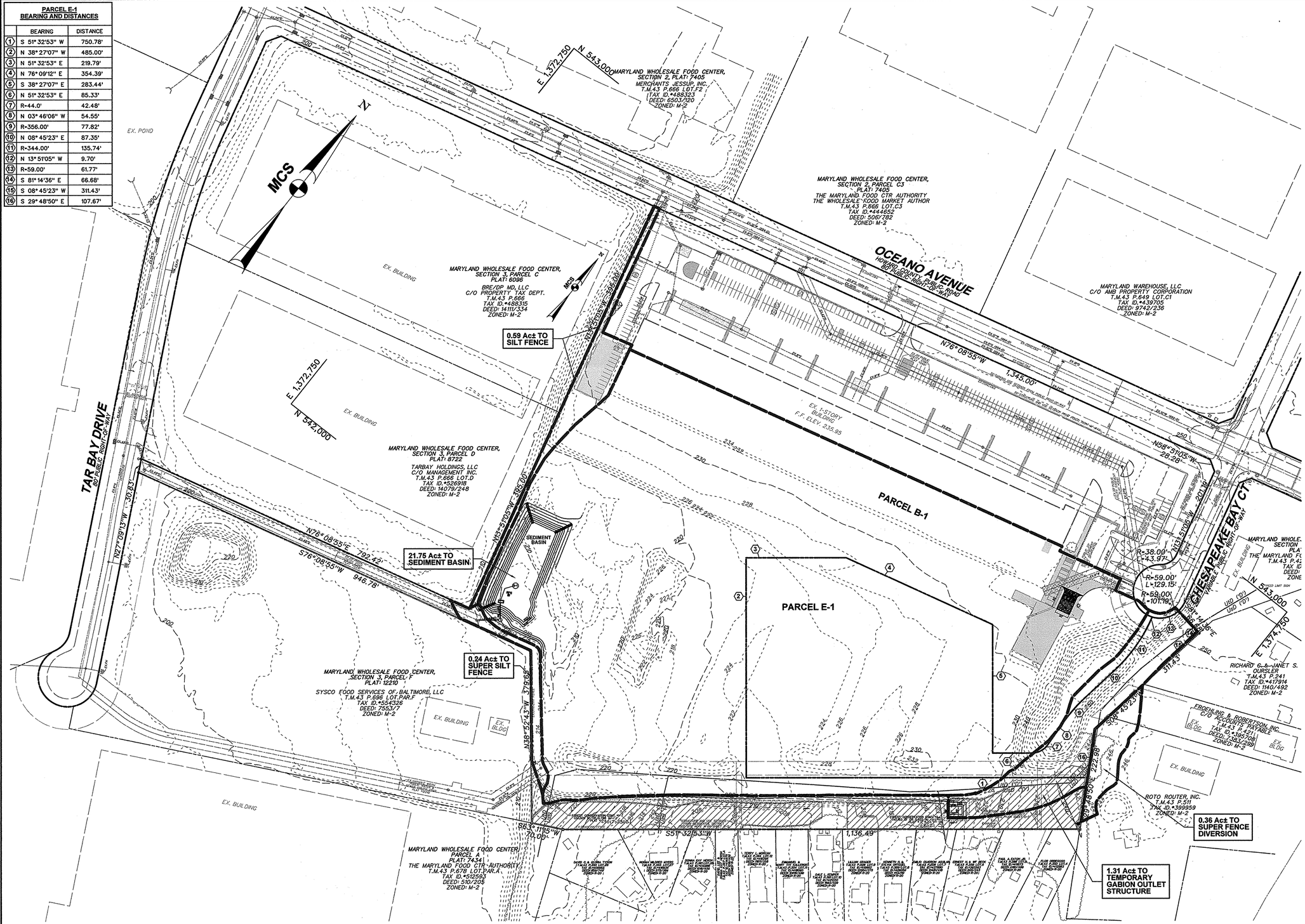

TEMPORARY GABION OUTLET STRUCTURE	
TOP ELEVATION	222.00'
BOTTOM ELEVATION	219.00'
BOTTOM DIMENSIONS	30' x 25'
EXISTING DRAINAGE AREA	1.40 Ac
STORAGE REQUIRED (1,800 CF / Ac)	2,520 CF
STORAGE PROVIDED	3,467 CF

SEDIMENT BASIN	
TOP OF EMBANKMENT	214.00'
BOTTOM ELEVATION	202.00'
EXISTING DRAINAGE AREA	21.75 Ac
STORAGE REQUIRED (3,600 CF / Ac)	78,300 CF
STORAGE PROVIDED	80,659 CF
TEMPORARY SWM (1-YR ROUTING)	PROVIDED

DRAINAGE AREA MAP LEGEND

LIMIT OF DISTURBANCE

IMPERVIOUS AREA

DRAINAGE AREA TO ESC DEVICES

This development plan is approved for soil erosion and sediment control by the HOWARD SOIL CONSERVATION DISTRICT.

Howard Co. SCD — Date 10/30/14

DEVELOPER'S CERTIFICATE

" I/We certify that all development and construction will be done according to this plan for sediment and erosion control, and that all responsible personnel involved in the construction project will have a Certificate of Attendance at a Department of the Environment Approved Training Program for the Control of Sediment and Erosion before beginning the project. I also authorize periodic on-site inspection by the Howard Soil Conservation District"

Stuart Foard — Date 10-15-14

ENGINEER'S CERTIFICATE

" I certify that this plan for sediment and erosion control represents a practical and workable plan based on my personal knowledge of the site conditions and that it was prepared in accordance with the requirements of the Howard Soil Conservation District"

Iwona Rostek-Zarsko, P.E. 21245 — Date 10-15-14

APPROVED: DEPARTMENT OF PLANNING AND ZONING

Chief, Development Engineering Division — Date 11.6.14

Chief, Division of Land Development — Date 11-2014

Director — Date 11/6/14

ADDRESS CHART

LOT / PARCEL NO.	STREET ADDRESS
PARCEL B-1	7901 OCEANO AVENUE
PARCEL E-1	7775 CHESAPEAKE BAY COURT

PERMIT INFORMATION CHART

SUBDIVISION NAME			SECTION / AREA	LOT / PARCEL NO.
MARYLAND FOOD CENTER AUTHORITY			3	B-1/662 & E-1/696
PLAT NO. or L/F	GRID NO.	ZONING	TAX MAP NO.	ELEC. DIST.	CENSUS TRACT
23017-23021	21	M-2	43	6TH	6069.01

THE COORDINATE SYSTEM OF ALL DRAWINGS IS BASED ON THE NORTH AMERICAN DATUM OF 1983. THE ELEVATION SYSTEM OF ALL DRAWINGS IS BASED ON THE NORTH AMERICAN VERTICAL DATUM OF 1988. HORZ: NAD 83/91; VERT: NAVD 88

BLDG
Baltimore Land Design Group Inc.
Consulting Engineers
230 SCHILLING CIRCLE, SUITE 364 • HUNT VALLEY, MARYLAND 21031
PHONE: 410.229.9851 • FAX: 410.229.9865 • BLDG@BLDGINC.COM

21245 IWONA ROSTEK-ZARSKO STATE OF MARYLAND — QUALIFIED FOR PROFESSIONAL ENGINEER

PROFESSIONAL CERTIFICATION

I HEREBY CERTIFY THAT THESE DOCUMENTS WERE PREPARED OR APPROVED BY ME, AND THAT I AM A DULY LICENSED PROFESSIONAL ENGINEER UNDER THE LAWS OF THE STATE OF MARYLAND, LICENSE NO. 21245, EXPIRATION DATE: JUNE 9, 2016.

OWNER
MARYLAND FOOD CENTER AUTHORITY
7801 OCEANO AVE
JESSUP, MD 20794
PHONE (410) 379-5760
FAX (410) 379-5773

DEVELOPER / APPLICANT
MERRITT PROPERTIES, LLC
2066 LORD BALTIMORE DRIVE
BALTIMORE, MD 21244
PHONE (410) 298-2600
FAX (410) 298-9644

REVISIONS

DATE	NO.	DESCRIPTION	BY

EROSION AND SEDIMENT CONTROL PLAN
EXISTING DRAINAGE AREA MAP

MARYLAND FOOD CENTER AUTHORITY

PARCEL B-1 & E-1
(WAREHOUSE & OFFICE)

HOWARD COUNTY, MARYLAND
SCALE: 1" = 100'
DATE: OCTOBER, 2014

DRAWING NO.
C-24
SHEET 24 OF 57

SDP-14-068

PARCEL E-1 BEARING AND DISTANCES		
	BEARING	DISTANCE
(1)	S 51° 32'53" W	750.78'
(2)	N 38° 27'07" W	485.00'
(3)	N 51° 32'53" E	219.79'
(4)	N 76° 09'12" E	354.39'
(5)	S 38° 27'07" E	283.44'
(6)	N 51° 32'53" E	85.33'
(7)	R=44.0'	42.48'
(8)	N 03° 46'06" W	54.55'
(9)	R=356.00'	77.82'
(10)	N 08° 45'23" E	87.35'
(11)	R=344.00'	135.74'
(12)	N 13° 51'05" W	9.70'
(13)	R=59.00'	61.77'
(14)	S 81° 14'36" E	66.68'
(15)	S 08° 45'23" W	311.43'
(16)	S 29° 48'50" E	107.67'

TEMPORARY GABION OUTLET STRUCTURE	
TOP ELEVATION	222.00'
BOTTOM ELEVATION	219.00'
BOTTOM DIMENSIONS	30' x 25'
PROPOSED DRAINAGE AREA	0.39 Ac
STORAGE REQUIRED (1,800 CF / Ac)	702 CF
STORAGE PROVIDED	3,467 CF

SEDIMENT BASIN	
TOP OF EMBANKMENT	214.00'
BOTTOM ELEVATION	202.00'
EXISTING DRAINAGE AREA	22.10 Ac
STORAGE REQUIRED (3,600 CF / Ac)	79,560 CF
STORAGE PROVIDED	80,659 CF
TEMPORARY SWM (1-YR ROUTING)	PROVIDED
10-YR WSEL	211.87'

DRAINAGE AREA MAP LEGEND

LIMIT OF DISTURBANCE .....

DRAINAGE AREA TO ESC DEVICES — — — — — —

MARYLAND WHOLESALE FOOD CENTER, SECTION 2, PLAT: 7405 MERCHANTS JESSUP, INC. T.M.43 P.666 LOT F2 TAX ID.#486323 DEED: 6503/320 ZONED: M-2

MARYLAND WHOLESALE FOOD CENTER, SECTION 2, PARCEL C3 PLAT: 7405 THE MARYLAND FOOD CTR AUTHORITY THE WHOLESALE FOOD MARKET AUTHOR T.M.43 P.666 LOT C3 TAX ID.#414652 DEED: 5467/762 ZONED: M-2

MARYLAND WHOLESALE FOOD CENTER, SECTION 3, PARCEL C PLAT: 6096 BRE/DP MD, LLC C/O PROPERTY TAX DEPT. T.M.43 P.666 TAX ID.#488315 DEED: 14111/334 ZONED: M-2

MARYLAND WHOLESALE FOOD CENTER, SECTION 3, PARCEL D PLAT: 6722 TARBAY HOLDINGS, LLC C/O MANAGEMENT INC. T.M.43 P.666 LOT D TAX ID.#526918 DEED: 14079/248 ZONED: M-2

MARYLAND WHOLESALE FOOD CENTER, PARCEL A PLAT: 7434 THE MARYLAND FOOD CTR AUTHORITY T.M.43 P.678 LOT PAR.A TAX ID.#512595 DEED: 510/206 ZONED: M-2

MARYLAND WHOLESALE FOOD CENTER, PARCEL F PLAT: 12210 SYSCO FOOD SERVICES OF BALTIMORE, LLC T.M.43 P.696 LOT PAR.F TAX ID.#554328 DEED: 7553/7 ZONED: M-2

MARYLAND WAREHOUSE, LLC C/O AMB PROPERTY CORPORATION T.M.43 P.649 LOT C1 TAX ID.#439705 DEED: 9742/236 ZONED: M-2

RICHARD G. & JANET S. OURSLER T.M.43 P.241 TAX ID.#417914 DEED: 7140/492 ZONED: M-2

EROFEULIN & ROBERTSON INC. C/O ACCOUNTING T.M.43 P.241 TAX ID.#417911 DEED: 7385/708 ZONED: M-2

ROTO ROUTER, INC. T.M.43 P.511 TAX ID.#399959 ZONED: M-2

MARYLAND WHOLE... SECTION ... PLA... THE MARYLAND FO... T.M.43 P.41... TAX ID ... DEED: ... ZONE...

EX. POND

EX. BUILDING

EX. 1-STORY BUILDING F.F. ELEV. 235.95

PROPOSED BUILDING EXPANSION BUILDING III 104,160 SF ± FF 235.95

PROPOSED OFFICE/WAREHOUSE BUILDING II 70,000 SF FF 226.50

PROPOSED OFFICE/WAREHOUSE BUILDING I 88,338 SF FF 231.00

PARCEL B-1

PARCEL E-1

SEDIMENT BASIN

0.32 Ac± TO SILT FENCE

22.10 Ac± TO SEDIMENT BASIN

0.62 Ac± TO SUPER SILT FENCE

0.38 Ac± TO SUPER FENCE DIVERSION

0.37 Ac± TO TEMPORARY GABION OUTLET STRUCTURE

OCEANO AVENUE
HOWARD COUNTY PUBLIC ROAD
80' PUBLIC RIGHT-OF-WAY

TAR BAY DRIVE
80' PUBLIC RIGHT-OF-WAY

CHESAPEAKE BAY CT.
PUBLIC RIGHT-OF-WAY

N 76° 08' 55" W 1,345.00'

N 76° 08' 55" W 946.78'

S 76° 08' 55" E 192.42'

S 51° 32' 53" W 1,136.49'

N 38° 27' 07" W 485.00'

N 51° 32' 53" E 219.79'

N 38° 27' 07" W 379.95'

N 27° 09' 13" W 305.83'

N 63° 17' 15" W 70.00'

N 08° 45' 23" E 87.35'

S 08° 45' 23" W 311.43'

S 29° 48' 50" E 107.67'

N 543,250 E 1,373,250

N 543,250 E 1,374,250

N 541,750 E 1,374,250

R=38.00' L=43.97'

R=59.00' L=129.15'

R=59.00' L=101.19'

R=44.00' L=42.48'

R=356.00' L=77.82'

R=344.00' L=135.74'

R=59.00' L=61.77'

N 13° 51' 05" W 9.70'

S 81° 14' 36" E 66.68'

N 58° 51' 05" W 28.28'

N 13° 51' 05" W 201.36'

S 58° 51' 05" E 222.88'

S 31° 08' 55" W 250'

S 58° 51' 05" E 250'

50 30 0 50

THE COORDINATE SYSTEM OF ALL DRAWINGS IS BASED ON THE NORTH AMERICAN DATUM OF 1983. THE ELEVATION SYSTEM OF ALL DRAWINGS IS BASED ON THE NORTH AMERICAN VERTICAL DATUM OF 1988. HORZ: NAD 83/91; VERT: NAVD 88

This development plan is approved for soil erosion and sediment control by the HOWARD SOIL CONSERVATION DISTRICT.

Howard Co. SCD — Date 12/15/15

DEVELOPER'S CERTIFICATE

" I/We certify that all development and construction will be done according to this plan for sediment and erosion control, and that all responsible personnel involved in the construction project will have a Certificate of Attendance at a Department of the Environment Approved Training Program for the Control of Sediment and Erosion before beginning the project. I also authorize periodic on-site inspection by the Howard Soil Conservation District"

Stuart Foard — Date 10.15.14

ENGINEER'S CERTIFICATE

" I certify that this plan for sediment and erosion control represents a practical and workable plan based on my personal knowledge of the site conditions and that it was prepared in accordance with the requirements of the Howard Soil Conservation District"

Iwona Rostek-Zarska, P.E. 21245 — Date 10-15-14

APPROVED: HOWARD COUNTY DEPARTMENT OF PLANNING AND ZONING

CHIEF, DEVELOPMENT ENGINEERING DIVISION — DATE 12.29.15

CHIEF, DIVISION OF LAND DEVELOPMENT — DATE 12.31.15

DIRECTOR, DEPARTMENT OF PLANNING AND ZONING — DATE 1-3-16

ADDRESS CHART	
LOT / PARCEL NO.	STREET ADDRESS
PARCEL B-1	7901 OCEANO AVENUE
PARCEL E-1	7775 CHESAPEAKE BAY COURT

PERMIT INFORMATION CHART

SUBDIVISION NAME			SECTION / AREA		LOT / PARCEL NO.
MARYLAND FOOD CENTER AUTHORITY			3		B-1/662 & E-1/696
PLAT NO. or L/F	GRID NO.	ZONING	TAX MAP NO.	ELEC. DIST.	CENSUS TRACT
23017-23021	21	M-2	43	6TH	6069.01

MORRIS & RITCHIE ASSOCIATES, INC.
ENGINEERS, PLANNERS, SURVEYORS AND LANDSCAPE ARCHITECTS
14280 PARK CENTER DRIVE - LAUREL, MD 20707
(410) 792-9792 / (301) 776-1690 FAX: (410) 792-7395
MRAGTA.COM

COPYRIGHT 2015 MORRIS & RITCHIE ASSOCIATES

FOR REVISION #3 ONLY

STATE OF MARYLAND — HOWARD CHI-HSIEN LIU — 29203 — PROFESSIONAL ENGINEER — 12-7-15

MD PROFESSIONAL CERTIFICATION:

I HEREBY CERTIFY THAT THESE DOCUMENTS WERE PREPARED OR APPROVED BY ME, AND THAT I AM A DULY LICENSED PROFESSIONAL ENGINEER UNDER THE LAWS OF THE STATE OF MARYLAND, LICENSE NO. 29203, EXPIRATION DATE: 09/16/2017.

BLDG
Baltimore Land Design Group Inc.
Consulting Engineers
230 SCHILLING CIRCLE, SUITE 364 • HUNT VALLEY, MARYLAND 21031
PHONE: 410.229.9851 • FAX: 410.229.9865 • BLDG@BLDGINC.COM

STATE OF MARYLAND — IWONA ROSTEK-ZARSKA — 21245 — REGISTERED PROFESSIONAL ENGINEER — 10/15/14

PROFESSIONAL CERTIFICATION

I HEREBY CERTIFY THAT THESE DOCUMENTS WERE PREPARED OR APPROVED BY ME, AND THAT I AM A DULY LICENSED PROFESSIONAL ENGINEER UNDER THE LAWS OF THE STATE OF MARYLAND, LICENSE NO. 21245, EXPIRATION DATE: JUNE 9, 2016.

OWNER
MARYLAND FOOD CENTER AUTHORITY
7801 OCEANO AVE
JESSUP, MD 20794
PHONE (410) 379-5760
FAX (410) 379-5773

DEVELOPER / APPLICANT
MERRITT PROPERTIES, LLC
2066 LORD BALTIMORE DRIVE
BALTIMORE, MD 21244
PHONE (410) 298-2600
FAX (410) 298-9644

REVISIONS			
DATE	NO.	DESCRIPTION	BY
9/18/15	3	REPLACED BUILDING IV WITH TRUCK WASH-OUT STATION	MRA

REVISED SITE DEVELOPMENT PLAN

EROSION AND SEDIMENT CONTROL PLAN
PROPOSED DRAINAGE AREA MAP

MARYLAND FOOD CENTER AUTHORITY
PARCEL B-1 & E-1
(WAREHOUSE & OFFICE)

HOWARD COUNTY, MARYLAND
SCALE: 1" = 100'
DATE: OCTOBER, 2014

DRAWING NO. C-25

SHEET 25 OF 57

SDP-14-068

P:\PROJ\17820 MFCA Expansion\PLANS\DEVELOPMENT\SEAFOOD MARKET\REDLINES\PLOT\2015-04-07-MFCA-SEAFOOD-REDLINE-25.dwg, 12/7/2015 10:58:55 AM, ChrDuerr

© COPYRIGHT 2015 MORRIS & RITCHIE ASSOCIATES, INC.

B-4 STANDARDS AND SPECIFICATIONS FOR VEGETATIVE STABILIZATION

Conditions Where Practice Applies:

On all disturbed areas not stabilized by other methods. This specification is divided into sections on incremental stabilization: soil preparation, soil amendments and topsoiling: seeding and mulching: temporary stabilization: and permanent stabilization.

Adequate Vegetative Establishment:

Inspect seeded areas for vegetative establishment and make necessary repairs, replacements, and reseedings within the planting season.

1. Adequate vegetative stabilization requires 95 percent groundcover.
2. If an area has less than 40 percent groundcover, restabilize following the original recommendations for lime, fertilizer, seedbed preparation, and seeding.
3. If an area has between 40 and 94 percent groundcover, over- seed and fertilize using half of the rates originally specified.
4. Maintenance fertilizer rates for permanent seeding are shown in Table B.6.

B-4-1 Standards and Specifications for Incremental Stabilization

Conditions Where Practice Applies:

Any cut or fill slope greater than 15 feet in height. This practice also applies to stockpiles.

Criteria:

A. Incremental Stabilization - Cut Slopes

1. Excavate and stabilize cut slopes in increments not to exceed 15 feet in height. Prepare seedbed and apply seed and mulch on all cut slopes as the work progresses.
2. Construction sequence example (Refer to Figure B.1 in "2011 Maryland Standards and Specifications for Soil Erosion and Sediment Control"):
   a. Construct and stabilize all temporary swales or dikes that will be used to convey runoff around the excavation.
   b. Perform Phase 1 excavation, prepare seedbed, and stabilize.
   c. Perform Phase 2 excavation, prepare seedbed, and stabilize. Overseed Phase 1 areas as necessary.
   d. Perform final phase excavation, prepare seedbed, and stabilize. Overseed previously seeded areas as necessary.

Note: Once excavation has begun the operation should be continuous from grubbing through the completion of grading and placement of topsoil (if required) and permanent seed and mulch. Any interruptions in the operation or completing the operation out of the seeding season will necessitate the application of temporary stabilization.

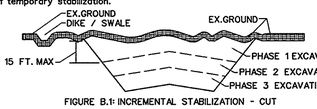

FIGURE B.1: INCREMENTAL STABILIZATION - CUT

B. Incremental Stabilization - Fill Slopes

1. Construct and stabilize fill slopes in increments not to exceed 15 feet in height. Prepare seedbed and apply seed and mulch on all slopes as the work progresses.
2. Stabilize slopes immediately when the vertical height of a lift reaches 15 feet, or when the grading operation ceases as prescribed in the plans.
3. At the end of each day, install temporary water conveyance practice(s), as necessary, to intercept surface runoff and convey it down the slope in a non-erosive manner.
4. Construction sequence example (Refer to Figure B.2 in "2011 Maryland Standards and Specifications for Soil Erosion and Sediment Control"):
   a. Construct and stabilize all temporary swales or dikes that will be used to divert runoff around the fill. Construct silt fence on low side of fill unless other methods shown on the plans address this area.
   b. At the end of each day, install temporary water conveyance practice(s), as necessary, to intercept surface runoff and convey it down the slope in a non-erosive manner.
   c. Place Phase 1 fill, prepare seedbed, and stabilize.
   d. Place Phase 2 fill, prepare seedbed, and stabilize.
   e. Place final phase fill, prepare seedbed, and stabilize. Overseed previously seeded areas as necessary.

Note: Once the placement of fill has begun the operation should be continuous from grubbing through the completion of grading and placement of topsoil (if required) and permanent seed and mulch. Any interruptions in the operation or completing the operation out of the seeding season will necessitate the application of temporary stabilization.

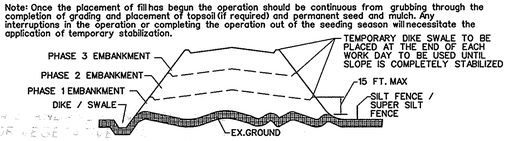

FIGURE B.2: INCREMENTAL STABILIZATION - FILL

B-4-2 Standards and Specifications for Soil Preparation, Topsoiling and Soil Amendments

Conditions Where Practice Applies:
Where vegetative stabilization is to be established

Criteria:

A. Soil Preparation

1. Temporary Stabilization
   a. Seedbed preparation consists of loosening soil to a depth of 3 to 5 inches by means of suitable agricultural or construction equipment, such as disc harrows or chisel plows or rippers mounted on construction equipment. After the soil is loosened, it must not be rolled or dragged smooth but left in the roughened condition. Slopes 3:1 or flatter are to be tracked with ridges running parallel to the contour of the slope.
   b. Apply fertilizer and lime as prescribed on the plans.
   c. Incorporate lime and fertilizer into the top 3 to 5 inches of soil by disking or other suitable means.
2. Permanent Stabilization
   a. A soil test is required for any earth disturbance of 5 acres or more. The minimum soil conditions required for permanent vegetative establishment are:
      i. Soil pH between 6.0 and 7.0.
      ii. Soluble salts less than 500 parts per million (ppm).
      iii. Soil contains less than 40 percent clay but enough fine grained material (greater than 30 percent silt plus clay) to provide the capacity to hold a moderate amount of moisture. An exception: if lovegrass will be planted, then a sandy soil (less than 30 percent silt plus clay) would be acceptable.
      iv. Soil contains 1.5 percent minimum organic matter by weight.
      v. Soil contains sufficient pore space to allow adequate root penetration.
   b. Application of amendments or topsoil is required if on-site soils do not meet the above conditions.
   c. Graded areas must be maintained in a true and even grade as specified on the approved plan, then scarified or otherwise loosened to a depth of 3 to 5 inches.
   d. Apply soil amendments as specified on the approved plan or as indicated by the results of a soil test.
   e. Mix soil amendments into the top 3 to 5 inches of soil by disking or other suitable means. Rake lawn areas to smooth the surface, remove large objects like stones and branches, and ready the area for seed application. Loosen surface soil by dragging with a heavy chain or other equipment to roughen the surface where site conditions will not permit normal seedbed preparation. Track slopes 3:1 or flatter with tracked equipment leaving the soil in an irregular condition with ridges running parallel to the contour of the slope. Leave the top 1 to 3 inches of soil loose and friable. Seedbed loosening may be unnecessary on newly disturbed areas.

B. Topsoiling

1. Topsoil is placed over prepared subsoil prior to establishment of permanent vegetation. The purpose is to provide a suitable soil medium for vegetative growth. Soils of concern have low moisture content, low nutrient levels, low pH, materials toxic to plants, and/or unacceptable soil gradation.
2. Topsoil salvaged from an existing site may be used provided it meets the standards as set forth in these specifications. Typically, the depth of topsoil to be salvaged for a given soil type can be found in the representative soil profile section in the Soil Survey published by USDA-NRCS.
3. Topsoiling is limited to areas having 2:1 or flatter slopes where:
   a. The texture of the exposed subsoil/parent material is not adequate to produce vegetative growth.
   b. The soil material is so shallow that the rooting zone is not deep enough to support plants or furnish continuing supplies of moisture and plant nutrients.
   c. The original soil to be vegetated contains material toxic to plant growth.
   d. The soil is so acidic that treatment with limestone is not feasible.
4. Areas having slopes steeper than 2:1 require special consideration and design.
5. Topsoil Specifications: Soil to be used as topsoil must meet the following criteria:
   a. Topsoil must be a loam, sandy loam, clay loam, silt loam, sandy clay loam, or loamy sand. Other soils may be used if recommended by an agronomist or soil scientist and approved by the appropriate approval authority. Topsoil must not be a mixture of contrasting textured subsoils and must contain less than 5 percent by volume of cinders, stones, slag, coarse fragments, gravel, sticks, roots, trash, or other materials larger than 1½inches in diameter.
   b. Topsoil must be free of noxious plants or plant parts such as Bermuda grass, quack grass, Johnson grass, nut sedge, poison ivy, thistle, or others as specified.
   c. Topsoil substitutes or amendments, as recommended by a qualified agronomist or soil scientist and approved by the appropriate approval authority, may be used in lieu of natural topsoil.
6. Topsoil Application
   a. Erosion and sediment control practices must be maintained when applying topsoil.
   b. Uniformly distribute topsoil in a 5 to 8 inch layer and lightly compact to a minimum thickness of 4 inches. Spreading is to be performed in such a manner that sodding or seeding can proceed with a minimum of additional soil preparation and tillage. Any irregularities in the surface resulting from topsoiling or other operations must be corrected in order to prevent the formation of depressions or water pockets.
   c. Topsoil must not be placed if the topsoil or subsoil is in a frozen or muddy condition, when the subsoil is excessively wet or in a condition that may otherwise be detrimental to proper grading and seedbed preparation.

C. Soil Amendments (Fertilizer and Lime Specifications)

1. Soil tests must be performed to determine the exact ratios and application rates for both lime and fertilizer on sites having disturbed areas of 5 acres or more. Soil analysis may be performed by a recognized private or commercial laboratory. Soil samples taken for engineering purposes may also be used for chemical analyses.
2. Fertilizers must be uniform in composition, free flowing and suitable for accurate application by appropriate equipment. Manure may be substituted for fertilizer with prior approval from the appropriate approval authority. Fertilizers must all be delivered to the site fully labeled according to the applicable laws and must bear the name, trade name or trademark and warranty of the producer.
3. Lime materials must be ground limestone (hydrated or burnt lime may be substituted except when hydroseeding) which contains at least 50 percent total oxides (calcium oxide plus magnesium oxide). Limestone must be ground to such fineness that at least 50 percent will pass through a #100 mesh sieve and 98 to 100 percent will pass through a #20 mesh sieve.
4. Lime and fertilizer are to be evenly distributed and incorporated into the top 3 to 5 inches of soil by disking or other suitable means.
5. Where the subsoil is either highly acidic or composed of heavy clays, spread ground limestone at the rate of 4 to 8 tons/acre (200-400 pounds per 1,000 square feet) prior to the placement of topsoil.

B-4-3 Standards and Specifications for Seeding and Mulching

Conditions Where Practice Applies:

To the surface of all perimeter controls, slopes, and any disturbed area not under active grading

Criteria:

A. Seeding

1. Specifications
   a. All seed must meet the requirements of the Maryland State Seed Law. All seed must be subject to re-testing by a recognized seed laboratory. All seed used must have been tested within the 6 months immediately preceding the date of sowing such material on any project. Refer to Table B.4 regarding the quality of seed. Seed tags must be available upon request to the inspector to verify type of seed and seeding rate.
   b. Mulch alone may be applied between the fall and spring seeding dates only if the ground is frozen. The appropriate seeding mixture must be applied when the ground thaws.
   c. Inoculants: The inoculant for treating legume seed in the seed mixtures must be a pure culture of nitrogen fixing bacteria prepared specifically for the species. Inoculants must not be used later than the date indicated on the container. Add fresh inoculants as directed on the package. Use four times the recommended rate when hydroseeding. Note: It is very important to keep inoculant as cool as possible until used. Temperatures above 75 to 80 degrees Fahrenheit can weaken bacteria and make the inoculant less effective.
   d. Sod or seed must not be placed on soil which has been treated with soil sterilants or chemicals used for weed control until sufficient time has elapsed (14 days min.) to permit dissipation of phyto-toxic materials.
2. Application
   a. Dry Seeding: This includes use of conventional drop or broadcast spreaders.
      i. Incorporate seed into the subsoil at the rates prescribed on Temporary Seeding Table B.1, Permanent Seeding Table B.3, or site- specific seeding summaries.
      ii. Apply seed in two directions, perpendicular to each other. Apply half the seeding rate in each direction. Roll the seeded area with a weighted roller to provide good seed to soil contact.
   b. Drill or Cultipacker Seeding: Mechanized seeders that apply and cover seed with soil.
      i. Cultipacking seeders are required to bury the seed in such a fashion as to provide at least ¼inch of soil covering. Seedbed must be firm after planting.
      ii. Apply seed in two directions, perpendicular to each other. Apply half the seeding rate in each direction.
   c. Hydroseeding: Apply seed uniformly with hydroseeder (slurry includes seed and fertilizer).
      i. If fertilizer is being applied at the time of seeding, the application rates should not exceed the following: nitrogen, 100 pounds per acre; total of soluble nitrogen P2O5 (phosphorous), 200 pounds per acre; K2O (potassium), 200 pounds per acre.
      ii. Lime: Use only ground agricultural limestone (up to 3 tons per acre may be applied by hydroseeding). Normally, not more than 2 tons are applied by hydroseeding at any one time. Do not use burnt or hydrated lime when hydroseeding.
      iii. Mix seed and fertilizer on site and seed immediately and without interruption.
      iv. When hydroseeding do not incorporate seed into the soil.

B. Mulching

1. Mulch Materials (in order of preference)
   a. Straw consisting of thoroughly threshed wheat, rye, oat, or barley and reasonably bright in color. Straw is to be free of noxious weed seeds as specified in the Maryland Seed Law and not musty, moldy, caked, decayed, or excessively dusty. Note: Use only sterile straw mulch in areas where one species of grass is desired.
   b. Wood Cellulose Fiber Mulch (WCFM) consisting of specially prepared wood cellulose processed into a uniform fibrous physical state.
      i. WCFM is to be dyed green or contain a green dye in the package that will provide an appropriate color to facilitate visual inspection of the uniformly spread slurry.
      ii. WCFM, including dye, must contain no germination or growth inhibiting factors.
      iii. WCFM materials are to be manufactured and processed in such a manner that the wood cellulose fiber mulch will remain in uniform suspension in water under agitation and will blend with seed, fertilizer and other additives to form a homogeneous slurry. The mulch material must form a blotter-like ground cover, on application, having moisture absorption and percolation properties and must cover and hold grass seed in contact with the soil without inhibiting the growth of the grass seedlings.
      iv. WCFM material must not contain elements or compounds at concentration levels that will be phyto-toxic.
      v. WCFM must conform to the following physical requirements: fiber length of approximately 10 millimeters, diameter approximately 1 millimeter, pH range of 4.0 to 8.5, ash content of 1.6 percent maximum and water holding capacity of 90 percent minimum.
2. Application
   a. Apply mulch to all seeded areas immediately after seeding.
   b. When straw mulch is used, spread it over all seeded areas at the rate of 2 tons per acre to a uniform loose depth of 1 to 2 inches. Apply mulch to achieve a uniform distribution and depth so that the soil surface is not exposed. When using a mulch anchoring tool, increase the application rate to 2.5 tons per acre.
   c. Wood cellulose fiber used as mulch must be applied at a net dry weight of 1500 pounds per acre. Mix the wood cellulose fiber with water to attain a mixture with a maximum of 50 pounds of wood cellulose fiber per 100 gallons of water.
3. Anchoring
   a. Perform mulch anchoring immediately following application of mulch to minimize loss by wind or water. This may be done by one of the following methods (listed by preference), depending upon the size of the area and erosion hazard:
      i. A mulch anchoring tool is a tractor drawn implement designed to punch and anchor mulch into the soil surface a minimum of 2 inches. This practice is most effective on large areas, but is limited to flatter slopes where equipment can operate safely. If used on sloping land, this practice should follow the contour.
      ii. Wood cellulose fiber may be used for anchoring straw. Apply the fiber binder at a net dry weight of 750 pounds per acre. Mix the wood cellulose fiber with water at a maximum of 50 pounds of wood cellulose fiber per 100 gallons of water.
      iii. Synthetic binders such as Acrylic DLR (Agro-Tack), DCA-70, Petroset, Terra Tax II, Terra Tack AR or other approved equal may be used. Follow application rates as specified by the manufacturer. Application of liquid binders needs to be heavier at the edges where wind catches mulch, such as in valleys and on crests of banks. Use of asphalt binders is strictly prohibited.
      iv. Lightweight plastic netting may be stapled over the mulch according to manufacturer recommendations. Netting is usually available in rolls 4 to 15 feet wide and 300 to 3,000 feet long.

B-4-4 Standards and Specifications for Temporary Stabilization

Conditions Where Practice Applies

Exposed soils where ground cover is needed for a period of 6 months or less. For longer duration of time, permanent stabilization practices are required.

Criteria

1. Select one or more of the species or seed mixtures listed in Table B.1 for the appropriate Plant Hardiness Zone (from Figure B.3), and enter them in the Temporary Seeding Summary below along with application rates, seeding dates and seeding depths. If this Summary is not put on the plan and completed, then Table B.1 plus fertilizer and lime rates must be put on the plan.
2. For sites having soil tests performed, use and show the recommended rates by the testing agency. Soil tests are not required for Temporary Seeding.
3. When stabilization is required outside of a seeding season, apply seed and mulch or straw mulch alone as prescribed in Section B-4-3.A.1.b and maintain until the next seeding season.

TEMPORARY SEEDING SUMMARY

Hardiness Zone (from Figure B.3): 7a Seed Mixture (from Table B.1): 7a					Fertilizer Rate (10-20-20)	Lime Rate
No.	Species	Application Rate (lb/ac)	Seeding Dates	Seeding Depths		
	FOXTAIL MILLET	30	5/1-8/14	½"	436 lb/ac (10 lb/1000 sf)	2 tons/ac (90 lb/1000 sf)
	ANNUAL RYEGRASS	40	2/15-4/30 8/15-11/30	½"		
	CEREAL RYE	112	2/15-4/30 8/15-12/15	1"		

B-4-5 Standards and Specification for Permanent Stabilization

Conditions Where Practice Applies

Exposed soils where ground cover is needed for 6 months or more.

Criteria

A. Seed Mixtures

1. General Use
   a. Select one or more of the species or mixtures listed in Table B.3 for the appropriate Plant Hardiness Zone (from Figure B.3) and based on the site condition or purpose found on Table B.2. Enter selected mixture(s), application rates, and seeding dates in the Permanent Seeding Summary. The Summary is to be placed on the plan.
   b. Additional planting specifications for exceptional sites such as shorelines, stream banks, or dunes or for special purposes such as wildlife or aesthetic treatment may be found in USDA-NRCS Technical Field Office Guide, Section 342 - Critical Area Planting.
   c. For sites having disturbed area over 5 acres, use and show the rates recommended by the soil testing agency.
   d. For areas receiving low maintenance, apply urea form fertilizer (46-0-0) at 3½ pounds per 1000 square feet (150 pounds per acre) at the time of seeding in addition to the soil amendments shown in the Permanent Seeding Summary.
2. Turfgrass Mixtures
   a. Areas where turfgrass may be desired include lawns, parks, playgrounds, and commercial sites which will receive a medium to high level of maintenance.
   b. Select one or more of the species or mixtures listed below based on the site conditions or purpose. Enter selected mixture(s), application rates, and seeding dates in the Permanent Seeding Summary. The summary is to be placed on the plan.
      i. Kentucky Bluegrass: Full Sun Mixture: For use in areas that receive intensive management. Irrigation required in the areas of central Maryland and Eastern Shore. Recommended Certified Kentucky Bluegrass Cultivars Seeding Rate: 1.5 to 2.0 pounds per 1000 square feet. Choose a minimum of three Kentucky bluegrass cultivars with each ranging from 10 to 35 percent of the total mixture by weight.
      ii. Kentucky Bluegrass/Perennial Rye: Full Sun Mixture: For use in full sun areas where rapid establishment is necessary and when turf will receive medium to intensive management. Certified Perennial Ryegrass Cultivars/Certified Kentucky Bluegrass Seeding Rate: 2 pounds mixture per 1000 square feet. Choose a minimum of three Kentucky bluegrass cultivars with each ranging from 10 to 35 percent of the total mixture by weight.
      iii. Tall Fescue/Kentucky Bluegrass: Full Sun Mixture: For use in drought prone areas and/or for areas receiving low to medium management in full sun to medium shade. Recommended mixture includes: Certified Tall Fescue Cultivars 95 to 100 percent, Certified Kentucky Bluegrass Cultivars 0 to 5 percent. Seeding Rate: 5 to 8 pounds per 1000 square feet. One or more cultivars may be blended.
      iv. Kentucky Bluegrass/Fine Fescue: Shade Mixture: For use in areas with shade in Bluegrass lawns. For establishment in high quality, intensively managed turf area. Mixture includes: Certified Kentucky Bluegrass Cultivars 30 to 40 percent and Certified Fine Fescue and 60 to 70 percent. Seeding Rate: 1½ to 3 pounds per 1000 square feet.

Notes:
Select turfgrass varieties from those listed in the most current University of Maryland Publication, Agronomy Memo #77, "Turfgrass Cultivar Recommendations for Maryland"

Choose certified material. Certified materials is the best guarantee of cultivar purity. The certification program of the Maryland Department of Agriculture, Turf and Seed Section, provides a reliable means of consumer protection and assures a pure genetic line

c. Ideal Times of Seeding for Turf Grass Mixtures

Western MD: March 15 to June 1, August 1 to October 1 (Hardiness Zones: 5b, 6a)
Central MD: March 1 to May 15, August 15 to October 15 (Hardiness Zone: 6b)
Southern MD, Eastern Shore: March 1 to May 15, August 15 to October 15 (Hardiness Zones: 7a, 7b)

d. Till areas to receive seed by disking or other approved methods to a depth of 2 to 4 inches, level and rake the areas to prepare a proper seedbed. Remove stones and debris over 1½inches in diameter. The resulting seedbed must be in such condition that future mowing of grasses will pose no difficulty.

e. If soil moisture is deficient, supply new seedings with adequate water for plant growth (½to 1 inch every 5 to 4 days depending on soil texture) until they are firmly established. This is especially true when seedings are made late in the planting season, in abnormally dry or hot seasons, or on adverse sites.

PERMANENT SEEDING SUMMARY

Hardiness Zone (from Figure B.3): 7a Seed Mixture (from Table B.1): 7a					Fertilizer Rate (10-20-20)			Lime Rate
No.	Species	Application Rate (lb/ac)	Seeding * Dates	Seeding Depths	N	P_2O_5	K_2O	
11	CREEPING RED FESCUE CHEWINGS FESCUE KENTUCKY BLUEGRASS FOXTAIL, OR PEARL MILLET	30 30 20 4	3/1-5/15 8/1-10/15 5/1-8/14	¼"-½"	45 lb/ac (1.0 lb/ 1000 sf)	90 lb/ac (2 lb/ 1000 sf)	90 lb/ac (2 lb/ 1000 sf)	2 tons/ac (90 lb/ 1000 sf)
6	TALL FESCUE WHITE CLOVER PERENNIAL RYEGRASS FOXTAIL, OR PEARL MILLET	40 5 25 3.5	3/1-5/15 8/1-10/15 5/1-8/14	¼"-½"				
TURF GRASS	TALL FESCUE (95%) KENTUCKY BLUEGRASS (5%) FOXTAIL, OR PEARL MILLET	270 15 14	3/1-5/15 8/1-10/15 5/16-7/31	¼"-½"				

* For dates '5/16 - 7/31' add either foxtail or pearl millet to the seed mixture as noted above.

Note:
For sites having disturbed areas over 5 acres the rates shown above for permanent seeding shall be deleted and the rates recommended by the soil testing agency shall be used. Soil testing shall be performed at the time of fine grading and the results shall be furnished to the sediment control inspector.

B. Sod: To provide quick cover on disturbed areas (2:1 grade or flatter).

1. General Specifications
   a. Class of turfgrass sod must be Maryland State Certified. Sod labels must be made available to the job foreman and inspector.
   b. Sod must be machine cut at a uniform soil thickness of¾inch, plus or minus¼inch, at the time of cutting. Measurement for thickness must exclude top growth and thatch. Broken pads and torn or uneven ends will not be acceptable.
   c. Standard size sections of sod must be strong enough to support their own weight and retain their size and shape when suspended vertically with a firm grasp on the upper 10 percent of the section.
   d. Sod must not be harvested or transplanted when moisture content (excessively dry or wet) may adversely affect its survival.
   e. Sod must be harvested, delivered, and installed within a period of 36 hours. Sod not transplanted within this period must be approved by an agronomist or soil scientist prior to its installation.
2. Sod Installation
   a. During periods of excessively high temperature or in areas having dry subsoil, lightly irrigate the subsoil immediately prior to laying the sod.
   b. Lay the first row of sod in a straight line with subsequent rows placed parallel to it and tightly wedged against each other. Stagger lateral joints to promote more uniform growth and strength. Ensure that sod is not stretched or overlapped and that all joints are butted tight in order to prevent voids which would cause air drying of the roots.
   c. Wherever possible, lay sod with the long edges parallel to the contour and with staggering joints. Roll and tamp, peg or otherwise secure the sod to prevent slippage on slopes. Ensure solid contact exists between sod roots and the underlying soil surface.
   d. Water the sod immediately following rolling and tamping until the underside of the new sod pad and soil surface below the sod are thoroughly wet. Complete the operations of laying, tamping and irrigating for any piece of sod within eight hours.
3. Sod Maintenance
   a. In the absence of adequate rainfall, water daily during the first week or as often and sufficiently as necessary to maintain moist soil to a depth of 4 inches. Water sod during the heat of the day to prevent wilting.
   b. After the first week, sod watering is required as necessary to maintain adequate moisture content.
   c. Do not mow until the sod is firmly rooted. No more than 1/3 of the grass leaf must be removed by the initial cutting or subsequent cuttings. Maintain a grass height of at least 3 inches unless otherwise specified.

B-4-6 Standards and Specifications for Soil Stabilization Matting

Conditions Where Practice Applies
On newly seeded surfaces to prevent the applied seed from washing out: in channels and on steep slopes where the flow has erosive velocities or conveys clear water: on temporary swales, earth dikes, and perimeter dike swales as required by the respective design standard: and, on stream banks where moving water is likely to wash out new vegetative plantings.

B-4-7 Standards and Specifications for Heavy use Area Protection

Conditions Where Practice Applies

This practice applies to intensively used areas (e.g., equipment and material storage, staging areas, heavily used travel lanes).

Criteria

1. A minimum 4-inch base course of crushed stone or other suitable materials including wood chips over nonwoven geotextile should be provided as specified in Section H-1 Materials.
2. Select the stabilizing material based on the intended use, desired maintenance frequency, and runoff control.
3. The transport of sediments, nutrients, oils, chemicals, particulate matter associated with vehicular traffic and equipment, and material storage needs to be considered in the selection of material. Additional control measures may be necessary to control some of these potential pollutants.
4. Surface erosion can be a problem on large heavy use areas. In these situations, measures to reduce the flow length of runoff or erosive velocities need to be considered.

Maintenance

The heavy use areas must be maintained in a condition that minimizes erosion. This may require adding suitable material, as specified on the approved plans, to maintain a clean surface.

B-4-8 Standards and Specifications for Stockpile Area

Conditions Where Practice Applies

Stockpile areas are utilized when it is necessary to salvage and store soil for later use.

Criteria

1. The stockpile location and all related sediment control practices must be clearly indicated on the erosion and sediment control plan.
2. The footprint of the stockpile must be sized to accommodate the anticipated volume of material and based on a side slope ratio no steeper than 2:1. Benching must be provided in accordance with Section B-3 Land Grading.
3. Runoff from the stockpile area must drain to a suitable sediment control practice.
4. Access the stockpile area from the upgrade side.
5. Clear water runoff into the stockpile area must be minimized by use of a diversion device such as an earth dike, temporary swale or diversion fence. Provisions must be made for discharging concentrated flow in a non-erosive manner.
6. Where runoff concentrates along the toe of the stockpile fill, an appropriate erosion/sediment control practice must be used to intercept the discharge.
7. Stockpiles must be stabilized in accordance with the 3/7 day stabilization requirement as well as Standard B-4-1 Incremental Stabilization and Standard B-4-4 Temporary Stabilization.
8. If the stockpile is located on an impervious surface, a liner should be provided below the stockpile to facilitate cleanup. Stockpiles containing contaminated material must be covered with impermeable sheeting.

Maintenance

The stockpile area must continuously meet the requirements for Adequate Vegetative Establishment in accordance with Section B-4 Vegetative Stabilization. Side slopes must be maintained at no steeper than a 2:1 ratio. The stockpile area must be kept free of erosion. If the vertical height of a stockpile exceeds 20 feet for 2:1 slopes, 30 feet for 3:1 slopes, or 40 feet for 4:1 slopes, benching must be provided in accordance with Section B-3 Land Grading.

H-1 Standards and Specifications for Materials

TABLE H.1: GEOTEXTILE FABRICS		WOVEN SLIT FILM GEOTEXTILE		WOVEN MONOFILAMENT GEOTEXTILE		NONWOVEN GEOTEXTILE	
		MINIMUM AVERAGE ROLL VALUE[1]					
PROPERTY	TEST METHOD	MD	CD	MD	CD	MD	CD
Grab Tensile Strength	ASTM D-4632	200 lb	200 lb	370 lb	250 lb	200 lb	200 lb
Grab Tensile Elongation	ASTM D-4632	15%	10%	15%	15%	50%	50%
Trapezoidal Tear Strength	ASTM D-4533	75 lb	75 lb	100 lb	60 lb	80 lb	80 lb
Puncture Strength	ASTM D-6241	450 lb		900 lb		450 lb	
Apparent Opening Size[2]	ASTM D-4751	U.S. Sieve 30 (0.59 mm)		U.S. Sieve 70 (0.21 mm)		U.S. Sieve 70 (0.21 mm)	
Permittivity	ASTM D-4491	0.05 sec^{-1}		0.28 sec^{-1}		1.1 sec^{-1}	
Ultraviolet Resistance Retained at 500 hours	ASTM D-4355	70% strength		70% strength		70% strength	

1 All numeric values except apparent opening size (AOS) represent minimum average roll values (MARV). MARV is calculated as the typical minus two standard deviations. MD is machine direction: CD is cross direction.

2 Values for AOS represent the average maximum opening.

Geotextiles must be evaluated by the National Transportation Product Evaluation Program (NTPEP) and conform to the values in Table H.1.

The geotextile must be inert to commonly encountered chemicals and hydrocarbons and must be rot and mildew resistant. The geotextile must be manufactured from fibers consisting of long chain synthetic polymers and composed of a minimum of 95 percent by weight of polyolefins or polyesters, and formed into a stable network so the filaments or yarns retain their dimensional stability relative to each other, including selvages.

When more than one section of geotextile is necessary, overlap the sections by at least one foot. The geotextile must be pulled taut over the applied surface. Equipment must not run over exposed fabric. When placing riprap on geotextile, do not exceed a one foot drop height.

TABLE B.2: RECOMMENDED PERMANENT SEEDING MIXTURES BY SITE CONDITION OR PURPOSE

Site Condition or Purpose of the Planting	Recommended Mix (See Table B.3)												
	1	2	3	4	5	6	7	8	9	10	11	12	13
Steep slopes, Roadsides	R	R	R	A	R	A				A	A	R	R
Sand and Gravel Pits, Sanitary Landfills	R	R	R	A	R	A				A	A	R	
Salt-Damaged Areas	A												R
Mine Spoil, Dredged Materal and Spoil Banks	A		R	A									
Utility Rights-of-Way	R	R	R	R	R	R	A			R	R	R	
Dikes and Dams	A	A	R	A		R	R	A		R	R	R	
Berms and Low Embankments (not on ponds)	R	R	R	R	R	R	A	A		R	R	R	A
Pond and Channel Banks, Streambanks	R	R	R	R	A	A	A			A	A		
Grassed Waterways, Diversions, Terraces, Spillways	A				A	R	R	A	R		R		A
Bottom of Drainage Channels, Swales, Detention Basins				A		R	A			A	R		R
Field Borders, Filter Stripes, Contour Buffer Strips	R	R	R	A	A	R	A	R	R	R	R	R	A
Wastewater Treatment Strips and Areas								R	A	A			
Heavy Use Areas (Grass Loafing Paddocks for livestock)								R					
Athletic Fields, Residential and Commercial Lawns								A	R	R		R	
Recreation Areas								R	R	R		R	

R = Recommended mix for this site condition or purpose
A = Alternative mix, depending on site conditions

THE COORDINATE SYSTEM OF ALL DRAWINGS IS BASED ON THE NORTH AMERICAN DATUM OF 1983. THE ELEVATION SYSTEM OF ALL DRAWINGS IS BASED ON THE NORTH AMERICAN VERTICAL DATUM OF 1988.
HORZ: NAD 83/91: VERT: NAVD 88

50 30 0 50

This development plan is approved for soil erosion and sediment control by the HOWARD SOIL CONSERVATION DISTRICT.

Howard Co. SCD — 10/30/14 Date

DEVELOPER'S CERTIFICATE

"I/We certify that all development and construction will be done according to this plan for sediment and erosion control, and that all responsible personnel involved in the construction project will have a Certificate of Attendance at a Department of the Environment Approved Training Program for the Control of Sediment and Erosion before beginning the project. I also authorize periodic on-site inspection by the Howard Soil Conservation District"

Stuart Foard — 10.15.14 Date

ENGINEER'S CERTIFICATE

"I certify that this plan for sediment and erosion control represents a practical and workable plan based on my personal knowledge of the site conditions and that it was prepared in accordance with the requirements of the Howard Soil Conservation District"

Iwona Rostek-Zarska, P.E. 21245 — 10-15-14 Date

APPROVED: DEPARTMENT OF PLANNING AND ZONING

Chief, Development Engineering Division — 11-6-14 Date

Chief, Division of Land Development — 11-20-14 Date

Director — 11/21/14 Date

ADDRESS CHART

LOT / PARCEL NO.	STREET ADDRESS
PARCEL B-1	7901 OCEANO AVENUE
PARCEL E-1	7775 CHESAPEAKE BAY COURT

PERMIT INFORMATION CHART

SUBDIVISION NAME			SECTION / AREA		LOT / PARCEL NO.
MARYLAND FOOD CENTER AUTHORITY			3		B-1/662 & E-1/696
PLAT NO. or L/F	GRID NO.	ZONING	TAX MAP NO.	ELEC. DIST.	CENSUS TRACT
23017-23021	21	M-2	43	6TH	6069.01

BLDG
Baltimore Land Design Group Inc.
Consulting Engineers
230 SCHILLING CIRCLE, SUITE 364 • HUNT VALLEY, MARYLAND 21031
PHONE: 410.229.9851 • FAX: 410.229.9865 • BLDG@BLDGINC.COM

ALLIANCE FOR PROFESSIONAL EXCELLENCE — 21245 — IWONA ROSTEK-ZARSKA — STATE OF MARYLAND — 10/15/14

PROFESSIONAL CERTIFICATION

I HEREBY CERTIFY THAT THESE DOCUMENTS WERE PREPARED OR APPROVED BY ME, AND THAT I AM A DULY LICENSED PROFESSIONAL ENGINEER UNDER THE LAWS OF THE STATE OF MARYLAND, LICENSE NO. 21245, EXPIRATION DATE: JUNE 9, 2016.

OWNER
MARYLAND FOOD CENTER AUTHORITY
7801 OCEANO AVE
JESSUP, MD 20794
PHONE (410) 379-5760
FAX (410) 379-5773

DEVELOPER / APPLICANT
MERRITT PROPERTIES, LLC
2066 LORD BALTIMORE DRIVE
BALTIMORE, MD 21244
PHONE (410) 298-2600
FAX (410) 298-9644

REVISIONS

DATE	NO.	DESCRIPTION	BY

EROSION AND SEDIMENT CONTROL PLAN
SPECIFICATIONS
MARYLAND FOOD CENTER AUTHORITY
PARCEL B-1 & E-1
(WAREHOUSE & OFFICE)
HOWARD COUNTY, MARYLAND
SCALE: N/A
DATE: OCTOBER, 2014

DRAWING NO.
C-26
SHEET 26 OF 57

SDP-14-068

DETAIL B-1 STABILIZED CONSTRUCTION ENTRANCE
STANDARD SYMBOL: SCE

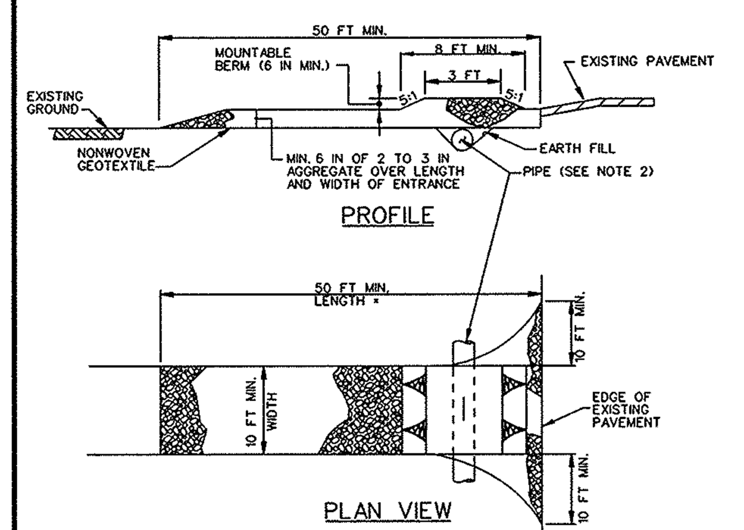

CONSTRUCTION SPECIFICATIONS

1. PLACE STABILIZED CONSTRUCTION ENTRANCE IN ACCORDANCE WITH THE APPROVED PLAN. VEHICLES MUST TRAVEL OVER THE ENTIRE LENGTH OF THE SCE. USE MINIMUM LENGTH OF 50 FEET (*30 FEET FOR SINGLE RESIDENCE LOT). USE MINIMUM WIDTH OF 10 FEET. FLARE SCE 10 FEET MINIMUM AT THE EXISTING ROAD TO PROVIDE A TURNING RADIUS.
2. PIPE ALL SURFACE WATER FLOWING TO OR DIVERTED TOWARD THE SCE UNDER THE ENTRANCE, MAINTAINING POSITIVE DRAINAGE. PROTECT PIPE INSTALLED THROUGH THE SCE WITH A MOUNTABLE BERM WITH 5:1 SLOPES AND A MINIMUM OF 12 INCHES OF STONE OVER THE PIPE. PROVIDE PIPE AS SPECIFIED ON APPROVED PLAN. WHEN THE SCE IS LOCATED AT A HIGH SPOT AND HAS NO DRAINAGE TO CONVEY, A PIPE IS NOT NECESSARY. A MOUNTABLE BERM IS REQUIRED WHEN SCE IS NOT LOCATED AT A HIGH SPOT.
3. PREPARE SUBGRADE AND PLACE NONWOVEN GEOTEXTILE, AS SPECIFIED IN SECTION H-1 MATERIALS.
4. PLACE CRUSHED AGGREGATE (2 TO 3 INCHES IN SIZE) OR EQUIVALENT RECYCLED CONCRETE (WITHOUT REBAR) AT LEAST 6 INCHES DEEP OVER THE LENGTH AND WIDTH OF THE SCE.
5. MAINTAIN ENTRANCE IN A CONDITION THAT MINIMIZES TRACKING OF SEDIMENT. ADD STONE OR MAKE OTHER REPAIRS AS CONDITIONS DEMAND TO MAINTAIN CLEAN SURFACE, MOUNTABLE BERM, AND SPECIFIED DIMENSIONS. IMMEDIATELY REMOVE STONE AND/OR SEDIMENT SPILLED, DROPPED, OR TRACKED ONTO ADJACENT ROADWAY BY VACUUMING, SCRAPING, AND/OR SWEEPING. WASHING ROADWAY TO REMOVE MUD TRACKED ONTO PAVEMENT IS NOT ACCEPTABLE UNLESS WASH WATER IS DIRECTED TO AN APPROVED SEDIMENT CONTROL PRACTICE.

MARYLAND STANDARDS AND SPECIFICATIONS FOR SOIL EROSION AND SEDIMENT CONTROL

U.S. DEPARTMENT OF AGRICULTURE NATURAL RESOURCES CONSERVATION SERVICE | 2011 | MARYLAND DEPARTMENT OF ENVIRONMENT WATER MANAGEMENT ADMINISTRATION

DETAIL C-8 MOUNTABLE BERM
STANDARD SYMBOL: MB

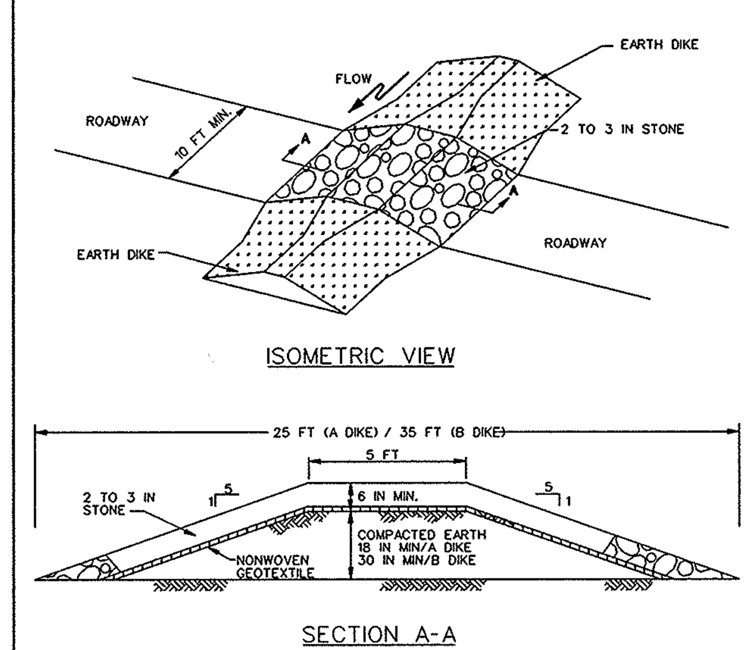

CONSTRUCTION SPECIFICATIONS

1. USE MINIMUM WIDTH OF 10 FEET TO ALLOW FOR VEHICULAR PASSAGE.
2. PLACE NONWOVEN GEOTEXTILE, AS SPECIFIED IN SECTION H-1 MATERIALS, OVER THE EARTH MOUND PRIOR TO PLACING STONE.
3. PLACE 2 TO 3 INCH STONE OR EQUIVALENT RECYCLED CONCRETE AT LEAST 6 INCHES DEEP OVER THE LENGTH AND WIDTH OF THE MOUNTABLE BERM.
4. MAINTAIN LINE, GRADE, AND CROSS SECTION. ADD STONE OR MAKE OTHER REPAIRS AS CONDITIONS DEMAND TO MAINTAIN SPECIFIED DIMENSIONS. REMOVE ACCUMULATED SEDIMENT AND DEBRIS. MAINTAIN POSITIVE DRAINAGE.

MARYLAND STANDARDS AND SPECIFICATIONS FOR SOIL EROSION AND SEDIMENT CONTROL

U.S. DEPARTMENT OF AGRICULTURE NATURAL RESOURCES CONSERVATION SERVICE | 2011 | MARYLAND DEPARTMENT OF ENVIRONMENT WATER MANAGEMENT ADMINISTRATION

DETAIL E-1 SILT FENCE
STANDARD SYMBOL: SF

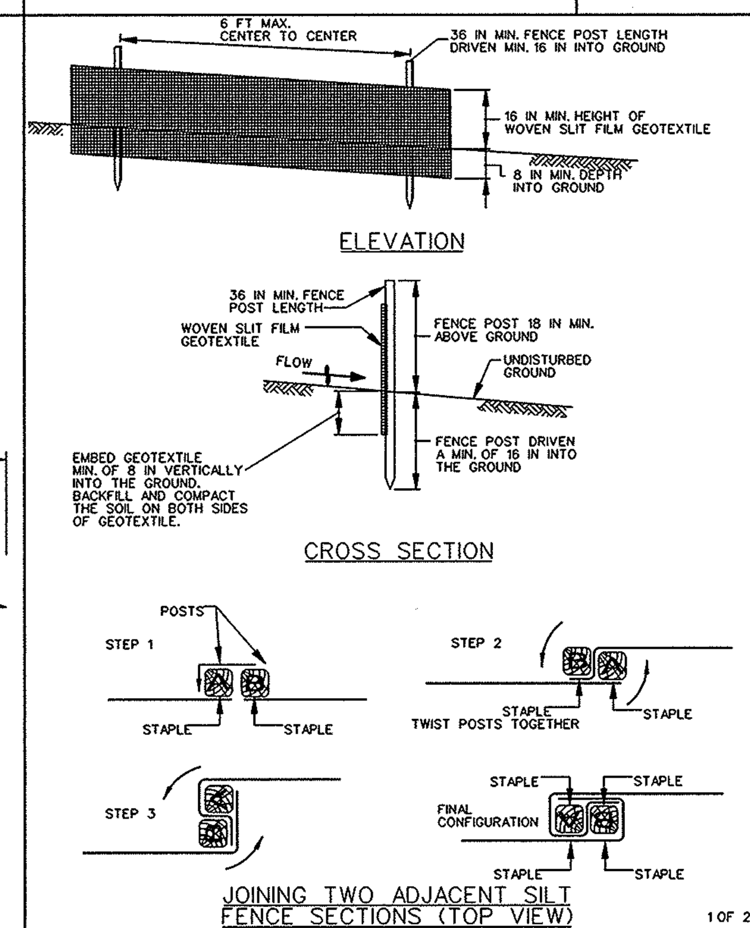

1 OF 2

MARYLAND STANDARDS AND SPECIFICATIONS FOR SOIL EROSION AND SEDIMENT CONTROL

U.S. DEPARTMENT OF AGRICULTURE NATURAL RESOURCES CONSERVATION SERVICE | 2011 | MARYLAND DEPARTMENT OF ENVIRONMENT WATER MANAGEMENT ADMINISTRATION

DETAIL E-1 SILT FENCE
STANDARD SYMBOL: SF

CONSTRUCTION SPECIFICATIONS

1. USE WOOD POSTS 1¾ x 1¾ ± 1/16 INCH (MINIMUM) SQUARE CUT OF SOUND QUALITY HARDWOOD. AS AN ALTERNATIVE TO WOODEN POST USE STANDARD "T" OR "U" SECTION STEEL POSTS WEIGHING NOT LESS THAN 1 POUND PER LINEAR FOOT.
2. USE 36 INCH MINIMUM POSTS DRIVEN 16 INCH MINIMUM INTO GROUND NO MORE THAN 6 FEET APART.
3. USE WOVEN SLIT FILM GEOTEXTILE AS SPECIFIED IN SECTION H-1 MATERIALS AND FASTEN GEOTEXTILE SECURELY TO UPSLOPE SIDE OF FENCE POSTS WITH WIRE TIES OR STAPLES AT TOP AND MID-SECTION.
4. PROVIDE MANUFACTURER CERTIFICATION TO THE AUTHORIZED REPRESENTATIVE OF THE INSPECTION/ENFORCEMENT AUTHORITY SHOWING THAT THE GEOTEXTILE USED MEETS THE REQUIREMENTS IN SECTION H-1 MATERIALS.
5. EMBED GEOTEXTILE A MINIMUM OF 8 INCHES VERTICALLY INTO THE GROUND. BACKFILL AND COMPACT THE SOIL ON BOTH SIDES OF FABRIC.
6. WHERE TWO SECTIONS OF GEOTEXTILE ADJOIN: OVERLAP, TWIST, AND STAPLE TO POST IN ACCORDANCE WITH THIS DETAIL.
7. EXTEND BOTH ENDS OF THE SILT FENCE A MINIMUM OF FIVE HORIZONTAL FEET UPSLOPE AT 45 DEGREES TO THE MAIN FENCE ALIGNMENT TO PREVENT RUNOFF FROM GOING AROUND THE ENDS OF THE SILT FENCE.
8. REMOVE ACCUMULATED SEDIMENT AND DEBRIS WHEN BULGES DEVELOP IN SILT FENCE OR WHEN SEDIMENT REACHES 25% OF FENCE HEIGHT. REPLACE GEOTEXTILE IF TORN. IF UNDERMINING OCCURS, REINSTALL FENCE.

2 OF 2

MARYLAND STANDARDS AND SPECIFICATIONS FOR SOIL EROSION AND SEDIMENT CONTROL

U.S. DEPARTMENT OF AGRICULTURE NATURAL RESOURCES CONSERVATION SERVICE | 2011 | MARYLAND DEPARTMENT OF ENVIRONMENT WATER MANAGEMENT ADMINISTRATION

DETAIL E-3 SUPER SILT FENCE
STANDARD SYMBOL: SSF

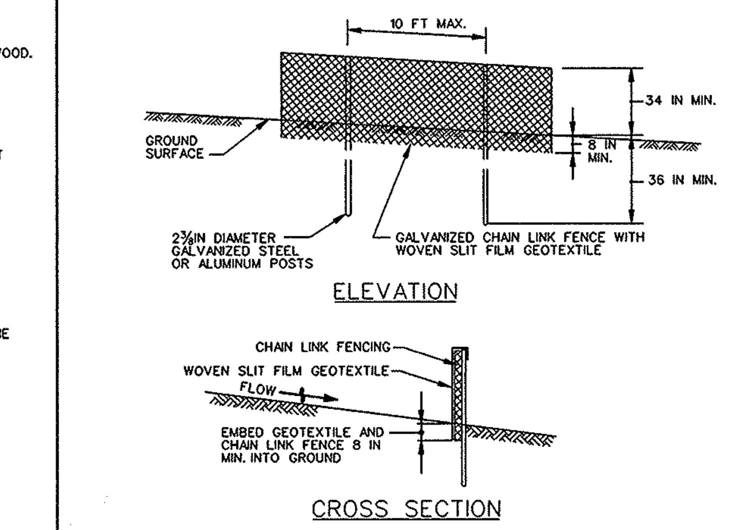

CONSTRUCTION SPECIFICATIONS

1. INSTALL 2 3/8 INCH DIAMETER GALVANIZED STEEL POSTS OF 0.095 INCH WALL THICKNESS AND SIX FOOT LENGTH SPACED NO FURTHER THAN 10 FEET APART. DRIVE THE POSTS A MINIMUM OF 36 INCHES INTO THE GROUND.
2. FASTEN 9 GAUGE OR HEAVIER GALVANIZED CHAIN LINK FENCE (2 3/8 INCH MAXIMUM OPENING) 42 INCHES IN HEIGHT SECURELY TO THE FENCE POSTS WITH WIRE TIES OR HUG RINGS.
3. FASTEN WOVEN SLIT FILM GEOTEXTILE AS SPECIFIED IN SECTION H-1 MATERIALS, SECURELY TO THE UPSLOPE SIDE OF CHAIN LINK FENCE WITH TIES SPACED EVERY 24 INCHES AT THE TOP AND MID SECTION. EMBED GEOTEXTILE AND CHAIN LINK FENCE A MINIMUM OF 8 INCHES INTO THE GROUND.
4. WHERE ENDS OF THE GEOTEXTILE COME TOGETHER, THE ENDS SHALL BE OVERLAPPED BY 6 INCHES, FOLDED, AND STAPLED TO PREVENT SEDIMENT BY PASS.
5. EXTEND BOTH ENDS OF THE SUPER SILT FENCE A MINIMUM OF FIVE HORIZONTAL FEET UPSLOPE AT 45 DEGREES TO THE MAIN FENCE ALIGNMENT TO PREVENT RUNOFF FROM GOING AROUND THE ENDS OF THE SUPER SILT FENCE.
6. PROVIDE MANUFACTURER CERTIFICATION TO THE INSPECTION/ENFORCEMENT AUTHORITY SHOWING THAT GEOTEXTILE USED MEETS THE REQUIREMENTS IN SECTION H-1 MATERIALS.
7. REMOVE ACCUMULATED SEDIMENT AND DEBRIS WHEN BULGES DEVELOP IN FENCE OR WHEN SEDIMENT REACHES 25% OF FENCE HEIGHT. REPLACE GEOTEXTILE IF TORN. IF UNDERMINING OCCURS, REINSTALL CHAIN LINK FENCING AND GEOTEXTILE.

MARYLAND STANDARDS AND SPECIFICATIONS FOR SOIL EROSION AND SEDIMENT CONTROL

U.S. DEPARTMENT OF AGRICULTURE NATURAL RESOURCES CONSERVATION SERVICE | 2011 | MARYLAND DEPARTMENT OF ENVIRONMENT WATER MANAGEMENT ADMINISTRATION

DETAIL E-8 TEMPORARY GABION OUTLET STRUCTURE
STANDARD SYMBOL: TGOS

MAXIMUM DRAINAGE AREA = 1½ ACRE

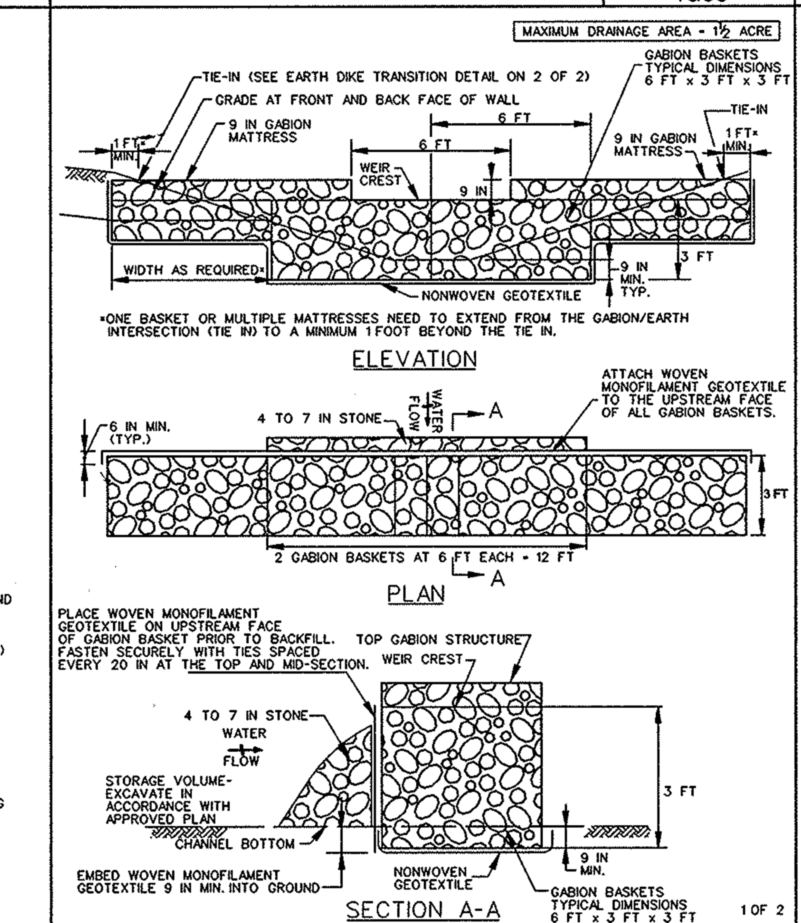

1 OF 2

MARYLAND STANDARDS AND SPECIFICATIONS FOR SOIL EROSION AND SEDIMENT CONTROL

U.S. DEPARTMENT OF AGRICULTURE NATURAL RESOURCES CONSERVATION SERVICE | 2011 | MARYLAND DEPARTMENT OF ENVIRONMENT WATER MANAGEMENT ADMINISTRATION

DETAIL E-8 TEMPORARY GABION OUTLET STRUCTURE
STANDARD SYMBOL: TGOS

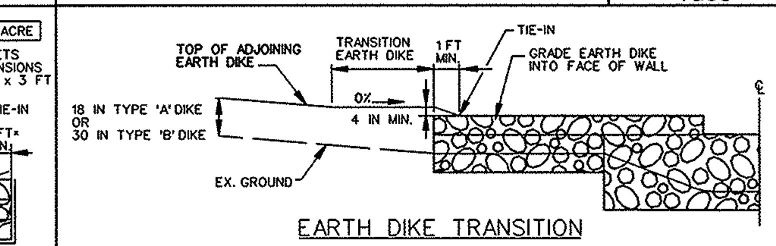

NOTES

1. PROVIDE TRANSITION LENGTH AND HEIGHT AS SPECIFIED ON PLAN. HEIGHT OF TRANSITION EARTH DIKE MUST EXCEED 4 INCH MINIMUM FREEBOARD ABOVE TOP OF GABION AND EXTEND AT THIS ELEVATION UNTIL IT INTERCEPTS THE TOP OF ADJOINING EARTH DIKE.
2. PROVIDE POSITIVE DRAINAGE ALONG EARTH DIKE TO GABION OUTLET STRUCTURE.
3. COMPACT FILL.
4. SHAPE EARTH DIKE TO LINE, GRADE, AND CROSS SECTION AS SPECIFIED ON PLAN. BANK PROJECTIONS OR IRREGULARITIES ARE NOT ALLOWED.

CONSTRUCTION SPECIFICATIONS

1. PROVIDE STORAGE VOLUME AS SPECIFIED ON APPROVED PLANS.
2. USE BASKETS MADE OF 11 GAUGE WIRE OR HEAVIER.
3. USE NONWOVEN AND WOVEN MONOFILAMENT GEOTEXTILES AS SPECIFIED IN SECTION H-1 MATERIALS.
4. INSTALL GABIONS IN ACCORDANCE WITH MANUFACTURER RECOMMENDATIONS.
5. EMBED THE GABION OUTLET STRUCTURE INTO THE SOIL A MINIMUM OF 9 INCHES. PROVIDE NONWOVEN GEOTEXTILE UNDER ALL GABIONS.
6. FILL GABION BASKETS WITH CLEAN 4 TO 7 INCH STONE OR EQUIVALENT RECYCLED CONCRETE WITHOUT REBAR OR WIRE MESH.
7. MAKE THE WEIR CREST OF THE GABION OUTLET STRUCTURE 9 INCHES LOWER THAN THE TOP OF THE ADJACENT GABIONS.
8. PROVIDE A MINIMUM WEIR CREST OF 6 FEET.
9. ATTACH WOVEN MONOFILAMENT GEOTEXTILE TO THE UPSTREAM FACE OF GABION BASKETS AND COVER WITH 4 TO 7 INCH STONE.
10. REMOVE SEDIMENT WHEN IT HAS ACCUMULATED TO WITHIN 12 INCHES OF THE WEIR CREST. REPLACE GEOTEXTILE AND STONE FACING WHEN STRUCTURE CEASES TO FUNCTION. MAINTAIN LINE, GRADE, AND CROSS SECTION.
11. UPON REMOVAL OF GABION OUTLET STRUCTURE, GRADE AREA FLUSH WITH EXISTING GROUND. WITHIN 24 HOURS STABILIZE DISTURBED AREA WITH TOPSOIL, SEED, AND MULCH, OR AS SPECIFIED ON APPROVED PLAN.

2 OF 2

MARYLAND STANDARDS AND SPECIFICATIONS FOR SOIL EROSION AND SEDIMENT CONTROL

U.S. DEPARTMENT OF AGRICULTURE NATURAL RESOURCES CONSERVATION SERVICE | 2011 | MARYLAND DEPARTMENT OF ENVIRONMENT WATER MANAGEMENT ADMINISTRATION

DETAIL F-1 REMOVABLE PUMPING STATION
STANDARD SYMBOL: RPS

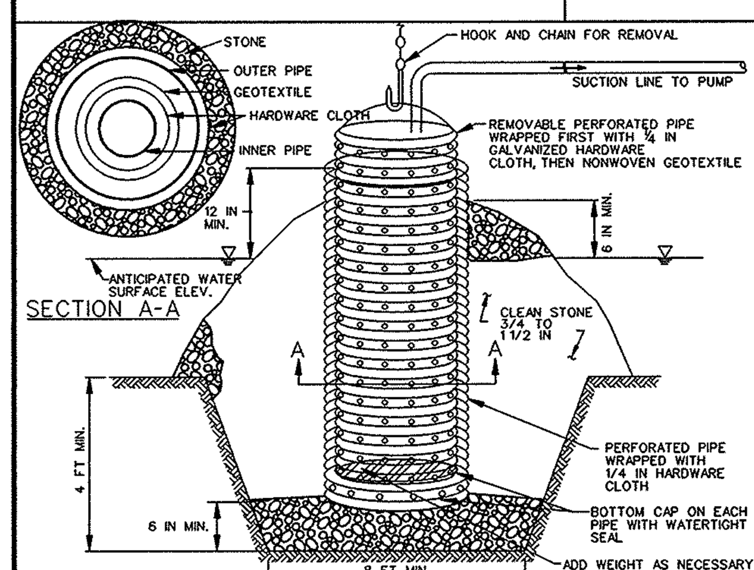

CONSTRUCTION SPECIFICATIONS

1. USE CORRUGATED METAL OR PLASTIC PIPE WITH 1 INCH DIAMETER PERFORATIONS 6 INCHES ON CENTER.
2. USE A MINIMUM 12 INCH DIAMETER INNER PIPE WITH AN OUTER PIPE A MINIMUM 6 INCHES LARGER IN DIAMETER. BOTTOM OF EACH PIPE MUST BE CAPPED WITH WATERTIGHT SEAL.
3. WRAP EACH PIPE WITH 1/4 INCH GALVANIZED HARDWARE CLOTH. ON INNER PIPE WRAP NONWOVEN GEOTEXTILE, AS SPECIFIED IN SECTION H-1 MATERIALS, OVER THE HARDWARE CLOTH.
4. EXCAVATE 8 FEET X 8 FEET X 4 FEET DEEP PIT FOR PIPE PLACEMENT. PLACE CLEAN 3/4 TO 1 1/2 INCH STONE OR EQUIVALENT RECYCLED CONCRETE, 6 INCHES IN DEPTH PRIOR TO PIPE PLACEMENT.
5. SET TOP OF INNER AND OUTER PIPES MINIMUM 12 INCHES ABOVE ANTICIPATED WATER SURFACE ELEVATION (OR RISER CREST ELEVATION WHEN DEWATERING A BASIN).
6. BACKFILL PIT AROUND THE OUTER PIPE WITH 3/4 TO 1 1/2 INCH CLEAN STONE OR EQUIVALENT RECYCLED CONCRETE AND EXTEND STONE A MINIMUM OF 6 INCHES ABOVE ANTICIPATED WATER SURFACE ELEVATION.
7. DISCHARGE TO A STABLE AREA AT A NONEROSIVE RATE.
8. A REMOVABLE PUMPING STATION REQUIRES FREQUENT MAINTENANCE. IF SYSTEM CLOGS, PULL OUT INNER PIPE AND REPLACE GEOTEXTILE. KEEP POINT OF DISCHARGE FREE OF EROSION.

MARYLAND STANDARDS AND SPECIFICATIONS FOR SOIL EROSION AND SEDIMENT CONTROL

U.S. DEPARTMENT OF AGRICULTURE NATURAL RESOURCES CONSERVATION SERVICE | 2011 | MARYLAND DEPARTMENT OF ENVIRONMENT WATER MANAGEMENT ADMINISTRATION

DETAIL G-2-4 BAFFLE BOARDS
STANDARD SYMBOL: BB

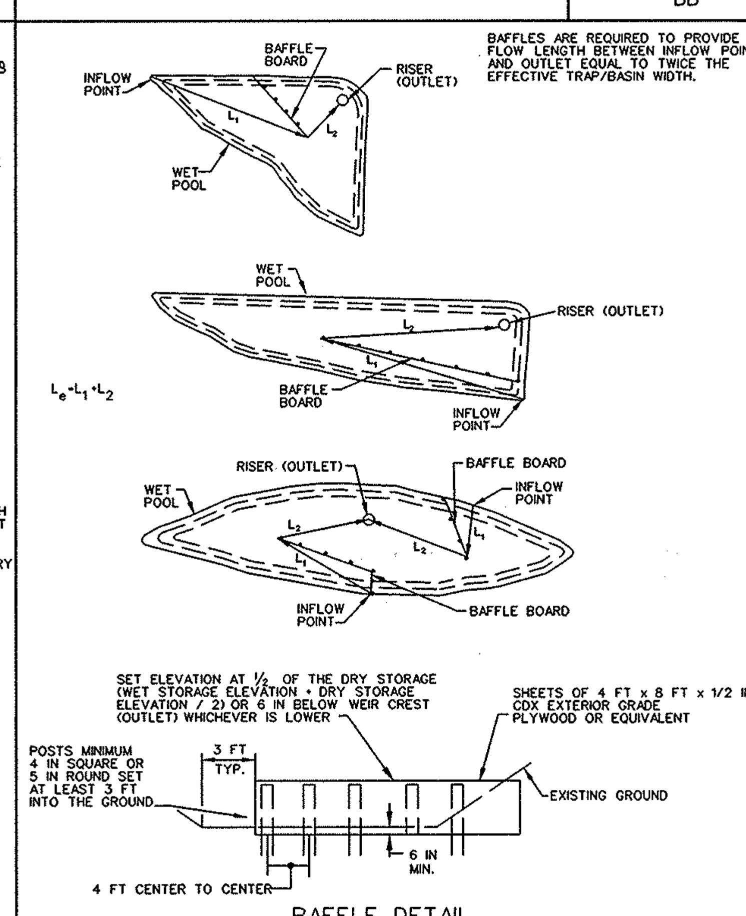

$L_e = L_1 + L_2$

MARYLAND STANDARDS AND SPECIFICATIONS FOR SOIL EROSION AND SEDIMENT CONTROL

U.S. DEPARTMENT OF AGRICULTURE NATURAL RESOURCES CONSERVATION SERVICE | 2011 | MARYLAND DEPARTMENT OF ENVIRONMENT WATER MANAGEMENT ADMINISTRATION

DETAIL G-2-6 SEDIMENT BASIN SCHEMATIC HORIZONTAL DRAW-DOWN DEVICE
STANDARD SYMBOL: HDDD

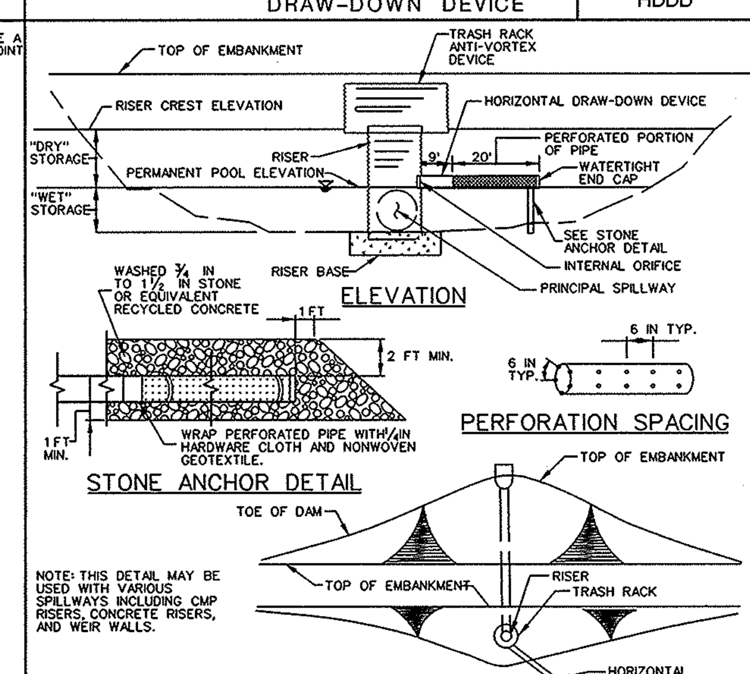

NOTE: THIS DETAIL MAY BE USED WITH VARIOUS SPILLWAYS INCLUDING CMP RISERS, CONCRETE RISERS, AND WEIR WALLS.

CONSTRUCTION SPECIFICATIONS

1. PERFORATE PIPE WITH 1 INCH DIAMETER PERFORATIONS SPACED 6 INCHES APART LONGITUDINALLY AND RADIALLY OR IN ACCORDANCE WITH APPROVED PLAN.
2. WRAP THE PERFORATED PORTION OF THE DRAW-DOWN DEVICE FIRST WITH ¼ INCH GALVANIZED HARDWARE CLOTH, THEN WITH NONWOVEN GEOTEXTILE. USE NONWOVEN GEOTEXTILE AS SPECIFIED IN SECTION H-1 MATERIALS. DO NOT WRAP WITH MORE THAN ONE LAYER OF GEOTEXTILE.
3. AS AN ALTERNATE TO STONE ANCHORING, SECURE DRAW-DOWN DEVICE WITH TWO 1 INCH STEEL ANGLES SET 3 FEET MINIMUM INTO THE GROUND ATTACHED TO DRAW-DOWN DEVICE BY A 1 INCH WIDE GALVANIZED STEEL STRAP OR 12 GAUGE OR HEAVIER WIRE.
4. REMOVE SEDIMENT WHEN IT ACCUMULATES TO CLEANOUT ELEVATION (50% OF THE WET STORAGE DEPTH). DEPOSIT REMOVED SEDIMENT IN AN APPROVED AREA IN A SUCH A MANNER THAT IT WILL NOT ERODE. MAINTAIN WATER TIGHT CONNECTIONS. REPLACE GEOTEXTILE AROUND PERFORATED RISER IF DRY STORAGE VOLUME DOES NOT DRAW DOWN WITHIN 10 HOURS.

MARYLAND STANDARDS AND SPECIFICATIONS FOR SOIL EROSION AND SEDIMENT CONTROL

U.S. DEPARTMENT OF AGRICULTURE NATURAL RESOURCES CONSERVATION SERVICE | 2011 | MARYLAND DEPARTMENT OF ENVIRONMENT WATER MANAGEMENT ADMINISTRATION

DETAIL E-9-2 AT-GRADE INLET PROTECTION
STANDARD SYMBOL: AGIP

MAXIMUM DRAINAGE AREA = 1 ACRE

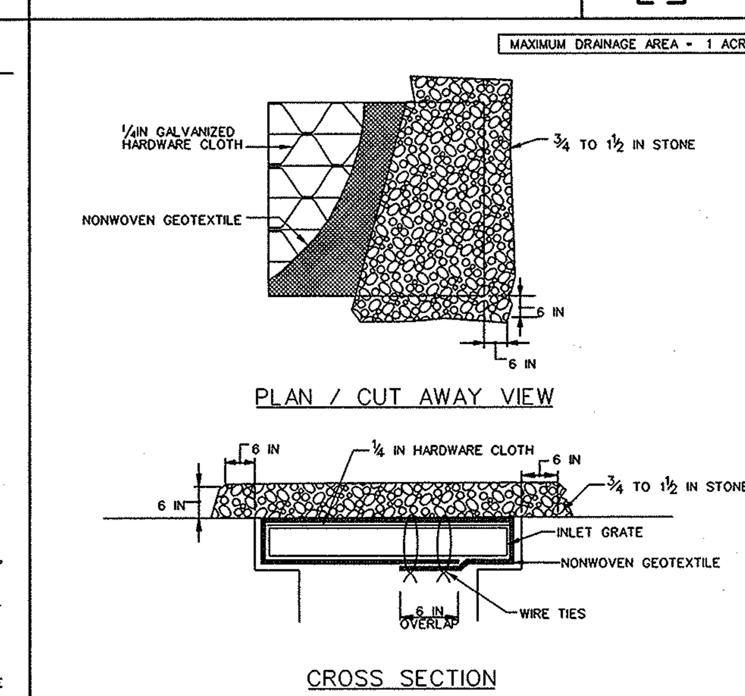

CONSTRUCTION SPECIFICATIONS

1. USE NONWOVEN GEOTEXTILE AS SPECIFIED IN SECTION H-1 MATERIALS.
2. LIFT GRATE AND WRAP WITH NONWOVEN GEOTEXTILE TO COMPLETELY COVER ALL OPENINGS. SECURE WITH WIRE TIES AND SET GRATE BACK IN PLACE.
3. PLACE CLEAN ¾ TO 1½ INCH STONE OR EQUIVALENT RECYCLED CONCRETE 6 INCHES THICK ON THE GRATE.
4. STORM DRAIN INLET PROTECTION REQUIRES FREQUENT MAINTENANCE. REMOVE ACCUMULATED SEDIMENT AFTER EACH RAIN EVENT TO MAINTAIN FUNCTION AND AVOID PREMATURE CLOGGING. IF INLET PROTECTION DOES NOT COMPLETELY DRAIN WITHIN 24 HOURS AFTER A STORM EVENT, IT IS CLOGGED. WHEN THIS OCCURS, REMOVE ACCUMULATED SEDIMENT AND CLEAN, OR REPLACE GEOTEXTILE AND STONE.

MARYLAND STANDARDS AND SPECIFICATIONS FOR SOIL EROSION AND SEDIMENT CONTROL

U.S. DEPARTMENT OF AGRICULTURE NATURAL RESOURCES CONSERVATION SERVICE | 2011 | MARYLAND DEPARTMENT OF ENVIRONMENT WATER MANAGEMENT ADMINISTRATION

DETAIL E-9-3 CURB INLET PROTECTION
STANDARD SYMBOL: CIP

MAXIMUM DRAINAGE AREA = ¼ ACRE

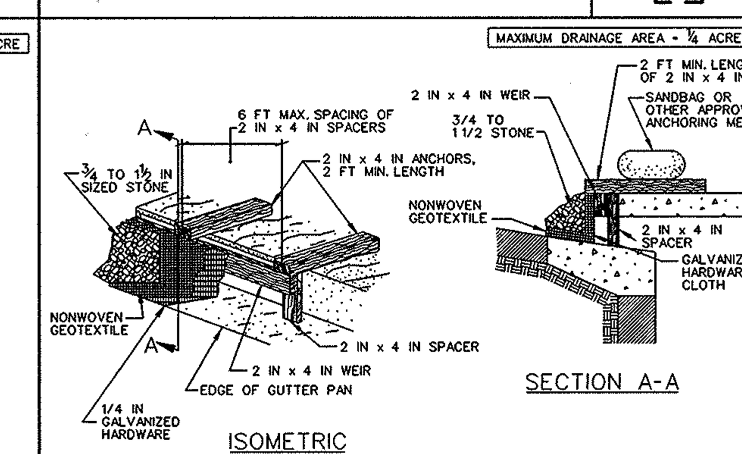

CONSTRUCTION SPECIFICATIONS

1. USE NOMINAL 2 INCH x 4 INCH LUMBER.
2. USE NONWOVEN GEOTEXTILE AS SPECIFIED IN SECTION H-1 MATERIALS.
3. NAIL THE 2x4 WEIR TO 9 INCH LONG VERTICAL SPACERS (MAXIMUM 6 FEET APART).
4. ATTACH A CONTINUOUS PIECE OF 1/4 INCH GALVANIZED HARDWARE CLOTH, WITH A MINIMUM WIDTH OF 30 INCHES AND A MINIMUM LENGTH OF 4 FEET LONGER THAN THE THROAT OPENING, TO THE 2x4 WEIR, EXTENDING IT 2 FEET BEYOND THROAT ON EACH SIDE.
5. PLACE A CONTINUOUS PIECE OF NONWOVEN GEOTEXTILE OF THE SAME DIMENSIONS AS THE HARDWARE CLOTH OVER THE HARDWARE CLOTH AND SECURELY ATTACH TO THE 2x4 WEIR.
6. PLACE THE ASSEMBLY AGAINST THE INLET THROAT AND NAIL TO 2x4 ANCHORS (MINIMUM 2 FEET LENGTH). EXTEND THE ANCHORS ACROSS THE INLET TOP AND HOLD IN PLACE BY SANDBAGS OR OTHER APPROVED ANCHORING METHOD.
7. INSTALL END SPACERS A MINIMUM OF 1 FOOT BEYOND THE ENDS OF THE THROAT OPENING.
8. FORM THE HARDWARE CLOTH AND THE GEOTEXTILE TO THE CONCRETE GUTTER AND FACE OF CURB TO SPAN THE INLET OPENING. COVER THE HARDWARE CLOTH AND GEOTEXTILE WITH CLEAN 3/4 TO 1 1/2 INCH STONE OR EQUIVALENT RECYCLED CONCRETE.
9. AT NON-SUMP LOCATIONS, INSTALL A TEMPORARY SANDBAG OR ASPHALT BERM TO PREVENT INLET BYPASS.
10. STORM DRAIN INLET PROTECTION REQUIRES FREQUENT MAINTENANCE. REMOVE ACCUMULATED SEDIMENT AFTER EACH RAIN EVENT TO MAINTAIN FUNCTION AND AVOID PREMATURE CLOGGING. IF INLET PROTECTION DOES NOT COMPLETELY DRAIN WITHIN 24 HOURS AFTER A STORM EVENT, IT IS CLOGGED. WHEN THIS OCCURS, REMOVE ACCUMULATED SEDIMENT AND CLEAN, OR REPLACE GEOTEXTILE AND STONE.

MARYLAND STANDARDS AND SPECIFICATIONS FOR SOIL EROSION AND SEDIMENT CONTROL

U.S. DEPARTMENT OF AGRICULTURE NATURAL RESOURCES CONSERVATION SERVICE | 2011 | MARYLAND DEPARTMENT OF ENVIRONMENT WATER MANAGEMENT ADMINISTRATION

DETAIL E-9-1 STANDARD INLET PROTECTION
STANDARD SYMBOL: SIP

TYPE A MAXIMUM DRAINAGE AREA = ¼ ACRE
TYPE B MAXIMUM DRAINAGE AREA = 1 ACRE

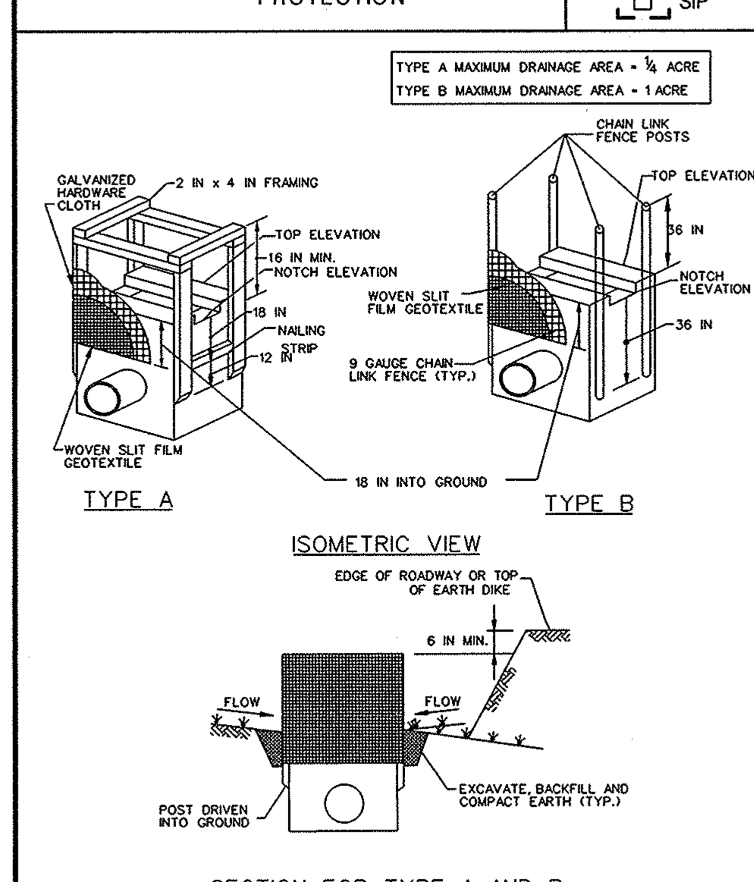

1 OF 2

MARYLAND STANDARDS AND SPECIFICATIONS FOR SOIL EROSION AND SEDIMENT CONTROL

U.S. DEPARTMENT OF AGRICULTURE NATURAL RESOURCES CONSERVATION SERVICE | 2011 | MARYLAND DEPARTMENT OF ENVIRONMENT WATER MANAGEMENT ADMINISTRATION

DETAIL E-9-1 STANDARD INLET PROTECTION
STANDARD SYMBOL: SIP

CONSTRUCTION SPECIFICATIONS

1. USE WOVEN SLIT FILM GEOTEXTILE AS SPECIFIED IN SECTION H-1 MATERIALS.
2. EXCAVATE COMPLETELY AROUND THE INLET TO A DEPTH OF 18 INCHES BELOW THE NOTCH ELEVATION.
3. FOR TYPE A, USE NOMINAL 2 INCH X 4 INCH CONSTRUCTION GRADE LUMBER POSTS, DRIVEN 1 FOOT INTO THE GROUND AT EACH CORNER OF THE INLET. PLACE NAIL STRIPS BETWEEN THE POSTS ON THE ENDS OF THE INLET. ASSEMBLE THE TOP PORTION OF THE 2X4 FRAME AS SHOWN. STRETCH 1/2 INCH GALVANIZED HARDWARE CLOTH TIGHTLY AROUND THE FRAME AND FASTEN SECURELY. FASTEN GEOTEXTILE SECURELY TO THE HARDWARE CLOTH WITH TIES SPACED EVERY 24 INCHES AT THE TOP AND MID SECTION. EMBED GEOTEXTILE AND HARDWARE CLOTH A MINIMUM OF 18 INCHES BELOW THE WEIR CREST. THE ENDS OF THE GEOTEXTILE MUST MEET AT A POST, BE OVERLAPPED AND FOLDED, THEN FASTENED TO THE POST. FOR TYPE B, USE 2 3/8 INCH DIAMETER GALVANIZED STEEL POSTS OF 0.095 INCH WALL THICKNESS AND 6 FOOT LENGTH, DRIVEN A MINIMUM OF 36 INCHES BELOW THE WEIR CREST AT EACH CORNER OF THE STRUCTURE. FASTEN 9 GAUGE OR HEAVIER CHAIN LINK FENCE, 42 INCHES IN HEIGHT, SECURELY TO THE FENCE POSTS WITH WIRE TIES. FASTEN GEOTEXTILE SECURELY TO THE CHAIN LINK FENCE WITH TIES SPACED EVERY 24 INCHES AT THE TOP AND MID SECTION. EMBED GEOTEXTILE AND CHAIN LINK FENCE A MINIMUM OF 18 INCHES BELOW THE WEIR CREST.
4. BACKFILL AROUND THE INLET IN LOOSE 4 INCH LIFTS AND COMPACT UNTIL SOIL IS LEVEL WITH THE NOTCH ELEVATION ON THE ENDS AND TOP ELEVATION ON THE SIDES.
5. STORM DRAIN INLET PROTECTION REQUIRES FREQUENT MAINTENANCE. REMOVE ACCUMULATED SEDIMENT AFTER EACH RAIN EVENT TO MAINTAIN FUNCTION AND AVOID PREMATURE CLOGGING. IF INLET PROTECTION DOES NOT COMPLETELY DRAIN WITHIN 24 HOURS AFTER A STORM EVENT, IT IS CLOGGED. WHEN THIS OCCURS, REMOVE ACCUMULATED SEDIMENT AND CLEAN, OR REPLACE GEOTEXTILE AND STONE.

2 OF 2

MARYLAND STANDARDS AND SPECIFICATIONS FOR SOIL EROSION AND SEDIMENT CONTROL

U.S. DEPARTMENT OF AGRICULTURE NATURAL RESOURCES CONSERVATION SERVICE | 2011 | MARYLAND DEPARTMENT OF ENVIRONMENT WATER MANAGEMENT ADMINISTRATION

DETAIL D-4-1-C ROCK OUTLET PROTECTION III
STANDARD SYMBOL: ROPIII

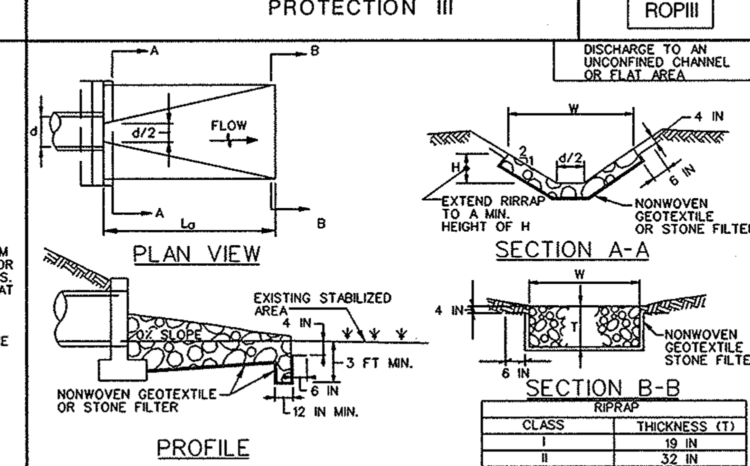

RIPRAP

CLASS	THICKNESS (T)
I	19 IN
II	32 IN
III	46 IN

CONSTRUCTION SPECIFICATIONS

1. RIPRAP AND STONE MUST CONFORM TO THE SPECIFIED CLASS.
2. USE NONWOVEN GEOTEXTILE, AS SPECIFIED IN SECTION H-1 MATERIALS, AND PROTECT FROM PUNCTURING, CUTTING, OR TEARING. REPAIR ANY DAMAGE OTHER THAN AN OCCASIONAL SMALL HOLE BY PLACING ANOTHER PIECE OF GEOTEXTILE OVER THE DAMAGED PART OR BY COMPLETELY REPLACING THE GEOTEXTILE. PROVIDE A MINIMUM OF ONE FOOT OVERLAP FOR ALL REPAIRS AND FOR JOINING TWO PIECES OF GEOTEXTILE TOGETHER.
3. PREPARE THE SUBGRADE FOR GEOTEXTILE OR STONE FILTER (3/8 TO 1½INCH MINIMUM STONE FOR 6 INCH MINIMUM DEPTH) AND RIPRAP TO THE REQUIRED LINES AND GRADES. COMPACT ANY FILL REQUIRED IN THE SUBGRADE TO A DENSITY OF APPROXIMATELY THAT OF THE SURROUNDING UNDISTURBED MATERIAL.
4. EXTEND GEOTEXTILE AT LEAST 6 INCHES BEYOND EDGES OF RIPRAP AND EMBED AT LEAST 4 INCHES AT SIDES OF RIPRAP.
5. CONSTRUCT RIPRAP OUTLET TO FULL COURSE THICKNESS IN ONE OPERATION AND IN SUCH A MANNER AS TO AVOID DISPLACEMENT OF UNDERLYING MATERIALS. PLACE STONE FOR RIPRAP OUTLET IN A MANNER THAT WILL ENSURE THAT IT IS REASONABLY HOMOGENOUS WITH THE SMALLER STONES AND SPALLS FILLING THE VOIDS BETWEEN THE LARGER STONES. PLACE RIPRAP IN A MANNER TO PREVENT DAMAGE TO THE FILTER BLANKET OR GEOTEXTILE. HAND PLACE TO THE EXTENT NECESSARY.
6. WHERE NO ENDWALL IS USED, CONSTRUCT THE UPSTREAM END OF THE APRON SO THAT THE WIDTH IS TWO TIMES THE DIAMETER OF THE OUTLET PIPE, AND EXTEND THE STONE UNDER THE OUTLET BY A MINIMUM OF 18 INCHES.
7. CONSTRUCT APRON WITH 0% SLOPE ALONG ITS LENGTH AND WITHOUT OBSTRUCTIONS. PLACE STONE SO THAT IT BLENDS IN WITH EXISTING GROUND.
8. MAINTAIN LINE, GRADE, AND CROSS SECTION. KEEP OUTLET FREE OF EROSION. REMOVE ACCUMULATED SEDIMENT AND DEBRIS. AFTER HIGH FLOWS INSPECT FOR SCOUR AND RIPRAP DISLODGED RIPRAP. MAKE NECESSARY REPAIRS IMMEDIATELY.

MARYLAND STANDARDS AND SPECIFICATIONS FOR SOIL EROSION AND SEDIMENT CONTROL

U.S. DEPARTMENT OF AGRICULTURE NATURAL RESOURCES CONSERVATION SERVICE | 2011 | MARYLAND DEPARTMENT OF ENVIRONMENT WATER MANAGEMENT ADMINISTRATION

DETAIL C-9 DIVERSION FENCE
STANDARD SYMBOL: DF

MAXIMUM DRAINAGE AREA = 2 ACRES

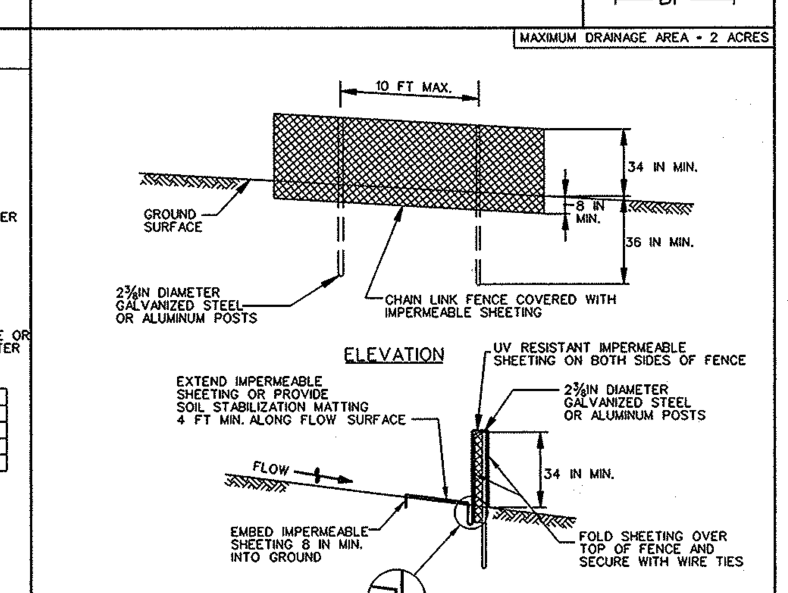

CONSTRUCTION SPECIFICATIONS

1. USE 42 INCH HIGH, 9 GAUGE OR THICKER CHAIN LINK FENCING (2⅜INCH MAXIMUM OPENING).
2. USE 2⅜INCH DIAMETER GALVANIZED STEEL POSTS OF 0.095 INCH WALL THICKNESS AND SIX FOOT LENGTH SPACED NO FURTHER THAN 10 FEET APART. THE POSTS DO NOT NEED TO BE SET IN CONCRETE.
3. FASTEN CHAIN LINK FENCE SECURELY TO THE FENCE POSTS WITH WIRE TIES.
4. SECURE 10 MIL OR THICKER UV RESISTANT, IMPERMEABLE SHEETING TO CHAIN LINK FENCE WITH TIES SPACED EVERY 24 INCHES AT TOP, MID SECTION, AND BELOW GROUND SURFACE.
5. EXTEND SHEETING A MINIMUM OF 4 FEET ALONG FLOW SURFACE AND EMBED END A MINIMUM OF 8 INCHES INTO GROUND. SOIL STABILIZATION MATTING MAY BE USED IN LIEU OF IMPERMEABLE SHEETING ALONG FLOW SURFACE.
6. WHEN TWO SECTIONS OF SHEETING ADJOIN EACH OTHER, OVERLAP BY 6 INCHES AND FOLD WITH SEAM FACING DOWNGRADE.
7. KEEP FLOW SURFACE ALONG DIVERSION FENCE AND POINT OF DISCHARGE FREE OF EROSION. REMOVE ACCUMULATED SEDIMENT AND DEBRIS. MAINTAIN POSITIVE DRAINAGE. REPLACE IMPERMEABLE SHEETING IF TORN. IF UNDERMINING OCCURS, REINSTALL FENCE.

MARYLAND STANDARDS AND SPECIFICATIONS FOR SOIL EROSION AND SEDIMENT CONTROL

U.S. DEPARTMENT OF AGRICULTURE NATURAL RESOURCES CONSERVATION SERVICE | 2011 | MARYLAND DEPARTMENT OF ENVIRONMENT WATER MANAGEMENT ADMINISTRATION

This development plan is approved for soil erosion and sediment control by the HOWARD SOIL CONSERVATION DISTRICT.

[signature] 10/30/14
Howard Co. SCD — Date

DEVELOPER'S CERTIFICATE

" I/We certify that all development and construction will be done according to this plan for sediment and erosion control, and that all responsible personnel involved in the construction project will have a Certificate of Attendance at a Department of the Environment Approved Training Program for the Control of Sediment and Erosion before beginning the project. I also authorize periodic on-site inspection by the Howard Soil Conservation District"

[signature] 10-15-14
Stuart Foard — Date

ENGINEER'S CERTIFICATE

" I certify that this plan for sediment and erosion control represents a practical and workable plan based on my personal knowledge of the site conditions and that it was prepared in accordance with the requirements of the Howard Soil Conservation District"

[signature] 10-15-14
Iwona Rostek-Zarska, P.E. 21245 — Date

APPROVED: DEPARTMENT OF PLANNING AND ZONING

[signature] 11-6-14
Chief, Development Engineering Division — Date

[signature] 11-20-14
Chief, Division of Land Development — Date

[signature] 11/28/14
Director — Date

ADDRESS CHART

LOT / PARCEL NO.	STREET ADDRESS
PARCEL B-1	7901 OCEANO AVENUE
PARCEL E-1	7775 CHESAPEAKE BAY COURT

THE COORDINATE SYSTEM OF ALL DRAWINGS IS BASED ON THE NORTH AMERICAN DATUM OF 1983. THE ELEVATION SYSTEM OF ALL DRAWINGS IS BASED ON THE NORTH AMERICAN VERTICAL DATUM OF 1988.
HORZ: NAD 83/91; VERT: NAVD 88

PERMIT INFORMATION CHART

SUBDIVISION NAME			SECTION / AREA		LOT / PARCEL NO.
MARYLAND FOOD CENTER AUTHORITY			3		B-1/662 & E-1/696
PLAT NO. or L/F	GRID NO.	ZONING	TAX MAP NO.	ELEC. DIST.	CENSUS TRACT
23017-23021	21	M-2	43	6TH	6069.01

50 30 0 50

REVISIONS

DATE	NO.	DESCRIPTION	BY

BLDG
Baltimore Land Design Group Inc.
Consulting Engineers
230 SCHILLING CIRCLE, SUITE 364 • HUNT VALLEY, MARYLAND 21031
PHONE: 410.229.9851 • FAX: 410.229.9865 • BLDG@BLDGINC.COM

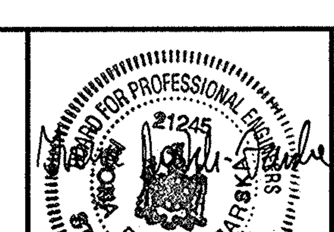

PROFESSIONAL CERTIFICATION

I HEREBY CERTIFY THAT THESE DOCUMENTS WERE PREPARED OR APPROVED BY ME, AND THAT I AM A DULY LICENSED PROFESSIONAL ENGINEER UNDER THE LAWS OF THE STATE OF MARYLAND, LICENSE NO. 21245, EXPIRATION DATE: JUNE 9, 2016.

OWNER
MARYLAND FOOD CENTER AUTHORITY
7801 OCEANO AVE
JESSUP, MD 20794
PHONE (410) 379-5760
FAX (410) 379-5773

DEVELOPER / APPLICANT
MERRITT PROPERTIES, LLC
2066 LORD BALTIMORE DRIVE
BALTIMORE, MD 21244
PHONE (410) 298-2600
FAX (410) 298-9644

EROSION AND SEDIMENT CONTROL PLAN
DETAILS
MARYLAND FOOD CENTER AUTHORITY
PARCEL B-1 & E-1
(WAREHOUSE & OFFICE)

HOWARD COUNTY, MARYLAND
SCALE: N/A

DATE: OCTOBER, 2014

DRAWING NO.
C-27

SDP-14-068

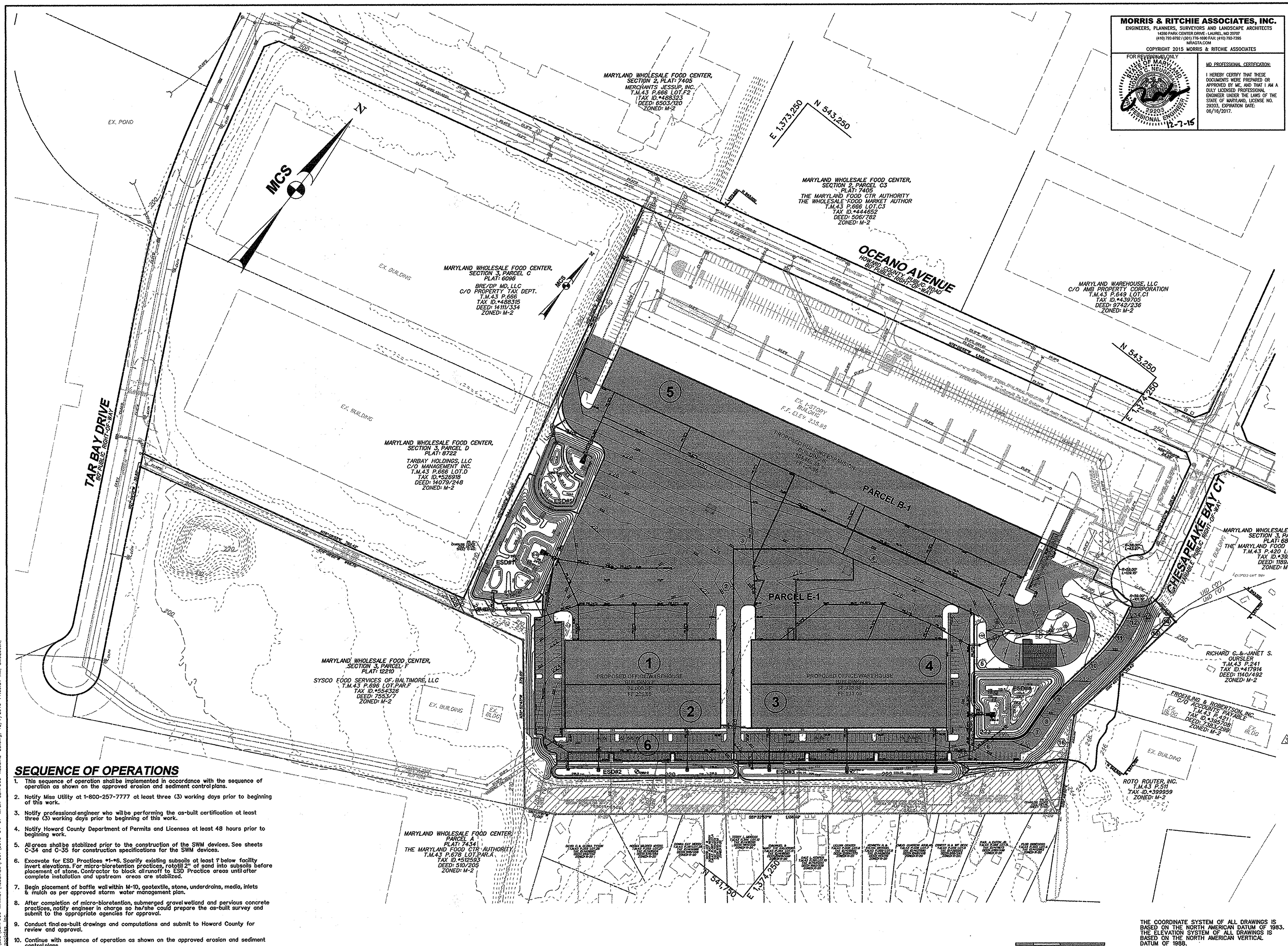

MORRIS & RITCHIE ASSOCIATES, INC.
ENGINEERS, PLANNERS, SURVEYORS AND LANDSCAPE ARCHITECTS
14280 PARK CENTER DRIVE - LAUREL, MD 20707
(410) 792-9792 / (301) 776-1690 FAX: (410) 792-7395
MRAGTA.COM

COPYRIGHT 2015 MORRIS & RITCHIE ASSOCIATES

FOR REVISION #3 ONLY

STATE OF MARYLAND THOMAS C. NEUGEBAUER 29203 PROFESSIONAL ENGINEER 12-7-15

MD PROFESSIONAL CERTIFICATION:

I HEREBY CERTIFY THAT THESE DOCUMENTS WERE PREPARED OR APPROVED BY ME, AND THAT I AM A DULY LICENSED PROFESSIONAL ENGINEER UNDER THE LAWS OF THE STATE OF MARYLAND, LICENSE NO. 29203, EXPIRATION DATE: 06/16/2017.

SUMMARY - OVERALL DESIGN	
TOTAL DEVELOPABLE AREA (LOD)	1,051,181 SF OR 24.13 Ac
PROPOSED IMPERVIOUS AREA	790,860 SF OR 18.16 Ac
EXISTING IMPERVIOUS AREA	28,595 SF OR 0.66 Ac
IMPERVIOUS AREA TO BE TREATED (PROP. - EX.)	757,799 SF OR 17.40 Ac
IMPERVIOUS AREA TREATED	769,013 SF OR 17.65 Ac
ESD TREATMENT VOLUME REQUIRED	110,187 CF
ESD TREATMENT VOLUME PROVIDED	148,573 CF
TARGET Pe REQUIRED	1.80
TARGET Pe PROVIDED	2.43
RECHARGE VOLUME REQUIRED	4,286 CF
RECHARGE VOLUME PROVIDED	4,344 CF

SUMMARY - DRAINAGE AREAS			
ESD PRACTICE NUMBER	DRAINAGE AREA NUMBER	TOTAL CONTRIBUTING DRAINAGE AREA (Ac)	IMPERVIOUS AREA (Ac)
ESD •1	1	7.593	6.401
ESD •2	2	1.173	0.803
ESD •3	3	1.537	1.010
ESD •4	4	6.925	4.863
ESD •5	5	4.094	3.596
Pervious Pavement	6	1.472	0.981
		22.794	17.65

SUMMARY - TYPE OF PRACTICE AND TARGET Pe			
ESD PRACTICE NUMBER	TYPE OF ESD PRACTICE	Pe REQUIRED	Pe PROVIDED
ESD •1	SUBMERGED GRAVEL WETLAND	1.8	2.0
ESD •2	MICRO-BIORETENTION	1.8	1.6
ESD •3	MICRO-BIORETENTION	1.8	1.7
ESD •4	SUBMERGED GRAVEL WETLAND	1.8	2.1
ESD •5	SUBMERGED GRAVEL WETLAND	1.8	2.2
ESD •6	PERVIOUS PAVEMENT	1.8	1.8

SOIL CLASSIFICATION		
UtD	Urban Land - Udorthents complex, 0 to 15 percent slopes	D

PARCEL E-1 BEARING AND DISTANCES

	BEARING	DISTANCE
1	S 51° 32'53" W	750.78'
2	N 38° 27'07" W	485.00'
3	N 51° 32'53" E	219.79'
4	N 76° 09'12" E	354.39'
5	S 38° 27'07" E	283.44'
6	N 51° 32'53" E	85.33'
7	R=44.0'	42.48'
8	N 03° 46'06" W	54.55'
9	R=356.00'	77.82'
10	N 08° 45'23" E	87.35'
11	R=344.00'	135.74'
12	N 13° 51'05" W	9.70'
13	R=59.00'	61.77'
14	S 81° 14'36" E	66.68'
15	S 08° 45'23" W	311.43'
16	S 29° 48'50" E	107.67'

SWM LEGEND

LIMIT OF DISTURBANCE

IMPERVIOUS AREA

SUB DRAINAGE AREAS TO ESD PRACTICES

APPROVED: HOWARD COUNTY DEPARTMENT OF PLANNING AND ZONING

CHIEF, DEVELOPMENT ENGINEERING DIVISION	12-29-15 DATE
CHIEF, DIVISION OF LAND DEVELOPMENT	12-31-15 DATE
DIRECTOR, DEPARTMENT OF PLANNING AND ZONING	1-3-16 DATE

LOT / PARCEL NO.	STREET ADDRESS
PARCEL B-1	7901 OCEANO AVENUE
PARCEL E-1	7775 CHESAPEAKE BAY COURT

PERMIT INFORMATION CHART

SUBDIVISION NAME			SECTION / AREA		LOT / PARCEL NO.
MARYLAND FOOD CENTER AUTHORITY			3		B-1/662 & E-1/696
PLAT NO. or L/F	GRID NO.	ZONING	TAX MAP NO.	ELEC. DIST.	CENSUS TRACT
23017-23021	21	M-2	43	6TH	6069.01

SEQUENCE OF OPERATIONS

1. This sequence of operation shall be implemented in accordance with the sequence of operation as shown on the approved erosion and sediment control plans.
2. Notify Miss Utility at 1-800-257-7777 at least three (3) working days prior to beginning of this work.
3. Notify professional engineer who will be performing the as-built certification at least three (3) working days prior to beginning of this work.
4. Notify Howard County Department of Permits and Licenses at least 48 hours prior to beginning work.
5. All areas shall be stabilized prior to the construction of the SWM devices. See sheets C-34 and C-35 for construction specifications for the SWM devices.
6. Excavate for ESD Practices •1-•6. Scarify existing subsoils at least 1' below facility invert elevations. For micro-bioretention practices, rototill 2" of sand into subsoils before placement of stone. Contractor to block all runoff to ESD Practice areas until after complete installation and upstream areas are stabilized.
7. Begin placement of baffle wall within M-10, geotextile, stone, underdrains, media, inlets & mulch as per approved storm water management plan.
8. After completion of micro-bioretention, submerged gravel wetland and pervious concrete practices, notify engineer in charge so he/she could prepare the as-built survey and submit to the appropriate agencies for approval.
9. Conduct final as-built drawings and computations and submit to Howard County for review and approval.
10. Continue with sequence of operation as shown on the approved erosion and sediment control plans.

THE COORDINATE SYSTEM OF ALL DRAWINGS IS BASED ON THE NORTH AMERICAN DATUM OF 1983. THE ELEVATION SYSTEM OF ALL DRAWINGS IS BASED ON THE NORTH AMERICAN VERTICAL DATUM OF 1988.
HORZ: NAD 83/91; VERT: NAVD 88

50 30 0 50

BLDG
Baltimore Land Design Group Inc.
Consulting Engineers
230 SCHILLING CIRCLE, SUITE 364 • HUNT VALLEY, MARYLAND 21031
PHONE: 410.229.9851 • FAX: 410.229.9865 • BLDG@BLDGINC.COM

STATE OF MARYLAND BOARD FOR PROFESSIONAL ENGINEERS 21245 ROSTEK-ZARSKA 10/15/14

PROFESSIONAL CERTIFICATION

I HEREBY CERTIFY THAT THESE DOCUMENTS WERE PREPARED OR APPROVED BY ME, AND THAT I AM A DULY LICENSED PROFESSIONAL ENGINEER UNDER THE LAWS OF THE STATE OF MARYLAND, LICENSE NO. 21245, EXPIRATION DATE: JUNE 9, 2016.

OWNER
MARYLAND FOOD CENTER AUTHORITY
7801 OCEANO AVE
JESSUP, MD 20794
PHONE (410) 379-5760
FAX (410) 379-5773

DEVELOPER / APPLICANT
MERRITT PROPERTIES, LLC
2066 LORD BALTIMORE DRIVE
BALTIMORE, MD 21244
PHONE (410) 298-2600
FAX (410) 298-9644

REVISIONS			
DATE	NO.	DESCRIPTION	BY
9/18/15	3	REPLACED BUILDING IV WITH TRUCK WASH-OUT STATION	MRA

REVISED SITE DEVELOPMENT PLAN
STORM WATER MANAGEMENT PLAN
PROPOSED DRAINAGE AREA MAP

MARYLAND FOOD CENTER AUTHORITY
PARCEL B-1 & E-1
(WAREHOUSE & OFFICE)

HOWARD COUNTY, MARYLAND
SCALE: 1" = 100'
DATE: OCTOBER, 2014

DRAWING NO.
C-28

SDP-14-068

P:\PROJ\17620 MFCA Expansion\PLANS\LDE\SEAFOOD MARKET\REDLINES\PLOT\2015-04-07-MFCA-SEAFOOD-REDLINE-28.dwg, 12/7/2015 11:03:21 AM, CMcQueen, 1:1 Copyright 2015 Morris & Ritchie Associates, Inc.

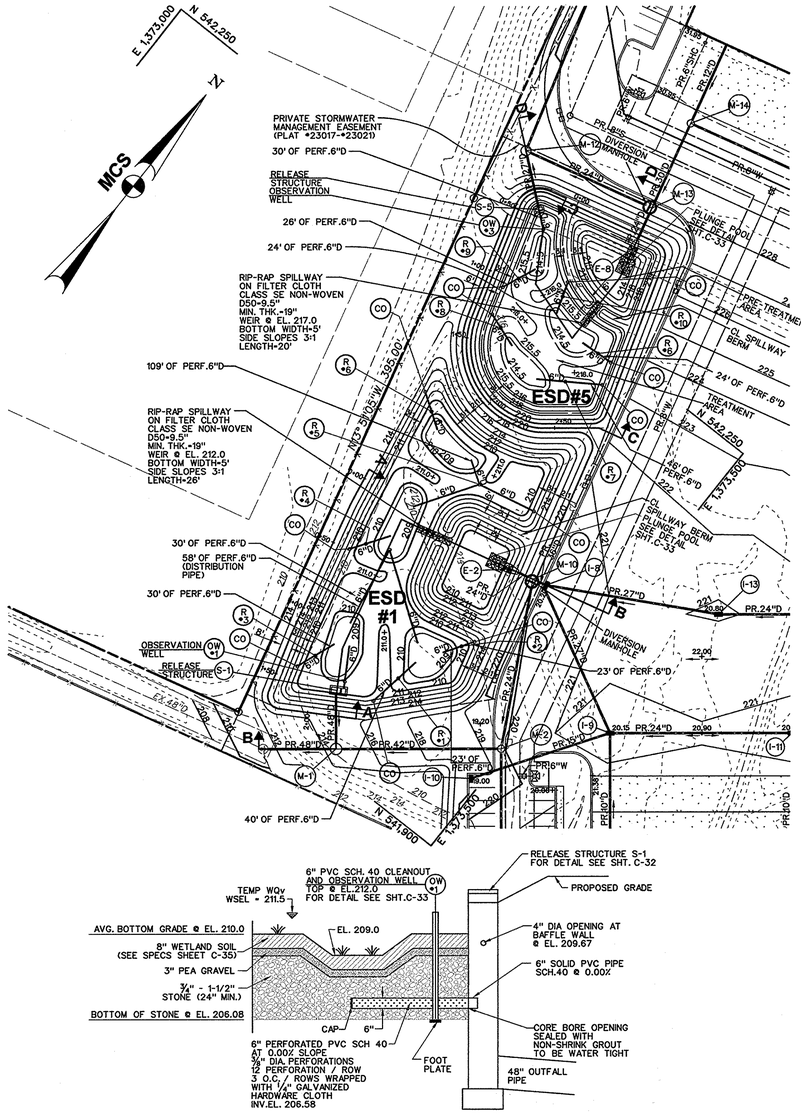

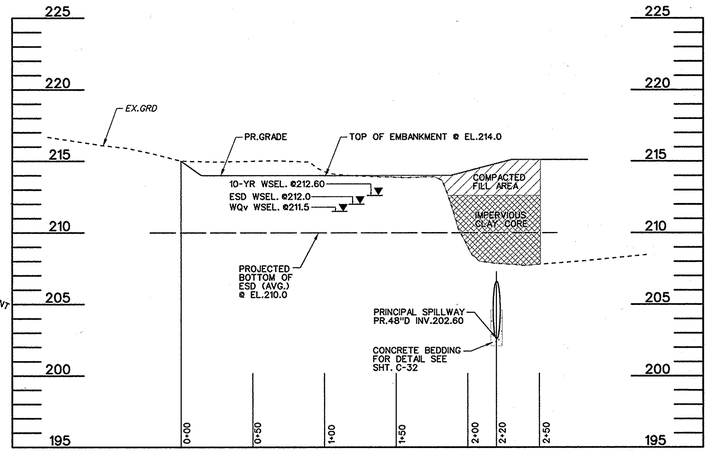

SECTION A-A

SCALE: H: 1" = 50'
V: 1" = 5'

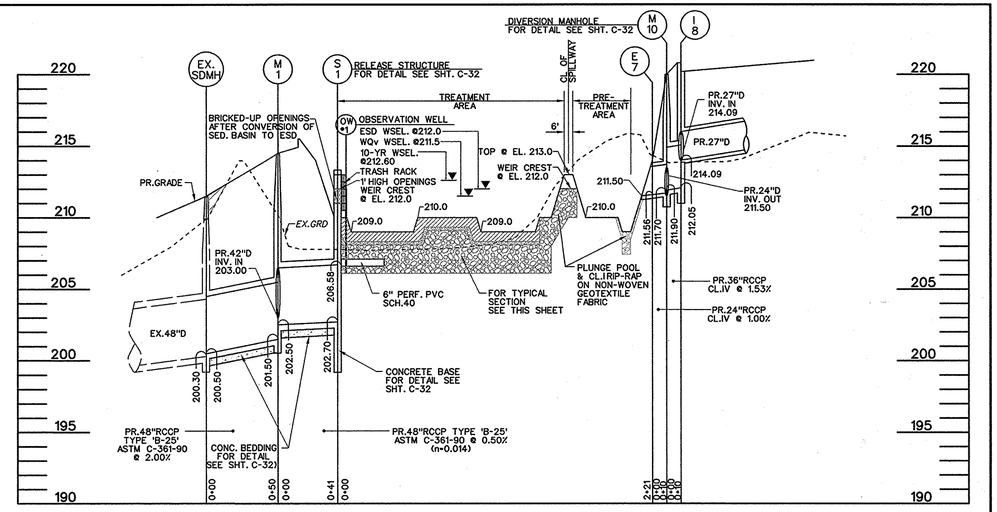

SECTION B-B

SCALE: H: 1" = 50'
V: 1" = 5'

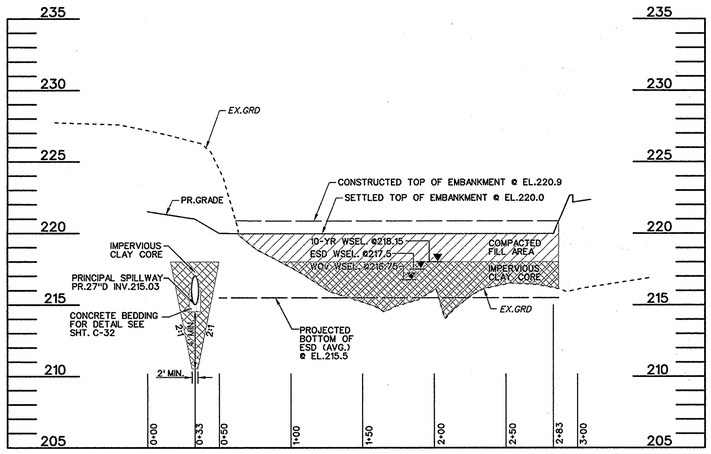

SECTION C-C

SCALE: H: 1" = 50'
V: 1" = 5'

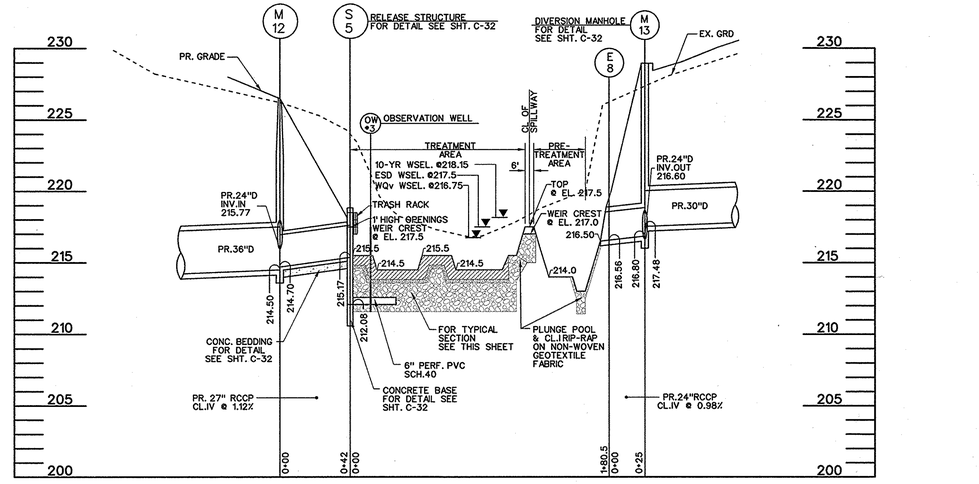

SECTION D-D

SCALE: H: 1" = 50'
V: 1" = 5'

TYPICAL SECTION THROUGH SUBMERGED GRAVEL WETLAND AND OBSERVATION WELL / CLEANOUT - ESD #1

NOT TO SCALE

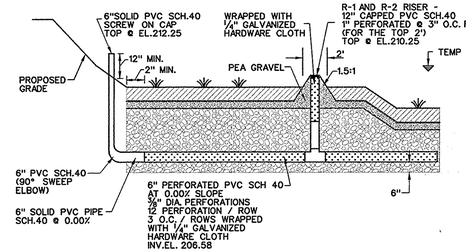

PVC CLEANOUT AND VERTICAL RISER DETAIL - ESD #1

NOT TO SCALE

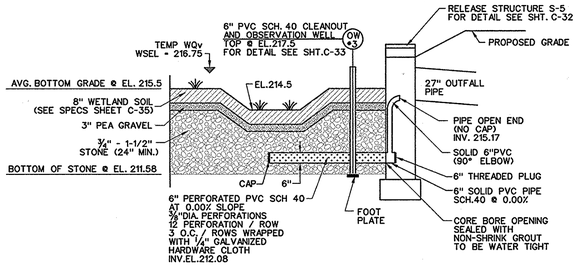

TYPICAL SECTION THROUGH SUBMERGED GRAVEL WETLAND AND OBSERVATION WELL / CLEANOUT - ESD #5

NOT TO SCALE

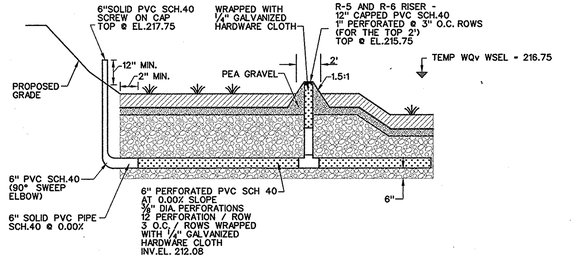

PVC CLEANOUT AND VERTICAL RISER DETAIL - ESD #5

NOT TO SCALE

50 30 0 50

THE COORDINATE SYSTEM OF ALL DRAWINGS IS BASED ON THE NORTH AMERICAN DATUM OF 1983. THE ELEVATION SYSTEM OF ALL DRAWINGS IS BASED ON THE NORTH AMERICAN VERTICAL DATUM OF 1988.
HORZ: NAD 83/91 VERT: NAVD 88

APPROVED: DEPARTMENT OF PLANNING AND ZONING

Chief, Development Engineering Division — Date 11-6-14

Chief, Division of Land Development — Date 11-20-14

Director — Date 11/21/14

ADDRESS CHART

LOT / PARCEL NO.	STREET ADDRESS
PARCEL B-1	7901 OCEANO AVENUE
PARCEL E-1	7775 CHESAPEAKE BAY COURT

PERMIT INFORMATION CHART

SUBDIVISION NAME		SECTION / AREA	LOT / PARCEL NO.
MARYLAND FOOD CENTER AUTHORITY		3	B-1/662 & E-1/696
PLAT NO. or L/F	GRID NO.	ZONING	TAX MAP NO.	ELEC. DIST.	CENSUS TRACT
23017-23021	21	M-2	43	6TH	6069.01

BLDG
Baltimore Land Design Group Inc.
Consulting Engineers
230 SCHILLING CIRCLE, SUITE 364 • HUNT VALLEY, MARYLAND 21031
PHONE: 410.229.9851 • FAX: 410.229.9865 • BLDG@BLDGINC.COM

MARYLAND REGISTERED PROFESSIONAL ENGINEER — 21245 — LAURA HOSTEK-ZARZYCKI — STATE OF MARYLAND

PROFESSIONAL CERTIFICATION

I HEREBY CERTIFY THAT THESE DOCUMENTS WERE PREPARED OR APPROVED BY ME, AND THAT I AM A DULY LICENSED PROFESSIONAL ENGINEER UNDER THE LAWS OF THE STATE OF MARYLAND, LICENSE NO. 21245, EXPIRATION DATE: JUNE 9, 2016.

OWNER
MARYLAND FOOD CENTER AUTHORITY
7801 OCEANO AVE
JESSUP, MD 20794
PHONE (410) 379-5760
FAX (410) 379-5773

DEVELOPER / APPLICANT
MERRITT PROPERTIES, LLC
2066 LORD BALTIMORE DRIVE
BALTIMORE, MD 21244
PHONE (410) 298-2600
FAX (410) 298-9644

REVISIONS

DATE	NO.	DESCRIPTION	BY

STORM WATER MANAGEMENT PLAN
SUBMERGED GRAVEL WETLAND – ESD #1 & #5

MARYLAND FOOD CENTER AUTHORITY
PARCEL B-1 & E-1
(WAREHOUSE & OFFICE)

HOWARD COUNTY, MARYLAND
SCALE: 1" = 50'
DATE: OCTOBER, 2014

DRAWING NO.
C-29
SHEET 29 OF 57

SDP-14-068

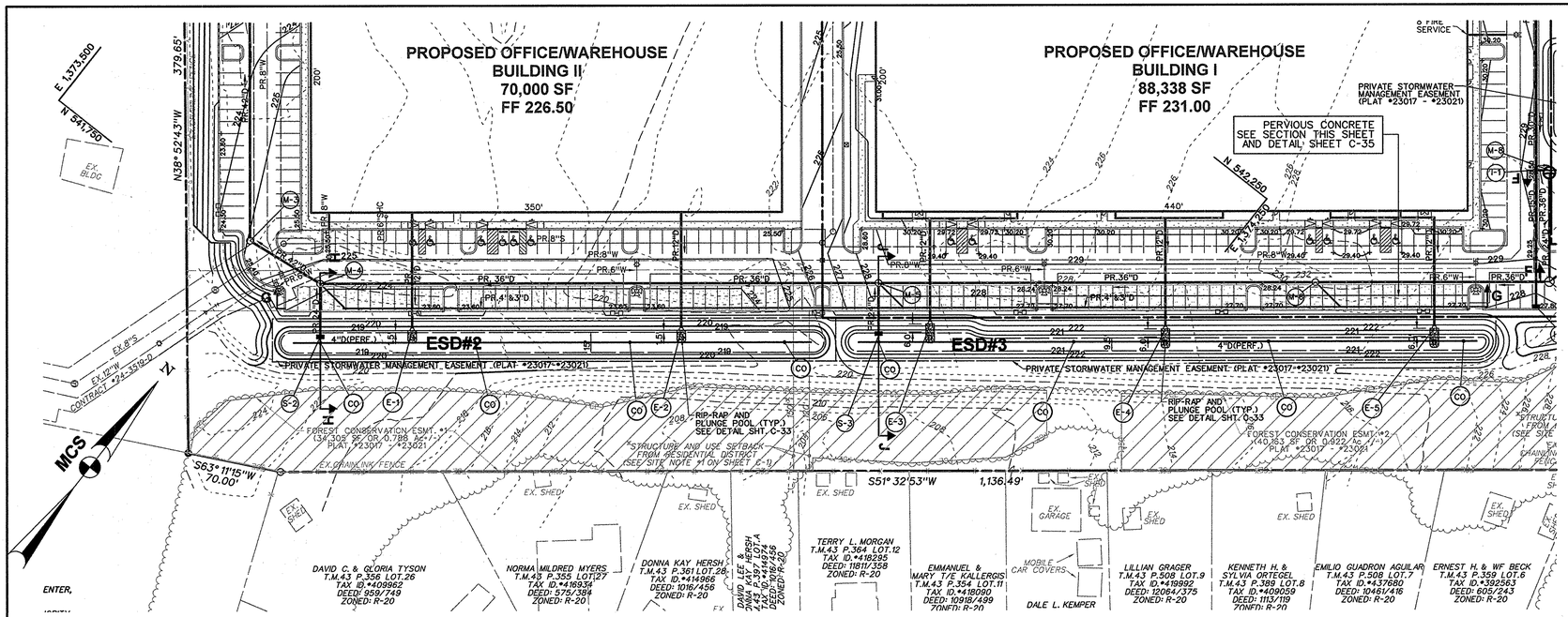

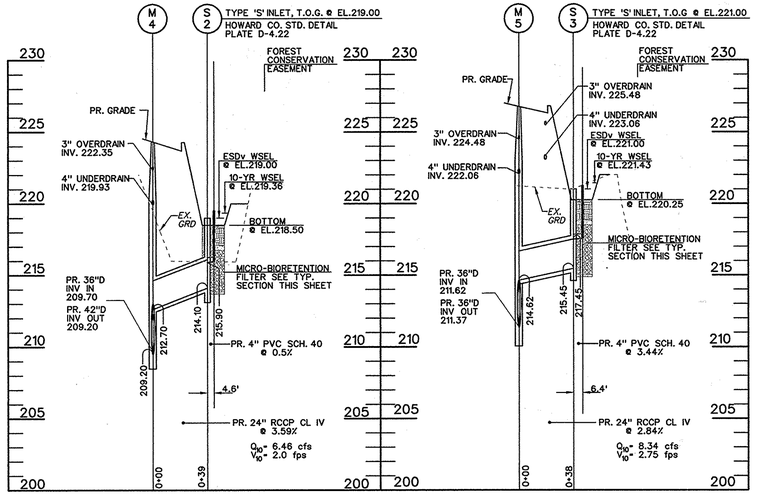

SECTION H-H
SCALE: H: 1" = 50'
V: 1" = 5'

SECTION J-J
SCALE: H: 1" = 50'
V: 1" = 5'

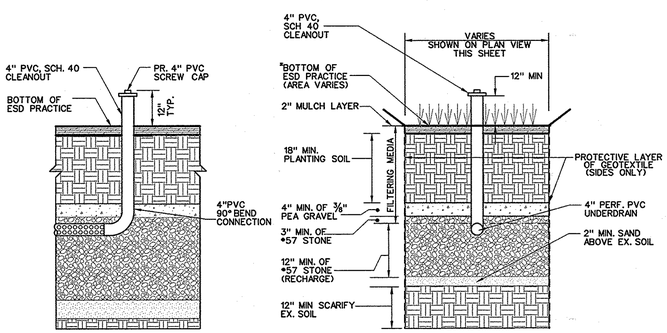

UNDERDRAIN CLEANOUT TYPICAL DETAIL
NOT TO SCALE

*ESD #2: EL.218.5
ESD #3: EL.220.25

TYPICAL SECTION THROUGH MICRO-BIORETENTION SECTIONS D-D & E-E
NOT TO SCALE

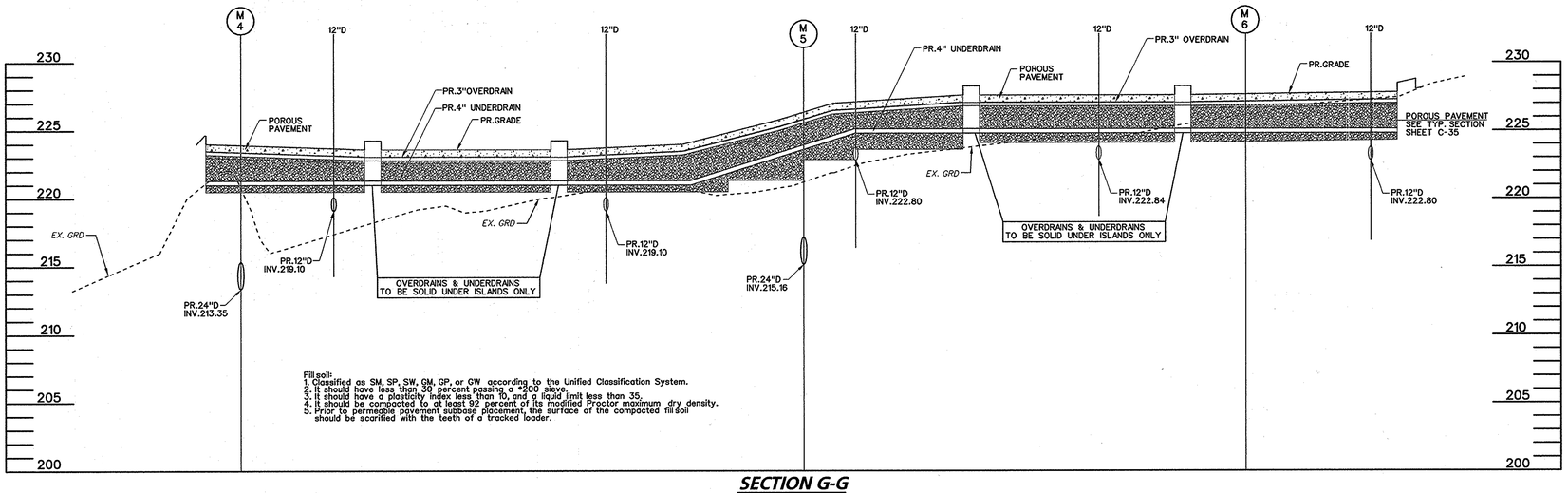

Fill soil:
1. Classified as SM, SP, SW, GM, GP, or GW according to the Unified Classification System.
2. It should have less than 30 percent passing a #200 sieve.
3. It should have a plasticity index less than 10, and a liquid limit less than 35.
4. It should be compacted to at least 92 percent of its modified Proctor maximum dry density.
5. Prior to permeable pavement subbase placement, the surface of the compacted fill soil should be scarified with the teeth of a tracked loader.

SECTION G-G
SCALE: H: 1" = 50'
V: 1" = 5'

APPROVED: DEPARTMENT OF PLANNING AND ZONING

Chief, Development Engineering Division — Date: 2-9-15

Chief, Division of Land Development — Date: 2-12-15

Director — Date: 2/13/15

ADDRESS CHART

LOT / PARCEL NO.	STREET ADDRESS
PARCEL B-1	7901 OCEANO AVENUE
PARCEL E-1	7775 CHESAPEAKE BAY COURT

PERMIT INFORMATION CHART

SUBDIVISION NAME			SECTION / AREA	LOT / PARCEL NO.
MARYLAND FOOD CENTER AUTHORITY			3	B-1/662 & E-1/696
PLAT NO. or L/F	GRID NO.	ZONING	TAX MAP NO.	ELEC. DIST.	CENSUS TRACT
23017-23021	21	M-2	43	6TH	6069.01

THE COORDINATE SYSTEM OF ALL DRAWINGS IS BASED ON THE NORTH AMERICAN DATUM OF 1983. THE ELEVATION SYSTEM OF ALL DRAWINGS IS BASED ON THE NORTH AMERICAN VERTICAL DATUM OF 1988.
HORZ: NAD 83/91 VERT: NAVD 88

50 30 0 50

REVISIONS

DATE	NO.	DESCRIPTION	BY
12/01/14	1	ADDED DOORS, SIDEWALK AND ROOF DRAINS.	BLDG
		RELOCATED HANDICAP SPACES AND PRIVATE	
		SEWER LINE FOR BUILDING I.	

BLDG
Baltimore Land Design Group Inc.
Consulting Engineers
230 SCHILLING CIRCLE, SUITE 364 • HUNT VALLEY, MARYLAND 21031
PHONE: 410.229.9851 • FAX: 410.229.9865 • BLDG@BLDGINC.COM

STATE OF MARYLAND — JOHN ROSTEK, JR. — 21245 — PROFESSIONAL ENGINEER — 11/6/15

PROFESSIONAL CERTIFICATION
I HEREBY CERTIFY THAT THESE DOCUMENTS WERE PREPARED OR APPROVED BY ME, AND THAT I AM A DULY LICENSED PROFESSIONAL ENGINEER UNDER THE LAWS OF THE STATE OF MARYLAND, LICENSE NO. 21245, EXPIRATION DATE: JUNE 9, 2016.

OWNER
MARYLAND FOOD CENTER AUTHORITY
7801 OCEANO AVE
JESSUP, MD 20794
PHONE (410) 379-5760
FAX (410) 379-5773

DEVELOPER / APPLICANT
MERRITT PROPERTIES, LLC
2066 LORD BALTIMORE DRIVE
BALTIMORE, MD 21244
PHONE (410) 298-2600
FAX (410) 298-9644

REVISED
STORM WATER MANAGEMENT PLAN
MICRO-BIORETENTION (ESD #2 & #3) & PERVIOUS CONCRETE

MARYLAND FOOD CENTER AUTHORITY
PARCEL B-1 & E-1
(WAREHOUSE & OFFICE)

HOWARD COUNTY, MARYLAND
SCALE: 1" = 50'
DATE: DECEMBER, 2014

DRAWING NO.
C-30
SHEET 30 OF 57

SDP-14-068

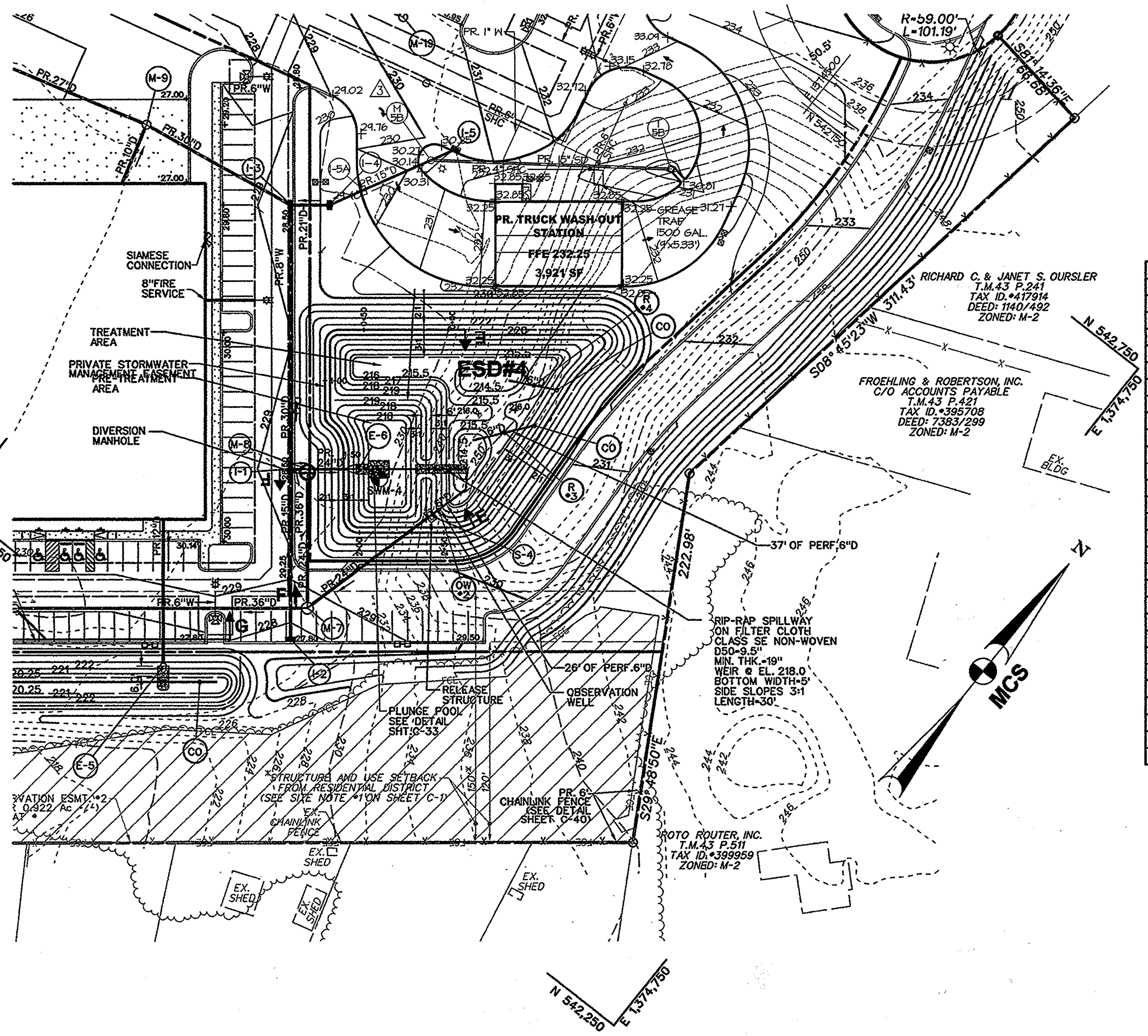

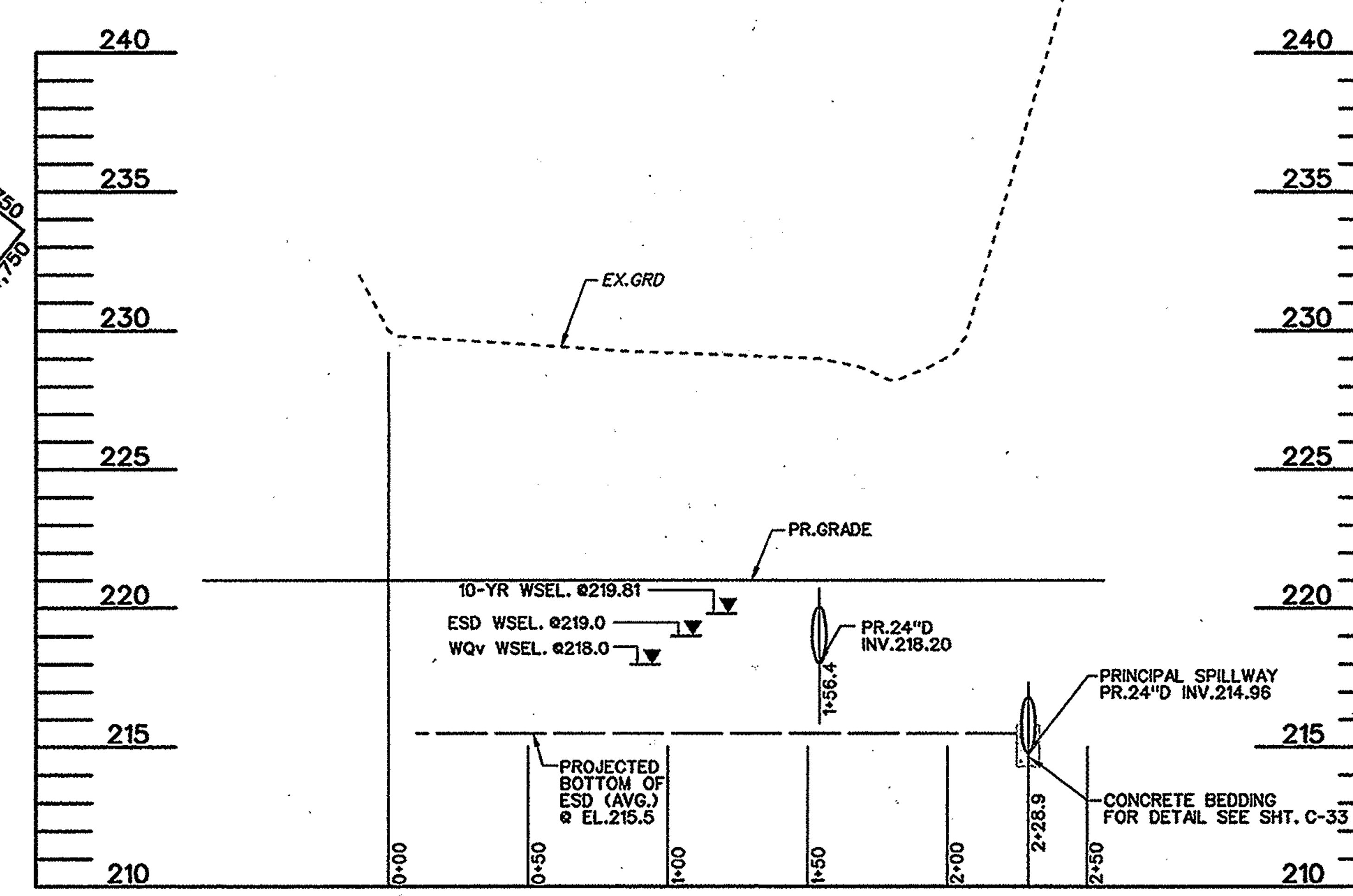

SECTION E-E

SCALE: H: 1" = 50'
V: 1" = 5'

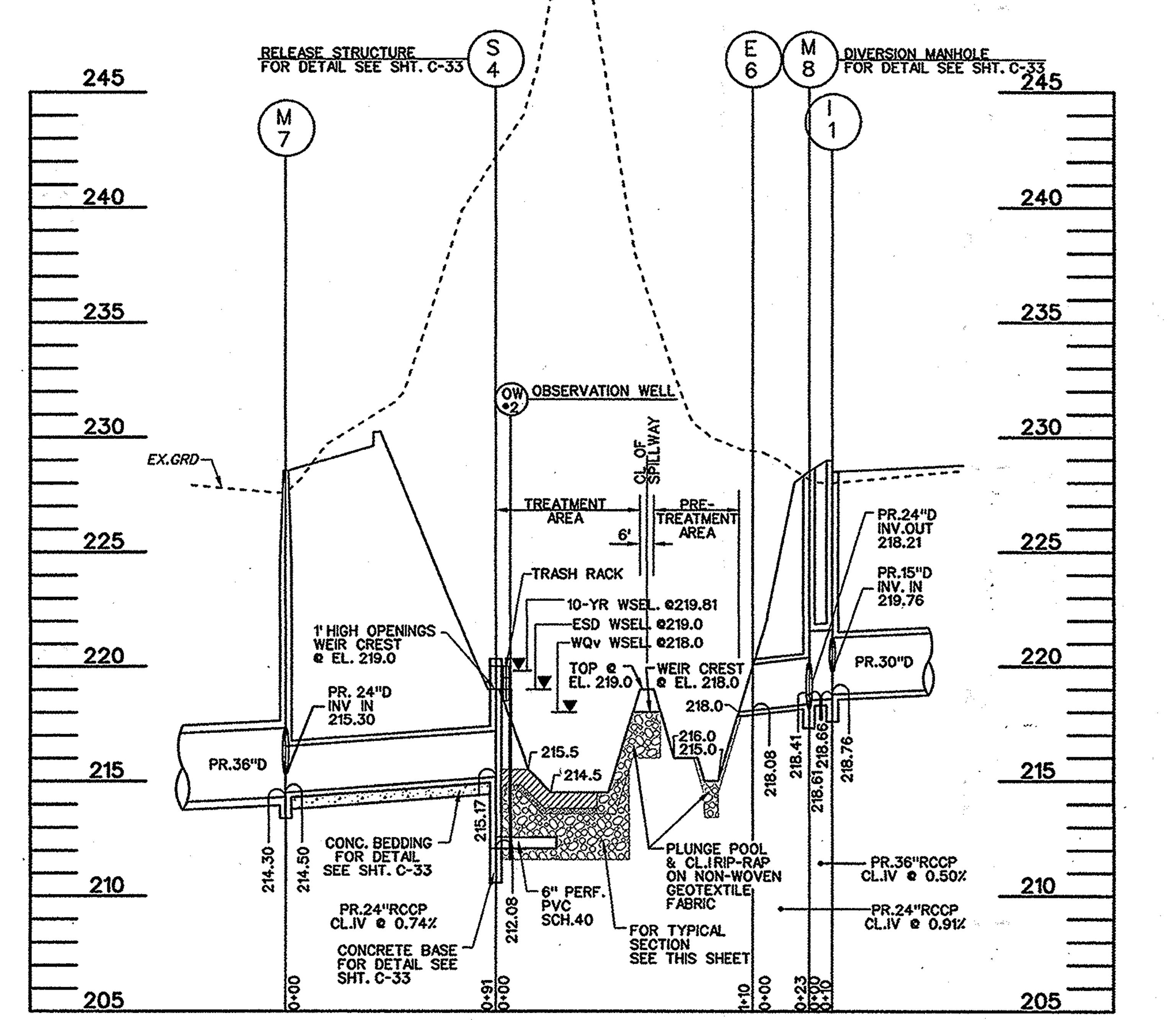

SECTION F-F

SCALE: H: 1" = 50'
V: 1" = 5'

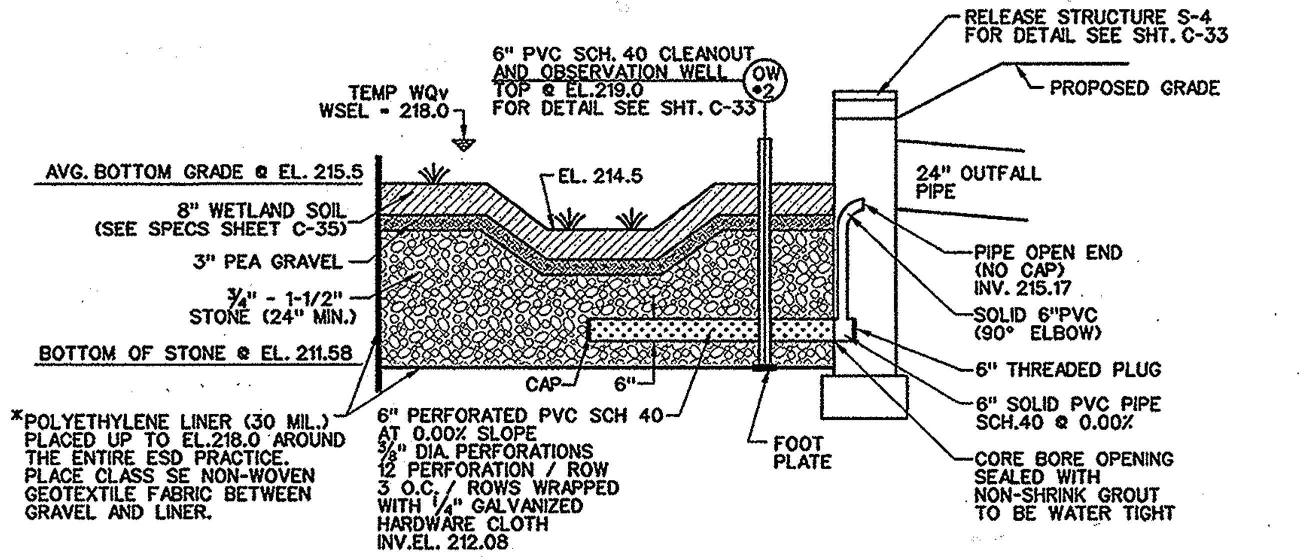

TYPICAL SECTION THROUGH SUBMERGED GRAVEL WETLAND AND OBSERVATION WELL / CLEANOUT - ESD #4

NOT TO SCALE

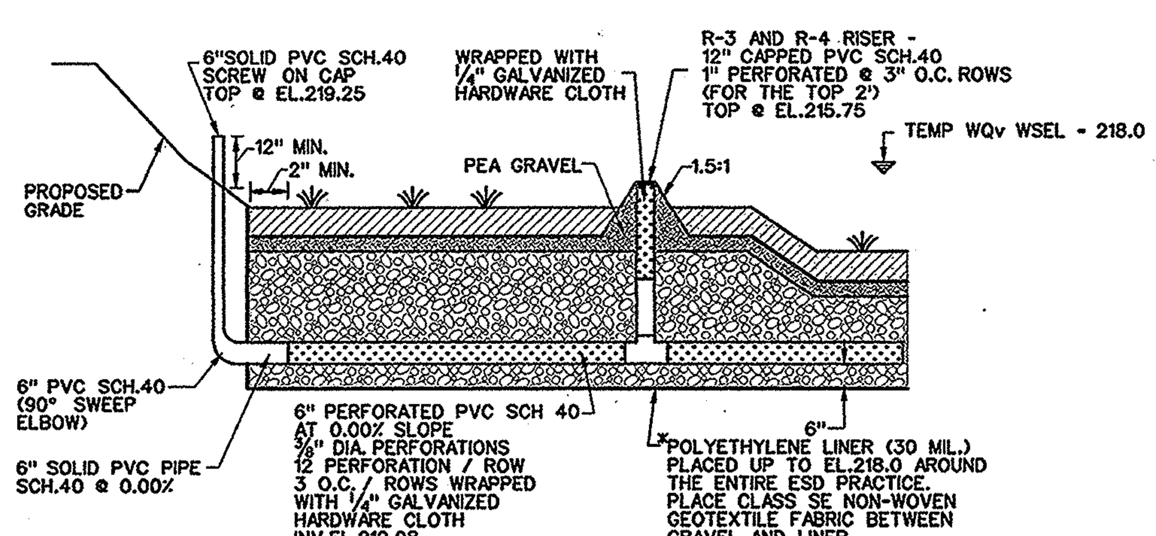

PVC CLEANOUT AND VERTICAL RISER DETAIL - ESD #4

NOT TO SCALE

*SEAMS ALONG LINER SHALL BE WATER TIGHT. HEAT ACTIVATED SEALANT SHALL BE USED PER MANUFACTURER'S RECOMMENDATIONS.

MORRIS & RITCHIE ASSOCIATES, INC.
ENGINEERS, PLANNERS, SURVEYORS AND LANDSCAPE ARCHITECTS
14280 PARK CENTER DRIVE - LAUREL, MD 20707
(410) 792-9792 / (301) 776-1690 FAX: (410) 792-7395
MRAGTA.COM

COPYRIGHT 2015 MORRIS & RITCHIE ASSOCIATES

FOR REVISION #3 ONLY
STATE OF MARYLAND THOMAS C. NEUGEBAUER 29203 PROFESSIONAL ENGINEER 12-7-15

MD PROFESSIONAL CERTIFICATION:
I HEREBY CERTIFY THAT THESE DOCUMENTS WERE PREPARED OR APPROVED BY ME, AND THAT I AM A DULY LICENSED PROFESSIONAL ENGINEER UNDER THE LAWS OF THE STATE OF MARYLAND, LICENSE NO. 29203, EXPIRATION DATE: 06/16/2017.

APPROVED: HOWARD COUNTY DEPARTMENT OF PLANNING AND ZONING

CHIEF, DEVELOPMENT ENGINEERING DIVISION	DATE 12-29-15
CHIEF, DIVISION OF LAND DEVELOPMENT	DATE 12-31-15
DIRECTOR, DEPARTMENT OF PLANNING AND ZONING	DATE 1-3-16

ADDRESS CHART

LOT / PARCEL NO.	STREET ADDRESS
PARCEL B-1	7901 OCEANO AVENUE
PARCEL E-1	7775 CHESAPEAKE BAY COURT

PERMIT INFORMATION CHART

SUBDIVISION NAME			SECTION / AREA	LOT / PARCEL NO.	
MARYLAND FOOD CENTER AUTHORITY			3	B-1/662 & E-1/696	
PLAT NO. or L/F	GRID NO.	ZONING	TAX MAP NO.	ELEC. DIST.	CENSUS TRACT
23017-23021	21	M-2	43	6TH	6069.01

THE COORDINATE SYSTEM OF ALL DRAWINGS IS BASED ON THE NORTH AMERICAN DATUM OF 1983. THE ELEVATION SYSTEM OF ALL DRAWINGS IS BASED ON THE NORTH AMERICAN VERTICAL DATUM OF 1988.
HORZ: NAD 83/91; VERT: NAVD 88

50 30 0 50

BLDG
Baltimore Land Design Group Inc.
Consulting Engineers
230 SCHILLING CIRCLE, SUITE 364 • HUNT VALLEY, MARYLAND 21031
PHONE: 410.229.9851 • FAX: 410.229.9865 • BLDG@BLDGINC.COM

BOARD FOR PROFESSIONAL ENGINEERS 21245 ROSTEK-ZARSKI STATE OF MARYLAND 10/15/14

PROFESSIONAL CERTIFICATION
I HEREBY CERTIFY THAT THESE DOCUMENTS WERE PREPARED OR APPROVED BY ME, AND THAT I AM A DULY LICENSED PROFESSIONAL ENGINEER UNDER THE LAWS OF THE STATE OF MARYLAND, LICENSE NO. 21245, EXPIRATION DATE: JUNE 9, 2016.

OWNER
MARYLAND FOOD CENTER AUTHORITY
7801 OCEANO AVE
JESSUP, MD 20794
PHONE (410) 379-5760
FAX (410) 379-5773

DEVELOPER / APPLICANT
MERRITT PROPERTIES, LLC
2066 LORD BALTIMORE DRIVE
BALTIMORE, MD 21244
PHONE (410) 298-2600
FAX (410) 298-9644

REVISIONS

DATE	NO.	DESCRIPTION	BY
9/18/15	3	REPLACED BUILDING IV WITH TRUCK WASH-OUT STATION	MRA

REVISED SITE DEVELOPMENT PLAN
STORM WATER MANAGEMENT PLAN
SUBMERGED GRAVEL WETLAND - ESD #4

MARYLAND FOOD CENTER AUTHORITY
PARCEL B-1 & E-1
(WAREHOUSE & OFFICE)

HOWARD COUNTY, MARYLAND
SCALE: 1" = 50'
DATE: OCTOBER, 2014

DRAWING NO. C-31

SDP-14-068

P:\PROJ\17620 MFCA Expansion\PLANS\LDE\SEAFOOD MARKET\REDLINES\PLOT\2015-04-07-MFCA-SEAFOOD-REDLINE-31.dwg, 12/7/2015 11:04:28 AM, CMcQueen.

NOTES

1. UNLESS OTHERWISE NOTED, THE DIVERSION STRUCTURE SHALL BE BUILT IN ACCORDANCE WITH SHA STANDARD DETAIL PLATE MD-384.09 (96" DIA PRECAST MANHOLE).
2. STRUCTURE TO BE CONCRETE SHA MIX NO.6.
3. STRUCTURE TO BE PRECAST.
4. MANHOLE STEPS SHALL BE AS SHOWN ON SHA STANDARD DETAIL PLATES MD-383.91 OR MD-383.92.
5. ALL PIPE JOINTS TO HAVE GROUT USING NON-SHRINK GROUT JOINT FILLER.
6. MINIMUM COVER FOR ANY BARS SHALL BE 2" ON WALLS AND 3" AT BOTTOM.
7. SEE SHA STANDARD DETAIL PLATES MD-383.31 & 383.32 FOR HEAVY TRAFFIC MANHOLE FRAME & COVER.

NOTE: ALL BAFFLE WALLS AND INTERNAL WEIRS TO BE WATER TIGHT.

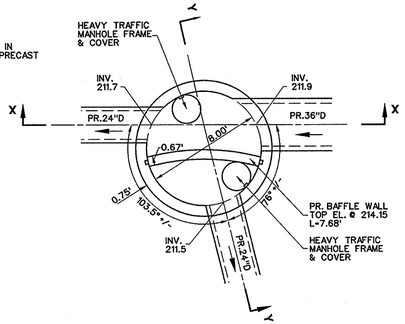

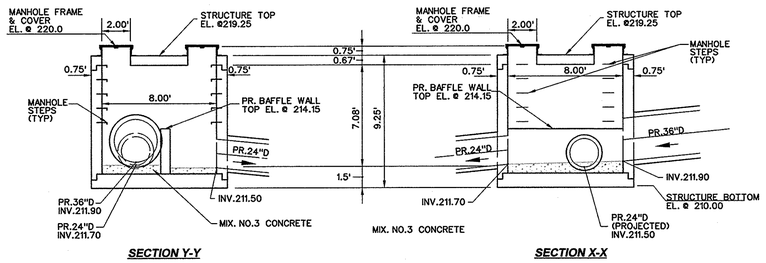

DIVERSION MANHOLE M-10 DETAIL

SCALE 1"=5'

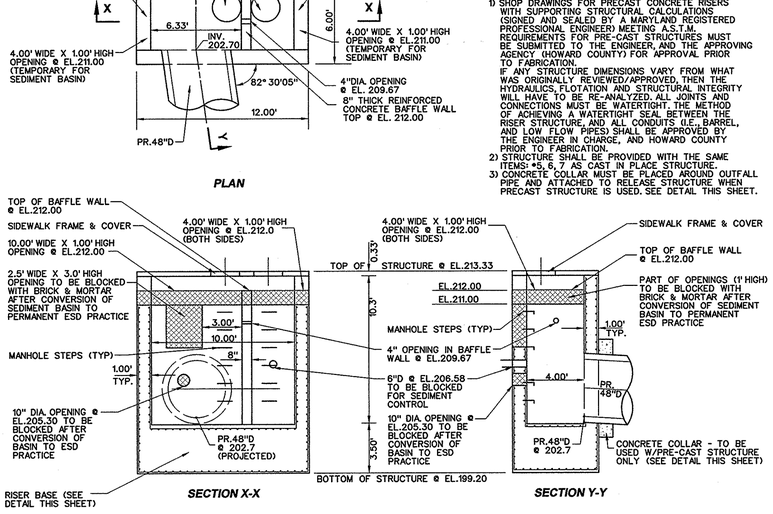

RELEASE STRUCTURE S-1 DETAIL

SCALE 1"=5'

STRUCTURE NOTES

CAST IN PLACE STRUCTURE:

1) UNLESS OTHERWISE NOTED, INLET SHALL BE BUILT IN ACCORDANCE WITH HO. CO. STD. DETAIL, PLATE D-4.04, TYPE A-10 INLET.
2) STRUCTURE TO BE CAST IN PLACE REINFORCED CONCRETE MIX NO.6.
3) REINFORCING SHALL BE IN ACCORDANCE WITH STD. DETAIL, PLATE D-4.04, BE CONTINUOUS THROUGH STRUCTURE AND AT CORNERS, AND TO HAVE 18" BAR LAPS.
4) PROVIDE ADDITIONAL REBARS ALONG PERIMETER OF ALL OPENINGS.
5) INSTALL MANHOLE STEPS. SEE HO.CO STD. DETAIL, PLATE G-5.21.
6) ALL PIPE JOINTS TO HAVE GROUT USING NON-SHRINK GROUT JOINT FILLER.
7) ALL EXPOSED CORNERS OF CONCRETE SHALL BE CHAMFERED WITH ¾" x ¾" MILLED CHAMFER STRIPS.
8) MINIMUM COVER FOR ANY BARS SHALL BE 2" ON WALLS AND 3" AT BOTTOM.

OPTIONAL PRECAST STRUCTURE:

1) SHOP DRAWINGS FOR PRECAST CONCRETE RISERS WITH SUPPORTING STRUCTURAL CALCULATIONS (SIGNED AND SEALED BY A MARYLAND REGISTERED PROFESSIONAL ENGINEER) MEETING A.S.T.M. REQUIREMENTS FOR PRE-CAST STRUCTURES MUST BE SUBMITTED TO THE ENGINEER, AND THE APPROVING AGENCY (HOWARD COUNTY) FOR APPROVAL PRIOR TO FABRICATION.
IF ANY STRUCTURE DIMENSIONS VARY FROM WHAT WAS ORIGINALLY REVIEWED/APPROVED, THEN THE HYDRAULICS, FLOTATION AND STRUCTURAL INTEGRITY WILL HAVE TO BE RE-ANALYZED. ALL JOINTS AND CONNECTIONS MUST BE WATERTIGHT. THE METHOD OF ACHIEVING A WATERTIGHT SEAL BETWEEN THE RISER STRUCTURE, AND ALL CONDUITS (I.E., BARREL, AND LOW FLOW PIPES) SHALL BE APPROVED BY THE ENGINEER IN CHARGE, AND HOWARD COUNTY PRIOR TO FABRICATION.
2) STRUCTURE SHALL BE PROVIDED WITH THE SAME ITEMS: #5, 6, 7 AS CAST IN PLACE STRUCTURE.
3) CONCRETE COLLAR MUST BE PLACED AROUND OUTFALL PIPE AND ATTACHED TO RELEASE STRUCTURE WHEN PRECAST STRUCTURE IS USED. SEE DETAIL THIS SHEET.

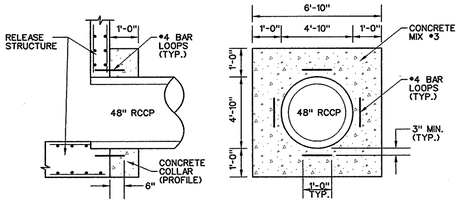

PRECAST RISER CONCRETE COLLAR DETAIL

NOT TO SCALE

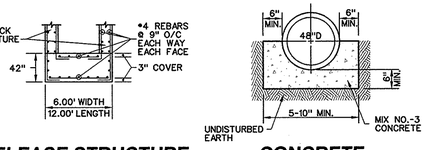

RELEASE STRUCTURE BASE DETAIL

NOT TO SCALE

CONCRETE BEDDING DETAIL

NOT TO SCALE

NOTE: FOR DRAINS FROM S-1 TO M-1 & FROM M-1 TO EX. MANHOLE.

NOTES

1. UNLESS OTHERWISE NOTED, THE DIVERSION STRUCTURE SHALL BE BUILT IN ACCORDANCE WITH SHA STANDARD DETAIL PLATE MD-384.09 (96" DIA. PRECAST MANHOLE).
2. STRUCTURE TO BE CONCRETE SHA MIX NO.6.
3. STRUCTURE TO BE PRECAST.
4. MANHOLE STEPS SHALL BE AS SHOWN ON SHA STANDARD DETAIL PLATES MD-383.91 OR MD-383.92.
5. ALL PIPE JOINTS TO HAVE GROUT USING NON-SHRINK GROUT JOINT FILLER.
6. MINIMUM COVER FOR ANY BARS SHALL BE 2" ON WALLS AND 3" AT BOTTOM.
7. SEE SHA STANDARD DETAIL PLATES MD-383.31 & 383.32 FOR HEAVY TRAFFIC MANHOLE FRAME & COVER.

NOTE: ALL BAFFLE WALLS AND INTERNAL WEIRS TO BE WATER TIGHT.

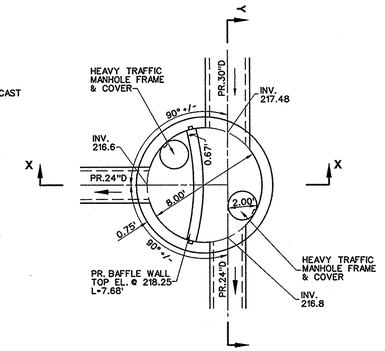

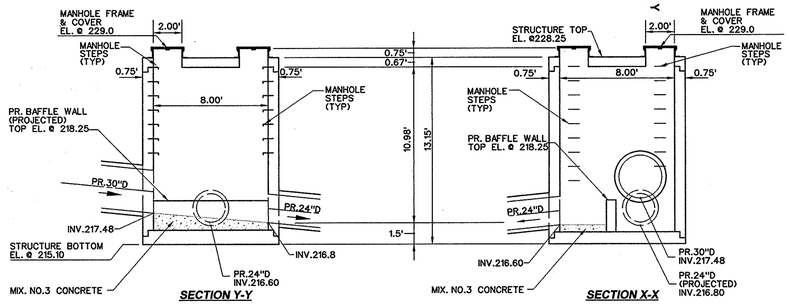

DIVERSION MANHOLE M-13 DETAIL

SCALE 1"=5'

STRUCTURE NOTES

CAST IN PLACE STRUCTURE:

1) UNLESS OTHERWISE NOTED, INLET SHALL BE BUILT IN ACCORDANCE WITH HO. CO. STD. DETAIL, PLATE D-4.02, TYPE A-5 INLET.
2) STRUCTURE TO BE CAST IN PLACE REINFORCED CONCRETE MIX NO.6.
3) REINFORCING SHALL BE IN ACCORDANCE WITH STD. DETAIL, PLATE D-4.02, BE CONTINUOUS THROUGH STRUCTURE AND AT CORNERS, AND TO HAVE 18" BAR LAPS.
4) PROVIDE ADDITIONAL REBARS ALONG PERIMETER OF ALL OPENINGS.
5) INSTALL MANHOLE STEPS. SEE HO.CO STD. DETAIL, PLATE G-5.21.
6) ALL PIPE JOINTS TO HAVE GROUT USING NON-SHRINK GROUT JOINT FILLER.
7) ALL EXPOSED CORNERS OF CONCRETE SHALL BE CHAMFERED WITH ¾" x ¾" MILLED CHAMFER STRIPS.
8) MINIMUM COVER FOR ANY BARS SHALL BE 2" ON WALLS AND 3" AT BOTTOM.

OPTIONAL PRECAST STRUCTURE:

1) SHOP DRAWINGS FOR PRECAST CONCRETE RISERS WITH SUPPORTING STRUCTURAL CALCULATIONS (SIGNED AND SEALED BY A MARYLAND REGISTERED PROFESSIONAL ENGINEER) MEETING A.S.T.M. REQUIREMENTS FOR PRE-CAST STRUCTURES MUST BE SUBMITTED TO THE ENGINEER, AND THE APPROVING AGENCY (HOWARD COUNTY) FOR APPROVAL PRIOR TO FABRICATION.
IF ANY STRUCTURE DIMENSIONS VARY FROM WHAT WAS ORIGINALLY REVIEWED/APPROVED, THEN THE HYDRAULICS, FLOTATION AND STRUCTURAL INTEGRITY WILL HAVE TO BE RE-ANALYZED. ALL JOINTS AND CONNECTIONS MUST BE WATERTIGHT. THE METHOD OF ACHIEVING A WATERTIGHT SEAL BETWEEN THE RISER STRUCTURE, AND ALL CONDUITS (I.E., BARREL, AND LOW FLOW PIPES) SHALL BE APPROVED BY THE ENGINEER IN CHARGE, AND HOWARD COUNTY PRIOR TO FABRICATION.
2) STRUCTURE SHALL BE PROVIDED WITH THE SAME ITEMS: #5, 6, 7 AS CAST IN PLACE STRUCTURE.
3) CONCRETE COLLAR MUST BE PLACED AROUND OUTFALL PIPE AND ATTACHED TO RELEASE STRUCTURE WHEN PRECAST STRUCTURE IS USED. SEE DETAIL THIS SHEET.

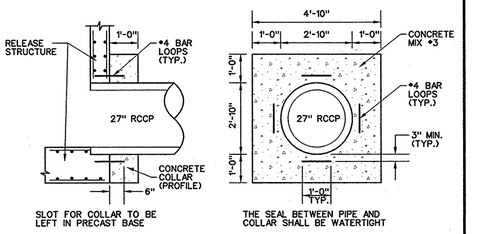

PRECAST RISER CONCRETE COLLAR DETAIL

NOT TO SCALE

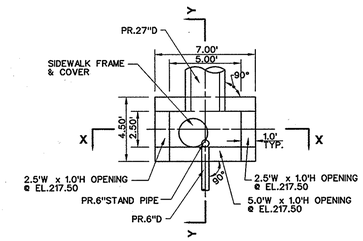

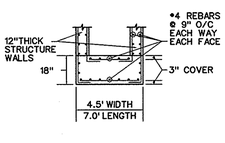

RELEASE STRUCTURE BASE DETAIL

NOT TO SCALE

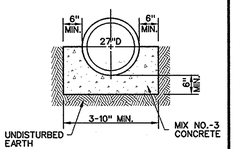

CONCRETE BEDDING DETAIL

NOT TO SCALE

NOTE: FOR DRAIN FROM S-5 TO M-12.

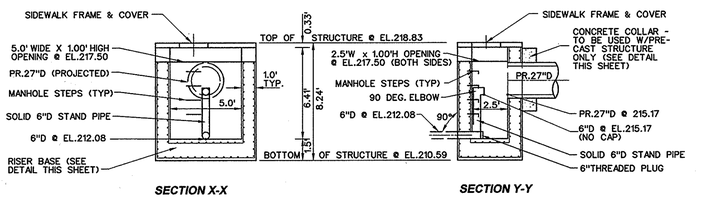

RELEASE STRUCTURE S-5 DETAIL

SCALE 1"=5'

6" STAND PIPE SHALL BE ATTACHED TO RELEASE STRUCTURE WITH STAINLESS STEEL STRAPS, 1-¼" WIDE, 11" GAUGE THICKNESS AT 3' MAX. SPACING (MIN. OF 2 PER PIPE JOINT) ANCHORED WITH ⅝" S.S. EXPANSION BOLTS.

APPROVED: DEPARTMENT OF PLANNING AND ZONING

Chief, Development Engineering Division — Date 11-6-14

Chief, Division of Land Development — Date 11-20-14

Director — Date 11/21/14

ADDRESS CHART

LOT / PARCEL NO.	STREET ADDRESS
PARCEL B-1	7901 OCEANO AVENUE
PARCEL E-1	7775 CHESAPEAKE BAY COURT

PERMIT INFORMATION CHART

SUBDIVISION NAME			SECTION / AREA	LOT / PARCEL NO.
MARYLAND FOOD CENTER AUTHORITY			3	B-1/662 & E-1/696
PLAT NO. or L/F	GRID NO.	ZONING	TAX MAP NO.	ELEC. DIST.	CENSUS TRACT
23017-23021	21	M-2	43	6TH	6069.01

BLDG
Baltimore Land Design Group Inc.
Consulting Engineers
230 SCHILLING CIRCLE, SUITE 364 • HUNT VALLEY, MARYLAND 21031
PHONE: 410.229.9851 • FAX: 410.229.9865 • BLDG@BLDGINC.COM

LICENSED PROFESSIONAL ENGINEER #21245 STEVEN MARK ROSTEK-ZARSKY STATE OF MARYLAND 10/13/14

PROFESSIONAL CERTIFICATION

I HEREBY CERTIFY THAT THESE DOCUMENTS WERE PREPARED OR APPROVED BY ME, AND THAT I AM A DULY LICENSED PROFESSIONAL ENGINEER UNDER THE LAWS OF THE STATE OF MARYLAND, LICENSE NO. 21245, EXPIRATION DATE: JUNE 9, 2016.

OWNER
MARYLAND FOOD CENTER AUTHORITY
7801 OCEANO AVE
JESSUP, MD 20794
PHONE (410) 379-5760
FAX (410) 379-5773

DEVELOPER / APPLICANT
MERRITT PROPERTIES, LLC
2066 LORD BALTIMORE DRIVE
BALTIMORE, MD 21244
PHONE (410) 298-2600
FAX (410) 298-9644

REVISIONS

DATE	NO.	DESCRIPTION	BY

STORM WATER MANAGEMENT PLAN
SUBMERGED GRAVEL WETLAND DETAILS – ESD #1 & #5

MARYLAND FOOD CENTER AUTHORITY

PARCEL B-1 & E-1
(WAREHOUSE & OFFICE)

HOWARD COUNTY, MARYLAND
SCALE: N/A
DATE: OCTOBER, 2014

DRAWING NO.
C-32
SHEET 32 OF 57

SDP-14-068

NOTES

1. UNLESS OTHERWISE NOTED, THE DIVERSION STRUCTURE SHALL BE BUILT IN ACCORDANCE WITH SHA STANDARD DETAIL PLATE MD-384.09 (96" DIA. PRECAST MANHOLE).
2. STRUCTURE TO BE CONCRETE SHA MIX NO.6.
3. STRUCTURE TO BE PRECAST.
4. MANHOLE STEPS SHALL BE AS SHOWN ON SHA STANDARD DETAIL PLATES MD-383.91 OR MD-383.92.
5. ALL PIPE JOINTS TO HAVE GROUT USING NON-SHRINK GROUT JOINT FILLER.
6. MINIMUM COVER FOR ANY BARS SHALL BE 2" ON WALLS AND 3" AT BOTTOM.
7. SEE SHA STANDARD DETAIL PLATES MD-383.31 & 383.32 FOR HEAVY TRAFFIC MANHOLE FRAME & COVER.

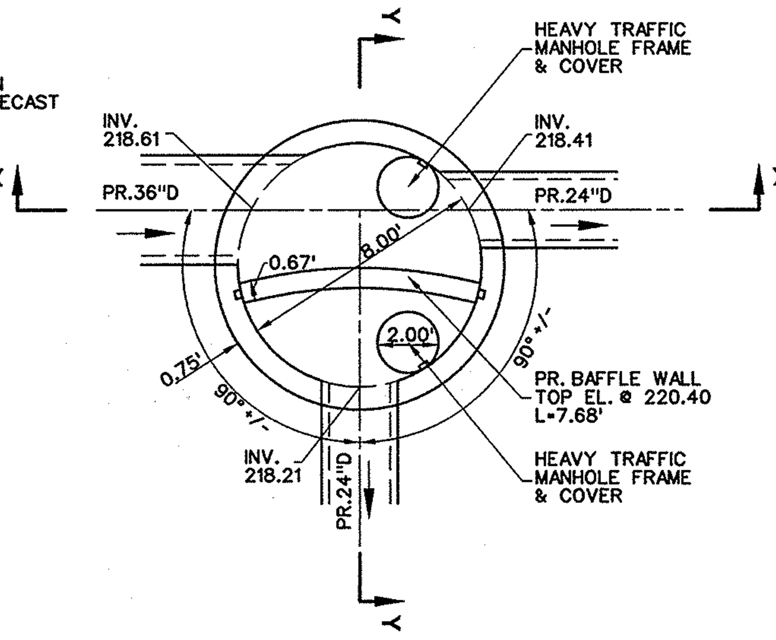

PLAN

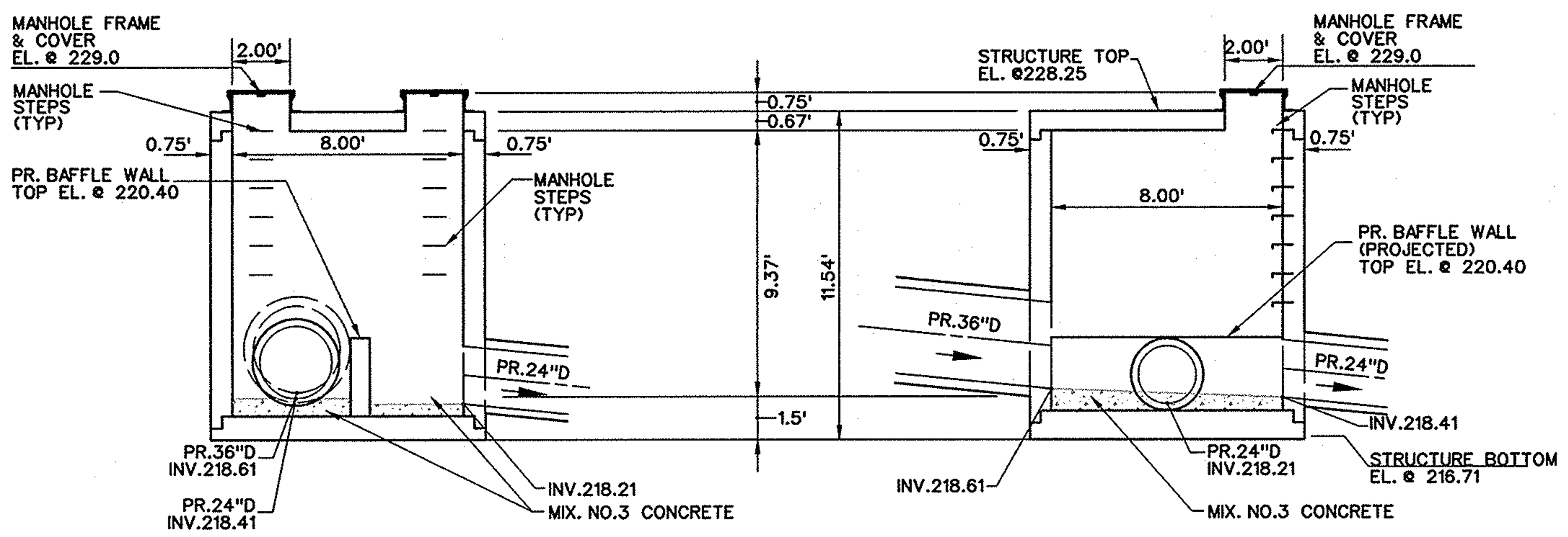

SECTION Y-Y

SECTION X-X

DIVERSION MANHOLE M-8 DETAIL

SCALE 1"=5'

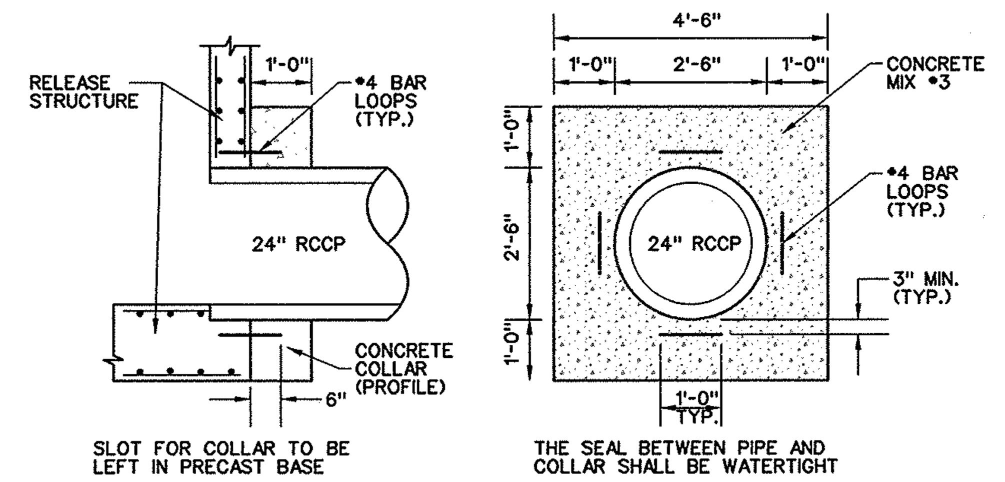

PRECAST RISER CONCRETE COLLAR DETAIL

NOT TO SCALE

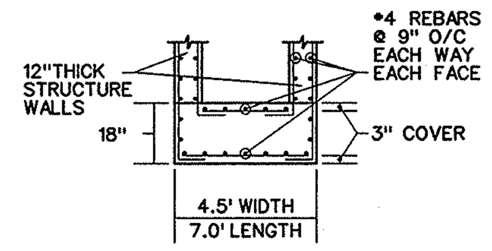

RELEASE STRUCTURE BASE DETAIL

NOT TO SCALE

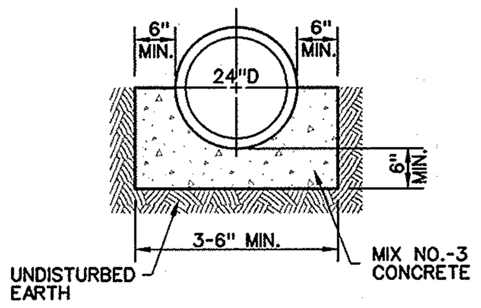

CONCRETE BEDDING DETAIL

NOT TO SCALE

NOTE: FOR DRAIN FROM S-4 TO M-7.

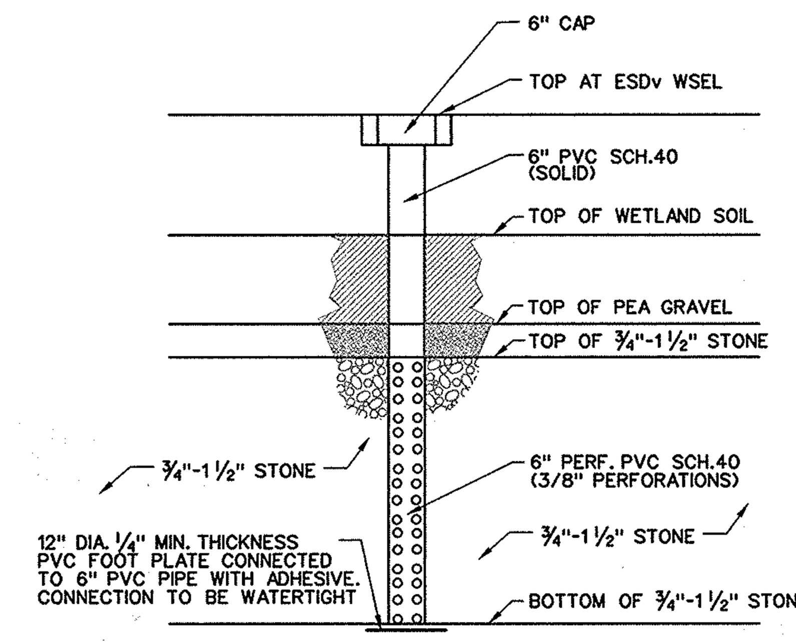

OBSERVATION WELL DETAIL

NOT TO SCALE

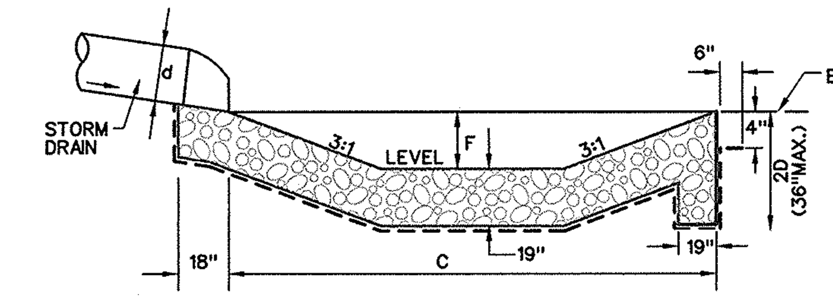

SECTION A-A

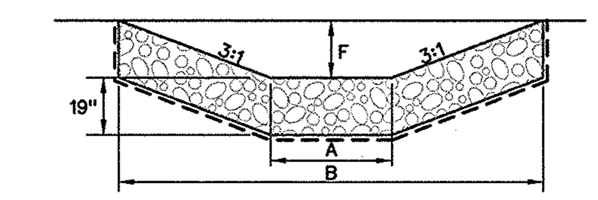

SECTION B-B

NOTE:
VOIDS IN STONE ARE TO BE PACKED WITH 3:1 SAND/SOIL MIXTURE. SURFACE IS SEED AND MULCH. "SAND" IS ASTM C-33. "SOIL" IS ENGINEER APPROVED "LOAM".

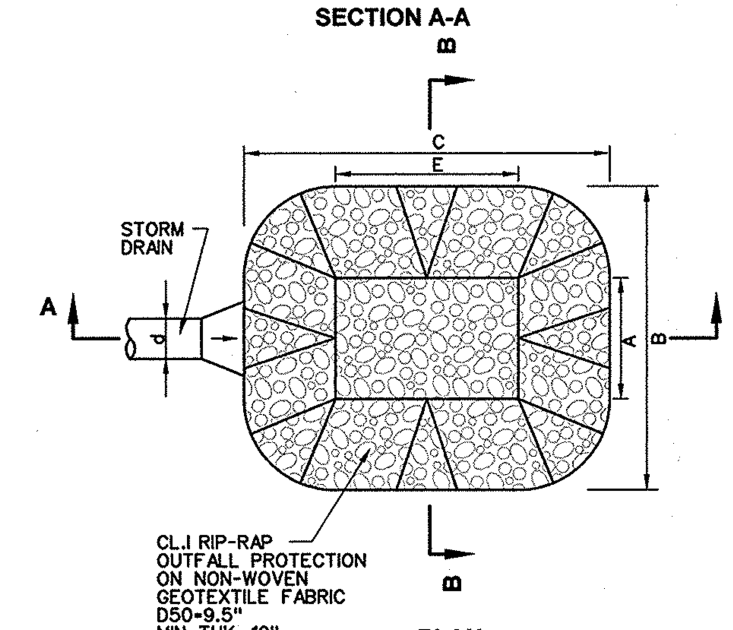

PLAN

TYPE I PLUNGE POOL DIMENSIONS

PIPE DIA.	'A'	'B'	'E'	'C'	'F'
15"	2.50'	6.28'	3.75'	7.53'	0.63'
18"	3.00'	7.50'	4.50'	9.00'	0.75'
21"	3.50'	8.78'	5.25'	10.50'	0.88'
24"	4.00'	10.00'	6.00'	12.00'	1.00'
27"	4.50'	11.28'	6.75'	13.50'	1.13'
30"	5.00'	12.50'	7.50'	15.00'	1.25'
36"	6.00'	15.00'	9.00'	18.00'	1.50'
42"	7.00'	17.50'	10.50'	21.00'	1.75'
48"	8.00'	20.00'	12.00'	24.00'	2.00'
54"	9.00'	22.50'	13.50'	27.00'	2.25'
60"	10.00'	25.00'	15.00'	30.00'	2.50'
72"	12.00'	30.00'	18.00'	36.00'	3.00'

PLUNGE POOL DETAIL

NOT TO SCALE

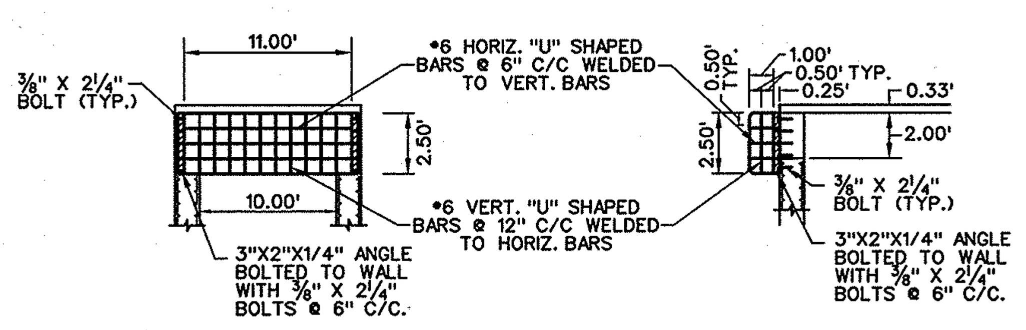

FRONT VIEW

SIDE VIEW

TRASH RACK #1 DETAIL FOR 10.00' WIDE x 2.00' HIGH OPENINGS @ S-1

NOT TO SCALE

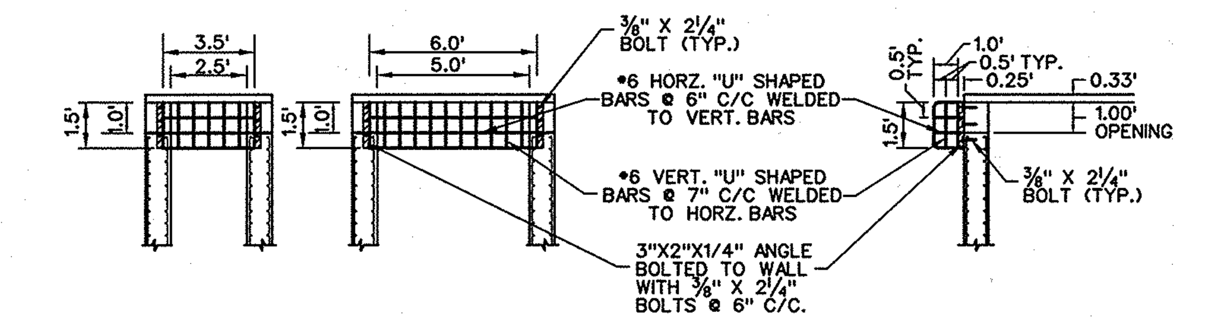

FRONT VIEW FRONT VIEW SIDE VIEW

TRASH RACK DETAIL FOR 5.0' & 2.5' WIDE x 1' HIGH OPENING @ S-4 & S-5

NOT TO SCALE

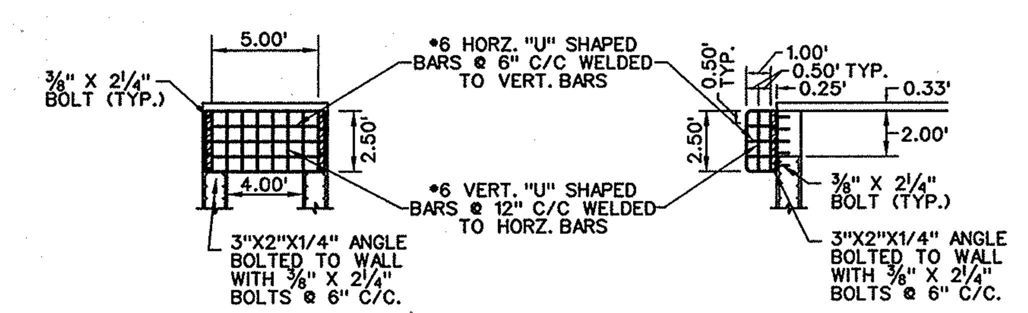

FRONT VIEW

SIDE VIEW

TRASH RACK #2 DETAIL FOR 4.00' WIDE x 2.00' HIGH OPENINGS @ S-1

NOT TO SCALE

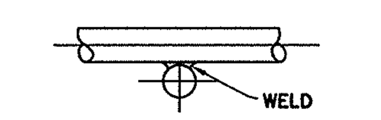

1. NO RUST SHALL BE PERMITTED ON REBAR SURFACES TO BE WELDED
2. TRASH RACK SHOULD BE HOT DIPPED GALVANIZED AFTER SHOP FABRICATION

TRASH RACK WELDING DETAIL

NOT TO SCALE

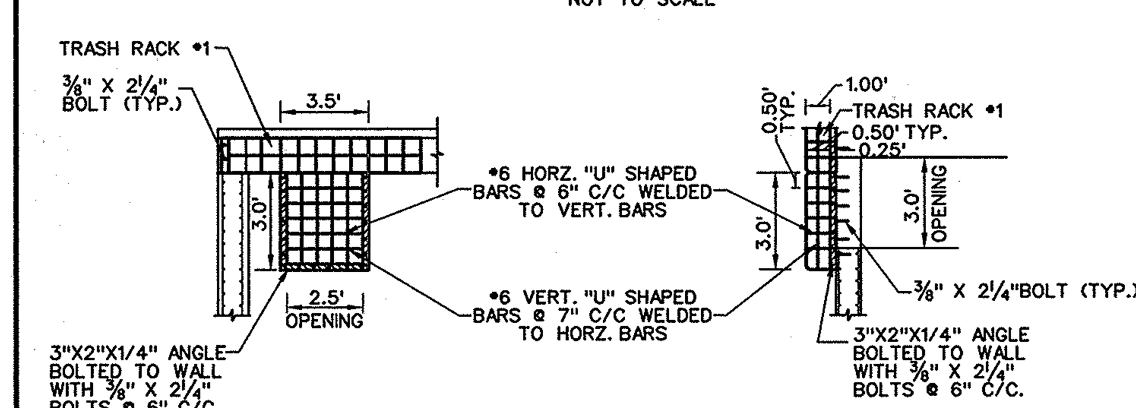

FRONT VIEW

SIDE VIEW

TRASH RACK DETAIL #3 FOR 2.50' WIDE x 3.00' HIGH OPENING @ S-1

NOT TO SCALE

NOTES

STRUCTURE NOTES

CAST IN PLACE STRUCTURE:

1) UNLESS OTHERWISE NOTED, INLET SHALL BE BUILT IN ACCORDANCE WITH HO. CO. STD. DETAIL, PLATE D-4.02, TYPE A-5 INLET.
2) STRUCTURE TO BE CAST IN PLACE REINFORCED CONCRETE MIX NO.6.
3) REINFORCING SHALL BE IN ACCORDANCE WITH STD. DETAIL, PLATE D-4.02, BE CONTINUOUS THROUGH STRUCTURE AND AT CORNERS, AND TO HAVE 16" BAR LAPS.
4) PROVIDE ADDITIONAL REBARS ALONG PERIMETER OF ALL OPENINGS.
5) INSTALL MANHOLE STEPS. SEE HO.CO STD. DETAIL, PLATE G-5.21.
6) ALL PIPE JOINTS TO HAVE GROUT USING NON-SHRINK GROUT JOINT FILLER.
7) ALL EXPOSED CORNERS OF CONCRETE SHALL BE CHAMFERED WITH ¾" x ¾" MILLED CHAMFER STRIPS.
8) MINIMUM COVER FOR ANY BARS SHALL BE 2" ON WALLS AND 3" AT BOTTOM.

OPTIONAL PRECAST STRUCTURE:

1) SHOP DRAWINGS FOR PRECAST CONCRETE RISERS WITH SUPPORTING STRUCTURAL CALCULATIONS (SIGNED AND SEALED BY A MARYLAND REGISTERED PROFESSIONAL ENGINEER) MEETING A.S.T.M. REQUIREMENTS FOR PRE-CAST STRUCTURES MUST BE SUBMITTED TO THE ENGINEER, AND THE APPROVING AGENCY (HOWARD COUNTY) FOR APPROVAL PRIOR TO FABRICATION.
IF ANY STRUCTURE DIMENSIONS VARY FROM WHAT WAS ORIGINALLY REVIEWED/APPROVED, THEN THE HYDRAULICS, FLOTATION AND STRUCTURAL INTEGRITY WILL HAVE TO BE RE-ANALYZED. ALL JOINTS AND CONNECTIONS MUST BE WATERTIGHT. THE METHOD OF ACHIEVING A WATERTIGHT SEAL BETWEEN THE RISER STRUCTURE, AND ALL CONDUITS (I.E., BARREL, AND LOW FLOW PIPES) SHALL BE APPROVED BY THE ENGINEER IN CHARGE, AND HOWARD COUNTY PRIOR TO FABRICATION.
2) STRUCTURE SHALL BE PROVIDED WITH THE SAME ITEMS: #5, 6, 7 AS CAST IN PLACE STRUCTURE.
3) CONCRETE COLLAR MUST BE PLACED AROUND OUTFALL PIPE AND ATTACHED TO RELEASE STRUCTURE WHEN PRECAST STRUCTURE IS USED. SEE DETAIL THIS SHEET.

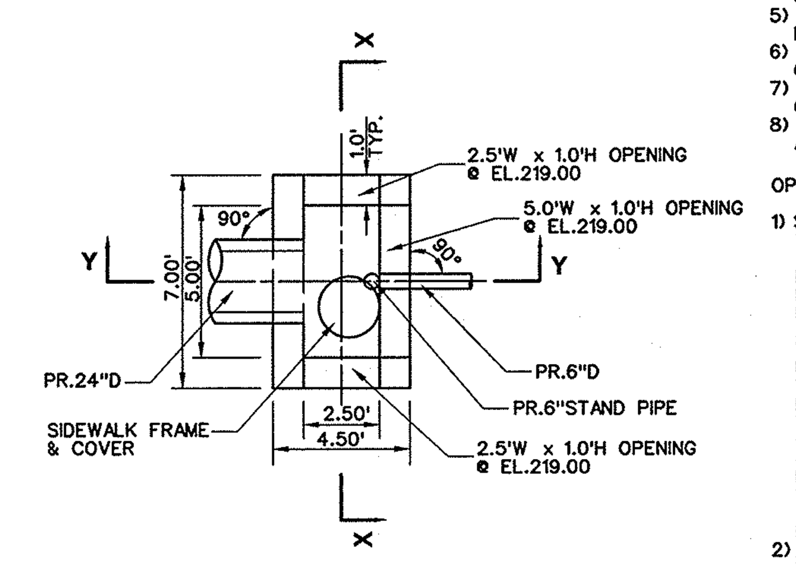

PLAN

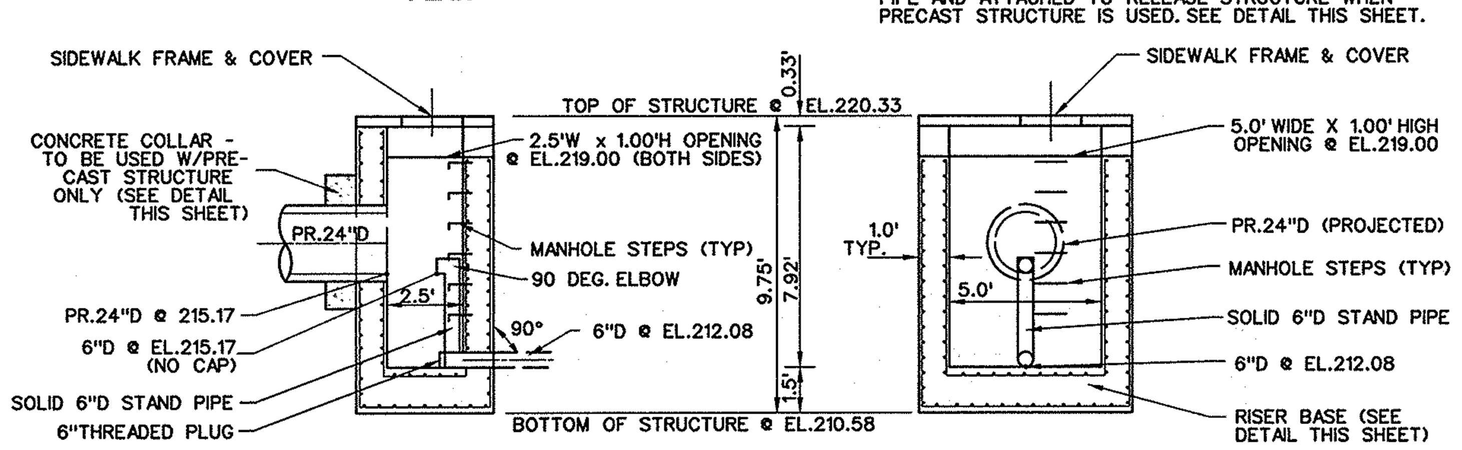

SECTION Y-Y

SECTION X-X

RELEASE STRUCTURE S-4 DETAIL

SCALE 1"=5'

6" STAND PIPE SHALL BE ATTACHED TO RELEASE STRUCTURE WITH STAINLESS STEEL STRAPS, 1-½" WIDE, 11" GAUGE THICKNESS AT 3' MAX. SPACING (MIN. OF 2 PER PIPE JOINT) ANCHORED WITH ⅜" S.S. EXPANSION BOLTS.

APPROVED: DEPARTMENT OF PLANNING AND ZONING

Chief, Development Engineering Division	Date 11-6-14
Chief, Division of Land Development	Date 6-30-14
Director	Date 11/21/14

ADDRESS CHART

LOT / PARCEL NO.	STREET ADDRESS
PARCEL B-1	7901 OCEANO AVENUE
PARCEL E-1	7775 CHESAPEAKE BAY COURT

PERMIT INFORMATION CHART

SUBDIVISION NAME			SECTION / AREA		LOT / PARCEL NO.
MARYLAND FOOD CENTER AUTHORITY			3		B-1/662 & E-1/696
PLAT NO. or L/F	GRID NO.	ZONING	TAX MAP NO.	ELEC. DIST.	CENSUS TRACT
23017-23021	21	M-2	43	6TH	6069.01

BLDG
Baltimore Land Design Group Inc.
Consulting Engineers
230 SCHILLING CIRCLE, SUITE 364 • HUNT VALLEY, MARYLAND 21031
PHONE: 410.229.9851 • FAX: 410.229.9865 • BLDG@BLDGINC.COM

STATE OF MARYLAND BOARD FOR PROFESSIONAL ENGINEERS 21245 ROSTEK-ZARSKI 10/15/14

PROFESSIONAL CERTIFICATION

I HEREBY CERTIFY THAT THESE DOCUMENTS WERE PREPARED OR APPROVED BY ME, AND THAT I AM A DULY LICENSED PROFESSIONAL ENGINEER UNDER THE LAWS OF THE STATE OF MARYLAND, LICENSE NO. 21245, EXPIRATION DATE: JUNE 9, 2016.

OWNER
MARYLAND FOOD CENTER AUTHORITY
7801 OCEANO AVE
JESSUP, MD 20794
PHONE (410) 379-5760
FAX (410) 379-5773

DEVELOPER / APPLICANT
MERRITT PROPERTIES, LLC
2066 LORD BALTIMORE DRIVE
BALTIMORE, MD 21244
PHONE (410) 298-2600
FAX (410) 298-9644

REVISIONS

DATE	NO.	DESCRIPTION	BY

STORM WATER MANAGEMENT PLAN
SUBMERGED GRAVEL WETLAND DETAILS - ESD #4
AND OTHER MISCELLANEOUS DETAILS
MARYLAND FOOD CENTER AUTHORITY
PARCEL B-1 & E-1
(WAREHOUSE & OFFICE)

HOWARD COUNTY, MARYLAND
SCALE: AS SHOWN

DATE: OCTOBER, 2014

DRAWING NO.
C-33

ESD PRACTICE - MICRO-BIORETENTION

CONSTRUCTION SPECIFICATIONS

B.4.C Specifications for Micro-Bioretention.
Rain Gardens, Landscape Infiltration & Infiltration Berms

1. Material Specifications: The allowable materials to be used in these practices are detailed in Table B.4.1.

2. Filtering Media or Planting Soil: The soil shall be a uniform mix, free of stones, stumps, roots or other similar objects larger than two inches. No other materials or substances shall be mixed or dumped within the micro-bioretention practice that may be harmful to plant growth, or prove a hindrance to the planting or maintenance operations. The planting soil shall be free of Bermuda grass, Quackgrass, Johnson grass, or other noxious weeds as specified under COMAR 15.08.01.05.

   The planting soil shall be tested and shall meet the following criteria:

   - Soil Component - Loamy Sand or Sandy Loam (USDA Soil Textural Classification)
   - Organic Content - Minimum 10% by dry weight (ASTM D 2974). In general, this can be met with a mixture of loamy sand (60%-65%) and compost (35% to 40%) or sandy loam (30%), coarse sand (30%), and compost (40%).
   - Clay Content - Media shall have a clay content of less than 5%.
   - pH Range - Should be between 5.5 - 7.0. Amendments (e.g., lime, iron sulfate plus sulfur) may be mixed into the soil to increase or decrease pH.

   There shall be at least one soil test per project. Each test shall consist of both the standard soil test for pH, and additional tests of organic matter, and soluble salts. A textural analysis is required from the site stockpiled topsoil. If topsoil is imported, then a texture analysis shall be performed for each location where the topsoil was excavated.

3. Compaction: It is very important to minimize compaction of both the base of bioretention practices and the required backfill. When possible, use excavation hoes to remove original soil. If practices are excavated using a loader, the contractor should use wide track or marsh track equipment, or light equipment with turf type tires. Use of equipment with narrow tracks or narrow tires, rubber tires with large lugs, or high-pressure tires will cause excessive compaction resulting in reduced infiltration rates and is not acceptable. Compaction will significantly contribute to design failure.

   Compaction can be alleviated at the base of the bioretention facility by using a primary tilling operation such as a chisel plow, ripper, or subsoiler. These tilling operations are to refracture the soil profile through the 12 inch compaction zone. Substitute methods must be approved by the engineer. Rototillers typically do not till deep enough to reduce the effects of compaction from heavy equipment.

   Rototill 2 to 3 inches of sand into the base of the bioretention facility before backfilling the optional sand layer. Pump any ponded water before preparing (rototilling) base.

   When backfilling the topsoil over the sand layer, first place 3 to 4 inches of topsoil over the sand, then rototill the sand/topsoil to create a gradation zone. Backfill the remainder of the topsoil to final grade. When backfilling the bioretention facility, place soil in lifts 12" to 18". Do not use heavy equipment within the bioretention basin. Heavy equipment can be used around the perimeter of the basin to supply soils and sand. Grade bioretention materials with light equipment such as a compact loader or a dozer/loader with marsh tracks.

4. Plant Material: Recommended plant material for micro-bioretention practices can be found in Appendix A, Section A.2.3 of the "2000 Maryland Stormwater Design Manual Volumes I & II".

5. Plant Installation: Compost is a better organic material source, is less likely to float, and should be placed in the invert and other low areas. Mulch should be placed in surrounding to a uniform thickness of 2" to 3". Shredded or chipped hardwood mulch is the only accepted mulch. Pine mulch and wood chips will float and move to the perimeter of the bioretention area during a storm event and are not acceptable. Shredded mulch must be well aged (6 to 12 months) for acceptance.

   Rootstock of the plant material shall be kept moist during transport and on-site storage. The plant root ball should be planted so 1/8th of the ball is above final grade surface. The diameter of the planting pit shall be at least six inches larger than the diameter of the planting ball. Set and maintain the plant straight during the entire planting process. Thoroughly water ground bed cover after installation.

   Trees shall be braced using 2" by 2" stakes only as necessary and for the first growing season only. Stakes are to be equally spaced on the outside of the tree ball.

   Grasses and legume seed should be drilled into the soil to a depth of at least one inch. Grass and legume plugs shall be planted following the non-grass ground cover planting specifications.

   The topsoil specifications provide enough organic material to adequately supply nutrients from natural cycling. The primary function of the bioretention structure is to improve water quality. Adding fertilizers defeats, or at a minimum, impedes this goal. Only add fertilizer if wood chips or mulch are used to amend the soil. Rototill urea fertilizer at a rate of 2 pounds per 1000 square feet.

6. Underdrains: should meet the following criteria:

   Pipe- Should be 4" to 6" diameter, slotted or perforated rigid plastic pipe (ASTMF 758, Type PS 28, or AASHTO-M-278) in a gravel layer. The preferred material is slotted, 4" rigid pipe (e.g., PVC or HDPE).

   Perforations - If perforated pipe is used, perforations should be 3/8" diameter located 6" on center with a minimum of four holes per row. Pipe shall be wrapped with a 1/4" (No. 4 or 4x4) galvanized hardware cloth.

   Gravel - The gravel layer (No. 57 stone preferred) shall be at least 3" thick above and below the underdrain.

   The main collector pipe shall be at a minimum 0.5% slope.

   A rigid, non-perforated observation well must be provided (one per every 1,000 square feet) to provide a clean-out port and monitor performance of the filter.

   A 4" layer of pea gravel (1/8" to 3/8" stone) shall be located between the filter media and underdrain to prevent migration of fines into the underdrain. This layer may be considered part of the filter bed when bed thickness exceeds 24".

   The main collector pipe for underdrain systems shall be constructed at a minimum slope of 0.5%. Observation wells and/or clean-out pipes must be provided (one minimum per every 1000 square feet of surface area).

7. Miscellaneous: These practices may not be constructed until all contributing drainage area has been stabilized.

Table B.4.1
Materials Specifications for Micro-Bioretention, Rain Gardens & Landscape Infiltration

MATERIAL	SPECIFICATION	SIZE	NOTES
Plantings	See Appendix A, Table A.4	n/a	plantings are site-specific
Planting soil [2' to 4' deep]	loamy sand (60 - 65%) & compost (35 - 40%) or sandy loam (30%), coarse sand (30%) & compost (40%)	n/a	USDA soil types loamy sand or sandy loam; clay content < 5%
Organic content	Min. 10% by dry weight (ASTM D 2974)		
Mulch	shredded hardwood		aged 6 months, minimum; no pine or wood chips
Pea gravel diaphragm	pea gravel: ASTM-D-448	NO. 8 OR NO. 9 (1/8" TO 3/8")	
Curtain drain	ornamental stone: washed cobbles	stone: 2" to 5"	
Geotextile		n/a	PE Type 1 nonwoven
Gravel (underdrains and infiltration berms)	AASHTO M-43	NO. 57 OR NO. 6 AGGREGATE (3/8" to 3/4")	
Underdrain piping	F 758, Type PS 28 or AASHTO M-278	4" to 6" rigid schedule 40 PVC or SDR35	Slotted or perforated pipe; 3/8" perf. @ 6" on center, 4 holes per row; minimum of 3" of gravel over pipes; not necessary underneath pipes. Perforated pipe shall be wrapped with 1/4-inch galvanized hardware cloth
Poured in place concrete (if required)	MSHA Mix No. 3; f'c= 3500 psi @ 28 days, normal weight, air-entrained; reinforcing to meet ASTM-615-60	n/a	on-site testing of poured-in-place concrete required: 28 day strength and slump test; all concrete design (cast-in-place or pre-cast) not using previously approved State or local standards requires design drawings sealed and approved by a professional structural engineer licensed in the State of Maryland - design to include meeting ACI Code 350.R/89; vertical loading [H-10 or H-20]; allowable horizontal loading (based on soil pressures); and analysis of potential cracking
Sand	AASHTO-M-6 or ASTM-C-33	0.02" to 0.04"	Sand substitutions such as Diabase and Graystone (AASHTO) #10 are not acceptable. No calcium carbonated or dolomitic sand substitutions are acceptable. No "rock dust" can be used for sand.

CONSTRUCTION CRITERIA, INSPECTION, AND MAINTENANCE CRITERIA

M-6. Micro-Bioretention

Construction Criteria:

The following items should be addressed during construction of projects with micro-bioretention:

1. Erosion and Sediment Control: Micro-bioretention practices should not be constructed until the contributing drainage area is stabilized. If this is impractical, runoff from disturbed areas shall be diverted away and no sediment control practices shall be used near the proposed location.
2. Soil Compaction: Excavation should be conducted in dry conditions with equipment located outside of the practice to minimize bottom and sidewall compaction. Only lightweight, low ground-contact equipment should be used within micro-bioretention practices and the bottom scarified before installing underdrains and filtering media.
3. Underdrain Installation: Gravel for the underdrain system should be clean, washed, and free of fines. Underdrain pipes should be checked to ensure that both the material and perforations meet specifications. The upstream ends of the underdrain pipe should be capped prior to installation.
4. Filter Media Installation: Bioretention soils may be mixed on-site before placement. However, soils should not be placed under saturated conditions. The filter media should be placed and graded using excavators or backhoes operating adjacent to the practice and be placed in horizontal layers (12 inches per lift maximum). Proper compaction of the media will occur naturally. Spraying or sprinkling water on each lift until saturated may quicken settling times.
5. Landscape Installation: The optimum planting time is during the Fall. Spring planting is also acceptable but may require watering.

Inspection:

Regular inspections shall be made during the following stages of construction:

1. During excavation to subgrade and placement and backfill of underdrain systems.
2. During placement of filter media.
3. During construction of appurtenant conveyance.
4. Upon completion of final grading and establishment of permanent stabilization.

Maintenance Criteria:

The following items should be addressed to ensure proper maintenance and long-term performance of micro-bioretention practices:

1. Privately owned practices shall have a maintenance plan and shall be protected by easement, deed restriction, ordinance, or other legal measures preventing its neglect, adverse alteration, and removal.
2. The top few inches of filter media should be removed and replaced when water ponds for more than 48 hours. Silts and sediment should be removed from the surface of the filter bed when accumulation exceeds one inch.
3. Where practices are used to treat areas with higher concentrations of heavy metals (e.g., parking lots, roads), mulch should be replaced annually. Otherwise, the top two to three inches should be replaced as necessary.
4. Occasional pruning and replacement of dead vegetation is necessary. If specific plants are not surviving, more appropriate species should be used. Watering may be required during prolonged dry periods.

OPERATION AND MAINTENANCE SCHEDULE

FOREBAY

1. Forebay shall be inspected annually and after major storm events.
2. Check for woody vegetation on dam and within 25 feet of release structure.
3. Visible signs of erosion in the forebay as well as the riprap stones or gabion stone outlet area shall be repaired.
4. Structural components of the forebay such as the dam, release structure and pipes shall be repaired upon detection of any failure. Grass should be maintained in good condition and be less than 12" in mowing height.
5. Debris and litter shall be removed during regular mowing operations.
6. Sediment shall be removed from forebay when 50% of storage loss has been achieved or when necessary for aesthetic reasons.

BIORETENTION

1. Annual maintenance of plant material, mulch layer, sand media and soil layer is required. Maintenance of mulch and soil is limited to correction areas of erosion or washout. Check for dewatering within 48 hours. When necessary, replace filter media per plan.
2. Schedule of plant inspection will be twice a year in spring and fall. This inspection will include removal of dead, diseased and excessive vegetation considered beyond treatment. Replacement of all diseased trees, shrubs, deficient stakes and wires will be required.
3. Mulch layer shall be inspected each spring. Once every 2 to 3 years, remove previous mulch layer and apply new 2 to 3 inch layer.
4. Soil erosion and flow blockages to be addressed on an as needed basis with a minimum of once per month and after heavy storms inspections. Inspect clean outs and observation wells along with overflow inlets and outfall/exit pipes at least once a month and after heavy storms.

ESD PRACTICE - PERVIOUS CONCRETE

CONSTRUCTION SPECIFICATIONS

Specifications for Pervious Concrete

Properly installed pervious concrete requires trained and experienced producers and construction contractors.

The actual mix proportions for pervious concrete varies depending on the application, mechanical properties required, and materials used. Concrete producers should develop the mix proportions based on the project specifications. A geotechnical engineer needs to be onsite so that he or she can certify the proper installation of the pervious concrete. The following specifications are for reference purposes only. They are not job specific. For more job specific/detailed specifications, please see Geotechnical Report and specifications developed for this project by a pervious concrete producer / installer. Producer / installer must be experienced / pre-qualified for designing / installation of pervious concrete and must be approved by the Developer.

Design Thickness - Pervious concrete applications shall be designed so that the thickness of the concrete slab shall support the traffic and vehicle types that will be carried. Applications may be designed using either standard pavement procedures (e.g., AASHTO, ACI 325.9R, ACI 330R) or using structural values derived from flexible pavement design procedures.

Mix & Installation - Traditional Portland cements (ASTM C 150, C 1157) may be used in pervious concrete applications. Phosphorus admixtures may also be used. Materials should be tested (e.g., trial batching) prior to construction so that critical properties (e.g. settling time, rate of strength development, porosity, permeability) can be determined.

Aggregate - Pervious concrete contains a limited fine aggregate content. Commonly used gradations include ASTM C 33 No.67 (3/4 in. to No. 4), No. 8 (3/8 in. to No. 16) and No. 89 (3/8 in. to No. 50) sieves. Single-sized aggregate (up to 1 inch) may also be used.

Water content - Water-to-cement ratios between 0.27 and 0.30 are used routinely with proper inclusion of chemical admixtures. Water quality should meet ACI 30a. As a general rule, potable water should be used although recycled concrete production water meeting ASTM C 94 or AASHTO M 157 may also be used.

Admixtures - Chemical admixtures (e.g., retarders or hydration-stabilizers) are used to obtain special properties in pervious concrete. Use of admixtures should meet ASTM C 494 (chemical admixtures) and ASTM C 260 (air entraining admixtures) and closely follow manufacturer's recommendations.

Base course - The base course shall be AASHTO No. 3 or 4 course aggregate with an assumed open pore space of 30% (n=0.30).

PERVIOUS CONCRETE MIX PROPORTIONING*		
	PROPORTION RANGE (lbs/yd^3)	TYPICAL PROPORTIONS (lbs/yd^3)
CEMENTITIOUS MATERIAL	450 TO 700	450 TO 700
WATER/CEMENTITIOUS RATIO	0.20 TO 0.45	0.27 TO 0.30
COARSE AGGREGATE	2000 TO 2700	2400 TO 2600
VOID CONTENT	15% TO 35%	20% TO 30%

MINIMUM REQUIRED PERMEABILITY OF PERVIOUS CONCRETE SHALL BE 8"/HR.

*FOR REFERENCE PURPOSES ONLY

CONSTRUCTION CRITERIA, INSPECTION, AND MAINTENANCE CRITERIA

A-2 Permeable Pavements

Construction Criteria:

The following items should be addressed during construction of projects with permeable pavement:

1. Erosion and Sediment Control: Final grading for installation should not take place until the surrounding site is stabilized. If this cannot be accomplished, runoff from disturbed areas shall be diverted around proposed pavement locations. .
2. Soil Compaction: Sub soils shall not be compacted. Construction should be performed with lightweight, wide tracked equipment to minimize compaction. Excavated materials should be placed in a contained area.
3. Distribution Systems: Overdrain, underdrain, and distribution pipes shall be checked to ensure that both the material and perforations meet specifications (see Appendix B.4 of the "2000 Maryland Stormwater Design Manual Volumes I & II"). The upstream ends of pipes should be capped prior to installation. All underdrain or distribution pipes used should be installed flat along the bed bottom.
4. Subbase Installation: Subbase aggregate shall be clean and free of fines. The subbase shall be placed in lifts and lightly rolled according to the specifications (see Appendix B.4 of the "2000 Maryland Stormwater Design Manual Volumes I & II").

Inspection:

Regular inspections shall be made during the following stages of construction:

1. During excavation to subgrade.
2. During placement and backfill of any drainage or distribution system(s).
3. During placement of the crushed stone subbase material.
4. During placement of the surface material.
5. Upon completion of final grading and establishment of permanent stabilization.

OPERATION AND MAINTENANCE SCHEDULE

PERMEABLE PAVING: Operation and Maintenance

1. Pavements should be used only where regular maintenance can be performed. Maintenance agreements should clearly specify how to conduct routine tasks to ensure long term performance.
2. Pavement surfaces should be swept and vacuumed to reduce sediment accumulation and ensure continued surface porosity. Sweeping should be performed at least twice annually with a commercial cleaning unit. Washing systems and compressed air units should not be used to perform surface cleaning.
3. Drainage pipes, inlets, stone edge drains and other structures within or draining to the subbase should be cleaned out at regular intervals.
4. Trucks and other heavy vehicles can grind dirt and grit into the porous surfaces, leading to clogging and premature failure. These vehicles should be prevented from tracking and spilling material onto the pavement.
5. Deicers should be used in moderation. When used, deicers should be non-toxic and organic and can be applied either as blended magnesium chloride-based liquid product or as pretreated salt. Snow plowing should be done carefully with blades set one inch higher than normal. Plowed snow piles and snowmelt should not be directed to permeable pavement.

Non-structural Practice Inspection Requirements During Construction

At a minimum, regular inspections shall be made and documented at the following specified stages of construction:

1. Upon completion of final grading
2. Upon the establishment of permanent stabilization.
3. Before the issuance of the final certificate of occupancy approval.

APPROVED: DEPARTMENT OF PLANNING AND ZONING

Chief, Development Engineering Division	Date 11-6-14
Chief, Division of Land Development	Date 11-20-14
Director	Date 11/28/14

ADDRESS CHART	
LOT / PARCEL NO.	STREET ADDRESS
PARCEL B-1	7901 OCEANO AVENUE
PARCEL E-1	7775 CHESAPEAKE BAY COURT

PERMIT INFORMATION CHART

SUBDIVISION NAME			SECTION / AREA		LOT / PARCEL NO.
MARYLAND FOOD CENTER AUTHORITY			3		B-1/662 & E-1/696
PLAT NO. or L/F	GRID NO.	ZONING	TAX MAP NO.	ELEC. DIST.	CENSUS TRACT
23017-23021	21	M-2	43	6TH	6069.01

BLDG
Baltimore Land Design Group Inc.
Consulting Engineers
230 SCHILLING CIRCLE, SUITE 364 • HUNT VALLEY, MARYLAND 21031
PHONE: 410.229.9851 • FAX: 410.229.9865 • BLDG@BLDGINC.COM

PROFESSIONAL CERTIFICATION

I HEREBY CERTIFY THAT THESE DOCUMENTS WERE PREPARED OR APPROVED BY ME, AND THAT I AM A DULY LICENSED PROFESSIONAL ENGINEER UNDER THE LAWS OF THE STATE OF MARYLAND, LICENSE NO. 21245, EXPIRATION DATE: JUNE 9, 2016.

OWNER
MARYLAND FOOD CENTER AUTHORITY
7801 OCEANO AVE
JESSUP, MD 20794
PHONE (410) 379-5760
FAX (410) 379-5773

DEVELOPER / APPLICANT
MERRITT PROPERTIES, LLC
2066 LORD BALTIMORE DRIVE
BALTIMORE, MD 21244
PHONE (410) 298-2600
FAX (410) 298-9644

REVISIONS			
DATE	NO.	DESCRIPTION	BY

STORM WATER MANAGEMENT PLAN
CONSTRUCTION SPECIFICATIONS AND NOTES - MICRO-BIORETENTION AND PERVIOUS CONCRETE
MARYLAND FOOD CENTER AUTHORITY
PARCEL B-1 & E-1
(WAREHOUSE & OFFICE)

HOWARD COUNTY, MARYLAND
SCALE: N/A
DATE: OCTOBER, 2014

DRAWING NO.
C-34

CONSTRUCTION SPECIFICATIONS

B1.1 Supplemental Stormwater Pond and Wetland Specifications (Non-378)

1. It is preferred to use the same material in the embankment as is being installed for the Core trench. If this is not possible because the appropriate material is not available, a dam core with a shell may be used. The cross-section of the stormwater facility should show the limits of the dam core (up to the 10-year water surface elevation) as well as the acceptable materials for the shell. The shape of the dam core and the material to be used in the shell should be provided by the geotechnical engineer.

2. If the compaction tests for site improvements is using a Modified Proctor (AASHTO 180), then to maintain on-site consistency, the Modified Proctor may be used in lieu of a Standard Proctor (AASHTO T-99). The minimum required density using the Modified Proctor test method shall be at least 92% of maximum dry density with a moisture content of +/- 2% of the optimum. The minimum required density using the Standard Proctor test method shall be at least 95% of the maximum dry density with a moisture content of +/- 2% of the optimum.

3. For all stormwater management facilities, a geotechnical engineer or their representative must be present to verify compaction in accordance with the selected test method. This information needs to be provided in a report to the design engineer, so that certification of the construction of the facility, in accordance with MD-378 specifications, can be made.

4. A 4-inch layer of topsoil shall be placed on all disturbed areas of the dam embankment. Seeding, liming, fertilizing, mulching, etc. shall be in accordance with Maryland Soil Conservation Service MD-342 or the 2011 Maryland Standards and Specifications for Soil Erosion and Sediment Control "Permanent Stabilization", B-4-5 Section. The purpose of the topsoil is to establish a good growth of grass which is not always possible with some of the materials that maybe placed for the embankment fill.

5. Geotextile placed beneath rip-rap shall be Class "C" geotextile or better (see Section H-1, Standards and Specifications for Materials, 2011 Standards and Specifications for Soil Erosion and Sediment Control, MDE, 2011). Some acceptable geotextiles that meet the Class "C" criteria include:

   Amoco 4552
   GEOLON N70
   WEBTEC N
   Carthage FX-7
   Mirafi 180

   This is only a partial listing of available geotextiles based on information provided by the manufacturers to the 1997 Specifier's Guide dated December 1996. It is the responsibility of the engineer to verify the adequacy of the material, as there are changes in the manufacturing process and the type of fabric used, which may affect the continued acceptance.

6. A rule of thumb to determine when an excavated pond may need to be considered an embankment pond is as follows:

   Provide calculation of 10H + 20 feet = L, where H equals height from pond bottom to top of dam.

   If the projection of L, downstream in a horizontal line from the upstream toe of slope is below existing ground, the pond can be considered an excavated pond. In addition, the existing ground slope, downstream of the toe must be less than 10%.

7. The design engineer and geotechnical engineer should make the determination that the settlement of the pond will not cause excessive joint extension. For further information on joint extension analysis, see NRCS Publication TR-18.

8. Fill placement shall not exceed a maximum 8-inch. Each lift shall be continuous for the entire length of the embankment.

9. The embankment fill shall not be placed higher than the centerline of the principal spillway until after the principal spillway has been installed. If the embankment needs to be excavated to install the principal spillway, the side slope shall be no less than 2:1.

10. The side slopes of a cut to repair a dam, install a principal spillway for an excavated pond, or other repair work, shall be no less than 2:1.

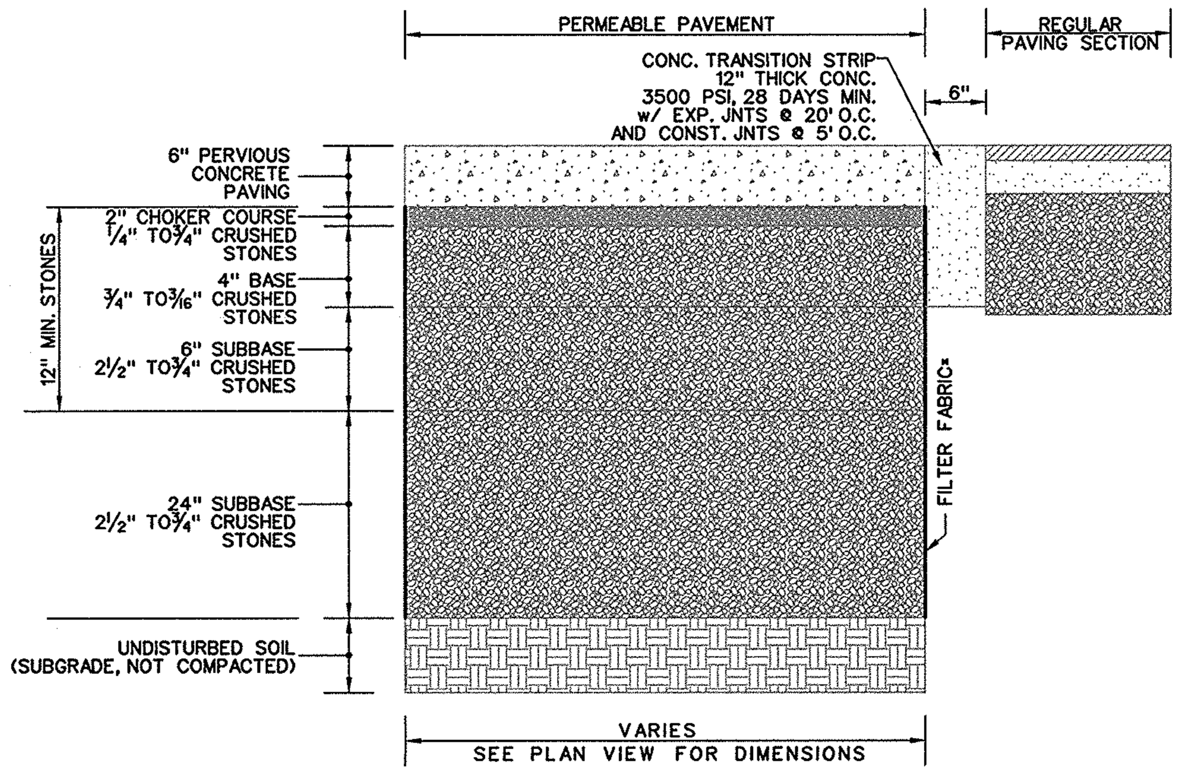

TYPICAL SECTION THROUGH PERVIOUS CONCRETE

NOT TO SCALE

*FILTER FABRIC TO BE USED ON SIDES ONLY

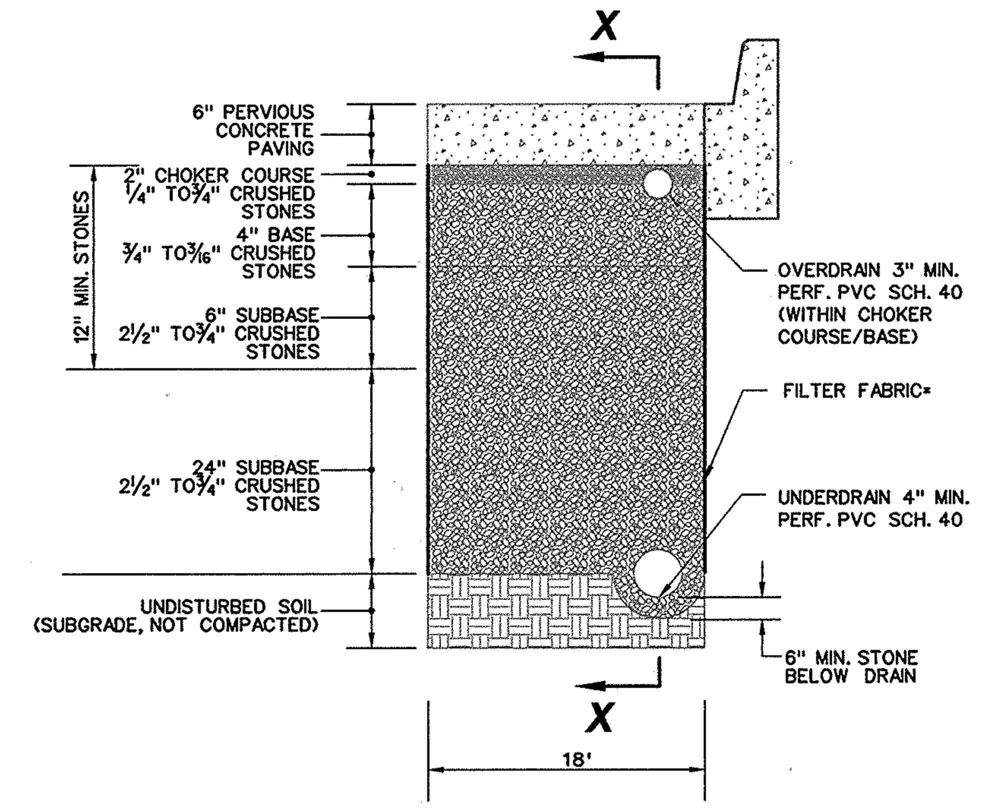

TYPICAL SECTION THROUGH PERVIOUS CONCRETE

NOT TO SCALE

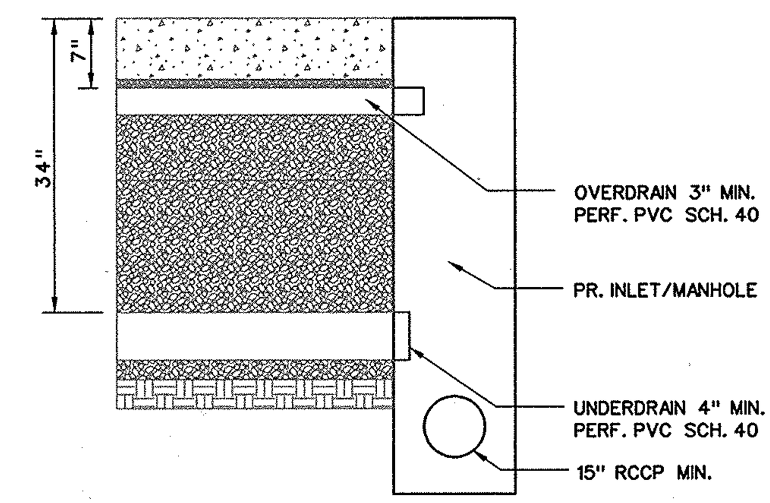

SECTION X-X

NOT TO SCALE

CONSTRUCTION CRITERIA, INSPECTION, AND MAINTENANCE CRITERIA

M-2. Submerged Gravel Wetlands

Construction Criteria:

The following items should be addressed during the construction of projects with submerged gravel wetlands:

1. Site Disturbance: All on-site disturbed areas should be stabilized prior to allowing runoff to enter the newly constructed wetland.

2. Erosion and Sediment Control: The proposed location of a submerged gravel wetland shall be protected during construction. Surface runoff shall be diverted away from the practice during grading operations. Flow splitters and other conveyance infrastructure shall be blocked.

   Wetland construction shall be performed with lightweight, wide-tracked equipment to minimize disturbance and compaction. Excavated materials shall be placed in a contained area. Any pumping operations shall discharge filtered water to a stable outlet.

3. Gravel Media: The aggregate shall be composed of an 18 to 48 inch layer of clean washed, uniformly graded material with a porosity of 40%. Rounded bank run gravel is recommended (e.g., ASTM D448 4,5, or 6 stone or equal).

Wetland Soil:

The surface infiltration rates of the gravel wetland soil should be similar to a low hydraulic conductivity wetland soil (0.1-0.01 ft/day = 3.5 x 10-5 cm/sec to 3.5 x 10-6 cm/sec)). This soil can be manufactured using compost, sand, and some fine soils to blend to a high % organic matter content soil (>15% organic matter). Avoid using clay contents in excess of 15% because of potential migration of fines into subsurface gravel layer. Do not use geotextiles between the horizontal layers of this system as they will clog due to fines and may restrict root growth. Soil shall consist of loose, friable soil, free of ice, snow and rubbish with no admixture of refuse or material toxic to plant growth. Soil shall be reasonably free of seeds and roots of exotic invasive species, stones, lumps and or similar objects larger than two inches in diameter. Manufactured wetland soil will be uniformly mixed to meet the final requirements listed below:

pH 5.5 - 7.5
Moisture Content 25% - 55%
Soluble Salts 2.5 mmhos (dS)
Organic Content >20% (dry weight)
Organic Carbon Content > 12% (dry weight)
Stone and Debris < 5% (by weight)
Foreign Matter <0.5% (by weight)

Particle Size:

- 100% by volume must pass a 1.5 inch screen.
- 85% by volume must pass a 3/4 inch screen.

An intermediate layer of a graded aggregate filter (i.e., pea gravel) is needed to prevent the wetland soil from migrating down into the crushed-stone (gravel) sub-layer. This is to prevent migration of the finer setting bed (wetland soil) into the coarse sublayer. Material compatibility should be evaluated using FHWA criteria (see Ferguson, 2005):

Criteria 1: D_{15}, coarse sublayer ≤ 5 x D_{85}, setting bed
Criteria 2: D_{50}, coarse sublayer ≤ 25 x D_{50}, setting bed

Below the wetland soil and pea gravel is a crushed stone (gravel) sublayer with a 24 in. (0.6 m) minimum thickness. Angular crushed stone is needed with a minimum size ~3/4-in (2-cm). Large particle, angular coarse to very coarse gravel is needed to maintain system longevity.

Native Materials and Liner:

If native a low hydraulic conductivity native soil is not present below the gravel layer, a low permeability liner or soil should be used to: minimize infiltration, preserve horizontal flow in the gravel, and maintain the wetland plants. If geotechnical tests confirm the need for a liner, acceptable options include: (a) 6 to 12 inches (15 - 30 cm) of clay soil (minimum 15% passing the #200 sieve and a minimum permeability of 1 x 10-5 cm/sec), (b) a 30 ml HDPE liner, (c) bentonite, (d) use of chemical additives (see NRCS Agricultural Handbook No. 386, dated 1961, or Engineering Field Manual), or (e) a design prepared by a Professional Engineer.

Inspection:

Regular inspections shall be made during the following stages of construction:

1. During excavation to subgrade.
2. During placement of backfill of perforated inlet pipe and observation wells.
3. During placement of geotextiles and all filter media.
4. During construction of any appurtenant conveyance systems such as diversion structures, inlets, outlets, and flow distribution structures.
5. Upon completion of final grading and establishment of permanent stabilization, and before allowing runoff to enter the wetland.

OPERATION AND MAINTENANCE SCHEDULE

FOREBAY

1. Forebay shall be inspected annually and after major storm events.
2. Check for woody vegetation on dam and within 25 feet of release structure.
3. Visible signs of erosion in the forebay as well as the riprap stones or gabion stone outlet area shall be repaired.
4. Structural components of the forebay such as the dam, release structure and pipes shall be repaired upon detection of any failure. Grass should be maintained in good condition and be less than 12" in mowing height.
5. Debris and litter shall be removed during regular mowing operations.
6. Sediment shall be removed from forebay when 50% of storage loss has been achieved or when necessary for aesthetic reasons.

GRAVEL WETLAND

1. Privately owned practices shall have a maintenance plan and shall be protected by easement, deed restriction, ordinance, or other legal measures preventing its neglect, adverse alteration, and removal.
2. During the first year of operation, inspections should be conducted after every major storm and poorly established areas revegetated.
3. Sediment accumulation in the pretreatment areas should be removed as necessary.
4. Signs of uneven flow distribution within the wetland may mean that the gravel or underdrain is clogged. The gravel and/or underdrain may need to be removed, cleaned and replaced.
5. A dense stand of wetland vegetation should be maintained throughout the life of the facility with plantings replaced as needed.
6. Inlets and outlets to each submerged gravel wetland cell should be free from debris to prevent clogging.
7. Erosion at inflow points should be repaired. Flow splitters should be functional to prevent bypassing of the facility.

BORING SWM #1

Reuling Associates, Inc. Boring Log Page 1 of 12

PROJECT: MFCA
Location: See Boring Location Plan
DATE START: 7/23/2013 | PROJECT No.: | BORING No.: SWM-1
FINISH: 7/23/2013 | ELEV: 207.15 | INSPECTOR:
HAMMER WT.: 140 lbs. | SPOON O.D.: 2" | FOREMAN: Victor
BORING METHOD: HSA | ROCK CORE DIA.: | HAMMER DROP: 30 in.

Scale	Description	No	Blows / 6in	Type	REC	Notes
	Topsoil					Topsoil: 4"
0'4"	Red, brown, moist, very loose, fine sand, SP	1	WH-WH-WH	DS	16"	WH - Weight of Hammer
		2	WH-WH-WH	DS	12"	
4'0"	Dark gray, moist, very soft, micaceous sandy clay CL	3	WH-1-2	DS	18"	
8'0"	Dark gray, moist, soft, silty clay, CL	4	1-2-3	DS	12"	
	Very Stiff	5	5-7-9	DS	18"	
15'0"	End of Boring					

LEGEND: DS DRIVEN SPOON; ST SHELBY; PS PISTON SAMPLE; RC ROCK CORE; HSA HOLLOW STEM AUGER

GROUND WATER: WATER ON RODS: N/A; WATER AT COMPLETION: DRY; CAVED: 8'0"; WATER AT 24 HOURS: DRY

BORING SWM #2

Reuling Associates, Inc. Boring Log Page 2 of 12

PROJECT: MFCA
Location: See Boring Location Plan
DATE START: 7/23/2013 | PROJECT No.: | BORING No.: SWM-2
FINISH: 7/23/2013 | ELEV: 218.2 | INSPECTOR:
HAMMER WT.: 140 lbs. | SPOON O.D.: 2" | FOREMAN: Victor
BORING METHOD: HSA | ROCK CORE DIA.: | HAMMER DROP: 30 in.

Scale	Description	No	Blows / 6in	Type	REC	Notes
	Topsoil					Topsoil: 4"
0'4"	Brown, tan, orange, dry, medium dense, silty sand, trace ironite, SM	1	4-7-9	DS	14"	
		2	5-9-12	DS	16"	
4'0"	Light tan, orange, moist, medium dense, silty, clayey sand, trace gravel, SM-SC	3	4-6-6	DS	18"	
	Medium Dense	4	8-12-15	DS	18"	
	Medium Dense	5	11-14-16	DS	18"	
12'0"	End of Boring					

LEGEND: DS DRIVEN SPOON; ST SHELBY; PS PISTON SAMPLE; RC ROCK CORE; HSA HOLLOW STEM AUGER

GROUND WATER: WATER ON RODS: N/A; WATER AT COMPLETION: DRY; CAVED: 6'0"; WATER AT 24 HOURS: DRY

BORING SWM #3

Reuling Associates, Inc. Boring Log Page 3 of 12

PROJECT: MFCA
Location: See Boring Location Plan
DATE START: 7/23/2013 | PROJECT No.: | BORING No.: SWM-3
FINISH: 7/23/2013 | ELEV: 223.96 | INSPECTOR:
HAMMER WT.: 140 lbs. | SPOON O.D.: 2" | FOREMAN: Victor
BORING METHOD: HSA | ROCK CORE DIA.: | HAMMER DROP: 30 in.

Scale	Description	No	Blows / 6in	Type	REC	Notes
	Topsoil					Topsoil: 4"
0'4"	Orange, brown, dry, medium dense, silty sand SM	1	4-6-6	DS	8"	
	Loose	2	3-4-4	DS	12"	
4'0"	Red, brown, orange, moist, loose, silty, clayey sand, SM-SC	3	2-3-3	DS	16"	
	Loose	4	3-3-5	DS	18"	
10'0"	Brown, orange, tan, moist, loose to medium dense, silty sand, some gravel SM	5	7-8-11	DS	18"	
12'0"	End of Boring					

LEGEND: DS DRIVEN SPOON; ST SHELBY; PS PISTON SAMPLE; RC ROCK CORE; HSA HOLLOW STEM AUGER

GROUND WATER: WATER ON RODS: N/; WATER AT COMPLETION: DR; CAVED: 6' 0; WATER AT 24 HOURS: 7' 8

BORING SWM #4

Reuling Associates, Inc. Boring Log

PROJECT: MFCA
Location: See Boring Location Plan
DATE START: 4/24/2014 | PROJECT No.: | BORING No.: SWM-4A
FINISH: 4/24/2014 | ELEV: 230.47 | INSPECTOR:
HAMMER WT.: 140 lbs. | SPOON O.D.: 2" | FOREMAN: Kmes
BORING METHOD: HSA | ROCK CORE DIA.: | HAMMER DROP: 30 in.

Scale	Description	No	Blows / 6in	Type	REC	Notes
0'3"	Brownish orange, moist, medium dense to very dense silty sand, SM	S-1	3-11-11	DS	10"	Topsoil: 3"
	Very Dense	S-2	13-25-36	DS	18"	
	Dense	S-3	12-18-22	DS	10"	
	Tan, orange, and brown, moist, medium dense medium to fine sand, SP	S-4	7-5-9	DS	16"	
	Moist, medium dense	S-5	11-12-13	DS	12"	
	Wet, medium dense	S-6	12-13-11	DS	15"	
20'0"	Wet, medium dense	S-7	7-7-6-7	DS	16"	
22'0"	End of Boring					

LEGEND: DS DRIVEN SPOON; ST SHELBY; PS PISTON SAMPLE; RC ROCK CORE; HSA HOLLOW STEM AUGER

GROUND WATER: WATER ON RODS: N/A; WATER AT COMPLETION: 12' 0"; CAVED:; WATER AT 24 HOURS: 11' 6"

BORING SWM #5

Reuling Associates, Inc. Boring Log Page 5 of 12

PROJECT: MFCA
Location: See Boring Location Plan
DATE START: 7/23/2013 | PROJECT No.: | BORING No.: SWM-5
FINISH: 7/23/2013 | ELEV: 217.49 | INSPECTOR:
HAMMER WT.: 140 lbs. | SPOON O.D.: 2" | FOREMAN: Victor
BORING METHOD: HSA | ROCK CORE DIA.: | HAMMER DROP: 30 in.

Scale	Description	No	Blows / 6in	Type	REC	Notes
	Topsoil					Topsoil: 4"
0'4"	Red, moist, very stiff, silty clay, CL	1	5-8-10	DS	18"	
	Very Stiff	2	8-10-15	DS	18"	
	Very Stiff	3	7-12-15	DS	18"	
6'6"	Red, brown, orange, moist, very stiff, silty clay CL; Stiff	4	7-6-6	DS	18"	
10'0"	Red, brown, orange, moist, stiff, very fine sandy clay CL; Medium stiff	5	3-4-4	DS	18"	
15'0"	End of Boring					

LEGEND: DS DRIVEN SPOON; ST SHELBY; PS PISTON SAMPLE; RC ROCK CORE; HSA HOLLOW STEM AUGER

GROUND WATER: WATER ON RODS: N/A; WATER AT COMPLETION: DRY; CAVED: 10' 0"; WATER AT 24 HOURS: DRY

SOIL BORINGS

APPROVED: DEPARTMENT OF PLANNING AND ZONING

Chief, Development Engineering Division	Date 11-6-14
Chief, Division of Land Development	Date 11-20-14
Director	Date 11/21/14

ADDRESS CHART

LOT / PARCEL NO.	STREET ADDRESS
PARCEL B-1	7901 OCEANO AVENUE
PARCEL E-1	7775 CHESAPEAKE BAY COURT

PERMIT INFORMATION CHART

SUBDIVISION NAME			SECTION / AREA		LOT / PARCEL NO.
MARYLAND FOOD CENTER AUTHORITY			3		B-1/662 & E-1/696
PLAT NO. or L/F	GRID NO.	ZONING	TAX MAP NO.	ELEC. DIST.	CENSUS TRACT
23017-23021	21	M-2	43	6TH	6069.01

BLDG
Baltimore Land Design Group Inc.
Consulting Engineers
230 SCHILLING CIRCLE, SUITE 364 • HUNT VALLEY, MARYLAND 21031
PHONE: 410.229.9851 • FAX: 410.229.9865 • BLDG@BLDGINC.COM

STATE OF MARYLAND ROSTEK-ZARSKI 21245 BOARD FOR PROFESSIONAL ENGINEERS 10/15/14

PROFESSIONAL CERTIFICATION

I HEREBY CERTIFY THAT THESE DOCUMENTS WERE PREPARED OR APPROVED BY ME, AND THAT I AM A DULY LICENSED PROFESSIONAL ENGINEER UNDER THE LAWS OF THE STATE OF MARYLAND, LICENSE NO. 21245, EXPIRATION DATE: JUNE 9, 2016.

OWNER
MARYLAND FOOD CENTER AUTHORITY
7801 OCEANO AVE
JESSUP, MD 20794
PHONE (410) 379-5760
FAX (410) 379-5773

DEVELOPER / APPLICANT
MERRITT PROPERTIES, LLC
2066 LORD BALTIMORE DRIVE
BALTIMORE, MD 21244
PHONE (410) 298-2600
FAX (410) 298-9644

REVISIONS

DATE	NO.	DESCRIPTION	BY

STORM WATER MANAGEMENT PLAN
CONSTRUCTION SPECIFICATIONS AND NOTES – SUBMERGED GRAVEL WETLANDS

MARYLAND FOOD CENTER AUTHORITY
PARCEL B-1 & E-1
(WAREHOUSE & OFFICE)

HOWARD COUNTY, MARYLAND
SCALE: N/A
DATE: OCTOBER, 2014

DRAWING NO. C-35

SDP-14-068

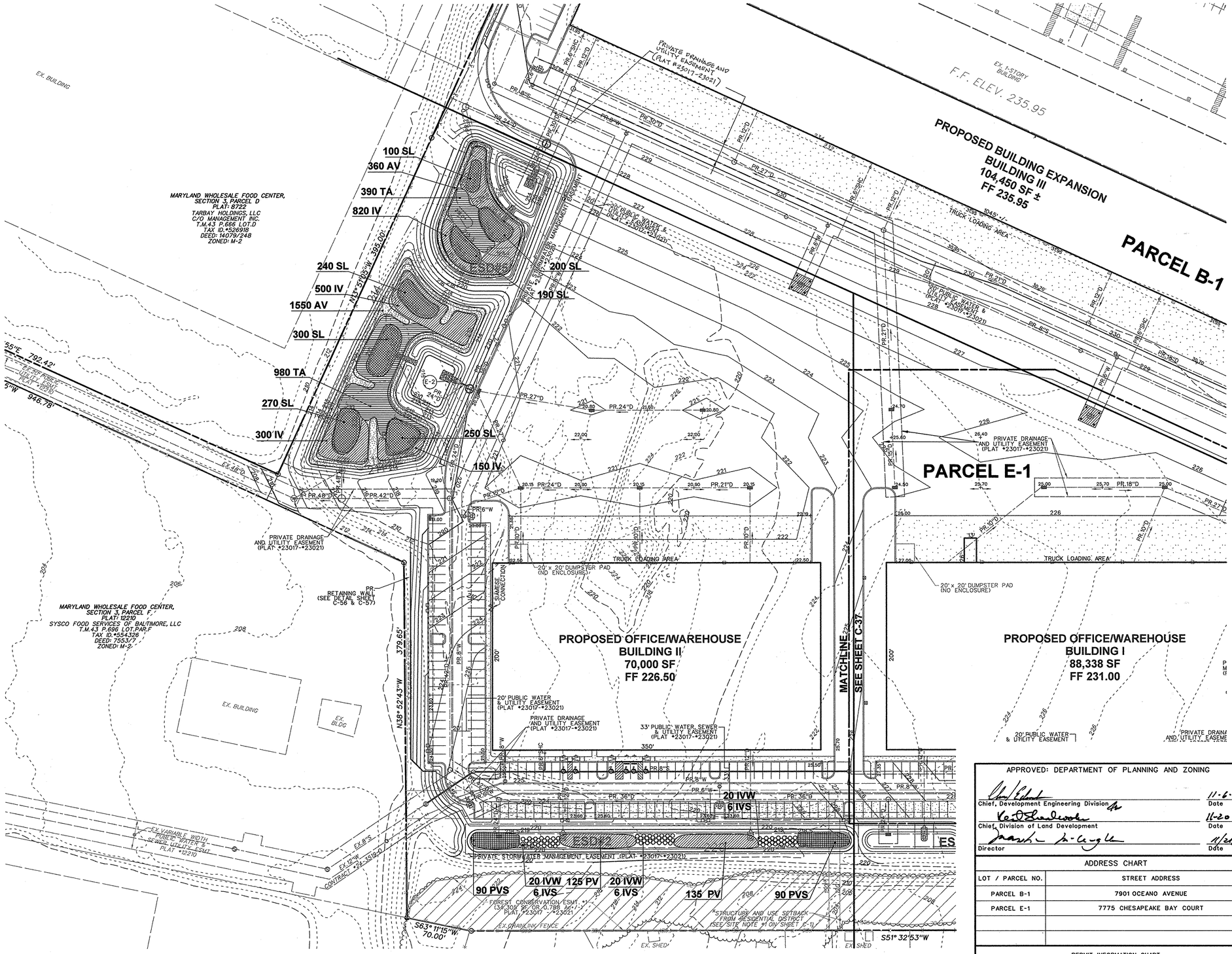

APPROVED: DEPARTMENT OF PLANNING AND ZONING

Chief, Development Engineering Division	Date 11-6-14
Chief, Division of Land Development	Date 11-20-14
Director	Date 11/21/14

ADDRESS CHART	
LOT / PARCEL NO.	STREET ADDRESS
PARCEL B-1	7901 OCEANO AVENUE
PARCEL E-1	7775 CHESAPEAKE BAY COURT

PERMIT INFORMATION CHART

SUBDIVISION NAME		SECTION / AREA	LOT / PARCEL NO.
MARYLAND FOOD CENTER AUTHORITY		3	B-1/662 & E-1/696
PLAT NO. or L/F	GRID NO.	ZONING	TAX MAP NO.
23017-23021	21	M-2	43
ELEC. DIST.	CENSUS TRACT		
6TH	6069.01		

THE COORDINATE SYSTEM OF ALL DRAWINGS IS BASED ON THE NORTH AMERICAN DATUM OF 1983. THE ELEVATION SYSTEM OF ALL DRAWINGS IS BASED ON THE NORTH AMERICAN VERTICAL DATUM OF 1988. HORZ: NAD 83/91 VERT: NAVD 88

HUMAN & ROHDE, INC.
LANDSCAPE ARCHITECTS
512 VIRGINIA AVENUE
TOWSON, MARYLAND 21286
410-825-3885

BLDG
Baltimore Land Design Group Inc.
Consulting Engineers
230 SCHILLING CIRCLE, SUITE 364 • HUNT VALLEY, MARYLAND 21031
PHONE: 410.229.9851 • FAX: 410.229.9865 • BLDG@BLDGINC.COM

LICENSED FOR PROFESSIONAL ENGINEERING — 21245 — THOMAS LOWELL ROSTEK, JR. — STATE OF MARYLAND — 10/27/14

PROFESSIONAL CERTIFICATION

I HEREBY CERTIFY THAT THESE DOCUMENTS WERE PREPARED OR APPROVED BY ME, AND THAT I AM A DULY LICENSED PROFESSIONAL ENGINEER UNDER THE LAWS OF THE STATE OF MARYLAND, LICENSE NO. 21245, EXPIRATION DATE: JUNE 9, 2016.

OWNER
MARYLAND FOOD CENTER AUTHORITY
7801 OCEANO AVE
JESSUP, MD 20794
PHONE (410) 379-5760
FAX (410) 379-5773

DEVELOPER / APPLICANT
MERRITT PROPERTIES, LLC
2066 LORD BALTIMORE DRIVE
BALTIMORE, MD 21244
PHONE (410) 298-2600
FAX (410) 298-9644

REVISIONS

DATE	NO.	DESCRIPTION	BY

STORM WATER MANAGEMENT PLAN
LANDSCAPE PLAN I
MARYLAND FOOD CENTER AUTHORITY
PARCEL B-1 & E-1
(WAREHOUSE & OFFICE)
HOWARD COUNTY, MARYLAND
SCALE: 1" = 50'
DATE: OCTOBER, 2014

DRAWING NO.
C-36
SHEET 36 OF 57

SDP-14-068

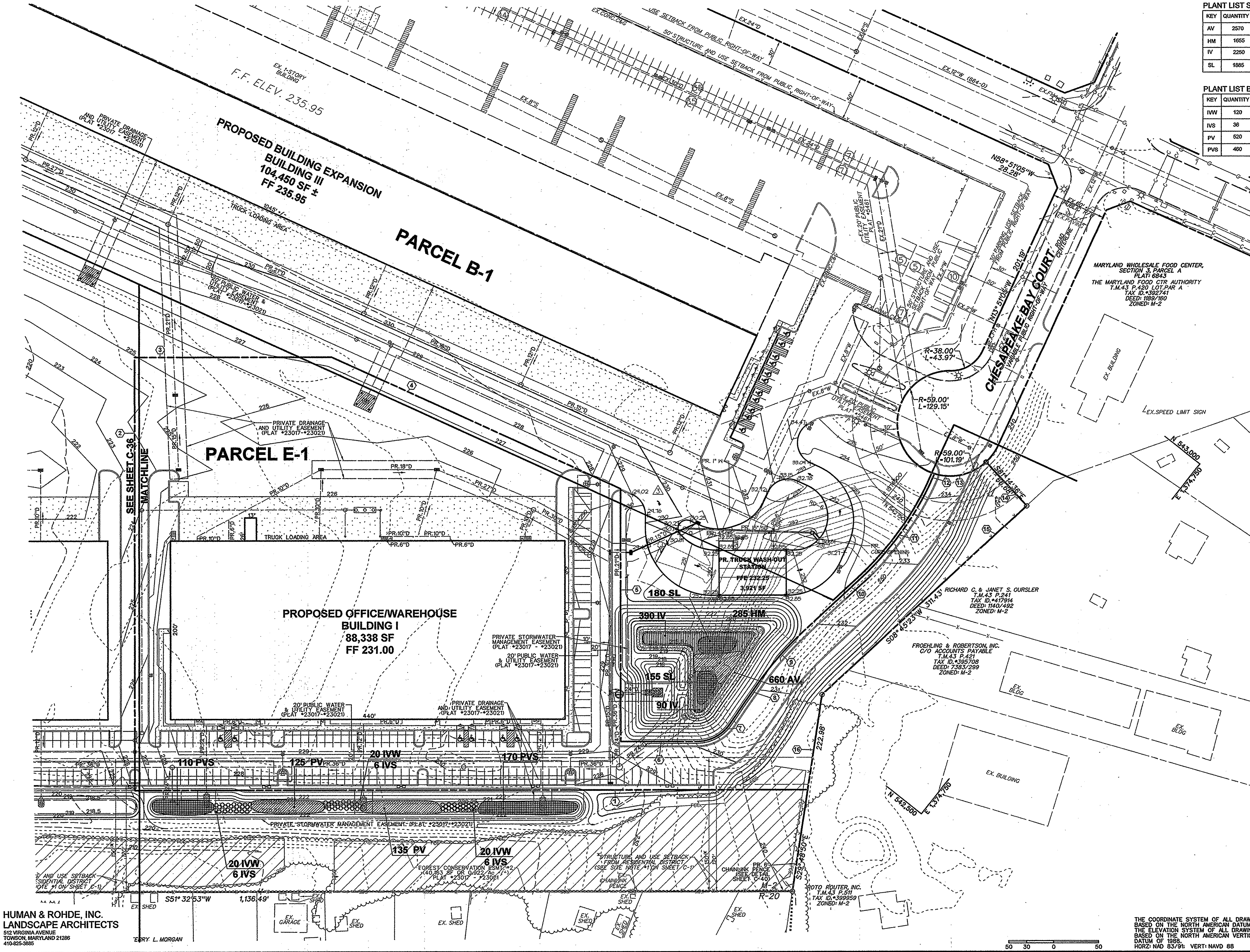

PLANT LIST SUBMERGED GRAVEL WETLAND

KEY	QUANTITY	BOTANICAL NAME / COMMON NAME	SIZE	COND.	REMARKS	COST UNIT/ TOTAL	
AV	2570	ANDROPOGON VIRGINICUS / BROOMSEDGE	PLUG		SPACE 2' O.C. STAGGER	1.40	$3,598.00
HM	1655	HIBISCUS MOSCHEUTOS / MARSH HIBISCUS	PLUG		SPACE 2' O.C. STAGGER	1.60	$2,648.00
IV	2250	IRIS VERSICOLOR / BLUE FLAG	PLUG		SPACE 2' O.C. STAGGER	1.60	$3,600.00
SL	1885	SAGITTARIA LATIFOLIA / DUCK POTATO	PLUG		SPACE 2' O.C. STAGGER	1.60	$3,016.00

TOTAL: $12,862.00

PLANT LIST BIO-RETENTION FACILITIES

KEY	QUANTITY	BOTANICAL NAME / COMMON NAME	SIZE	COND.	REMARKS	COST UNIT/ TOTAL	
IVW	120	ILEX VERTICILLATA 'WINTER RED' / 'WINTER RED' WINTERBERRY HOLLY	18"-24"	#3 CONT.	4' O.C. STAGGER	23.00	$2,760.00
IVS	36	ILEX VERTICILLATA 'SOUTHERN GENTLEMAN' / 'SOUTHERN GENTLEMAN' WINTERBERRY HOLLY	18"-24"	#3 CONT.	4' O.C. STAGGER	23.00	$828.00
PV	520	PANICUM VIRGATUM 'HEAVY METAL' / 'HEAVY METAL' SWITCHGRASS	#1	CONT.	SPACE 3' O.C.	8.00	$4,160.00
PVS	460	PANICUM VIRGATUM SHENANDOAH' / 'SHENANDOAH' SWITCHGRASS	#1	CONT.	SPACE 3' O.C.	8.00	$3,680.00

TOTAL: $11,428.00

MORRIS & RITCHIE ASSOCIATES, INC.
ENGINEERS, PLANNERS, SURVEYORS AND LANDSCAPE ARCHITECTS
14280 PARK CENTER DRIVE - LAUREL, MD 20707
(410) 792-9792 / (301) 776-1690 FAX: (410) 792-7395
MRAGTA.COM

COPYRIGHT 2015 MORRIS & RITCHIE ASSOCIATES

FOR REVISION #3 ONLY
[Seal: STATE OF MARYLAND, THOMAS C. NEUGEBAUER, 29203, PROFESSIONAL ENGINEER] 12-7-15

MD PROFESSIONAL CERTIFICATION:
I HEREBY CERTIFY THAT THESE DOCUMENTS WERE PREPARED OR APPROVED BY ME, AND THAT I AM A DULY LICENSED PROFESSIONAL ENGINEER UNDER THE LAWS OF THE STATE OF MARYLAND, LICENSE NO. 29203, EXPIRATION DATE: 06/16/2017.

PARCEL E-1 BEARING AND DISTANCES

	BEARING	DISTANCE
1	S 51°32'53" W	750.78'
2	N 38°27'07" W	485.00'
3	N 51°32'53" E	219.79'
4	N 76°09'12" E	354.39'
5	S 38°27'07" E	283.44'
6	N 51°32'53" E	85.33'
7	R=44.0'	42.48'
8	N 03°46'06" W	54.55'
9	R=356.00'	77.82'
10	N 08°45'23" E	87.35'
11	R=344.00'	135.74'
12	N 13°51'05" W	9.70'
13	R=59.00'	61.77'
14	S 81°14'36" E	66.68'
15	S 08°45'23" W	311.43'
16	S 29°48'50" E	107.67'

3
APPROVED: HOWARD COUNTY DEPARTMENT OF PLANNING AND ZONING

[signature] CHIEF, DEVELOPMENT ENGINEERING DIVISION	12-29-15 DATE
[signature] CHIEF, DIVISION OF LAND DEVELOPMENT	12-31-15 DATE
[signature] DIRECTOR, DEPARTMENT OF PLANNING AND ZONING	1-3-16 DATE

ADDRESS CHART

LOT / PARCEL NO.	STREET ADDRESS
PARCEL B-1	7901 OCEANO AVENUE
PARCEL E-1	7775 CHESAPEAKE BAY COURT

PERMIT INFORMATION CHART

SUBDIVISION NAME			SECTION / AREA		LOT / PARCEL NO.
MARYLAND FOOD CENTER AUTHORITY			3		B-1/662 & E-1/696
PLAT NO. or L/F	GRID NO.	ZONING	TAX MAP NO.	ELEC. DIST.	CENSUS TRACT
23017-23021	21	M-2	43	6TH	6069.01

THE COORDINATE SYSTEM OF ALL DRAWINGS IS BASED ON THE NORTH AMERICAN DATUM OF 1983. THE ELEVATION SYSTEM OF ALL DRAWINGS IS BASED ON THE NORTH AMERICAN VERTICAL DATUM OF 1988.
HORZ: NAD 83/91; VERT: NAVD 88

50 30 0 50

HUMAN & ROHDE, INC.
LANDSCAPE ARCHITECTS
512 VIRGINIA AVENUE
TOWSON, MARYLAND 21286
410-825-3885

BLDG
Baltimore Land Design Group Inc.
Consulting Engineers
230 SCHILLING CIRCLE, SUITE 364 • HUNT VALLEY, MARYLAND 21031
PHONE: 410.229.9851 • FAX: 410.229.9865 • BLDG@BLDGINC.COM

[Seal: STATE OF MARYLAND, BOARD FOR PROFESSIONAL ENGINEERS, ROSTEK-ZARSKI, 21245] 1/12/15

PROFESSIONAL CERTIFICATION
I HEREBY CERTIFY THAT THESE DOCUMENTS WERE PREPARED OR APPROVED BY ME, AND THAT I AM A DULY LICENSED PROFESSIONAL ENGINEER UNDER THE LAWS OF THE STATE OF MARYLAND, LICENSE NO. 21245, EXPIRATION DATE: JUNE 9, 2016.

OWNER
MARYLAND FOOD CENTER AUTHORITY
7801 OCEANO AVE
JESSUP, MD 20794
PHONE (410) 379-5760
FAX (410) 379-5773

DEVELOPER / APPLICANT
MERRITT PROPERTIES, LLC
2066 LORD BALTIMORE DRIVE
BALTIMORE, MD 21244
PHONE (410) 298-2600
FAX (410) 298-9644

REVISIONS

DATE	NO.	DESCRIPTION	BY
12/01/14	1	ADDED DOORS, SIDEWALK AND ROOF DRAINS.	BLDG
		RELOCATED HANDICAP SPACES AND PRIVATE	
		SEWER LINE FOR BUILDING I.	
9/18/15	3	REPLACED BUILDING IV WITH TRUCK WASH-OUT STATION	MRA

REVISED SITE DEVELOPMENT PLAN
STORM WATER MANAGEMENT PLAN
LANDSCAPE PLAN II

MARYLAND FOOD CENTER AUTHORITY
PARCEL B-1 & E-1
(WAREHOUSE & OFFICE)

HOWARD COUNTY, MARYLAND
SCALE: 1" = 50'
DATE: DECEMBER, 2014

DRAWING NO.
C-37

SDP-14-068

P:\PROJ\17620 MFCA Exponsion\PLANS\LDE\SEAFOOD MARKET\REDLINES\PLOT\2015-04-07-MFCA-SEAFOOD-REDLINE-37.dwg, 12/7/2015 11:05:16 AM, CMcQueen, 1:1, Copyright 2015 Morris & Ritchie Associates, Inc.

LANDSCAPE NOTES

Plant Identification: All plants shall be properly marked for identification and checking.

List of Plant Materials: The Contractor will verify plant quantities prior to bidding and any discrepancies shall be brought to the attention of the Landscape Architect. The Contractor shall furnish and plant all plants required to complete the work as shown on the drawings. Substitutions shall not be made without the written approval of the Landscape Architect. This contract will be based on the bidder having verified, prior to bidding, the availability of the required plant materials as specified on the Plant List.

Plant Quantity: All shrubs shall be dense, heavy to the ground, and well grown, showing evidence of having been sheared regularly, and sound, free of plant disease or insect eggs, and shall have a healthy, normal root system. Plants shall be nursery grown. Plants shall not be pruned prior to delivery. The shape of the plant shall in general conform to its natural growth proportions unless otherwise specified. All plants including container grown shall conform to American Standard for Nursery Stock (ANSI z60.1, latest edition), and shall have a well-shaped, heavy branch structure for the species. Evergreen trees are to have an internode no greater than 24" and shall be uniformly well-shaped. All plant sizes shall average at least the middle of the range given in the plant list.

Plant Spacing: Plant spacing is to scale on the plan or as shown on the plant list.

Soil Mix: Soil mix will be 2/3 existing soil and 1/3 leaf mold or equal organic material, thoroughly mixed and homogenized.

Ball Size: The ball size shall conform to the American Association of Nurserymen's publication entitled American Standard for Nursery Stock, ANSI z60.1, latest edition.

Excavation: Holes for all plants shall be 18" larger in diameter than size of ball or container and shall have vertical sides. Hedges shall be planted in a trench 12" wider than ball diameter. Beds for mass planting shall be entirely rototilled to a depth of 8" and shall be 18" beyond the average outside edge of plant balls. A 2" layer of organic material (i.e., leaf mold) will be incorporated into plant beds by tilling again.

Planting: Backfilling shall be done with soil mix, reasonably free of stones, subsoil, clay, lumps, stumps, roots, weeds, bermuda grass, litter, toxic substances, or any other material which may be harmful to plant growth or hinder grading, planting, or maintenance operations. Should any unforeseen or unsuitable planting conditions arise, such as faulty soil drainage or chemical residues, they should be called to the attention of the Landscape Architect and Owner for adjustments before planting. The plant shall be set plumb and straight and shall be staked at the time of planting. Backfill shall be well worked about the roots and settled by watering. Plants will be planted higher than surrounding grade. Shrubs will be 1" higher and trees will be 3" higher. Remove rope from around tree trunks and lay back burlap from top of all B&B material. Nylon or vinyl rope and/or burlap will be completely removed from all plant material prior to planting.

Transplanting Trees by Tree Machines: Trees shall be moved by machines that provide a minimum of 9" per 1" of tree caliper. Holes are to be dug by the same size machine as the one transporting the plant. The plant material shall be transplanted in approximately the same growing condition as it is presently growing, in terms of soil type and moisture content. Fertilize and guy as described in these plans and specifications.

Cultivation: All trenches and shrub beds shall be cultivated, edged and mulched to a depth of 3" with shredded bark. The area around isolated plants shall be mulched to at least 6" greater diameter than that of the hole. Plant beds adjacent to buildings shall be mulched to the building wall.

Maintenance: The Contractor shall be responsible during the contract and up to the time of acceptance for keeping the planting and work incidental thereto in good condition, by replanting, plant replacement, watering, weeding, cultivating, pruning and spraying, restaking and cleaning up and by performing all other necessary operations of care for promotion of good plant growth so that all work is in satisfactory condition at time of acceptance, at no additional cost to the Owner.

Fertilizer: Fertilizer shall be a slow release type contained in polyethylene perforated bags with micropore holes for controlled feeding, such as Easy Grow as manufactured by Specialty Fertilizer, Inc., Box 355, Suffern, New York 10901, or approved equal. The bags shall contain 1 ounce of soluble fertilizer analysis 16-18-16 per unit to last three (3) years and shall be applied during planting as recommended by the manufacturer. If fertilizer packets are not used, the Contractor shall apply granular fertilizer to the soil mix with 10-6-4 analysis, 50% organic, at the following rates: Trees @ 2-3 lbs. per caliper inch; Shrub Beds @ 3-5 lbs. per 100 sq. ft.; and Groundcover Beds @ 2-3 lbs. per 100 sq. ft.

Groundcover: All areas of groundcover shall be rototilled to a depth of 6". Apply 2" of organic material and rototill until thoroughly mixed. Apply fertilizer as stated above.

Guarantee and Replacement: All material shall be unconditionally guaranteed for one (1) year. The Contractor is responsible for watering but not for losses or damage caused by mechanical injury or vandalism.

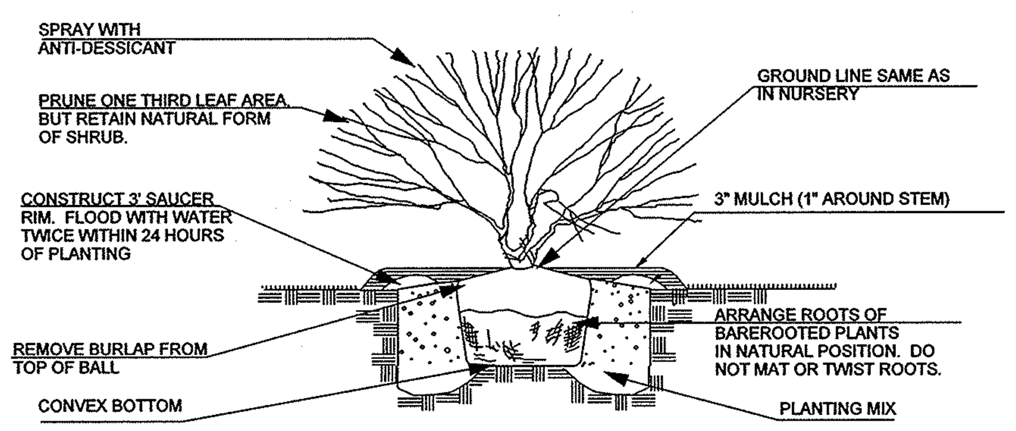

PLANTING DETAIL FOR EVERGREEN AND DECIDUOUS SHRUBS

NOT TO SCALE

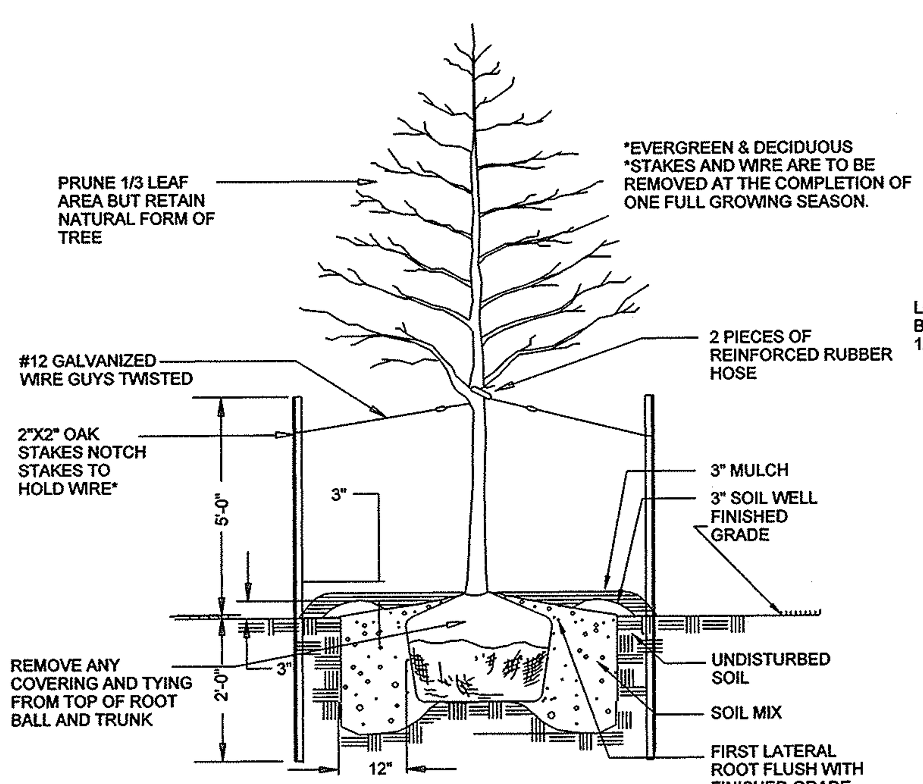

TREE PLANTING DETAIL

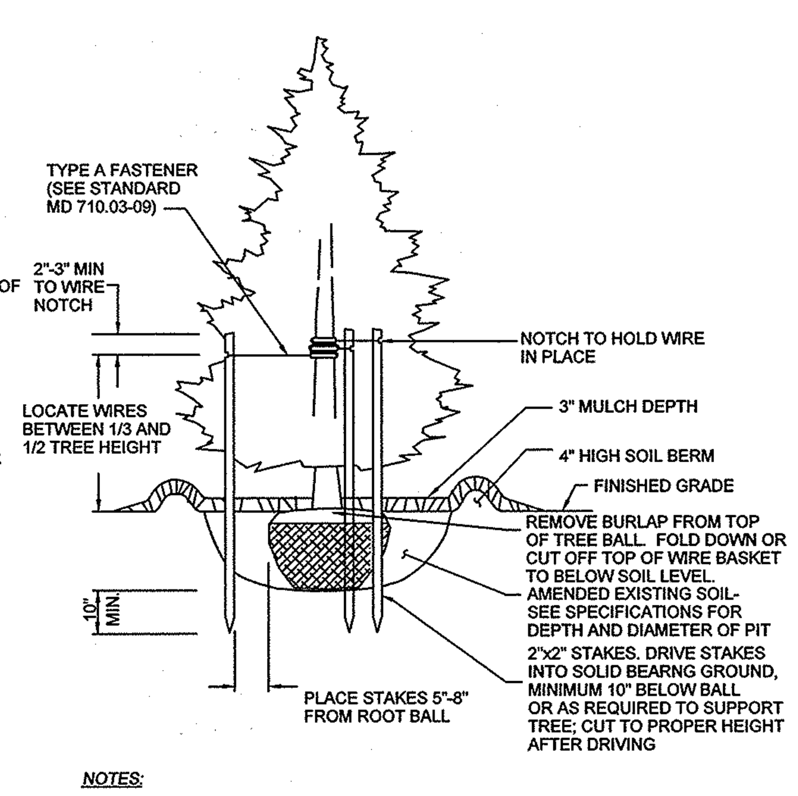

NOTES:

1. *PLACE STAKES 120 DEGREES APART.*
2. *LOCATE TWO STAKES PARALLEL TO NEAREST ROADWAY OR PAVMENT AREA FOR UNIFORM APPEARANCE.*
3. *CENTER TREE IN PLANTING PIT.*

EVERGREEN TREE PLANTING DETAIL

HUMAN & ROHDE, INC.
LANDSCAPE ARCHITECTS
512 VIRGINIA AVENUE
TOWSON, MARYLAND 21286
410-825-3885

SEE SHEET C-36 & C-37 FOR STORMWATER MANAGEMENT LANDSCAPING

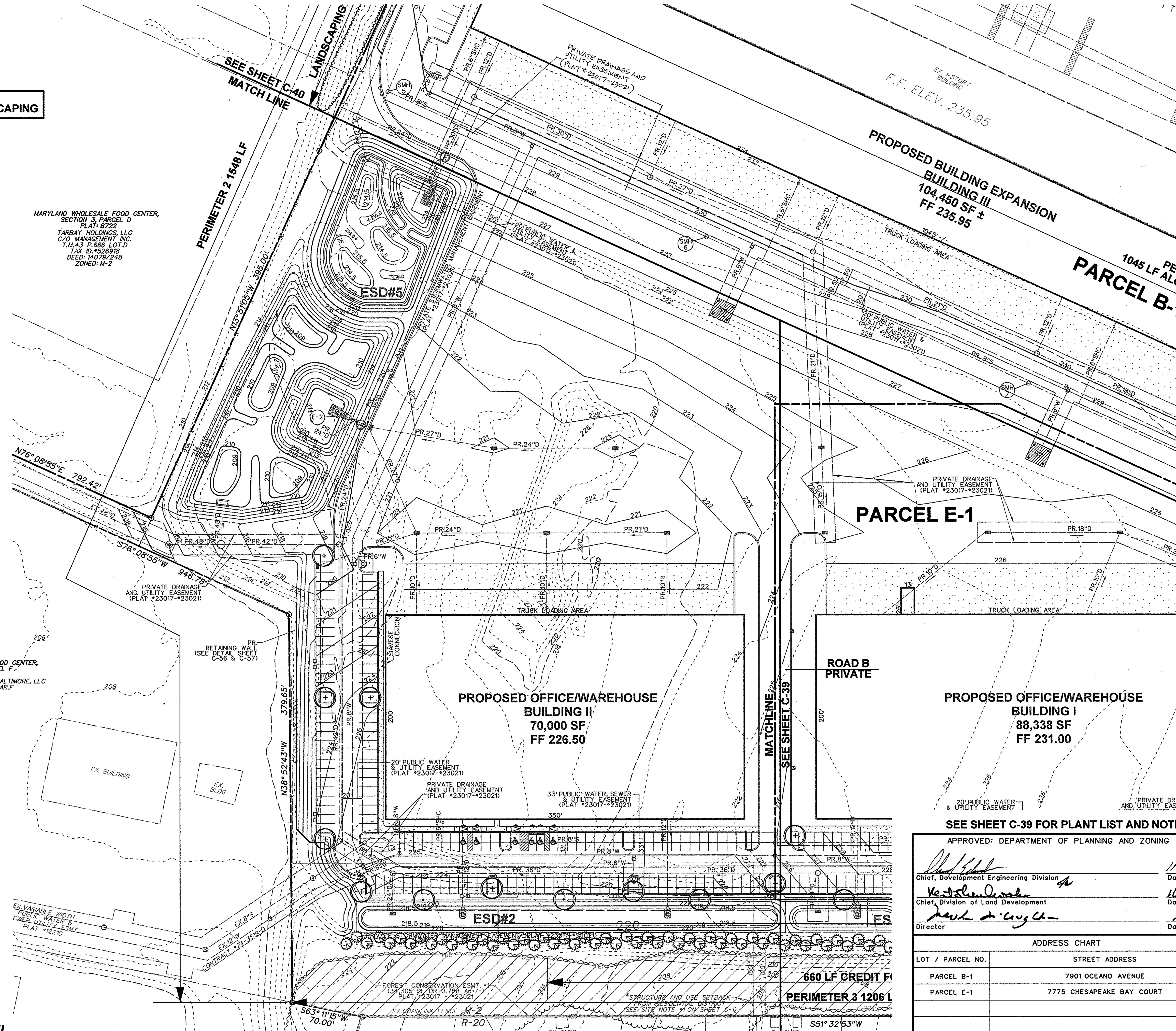

SEE SHEET C-39 FOR PLANT LIST AND NOTES

APPROVED: DEPARTMENT OF PLANNING AND ZONING

Chief, Development Engineering Division	Date 11-6-14
Chief, Division of Land Development	Date 11-20-14
Director	Date 11/21/14

ADDRESS CHART

LOT / PARCEL NO.	STREET ADDRESS
PARCEL B-1	7901 OCEANO AVENUE
PARCEL E-1	7775 CHESAPEAKE BAY COURT

PERMIT INFORMATION CHART

SUBDIVISION NAME			SECTION / AREA		LOT / PARCEL NO.
MARYLAND FOOD CENTER AUTHORITY			3		B-1/662 & E-1/696
PLAT NO. or L/F	GRID NO.	ZONING	TAX MAP NO.	ELEC. DIST.	CENSUS TRACT
23017-23021	21	M-2	43	6TH	6069.01

THE COORDINATE SYSTEM OF ALL DRAWINGS IS BASED ON THE NORTH AMERICAN DATUM OF 1983. THE ELEVATION SYSTEM OF ALL DRAWINGS IS BASED ON THE NORTH AMERICAN VERTICAL DATUM OF 1988.
HORZ: NAD 83/91; VERT: NAVD 88

50 30 0 50

BLDG
Baltimore Land Design Group Inc.
Consulting Engineers
230 SCHILLING CIRCLE, SUITE 364 • HUNT VALLEY, MARYLAND 21031
PHONE: 410.229.9851 • FAX: 410.229.9865 • BLDG@BLDGINC.COM

BOARD FOR PROFESSIONAL ENGINEERS · 21245 · ROSTEK-ZARSKI · STATE OF MARYLAND · 10/27/14

PROFESSIONAL CERTIFICATION

I HEREBY CERTIFY THAT THESE DOCUMENTS WERE PREPARED OR APPROVED BY ME, AND THAT I AM A DULY LICENSED PROFESSIONAL ENGINEER UNDER THE LAWS OF THE STATE OF MARYLAND, LICENSE NO. 21245, EXPIRATION DATE: JUNE 9, 2016.

OWNER

MARYLAND FOOD CENTER AUTHORITY
7801 OCEANO AVE
JESSUP, MD 20794
PHONE (410) 379-5760
FAX (410) 379-5773

DEVELOPER / APPLICANT

MERRITT PROPERTIES, LLC
2066 LORD BALTIMORE DRIVE
BALTIMORE, MD 21244
PHONE (410) 298-2600
FAX (410) 298-9644

REVISIONS

DATE	NO.	DESCRIPTION	BY

FINAL LANDSCAPE PLAN
PLAN VIEW I

MARYLAND FOOD CENTER AUTHORITY
PARCEL B-1 & E-1
(WAREHOUSE & OFFICE)

HOWARD COUNTY, MARYLAND
SCALE: 1" = 50'

DATE: OCTOBER, 2014

DRAWING NO.
C-38

SDP-14-068

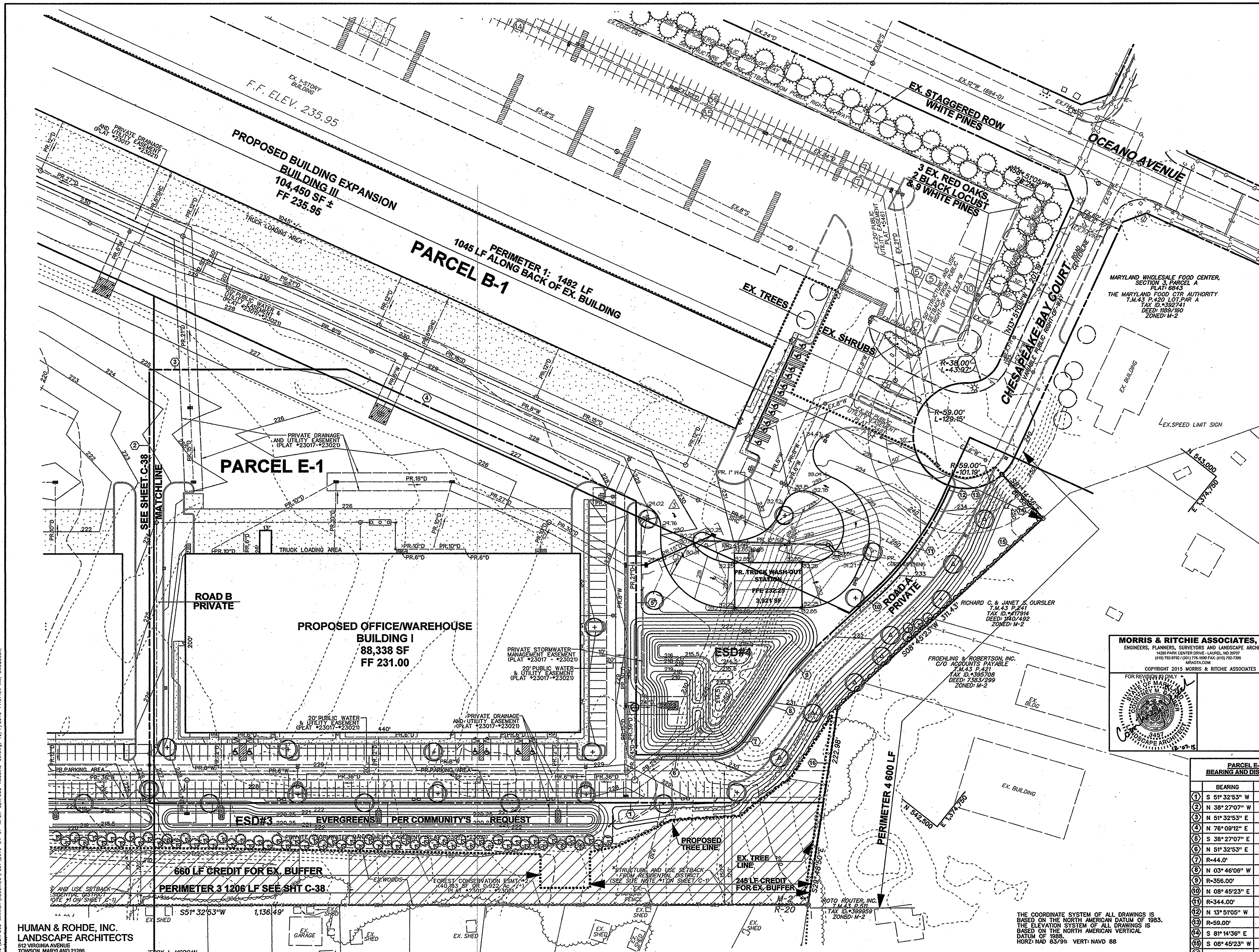

HUMAN & ROHDE, INC.
LANDSCAPE ARCHITECTS
512 VIRGINIA AVENUE
TOWSON, MARYLAND 21286
410-825-3885

SCHEDULE A: PERIMETER LANDSCAPE EDGE

Category	Adjacent to Internal Lot	Adjacent to Perimeter Properties			
Perimeter Number	1	2	3	4	
Landscape Type	A	A	C	A	
Linear Feet of Roadway Frontage/Perimeter	1482 LF	1548 LF	1,206 LF	600 LF	
Credit for Existing Vegetation (Yes, No, Linear Feet) (Describe below if needed)	YES 1482 LF	NO*	YES 905 LF	NO	
Credit for Wall, Fence or Berm (Yes, No, Linear Feet) (Describe below if needed)	NO	NO	NO	NO	
Number of Plants Required					
Shade Trees	0	0 *	8	10	
Evergreen Trees	0	0	15	0	
Shrubs	0	0	0	0	
Number of Plants Provided					
Shade Trees/Street Trees	0	0	8	8	
Evergreen Trees	0		** 15		
Other Trees (2:1 substitution)		0		4	
Shrubs (10:1 substitution)					

(Describe plant substitution credits below if needed)
* Landscaping is not required for P2 because the project is located within the interior of an established business park.
** An additional 77 evergreens were added to perimeter 3 at the request of the neighboring community

SCHEDULE B: PARKING LOT INTERNAL LANDSCAPING

Number of Parking Spaces Proposed	283
Number of Trees Required	15
Number of Trees Provided	
Shade Trees	15
Other Trees (2:1 substitution)	
Internal Islands Required	15
Internal Islands Provided (Min. 200 Sf.)	17

PLANT LIST

KEY	QUANTITY	BOTANICAL NAME / COMMON NAME	SIZE	COND.	REMARKS
(·)	8	ACER FREMANII 'JEFFERSRED' / AUTUMN BLAZE MAPLE	2 1/2"-3" CAL.	B & B	AS SHOWN
(+)	22	QUERCUS PHELLOS 'HIGHTOWER' / 'HIGHTOWER' WILLOW OAK	2 1/2"-3" CAL.	B & B	AS SHOWN
(Δ)	7	QUERCUS PALUSTRIS / PIN OAK	2 1/2"-3" CAL.	B & B	AS SHOWN
(✲)	96	THUJA X 'GIGANTEOIDES' / 'GREEN GIANT' ARBORVITAE	6-8' HT.	B & B	10-12' O.C. STAGGERED

PLANTING NOTES:

1. This Plan is for planting purposes only.
2. This Plan has been prepared in accordance with the provisions of section 16.124 of the Howard County Code and the Landscape Manual.
3. All plant material shall be nursery grown and shall conform to American Association of Nurserymen latest standards. Plant installation must conform to the minimum standards cited in the latest edition of the "LANDSCAPE SPECIFICATION GUIDELINES" by the Landscape Contractor's Association.
4. Contractor is to notify Miss Utility a minimum of 72 hours prior to digging. Telephone 1-800-257-7777
5. The Landscape Architect is to be notified 48 hours before planting begins. The location of all plant material is to be approved in field by the Landscape Architect.
6. No tree or shrub planting pits are to be left open or unattended.
7. Shrubs are to be grouped into mulched beds. Beds are to be edged and the grass is to be killed or removed prior to mulching.
8. Sod is to be: Kentucky blue/tall fescue mix
9. "Should any tree designated for preservation for which landscaping credit is given, die prior to release of bonds, the owner will be required to replace the tree with the equivalent species or with a tree which will obtain the same height, spread and growth characteristics. The replacement tree must be a minimum of 3 inch caliper and installed as required in Howard County Landscape Manual.
10. "At the time of installment, all shrubs and other plantings herewith listed and approved for this site, shall be of the proper height requirements in accordance with the Howard County Landscaping Manual. In addition, no substitutions or relocation of required plantings may be made without prior review and approval from the Department of Planning and Zoning. Any deviation from this approved Landscape plan may result in denial or delay in the release of landscape surety until such time as all required materials are planted and/or revisions are made to applicable plans and certificates."

DEVELOPER'S / BUILDER'S CERTIFICATE

I / We certify that the landscaping shown on this plan will be done according to the plan, Section 16.124 of the Howard County Code and the Howard County Landscape Manual.
I / We further certify that upon completion, a Certification of Landscape installation, accompanied by an executed one year guarantee of plant materials, will be submitted to the Department of Planning and Zoning.

NOTE:
THE OWNER, TENANT, AND/OR THEIR AGENTS SHALL BE RESPONSIBLE FOR MAINTENANCE OF THE REQUIRED LANDSCAPING, INCLUDING BOTH PLANT MATERIALS AND BERMS, FENCES AND WALLS. ALL PLANT MATERIALS SHALL BE MAINTAINED IN GOOD GROWING CONDITION AND WHEN NECESSARY, REPLACED WITH NEW MATERIALS TO ENSURE CONTINUED COMPLIANCE WITH APPLICABLE REGULATIONS. ALL OTHER REQUIRED LANDSCAPING SHALL BE PERMANENTLY MAINTAINED IN GOOD CONDITION, AND WHEN NECESSARY, REPAIRED OR REPLACED.

LANDSCAPE SURETY NOTE:
FINANCIAL SURETY FOR THE REQUIRED LANDSCAPING HAS BEEN POSTED AS PART OF THE DEVELOPER'S AGREEMENT IN THE AMOUNT OF:
(35) SHADE TREES @ $300 EACH = $10,500
(92) EVERGREEN TREES @ $150 = $13,800
TOTAL $24,300

MORRIS & RITCHIE ASSOCIATES, INC.
ENGINEERS, PLANNERS, SURVEYORS AND LANDSCAPE ARCHITECTS
14280 PARK CENTER DRIVE - LAUREL, MD 20707
(410) 792-9792 / (301) 776-1690 FAX: (410) 792-7395
MRAGTA.COM
COPYRIGHT 2015 MORRIS & RITCHIE ASSOCIATES
FOR REVISION #3 ONLY
STATE OF MARYLAND COURTNEY M. GABBER 3457 LANDSCAPE ARCHITECT 12-07-15

SEE SHEET C-36 & C-37 FOR STORMWATER MANAGEMENT LANDSCAPING

APPROVED: HOWARD COUNTY DEPARTMENT OF PLANNING AND ZONING

CHIEF, DEVELOPMENT ENGINEERING DIVISION	DATE 12-29-15
CHIEF, DIVISION OF LAND DEVELOPMENT	DATE 12-31-15
DIRECTOR, DEPARTMENT OF PLANNING AND ZONING	DATE 1-3-16

PARCEL E-1 BEARING AND DISTANCES

	BEARING	DISTANCE
1	S 51° 32'53" W	750.78'
2	N 38° 27'07" W	485.00'
3	N 51° 32'53" E	219.79'
4	N 76° 09'12" E	354.39'
5	S 38° 27'07" E	283.44'
6	N 51° 32'53" E	85.33'
7	R=44.0'	42.48'
8	N 03° 46'06" W	54.55'
9	R=356.00'	77.82'
10	N 08° 45'23" E	87.35'
11	R=344.00'	135.74'
12	N 13° 51'05" W	9.70'
13	R=59.00'	61.77'
14	S 81° 14'36" E	66.68'
15	S 08° 45'23" W	311.43'
16	S 29° 48'50" E	107.67'

THE COORDINATE SYSTEM OF ALL DRAWINGS IS BASED ON THE NORTH AMERICAN DATUM OF 1983. THE ELEVATION SYSTEM OF ALL DRAWINGS IS BASED ON THE NORTH AMERICAN VERTICAL DATUM OF 1988.
HORZ: NAD 83/91; VERT: NAVD 88

50 30 0 50

ADDRESS CHART

LOT / PARCEL NO.	STREET ADDRESS
PARCEL B-1	7901 OCEANO AVENUE
PARCEL E-1	7775 CHESAPEAKE BAY COURT

PERMIT INFORMATION CHART

SUBDIVISION NAME			SECTION / AREA		LOT / PARCEL NO.
MARYLAND FOOD CENTER AUTHORITY			3		B-1/662 & E-1/696
PLAT NO. or L/F	GRID NO.	ZONING	TAX MAP NO.	ELEC. DIST.	CENSUS TRACT
23017-23021	21	M-2	43	6TH	6069.01

BLDG
Baltimore Land Design Group Inc.
Consulting Engineers
230 SCHILLING CIRCLE, SUITE 364 • HUNT VALLEY, MARYLAND 21031
PHONE: 410.229.9851 • FAX: 410.229.9865 • BLDG@BLDGINC.COM

PROFESSIONAL CERTIFICATION
I HEREBY CERTIFY THAT THESE DOCUMENTS WERE PREPARED OR APPROVED BY ME, AND THAT I AM A DULY LICENSED PROFESSIONAL ENGINEER UNDER THE LAWS OF THE STATE OF MARYLAND, LICENSE NO. 21245, EXPIRATION DATE: JUNE 9, 2016.

OWNER
MARYLAND FOOD CENTER AUTHORITY
7801 OCEANO AVE
JESSUP, MD 20794
PHONE (410) 379-5760
FAX (410) 379-5773

DEVELOPER / APPLICANT
MERRITT PROPERTIES, LLC
2066 LORD BALTIMORE DRIVE
BALTIMORE, MD 21244
PHONE (410) 298-2600
FAX (410) 298-9644

REVISIONS

DATE	NO.	DESCRIPTION	BY
12/01/14	1	ADDED DOORS, SIDEWALK AND ROOF DRAINS. RELOCATED HANDICAP SPACES AND PRIVATE SEWER LINE FOR BUILDING I.	BLDG
9/18/15	3	REPLACED BUILDING IV WITH TRUCK WASH STATION	MRA

REVISED SITE DEVELOPMENT PLAN
FINAL LANDSCAPE PLAN
PLAN VIEW II

MARYLAND FOOD CENTER AUTHORITY

PARCEL B-1 & E-1
(WAREHOUSE & OFFICE)

HOWARD COUNTY, MARYLAND
SCALE: 1" = 50'
DATE: DECEMBER, 2014

DRAWING NO. C-39

SDP-14-068

P:\PROJ\17620 MFCA Expansion\PLANS\LDE\SEAFOOD MARKET\REDLINES\PLOT\2015-04-07-MFCA-SEAFOOD-REDLINE-39.dwg, 12/7/2015 11:07:24 AM, CMcQueen,

MARYLAND WHOLESALE FOOD CENTER, SECTION 2, PARCEL C3 PLAT: 7405 THE MARYLAND FOOD CTR AUTHORITY THE WHOLESALE FOOD MARKET AUTHOR T.M.43 P.666 LOT.C3 TAX ID.#444655 DEED: 506/782 ZONED: M-2

N 543,000 E 1,373,280

OCEANO AVENUE
HOWARD COUNTY PUBLIC ROAD
80' PUBLIC RIGHT-OF-WAY

3 EX. PIN OAKS

EX. OAKS

N76° 08'55"W 1,345.00'

EX. STAGGERED ROW WHITE PINES

N58° 51'05"W 25.28'

3 EX. RED OAKS, 2 BLACK LOCUST & 9 WHITE PINES

EX. BLACK LOCUST

EX.MIX OF DECIDUOUS TREES +/- 20' WIDE

LANDSCAPING IS NOT REQUIRED WITHIN THE INTERIOR OF AN ESTABLISHED BUSINESS PARK

EX. 1-STORY BUILDING

F.F. ELEV. 235.95

EX. TREES

EX. SHRUBS

PROPOSED BUILDING EXPANSION
BUILDING III
104,450 SF ±
FF 235.95

PERIMETER 1: 1482 LF
1045 LF ALONG BACK OF EX. BUILDING

PARCEL B-1

PRIVATE DRAINAGE AND UTILITY EASEMENT (PLAT #23017-23021)

TRUCK LOADING AREA

20' PUBLIC WATER & UTILITY EASEMENT (PLAT #23017-23021)

MATCH LINE
SEE SHEET C-38

MATCH LINE
SEE SHEET C-39

PARCEL E-1

PRIVATE STORMWATER MANAGEMENT EASEMENT (PLAT #23017-23021)

20' PUBLIC UTILITY EASEMENT PLAT #3461

50' STRUCTURE AND USE SETBACK FROM PUBLIC RIGHT-OF-WAY

CHESAPEAKE BAY COURT
VARIABLE PUBLIC RIGHT-OF-WAY

MARYLAND WHOLESALE FOOD CENTER, SECTION 3, PARCEL A PLAT: 6843 THE MARYLAND FOOD CTR AUTHORITY T.M.43 P.420 LOT.PAR A TAX ID.#392741 DEED: 1189/160 ZONED: M-2

EX. BUILDING

SPEED LIMIT SIGN

N 543,000 E 1,374,160

PR. KNOX BOX

R=38.00' L=43.97'

R=59.00' L=129.15'

R=59.00' L=101.19'

S08° 14'36"E 66.68'

S08° 45'23"W 311.43'

RICHARD C. & JANET S. OURSLER T/M.43 P.241 TAX ID.#417914 DEED: 1140/492 ZONED: M-2

FROEHLING & ROBERTSON, INC. C/O ACCOUNTS PAYABLE T/M.43 P.421 TAX ID.#395708 DEED: 2853/299 ZONED: M-2

EX. BLDG

ROAD A - PRIVATE

20'x 20' DUMPSTER PAD (NO ENCLOSURE)

SIAMESE CONNECTION

TRUCK WASH-OUT STATION FF=235.95 3921 SF

ESD#3 FF=234.5 BF=225.5

SIAMESE CONNECTION B"FIRE SERVICE

WATER EASEMENT

EX. 20' PUBLIC UTILITY EASEMENT PLAT #5461

N13° 51'05"W 201.19'

N

MCS

PARCEL E-1 BEARING AND DISTANCES		
	BEARING	DISTANCE
1	S 51° 32'53" W	750.78'
2	N 38° 27'07" W	485.00'
3	N 51° 32'53" E	219.79'
4	N 76° 09'12" E	354.39'
5	S 38° 27'07" E	283.44'
6	N 51° 32'53" E	85.33'
7	R=44.0'	42.48'
8	N 03° 46'06" W	54.55'
9	R=356.00'	77.82'
10	N 08° 45'23" E	87.35'
11	R=344.00'	135.74'
12	N 13° 51'05" W	9.70'
13	R=59.00'	61.77'
14	S 81° 14'36" E	66.68'
15	S 08° 45'23" W	311.43'
16	S 29° 48'50" E	107.67'

MORRIS & RITCHIE ASSOCIATES, INC.
ENGINEERS, PLANNERS, SURVEYORS AND LANDSCAPE ARCHITECTS
14280 PARK CENTER DRIVE - LAUREL, MD 20707
(410) 792-9792 / (301) 776-1939 FAX: (410) 792-7395
MRAGTA.COM

COPYRIGHT 2015 MORRIS & RITCHIE ASSOCIATES

FOR PREVIEW/REVIEW ONLY
STATE OF MARYLAND COURTNEY M. KELLY 21457 LANDSCAPE ARCHITECT
12-07-15

HUMAN & ROHDE, INC.
LANDSCAPE ARCHITECTS
512 VIRGINIA AVENUE
TOWSON, MARYLAND 21286
410-825-3885

APPROVED: HOWARD COUNTY DEPARTMENT OF PLANNING AND ZONING

CHIEF, DEVELOPMENT ENGINEERING DIVISION — DATE 12-29-15

CHIEF, DIVISION OF LAND DEVELOPMENT — DATE 12-31-15

DIRECTOR, DEPARTMENT OF PLANNING AND ZONING — DATE 1-3-16

ADDRESS CHART	
LOT / PARCEL NO.	STREET ADDRESS
PARCEL B-1	7901 OCEANO AVENUE
PARCEL E-1	7775 CHESAPEAKE BAY COURT

PERMIT INFORMATION CHART						
SUBDIVISION NAME: MARYLAND FOOD CENTER AUTHORITY			SECTION / AREA: 3		LOT / PARCEL NO.: B-1/662 & E-1/696	
PLAT NO. or L/F: 23017-23021	GRID NO.: 21	ZONING: M-2	TAX MAP NO.: 43	ELEC. DIST.: 6TH	CENSUS TRACT: 6069.01	

THE COORDINATE SYSTEM OF ALL DRAWINGS IS BASED ON THE NORTH AMERICAN DATUM OF 1983. THE ELEVATION SYSTEM OF ALL DRAWINGS IS BASED ON THE NORTH AMERICAN VERTICAL DATUM OF 1988. HORZ= NAD 83/91; VERT= NAVD 88

50 30 0 50

REVISIONS			
DATE	NO.	DESCRIPTION	BY
9/18/15	3	REPLACED BUILDING IV WITH TRUCK WASH STATION	MRA

BLDG
Baltimore Land Design Group Inc.
Consulting Engineers
230 SCHILLING CIRCLE, SUITE 364 • HUNT VALLEY, MARYLAND 21031
PHONE: 410.229.9851 • FAX: 410.229.9865 • BLDG@BLDGINC.COM

21245 REGISTERED FOR PROFESSIONAL ENGINEER VICTORIA ROSTEK-ZARKOWSKI STATE OF MARYLAND

PROFESSIONAL CERTIFICATION

I HEREBY CERTIFY THAT THESE DOCUMENTS WERE PREPARED OR APPROVED BY ME, AND THAT I AM A DULY LICENSED PROFESSIONAL ENGINEER UNDER THE LAWS OF THE STATE OF MARYLAND, LICENSE NO. 21245, EXPIRATION DATE: JUNE 9, 2016.

OWNER
MARYLAND FOOD CENTER AUTHORITY
7801 OCEANO AVE
JESSUP, MD 20794
PHONE (410) 379-5760
FAX (410) 379-5773

DEVELOPER / APPLICANT
MERRITT PROPERTIES, LLC
2066 LORD BALTIMORE DRIVE
BALTIMORE, MD 21244
PHONE (410) 298-2600
FAX (410) 298-9644

REVISED SITE DEVELOPMENT PLAN
FINAL LANDSCAPE PLAN
PLAN VIEW III

MARYLAND FOOD CENTER AUTHORITY
PARCEL B-1 & E-1
(WAREHOUSE & OFFICE)

HOWARD COUNTY, MARYLAND
SCALE: 1" = 50'
DATE: OCTOBER, 2014

DRAWING NO.
C-40
SHEET 40 OF 57

SDP-14-068

11(, Copyright 2015 Morris & Ritchie Associates, Inc.

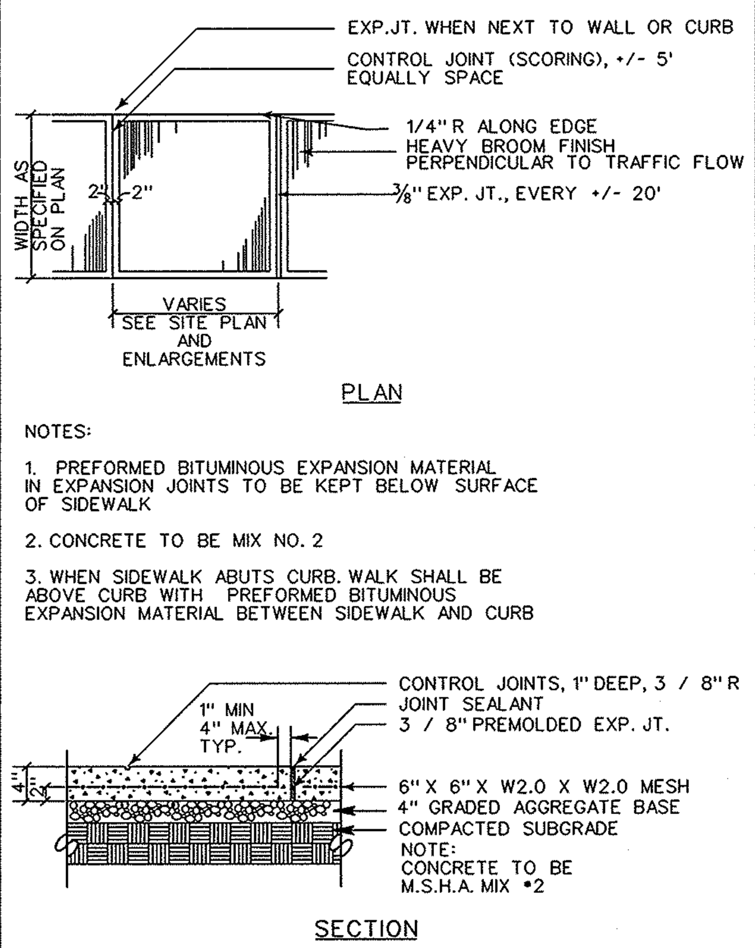

NOTES:

1. PREFORMED BITUMINOUS EXPANSION MATERIAL IN EXPANSION JOINTS TO BE KEPT BELOW SURFACE OF SIDEWALK
2. CONCRETE TO BE MIX NO. 2
3. WHEN SIDEWALK ABUTS CURB. WALK SHALL BE ABOVE CURB WITH PREFORMED BITUMINOUS EXPANSION MATERIAL BETWEEN SIDEWALK AND CURB

1 **CONCRETE WALK**
N.T.S.

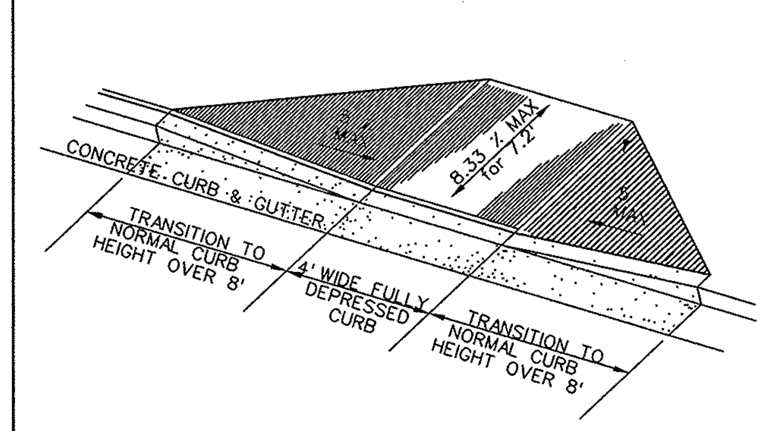

2 **Type 'A' Sidewalk Ramp**
N.T.S.

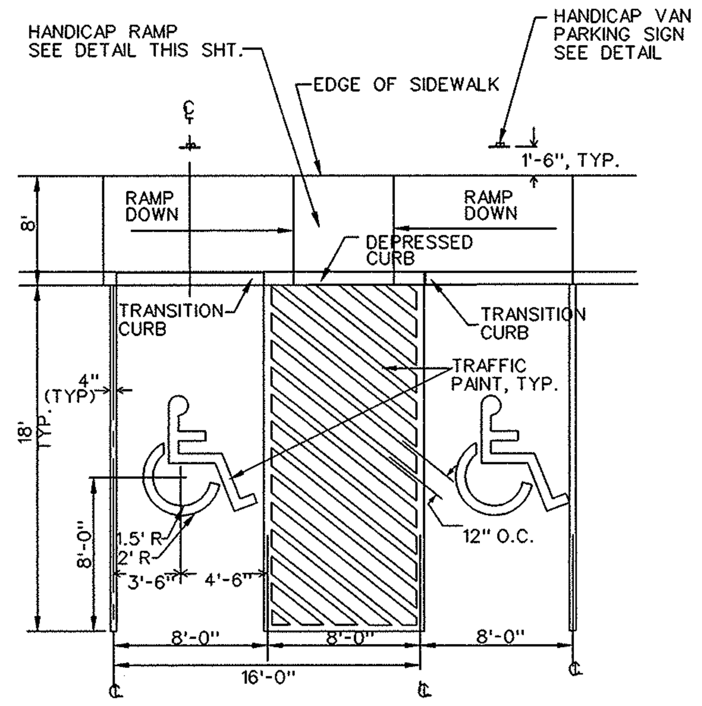

NOTE:
H.C. PARKING SHALL CONFORM TO CURRENT ADA CRITERIA ANSI A117.1-1980

3 **Van Accessible Handicap Parking Space**
N.T.S.

ALL DIMENSIONS ARE IN INCHES

* REDUCE SPACING 50 PERCENT

COLORS
LEGEND AND BORDER - GREEN
WHITE SYMBOL ON BLUE BACKGROUND
BACKGROUND - WHITE

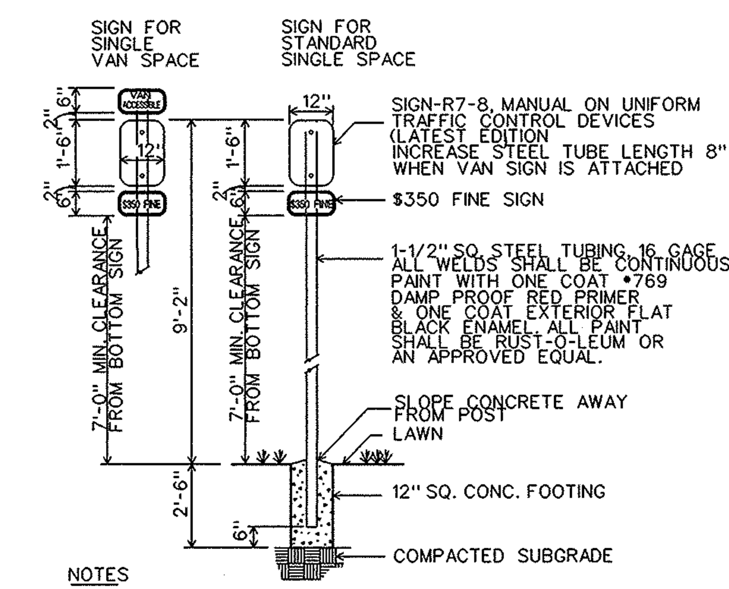

NOTES
1. DISTANCE FROM GROUND TO BOTTOM OF SIGN SHALL BE 7'
2. SEE HANDICAPPED PARKING SPACE DETAIL THIS SHEET FOR LOCATION OF HANDICAPPED SIGN.
3. VAN ACCESSIBLE SPACES SHALL INCLUDE "VAN SIGN" AS REQUIRED
4. SIGNS SHALL CONFORM TO CURRENT ADA CRITERIA.

SIGN COLORS
LETTERS AND BORDER - GREEN
WHITE H.C. SYMBOLS ON BLUE BACKGROUND
BACKGROUND - WHITE

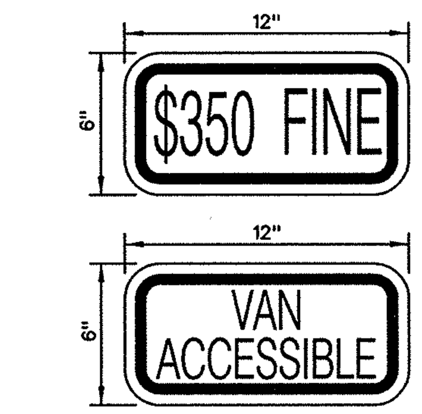

$350 FINE SIGN / VAN ACCESSIBLE SIGN

SIGN TO UTILIZE AN ALUMINUM BLANK 6" X 12" X 0.080 " THICK WITH TWO SINGLE POST MOUNTING HOLES.

THE TEXT AND BORDER SHALL BE STANDARD GREEN TO MATCH THAT ON R7-8 AND THE BACKGROUND SHALL BE REFLECTIVE WHITE. TEXT SHALL BE IN 3" CHARACTERS

4 **Detail Handicap Parking Signs**
N.T.S.

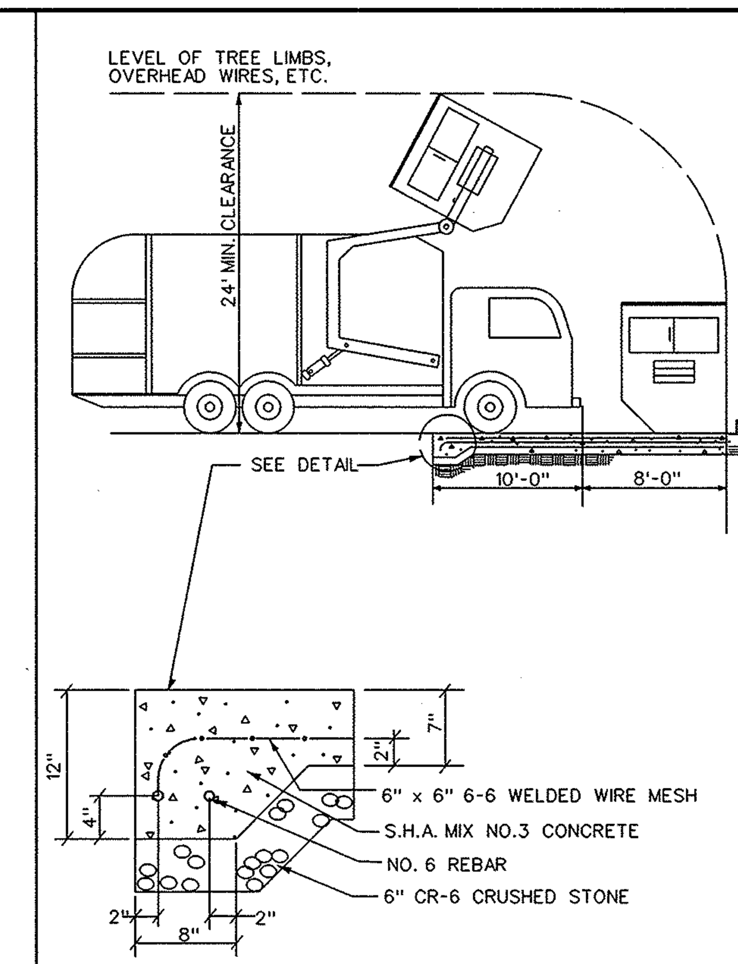

Refer to Howard County Standard Plate R -3.01

5 **Detail Solid Waste Service Pad**
N.T.S.

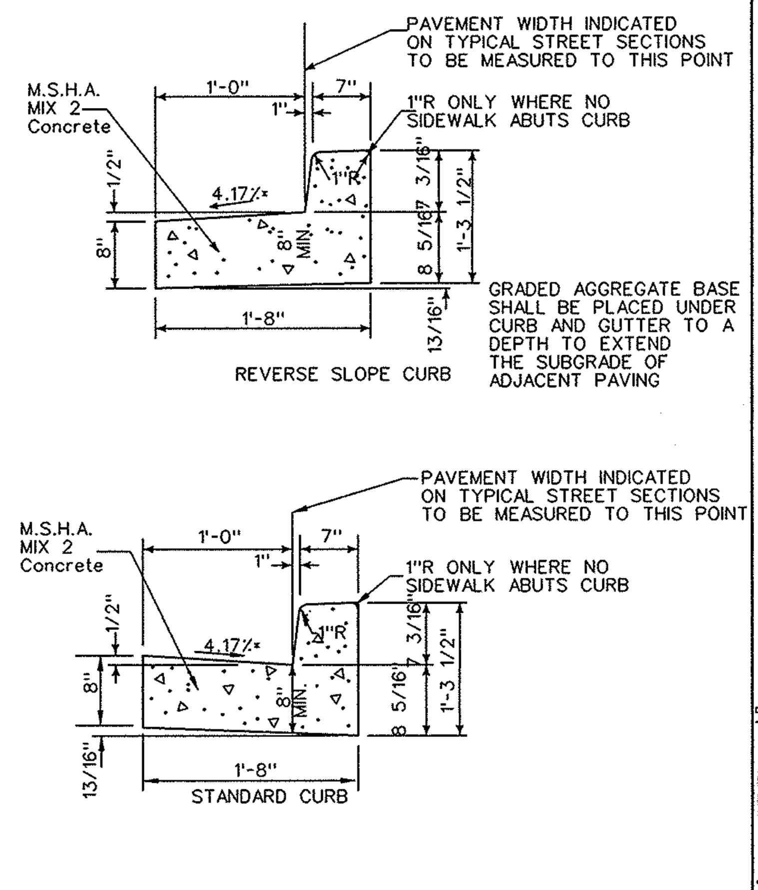

*Where Gutter Pan is Adjacent to Handicap Parking Space Maximum Slope = 2.00%
Refer to Howard County Standard Plate R-3.01

6 **Detail Concrete Curb and Gutter**
N.T.S.

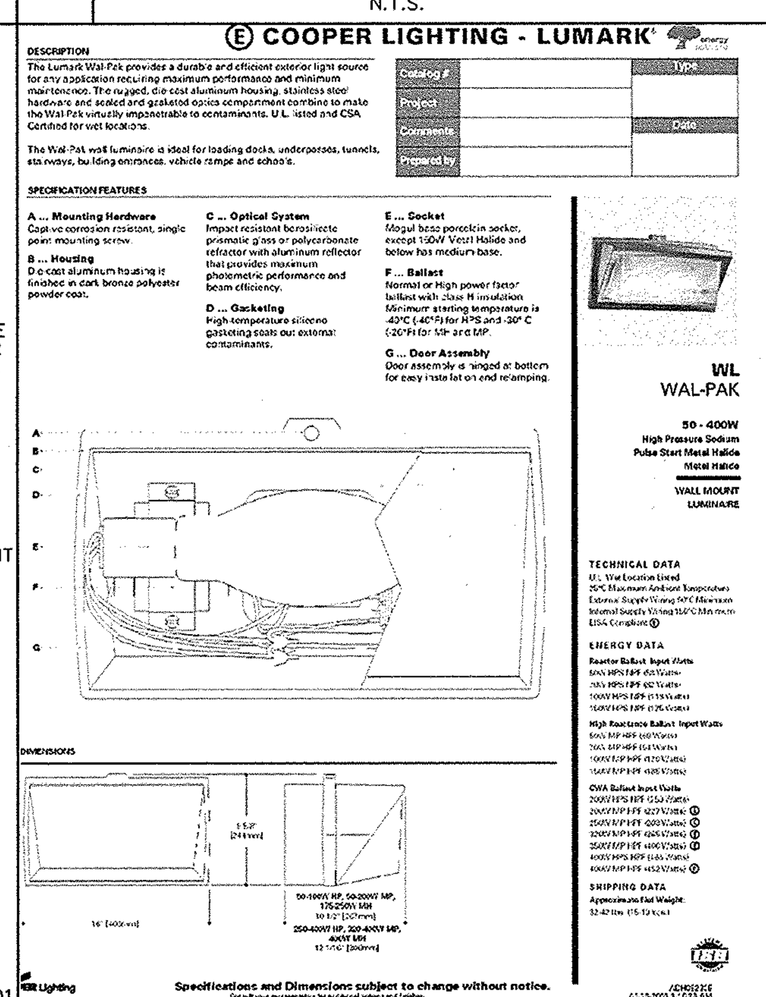

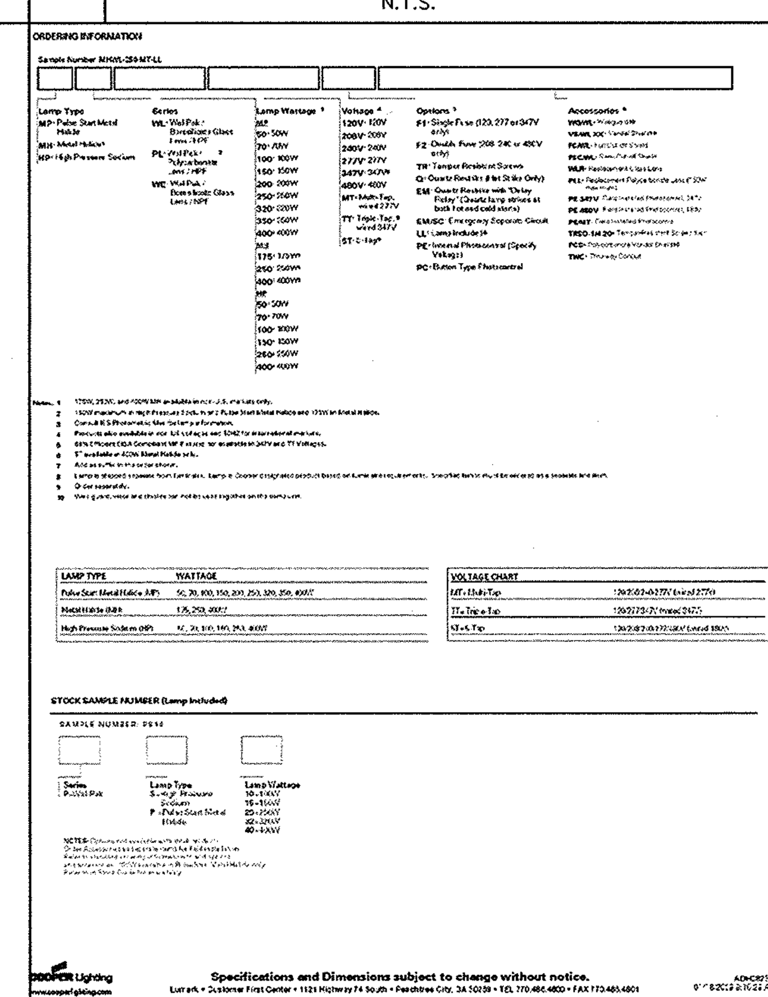

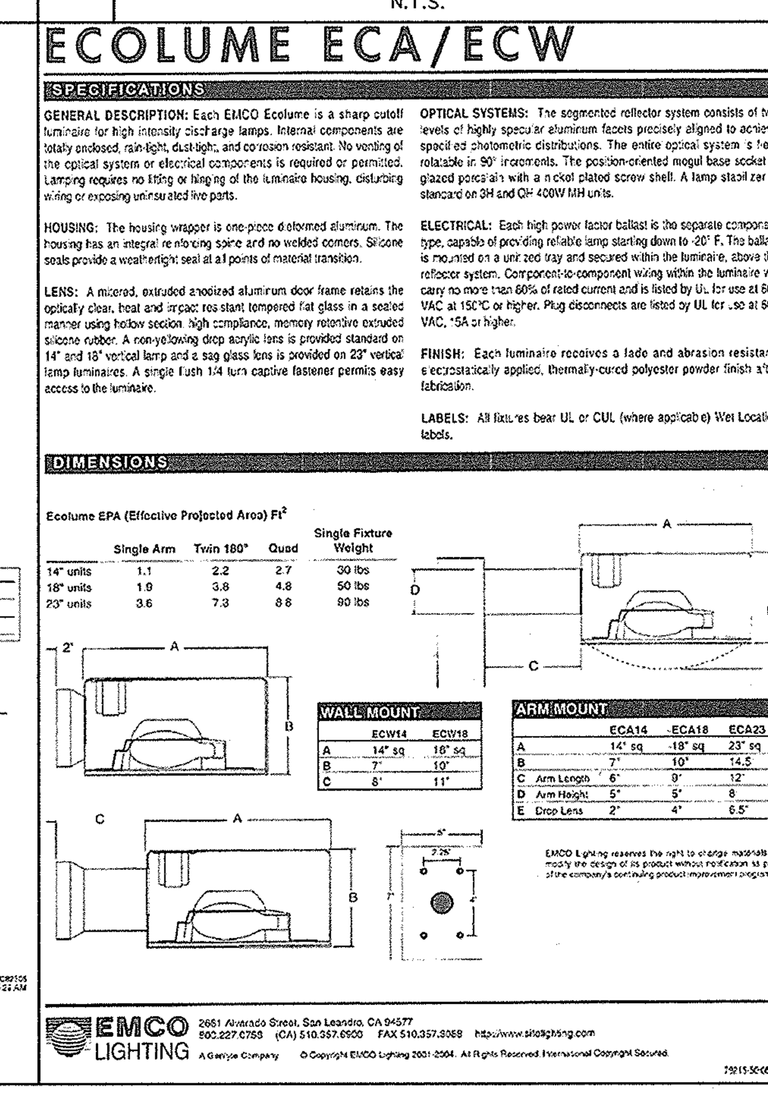

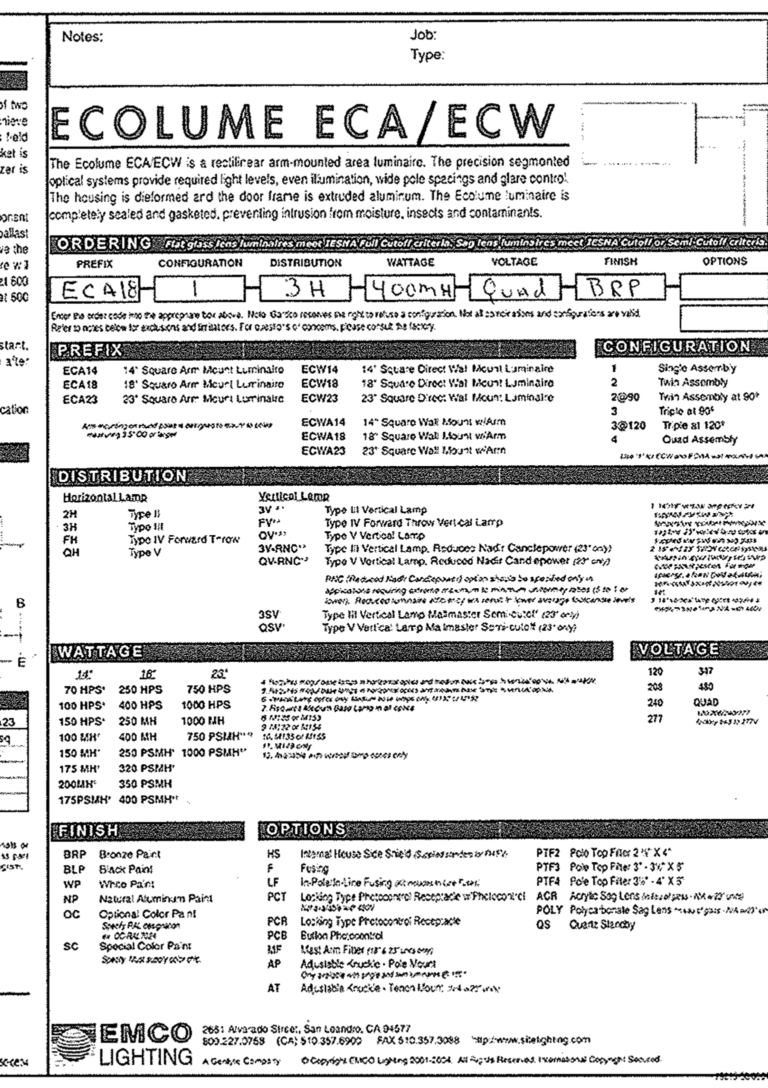

7 **Lighting Detail**
N.T.S.

PAVEMENT SECTION DETAILS

HEAVY & LIGHT DUTY PAVING

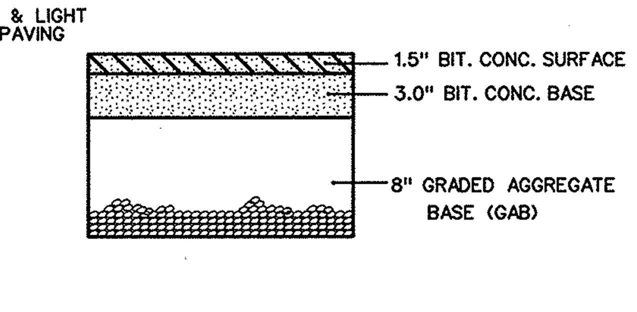

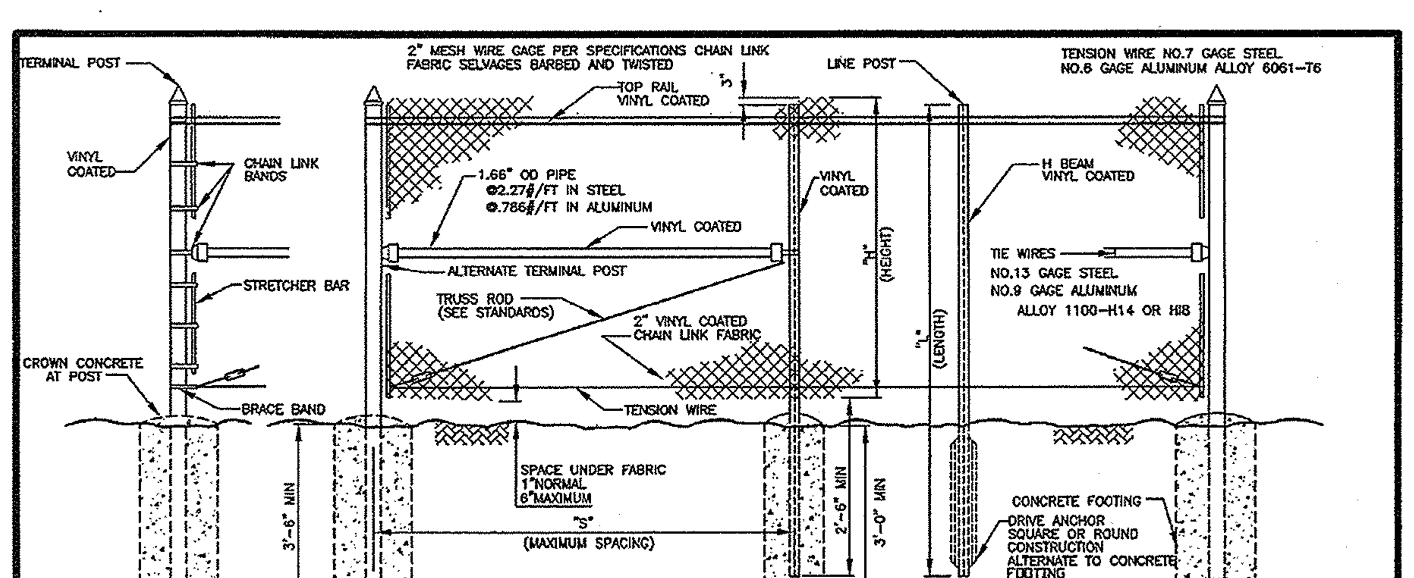

"H" HEIGHT OF FENCE	5'-0" RURAL	6'-0"	8'-0"
"S" POST SPACING MAX	12'-0"	10'-0"	10'-0"
"L" LENGTH OF H BEAM	7'-8" MIN	8'-8" MIN	10'-8" MIN
H BEAM - STEEL	1.875"x1.65"@2.70"/FT	2.25"x1.95"@4.10"/FT	2.25"x1.95"@4.10"/FT
H BEAM - ALUMINUM	1.875"x1.62"@0.91"/FT	2.25"x1.95"@1.25"/FT	2.25"x1.95"@1.25"/FT
TERM POST STEEL	2.375"OD@3.65"/FT	2.875"OD@5.79"/FT	2.875"OD@5.79"/FT
TERM POST ALUMINUM	2.375"OD@1.26"/FT	2.875"OD@2.00"/FT	2.875"OD@2.00"/FT
ALT TERM POST STEEL	2.00"SQ @3.85"/FT	2.50"SQ @5.70"/FT	2.50"SQ @5.70"/FT
ALT TERM POST ALUMINUM	2.50"SQ @1.26"/FT	3.00"SQ @2.00"/FT	3.00"SQ @2.00"/FT

NOTES:
1. ALL POSTS (TERMINAL AND LINE) TO BE SAME LENGTH (L).
2. TENSION WIRE CLIP AT 18"± O/C 12 1/2 GA. GALVANIZED STEEL WIRE .110 DIAMETER ALUMINUM WIRE ALLOY 5058-H38.
3. MATERIALS TO MEET REQUIREMENTS OF AASHTO M181.
4. VINYL CLAD STEEL IF SPECIFIED BY ENGINEER SHALL BE COLORED BLACK UNLESS OTHERWISE SPECIFIED.

	5'-0" RURAL & 6'-0"
HOG RING - STEEL	18" ± O/C 12.5 GA GALVANIZED STEEL WIRE
HOG RING - ALUMINUM	18" ± O/C 110 0 ALUMINUM WIRE ALLOY 5058 - H38

Revised / Revised 5/7/2007 Approved	Howard County, Maryland Department of Public Works Approved: Chief, Bureau of Engineering	CHAIN LINK FENCE	Detail G-7.21

NOTE:
USE MANUFACTURER'S RECOMMENDATIONS FOR THE SPECIFIC INSTALLATION REQUIREMENTS.

APPROVED: DEPARTMENT OF PLANNING AND ZONING

Chief, Development Engineering Division — Date 11-6-14
Chief, Division of Land Development — Date 11-20-14
Director — Date 11/21/14

ADDRESS CHART

LOT / PARCEL NO.	STREET ADDRESS
PARCEL B-1	7901 OCEANO AVENUE
PARCEL E-1	7775 CHESAPEAKE BAY COURT

PERMIT INFORMATION CHART

SUBDIVISION NAME			SECTION / AREA		LOT / PARCEL NO.
MARYLAND FOOD CENTER AUTHORITY			3		B-1/662 & E-1/696
PLAT NO. or L/F	GRID NO.	ZONING	TAX MAP NO.	ELEC. DIST.	CENSUS TRACT
23017-23021	21	M-2	43	6TH	6069.01

BLDG
Baltimore Land Design Group Inc.
Consulting Engineers
230 SCHILLING CIRCLE, SUITE 364 • HUNT VALLEY, MARYLAND 21031
PHONE: 410.229.9851 • FAX: 410.229.9865 • BLDG@BLDGINC.COM

PROFESSIONAL CERTIFICATION
I HEREBY CERTIFY THAT THESE DOCUMENTS WERE PREPARED OR APPROVED BY ME, AND THAT I AM A DULY LICENSED PROFESSIONAL ENGINEER UNDER THE LAWS OF THE STATE OF MARYLAND, LICENSE NO. 21245, EXPIRATION DATE: JUNE 9, 2016.

OWNER
MARYLAND FOOD CENTER AUTHORITY
7801 OCEANO AVE
JESSUP, MD 20794
PHONE (410) 379-5760
FAX (410) 379-5773

DEVELOPER / APPLICANT
MERRITT PROPERTIES, LLC
2066 LORD BALTIMORE DRIVE
BALTIMORE, MD 21244
PHONE (410) 298-2600
FAX (410) 298-9644

REVISIONS

DATE	NO.	DESCRIPTION	BY

SITE DETAILS I

MARYLAND FOOD CENTER AUTHORITY
PARCEL B-1 & E-1
(WAREHOUSE & OFFICE)

HOWARD COUNTY, MARYLAND
SCALE: N/A

DATE: OCTOBER, 2014

DRAWING NO.
C-41

SDP-14-068

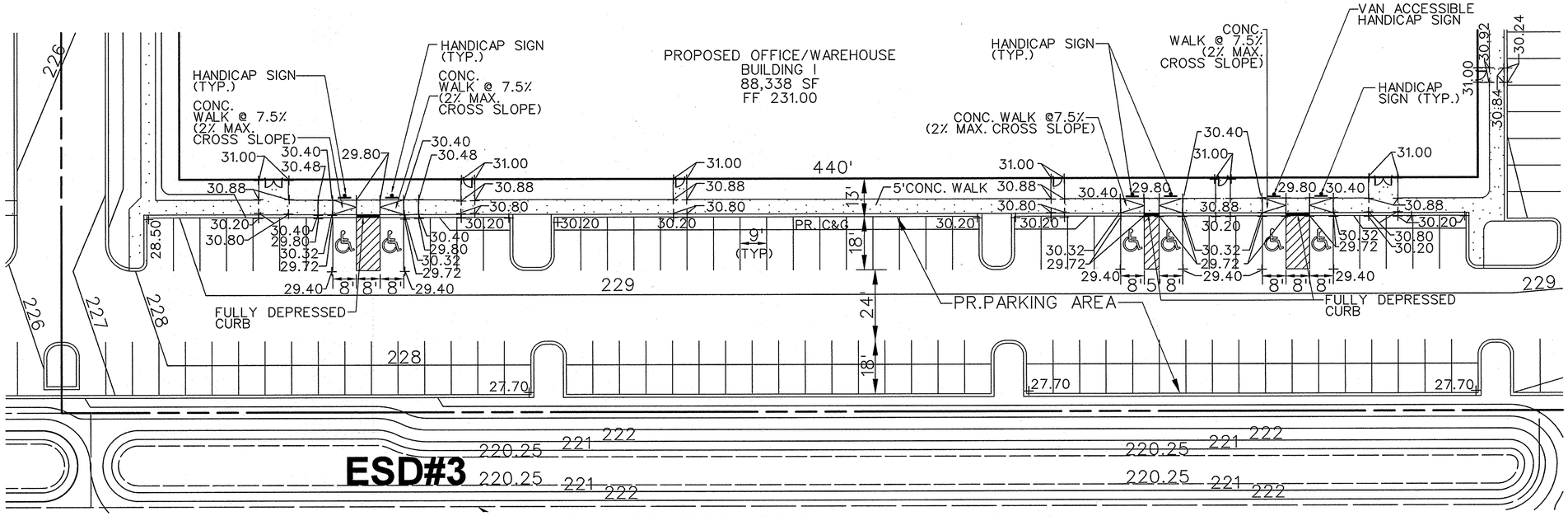

HANDICAP ACCESSIBLE ROUTE FOR PROPOSED BUILDING #1

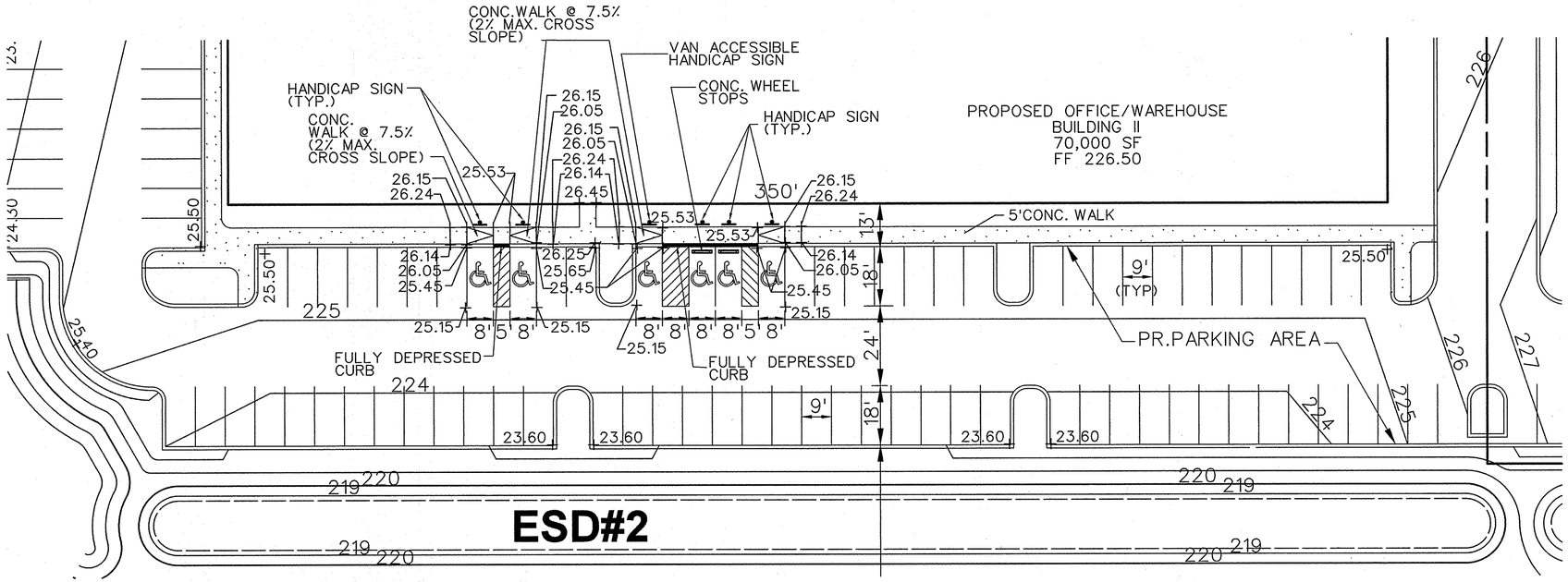

HANDICAP ACCESSIBLE ROUTE FOR PROPOSED BUILDING #2

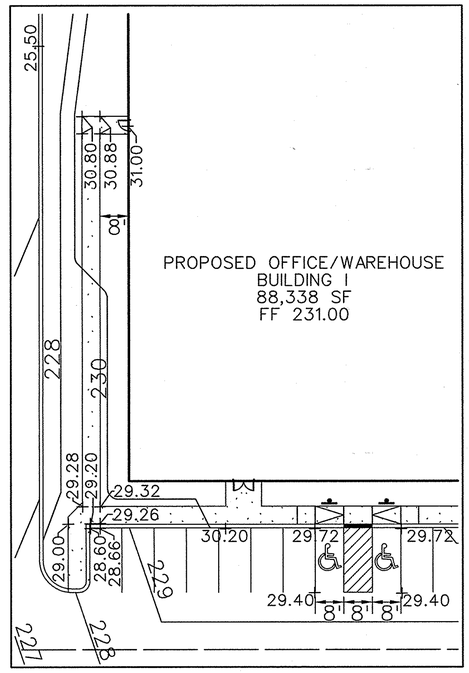

HANDICAP ACCESSIBLE ROUTE FOR PROPOSED BUILDING #1 (CONTINUED)

APPROVED: DEPARTMENT OF PLANNING AND ZONING

Chief, Development Engineering Division — Date 2-9-15

Chief, Division of Land Development — Date 2-12-15

Director — Date 2/12/15

ADDRESS CHART	
LOT / PARCEL NO.	STREET ADDRESS
PARCEL B-1	7901 OCEANO AVENUE
PARCEL E-1	7775 CHESAPEAKE BAY COURT

PERMIT INFORMATION CHART					
SUBDIVISION NAME			SECTION / AREA		LOT / PARCEL NO.
MARYLAND FOOD CENTER AUTHORITY			3		B-1/662 & E-1/696
PLAT NO. or L/F	GRID NO.	ZONING	TAX MAP NO.	ELEC. DIST.	CENSUS TRACT
23017-23021	21	M-2	43	6TH	6069.01

40 20 0 40

THE COORDINATE SYSTEM OF ALL DRAWINGS IS BASED ON THE NORTH AMERICAN DATUM OF 1983. THE ELEVATION SYSTEM OF ALL DRAWINGS IS BASED ON THE NORTH AMERICAN VERTICAL DATUM OF 1988. HORZ: NAD 83/91; VERT: NAVD 88

BLDG
Baltimore Land Design Group Inc.
Consulting Engineers
230 SCHILLING CIRCLE, SUITE 364 • HUNT VALLEY, MARYLAND 21031
PHONE: 410.229.9851 • FAX: 410.229.9865 • BLDG@BLDGINC.COM

LICENSED FOR PROFESSIONAL ENGINEERING — 21245 — CHARLES VALENTINE HOSTEK, ZARBOS — STATE OF MARYLAND — 1/9/15

PROFESSIONAL CERTIFICATION

I HEREBY CERTIFY THAT THESE DOCUMENTS WERE PREPARED OR APPROVED BY ME, AND THAT I AM A DULY LICENSED PROFESSIONAL ENGINEER UNDER THE LAWS OF THE STATE OF MARYLAND, LICENSE NO. 21245, EXPIRATION DATE: JUNE 9, 2016.

OWNER
MARYLAND FOOD CENTER AUTHORITY
7801 OCEANO AVE
JESSUP, MD 20794
PHONE (410) 379-5760
FAX (410) 379-5773

DEVELOPER / APPLICANT
MERRITT PROPERTIES, LLC
2066 LORD BALTIMORE DRIVE
BALTIMORE, MD 21244
PHONE (410) 298-2600
FAX (410) 298-9644

REVISIONS

DATE	NO.	DESCRIPTION	BY
12/01/14	1	ADDED DOORS/SIDEWALK AND RELOCATED HANDICAP SPACES FOR BUILDING I.	BLDG

REVISED
SITE DETAILS II
HANDICAP ACCESSIBLE ROUTE FOR PROPOSED BUILDINGS I & II

MARYLAND FOOD CENTER AUTHORITY
PARCEL B-1 & E-1
(WAREHOUSE & OFFICE)

HOWARD COUNTY, MARYLAND
SCALE: 1"=20'
DATE: DECEMBER, 2014

DRAWING NO. C-42
SHEET 42 OF 57

SDP-14-068

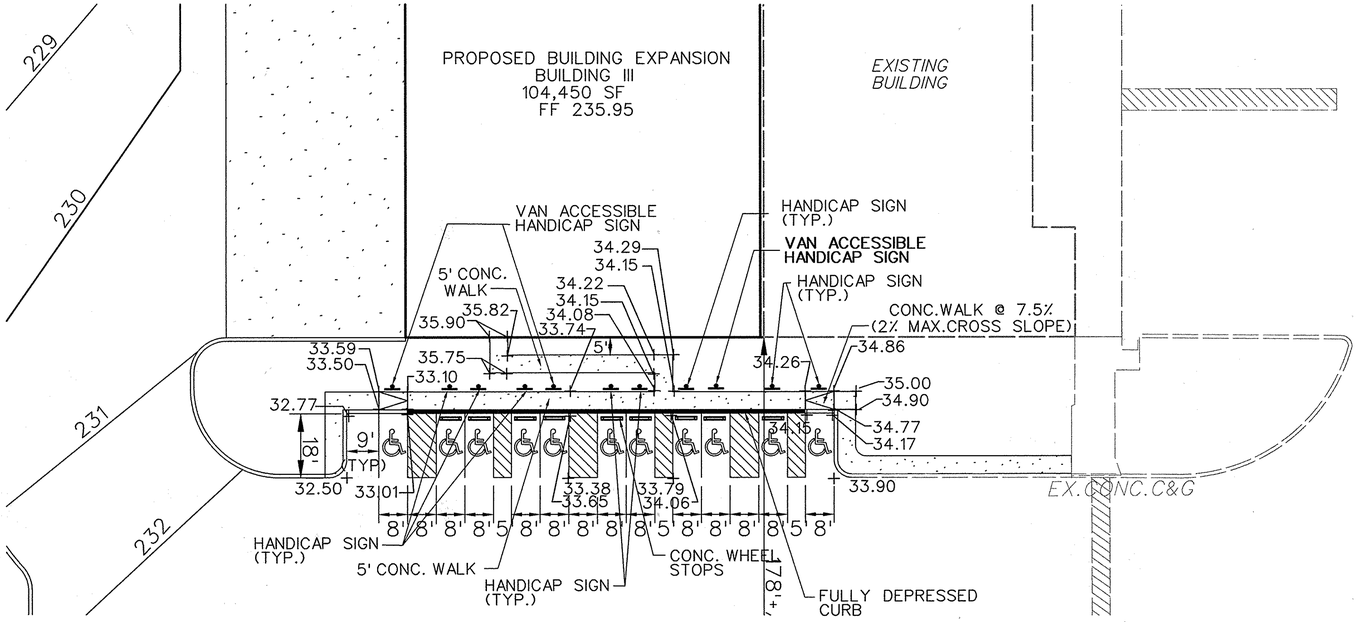

HANDICAP ACCESSIBLE ROUTE FOR PROPOSED BUILDING #3

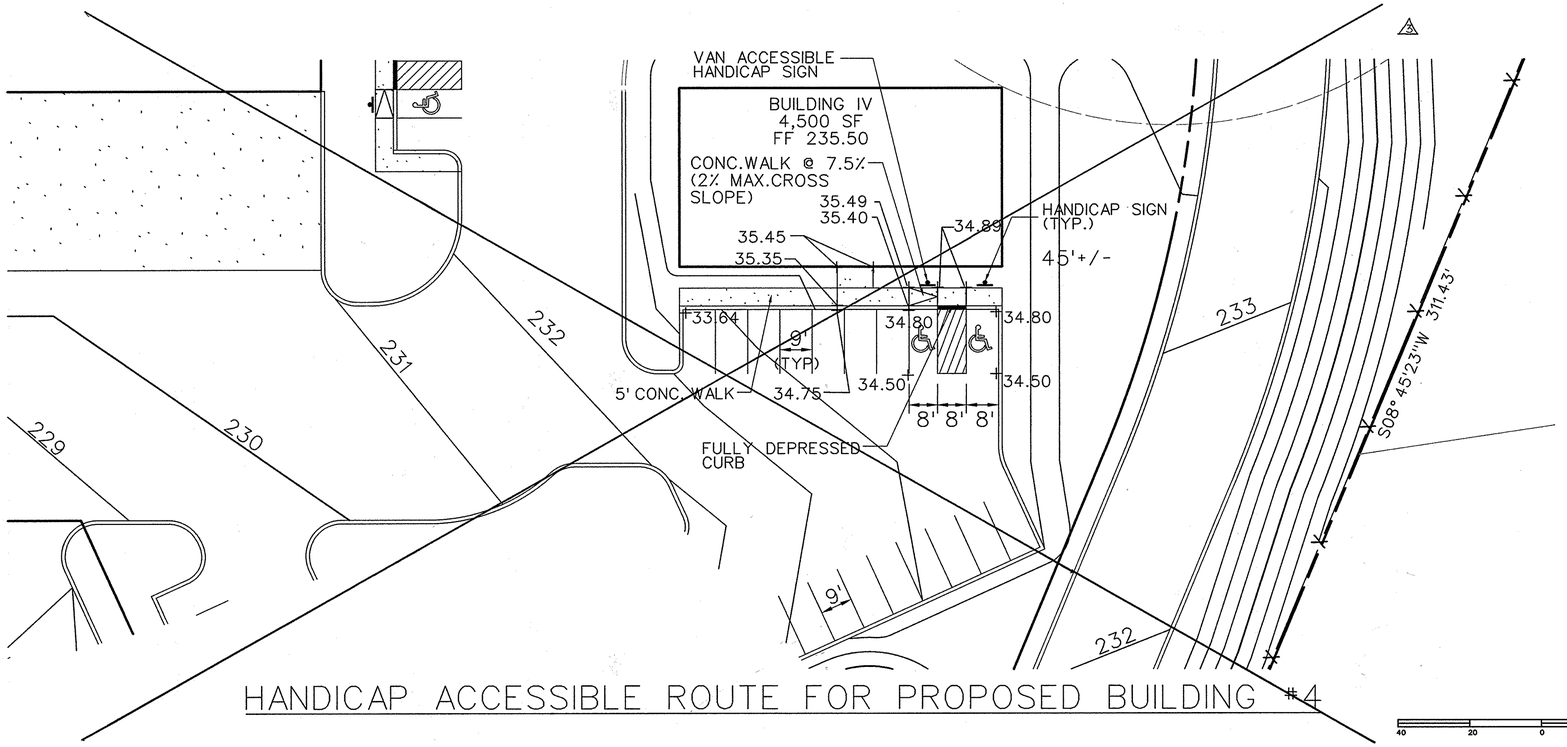

HANDICAP ACCESSIBLE ROUTE FOR PROPOSED BUILDING #4

40 20 0 40

THE COORDINATE SYSTEM OF ALL DRAWINGS IS BASED ON THE NORTH AMERICAN DATUM OF 1983. THE ELEVATION SYSTEM OF ALL DRAWINGS IS BASED ON THE NORTH AMERICAN VERTICAL DATUM OF 1988.
HORZ: NAD 83/91: VERT: NAVD 88

APPROVED: DEPARTMENT OF PLANNING AND ZONING

Chief, Development Engineering Division — Date 11.6.14

Chief, Division of Land Development — Date 11-20-14

Director — Date 11/21/14

ADDRESS CHART	
LOT / PARCEL NO.	STREET ADDRESS
PARCEL B-1	7901 OCEANO AVENUE
PARCEL E-1	7775 CHESAPEAKE BAY COURT

PERMIT INFORMATION CHART

SUBDIVISION NAME			SECTION / AREA	LOT / PARCEL NO.
MARYLAND FOOD CENTER AUTHORITY			3	B-1/662 & E-1/696
PLAT NO. or L/F	GRID NO.	ZONING	TAX MAP NO.	ELEC. DIST.	CENSUS TRACT
23017-23021	21	M-2	43	6TH	6069.01

MORRIS & RITCHIE ASSOCIATES, INC.
ENGINEERS, PLANNERS, SURVEYORS AND LANDSCAPE ARCHITECTS
14280 PARK CENTER DRIVE - LAUREL, MD 20707
(410) 792-9792 / (301) 776-1696 FAX: (410) 792-7395
MRAGTA.COM
COPYRIGHT MORRIS & RITCHIE ASSOCIATES, INC. 2015

FOR REVISION #3 ONLY

STATE OF MARYLAND — ROBERT C. NEUGEBAUER — 29203 — PROFESSIONAL ENGINEER — 11-30-15

MD PROFESSIONAL CERTIFICATION:
I HEREBY CERTIFY THAT THESE DOCUMENTS WERE PREPARED OR APPROVED BY ME, AND THAT I AM A DULY LICENSED PROFESSIONAL ENGINEER UNDER THE LAWS OF THE STATE OF MARYLAND.
LICENSE NO.: 29203
EXPIRATION DATE: 01/14/2017

BLDG
Baltimore Land Design Group Inc.
Consulting Engineers
230 SCHILLING CIRCLE, SUITE 364 • HUNT VALLEY, MARYLAND 21031
PHONE: 410.229.9851 • FAX: 410.229.9865 • BLDG@BLDGINC.COM

THE SEAL OF PROFESSIONAL ENGINEERS — 21245 — LOUIS T. JAVIE — STATE OF MARYLAND — 10/15/14

PROFESSIONAL CERTIFICATION
I HEREBY CERTIFY THAT THESE DOCUMENTS WERE PREPARED OR APPROVED BY ME, AND THAT I AM A DULY LICENSED PROFESSIONAL ENGINEER UNDER THE LAWS OF THE STATE OF MARYLAND, LICENSE NO. 21245, EXPIRATION DATE: JUNE 9, 2016.

OWNER
MARYLAND FOOD
CENTER AUTHORITY
7801 OCEANO AVE
JESSUP, MD 20794
PHONE (410) 379-5760
FAX (410) 379-5773

DEVELOPER / APPLICANT
MERRITT PROPERTIES, LLC
2066 LORD BALTIMORE DRIVE
BALTIMORE, MD 21244
PHONE (410) 298-2600
FAX (410) 298-9644

REVISIONS

DATE	NO.	DESCRIPTION	BY
9/18/15	3	REPLACED BUILDING IV WITH TRUCK WASH STATION	MRA

REVISED SITE DEVELOPMENT PLAN
SITE DETAILS III
HANDICAP ACCESSIBLE ROUTE FOR PROPOSED BUILDING #3 & #4

MARYLAND FOOD CENTER AUTHORITY

PARCEL B-1 & E-1
(WAREHOUSE & OFFICE)

HOWARD COUNTY, MARYLAND
SCALE: 1"=20'
DATE: OCTOBER, 2014

DRAWING NO.
C-43
SHEET 43 OF 57

SDP-14-068

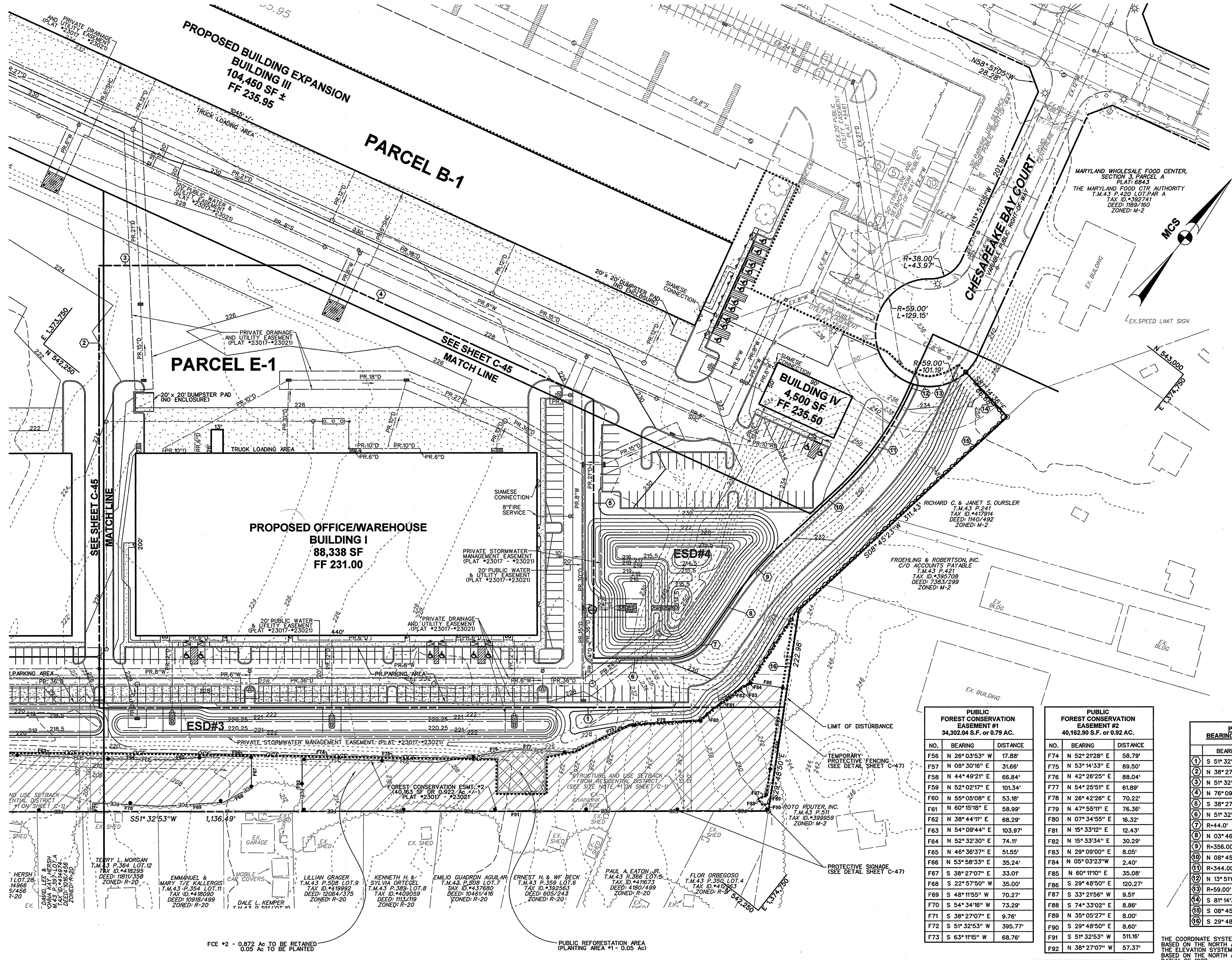

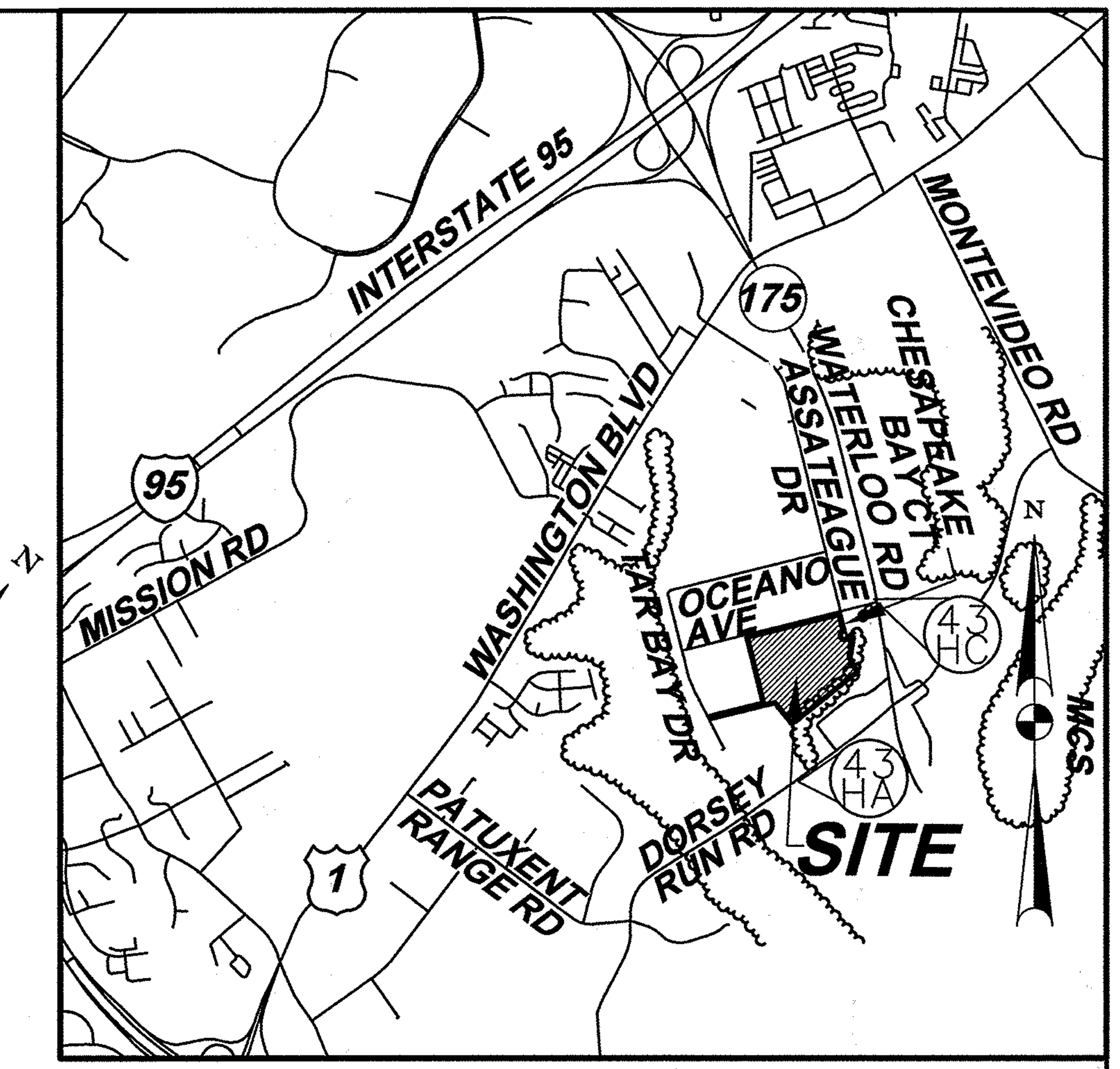

VICINITY MAP

SCALE: 1" = 2000'

ADC MAP NUMBER: 41, GRID: 1D AND 2D
ADC MAP COORDINATES: 76° 47'00" / 39° 08'30"

BENCH MARK

ELEVATIONS ARE BASED ON NAVD 88 DATUM PER HOWARD COUNTY CONTROL POINTS:

CONTROL POINT: 43HA
N 540,761.71; E 1,373,837.33
EL.224.21

CONTROL POINT: 43HC
N 543,386.16; E 1,374,935.81
EL.253.87

NOTES:

1. No rare, threatened or endangered species were observed within the study area.
2. Surrounding land use consists of commercial development and high density residential
3. Project site is 35.97 acres.
4. No wetlands, streams or buffers are present on the site. There is no 100 year floodplain on the site.
5. There are steep slopes on the property. These slopes are present around the perimeter of the site and around the existing stockpile.
6. There are no known specimen trees or state champion trees on the site.
7. There are no known rare, threatened or endangered species habitats on the property.
8. There are no known historic structures on the site.
9. Based on the FC Worksheet the FCA obligations for the project will be met with the retention of 1.66 acres of onsite forest and the afforestation/reforestation of 4.0 acres of reforestation. The planting will be provided with 0.05 acres onsite and 3.5 acres offsite on the Hay Medow Farm property.
10. The 0.05 acres of forest to be cleared for the construction of the temporary gabion outlet structure will be replanted onsite to maintain the 35 foot width requirement of the FCE.
11. A surety for the onsite/offsite planting will be required as part of the requirements for the project. The surety will be based on $0.50 per square foot of planting. The surety for onsite planting will be $1,089.00 and for offsite planting will be $86,031.00 to be posted as part of the DPW Developer's Agreement.

Forest Clearing/Reforestation Justification

The proposed forest clearing is required to allow for the construction of the access roadway and for construction of a temporary sediment control device. The proposed forest clearing is required to provide the most efficient site design. The forest to be cleared is of low priority for retention on the basis of its small size, isolated nature and invasive species colonization.

The 4.0 acre reforestation obligation will be met with 0.05 acres of onsite planting and 3.95 acres of offsite planting on the Hay Medow Farm property. The onsite planting will be performed within an area of clearing required for a temporary sediment control facility. The onsite planting will be performed to maintain the FCE width on the site to maximize forest retention credit and function.

The offsite planting at Hay Medow Farm will be located in a high priority planting area within and adjacent to wetlands, streams, and buffers. The plantings will help to convert an existing cattle pasture to forest and will help to improve water quality and habitat value. The offsite planting area is within a Use III watershed and will increase rural forest cover within the County. The offsite planting area, when combined with future plantings proposed for Hay Medow farm will create a riparian forest with corridor connections to adjacent properties.

**SEE SHEET C-47 AND C-48
FOR ADDITIONAL NOTES, DETAILS AND SPECIFICATIONS**

PUBLIC FOREST CONSERVATION EASEMENT #1
34,302.04 S.F. or 0.79 AC.

NO.	BEARING	DISTANCE
F56	N 26° 03'53" W	17.88'
F57	N 08° 30'16" E	31.66'
F58	N 44° 49'21" E	66.84'
F59	N 52° 02'17" E	101.34'
F60	N 55° 05'08" E	53.18'
F61	N 60° 15'18" E	58.99'
F62	N 38° 44'11" E	68.29'
F63	N 54° 09'44" E	103.97'
F64	N 52° 32'30" E	74.11'
F65	N 46° 36'37" E	51.55'
F66	N 53° 58'33" E	35.24'
F67	S 38° 27'07" E	33.01'
F68	S 22° 57'50" W	35.00'
F69	S 48° 11'55" W	70.27'
F70	S 54° 34'16" W	73.29'
F71	S 38° 27'07" E	9.76'
F72	S 51° 32'53" W	395.77'
F73	S 63° 11'15" W	68.76'

PUBLIC FOREST CONSERVATION EASEMENT #2
40,162.90 S.F. or 0.92 AC.

NO.	BEARING	DISTANCE
F74	N 52° 21'28" E	58.79'
F75	N 53° 14'33" E	89.50'
F76	N 42° 26'25" E	88.04'
F77	N 54° 25'51" E	61.89'
F78	N 26° 42'26" E	70.22'
F79	N 47° 55'11" E	76.36'
F80	N 07° 34'55" E	16.32'
F81	N 15° 33'12" E	12.43'
F82	N 15° 33'34" E	30.29'
F83	N 29° 09'00" E	8.05'
F84	N 05° 03'23"W	2.40'
F85	N 60° 11'10" E	35.08'
F86	S 29° 48'50" E	120.27'
F87	S 33° 21'56" W	9.51'
F88	S 74° 33'02" E	8.86'
F89	N 35° 05'27" E	8.00'
F90	S 29° 48'50" E	8.60'
F91	S 51° 32'53" W	511.16'
F92	N 38° 27'07" W	57.37'

PARCEL E-1 BEARING AND DISTANCES

	BEARING	DISTANCE
1	S 51° 32'53" W	750.78'
2	N 38° 27'07" W	485.00'
3	N 51° 32'53" E	219.79'
4	N 76° 09'12" E	354.39'
5	S 38° 27'07" E	283.44'
6	N 51° 32'53" E	85.33'
7	R=44.0'	42.48'
8	N 03° 46'06" W	54.55'
9	R=356.00'	77.82'
10	N 08° 45'23" E	87.35'
11	R=344.00'	135.74'
12	N 13° 51'05" W	9.70'
13	R=59.00'	61.77'
14	S 81° 14'36" E	66.68'
15	S 08° 45'23" W	311.43'
16	S 29° 48'50" E	107.67'

50 30 0 50

THE COORDINATE SYSTEM OF ALL DRAWINGS IS BASED ON THE NORTH AMERICAN DATUM OF 1983. THE ELEVATION SYSTEM OF ALL DRAWINGS IS BASED ON THE NORTH AMERICAN VERTICAL DATUM OF 1988.
HORZ: NAD 83/91; VERT: NAVD 88

APPROVED: DEPARTMENT OF PLANNING AND ZONING

Chief, Development Engineering Division — Date 2.9.15
Chief, Division of Land Development — Date 2-12-15
Director — Date 2/13/15

ADDRESS CHART	
LOT / PARCEL NO.	STREET ADDRESS
PARCEL B-1	7901 OCEANO AVENUE
PARCEL E-1	7775 CHESAPEAKE BAY COURT

PERMIT INFORMATION CHART

SUBDIVISION NAME			SECTION / AREA		LOT / PARCEL NO.
MARYLAND FOOD CENTER AUTHORITY			3		B-1/662 & E-1/696
PLAT NO. or L/F	GRID NO.	ZONING	TAX MAP NO.	ELEC. DIST.	CENSUS TRACT
23017-23021	21	M-2	43	6TH	6069.01

Eco-Science Professionals, Inc.
Consulting Ecologists
P.O. Box 5006 Glen Arm, Maryland 21057 Telephone (410) 832-2400 Fax (410) 832-2400

MD DNR Qualified Professional
USACOE Wetland Delineator
Certification # WDCP93MD0610044B2
John P. Canoles

01/12/14

OWNER
MARYLAND FOOD CENTER AUTHORITY
7801 OCEANO AVE
JESSUP, MD 20794
PHONE (410) 379-5760
FAX (410) 379-5773

DEVELOPER / APPLICANT
MERRITT PROPERTIES, LLC
2066 LORD BALTIMORE DRIVE
BALTIMORE, MD 21244
PHONE (410) 298-2600
FAX (410) 298-9644

REVISIONS

DATE	NO.	DESCRIPTION	BY
12/01/14	1	ADDED DOORS, SIDEWALK AND ROOF DRAINS.	BLDG
		RELOCATED HANDICAP SPACES AND PRIVATE	
		SEWER LINE FOR BUILDING I.	

REVISED
FOREST CONSERVATION PLAN
PLAN VIEW I

MARYLAND FOOD CENTER AUTHORITY

PARCEL B-1 & E-1
(WAREHOUSE & OFFICE)

HOWARD COUNTY, MARYLAND
SCALE: 1" = 50'

DATE: DECEMBER, 2014

DRAWING NO.
C-44

SDP-14-068

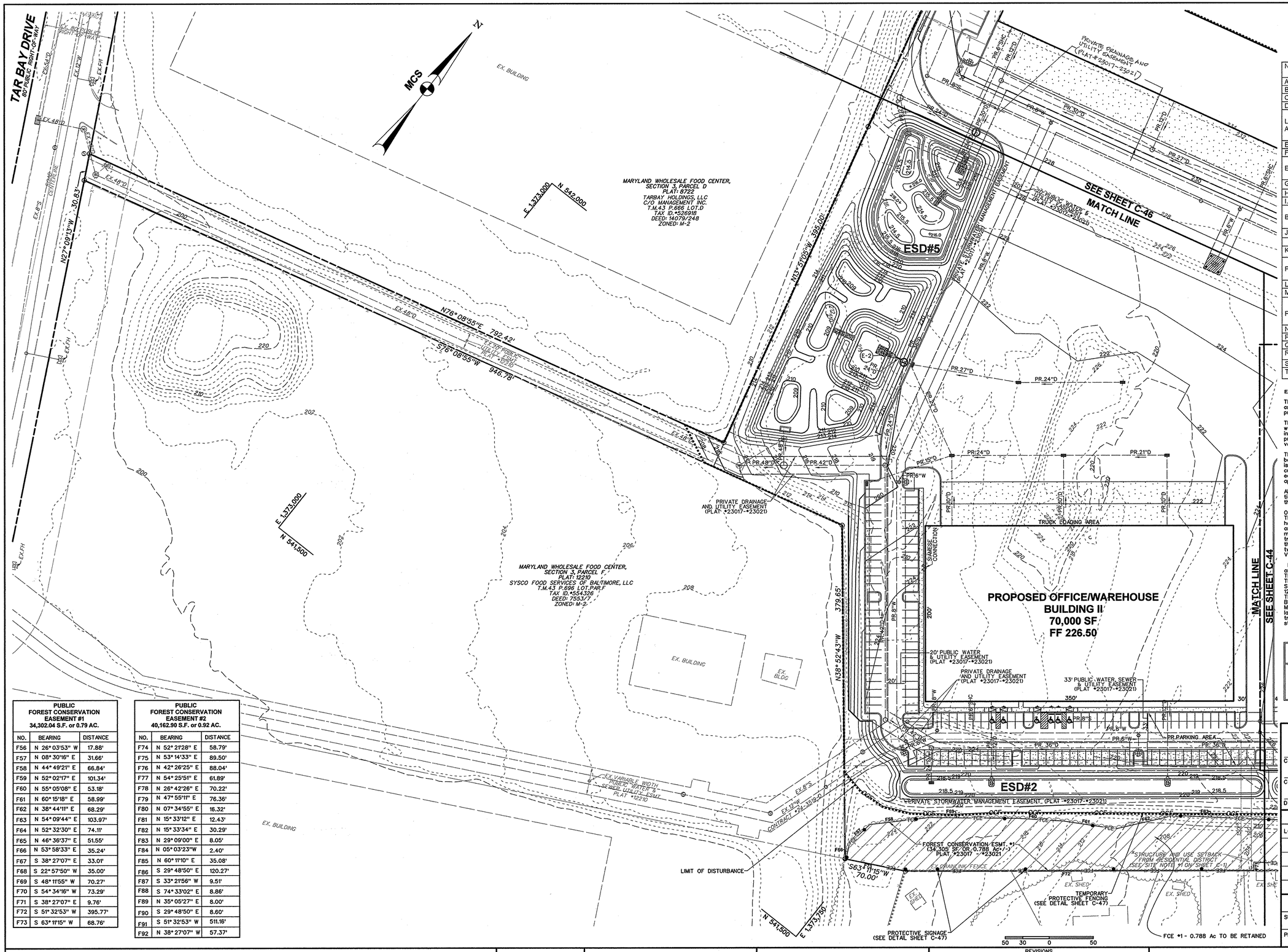

FOREST CONSERVATION WORKSHEET

Version 1.0

Project: MD Food Center Authority, Parcels B-1 & E-1
Date: June 18, 2014

NET TRACT AREA			Acres
A. Total tract area			35.97
B. Area within 100 Year Floodplain			0
C. Area of site within overhead transmission line			0
D. Net Tract Area			35.97
LAND USE CATEGORY: (from table 3.2.1, page 40, Manual) ARA MDR IDA HDR MPD CIA M-2			
E. Afforestation Threshold	(percentage)	0.15	5.4
F. Conservation Threshold	(percentage)	0.15	5.4
EXISTING FOREST COVER:			
G. Existing forest cover (excluding floodplain)			1.9
H. Area of forest above afforestation threshold			0
I. Area of forest above conservation threshold			0
BREAK EVEN POINT:			
J. Forest retention above threshold with no mitigation			NA
Break-Even Point			NA
K. Clearing permitted without mitigation			NA
PROPOSED FOREST CLEARING			
L. Total area of forest to be Cleared or Retained Outside FCE			0.24
M. Total area of forest to be Retained in FCE			1.66
PLANTING REQUIREMENTS			
N. Reforestation for clearing above Conservation Threshold			0
P. Reforestation for clearing below Conservation Threshold			0.5
Q. Credit for retention above conservation threshold			0
R. Total reforestation required			0.5
S. Total afforestation required			3.5
T. Total reforestation and afforestation required			4.0

EXISTING CONDITIONS OVERVIEW

The subject property is comprised of two parcels that are located at 7901 Oceano Drive and 7775 Chesapeake Bay Court. These properties combine to create the 35.97 acres project site.

The property at 7901 Oceano Drive has been previously developed into a seafood warehouse and sales outlet. Approximately half of this property has been developed into a warehouse building and associated parking and access. The balance of the property has been graded to a level or gently sloping pad site. This area is partly vegetated and partly gravel.

The property at 7775 Chesapeake Bay Court is a vacant of any structures but has been previously graded. The site has been graded into a large pad site. A soil stockpile is present at the eastern end of the site, just beyond the Chesapeake Bay Court cul-de-sac and a storm water management facility has been constructed at the western edge of the site. This facility does not appear to be functional at this time though it does appear to convey surface water run-off from the site through a culvert system.

Along the southern edge of the property a graded slope has been constructed. This slope ties in the grades of the pad site into the existing grades of the residential development to the south of the property.

On the graded pad site and soil stockpile successional vegetative colonization has begun. The area contains a mixed community of lespedeza, raspberry, Indian grass, Japanese honeysuckle, young Bradford pear, black locust, Virginia pine, winged and staghorn sumac, and sweet gum. The woody colonization of these areas site is young and sporadic. The majority of the saplings are less than 2 inches, though some do reach four inch dbh. The tree cover on the pad site is inconsistent and fragmented. The tree cover does not meet the minimum requirements to be considered forest. This includes a requirement of 100, two inch caliper trees per acre over contiguous areas 10,000 sq.ft. and 35 foot in width. Vine cover, primarily Japanese honeysuckle, is common on the soil stockpile.

Forest is present on the tie in slopes along the southern edge of the site, continuing around the southeast corner of the site. The forest occupies 1.9 acres of the site. The forest is likely a remnant of forest community that existed prior to past site grading. The community includes tulip poplar, red oak, southern red oak, sweet gum and beech. Scattered white pine are also present within the stand. The canopy trees are generally 12-16 inches diameter at breast height and the understory trees are 6-12 inch dbh. The understory includes the canopy associates as well as red maple and black cherry. Black locust and mulberry are common along the outer edges of the community. Multiflora rose, spicebush, bush honeysuckle and blackhaw are common in the shrub layer. Vine cover in the stand is high with poison ivy, Japanese honeysuckle, periwinkle, trumpet creeper and grape all being common. Vine cover extends into the canopy of the stand. No specimen trees were noted within or outside of the forest limits.

Key	Community Type	Acreage	Dominant Vegetation	General Condition	Priority Acreage
F1	Oak/Poplar	1.9 (NTA)	Liriodendron tulipifera, Quercus rubra, Quercus falcata, Liquidambar styraciflua, Acer rubrum	Good	0

APPROVED: DEPARTMENT OF PLANNING AND ZONING

Chief, Development Engineering Division — Date 11-6-14

Chief, Division of Land Development — Date 11-2014

Director — Date 11/6/14

ADDRESS CHART	
LOT / PARCEL NO.	STREET ADDRESS
PARCEL B-1	7901 OCEANO AVENUE
PARCEL E-1	7775 CHESAPEAKE BAY COURT

PERMIT INFORMATION CHART					
SUBDIVISION NAME MARYLAND FOOD CENTER AUTHORITY			SECTION / AREA 3		LOT / PARCEL NO. B-1/662 & E-1/696
PLAT NO. or L/F 23017-23021	GRID NO. 21	ZONING M-2	TAX MAP NO. 43	ELEC. DIST. 6TH	CENSUS TRACT 6069.01

PUBLIC FOREST CONSERVATION EASEMENT #1 34,302.04 S.F. or 0.79 AC.		
NO.	BEARING	DISTANCE
F56	N 26° 03'53" W	17.88'
F57	N 08° 30'16" E	31.66'
F58	N 44° 49'21" E	66.84'
F59	N 52° 02'17" E	101.34'
F60	N 55° 05'08" E	53.18'
F61	N 60° 15'18" E	58.99'
F62	N 38° 44'11" E	68.29'
F63	N 54° 09'44" E	103.97'
F64	N 52° 32'30" E	74.11'
F65	N 46° 36'37" E	51.55'
F66	N 53° 58'33" E	35.24'
F67	S 38° 27'07" E	33.01'
F68	S 22° 57'50" W	35.00'
F69	S 48° 11'55" W	70.27'
F70	S 54° 34'16" W	73.29'
F71	S 38° 27'07" E	9.76'
F72	S 51° 32'53" W	395.77'
F73	S 63° 11'15" W	68.76'

PUBLIC FOREST CONSERVATION EASEMENT #2 40,162.90 S.F. or 0.92 AC.		
NO.	BEARING	DISTANCE
F74	N 52° 21'28" E	58.79'
F75	N 53° 14'33" E	89.50'
F76	N 42° 26'25" E	88.04'
F77	N 54° 25'51" E	61.89'
F78	N 26° 42'26" E	70.22'
F79	N 47° 55'11" E	76.36'
F80	N 07° 34'55" E	16.32'
F81	N 15° 33'12" E	12.43'
F82	N 15° 33'34" E	30.29'
F83	N 29° 09'00" E	8.05'
F84	N 05° 03'23"W	2.40'
F85	N 60° 11'10" E	35.08'
F86	S 29° 48'50" E	120.27'
F87	S 33° 21'56" W	9.51'
F88	S 74° 33'02" E	8.86'
F89	N 35° 05'27" E	8.00'
F90	S 29° 48'50" E	8.60'
F91	S 51° 32'53" W	511.16'
F92	N 38° 27'07" W	57.37'

Eco-Science Professionals, Inc.
Consulting Ecologists
P.O. Box 9006 Glen Arm, Maryland 21057 Telephone (410) 832-2400 Fax (410) 832-2402

MD DNR Qualified Professional
USACOE Wetland Delineator
Certification # WDCP93MD0610044B2
John F. Canoles
10/2/14

OWNER
MARYLAND FOOD CENTER AUTHORITY
7801 OCEANO AVE
JESSUP, MD 20794
PHONE (410) 379-5760
FAX (410) 379-5773

DEVELOPER / APPLICANT
MERRITT PROPERTIES, LLC
2066 LORD BALTIMORE DRIVE
BALTIMORE, MD 21244
PHONE (410) 298-2600
FAX (410) 298-9644

REVISIONS			
DATE	NO.	DESCRIPTION	BY

FOREST CONSERVATION PLAN
PLAN VIEW II

MARYLAND FOOD CENTER AUTHORITY

PARCEL B-1 & E-1
(WAREHOUSE & OFFICE)

HOWARD COUNTY, MARYLAND
SCALE: 1" = 50'
DATE: OCTOBER, 2014

DRAWING NO. C-45

SHEET 45 OF 57

SDP-14-068

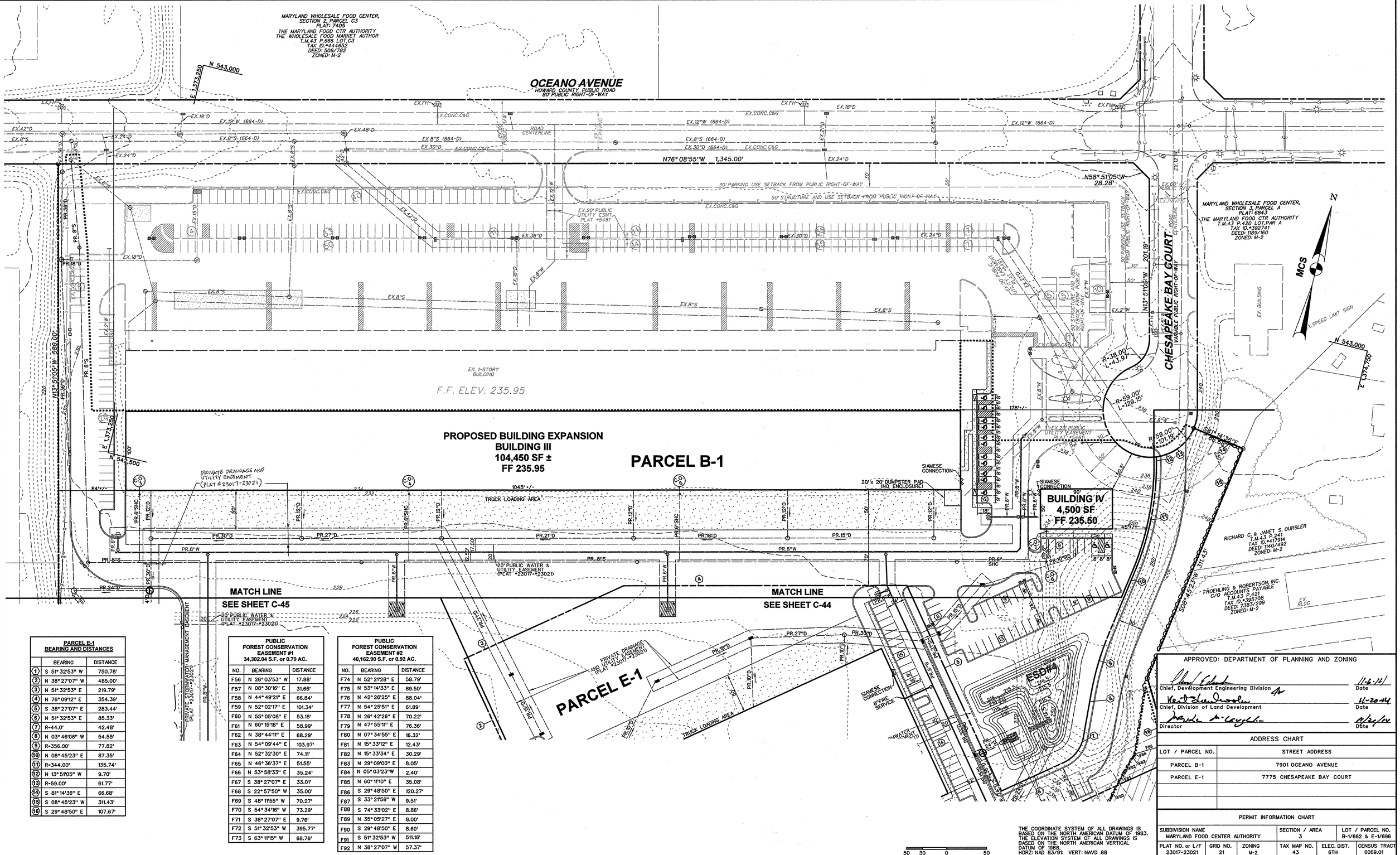

PARCEL E-1 BEARING AND DISTANCES

	BEARING	DISTANCE
1	S 51° 32'53" W	750.78'
2	N 38° 27'07" W	485.00'
3	N 51° 32'53" E	219.79'
4	N 76° 09'12" E	354.39'
5	S 38° 27'07" E	283.44'
6	N 51° 32'53" E	85.33'
7	R=44.0'	42.48'
8	N 03° 46'06" W	54.55'
9	R=356.00'	77.82'
10	N 08° 45'23" E	87.35'
11	R=344.00'	135.74'
12	N 13° 51'05" W	9.70'
13	R=59.00'	61.77'
14	S 81° 14'36" E	66.68'
15	S 08° 45'23" W	311.43'
16	S 29° 48'50" E	107.67'

PUBLIC FOREST CONSERVATION EASEMENT #1 34,302.04 S.F. or 0.79 AC.

NO.	BEARING	DISTANCE
F56	N 26° 03'53" W	17.88'
F57	N 08° 30'16" E	31.66'
F58	N 44° 49'21" E	66.84'
F59	N 52° 02'17" E	101.34'
F60	N 55° 05'08" E	53.18'
F61	N 60° 15'18" E	58.99'
F62	N 38° 44'11" E	68.29'
F63	N 54° 09'44" E	103.97'
F64	N 52° 32'30" E	74.11'
F65	N 46° 36'37" E	51.55'
F66	N 53° 58'33" E	35.24'
F67	S 38° 27'07" E	33.01'
F68	S 22° 57'50" W	35.00'
F69	S 48° 11'55" W	70.27'
F70	S 54° 34'16" W	73.29'
F71	S 38° 27'07" E	9.76'
F72	S 51° 32'53" W	395.77'
F73	S 63° 11'15" W	68.76'

PUBLIC FOREST CONSERVATION EASEMENT #2 40,162.90 S.F. or 0.92 AC.

NO.	BEARING	DISTANCE
F74	N 52° 21'28" E	58.79'
F75	N 53° 14'33" E	89.50'
F76	N 42° 26'25" E	88.04'
F77	N 54° 25'51" E	61.89'
F78	N 26° 42'26" E	70.22'
F79	N 47° 55'11" E	76.36'
F80	N 07° 34'55" E	16.32'
F81	N 15° 33'12" E	12.43'
F82	N 15° 33'34" E	30.29'
F83	N 29° 09'00" E	8.05'
F84	N 05° 03'23"W	2.40'
F85	N 60° 11'10" E	35.08'
F86	S 29° 48'50" E	120.27'
F87	S 33° 21'56" W	9.51'
F88	S 74° 33'02" E	8.86'
F89	N 35° 05'27" E	8.00'
F90	S 29° 48'50" E	8.60'
F91	S 51° 32'53" W	511.16'
F92	N 38° 27'07" W	57.37'

50 30 0 50

THE COORDINATE SYSTEM OF ALL DRAWINGS IS BASED ON THE NORTH AMERICAN DATUM OF 1983. THE ELEVATION SYSTEM OF ALL DRAWINGS IS BASED ON THE NORTH AMERICAN VERTICAL DATUM OF 1988. HORZ: NAD 83/91 VERT: NAVD 88

APPROVED: DEPARTMENT OF PLANNING AND ZONING

Chief, Development Engineering Division — Date 11-6-14

Chief, Division of Land Development — Date 11-20-14

Director — Date 11/21/14

ADDRESS CHART

LOT / PARCEL NO.	STREET ADDRESS
PARCEL B-1	7901 OCEANO AVENUE
PARCEL E-1	7775 CHESAPEAKE BAY COURT

PERMIT INFORMATION CHART

SUBDIVISION NAME			SECTION / AREA		LOT / PARCEL NO.
MARYLAND FOOD CENTER AUTHORITY			3		B-1/662 & E-1/696
PLAT NO. or L/F	GRID NO.	ZONING	TAX MAP NO.	ELEC. DIST.	CENSUS TRACT
23017-23021	21	M-2	43	6TH	6069.01

Eco-Science Professionals, Inc.
Consulting Ecologists
P.O. Box 5126 Glen Arm, Maryland 21057 Telephone (410) 832-3400 Fax (410) 832-3402

DNR Qualified Professional
USACOE Wetland Delineator
Certification # WDCP93MD0610044B2
John P. Canoles
10/23/14

OWNER
MARYLAND FOOD CENTER AUTHORITY
7801 OCEANO AVE
JESSUP, MD 20794
PHONE (410) 379-5760
FAX (410) 379-5773

DEVELOPER / APPLICANT
MERRITT PROPERTIES, LLC
2066 LORD BALTIMORE DRIVE
BALTIMORE, MD 21244
PHONE (410) 298-2600
FAX (410) 298-9644

REVISIONS

DATE	NO.	DESCRIPTION	BY

FOREST CONSERVATION PLAN
PLAN VIEW III
MARYLAND FOOD CENTER AUTHORITY
PARCEL B-1 & E-1
(WAREHOUSE & OFFICE)
HOWARD COUNTY, MARYLAND
SCALE: 1" = 50'
DATE: OCTOBER, 2014

DRAWING NO.
C-46
SHEET 46 OF 57

SDP-14-068

REFORESTATION PLAN

A. Planting Plan and Methods

Plant species selection was based on our knowledge regarding plant communities in Maryland's Piedmont Plateau and information provided in the soil survey on typical vegetation for the soil type on the planting site. Species selection was also based on our knowledge of plant availability in the nursery industry.

Reforestation will be accomplished through a mixed planting of whips and branched transplants. Container grown stock is recommended but bareroot stock may be used to help control afforestation costs. If bareroot stock is used the root systems of all plants will be dipped in an anti-desiccant gel prior to planting to improve moisture retention in the root systems.

Prior to planting the proposed Forest Conservation Easements all multiflora rose in the planting area shall be removed. Removal of the rose may be performed with mowing and herbicide treatments. Physical removal of all top growth following by a periodic herbicide treatment of stump sprouts is recommended. Native tree and shrub species occurring within the rose thickets should be retained wherever possible. Herbicides treatments shall occur on 2 month intervals during the first growing season and once each in the spring and fall for subsequent years. Herbicide used shall be made specifically to address woody plant material and shall be applied as per manufacturers specifications. Care should be taken not to spray planted trees or naturally occurring native trees/shrub seedlings. It is recommended that initiation of rose removal begin at least six months prior to planting.

B. Planting and Soil Specifications

Plant material will be installed in accordance with the Planting Detail and Planting Specifications shown on the Forest Conservation Plan.

Amendments to existing soil will be in accordance with the Planting Specifications shown on the Forest Conservation Plan. Soil disturbance will be limited to individual planting locations.

C. Maintenance of Plantings

For information regarding maintenance of the reforestation plantings, see Post Construction Management Plans.

D. Guarantee Requirements

A 90 percent survival rate of the reforestation plantings will be required after one growing season. All plant material below the 90 percent survival threshold will be replaced at the beginning of the second growing season. At the end of the second growing season, a 75 percent survival rate will be required. All plant material below the 75 percent survival threshold will be replaced by the beginning of the next growing season.

E. Security for Reforestation

Section 16-1209 of the Howard County Forest Conservation Act requires that a developer shall post a security (bond, letter of credit, etc.) with the County to insure that all work is done in accordance with the FCP.

CONSTRUCTION PERIOD PROTECTION PROGRAM

A. Forest Protection Techniques

1. Soil Protection Area (Critical Root Zone)

The soil protection area, or critical root zone, of a tree is that portion of the soil column where most of a its roots may be found. The majority of roots responsible for water and nutrient uptake are located just below the soil surface. Temporary fencing shall be placed around the critical root zone of the forest in areas where the forest limits occur within 25 feet of the limit of disturbance.

2. Fencing and Signage

Existing forest limits occurring within 50 feet of the limits of disturbance shall be protected using temporary protective fencing. Permanent signage shall be placed around the afforestation area prior to plant installation, as shown on the plan.

B. Pre-Construction Meeting

Upon staking of limits of disturbance a pre-construction meeting will be held between the developer, contractor and appropriate County inspector. The purpose of the meeting will be to verify that all sediment controls in order, and to notify the contractor of possible penalties for non-compliance with the FCP.

C. Storage Facilities/Equipment Cleaning

All equipment storage, parking, sanitary facilities, material stockpiling, etc. associated with construction of the project will be restricted to those areas outside of the proposed Forest Conservation Easement. Cleaning of equipment will be limited to area within the LOD of the proposed homesites. Wastewater resulting from equipment cleaning will be controlled to prevent runoff into environmentally sensitive areas.

D. Sequence of Construction

The following timetable represents the proposed timetable for development. The items outlined in the Forest Conservation Plan will be enacted within two (2) years of subdivision approval.

Below find a proposed sequence of construction.

1. Install all signage and sediment control devices.

2. Hold pre-construction meeting between developer, contractor and County inspector.

3. Build access to site, grade pad sites, construction buildings and parking, stabilize all disturbed areas accordingly. Install permanent protective signage for Easements and initiate onsite plantings in accordance with Forest Conservation Plan.

4. Onsite and offsite plantings will be completed within two (2) years of subdivision approval.

5. Remove sediment control.

6. Hold post-construction meeting with County inspectors to assure compliance with FCP. Submit Certification of Installation.

7. Monitor and maintain plantings for 2 years.

E. Construction Monitoring

Eco-Science Professionals, or another qualified professional designated by the developer, will monitor construction of the project to ensure that all activities are in compliance with the Forest Conservation Plan.

F. Post-Construction Meeting

Upon completion of construction, Eco-Science Professionals, or another qualified professional designated by the developer, will notify the County that construction has been completed and arrange for a post-construction meeting to review the project site. The meeting will allow the County inspector to verify that afforestation plantings have been installed.

POST-CONSTRUCTION MANAGEMENT PLAN

Howard County requires a two year post-construction management plan be prepared as part of the forest conservation plan. The plan goes into effect upon acceptance of the construction certification of completion by the County. Eco-Science Professionals, or another qualified professional designated by the developer, will be responsible for implementation of the post-construction management plan.

The following items will be incorporated into the plan:

A. Fencing and Signage

Permanent signage indicating the limits of the retention/reforestation area shall be maintained.

B. General Site Inspections/Maintenance of Plantings

Site inspections will be performed a minimum of three times during the growing season. The purpose of the inspections will be to assess the health of the afforestation plantings. Appropriate measures will be taken to rectify any problems which may arise.

In addition, maintenance of the afforestation plantings will involve the following steps:

1. Watering - All plant material shall be watered twice a month during the 1st growing season, more or less frequently depending on weather conditions. During the second growing season, once a month during May-September, if needed.

2. Removal of invasive exotics and noxious weeds. Old field successional species will be retained.

3. Identification of serious plant pests and diseases, treatment with appropriate agent.

4. Pruning of dead branches.

5. After 12 and 24 months, replacement of plants, if required, in accordance with the Guarantee Requirements shown on the FCP.

C. Education

The developer will provide appropriate materials to property owners informing them of the location and purpose of the afforestation area. Materials may include site plans and information explaining the intent of the forest conservation law.

D. Final Inspection

At the end of the two year post-construction management period, Eco-Science Professionals, or another qualified professional, will submit to the administrator of the Howard County Forest Conservation Program certification that all retention/afforestation requirements have been met. Upon acceptance of this certification, the County will release the developer from all future obligations and release the developer's bond.

EXHIBIT G - 16

Reforestation and Afforestation Area Protection Signage

Signs similar to protection signage for Retention Areas can be used on Afforestation and Reforestation Areas. The signs notify construction workers and future residents of the newly planted material, improving the trees' survival rates.

EXHIBIT G - 17

Signage

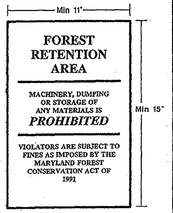

State Forest Conservation Manual
Appendix C: Sample Details and Specifications

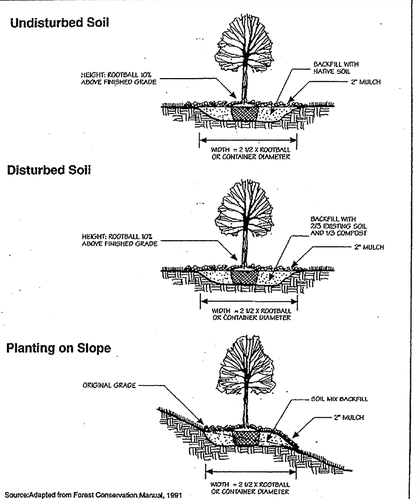

Source:Adapted from Forest Conservation Manual, 1991

Container Grown and B&B Planting Techniques | Figure C-16

Final Draft | July 1995

State Forest Conservation Manual
Appendix C: Sample Details and Specifications

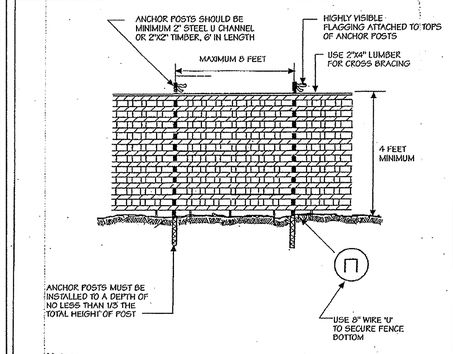

Notes:
1. Blaze orange or blue plastic mesh fence for forest protection device, only.
2. Boundaries of Retention Area will be established as part of the forest conservation plan review process.
3. Boundaries of Retention Area should be staked and flagged prior to installing device.
4. Avoid damage to critical root zone. Do not damage or sever large roots when installing posts.
5. Protection signs are required, See Figure C-4.
6. Device should be maintained throughout construction.

Source: Adapted from Prince George's County, Maryland: Woodland Conservation Manual and Forest Conservation Manual, 1991

Plastic Mesh Tree Protection Fence | Figure C-5

Final Draft | July 1995

State Forest Conservation Manual
Appendix C: Sample Details and Specifications

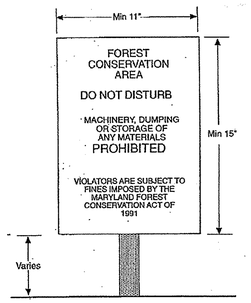

Notes:
1. Bottom of signs to be higher than top of tree protection fence.
2. Signs to be placed approximately 50' feet apart. Conditions on site affecting visibility may warrant placing signs closer or farthor apart.
3. Attachment of signs to trees is prohibited.

Source: Adapted from Forest Conservation Manual, 1991

Construction Signs | Figure C-4

Final Draft | July 1995

PLANTING SCHEDULE

FCE # 1 – Onsite Planting Area A - 0.05 acres
Planting Units Required: 35
Planting Units Provided: 35

Qty	Species	Size	Spacing	Total FCA Units
3	Acer rubrum - Red maple	1" caliper	15' o.c.	
4	Cornus florida - Flowering dogwood	1" caliper	15' o.c.	
3	Prunus serotina - Black cherry	1" caliper	15' o.c.	
10	Total whip plantings x 3.5 units /tree = FCA unit credit			35
	Total Unit Credit			35

FCE # 2 – Offsite Planting Area A – 3.85 acres
Planting Units Required: 2765
Planting Units Provided: 2766

Qty	Species	Size	Spacing	Total FCA Units
225	Acer rubrum - Red maple	2-3' whip w/shelter	11' o.c.	
175	Acer saccharinum – Silver maple	2-3' whip w/shelter	11' o.c.	
125	Liriodenron tulipifera- Tulip poplar	2-3' whip w/shelter	11' o.c. **	
150	Nyssa sylvatica - Black gum	2-3' whip w/shelter	11' o.c.	
125	Platanus occidentalis- Sycamore	2-3' whip w/shelter	11' o.c.	
125	Prunus serotina – Black cherry	2-3' whip w/shelter	11' o c **	
133	Quercus palustris – Pin oak	2-3' whip w/shelter	11' o.c.	
125	Salix nigra – Black willow	2-3' whip w/shelter	11' o c ##	
200	Ulmus rubra – Slippery elm	2-3' whip w/shelter	11' o.c.	
1383	Total whip plantings with shelter x 2 units /tree = FCA unit credit			2765
	Total Unit Credit			2766

Planting Notes:

Planting density based spacing requirements: whips with shelter @ 11' on center

Planting may be made in a curvilinear fashion along contour. The planting should avoid a grid appearance but should be spaced to facilitate maintenance

** should be planted in uplands only , ## should be planted in wetlands only

All whips are required to be installed with tree shelters per Howard County FCA requirements.

Planting units defined by the spacing requirements established in the FCA Manual. One plant unit is defined as 1 seedling or whip without shelter. The Manual states that 700 seedlings/whips without shelters are required per acre, or 350 whips w/shelters, or 200 1" caliper trees, or 100 2" caliper trees. By conversion it has been determined that a seeding or whip without shelter = 1 unit, whip with shelter = 2 units, 1"caliper tree = 3.5 units and 2" caliper tree =7 units. The use of plant units simplifies the plant density calculations when mixing stock size.

The offsite planting schedule and planting location may be revised by the property owner with the County's approval.

Typical Planting Layout

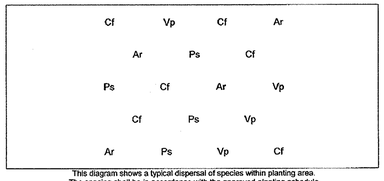

This diagram shows a typical dispersal of species within planting area.
The spacing shall be in accordance with the approved planting schedule

NOTE: PROTECTIVE SIGNAGE SHALL BE IN PLACE FOR PERPETUITY.

APPROVED: DEPARTMENT OF PLANNING AND ZONING

Chief, Development Engineering Division — Date 11-6-14

Chief, Division of Land Development — Date 11-20-14

Director — Date 11/24/14

ADDRESS CHART

LOT / PARCEL NO.	STREET ADDRESS
PARCEL B-1	7901 OCEANO AVENUE
PARCEL E-1	7775 CHESAPEAKE BAY COURT

PERMIT INFORMATION CHART

SUBDIVISION NAME			SECTION / AREA		LOT / PARCEL NO.
MARYLAND FOOD CENTER AUTHORITY			3		B-1/662 & E-1/696
PLAT NO. or L/F	GRID NO.	ZONING	TAX MAP NO.	ELEC. DIST.	CENSUS TRACT
25017- 25021	21	M-2	43	6TH	6069.01

Eco-Science Professionals, Inc.
Consulting Ecologists
P.O. Box 8006 Glen Arm, Maryland 21057 Telephone (410) 832-3480 Fax (410) 832-3488

MD DNR Qualified Professional
USACOE Wetland Delineator
Certification # WDCP93MD0610044B2
John F. Canoles 10/15/14

OWNER
MARYLAND FOOD CENTER AUTHORITY
7801 OCEANO AVE
JESSUP, MD 20794
PHONE (410) 379-5760
FAX (410) 379-5773

DEVELOPER / APPLICANT
MERRITT PROPERTIES, LLC
2066 LORD BALTIMORE DRIVE
BALTIMORE, MD 21244
PHONE (410) 298-2600
FAX (410) 298-9644

REVISIONS

DATE	NO.	DESCRIPTION	BY

FOREST CONSERVATION PLAN
NOTES, DETAILS AND SPECIFICATIONS
MARYLAND FOOD CENTER AUTHORITY
PARCEL B-1 & E-1
(WAREHOUSE & OFFICE)

HOWARD COUNTY, MARYLAND
SCALE: N/A
DATE: OCTOBER, 2014

DRAWING NO.
C-47
SHEET 47 OF 57

SDP-14-068

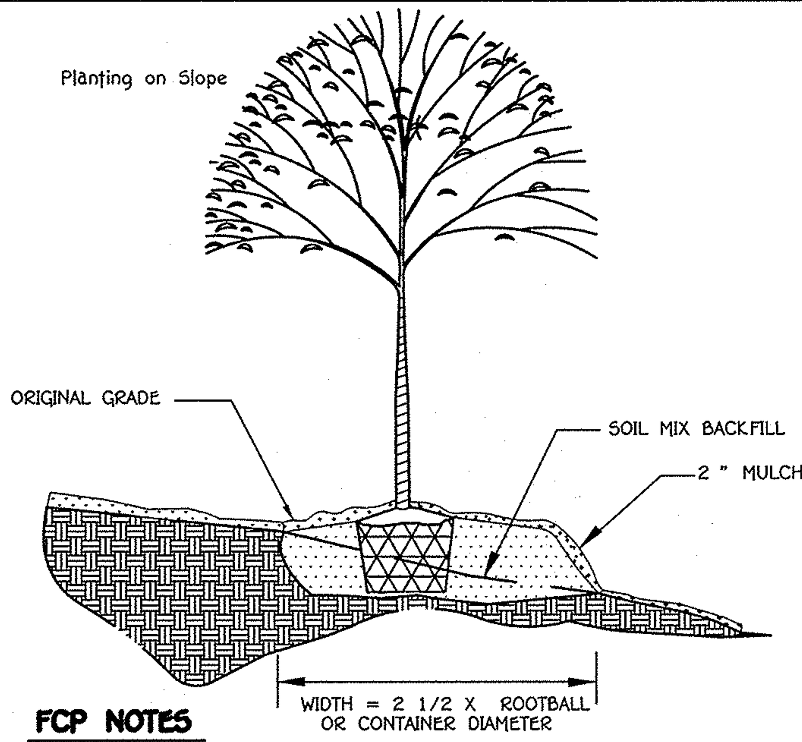

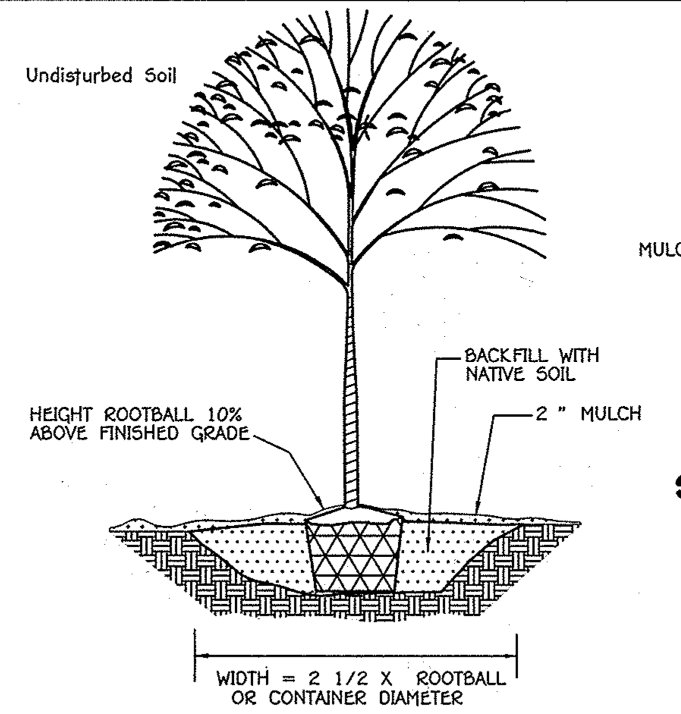

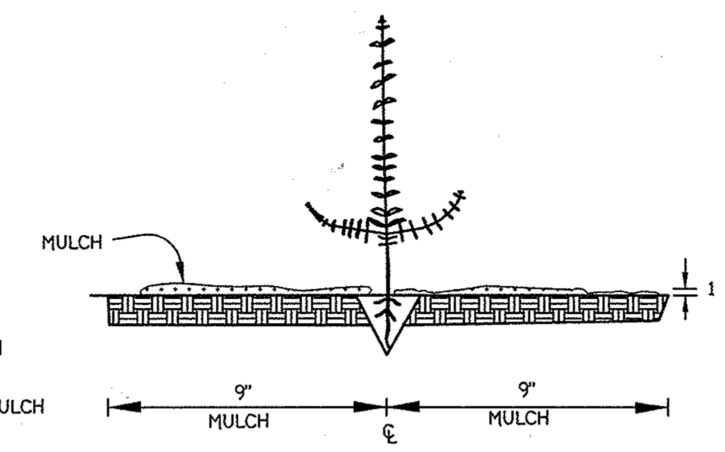

Seedling and Whip Planting Specification

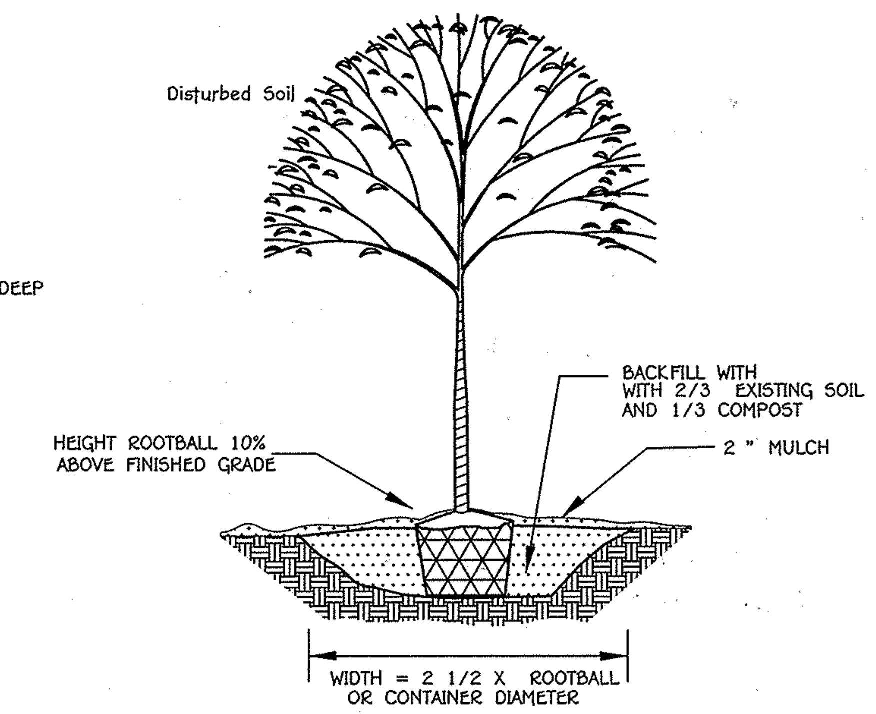

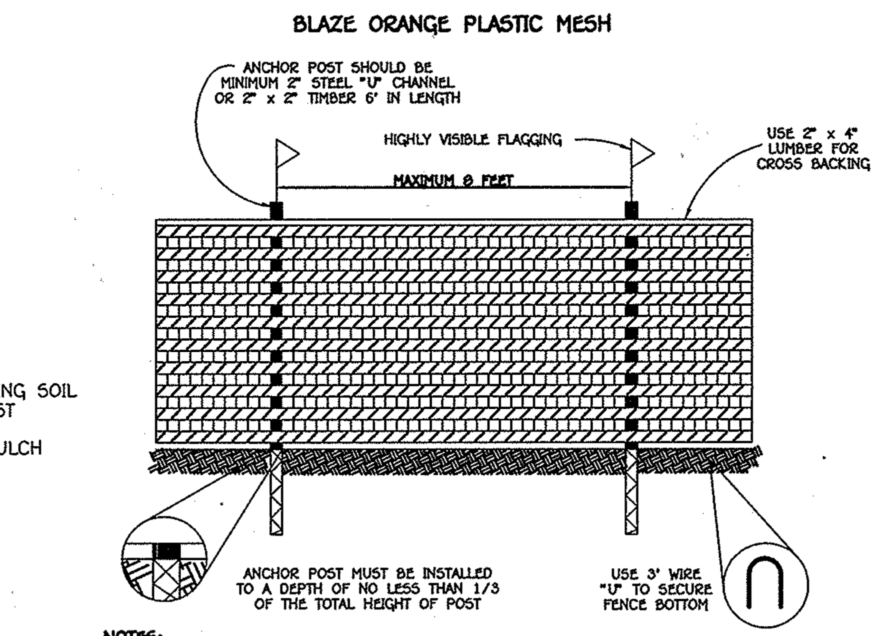

NOTES:
1. FOREST PROTECTION DEVICE ONLY.
2. RETENTION AREA WILL BE SET AS PART OF THE REVIEW PROCESS.
3. BOUNDARIES OF RETENTION AREA SHOULD BE STAKED AND FLAGGED PRIOR TO INSTALLING DEVICE.
4. ROOT DAMAGE SHOULD BE AVOIDED.
5. PROTECTIVE SIGNAGE MAY ALSO BE USED.
6. DEVICE SHOULD BE MAINTAINED THROUGHOUT CONSTRUCTION.

TREE PROTECTION DETAIL

NOT TO SCALE

▲ - DENOTES REFORESTATION PROJECT SIGN TO BE INSTALLED. SIGNAGE IS PLACED IN PERPETUITY

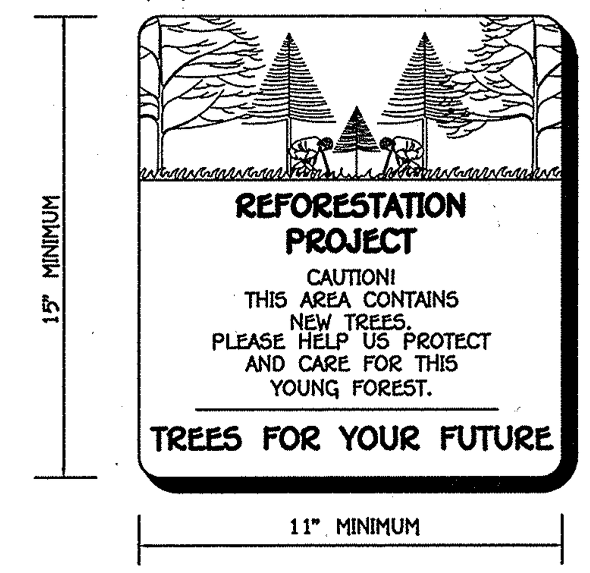

TYPICAL PLANTING LAYOUT

NOT TO SCALE

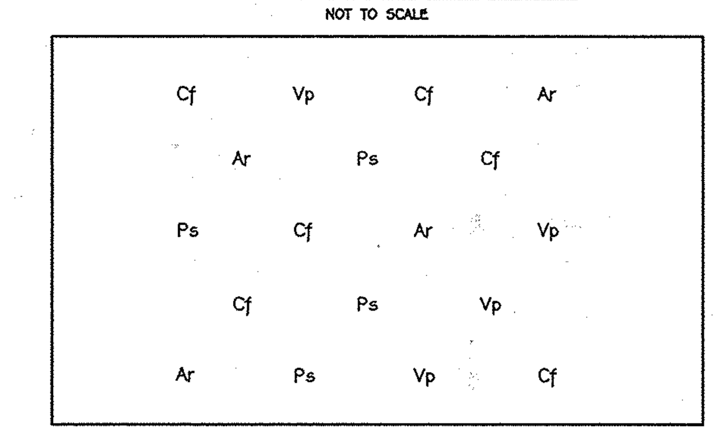

This Diagram Shows A Typical Dispersal Of Species Within Planting Area. The Spacing Shall Be In Accordance With The Approved Planting Schedule.

FCP NOTES

1. ANY FOREST CONSERVATION EASEMENT (FCE) AREA SHOWN HEREON IS SUBJECT TO PROTECTIVE COVENANTS WHICH MAY BE FOUND IN THE LAND RECORDS OF HOWARD COUNTY WHICH RESTRICT THE DISTURBANCE AND USE OF THESE AREAS.
2. THE FOREST CONSERVATION EASEMENTS HAVE BEEN ESTABLISHED TO FULFILL THE REQUIREMENTS OF SECTION 16.1200 OF THE HOWARD COUNTY CODE, FOREST CONSERVATION ACT. NO CLEARING, GRADING, OR CONSTRUCTION IS PERMITTED WITHIN THE FOREST CONSERVATION EASEMENTS, HOWEVER, FOREST MANAGEMENT PRACTICES AS DEFINED IN THE DEED OF FOREST CONSERVATION EASEMENT ARE ALLOWED.
3. FORESTED AREAS OCCURRING OUTSIDE OF THE FCE SHALL NOT BE CONSIDERED PART OF THE FCE AND SHALL NOT BE SUBJECT TO PROTECTIVE LAND COVENANTS.
4. LIMITS OF DISTURBANCE SHALL BE RESTRICTED TO AREAS OUTSIDE THE LIMIT OF TEMPORARY FENCING OR THE FCE BOUNDARY, WHICHEVER IS GREATER.
5. THERE SHALL BE NO CLEARING, GRADING, CONSTRUCTION OR DISTURBANCE OF VEGETATION IN THE FOREST CONSERVATION EASEMENT, EXCEPT AS PERMITTED BY HOWARD COUNTY DPZ.
6. NO STOCKPILES, PARKING AREAS, EQUIPMENT CLEANING AREAS, ETC. SHALL OCCUR WITHIN AREAS DESIGNATED
7. TEMPORARY FENCING SHALL BE USED TO PROTECT FOREST RESOURCES DURING CONSTRUCTION. THE FENCING SHALL BE PLACED ALONG ALL FCE BOUNDARIES WHICH OCCUR WITHIN 15 FEET OF THE PROPOSED LIMITS OF DISTURBANCE.
8. PERMANENT SIGNAGE SHALL BE PLACED 50' – 100' APART ALONG BOUNDARIES OF ALL AREAS INCLUDED IN FOREST CONSERVATION EASEMENTS.

PLANTING/SOIL SPECIFICATIONS

1. PLANTING OF NURSERY STOCK SHALL TAKE PLACE BETWEEN MARCH 15th. AND APRIL 30th. OR SEPTEMBER 15th. AND NOVEMBER 15th.
2. A TWELVE (12) INCH LAYER OF TOPSOIL SHALL BE SPREAD OVER ALL FORESTATION AREAS IMPACTED BY SITE GRADING TO ASSURE A SUITABLE PLANTING AREA. DISTURBED AREAS SHALL BE SEEDED AND STABILIZED AS PER GENERAL CONSTRUCTION PLAN FOR PROJECT. PLANTING AREAS NOT IMPACTED BY SITE GRADING SHALL HAVE NO ADDITIONAL TOPSOIL INSTALLED.
3. ALL BAREROOT PLANTING STOCK SHALL HAVE THEIR ROOT SYSTEMS DIPPED INTO AN ANTI-DESICCANT GEL PRIOR TO PLANTING.
4. PLANTS SHALL BE INSTALLED SO THAT THE TOP OF ROOT MASS IS LEVEL WITH THE TOP OF EXISTING GRADE. BACKFILL IN THE PLANTING PITS SHALL CONSIST OF 3 PARTS EXISTING SOIL TO 1 PART PINE FINES OR EQUIVALENT.
5. FERTILIZER SHALL CONSIST OF AGRIFORM 22-8-2, OR EQUIVALENT, APPLIED AS PER MANUFACTURER'S SPECIFICATIONS.
6. A TWO (2) INCH LAYER OF HARDWOOD MULCH SHALL BE PLACED OVER THE ROOT AREA OF ALL PLANTINGS.
7. PLANT MATERIAL SHALL BE TRANSPORTED TO THE SITE IN A TARPED OR COVERED TRUCK. PLANTS SHALL BE KEPT MOIST PRIOR TO PLANTING.
8. ALL NON-ORGANIC DEBRIS ASSOCIATED WITH THE PLANTING OPERATION SHALL BE REMOVED FROM THE SITE BY THE CONTRACTOR.

SEQUENCE OF CONSTRUCTION

1. SEDIMENT CONTROL AND TREE PROTECTION DEVICES SHALL BE INSTALLED IN ACCORDANCE WITH GENERAL CONSTRUCTION PLAN FOR SITE. SITE SHALL BE GRADED IN ACCORDANCE WITH GENERAL CONSTRUCTION PLANS.
2. PROPOSED FORESTATION AREAS IMPACTED BY SITE GRADING SHALL BE TOPSOILED AND STABILIZED AS PER NOTE NO. 2 OF PLANTING/SOIL SPECIFICATIONS FOR PROJECT.
3. PLANTS SHALL BE INSTALLED AS PER PLANT SCHEDULE AND THE PLANTING/SOIL SPECIFICATIONS FOR THE PROJECT.
4. UPON COMPLETION OF THE PLANTING, SIGNAGE SHALL BE INSTALLED AS PER THE FOREST PROTECTION DEVICES SHOWN ON THE FOREST CONSERVATION PLAN.
5. PLANTINGS SHALL BE MAINTAINED AND GUARANTEED IN ACCORDANCE WITH THE MAINTENANCE AND GUARANTEE REQUIREMENTS FOR PROJECT.

MAINTENANCE OF PLANTINGS

1. MAINTENANCE OF PLANTINGS SHALL LAST FOR A PERIOD OF 26 MONTHS.
2. ALL PLANT MATERIAL SHALL BE WATERED TWICE A MONTH DURING THE 1st. GROWING SEASON. WATERING MAY BE MORE OR LESS FREQUENT DEPENDING IN WEATHER CONDITIONS. DURING 2nd. GROWING SEASON, ONCE A MONTH DURING MAY-SEPTEMBER, IF NEEDED.
3. INVASIVE EXOTICS AND NOXIOUS WEEDS WILL BE REMOVED FROM FORESTATION AREAS. OLD FIELD SUCCESSIONAL SPECIES WILL BE RETAINED.
4. PLANTS WILL BE EXAMINED A MINIMUM TWO TIMES DURING THE GROWING SEASON FOR SERIOUS PLANT PESTS AND DISEASES. SERIOUS PROBLEMS WILL BE TREATED WITH THE APPROPRIATE AGENT.
5. DEAD BRANCHES WILL BE PRUNED FROM PLANTINGS.

GUARANTEE REQUIREMENTS

1. A 75 PERCENT SURVIVAL RATE OF FORESTATION PLANTINGS WILL BE REQUIRED AT THE END OF THE 24 MONTH MAINTENANCE PERIOD. ALL PLANT MATERIAL BELOW THE 75 PERCENT THRESHOLD WILL BE REPLACED AT THE BEGINNING OF THE NEXT GROWING SEASON.

SURETY OF OFFSITE PLANTING (SDP-14-068)

A SURETY FOR THE 3.95 ACRE OFFSITE FOREST CONSERVATION PLANTING OBLIGATION OF MD FOOD CENTER AUTHORITY, PARCELS B-1 AND E-1 (SDP-14-068) SHALL BE POSTED AS PART OF THE DPW DEVELOPERS AGREEMENT FOR THAT PROJECT. THE SURETY WILL BE BASED ON $0.50 PER SQUARE FOOT OF PLANTING AND WILL BE $86,031.00. AN ADDITIONAL SURETY OF $1,089.00 SHALL BE POSTED AS PART OF THE DPW DEVELOPERS AGREEMENT FOR THAT PROJECT FOR THE 0.05 ACRE ONSITE FOREST CONSERVATION PLANTINGS.

FCE No. 4 – Offsite Planting Area A – 3.95 Acres

Planting Units Required: 2765
Planting Units Provided: 2766

Qty	Species	Size	Spacing	Total FCA Units
225	Acer rubrum – Red Maple	2-3' whip w/shelter	11' o.c.	
175	Acer saccharinum – Silver Maple	2-3' whip w/shelter	11' o.c.	
125	Liriodenron tulipifera – Tulip poplar	2-3' whip w/shelter	11' o.c. **	
150	Nyssa sylvatica – Black gum	2-3' whip w/shelter	11' o.c.	
125	Platanus occidentalis – Sycamore	2-3' whip w/shelter	11' o.c.	
125	Prunus serotina – Black cherry	2-3' whip w/shelter	11' o.c. **	
133	Quercus palustris – Pin oak	2-3' whip w/shelter	11' o.c.	
125	Salix nigra – Black willow	2-3' whip w/shelter	11' o.c. ##	
200	Ulmus rubra – Slippery elm	2-3' whip w/shelter	11' o.c.	
1383	Total whip plantings with shelter x 2 units / tree = FCA unit credit			2766
	Total Unit Credit			2766

SOILS LEGEND

SOIL	NAME	CLASS
BaA	Baile silt loam, 0 to 3 percent slopes	D
GgB	Glenelg loam, 3 to 8 percent slopes	B
GgC	Glenelg loam, 8 to 15 percent slopes	B
GmB	Glenville silt loam, 3 to 8 percent slopes	C
MaC	Manor loam, 8 to 15 percent slopes	B
MaD	Manor loam, 15 to 25 percent slopes	B
McC	Manor-channery loam, 8 to 15 percent slopes	B

NOTES:
* Hydric soils and/or contains hydric inclusions
** May contain hydric inclusions
† Generally only within 100-year floodplain areas

MULTIFLORA ROSE CONTROL NOTE:

PRIOR TO PLANTING ALL MULTIFLORA ROSE WITHIN PLANTING AREAS SHALL BE REMOVED. REMOVAL OF THE ROSE MAY BE PERFORMED WITH MOWING AND HERBICIDE TREATMENTS. PHYSICAL REMOVAL OF ALL TOP GROWTH FOLLOWING BY A PERIODIC HERBICIDE TREATMENT OF STUMP SPROUTS IS RECOMMENDED. NATIVE TREE AND SHRUB SPECIES OCCURRING WITHIN THE ROSE THICKETS SHOULD BE RETAINED WHEREVER POSSIBLE. HERBICIDES TREATMENTS SHALL OCCUR ON 2 MONTH INTERVALS DURING THE FIRST GROWING SEASON AND ONCE EACH IN THE SPRING AND FALL FOR SUBSEQUENT YEARS. HERBICIDE USED SHALL BE MADE SPECIFICALLY TO ADDRESS WOODY PLANT MATERIAL AND SHALL BE APPLIED AS PER MANUFACTURERS SPECIFICATIONS. CARE SHOULD BE TAKEN NOT SPRAY PLANTED TREES OR NATURALLY OCCURRING NATIVE TREE/SHRUB SEEDLINGS. IT IS RECOMMENDED THAT INITIATION OF ROSE REMOVAL BEGIN AT LEAST SIX MONTHS PRIOR TO PLANTING.

PLANTING NOTES:

PLANTING DENSITY BASED SPACING REQUIREMENTS: WHIPS WITH SHELTER @ 11' ON CENTER PLANTING MAY BE MADE IN CURVILINEAR FASHION ALONG CONTOUR. THE PLANTING SHOULD AVOID A GRID APPEARANCE BUT SHOULD BE SPACED TO FACILITATE MAINTENANCE.

** SHOULD BE PLANTED IN UPLANDS ONLY, ## SHOULD BE PLANTED IN WETLANDS ONLY.

ALL WHIPS ARE REQUIRED TO BE INSTALLED WITH TREE SHELTERS PER HOWARD COUNTY FCA REQUIREMENTS.

PLANTING UNITS DEFINED BY THE SPACING REQUIREMENTS ESTABLISHED IN THE FCA MANUAL. ONE PLANT UNIT IS DEFINED AS 1 SEEDLING OR WHIP WITHOUT SHELTER. THE MANUAL STATES THAT 700 SEEDLINGS/WHIPS WITHOUT SHELTERS ARE REQUIRED PER ACRE, OR 350 WHIPS W/SHELTERS, OR 200 1" CALIPER TREES, OR 100 2" CALIPER TREES. BY CONVERSION IT HAS BEEN DETERMINED THAT A SEEDLING OR WHIP WITHOUT SHELTER = 1 UNIT, WHIP WITH SHELTER = 2 UNITS, 1" CALIPER TREE = 3.5 UNITS AND 2" CALIPER TREE = 7 UNITS. THE USE OF PLANT UNITS SIMPLIFIES THE PLANT DENSITY CALCULATIONS WHEN MIXING STOCK SIZE.

THE OFFSITE PLANTING SCHEDULE AND PLANTING LOCATION MAY BE REVISED BY THE PROPERTY OWNER WITH THE COUNTY'S APPROVAL.

FOREST CONSERVATION FOR F-13-072 WAS PROVIDED WITH DEVELOPER AGREEMENT FOR F-94-040, HAY MEDOW, LOTS 1-4 AND PARCEL 'A', PLAT NOS. 11244-11246.

Legend

- Denotes Existing Amended 24' Private Use-In-Common Access Easement For The Benefit Of Lot 5 And Parcel 'B' (Plat Nos. 22332 And 22333)
- Denotes Existing Public Forest Conservation Easement (Plat Nos. 21747 And 21748)
- Denotes Public Forest Conservation Easement 3.950 Ac.± (Reforestation)
- Denotes Existing Stream
- —SBB— Denotes Existing Stream Bank Buffer
- Denotes Limits Of Wetlands

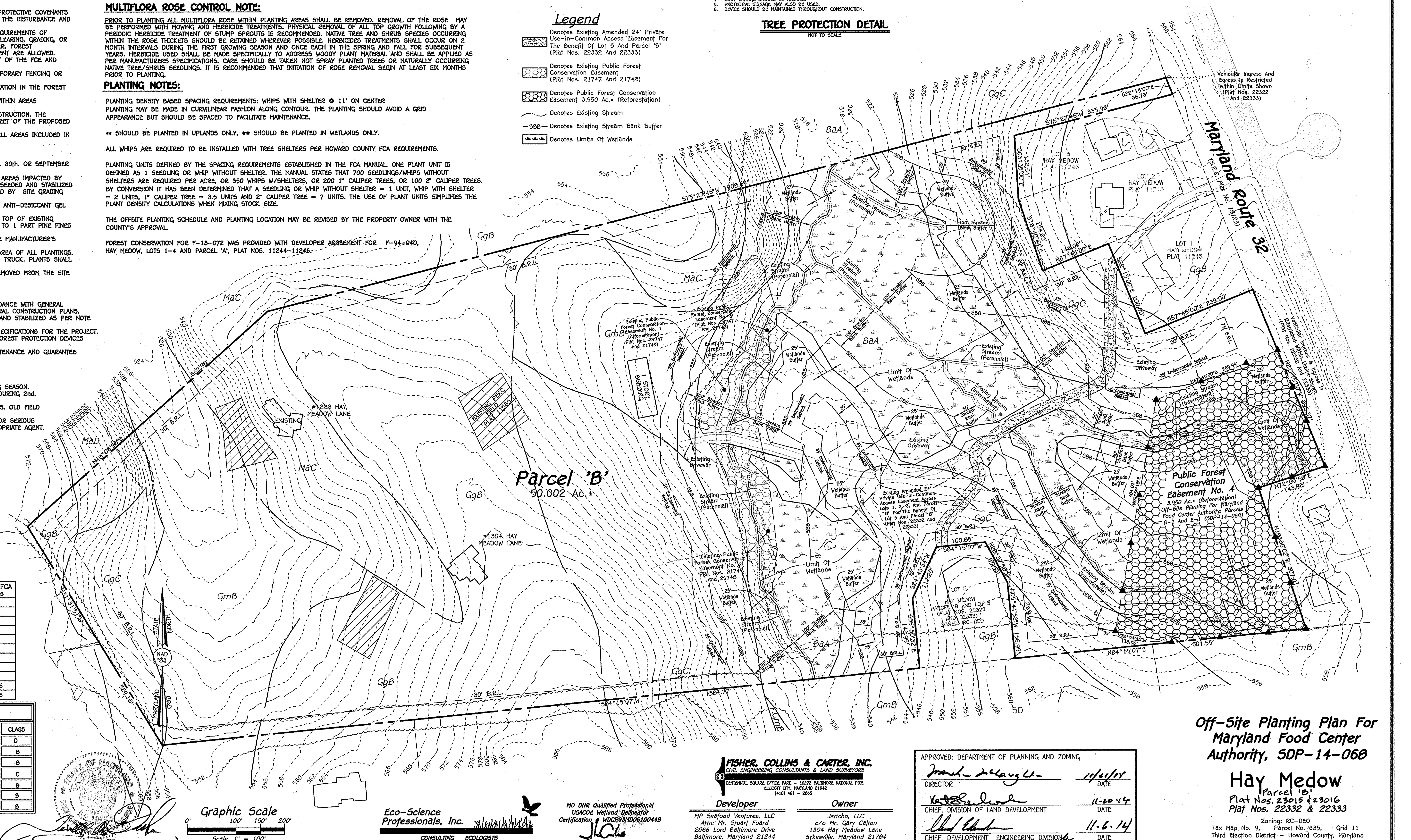

Eco-Science Professionals, Inc.
CONSULTING ECOLOGISTS

MD DNR Qualified Professional
USACOE Wetland Delineator
Certification # WDCP93MD0610044B
JOHN P. CANOLES

FISHER, COLLINS & CARTER, INC.
CIVIL ENGINEERING CONSULTANTS & LAND SURVEYORS
CENTENNIAL SQUARE OFFICE PARK - 10272 BALTIMORE NATIONAL PIKE
ELLICOTT CITY, MARYLAND 21042
(410) 461 - 2855

Developer	Owner
MP Seafood Ventures, LLC Attn: Mr. Stuart Foard 2066 Lord Baltimore Drive Baltimore, Maryland 21244 Ph# 410-298-2600	Jericho, LLC c/o Mr. Gary Calton 1304 Hay Meadow Lane Sykesville, Maryland 21784 Ph# 410-982-8501

APPROVED: DEPARTMENT OF PLANNING AND ZONING

DIRECTOR	11/21/14 DATE
CHIEF, DIVISION OF LAND DEVELOPMENT	11-20-14 DATE
CHIEF, DEVELOPMENT ENGINEERING DIVISION	11-6-14 DATE

Off-Site Planting Plan For Maryland Food Center Authority, SDP-14-068

Hay Medow

Parcel 'B'
Plat Nos. 23015 & 23016
Plat Nos. 22332 & 22333

Zoning: RC-DEO
Tax Map No. 9, Parcel No. 335, Grid 11
Third Election District - Howard County, Maryland
Revised Date: July 8, 2014

C-48

K:\Drawings 3\30438 Streker Property - Green\dwg\30438 Revised Forest Plan Exhibit.dwg, Layout1, 7/18/2014 3:27:51 PM, 1:1

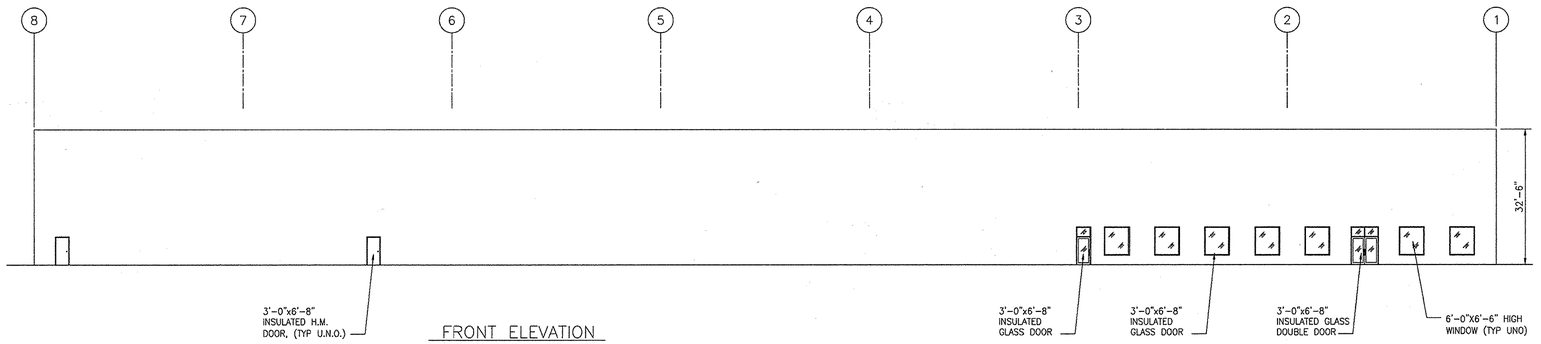

FRONT ELEVATION

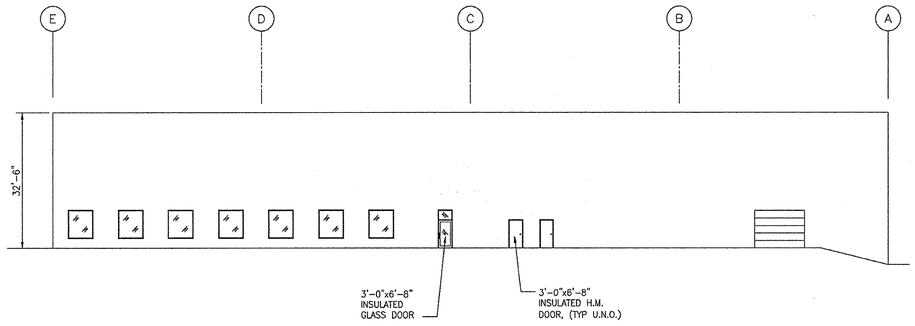

SIDE ELEVATION

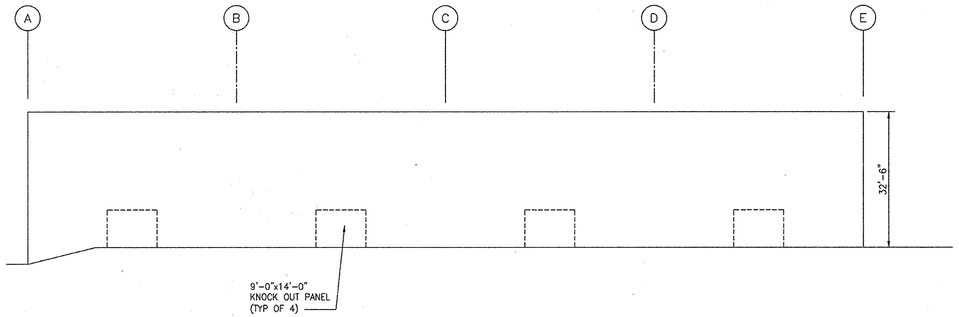

SIDE ELEVATION

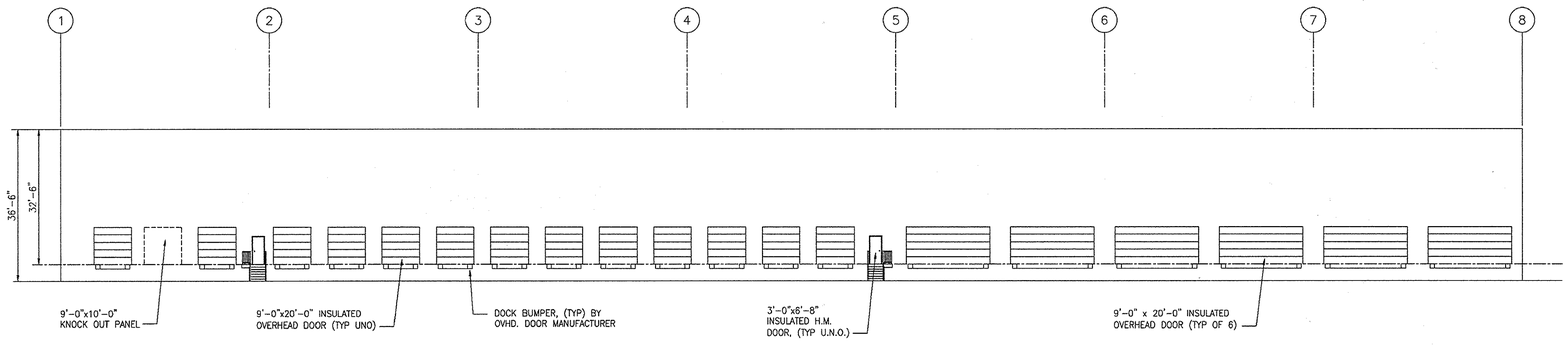

REAR ELEVATION

NOTE:
THIS BUILDING IS REPRESENTATIVE OF ALL THE BUILDLINGS. BUILDINGS WILL BE PAINTED CONCRETE FINISH.

APPROVED: DEPARTMENT OF PLANNING AND ZONING

Chief, Development Engineering Division	Date 11-6-14
Chief, Division of Land Development	Date 11-20-14
Director	Date 11/21/14

ADDRESS CHART

LOT / PARCEL NO.	STREET ADDRESS
PARCEL B-1	7901 OCEANO AVENUE
PARCEL E-1	7775 CHESAPEAKE BAY COURT

PERMIT INFORMATION CHART

SUBDIVISION NAME	SECTION / AREA	LOT / PARCEL NO.
MARYLAND FOOD CENTER AUTHORITY	3	B-1/662 & E-1/696

PLAT NO. or L/F	GRID NO.	ZONING	TAX MAP NO.	ELEC. DIST.	CENSUS TRACT
23017-23021	21	M-2	43	6TH	6069.01

THE COORDINATE SYSTEM OF ALL DRAWINGS IS BASED ON THE NORTH AMERICAN DATUM OF 1983. THE ELEVATION SYSTEM OF ALL DRAWINGS IS BASED ON THE NORTH AMERICAN VERTICAL DATUM OF 1988.
HORZ: NAD 83/91; VERT: NAVD 88

50 30 0 50

REVISIONS

DATE	NO.	DESCRIPTION	BY

BLDG
Baltimore Land Design Group Inc.
Consulting Engineers
230 SCHILLING CIRCLE, SUITE 364 • HUNT VALLEY, MARYLAND 21031
PHONE: 410.229.9851 • FAX: 410.229.9865 • BLDG@BLDGINC.COM

LICENSED FOR PROFESSIONAL ENGINEERS 21245 ROSTEK-ZARSKI STATE OF MARYLAND 10/15/14

PROFESSIONAL CERTIFICATION
I HEREBY CERTIFY THAT THESE DOCUMENTS WERE PREPARED OR APPROVED BY ME, AND THAT I AM A DULY LICENSED PROFESSIONAL ENGINEER UNDER THE LAWS OF THE STATE OF MARYLAND, LICENSE NO. 21245, EXPIRATION DATE: JUNE 9, 2016.

OWNER
MARYLAND FOOD CENTER AUTHORITY
7801 OCEANO AVE
JESSUP, MD 20794
PHONE (410) 379-5760
FAX (410) 379-5773

DEVELOPER / APPLICANT
MERRITT PROPERTIES, LLC
2066 LORD BALTIMORE DRIVE
BALTIMORE, MD 21244
PHONE (410) 298-2600
FAX (410) 298-9644

SCHEMATIC PROFILE OF PROPOSED BUILDINGS
BUILDING I

MARYLAND FOOD CENTER AUTHORITY
PARCEL B-1 & E-1
(WAREHOUSE & OFFICE)

HOWARD COUNTY, MARYLAND
SCALE: N/A
DATE: OCTOBER, 2014

DRAWING NO.
C-49

SDP-14-068

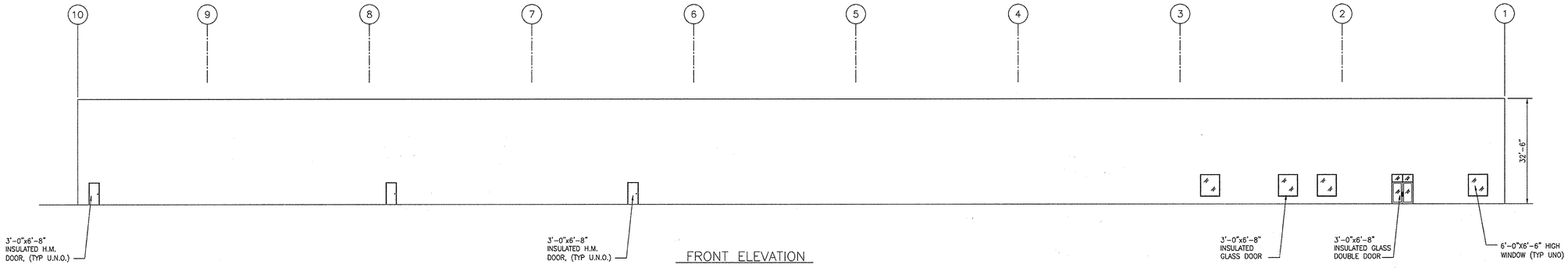

FRONT ELEVATION

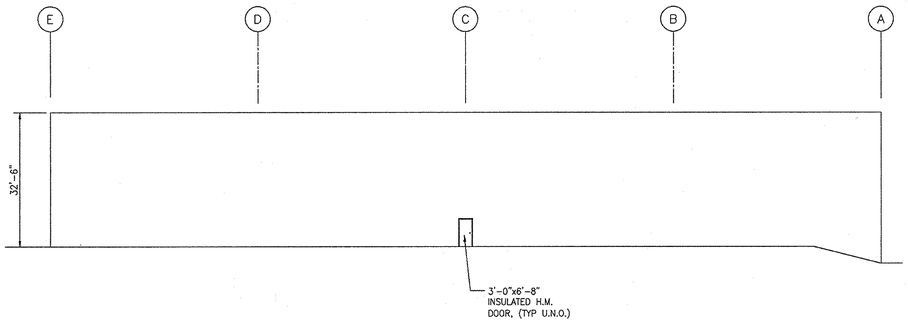

SIDE ELEVATION

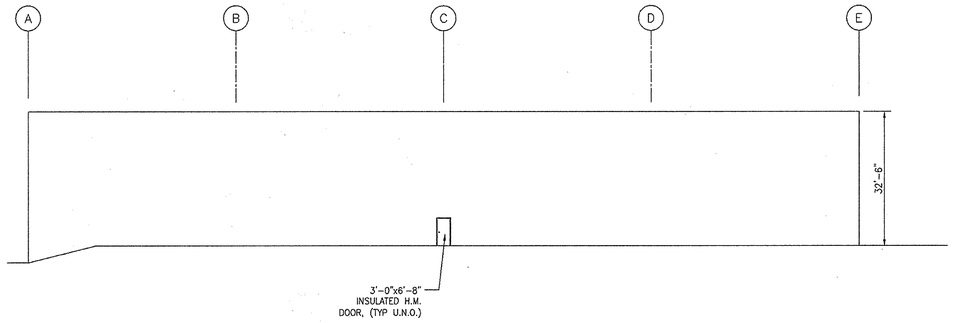

SIDE ELEVATION

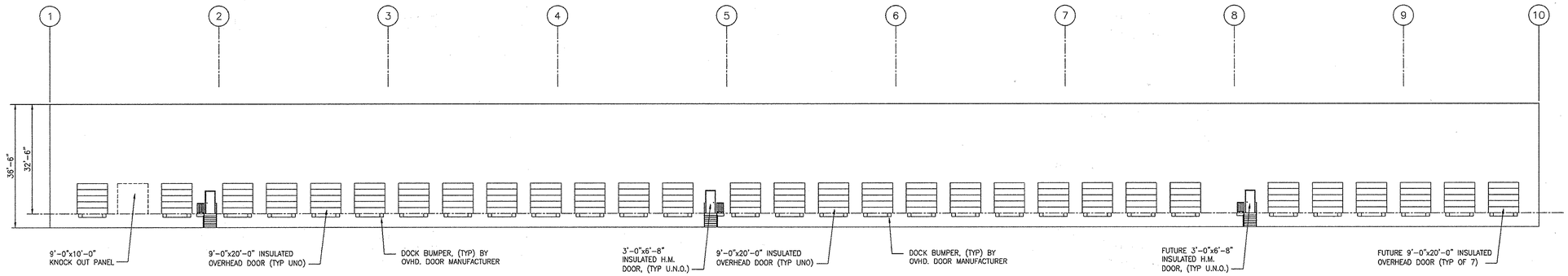

REAR ELEVATION

NOTE:
THIS BUILDING IS REPRESENTATIVE OF ALL THE BUILDINGS. BUILDINGS WILL BE PAINTED CONCRETE FINISH.

APPROVED: DEPARTMENT OF PLANNING AND ZONING

Chief, Development Engineering Division — Date 11-6-14

Chief, Division of Land Development — Date 11-20-14

Director — Date 11/21/14

ADDRESS CHART	
LOT / PARCEL NO.	STREET ADDRESS
PARCEL B-1	7901 OCEANO AVENUE
PARCEL E-1	7775 CHESAPEAKE BAY COURT

PERMIT INFORMATION CHART

SUBDIVISION NAME			SECTION / AREA	LOT / PARCEL NO.
MARYLAND FOOD CENTER AUTHORITY			3	B-1/662 & E-1/696
PLAT NO. or L/F	GRID NO.	ZONING	TAX MAP NO.	ELEC. DIST.	CENSUS TRACT
23017-23021	21	M-2	43	6TH	6069.01

THE COORDINATE SYSTEM OF ALL DRAWINGS IS BASED ON THE NORTH AMERICAN DATUM OF 1983. THE ELEVATION SYSTEM OF ALL DRAWINGS IS BASED ON THE NORTH AMERICAN VERTICAL DATUM OF 1988.
HORZ: NAD 83/91; VERT: NAVD 88

50 30 0 50

BLDG
Baltimore Land Design Group Inc.
Consulting Engineers
230 SCHILLING CIRCLE, SUITE 364 • HUNT VALLEY, MARYLAND 21031
PHONE: 410.229.9851 • FAX: 410.229.9865 • BLDG@BLDGINC.COM

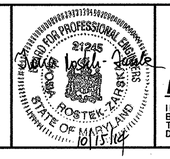

PROFESSIONAL CERTIFICATION
I HEREBY CERTIFY THAT THESE DOCUMENTS WERE PREPARED OR APPROVED BY ME, AND THAT I AM A DULY LICENSED PROFESSIONAL ENGINEER UNDER THE LAWS OF THE STATE OF MARYLAND, LICENSE NO. 21245, EXPIRATION DATE: JUNE 9, 2016.

OWNER
MARYLAND FOOD CENTER AUTHORITY
7801 OCEANO AVE
JESSUP, MD 20794
PHONE (410) 379-5760
FAX (410) 379-5773

DEVELOPER / APPLICANT
MERRITT PROPERTIES, LLC
2066 LORD BALTIMORE DRIVE
BALTIMORE, MD 21244
PHONE (410) 298-2600
FAX (410) 298-9644

REVISIONS

DATE	NO.	DESCRIPTION	BY

SCHEMATIC PROFILE OF PROPOSED BUILDINGS
BUILDING II

MARYLAND FOOD CENTER AUTHORITY
PARCEL B-1 & E-1
(WAREHOUSE & OFFICE)

HOWARD COUNTY, MARYLAND
SCALE: N/A
DATE: OCTOBER, 2014

DRAWING NO.
C-50
SHEET 50 OF 57

SDP-14-068

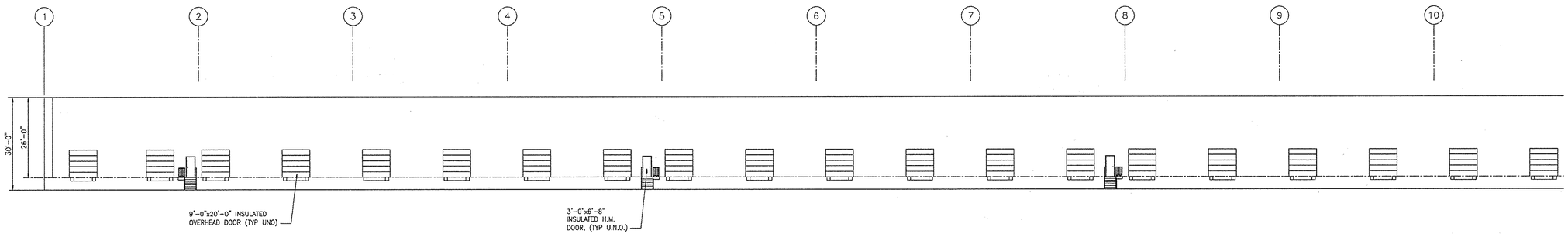

REAR ELEVATION BAYS 1–10

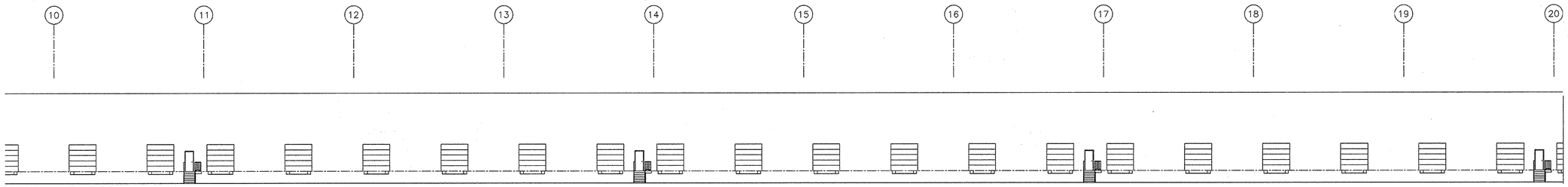

REAR ELEVATION BAYS 10–20

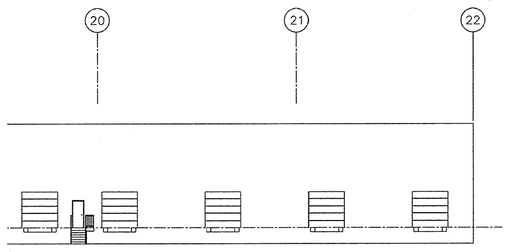

REAR ELEVATION BAYS 20–22

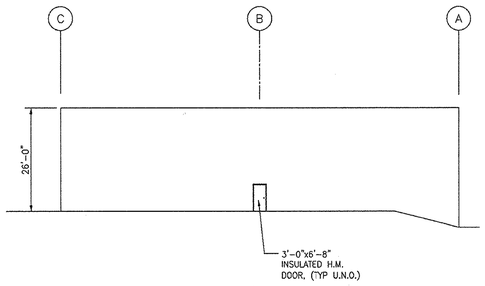

SIDE ELEVATION

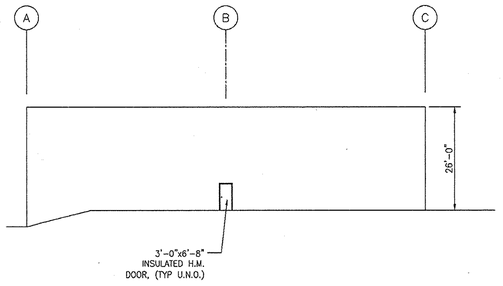

SIDE ELEVATION

NOTE:
THIS BUILDING IS REPRESENTATIVE OF ALL THE BUILDLINGS. BUILDINGS WILL BE PAINTED CONCRETE FINISH.

APPROVED: DEPARTMENT OF PLANNING AND ZONING

Chief, Development Engineering Division — Date 11-6-14

Chief, Division of Land Development — Date 11-20-14

Director — Date 11/21/14

ADDRESS CHART	
LOT / PARCEL NO.	STREET ADDRESS
PARCEL B-1	7901 OCEANO AVENUE
PARCEL E-1	7775 CHESAPEAKE BAY COURT

PERMIT INFORMATION CHART

SUBDIVISION NAME			SECTION / AREA	LOT / PARCEL NO.
MARYLAND FOOD CENTER AUTHORITY			3	B-1/662 & E-1/696
PLAT NO. or L/F	GRID NO.	ZONING	TAX MAP NO.	ELEC. DIST.	CENSUS TRACT
23017-23021	21	M-2	43	6TH	6069.01

THE COORDINATE SYSTEM OF ALL DRAWINGS IS BASED ON THE NORTH AMERICAN DATUM OF 1983. THE ELEVATION SYSTEM OF ALL DRAWINGS IS BASED ON THE NORTH AMERICAN VERTICAL DATUM OF 1988.
HORZ: NAD 83/91; VERT: NAVD 88

50 30 0 50

REVISIONS

DATE	NO.	DESCRIPTION	BY

BLDG
Baltimore Land Design Group Inc.
Consulting Engineers
230 SCHILLING CIRCLE, SUITE 364 • HUNT VALLEY, MARYLAND 21031
PHONE: 410.229.9851 • FAX: 410.229.9865 • BLDG@BLDGINC.COM

LICENSED PROFESSIONAL ENGINEER 21245 LAURA A. FROTSETH-ZARSKY STATE OF MARYLAND

PROFESSIONAL CERTIFICATION
I HEREBY CERTIFY THAT THESE DOCUMENTS WERE PREPARED OR APPROVED BY ME, AND THAT I AM A DULY LICENSED PROFESSIONAL ENGINEER UNDER THE LAWS OF THE STATE OF MARYLAND, LICENSE NO. 21245, EXPIRATION DATE: JUNE 9, 2016.

OWNER
MARYLAND FOOD CENTER AUTHORITY
7801 OCEANO AVE
JESSUP, MD 20794
PHONE (410) 379-5760
FAX (410) 379-5773

DEVELOPER / APPLICANT
MERRITT PROPERTIES, LLC
2066 LORD BALTIMORE DRIVE
BALTIMORE, MD 21244
PHONE (410) 298-2600
FAX (410) 298-9644

SCHEMATIC PROFILE OF PROPOSED BUILDINGS
BUILDING III

MARYLAND FOOD CENTER AUTHORITY
PARCEL B-1 & E-1
(WAREHOUSE & OFFICE)

HOWARD COUNTY, MARYLAND
SCALE: N/A
DATE: OCTOBER, 2014

DRAWING NO.
C-51
SHEET 51 OF 57

SDP-14-068

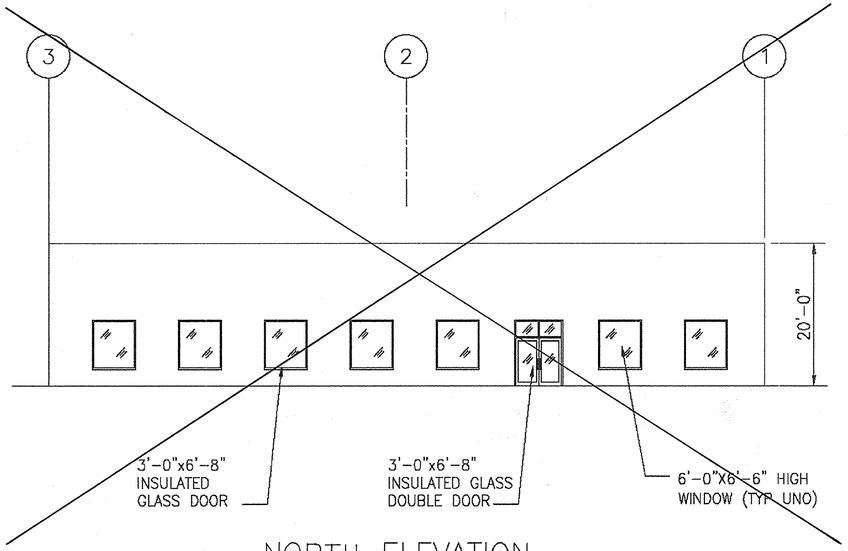

NORTH ELEVATION

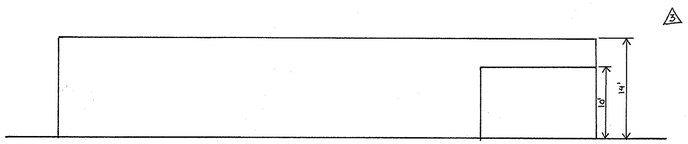

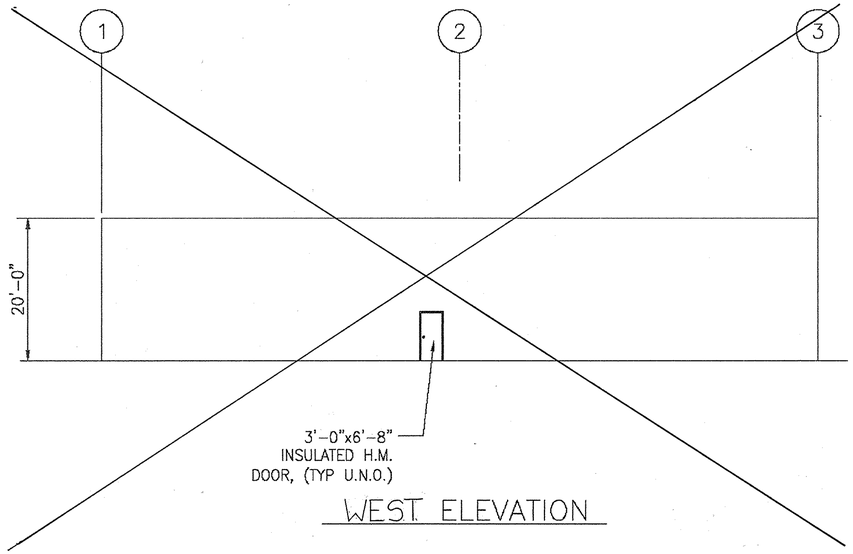

WEST ELEVATION

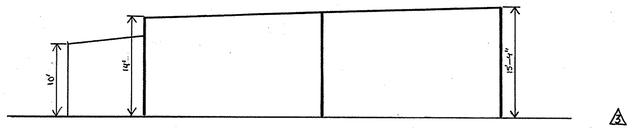

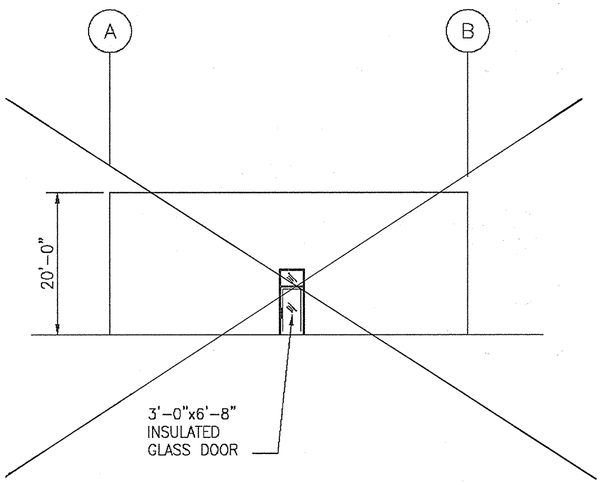

EAST ELEVATION

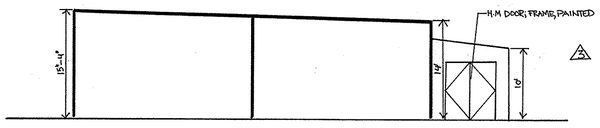

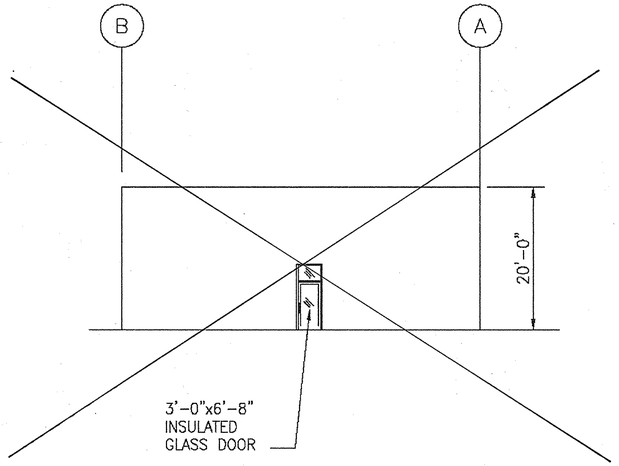

SOUTH ELEVATION

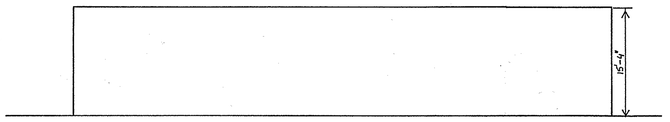

10 0 10 20 30

Scale 1" = 10'

THE COORDINATE SYSTEM OF ALL DRAWINGS IS BASED ON THE NORTH AMERICAN DATUM OF 1983. THE ELEVATION SYSTEM OF ALL DRAWINGS IS BASED ON THE NORTH AMERICAN VERTICAL DATUM OF 1988.
HORZ: NAD 83/91: VERT: NAVD 88

MORRIS & RITCHIE ASSOCIATES, INC.
ENGINEERS, PLANNERS, SURVEYORS AND LANDSCAPE ARCHITECTS
14280 PARK CENTER DRIVE - LAUREL, MD 20707
(410) 792-9792 / (301) 776-1690 FAX: (410) 792-7395
MRAGTA.COM

COPYRIGHT MORRIS & RITCHIE ASSOCIATES, INC. 2015

FOR REVISION #3 ONLY

STATE OF MARYLAND — ERIC NEUMANN — 29203 — PROFESSIONAL ENGINEER — 11-3-15

MD PROFESSIONAL CERTIFICATION:
I HEREBY CERTIFY THAT THESE DOCUMENTS WERE PREPARED OR APPROVED BY ME, AND THAT I AM A DULY LICENSED PROFESSIONAL ENGINEER UNDER THE LAWS OF THE STATE OF MARYLAND.
LICENSE NO.: 29203
EXPIRATION DATE: 06/10/2017

NOTE:
THIS BUILDING IS REPRESENTATIVE OF ALL THE BUILDINGS. BUILDINGS WILL BE PAINTED CONCRETE FINISH.

APPROVED: DEPARTMENT OF PLANNING AND ZONING

Chief, Development Engineering Division — 11.5.14 Date

Chief, Division of Land Development — 11.20.14 Date

Director — 11/21/14 Date

ADDRESS CHART

LOT / PARCEL NO.	STREET ADDRESS
PARCEL B-1	7901 OCEANO AVENUE
PARCEL E-1	7775 CHESAPEAKE BAY COURT

PERMIT INFORMATION CHART

SUBDIVISION NAME			SECTION / AREA	LOT / PARCEL NO.
MARYLAND FOOD CENTER AUTHORITY			3	B-1/662 & E-1/696
PLAT NO. or L/F	GRID NO.	ZONING	TAX MAP NO.	ELEC. DIST.	CENSUS TRACT
23017-23021	21	M-2	43	6TH	6069.01

BLDG
Baltimore Land Design Group Inc.
Consulting Engineers
230 SCHILLING CIRCLE, SUITE 364 • HUNT VALLEY, MARYLAND 21031
PHONE: 410.229.9851 • FAX: 410.229.9865 • BLDG@BLDGINC.COM

STATE OF MARYLAND — 21245 — STEVEN LOUIS ZARSKY — PROFESSIONAL ENGINEER — 10/15/14

PROFESSIONAL CERTIFICATION
I HEREBY CERTIFY THAT THESE DOCUMENTS WERE PREPARED OR APPROVED BY ME, AND THAT I AM A DULY LICENSED PROFESSIONAL ENGINEER UNDER THE LAWS OF THE STATE OF MARYLAND, LICENSE NO. 21245, EXPIRATION DATE: JUNE 9, 2016.

OWNER
MARYLAND FOOD
CENTER AUTHORITY
7801 OCEANO AVE
JESSUP, MD 20794
PHONE (410) 379-5760
FAX (410) 379-5773

DEVELOPER / APPLICANT
MERRITT PROPERTIES, LLC
2066 LORD BALTIMORE DRIVE
BALTIMORE, MD 21244
PHONE (410) 298-2600
FAX (410) 298-9644

REVISIONS

DATE	NO.	DESCRIPTION	BY
9/18/15	2	REPLACED BUILDING IV WITH TRUCK WASH-OUT STATION	MRA

REVISED SITE DEVELOPMENT PLAN
SCHEMATIC PROFILE OF PROPOSED BUILDINGS
BUILDING IV
MARYLAND FOOD CENTER AUTHORITY
PARCEL B-1 & E-1
(WAREHOUSE & OFFICE)
HOWARD COUNTY, MARYLAND
SCALE: N/A
DATE: OCTOBER, 2014

DRAWING NO.
C-52
SHEET 52 OF 57

SDP-14-068

Luminaire Schedule						
Symbol	Qty	Label	Arrangement	Total Lamp Lumens	LLF	Description
	16	S12-HS	TWIN	40000	0.720	MPTR-3S-400-XX-HS
	6	S1-HS	SINGLE	40000	0.720	MPTR-3S-400-XX-HS
	16	S2	BACK-BACK	40000	0.720	MPTR-3S-400
	39	SWP	SINGLE	44000	0.720	MPWP-GL-400-XX

NOTE:
LIGHT POLES AND LIGHTS PER LIGHTING SUPPLIER SPECIFICATIONS, FOUNDATION BY GENERAL CONTRACTOR PER SHEET C-40.

PROPOSED BUILDING EXPANSION
BUILDING III
104,450 SF ±
FF 235.95

PARCEL B-1

PARCEL E-1

PROPOSED OFFICE/WAREHOUSE
BUILDING I
88,338 SF
FF 231.00

BUILDING IV
4,500 SF
FF 235.50

MARYLAND WHOLESALE FOOD CENTER, SECTION 3, PARCEL A
PLAT: 6843
THE MARYLAND FOOD CTR AUTHORITY
T.M.43 P.420 LOT/PAR A
TAX ID.#392741
DEED: 1189/160
ZONED: M-2

CHESAPEAKE BAY COURT
(PRIVATE PUBLIC ACCESS WAY)

MCS

EX. BUILDING

EX. SPEED LIMIT SIGN

N 543,000
E 1,374,750

N58°51'05"W 26.25'

N13°51'05"W 201.19'

R=38.00'
L=43.97'

R=59.00'
L=129.15'

R=59.00'
L=104.19'

S81°44'35"E 86.68'

S08°15'23"W 311.43'

RICHARD C. & JANET S. OURSLER
T.M.43 P.241
TAX ID.#417914
DEED: 1140/492
ZONED: M-2

SEE SHEET C-55
MATCH LINE

FROEHLING & ROBERTSON, INC.
C/O ACCOUNTS PAYABLE
T.M.43 P.421
TAX ID.#395708
DEED: 7383/299
ZONED: M-2

EX. BLDG

EX. BUILDING

222.98'

S29°48'50"E

ROTO ROUTER, INC.
T.M.43 F.511
TAX ID.#399959
ZONED: M-2

S51° 32' 53"W 1,136.49'

N 542,250
E 1,374,750

SEE SHEET C-54
MATCH LINE

DANA LEE & DONNA MARSH
T.M.43 P.397 LOT.A
DEED: 1016/456
ZONED: R-20

TERRY L. MORGAN
T.M.43 P.364 LOT.12
DEED: 1181/335
ZONED: R-20

EMMANUEL & MARY ELLEN ALLEGRO
T.M.43 P.364 LOT.11
TAX ID.#418099
DEED: 1181/339
ZONED: R-20

DALE L. KEMPER
T.M.43 P.391 LOT.10
TAX ID.#421350
DEED: 1693/529
ZONED: R-20

LILLIAN GRAGER
T.M.43 P.508 LOT.9
TAX ID.#419992
DEED: 12064/375
ZONED: R-20

KENNETH H. & SYLVIA ORTEGEL
T.M.43 P.389 LOT.8
TAX ID.#409059
DEED: 1113/119
ZONED: R-20

EMILIO GUADRON AGUILAR
T.M.43 P.508 LOT.7
TAX ID.#437680
DEED: 10461/416
ZONED: R-20

ERNEST H. & WF BECK
T.M.43 P.359 LOT.6
TAX ID.#392563
DEED: 605/243
ZONED: R-20

PAUL A. EATON JR.
T.M.43 P.366 LOT.5
TAX ID.#419573
DEED: 4180/499
ZONED: R-20

FLOR ORBEGOSO
T.M.43 P.350 LOT.4
TAX ID.#412963
ZONED: R-20

EX. GARAGE
EX. SHED
MOBILE CAR COVERS

50 30 0 50

THE COORDINATE SYSTEM OF ALL DRAWINGS IS BASED ON THE NORTH AMERICAN DATUM OF 1983. THE ELEVATION SYSTEM OF ALL DRAWINGS IS BASED ON THE NORTH AMERICAN VERTICAL DATUM OF 1988.
HORZ: NAD 83/91 VERT: NAVD 88

APPROVED: DEPARTMENT OF PLANNING AND ZONING

Chief, Development Engineering Division — Date 11-6-14

Chief, Division of Land Development — Date 11-20-14

Director — Date 11/21/14

ADDRESS CHART	
LOT / PARCEL NO.	STREET ADDRESS
PARCEL B-1	7901 OCEANO AVENUE
PARCEL E-1	7775 CHESAPEAKE BAY COURT

PERMIT INFORMATION CHART

SUBDIVISION NAME			SECTION / AREA		LOT / PARCEL NO.
MARYLAND FOOD CENTER AUTHORITY			3		B-1/662 & E-1/696
PLAT NO. or L/F	GRID NO.	ZONING	TAX MAP NO.	ELEC. DIST.	CENSUS TRACT
23017-23021	21	M-2	43	6TH	6069.01

BLDG
Baltimore Land Design Group Inc.
Consulting Engineers
230 SCHILLING CIRCLE, SUITE 364 • HUNT VALLEY, MARYLAND 21031
PHONE: 410.229.9851 • FAX: 410.229.9865 • BLDG@BLDGINC.COM

PROFESSIONAL CERTIFICATION
I HEREBY CERTIFY THAT THESE DOCUMENTS WERE PREPARED OR APPROVED BY ME, AND THAT I AM A DULY LICENSED PROFESSIONAL ENGINEER UNDER THE LAWS OF THE STATE OF MARYLAND, LICENSE NO. 21245, EXPIRATION DATE: JUNE 9, 2016.

OWNER
MARYLAND FOOD CENTER AUTHORITY
7801 OCEANO AVE
JESSUP, MD 20794
PHONE (410) 379-5760
FAX (410) 379-5773

DEVELOPER / APPLICANT
MERRITT PROPERTIES, LLC
2066 LORD BALTIMORE DRIVE
BALTIMORE, MD 21244
PHONE (410) 298-2600
FAX (410) 298-9644

REVISIONS			
DATE	NO.	DESCRIPTION	BY

LIGHTING PLAN
PLAN VIEW I
MARYLAND FOOD CENTER AUTHORITY
PARCEL B-1 & E-1
(WAREHOUSE & OFFICE)
HOWARD COUNTY, MARYLAND
SCALE: 1" = 50'
DATE: OCTOBER, 2014

DRAWING NO.
C-53
SHEET 53 OF 57

SDP-14-068

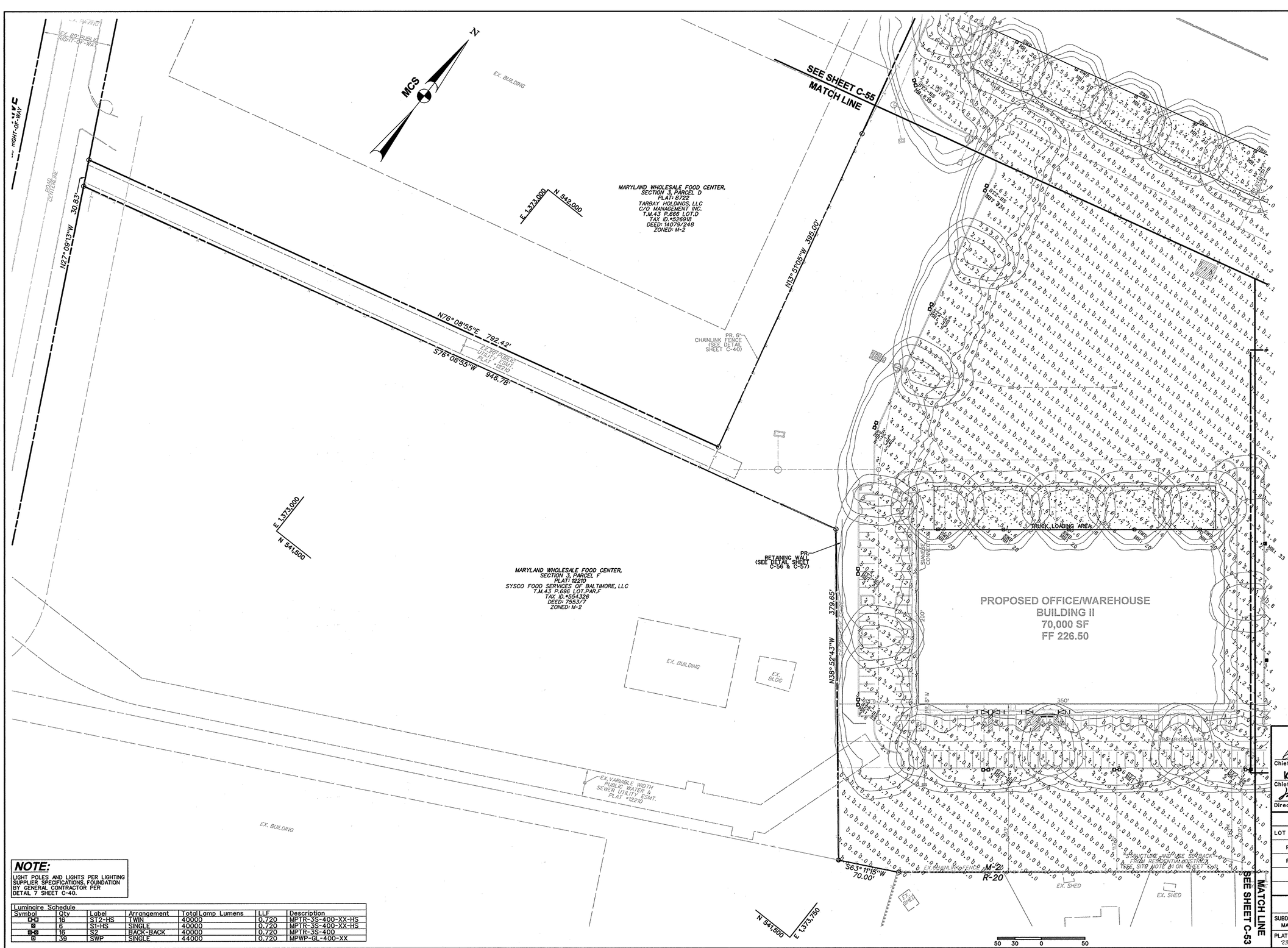

NOTE:
LIGHT POLES AND LIGHTS PER LIGHTING SUPPLIER SPECIFICATIONS. FOUNDATION BY GENERAL CONTRACTOR PER DETAIL 7 SHEET C-40.

Luminaire Schedule

Symbol	Qty	Label	Arrangement	Total Lamp Lumens	LLF	Description
	16	ST2-HS	TWIN	40000	0.720	MPTR-3S-400-XX-HS
	6	S1-HS	SINGLE	40000	0.720	MPTR-3S-400-XX-HS
	16	S2	BACK-BACK	40000	0.720	MPTR-3S-400
	39	SWP	SINGLE	44000	0.720	MPWP-GL-400-XX

APPROVED: DEPARTMENT OF PLANNING AND ZONING

Chief, Development Engineering Division — Date 11-6-14

Chief, Division of Land Development — Date 11-20-14

Director — Date 11/21/14

ADDRESS CHART

LOT / PARCEL NO.	STREET ADDRESS
PARCEL B-1	7901 OCEANO AVENUE
PARCEL E-1	7775 CHESAPEAKE BAY COURT

PERMIT INFORMATION CHART

SUBDIVISION NAME	SECTION / AREA	LOT / PARCEL NO.
MARYLAND FOOD CENTER AUTHORITY	3	B-1/662 & E-1/696

PLAT NO. or L/F	GRID NO.	ZONING	TAX MAP NO.	ELEC. DIST.	CENSUS TRACT
23017-23021	21	M-2	43	6TH	6069.01

BLDG
Baltimore Land Design Group Inc.
Consulting Engineers
230 SCHILLING CIRCLE, SUITE 364 • HUNT VALLEY, MARYLAND 21031
PHONE: 410.229.9851 • FAX: 410.229.9865 • BLDG@BLDGINC.COM

BOARD FOR PROFESSIONAL ENGINEERS 21245 STATE OF MARYLAND 10/15/14

PROFESSIONAL CERTIFICATION
I HEREBY CERTIFY THAT THESE DOCUMENTS WERE PREPARED OR APPROVED BY ME, AND THAT I AM A DULY LICENSED PROFESSIONAL ENGINEER UNDER THE LAWS OF THE STATE OF MARYLAND, LICENSE NO. 21245, EXPIRATION DATE: JUNE 9, 2016.

OWNER
MARYLAND FOOD CENTER AUTHORITY
7801 OCEANO AVE
JESSUP, MD 20794
PHONE (410) 379-5760
FAX (410) 379-5773

DEVELOPER / APPLICANT
MERRITT PROPERTIES, LLC
2066 LORD BALTIMORE DRIVE
BALTIMORE, MD 21244
PHONE (410) 298-2600
FAX (410) 298-9644

REVISIONS

DATE	NO.	DESCRIPTION	BY

LIGHTING PLAN
PLAN VIEW II
MARYLAND FOOD CENTER AUTHORITY
PARCEL B-1 & E-1
(WAREHOUSE & OFFICE)
HOWARD COUNTY, MARYLAND
SCALE: 1" = 50'
DATE: OCTOBER, 2014

DRAWING NO.
C-54
SHEET 54 OF 57

SDP-14-068

MARYLAND WHOLESALE FOOD CENTER,
SECTION 2, PARCEL C3
PLAT: 7405
THE MARYLAND FOOD CTR. AUTHORITY
THE WHOLESALE FOOD MARKET AUTHOR
T.M.43 P.666 LOT.C3
TAX ID.#444652
DEED: 506/782
ZONED: M-2

OCEANO AVENUE
HOWARD COUNTY PUBLIC ROAD
80' PUBLIC RIGHT-OF-WAY

EX.CONC.C&G
EX. 80' PUBLIC R/W
ROAD CENTERLINE
60' WIDE EX. PARKING
N76° 08'55"W 1,345.00'
30'
50' PARKING USE SETBACK FROM PUBLIC RIGHT-OF-WAY
50' STRUCTURE AND USE SETBACK FROM PUBLIC RIGHT-OF-WAY
EX. 80' PUBLIC UTILITY EASEMENT
EX. 1-STORY BUILDING
F.F. ELEV. 235.95
N13° 51'05"W 560.00'
PROPOSED BUILDING EXPANSION
BUILDING III
104,450 SF ±
FF 235.95
PARCEL B-1
N58° 51'05"W 28.28'
N13° 51'05"W 201.19'
CHESAPEAKE BAY COURT
CAMPBELL PUBLIC RIGHT-OF-WAY
MARYLAND WHOLESALE FOOD CENTER,
SECTION 3, PARCEL A
PLAT: 6843
THE MARYLAND FOOD CTR. AUTHORITY
T.M.43 P.420 LOT.PAR A
TAX ID.#392741
DEED: 1189/160
ZONED: M-2
EX. BUILDING
N
MCS
EX. SPEED LIMIT SIGN
R=38.00'
L=43.97'
R=59.00'
L=49.15'
R=59.00'
L=104.19'
MATCH LINE
SEE SHEET C-53
S81° 14'36"E
66.68'
SIAMESE CONNECTION
BUILDING IV
4,500 SF
FF 235.50
RICHARD C. & JANET S. OURSLER
T.M.43 P.241
TAX ID.#417914
DEED: 1140/492
ZONED: M-2
FROEHLING & ROBERTSON, INC.
C/O ACCOUNTS PAYABLE
T.M.43 P.421
TAX ID.#395708
DEED: 738/299
ZONED: M-2
EX. BLDG
S08° 45'23"W 134.43'
MATCH LINE
SEE SHEET C-54
PARCEL E-1
8" FIRE SERVICE

NOTE:
LIGHT POLES AND LIGHTS PER LIGHTING SUPPLIER SPECIFICATIONS. FOUNDATION BY GENERAL CONTRACTOR PER DETAIL 7 SHEET C-40.

Luminaire Schedule						
Symbol	Qty	Label	Arrangement	Total Lamp Lumens	LLF	Description
⊡⊡	16	S12-HS	TWIN	40000	0.720	MPTR-3S-400-XX-HS
⊠	6	S1-HS	SINGLE	40000	0.720	MPTR-3S-400-XX-HS
⊠⊠	16	S2	BACK-BACK	40000	0.720	MPTR-3S-400
⊡	39	SWP	SINGLE	44000	0.720	MPWP-GL-400-XX

50 30 0 50

THE COORDINATE SYSTEM OF ALL DRAWINGS IS BASED ON THE NORTH AMERICAN DATUM OF 1983. THE ELEVATION SYSTEM OF ALL DRAWINGS IS BASED ON THE NORTH AMERICAN VERTICAL DATUM OF 1988.
HORZ: NAD 83/91 VERT: NAVD 88

APPROVED: DEPARTMENT OF PLANNING AND ZONING

Chief, Development Engineering Division — Date 11.6.14
Chief, Division of Land Development — Date 11-20-14
Director — Date 11/21/14

ADDRESS CHART

LOT / PARCEL NO.	STREET ADDRESS
PARCEL B-1	7901 OCEANO AVENUE
PARCEL E-1	7775 CHESAPEAKE BAY COURT

PERMIT INFORMATION CHART

SUBDIVISION NAME			SECTION / AREA		LOT / PARCEL NO.
MARYLAND FOOD CENTER AUTHORITY			3		B-1/662 & E-1/696
PLAT NO. or L/F	GRID NO.	ZONING	TAX MAP NO.	ELEC. DIST.	CENSUS TRACT
23017-23021	21	M-2	43	6TH	6069.01

BLDG
Baltimore Land Design Group Inc.
Consulting Engineers
230 SCHILLING CIRCLE, SUITE 364 • HUNT VALLEY, MARYLAND 21031
PHONE: 410.229.9851 • FAX: 410.229.9865 • BLDG@BLDGINC.COM

REGISTERED PROFESSIONAL ENGINEER — 21245 — STATE OF MARYLAND — 10/17/14

PROFESSIONAL CERTIFICATION
I HEREBY CERTIFY THAT THESE DOCUMENTS WERE PREPARED OR APPROVED BY ME, AND THAT I AM A DULY LICENSED PROFESSIONAL ENGINEER UNDER THE LAWS OF THE STATE OF MARYLAND, LICENSE NO. 21245, EXPIRATION DATE: JUNE 9, 2016.

OWNER
MARYLAND FOOD CENTER AUTHORITY
7801 OCEANO AVE
JESSUP, MD 20794
PHONE (410) 379-5760
FAX (410) 379-5773

DEVELOPER / APPLICANT
MERRITT PROPERTIES, LLC
2066 LORD BALTIMORE DRIVE
BALTIMORE, MD 21244
PHONE (410) 298-2600
FAX (410) 298-9644

REVISIONS

DATE	NO.	DESCRIPTION	BY

LIGHTING PLAN
PLAN VIEW III
MARYLAND FOOD CENTER AUTHORITY
PARCEL B-1 & E-1
(WAREHOUSE & OFFICE)
HOWARD COUNTY, MARYLAND
SCALE: 1" = 50'
DATE: OCTOBER, 2014

DRAWING NO.
C-55
SHEET 55 OF 57

SDP-14-068

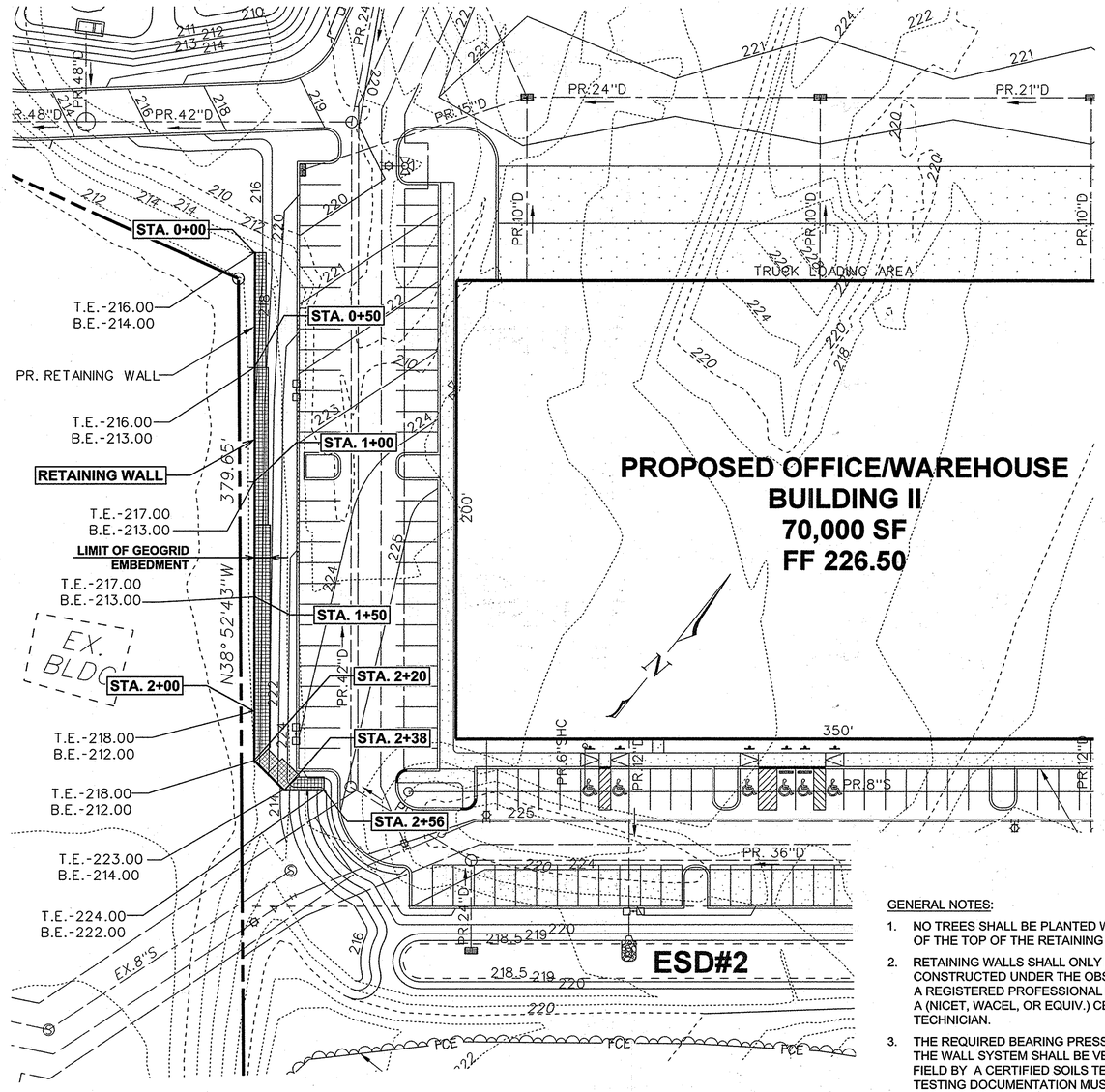

WALL LOCATION PLAN
1" = 30'

GENERAL NOTES:

1. NO TREES SHALL BE PLANTED WITHIN 10 FEET OF THE TOP OF THE RETAINING WALL.
2. RETAINING WALLS SHALL ONLY BE CONSTRUCTED UNDER THE OBSERVATION OF A REGISTERED PROFESSIONAL ENGINEER AND A (NICET, WACEL, OR EQUIV.) CERTIFIED SOILS TECHNICIAN.
3. THE REQUIRED BEARING PRESSURE BENEATH THE WALL SYSTEM SHALL BE VERIFIED IN THE FIELD BY A CERTIFIED SOILS TECHNICIAN. TESTING DOCUMENTATION MUST BE PROVIDED TO THE HOWARD COUNTY INSPECTOR PRIOR TO START OF CONSTRUCTION. THE REQUIRED BEARING TEST SHALL BE THE DYNAMIC CONE PENETROMETER TEST ASTM STP-399.
4. THE SUITABILITY OF FILL MATERIAL SHALL BE CONFIRMED BY THE ON-SITE SOILS TECHNICIAN. EACH 8" LIFT MUST BE COMPACTED TO A MINIMUM 95% STANDARD PROCTOR DENSITY AND THE TESTING REPORT SHALL BE MADE AVAILABLE TO THE HOWARD COUNTY INSPECTOR UPON COMPLETION OF CONSTRUCTION.
5. WALLS SHALL NOT BE CONSTRUCTED ON UNCERTIFIED FILL MATERIALS.
6. WALLS SHALL NOT BE CONSTRUCTED WITHIN A HOWARD CO. RIGHT-OF-WAY OR EASEMENT.

SPECIFICATIONS

MODULAR CONCRETE BLOCK RETAINING WALL

PART 1: GENERAL

1.01 Description

A. Work shall consist of furnishing and construction of a Modular Retaining Wall System in accordance with these specifications and in reasonably close conformity with the lines, grades, design, and dimensions shown on the plans.

B. Work includes preparing foundation soil, furnishing and installing leveling pad, unit drainage fill and backfill to the lines and grades shown on the construction drawings.

C. Work includes furnishing and installing geogrid soil reinforcement of the type, size, location, and lengths designated on the construction drawings.

1.02 Delivery, Storage and Handling

A. Contractor shall check all materials upon delivery to assure that the proper type, grade, color, and certification has been received.

B. Contractor shall protect all materials from damage due to job site conditions and in accordance with manufacturer's recommendations. Damaged materials shall not be incorporated into the work.

PART 2: PRODUCTS

2.01 Modular Concrete Retaining Wall Units

A. Modular concrete units shall conform to the following architectural requirements:

face color - color may be specified by the Owner.

face finish - sculptured rock face in angular tri-planer or flat configuration. Other face finishes will not be allowed without written approval of Owner.

bond configuration - running with bonds nominally located at midpoint vertically adjacent units, in both straight and curved alignments.

exposed surfaces of units shall be free of chips, cracks or other imperfections when viewed from a distance of 10 feet under diffused lighting.

B. Modular concrete materials shall conform to the requirements of ASTM C1372 - Standard Specifications for Segmental Retaining Wall Units.

C. Modular concrete units shall conform to the following structural and geometric requirements measured in accordance with appropriate references:

compressive strength = 3000 psi minimum; absorption = 8% maximum (6% in northern states) for standard weight aggregates;

dimensional tolerances = ±1/8" from nominal unit dimensions not including rough split face, ±1/16"

unit height - top and bottom planes; unit size - 8" (H) x 18" (W) x 12 (D) minimum;

unit weight - 75 lbs/unit minimum for standard weight aggregates;

inter-unit shear strength - 1000 plf minimum at 2 psi normal pressure; at 2 psi normal force.

geogrid/unit peak connection strength - 1000 plf minimum

D. Modular concrete units shall conform to the following constructability requirements: (if applicable)

vertical setback = 1/8"± per course (near vertical) or 1"+ per course per the design; alignment and grid positioning mechanism - fiberglass pins, two per unit minimum;

maximum horizontal gap between erected units shall be - 1/2 inch.

2.02 Shear Connectors (if applicable)

A. Shear connectors shall be 1/2 inch diameter thermoset isopthalic polyester resin-protruded fiberglass reinforcement rods or equivalent to provide connection between vertically and horizontally adjacent units. Strength of shear connectors between vertical adjacent units shall be applicable over a design temperature of 10 degrees F to + 100 degrees F. B. Shear connectors shall be capable of holding the geogrid in the proper design position during grid pre-tensioning and backfilling.

2.03 Base Leveling Pad Material

A. Material shall consist of a compacted #57 crushed stone base as shown on the construction drawings.

2.04 Unit Drainage Fill

A. Unit drainage fill shall consist of #57crushed stone

2.05 Reinforced Backfill

A. Reinforced backfill shall type SM, be free of debris and meet the following gradation tested in accordance with ASTM D-422 and meet other properties shown on the plan:

Sieve Size	Percent Passing
2 inch	100-75
3/4 inch	100-75
No. 40	0-60
No. 200	0-35

Plasticity Index (PI) <10 artd Liquid Limit <35 per ASTM D-4318.

B. Material can be site excavated soils where the above requirements can be met. Unsuitable soils for backfill (high plastic clays or organic soils) shall not be used in the reinforced soil mass.

2.06 Geogrid Soil Reinforcement

A. Geosynthetic reinforcement shall consist of geogrids manufactured specifically for soil reinforcement applications and shall be manufactured from high tenacity polyester yarn.

2.07 Drainage Pipe

A. The drainage pipe shall be perforated corrugated HDPE pipe manufactured in accordance with ASTM D-1246.

PART 3 EXECUTION

3.01 Excavation

A. Contractor shall excavate to the lines and grades shown on the construction drawings. Owner's representative shall be responsible for inspecting and approving the excavation prior to placement of leveling material or fill soils.

3.02 Base Leveling Pad

A. Leveling pad material shall be placed to the lines and grades shown on the construction drawings, to a minimum thickness of 6 inches and extend laterally a minimum of 6" in front and behind the modular wall unit.

B. Leveling pad shall be prepared to insure full contact to the base surface of the concrete units.

3.03 Modular Unit Installation

A. First course of units shall be placed on the leveling pad at the appropriate line and grade. Alignment and level shall be checked in all directions and insure that all units are in full contact with the base and properly seated.

B. Place the front of units side-by-side. Do not leave gaps between adjacent units. Layout of corners and curves shall be in accordance with manufacturer's recommendations.

C. Install shear/connecting devices per manufacturer's recommendations.

D. Place and compact drainage fill within and behind wall units. Place and compact backfill soil behind drainage fill. Follow wall erection and drainage fill closely with structure backfill.

E. Maximum stacked vertical height of wall units, prior to unit drainage fill and backfill placement and compaction, shall not exceed three courses.

3.04 Structural Geogrid Installation

A. Geogrid shall be oriented with the highest strength axis perpendicular to the wall alignment.

B. Geogrid reinforcement shall be placed at the strengths, lengths, and elevations shown on the construction design drawings or as directed by the Engineer.

C. The geogrid shall be laid horizontally on compacted backfill and attached to the modular wall units. Place the next course of modular concrete units over the geogrid. The geogrid shall be pulled taut, and anchored prior to backfill placement on the geogrid.

D. Geogrid reinforcements shall be continuous throughout their embedment lengths and placed side-by-side to provide 100% coverage at each level. Spliced connections between shorter pieces of geogrid or gaps between adjacent pieces of geogrid are not permitted.

3.05 Reinforced Backfill Placement

A. Reinforced backfill shall be placed, spread, and compacted in such a manner that minimizes the development of slack in the geogrid and installation damage.

B. Reinforced backfill shall be placed and compacted in lifts not to exceed 6 inches where hand compaction is used, or 8 - 10 inches where heavy compaction equipment is used. Lift thickness shall be decreased to achieve the required density as required.

C. Reinforced backfill shall be compacted to 95% of the maximum density as determined by ASTM D698. The moisture content of the backfill material prior to and during compaction shall be uniformly distributed throughout each layer and shall be + 3% to - 3% of optimum.

D. Only lightweight hand-operated equipment shall be allowed within 3 feet from the tail of the modular concrete unit.

E. Tracked construction equipment shall not be operated directly upon the geogrid reinforcement. A minimum fill thickness of 6 inches is required prior to operation of tracked vehicles over the geogrid. Tracked vehicle turning should be kept to a minimum to prevent tracks from displacing the fill and damaging the geogrid.

F. Rubber tired equipment may pass over geogrid reinforcement at slow speeds, less than 10 MPH. Sudden braking and sharp turning shall be avoided.

G. At the end of each day's operation, the Contractor shall slope the last lift of reinforced backfill away from the wall units to direct runoff away from wall face. The Contractor shall not allow surface runoff from adjacent areas to enter the wall construction site.

3.06 Cap Installation

A. Cap units shall be glued to underlying units with an all-weather adhesive recommended by the manufacturer.

3.07 Field Quality Control

A. The Owner shall engage inspection and testing services, including independent laboratories, to provide quality assurance and testing services during construction.

B. As a minimum, quality assurance testing should include foundation soil inspection, soil and backfill testing, verification of design parameters, and observation of construction for general compliance with design drawings and specifications.

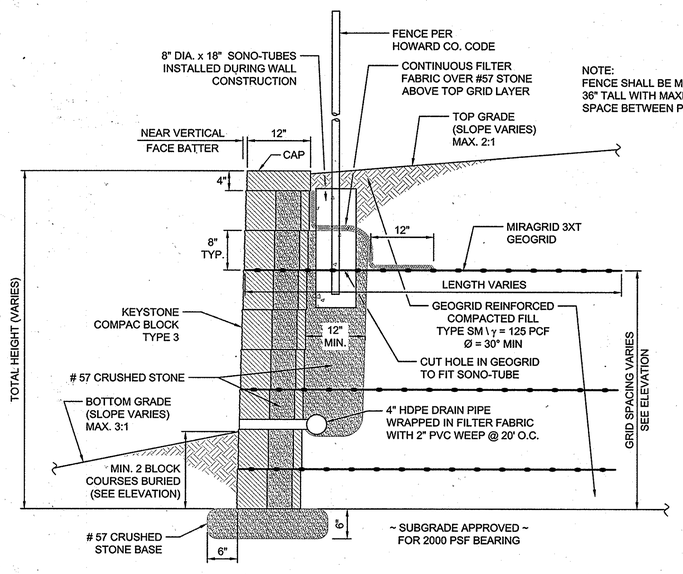

TYPICAL WALL SECTION
N.T.S.

THE COORDINATE SYSTEM OF ALL DRAWINGS IS BASED ON THE NORTH AMERICAN DATUM OF 1983. THE ELEVATION SYSTEM OF ALL DRAWINGS IS BASED ON THE NORTH AMERICAN VERTICAL DATUM OF 1988.
HORZ: NAD 83/91; VERT: NAVD 88

APPROVED: DEPARTMENT OF PLANNING AND ZONING

Chief, Development Engineering Division	Date 11.5.14
Chief, Division of Land Development	Date 11-20-14
Director	Date 11/25/14

ADDRESS CHART

LOT / PARCEL NO.	STREET ADDRESS
PARCEL B-1	7901 OCEANO AVENUE
PARCEL E-1	7775 CHESAPEAKE BAY COURT

PERMIT INFORMATION CHART

SUBDIVISION NAME			SECTION / AREA		LOT / PARCEL NO.
MARYLAND FOOD CENTER AUTHORITY			3		B-1/662 & E-1/696
PLAT NO. or L/F	GRID NO.	ZONING	TAX MAP NO.	ELEC. DIST.	CENSUS TRACT
23017 – 23021	21	M-2	43	6TH	6069.01

HILLIS-CARNES ENGINEERING ASSOCIATES
10975 Guilford Road, Suite A Annapolis Junction, Maryland
(410) 880-4788 WWW.HCEA.COM Fax: (410) 880-4098

HCEA JOB NO.:	14133-A
DESIGNED BY:	AM
DRAWN BY:	AM
APPROVED BY:	RWS

STATE OF MARYLAND · RICHARD W. STUMP II · No. 14434 · PROFESSIONAL ENGINEER

I HEREBY CERTIFY THAT THESE DOCUMENTS WERE PREPARED OR APPROVED BY ME, AND THAT I AM A DULY LICENSED PROFESSIONAL ENGINEER UNDER THE LAWS OF THE STATE OF MARYLAND, LICENSE NO. 14434, EXPIRATION DATE: MAY 13, 2015.

MARYLAND FOOD CENTER AUTHORITY
7801 OCEANO AVE
JESSUP, MD 20794
PHONE (410) 379-5760
FAX (410) 379-5773

MERRITT PROPERTIES, LLC
2066 LORD BALTIMORE DRIVE
BALTIMORE, MD 21244
PHONE (410) 298-2600
FAX (410) 298-9644

REVISIONS

DATE	NO.	DESCRIPTION	BY

RETAINING WALL PLAN AND DETAILS

MARYLAND FOOD CENTER AUTHORITY

PARCEL B-1 & E-1
(WAREHOUSE & OFFICE)

HOWARD COUNTY, MARYLAND
SCALE: AS SHOWN
DATE: OCTOBER, 2014

DRAWING NO.
C-56
SHEET 56 OF 57

SDP-14-068

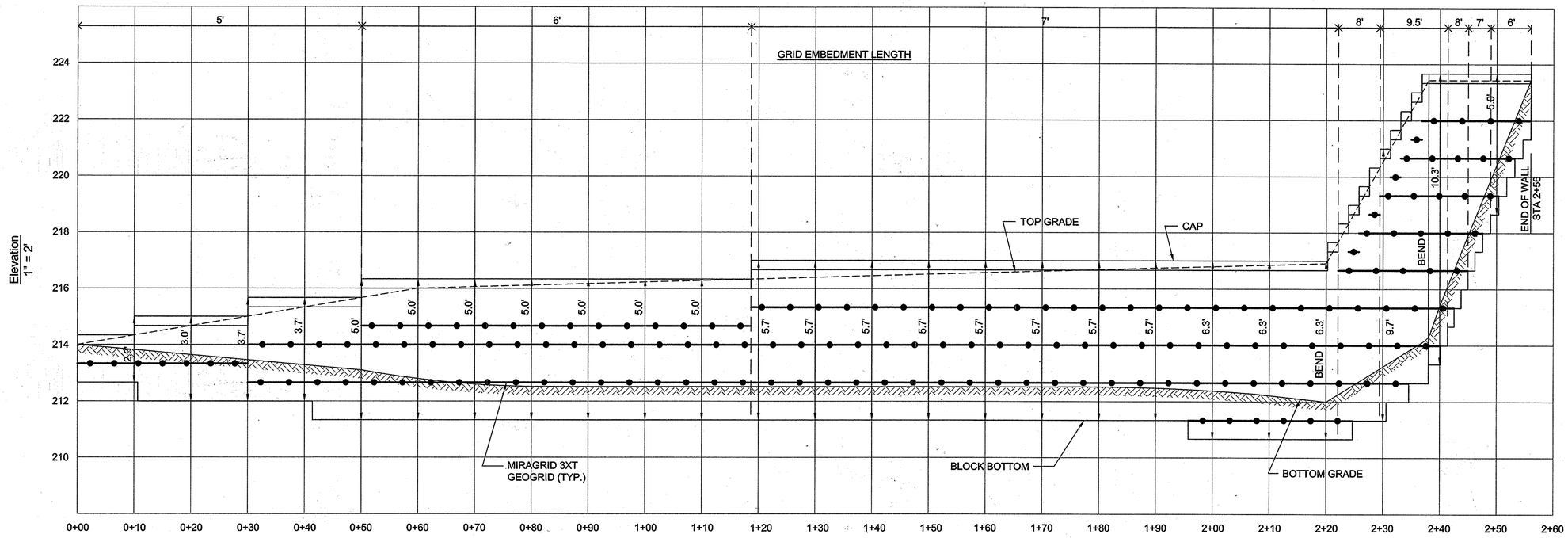

WALL STATION
1" =10'

WALL ELEVATION

APPROVED: DEPARTMENT OF PLANNING AND ZONING

Chief, Development Engineering Division — Date 11.6.14

Chief, Division of Land Development — Date 11.20.14

Director — Date 11/21/14

ADDRESS CHART	
LOT / PARCEL NO.	STREET ADDRESS
PARCEL B-1	7901 OCEANO AVENUE
PARCEL E-1	7775 CHESAPEAKE BAY COURT

PERMIT INFORMATION CHART

SUBDIVISION NAME	SECTION / AREA	LOT / PARCEL NO.
MARYLAND FOOD CENTER AUTHORITY	3	B-1/662 & E-1/696

PLAT NO. or L/F	GRID NO.	ZONING	TAX MAP NO.	ELEC. DIST.	CENSUS TRACT
23017 – 23021	21	M-2	43	6TH	6069.01

THE COORDINATE SYSTEM OF ALL DRAWINGS IS BASED ON THE NORTH AMERICAN DATUM OF 1983. THE ELEVATION SYSTEM OF ALL DRAWINGS IS BASED ON THE NORTH AMERICAN VERTICAL DATUM OF 1988.
HORZ: NAD 83/91; VERT: NAVD 88

HILLIS-CARNES ENGINEERING ASSOCIATES
10975 Guilford Road, Suite A Annapolis Junction, Maryland
(410) 880-4788 WWW.HCEA.COM Fax: (410) 880-4098

HCEA JOB NO.:	14133-A
DESIGNED BY:	AM
DRAWN BY:	AM
APPROVED BY:	RWS

STATE OF MARYLAND — HOWARD W. STUMPF — No. 14434 — PROFESSIONAL ENGINEER

I HEREBY CERTIFY THAT THESE DOCUMENTS WERE PREPARED OR APPROVED BY ME, AND THAT I AM A DULY LICENSED PROFESSIONAL ENGINEER UNDER THE LAWS OF THE STATE OF MARYLAND, LICENSE NO. 14434, EXPIRATION DATE: MAY 13, 2015.

MARYLAND FOOD CENTER AUTHORITY
7801 OCEANO AVE
JESSUP, MD 20794
PHONE (410) 379-5760
FAX (410) 379-5773

MERRITT PROPERTIES, LLC
2066 LORD BALTIMORE DRIVE
BALTIMORE, MD 21244
PHONE (410) 298-2600
FAX (410) 298-9644

REVISIONS

DATE	NO.	DESCRIPTION	BY

RETAINING WALL ELEVATION

MARYLAND FOOD CENTER AUTHORITY

PARCEL B-1 & E-1
(WAREHOUSE & OFFICE)

HOWARD COUNTY, MARYLAND
SCALE: AS SHOWN
DATE: OCTOBER, 2014

DRAWING NO.
C-57
SHEET 57 OF 57

SDP-14-068