SITE DEVELOPMENT PLAN

THE MEADOWS CORPORATE PARK PHASE 2

Howard County, Maryland

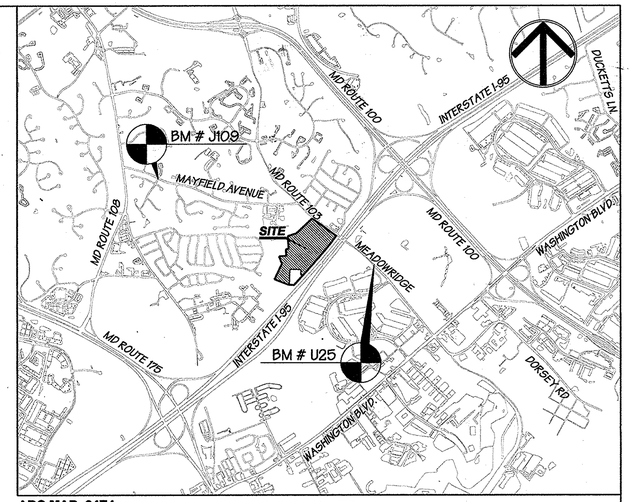

ADC MAP: 34E4

Vicinity Map
SCALE: 1" = 2,000'

GENERAL NOTES

1. ALL CONSTRUCTION SHALL BE IN ACCORDANCE WITH THE LATEST STANDARDS AND SPECIFICATIONS OF HOWARD COUNTY PLUS MSHA STANDARDS AND SPECIFICATIONS IF APPLICABLE.
2. THE CONTRACTOR SHALL NOTIFY THE DEPARTMENT OF PUBLIC WORKS/BUREAU OF ENGINEERING/CONSTRUCTION INSPECTION DIVISION AT (410) 313-1880 AT LEAST FIVE (5) WORKING DAYS PRIOR TO THE START OF WORK.
3. THE CONTRACTOR SHALL NOTIFY "MISS UTILITY" AT 1-800-257-7777 AT LEAST 48 HOURS PRIOR TO ANY EXCAVATION WORK BEING DONE.
4. TRAFFIC CONTROL DEVICES, MARKINGS AND SIGNING SHALL BE IN ACCORDANCE WITH THE LATEST EDITION OF THE MANUAL OF UNIFORM TRAFFIC CONTROL DEVICES (MUTCD). ALL STREET AND REGULATORY SIGNS SHALL BE IN PLACE PRIOR TO THE PLACEMENT OF ANY ASPHALT.
5. ALL PLAN DIMENSIONS ARE TO FACE OF CURB UNLESS OTHERWISE NOTED.
6. THE EXISTING TOPOGRAPHY IS TAKEN FROM FIELD RUN SURVEY WITH ONE FOOT CONTOUR INTERVALS PREPARED BY DUVAL & ASSOCIATES, P.A., DATED NOVEMBER 2012.
7. THE COORDINATES SHOWN HEREON ARE BASED UPON THE HOWARD COUNTY GEODETIC CONTROL WHICH IS BASED UP ON THE MARYLAND STATE PLANE COORDINATE SYSTEM. HOWARD COUNTY MONUMENT NOS. J109 AND U25 WERE USED FOR THIS PROJECT.
8. WATER IS PUBLIC. SEE CONTRACT NO. 14-4281-D & 14-4822-D.
9. SEWER IS PUBLIC . SEE CONTRACT NO. 14-4281-D & 14-4822-D.
10. THIS PROJECT UTILIZES ENVIRONMENTAL SITE DESIGN FOR ALL STORM WATER MANAGEMENT PRACTICES INCLUDING PERMEABLE PAVING, MICROBIORETENTION AND GRAVEL WETLANDS. ALL SWM DEVICES WILL BE PRIVATELY OWNED AND MAINTAINED.
11. EXISTING UTILITIES ARE BASED ON FIELD RUN SURVEY AND AVAILABLE RECORDS.
12. THERE IS NO FLOODPLAIN ON THIS SITE.
13. THERE ARE WETLANDS ON SITE. THE WETLANDS STUDY WAS PREPARED BY ECO-SCIENCE PROFESSIONALS, INC. DATED 12/03/04 AND REVISED ON 3/19/2013.
14. THE TRAFFIC STUDY FOR THIS PROJECT WAS PREPARED BY THE TRAFFIC GROUP, DATED MAY 2013 , AND WAS APPROVED ON JANUARY 15, 2014. MITIGATION WAS REQUIRED AT MD 1 AND MD 103 AND A FEE WAS PAID BASED ON THE PROJECTED IMPROVEMENTS AND CREDITED TO CAPITAL PROJECT NUMBER J-4420 ACCOUNT NUMBER:
    WBS: J0076.0.3100 GL: 490900
    FUND: 4010000000 BUSINESS AREA: 3100
    COST CENTER: 3100000000 FUNC AREA: PWPW000000000000
15. A WAIVER OF SUBSECTION 16.1205(a)(7) OF THE SUBDIVISION AND LAND DEVELOPMENT REGULATIONS IS REQUIRED TO REMOVE THE THREE SPECIMEN TREES LOCATED ON PARCEL A-7. WP-14-012 APPROVED ON 8/19/13. A WAIVER OF SUBSECTION 16.144(B) OF THE REQUIREMENT TO SUBMIT A SKETCH PLAN OR PRELIMINARY EQUIVALENT SKETCH PLAN FOR THE PROPOSED NON-RESIDENTIAL SUBDIVISION. WP-13-156 APPROVED ON 5/28/13.
16. THE GEOTECHNICAL STUDY FOR THIS PROJECT WAS PREPARED BY REULING ASSOCIATES, INC DATED MAY 2013.
17. CONTRACTOR SHALL MEET ALL EXISTING IMPROVEMENTS SMOOTHLY FOR LINE, GRADE AND FINISH.
18. IT SHALL BE DISTINCTLY UNDERSTOOD THAT FAILURE TO MENTION SPECIFICALLY ANY WORK WHICH WOULD NORMALLY BE REQUIRED TO COMPLETE THIS PROJECT SHALL NOT RELIEVE THE CONTRACTOR OF THE RESPONSIBILITY TO PERFORM SUCH WORK. THE COST OF SUCH WORK SHALL BE INCLUDED IN THE BASE BID.
19. THE LOCATIONS OF EXISTING UTILITIES SHOWN HEREON ARE APPROXIMATE ONLY AND ARE PROVIDED FOR THE CONVENIENCE OF THE CONTRACTOR ONLY. THE CONTRACTOR SHALL CONFIRM TO HIS OWN SATISFACTION THE LOCATION OF ALL UTILITIES PRIOR TO ANY EXCAVATION OR PLACEMENT OF MATERIALS. IF ANY CONFLICT IS FOUND BETWEEN UNDERGROUND UTILITIES AND THE PROPOSED LOCATION OF ANY CONSTRUCTION, THE CONTRACTOR SHALL CONTACT THE ENGINEER AND OWNER OF THE UTILITY IMMEDIATELY. ANY DAMAGE OR DISRUPTION OF SERVICE SHALL BE AT THE EXPENSE OF THE CONTRACTOR. RELOCATION OF ANY EXISTING UTILITIES, IF NECESSARY, SHALL BE AT THE EXPENSE OF THE OWNER. THE CONTRACTOR SHALL COORDINATE RELOCATION OF THESE FACILITIES, IF NECESSARY.
20. CONTRACTOR SHALL PROTECT ALL EXISTING IMPROVEMENTS NOT SCHEDULED FOR REMOVAL OR DEMOLITION. COST OF REPAIR TO EXISTING IMPROVEMENTS SHALL BE INCLUDED IN THE BASE BID. ALL EXISTING SITE FEATURES NOT BEING RETAINED SHALL BE REMOVED AND DISPOSED OF AT AN APPROVED LOCATION. ANY DAMAGE TO OFFSITE ROADS, RIGHTS OF WAY, OR ADJACENT PROPERTY SHALL BE REPAIRED IMMEDIATELY AT THE EXPENSE OF THE CONTRACTOR.
21. THE CONTRACTOR SHALL CLEAR THE PROJECT SITE OF ALL TREES, PAVING, STRUCTURES, ETC. WITHIN THE CONSTRUCTION AREA UNLESS OTHERWISE NOTED ON THE PLAN.
22. ONLY SUITABLE MATERIAL SHALL BE USED AS FILL AND ALL FILL SHALL BE PLACED AND COMPACTED AS SPECIFIED IN THE SOILS REPORT PREPARED FOR THIS SITE OR AS DIRECTED BY THE GEOTECHNICAL ENGINEER.
23. THIS SITE IS ZONED POR PER THE OCTOBER 6, 2013 COMPREHENSIVE ZONING PLAN.
24. NO GRADING, REMOVAL OF VEGETATIVE COVER AND TREES, PAVING AND NEW STRUCTURES SHALL BE PERMITTED WITHIN 25 FEET OF A WETLANDS OR FOREST CONSERVATION EASEMENT
25. THIS PLAN HAS BEEN PREPARED IN ACCORDANCE WITH THE PROVISIONS OF SECTION 16.124 OF THE HOWARD COUNTY CODE AND LANDSCAPE MANUAL.
26. FINANCIAL SURETY FOR THE REQUIRED LANDSCAPING HAS BEEN POSTED AS PART OF THE DPW DEVELOPER'S AGREEMENT IN THE AMOUNT OF $67,770.00 FOR 110 SHADE TREES, 33 UNDERSTORY TREES, 71 EVERGREEN TREES AND 639 SHRUBS.
27. THIS PROJECT COMPLIES WITH THE REQUIREMENTS OF SECTION 16.1200 OF THE HOWARD COUNTY CODE FOR FOREST CONSERVATION BY PROVIDING 0.7 ACRES OF ON-SITE RETENTION AND 0.8 ACRES OF ON-SITE REFORESTATION WITHIN THE PROPOSED FCE EASEMENT AND PURCHASING 1.9 ACRE OF A CREDIT IN THE MAPLEWOOD FARM FOREST MITIGATION BANK (SDP-13-040) TO BE DESIGNED, CONSTRUCTED AND MONITORED BY ECOTONE, INC.
28. THERE ARE NO CEMETERIES OR BURIAL GROUNDS LOCATED ON THIS SITE.
29. THIS SITE COMPLIES WITH THE HOWARD COUNTY GREEN BUILDINGS LAW UNDER TITLE 3, SUBTITLE 10 OF THE HOWARD COUNTY CODE AND SECTION 3.1005(a) OF THE CODE. REGISTRATION WITH THE GREEN BUILDING COUNCIL AND PAYMENT OF THE LEED REGISTRATION FEE WAS PAID MADE IN 2008. THE LEED NEW CONSTRUCTION CHECKLIST WAS PREPARED, SIGNED AND DATED BY THE PROJECT LEED ACCREDITED PROFESSIONAL WAS RECEIVED BY DPZ ON SEPTEMBER 10, 2013. THE PROPOSED BUILDING NO. 4 IS TENTATIVELY CERTIFIED BY LEED WITH A GOLD RATING."
30. A KNOX BOX (FIRE DEPARTMENT ACCESS BOX) IS REQUIRED TO BE PLACED ON THE FRONT OF BUILDING NO. 4. IT SHALL BE PLACED TO THE RIGHT OF THE MAIN ENTRANCE AT A RANGE OF 4-6 FT IN HEIGHT AND NO MORE THAN 6 FT LATERALLY FROM THE DOOR. THE BOX SHALL BE ELECTRONICALLY SUPERVISED TO NOTIFY THE OWNER THAT IT IS BEING ACCESSED (INTEGRATED WITH THE FIRE ALARM SYSTEM). NFPA-1 10.12.1
31. PER SECTION 115.0.B.38 OF THE 2013 ZONING REGULATIONS, IF THE DEVELOPMENT IS MORE THAN 25 ACRES CONTAINING > 100,000 SF OF OFFICE, RETAIL USE SHALL CONSTITUTE NO MORE THAN 10% OF THE FLOOR AREA OF THE TOTAL DEVELOPMENT. THIS SITE IS 33.05 ACRES WITH 218,955 SF OF OFFICE SPACE, THEREFORE 21,895 SF OF RETAIL IS CURRENTLY ALLOWED WITH 11,200 SF PROPOSED WITHIN BLDG. NO. 5.

SITE DATA

TOTAL AREA OF SITE	1,439,642 Sq. Ft. or 33.05 Ac.+/-
LIMIT OF DISTURBED AREA	456,800 Sq. Ft.or 10.49Ac. +/-
	487,700 Sq. Ft.or 11.20Ac.+/- including Ex. SWM Pond/Basin for maintenance purposes only
PRESENT ZONING DESIGNATION	POR
DEED REFERENCE	11148 2/00388 (p454), 11098/00001 (p500), 13989/00303 (p524), 12931/00328 (p536), 11482/00388 (p750), 09009/00151 (pA2,A3,A4)
PLAT REFERENCE	
APPLICABLE DPZ FILE REFERENCES	F-05-103, WP-05-86, SDP-05-072, F-06-114, WP-10-144, ECP-13-063, WP-13-156, WP-14-012, F-14-035
EXISTING USE	GENERAL OFFICE
PROPOSED USE	GENERAL OFFICE & RETAIL
TOTAL BUILDING FLOOR AREA	230,155 Sq.Ft.
Existing (2-STORY) Bldg No. 2	70,734 Sq. Ft. per SDP-05072
Existing (2-STORY) Bldg No. 3	70,734 Sq. Ft. per SDP-05072
Proposed (2-STORY) Bldg No. 4	77,487 Sq. Ft. (including basement emergency exit corridor/utility room)
Proposed (1-STORY) Bldg No. 5	11,200 Sq. Ft.
FLOOR AREA RATIO	0.16
PARKING SPACES REQUIRED:	779 SPACES OFFICE: 218,955 * 3.3/1000 = 723 RETAIL: 11,200 * 5.0/1000 = 56
PARKING SPACES PROVIDED:	1081 SPACES 1037 STANDARD SPACES 19 COMPACT SPACES 25 HANDICAP SPACES
AREA OF WETLANDS (BUFFERS):	1.21 Ac. (0.00 Ac. within LOD)
AREA OF FLOODPLAINS (BUFFERS):	0.00 Ac.
AREA OF FOREST:	**8.3 Ac. (4.6 Ac. within LOD)
AREA OF STEEP SLOPES >15% within LOD:	1.52 Ac.
AREA OF STEEP SLOPES >25% within LOD:	0.62 Ac. (There are no contiguous areas > 20,000 s.f.)
AREA OF ERODIBLE SOILS:	1.67 Ac. of SrC/SrD (0.00 Ac. within LOD)
IMPERVIOUS AREA within LOD:	5.56 Ac.
GREEN AREA within LOD:	4.93 Ac.

- Phase 1 Site Area (SDP 05-072): 1,058,910 s.f. or 24.31 acres (Parcels A1 - A4).
  Phase 2 Additional Site Area: +500,932 s.f. or 11.50 acres (Parcels 454,500,524,536,750)
  Total Site Area of
  The Meadows Corporate Park: 1,559,842 s.f. or 35.81 acres (Parcels A1, A5-A9)
  Parcel A1: -120,200 s.f. or 2.76 ac - NOT PART OF PHASE 2 APPLICATION - DIFFERENT OWNER
  Phase 2 Site Area: 1,439,642 s.f. or 33.05 acres (Parcels A5-A9)

** The Forest Conservation requirement for Phase 1 (Parcels A1 - A4) as approved with SDP-05-072 was met by providing 3.6 ac. of on-site retention within the now recorded FCE easements, 0.25 ac. of on-site reforestation and 5.15 acres of Fee-in-lieu. This application for Phase 2 adds an additional 8.3 acres (Parcels 454,500,524,536,750) of existing Forest to the original Meadows Corporate Park Development. The Forest Conservation requirement for Phase 2 shall be met by providing 0.7 acres of on-site retention and 0.8 acres of on-site reforestation within the proposed FCE easement and purchasing 1.9 acre of a credit in The Maplewood Farm Forest Mitigation Bank (SDP-13-040) to be designed, constructed and monitored by Ecotone, Inc

LEGEND

Existing Contour 653 / 650
Property Line
Proposed Contour 532
Existing Storm Drain
Proposed Storm Drain Prop SD
Existing Sanitary
Existing Water
Existing Curb
Proposed Conc. Curb
Existing Electric E E
Existing Telephone T T
Existing Gas G G
Existing Spot Elevation +604
Proposed Spot Elevation 652.2+
Limit of Disturbance
Proposed Impervious Area
Proposed Permeable Pave
Ex. Slopes 15% - 25%
Ex. Slopes >25%
Conservation Easement Area
Tree Line

Drainage Divide
Super Silt Fence SSF
Silt Fence SF
Silt Fence on Pavement SFOP
Temporary Dike/Swale
Earth Dike
Temporary Asphalt Berm TAB
Inlet Protection IP
Stabilized Construction Entrance SCE
Gabion Inflow Protection GP
Rip-rap Inflow Protection RRP

BENCHMARKS

BM # J 109 ELEVATION 348.04
NAD 83
THE DISK IS SET IN A CONCRETE MONUMENT PROJECTING TEN CENTIMETERS AND THE DISK IS STAMPED J 109 1965 USC AND GS
N 557,526.35 E 1,370,661.99

BM # U 25 ELEVATION 215.39
NAD 83
THE DISK IS SET IN A ROUND CONCRETE POST PROJECTING SIX INCHES AND THE DISK IS STAMPED U 26 1957
N 554,701.88 E 1,377,647.62

Index of Sheets

SHEET NO. 1 - COVER SHEET, GENERAL NOTES & LOCATION MAP
SHEET NO. 2 - OVERALL PROPERTY INDEX
SHEET NO. 3 - EXISTING CONDITIONS PLAN
SHEET NO. 4 - EXISTING CONDITIONS PLAN
SHEET NO. 5 - SITE DEVELOPMENT PLAN
SHEET NO. 6 - SITE DEVELOPMENT PLAN
SHEET NO. 7 - GRADING PLAN
SHEET NO. 8 - UTILITY PLAN
SHEET NO. 9 - LANDSCAPE PLAN
SHEET NO. 10 LANDSCAPE DETAILS
SHEET NO. 11 SITE PLAN DETAILS
SHEET NO. 12 SITE PLAN DETAILS
SHEET NO. 13 BUILDING SECTIONS
SHEET NO.14 STORM DRAINAGE MAP
SHEET NO.15 STORM DRAINAGE DETAILS
SHEET NO. 16 STORM DRAINAGE PROFILES
SHEET NO. 17 SHA SITE OUTFALLS DRAINAGE MAP
SHEET NO.18 ESD DRAINAGE AREA MAP
SHEET NO.19 STORMWATER MANAGEMENT DETAILS
SHEET NO.20 STORMWATER MANAGEMENT DETAILS
SHEET NO.21 SOIL BORING LOGS
SHEET NO.22 SOIL BORING LOGS
SHEET NO.23 INITIAL EROSION & SEDIMENT CONTROL PLAN
SHEET NO.24 FINAL EROSION & SEDIMENT CONTROL PLAN
SHEET NO.25 SEDIMENT CONTROL DETAILS
SHEET NO.26 SEDIMENT CONTROL DETAILS
SHEET NO.27 SEDIMENT CONTROL DETAILS
SHEET NO.28 SEDIMENT CONTROL DETAILS
SHEET NO.29 SEDIMENT CONTROL DETAILS
SHEET NO.30 SEDIMENT CONTROL DETAILS
SHEET NO.31 FOREST STAND DELINEATION
SHEET NO.32 FOREST STAND DELINEATION
SHEET NO.33 FOREST CONSERVATION PLAN
SHEET NO.34 FOREST CONSERVATION PLAN
SHEET NO.35 FOREST CONSERVATION NOTES

ADDRESS CHART	
PARCEL NO.	STREET ADDRESS
Par A-6;Bldg. No. 2	6518 MEADOW RIDGE ROAD MD RTE. 103
Par A-6;Bldg. No. 3	6514 MEADOW RIDGE ROAD MD RTE. 103
Par A-7;Bldg. No. 4	6510 MEADOW RIDGE ROAD MD RTE. 103
Par A-9;Bldg. No. 5	6508 MEADOW RIDGE ROAD MD RTE. 103

SUBDIVISION NAME	SECTION NAME	PARCEL#
The Meadows Corporate Park		A5, A6, A7, A8, A9

PLATS	GRID	ZONE	TAX MAP / ZONE	ELECT. DIST.	CENSUS TRACT
22860 - 22862	22	POR	37	1	6011.02

WATER CODE B-02 SEWER CODE 4020000

APPROVED: Howard County Department of Planning and Zoning

CHIEF, DEVELOPMENT ENGINEERING DIVISION — DATE 5.12.14
CHIEF, DIVISION OF LAND DEVELOPMENT — DATE 6-18-14
DIRECTOR — DATE 6/18/14

PROFESSIONAL CERTIFICATION:
I HEREBY CERTIFY THAT THESE DOCUMENTS WERE PREPARED OR APPROVED BY ME, AND THAT I AM A DULY LICENSED PROFESSIONAL ENGINEER UNDER THE LAWS OF THE STATE OF MARYLAND, LICENSE NO. 29179, EXPIRATION DATE: 06-16-2015.
4-23-14
STATE OF MARYLAND — STEVEN L. BENSINGER — No. 29179 — PROFESSIONAL ENGINEER

MATIS WARFIELD
Consulting Engineers
10540 York Road, Suite M
Hunt Valley, Maryland 21030
PHONE 410.683.7004 FAX 410.683.1798
www.matiswarfield.com

Owner/Developer:
Merritt-MR, LLC
2066 Lord Baltimore Drive
Baltimore, Maryland 21244
ph: 410-298-2600
fx: 410-298-9644

NO.	DESCRIPTION	BY	DATE
1	Add temporary parking and submerged gravel wetland SWM-11A.	MWI	1/28/15

COVER SHEET, GENERAL NOTES & LOCATION MAP
The Meadows Corporate Park Phase 2
6510 - 6518 MEADOW RIDGE ROAD MD RTE. 103
GREEN BUILDING

TAX MAP: 37; PARCELS: A5-A9
ELECTION DISTRICT : 1
ZONE: POR

GENERAL OFFICE
SCALE : As Shown
DATE : April 23, 2014
SHEET: 1 of 35

SDP-13-070

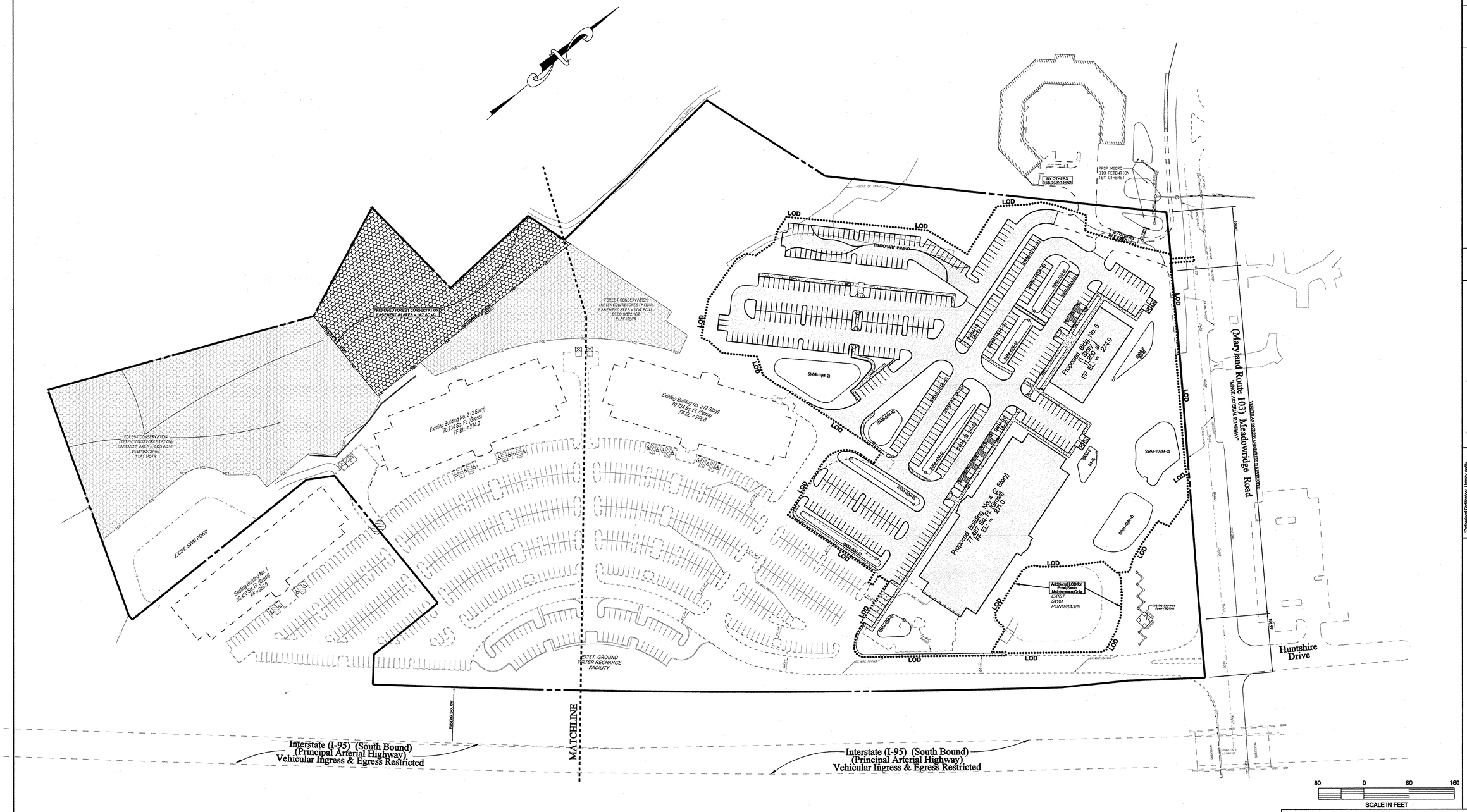

NO.	DESCRIPTION	BY	DATE
1	Add temporary parking and submerged gravel wetland SWM-11A.	MWI	1/28/2015

Owner/Developer:
Merritt-MR, LLC
2066 Lord Baltimore Drive
Baltimore, Maryland 21244
ph: 410-298-2600
fx: 410-298-9644

MATIS WARFIELD
Consulting Engineers
10540 York Road, Suite M
Hunt Valley, Maryland 21030
PHONE 410.683.7004 FAX 410.683.1798
www.matiswarfield.com

APPROVED: Howard County Department of Planning and Zoning

CHIEF, DEVELOPMENT ENGINEERING DIVISION — DATE 4-8-15

CHIEF, DIVISION OF LAND DEVELOPMENT — DATE 4-13-15

DIRECTOR — DATE 4/13/15

REVISED SITE DEVELOPMENT PLAN

OVERALL PROPERTY INDEX
The Meadows Corporate Park Phase 2

6510 - 6518 MEADOW RIDGE ROAD MD RTE. 103
GREEN BUILDING

TAX MAP: 37;
PARCELS: A5-A9
ELECTION DISTRICT : 1
ZONE: POR

GENERAL OFFICE
SCALE : 1" = 80'
DATE : April 23, 2014
SHEET: 2 of 35

The purpose for Revision #1 to SDP-13-070 is to revise to add SWM-11A to serve the shared improvement of SDP-13-021 and SDP-13-070.

SDP-13-070

SEE MATCHLINE THIS SHEET

PARCEL 172
HOWARD COUNTY, MD.
DEPT. OF PUBLIC WORKS
ZONED POR
01022/00139
USE: VACANT

PARCEL 408
HOWARD COUNTY, MD.
DEPT. OF PUBLIC WORKS
ZONED POR
00935/00048
USE: INDUSTRIAL

SEE MATCHLINE THIS SHEET

MEADOWI
LANDING AS
LOCAL OPEN
LOT 1(
PLAT 9
04999-0
TAX ACCT. 2

(Maryland Route 103) Meadowridge Road
"MINOR ARTERIAL ROADWAY"
VEHICULAR INGRESS AND EGRESS IS RESTRICTED

MEADC
65

Huntshire Drive

MATCH LINE 'A-A (SEE SHEET 4)

Interstate (I-95) (South Bound)
(Principal Arterial Highway)
Vehicular Ingress & Egress Restricted

FOREST CONSERVATION (RETENTION/REFORESTATION) EASEMENT AREA = 1.04± AC.+/- DEED 9372/162 PLAT 17574

Existing Building No. 3 (2 Story)
70,734 Sq. Ft. (Gross)
FF-EL. = 276.0

EXIST. GROUND WATER RECHARGE FACILITY

OLD FIELD/BRUSH

DRIVEWAY

7,424 s.f. slopes>25%
505 s.f. slopes>25%
2,556 s.f. slopes>25%
220 s.f. slopes>25%
397 s.f. slopes>25%
6,670 s.f. slopes>25%
1,321 s.f. slopes>25%
2,762 s.f. slopes>25%
973 s.f. slopes>25%

Additional LOD for Pond/Basin Maintenance Only

EXIST. SWM POND/BASIN

30' STRUCTURE AND USE SETBACK

20' PUBLIC WATER AND UTILITY EASEMENT (PLATS 10356-10358)

20' PRIVATE DRAINAGE & UTILITY EASEMENT (PLATS 10356 AND 10358)

24' PRIVATE ACCESS EASEMENT (PLATS 10356-10358)

SHA DRAINAGE & UTILITY EASEMENT

EXISTING PUBLIC 8" WATER PER CONT. NO. 75-W

EXISTING PUBLIC SEWER PER CONTRACT NO. 25-D

LEGEND

Existing Contour	653 / 650
Property Line	
Proposed Contour	532
Existing Storm Drain	EX. 15"SD
Proposed Storm Drain	Prop SD
Existing Sanitary	EX. 8"SAN
Existing Water	EX. 8" W
Existing Curb	
Proposed Conc. Curb	
Existing Electric	E E E
Existing Telephone	T T T
Existing Gas	G G G
Existing Spot Elevation	+604
Proposed Spot Elevation	652.2+
Tree Line	
5' Wide Painted Crosswalk	
Pipe Railing	
Limit of Disturbance	
Proposed Impervious Area	
Proposed Permeable Pave	
Conservation Easement Area	
Ex. Slopes 15% - 25%	
Ex. Slopes >25%	

50 0 50 100
SCALE IN FEET

APPROVED: Howard County Department of Planning and Zoning

CHIEF, DEVELOPMENT ENGINEERING DIVISION — DATE 6.12.14

CHIEF, DIVISION OF LAND DEVELOPMENT — DATE 6-18-14

DIRECTOR — DATE 6/18/14

NO.	DESCRIPTION	BY	DATE

Owner/Developer:
Merritt-MR, LLC
2066 Lord Baltimore Drive
Baltimore, Maryland 21244
ph: 410-298-2600
fx: 410-298-9644

I hereby certify that these documents were prepared or approved by me, and that I am a duly licensed professional engineer under the laws of the State of Maryland, License No. 22431, Expiration Date: 07-07-2015

STATE OF MARYLAND
CARL BENSINGER
No. 22431
PROFESSIONAL ENGINEER

4-23-14

MATIS WARFIELD
Consulting Engineers
10540 York Road, Suite M
Hunt Valley, Maryland 21030
PHONE 410.683.7004 FAX 410.683.1798
www.matiswarfield.com

EXISTING CONDITIONS PLAN
The Meadows Corporate Park Phase 2

6510 - 6518 MEADOW RIDGE ROAD MD RTE. 103
GREEN BUILDING

TAX MAP: 37;
PARCELS: A5-A9
ELECTION DISTRICT : 1
ZONE: POR

GENERAL OFFICE
SCALE : 1" = 50'
DATE : April 23, 2014
SHEET: 3 of 35

SDP-13-070

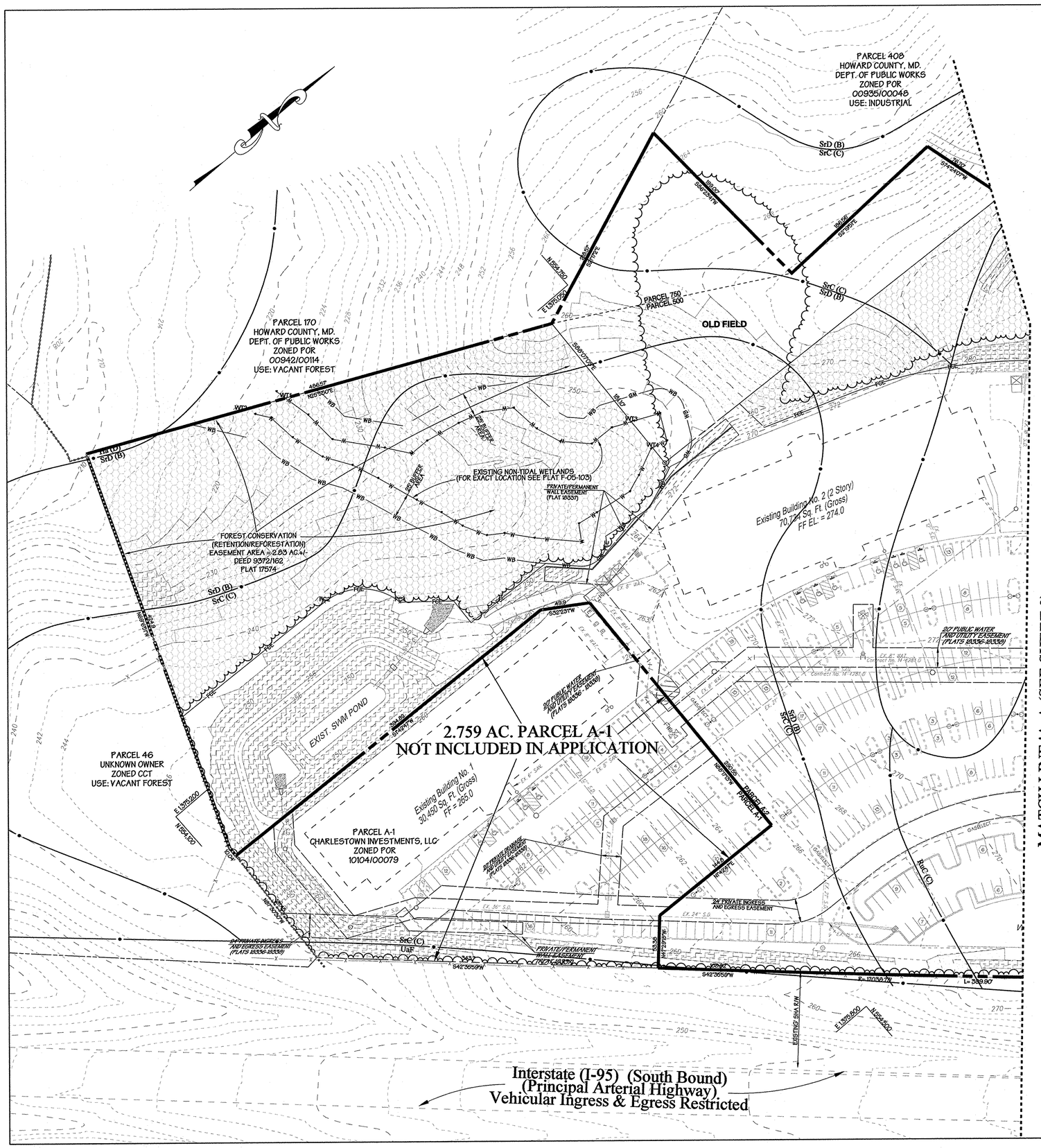

LEGEND

Existing Contour	653 / 650
Property Line	
Proposed Contour	532
Existing Storm Drain	EX. 15" SD
Proposed Storm Drain	Prop SD
Existing Sanitary	EX. 8" SAN
Existing Water	EX. 8" W
Existing Curb	
Proposed Conc. Curb	
Existing Electric	E
Existing Telephone	T
Existing Gas	G
Existing Spot Elevation	+604
Proposed Spot Elevation	652.2+
Tree Line	
5' Wide Painted Crosswalk	
Pipe Railing	
Limit of Disturbance	
Proposed Impervious Area	
Proposed Permeable Pave	
Conservation Easement Area	
Ex. Slopes 15% - 25%	
Ex. Slopes >25%	

50 0 50 100
SCALE IN FEET

NO.	DESCRIPTION	BY	DATE

Owner/Developer:
Merritt-MR, LLC
2066 Lord Baltimore Drive
Baltimore, Maryland 21244
ph: 410-298-2600
fx: 410-298-9644

STATE OF MARYLAND
TANVAL DENSINGER
No. 29179
4-23-14

MATIS WARFIELD
Consulting Engineers
10540 York Road, Suite M
Hunt Valley, Maryland 21030
PHONE 410.683.7004 FAX 410.683.1798
www.matiswarfield.com

APPROVED: Howard County Department of Planning and Zoning

CHIEF, DEVELOPMENT ENGINEERING DIVISION — DATE 5-12-14

CHIEF, DIVISION OF LAND DEVELOPMENT — DATE 6-18-14

DIRECTOR — DATE 6/18/14

EXISTING CONDITIONS PLAN
The Meadows Corporate Park Phase 2

6510 - 6518 MEADOW RIDGE ROAD MD RTE. 103
GREEN BUILDING

TAX MAP: 37;
PARCELS: A5-A9
ELECTION DISTRICT : 1
ZONE: POR

GENERAL OFFICE
SCALE : 1" = 50'
DATE : April 23, 2014
SHEET: 4 of 35

SDP-13-070

SEE MATCHLINE THIS SHEET

PARCEL 172
HOWARD COUNTY, MD.
DEPT. OF PUBLIC WORKS
ZONED POR
01022/00139
USE: VACANT

BY OTHERS
SEE SDP-13-021

PROP MICRO
BIO-RETENTION
(BY OTHERS)

MEADOWI
LANDING AS:
LOCAL OPEN
LOT 1C
PLAT 9
04999-0
TAX ACCT. 2

S46°44'56"W 604.01'

369.91'

214.90'

PRIVATE VARIABLE WIDTH INGRESS, EGRESS & UTILITY EASEMENT

BY OTHERS
SEE SDP-13-021

PROP. 8" WATER

TEMPORARY PAVING

N74°24'07"E 12.99'

N74°16'03"E 22.08'

216.81'

PARCEL A-8
PARCEL A-9

FOREST CONSERVATION
(RETENTION/REFORESTATION)
EASEMENT AREA = 1.04 AC.+/-
DEED 9372/162
PLAT 17574

N74°03'35"E 156.62'

E 1375,400
N 555,350

PROP. 6" SAN.

20' PUBLIC SEWER & UTILITY EASEMENT

PROP. 8" WATER

PROP. 8" SAN.

SWM-11(M-2)

Existing Building No. 3 (2 Story)
70,734 Sq. Ft. (Gross)
FF EL. = 276.0

20' PUBLIC WATER AND UTILITY EASEMENT (PLATS 17573-17575) TO BE RELEASED

20' PUBLIC SEWER & UTILITY EASEMENT

PROP. 8" WATER

SWM-5(M-2)

SWM-11A(M-2)

SWM-11B(M-2)

SWM-11C(M-2)

SWM-11D(M-2)

SWM-10A(M-2)

SWM-10B(M-2)

SWM-10C(M-2)

SWM-10D(M-2)

SWM-10E(M-2)

SWM-10F(M-2)

SWM-10G(M-2)

SWM-10H(M-2)

SWM-10I(M-2)

SWM-10J(M-2)

SWM-10K(M-2)

SWM-10L(M-2)

SWM-10M(M-2)

SWM-10N(M-2)

SWM-10O(M-2)

SWM-10P(M-2)

SWM-10Q(M-2)

SWM-10R(M-2)

SWM-10S(M-2)

SWM-10T(M-2)

SWM-10U(M-2)

SWM-10V(M-2)

SWM-10W(M-2)

SWM-10X(M-2)

SWM-10Y(M-2)

SWM-10Z(M-2)

SWM-10AA(M-2)

SWM-10AB(M-2)

SWM-10AC(M-2)

SWM-10AD(M-2)

SWM-10AE(M-2)

SWM-10AF(M-2)

SWM-10AG(M-2)

SWM-10AH(M-2)

SWM-10AI(M-2)

SWM-10AJ(M-2)

SWM-10AK(M-2)

SWM-10AL(M-2)

SWM-10AM(M-2)

SWM-10AN(M-2)

SWM-10AO(M-2)

SWM-10AP(M-2)

SWM-10AQ(M-2)

SWM-10AR(M-2)

SWM-10AS(M-2)

SWM-10AT(M-2)

SWM-10AU(M-2)

SWM-10AV(M-2)

SWM-10AW(M-2)

SWM-10AX(M-2)

SWM-10AY(M-2)

SWM-10AZ(M-2)

SWM-10BA(M-2)

SWM-10BB(M-2)

SWM-10BC(M-2)

SWM-10BD(M-2)

SWM-10BE(M-2)

SWM-10BF(M-2)

SWM-10BG(M-2)

SWM-10BH(M-2)

SWM-10BI(M-2)

SWM-10BJ(M-2)

SWM-10BK(M-2)

SWM-10BL(M-2)

SWM-10BM(M-2)

SWM-10BN(M-2)

SWM-10BO(M-2)

SWM-10BP(M-2)

SWM-10BQ(M-2)

SWM-10BR(M-2)

SWM-10BS(M-2)

SWM-10BT(M-2)

SWM-10BU(M-2)

SWM-10BV(M-2)

SWM-10BW(M-2)

SWM-10BX(M-2)

SWM-10BY(M-2)

SWM-10BZ(M-2)

SWM-10CA(M-2)

SWM-10CB(M-2)

SWM-10CC(M-2)

SWM-10CD(M-2)

SWM-10CE(M-2)

SWM-10CF(M-2)

SWM-10CG(M-2)

SWM-10CH(M-2)

SWM-10CI(M-2)

SWM-10CJ(M-2)

SWM-10CK(M-2)

SWM-10CL(M-2)

SWM-10CM(M-2)

SWM-10CN(M-2)

SWM-10CO(M-2)

SWM-10CP(M-2)

SWM-10CQ(M-2)

SWM-10CR(M-2)

SWM-10CS(M-2)

SWM-10CT(M-2)

SWM-10CU(M-2)

SWM-10CV(M-2)

SWM-10CW(M-2)

SWM-10CX(M-2)

SWM-10CY(M-2)

SWM-10CZ(M-2)

SWM-10DA(M-2)

SWM-10DB(M-2)

SWM-10DC(M-2)

SWM-10DD(M-2)

SWM-10DE(M-2)

SWM-10DF(M-2)

SWM-10DG(M-2)

SWM-10DH(M-2)

SWM-10DI(M-2)

SWM-10DJ(M-2)

SWM-10DK(M-2)

SWM-10DL(M-2)

SWM-10DM(M-2)

SWM-10DN(M-2)

SWM-10DO(M-2)

SWM-10DP(M-2)

SWM-10DQ(M-2)

SWM-10DR(M-2)

SWM-10DS(M-2)

SWM-10DT(M-2)

SWM-10DU(M-2)

SWM-10DV(M-2)

SWM-10DW(M-2)

SWM-10DX(M-2)

SWM-10DY(M-2)

SWM-10DZ(M-2)

SWM-10EA(M-2)

SWM-10EB(M-2)

SWM-10EC(M-2)

SWM-10ED(M-2)

SWM-10EE(M-2)

SWM-10EF(M-2)

SWM-10EG(M-2)

SWM-10EH(M-2)

SWM-10EI(M-2)

SWM-10EJ(M-2)

SWM-10EK(M-2)

SWM-10EL(M-2)

SWM-10EM(M-2)

SWM-10EN(M-2)

SWM-10EO(M-2)

SWM-10EP(M-2)

SWM-10EQ(M-2)

SWM-10ER(M-2)

SWM-10ES(M-2)

SWM-10ET(M-2)

SWM-10EU(M-2)

SWM-10EV(M-2)

SWM-10EW(M-2)

SWM-10EX(M-2)

SWM-10EY(M-2)

SWM-10EZ(M-2)

SWM-10FA(M-2)

SWM-10FB(M-2)

SWM-10FC(M-2)

SWM-10FD(M-2)

SWM-10FE(M-2)

SWM-10FF(M-2)

SWM-10FG(M-2)

SWM-10FH(M-2)

SWM-10FI(M-2)

SWM-10FJ(M-2)

SWM-10FK(M-2)

SWM-10FL(M-2)

SWM-10FM(M-2)

SWM-10FN(M-2)

SWM-10FO(M-2)

SWM-10FP(M-2)

SWM-10FQ(M-2)

SWM-10FR(M-2)

SWM-10FS(M-2)

SWM-10FT(M-2)

SWM-10FU(M-2)

SWM-10FV(M-2)

SWM-10FW(M-2)

SWM-10FX(M-2)

SWM-10FY(M-2)

SWM-10FZ(M-2)

SWM-10GA(M-2)

SWM-10GB(M-2)

SWM-10GC(M-2)

SWM-10GD(M-2)

SWM-10GE(M-2)

SWM-10GF(M-2)

SWM-10GG(M-2)

SWM-10GH(M-2)

SWM-10GI(M-2)

SWM-10GJ(M-2)

SWM-10GK(M-2)

SWM-10GL(M-2)

SWM-10GM(M-2)

SWM-10GN(M-2)

SWM-10GO(M-2)

SWM-10GP(M-2)

SWM-10GQ(M-2)

SWM-10GR(M-2)

SWM-10GS(M-2)

SWM-10GT(M-2)

SWM-10GU(M-2)

SWM-10GV(M-2)

SWM-10GW(M-2)

SWM-10GX(M-2)

SWM-10GY(M-2)

SWM-10GZ(M-2)

SWM-10HA(M-2)

SWM-10HB(M-2)

SWM-10HC(M-2)

SWM-10HD(M-2)

SWM-10HE(M-2)

SWM-10HF(M-2)

SWM-10HG(M-2)

SWM-10HH(M-2)

SWM-10HI(M-2)

SWM-10HJ(M-2)

SWM-10HK(M-2)

SWM-10HL(M-2)

SWM-10HM(M-2)

SWM-10HN(M-2)

SWM-10HO(M-2)

SWM-10HP(M-2)

SWM-10HQ(M-2)

SWM-10HR(M-2)

SWM-10HS(M-2)

SWM-10HT(M-2)

SWM-10HU(M-2)

SWM-10HV(M-2)

SWM-10HW(M-2)

SWM-10HX(M-2)

SWM-10HY(M-2)

SWM-10HZ(M-2)

SWM-10IA(M-2)

SWM-10IB(M-2)

SWM-10IC(M-2)

SWM-10ID(M-2)

SWM-10IE(M-2)

SWM-10IF(M-2)

SWM-10IG(M-2)

SWM-10IH(M-2)

SWM-10II(M-2)

SWM-10IJ(M-2)

SWM-10IK(M-2)

SWM-10IL(M-2)

SWM-10IM(M-2)

SWM-10IN(M-2)

SWM-10IO(M-2)

SWM-10IP(M-2)

SWM-10IQ(M-2)

SWM-10IR(M-2)

SWM-10IS(M-2)

SWM-10IT(M-2)

SWM-10IU(M-2)

SWM-10IV(M-2)

SWM-10IW(M-2)

SWM-10IX(M-2)

SWM-10IY(M-2)

SWM-10IZ(M-2)

SWM-10JA(M-2)

SWM-10JB(M-2)

SWM-10JC(M-2)

SWM-10JD(M-2)

SWM-10JE(M-2)

SWM-10JF(M-2)

SWM-10JG(M-2)

SWM-10JH(M-2)

SWM-10JI(M-2)

SWM-10JJ(M-2)

SWM-10JK(M-2)

SWM-10JL(M-2)

SWM-10JM(M-2)

SWM-10JN(M-2)

SWM-10JO(M-2)

SWM-10JP(M-2)

SWM-10JQ(M-2)

SWM-10JR(M-2)

SWM-10JS(M-2)

SWM-10JT(M-2)

SWM-10JU(M-2)

SWM-10JV(M-2)

SWM-10JW(M-2)

SWM-10JX(M-2)

SWM-10JY(M-2)

SWM-10JZ(M-2)

SWM-10KA(M-2)

SWM-10KB(M-2)

SWM-10KC(M-2)

SWM-10KD(M-2)

SWM-10KE(M-2)

SWM-10KF(M-2)

SWM-10KG(M-2)

SWM-10KH(M-2)

SWM-10KI(M-2)

SWM-10KJ(M-2)

SWM-10KK(M-2)

SWM-10KL(M-2)

SWM-10KM(M-2)

SWM-10KN(M-2)

SWM-10KO(M-2)

SWM-10KP(M-2)

SWM-10KQ(M-2)

SWM-10KR(M-2)

SWM-10KS(M-2)

SWM-10KT(M-2)

SWM-10KU(M-2)

SWM-10KV(M-2)

SWM-10KW(M-2)

SWM-10KX(M-2)

SWM-10KY(M-2)

SWM-10KZ(M-2)

SWM-10LA(M-2)

SWM-10LB(M-2)

SWM-10LC(M-2)

SWM-10LD(M-2)

SWM-10LE(M-2)

SWM-10LF(M-2)

SWM-10LG(M-2)

SWM-10LH(M-2)

SWM-10LI(M-2)

SWM-10LJ(M-2)

SWM-10LK(M-2)

SWM-10LL(M-2)

SWM-10LM(M-2)

SWM-10LN(M-2)

SWM-10LO(M-2)

SWM-10LP(M-2)

SWM-10LQ(M-2)

SWM-10LR(M-2)

SWM-10LS(M-2)

SWM-10LT(M-2)

SWM-10LU(M-2)

SWM-10LV(M-2)

SWM-10LW(M-2)

SWM-10LX(M-2)

SWM-10LY(M-2)

SWM-10LZ(M-2)

SWM-10MA(M-2)

SWM-10MB(M-2)

SWM-10MC(M-2)

SWM-10MD(M-2)

SWM-10ME(M-2)

SWM-10MF(M-2)

SWM-10MG(M-2)

SWM-10MH(M-2)

SWM-10MI(M-2)

SWM-10MJ(M-2)

SWM-10MK(M-2)

SWM-10ML(M-2)

SWM-10MM(M-2)

SWM-10MN(M-2)

SWM-10MO(M-2)

SWM-10MP(M-2)

SWM-10MQ(M-2)

SWM-10MR(M-2)

SWM-10MS(M-2)

SWM-10MT(M-2)

SWM-10MU(M-2)

SWM-10MV(M-2)

SWM-10MW(M-2)

SWM-10MX(M-2)

SWM-10MY(M-2)

SWM-10MZ(M-2)

SWM-10NA(M-2)

SWM-10NB(M-2)

SWM-10NC(M-2)

SWM-10ND(M-2)

SWM-10NE(M-2)

SWM-10NF(M-2)

SWM-10NG(M-2)

SWM-10NH(M-2)

SWM-10NI(M-2)

SWM-10NJ(M-2)

SWM-10NK(M-2)

SWM-10NL(M-2)

SWM-10NM(M-2)

SWM-10NN(M-2)

SWM-10NO(M-2)

SWM-10NP(M-2)

SWM-10NQ(M-2)

SWM-10NR(M-2)

SWM-10NS(M-2)

SWM-10NT(M-2)

SWM-10NU(M-2)

SWM-10NV(M-2)

SWM-10NW(M-2)

SWM-10NX(M-2)

SWM-10NY(M-2)

SWM-10NZ(M-2)

SWM-10OA(M-2)

SWM-10OB(M-2)

SWM-10OC(M-2)

SWM-10OD(M-2)

SWM-10OE(M-2)

SWM-10OF(M-2)

SWM-10OG(M-2)

SWM-10OH(M-2)

SWM-10OI(M-2)

SWM-10OJ(M-2)

SWM-10OK(M-2)

SWM-10OL(M-2)

SWM-10OM(M-2)

SWM-10ON(M-2)

SWM-10OO(M-2)

SWM-10OP(M-2)

SWM-10OQ(M-2)

SWM-10OR(M-2)

SWM-10OS(M-2)

SWM-10OT(M-2)

SWM-10OU(M-2)

SWM-10OV(M-2)

SWM-10OW(M-2)

SWM-10OX(M-2)

SWM-10OY(M-2)

SWM-10OZ(M-2)

SWM-10PA(M-2)

SWM-10PB(M-2)

SWM-10PC(M-2)

SWM-10PD(M-2)

SWM-10PE(M-2)

SWM-10PF(M-2)

SWM-10PG(M-2)

SWM-10PH(M-2)

SWM-10PI(M-2)

SWM-10PJ(M-2)

SWM-10PK(M-2)

SWM-10PL(M-2)

SWM-10PM(M-2)

SWM-10PN(M-2)

SWM-10PO(M-2)

SWM-10PP(M-2)

SWM-10PQ(M-2)

SWM-10PR(M-2)

SWM-10PS(M-2)

SWM-10PT(M-2)

SWM-10PU(M-2)

SWM-10PV(M-2)

SWM-10PW(M-2)

SWM-10PX(M-2)

SWM-10PY(M-2)

SWM-10PZ(M-2)

SWM-10QA(M-2)

SWM-10QB(M-2)

SWM-10QC(M-2)

SWM-10QD(M-2)

SWM-10QE(M-2)

SWM-10QF(M-2)

SWM-10QG(M-2)

SWM-10QH(M-2)

SWM-10QI(M-2)

SWM-10QJ(M-2)

SWM-10QK(M-2)

SWM-10QL(M-2)

SWM-10QM(M-2)

SWM-10QN(M-2)

SWM-10QO(M-2)

SWM-10QP(M-2)

SWM-10QQ(M-2)

SWM-10QR(M-2)

SWM-10QS(M-2)

SWM-10QT(M-2)

SWM-10QU(M-2)

SWM-10QV(M-2)

SWM-10QW(M-2)

SWM-10QX(M-2)

SWM-10QY(M-2)

SWM-10QZ(M-2)

SWM-10RA(M-2)

SWM-10RB(M-2)

SWM-10RC(M-2)

SWM-10RD(M-2)

SWM-10RE(M-2)

SWM-10RF(M-2)

SWM-10RG(M-2)

SWM-10RH(M-2)

SWM-10RI(M-2)

SWM-10RJ(M-2)

SWM-10RK(M-2)

SWM-10RL(M-2)

SWM-10RM(M-2)

SWM-10RN(M-2)

SWM-10RO(M-2)

SWM-10RP(M-2)

SWM-10RQ(M-2)

SWM-10RR(M-2)

SWM-10RS(M-2)

SWM-10RT(M-2)

SWM-10RU(M-2)

SWM-10RV(M-2)

SWM-10RW(M-2)

SWM-10RX(M-2)

SWM-10RY(M-2)

SWM-10RZ(M-2)

SWM-10SA(M-2)

SWM-10SB(M-2)

SWM-10SC(M-2)

SWM-10SD(M-2)

SWM-10SE(M-2)

SWM-10SF(M-2)

SWM-10SG(M-2)

SWM-10SH(M-2)

SWM-10SI(M-2)

SWM-10SJ(M-2)

SWM-10SK(M-2)

SWM-10SL(M-2)

SWM-10SM(M-2)

SWM-10SN(M-2)

SWM-10SO(M-2)

SWM-10SP(M-2)

SWM-10SQ(M-2)

SWM-10SR(M-2)

SWM-10SS(M-2)

SWM-10ST(M-2)

SWM-10SU(M-2)

SWM-10SV(M-2)

SWM-10SW(M-2)

SWM-10SX(M-2)

SWM-10SY(M-2)

SWM-10SZ(M-2)

SWM-10TA(M-2)

SWM-10TB(M-2)

SWM-10TC(M-2)

SWM-10TD(M-2)

SWM-10TE(M-2)

SWM-10TF(M-2)

SWM-10TG(M-2)

SWM-10TH(M-2)

SWM-10TI(M-2)

SWM-10TJ(M-2)

SWM-10TK(M-2)

SWM-10TL(M-2)

SWM-10TM(M-2)

SWM-10TN(M-2)

SWM-10TO(M-2)

SWM-10TP(M-2)

SWM-10TQ(M-2)

SWM-10TR(M-2)

SWM-10TS(M-2)

SWM-10TT(M-2)

SWM-10TU(M-2)

SWM-10TV(M-2)

SWM-10TW(M-2)

SWM-10TX(M-2)

SWM-10TY(M-2)

SWM-10TZ(M-2)

SWM-10UA(M-2)

SWM-10UB(M-2)

SWM-10UC(M-2)

SWM-10UD(M-2)

SWM-10UE(M-2)

SWM-10UF(M-2)

SWM-10UG(M-2)

SWM-10UH(M-2)

SWM-10UI(M-2)

SWM-10UJ(M-2)

SWM-10UK(M-2)

SWM-10UL(M-2)

SWM-10UM(M-2)

SWM-10UN(M-2)

SWM-10UO(M-2)

SWM-10UP(M-2)

SWM-10UQ(M-2)

SWM-10UR(M-2)

SWM-10US(M-2)

SWM-10UT(M-2)

SWM-10UU(M-2)

SWM-10UV(M-2)

SWM-10UW(M-2)

SWM-10UX(M-2)

SWM-10UY(M-2)

SWM-10UZ(M-2)

SWM-10VA(M-2)

SWM-10VB(M-2)

SWM-10VC(M-2)

SWM-10VD(M-2)

SWM-10VE(M-2)

SWM-10VF(M-2)

SWM-10VG(M-2)

SWM-10VH(M-2)

SWM-10VI(M-2)

SWM-10VJ(M-2)

SWM-10VK(M-2)

SWM-10VL(M-2)

SWM-10VM(M-2)

SWM-10VN(M-2)

SWM-10VO(M-2)

SWM-10VP(M-2)

SWM-10VQ(M-2)

SWM-10VR(M-2)

SWM-10VS(M-2)

SWM-10VT(M-2)

SWM-10VU(M-2)

SWM-10VV(M-2)

SWM-10VW(M-2)

SWM-10VX(M-2)

SWM-10VY(M-2)

SWM-10VZ(M-2)

SWM-10WA(M-2)

SWM-10WB(M-2)

SWM-10WC(M-2)

SWM-10WD(M-2)

SWM-10WE(M-2)

SWM-10WF(M-2)

SWM-10WG(M-2)

SWM-10WH(M-2)

SWM-10WI(M-2)

SWM-10WJ(M-2)

SWM-10WK(M-2)

SWM-10WL(M-2)

SWM-10WM(M-2)

SWM-10WN(M-2)

SWM-10WO(M-2)

SWM-10WP(M-2)

SWM-10WQ(M-2)

SWM-10WR(M-2)

SWM-10WS(M-2)

SWM-10WT(M-2)

SWM-10WU(M-2)

SWM-10WV(M-2)

SWM-10WW(M-2)

SWM-10WX(M-2)

SWM-10WY(M-2)

SWM-10WZ(M-2)

SWM-10XA(M-2)

SWM-10XB(M-2)

SWM-10XC(M-2)

SWM-10XD(M-2)

SWM-10XE(M-2)

SWM-10XF(M-2)

SWM-10XG(M-2)

SWM-10XH(M-2)

SWM-10XI(M-2)

SWM-10XJ(M-2)

SWM-10XK(M-2)

SWM-10XL(M-2)

SWM-10XM(M-2)

SWM-10XN(M-2)

SWM-10XO(M-2)

SWM-10XP(M-2)

SWM-10XQ(M-2)

SWM-10XR(M-2)

SWM-10XS(M-2)

SWM-10XT(M-2)

SWM-10XU(M-2)

SWM-10XV(M-2)

SWM-10XW(M-2)

SWM-10XX(M-2)

SWM-10XY(M-2)

SWM-10XZ(M-2)

SWM-10YA(M-2)

SWM-10YB(M-2)

SWM-10YC(M-2)

SWM-10YD(M-2)

SWM-10YE(M-2)

SWM-10YF(M-2)

SWM-10YG(M-2)

SWM-10YH(M-2)

SWM-10YI(M-2)

SWM-10YJ(M-2)

SWM-10YK(M-2)

SWM-10YL(M-2)

SWM-10YM(M-2)

SWM-10YN(M-2)

SWM-10YO(M-2)

SWM-10YP(M-2)

SWM-10YQ(M-2)

SWM-10YR(M-2)

SWM-10YS(M-2)

SWM-10YT(M-2)

SWM-10YU(M-2)

SWM-10YV(M-2)

SWM-10YW(M-2)

SWM-10YX(M-2)

SWM-10YY(M-2)

SWM-10YZ(M-2)

SWM-10ZA(M-2)

SWM-10ZB(M-2)

SWM-10ZC(M-2)

SWM-10ZD(M-2)

SWM-10ZE(M-2)

SWM-10ZF(M-2)

SWM-10ZG(M-2)

SWM-10ZH(M-2)

SWM-10ZI(M-2)

SWM-10ZJ(M-2)

SWM-10ZK(M-2)

SWM-10ZL(M-2)

SWM-10ZM(M-2)

SWM-10ZN(M-2)

SWM-10ZO(M-2)

SWM-10ZP(M-2)

SWM-10ZQ(M-2)

SWM-10ZR(M-2)

SWM-10ZS(M-2)

SWM-10ZT(M-2)

SWM-10ZU(M-2)

SWM-10ZV(M-2)

SWM-10ZW(M-2)

SWM-10ZX(M-2)

SWM-10ZY(M-2)

SWM-10ZZ(M-2)

SWM-10AAA(M-2)

SWM-10AAB(M-2)

SWM-10AAC(M-2)

SWM-10AAD(M-2)

SWM-10AAE(M-2)

SWM-10AAF(M-2)

SWM-10AAG(M-2)

SWM-10AAH(M-2)

SWM-10AAI(M-2)

SWM-10AAJ(M-2)

SWM-10AAK(M-2)

SWM-10AAL(M-2)

SWM-10AAM(M-2)

SWM-10AAN(M-2)

SWM-10AAO(M-2)

SWM-10AAP(M-2)

SWM-10AAQ(M-2)

SWM-10AAR(M-2)

SWM-10AAS(M-2)

SWM-10AAT(M-2)

SWM-10AAU(M-2)

SWM-10AAV(M-2)

SWM-10AAW(M-2)

SWM-10AAX(M-2)

SWM-10AAY(M-2)

SWM-10AAZ(M-2)

SWM-10ABA(M-2)

SWM-10ABB(M-2)

SWM-10ABC(M-2)

SWM-10ABD(M-2)

SWM-10ABE(M-2)

SWM-10ABF(M-2)

SWM-10ABG(M-2)

SWM-10ABH(M-2)

SWM-10ABI(M-2)

SWM-10ABJ(M-2)

SWM-10ABK(M-2)

SWM-10ABL(M-2)

SWM-10ABM(M-2)

SWM-10ABN(M-2)

SWM-10ABO(M-2)

SWM-10ABP(M-2)

SWM-10ABQ(M-2)

SWM-10ABR(M-2)

SWM-10ABS(M-2)

SWM-10ABT(M-2)

SWM-10ABU(M-2)

SWM-10ABV(M-2)

SWM-10ABW(M-2)

SWM-10ABX(M-2)

SWM-10ABY(M-2)

SWM-10ABZ(M-2)

SWM-10ACA(M-2)

SWM-10ACB(M-2)

SWM-10ACC(M-2)

SWM-10ACD(M-2)

SWM-10ACE(M-2)

SWM-10ACF(M-2)

SWM-10ACG(M-2)

SWM-10ACH(M-2)

SWM-10ACI(M-2)

SWM-10ACJ(M-2)

SWM-10ACK(M-2)

SWM-10ACL(M-2)

SWM-10ACM(M-2)

SWM-10ACN(M-2)

SWM-10ACO(M-2)

SWM-10ACP(M-2)

SWM-10ACQ(M-2)

SWM-10ACR(M-2)

SWM-10ACS(M-2)

SWM-10ACT(M-2)

SWM-10ACU(M-2)

SWM-10ACV(M-2)

SWM-10ACW(M-2)

SWM-10ACX(M-2)

SWM-10ACY(M-2)

SWM-10ACZ(M-2)

SWM-10ADA(M-2)

SWM-10ADB(M-2)

SWM-10ADC(M-2)

SWM-10ADD(M-2)

SWM-10ADE(M-2)

SWM-10ADF(M-2)

SWM-10ADG(M-2)

SWM-10ADH(M-2)

SWM-10ADI(M-2)

SWM-10ADJ(M-2)

SWM-10ADK(M-2)

SWM-10ADL(M-2)

SWM-10ADM(M-2)

SWM-10ADN(M-2)

SWM-10ADO(M-2)

SWM-10ADP(M-2)

SWM-10ADQ(M-2)

SWM-10ADR(M-2)

SWM-10ADS(M-2)

SWM-10ADT(M-2)

SWM-10ADU(M-2)

SWM-10ADV(M-2)

SWM-10ADW(M-2)

SWM-10ADX(M-2)

SWM-10ADY(M-2)

SWM-10ADZ(M-2)

SWM-10AEA(M-2)

SWM-10AEB(M-2)

SWM-10AEC(M-2)

SWM-10AED(M-2)

SWM-10AEE(M-2)

SWM-10AEF(M-2)

SWM-10AEG(M-2)

SWM-10AEH(M-2)

SWM-10AEI(M-2)

SWM-10AEJ(M-2)

SWM-10AEK(M-2)

SWM-10AEL(M-2)

SWM-10AEM(M-2)

SWM-10AEN(M-2)

SWM-10AEO(M-2)

SWM-10AEP(M-2)

SWM-10AEQ(M-2)

SWM-10AER(M-2)

SWM-10AES(M-2)

SWM-10AET(M-2)

SWM-10AEU(M-2)

SWM-10AEV(M-2)

SWM-10AEW(M-2)

SWM-10AEX(M-2)

SWM-10AEY(M-2)

SWM-10AEZ(M-2)

SWM-10AFA(M-2)

SWM-10AFB(M-2)

SWM-10AFC(M-2)

SWM-10AFD(M-2)

SWM-10AFE(M-2)

SWM-10AFF(M-2)

SWM-10AFG(M-2)

SWM-10AFH(M-2)

SWM-10AFI(M-2)

SWM-10AFJ(M-2)

SWM-10AFK(M-2)

SWM-10AFL(M-2)

SWM-10AFM(M-2)

SWM-10AFN(M-2)

SWM-10AFO(M-2)

SWM-10AFP(M-2)

SWM-10AFQ(M-2)

SWM-10AFR(M-2)

SWM-10AFS(M-2)

SWM-10AFT(M-2)

SWM-10AFU(M-2)

SWM-10AFV(M-2)

SWM-10AFW(M-2)

SWM-10AFX(M-2)

SWM-10AFY(M-2)

SWM-10AFZ(M-2)

SWM-10AGA(M-2)

SWM-10AGB(M-2)

SWM-10AGC(M-2)

SWM-10AGD(M-2)

SWM-10AGE(M-2)

SWM-10AGF(M-2)

SWM-10AGG(M-2)

SWM-10AGH(M-2)

SWM-10AGI(M-2)

SWM-10AGJ(M-2)

SWM-10AGK(M-2)

SWM-10AGL(M-2)

SWM-10AGM(M-2)

SWM-10AGN(M-2)

SWM-10AGO(M-2)

SWM-10AGP(M-2)

SWM-10AGQ(M-2)

SWM-10AGR(M-2)

SWM-10AGS(M-2)

SWM-10AGT(M-2)

SWM-10AGU(M-2)

SWM-10AGV(M-2)

SWM-10AGW(M-2)

SWM-10AGX(M-2)

SWM-10AGY(M-2)

SWM-10AGZ(M-2)

SWM-10AHA(M-2)

SWM-10AHB(M-2)

SWM-10AHC(M-2)

SWM-10AHD(M-2)

SWM-10AHE(M-2)

SWM-10AHF(M-2)

SWM-10AHG(M-2)

SWM-10AHH(M-2)

SWM-10AHI(M-2)

SWM-10AHJ(M-2)

SWM-10AHK(M-2)

SWM-10AHL(M-2)

SWM-10AHM(M-2)

SWM-10AHN(M-2)

SWM-10AHO(M-2)

SWM-10AHP(M-2)

SWM-10AHQ(M-2)

SWM-10AHR(M-2)

SWM-10AHS(M-2)

SWM-10AHT(M-2)

SWM-10AHU(M-2)

SWM-10AHV(M-2)

SWM-10AHW(M-2)

SWM-10AHX(M-2)

SWM-10AHY(M-2)

SWM-10AHZ(M-2)

SWM-10AIA(M-2)

SWM-10AIB(M-2)

SWM-10AIC(M-2)

SWM-10AID(M-2)

SWM-10AIE(M-2)

SWM-10AIF(M-2)

SWM-10AIG(M-2)

SWM-10AIH(M-2)

SWM-10AII(M-2)

SWM-10AIJ(M-2)

SWM-10AIK(M-2)

SWM-10AIL(M-2)

SWM-10AIM(M-2)

SWM-10AIN(M-2)

SWM-10AIO(M-2)

SWM-10AIP(M-2)

SWM-10AIQ(M-2)

SWM-10AIR(M-2)

SWM-10AIS(M-2)

SWM-10AIT(M-2)

SWM-10AIU(M-2)

SWM-10AIV(M-2)

SWM-10AIW(M-2)

SWM-10AIX(M-2)

SWM-10AIY(M-2)

SWM-10AIZ(M-2)

SWM-10AJA(M-2)

SWM-10AJB(M-2)

SWM-10AJC(M-2)

SWM-10AJD(M-2)

SWM-10AJE(M-2)

SWM-10AJF(M-2)

SWM-10AJG(M-2)

SWM-10AJH(M-2)

SWM-10AJI(M-2)

SWM-10AJJ(M-2)

SWM-10AJK(M-2)

SWM-10AJL(M-2)

SWM-10AJM(M-2)

SWM-10AJN(M-2)

SWM-10AJO(M-2)

SWM-10AJP(M-2)

SWM-10AJQ(M-2)

SWM-10AJR(M-2)

SWM-10AJS(M-2)

SWM-10AJT(M-2)

SWM-10AJU(M-2)

SWM-10AJV(M-2)

SWM-10AJW(M-2)

SWM-10AJX(M-2)

SWM-10AJY(M-2)

SWM-10AJZ(M-2)

SWM-10AKA(M-2)

SWM-10AKB(M-2)

SWM-10AKC(M-2)

SWM-10AKD(M-2)

SWM-10AKE(M-2)

SWM-10AKF(M-2)

SWM-10AKG(M-2)

SWM-10AKH(M-2)

SWM-10AKI(M-2)

SWM-10AKJ(M-2)

SWM-10AKK(M-2)

SWM-10AKL(M-2)

SWM-10AKM(M-2)

SWM-10AKN(M-2)

SWM-10AKO(M-2)

SWM-10AKP(M-2)

SWM-10AKQ(M-2)

SWM-10AKR(M-2)

SWM-10AKS(M-2)

SWM-10AKT(M-2)

SWM-10AKU(M-2)

SWM-10AKV(M-2)

SWM-10AKW(M-2)

SWM-10AKX(M-2)

SWM-10AKY(M-2)

SWM-10AKZ(M-2)

SWM-10ALA(M-2)

SWM-10ALB(M-2)

SWM-10ALC(M-2)

SWM-10ALD(M-2)

SWM-10ALE(M-2)

SWM-10ALF(M-2)

SWM-10ALG(M-2)

SWM-10ALH(M-2)

SWM-10ALI(M-2)

SWM-10ALJ(M-2)

SWM-10ALK(M-2)

SWM-10ALL(M-2)

SWM-10ALM(M-2)

SWM-10ALN(M-2)

SWM-10ALO(M-2)

SWM-10ALP(M-2)

SWM-10ALQ(M-2)

SWM-10ALR(M-2)

SWM-10ALS(M-2)

SWM-10ALT(M-2)

SWM-10ALU(M-2)

SWM-10ALV(M-2)

SWM-10ALW(M-2)

SWM-10ALX(M-2)

SWM-10ALY(M-2)

SWM-10ALZ(M-2)

SWM-10AMA(M-2)

SWM-10AMB(M-2)

SWM-10AMC(M-2)

SWM-10AMD(M-2)

SWM-10AME(M-2)

SWM-10AMF(M-2)

SWM-10AMG(M-2)

SWM-10AMH(M-2)

SWM-10AMI(M-2)

SWM-10AMJ(M-2)

SWM-10AMK(M-2)

SWM-10AML(M-2)

SWM-10AMM(M-2)

SWM-10AMN(M-2)

SWM-10AMO(M-2)

SWM-10AMP(M-2)

SWM-10AMQ(M-2)

SWM-10AMR(M-2)

SWM-10AMS(M-2)

SWM-10AMT(M-2)

SWM-10AMU(M-2)

SWM-10AMV(M-2)

SWM-10AMW(M-2)

SWM-10AMX(M-2)

SWM-10AMY(M-2)

SWM-10AMZ(M-2)

SWM-10ANA(M-2)

SWM-10ANB(M-2)

SWM-10ANC(M-2)

SWM-10AND(M-2)

SWM-10ANE(M-2)

SWM-10ANF(M-2)

SWM-10ANG(M-2)

SWM-10ANH(M-2)

SWM-10ANI(M-2)

SWM-10ANJ(M-2)

SWM-10ANK(M-2)

SWM-10ANL(M-2)

SWM-10ANM(M-2)

SWM-10ANN(M-2)

SWM-10ANO(M-2)

SWM-10ANP(M-2)

SWM-10ANQ(M-2)

SWM-10ANR(M-2)

SWM-10ANS(M-2)

SWM-10ANT(M-2)

SWM-10ANU(M-2)

SWM-10ANV(M-2)

SWM-10ANW(M-2)

SWM-10ANX(M-2)

SWM-10ANY(M-2)

SWM-10ANZ(M-2)

SWM-10AOA(M-2)

SWM-10AOB(M-2)

SWM-10AOC(M-2)

SWM-10AOD(M-2)

SWM-10AOE(M-2)

SWM-10AOF(M-2)

SWM-10AOG(M-2)

SWM-10AOH(M-2)

SWM-10AOI(M-2)

SWM-10AOJ(M-2)

SWM-10AOK(M-2)

SWM-10AOL(M-2)

SWM-10AOM(M-2)

SWM-10AON(M-2)

SWM-10AOO(M-2)

SWM-10AOP(M-2)

SWM-10AOQ(M-2)

SWM-10AOR(M-2)

SWM-10AOS(M-2)

SWM-10AOT(M-2)

SWM-10AOU(M-2)

SWM-10AOV(M-2)

SWM-10AOW(M-2)

SWM-10AOX(M-2)

SWM-10AOY(M-2)

SWM-10AOZ(M-2)

SWM-10APA(M-2)

SWM-10APB(M-2)

SWM-10APC(M-2)

SWM-10APD(M-2)

SWM-10APE(M-2)

SWM-10APF(M-2)

SWM-10APG(M-2)

SWM-10APH(M-2)

SWM-10API(M-2)

SWM-10APJ(M-2)

SWM-10APK(M-2)

SWM-10APL(M-2)

SWM-10APM(M-2)

SWM-10APN(M-2)

SWM-10APO(M-2)

SWM-10APP(M-2)

SWM-10APQ(M-2)

SWM-10APR(M-2)

SWM-10APS(M-2)

SWM-10APT(M-2)

SWM-10APU(M-2)

SWM-10APV(M-2)

SWM-10APW(M-2)

SWM-10APX(M-2)

SWM-10APY(M-2)

SWM-10APZ(M-2)

SWM-10AQA(M-2)

SWM-10AQB(M-2)

SWM-10AQC(M-2)

SWM-10AQD(M-2)

SWM-10AQE(M-2)

SWM-10AQF(M-2)

SWM-10AQG(M-2)

SWM-10AQH(M-2)

SWM-10AQI(M-2)

SWM-10AQJ(M-2)

SWM-10AQK(M-2)

SWM-10AQL(M-2)

SWM-10AQM(M-2)

SWM-10AQN(M-2)

SWM-10AQO(M-2)

SWM-10AQP(M-2)

SWM-10AQQ(M-2)

SWM-10AQR(M-2)

SWM-10AQS(M-2)

PARCEL 408
HOWARD COUNTY, MD.
DEPT. OF PUBLIC WORKS
ZONED POR
00935/00048
USE: INDUSTRIAL

PARCEL 170
HOWARD COUNTY, MD.
DEPT. OF PUBLIC WORKS
ZONED POR
00942/00114
USE: VACANT FOREST

PROPOSED FOREST CONSERVATION
EASEMENT #1 AREA = 1.47 AC.+/-

EXISTING NON-TIDAL WETLANDS
(FOR EXACT LOCATION SEE PLAT F-05-103)

PRIVATE/PERMANENT
WALL EASEMENT
(PLAT 16357)

FOREST CONSERVATION
(RETENTION/REFORESTATION)
EASEMENT AREA = 2.83 AC.+/-
DEED 9372/162
PLAT 17574

Existing Building No. 2 (2 Story)
70,734 Sq. Ft. (Gross)
FF EL: = 274.0

EXIST. SWM POND

2.759 AC. PARCEL A-1
NOT INCLUDED IN APPLICATION

Existing Building No. 1
30,450 Sq. Ft. (Gross)
FF = 285.0

PARCEL 46
UNKNOWN OWNER
ZONED CCT
USE: VACANT FOREST

PARCEL A-1
CHARLESTOWN INVESTMENTS, LLC
ZONED POR
10104/00079

24' PRIVATE INGRESS AND EGRESS EASEMENT

20' PUBLIC WATER AND UTILITY EASEMENT (PLATS 16356-16359)

MATCH LINE 'A-A (SEE SHEET 5)

Interstate (I-95) (South Bound)
(Principal Arterial Highway)
Vehicular Ingress & Egress Restricted

EXISTING SHA R/W

LEGEND

Existing Contour	653 / 650
Property Line	
Proposed Contour	532
Existing Storm Drain	EX. 15"SD
Proposed Storm Drain	Prop SD
Existing Sanitary	EX. 8"SAN
Existing Water	EX. 8" W.
Existing Curb	
Proposed Conc. Curb	
Existing Electric	E E E
Existing Telephone	T T T
Existing Gas	G G G
Existing Spot Elevation	+604
Proposed Spot Elevation	652.2+
Tree Line	
5' Wide Painted Crosswalk	
Pipe Railing	
Limit of Disturbance	
Proposed Impervious Area	
Proposed Permeable Pave	
Conservation Easement Area	
Ex. Slopes 15% - 25%	
Ex. Slopes >25%	

50 0 50 100
SCALE IN FEET

NO.	DESCRIPTION	BY	DATE

Owner/Developer:
Merritt-MR, LLC
2066 Lord Baltimore Drive
Baltimore, Maryland 21244
ph: 410-298-2600
fx: 410-298-9644

STATE OF MARYLAND
DONALD W. MATIS
No. 21131
REGISTERED PROFESSIONAL ENGINEER
1-23-14

MATIS WARFIELD
Consulting Engineers
10540 York Road, Suite M
Hunt Valley, Maryland 21030
PHONE 410.683.7004 FAX 410.683.1798
www.matiswarfield.com

APPROVED: Howard County Department of Planning and Zoning

CHIEF, DEVELOPMENT ENGINEERING DIVISION — DATE 5.12.14
CHIEF, DIVISION OF LAND DEVELOPMENT — DATE 6.18.14
DIRECTOR — DATE 6/18/14

SITE DEVELOPMENT PLAN
The Meadows Corporate Park
Phase 2

6510 - 6518 MEADOW RIDGE ROAD MD RTE. 103
GREEN BUILDING

TAX MAP: 37;
PARCELS: A6-A9
ELECTION DISTRICT : 1
ZONE: POR

GENERAL OFFICE
SCALE : 1" = 60'
DATE : April 23, 2014
SHEET: 6 of 35

SDP-13-070

The purpose for Revision #1 to SDP-13-070 is to revise to add SWM-11A to serve the shared improvement of SDP-13-021 and SDP-13-070.

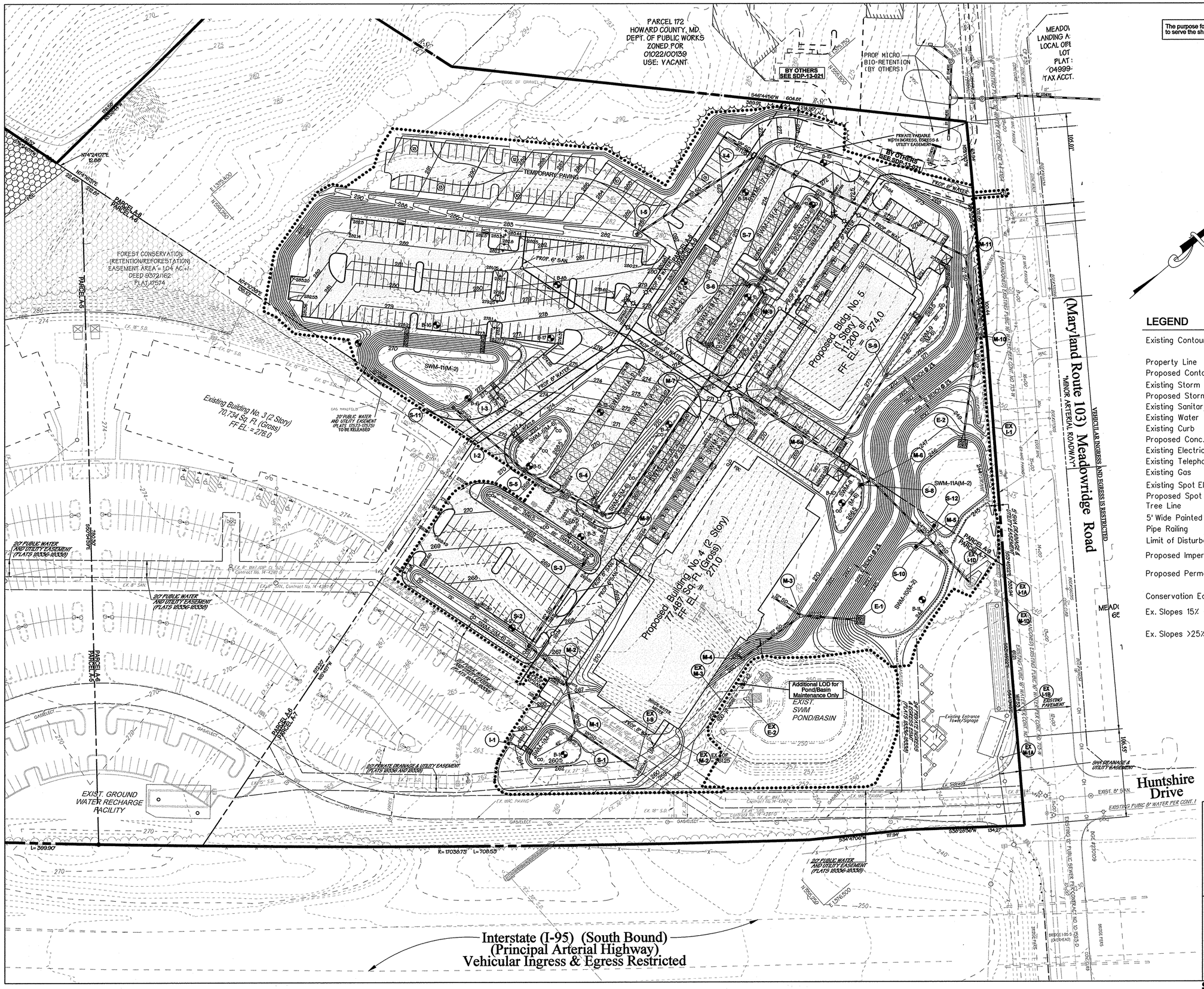

LEGEND

Existing Contour	653 / 650
Property Line	
Proposed Contour	532
Existing Storm Drain	EX. 15" SD
Proposed Storm Drain	Prop SD
Existing Sanitary	EX. 8" SAN
Existing Water	EX. 8" W
Existing Curb	
Proposed Conc. Curb	
Existing Electric	E
Existing Telephone	T
Existing Gas	G
Existing Spot Elevation	+604
Proposed Spot Elevation	652.2+
Tree Line	
5' Wide Painted Crosswalk	
Pipe Railing	
Limit of Disturbance	
Proposed Impervious Area	
Proposed Permeable Pave	
Conservation Easement Area	
Ex. Slopes 15% - 25%	
Ex. Slopes >25%	

50 0 50 100
SCALE IN FEET

NO.	DESCRIPTION	BY	DATE
1	Add temporary parking and submerged gravel wetland SWM-11A.	MWI	1/28/2015

Owner/Developer:
Merritt-MR, LLC
2066 Lord Baltimore Drive
Baltimore, Maryland 21244
ph: 410-298-2600
fx: 410-298-9644

STATE OF MARYLAND
JAMIE L. BENSINGER
No. 29179
PROFESSIONAL ENGINEER
1-28-15

MATIS WARFIELD
Consulting Engineers
10540 York Road, Suite M
Hunt Valley, Maryland 21030
PHONE 410.683.7004 FAX 410.683.1798
www.matiswarfield.com

APPROVED: Howard County Department of Planning and Zoning

CHIEF, DEVELOPMENT ENGINEERING DIVISION — DATE 4-8-15

CHIEF, DIVISION OF LAND DEVELOPMENT — DATE 4-13-15

DIRECTOR — DATE 4/13/15

REVISED SITE DEVELOPMENT PLAN
GRADING PLAN
The Meadows Corporate Park Phase 2
6510 - 6518 MEADOW RIDGE ROAD MD RTE. 103
GREEN BUILDING

TAX MAP: 37;
PARCELS: A5-A9
ELECTION DISTRICT : 1
ZONE: POR

GENERAL OFFICE
SCALE : 1" = 50'
DATE : April 23, 2014
SHEET: 7 of 35

SDP-13-070

The purpose for Revision #1 to SDP-13-070 is to revise to add SWM-11A to serve the shared improvement of SDP-13-021 and SDP-13-070.

NO.	DESCRIPTION	BY	DATE
1	Add temporary parking and submerged gravel wetland SWM-11A.	MWI	1/28/2016

LEGEND

- Existing Contour — 653 / 650
- Property Line
- Proposed Contour — 532
- Existing Storm Drain — EX. 15"SD
- Proposed Storm Drain — Prop SD
- Existing Sanitary — EX. 8"SAN
- Existing Water — EX. 8" W
- Existing Curb
- Proposed Conc. Curb
- Existing Electric — E E E
- Existing Telephone — T T T
- Existing Gas — G G G
- Existing Spot Elevation — +604
- Proposed Spot Elevation — 652.2+
- Tree Line
- 5' Wide Painted Crosswalk
- Pipe Railing
- Limit of Disturbance
- Utility Easements

Owner/Developer:
Merritt-MR, LLC
2066 Lord Baltimore Drive
Baltimore, Maryland 21244
ph: 410-298-2600
fx: 410-298-9844

MATIS WARFIELD
Consulting Engineers
10540 York Road, Suite M
Hunt Valley, Maryland 21030
PHONE 410.683.7004 FAX 410.683.1798
www.matiswarfield.com

50 0 50 100
SCALE IN FEET

APPROVED: Howard County Department of Planning and Zoning

CHIEF, DEVELOPMENT ENGINEERING DIVISION	DATE 4.8.15
CHIEF, DIVISION OF LAND DEVELOPMENT	DATE 4/13/15
DIRECTOR	DATE 4/13/15

REVISED SITE DEVELOPMENT PLAN
UTILITY PLAN
The Meadows Corporate Park Phase 2
6510 - 6518 MEADOW RIDGE ROAD MD RTE. 103
GREEN BUILDING

TAX MAP: 37;
PARCELS: A5-A9
ELECTION DISTRICT : 1
ZONE: POR

GENERAL OFFICE
SCALE : 1" = 50'
DATE : April 23, 2014
SHEET: 8 of 35

SDP-13-070

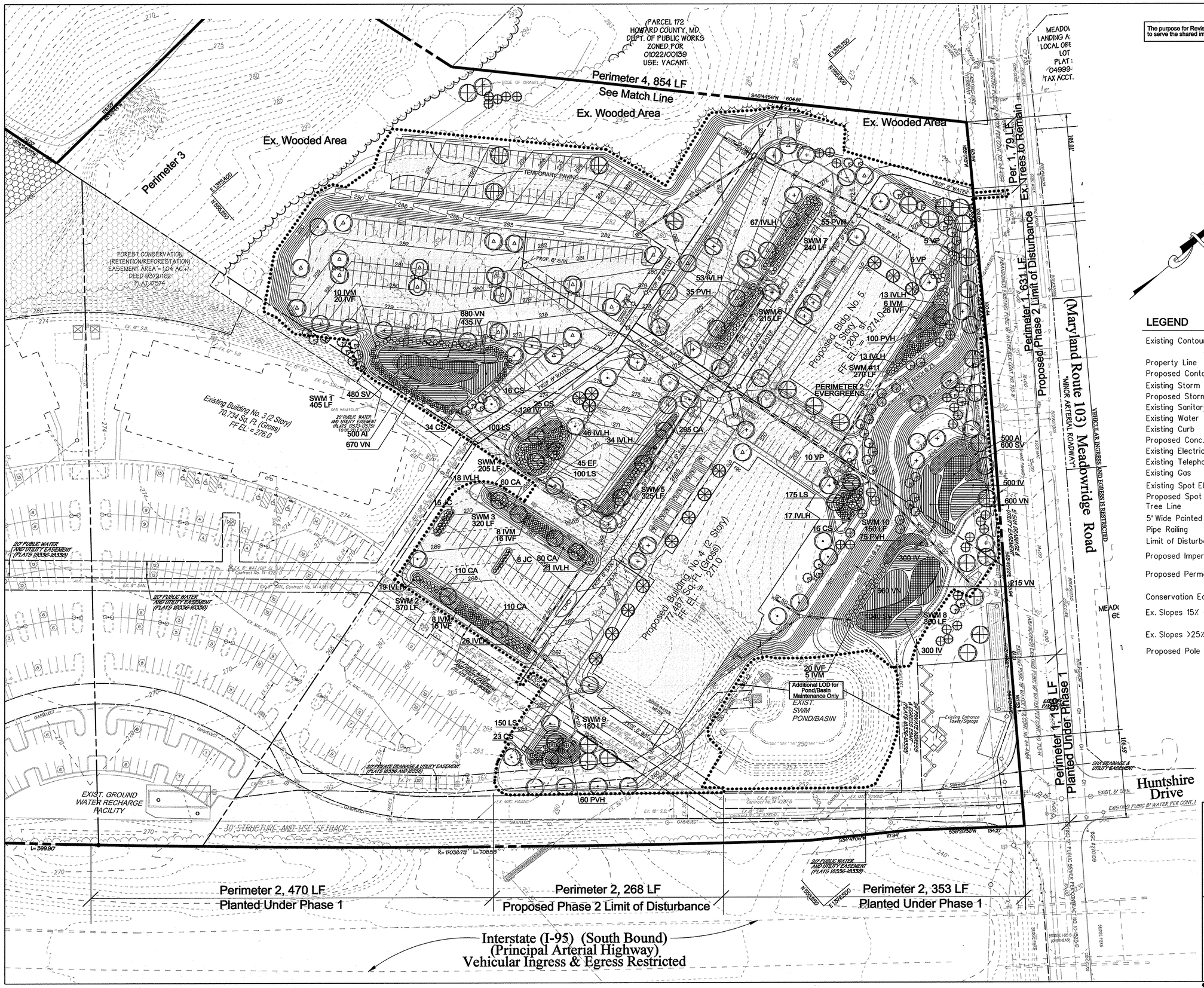

The purpose for Revision #1 to SDP-13-070 is to revise to add SWM-11A to serve the shared improvement of SDP-13-021 and SDP-13-070.

LEGEND

Existing Contour	653 / 650
Property Line	
Proposed Contour	532
Existing Storm Drain	EX. 15" SD
Proposed Storm Drain	Prop SD
Existing Sanitary	EX. 8" SAN
Existing Water	EX. 8" W
Existing Curb	
Proposed Conc. Curb	
Existing Electric	E
Existing Telephone	T
Existing Gas	G
Existing Spot Elevation	+604
Proposed Spot Elevation	652.2+
Tree Line	
5' Wide Painted Crosswalk	
Pipe Railing	
Limit of Disturbance	
Proposed Impervious Area	
Proposed Permeable Pave	
Conservation Easement Area	
Ex. Slopes 15% - 25%	
Ex. Slopes >25%	
Proposed Pole Mounted Lighting	

Landscape Plan Prepared by:
HUMAN & ROHDE, INC.
LANDSCAPE ARCHITECTS
512 VIRGINIA AVENUE
TOWSON, MD 21286
410.825.3885 phone
410.825.3887 fax

50 0 50 100
SCALE IN FEET

NO.	DESCRIPTION	BY	DATE
1	Add temporary parking and submerged gravel wetland SWM-11A.	MWI	1/28/2015

Owner/Developer:
Merritt-MR, LLC
2066 Lord Baltimore Drive
Baltimore, Maryland 21244
ph: 410-298-2600
fx: 410-298-9644

MATIS WARFIELD
Consulting Engineers
10540 York Road, Suite M
Hunt Valley, Maryland 21030
PHONE 410.683.7004 FAX 410.683.1798
www.matiswarfield.com

APPROVED: Howard County Department of Planning and Zoning

CHIEF, DEVELOPMENT ENGINEERING DIVISION — DATE 4-8-15

CHIEF, DIVISION OF LAND DEVELOPMENT — DATE 4-13-15

DIRECTOR — DATE 4/13/15

REVISED SITE DEVELOPMENT PLAN

LANDSCAPE PLAN
The Meadows Corporate Park Phase 2

6510 - 6518 MEADOW RIDGE ROAD MD RTE. 103
GREEN BUILDING

TAX MAP: 37;
PARCELS: A5-A9
ELECTION DISTRICT : 1
ZONE: POR

GENERAL OFFICE
SCALE : 1" = 50'
DATE : April 23, 2014
SHEET: 9 of 35

SDP-13-070

Landscape Notes

A. STANDARDS:

1. ALL PLANT MATERIAL, CONSTRUCTION METHODS AND MATERIAL PLACEMENT SHALL BE IN ACCORDANCE WITH THE LATEST EDITIONS OF "AMERICAN STANDARD FOR NURSERY STOCK," AS PUBLISHED BY THE AMERICAN ASSOCIATION OF NURSERYMEN, INC., THE "LANDSCAPE SPECIFICATION GUIDELINES FOR BALTIMORE-WASHINGTON METROPOLITAN AREAS."

2. ALL TREES SHALL BE DELIVERED TO THE SITE BALLED AND BURLAPPED. ALL SHRUBS SHALL BE BALLED AND BURLAPPED OR IN CONTAINERS. ALL GRASSES & PERENNIALS SHALL BE IN CONTAINERS.

B. MAINTENANCE:

1. AFTER THE PLANTING HAS BEEN APPROVED BY THE LANDSCAPE ARCHITECT AND THE OWNER, THE MAINTENANCE OF WATERING AND WEEDING OF SUCH PLANTS AND PLANTED AREAS SHALL BE PROVIDED BY THE OWNER. SINCE THE PLANTS ARE TO BE GUARANTEED BY THE CONTRACTOR, THE CONTRACTOR SHALL PERIODICALLY CHECK THE MAINTENANCE CONDUCTED BY THE OWNER. IF THE CONTRACTOR IS NOT SATISFIED WITH THE MAINTENANCE OF THE PLANTS, A WRITTEN REPORT, IN TRIPLICATE, STATING APPROPRIATE CHANGES SHALL BE GIVEN IMMEDIATELY TO THE LANDSCAPE ARCHITECT; TWO COPIES WILL BE FORWARDED TO THE OWNER. BEGIN MAINTENANCE IMMEDIATELY AFTER PLANTING.

2. MAINTAIN TREES UNTIL FINAL ACCEPTANCE, BUT IN NO CASE, LESS THAN 60 DAYS AFTER FINAL ACCEPTANCE OF PLANTING. MAINTAIN ALL PLANTS BY PRUNING, CULTIVATING AND WEEDING AS REQUIRED FOR HEALTHY GROWTH. RESTORE PLANTING SAUCERS. TIGHTEN AND REPAIR STAKE AND GUY SUPPORTS AND RESET TREES TO PROPER GRADES OR VERTICAL POSITION AS REQUIRED. RESTORE OR REPLACE DAMAGED WRAPPINGS. SPRAY AS REQUIRED TO KEEP ALL PLANTS FREE OF INSECTS AND DISEASE.

C. WATERING

1. IN THE ABSENCE OF ADEQUATE RAINFALL, WATERING SHALL BE PERFORMED DAILY OR AS OFTEN AS NECESSARY DURING THE FIRST WEEK AND IN SUFFICIENT QUANTITIES TO MAINTAIN MOIST SOIL TO A DEPTH OF 4 INCHES. WATERING SHALL NOT BE DONE DURING THE HEAT OF THE DAY. CONTRACTOR SHALL PROVIDE A SEPARATE LUMP SUM PRICE IN THE OVERALL LANDSCAPE BID FOR WATERING TO ALL NEW PLANTINGS DURING ONE GROWING SEASON.

D. EXCAVATION:

1. DEPTH AND WIDTH OF EXCAVATION FOR PLANTING OF ALL PLANTS SHALL BE TO TWICE THE DEPTH AND WIDTH OF ROOT BALL OR CONTAINER OF PLANT TO BE INSTALLED, EXCEPT AS NOTED ON DETAILS.

E. TOPSOIL, PLANTING MIX, FERTILIZER, MULCH AND SOIL AMENDMENTS:

1. ALL TOPSOIL SHALL BE WELL GRADED LOAM OF GOOD UNIFORM QUALITY AND SHALL BE A NATURAL FRIABLE SOIL FREE OF OBJECTS LARGER THAN ONE INCH IN ANY DIMENSION, AND FREE OF TOXIC SUBSTANCES, WEEDS AND ANY MATERIAL OR SUBSTANCES THAT MAY BE HARMFUL TO PLANT GROWTH. TOPSOIL SHALL CONTAIN AT LEAST ORGANIC MATTER. IF SUFFICIENT TOPSOIL IS NOT AVAILABLE ON THE SITE TO MEET THE DEPTH AS SPECIFIED HEREIN, THE CONTRACTOR SHALL FURNISH ADDITIONAL TOPSOIL. PRIOR TO TOPSOIL DELIVERY, THE CONTRACTOR SHALL OBTAIN THE LANDSCAPE ARCHITECT'S APPROVAL OF THE SOURCE FROM WHICH TOPSOIL IS TO BE FURNISHED.

2. FOR PLANTING MIX, MIX THOROUGHLY 2/3 APPROVED TOPSOIL (SEE "TOPSOIL") AND 1/3 APPROVED ORGANIC MATTER.

3. FERTILIZER TABLETS OR SPIKES TO BE PLACED AT EACH TREE AND SHRUB AT A RATE OF 1 PER 2" OF TRUNK CALIPER OR GALLON OF ROOTBALL. TABLETS OR SPIKES SHALL NOT BE IN CONTACT WITH THE ROOTBALL.

4. MULCH MATERIAL SHALL BE OF UNIFORM SIZE, FINE SHREDDED TANBARK HARDWOOD MULCH OR APPROVED EQUAL. MULCH SHALL BE A REDDISH DARK BROWN COLOR AND SHALL BE LAID TO A UNIFORM MINIMUM DEPTH OF 2 INCHES. MULCH AREAS AROUND TREES AT THE RATE OF 1' OF DIAMETER PER OF TRUNK CALIPER.

5. HYDROGEL ABSORBENT MATERIAL SHALL BE ADDED TO THE PLANTING HOLE FOR EACH TREE AND SHRUB AT THE RATE OF 4 OUNCES PER 2-1/2" CALIPER OR GALLON OF ROOTBALL. HYDROGEL MATERIAL SHALL BE VITERRA "GELSCAPE," "TERRASORB," OR APPROVED EQUAL.

F. SUBSTITUTIONS:

1. IF A PLANT IS FOUND NOT TO BE SUITABLE OR AVAILABLE, THE LANDSCAPE CONTRACTOR IS TO NOTIFY THE LANDSCAPE ARCHITECT BEFORE BIDDING. THE OWNER OR LANDSCAPE ARCHITECT WILL THEN SELECT A REASONABLE ALTERNATE OR INFORM ALL LANDSCAPE CONTRACTORS OF THE AVAILABILITY OF THE ORIGINAL PLANT.

G. PRUNING, CLEANUP, PROTECTION OF EXISTING MATERIALS AND RESTORATION

1. THE CONTRACTOR SHALL PRUNE PLANT MATERIAL WITHIN TWO (2) DAYS OF INSTALLATION IN ACCORDANCE WITH THE DETAILS AND AS DIRECTED BY THE OWNER'S REPRESENTATIVE.

2. DURING COURSE OF PLANTING, EXCESS AND WASTE MATERIALS SHALL BE CONTINUOUSLY AND PROMPTLY REMOVED, LAWN AREAS KEPT CLEAR, AND ALL REASONABLE PRECAUTIONS TAKEN TO AVOID DAMAGE TO ANY EXISTING LAWNS, PAVING, ETC, NOT SCHEDULED FOR REMOVAL. WHEN PLANTING IN AN AREA HAS BEEN COMPLETED, THE AREA SHALL BE CLEANED UP THOROUGHLY. DEBRIS, RUBBISH, SUBSOIL AND WASTE MATERIALS SHALL BE CLEANED UP AND REMOVED FROM THE PROPERTY. EXISTING GRASS AREAS WHICH HAVE BEEN INJURED BY THE WORK SHALL BE REGRADED AND SODDED TO MATCH THE EXISTING LAWN; THE ENTIRE AREA SHALL BE NEAT AND CLEAN TO THE SATISFACTION OF THE LANDSCAPE ARCHITECT.

3. CONTRACTOR SHALL, AT ALL TIMES, PROTECT ALL PLANTS AND LAWNS FROM DAMAGE. THE MOVING OF HEAVY EQUIPMENT OR MATERIAL OVER THE LAWN AREAS SHALL BE DONE ON PLANKS OR PONTOONS.

4. THE CONTRACTOR SHALL RESTORE TO THEIR ORIGINAL CONDITION ALL PAVEMENTS, SODDED OR PLANTED AREAS, STRUCTURES OR SUBSTRUCTURES, NOT SCHEDULED FOR REMOVAL, WHICH ARE DISTURBED BY THE CONTRACTOR DURING PLANTING OPERATIONS. SUCH RESTORATION SHALL BE IN A MANNER SATISFACTORY TO THE LANDSCAPE ARCHITECT AND AT NO ADDITIONAL COST TO THE OWNER.

H. FINAL INSPECTION AND GUARANTEE:

1. AFTER PLANTING IS COMPLETED (INCLUDING MULCHING AND CLEAN-UP) THE CONTRACTOR SHALL NOTIFY THE LANDSCAPE ARCHITECT IN WRITING TO REQUEST FINAL INSPECTION OF THE TOTAL PLANTING. THE LANDSCAPE ARCHITECT SHALL MAKE A FINAL INSPECTION VISIT AS SOON AS POSSIBLE. LANDSCAPE ARCHITECT SHALL NOTIFY THE LANDSCAPE CONTRACTOR, IN WRITING, WHEN ALL WORK IS SATISFACTORILY COMPLETE. IF WORK IS NOT SATISFACTORILY COMPLETE, THE LANDSCAPE ARCHITECT WILL NOTIFY THE LANDSCAPE CONTRACTOR, IN WRITING, AS TO THE DEFICIENCIES IN THE WORK AND THE NECESSARY CORRECTIVE MEASURES. THE LANDSCAPE CONTRACTOR WILL BE GIVEN A REASONABLE AMOUNT OF TIME TO CORRECT THE DEFICIENCIES, AND ANOTHER FINAL INSPECTION WILL BE SCHEDULED BY THE LANDSCAPE ARCHITECT.

2. ALL PLANT MATERIAL AND LAWN AREAS SHALL BE GUARANTEED TO BE IN A VIGOROUS GROWING CONDITION ONE YEAR FROM THE DATE OF FINAL INSPECTION AND ACCEPTANCE. AT THE TERMINATION OF THIS PERIOD, THE CONTRACTOR SHALL HAVE COMPLETED THE PRECEDING MAINTENANCE SCHEDULE. ANY PLANTS INFECTED WITH DISEASE OR INSECTS WILL BE REMOVED OR TREATED. ALL DEAD OR UNACCEPTABLE PLANTS WILL BE REPLACED BY THE SAME PLANTS AND SIZES DESIGNATED ON THE PLANT LIST. THESE PLANTS SHALL BE PLANTED, MULCHED AND GUY AS SPECIFIED HEREIN AND WITHOUT EXTRA COMPENSATION TO THE CONTRACTOR. AT THE COMPLETION OF ALL SUCH WORK AND WITH THE APPROVAL OF THE LANDSCAPE ARCHITECT, THE CONTRACT WILL BE CONSIDERED COMPLETE.

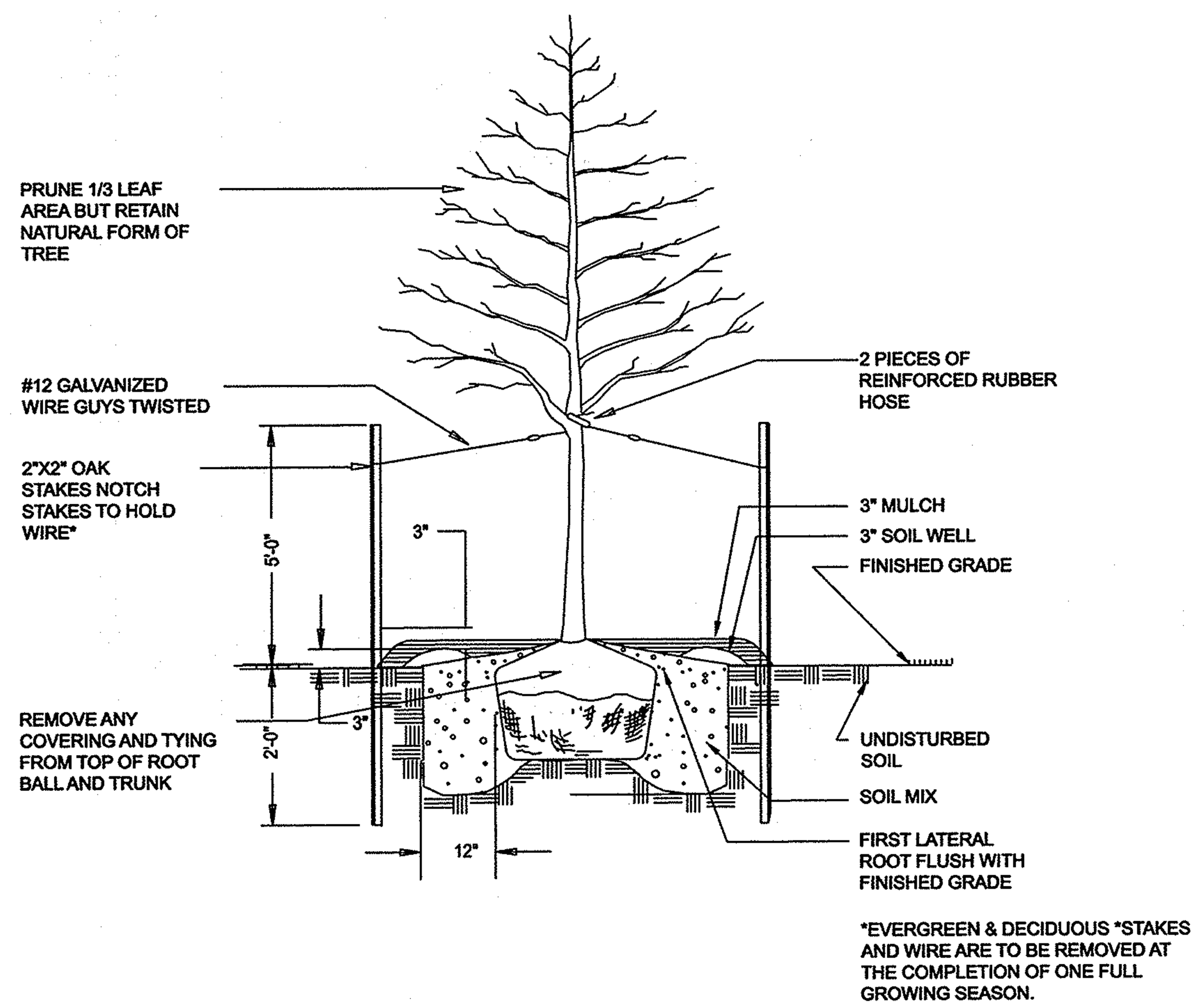

PLANTING DETAIL FOR TREES* - 1 - 4" CALIPER

SCALE: NONE

PLANT LIST

KEY	QUANTITY	BOTANICAL NAME / COMMON NAME	SIZE	CONDITION	REMARKS
(symbol)	28	ACER RUBRUM 'RED SUNSET' / 'RED SUNSET' RED MAPLE	2 1/2-3" CAL.	B & B	
(symbol)	44	QUERCUS PHELLOS 'HIGHTOWER' / 'HIGHTOWER' WILLOW OAK	2 1/2-3" CAL.	B & B	
(symbol)	18	TILIA CORDATA 'GREENSPIRE' / LITTLE LEAF LINDEN	2 1/2-3" CAL.	B & B	
(symbol)	26	ZELKOVA SERRATA 'GREEN VASE' / 'GREEN VASE' ZELKOVA	2 1/2-3" CAL.	B & B	
(symbol)	14	LAGERSTROEMIA INDICA 'TUSCARORA' / 'TUSCARORA' CRAPEMYRTLE	8-10' HT.	B & B	
(symbol)	19	MAGNOLIA VIRGINIANA / SWEETBAY MAGNOLIA	8-10' HT.	B & B	
(symbol)	33	PINUS STROBUS / EASTERN WHITE PINE	6-8' HT.	B & B	SPACE 10-12' O.C. STAGGER
(symbol)	49	THUJA X 'GIGANTEOIDES' / GREEN GIANT ARBORVITAE	6-8' HT.	B & B	SPACE 10-12' O.C. STAGGER
CS	114	CORNUS SERICEA 'FLAVIRAMEA' / YELLOW TWIG DOGWOOD	24 -30" HT.	#5 CONT.	SPACE 5' O.C.
IVLH	331	ITEA VIRGINICA 'LITTLE HENRY' / 'LITTLE HENRY' SWEETSPIRE	18-24" SP'D	#3 CONT.	SPACE 4' O.C.
JC	38	JUNIPERUS CHINENSIS 'OLD GOLD' / 'OLD GOLD' JUNIPER	18-24" SP'D	#3 CONT.	SPACE 4' O.C.
VP	21	VIBURNUM PRAGENSE / PRAGUE VIBURNUM	30-36" HT.	B & B	SPACE 5' O.C.
IVM	37	ILEX VERTICILLATA 'JIM DANDY' / 'JIM DANDY' WINTERBERRY HOLLY	24 -30" HT.	#5 CONT.	SPACE 5' O.C.
IVF	98	ILEX VERTICILLATA 'RED SPRITE' / 'RED SPRITE' WINTERBERRY HOLLY	24 -30" HT.	#5 CONT.	SPACE 5' O.C.
CA	655	CALAMAGROSTIS ACUTIFLORA 'KARL FOERSTER' / 'KARL FOESTER' FEATHER REED GRASS	#1	CONTAINER	SPACE 24" O.C. STAGGER
PVH	325	PANICUM VIRGATUM 'HEAVY METAL' / 'HEAVY METAL' SWITCH GRASS	#1	CONTAINER	SPACE 36" O.C. STAGGER
AI	1000	ASCELPIAS INCARNATA / SWAMP MILKWEED	1 QT.	CONTAINER	SPACE 18" O.C. STAGGER
EF	45	EUPATORIUM FISTULOSUM / JOE-PYE WEED	1 QT.	CONTAINER	SPACE 30" O.C. STAGGER
IV	1655	IRIS VERSICOLOR / BLUE FLAG IRIS	1 QT.	CONTAINER	SPACE 18" O.C. STAGGER
LS	525	LOBELIA SIPHILITICA / GREAT BLUE LOBELIA	1 QT.	CONTAINER	SPACE 18" O.C. STAGGER
SV	2120	SCIRPUS VALIDUS / SOFT STEM BULLRUSH	1 QT.	CONTAINER	SPACE 18" O.C. STAGGER
VN	3025	VERNONIA NOVEBORACENSIS / NEW YORK IRONWEED	1 QT.	CONTAINER	SPACE 18" O.C. STAGGER

PLANTING NOTES:

1. This Plan is for planting purposes only.
2. This Plan has been prepared in accordance with the provisions of section 16.124 of the Howard County Code and the Landscape Manual.
3. All plant material shall be nursery grown and shall conform to AmericanAssociation of Nurserymen latest standards. Plant installation must conform to the minimum standards cited in the latest edition of the "LANDSCAPE SPECIFICATION GUIDELINES" by the Landscape Contractor's Association.
4. Contractor is to notify Miss Utility a minimum of 72 hours prior to digging. Telephone 1-800-257-7777
5. The Landscape Architect is to be notified 48 hours before planting begins. The location of all plant material is to be approved in field by the Landscape Architect.
6. No tree or shrub planting pits are to be left open or unattended.
7. Shrubs are to be grouped into mulched beds. Beds are to be edged and the grass is to be killed or removed prior to mulching.

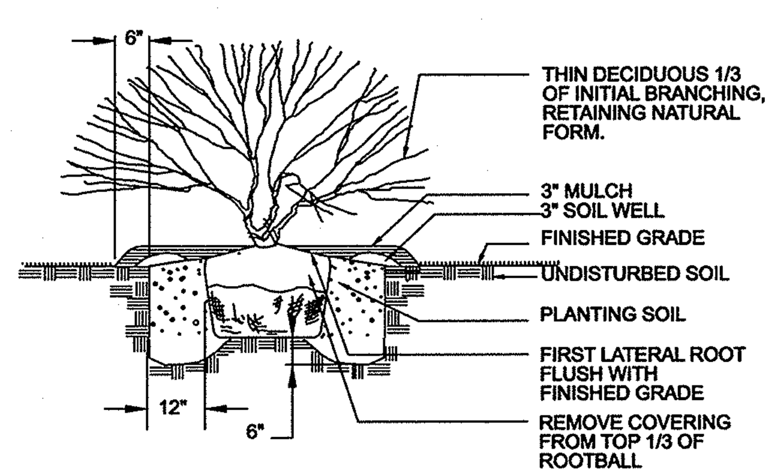

PLANTING DETAIL FOR EVERGREEN AND DECIDUOUS SHRUBS

NOT TO SCALE

NOTE:

THE OWNER, TENANT, AND/OR THEIR AGENTS SHALL BE RESPONSIBLE FOR MAINTENANCE OF THE REQUIRED LANDSCAPING, INCLUDING BOTH PLANT MATERIALS AND BERMS, FENCES AND WALLLS. ALL PLANT MATERIALS SHALL BE MAINTAINED IN GOOD GROWING CONDITION AND WHEN NECESSARY, REPLACED WITH NEW MATERIALS TO ENSURE CONTINUED COMPLIANCE WITH APPLICABLE REGULATIONS. ALL OTHER REQUIRED LANDSCAPING SHALL BE PERMANENTLY MAINTAINED IN GOOD CONDITION, AND WHEN NECESSARY, REPAIRED OR REPLACED.

LANDSCAPE SURETY NOTE:

FINANCIAL SURETY FOR THE REQUIRED LANDSCAPING HAS BEEN POSTED AS PART OF THE DEVELOPER'S AGREEMENT IN THE AMOUNT OF:

(110) SHADE TREES @ $300 EACH =	$33,000.00
(33) UNDERSTORY TREES @ $150 =	$4,950.00
(71) EVERGREEN TREES @ $150 =	$10,650.00
(639) SHRUBS @ $30 =	$19,170.00
TOTAL =	$67,770.00

SCHEDULE A
PERIMETER LANDSCAPE EDGE

Category	Adjacent to Roadways	Adjacent to Roadways	Adjacent to Perimeter Properties	
Perimeter Number	1	2	3	4
Landscape Type	'C'	'B'	Internal lots buffering not required	'C'
Linear Feet of Roadway Frontage/Perimeter	829 LF.	1091 LF.		854 LF.
Credit for Existing Vegetation (Yes, No, Linear Feet) (Describe below if needed)	YES 275 LF	Yes 823 LF		YES 655 LF
Credit for Wall, Fence or Berm (Yes, No, Linear Feet) (Describe below if needed)	NO	NO		NO
Number of Plants Required				
Shade Trees	14	5		5
Evergreen Trees	28	7		10
Shrubs				
Number of Plants Provided				
Shade Trees	14	5		5
Evergreen Trees	28	* 7		10
Other Trees (2:1 substitution)				
Shrubs (10:1 substitution)				
(Describe plant substitution credits below if needed)	* PERIMETER 2 EVERGREENS USED ELSEWHERE ON SITE			

SCHEDULE B
PARKING LOT INTERNAL LANDSCAPING

Number of Parking Spaces	470
Number of Trees Required	24
Number of Trees Provided	
Shade Trees	24
Other Trees (2:1 substitution)	
Internal Islands Required	24
Internal Islands Provided (Min. 200 Sf.) 26996 SF: 200 =	135

SCHEDULE D
STORMWATER MANAGEMENT AREA LANDSCAPING

Linear Feet of Perimeter	2680 LF *
Number of Trees Required	
Shade Trees	54
Evergreen Trees	67
Credit for Existing Vegetation (No, Yes and %)	NO
Credit for Other Landscaping (No, Yes and %)	
Number of Trees Provideded	
Shade Trees	54
Evergreen Trees	37
Other Trees (2:1 substitution)	14 Sm. Deciduous trees = 7 Shade trees 19 Sm. Deciduous trees + 295 shrubs substituted for 39 evergreens
* PER THE LANDSCAPE MANUAL IF A TYPE C BUFFER IS REQ'D A TYPE B BUFFER IS NOT NECESSARY. SWM FACILITIES 8 AND 11A ARE OMITTED FROM THE CALCULATION. BUFFER MATERIAL REQUIRED FOR TYPE C HAVE BEEN LOCATED TO SUFFICIENTLY SCREEN THE SWM FACILITIES. THE QUANTITIES PREVIOUSLY APPROVED HAVE NOT BEEN CHANGED.	

INFORMAL STREET TREES
Road A
Partial sidewalks
Steep slopes, residential on opposite side of the street
829 LF of ROW (79 LF Ex. Woods & 196 LF Planted under Phase 1) = 554 LF =14 Canopy Trees
14 Trees Provided
Ex. Utilities within 3' of sidewalk

Landscape Plan Prepared by:
HUMAN & ROHDE, INC.
LANDSCAPE ARCHITECTS
512 VIRGINIA AVENUE
TOWSON, MD 21286
410.825.3885 phone
410.825.3887 fax

NO.	DESCRIPTION	BY	DATE
1	Add temporary parking and submerged gravel wetland SWM-11A.	MWI	11/6/2014

Owner/Developer:
Merritt-MR, LLC
2066 Lord Baltimore Drive
Baltimore, Maryland 21244
ph: 410-298-2600
fx: 410-298-9644

"Professional Certification: I hereby certify that these documents were prepared or approved by me, and that I am a duly licensed professional engineer under the laws of the State of Maryland, License No. 29179, Expiration Date: 06-18-16."
STATE OF MARYLAND TANYA L. BENSINGER No. 29179 PROFESSIONAL ENGINEER
1-28-15

MATIS WARFIELD
Consulting Engineers
10540 York Road, Suite M
Hunt Valley, Maryland 21030
PHONE 410.683.7004 FAX 410.683.1798
www.matiswarfield.com

APPROVED: Howard County Department of Planning and Zoning

CHIEF, DEVELOPMENT ENGINEERING DIVISION	DATE 4.8.15
CHIEF, DIVISION OF LAND DEVELOPMENT	DATE 4-3-15
DIRECTOR	DATE 4/13/15

REVISED SITE DEVELOPMENT PLAN

LANDSCAPE DETAILS

The Meadows Corporate Park Phase 2

6510 - 6518 MEADOW RIDGE ROAD MD RTE. 103
GREEN BUILDING

TAX MAP: 37;
PARCELS: A5-A9
ELECTION DISTRICT : 1
ZONE: POR

GENERAL OFFICE
SCALE : NA
DATE : April 23, 2014
SHEET: 10 of 35

SDP-13-070

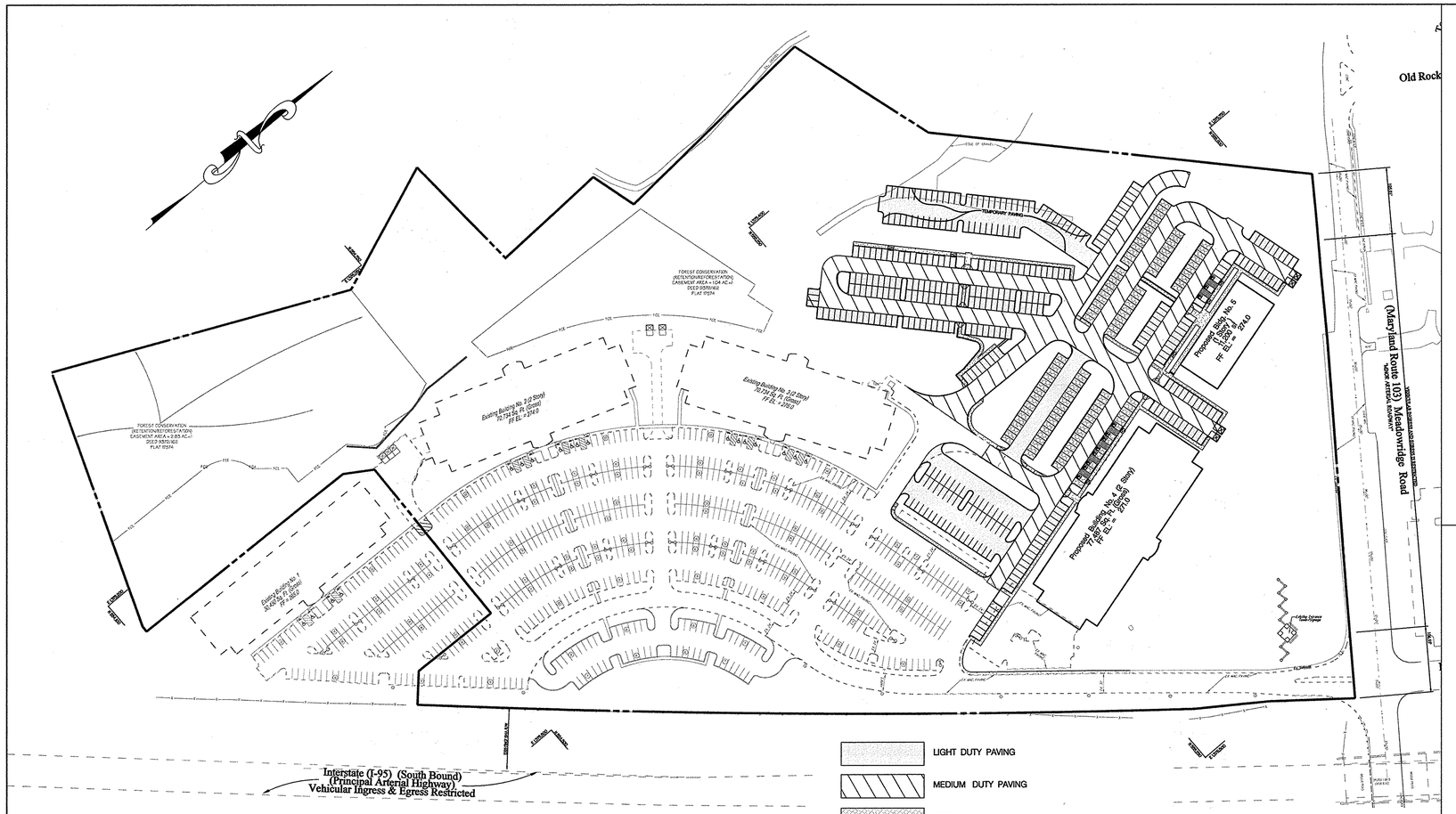

PAVING PLAN
1"= 100'

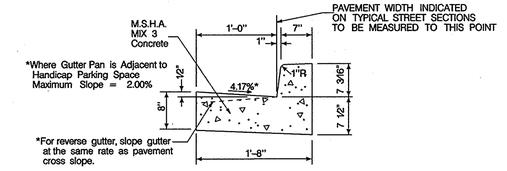

STANDARD CURB

Refer to Howard County Standard Plate R-3.01

Detail Concrete Curb and Gutter
Not To Scale

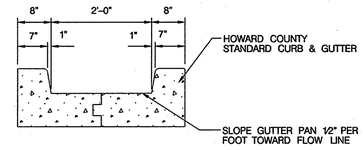

Curb Opening Detail
Not To Scale

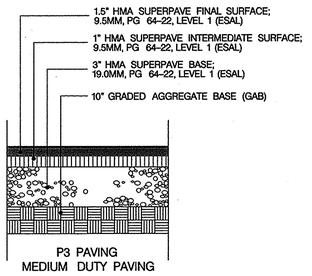

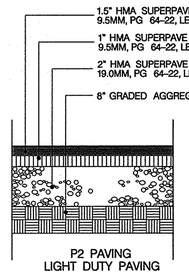

NOTES:
1. STANDARD SECTION FOR CBR VALUE <5. FINAL PAVEMENT SHALL BE CONFIRMED BY GEOTECHNICAL ENGINEER BASED ON ACTUAL SUB-GRADE CONDITIONS PRIOR TO PAVING.
2. SEE SWM DETAILS ON SHEET 20 FOR PERMEABLE PAVING SECTION.

Paving Sections Detail
Not To Scale

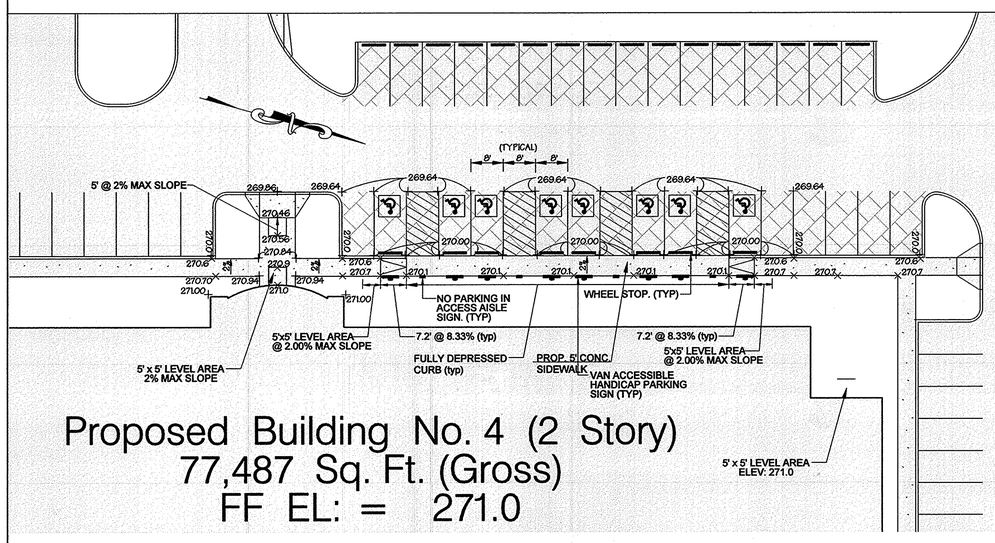

ENTRANCE PLAN BLDG. NO 4
1"= 20'

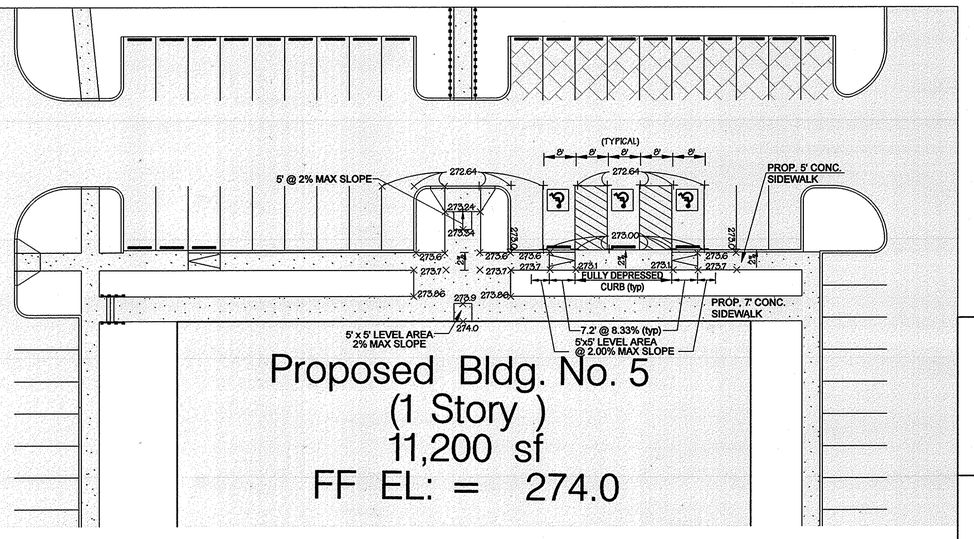

ENTRANCE PLAN BLDG. NO 5
1"= 20'

NO.	DESCRIPTION	BY	DATE
1	Add temporary parking and submerged gravel wetland SWM-11A.	MWI	1/22/2015

Owner/Developer:
Merritt-MR, LLC
2066 Lord Baltimore Drive
Baltimore, Maryland 21244
ph: 410-298-2600
fx: 410-298-9644

STATE OF MARYLAND — KENNETH L. BENNINGER — No. 29179 — PROFESSIONAL ENGINEER — 4-28-15

MATIS WARFIELD
Consulting Engineers
10540 York Road, Suite M
Hunt Valley, Maryland 21030
PHONE 410.683.7004 FAX 410.683.1798
www.matiswarfield.com

100 0 100 200
SCALE IN FEET

APPROVED: Howard County Department of Planning and Zoning

CHIEF, DEVELOPMENT ENGINEERING DIVISION — DATE 4.8.15
CHIEF, DIVISION OF LAND DEVELOPMENT — DATE 4-13-15
DIRECTOR — DATE 4/16/15

REVISED SITE DEVELOPMENT PLAN

SITE PLAN DETAILS
The Meadows Corporate Park Phase 2

6510 - 6518 MEADOW RIDGE ROAD MD RTE. 103
GREEN BUILDING

TAX MAP: 37;
PARCELS: A6-A9
ELECTION DISTRICT : 1
ZONE: POR

SCALE : 1" = 50'
DATE : April 23, 2014
SHEET: 11 of 35

SDP-13-070

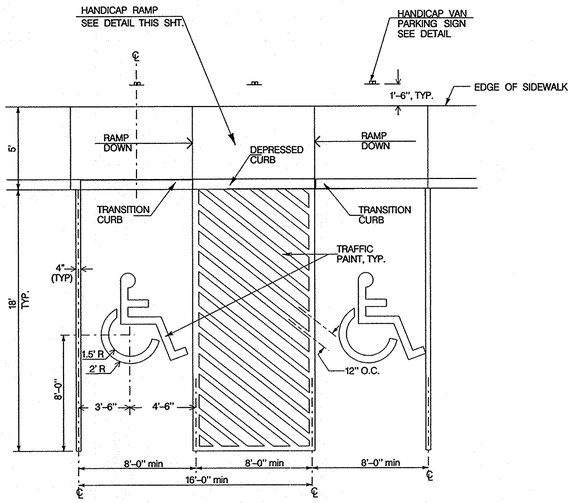

NOTE:
H.C. PARKING SHALL CONFORM
TO CURRENT ADA CRITERIA
ANSI A117.1-1980

Detail Van Accessible Handicap Parking Spaces

Not To Scale

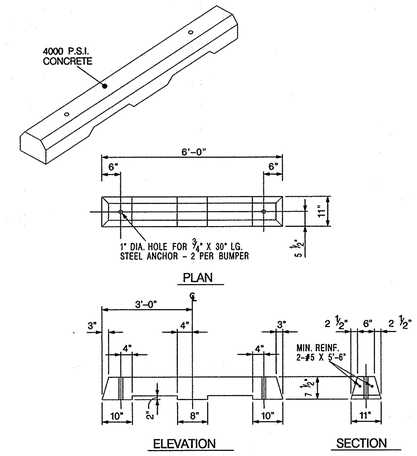

Concrete Wheel Stop Detail

Not To Scale

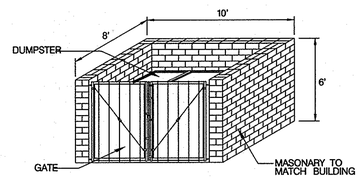

Dumpster Enclosure Detail

Not To Scale

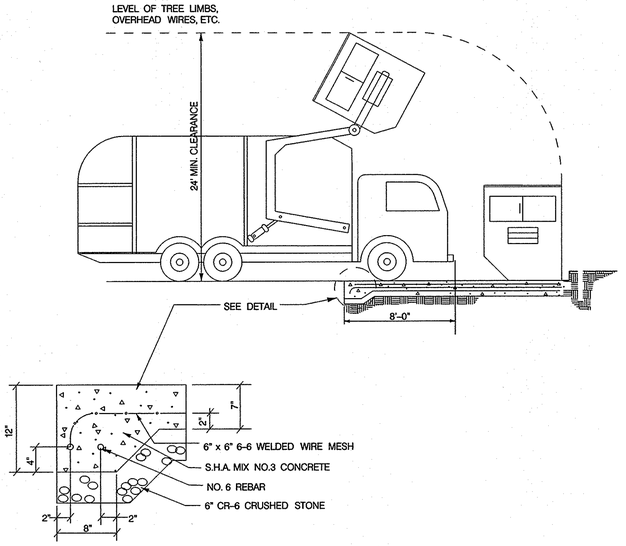

Section

Detail Solid Waste Service Pad

Not To Scale

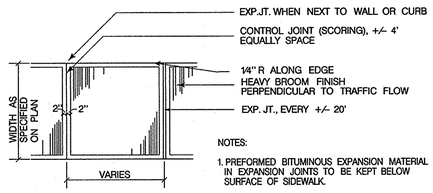

PLAN

NOTES:

1. PREFORMED BITUMINOUS EXPANSION MATERIAL IN EXPANSION JOINTS TO BE KEPT BELOW SURFACE OF SIDEWALK.
2. CONCRETE TO BE MIX NO. 2.
3. WHEN SIDEWALK ABUTS CURB TO ALLOW CONTROL JOINT TO DRAIN, WALK SHALL BE ¼" HIGHER THAN ADJOINING CURB WITH PREFORMED BITUMINOUS EXPANSION MATERIAL BETWEEN SIDEWALK AND CURB.
4. MAXIMUM CROSS SLOPE = 2.00%

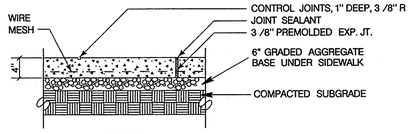

SECTION

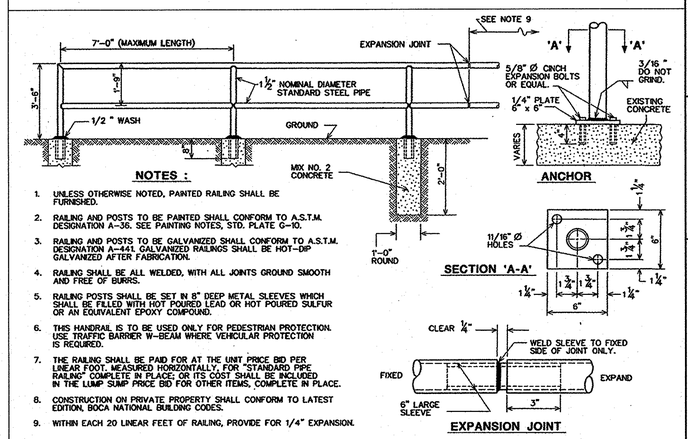

NOTES :

1. UNLESS OTHERWISE NOTED, PAINTED RAILING SHALL BE FURNISHED.
2. RAILING AND POSTS TO BE PAINTED SHALL CONFORM TO A.S.T.M. DESIGNATION A-36. SEE PAINTING NOTES, STD. PLATE G-10.
3. RAILING AND POSTS TO BE GALVANIZED SHALL CONFORM TO A.S.T.M. DESIGNATION A-444. GALVANIZED RAILINGS SHALL BE HOT-DIP GALVANIZED AFTER FABRICATION.
4. RAILING SHALL BE ALL WELDED, WITH ALL JOINTS GROUND SMOOTH AND FREE OF BURRS.
5. RAILING POSTS SHALL BE SET IN 8" DEEP METAL SLEEVES WHICH SHALL BE FILLED WITH HOT POURED LEAD OR HOT POURED SULFUR OR AN EQUIVALENT EPOXY COMPOUND.
6. THIS HANDRAIL IS TO BE USED ONLY FOR PEDESTRIAN PROTECTION. USE TRAFFIC BARRIER W-BEAM WHERE VEHICULAR PROTECTION IS REQUIRED.
7. THE RAILING SHALL BE PAID FOR AT THE UNIT PRICE BID PER LINEAR FOOT, MEASURED HORIZONTALLY, FOR "STANDARD PIPE RAILING" COMPLETE IN PLACE; OR ITS COST SHALL BE INCLUDED IN THE LUMP SUMP PRICE BID FOR OTHER ITEMS, COMPLETE IN PLACE.
8. CONSTRUCTION ON PRIVATE PROPERTY SHALL CONFORM TO LATEST EDITION, BOCA NATIONAL BUILDING CODES.
9. WITHIN EACH 20 LINEAR FEET OF RAILING, PROVIDE FOR 1/4" EXPANSION.

Detail Pipe Railing

Not To Scale

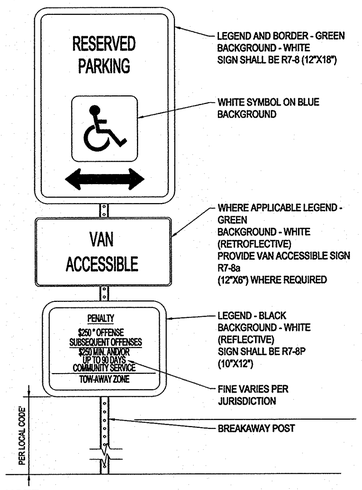

NOTES:
FOR VAN ACCESSIBLE SPACES ONLY.
DISTANCE FROM GROUND TO BOTTOM
OF SIGN SHALL BE 7'.

NOTE:
1. SIGNS SHALL MEET THE REQUIREMENTS OF THE MANUAL ON UNIFORM TRAFFIC CONTROL DEVICES.
2. SIGNS ATTACHED WITH ACORN NUT TYPE FASTENERS.

Handicap Parking Sign Detail

Not To Scale

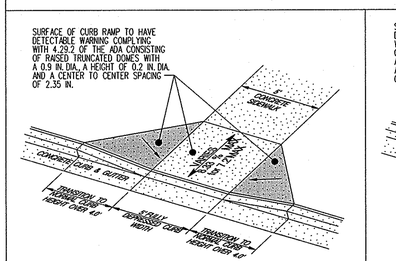

Type 'A' Ramp

Not To Scale

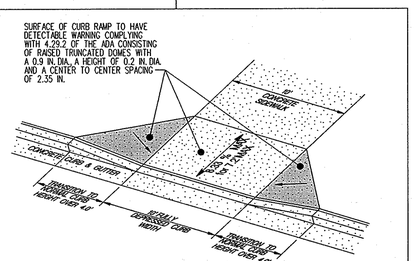

Type 'A1' Ramp

Not To Scale

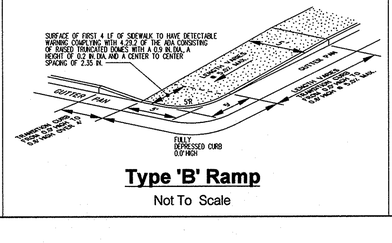

Type 'B' Ramp

Not To Scale

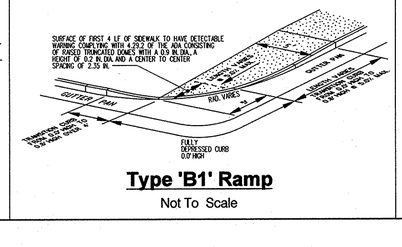

Type 'B1' Ramp

Not To Scale

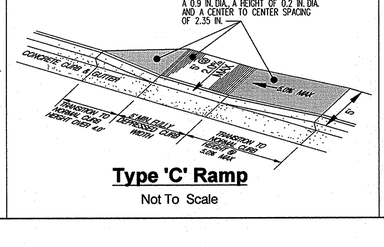

Type 'C' Ramp

Not To Scale

NO.	BY	DATE	DESCRIPTION

Owner/Developer:
Merritt-MR, LLC
2066 Lord Baltimore Drive
Baltimore, Maryland 21244
ph: 410-298-2600
fx: 410-298-9844

STATE OF MARYLAND
NEAL L. BERSINGER
CIVIL ENGINEER
11/3/2014

MATIS WARFIELD
Consulting Engineers
10540 York Road Suite M
Hunt Valley, Maryland 21030
PHONE 410.683.7004 FAX 410.683.1798
www.matiswarfield.com

APPROVED: Howard County Department of Planning and Zoning

CHIEF, DEVELOPMENT ENGINEERING DIVISION — DATE 5.12.14

CHIEF, DIVISION OF LAND DEVELOPMENT — DATE 6.18.14

DIRECTOR — DATE 6/19/14

SITE PLAN DETAILS
The Meadows Corporate Park Phase 2

6510 - 6518 MEADOW RIDGE ROAD MD RTE. 103
GREEN BUILDING

TAX MAP: 37;
PARCELS: A5-A9
ELECTION DISTRICT : 1
ZONE: POR

GENERAL OFFICE
SCALE : na
DATE : April 23, 2014
SHEET: 12 of 35

SDP-13-070

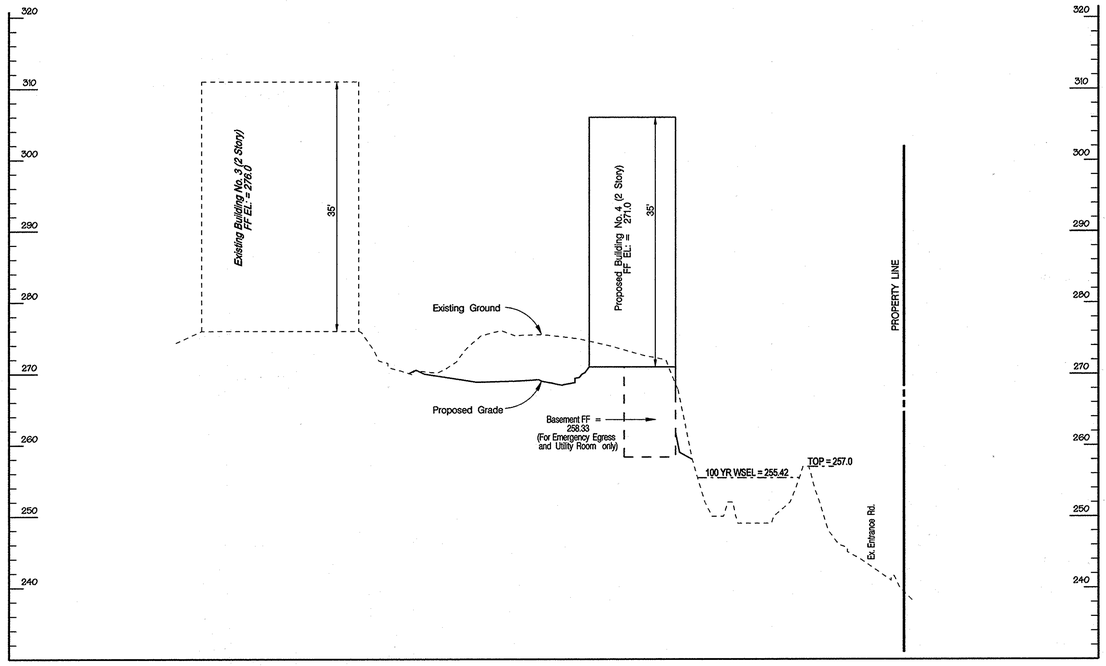

SECTION A-A

SCALE: HORZ. 1" = 100'
VERT. 1" = 10'

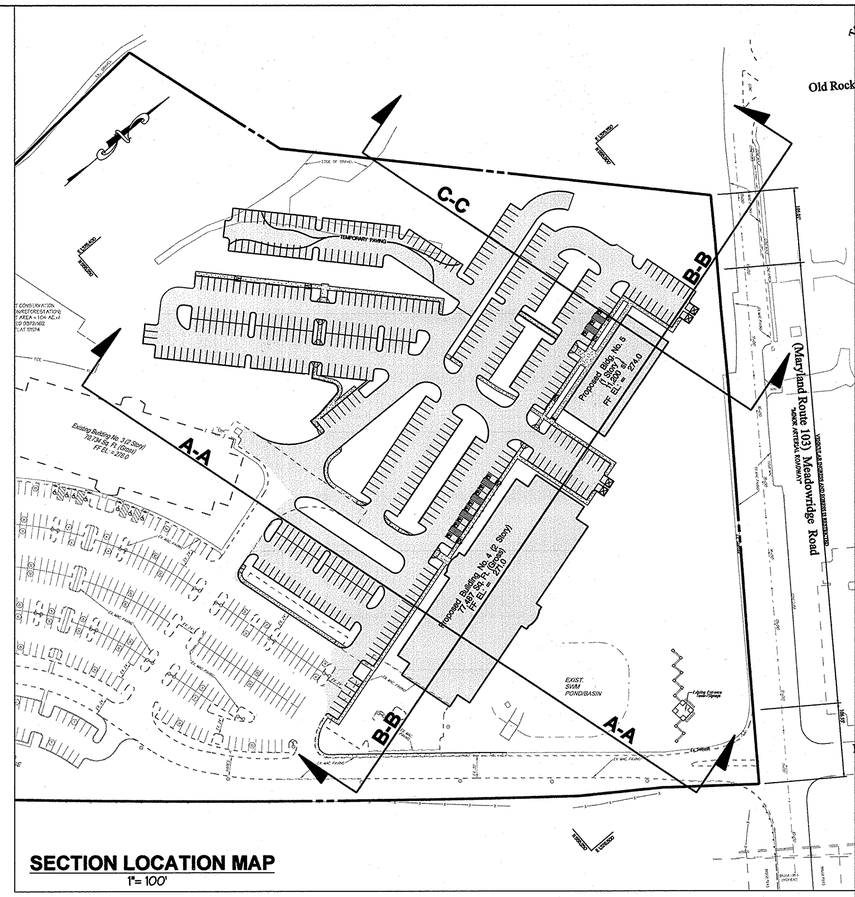

SECTION LOCATION MAP

1"= 100'

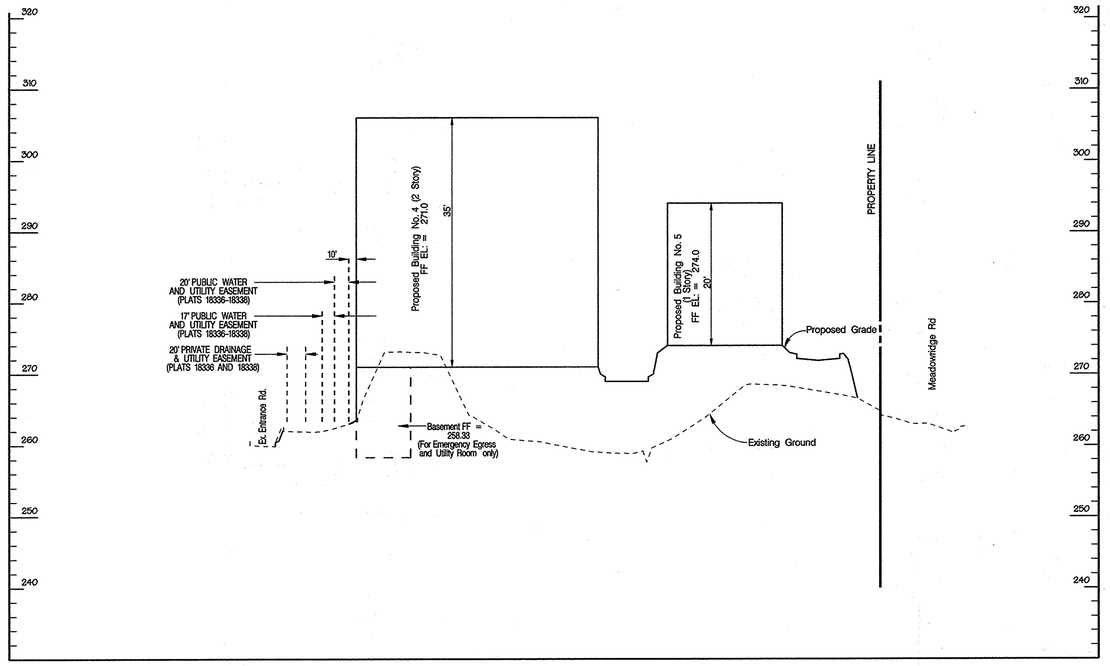

SECTION B-B

SCALE: HORZ. 1" = 100'
VERT. 1" = 10'

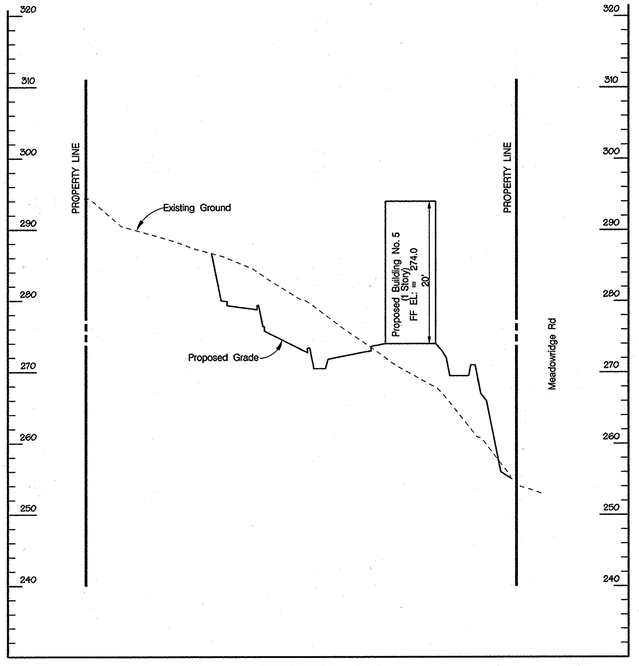

SECTION C-C

SCALE: HORZ. 1" = 100'
VERT. 1" = 10'

NO.	DESCRIPTION	BY	DATE
1	Add temporary parking and submerged gravel wetland SWM-11A.	MWI	1/28/2015

Owner/Developer:
Merritt-MR, LLC
2066 Lord Baltimore Drive
Baltimore, Maryland 21244
ph: 410-298-2600
fx: 410-298-9644

MATIS WARFIELD
Consulting Engineers
10540 York Road, Suite M
Hunt Valley, Maryland 21030
PHONE 410.683.7004 FAX 410.683.1798
www.matiswarfield.com

100 0 100 200
SCALE IN FEET

APPROVED: Howard County Department of Planning and Zoning

CHIEF, DEVELOPMENT ENGINEERING DIVISION — DATE 4.8.15

CHIEF, DIVISION OF LAND DEVELOPMENT — DATE 4-13-15

DIRECTOR — DATE 4/13/15

REVISED SITE DEVELOPMENT PLAN

BUILDING SECTIONS
The Meadows Corporate Park Phase 2

6510 - 6518 MEADOW RIDGE ROAD MD RTE. 103
GREEN BUILDING

TAX MAP: 37;
PARCELS: A5-A9
ELECTION DISTRICT : 1
ZONE: POR

GENERAL OFFICE
SCALE : 1" = 100'
DATE : April 23, 2014
SHEET: 13 of 35

SDP-13-070

DRAINAGE AREAS

D.A.	ACRES	COMP "C"
A1	0.97	0.90
B1	0.42	0.85
C1	0.34	0.85
D1	1.21	0.82
E1	0.59	0.90
F1	0.33	0.86
G1	0.36	0.72
Gg1	0.19	0.30
H1	0.47	0.69
I1	0.50	0.79
J1	0.47	0.74
A2	0.46	0.95
B2	0.46	0.95
C2	0.62	0.30
D2	1.62	0.65
E2	0.55	0.70
F2	0.81	0.52
G2	0.66	0.60
H2	0.42	0.64
H2a	0.56	0.75
I2	0.44	0.67
J2	0.81	0.52
K2	0.96	0.83
L2	0.29	0.66
M2	0.63	0.30
N2	0.10	0.30
O2	0.19	0.74
P2	0.19	0.95
Q2	0.56	0.53

NO.	DESCRIPTION	BY	DATE
1	Add temporary parking and submerged gravel wetland SWM-11A.	MWI	1/28/2015

Owner/Developer:
Merritt-MR, LLC
2066 Lord Baltimore Drive
Baltimore, Maryland 21244
ph: 410-298-2600
fx: 410-298-9644

MATIS WARFIELD
Consulting Engineers
10540 York Road, Suite M
Hunt Valley, Maryland 21030
PHONE 410.683.7004 FAX 410.683.1798
www.matiswarfield.com

I HEREBY CERTIFY THAT THESE DOCUMENTS WERE PREPARED OR APPROVED BY ME, AND THAT I AM A DULY LICENSED PROFESSIONAL ENGINEER UNDER THE LAWS OF THE STATE OF MARYLAND, LICENSE NO. 21579, EXPIRATION DATE: 09/19/2015
STATE OF MARYLAND — DANIEL L. BENSINGER — No. 21579 — PROFESSIONAL ENGINEER
1-28-15

50 0 50 100
SCALE IN FEET

APPROVED: Howard County Department of Planning and Zoning

CHIEF, DEVELOPMENT ENGINEERING DIVISION — DATE 4.8.15

CHIEF, DIVISION OF LAND DEVELOPMENT — DATE 4-13-15

DIRECTOR — DATE 4/28/15

REVISED SITE DEVELOPMENT PLAN

STORM DRAINAGE MAP

The Meadows Corporate Park Phase 2

6510 - 6518 MEADOW RIDGE ROAD MD RTE. 103
GREEN BUILDING

TAX MAP: 37;
PARCELS: A6-A9
ELECTION DISTRICT : 1
ZONE: POR

GENERAL OFFICE
SCALE : 1" = 50'
DATE : April 23, 2014
SHEET: 14 of 35

SDP-13-070

STORM DRAINAGE AREA MAP
1"= 50'

LOCATION		AREA	ACRES		COEFF. C	CA		Σ CA	TIME CONC. (MIN.)			INTEN. I		Q=CIA	PIPE	n =	0.013		Pipe Time	
FROM	TO		Sub.	Total		25 YR	10 YR		Inlet	Drain	Total	25 YR	10 YR	(CFS)	SIZE	SLOPE	VEL.	LGTH.	(Min)	REMARKS
	exI-5	B1	0.42		0.85		0.36				5.00		8.50	3.03						
exI-5	exI-6	B1		0.42				0.36			5.00		8.50	3.03	15	0.22%	2.47	96	0.65	
	exI-6A	A1	0.97		0.90		0.87				5.00		8.50	7.42						
exI-6A	exI-6	A1		0.97				0.87			5.00		8.50	7.42	18	0.50%	4.20	87	0.35	
	exI-6	C1	0.34		0.85		0.29				5.00		8.50	2.46						
exI-6	exI-8	A1-C1		1.73				1.52	5.00	0.65	5.65		8.00	12.15	21	0.59%	5.05	188	0.62	
	exI-7	D1	1.21		0.82		0.99				5.00		8.50	8.39						
exI-7	exI-8	D1		1.21				0.99			5.00		8.50	8.39	18	0.64%	4.75	67.6	0.24	
	exI-8	E1	0.59		0.90		0.53				5.00		8.50	4.51						
exI-8	ex I-9	A1-E1		3.53				3.04	5.65	0.62	6.27		8.00	24.30	27	0.61%	6.11	208	0.57	
	exI-10	F1	0.33		0.86		0.28				5.00		8.50	2.41						
exI-10	exI-11	F1		0.33				0.28			5.00		8.50	2.41	18	0.05%	1.37	30	0.37	
	exI-11	G1	0.36		0.72		0.26				5.00		8.50	2.19						
exI-11	exM-2a	F1-G1		0.69				0.54	5.00	0.37	5.37		8.50	4.60	21	0.08%	1.91	48	0.42	
exM-2a	ex I-9	F1-G1		0.69				0.54	5.37	0.42	5.78		8.00	4.33	21	0.07%	1.80	11.5	0.11	
	S-3	J1	0.47		0.74		0.35				5.00		8.50	2.97						
S-3	S-2	J1		0.47				0.35			5.00		8.50	2.97	15	0.21%	2.42	117	0.81	
	S-2	I1	0.50		0.79		0.40				5.00		8.50	3.37						
S-2	M-2	I1-J1		0.97				0.75	5.00	0.81	5.81		8.00	5.97	18	0.32%	3.38	57	0.28	
M-2	M-1	I1-J1		0.97				0.75	5.81	0.28	6.09		8.00	5.97	18	0.32%	3.38	62	0.31	
	S-1	H1	0.47		0.69		0.32				5.00		8.50	2.75						
S-1	M-1	H1		0.47				0.32			5.00		8.50	2.75	15	0.18%	2.24	18	0.13	
M-1	ex I-9	H1-J1		1.44				1.07	6.09	0.31	6.39		8.00	8.55	18	0.66%	4.84	84	0.29	
	ex I-9	Gg1	0.19		0.30		0.06				5.00		8.50	0.48						
exI-9	exM-2	A1-J1		5.85				4.70	6.39	0.29	6.68		7.60	35.75	36	0.29%	5.06	59.5	0.20	
exM-2	exM-3	A1-J1		5.85				4.70	6.68	0.20	6.88		7.60	35.75	36	0.29%	5.06	70.7	0.23	
exM-3	exE-2	A1-J1		5.85				4.70	6.88	0.23	7.11		7.60	35.75	36	0.29%	5.06	26.3	0.09	

LOCATION		AREA	ACRES		COEFF. C	CA		S CA	TIME CONC. (MIN.)			INTEN. I		Q=CIA	PIPE	n =	0.013		Pipe Time	
FROM	TO		Sub.	Total		25 YR	10 YR		Inlet	Drain	Total	25 YR	10 YR	(CFS)	SIZE	SLOPE	VEL.	LGTH.	(Min)	REMARKS
	RD	A2	0.46		0.95		0.44				5.00		8.50	3.71						
RD	M-4	A2		0.46				0.44			5.00		8.50	3.71	12	1.09%	4.73	17	0.06	
M-4	M-3	A2		0.46				0.44			5.00		8.50	3.71	15	0.33%	3.03	84	0.46	
	RD	B2	0.46		0.95		0.44				5.00		8.50	3.71						
RD	M-3	B2		0.46				0.44			5.00		8.50	3.71	12	1.09%	4.73	46	0.16	
M-3	E-1/S-1	A2-B2		0.92				0.87	5.00	0.46	5.46		8.50	7.43	18	0.50%	4.20	64	0.25	
	S-11	D2	1.62		0.65		1.06				5.00		8.50	8.99						
S-11	S-5	D2		1.62				1.06			5.00		8.50	8.99	18	0.73%	5.09	112	0.37	
	S-5	E2	0.55		0.70		0.39				5.00		8.50	3.28						
S-5	S-4	D2-E2		2.17				1.44	5.00	0.37	5.37		8.50	12.27	21	0.60%	5.10	105	0.34	
	S-4	F2	0.81		0.52		0.43				5.00		8.50	3.61						
S-4	M-8	D2-F2		2.98				1.87	5.37	0.34	5.71		8.00	14.95	21	0.89%	6.22	20	0.05	
M-8	M-7	D2-F2		2.98				1.87	5.71	0.05	5.76		8.00	14.95	21	0.89%	6.22	193	0.52	
	S-7	G2	0.66		0.60		0.39				5.00		8.50	3.34						
S-7	S-6	G2		0.66				0.39			5.00		8.50	3.34	15	0.27%	2.72	19	0.12	
	S-6	H2	0.42		0.64		0.27				5.00		8.50	2.29						
S-6	M-9	G2-H2		1.08				0.66	5.00	0.12	5.12		8.50	5.63	15	0.76%	4.59	15	0.05	
M-9	M-7	G2-H2		1.08				0.66	5.12	0.05	5.17		8.50	5.63	15	0.76%	4.59	112	0.41	
M-7	M-6a	D2-H2		4.06				2.53	5.76	0.52	6.28		8.00	20.25	24	0.80%	6.45	171	0.44	
	S-9	H2a	0.56		0.75		0.42				5.00		8.50	3.58						
S-9	M-6a	H2a		0.56				0.42			5.00		8.50	3.58	15	0.31%	2.92	113	0.65	
M-6a	M-6	D2-H2		4.62				2.95	6.28	0.44	6.72		7.60	22.44	24	0.98%	7.14	53	0.12	
	S-8	I2	0.44		0.67		0.29				5.00		8.50	2.50						
S-8	M-6	I2		0.44				0.29			5.00		8.50	2.50	15	0.15%	2.04	13	0.11	
M-6	M-5	D2-I2		5.06				3.25	6.72	0.12	6.85		7.60	24.68	24	1.19%	7.86	93	0.20	
	I-5	J2	0.81		0.52		0.43				5.00		8.50	3.61						
I-5	I-4	J2		0.81				0.43			5.00		8.50	3.61	15	0.31%	2.94	165	0.93	
	I-4	K2	0.96		0.83		0.80				5.00		8.50	6.81						
I-4	M-11	J2-K2		1.77				1.23	5.00	0.93	5.93		8.00	9.81	21	0.38%	4.08	275	1.12	
M-11	M-10	J2-K2		1.77				1.23	5.93	1.12	7.06		7.60	9.81	21	0.38%	4.08	93	0.38	
	STUB	L2	0.29		0.66		0.19				5.00		8.50	1.62						
STUB	M-10	L2		0.29				0.19			5.00		8.50	1.62	15	0.06%	1.32	9	0.11	
M-10	E-2	J2-L2		2.06				1.42	7.06	0.38	7.44		7.60	10.77	24	0.23%	3.43	125	0.61	
	S-12	M2	0.63		0.30		0.19				5.00		8.50	1.61						
S-12	M-5	J2-M2		2.69				1.61	7.44	0.61	8.04		7.20	11.57	27	0.14%	2.91	16	0.09	
	S-10	C2	0.62		0.30		0.19				5.00		8.50	1.58						
S-10	M-5	A2-C2		1.54				1.06			5.00		8.50	9.01	27	0.08%	2.27	17	0.13	
M-5	exI-1D	A2-M2		9.29				5.91	8.04	0.20	8.24		7.20	42.58	27	1.89%	10.71	75	0.12	
	exI-1D	N2	0.10		0.30		0.03				5.00		8.50	0.26						
exI-1D	ex M-1D	A2-N2		9.39				5.94	8.24	0.12	8.36		7.20	42.79	27	1.91%	10.76	49.5	0.08	
	exI-1	O2	0.19		0.74		0.14				5.00		8.50	1.20						
exI-1	exI-1A	O2		0.19				0.14			5.00		8.50	1.20	18	0.01%	0.68	174.9	4.28	
	exI-1A	P2	0.19		0.95		0.18				5.00		8.50	1.53						
exI-1A	ex M-1D	O2-P2		0.38				0.32	5.00	4.28	9.28		6.90	2.22	18	0.04%	1.26	28.2	0.37	
ex M-1D	exI-1B	A2-P2		9.77				6.27	8.36	0.08	8.44		7.20	45.11	27	2.12%	11.35	132.5	0.19	
	exI-1B	Q2	0.56		0.53		0.30				5.00		8.50	2.53						
exI-1B	exM-1A	A2-Q2		10.33				6.56	8.44	0.19	8.63		6.90	45.29	27	2.14%	11.39	56.3	0.08	

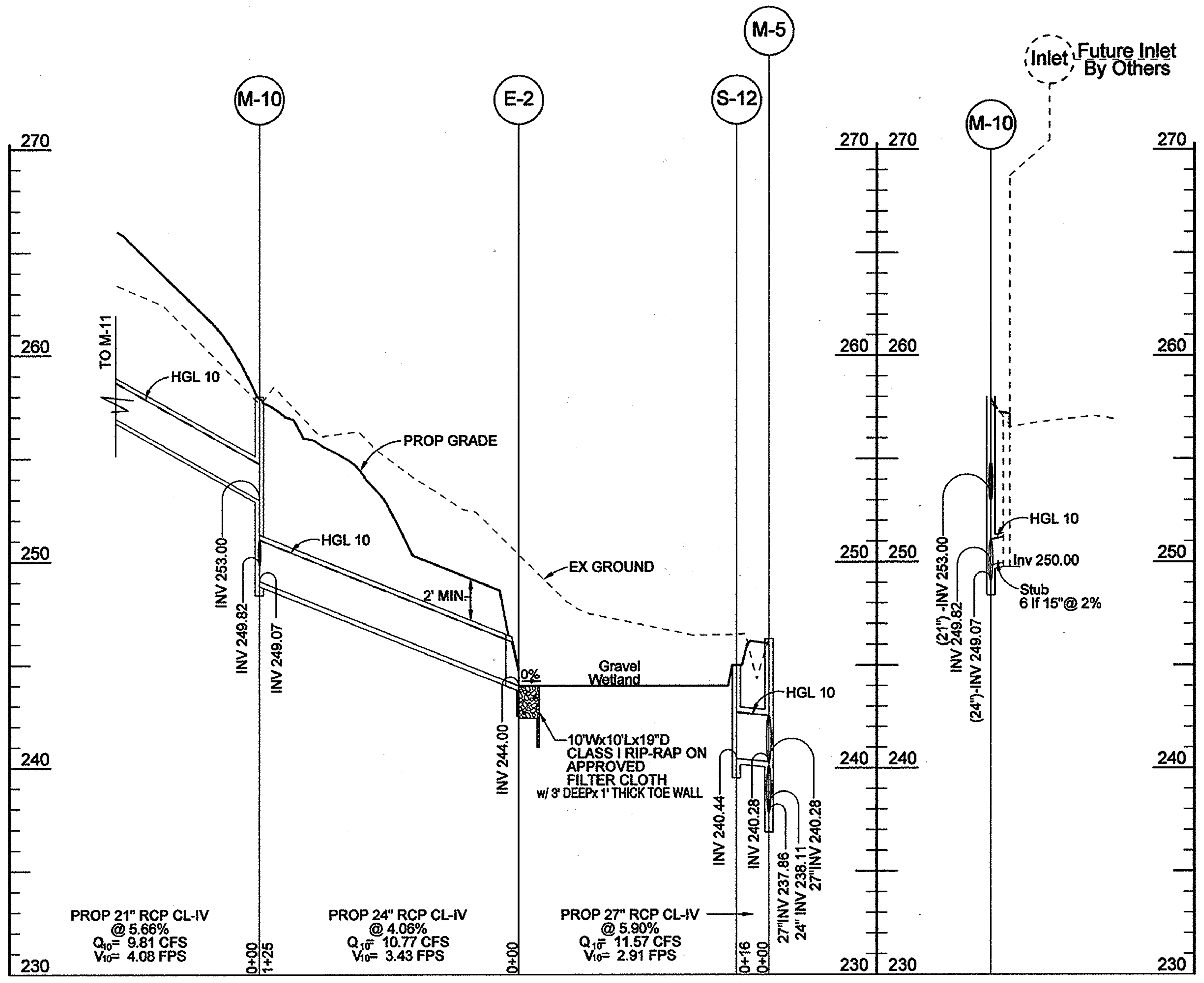

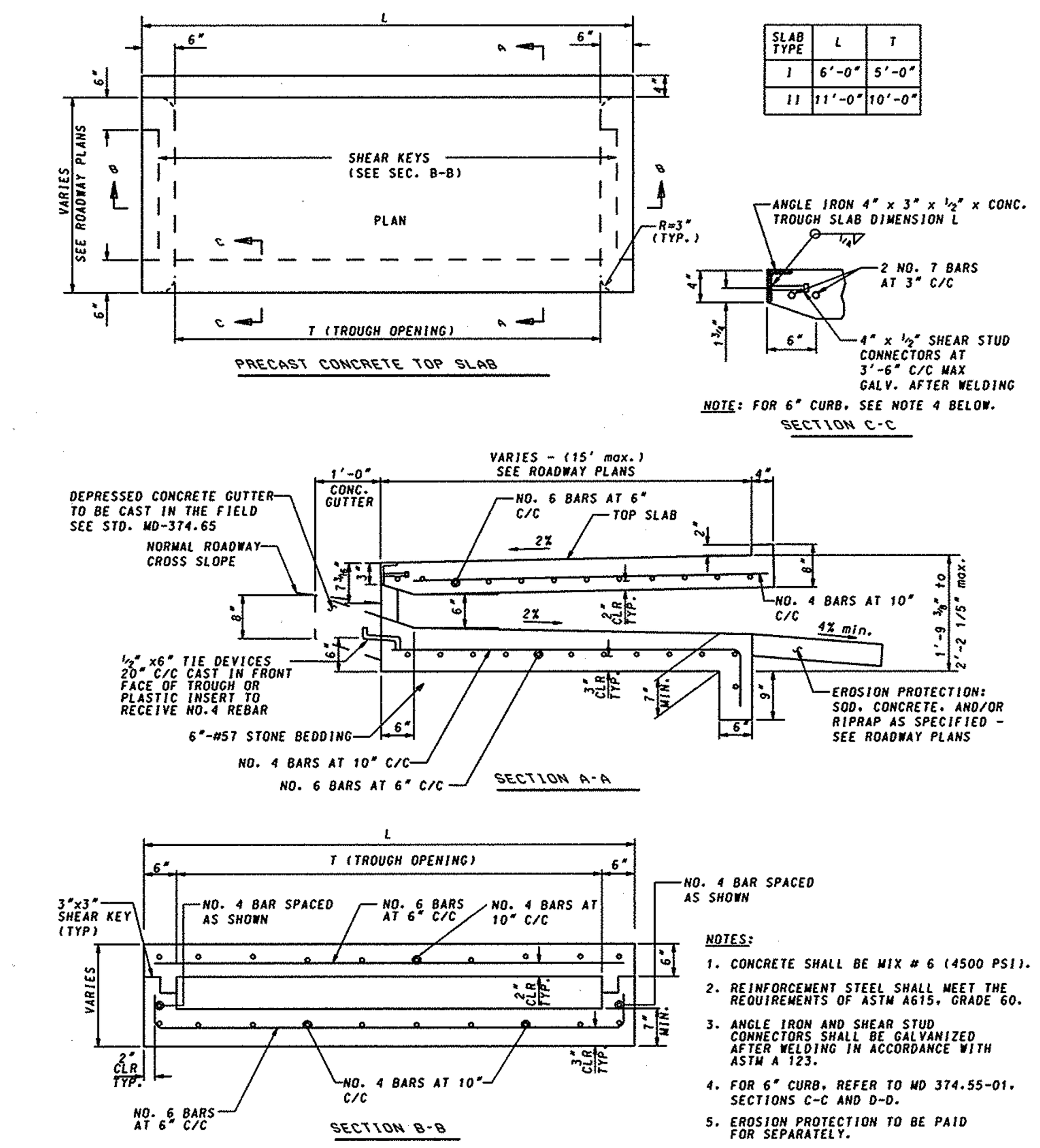

NOTES:

1. CONCRETE SHALL BE MIX # 6 (4500 PSI).
2. REINFORCEMENT STEEL SHALL MEET THE REQUIREMENTS OF ASTM A615, GRADE 60.
3. ANGLE IRON AND SHEAR STUD CONNECTORS SHALL BE GALVANIZED AFTER WELDING IN ACCORDANCE WITH ASTM A 123.
4. FOR 6" CURB, REFER TO MD 374.55-01, SECTIONS C-C AND D-D.
5. EROSION PROTECTION TO BE PAID FOR SEPARATELY.

MODIFIED FOR HOWARD COUNTY STANDARD CURB HEIGHT

PRECAST OR CAST-IN-PLACE
COG/COS OPENING
5' OR 10' ONLY

STANDARD NO. MD 374.68

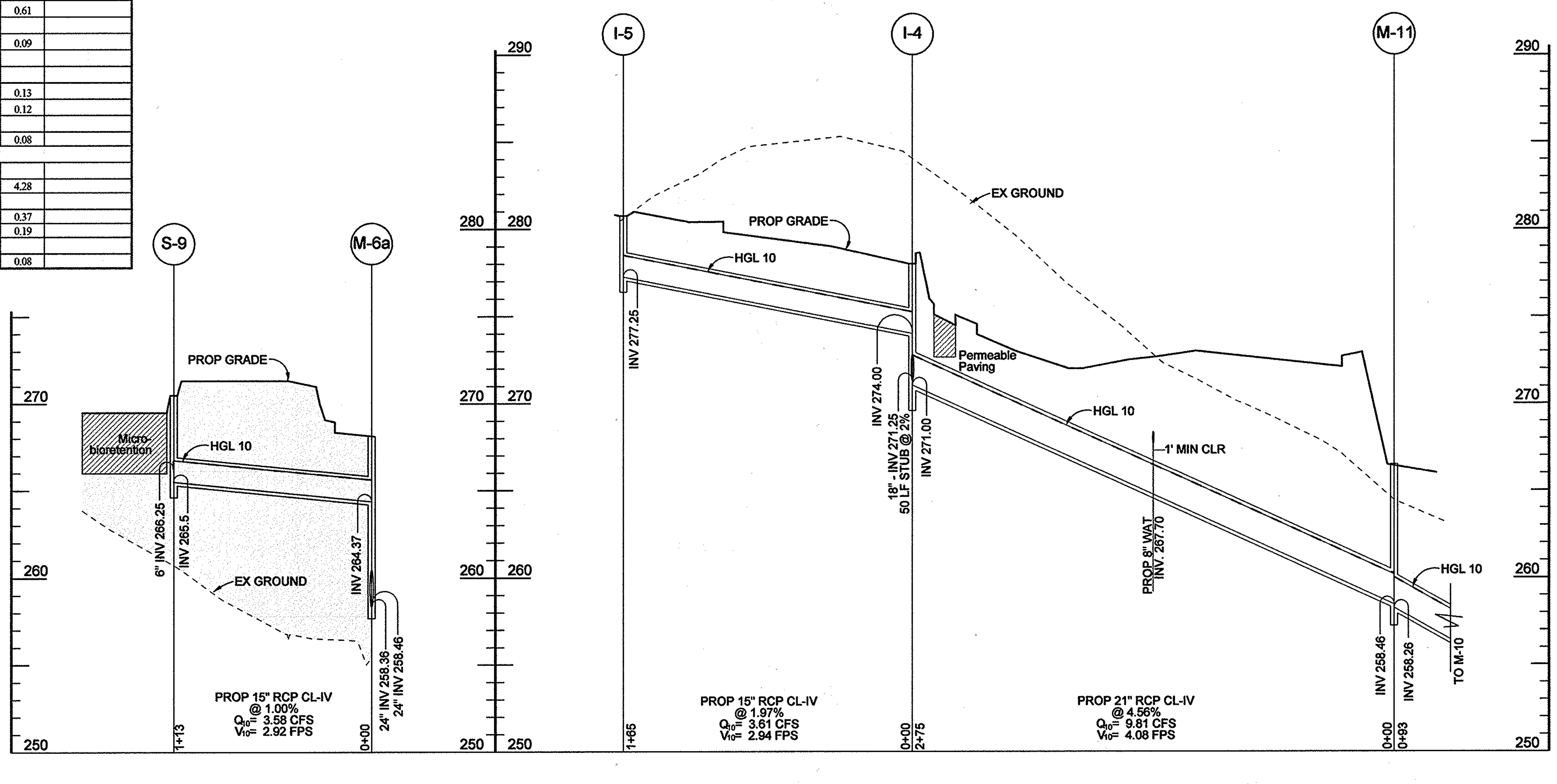

DENOTES CONTROLLED AND COMPACTED FILL AS CERTIFIED BY AN APPROVED SOILS ENGINEER AND CONFORMING TO HOWARD COUNTY SPECS OR AASHTO T-180.

COMPACTED SPECIFICATIONS FOR UTILITIES IN FILL

WHERE UTILITY PIPES ARE TO BE PLACED ON COMPACTED FILL, THE FOLLOWING APPLIES:

A. PRIOR TO PLACEMENT OF COMPACTED FILL, ANY SOFT OR OTHERWISE UNSUITABLE SOILS ENCOUNTERED AT THE EXISTING RAVINE BOTTOM OR SLOPE, SHALL BE UNDERCUT AND REMOVED FROM THE CONSTRUCTION AREA.
B. ACCEPTABLE COMPACTED FILL SHALL BE PLACED IN SIX INCH THICK LOOSE LIFTS AND COMPACTED AS DIRECTED BY THE SOILS ENGINEER.
C. THE COMPACTED FILL SHALL BE BENCHED INTO THE EXISTING VIRGIN SLOPES WITH EACH LIFT PLACED TO A SMOOTH TRANSITION FROM VIRGIN TO FILL SOILS.

STORM DRAIN PROFILES

H: 1" = 50'
V: 1" = 5'

50 0 50 100
SCALE IN FEET

NO.	DESCRIPTION	BY	DATE
1	Add temporary parking and submerged gravel wetland SWM-11A.	MWI	1/28/2015

Owner/Developer:
Merritt-MR, LLC
2066 Lord Baltimore Drive
Baltimore, Maryland 21244
ph: 410-298-2600
fx: 410-298-9644

"Professional Certification: I hereby certify that these documents were prepared or approved by me, and that I am a duly licensed professional engineer under the laws of the State of Maryland, License No. 29179, Expiration Date: [illegible]"

STATE OF MARYLAND · TANYA L. BENSINGER · No. 29179 · PROFESSIONAL ENGINEER · 1-28-15

MATIS WARFIELD
Consulting Engineers
10540 York Road, Suite M
Hunt Valley, Maryland 21030
PHONE 410.683.7004 FAX 410.683.1798
www.matiswarfield.com

APPROVED: Howard County Department of Planning and Zoning

[signature] CHIEF, DEVELOPMENT ENGINEERING DIVISION NY	4.8.15 DATE
[signature] CHIEF, DIVISION OF LAND DEVELOPMENT	4-13-15 DATE
[signature] DIRECTOR	4/10/15 DATE

REVISED SITE DEVELOPMENT PLAN

STORM DRAINAGE DETAILS

The Meadows Corporate Park Phase 2

6510 - 6518 MEADOW RIDGE ROAD MD RTE. 103
GREEN BUILDING

TAX MAP: 37;
PARCELS: A5-A9
ELECTION DISTRICT : 1
ZONE: POR

GENERAL OFFICE
SCALE : 1" = 50'
DATE : April 23, 2014
SHEET: 15 of 35

SDP-13-070

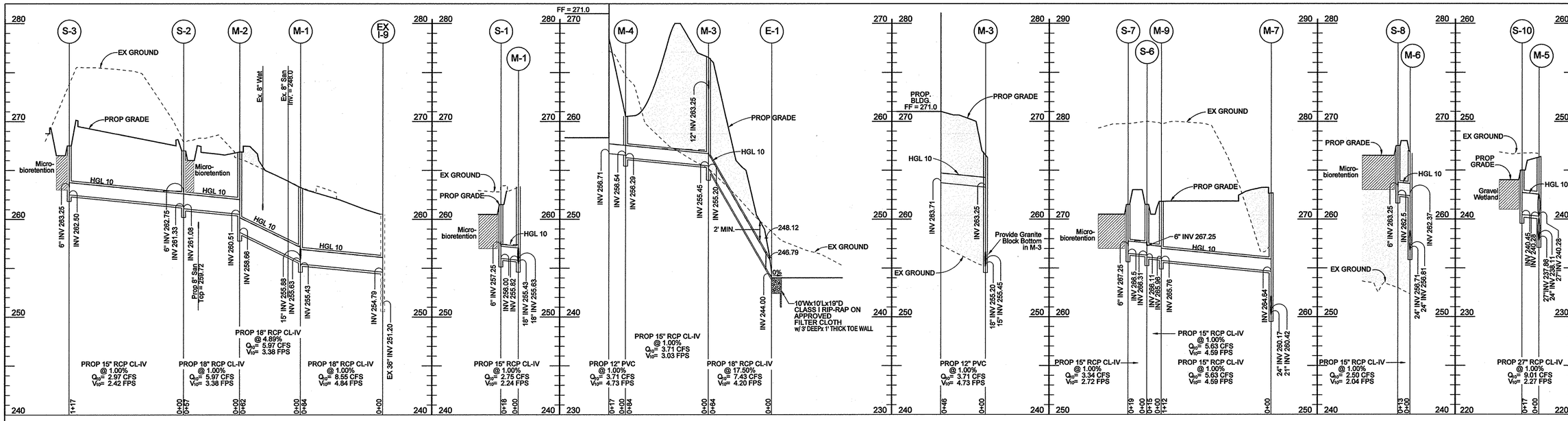

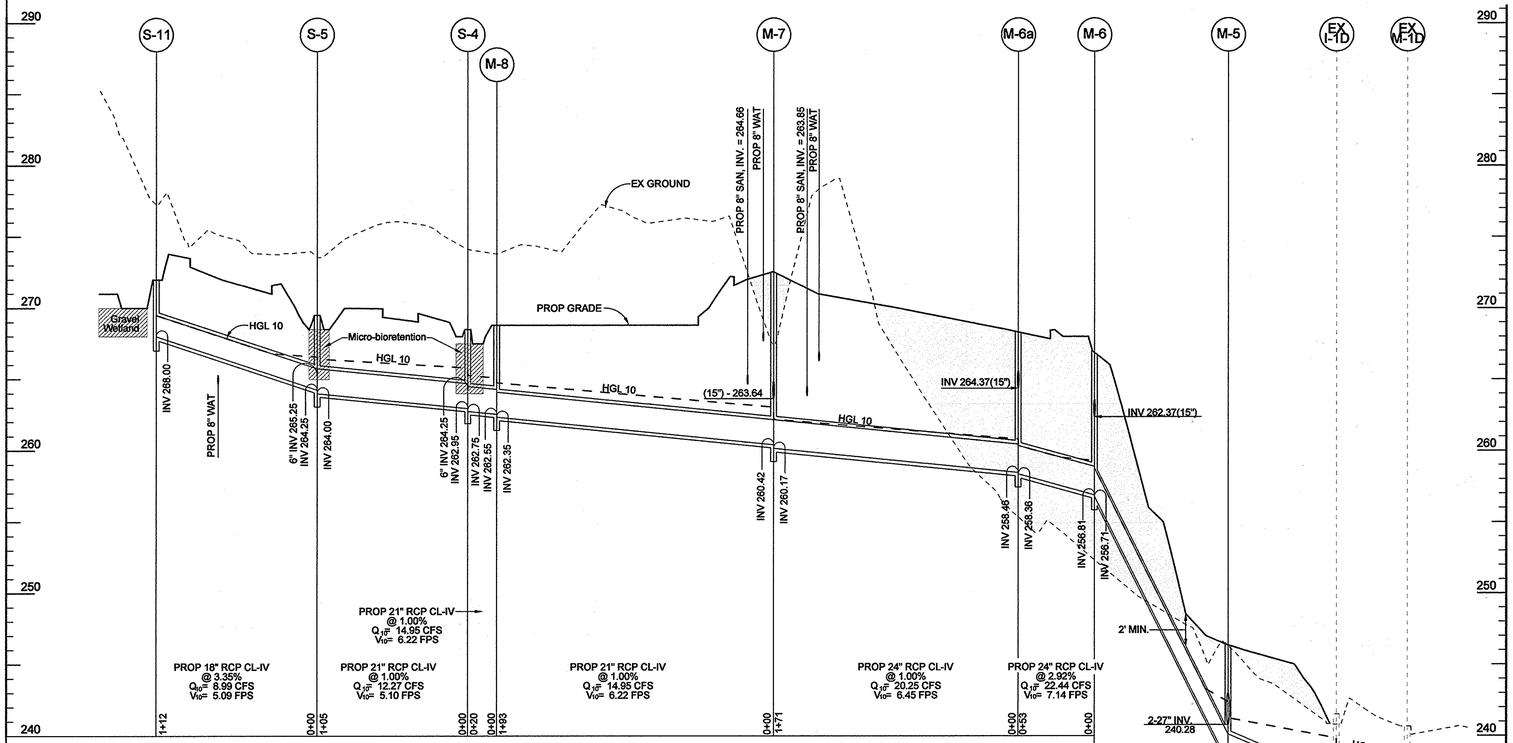

DENOTES CONTROLLED AND COMPACTED FILL AS CERTIFIED BY AN APPROVED SOILS ENGINEER AND CONFORMING TO HOWARD COUNTY SPECS OR AASHTO T-180.

COMPACTED SPECIFICATIONS FOR UTILITIES IN FILL

WHERE UTILITY PIPES ARE TO BE PLACED ON COMPACTED FILL, THE FOLLOWING APPLIES:
A. PRIOR TO PLACEMENT OF COMPACTED FILL, ANY SOFT OR OTHERWISE UNSUITABLE SOILS ENCOUNTERED AT THE EXISTING RAVINE BOTTOM OR SLOPE, SHALL BE UNDERCUT AND REMOVED FROM THE CONSTRUCTION AREA.
B. ACCEPTABLE COMPACTED FILL SHALL BE PLACED IN SIX INCH THICK LOOSE LIFTS AND COMPACTED AS DIRECTED BY THE SOILS ENGINEER.
C. THE COMPACTED FILL SHALL BE BENCHED INTO THE EXISTING VIRGIN SLOPES WITH EACH LIFT PLACED TO A SMOOTH TRANSITION FROM VIRGIN TO FILL SOILS.

STORM DRAIN PROFILES
H: 1" = 50'
V: 1" = 5'

STRUCTURE SCHEDULE

NO.	TYPE	INV. IN	INV. OUT	TOP ELEV.	LOCATION NORTHING	LOCATION EASTING	DETAIL
S-1	'S' INLET	257.25	256.00	261.50*	555,152.78	1,376,158.01	HOCO D-4.22
S-2	'S' INLET	262.75 261.33	269.15	267.00*	555,186.72	1,376,044.14	HOCO D-4.22
S-3	'S' INLET	263.25	262.50	267.50*	555,298.89	1,376,012.34	HOCO D-4.22
S-4	'S' INLET	264.25 262.95	256.20	268.50*	555,351.83	1,375,983.36	HOCO D-4.22
S-5	'S' INLET	265.25 264.25	264.00	269.50*	555,316.52	1,375,884.42	HOCO D-4.22
S-6	'S' INLET	267.25 266.31	266.11	271.50*	555,665.14	1,375,896.55	HOCO D-4.22
S-7	'S' INLET	267.25	266.50	271.50*	555,683.52	1,375,891.21	HOCO D-4.22
S-8	'S' INLET	263.25	262.50	267.50*	555,604.29	1,376,153.09	HOCO D-4.22
S-9	'S' INLET	266.25	265.50	270.50*	555,710.04	1,376,074.58	HOCO D-4.22
S-10	'S' INLET	—	240.45	245.00*	555,605.49	1,376,250.24	HOCO D-4.22
S-11	'S' INLET	—	268.00	272.00*	555,301.44	1,375,773.92	HOCO D-4.22
I-1	5' COS	—	—	263.84**	555,103.90	1,376,128.96	MD 374.68
I-2	5' COG	—	—	272.90**	555,335.91	1,375,841.59	MD 374.68
I-3	5' COS	—	—	273.68**	555,353.84	1,375,793.87	MD 374.68
M-1	STD. MH	255.82 255.63	255.43	263.25	555,164.33	1,376,154.75	HOCO G-5.12
M-2	STD. MH	260.51	258.66	266.90	555,194.60	1,376,100.73	HOCO G-5.12
M-3***	STD. MH	263.25 255.45	255.20	266.60	555,450.97	1,376,224.34	HOCO G-5.12
M-4	STD. MH	256.54	256.29	261.00	555,366.76	1,376,218.46	HOCO G-5.12
M-5	STD. MH	240.28 238.11	237.86	246.10	555,622.81	1,376,249.70	HOCO G-5.13
M-6	STD. MH	262.37 256.81	256.71	266.85	555,616.06	1,376,156.58	HOCO G-5.12
M-6a	STD. MH	264.37 258.46	258.36	268.15	555,601.26	1,376,105.12	HOCO G-5.12
M-7	STD. MH	264.64 260.42	260.17	272.90	555,554.99	1,375,941.07	HOCO G-5.12
M-8	STD. MH	262.55 262.37	262.35	268.80	555,369.08	1,375,993.79	HOCO G-5.12
M-9	STD. MH	265.96	265.76	271.80	555,662.63	1,375,911.10	HOCO G-5.12
E-1	END SECT	—	244.00	—	555,496.84	1,376,269.54	HOCO D-5.51
S-12	'S' INLET	—	240.44	245.00*	555,637.71	1,376,245.01	HOCO D-4.22
E-2	END SECT	—	244.00	—	555,750.74	1,376,155.93	HOCO D-5.51
M-10	STD. MH	253.00 249.82	249.07	258.00	555,821.95	1,376,107.38	HOCO G-5.12
M-11	STD. MH	266.50	258.46	258.26	555,870.81	1,376,028.48	HOCO G-5.12
I-4	STD. MH	274.00 271.25	271.00	278.00	555,760.27	1,375,777.03	HOCO D-4.31
I-5	STD. MH	—	277.25	280.75	555,596.60	1,375,759.33	HOCO D-4.14

* Denotes Grate Elevation
**Denotes Top of Curb at Centerline of Inlet
***Denotes Granite Block Bottom

SCALE IN FEET: 50 0 50 100

PIPE SCHEDULE

SIZE (IN.)	CLASSIFICATION	TYPE	TOTAL LENGTH (FT.)
12	SCH 40	PVC	63
15	IV	RCP	665
18	IV	RCP	429
21	IV	RCP	686
24	IV	RCP	442
27	IV	RCP	108

NO.	DESCRIPTION	BY	DATE
1	Add temporary parking and submerged gravel wetland SWM-11A.	MWI	1/28/2016

Owner/Developer:
Merritt-MR, LLC
2066 Lord Baltimore Drive
Baltimore, Maryland 21244
ph: 410-298-2600
fx: 410-298-9644

1-28-15
STATE OF MARYLAND
DANIAL L. DENSINGER
No. 29179
PROFESSIONAL ENGINEER

MATIS WARFIELD
Consulting Engineers
10540 York Road, Suite M
Hunt Valley, Maryland 21030
PHONE 410.683.7004 FAX 410.683.1798
www.matiswarfield.com

APPROVED: Howard County Department of Planning and Zoning

CHIEF, DEVELOPMENT ENGINEERING DIVISION — DATE 4.8.15
CHIEF, DIVISION OF LAND DEVELOPMENT — DATE 4-13-15
DIRECTOR — DATE 4/8/15

REVISED SITE DEVELOPMENT PLAN
STORM DRAINAGE PROFILES
The Meadows Corporate Park Phase 2
6510 - 6518 MEADOW RIDGE ROAD MD RTE. 103
GREEN BUILDING

TAX MAP: 37; PARCELS: A6-A9
ELECTION DISTRICT : 1
ZONE: POR

GENERAL OFFICE
SCALE : 1" = 50'
DATE : April 23, 2014
SHEET: 16 of 35

SDP-13-070

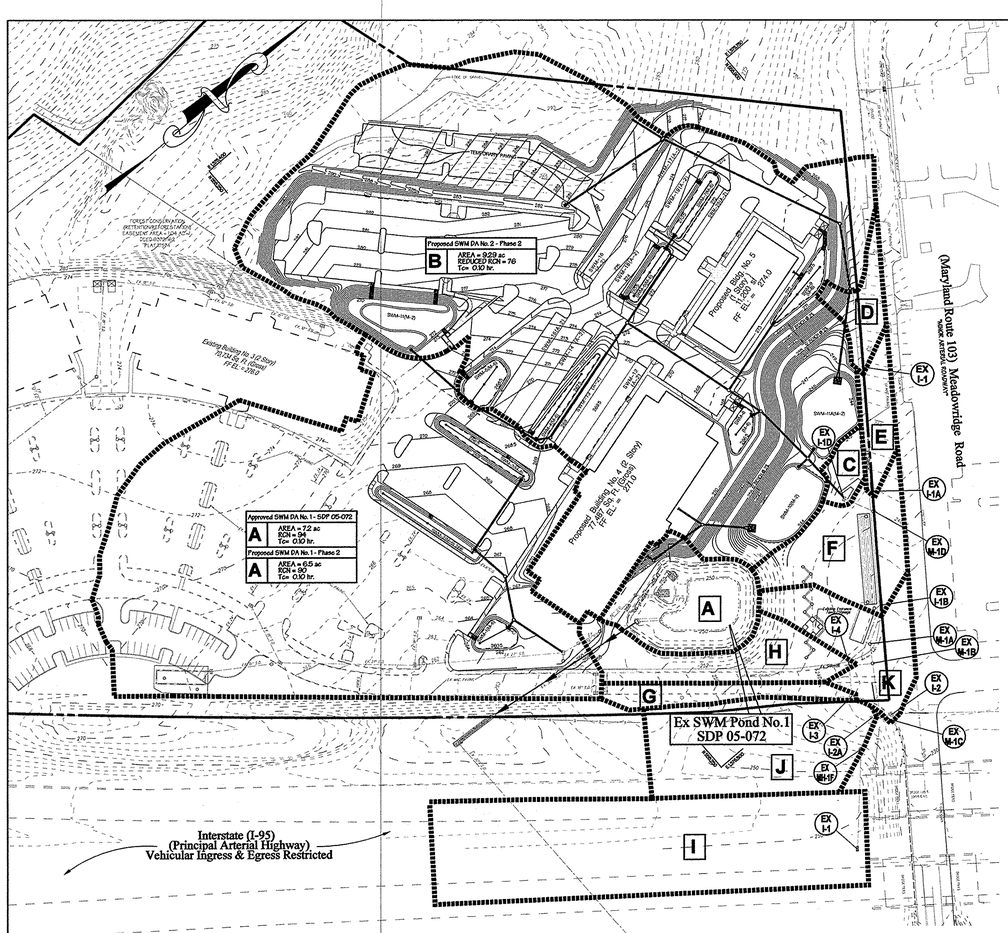

STORM DRAINAGE AREA MAP

1"= 100'

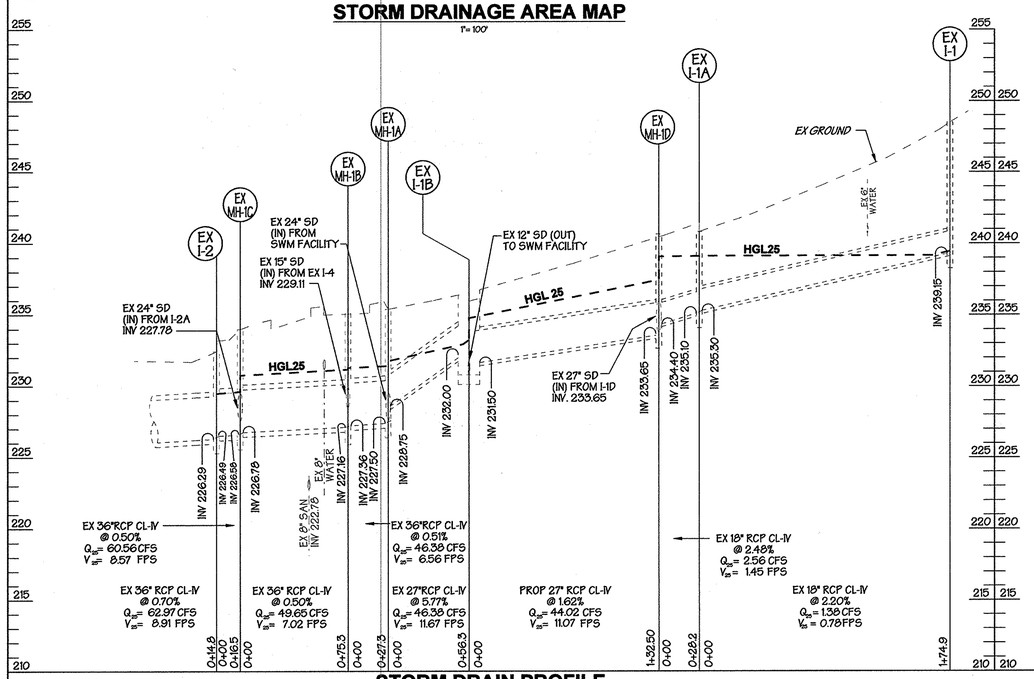

STORM DRAIN PROFILE

SCALE: HORZ: 1" = 50'
VERT: 1" = 5'

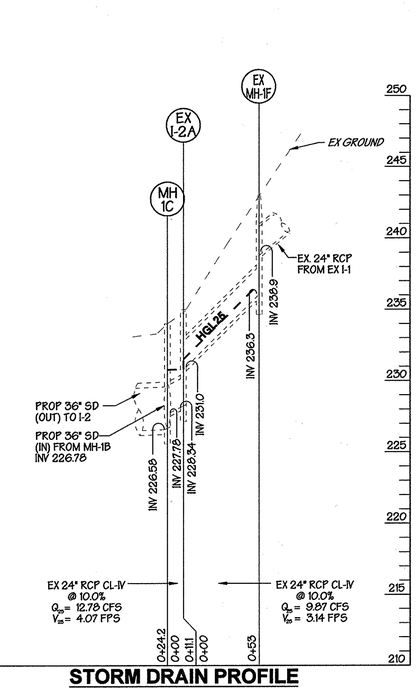

STORM DRAIN PROFILE

SCALE: HORZ: 1" = 50'
VERT: 1" = 5'

LOCATION		AREA	ACRES		COEFF	CA	Σ CA	TIME CONC. (MIN.)			INTEN. I	Q = CIA	PIPE	n = 0.013			Pipe Time	REMARKS
FROM	TO		Sub.	Total	C	25 YR		Inlet	Drain	Total	25YR	(CFS)	SIZE	SLOPE	VEL.	LGTH.	(Min)	
M-5	ex I-1D	B		9.29		0.56	5.18			8.24	8.40	43.55	27	1.98%	10.95	75	0.11	From TR-55
	ex I-1D	C	0.10		0.30	0.03				5.00	9.76	0.29						
ex I-1D	ex M-1D	B-C		9.39			5.21	8.24	0.11	8.36	8.40	43.80	27	2.00%	11.02	49.5	0.07	
	ex I-1	D	0.19		0.74	0.14				5.00	9.76	1.38						
ex I-1	ex I-1A	D		0.19			0.14			5.00	9.76	1.38	18	0.02%	0.78	174.9	3.73	
	ex I-1A	E	0.19		0.95	0.18				5.00	9.76	1.76						
ex I-1A	ex M-1D	D-E		0.38			0.32	5.00	3.73	8.73	7.95	2.56	18	0.06%	1.45	28.2	0.32	
ex M-1D	ex I-1B	B-E		9.77			5.54	8.73	0.07	8.80	7.95	44.02	27	2.02%	11.07	132.5	0.20	
	ex I-1B	F	0.56		0.53	0.30				5.00	9.76	2.91						
ex I-1B	ex M-1A	B-F		10.33			5.83	8.80	0.20	9.00	7.95	46.38	27	2.24%	11.67	56.3	0.08	
ex M-1A	ex M-1B	B-F		10.33			5.83	9.00	0.08	9.08	7.95	46.38	36	0.48%	6.56	27.3	0.07	
	ex I-3	G	0.22		0.68	0.15				5.00	9.76	1.47						
ex I-3	ex I-4	G		0.22			0.15			5.00	9.76	1.47	15	0.05%	1.20	44	0.61	
	ex I-4	H	0.50		0.52	0.26				5.00	9.76	2.54						
ex I-4	ex M-1B	G-H		0.72			0.41	5.00	0.61	5.61	9.31	3.83	15	0.35%	3.12	33.2	0.18	
ex M-1B	ex M-1C	B-H		11.05			6.25	9.08	0.07	9.15	7.95	49.65	36	0.55%	7.02	75.3	0.18	
	ex I-1	I	1.92		0.53	1.01				5.00	9.76	9.87						
ex I-1	ex M-1F	I		1.92			1.01			5.00	9.76	9.87	24	0.19%	3.14	139	0.74	
ex M-1F	ex I-2A	I		1.92			1.01			5.00	9.76	9.87	24	0.19%	3.14	53	0.28	
	ex I-2A	J	0.90		0.40	0.36				5.00	9.76	3.52						
ex I-2A	ex M-1C	I-J		2.82			1.37	5.00	0.74	5.74	9.31	12.78	24	0.32%	4.07	11.1	0.05	
ex M-1C	ex I-2	B-J		13.87			7.62	9.15	0.18	9.33	7.95	60.56	36	0.82%	8.57	16.5	0.03	
	ex I-2	K	0.49		0.62	0.30				5.00	9.76	2.96						
ex I-2	out	B-K		14.36			7.92	9.33	0.03	9.36	7.95	62.97	36	0.89%	8.91	400	0.75	

NO.	DESCRIPTION	BY	DATE
1	Add temporary parking and submerged gravel wetland SWM-11A.	MWI	1/28/2015

Owner/Developer:
Merritt-MR, LLC
2066 Lord Baltimore Drive
Baltimore, Maryland 21244
ph: 410-298-2600
fx: 410-298-9844

Professional Certification. I hereby certify that these documents were prepared or approved by me, and that I am a duly licensed professional engineer under the laws of the State of Maryland, License No. 29179, Expiration Date: 07-28-15

STATE OF MARYLAND — TANYA L. BENSINGER — No. 29179 — PROFESSIONAL ENGINEER — 1-28-15

MATIS WARFIELD
Consulting Engineers
10540 York Road, Suite M
Hunt Valley, Maryland 21030
PHONE 410.683.7004 FAX 410.683.1798
www.matiswarfield.com

100 0 100 200
SCALE IN FEET

APPROVED: Howard County Department of Planning and Zoning

CHIEF, DEVELOPMENT ENGINEERING DIVISION — DATE 4.8.15
CHIEF, DIVISION OF LAND DEVELOPMENT — DATE 4.13.15
DIRECTOR — DATE 4/21/15

REVISED SITE DEVELOPMENT PLAN

SHA SITE OUTFALLS DRAINAGE MAP
The Meadows Corporate Park Phase 2

6510 - 6518 MEADOW RIDGE ROAD MD RTE. 103
GREEN BUILDING

TAX MAP: 37;
PARCELS: A5-A9
ELECTION DISTRICT : 1
ZONE: POR

GENERAL OFFICE
SCALE : 1" = 50'
DATE : April 23, 2014
SHEET: 17 of 35

SDP-13-070

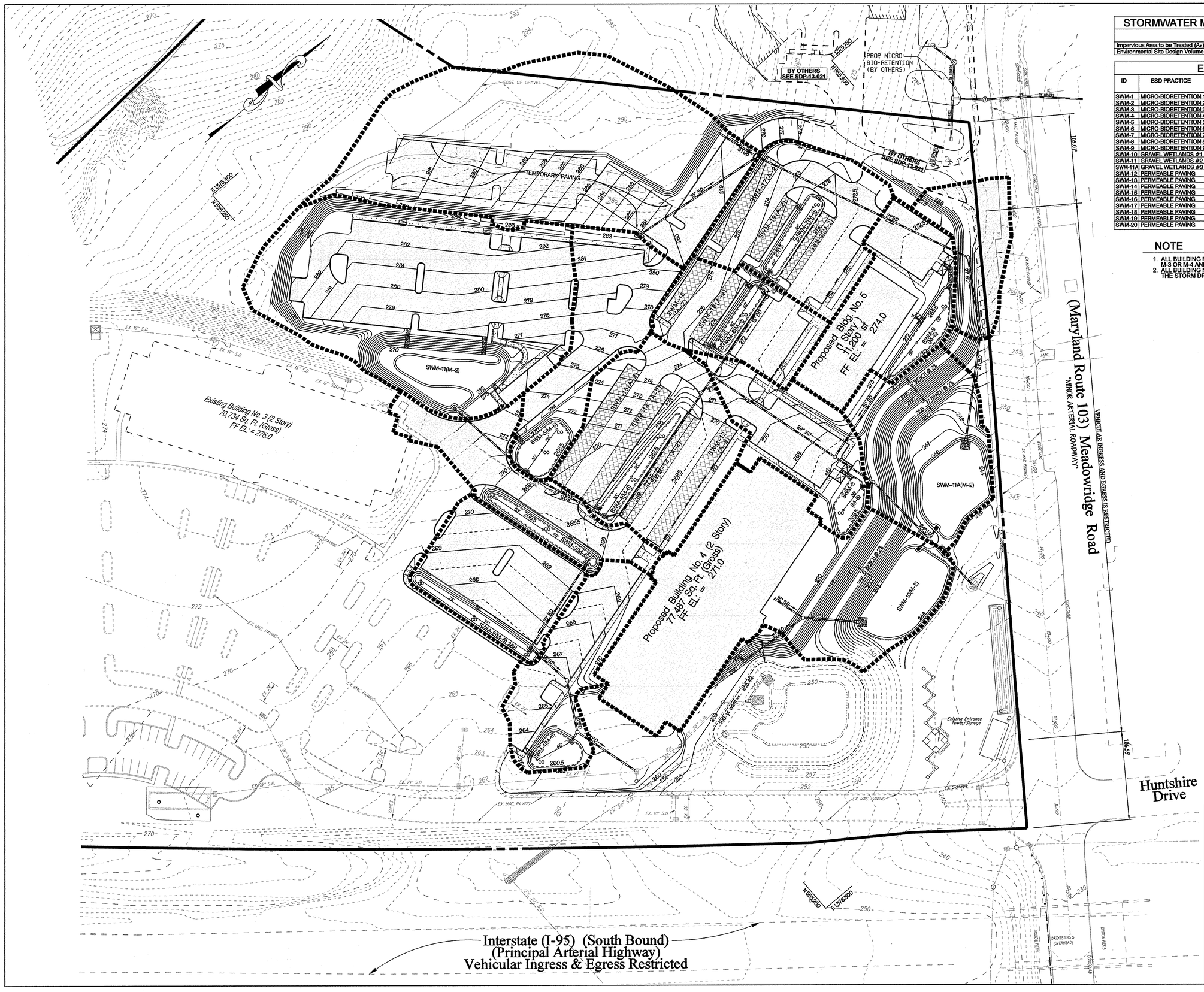

STORMWATER MANAGEMENT SUMMARY

	REQ'D	PROV'D
Impervious Area to be Treated (A_T)	5.56 AC.	5.73 AC.
Environmental Site Design Volume (ESDv)	40,112 C.F.	42,404 C.F.

ESDv SUMMARY

ID	ESD PRACTICE	TREATMENT VOLUME	SURFACE AREA	DRAINAGE AREA	IMPERVIOUS AREA
SWM-1	MICRO-BIORETENTION 1	2011 C.F.	1550 S.F.	0.47 AC.	0.28 AC.
SWM-2	MICRO-BIORETENTION 2	2638 C.F.	2015 S.F.	0.50 AC.	0.38 AC.
SWM-3	MICRO-BIORETENTION 3	2261 C.F.	1750 S.F.	0.47 AC.	0.32 AC.
SWM-4	MICRO-BIORETENTION 4	2061 C.F.	1550 S.F.	0.55 AC.	0.28 AC.
SWM-5	MICRO-BIORETENTION 5	2419 C.F.	1825 S.F.	0.55 AC.	0.34 AC.
SWM-6	MICRO-BIORETENTION 6	1593 C.F.	1200 S.F.	0.35 AC.	0.22 AC.
SWM-7	MICRO-BIORETENTION 7	2140 C.F.	1605 S.F.	0.53 AC.	0.30 AC.
SWM-8	MICRO-BIORETENTION 8	1785 C.F.	1340 S.F.	0.44 AC.	0.25 AC.
SWM-9	MICRO-BIORETENTION 9	2758 C.F.	2100 S.F.	0.56 AC.	0.39 AC.
SWM-10	GRAVEL WETLANDS #1	6550 C.F.	6550 S.F.	1.53 AC.	0.91 AC.
SWM-11	GRAVEL WETLANDS #2	7000 C.F.	7000 S.F.	1.62 AC.	0.88 AC.
SWM-11A	GRAVEL WETLANDS #3	6000 C.F.	6000 C.F.	2.69 AC.	0.72 AC.
SWM-12	PERMEABLE PAVING		2916 S.F.		
SWM-13	PERMEABLE PAVING		2592 S.F.		
SWM-14	PERMEABLE PAVING		2916 S.F.		
SWM-15	PERMEABLE PAVING		2916 S.F.		
SWM-16	PERMEABLE PAVING	3188 C.F.	1782 S.F.	0.46 AC.	0.46 AC.
SWM-17	PERMEABLE PAVING		2106 S.F.		
SWM-18	PERMEABLE PAVING		1620 S.F.		
SWM-19	PERMEABLE PAVING		1458 S.F.		
SWM-20	PERMEABLE PAVING		1620 S.F.		
					5.73 AC.

NOTE

1. ALL BUILDING No. 4 ROOF LEADERS SHALL BE CONNECTED TO M-3 OR M-4 AND DRAIN INTO SWM-10.
2. ALL BUILDING No.5 ROOF LEADERS SHALL BE CONNECTED TO THE STORM DRAIN SYSTEM AND DRAIN INTO SWM-9.

50 0 50 100
SCALE IN FEET

NO.	DESCRIPTION	BY	DATE
1	Add temporary parking and submerged gravel wetland SWM-11A.	MWI	1/28/2015

Owner/Developer:
Merritt-MR, LLC
2066 Lord Baltimore Drive
Baltimore, Maryland 21244
ph: 410-298-2600
fx: 410-298-9644

MATIS WARFIELD
Consulting Engineers
10540 York Road, Suite M
Hunt Valley, Maryland 21030
PHONE 410.683.7004 FAX 410.683.1798
www.matiswarfield.com

APPROVED: Howard County Department of Planning and Zoning

CHIEF, DEVELOPMENT ENGINEERING DIVISION — DATE 4.8.15

CHIEF, DIVISION OF LAND DEVELOPMENT — DATE 4-13-15

DIRECTOR — DATE 4/13/15

REVISED SITE DEVELOPMENT PLAN

ESD DRAINAGE AREA MAP
The Meadows Corporate Park
Phase 2

6510 - 6518 MEADOW RIDGE ROAD MD RTE. 103
GREEN BUILDING

TAX MAP: 37;
PARCELS: A5-A9
ELECTION DISTRICT : 1
ZONE: POR

GENERAL OFFICE
SCALE : 1" = 50'
DATE : April 23, 2014
SHEET: 18 of 35

SDP-13-070

MICRO-BIORETENTION CONSTRUCTION CRITERIA:

EROSION AND SEDIMENT CONTROL: Micro-bioretention practices should not be constructed until the Contributing drainage area is stabilized.

SOIL COMPACTION: Excavation should be conducted in dry conditions with equipment located outside of the practice to minimize bottom and sidewall compaction. Only lightweight, low ground-contact equipment should be used within micro-bioretention practices and the bottom scarified before installing underdrains and filtering media.

UNDERDRAIN INSTALLATION: Gravel for the underdrain system should be clean, washed, and free of fines. Underdrain pipes should be checked to ensure that both the material and perforations meet specifications. The upstream ends of the underdrain pipe should be capped prior to installation.

FILTER MEDIA INSTALLATION: Bioretention soils may be mixed on-site before placement. However, soils should not be placed under saturated conditions. The filter media should be placed and graded using excavators or backhoes operating adjacent to the practice and be placed in horizontal layers (12 inches per lift maximum). Proper compaction of the media will occur naturally. Spraying or sprinkling water on each lift until saturated may quicken settling times.

LANDSCAPE INSTALLATION: The optimum planting time is during the Fall. Spring planting is also acceptable but may require watering.

INSPECTION:
Regular inspections shall be made during the following stages of construction:
* During excavation to subgrade and placement and backfill of underdrain systems.
* During placement of filter media.
* During construction of appurtenant conveyance.
* Upon completion of final grading and establishment of permanent stabilization

B.4.C SPECIFICATIONS FOR MICRO-BIORETENTION. RAIN GARDENS, LANDSCAPE INFILTRATION & INFILTRATION BERMS

1. MATERIAL SPECIFICATIONS
The allowable materials to be used in these practices are detailed in Table B.4.1.

2. FILTERING MEDIA OR PLANTING SOIL
The soil shall be a uniform mix, free of stones, stumps, roots or other similar objects larger than two inches. No other materials or substances shall be mixed or dumped within the micro-bioretention practice that may be harmful to plant growth, or prove a hindrance to the planting or maintenance operations. The planting soil shall be free of Bermuda grass, Quackgrass, Johnson grass, or other noxious weeds as specified under COMAR 15.08.01.05.

The planting soil shall be tested and shall meet the following criteria:
* Soil Component - Loamy Sand or Sandy Loam (USDA Soil Textural Classification)
* Organic Content - Minimum 10% by dry weight (ASTM D 2974). In general, this can be met with a mixture of loamy sand (60%-65%) and compost (35% to 40%) or sandy loam (30%), coarse sand (30%), and compost (40%).
* Clay Content - Media shall have a clay content of less than 5%.
* pH Range - Should be between 5.5 - 7.0. Amendments (e.g., lime, iron sulfate plus sulfur) may be mixed into the soil to increase or decrease pH.

There shall be at least one soil test per project. Each test shall consist of both the standard soil test for pH, and additional tests of organic matter, and soluble salts. A textural analysis is required from the site stockpiled topsoil. If topsoil is imported, then a texture analysis shall be performed for each location where the topsoil was excavated.

3. COMPACTION
It is very important to minimize compaction of both the base of bioretention practices and the required backfill. When possible, use excavation hoes to remove original soil. If practices are excavated using a loader, the contractor should use wide track or marsh track equipment, or light equipment with turf type tires. Use of equipment with narrow tracks or narrow tires, rubber tires with large lugs, or high-pressure tires will cause excessive compaction resulting in reduced infiltration rates and is not acceptable. Compaction will significantly contribute to design failure.

Compaction can be alleviated at the base of the bioretention facility by using a primary tilling operation such as a chisel plow, ripper, or subsoiler. These tilling operations are to refracture the soil profile through the 12 inch compaction zone. Substitute methods must be approved by the engineer. Rototillers typically do not till deep enough to reduce the effects of compaction from heavy equipment.

Rototill 2 to 3 inches of sand into the base of the bioretention facility before backfilling the optional sand layer. Pump any ponded water before preparing (rototilling) base.

When backfilling the topsoil over the sand layer, first place 3 to 4 inches of topsoil over the sand, then rototill the sand/topsoil to create a gradation zone. Backfill the remainder of the topsoil to final grade.

When backfilling the bioretention facility, place soil in lifts 12" to 18". Do not use heavy equipment within the bioretention basin. Heavy equipment can be used around the perimeter of the basin to supply soils and sand. Grade bioretention materials with light equipment such as a compact loader or a dozer/loader with marsh tracks.

4. PLANT MATERIAL
Recommended plant material for micro-bioretention practices can be found in Appendix A, Section A.2.3.

5. PLANT INSTALLATION
Compost is a better organic material source, is less likely to float, and should be placed in the invert and other low areas. Mulch should be placed in surrounding to a uniform thickness of 2" to 3". Shredded or chipped hardwood mulch is the only accepted mulch. Pine mulch and wood chips will float and move to the perimeter of the bioretention area during a storm event and are not acceptable. Shredded mulch must be well aged (6 to 12 months) for acceptance.

Rootstock of the plant material shall be kept moist during transport and on-site storage. The plant root ball should be planted so 1/8th of the ball is above final grade surface. The diameter of the planting pit shall be at least six inches larger than the diameter of the planting ball. Set and maintain the plant straight during the entire planting process. Thoroughly water ground bed cover after installation.
Trees shall be braced using 2" by 2" stakes only as necessary and for the first growing season only. Stakes are to be equally spaced on the outside of the tree ball.

Grasses and legume seed should be drilled into the soil to a depth of at least one inch. Grass nd legume plugs shall be planted following the non-grass ground cover planting specifications.

The topsoil specifications provide enough organic material to adequately supply nutrients from natural cycling. The primary function of the bioretention structure is to improve water quality. Adding fertilizers defeats, or at a minimum, impedes this goal. Only add fertilizer if wood chips or mulch are used to amend the soil. Rototill urea fertilizer at a rate of 2 pounds per 1000 square feet.

6. UNDERDRAINS
Underdrains should meet the following criteria:
* Pipe- Should be 4" to 6" diameter, slotted or perforated rigid plastic pipe (ASTMF 758, Type PS 28, or AASHTO-M-278) in a gravel layer. The preferred material is slotted, 4" rigid pipe (e.g., PVC or HDPE).
* Perforations - If perforated pipe is used, perforations should be 3/8" diameter located 6" on center with a minimum of four holes per row. Pipe shall be wrapped with a ¼" (No. 4 or 4x4) galvanized hardware cloth.
* Gravel - The gravel layer (No. 57 stone preferred) shall be at least 3" thick above and below the underdrain.
* The main collector pipe shall be at a minimum 0.5% slope.
* A rigid, non-perforated observation well must be provided (one per every 1,0000 square feet) to provide a clean-out port and monitor performance of the filter.
* A 4" layer of pea gravel (1/8" to 3/8" stone) shall be located between the filter media and underdrain to prevent migration of fines into the underdrain. This layer may be considered part of the filter bed when bed thickness exceeds 24".

The main collector pipe for underdrain systems shall be constructed at a minimum slope of 0.5%. Observation wells and/or clean-out pipes must be provided (one minimum per every 1000 square feet of surface area).

7. MISCELLANEOUS
These practices may not be constructed until all contributing drainage area has been stabilized

OPERATION AND MAINTENANCE SCHEDULE FOR MICRO-BIORETENTION (M-6),

1. The Owner shall maintain the plant material, mulch layer and soil layer annually. Maintenance of mulch and soil is limited to correcting areas of erosion or wash out. Any mulch replacement shall be done in the spring. Plant material shall be checked for disease and insect infestation and maintenance will address dead material and pruning. Acceptable replacement plant material is limited to the following: 2000 Maryland Stormwater Design Manual Volume II, Table A.4.1 and 2.
2. The Owner shall perform a plant in the spring and in the fall of each year. During the inspection, the Owner shall remove dead and diseased vegetation considered beyond treatment, replace dead plant material with acceptable replacement plant material, treat diseased trees and shrubs, and replace all deficient stakes and wires.
3. The Owner shall inspect the mulch each spring. The mulch shall be replaced every two to three years. The previous mulch layer shall be removed before the new layer is applied.
4. The Owner shall correct soil erosion on an as needed basis, with a minimum of once per month and after each heavy storm.

INSPECTION REQUIREMENTS FOR MICRO-BIORETENTION FACILITIES

Regular inspections shall be made during the following stages of construction:
1. During excavation to subgrade and placement and backfill of underdrain systems,
2. during placement of alter media.
3. During construction of appurtenant conveyance.
4. Upon completion of final grading and establishment of permanent stabilization,

Appendix B.4. Construction Specifications for Environmental Site Design Practices

Table B.4.1 Materials Specifications for Micro-Bioretention, Rain Gardens & Landscape Infiltration-

Material	Specification	Size	Notes
Plantings	see Appendix A, Table A.4	n/a	plantings are site-specific
Planting soil [2' to 4' deep]	loamy sand (60 - 65%) & compost (35 – 40%) or sandy loam (30%), coarse sand (30%) & compost (40%)	n/a	USDA soil types loamy sand or sandy loam; clay content < 5%
Organic content	Min. 10% by dry weight (ASTM D 2974)		
Mulch	shredded hardwood		aged 6 months, minimum; no pine or wood chips
Pea gravel diaphragm	pea gravel: ASTM-D-448	NO. 8 OR NO. 9 (1/8" TO 3/8")	
Curtain drain	ornamental stone: washed cobbles	stone: 2" to 5"	
Geotextile		n/a	PE Type 1 nonwoven
Gravel (underdrains and infiltration berms)	AASHTO M-43	NO. 57 OR NO. 6 AGGREGATE (3/8" to 3/4")	
Underdrain piping	F 758, Type PS 28 or AASHTO M-278	4" to 6" rigid schedule 40 PVC or SDR35	Slotted or perforated pipe; 3/8" perf. @ 6" on center, 4 holes per row; minimum of 3" of gravel over pipes; not necessary underneath pipes. Perforated pipe shall be wrapped with ¼-inch galvanized hardware cloth
Poured in place concrete (if required)	MSHA Mix No. 3; f'_c = 3500 psi @ 28 days, normal weight, air-entrained; reinforcing to meet ASTM-615-60	n/a	on-site testing of poured-in-place concrete required: 28 day strength and slump test; all concrete design (cast-in-place or pre-cast) *not using previously approved State or local standards* requires design drawings sealed and approved by a professional structural engineer licensed in the State of Maryland - design to include meeting ACI Code 350.R/89; vertical loading [H-10 or H-20]; allowable horizontal loading (based on soil pressures); and analysis of potential cracking
Sand	AASHTO-M-6 or ASTM-C-33	0.02" to 0.04"	Sand substitutions such as Diabase and Graystone (AASHTO) #10 are not acceptable. No calcium carbonated or dolomitic sand substitutions are acceptable. No "rock dust" can be used for sand.

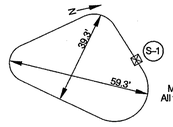

Minimum Surface Area
All filter layers = 1550 s.f.

SWM-1 Micro-Bioretention Dimensions
NOT TO SCALE

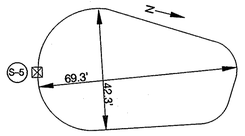

Minimum Surface Area
All filter layers = 1825 s.f.

SWM-5 Micro-Bioretention Dimensions
NOT TO SCALE

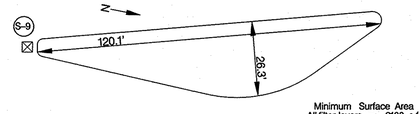

Minimum Surface Area
All filter layers = 2100 s.f.

SWM-9 Micro-Bioretention Dimensions
NOT TO SCALE

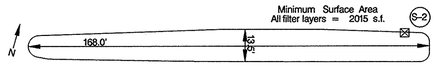

Minimum Surface Area
All filter layers = 2015 s.f.

SWM-2 Micro-Bioretention Dimensions
NOT TO SCALE

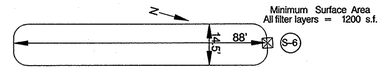

Minimum Surface Area
All filter layers = 1200 s.f.

SWM-6 Micro-Bioretention Dimensions
NOT TO SCALE

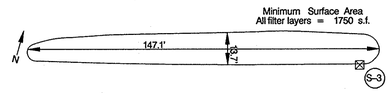

Minimum Surface Area
All filter layers = 1750 s.f.

SWM-3 Micro-Bioretention Dimensions
NOT TO SCALE

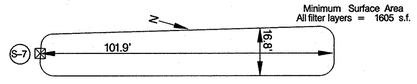

Minimum Surface Area
All filter layers = 1605 s.f.

SWM-7 Micro-Bioretention Dimensions
NOT TO SCALE

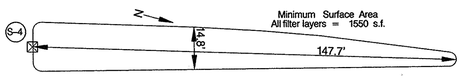

Minimum Surface Area
All filter layers = 1550 s.f.

SWM-4 Micro-Bioretention Dimensions
NOT TO SCALE

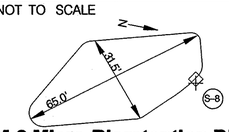

Minimum Surface Area
All filter layers = 1340 s.f.

SWM-8 Micro-Bioretention Dimensions
NOT TO SCALE

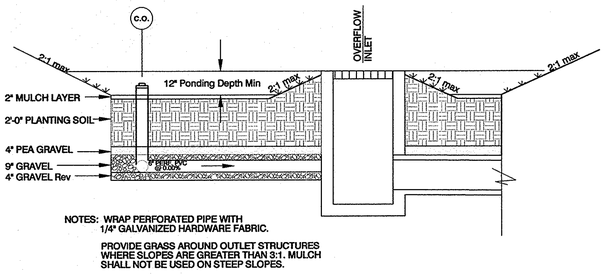

Micro-Bioretention Area Profile
NOT TO SCALE

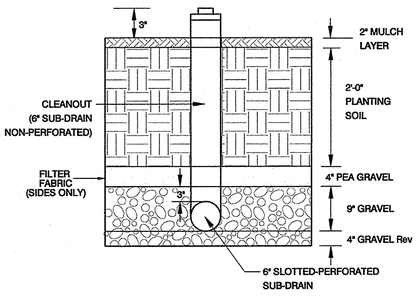

Micro-Bioretention Typical Section
NOT TO SCALE

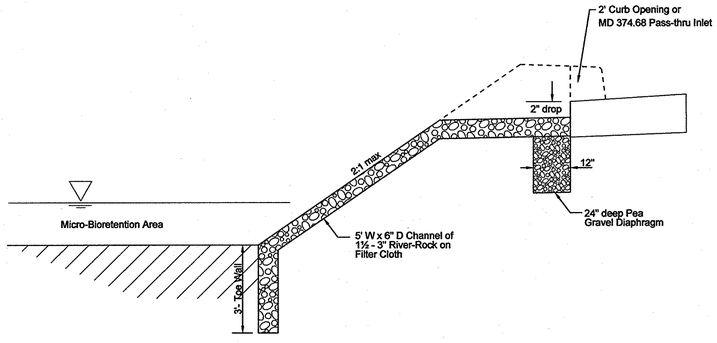

Typical Detail for Curb-Opening or Pass-thru Inlet Outfall
NOT TO SCALE

NO.	DESCRIPTION	BY	DATE

Owner/Developer:
Merritt-MR, LLC
2066 Lord Baltimore Drive
Baltimore, Maryland 21244
ph: 410-298-2600
fx: 410-298-9644

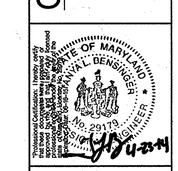

MATIS WARFIELD
Consulting Engineers
10540 York Road, Suite M
Hunt Valley, Maryland 21030
PHONE 410.683.7004 FAX 410.683.1798
www.matiswarfield.com

50 0 50 100
SCALE IN FEET

APPROVED: Howard County Department of Planning and Zoning

CHIEF, DEVELOPMENT ENGINEERING DIVISION — DATE 5.12.14

CHIEF, DIVISION OF LAND DEVELOPMENT — DATE 6.18.14

DIRECTOR — DATE 6/18/14

STORMWATER MANAGEMENT DETAILS
The Meadows Corporate Park Phase 2

6510 - 6518 MEADOW RIDGE ROAD MD RTE. 103
GREEN BUILDING

TAX MAP: 37;
PARCELS: A5-A9
ELECTION DISTRICT : 1
ZONE: POR

GENERAL OFFICE
SCALE : 1" = 50'
DATE : April 23, 2014
SHEET: 19 of 35

SDP-13-070

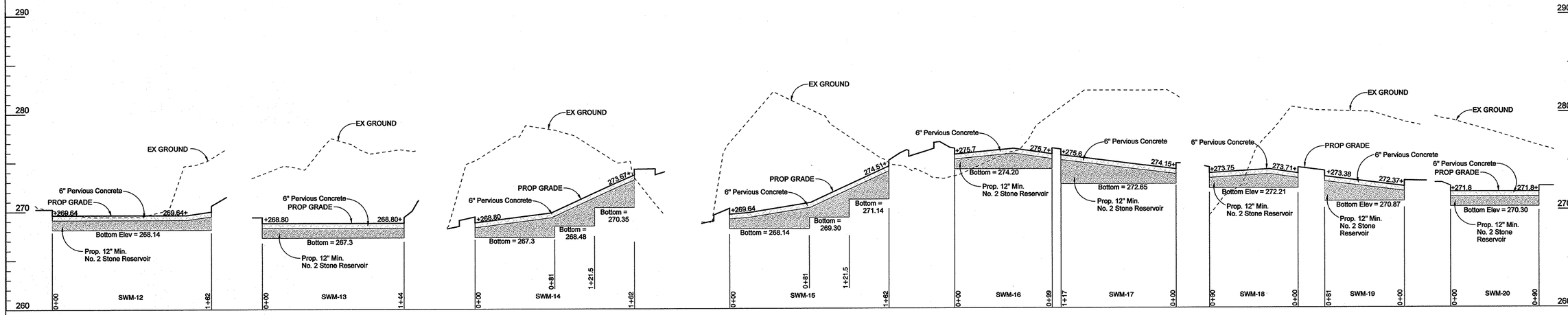

Permeable Paving Profiles

NOT TO SCALE

B.4.B SPECIFICATIONS FOR PERMEABLE PAVEMENTS & REINFORCED TURF

These specifications include information on acceptable materials for typical applications and are not exclusive or limiting. The designer is responsible for developing detailed specifications for individual projects and specific conditions.

1. Pervious Concrete Specifications
Design Thickness - Pervious concrete applications shall be designed so that the thickness of the concrete slab shall support the traffic and vehicle types that will be carried. Applications may be designed using either standard pavement procedures (e.g., AASHTO, ACI 325.9R, ACI 330R) or using structural values derived from flexible pavement design procedures.

Mix & Installation . Traditional Portland cements (ASTM C 150, C 1157) may be used in pervious concrete applications. Phosphorus admixtures may also be used. Materials should be tested (e.g., trial batching) prior to construction so that critical properties (e.g., setting time, rate of strength development, porosity, permeability) can be determined.

Aggregate . Pervious concrete contains a limited fine aggregate content. Commonly used gradations include ASTM C 33 No. 67 (. in. to No. 4), No. 8 (. in. to No. 16) and No. 89 (. in. to No. 50) sieves. Single-sized aggregate (up to 1 inch) may also be used.

Water Content . Water-to-cement ratios between 0.27 and 0.30 are used routinely with proper inclusion of chemical admixtures. Water quality should meet ACI 30a. As a general rule, potable water should be used although recycled concrete production water meetingASTM C 94 or AASHTO M 157 may also be used.

Admixtures - Chemical admixtures (e.g., retarders or hydration-stabilizers) are used to obtain special properties in pervious concrete. Use of admixtures should meet ASTM C 494 (chemical admixtures) and ASTM C 260 (air entraining admixtures) and closely follow manufacturer's recommendations.

Base Course - The base course shall be AASHTO No. 3 or 4 course aggregate with an assumed open pore space of 30% (n = 0.30).

Clay Liner Specifications			
Property	Test Method	Unit	Specification
Permeability	ASTM D-2434	Cm/sec	1 x 10-6
Plasticity Index of Clay	ASTM D-423/424	%	Not less than 15
Liquid Limit of Clay	ASTM D-2216	%	Not less than 30
Clay Particles Passing	ASTM D-422	%	Not less than 30
Clay Compaction	ASTM D-2216	%	95% of standard proctor density

Submerged Gravel Wetland Profile

NOT TO SCALE

Submerged Gravel Wetland Observation Well Detail

NOT TO SCALE

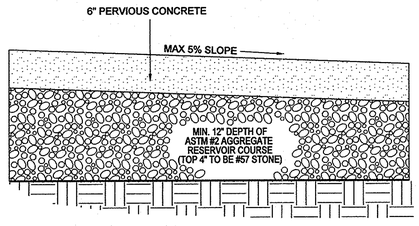

Typical Permeable Paving Section

NOT TO SCALE

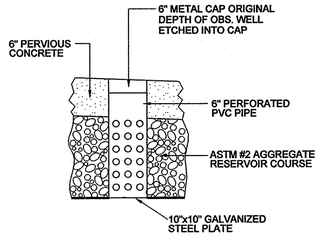

Note: One observation well shall be provided for each Permeable Paving SWM Area to facilitate periodic inspection.

Permeable Paving Observation Well Detail

NOT TO SCALE

OPERATION AND MAINTENANCE SCHEDULE FOR PRIVATELY OWNED AND MAINTAINED PERMEABLE PAVEMENT (A-2)

1. The Owner shall periodically sweep (or vacuum porous concrete pavement) the pavement surfaces to reduce sediment accumulation and ensure continued surface porosity. Sweeping should be performed at least twice annually with a commercial cleaning unit. Washing or compressed air units should not be used to perform surface cleaning.
2. The Owner shall periodically clean drainage pipes, inlets, stone edge drains and other structures within or draining to the subbase
3. The Owner shall use deicers in moderation. Deicers should be non-toxic and be applied either as calcium magnesium acetate or as pretreated salt.
4. The Owner shall ensure snow plowing is performed carefully with blades set oneinch above the surface. Plowed snow piles and snowmelt should not be directed to permeable pavement.

OPERATION AND MAINTENANCE SCHEDULE FOR PRIVATELY OWNED AND MAINTAINED SUBMERGED GRAVEL WETLANDS (M-2)

1. During the first year of operation, the Owner shall inspect the facility after every heavy storm and replace vegetation as needed.
2. The Owner shall remove sediment accumulated in the pretreatment areas as necessary.
3. Signs of uneven flow within the wetland may mean that the gravel or underdrain is clogged. The gravel or underdrain shall be removed, cleaned, and replaced, as needed.
4. The Owner shall ensure a dense stand of wetland vegetation is maintained through the life of the facility and replace vegetation as needed.
5. The Owner shall ensure the inlets and outlets to each gravel wetland cell are free from debris.
6. The Owner shall repair erosion at inflow points and ensure flow splitters are functional to prevent storm water from bypassing the facility.

NO.	DESCRIPTION	BY	DATE

Owner/Developer:
Merritt-MR, LLC
2066 Lord Baltimore Drive
Baltimore, Maryland 21244
ph: 410-298-2600
fx: 410-298-9644

I hereby certify that these documents were prepared or approved by me, and that I am a duly licensed professional engineer under the laws of the State of Maryland, License No. 19179, Expiration Date: 4-27-16

MATIS WARFIELD
Consulting Engineers
10540 York Road, Suite M
Hunt Valley, Maryland 21030
PHONE 410.683.7004 FAX 410.683.1798
www.matiswarfield.com

50 0 50 100
SCALE IN FEET

APPROVED: Howard County Department of Planning and Zoning

CHIEF, DEVELOPMENT ENGINEERING DIVISION — DATE 5.12.14

CHIEF, DIVISION OF LAND DEVELOPMENT — DATE 6-18-14

DIRECTOR — DATE 6/18/14

STORMWATER MANAGEMENT DETAILS
The Meadows Corporate Park Phase 2

6510 - 6518 MEADOW RIDGE ROAD MD RTE. 103
GREEN BUILDING

TAX MAP: 37; PARCELS: A8-A9
ELECTION DISTRICT : 1
ZONE: POR

GENERAL OFFICE
SCALE : 1" = 50'
DATE : April 23, 2014
SHEET: 20 of 35

SDP-13-070

Reuling Associates, Inc. — Boring Log — Page 1 of 25

PROJECT:	Meadowridge, Building No. 4		
Location:	See Boring Location Plan		
DATE START: 4/25/2013	PROJECT No.:	BORING No.:	B-1
FINISH: 4/25/2013	ELEV: 262.53	INSPECTOR:	
HAMMER WT.: 140 lb	SPOON O.D.: 2"	FOREMAN:	
BORING METHOD: HSA	ROCK CORE DIA.:	HAMMER DROP:	30 in.

Elev	Description	Scale	No	Blows / 6in	Type	REC	Notes
		0					2" topsoil
	Brown, moist, soft to medium stiff to stiff sandy silt, ML		1	1-1-2	DS	2"	
			2	3-3-4	DS	15"	
		5	3	3-7-7	DS	18"	
			4	4-5-7	DS	14"	
	Light brown and orange, moist, medium dense sand, some gravel, SM	10	5	4-8-8	DS	10"	
15'0"	End of boring	15	6	10-12-18	DS	12"	
		20					

LEGEND
DS DRIVEN SPOON
ST SHELBY
PS PISTON SAMPLE
RC ROCK CORE
HSA HOLLOW STEM AUGER

GROUND WATER
WATER ON RODS:
WATER AT COMPLETION: dry
AT 24 HOURS: 6'2"
CAVED: 8'6"

Reuling Associates, Inc. — Boring Log — Page 2 of 25

PROJECT:	Meadowridge, Bbuilding No. 4		
Location:	See Boring Location Plan		
DATE START: 4/25/2013	PROJECT No.:	BORING No.:	B-2
FINISH: 4/25/2013	ELEV: 268.10	INSPECTOR:	
HAMMER WT.: 140 lb	SPOON O.D.: 2"	FOREMAN:	
BORING METHOD: HSA	ROCK CORE DIA.:	HAMMER DROP:	30 in.

Elev	Description	Scale	No	Blows / 6in	Type	REC	Notes
		0					No topsoil
	Orange and tan, moist, hard clayey silt ML-CL		1	20-15-30	DS	8"	
			2	12-15-20	DS	12"	
		5	3	8-10-22	DS	12"	
			4	15-15-17	DS	14"	
	Orange and tan, moist, dense sand, trace silt, SM	10	5	12-15-19	DS	12"	
15'0"	End of boring	15	6	17-19-22	DS	14"	
		20					

LEGEND
DS DRIVEN SPOON
ST SHELBY
PS PISTON SAMPLE
RC ROCK CORE
HSA HOLLOW STEM AUGER

GROUND WATER
WATER ON RODS:
WATER AT COMPLETION: dry
AT 24 HOURS: DRY TO CAVE IN
CAVED: 7'8"

Reuling Associates, Inc. — Boring Log — Page 3 of 25

PROJECT:	Meadowridge, Building No. 4		
Location:	See Boring Location Plan		
DATE START: 4/25/2013	PROJECT No.:	BORING No.:	B-3
FINISH: 4/25/2013	ELEV: 268.06	INSPECTOR:	
HAMMER WT.: 140 lb	SPOON O.D.: 2"	FOREMAN:	
BORING METHOD: HSA	ROCK CORE DIA.:	HAMMER DROP:	30 in.

Elev	Description	Scale	No	Blows / 6in	Type	REC	Notes
		0					No topsoil
	Orange and tan, moist, stiff to very stiff clayey silt, ML-CL		1	6-6-7	DS	12"	
			2	6-6-7	DS	12"	
		5	3	6-7-12	DS	14"	
	Tan and orange, moist, medium dense silty sand, SM		4	8-8-10	DS	13"	
		10	5	8-9-10	DS	18"	
15'0"	End of boring	15	6	7-10-17	DS	12"	
		20					

LEGEND
DS DRIVEN SPOON
ST SHELBY
PS PISTON SAMPLE
RC ROCK CORE
HSA HOLLOW STEM AUGER

GROUND WATER
WATER ON RODS:
WATER AT COMPLETION: Dry
AT 24 HOURS: DRY TO CAVE IN
CAVED: 7'3"

Reuling Associates, Inc. — Boring Log — Page 4 of 25

PROJECT:	Meadowridge, Building No. 4		
Location:	See Boring Location Plan		
DATE START: 4/25/2013	PROJECT No.:	BORING No.:	B-4
FINISH: 4/25/2013	ELEV: 278.60	INSPECTOR:	
HAMMER WT.: 140 lb	SPOON O.D.: 2"	FOREMAN:	
BORING METHOD: HSA	ROCK CORE DIA.:	HAMMER DROP:	30 in.

Elev	Description	Scale	No	Blows / 6in	Type	REC	Notes
		0					4" topsoil
	Brown, moist, stiff silty clay, CL		1	3-3-10	DS	12"	
	Light brown, moist, dense to very dense silty sand, SM		2	13-17-19	DS	12"	
		5	3	22-25-19	DS	16"	
	Light brown, moist, very stiff sandy silt, ML		4	9-9-10	DS	14"	
		10	5	6-7-9	DS	18"	
	Light brown, moist, medium dense to very dense silty fine sand, SM	15	6	10-12-12	DS	14"	
		20	7	22-39-39	DS	18"	
	End of boring						

LEGEND
DS DRIVEN SPOON
ST SHELBY
PS PISTON SAMPLE
RC ROCK CORE
HSA HOLLOW STEM AUGER

GROUND WATER
WATER ON RODS:
WATER AT COMPLETION: Dry
AT 24 HOURS: DRY TO CAVE IN
CAVED: 12'1"

Reuling Associates, Inc. — Boring Log — Page 5 of 25

PROJECT:	Meadowridge, Building No. 4		
Location:	See Boring Location Plan		
DATE START: 4/25/2013	PROJECT No.:	BORING No.:	B-5
FINISH: 4/25/2013	ELEV: 276.29	INSPECTOR:	
HAMMER WT.: 140 lb	SPOON O.D.: 2"	FOREMAN:	
BORING METHOD: HSA	ROCK CORE DIA.:	HAMMER DROP:	30 in.

Elev	Description	Scale	No	Blows / 6in	Type	REC	Notes
		0					4" topsoil
	Brown, moist, medium dense cklayey sand, SC		1	2-6-4	DS	8"	
	Light brown and tan, moist, medium dense to very dense silty fine sand, SM		2	8-12-14	DS	18"	
		5	3	5-8-11	DS	18"	
			4	12-21-22	DS	13"	
		10	5	13-19-22	DS	18"	
		15	6	19-30-35	DS	15"	
		20	7	13-22-22	DS	18"	
	End of boring						

LEGEND
DS DRIVEN SPOON
ST SHELBY
PS PISTON SAMPLE
RC ROCK CORE
HSA HOLLOW STEM AUGER

GROUND WATER
WATER ON RODS:
WATER AT COMPLETION: Dry
AT 24 HOURS: DRY TO CAVE IN
CAVED: 11'5"

Reuling Associates, Inc. — Boring Log — Page 6 of 25

PROJECT:	Meadowridge, Building No. 4		
Location:	See Boring Location Plan		
DATE START: 4/25/2013	PROJECT No.:	BORING No.:	B-6
FINISH: 4/25/2013	ELEV: 281.11	INSPECTOR:	
HAMMER WT.: 140 lb	SPOON O.D.: 2"	FOREMAN:	
BORING METHOD: HSA	ROCK CORE DIA.:	HAMMER DROP:	30 in.

Elev	Description	Scale	No	Blows / 6in	Type	REC	Notes
		0					6" topsoil
	Brown, moist, medium dense to very dense clayey sand, SC		1	3-4-7	DS	6"	
			2	6-13-13	DS	12"	
		5	3	15-22-30	DS	18"	
	Gray and tan, moist, very dense silty fine sand, SM		4	32-35-39	DS	14"	
		10	5	20-30-38	DS	18"	
15'0"	End of boring	15	6		DS	21"	
		20					

LEGEND
DS DRIVEN SPOON
ST SHELBY
PS PISTON SAMPLE
RC ROCK CORE
HSA HOLLOW STEM AUGER

GROUND WATER
WATER ON RODS:
WATER AT COMPLETION: Dry
AT 24 HOURS: DRY TO CAVE IN
CAVED: 8'7"

Reuling Associates, Inc. — Boring Log — Page 7 of 25

PROJECT:	Meadowridge, Building No. 4		
Location:	See Boring Location Plan		
DATE START: 4/25/2013	PROJECT No.:	BORING No.:	B-7
FINISH: 4/25/2013	ELEV: 283.31	INSPECTOR:	
HAMMER WT.: 140 lb	SPOON O.D.: 2"	FOREMAN:	
BORING METHOD: HSA	ROCK CORE DIA.:	HAMMER DROP:	30 in.

Elev	Description	Scale	No	Blows / 6in	Type	REC	Notes
		0					4" topsoil
	Tan, moist, very loose to medium dense silty sand, SM		1	2-2-2	DS	12"	
			2	7-9-10	DS	14"	
	Tan, moist, very stiff sandy, clayey silt, ML-CL	5	3	8-10-16	DS	12"	
			4	16-16-19	DS	15"	
		10	5	13-13-13	DS	13"	
		15	6	11-15-15	DS	12"	
		20	7	10-14-11	DS	19"	
	End of boring						

LEGEND
DS DRIVEN SPOON
ST SHELBY
PS PISTON SAMPLE
RC ROCK CORE
HSA HOLLOW STEM AUGER

GROUND WATER
WATER ON RODS:
WATER AT COMPLETION: Dry
AT 24 HOURS: DRY TO CAVE IN
CAVED: 9'9"

Reuling Associates, Inc. — Boring Log — Page 8 of 25

PROJECT:	Meadowridge, Building No. 4		
Location:	See Boring Location Plan		
DATE START: 4/25/2013	PROJECT No.:	BORING No.:	B-8
FINISH: 4/25/2013	ELEV: 281.24	INSPECTOR:	
HAMMER WT.: 140 lb	SPOON O.D.: 2"	FOREMAN:	
BORING METHOD: HSA	ROCK CORE DIA.:	HAMMER DROP:	30 in.

Elev	Description	Scale	No	Blows / 6in	Type	REC	Notes
		0					4" topsoil
	Dark Brown, moist, medium stiff silt, ML		1	3-3-3	DS	12"	
	Brown to light brown, moist medium dense to very dense silty fine sand, SM		2	3-3-3	DS	12"	
		5	3	6-10-10	DS	18"	
			4	24-37-30	DS	14"	
		10	5	14-17-17	DS	18"	
		15	6	18-20-23	DS	14"	
		20	7	7-17-20	DS	16"	
	End of boring						

LEGEND
DS DRIVEN SPOON
ST SHELBY
PS PISTON SAMPLE
RC ROCK CORE
HSA HOLLOW STEM AUGER

GROUND WATER
WATER ON RODS:
WATER AT COMPLETION: Dry
AT 24 HOURS: DRY TO CAVE IN
CAVED: 6'1"

Reuling Associates, Inc. — Boring Log — Page 9 of 25

PROJECT:	Meadowridge, Building No. 4		
Location:	See Boring Location Plan		
DATE START: 4/25/2013	PROJECT No.:	BORING No.:	B-9
FINISH: 4/25/2013	ELEV: 277.42	INSPECTOR:	
HAMMER WT.: 140 lb	SPOON O.D.: 2"	FOREMAN:	
BORING METHOD: HSA	ROCK CORE DIA.:	HAMMER DROP:	30 in.

Elev	Description	Scale	No	Blows / 6in	Type	REC	Notes
		0					
	Boulders (rip rap)		1		DS		
	Gray and tan, moist, very dense silty fine sand, SM		2	32-35-20	DS	13"	Auger refusal at 5 ft. (boulders)
	End of boring	5					
		10					
		15					
		20					

LEGEND
DS DRIVEN SPOON
ST SHELBY
PS PISTON SAMPLE
RC ROCK CORE
HSA HOLLOW STEM AUGER

GROUND WATER
WATER ON RODS:
WATER AT COMPLETION: Dry
AT 24 HOURS: DRY TO CAVE IN
CAVED: 7'1"

Reuling Associates, Inc. — Boring Log — Page 10 of 25

PROJECT:	Meadowridge, Building No. 4		
Location:	See Boring Location Plan		
DATE START: 4/25/2013	PROJECT No.:	BORING No.:	B-10
FINISH: 4/25/2013	ELEV: 253.70	INSPECTOR:	
HAMMER WT.: 140 lb	SPOON O.D.: 2"	FOREMAN:	
BORING METHOD: HSA	ROCK CORE DIA.:	HAMMER DROP:	30 in.

Elev	Description	Scale	No	Blows / 6in	Type	REC	Notes
		0					3" topsoil
	Brown, moist, loose to dense silty sand, little gravel, SM		1	2-3-4	DS	6"	
			2	6-17-32	DS	18"	
		5	3	15-22-28	DS	18"	
	Light brown, moist, stiff to very stiff silty clay, CL		4	6-7-10	DS	14"	
		10	5	4-5-8	DS	14"	
	End of boring	15	6	6-8-13	DS	16"	
		20					

LEGEND
DS DRIVEN SPOON
ST SHELBY
PS PISTON SAMPLE
RC ROCK CORE
HSA HOLLOW STEM AUGER

GROUND WATER
WATER ON RODS:
WATER AT COMPLETION: Dry
AT 24 HOURS: 4'11"
CAVED:

APPROVED: Howard County Department of Planning and Zoning

CHIEF, DEVELOPMENT ENGINEERING DIVISION — DATE 5.12.14
CHIEF, DIVISION OF LAND DEVELOPMENT — DATE 6-18-14
DIRECTOR — DATE 6/18/14

MATIS WARFIELD
Consulting Engineers
10540 York Road, Suite M
Hunt Valley, Maryland 21030
PHONE 410.683.7004 FAX 410.683.1798
www.matiswarfield.com

"Professional Certification: I hereby certify that these documents were prepared or approved by me, and that I am duly licensed professional engineer under the laws of the state of Maryland, License No. 29179, Expiration Date: 06-16-15."
STATE OF MARYLAND — TANYA L. BENSINGER — No. 29179 — PROFESSIONAL ENGINEER — 4-23-14

Owner/Developer:
Merritt-MR, LLC
2066 Lord Baltimore Drive
Baltimore, Maryland 21244
ph: 410-298-2600
fx: 410-298-9644

NO.	DESCRIPTION	BY	DATE

SOIL BORING LOGS
The Meadows Corporate Park Phase 2

6510 - 6518 MEADOW RIDGE ROAD MD RTE. 103
GREEN BUILDING

TAX MAP: 37;
PARCELS: A5-A9
ELECTION DISTRICT : 1
ZONE: POR

GENERAL OFFICE
SCALE : 1" = 50'
DATE : April 23, 2014
SHEET: 21 of 35

SDP-13-070

Reuling Associates, Inc. Boring Log

PROJECT: Meadowridge, Building No. 4
Location: See Boring Location Plan
DATE START: 4/25/2013 PROJECT No.: BORING No.: B-11
FINISH: 4/25/2013 ELEV: 244.97 INSPECTOR:
HAMMER WT.: 140 lb SPOON O.D.: 2" FOREMAN:
BORING METHOD: HSA ROCK CORE DIA.: HAMMER DROP: 30 In.

Scale	Elev	Description	Depth	Scale	No	Blows / 6in	Type	REC	Notes
		Brown, wet, stiff clayey silt, ML-CL		0	1	5-6-6	DS	12"	No topsoil
					2	6-8-10	DS	18"	
		Light brown, moist, very stiff sandy silt, ML		5	3	8-12-14	DS	14"	
		End of boring		10	4	12-15-15	DS	18"	
				15					
				20					

LEGEND

DS DRIVEN SPOON
ST SHELBY
PS PISTON SAMPLE
RC ROCK CORE
HSA HOLLOW STEM AUGER

GROUND WATER

WATER ON RODS:
WATER AT COMPLETION: Dry
AT 24 HOURS: 6'3"
CAVED:

Reuling Associates, Inc. Boring Log

PROJECT: Meadowridge, Building No. 4
Location: See Boring Location Plan
DATE START: 4/25/2013 PROJECT No.: BORING No.: B-12
FINISH: 4/25/2013 ELEV: 278.88 INSPECTOR:
HAMMER WT.: 140 lb SPOON O.D.: 2" FOREMAN:
BORING METHOD: HSA ROCK CORE DIA.: HAMMER DROP: 30 In.

Scale	Elev	Description	Depth	Scale	No	Blows / 6in	Type	REC	Notes
				0	1	10-15-15	DS	3"	No topsoil
		Light brown and tan, moist, medium dense clayey sand, SC			2	6-8-9	DS	18"	
				5	3	11-14-16	DS	10"	
		Tan, moist, dense silty fine sand, SM			4	12-14-15	DS	13"	
				10	5	15-19-18	DS	16"	
15'0"		End of boring							
				15	6	18-15-15	DS	12"	
				20					

LEGEND

DS DRIVEN SPOON
ST SHELBY
PS PISTON SAMPLE
RC ROCK CORE
HSA HOLLOW STEM AUGER

GROUND WATER

WATER ON RODS:
WATER AT COMPLETION: Dry
AT 24 HOURS: DRY TO CAVE IN
CAVED: 7'6"

Reuling Associates, Inc. Boring Log

PROJECT: Meadowridge, Building No. 4
Location: See Boring Location Plan
DATE START: 4/25/2013 PROJECT No.: BORING No.: B-13
FINISH: 4/25/2013 ELEV: 275.68 INSPECTOR:
HAMMER WT.: 140 lb SPOON O.D.: 2" FOREMAN:
BORING METHOD: HSA ROCK CORE DIA.: HAMMER DROP: 30 In.

Scale	Elev	Description	Depth	Scale	No	Blows / 6in	Type	REC	Notes
		Orange and tan, moist, stiff to hard clayey silt, ML-CL		0	1	3-4-8	DS	12"	
					2	12-12-13	DS	12"	
				5	3	5-5-7	DS	13"	
		End of boring		10	4	10-12-20	DS	18"	
				15					
				20					

LEGEND

DS DRIVEN SPOON
ST SHELBY
PS PISTON SAMPLE
RC ROCK CORE
HSA HOLLOW STEM AUGER

GROUND WATER

WATER ON RODS:
WATER AT COMPLETION: Dry
AT 24 HOURS: DRY TO CAVE IN
CAVED: 6'4"

Reuling Associates, Inc. Boring Log

PROJECT: Meadowridge, Building No. 4
Location: See Boring Location Plan
DATE START: 4/25/2013 PROJECT No.: BORING No.: B-14
FINISH: 4/25/2013 ELEV: 283.62 INSPECTOR:
HAMMER WT.: 140 lb SPOON O.D.: 2" FOREMAN:
BORING METHOD: HSA ROCK CORE DIA.: HAMMER DROP: 30 In.

Scale	Elev	Description	Depth	Scale	No	Blows / 6in	Type	REC	Notes
		Crushed Stone		0	1	50/3"	DS		
		Brown and gray, moist, hard to very stiff clayey silt, ML-CL			2	26-22-19	DS	12"	
				5	3	8-8-9	DS	18"	
		Tan, moist, very dense to medium dense silty sand, SM			4	12-14-16	DS	13"	
				10	5	12-20-32	DS	18"	
15'0"		End of boring							
				15	6	15-15-9	DS	9"	
				20					

LEGEND

DS DRIVEN SPOON
ST SHELBY
PS PISTON SAMPLE
RC ROCK CORE
HSA HOLLOW STEM AUGER

GROUND WATER

WATER ON RODS:
WATER AT COMPLETION: Dry
AT 24 HOURS: DRY TO CAVE IN
CAVED: 6'5"

Reuling Associates, Inc. Boring Log

PROJECT: Meadowridge, Building No. 4
Location: See Boring Location Plan
DATE START: 4/25/2013 PROJECT No.: BORING No.: B-15
FINISH: 4/25/2013 ELEV: 276.98 INSPECTOR:
HAMMER WT.: 140 lb SPOON O.D.: 2" FOREMAN:
BORING METHOD: HSA ROCK CORE DIA.: HAMMER DROP: 30 In.

Scale	Elev	Description	Depth	Scale	No	Blows / 6in	Type	REC	Notes
		Brown, moist, soft silty clay, CL-ML		0	1	2-2-2	DS	6"	
		Light brown, moist, medium dense silty fine sand, SM			2	6-8-9	DS	18"	
				5	3	7-9-10	DS	16"	
		Gray and tan, moist, medium dense silty fine sand, SM			4	10-13-13	DS	18"	
		End of boring		10					
				15					
				20					

LEGEND

DS DRIVEN SPOON
ST SHELBY
PS PISTON SAMPLE
RC ROCK CORE
HSA HOLLOW STEM AUGER

GROUND WATER

WATER ON RODS:
WATER AT COMPLETION: Dry
AT 24 HOURS: DRY TO CAVE IN
CAVED: 6'9"

Reuling Associates, Inc. Boring Log

PROJECT: Meadowridge, Building No. 4
Location: See Boring Location Plan
DATE START: 4/25/2013 PROJECT No.: BORING No.: B-16
FINISH: 4/25/2013 ELEV: 283.91 INSPECTOR:
HAMMER WT.: 140 lb SPOON O.D.: 2" FOREMAN:
BORING METHOD: HSA ROCK CORE DIA.: HAMMER DROP: 30 In.

Scale	Elev	Description	Depth	Scale	No	Blows / 6in	Type	REC	Notes
		Brown, moist, dense to very dense silty sand and gravel, SM		0	1	11-17-14	DS	3"	No topsoil
					2	6-17-34	DS	4"	
		Tan, moist, dense silty fine sand, SM		5	3	11-17-17	DS	12"	
					4	14-22-30	DS	14"	
		Tan, moist, hard, sandy clayey silt, ML-CL		10	5	10-19-30	DS	16"	
17'0"		End of boring							
				15	6	44-50-5	DS	9"	
				20					

LEGEND

DS DRIVEN SPOON
ST SHELBY
PS PISTON SAMPLE
RC ROCK CORE
HSA HOLLOW STEM AUGER

GROUND WATER

WATER ON RODS:
WATER AT COMPLETION: Dry
AT 24 HOURS: DRY TO CAVE IN
CAVED: 3'10"

Reuling Associates, Inc. Boring Log

PROJECT: Meadowridge, Building No. 4
Location: See Boring Location Plan
DATE START: 4/25/2013 PROJECT No.: BORING No.: B-17
FINISH: 4/25/2013 ELEV: 277.75 INSPECTOR:
HAMMER WT.: 140 lb SPOON O.D.: 2" FOREMAN:
BORING METHOD: HSA ROCK CORE DIA.: HAMMER DROP: 30 In.

Scale	Elev	Description	Depth	Scale	No	Blows / 6in	Type	REC	Notes
		Brown and tan, moist, very stiff clayey silt, ML-CL		0	1	7-7-10	DS	12"	No topsoil
					2	6-8-10	DS	18"	
		Tan, moist, medium dense silty fine sand, SM		5	3	4-6-8	DS	10"	
					4	12-17-24	DS	12"	
		Gray, moist, dense clayey sand, SC		10					
		End of boring							
				15					
				20					

LEGEND

DS DRIVEN SPOON
ST SHELBY
PS PISTON SAMPLE
RC ROCK CORE
HSA HOLLOW STEM AUGER

GROUND WATER

WATER ON RODS:
WATER AT COMPLETION: Dry
AT 24 HOURS: DRY TO CAVE IN
CAVED: 5'11"

Reuling Associates, Inc. Boring Log

PROJECT: Meadowridge, Building No. 4
Location: See Boring Location Plan
DATE START: 4/25/2013 PROJECT No.: BORING No.: B-18
FINISH: 4/25/2013 ELEV: 278.03 INSPECTOR:
HAMMER WT.: 140 lb SPOON O.D.: 2" FOREMAN:
BORING METHOD: HSA ROCK CORE DIA.: HAMMER DROP: 30 In.

Scale	Elev	Description	Depth	Scale	No	Blows / 6in	Type	REC	Notes
				0	1	4-7-10	DS	12"	No topsoil
		Tan, moist, medium dense silty sand, trace gravel, SM			2	6-11-13	DS	12"	
				5	3	8-8-10	DS	16"	
		Tan, moist, very stiff to hard clayey silt, ML-CL		10	4	10-16-16	DS	18"	
		End of boring							
				15					
				20					

LEGEND

DS DRIVEN SPOON
ST SHELBY
PS PISTON SAMPLE
RC ROCK CORE
HSA HOLLOW STEM AUGER

GROUND WATER

WATER ON RODS:
WATER AT COMPLETION: Dry
AT 24 HOURS: DRY TO CAVE IN
CAVED: 5'7"

APPROVED: Howard County Department of Planning and Zoning

CHIEF, DEVELOPMENT ENGINEERING DIVISION — DATE 5.12.14

CHIEF, DIVISION OF LAND DEVELOPMENT — DATE 6.18.14

DIRECTOR — DATE 6/18/14

MATIS WARFIELD
Consulting Engineers
10540 York Road, Suite M
Hunt Valley, Maryland 21030
PHONE 410.683.7004 FAX 410.683.1798
www.matiswarfield.com

"Professional Certification. I hereby certify that these documents were prepared or approved by me, and that I am a duly licensed professional engineer under the laws of the State of Maryland, License No. 21179, Expiration Date: 9-30-14"
STATE OF MARYLAND — DANIEL P. BENSINGER — No. 21179 — PROFESSIONAL ENGINEER
4-23-14

Owner/Developer:
Merritt-MR, LLC
2066 Lord Baltimore Drive
Baltimore, Maryland 21244
ph: 410-298-2600
fx: 410-298-9644

NO.	DESCRIPTION	BY	DATE

SOIL BORING LOGS
The Meadows Corporate Park Phase 2

6510 - 6518 MEADOW RIDGE ROAD MD RTE. 103
GREEN BUILDING

TAX MAP: 37;
PARCELS: A5-A9
ELECTION DISTRICT : 1
ZONE: POR

GENERAL OFFICE
SCALE : 1" = 50'
DATE : April 23, 2014
SHEET: 22 of 35

SDP-13-070

ENGINEER CERTIFICATION:

I certify that this plan for erosion and sediment control represents a practical and workable plan based on my personal knowledge of the site conditions and that it was prepared in accordance with the requirements of the Howard Soil Conservation District.

Engineer _____ Date 1-28-15

Name Tanya L. Bensinger PE # 29179

DEVELOPER CERTIFICATION:

We certify that all development and construction will be done according to this plan for sediment and erosion control, and that all responsible personnel involved in the construction project will have a Certificate of Attendance at a Department of the Environment Approved Training Program for the Control of Sediment and Erosion before beginning the project. I also authorize periodic on-site inspection by the Howard Soil Conservation District.

Developer _____

Name Josh Asbury

This development plan is approved for soil erosion and sediment control by the Howard Soil Conservation District.

2/10/15

APPROVED: HOWARD SOIL CONSERVATION DISTRICT

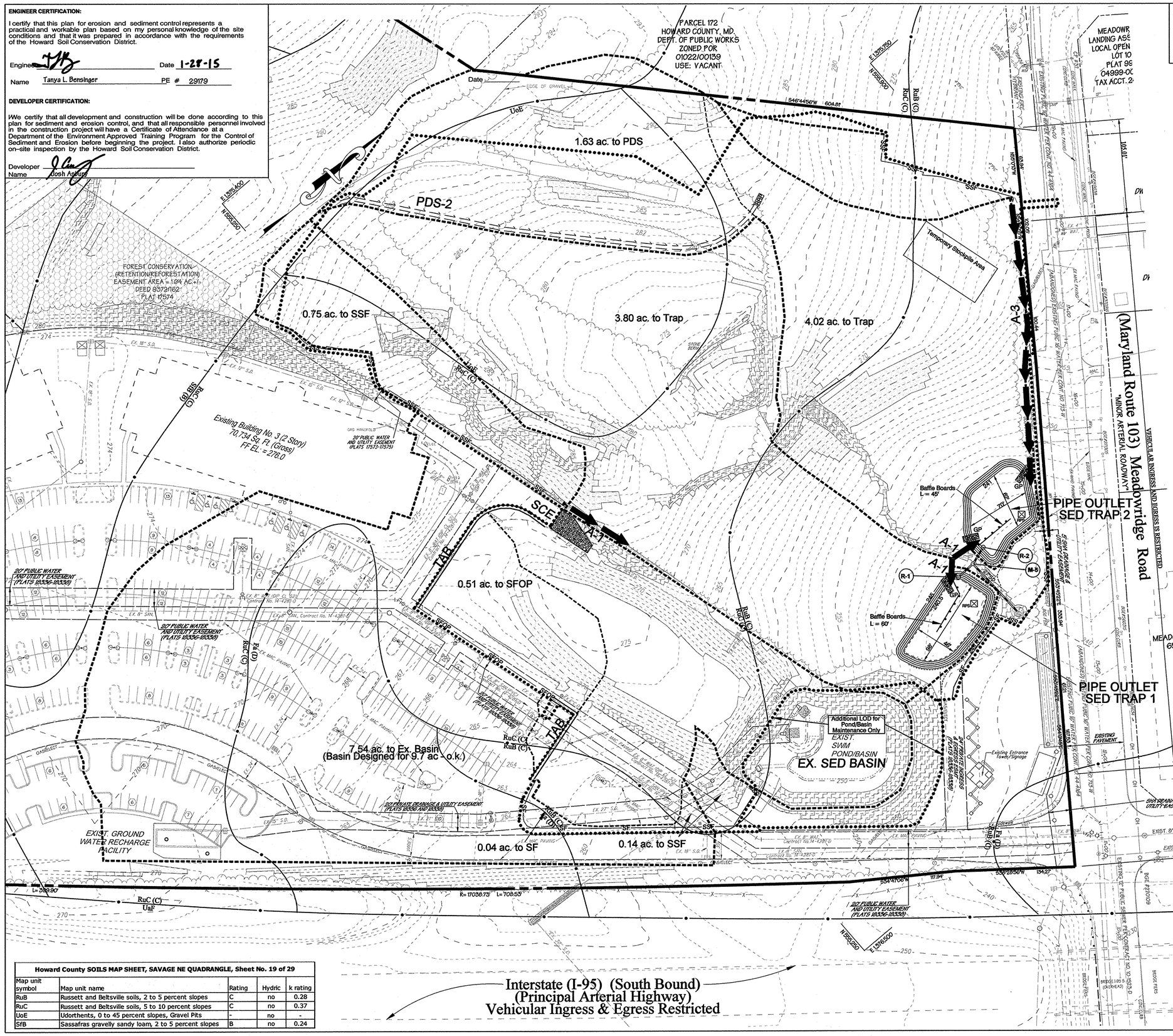

Howard County SOILS MAP SHEET, SAVAGE NE QUADRANGLE, Sheet No. 19 of 29				
Map unit symbol	Map unit name	Rating	Hydric	k rating
RuB	Russett and Beltsville soils, 2 to 5 percent slopes	C	no	0.28
RuC	Russett and Beltsville soils, 5 to 10 percent slopes	C	no	0.37
UoE	Udorthents, 0 to 45 percent slopes, Gravel Pits	-	no	-
SfB	Sassafras gravelly sandy loam, 2 to 5 percent slopes	B	no	0.24

LEGEND

- Existing Contour
- Property Line
- Proposed Contour
- Existing Storm Drain
- Proposed Storm Drain
- Existing Sanitary
- Existing Water
- Existing Curb
- Proposed Conc. Curb
- Existing Electric
- Existing Telephone
- Existing Gas
- Existing Spot Elevation
- Proposed Spot Elevation
- Tree Line
- 5' Wide Painted Crosswalk
- Pipe Railing
- Limit of Disturbance
- Proposed Impervious Area
- Proposed Permeable Pave
- Conservation Easement Area
- Ex. Slopes 15% - 25%
- Ex. Slopes >25%
- Drainage Divide
- Super Silt Fence
- Silt Fence
- Silt Fence on Pavement
- Temporary Dike/Swale
- Earth Dike
- Temporary Asphalt Berm
- Inlet Protection
- Stabilized Construction Entrance
- Gabion Inflow Protection
- Rip-rap Inflow Protection

SCALE IN FEET: 50 0 50 100

NO.	DESCRIPTION	BY	DATE
1	Add temporary parking and submerged gravel wetland SWM-11A.	MWI	11/6/2014

Owner/Developer:
Merritt-MR, LLC
2066 Lord Baltimore Drive
Baltimore, Maryland 21244
ph: 410-298-2600
fx: 410-298-9644

MATIS WARFIELD
Consulting Engineers
10540 York Road, Suite M
Hunt Valley, Maryland 21030
PHONE 410.683.7004 FAX 410.683.1798
www.matiswarfield.com

APPROVED: Howard County Department of Planning and Zoning

CHIEF, DEVELOPMENT ENGINEERING DIVISION — DATE 4-8-15

CHIEF, DIVISION OF LAND DEVELOPMENT — DATE 4-13-15

DIRECTOR — DATE 4/13/15

REVISED SITE DEVELOPMENT PLAN

Initial Sediment Control Plan
The Meadows Corporate Park
Phase 2

6510 - 6518 MEADOW RIDGE ROAD MD RTE. 103
GREEN BUILDING

TAX MAP: 37;
PARCELS: A5-A9
ELECTION DISTRICT : 1
ZONE: POR

GENERAL OFFICE
SCALE : 1" = 50'
DATE : April 23, 2014
SHEET: 23 of 35

SDP-13-070

ENGINEER CERTIFICATION:

I certify that this plan for erosion and sediment control represents a practical and workable plan based on my personal knowledge of the site conditions and that it was prepared in accordance with the requirements of the Howard Soil Conservation District.

Engineer _____ Date 1-28-15

Name Tanya L. Bensinger PE # 29179

DEVELOPER CERTIFICATION:

We certify that all development and construction will be done according to this plan for sediment and erosion control, and that all responsible personnel involved in the construction project will have a Certificate of Attendance at a Department of the Environment Approved Training Program for the Control of Sediment and Erosion before beginning the project. I also authorize periodic on-site inspection by the Howard Soil Conservation District.

Developer _____

Name Josh Ashury

This development plan is approved for soil erosion and sediment control by the Howard Soil Conservation District.

2/10/15

APPROVED: HOWARD SOIL CONSERVATION DISTRICT

NO.	DESCRIPTION	BY	DATE
1	Add temporary parking and submerged gravel wetland SWM-11A.	MWI	1/28/2016

TRAP #1 SEDIMENT TRAP ST-I

EXISTING DRAINAGE AREA = 3.80 ACRES
PROPOSED DRAINAGE AREA = 1.55 ACRES
TOTAL STORAGE REQUIRED = 13,680 C.F.
TOTAL STORAGE PROVIDED = 14,560 C.F.
WET STORAGE REQUIRED = 6,840 C.F.
WET STORAGE PROVIDED =7,394 C.F.
DRY STORAGE REQUIRED = 6,840 C.F.
DRY STORAGE PROVIDED = 7,166 C.F.
TRAP BOTTOM ELEVATION = 240.5
BOTTOM DIMENSIONS = 98' x 46'
RISER CREST (DRY STORAGE) ELEV. = 243.25
WET STORAGE ELEV. = 242.00
CLEANOUT ELEVATION = 241.25
TOP OF EMBANKMENT = 245.5
SIDE SLOPES = 2:1
EMBANKMENT TOP WIDTH = 4.0 FT
PRINCIPAL SPILLWAY MATERIAL = CMP
RISER DIAMETER = 36"
BARREL DIAMETER = 27"
TRASH RACK DIAMETER = 54"
TRASH RACK HEIGHT = 25'
BAFFLE TOP ELEV = 242.63

TRAP #2 SEDIMENT TRAP ST-I

EXISTING DRAINAGE AREA = 4.02 ACRES
PROPOSED DRAINAGE AREA = 0.77 ACRES
TOTAL STORAGE REQUIRED = 14,472 C.F.
TOTAL STORAGE PROVIDED = 15,536 C.F.
WET STORAGE REQUIRED = 7,236 C.F.
WET STORAGE PROVIDED =7,660 C.F.
DRY STORAGE REQUIRED = 7,236 C.F.
DRY STORAGE PROVIDED = 7,876 C.F.
TRAP BOTTOM ELEVATION = 241.0
BOTTOM DIMENSIONS = 62' x 70'
RISER CREST (DRY STORAGE) ELEV. = 244.00
WET STORAGE ELEV. = 242.60
CLEANOUT ELEVATION = 241.85
TOP OF EMBANKMENT = 245.5
SIDE SLOPES = 2:1
EMBANKMENT TOP WIDTH = 4.0 FT
PRINCIPAL SPILLWAY MATERIAL = CMP
RISER DIAMETER = 36"
BARREL DIAMETER = 27"
TRASH RACK DIAMETER = 54"
TRASH RACK HEIGHT = 25'
BAFFLE TOP ELEV = 243.05

Owner/Developer:
Merritt-MR, LLC
2066 Lord Baltimore Drive
Baltimore, Maryland 21244
ph: 410-298-2600
fx: 410-298-9644

MATIS WARFIELD
Consulting Engineers
10540 York Road, Suite M
Hunt Valley, Maryland 21030
PHONE 410.683.7004 FAX 410.683.1798
www.matiswarfield.com

NOTE

1. THE STOCKPILE AREA MUST BE BENCHED IF IT EXCEEDS 15 FT IN HEIGHT.

SCALE IN FEET 50 0 50 100

APPROVED: Howard County Department of Planning and Zoning

CHIEF, DEVELOPMENT ENGINEERING DIVISION — DATE 4.8.15

CHIEF, DIVISION OF LAND DEVELOPMENT — DATE 4-13-15

DIRECTOR — DATE 4/8/15

REVISED SITE DEVELOPMENT PLAN

Final Sediment Control Plan
The Meadows Corporate Park
Phase 2

6510 - 6518 MEADOW RIDGE ROAD MD RTE. 103
GREEN BUILDING

TAX MAP: 37;
PARCELS: A5-A9
ELECTION DISTRICT : 1
ZONE: POR

GENERAL OFFICE
SCALE : 1" = 50'
DATE : April 23, 2014
SHEET: 24 of 35

SDP-13-070

SEQUENCE OF CONSTRUCTION

PHASE I - INITIAL SEDIMENT CONTROLS

1. OBTAIN GRADING PERMIT. (1 DAY)
2. NOTIFY THE HOWARD COUNTY DEPARTMENT OF PERMITS AND LICENSES 48 HOURS PRIOR TO BEGINNING WORK. (2 DAYS)
3. CLEAR FOR AND INSTALL STABILIZED CONSTRUCTION ENTRANCE, PERIMETER DIKE SWALE, EARTH DIKE, SUPER SILT FENCE, SILT FENCE, SILT FENCE ON PAVEMENT, TEMPORARY ASPHALT BERM, SEDIMENT TRAPS #1 & 2 AND STOCKPILE AREA. INSTALL PERMANENT PIPE FROM M-5 TO EX I-1D AS PART OF SEDIMENT TRAP INSTALLATION. (4 WEEKS)
4. WITH HOWARD COUNTY SEDIMENT CONTROL INSPECTOR'S PERMISSION, PROCEED WITH PHASE-II. (1 DAY)

PHASE II - FINAL SEDIMENT CONTROLS

5. CLEAR & GRUB THE REMAINDER OF THE DISTURBED AREA INCLUDING ANY REMOVAL OF EXISTING IMPROVEMENTS. (4 WEEKS)
6. BEGIN ROUGH GRADING OF SITE. EXCAVATE & BEGIN CONSTRUCTION OF BUILDING FOUNDATIONS. (4 WEEKS)
7. BEGIN UTILITY CONSTRUCTION AND COMPLETE STORM DRAIN SYSTEM, INSTALL INLET PROTECTION AS STORM DRAIN INSTALLATION PROCEEDS. ANY SEDIMENT CONTROLS INTERRUPTED BY STORM DRAIN INSTALLATION SHALL BE REPAIRED IMMEDIATELY. (8 WEEKS) ONCE STORM DRAIN SYSTEM TO I-5 IS INSTALLED AND WITH THE PERMISSION OF SEDIMENT CONTROL INSPECTOR, THE PORTION OF PDS-2 OVER THE PROPOSED PAVEMENT MAY BE REMOVED.
8. FINE GRADE AND INSTALL CURB AND GUTTER, AND BASE PAVING. (5 WEEKS)
9. UPON STABILIZATION OF ALL CONTRIBUTING DRAINAGE AREAS, INSTALL PERMEABLE PAVEMENT SECTIONS. (2 WEEKS)
10. WHEN RECEIVING AREA IS STABILIZED, REMOVE INLET PROTECTION AND FLUSH STORM DRAINAGE SYSTEM. (1 WEEK)
11. INSTALL MICRO BIORETENTION FACILITIES AND GRAVEL WETLAND #2. (3 WEEKS)
12. WITH HOWARD COUNTY SEDIMENT CONTROL INSPECTOR'S PERMISSION, REMOVE SEDIMENT TRAP#1 AND CONVERT TO GRAVEL WETLAND. ANY TRAP OR BASIN LOCATED OVER A SWM FACILITY SHALL BE MULCHED OUT TO ONE FOOT BELOW THE BOTTOM OF THE ORIGINAL DEVICE. SOIL BACKFILL SHALL BE DRY AND REPLACED IN 6"-12" LOOSE LIFTS. (1 WEEK)
13. STABILIZE REMAINING AREAS AND BEGIN LANDSCAPING. (1 WEEK)
14. WITH THE PERMISSION OF THE SEDIMENT CONTROL INSPECTOR, REMOVE ANY REMAINING SEDIMENT CONTROL MEASURES AND STABILIZE. (5 DAYS)

DAILY STABILIZATION NOTES

Areas within the limits of disturbance that are not draining to the sediment control measures require daily stabilization. Contractor shall only disturb that area which can be completed and stabilized at the end of each working day. Stabilization shall constitute the following:

1. FOR AREAS TO BE PAVED - STONE BASE
2. FOR AREAS TO BE VEGETATIVELY STABILIZED-
   a) Permanent Seed & Erosion Control Matting, or Sod for all slopes, channel or swale areas
   b) Permanent Seed and Mulch for all other areas.

Any areas which can not be stabilized by the end of each working day must have silt fence installed downslope of them.

UTILITY NOTES

A. Contractor shall open only that section of trench which can be backfilled and stabilized each day. If trench must remain open for longer than one day, silt fence shall be placed below, (downslope) the trench.
B. Place all excavated material on uphill side of trench.
C. Any sediment control devices disturbed by construction are to be repaired immediately.

INLET PROTECTION NOTE

* The contractor is required to install inlet protection on all storm drain inlets with the exception of the following:

1. Any inlet outfalling directly into a sediment trapping device.
2. Inlets on private or public paved roadways open to the public.

All inlet protection will be installed as directed by the inspector in accordance with the 2011 Maryland Standards and Specifications for Soil Erosion and Sediment Control, Page E.23
* (or as may be amended).
The removal of any inlet protection devices will require approval from the inspector.

Storm Drains to be flushed prior to trapping device removal.

MAINTENANCE NOTE

CONTRACTOR SHALL INSPECT AND MAINTAIN ALL SEDIMENT CONTROL MEASURES AND DEVICES AFTER EVERY STORM EVENT. MAINTENANCE SHALL INCLUDE, BUT NOT BE LIMITED TO, REMOVAL OF ANY ACCUMULATED SEDIMENT. GEOTEXTILE FABRICE SHALL BE REPLACED AS NEEDED TO ENSURE PROPER FUNCTION.
AFTER EACH STORM EVENT, ANY STORM DRAINS DISCHARGING TO THE SEDIMENT TRAP MUST BE FLUSHED AND THE TRAP MUST BE CLEANED OUT.

SILT FENCE, SUPER SILT FENCE & INLET PROTECTION MAINTENANCE NOTE

CONTRACTOR SHALL INSPECT THE SILT FENCE (SF) SUPER SILT FENCE (SSF) & INLET PROTECTION (IP) AFTER EACH DAY OR AFTER EACH STORM EVENT AND PERFORM MAINTENANCE. MAINTENANCE SHALL INCLUDE, BUT NOT BE LIMITED TO, REMOVAL OF ANY ACCUMULATED SEDIMENT ALONG AND/ OR ABOVE THE FENCE LOCATION OR ON INLET PROTECTION WHICH WILL RESTRICT ITS FUNCTION. IN ADDITION, ANY PORTION OF SSF AND/ OR INLET PROTECTION DAMAGED SHALL BE REPAIRED AND/OR REPLACED IN ACCORDANCE WITH THE STANDARDS AND SPECIFICATIONS.

TEMPORARY STOCKPILE NOTE

TEMPORARY STOCKPILES SHALL BE:

1.) LOCATED WITHIN THE LIMIT OF DISTURBANCE (LOD).
2.) DRAIN TO A FUNCTIONING SEDIMENT CONTROL DEVICE.
3.) POSITIONED TO NOT IMPEDE UPON, OR IMPAIR THE FUNCTION OF SAID DEVICE.
4.) POSITIONED TO NOT ALTER DRAINAGE DIVIDES.

TRAP/BASIN FLOW DIVERSION NOTE

TO PREVENT SLOPE EROSION, WITHIN SEDIMENT TRAPPING DEVICES, ADEQUATELY SIZED AND STABILIZED FLOW DIVERSION MEASURES (I.E. EARTH DIKE, TEMPORARY SWALE, PERIMETER DIKE/SWALE, SUPER FENCE DIVERSION, ETC) SHALL BE INSTALLED AT THE UPSLOPE EXTENT OF TRAP, AND BASIN STORAGE AREAS TO DIVERT ALL FLOWS TO APPROPRIATE INFLOW PROTECTION DEVICES. THESE MEASURES WILL BE LOCATED BY THE CONTRACTOR AND THEREFORE NOT SHOWN ON THE PLAN VIEW.

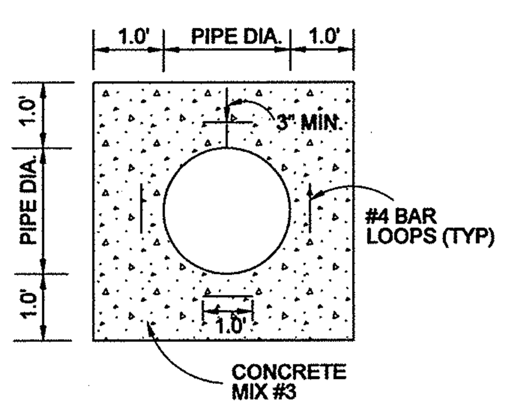

CONCRETE COLLAR DETAIL

NOT TO SCALE

DETAIL C-5 TEMPORARY ASPHALT BERM

STANDARD SYMBOL
TAB

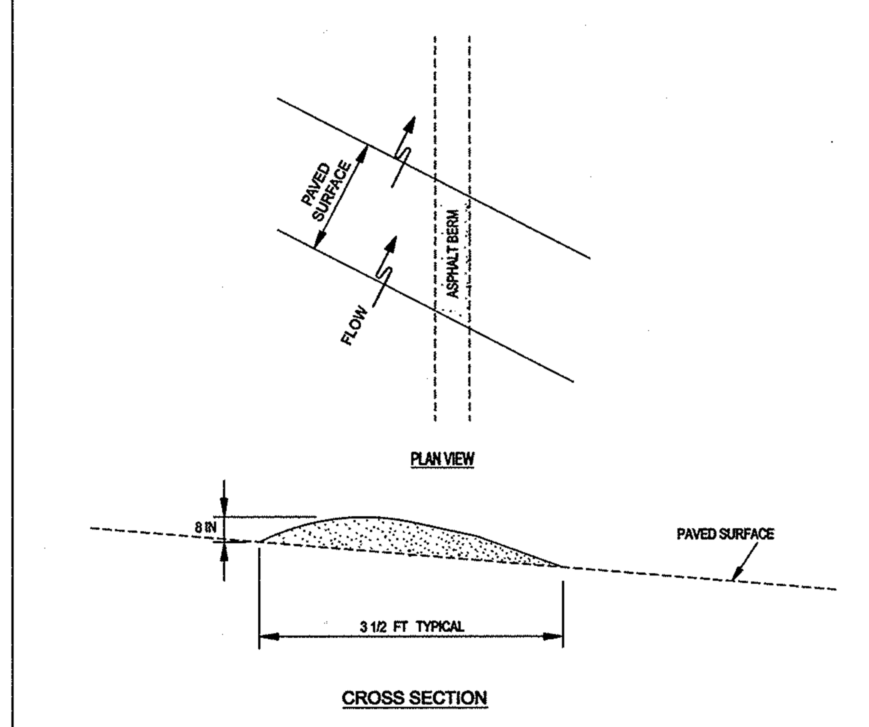

CONSTRUCTION SPECIFICATIONS

1. CONSTRUCT BERM ON AN UNINTERRUPTED, CONTINUOUS GRADE.
2. INSTALL BERM TO CONFORM TO CROSS SECTION DIMENSIONS OF A UNIFORM HEIGHT OF 8 INCHES MINIMUM AND APPROXIMATE WIDTH OF 3 1/2 FEET.
3. PROVIDE OUTLET PROTECTION AS REQUIRED ON PLAN.
4. COMPACT ASPHALT BERM.
5. REPAIR DAMAGED ASPHALT. REMOVE ACCUMULATED SEDIMENT AND DEBRIS. MAINTAIN POSITIVE DRAINAGE.
6. UPON REMOVAL OF ASPHALT BERM, RETURN TO ORIGINAL CONDITIONS OR AS SPECIFIED ON APPROVED PLAN.

MARYLAND STANDARDS AND SPECIFICATIONS FOR SOIL EROSION AND SEDIMENT CONTROL

U.S. DEPARTMENT OF AGRICULTURE NATURAL RESOURCES CONSERVATION SERVICE	2011	MARYLAND DEPARTMENT OF ENVIRONMENT WATER MANAGEMENT ADMINISTRATION

DETAIL E-2 SILT FENCE ON PAVEMENT

STANDARD SYMBOL
SFOP

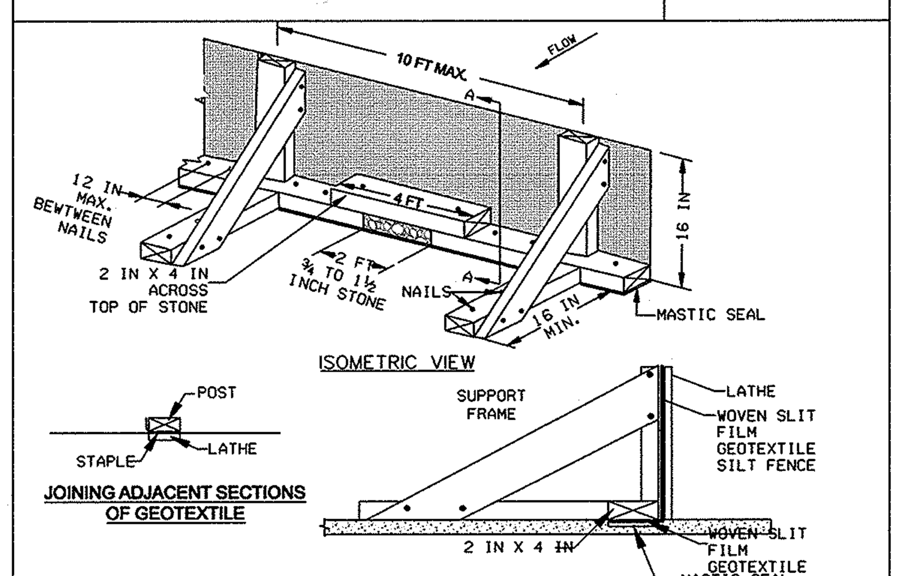

CONSTRUCTION SPECIFICATIONS

1. USE NOMINAL 2 INCH X 4 INCH LUMBER.
2. USE WOVEN SLIT FILM GEOTEXTILE, AS SPECIFIED IN SECTION H-1 MATERIALS.
3. PROVIDE MANUFACTURER CERTIFICATION TO THE AUTHORIZED REPRESENTATIVE OF THE INSPECTION/ENFORCEMENT AUTHORITY SHOWING THAT THE GEOTEXTILE USED MEETS THE REQUIREMENTS IN SECTION H-1 MATERIALS.
4. SPACE UPRIGHT SUPPORTS NO MORE THAN 10 FEET APART.
5. PROVIDE A TWO FOOT OPENING BETWEEN EVERY SET OF SUPPORTS AND PLACE STONE IN THE OPENING OVER GEOTEXTILE.
6. KEEP SILT FENCE TAUT AND SECURELY STAPLE TO THE UPSLOPE SIDE OF UPRIGHT SUPPORTS. EXTEND GEOTEXTILE UNDER 2x4.
7. WHERE TWO SECTIONS OF GEOTEXTILE ADJOIN: OVERLAP, FOLD, AND STAPLE TO POST IN ACCORDANCE WITH THIS DETAIL. ATTACH LATHE.
8. PROVIDE A MASTIC SEAL BETWEEN PAVEMENT, GEOTEXTILE, AND 2x4 TO PREVENT SEDIMENT-LADEN WATER FROM ESCAPING BENEATH SILT FENCE INSTALLATION.
9. SECURE BOARDS TO PAVEMENT WITH 40D 5 INCH MINIMUM LENGTH NAILS.
10. REMOVE ACCUMULATED SEDIMENT AND DEBRIS WHEN BULGES DEVELOP IN SILT FENCE OR WHEN SEDIMENT REACHES 25% OF FENCE HEIGHT. REPLACE GEOTEXTILE IF TORN. MAINTAIN WATER TIGHT SEAL ALONG BOTTOM. REPLACE STONE IF DISPLACED.

MARYLAND STANDARDS AND SPECIFICATIONS FOR SOIL EROSION AND SEDIMENT CONTROL

U.S. DEPARTMENT OF AGRICULTURE NATURAL RESOURCES CONSERVATION SERVICE	2011	MARYLAND DEPARTMENT OF ENVIRONMENT WATER MANAGEMENT ADMINISTRATION

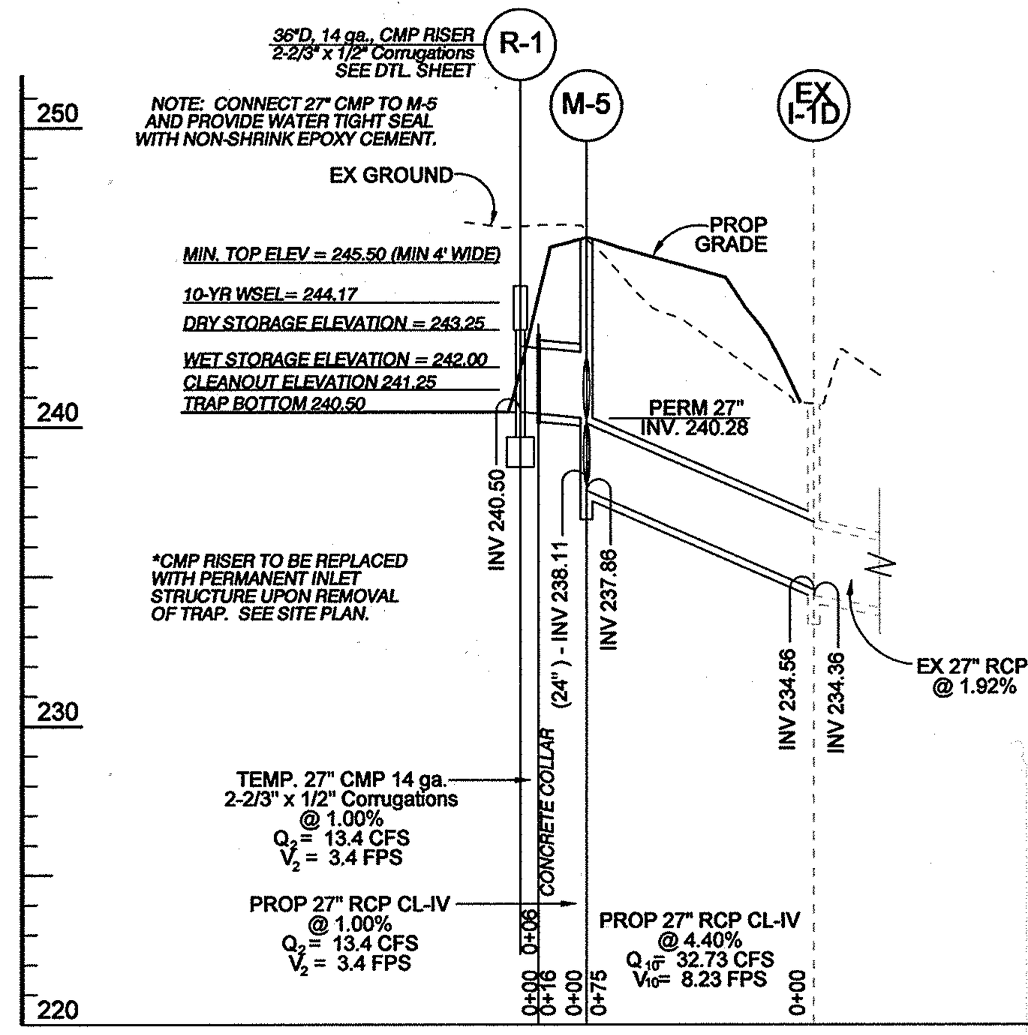

SEDIMENT TRAP #1 PROFILE

SCALE: HORZ. 1" = 50'
VERT. 1" = 5'

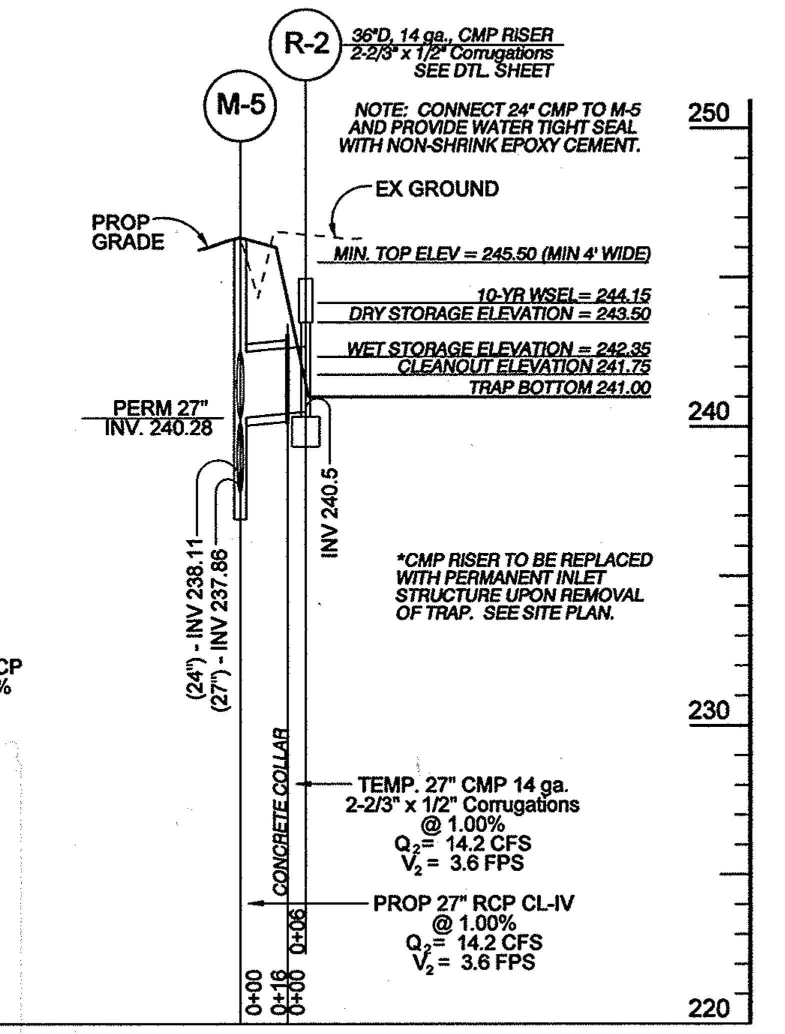

SEDIMENT TRAP #2 PROFILE

SCALE: HORZ. 1" = 50'
VERT. 1" = 5'

HOWARD SOIL CONSRVATION DISTRICT
STANDARD SEDIMENT CONTROL NOTES

1. A minimum of 48 hours notice must be given to the Howard County Department of Inspections, Licenses and Permits, Sediment Control Division prior to the start of any construction (313-1855).
2. All vegetative and structural practices are to be installed according to the provisions of this plan and are to be in conformance with the most current MARYLAND STANDARDS AND SPECIFICATIONS FOR SOIL EROSION AND SEDIMENT CONTROL and revisions thereto.
3. Following initial soil disturbance or re-disturbance, permanent or temporary stabilization shall be completed within:
   a) 3 calendar days for all perimeter sediment control structures, dikes, perimeter slopes and all slopes greater than 3:1,
   b) 7 days as to all other disturbed or graded areas on the project site.
4. All disturbed areas must be stabilized within the time period specified above in accordance with the 2011 MARYLAND STANDARDS AND SPECIFICATIONS FOR SOIL EROSION AND SEDIMENT CONTROL for permanent seeding (Sec. B-4-5), temporary seeding (Sec. B-4-4) and mulching (Sec.B-4-3). Temporary stabilization with mulch alone can only be done when recommended seeding dates do not allow for proper germination and establishment of grasses.
5. All sediment control structures are to remain in place and are to be maintained in operative condition until permission for their removal has been obtained from the Howard County Sediment Control Inspector.
6. Site Analysis:
   Total Area of Site: 33.05 Acres
   Area Disturbed: 10.49 Acres
   Area to be roofed or paved: 5.56 Acres
   Area to be vegetatively stabilized: 4.93 Acres
   Total Cut: 55,000 Cu. Yds.
   Total Fill: 35,000 Cu. Yds.
   Offsite waste/borrow are location ________________
7. Any sediment control practice that is disturbed by grading activity for placement of utilities must be repaired on the same day of disturbance.
8. Additional sediment control must be provided, if deemed necessary by the Howard County Sediment Control Inspector.
9. On all sites with disturbed areas in excess of 2 acres, approval of the inspection agency shall be requested upon completion of installation of perimeter erosion and sediment controls, but before proceeding with any other earth disturbance or grading. Other building or grading inspection approvals may not be authorized until this initial approval by the inspection agency is made.
10. Trenches for the construction of utilities is limited to three pipe lengths or that which shall be back-filled and stabilized by the end of each workday, whichever is shorter.
11. Any changes or revisions to the sequence of construction must be reviewed and approved by the plan approval authority prior to proceeding with construction.
12. A project is to be sequenced so that grading activities begin on one grading unit (maximum acreage of 20 ac. per grading unit) At a time. Work may proceed to a subsequent grading unit when at least 50 percent of the disturbed area in the preceding grading unit has be stabilized and approved by the enforcement authority. Unless otherwise specified and approved by the approval authority, no more than 30 acres cumulatively may be disturbed at a given time.
13. The Environment Concept Plan, ECP-13-063, was approved on 7/18/13.

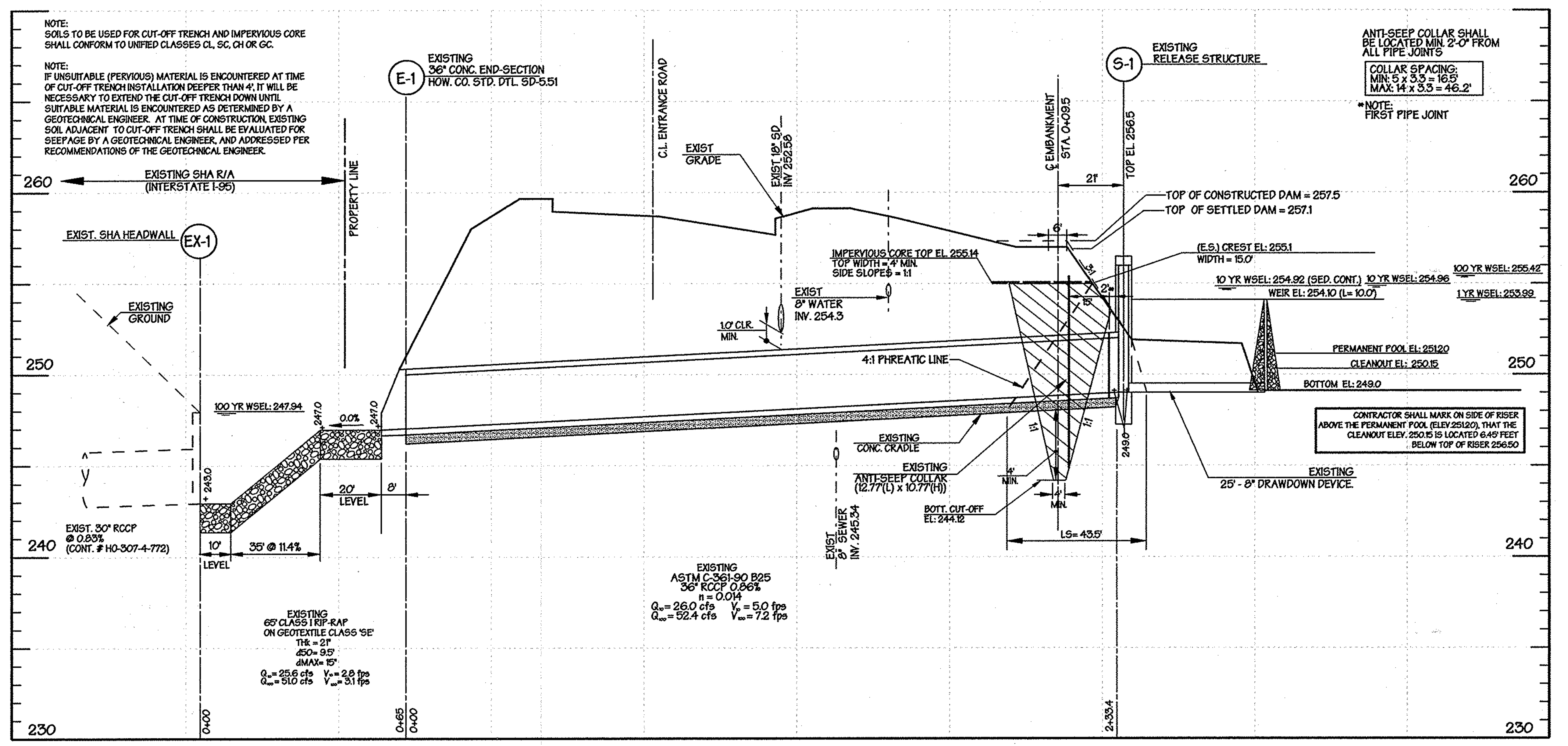

EXISTING SEDIMENT BASIN

PROFILE ALONG ℄ OF PRINCIPAL SPILLWAY - PER SDP05-072

SCALE: HORZ: 1"= 30'
VERT: 1"= 5'

ENGINEER CERTIFICATION:

I certify that this plan for erosion and sediment control represents a practical and workable plan based on my personal knowledge of the site conditions and that it was prepared in accordance with the requirements of the Howard Soil Conservation District.

Engineer [signature] Date 1-28-15
Name Tanya L. Bensinger PE # 29179

DEVELOPER CERTIFICATION:

I/We certify that all development and construction will be done according to this plan for sediment and erosion control, and that all responsible personnel involved in the construction project will have a Certificate of Attendance at a Department of the Environment Approved Training Program for the Control of Sediment and Erosion before beginning the project. I also authorize periodic on-site inspection by the Howard Soil Conservation District.

Developer [signature]
Name Josh Asbury

This development plan is approved for soil erosion and sediment control by the Howard Soil Conservation District.

[signature] 2/10/15
APPROVED: HOWARD SOIL CONSERVATION DISTRICT

APPROVED: Howard County Department of Planning and Zoning

[signature] 4.8.15
CHIEF, DEVELOPMENT ENGINEERING DIVISION DATE

[signature] 4-13-15
CHIEF, DIVISION OF LAND DEVELOPMENT DATE

[signature] 4/23/15
DIRECTOR DATE

MATIS WARFIELD
Consulting Engineers
10540 York Road, Suite M
Hunt Valley, Maryland 21030
PHONE 410.683.7004 FAX 410.683.1798
www.matiswarfield.com

"Professional Certification: I hereby certify that these documents were prepared or approved by me, and that I am duly licensed professional engineer under the laws of the state of Maryland, License No. 29179, Expiration Date: 06-18-15.
[seal: STATE OF MARYLAND, TANYA L. BENSINGER, No. 29179, PROFESSIONAL ENGINEER] 1-28-15

Owner/Developer:

Merritt-MR, LLC
2066 Lord Baltimore Drive
Baltimore, Maryland 21244
ph: 410-298-2600
fx: 410-298-9644

NO.	DESCRIPTION	BY	DATE
1	Add temporary parking and submerged gravel wetland SWM-11A.	MWI	1/28/2015

REVISED SITE DEVELOPMENT PLAN

SEDIMENT CONTROL DETAILS

The Meadows Corporate Park Phase 2

6510 - 6518 MEADOW RIDGE ROAD MD RTE. 103
GREEN BUILDING

TAX MAP: 37;
PARCELS: A5-A9
ELECTION DISTRICT : 1
ZONE: POR

GENERAL OFFICE
SCALE : 1" = 50'
DATE : April 23, 2014
SHEET: 25 of 35

SDP-13-070

DETAIL B-1 STABILIZED CONSTRUCTION ENTRANCE

STANDARD SYMBOL: SCE

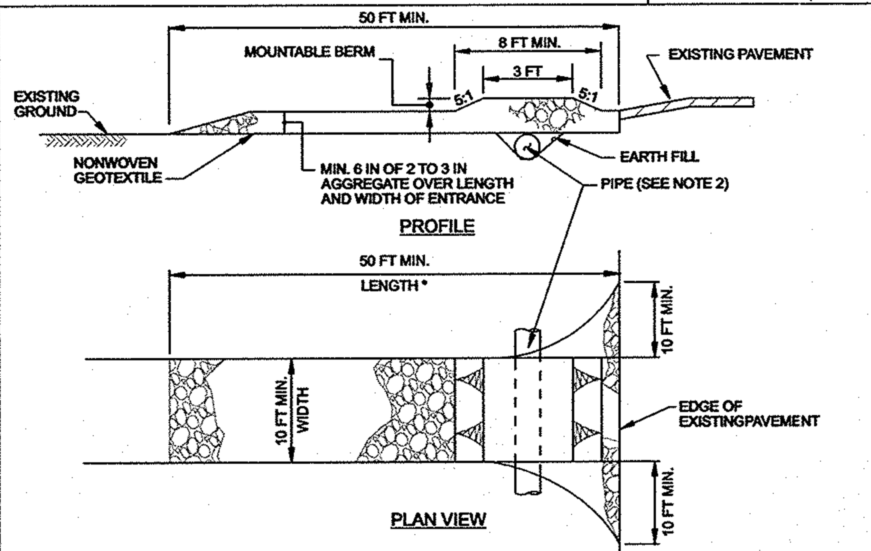

CONSTRUCTION SPECIFICATIONS

1. PLACE STABILIZED CONSTRUCTION ENTRANCE IN ACCORDANCE WITH THE APPROVED PLAN. VEHICLES MUST TRAVEL OVER THE ENTIRE LENGTH OF THE SCE. USE MINIMUM LENGTH OF 50 FEET (*30 FEET FOR SINGLE RESIDENCE LOT). USE MINIMUM WIDTH OF 10 FEET. FLARE SCE 10 FEET MINIMUM AT THE EXISTING ROAD TO PROVIDE A TURNING RADIUS.
2. PIPE ALL SURFACE WATER FLOWING TO OR DIVERTED TOWARD THE SCE UNDER THE ENTRANCE, MAINTAINING POSITIVE DRAINAGE. PROTECT PIPE INSTALLED THROUGH THE SCE WITH A MOUNTABLE BERM WITH 5:1 SLOPES AND A MINIMUM OF 12 INCHES OF STONE OVER THE PIPE. PROVIDE PIPE AS SPECIFIED ON APPROVED PLAN. WHEN THE SCE IS LOCATED AT A HIGH SPOT AND HAS NO DRAINAGE TO CONVEY, A PIPE IS NOT NECESSARY. A MOUNTABLE BERM IS REQUIRED WHEN SCE IS NOT LOCATED AT A HIGH SPOT.
3. PREPARE SUBGRADE AND PLACE NONWOVEN GEOTEXTILE, AS SPECIFIED IN SECTION H-1 MATERIALS.
4. PLACE CRUSHED AGGREGATE (2 TO 3 INCHES IN SIZE) OR EQUIVALENT RECYCLED CONCRETE (WITHOUT REBAR) AT LEAST 6 INCHES DEEP OVER THE LENGTH AND WIDTH OF THE SCE.
5. MAINTAIN ENTRANCE IN A CONDITION THAT MINIMIZES TRACKING OF SEDIMENT. ADD STONE OR MAKE OTHER REPAIRS AS CONDITIONS DEMAND TO MAINTAIN CLEAN SURFACE, MOUNTABLE BERM, AND SPECIFIED DIMENSIONS. IMMEDIATELY REMOVE STONE AND/OR SEDIMENT SPILLED, DROPPED, OR TRACKED ONTO ADJACENT ROADWAY BY VACUUMING, SCRAPING, AND/OR SWEEPING. WASHING ROADWAY TO REMOVE MUD TRACKED ONTO PAVEMENT IS NOT ACCEPTABLE UNLESS WASH WATER IS DIRECTED TO AN APPROVED SEDIMENT CONTROL PRACTICE.

MARYLAND STANDARDS AND SPECIFICATIONS FOR SOIL EROSION AND SEDIMENT CONTROL

U.S. DEPARTMENT OF AGRICULTURE NATURAL RESOURCES CONSERVATION SERVICE	2011	MARYLAND DEPARTMENT OF ENVIRONMENT WATER MANAGEMENT ADMINISTRATION

DETAIL C-1 EARTH DIKE

STANDARD SYMBOL: A-1 — PLACE DESIGNATION (e.g. A-1) ON FLOW CHANNEL SIDE OF DIKE.

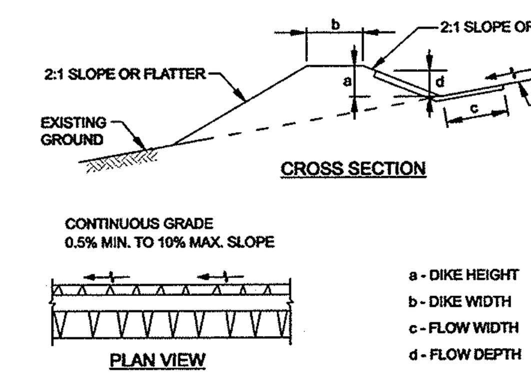

DIKE TYPE

	A	B
a - DIKE HEIGHT	18 IN MIN.	30 IN MIN.
b - DIKE WIDTH	24 IN MIN.	36 IN MIN.
c - FLOW WIDTH	4 FT MIN.	6 FT MIN.
d - FLOW DEPTH	12 IN MIN.	24 IN MIN.

FLOW CHANNEL STABILIZATION

- A-1 SEED WITH STRAW MULCH AND TACK. (NOT ALLOWED FOR CLEAR WATER DIVERSION.)
- A-2/B-2 SEED WITH SOIL STABILIZATION MATTING OR LINE WITH SOD.
- A-3/B-3 4 TO 7 INCH STONE OR EQUIVALENT RECYCLED CONCRETE PRESSED INTO SOIL A MINIMUM OF 7 INCHES AND FLUSH WITH GROUND.

CONSTRUCTION SPECIFICATIONS

1. REMOVE AND DISPOSE OF ALL TREES, BRUSH, STUMPS, OBSTRUCTIONS, AND OTHER OBJECTIONABLE MATERIAL SO AS NOT TO INTERFERE WITH PROPER FUNCTION OF EARTHDIKE.
2. EXCAVATE OR SHAPE EARTH DIKE TO LINE, GRADE, AND CROSS SECTION AS SPECIFIED. BANK PROJECTIONS OR OTHER IRREGULARITIES ARE NOT ALLOWED.
3. COMPACT FILL.
4. CONSTRUCT FLOW CHANNEL ON AN UNINTERRUPTED, CONTINUOUS GRADE, ADJUSTING THE LOCATION DUE TO FIELD CONDITIONS AS NECESSARY TO MAINTAIN POSITIVE DRAINAGE.
5. PROVIDE OUTLET PROTECTION AS REQUIRED ON APPROVED PLAN.
6. STABILIZE EARTH DIKE WITHIN THREE DAYS OF INSTALLATION. STABILIZE FLOW CHANNEL FOR CLEAR WATER DIVERSION WITHIN 24 HOURS OF INSTALLATION.
7. MAINTAIN LINE, GRADE, AND CROSS SECTION. REMOVE ACCUMULATED SEDIMENT AND DEBRIS, AND MAINTAIN POSITIVE DRAINAGE. KEEP EARTH DIKE AND POINT OF DISCHARGE FREE OF EROSION, AND CONTINUOUSLY MEET REQUIREMENTS FOR ADEQUATE VEGETATIVE ESTABLISHMENT IN ACCORDANCE WITH SECTION B-4 VEGETATIVE STABILIZATION.
8. UPON REMOVAL OF EARTH DIKE, GRADE AREA FLUSH WITH EXISTING GROUND. WITHIN 24 HOURS OF REMOVAL STABILIZE DISTURBED AREA WITH TOPSOIL, SEED, AND MULCH, OR AS SPECIFIED ON APPROVED PLAN.

MARYLAND STANDARDS AND SPECIFICATIONS FOR SOIL EROSION AND SEDIMENT CONTROL

U.S. DEPARTMENT OF AGRICULTURE NATURAL RESOURCES CONSERVATION SERVICE	2011	MARYLAND DEPARTMENT OF ENVIRONMENT WATER MANAGEMENT ADMINISTRATION

DETAIL C-3 PERIMETER DIKE/SWALE

STANDARD SYMBOL: PDS-1 — PLACE DESIGNATION (PDS-1 OR 2) ON FLOW CHANNEL SIDE OF DIKE-SWALE.

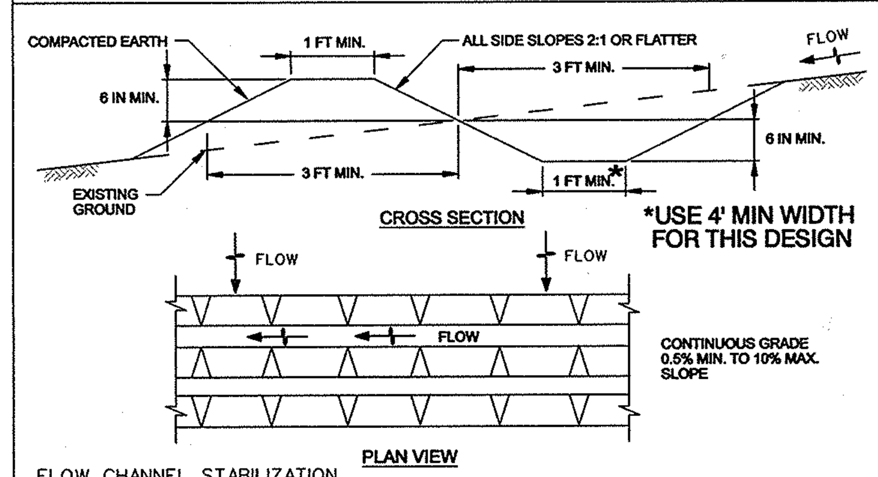

FLOW CHANNEL STABILIZATION

- PDS-1 SEED AND MULCH AND TACK (DRAINING < 1 ACRE) (NOT ALLOWED FOR CLEAR WATER DIVERSION.)
- PDS-2 SEED WITH SOIL STABILIZATION MATTING OR LINE WITH SOD (DRAINING BETWEEN 1 AND 2 ACRES)

NOTE: THE MAXIMUM DRAINAGE AREA FOR THIS PRACTICE IS 2 ACRES.

CONSTRUCTION SPECIFICATIONS

1. REMOVE AND DISPOSE OF ALL TREES, BRUSH, STUMPS, OBSTRUCTIONS, AND OTHER OBJECTIONABLE MATERIAL SO AS NOT TO INTERFERE WITH PROPER FUNCTION OF DIKE/SWALE.
2. EXCAVATE OR SHAPE DIKE/SWALE TO LINE, GRADE, AND CROSS SECTION AS SPECIFIED. BANK PROJECTIONS OR OTHER IRREGULARITIES ARE NOT ALLOWED.
3. COMPACT FILL.
4. CONSTRUCT DIKE/SWALE ON AN UNINTERRUPTED, CONTINUOUS GRADE, ADJUSTING THE LOCATION DUE TO FIELD CONDITIONS AS NECESSARY TO MAINTAIN POSITIVE DRAINAGE.
5. PROVIDE OUTLET PROTECTION AS REQUIRED ON APPROVED PLAN.
6. STABILIZE DIKE/SWALE WITHIN 3 DAYS OF INSTALLATION. STABILIZE DIKE/SWALES USED FOR CLEAR WATER DIVERSION WITHIN 24 HOURS OF INSTALLATION.
7. MAINTAIN LINE, GRADE, AND CROSS SECTION. REMOVE ACCUMULATED SEDIMENT AND DEBRIS, AND MAINTAIN POSITIVE DRAINAGE. KEEP PERIMETER DIKE/SWALE AND POINT OF DISCHARGE FREE OF EROSION AND CONTINUOUSLY MEET REQUIREMENTS FOR ADEQUATE VEGETATIVE ESTABLISHMENT IN ACCORDANCE WITH SECTION B-4 VEGETATIVE STABILIZATION.
8. UPON REMOVAL OF DIKE/SWALE, GRADE AREA FLUSH WITH EXISTING GROUND. WITHIN 24 HOURS OF REMOVAL STABILIZE DISTURBED AREA WITH TOPSOIL, SEED, MULCH, OR AS SPECIFIED ON APPROVED PLAN.

MARYLAND STANDARDS AND SPECIFICATIONS FOR SOIL EROSION AND SEDIMENT CONTROL

U.S. DEPARTMENT OF AGRICULTURE NATURAL RESOURCES CONSERVATION SERVICE	2011	MARYLAND DEPARTMENT OF ENVIRONMENT WATER MANAGEMENT ADMINISTRATION

DETAIL C-8 MOUNTABLE BERM

STANDARD SYMBOL: MB

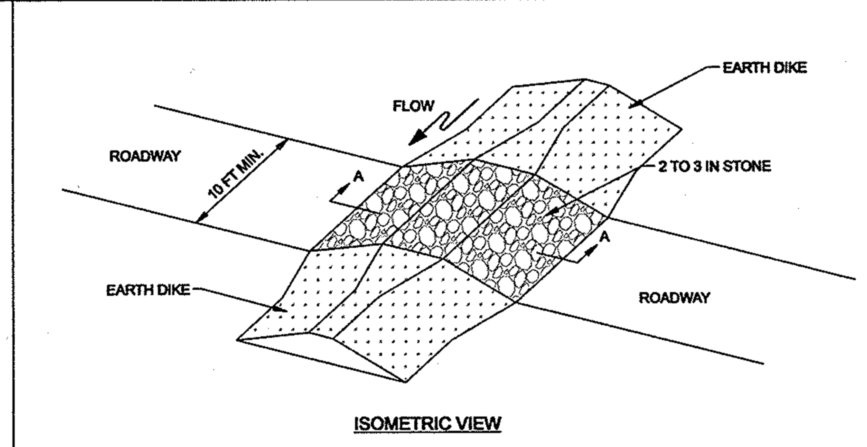

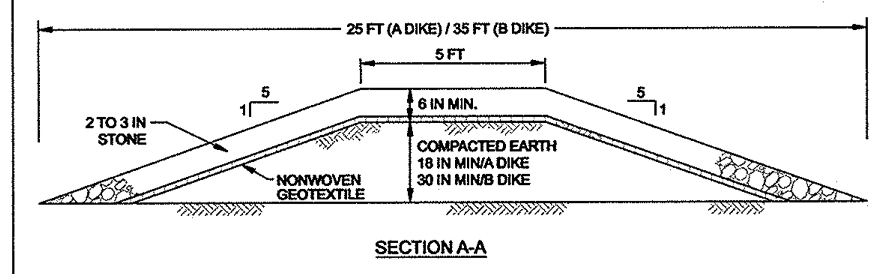

CONSTRUCTION SPECIFICATIONS

1. USE MINIMUM WIDTH OF 10 FEET TO ALLOW FOR VEHICULAR PASSAGE.
2. PLACE NONWOVEN GEOTEXTILE, AS SPECIFIED IN SECTION H-1 MATERIALS, OVER THE EARTH MOUND PRIOR TO PLACING STONE.
3. PLACE 2 TO 3 INCH STONE OR EQUIVALENT RECYCLED CONCRETE AT LEAST 6 INCHES DEEP OVER THE LENGTH AND WIDTH OF THE MOUNTABLE BERM.
4. MAINTAIN LINE, GRADE, AND CROSS SECTION. ADD STONE OR MAKE OTHER REPAIRS AS CONDITIONS DEMAND TO MAINTAIN SPECIFIED DIMENSIONS. REMOVE ACCUMULATED SEDIMENT AND DEBRIS. MAINTAIN POSITIVE DRAINAGE.

MARYLAND STANDARDS AND SPECIFICATIONS FOR SOIL EROSION AND SEDIMENT CONTROL

U.S. DEPARTMENT OF AGRICULTURE NATURAL RESOURCES CONSERVATION SERVICE	2011	MARYLAND DEPARTMENT OF ENVIRONMENT WATER MANAGEMENT ADMINISTRATION

DETAIL E-3 SUPER SILT FENCE

STANDARD SYMBOL: SSF

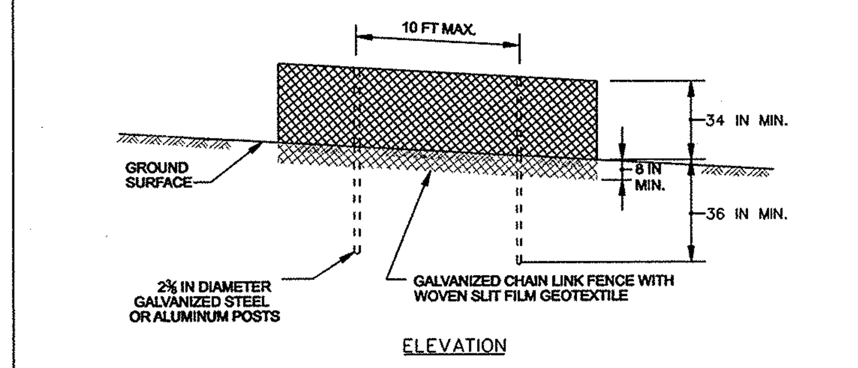

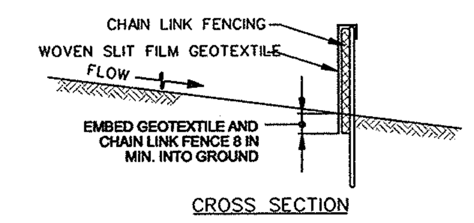

CONSTRUCTION SPECIFICATIONS

1. INSTALL 2⅜ INCH DIAMETER GALVANIZED STEEL POSTS OF 0.095 INCH WALL THICKNESS AND SIX FOOT LENGTH SPACED NO FURTHER THAN 10 FEET APART. DRIVE THE POSTS A MINIMUM OF 36 INCHES INTO THE GROUND.
2. FASTEN 9 GAUGE OR HEAVIER GALVANIZED CHAIN LINK FENCE (2⅜ INCH MAXIMUM OPENING) 42 INCHES IN HEIGHT SECURELY TO THE FENCE POSTS WITH WIRE TIES OR HUG RINGS.
3. FASTEN WOVEN SLIT FILM GEOTEXTILE AS SPECIFIED IN SECTION H-1 MATERIALS, SECURELY TO THE UPSLOPE SIDE OF CHAIN LINK FENCE WITH TIES SPACED EVERY 24 INCHES AT THE TOP AND MID SECTION. EMBED GEOTEXTILE AND CHAIN LINK FENCE A MINIMUM OF 8 INCHES INTO THE GROUND.
4. WHERE ENDS OF THE GEOTEXTILE COME TOGETHER, THE ENDS SHALL BE OVERLAPPED BY 6 INCHES, FOLDED, AND STAPLED TO PREVENT SEDIMENT BY PASS.
5. EXTEND BOTH ENDS OF THE SUPER SILT FENCE A MINIMUM OF FIVE HORIZONTAL FEET UPSLOPE AT 45 DEGREES TO THE MAIN FENCE ALIGNMENT TO PREVENT RUNOFF FROM GOING AROUND THE ENDS OF THE SUPER SILT FENCE.
6. PROVIDE MANUFACTURER CERTIFICATION TO THE INSPECTION/ENFORCEMENT AUTHORITY SHOWING THAT GEOTEXTILE USED MEETS THE REQUIREMENTS IN SECTION H-1 MATERIALS.
7. REMOVE ACCUMULATED SEDIMENT AND DEBRIS WHEN BULGES DEVELOP IN FENCE OR WHEN SEDIMENT REACHES 25% OF FENCE HEIGHT. REPLACE GEOTEXTILE IF TORN. IF UNDERMINING OCCURS, REINSTALL CHAIN LINK FENCING AND GEOTEXTILE.

MARYLAND STANDARDS AND SPECIFICATIONS FOR SOIL EROSION AND SEDIMENT CONTROL

U.S. DEPARTMENT OF AGRICULTURE NATURAL RESOURCES CONSERVATION SERVICE	2011	MARYLAND DEPARTMENT OF ENVIRONMENT WATER MANAGEMENT ADMINISTRATION

DETAIL E-1 SILT FENCE

STANDARD SYMBOL: SF

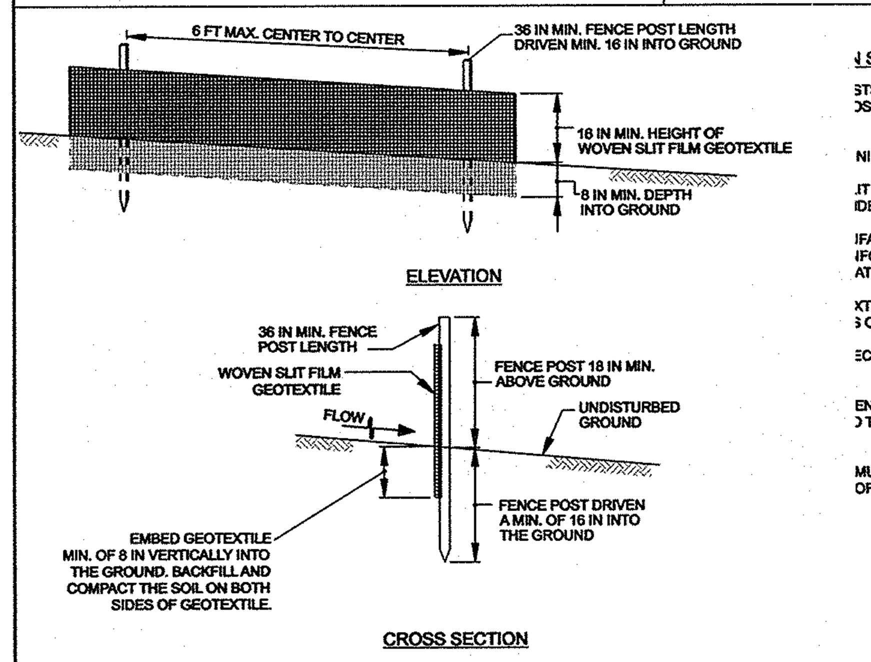

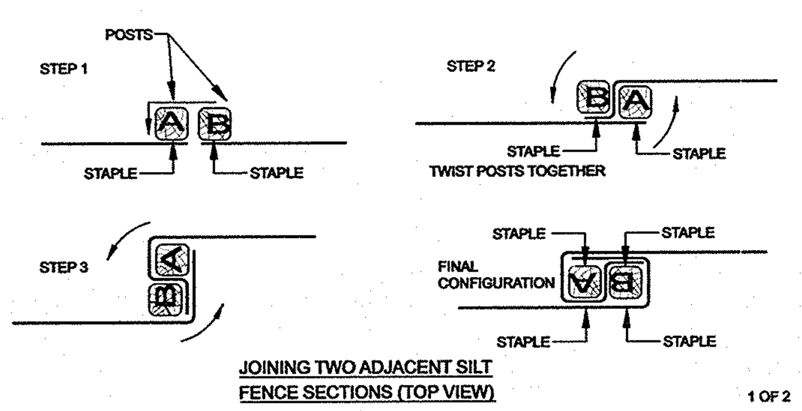

1 OF 2

MARYLAND STANDARDS AND SPECIFICATIONS FOR SOIL EROSION AND SEDIMENT CONTROL

U.S. DEPARTMENT OF AGRICULTURE NATURAL RESOURCES CONSERVATION SERVICE	2011	MARYLAND DEPARTMENT OF ENVIRONMENT WATER MANAGEMENT ADMINISTRATION

DETAIL E-1 SILT FENCE

STANDARD SYMBOL: SF

N SPECIFICATIONS

STS 1¾ X 1¾ ± ⅟₁₆ INCH (MINIMUM) SQUARE CUT OF SOUND QUALITY HARDWOOD. AS AN ALTERNATIVE OST USE STANDARD "T" OR "U" SECTION STEEL POSTS WEIGHING NOT LESS THAN 1 POUND PER

NIMUM POSTS DRIVEN 16 INCH MINIMUM INTO GROUND NO MORE THAN 6 FEET APART.

IT FILM GEOTEXTILE AS SPECIFIED IN SECTION H-1 MATERIALS AND FASTEN GEOTEXTILE SECURELY IDE OF FENCE POSTS WITH WIRE TIES OR STAPLES AT TOP AND MID-SECTION.

IFACTURER CERTIFICATION TO THE AUTHORIZED REPRESENTATIVE OF THE IFORCEMENT AUTHORITY SHOWING THAT THE GEOTEXTILE USED MEETS THE REQUIREMENTS IN ATERIALS.

XTILE A MINIMUM OF 8 INCHES VERTICALLY INTO THE GROUND. BACKFILL AND COMPACT THE SOIL S OF FABRIC.

ECTIONS OF GEOTEXTILE ADJOIN: OVERLAP, TWIST, AND STAPLE TO POST IN ACCORDANCE WITH

ENDS OF THE SILT FENCE A MINIMUM OF FIVE HORIZONTAL FEET UPSLOPE AT) THE MAIN FENCE ALIGNMENT TO PREVENT RUNOFF FROM GOING AROUND THE ENDS OF THE SILT

MULATED SEDIMENT AND DEBRIS WHEN BULGES DEVELOP IN SILT FENCE OR WHEN SEDIMENT OF FENCE HEIGHT. REPLACE GEOTEXTILE IF TORN. IF UNDERMINING OCCURS, REINSTALL FENCE.

2 OF 2

'LAND STANDARDS AND SPECIFICATIONS FOR SOIL EROSION AND SEDIMENT CONTROL

T OF AGRICULTURE 3 CONSERVATION SERVICE	2011	MARYLAND DEPARTMENT OF ENVIRONMENT WATER MANAGEMENT ADMINISTRATION

DETAIL E-9-1 STANDARD INLET PROTECTION

STANDARD SYMBOL: SIP

TYPE A MAXIMUM DRAINAGE AREA = ¼ ACRE
TYPE B MAXIMUM DRAINAGE AREA = 1 ACRE

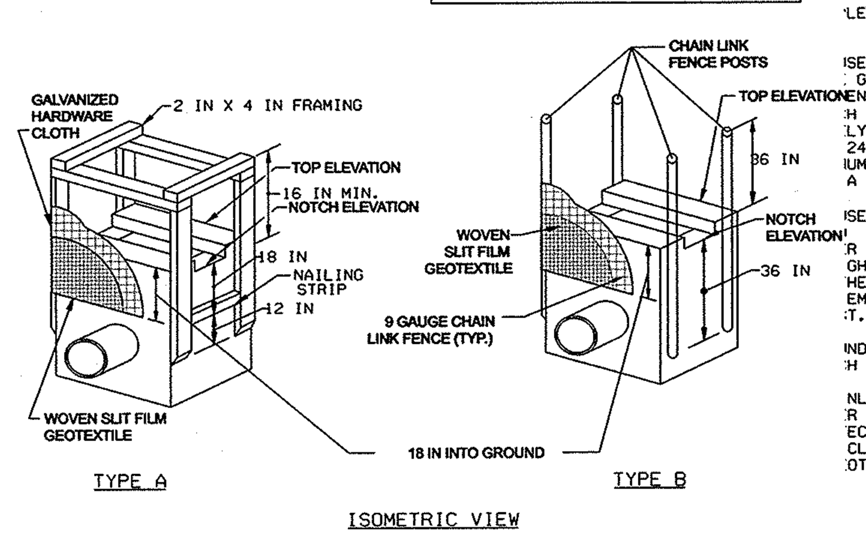

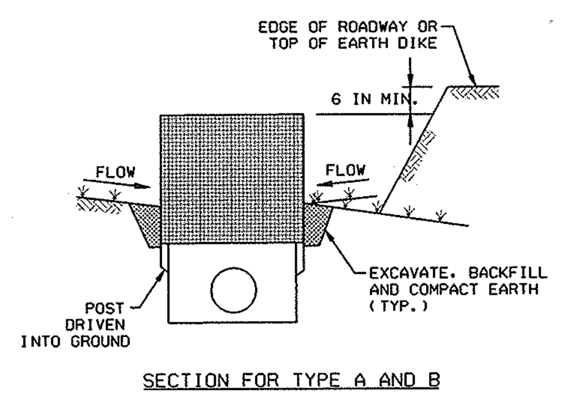

1 OF 2

MARYLAND STANDARDS AND SPECIFICATIONS FOR SOIL EROSION AND SEDIMENT CONTROL

U.S. DEPARTMENT OF AGRICULTURE NATURAL RESOURCES CONSERVATION SERVICE	2011	MARYLAND DEPARTMENT OF ENVIRONMENT WATER MANAGEMENT ADMINISTRATION

-1 STANDARD INLET PROTECTION

STANDARD SYMBOL: SIP

SPECIFICATIONS

T FILM GEOTEXTILE AS SPECIFIED IN SECTION H-1 MATERIALS.

LETELY AROUND THE INLET TO A DEPTH OF 18 INCHES BELOW THE NOTCH

ISE NOMINAL 2 INCH X 4 INCH CONSTRUCTION GRADE LUMBER POSTS. DRIVEN 1 GROUND AT EACH CORNER OF THE INLET. PLACE NAIL STRIPS BETWEEN THE ENDS OF THE INLET. ASSEMBLE THE TOP PORTION OF THE 2X4 FRAME AS H ½ INCH GALVANIZED HARDWARE CLOTH TIGHTLY AROUND THE FRAME AND LY. FASTEN GEOTEXTILE SECURELY TO THE HARDWARE CLOTH WITH TIES 24 INCHES AT THE TOP AND MID SECTION. EMBED GEOTEXTILE AND HARDWARE IUM OF 18 INCHES BELOW THE WEIR CREST. THE ENDS OF THE GEOTEXTILE A POST. BE OVERLAPPED AND FOLDED. THEN FASTENED TO THE POST.

ISE 2⅜ INCH DIAMETER GALVANIZED STEEL POSTS OF 0.095 INCH WALL 6 FOOT LENGTH. DRIVEN A MINIMUM OF 36 INCHES BELOW THE WEIR CREST R OF THE STRUCTURE. FASTEN 9 GAUGE OR HEAVIER CHAIN LINK FENCE. 42 GHT. SECURELY TO THE FENCE POSTS WITH WIRE TIES. FASTEN GEOTEXTILE HE CHAIN LINK FENCE WITH TIES SPACED EVERY 24 INCHES AT THE TOP AND EMBED GEOTEXTILE AND CHAIN LINK FENCE A MINIMUM OF 18 INCHES BELOW T.

IND THE INLET IN LOOSE 4 INCH LIFTS AND COMPACT UNTIL SOIL IS LEVEL H ELEVATION ON THE ENDS AND TOP ELEVATION ON THE SIDES.

NLET PROTECTION REQUIRES FREQUENT MAINTENANCE. REMOVE ACCUMULATED R EACH RAIN EVENT TO MAINTAIN FUNCTION AND AVOID PREMATURE CLOGGING. ECTION DOES NOT COMPLETELY DRAIN WITHIN 24 HOURS AFTER A STORM CLOGGED. WHEN THIS OCCURS, REMOVE ACCUMULATED SEDIMENT AND CLEAN. OTEXTILE AND STONE.

2 OF 2

ND STANDARDS AND SPECIFICATIONS FOR SOIL EROSION AND SEDIMENT CONTROL

OF AGRICULTURE ONSERVATION SERVICE	2011	MARYLAND DEPARTMENT OF ENVIRONMENT WATER MANAGEMENT ADMINISTRATION

DETAIL E-9-7 GABION INLET PROTECTION

STANDARD SYMBOL: GIP

MAXIMUM DRAINAGE AREA = 1½ ACRE

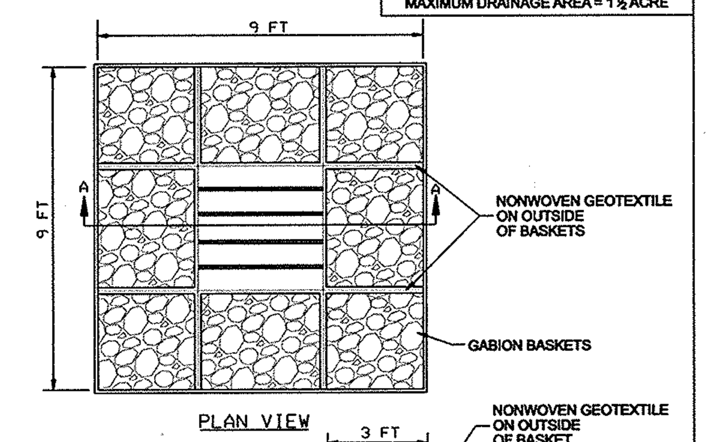

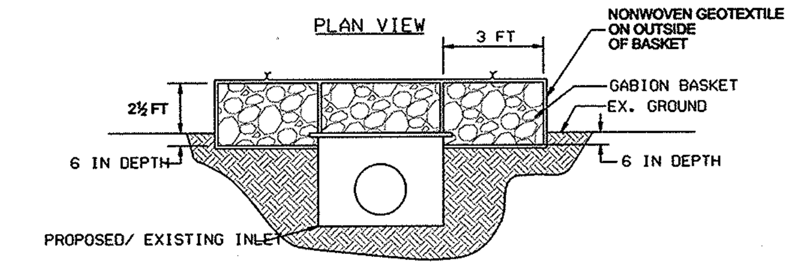

CONSTRUCTION SPECIFICATIONS

1. USE BASKETS MADE OF 11 GAUGE WIRE OR HEAVIER.
2. WRAP 3 FEET x 3 FEET GABION BASKETS (LENGTH VARIABLE) WITH NONWOVEN GEOTEXTILE, AS SPECIFIED IN SECTION H-1 MATERIALS, OVERLAPPING AT THE TOP AND FASTEN THE GEOTEXTILE AT THE TOP OF THE BASKET WITH WIRE FASTENERS (HOG RINGS) AT A MAXIMUM OF 1 FOOT INTERVALS ALONG THE SEAM.
3. AVOID TEARING OR DAMAGING GEOTEXTILE.
4. ENTRENCH GABION BASKETS TO A DEPTH OF 6 INCHES.
5. PLACE AND INTERLOCK GABION BASKETS WITH NO GAPS.
6. FILL GABION BASKETS WITH CLEAN 4 TO 7 INCH STONE OR EQUIVALENT RECYCLED CONCRETE WITHOUT REBAR OR MESH.
7. STORM DRAIN INLET PROTECTION REQUIRES FREQUENT MAINTENANCE. REMOVE ACCUMULATED SEDIMENT AFTER EACH RAIN EVENT TO MAINTAIN FUNCTION AND AVOID PREMATURE CLOGGING. IF INLET PROTECTION DOES NOT COMPLETELY DRAIN WITHIN 24 HOURS AFTER A STORM EVENT, IT IS CLOGGED. WHEN THIS OCCURS, REMOVE ACCUMULATED SEDIMENT AND CLEAN, OR REPLACE GEOTEXTILE AND STONE.

MARYLAND STANDARDS AND SPECIFICATIONS FOR SOIL EROSION AND SEDIMENT CONTROL

U.S. DEPARTMENT OF AGRICULTURE NATURAL RESOURCES CONSERVATION SERVICE	2011	MARYLAND DEPARTMENT OF ENVIRONMENT WATER MANAGEMENT ADMINISTRATION

ENGINEER CERTIFICATION:

I certify that this plan for erosion and sediment control represents a practical and workable plan based on my personal knowledge of the site conditions and that it was prepared in accordance with the requirements of the Howard Soil Conservation District.

Engineer [signature] Date 4-23-14

Name Tanya L. Bensinger PE # 29179

DEVELOPER CERTIFICATION:

I/We certify that all development and construction will be done according to this plan for sediment and erosion control, and that all responsible personnel involved in the construction project will have a Certificate of Attendance at a Department of the Environment Approved Training Program for the Control of Sediment and Erosion before beginning the project. I also authorize periodic on-site inspection by the Howard Soil Conservation District.

Developer [signature]
Name Josh Asbury

This development plan is approved for soil erosion and sediment control by the Howard Soil Conservation District.

[signature] 5/6/14
APPROVED: HOWARD SOIL CONSERVATION DISTRICT

APPROVED: Howard County Department of Planning and Zoning

[signature] 5.12.14
CHIEF, DEVELOPMENT ENGINEERING DIVISION — DATE

[signature] 6-18-14
CHIEF, DIVISION OF LAND DEVELOPMENT — DATE

[signature] 6/18/14
DIRECTOR — DATE

MATIS WARFIELD
Consulting Engineers
10540 York Road, Suite M
Hunt Valley, Maryland 21030
PHONE 410.683.7004 FAX 410.683.1798
www.matiswarfield.com

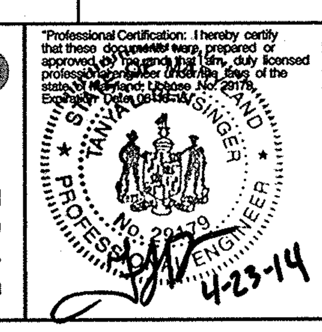

Owner/Developer:
Merritt-MR, LLC
2066 Lord Baltimore Drive
Baltimore, Maryland 21244
ph: 410-298-2600
fx: 410-298-9644

NO.	DESCRIPTION	BY	DATE

SEDIMENT CONTROL DETAILS
The Meadows Corporate Park Phase 2

6510 - 6518 MEADOW RIDGE ROAD MD RTE. 103
GREEN BUILDING

TAX MAP: 37;
PARCELS: A5-A9
ELECTION DISTRICT : 1
ZONE: POR

GENERAL OFFICE
SCALE : 1" = 50'
DATE : April 23, 2014
SHEET: 26 of 35

SDP-13-070

DETAIL G-1-1 PIPE OUTLET SEDIMENT TRAP ST-I

STANDARD SYMBOL: ST-I

MAXIMUM DRAINAGE AREA = 5 ACRES

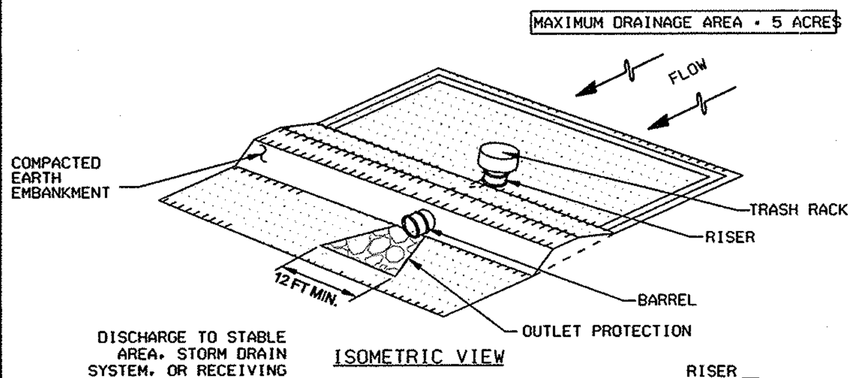

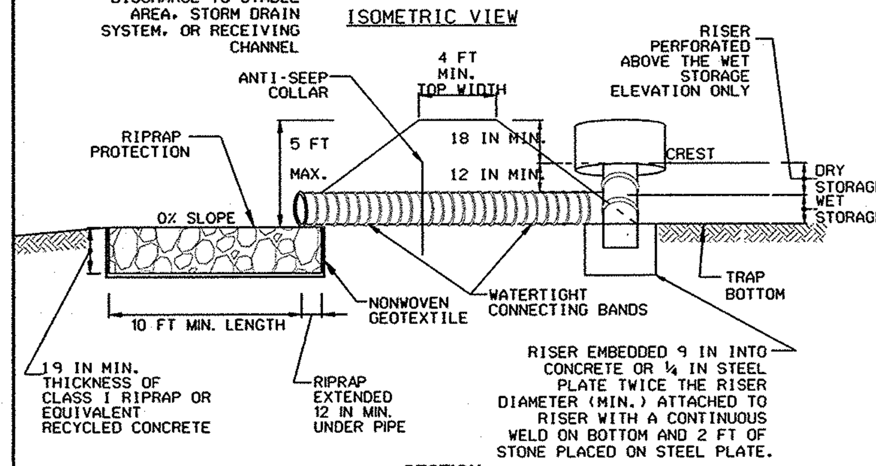

SECTION

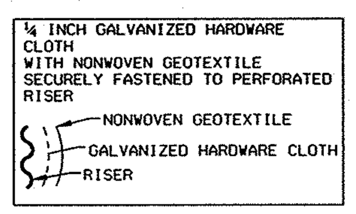

NOTE:
REFER TO DETAIL G-2-1 - TYPICAL ANTI-SEEP COLLARS
REFER TO DETAIL G-2-2 - RISER BASE
REFER TO DETAIL G-2-3 - CONCENTRIC TRASH RACK AND ANTI-VORTEX DEVICE

1 OF 3

MARYLAND STANDARDS AND SPECIFICATIONS FOR SOIL EROSION AND SEDIMENT CONTROL

U.S. DEPARTMENT OF AGRICULTURE NATURAL RESOURCES CONSERVATION SERVICE | 2011 | MARYLAND DEPARTMENT OF ENVIRONMENT WATER MANAGEMENT ADMINISTRATION

DETAIL G-1-1 PIPE OUTLET SEDIMENT TRAP ST-I

STANDARD SYMBOL: ST-I

CONSTRUCTION SPECIFICATIONS

1. CONSTRUCT TRAP IN SUCH A MANNER THAT EROSION AND WATER POLLUTION ARE AVOIDED.
2. CLEAR, GRUB, AND STRIP ANY VEGETATION AND ROOT MAT FROM THE AREA UNDER THE EMBANKMENT AND TRAP BOTTOM.
3. PERFORATE THE RISER WITH 1 INCH DIAMETER HOLES SPACED 6 INCHES ON CENTER WITH THE LOWEST PERFORATIONS AT THE WET STORAGE ELEVATION OR PROVIDE A HORIZONTAL OR VERTICAL DRAW-DOWN DEVICE PERFORATED ACCORDING TO APPROVED PLAN. DO NOT PERFORATE THE RISER WITHIN 6 INCHES OF THE TOP OF THE HORIZONTAL BARREL.
4. SET RISER/BARREL ASSEMBLY PRIOR TO EMBANKMENT CONSTRUCTION. MAKE ALL PIPE CONNECTIONS WATERTIGHT. OFFSET RISER FROM EMBANKEMENT TO ACCOMODATE PLACEMENT OF THE TRASH RACK. ANCHOR THE RISER WITH EITHER A REINFORCED CONCRETE BASE OR STEEL PLATE BASE TO PREVENT FLOTATION. MAKE CONCRETE BASES AT LEAST TWICE THE RISER DIAMETER AND 18 INCHES THICK WITH THE RISER EMBEDDED 9 INCHES.
5. USE FILL MATERIAL FREE OF ROOTS, WOODY VEGETATION, OVERSIZED STONES, ROCKS, ORGANIC MATERIAL, OR OTHER OBJECTIONABLE MATERIAL FOR THE EMBANKMENT.
6. HAND COMPACT IN 4 INCH LAYERS FILL MATERIAL AROUND THE PIPE SPILLWAY. PLACE A MINIMUM OF 2 FEET OF HAND COMPACTED BACKFILL OVER THE PIPE SPILLWAY BEFORE CROSSING IT WITH CONSTRUCTION EQUIPMENT.
7. CONSTRUCT TOP OF EMBANKMENT 1 FOOT MINIMUM ABOVE RISER CREST. COMPACT THE EMBANKMENT BY TRAVERSING WITH EQUIPMENT WHILE IT IS BEING CONSTRUCTED.
8. MAKE ALL CUT AND FILL SLOPES 2:1 OR FLATTER.
9. WRAP THE RISER WITH ¼ INCH GALVANIZED HARDWARE CLOTH THEN WRAP WITH NONWOVEN GEOTEXTILE. DO NOT WRAP WITH MORE THAN ONE LAYER OF GEOTEXTILE. EXTEND HARDWARE CLOTH AND GEOTEXTILE AT LEAST 6 INCHES ABOVE THE HIGHEST PERFORATIONS AND AT LEAST 6 INCHES BELOW THE LOWEST PERFORATIONS. OVERLAP, FOLD AND FASTEN WHERE ENDS OF GEOTEXTILE COME TOGETHER TO PREVENT BYPASS. REPLACE GEOTEXTILE AS NECESSARY TO PREVENT CLOGGING.
10. USE STRAPS OR CONNECTING BANDS AT THE TOP AND BOTTOM OF THE GEOTEXTILE TO HOLD THE GEOTEXTILE AND HARDWARE CLOTH IN PLACE.
11. USE NONWOVEN GEOTEXTILE AS SPECIFIED IN SECTION H-1 MATERIALS.
12. STABILIZE THE EMBANKMENT AND INTERIOR SLOPES WITH SEED AND MULCH. STABILIZE POINTS OF CONCENTRATED INFLOW AS SHOWN ON APPROVED PLAN.
13. CONSTRUCT AND MAINTAIN THE OUTLET ACCORDING TO THE APPROVED PLAN AND IN SUCH A MANNER THAT EROSION AT OR BELOW THE OUTLET DOES NOT OCCUR.
14. REMOVE SEDIMENT AND RESTORE TRAP TO ORIGINAL DIMENSIONS WHEN SEDIMENT HAS ACCUMULATED TO CLEANOUT ELEVATION (50% OF WET STORAGE DEPTH). DEPOSIT REMOVED SEDIMENT IN AN APPROVED AREA AND IN SUCH A MANNER THAT IT WILL NOT ERODE. KEEP POINTS OF INFLOW AND OUTFLOW AS WELL AS INTERIOR OF THE TRAP FREE FROM EROSION, AND REMOVE ACCUMULATED DEBRIS. MAINTAIN EMBANKMENTS TO CONTINUOUSLY MEET REQUIREMENTS FOR ADEQUATE VEGETATIVE ESTABLISHMENT IN ACCORDANCE WITH SECTION B-4 VEGETATIVE STABILIZATION. REMOVE ANY TREES, BRUSH, OR OTHER WOODY VEGETATION GROWING ON EMBANKMENT OR NEAR PRINCIPAL SPILLWAY. MAINTAIN LINE, GRADE, AND CROSS SECTION. MAINTAIN WATER TIGHT CONNECTIONS. REPLACE GEOTEXTILE AROUND PERFORATED RISER IF DRY STORAGE VOLUME DOES NOT DRAW DOWN WITHIN 10 HOURS.
15. WHEN DEWATERING TRAP, PASS REMOVED WATER THROUGH AN APPROVED SEDIMENT CONTROL PRACTICE.
16. UPON REMOVAL, GRADE AND STABILIZE THE AREA OCCUPIED BY TRAP.

2 OF 3

MARYLAND STANDARDS AND SPECIFICATIONS FOR SOIL EROSION AND SEDIMENT CONTROL

U.S. DEPARTMENT OF AGRICULTURE NATURAL RESOURCES CONSERVATION SERVICE | 2011 | MARYLAND DEPARTMENT OF ENVIRONMENT WATER MANAGEMENT ADMINISTRATION

DETAIL G-2-2 CORRUGATED RISER BASE

STANDARD SYMBOL

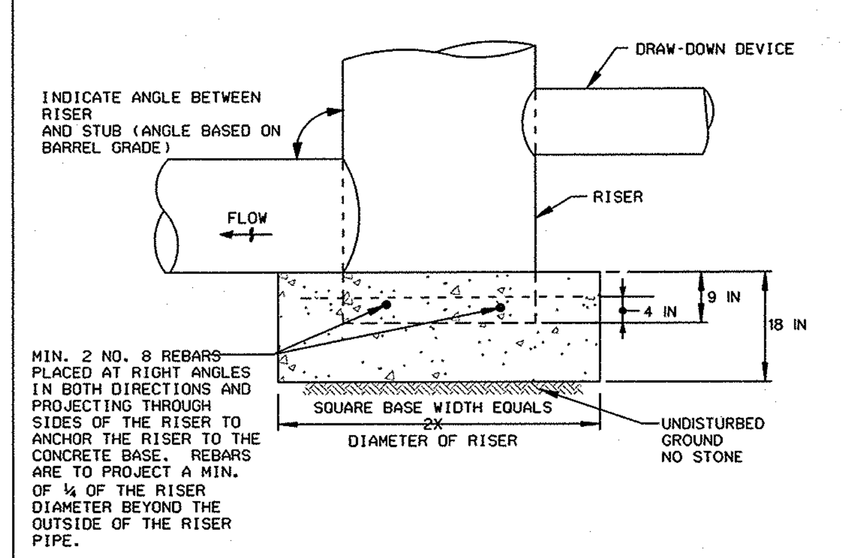

CONSTRUCTION SPECIFICATIONS

1. BOTTOM OF CONCRETE BASE TO BE PLACED ON UNDISTURBED, NATURAL GROUND.
2. NO STONE IS ALLOWED UNDER BASE. IF NECESSARY, TO ACHIEVE STABILITY INCREASE DEPTH OF CONCRETE BASE.

MARYLAND STANDARDS AND SPECIFICATIONS FOR SOIL EROSION AND SEDIMENT CONTROL

U.S. DEPARTMENT OF AGRICULTURE NATURAL RESOURCES CONSERVATION SERVICE | 2011 | MARYLAND DEPARTMENT OF ENVIRONMENT WATER MANAGEMENT ADMINISTRATION

DETAIL G-2-3 CONCENTRIC TRASH RACK AND ANTI-VORTEX DEVICE

STANDARD SYMBOL: TR

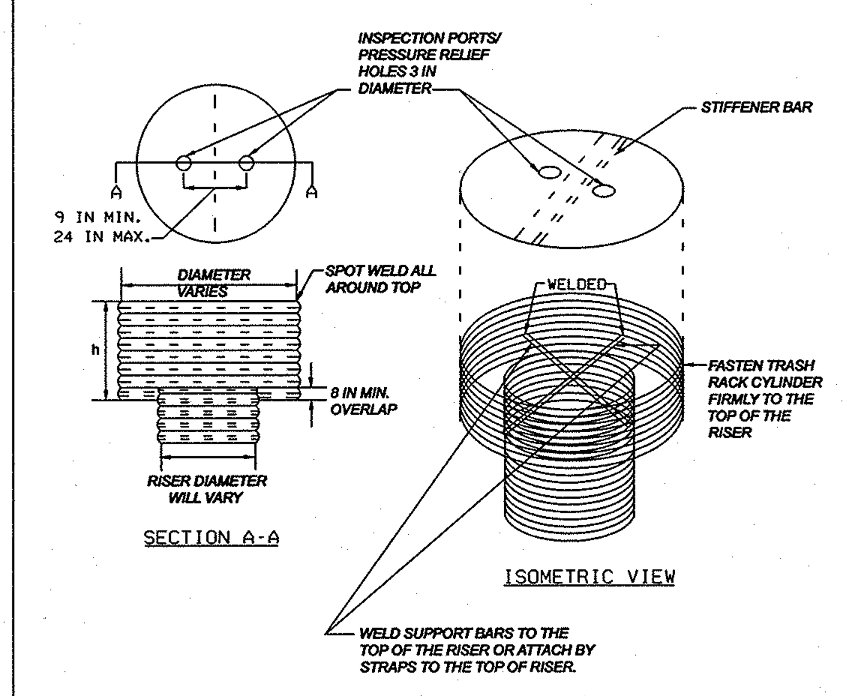

1 OF 2

MARYLAND STANDARDS AND SPECIFICATIONS FOR SOIL EROSION AND SEDIMENT CONTROL

U.S. DEPARTMENT OF AGRICULTURE NATURAL RESOURCES CONSERVATION SERVICE | 2011 | MARYLAND DEPARTMENT OF ENVIRONMENT WATER MANAGEMENT ADMINISTRATION

DETAIL G-2-3 CONCENTRIC TRASH RACK AND ANTI-VORTEX DEVICE

STANDARD SYMBOL: TR

RISER DIAM. (IN)	TRASH RACK CYLINDER DIAM. (IN)	TRASH RACK CYLINDER THICKNESS (GAUGE)	h (IN)	MINIMUM SIZE SUPPORT BAR	MINIMUM TOP THICKNESS (GAUGE)	MINIMUM TOP STIFFENER
12	18	16	14	#6 REBAR	16	N/A
15	21	16	15	#6 REBAR	16	N/A
18	27	16	16	#6 REBAR	16	N/A
21	30	16	19	#6 REBAR	16	N/A
24	36	16	21	#6 REBAR	14	N/A
27	42	16	21	#6 REBAR	14	N/A
36	54	14	25	#8 REBAR	12	N/A
42	60	14	27	#8 REBAR	12	N/A
48	72	12	29	1¼ IN PIPE OR 1¼ X 1¼ X ¼ ANGLE	10	N/A
54	78	12	33	1¼ IN PIPE OR 1¼ X 1¼ X ¼ ANGLE	10	N/A
60	90	12	37	1½ IN PIPE OR 1½ X 1½ X ¼ ANGLE	8	N/A
66	96	10	41	2 IN PIPE OR 2 X 2 X 3/16 ANGLE	8	2 X 2 X ¼ ANGLE
72	102	10	44	2 IN PIPE OR 2 X 2 X 3/16 ANGLE	8	2½ X 2½ X ¼ ANGLE
78	114	10	47	2½ IN PIPE OR 2 X 2 X ¼ ANGLE	8	2½ X 2½ X ¼ ANGLE
84	120	10	50	2½ IN PIPE OR 2½ X 2½ X ¼ ANGLE	8	2½ X 2½ X 5/16 ANGLE

NOTE:
THE ABOVE TRASH RACK AND ANTI-VORTEX DEVICE INFORMATION IS FOR CORRUGATED METAL PIPE ONLY. CONCRETE RISERS MUST MEET THE REQUIREMENTS OF MD 378.

2 OF 2

MARYLAND STANDARDS AND SPECIFICATIONS FOR SOIL EROSION AND SEDIMENT CONTROL

U.S. DEPARTMENT OF AGRICULTURE NATURAL RESOURCES CONSERVATION SERVICE | 2011 | MARYLAND DEPARTMENT OF ENVIRONMENT WATER MANAGEMENT ADMINISTRATION

DETAIL G-2-4 BAFFLE BOARDS

STANDARD SYMBOL: BB

BAFFLES ARE REQUIRED TO PROVIDE A FLOW LENGTH BETWEEN INFLOW POINT AND OUTLET EQUAL TO TWICE THE EFFECTIVE TRAP/BASIN WIDTH.

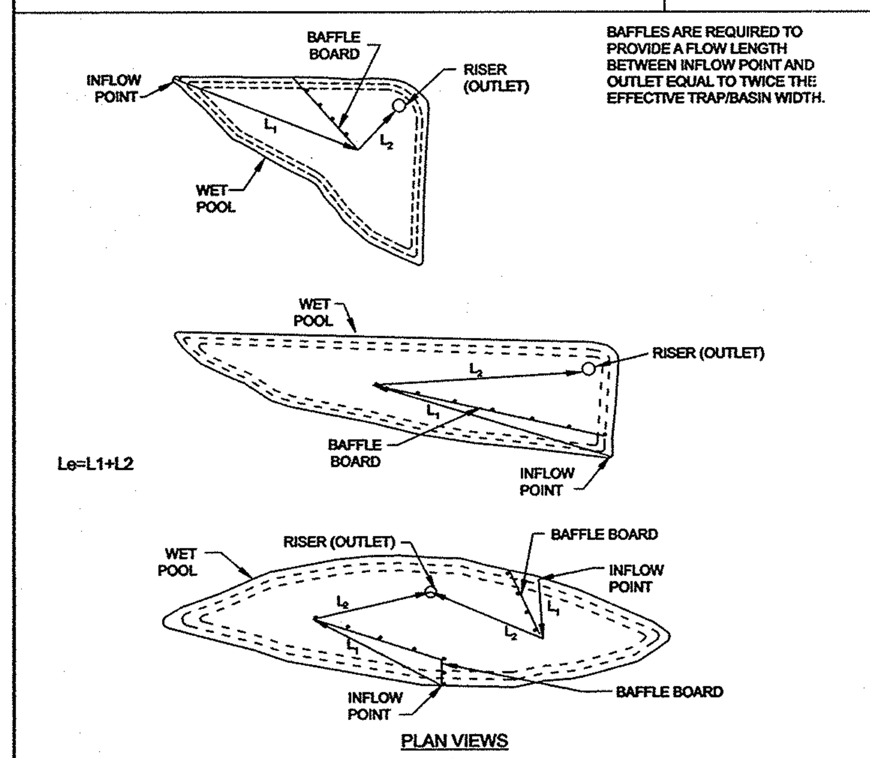

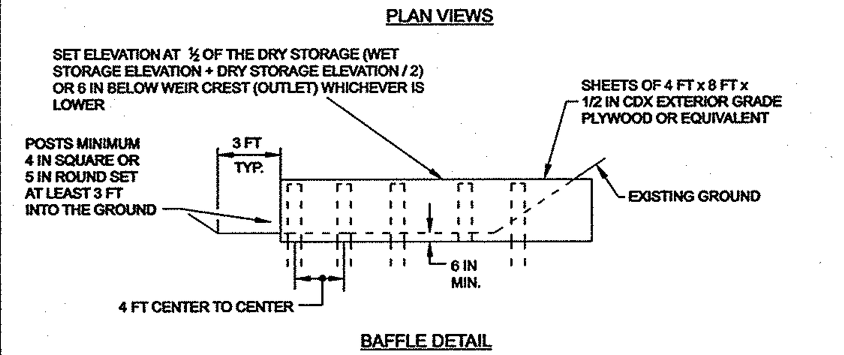

MARYLAND STANDARDS AND SPECIFICATIONS FOR SOIL EROSION AND SEDIMENT CONTROL

U.S. DEPARTMENT OF AGRICULTURE NATURAL RESOURCES CONSERVATION SERVICE | 2011 | MARYLAND DEPARTMENT OF ENVIRONMENT WATER MANAGEMENT ADMINISTRATION

DETAIL F-1 REMOVABLE PUMPING STATION

STANDARD SYMBOL: RPS

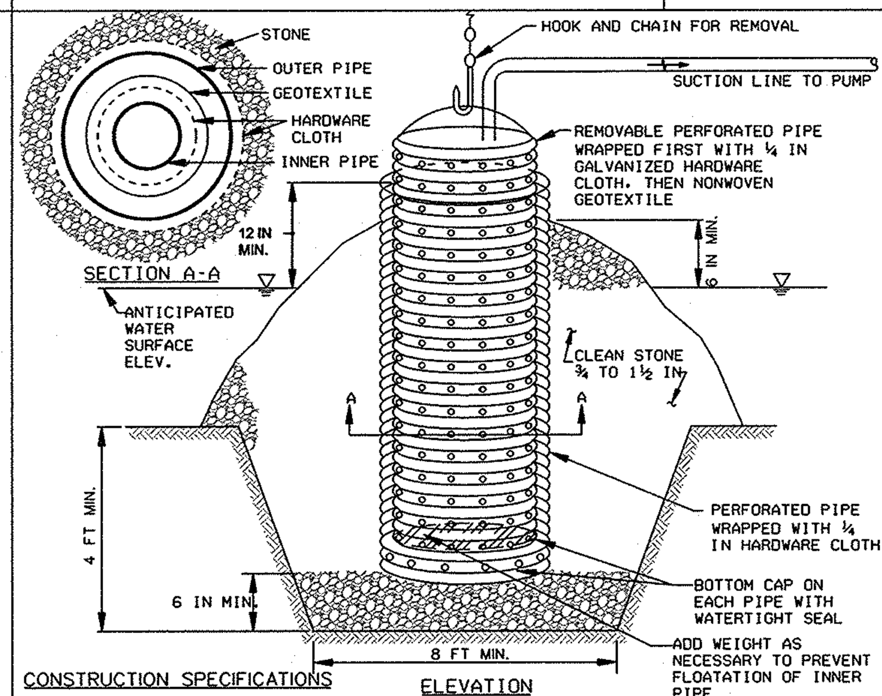

CONSTRUCTION SPECIFICATIONS

1. USE CORRUGATED METAL OR PLASTIC PIPE WITH 1 INCH DIAMETER PERFORATIONS 6 INCHES ON CENTER.
2. USE A MINIMUM 12 INCH DIAMETER INNER PIPE WITH AN OUTER PIPE A MINIMUM 6 INCHES LARGER IN DIAMETER. BOTTOM OF EACH PIPE MUST BE CAPPED WITH WATERTIGHT SEAL.
3. WRAP EACH PIPE WITH ¼ INCH GALVANIZED HARDWARE CLOTH. ON INNER PIPE WRAP NONWOVEN GEOTEXTILE, AS SPECIFIED IN SECTION H-1 MATERIALS, OVER THE HARDWARE CLOTH.
4. EXCAVATE 8 FEET X 8 FEET X 4 FEET DEEP PIT FOR PIPE PLACEMENT. PLACE CLEAN ¾ TO 1½ INCH STONE OR EQUIVALENT RECYCLED CONCRETE, 6 INCHES IN DEPTH PRIOR TO PIPE PLACEMENT.
5. SET TOP OF INNER AND OUTER PIPES MINIMUM 12 INCHES ABOVE ANTICIPATED WATER SURFACE ELEVATION (OR RISER CREST ELEVATION WHEN DEWATERING A BASIN).
6. BACKFILL PIT AROUND THE OUTER PIPE WITH ¾ TO 1½ INCH CLEAN STONE OR EQUIVALENT RECYCLED CONCRETE AND EXTEND STONE A MINIMUM OF 6 INCHES ABOVE ANTICIPATED WATER SURFACE ELEVATION.
7. DISCHARGE TO A STABLE AREA AT A NONEROSIVE RATE.
8. A REMOVABLE PUMPING STATION REQUIRES FREQUENT MAINTENANCE. IF SYSTEM CLOGS, PULL OUT INNER PIPE AND REPLACE GEOTEXTILE. KEEP POINT OF DISCHARGE FREE OF EROSION.

MARYLAND STANDARDS AND SPECIFICATIONS FOR SOIL EROSION AND SEDIMENT CONTROL

U.S. DEPARTMENT OF AGRICULTURE NATURAL RESOURCES CONSERVATION SERVICE | 2011 | MARYLAND DEPARTMENT OF ENVIRONMENT WATER MANAGEMENT ADMINISTRATION

DETAIL H-6 ONSITE CONCRETE WASHOUT STRUCTURE

STANDARD SYMBOL: CWS

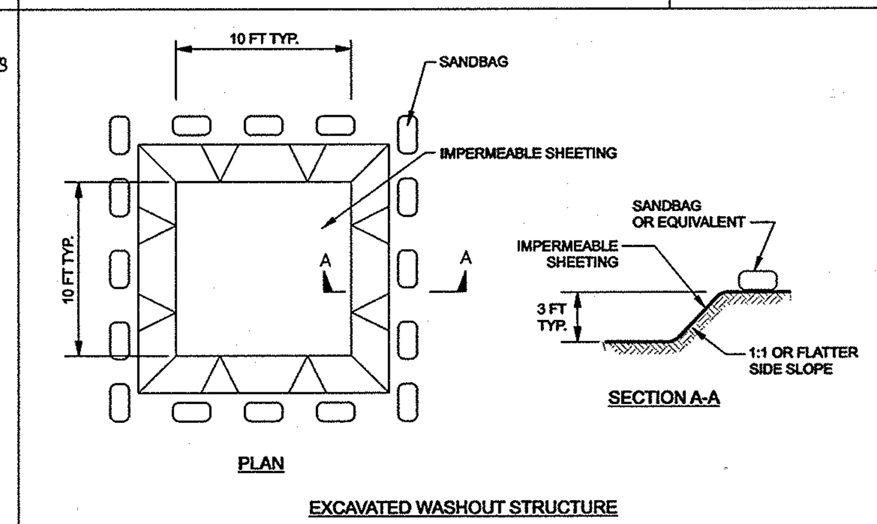

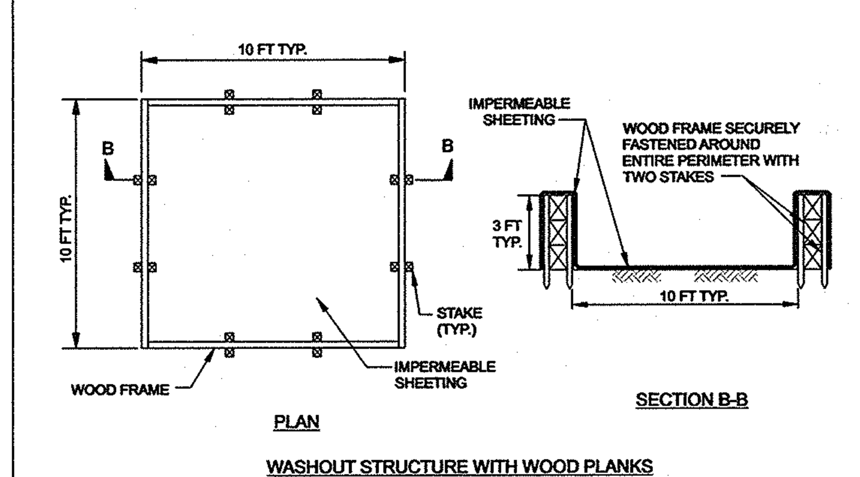

1 OF 2

MARYLAND STANDARDS AND SPECIFICATIONS FOR SOIL EROSION AND SEDIMENT CONTROL

U.S. DEPARTMENT OF AGRICULTURE NATURAL RESOURCES CONSERVATION SERVICE | 2011 | MARYLAND DEPARTMENT OF ENVIRONMENT WATER MANAGEMENT ADMINISTRATION

L H-6 ONSITE CONCRETE WASHOUT STRUCTURE

STANDARD SYMBOL: CWS

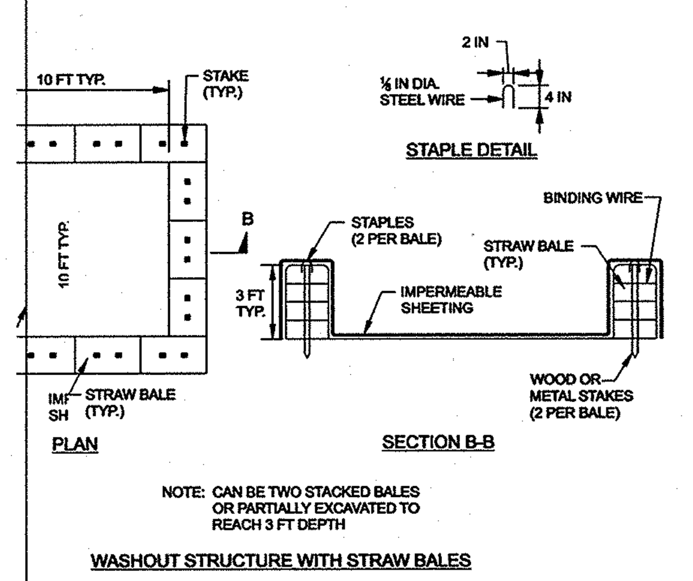

PECIFICATIONS

STRUCTURE A MINIMUM OF 50 FEET AWAY FROM OPEN CHANNELS, STORM DRAIN INLETS, WETLANDS, BUFFERS AND WATER COURSES AND AWAY FROM CONSTRUCTION TRAFFIC.

RUCTURE FOR VOLUME NECESSARY TO CONTAIN WASH WATER AND SOLIDS AND MAINTAIN AT FREEBOARD. TYPICAL DIMENSIONS ARE 10 FEET X 10 FEET X 3 FEET DEEP.

E FREE OF ROCKS OR OTHER DEBRIS THAT MAY CAUSE TEARS OR HOLES IN THE LINER. FOR OR THICKER UV RESISTANT, IMPERMEABLE SHEETING, FREE OF HOLES AND TEARS OR OTHER MPROMISE IMPERMEABILITY OF THE MATERIAL.

R THE WASHOUT IN CLOSE PROXIMITY TO THE FACILITY.

VASHOUT STRUCTURE WATER TIGHT. REPLACE IMPERMEABLE LINER IF DAMAGED (E.G., RIPPED EMPTY OR REPLACE WASHOUT STRUCTURE THAT IS 75 PERCENT FULL, AND DISPOSE OF TERIAL PROPERLY. DO NOT REUSE PLASTIC LINER. WET-VACUUM STORED LIQUIDS THAT HAVE AND DISPOSE OF IN AN APPROVED MANNER. PRIOR TO FORECASTED RAINSTORMS, REMOVE STRUCTURE TO PREVENT OVERFLOWS. REMOVE HARDENED SOLIDS, WHOLE OR BROKEN UP, RECYCLING. MAINTAIN RUNOFF DIVERSION AROUND EXCAVATED WASHOUT STRUCTURE UNTIL MOVED.

2 OF 2

D STANDARDS AND SPECIFICATIONS FOR SOIL EROSION AND SEDIMENT CONTROL

F AGRICULTURE SERVATION SERVICE | 2011 | MARYLAND DEPARTMENT OF ENVIRONMENT WATER MANAGEMENT ADMINISTRATION

DETAIL D-3-2 GABION INFLOW PROTECTION

STANDARD SYMBOL: GP

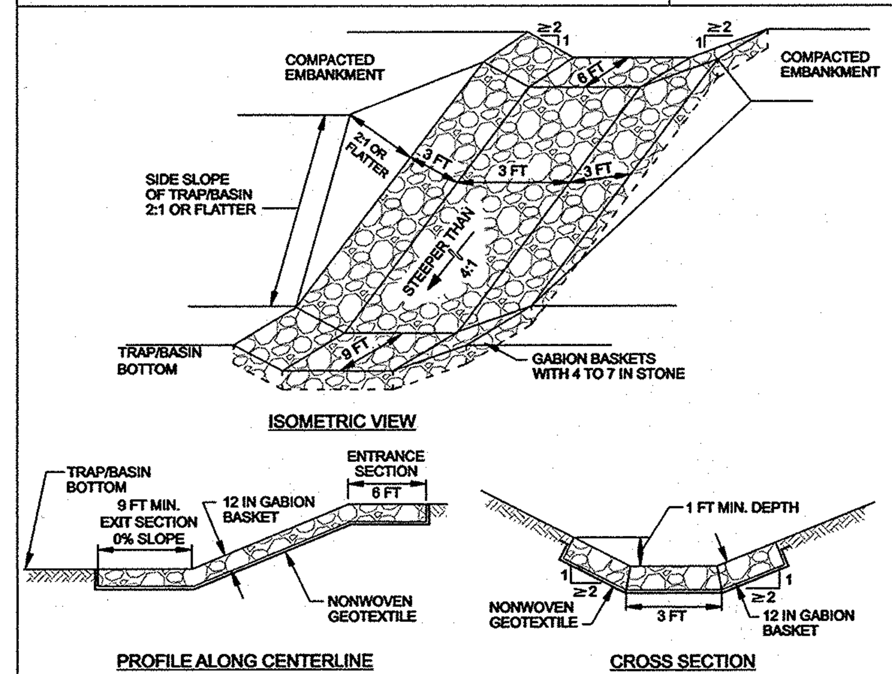

CONSTRUCTION SPECIFICATIONS

1. PROVIDE NONWOVEN GEOTEXTILE, AS SPECIFIED IN SECTION H-1 MATERIALS, UNDER THE BOTTOM AND ALONG SIDES OF ALL GABION BASKETS.
2. USE BASKETS MADE OF MINIMUM 11 GAUGE WIRE.
3. CONSTRUCT GABION INFLOW PROTECTION BY ARRANGING 9 X 3 X 1 FOOT GABION BASKETS TO FORM A TRAPEZOIDAL SECTION WITH A 3 FOOT BOTTOM WIDTH, 1 FOOT MINIMUM DEPTH, 3 FOOT SIDE WALLS, AND 2:1 OR FLATTER SIDE SLOPES. FILL GABION BASKETS WITH 4 TO 7 INCH STONE OR EQUIVALENT RECYCLED CONCRETE WITHOUT REBAR OR WEIR MESH.
4. INSTALL ENTRANCE AND EXIT SECTIONS AS SHOWN ON THE PROFILE.
5. INSTALL GABIONS IN ACCORDANCE WITH MANUFACTURER RECOMMENDATIONS.
6. BLEND GABIONS INTO EXISTING GROUND.
7. MAINTAIN LINE, GRADE, AND CROSS SECTION. REMOVE ACCUMULATED SEDIMENT AND DEBRIS. KEEP POINTS OF INFLOW AND OUTFLOW FREE OF EROSION

MARYLAND STANDARDS AND SPECIFICATIONS FOR SOIL EROSION AND SEDIMENT CONTROL

U.S. DEPARTMENT OF AGRICULTURE NATURAL RESOURCES CONSERVATION SERVICE | 2011 | MARYLAND DEPARTMENT OF ENVIRONMENT WATER MANAGEMENT ADMINISTRATION

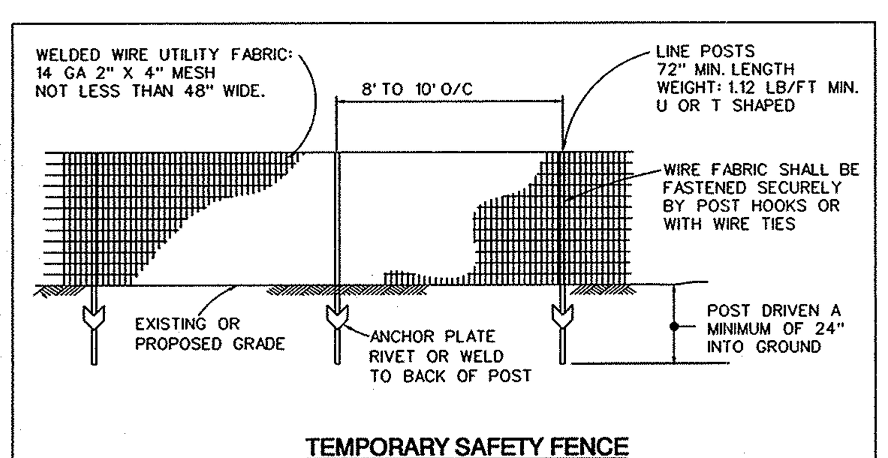

TEMPORARY SAFETY FENCE FOR SEDIMENT TRAPPING DEVICES
NOT TO SCALE

ENGINEER CERTIFICATION:

I certify that this plan for erosion and sediment control represents a practical and workable plan based on my personal knowledge of the site conditions and that it was prepared in accordance with the requirements of the Howard Soil Conservation District.

Engineer [signature] Date 4-23-14
Name Tanya L. Bensinger PE # 29179

DEVELOPER CERTIFICATION:

I/We certify that all development and construction will be done according to this plan for sediment and erosion control, and that all responsible personnel involved in the construction project will have a Certificate of Attendance at a Department of the Environment Approved Training Program for the Control of Sediment and Erosion before beginning the project. I also authorize periodic on-site inspection by the Howard Soil Conservation District.

Developer [signature]
Name Josh Asbury

This development plan is approved for soil erosion and sediment control by the Howard Soil Conservation District.

[signature] 5/6/14
APPROVED: HOWARD SOIL CONSERVATION DISTRICT

APPROVED: Howard County Department of Planning and Zoning

[signature] 5.12.14
CHIEF, DEVELOPMENT ENGINEERING DIVISION — DATE

[signature] 6-18-14
CHIEF, DIVISION OF LAND DEVELOPMENT — DATE

[signature] 6/18/14
DIRECTOR — DATE

MATIS WARFIELD
Consulting Engineers
10540 York Road, Suite M
Hunt Valley, Maryland 21030
PHONE 410.683.7004 FAX 410.683.1798
www.matiswarfield.com

"Professional Certification: I hereby certify that these documents were prepared or approved by me, and that I am a duly licensed professional engineer under the laws of the state of Maryland, License No. 29179, Expiration Date: [illegible]"

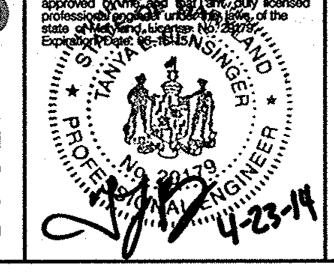

Owner/Developer:
Merritt-MR, LLC
2066 Lord Baltimore Drive
Baltimore, Maryland 21244
ph: 410-298-2600
fx: 410-298-9644

NO.	DESCRIPTION	BY	DATE

SEDIMENT CONTROL DETAILS
The Meadows Corporate Park Phase 2

6510 - 6518 MEADOW RIDGE ROAD MD RTE. 103
GREEN BUILDING

TAX MAP: 37;
PARCELS: A5-A9
ELECTION DISTRICT : 1
ZONE: POR

GENERAL OFFICE
SCALE : 1" = 50'
DATE : April 23, 2014
SHEET: 27 of 35

SDP-13-070

B-3 STANDARDS AND SPECIFICATIONS

FOR

LAND GRADING

Definition

Reshaping the existing land surface to provide suitable topography for building facilities and other site improvements.

Purpose

To provide erosion control and vegetative establishment for extreme changes in grade.

Conditions Where Practice Applies

Earth disturbances or extreme grade modifications on steep or long slopes.

Design Criteria

The grading plan should be based on the incorporation of building designs and street layouts that fit and utilize existing topography and desirable natural surroundings to avoid extreme grade modifications. Information submitted must provide sufficient topographic surveys and soil investigations to determine limitations that must be imposed on the grading operation related to slope stability, adjacent properties, drainage patterns, measures for water removal, and vegetative treatment, etc.

Many jurisdictions have regulations and design procedures already established for land grading that must be followed. The plan must show existing and proposed contours for the area(s) to be graded including practices for erosion control, slope stabilization, and safe conveyance of runoff (e.g., waterways, lined channels, reverse benches, grade stabilization structures). The grading/construction plans are to include the phasing of these practices and consideration of the following:

1. Provisions to safely convey surface runoff to storm drains, protected outlets or stable water courses to ensure that surface runoff will not damage slopes or other graded areas.
2. Cut and fill slopes, stabilized with grasses, no steeper than 2:1. (Where the slope is to be mowed, the slope should be no steeper than 3:1, but 4:1 is preferred because of safety factors related to mowing steep slopes.) Slopes steeper than 2:1 require special design and stabilization considerations to be shown on the plans.
3. Benching per Detail B-3-1 whenever the vertical interval (height) of any 2:1 slope exceeds 20 feet; for 3:1 slopes, when it exceeds 30 feet; and for 4:1 slopes, when it exceeds 40 feet. Locate benches to divide the slope face as equally as possible and to convey the water to a stable outlet. Soils, seeps, rock outcrops, etc. are to be taken into consideration when designing benches.
   a. Provide benches with a minimum width of six feet for ease of maintenance.
   b. Design benches with a reverse slope of 6:1 or flatter to the toe of the upper slope and with a minimum of one foot in depth. Grade the longitudinal slope of the bench between 2 percent and 3 percent, unless accompanied by appropriate design and computations.

B.5

   c. The maximum allowable flow length within a bench is 800 feet unless accompanied by appropriate design and computations.
4. Diversion of surface water from the face of all cut and fill slopes using earth dikes or swales. Convey surface water down slope using a designed structure, and:
   a. Protect the face of all graded slopes from surface runoff until they are stabilized.
   b. Do not subject the slope's face to any concentrated flow of surface water such as from natural drainage ways, graded swales, downspouts, etc.
   c. Protect the face of the slope by special erosion control materials to include, but not be limited to, approved vegetative stabilization practices, riprap or other approved stabilization methods.
5. Serrated slope as shown in Detail B-3-2. The steepest allowable slope for ripable rock is 1.5:1. For non rock surfaces, the slopes are to be 2:1 or flatter. These steps will weather and act to hold moisture, lime, fertilizer and seed thus producing a much quicker and longer lived vegetative cover and better slope stabilization.
6. Subsurface drainage provisions. Provide subsurface drainage where necessary to intercept seepage that would otherwise adversely affect slope stability or create excessively wet site conditions.
7. Proximity to adjacent property. Slopes must not be created close to property lines without adequate protection against sedimentation, erosion, slippage, settlement, subsidence, or other related damages.
8. Quality of fill material. Fill material must be free of brush, rubbish, logs, stumps, building debris, and other objectionable material. Do not place frozen materials in the fill nor place the fill material on a frozen foundation.
9. Stabilization. Stabilize all disturbed areas structurally or vegetatively in compliance with Section B-4 Standards and Specifications for Stabilization Practices.

Maintenance

The line, grade, and cross section of benching and serrated slopes must be maintained. Benches and serrated slopes must continuously meet the requirements for Adequate Vegetative Establishment in accordance with Section B-4 Vegetative Stabilization.

B.6

DETAIL B-3-1 , BENCHING

STANDARD SYMBOL: BENCHING

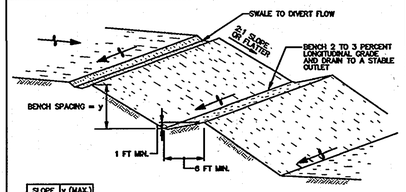

SLOPE	y (MAX.)
2:1	20 FT
3:1	30 FT
4:1	40 FT

CONSTRUCTION SPECIFICATIONS

1. USE FILL MATERIAL FREE OF BRUSH, RUBBISH, ROCKS, LOGS, STUMPS, BUILDING DEBRIS, AND OTHER OBJECTIONABLE MATERIALS THAT WOULD INTERFERE WITH OR PREVENT CONSTRUCTION OF SATISFACTORY FILLS.
2. DO NOT INCORPORATE FROZEN, SOFT, MUCKY, OR HIGHLY COMPRESSIBLE MATERIALS INTO FILL SLOPES OR STRUCTURAL FILLS. DO NOT PLACE FILL ON A FROZEN FOUNDATION.
3. PLACE ALL FILL IN LOOSE LIFTS NOT TO EXCEED 8 INCHES AND THEN COMPACT.
4. COMPACT ALL FILLS AS REQUIRED TO REDUCE EROSION, SLIPPAGE, SETTLEMENT, OR OTHER RELATED PROBLEMS. COMPACT FILL INTENDED TO SUPPORT BUILDINGS, STRUCTURES, CONDUITS, ETC., IN ACCORDANCE WITH LOCAL REQUIREMENTS OR CODES.
5. HANDLE SEEPS OR SPRINGS ENCOUNTERED DURING CONSTRUCTION IN ACCORDANCE WITH SECTION H–2 SUBSURFACE DRAINS OR OTHER APPROVED METHODS.
6. MAINTAIN LINE, GRADE, AND CROSS SECTION OF BENCHING. STABILIZE IN ACCORDANCE WITH THE 3/7 DAY STABILIZATION CRITERIA OR AS SPECIFIED ON THE APPROVED EROSION AND SEDIMENT CONTROL PLAN. INSTALLATION OF EROSION CONTROL MATTING MAY BE NECESSARY IN BENCH/SWALE INVERTS. CONTINUOUSLY MEET REQUIREMENTS FOR ADEQUATE VEGETATIVE ESTABLISHMENT IN ACCORDANCE WITH SECTION B–4 VEGETATIVE STABILIZATION.
7. KEEP ALL BENCHES FREE OF SEDIMENT DURING ALL PHASES OF DEVELOPMENT.

MARYLAND STANDARDS AND SPECIFICATIONS FOR SOIL EROSION AND SEDIMENT CONTROL

U.S. DEPARTMENT OF AGRICULTURE NATURAL RESOURCES CONSERVATION SERVICE	2011	MARYLAND DEPARTMENT OF ENVIRONMENT WATER MANAGEMENT ADMINISTRATION

B.7

DETAIL B-3-2 SERRATED SLOPE

STANDARD SYMBOL

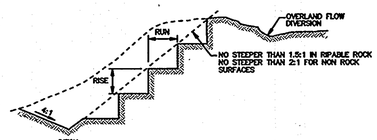

TYPICAL SECTION

CONSTRUCTION SPECIFICATIONS

1. DIVERT OVERLAND FLOW FROM THE TOP OF ALL SERRATED CUT SLOPES AND CARRY TO A SUITABLE OUTLET.
2. MAKE SERRATIONS AS THE EXCAVATION PROGRESSES.
3. CONSTRUCT EACH STEP OR SERRATION ON THE CONTOUR. RISE & RUN DIMENSIONS WILL VARY DEPENDING ON THE FINAL SLOPE RATIO. FOR RIPABLE ROCK SURFACES, MAKE TWO FOOT VERTICAL (RISE) AND THREE FOOT HORIZONTAL (RUN) SERRATIONS AT A SLOPE RATIO NO STEEPER THAN 1.5:1. FOR NON ROCK SURFACES, MAKE TWO FOOT VERTICAL (RISE) AND FOUR FOOT HORIZONTAL (RUNS) SERRATIONS AT A SLOPE RATIO NO STEEPER THAN 2:1.
4. KEEP ALL BENCHES FREE OF SEDIMENT DURING ALL PHASES OF CONSTRUCTION.
5. HANDLE SEEPS OR SPRINGS ENCOUNTERED DURING CONSTRUCTION IN ACCORDANCE WITH SECTION H–2 SUBSURFACE DRAINS OR OTHER APPROVED METHODS.
6. MAINTAIN LINE, GRADE, AND CROSS SECTION OF SERRATED SLOPES. TEMPORARILY OR PERMANENTLY STABILIZE ALL GRADED, NON ROCK SURFACES IN ACCORDANCE WITH THE 3/7 DAY STABILIZATION REQUIREMENTS OR AS SPECIFIED ON THE APPROVED EROSION AND SEDIMENT CONTROL PLAN. CONTINUOUSLY MEET REQUIREMENTS FOR ADEQUATE VEGETATIVE ESTABLISHMENT IN ACCORDANCE WITH SECTION B–4 VEGETATIVE STABILIZATION.

MARYLAND STANDARDS AND SPECIFICATIONS FOR SOIL EROSION AND SEDIMENT CONTROL

U.S. DEPARTMENT OF AGRICULTURE NATURAL RESOURCES CONSERVATION SERVICE	2011	MARYLAND DEPARTMENT OF ENVIRONMENT WATER MANAGEMENT ADMINISTRATION

B.8

B-4 STANDARDS AND SPECIFICATIONS

FOR

VEGETATIVE STABILIZATION

Definition

Using vegetation as cover to protect exposed soil from erosion.

Purpose

To promote the establishment of vegetation on exposed soil.

Conditions Where Practice Applies

On all disturbed areas not stabilized by other methods. This specification is divided into sections on incremental stabilization; soil preparation, soil amendments and topsoiling; seeding and mulching; temporary stabilization; and permanent stabilization.

Effects on Water Quality and Quantity

Stabilization practices are used to promote the establishment of vegetation on exposed soil. When soil is stabilized with vegetation, the soil is less likely to erode and more likely to allow infiltration of rainfall, thereby reducing sediment loads and runoff to downstream areas.

Planting vegetation in disturbed areas will have an effect on the water budget, especially on volumes and rates of runoff, infiltration, evaporation, transpiration, percolation, and groundwater recharge. Over time, vegetation will increase organic matter content and improve the water holding capacity of the soil and subsequent plant growth.

Vegetation will help reduce the movement of sediment, nutrients, and other chemicals carried by runoff to receiving waters. Plants will also help protect groundwater supplies by assimilating those substances present within the root zone.

Sediment control practices must remain in place during grading, seedbed preparation, seeding, mulching, and vegetative establishment.

Adequate Vegetative Establishment

Inspect seeded areas for vegetative establishment and make necessary repairs, replacements, and reseedings within the planting season.

1. Adequate vegetative stabilization requires 95 percent groundcover.
2. If an area has less than 40 percent groundcover, restabilize following the original recommendations for lime, fertilizer, seedbed preparation, and seeding.
3. If an area has between 40 and 94 percent groundcover, over-seed and fertilize using half of the rates originally specified.
4. Maintenance fertilizer rates for permanent seeding are shown in Table B.6.

B.9

B-4.1 STANDARDS AND SPECIFICATIONS

FOR

INCREMENTAL STABILIZATION

Definition

Establishment of vegetative cover on cut and fill slopes.

Purpose

To provide timely vegetative cover on cut and fill slopes as work progresses.

Conditions Where Practice Applies

Any cut or fill slope greater than 15 feet in height. This practice also applies to stockpiles.

Criteria

A. Incremental Stabilization - Cut Slopes
   1. Excavate and stabilize cut slopes in increments not to exceed 15 feet in height. Prepare seedbed and apply seed and mulch on all cut slopes as the work progresses.
   2. Construction sequence example (Refer to Figure B.1):
      a. Construct and stabilize all temporary swales or dikes that will be used to convey runoff around the excavation.
      b. Perform Phase 1 excavation, prepare seedbed, and stabilize.
      c. Perform Phase 2 excavation, prepare seedbed, and stabilize. Overseed Phase 1 areas as necessary.
      d. Perform final phase excavation, prepare seedbed, and stabilize. Overseed previously seeded areas as necessary.

Note: Once excavation has begun the operation should be continuous from grubbing through the completion of grading and placement of topsoil (if required) and permanent seed and mulch. Any interruptions in the operation or completing the operation out of the seeding season will necessitate the application of temporary stabilization.

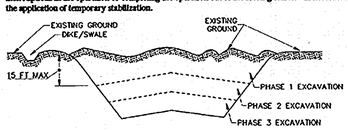

Figure B.1: Incremental Stabilization – Cut

B.10

B. Incremental Stabilization - Fill Slopes
   1. Construct and stabilize fill slopes in increments not to exceed 15 feet in height. Prepare seedbed and apply seed and mulch on all slopes as the work progresses.
   2. Stabilize slopes immediately when the vertical height of a lift reaches 15 feet, or when the grading operation ceases as prescribed in the plans.
   3. At the end of each day, install temporary water conveyance practice(s), as necessary, to intercept surface runoff and convey it down the slope in a non-erosive manner.
   4. Construction sequence example (Refer to Figure B.2):
      a. Construct and stabilize all temporary swales or dikes that will be used to divert runoff around the fill. Construct silt fence on low side of fill unless other methods shown on the plans address this area.
      b. At the end of each day, install temporary water conveyance practice(s), as necessary, to intercept surface runoff and convey it down the slope in a non-erosive manner.
      c. Place Phase 1 fill, prepare seedbed, and stabilize.
      d. Place Phase 2 fill, prepare seedbed, and stabilize.
      e. Place final phase fill, prepare seedbed, and stabilize. Overseed previously seeded areas as necessary.

Note: Once the placement of fill has begun the operation should be continuous from grubbing through the completion of grading and placement of topsoil (if required) and permanent seed and mulch. Any interruptions in the operation or completing the operation out of the seeding season will necessitate the application of temporary stabilization.

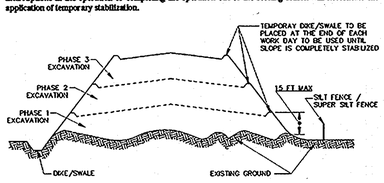

Figure B.2: Incremental Stabilization – Fill

B.11

B-4.2 STANDARDS AND SPECIFICATIONS

FOR

SOIL PREPARATION, TOPSOILING, AND SOIL AMENDMENTS

Definition

The process of preparing the soils to sustain adequate vegetative stabilization.

Purpose

To provide a suitable soil medium for vegetative growth.

Conditions Where Practice Applies

Where vegetative stabilization is to be established.

Criteria

A. Soil Preparation
   1. Temporary Stabilization
      a. Seedbed preparation consists of loosening soil to a depth of 3 to 5 inches by means of suitable agricultural or construction equipment, such as disc harrows or chisel plows or rippers mounted on construction equipment. After the soil is loosened, it must not be rolled or dragged smooth but left in the roughened condition. Slopes 3:1 or flatter are to be tracked with ridges running parallel to the contour of the slope.
      b. Apply fertilizer and lime as prescribed on the plans.
      c. Incorporate lime and fertilizer into the top 3 to 5 inches of soil by disking or other suitable means.
   2. Permanent Stabilization
      a. A soil test is required for any earth disturbance of 5 acres or more. The minimum soil conditions required for permanent vegetative establishment are:
         i. Soil pH between 6.0 and 7.0.
         ii. Soluble salts less than 500 parts per million (ppm).
         iii. Soil contains less than 40 percent clay but enough fine grained material (greater than 30 percent silt plus clay) to provide the capacity to hold a moderate amount of moisture. An exception: if lovegrass will be planted, then a sandy soil (less than 30 percent silt plus clay) would be acceptable.
         iv. Soil contains 1.5 percent minimum organic matter by weight.
         v. Soil contains sufficient pore space to permit adequate root penetration.
      b. Application of amendments or topsoil is required if on-site soils do not meet the above conditions.
      c. Graded areas must be maintained in a true and even grade as specified on the approved plan, then scarified or otherwise loosened to a depth of 3 to 5 inches.

B.12

      d. Apply soil amendments as specified on the approved plan or as indicated by the results of a soil test.
      e. Mix soil amendments into the top 3 to 5 inches of soil by disking or other suitable means. Rake lawn areas to smooth the surface, remove large objects like stones and branches, and ready the area for seed application. Loosen surface soil by dragging with a heavy chain or other equipment to roughen the surface where site conditions will not permit normal seedbed preparation. Track slopes 2:1 or flatter with tracked equipment leaving the soil in an irregular condition with ridges running parallel to the contour of the slope. Leave the top 1 to 3 inches of soil loose and friable. Seedbed loosening may be unnecessary on newly disturbed areas.

B. Topsoiling
   1. Topsoil is placed over prepared subsoil prior to establishment of permanent vegetation. The purpose is to provide a suitable soil medium for vegetative growth. Soils of concern have low moisture content, low nutrient levels, low pH, materials toxic to plants, and/or unacceptable soil gradation.
   2. Topsoil salvaged from an existing site may be used provided it meets the standards as set forth in these specifications. Typically, the depth of topsoil to be salvaged for a given soil type can be found in the representative soil profile section in the Soil Survey published by USDA-NRCS.
   3. Topsoiling is limited to areas having 2:1 or flatter slopes where:
      a. The texture of the exposed subsoil/parent material is not adequate to produce vegetative growth.
      b. The soil material is so shallow that the rooting zone is not deep enough to support plants or furnish continuing supplies of moisture and plant nutrients.
      c. The original soil to be vegetated contains material toxic to plant growth.
      d. The soil is so acidic that treatment with limestone is not feasible.
   4. Areas having slopes steeper than 2:1 require special consideration and design.
   5. Topsoil Specifications: Soil to be used as topsoil must meet the following criteria:
      a. Topsoil must be a loam, sandy loam, clay loam, silt loam, sandy clay loam, or loamy sand. Other soils may be used if recommended by an agronomist or soil scientist and approved by the appropriate approval authority. Topsoil must not be a mixture of contrasting textured subsoils and must contain less than 5 percent by volume of cinders, stones, slag, coarse fragments, gravel, sticks, roots, trash, or other materials larger than 1½ inches in diameter.
      b. Topsoil must be free of noxious plants or plant parts such as Bermuda grass, quack grass, Johnson grass, nut sedge, poison ivy, thistle, or others as specified.
      c. Topsoil substitutes or amendments, as recommended by a qualified agronomist or soil scientist and approved by the appropriate approval authority, may be used in lieu of natural topsoil.
   6. Topsoil Application
      a. Erosion and sediment control practices must be maintained when applying topsoil.
      b. Uniformly distribute topsoil in a 5 to 8 inch layer and lightly compact to a minimum thickness of 4 inches. Spreading is to be performed in such a manner that sodding or seeding can proceed with a minimum of additional soil preparation and tillage. Any irregularities in the surface resulting from topsoiling or other operations must be corrected in order to prevent the formation of depressions or water pockets.
      c. Topsoil must not be placed if the topsoil or subsoil is in a frozen or muddy condition, when the subsoil is excessively wet or in a condition that may otherwise be detrimental to proper grading

B.13

and seedbed preparation.

C. Soil Amendments (Fertilizer and Lime Specifications)
   1. Soil tests must be performed to determine the exact ratios and application rates for both lime and fertilizer on sites having disturbed areas of 5 acres or more. Soil analysis may be performed by a recognized private or commercial laboratory. Soil samples taken for engineering purposes may also be used for chemical analyses.
   2. Fertilizers must be uniform in composition, free flowing and suitable for accurate application by appropriate equipment. Manure may be substituted for fertilizer with prior approval from the appropriate approval authority. Fertilizers must all be delivered to the site fully labeled according to the applicable laws and must bear the name, trade name or trademark and warranty of the producer.
   3. Lime materials must be ground limestone (hydrated or burnt lime may be substituted except when hydroseeding) which contains at least 50 percent total oxides (calcium oxide plus magnesium oxide). Limestone must be ground to such fineness that at least 50 percent will pass through a #100 mesh sieve and 98 to 100 percent will pass through a #20 mesh sieve.
   4. Lime and fertilizer are to be evenly distributed and incorporated into the top 3 to 5 inches of soil by disking or other suitable means.
   5. Where the subsoil is either highly acidic or composed of heavy clays, spread ground limestone at the rate of 4 to 8 tons/acre (200-400 pounds per 1,000 square feet) prior to the placement of topsoil.

B.14

ENGINEER CERTIFICATION:

I certify that this plan for erosion and sediment control represents a practical and workable plan based on my personal knowledge of the site conditions and that it was prepared in accordance with the requirements of the Howard Soil Conservation District.

Engineer _____ Date 4-23-14

Name Tanya L. Bensinger PE # 29179

DEVELOPER CERTIFICATION:

We certify that all development and construction will be done according to this plan for sediment and erosion control, and that all responsible personnel involved in the construction project will have a Certificate of Attendance at a Department of the Environment Approved Training Program for the Control of Sediment and Erosion before beginning the project. I also authorize periodic on-site inspection by the Howard Soil Conservation District.

Developer _____

Name Josh Asbury

This development plan is approved for soil erosion and sediment control by the Howard Soil Conservation District.

_____ 5/6/14

APPROVED: HOWARD SOIL CONSERVATION DISTRICT

APPROVED: Howard County Department of Planning and Zoning

_____ 5.12.14

CHIEF, DEVELOPMENT ENGINEERING DIVISION DATE

_____ 6-18-14

CHIEF, DIVISION OF LAND DEVELOPMENT DATE

_____ 6/10/14

DIRECTOR DATE

MATIS WARFIELD

Consulting Engineers

10540 York Road, Suite M
Hunt Valley, Maryland 21030
PHONE 410.683.7004 FAX 410.683.1798
www.matiswarfield.com

"Professional Certification. I hereby certify that these documents were prepared or approved by me, and that I am a duly licensed professional engineer under the laws of the State of Maryland, License No. 29179, Expiration Date: November 07, 2015."

TANYA L. BENSINGER — No. 29179 — PROFESSIONAL ENGINEER — 4-23-14

Owner/Developer:

Merritt-MR, LLC
2066 Lord Baltimore Drive
Baltimore, Maryland 21244
ph: 410-298-2600
fx: 410-298-9644

NO.	DESCRIPTION	BY	DATE

SEDIMENT CONTROL DETAILS
The Meadows Corporate Park Phase 2

6510 - 6518 MEADOW RIDGE ROAD MD RTE. 103
GREEN BUILDING

TAX MAP: 37; PARCELS: A6-A9
ELECTION DISTRICT : 1
ZONE: POR

GENERAL OFFICE
SCALE : 1" = 50'
DATE : April 23, 2014
SHEET: 28 of 35

SDP-13-070

B-4-3 STANDARDS AND SPECIFICATIONS

FOR

SEEDING AND MULCHING

Definition

The application of seed and mulch to establish vegetative cover.

Purpose

To protect disturbed soils from erosion during and at the end of construction.

Conditions Where Practice Applies

To the surface of all perimeter controls, slopes, and any disturbed area not under active grading.

Criteria

A. Seeding

1. Specifications
   a. All seed must meet the requirements of the Maryland State Seed Law. All seed must be subject to re-testing by a recognized seed laboratory. All seed used must have been tested within the 6 months immediately preceding the date of sowing such material on any project. Refer to Table B.4 regarding the quality of seed. Seed tags must be available upon request to the inspector to verify type of seed and seeding rate.
   b. Mulch alone may be applied between the fall and spring seeding dates only if the ground is frozen. The appropriate seeding mixture must be applied when the ground thaws.
   c. Inoculants: The inoculant for treating legume seed in the seed mixtures must be a pure culture of nitrogen fixing bacteria prepared specifically for the species. Inoculants must not be used later than the date indicated on the container. Add fresh inoculants as directed on the package. Use four times the recommended rate when hydroseeding. Note: It is very important to keep inoculant as cool as possible until used. Temperatures above 75 to 80 degrees Fahrenheit can weaken bacteria and make the inoculant less effective.
   d. Sod or seed must not be placed on soil which has been treated with soil sterilants or chemicals used for weed control until sufficient time has elapsed (14 days min.) to permit dissipation of phyto-toxic materials.

2. Application
   a. Dry Seeding: This includes use of conventional drop or broadcast spreaders.
      i. Incorporate seed into the subsoil at the rates prescribed on Temporary Seeding Table B.1, Permanent Seeding Table B.3, or site-specific seeding summaries.
      ii. Apply seed in two directions, perpendicular to each other. Apply half the seeding rate in each direction. Roll the seeded area with a weighted roller to provide good seed to soil contact.

B.15

   b. Drill or Cultipacker Seeding: Mechanized seeders that apply and cover seed with soil.
      i. Cultipacking seeders are required to bury the seed in such a fashion as to provide at least 1/4 inch of soil covering. Seedbed must be firm after planting.
      ii. Apply seed in two directions, perpendicular to each other. Apply half the seeding rate in each direction.
   c. Hydroseeding: Apply seed uniformly with hydroseeder (slurry includes seed and fertilizer).
      i. If fertilizer is being applied at the time of seeding, the application rates should not exceed the following: nitrogen, 100 pounds per acre total of soluble nitrogen; P_2O_5 (phosphorous), 200 pounds per acre; K_2O (potassium), 200 pounds per acre.
      ii. Lime: Use only ground agricultural limestone (up to 3 tons per acre may be applied by hydroseeding). Normally, not more than 2 tons are applied by hydroseeding at any one time. Do not use burnt or hydrated lime when hydroseeding.
      iii. Mix seed and fertilizer on site and seed immediately and without interruption.
      iv. When hydroseeding do not incorporate seed into the soil.

B. Mulching

1. Mulch Materials (in order of preference)
   a. Straw consisting of thoroughly threshed wheat, rye, oat, or barley and reasonably bright in color. Straw is to be free of noxious weed seeds as specified in the Maryland Seed Law and not musty, moldy, caked, decayed, or excessively dusty. **Note: Use only sterile straw mulch in areas where one species of grass is desired.**
   b. Wood Cellulose Fiber Mulch (WCFM) consisting of specially prepared wood cellulose processed into a uniform fibrous physical state.
      i. WCFM is to be dyed green or contain a green dye in the package that will provide an appropriate color to facilitate visual inspection of the uniformly spread slurry.
      ii. WCFM, including dye, must contain no germination or growth inhibiting factors.
      iii. WCFM materials are to be manufactured and processed in such a manner that the wood cellulose fiber mulch will remain in uniform suspension in water under agitation and will blend with seed, fertilizer and other additives to form a homogeneous slurry. The mulch material must form a blotter-like ground cover, on application, having moisture absorption and percolation properties and must cover and hold grass seed in contact with the soil without inhibiting the growth of the grass seedlings.
      iv. WCFM material must not contain elements or compounds at concentration levels that will be phyto-toxic.
      v. WCFM must conform to the following physical requirements: fiber length of approximately 10 millimeters, diameter approximately 1 millimeter, pH range of 4.0 to 8.5, ash content of 1.6 percent maximum and water holding capacity of 90 percent minimum.

B.16

2. Application
   a. Apply mulch to all seeded areas immediately after seeding.
   b. When straw mulch is used, spread it over all seeded areas at the rate of 2 tons per acre to a uniform loose depth of 1 to 2 inches. Apply mulch to achieve a uniform distribution and depth so that the soil surface is not exposed. When using a mulch anchoring tool, increase the application rate to 2.5 tons per acre.
   c. Wood cellulose fiber used as mulch must be applied at a net dry weight of 1500 pounds per acre. Mix the wood cellulose fiber with water to attain a mixture with a maximum of 50 pounds of wood cellulose fiber per 100 gallons of water.
3. Anchoring
   a. Perform mulch anchoring immediately following application of mulch to minimize loss by wind or water. This may be done by one of the following methods (listed by preference), depending upon the size of the area and erosion hazard:
      i. A mulch anchoring tool is a tractor drawn implement designed to punch and anchor mulch into the soil surface a minimum of 2 inches. This practice is most effective on large areas, but is limited to flatter slopes where equipment can operate safely. If used on sloping land, this practice should follow the contour.
      ii. Wood cellulose fiber may be used for anchoring straw. Apply the fiber binder at a net dry weight of 750 pounds per acre. Mix the wood cellulose fiber with water at a maximum of 50 pounds of wood cellulose fiber per 100 gallons of water.
      iii. Synthetic binders such as Acrylic DLR (Agro-Tack), DCA-70, Petroset, Terra Tax II, Terra Tack AR or other approved equal may be used. Follow application rates as specified by the manufacturer. Application of liquid binders needs to be heavier at the edges where wind catches mulch, such as in valleys and on crests of banks. **Use of asphalt binders is strictly prohibited.**
      iv. Lightweight plastic netting may be stapled over the mulch according to manufacturer recommendations. Netting is usually available in rolls 4 to 15 feet wide and 300 to 3,000 feet long.

B.17

B-4-4 STANDARDS AND SPECIFICATIONS

FOR

TEMPORARY STABILIZATION

Definition

To stabilize disturbed soils with vegetation for up to 6 months.

Purpose

To use fast growing vegetation that provides cover on disturbed soils.

Conditions Where Practice Applies

Exposed soils where ground cover is needed for a period of 6 months or less. For longer duration of time, permanent stabilization practices are required.

Criteria

1. Select one or more of the species or seed mixtures listed in Table B.1 for the appropriate Plant Hardiness Zone (from Figure B.3), and enter them in the Temporary Seeding Summary below along with application rates, seeding dates and seeding depths. If this Summary is not put on the plan and completed, then Table B.1 plus fertilizer and lime rates must be put on the plan.
2. For sites having soil tests performed, use and show the recommended rates by the testing agency. Soil tests are not required for Temporary Seeding.
3. When stabilization is required outside of a seeding season, apply seed and mulch or straw mulch alone as prescribed in Section B-4-3.A.1.b and maintain until the next seeding season.

Temporary Seeding Summary

Hardiness Zone (from Figure B.3): 6b **Seed Mixture** (from Table B.1):					**Fertilizer Rate (10-20-20)**	**Lime Rate**
No.	**Species**	**Application Rate (lb/ac)**	**Seeding Dates**	**Seeding Depths**		
	ANNUAL RYEGRASS	40	3/1-5/15 8/1-10/15	0.5 in	436 lb/ac (10 lb/1000 sf)	2 tons/ac (90 lb/1000 sf)
	BARLEY	96	3/1-5/15 8/1-10/15	1.0 in		
	FOXTAIL MILLET	30	5/16-7/31	0.5 in		
	PEARL MILLET	20	5/16-7/31	0.5 in		

B.18

B-4-5 STANDARDS AND SPECIFICATIONS

FOR

PERMANENT STABILIZATION

Definition

To stabilize disturbed soils with permanent vegetation.

Purpose

To use long-lived perennial grasses and legumes to establish permanent ground cover on disturbed soils.

Conditions Where Practice Applies

Exposed soils where ground cover is needed for 6 months or more.

Criteria

A. Seed Mixtures

1. General Use
   a. Select one or more of the species or mixtures listed in Table B.3 for the appropriate Plant Hardiness Zone (from Figure B.3) and based on the site condition or purpose found on Table B.2. Enter selected mixture(s), application rates, and seeding dates in the Permanent Seeding Summary. The Summary is to be placed on the plan.
   b. Additional planting specifications for exceptional sites such as shorelines, stream banks, or dunes or for special purposes such as wildlife or aesthetic treatment may be found in USDA-NRCS Technical Field Office Guide, Section 342 - Critical Area Planting.
   c. For sites having disturbed area over 5 acres, use and show the rates recommended by the soil testing agency.
   d. For areas receiving low maintenance, apply urea form fertilizer (46-0-0) at 3 ½ pounds per 1000 square feet (150 pounds per acre) at the time of seeding in addition to the soil amendments shown in the Permanent Seeding Summary .
2. Turfgrass Mixtures
   a. Areas where turfgrass may be desired include lawns, parks, playgrounds, and commercial sites which will receive a medium to high level of maintenance.
   b. Select one or more of the species or mixtures listed below based on the site conditions or purpose. Enter selected mixture(s), application rates, and seeding dates in the Permanent Seeding Summary. The summary is to be placed on the plan.
      i. Kentucky Bluegrass: Full Sun Mixture: For use in areas that receive intensive management. Irrigation required in the areas of central Maryland and Eastern Shore. Recommended Certified Kentucky Bluegrass Cultivars Seeding Rate: 1.5 to 2.0 pounds per 1000 square feet. Choose a minimum of three Kentucky bluegrass cultivars with each ranging from 10 to 35 percent of the total mixture by weight.
      ii. Kentucky Bluegrass/Perennial Rye: Full Sun Mixture: For use in full sun areas where

B.21

rapid establishment is necessary and when turf will receive medium to intensive management. Certified Perennial Ryegrass Cultivars/Certified Kentucky Bluegrass Seeding Rate: 2 pounds mixture per 1000 square feet. Choose a minimum of three Kentucky bluegrass cultivars with each ranging from 10 to 35 percent of the total mixture by weight.

      iii. Tall Fescue/Kentucky Bluegrass: Full Sun Mixture: For use in drought prone areas and/or for areas receiving low to medium management in full sun to medium shade. Recommended mixture includes; Certified Tall Fescue Cultivars 95 to 100 percent, Certified Kentucky Bluegrass Cultivars 0 to 5 percent. Seeding Rate: 5 to 8 pounds per 1000 square feet. One or more cultivars may be blended.
      iv. Kentucky Bluegrass/Fine Fescue: Shade Mixture: For use in areas with shade in Bluegrass lawns. For establishment in high quality, intensively managed turf area. Mixture includes; Certified Kentucky Bluegrass Cultivars 30 to 40 percent and Certified Fine Fescue and 60 to 70 percent. Seeding Rate: 1½ to 3 pounds per 1000 square feet.

      Notes:
      Select turfgrass varieties from those listed in the most current University of Maryland Publication, Agronomy Memo #77, "Turfgrass Cultivar Recommendations for Maryland"

      Choose certified material. Certified material is the best guarantee of cultivar purity. The certification program of the Maryland Department of Agriculture, Turf and Seed Section, provides a reliable means of consumer protection and assures a pure genetic line

   c. Ideal Times of Seeding for Turf Grass Mixtures

      Western MD: March 15 to June 1, August 1 to October 1 (Hardiness Zones: 5b, 6a)

      Central MD: March 1 to May 15, August 15 to October 15 (Hardiness Zone: 6b)

      Southern MD, Eastern Shore: March 1 to May 15, August 15 to October 15 (Hardiness Zones: 7a, 7b)

   d. Till areas to receive seed by disking or other approved methods to a depth of 2 to 4 inches, level and rake the areas to prepare a proper seedbed. Remove stones and debris over 1½ inches in diameter. The resulting seedbed must be in such condition that future mowing of grasses will pose no difficulty.
   e. If soil moisture is deficient, supply new seedings with adequate water for plant growth (½ to 1 inch every 3 to 4 days depending on soil texture) until they are firmly established. This is especially true when seedings are made late in the planting season, in abnormally dry or hot seasons, or on adverse sites.

B.22

Permanent Seeding Summary

Hardiness Zone (from Figure B.3): 6b **Seed Mixture** (from Table B.3):					**Fertilizer Rate (10-20-20)**			**Lime Rate**
No.	**Species**	**Application Rate (lb/ac)**	**Seeding Dates**	**Seeding Depths**	**N**	**P_2O_5**	**K_20**	
1	SWITCH GRASS	10	5/16-6/15	¼- ½ in	45 pounds per acre (1.0 lb/ 1000 sf)	90 lb/ac (2 lb/ 1000 sf)	90 lb/ac (2 lb/ 1000 sf)	2 tons/ac (90 lb/ 1000 sf)
	CREEPING RED FESCUE	15	3/1-5/15 8/1- 10/15	¼- ½ in				
	WILD INDIGO	2		¼- ½ in				

B. Sod: To provide quick cover on disturbed areas (2:1 grade or flatter).

1. General Specifications
   a. Class of turfgrass sod must be Maryland State Certified. Sod labels must be made available to the job foreman and inspector.
   b. Sod must be machine cut at a uniform soil thickness of ¾ inch, plus or minus ¼ inch, at the time of cutting. Measurement for thickness must exclude top growth and thatch. Broken pads and torn or uneven ends will not be acceptable.
   c. Standard size sections of sod must be strong enough to support their own weight and retain their size and shape when suspended vertically with a firm grasp on the upper 10 percent of the section.
   d. Sod must not be harvested or transplanted when moisture content (excessively dry or wet) may adversely affect its survival.
   e. Sod must be harvested, delivered, and installed within a period of 36 hours. Sod not transplanted within this period must be approved by an agronomist or soil scientist prior to its installation.

2. Sod Installation
   a. During periods of excessively high temperature or in areas having dry subsoil, lightly irrigate the subsoil immediately prior to laying the sod.
   b. Lay the first row of sod in a straight line with subsequent rows placed parallel to it and tightly wedged against each other. Stagger lateral joints to promote more uniform growth and strength. Ensure that sod is not stretched or overlapped and that all joints are butted tight in order to prevent voids which would cause air drying of the roots.
   c. Wherever possible, lay sod with the long edges parallel to the contour and with staggering joints. Roll and tamp, peg or otherwise secure the sod to prevent slippage on slopes. Ensure solid contact exists between sod roots and the underlying soil surface.
   d. Water the sod immediately following rolling and tamping until the underside of the new sod pad and soil surface below the sod are thoroughly wet. Complete the operations of laying, tamping and irrigating for any piece of sod within eight hours.

B.23

3. Sod Maintenance
   a. In the absence of adequate rainfall, water daily during the first week or as often and sufficiently as necessary to maintain moist soil to a depth of 4 inches. Water sod during the heat of the day to prevent wilting.
   b. After the first week, sod watering is required as necessary to maintain adequate moisture content.
   c. Do not mow until the sod is firmly rooted. No more than ⅓ of the grass leaf must be removed by the initial cutting or subsequent cuttings. Maintain a grass height of at least 3 inches unless otherwise specified.

B.24

B-4-6 STANDARDS AND SPECIFICATIONS

FOR

SOIL STABILIZATION MATTING

Definition

Material used to temporarily or permanently stabilize channels or steep slopes until groundcover is established.

Purpose

To protect the soils until vegetation is established.

Conditions Where Practice Applies

On newly seeded surfaces to prevent the applied seed from washing out; in channels and on steep slopes where the flow has erosive velocities or conveys clear water; on temporary swales, earth dikes, and perimeter dike swales as required by the respective design standard; and, on stream banks where moving water is likely to wash out new vegetative plantings.

Design Criteria

1. The soil stabilization matting that is used must withstand the flow velocities and shear stresses determined for the area, based on the 2-year, 24-hour frequency storm for temporary applications and the 10-year, 24-hour frequency storm for permanent applications. Designate on the plan the type of soil stabilization matting using the standard symbol and include the calculated shear stress for the respective treatment area.
2. Matting is required on permanent channels where the runoff velocity exceeds two and half feet per second (2.5 fps) or the shear stress exceeds two pounds per square foot (2 lbs/ft^2). On temporary channels discharging to a sediment trapping practice, provide matting where the runoff velocity exceeds four feet per second (4 fps).
3. Temporary soil stabilization matting is made with degradable (lasts 6 months minimum), natural, or manmade fibers of uniform thickness and distribution of fibers throughout and is smolder resistant. The maximum permissible velocity for temporary matting is 6 feet per second.
4. Permanent soil stabilization matting is an open weave, synthetic material consisting of non-degradable fibers or elements of uniform thickness and distribution of weave throughout. The maximum permissible velocity for permanent matting is 8.5 feet per second.
5. Calculate channel velocity and shear stress using the following procedure:

   Shear Stress (τ) is a measure of the force of moving water against the substrate and is calculated as:

   $\tau = \gamma \cdot R \cdot S_w$ where:

   τ = shear stress (lb/ft^2)
   γ = weight density of water (62.4 lb/ft^3)
   R = average water depth (hydraulic radius) (ft)
   S_w = water surface slope (ft/ft)

B.36

Velocity (v) measures the rate of flow through a defined area and is calculated as:

$$v = \frac{1.486 R^{2/3} s^{1/2}}{n}$$

where:
v = velocity (ft/sec)
n = Manning's roughness coefficient
R = hydraulic radius (ft)
s = channel slope (ft/ft)

6. Use Table B.7 to assist in selecting the appropriate soil stabilization matting for slope applications based on the slope, the slope length, and the soil-erodibility K factor.

Table B.7: Soil Stabilization on Slopes

Slope	**20:1 or Flatter (≤5%)**			**<20:1 to 4:1 (>5 - 25%)**			**<4:1 to 3:1 (>25 - 33%)**			**<3:1 to 2.5:1 (>33 - 40%)**			**<2.5:1 to 2:1** (>40 - 50%)**		
Slope Length (feet)*	0-30	30-60	60-120	0-30	30-60	60-120	0-30	30-60	60-120	0-30	30-60	60-120	0-30	30-60	60-120
Straw Mulch/Wood Cellulose Fiber				for K ≤ 0.35***											
Temporary Matting with Design Shear Stress ≥ 1.5 lb/sf															
Temporary Matting with Design Shear Stress ≥ 1.75 lb/sf															
Temporary Matting with Design Shear Stress ≥ 2.0 lb/sf															
Temporary Matting with Design Shear Stress ≥ 2.25 lb/sf															

Effective range for all K values unless otherwise specified

* Slope length includes contributing flow length.
** Slopes steeper than 2:1 must be engineered.
*** Soil having a K value less than or equal to 0.35 can be stabilized effectively with straw mulch or wood cellulose fiber when located on slopes steeper than 5%. Soil stabilization matting is required on all slopes steeper than 5% that have soil with a K factor greater than 0.35. K factor ratings are published in the NRCS Soil Survey http:// websoilsurvey.nrcs.usda.gov/app. During construction or reclamation, the soil-erodibility K value should represent the upper 6 inches of the final fill material re-spread as the last lift. Only the effects of rock fragments within the soil profile are considered in the estimation of the K value. Do not adjust K values to account for rocks on the soil surface or increases in soil organic matter related to management activities.

Maintenance

Vegetation must be established and maintained so that the requirements for Adequate Vegetative Establishment are continuously met in accordance with Section B-4 Vegetative Stabilization.

B.37

ENGINEER CERTIFICATION:

I certify that this plan for erosion and sediment control represents a practical and workable plan based on my personal knowledge of the site conditions and that it was prepared in accordance with the requirements of the Howard Soil Conservation District.

Engineer [signature] Date 4-23-14
Name Tanya L. Bensinger PE # 29179

DEVELOPER CERTIFICATION:

I/We certify that all development and construction will be done according to this plan for sediment and erosion control, and that all responsible personnel involved in the construction project will have a Certificate of Attendance at a Department of the Environment Approved Training Program for the Control of Sediment and Erosion before beginning the project. I also authorize periodic on-site inspection by the Howard Soil Conservation District.

Developer [signature]
Name Josh Asbury

This development plan is approved for soil erosion and sediment control by the Howard Soil Conservation District.

[signature] 5/6/14
APPROVED: HOWARD SOIL CONSERVATION DISTRICT

APPROVED: Howard County Department of Planning and Zoning

[signature] 5-12-14
CHIEF, DEVELOPMENT ENGINEERING DIVISION DATE

[signature] 6-18-14
CHIEF, DIVISION OF LAND DEVELOPMENT DATE

[signature] 6/18/14
DIRECTOR DATE

MATIS WARFIELD
Consulting Engineers
10540 York Road, Suite M
Hunt Valley, Maryland 21030
PHONE 410.683.7004 FAX 410.683.1798
www.matiswarfield.com

"Professional Certification: I hereby certify that these documents were prepared or approved by me, and that I am a duly licensed professional engineer under the laws of the state of Maryland, License No. 29179, Expiration Date: [illegible]"
STATE OF MARYLAND · TANYA L. BENSINGER · No. 29179 · PROFESSIONAL ENGINEER — 4-23-14

Owner/Developer:
Merritt-MR, LLC
2066 Lord Baltimore Drive
Baltimore, Maryland 21244
ph: 410-298-2600
fx: 410-298-9644

NO.	DESCRIPTION	BY	DATE

SEDIMENT CONTROL DETAILS
The Meadows Corporate Park Phase 2

6510 - 6518 MEADOW RIDGE ROAD MD RTE. 103
GREEN BUILDING

TAX MAP: 37;
PARCELS: A5-A9
ELECTION DISTRICT : 1
ZONE: POR

GENERAL OFFICE
SCALE : 1" = 50'
DATE : April 23, 2014
SHEET: 29 of 35

SDP-13-070

DETAIL B-4-6-A TEMPORARY SOIL STABILIZATION MATTING CHANNEL APPLICATION

STANDARD SYMBOL
TSSMC – * lb/ft²
(* INCLUDE SHEAR STRESS)

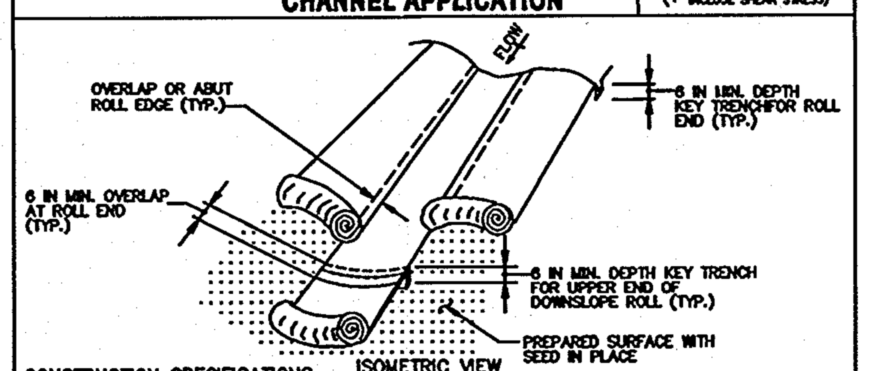

CONSTRUCTION SPECIFICATIONS

1. USE MATTING THAT HAS A DESIGN VALUE FOR SHEAR STRESS EQUAL TO OR HIGHER THAN THE SHEAR STRESS DESIGNATED ON APPROVED PLANS.
2. USE TEMPORARY SOIL STABILIZATION MATTING MADE OF DEGRADABLE (LASTS 6 MONTHS MINIMUM) NATURAL OR MAN-MADE FIBERS (MOSTLY ORGANIC). MAT MUST HAVE UNIFORM THICKNESS AND DISTRIBUTION OF FIBERS THROUGHOUT AND BE SMOLDER RESISTANT. CHEMICALS USED IN THE MAT MUST BE NON-LEACHING AND NON-TOXIC TO VEGETATION AND SEED GERMINATION AND NON-INJURIOUS TO THE SKIN. IF PRESENT, NETTING MUST BE EXTRUDED PLASTIC WITH A MAXIMUM MESH OPENING OF 2x2 INCHES AND SUFFICIENTLY BONDED OR SEWN ON 2 INCH CENTERS ALONG LONGITUDINAL AXIS OF THE MATERIAL TO PREVENT SEPARATION OF THE NET FROM THE PARENT MATERIAL.
3. SECURE MATTING USING STEEL STAPLES, WOOD STAKES, OR BIODEGRADABLE EQUIVALENT. STAPLES MUST BE "U" OR "T" SHAPED STEEL WIRE HAVING A MINIMUM GAUGE OF NO. 11 AND NO. 8 RESPECTIVELY. "U" SHAPED STAPLES MUST AVERAGE 1 TO 1½ INCHES WIDE AND BE A MINIMUM OF 6 INCHES LONG. "T" SHAPED STAPLES MUST HAVE A MINIMUM 8 INCH MAIN LEG, A MINIMUM 1 INCH SECONDARY LEG, AND A MINIMUM 4 INCH HEAD. WOOD STAKES MUST BE ROUGH-SAWN HARDWOOD, 12 TO 24 INCHES IN LENGTH, 1x3 INCH IN CROSS SECTION, AND WEDGE SHAPED AT THE BOTTOM.
4. PERFORM FINAL GRADING, TOPSOIL APPLICATION, SEEDBED PREPARATION, AND PERMANENT SEEDING IN ACCORDANCE WITH SPECIFICATIONS. PLACE MATTING WITHIN 48 HOURS OF COMPLETING SEEDING OPERATIONS UNLESS END OF WORKDAY STABILIZATION IS SPECIFIED ON THE APPROVED EROSION AND SEDIMENT CONTROL PLAN.
5. UNROLL MATTING IN DIRECTION OF WATER FLOW, CENTERING THE FIRST ROLL ON THE CHANNEL CENTERLINE. WORK FROM CENTER OF CHANNEL OUTWARD WHEN PLACING ROLLS. LAY MAT SMOOTHLY AND FIRMLY ON THE SEEDED SURFACE. AVOID STRETCHING THE MATTING.
6. KEY-IN UPSTREAM END OF EACH MAT ROLL BY DIGGING A 6 INCH (MINIMUM) TRENCH AT THE UPSTREAM END OF THE MATTING, PLACING THE ROLL END IN THE TRENCH, STAPLING THE MAT IN PLACE, REPLACING THE EXCAVATED MATERIAL, AND TAMPING TO SECURE THE MAT END.
7. OVERLAP OR ABUT THE ROLL EDGES PER MANUFACTURER RECOMMENDATIONS. OVERLAP ROLL ENDS BY 6 INCHES (MINIMUM), WITH THE UPSTREAM MAT OVERLAPPING ON TOP OF THE NEXT DOWNSTREAM MAT.
8. STAPLE/STAKE MAT IN A STAGGERED PATTERN ON 4 FOOT (MAXIMUM) CENTERS THROUGHOUT AND 2 FOOT (MAXIMUM) CENTERS ALONG SEAMS, JOINTS, AND ROLL ENDS.
9. ESTABLISH AND MAINTAIN VEGETATION SO THAT REQUIREMENTS FOR ADEQUATE VEGETATIVE ESTABLISHMENT ARE CONTINUOUSLY MET IN ACCORDANCE WITH SECTION B-4 VEGETATIVE STABILIZATION.

MARYLAND STANDARDS AND SPECIFICATIONS FOR SOIL EROSION AND SEDIMENT CONTROL

U.S. DEPARTMENT OF AGRICULTURE NATURAL RESOURCES CONSERVATION SERVICE	2011	MARYLAND DEPARTMENT OF ENVIRONMENT WATER MANAGEMENT ADMINISTRATION

B.38

DETAIL B-4-6-B TEMPORARY SOIL STABILIZATION MATTING SLOPE APPLICATION

STANDARD SYMBOL
TSSMS – * lb/ft²
(* INCLUDE SHEAR STRESS)

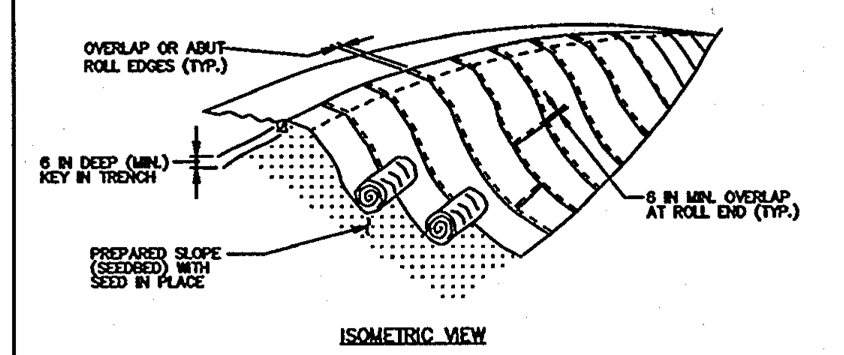

CONSTRUCTION SPECIFICATIONS

1. USE MATTING THAT HAS A DESIGN VALUE FOR SHEAR STRESS EQUAL TO OR HIGHER THAN THE SHEAR STRESS DESIGNATED ON APPROVED PLANS.
2. USE TEMPORARY SOIL STABILIZATION MATTING MADE OF DEGRADABLE (LASTS 6 MONTHS MINIMUM) NATURAL OR MAN-MADE FIBERS (MOSTLY ORGANIC). MAT MUST HAVE UNIFORM THICKNESS AND DISTRIBUTION OF FIBERS THROUGHOUT AND BE SMOLDER RESISTANT. CHEMICALS USED IN THE MAT MUST BE NON-LEACHING AND NON-TOXIC TO VEGETATION AND SEED GERMINATION AND NON-INJURIOUS TO THE SKIN. IF PRESENT, NETTING MUST BE EXTRUDED PLASTIC WITH A MAXIMUM MESH OPENING OF 2x2 INCHES AND SUFFICIENTLY BONDED OR SEWN ON 2 INCH CENTERS ALONG LONGITUDINAL AXIS OF THE MATERIAL TO PREVENT SEPARATION OF THE NET FROM THE PARENT MATERIAL.
3. SECURE MATTING USING STEEL STAPLES, WOOD STAKES, OR BIODEGRADABLE EQUIVALENT. STAPLES MUST BE "U" OR "T" SHAPED STEEL WIRE HAVING A MINIMUM GAUGE OF NO. 11 AND NO. 8 RESPECTIVELY. "U" SHAPED STAPLES MUST AVERAGE 1 TO 1½ INCHES WIDE AND BE A MINIMUM OF 6 INCHES LONG. "T" SHAPED STAPLES MUST HAVE A MINIMUM 8 INCH MAIN LEG, A MINIMUM 1 INCH SECONDARY LEG, AND A MINIMUM 4 INCH HEAD. WOOD STAKES MUST BE ROUGH-SAWN HARDWOOD, 12 TO 24 INCHES IN LENGTH, 1x3 INCH IN CROSS SECTION, AND WEDGE SHAPED AT THE BOTTOM.
4. PERFORM FINAL GRADING, TOPSOIL APPLICATION, SEEDBED PREPARATION, AND PERMANENT SEEDING IN ACCORDANCE WITH SPECIFICATIONS. PLACE MATTING WITHIN 48 HOURS OF COMPLETING SEEDING OPERATIONS UNLESS END OF WORKDAY STABILIZATION IS SPECIFIED ON THE APPROVED EROSION & SEDIMENT CONTROL PLAN.
5. UNROLL MATTING DOWNSLOPE. LAY MAT SMOOTHLY AND FIRMLY UPON THE SEEDED SURFACE. AVOID STRETCHING THE MATTING.
6. OVERLAP OR ABUT ROLL EDGES PER MANUFACTURER RECOMMENDATIONS. OVERLAP ROLL ENDS BY 6 INCHES (MINIMUM), WITH THE UPSLOPE MAT OVERLAPPING ON TOP OF THE DOWNSLOPE MAT.
7. KEY IN THE UPSLOPE END OF MAT 6 INCHES (MINIMUM) BY DIGGING A TRENCH, PLACING THE MATTING ROLL END IN THE TRENCH, STAPLING THE MAT IN PLACE, REPLACING THE EXCAVATED MATERIAL, AND TAMPING TO SECURE THE MAT END IN THE KEY.
8. STAPLE/STAKE MAT IN A STAGGERED PATTERN ON 4 FOOT (MAXIMUM) CENTERS THROUGHOUT AND 2 FOOT (MAXIMUM) CENTERS ALONG SEAMS, JOINTS, AND ROLL ENDS.
9. ESTABLISH AND MAINTAIN VEGETATION SO THAT REQUIREMENTS FOR ADEQUATE VEGETATIVE ESTABLISHMENT ARE CONTINUOUSLY MET IN ACCORDANCE WITH SECTION B-4 VEGETATIVE STABILIZATION.

MARYLAND STANDARDS AND SPECIFICATIONS FOR SOIL EROSION AND SEDIMENT CONTROL

U.S. DEPARTMENT OF AGRICULTURE NATURAL RESOURCES CONSERVATION SERVICE	2011	MARYLAND DEPARTMENT OF ENVIRONMENT WATER MANAGEMENT ADMINISTRATION

B.39

DETAIL B-4-6-C PERMANENT SOIL STABILIZATION MATTING CHANNEL APPLICATION

STANDARD SYMBOL
PSSMC – * lb/ft²
(* INCLUDE SHEAR STRESS)

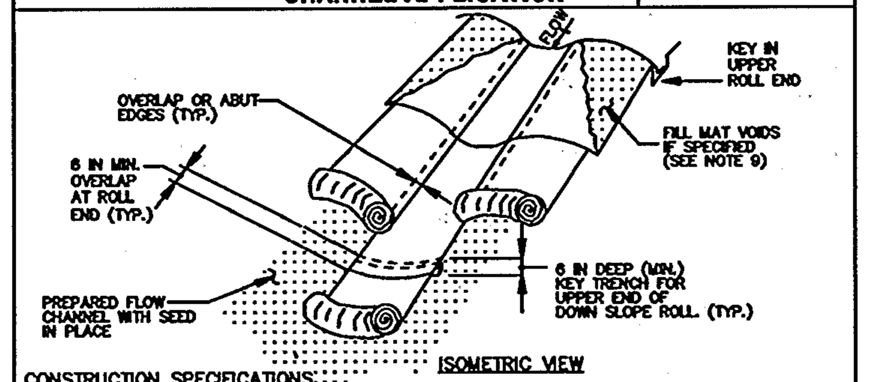

CONSTRUCTION SPECIFICATIONS

1. USE MATTING THAT HAS A DESIGN VALUE FOR SHEAR STRESS EQUAL TO OR HIGHER THAN THE SHEAR STRESS DESIGNATED ON APPROVED PLANS.
2. USE PERMANENT SOIL STABILIZATION MATTING MADE OF OPEN WEAVE SYNTHETIC, NON-DEGRADABLE FIBERS OR ELEMENTS OF UNIFORM THICKNESS AND DISTRIBUTION THROUGHOUT. CHEMICALS USED IN THE MAT MUST BE NON-LEACHING AND NON-TOXIC TO VEGETATION AND SEED GERMINATION AND NON-INJURIOUS TO THE SKIN. IF PRESENT, NETTING MUST BE EXTRUDED PLASTIC WITH A MAXIMUM MESH OPENING OF 2x2 INCHES AND SUFFICIENTLY BONDED OR SEWN ON 2 INCH CENTERS ALONG LONGITUDINAL AXIS OF THE MATERIAL TO PREVENT SEPARATION OF THE NET FROM THE PARENT MATERIAL.
3. SECURE MATTING USING STEEL STAPLES OR WOOD STAKES. STAPLES MUST BE "U" OR "T" SHAPED STEEL WIRE HAVING A MINIMUM GAUGE OF NO. 11 AND NO. 8 RESPECTIVELY. "U" SHAPED STAPLES MUST AVERAGE 1 TO 1½ INCHES WIDE AND BE A MINIMUM OF 6 INCHES LONG. "T" SHAPED STAPLES MUST HAVE A MINIMUM 8 INCH MAIN LEG, A MINIMUM 1 INCH SECONDARY LEG, AND MINIMUM 4 INCH HEAD. WOOD STAKES MUST BE ROUGH-SAWN HARDWOOD, 12 TO 24 INCHES IN LENGTH, 1x3 INCH IN CROSS SECTION, AND WEDGE SHAPE AT THE BOTTOM.
4. PERFORM FINAL GRADING, TOPSOIL APPLICATION, SEEDBED PREPARATION, AND PERMANENT SEEDING IN ACCORDANCE WITH SPECIFICATIONS. PLACE MATTING WITHIN 48 HOURS OF COMPLETING SEEDING OPERATIONS, UNLESS END OF WORKDAY STABILIZATION IS SPECIFIED ON THE APPROVED EROSION AND SEDIMENT CONTROL PLAN.
5. UNROLL MATTING IN DIRECTION OF WATER FLOW, CENTERING THE FIRST ROLL ON THE CHANNEL CENTER LINE. WORK FROM CENTER OF CHANNEL OUTWARD WHEN PLACING ROLLS. LAY MATTING SMOOTHLY AND FIRMLY UPON THE SEEDED SURFACE. AVOID STRETCHING THE MATTING.
6. OVERLAP OR ABUT EDGES OF MATTING ROLLS PER MANUFACTURER RECOMMENDATIONS. OVERLAP ROLL ENDS BY 6 INCHES (MINIMUM), WITH THE UPSTREAM MAT OVERLAPPING ON TOP OF THE NEXT DOWNSTREAM MAT.
7. KEY IN THE TOP OF SLOPE END OF MAT 6 INCHES (MINIMUM) BY DIGGING A TRENCH, PLACING THE MATTING ROLL END IN THE TRENCH, STAPLING THE MAT IN PLACE, REPLACING THE EXCAVATED MATERIAL, AND TAMPING TO SECURE THE MAT END IN THE KEY.
8. STAPLE/STAKE MAT IN A STAGGERED PATTERN ON 4 FOOT (MAXIMUM) CENTERS THROUGHOUT AND 2 FOOT (MAXIMUM) CENTERS ALONG SEAMS, JOINTS, AND ROLL ENDS.
9. IF SPECIFIED BY THE DESIGNER OR MANUFACTURER AND DEPENDING ON THE TYPE OF MAT BEING INSTALLED, ONCE THE MATTING IS KEYED AND STAPLED IN PLACE, FILL THE MAT VOIDS WITH TOP SOIL OR GRANULAR MATERIAL AND LIGHTLY COMPACT OR ROLL TO MAXIMIZE SOIL/MAT CONTACT WITHOUT CRUSHING MAT.
10. ESTABLISH AND MAINTAIN VEGETATION SO THAT REQUIREMENTS FOR ADEQUATE VEGETATIVE ESTABLISHMENT ARE CONTINUOUSLY MET IN ACCORDANCE WITH SECTION B-4 VEGETATIVE STABILIZATION.

MARYLAND STANDARDS AND SPECIFICATIONS FOR SOIL EROSION AND SEDIMENT CONTROL

U.S. DEPARTMENT OF AGRICULTURE NATURAL RESOURCES CONSERVATION SERVICE	2011	MARYLAND DEPARTMENT OF ENVIRONMENT WATER MANAGEMENT ADMINISTRATION

B.40

DETAIL B-4-6-D PERMANENT SOIL STABILIZATION MATTING SLOPE APPLICATION

STANDARD SYMBOL
PSSMS – * lb/ft²
(* INCLUDE SHEAR STRESS)

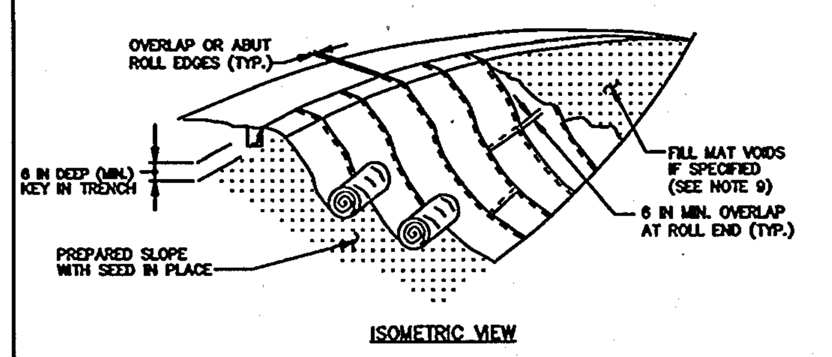

CONSTRUCTION SPECIFICATIONS

1. USE MATTING THAT HAS A DESIGN VALUE FOR SHEAR STRESS EQUAL TO OR HIGHER THAN THE SHEAR STRESS DESIGNATED ON APPROVED PLANS.
2. USE PERMANENT SOIL STABILIZATION MATTING MADE OF OPEN WEAVE SYNTHETIC, NON-DEGRADABLE FIBERS OR ELEMENTS OF UNIFORM THICKNESS AND DISTRIBUTION THROUGHOUT. CHEMICALS USED IN THE MAT MUST BE NON-LEACHING AND NON-TOXIC TO VEGETATION AND SEED GERMINATION AND NON-INJURIOUS TO THE SKIN. IF PRESENT, NETTING MUST BE EXTRUDED PLASTIC WITH A MAXIMUM MESH OPENING OF 2x2 INCHES AND SUFFICIENTLY BONDED OR SEWN ON 2 INCH CENTERS ALONG LONGITUDINAL AXIS OF THE MATERIAL TO PREVENT SEPARATION OF THE NET FROM THE PARENT MATERIAL.
3. SECURE MATTING USING STEEL STAPLES OR WOOD STAKES. STAPLES MUST BE "U" OR "T" SHAPED STEEL WIRE HAVING A MINIMUM GAUGE OF NO. 11 AND NO. 8 RESPECTIVELY. "U" SHAPED STAPLES MUST AVERAGE 1 TO 1½ INCHES WIDE AND BE A MINIMUM OF 6 INCHES LONG. "T" SHAPED STAPLES MUST HAVE A MINIMUM 8 INCH MAIN LEG, A MINIMUM 1 INCH SECONDARY LEG, AND MINIMUM 4 INCH HEAD. WOOD STAKES MUST BE ROUGH-SAWN HARDWOOD, 12 TO 24 INCHES IN LENGTH, 1x3 INCH IN CROSS SECTION, AND WEDGE SHAPE AT THE BOTTOM.
4. PERFORM FINAL GRADING, TOPSOIL APPLICATION, SEEDBED PREPARATION, AND PERMANENT SEEDING IN ACCORDANCE WITH SPECIFICATIONS. PLACE MATTING WITHIN 48 HOURS OF COMPLETING SEEDING OPERATIONS, UNLESS END OF WORKDAY STABILIZATION IS SPECIFIED ON THE APPROVED EROSION AND SEDIMENT CONTROL PLAN.
5. UNROLL MATTING DOWN SLOPE. LAY MATTING SMOOTHLY AND FIRMLY UPON THE SEEDED SURFACE. AVOID STRETCHING THE MATTING.
6. OVERLAP OR ABUT EDGES OF MATTING ROLLS PER MANUFACTURER RECOMMENDATIONS. OVERLAP ROLL ENDS BY 6 INCHES (MINIMUM), WITH THE UPSTREAM MAT OVERLAPPING ON TOP OF THE DOWNSLOPE MAT.
7. KEY IN THE TOP OF SLOPE END OF MAT 6 INCHES (MINIMUM) BY DIGGING A TRENCH, PLACING THE MATTING ROLL END IN THE TRENCH, STAPLING THE MAT IN PLACE, REPLACING THE EXCAVATED MATERIAL, AND TAMPING TO SECURE THE MAT END IN THE KEY.
8. STAPLE/STAKE MAT IN A STAGGERED PATTERN ON 4 FOOT (MAXIMUM) CENTERS THROUGHOUT AND 2 FOOT (MAXIMUM) CENTERS ALONG SEAMS, JOINTS, AND ROLL ENDS.
9. IF SPECIFIED BY THE DESIGNER OR MANUFACTURER AND DEPENDING ON THE TYPE OF MAT BEING INSTALLED, ONCE THE MATTING IS KEYED AND STAPLED IN PLACE, FILL THE MAT VOIDS WITH TOP SOIL OR GRANULAR MATERIAL AND LIGHTLY COMPACT OR ROLL TO MAXIMIZE SOIL/MAT CONTACT WITHOUT CRUSHING MAT.
10. ESTABLISH AND MAINTAIN VEGETATION SO THAT REQUIREMENTS FOR ADEQUATE VEGETATIVE ESTABLISHMENT ARE CONTINUOUSLY MET IN ACCORDANCE WITH SECTION B-4 VEGETATIVE STABILIZATION.

MARYLAND STANDARDS AND SPECIFICATIONS FOR SOIL EROSION AND SEDIMENT CONTROL

U.S. DEPARTMENT OF AGRICULTURE NATURAL RESOURCES CONSERVATION SERVICE	2011	MARYLAND DEPARTMENT OF ENVIRONMENT WATER MANAGEMENT ADMINISTRATION

B.41

B-4-8 STANDARDS AND SPECIFICATIONS FOR STOCKPILE AREA

Definition

A mound or pile of soil protected by appropriately designed erosion and sediment control measures.

Purpose

To provide a designated location for the temporary storage of soil that controls the potential for erosion, sedimentation, and changes to drainage patterns.

Conditions Where Practice Applies

Stockpile areas are utilized when it is necessary to salvage and store soil for later use.

Criteria

1. The stockpile location and all related sediment control practices must be clearly indicated on the erosion and sediment control plan.
2. The footprint of the stockpile must be sized to accommodate the anticipated volume of material and based on a side slope ratio no steeper than 2:1. Benching must be provided in accordance with Section B-3 Land Grading.
3. Runoff from the stockpile area must drain to a suitable sediment control practice.
4. Access the stockpile area from the upgrade side.
5. Clear water runoff into the stockpile area must be minimized by use of a diversion device such as an earth dike, temporary swale or diversion fence. Provisions must be made for discharging concentrated flow in a non-erosive manner.
6. Where runoff concentrates along the toe of the stockpile fill, an appropriate erosion/sediment control practice must be used to intercept the discharge.
7. Stockpiles must be stabilized in accordance with the 3/7 day stabilization requirement as well as Standard B-4-1 Incremental Stabilization and Standard B-4-4 Temporary Stabilization.
8. If the stockpile is located on an impervious surface, a liner should be provided below the stockpile to facilitate cleanup. Stockpiles containing contaminated material must be covered with impermeable sheeting.

Maintenance

The stockpile area must continuously meet the requirements for Adequate Vegetative Establishment in accordance with Section B-4 Vegetative Stabilization. Side slopes must be maintained at no steeper than a 2:1 ratio. The stockpile area must be kept free of erosion. If the vertical height of a stockpile exceeds 20 feet for 2:1 slopes, 30 feet for 3:1 slopes, or 40 feet for 4:1 slopes, benching must be provided in accordance with Section B-3 Land Grading.

B.43

H-1 STANDARDS AND SPECIFICATIONS FOR MATERIALS

Table H.1: Geotextile Fabrics

		WOVEN SLIT FILM GEOTEXTILE		WOVEN MONOFILAMENT GEOTEXTILE		NONWOVEN GEOTEXTILE	
		MINIMUM AVERAGE ROLL VALUE[1]					
PROPERTY	TEST METHOD	MD	CD	MD	CD	MD	CD
Grab Tensile Strength	ASTM D-4632	200 lb	200 lb	370 lb	250 lb	200 lb	200 lb
Grab Tensile Elongation	ASTM D-4632	15%	10%	15%	15%	50%	50%
Trapezoidal Tear Strength	ASTM D-4533	75 lb	75 lb	100 lb	60 lb	80 lb	80 lb
Puncture Strength	ASTM D-6241	450 lb		900 lb		450 lb	
Apparent Opening Size[2]	ASTM D-4751	U.S. Sieve 30 (0.59 mm)		U.S. Sieve 70 (0.21 mm)		U.S. Sieve 70 (0.21 mm)	
Permittivity	ASTM D-4491	0.05 sec⁻¹		0.28 sec⁻¹		1.1 sec⁻¹	
Ultraviolet Resistance Retained at 500 hours	ASTM D-4355	70% strength		70% strength		70% strength	

[1] All numeric values except apparent opening size (AOS) represent minimum average roll values (MARV). MARV is calculated as the typical minus two standard deviations. MD is machine direction; CD is cross direction.

[2] Values for AOS represent the average maximum opening.

Geotextiles must be evaluated by the National Transportation Product Evaluation Program (NTPEP) and conform to the values in Table H.1.

The geotextile must be inert to commonly encountered chemicals and hydrocarbons and must be rot and mildew resistant. The geotextile must be manufactured from fibers consisting of long chain synthetic polymers and composed of a minimum of 95 percent by weight of polyolefins or polyesters, and formed into a stable network so the filaments or yarns retain their dimensional stability relative to each other, including selvages.

When more than one section of geotextile is necessary, overlap the sections by at least one foot. The geotextile must be pulled taut over the applied surface. Equipment must not run over exposed fabric. When placing riprap on geotextile, do not exceed a one foot drop height.

H.1

Table H.2: Stone Size

TYPE	SIZE RANGE	d_{50}	d_{100}	AASHTO	MIDSIZE WEIGHT[3]
NUMBER 57[1]	3/8 to 1 ½ inch	½ in	1 ½ in	M-43	N/A
NUMBER 1	2 to 3 inch	2 ½ in	3 in	M-43	N/A
RIPRAP[2] (CLASS 0)	4 to 7 inch	5 ½ in	7 in	N/A	N/A
CLASS I	N/A	9 ½ in	15 in	N/A	40 lb
CLASS II	N/A	16 in	24 in	N/A	200 lb
CLASS III	N/A	23 in	34 in	N/A	600 lb

[1] This classification is to be used on the upstream face of stone outlets and check dams.

[2] This classification is to be used for gabions.

[3] Optimum gradation is 50 percent of the stone being above and 50 percent below the midsize.

Stone must be composed of a well graded mixture of stone sized so that fifty (50) percent of the pieces by weight are larger than the size determined by using the charts. A well graded mixture, as used herein, is defined as a mixture composed primarily of larger stone sizes but with a sufficient mixture of other sizes to fill the smaller voids between the stones. The diameter of the largest stone in such a mixture must not exceed the respective d_{100} selected from Table H.2. The d_{50} refers to the median diameter of the stone. This is the size for which 50 percent, by weight, will be smaller and 50 percent will be larger.

Note: Recycled concrete equivalent may be substituted for all stone classifications for temporary control measures only. Concrete broken into the sizes meeting the appropriate classification, containing no steel reinforcement, and having a minimum density of 150 pounds per cubic foot may be used as an equivalent.

H.2

H-5 STANDARDS AND SPECIFICATIONS FOR DUST CONTROL

Definition

Controlling the suspension of dust particles from construction activities.

Purpose

To prevent blowing and movement of dust from exposed soil surfaces to reduce on and off-site damage including health and traffic hazards.

Conditions Where Practice Applies

Areas subject to dust blowing and movement where on and off-site damage is likely without treatment.

Specifications

1. Mulches: See Section B-4-2 Soil Preparation, Topsoiling, and Soil Amendments, Section B-4-3 Seeding and Mulching, and Section B-4-4 Temporary Stabilization. Mulch must be anchored to prevent blowing.
2. Vegetative Cover: See Section B-4-4 Temporary Stabilization.
3. Tillage: Till to roughen surface and bring clods to the surface. Begin plowing on windward side of site. Chisel-type plows spaced about 12 inches apart, spring-toothed harrows, and similar plows are examples of equipment that may produce the desired effect.
4. Irrigation: Sprinkle site with water until the surface is moist. Repeat as needed. The site must not be irrigated to the point that runoff occurs.
5. Barriers: Solid board fences, silt fences, snow fences, burlap fences, straw bales, and similar material can be used to control air currents and soil blowing.
6. Chemical Treatment: Use of chemical treatment requires approval by the appropriate plan review authority.

H.22

ENGINEER CERTIFICATION:

I certify that this plan for erosion and sediment control represents a practical and workable plan based on my personal knowledge of the site conditions and that it was prepared in accordance with the requirements of the Howard Soil Conservation District.

Engineer ________ Date 4-23-14
Name Tanya L. Bensinger PE # 29179

DEVELOPER CERTIFICATION:

I/We certify that all development and construction will be done according to this plan for sediment and erosion control, and that all responsible personnel involved in the construction project will have a Certificate of Attendance at a Department of the Environment Approved Training Program for the Control of Sediment and Erosion before beginning the project. I also authorize periodic on-site inspection by the Howard Soil Conservation District.

Developer ________
Name. Josh Asbury

This development plan is approved for soil erosion and sediment control by the Howard Soil Conservation District.

________ 5/6/14
APPROVED: HOWARD SOIL CONSERVATION DISTRICT

APPROVED: Howard County Department of Planning and Zoning

________ 5.12.14
CHIEF, DEVELOPMENT ENGINEERING DIVISION DATE

________ 6-18-14
CHIEF, DIVISION OF LAND DEVELOPMENT DATE

________ 6/18/14
DIRECTOR DATE

MATIS WARFIELD
Consulting Engineers
10540 York Road, Suite M
Hunt Valley, Maryland 21030
PHONE 410.683.7004 FAX 410.683.1798
www.matiswarfield.com

"Professional Certification: I hereby certify that these documents were prepared or approved by me, and that I am a duly licensed professional engineer under the laws of the state of Maryland, License No. 29179, Expiration Date: 08-10-15"
STATE OF MARYLAND · TANYA L. BENSINGER · No. 29179 · PROFESSIONAL ENGINEER · 4-23-14

Owner/Developer:
Merritt-MR, LLC
2066 Lord Baltimore Drive
Baltimore, Maryland 21244
ph: 410-298-2600
fx: 410-298-9644

NO.	DESCRIPTION	BY	DATE

SEDIMENT CONTROL DETAILS
The Meadows Corporate Park Phase 2

6510 - 6518 MEADOW RIDGE ROAD MD RTE. 103
GREEN BUILDING

TAX MAP: 37;
PARCELS: A5-A9
ELECTION DISTRICT : 1
ZONE: POR

GENERAL OFFICE
SCALE : 1" = 50'
DATE : April 23, 2014
SHEET: 30 of 35

SDP-13-070

SEE MATCHLINE THIS SHEET

PARCEL 172
HOWARD COUNTY, MD.
DEPT. OF PUBLIC WORKS
ZONED FOR
01022/00139
USE: VACANT

PARCEL 408
HOWARD COUNTY, MD.
DEPT. OF PUBLIC WORKS
ZONED FOR
00955/00048
USE: INDUSTRIAL

SEE MATCHLINE THIS SHEET

MATCH LINE 'A-A (SEE SHEET 32)

Interstate (I-95) (South Bound)
(Principal Arterial Highway)
Vehicular Ingress & Egress Restricted

Meadowridge Road
(Maryland Route 103)
"MINOR ARTERIAL ROADWAY"
VEHICULAR INGRESS AND EGRESS IS RESTRICTED

Huntshire Drive

F1
F2
OLD FIELD/BRUSH
DRIVEWAY
FOREST CONSERVATION (RETENTION/REFORESTATION) EASEMENT AREA = 1.04 AC+/- DEED 9372/162 PLAT 17574
Existing Building No. 3 (2 Story) 70,734 Sq. Ft. (Gross) FF EL. = 276.0
EXIST. GROUND WATER RECHARGE FACILITY
EXIST. SWM POND/BASIN
7,424 s.f. slopes>25%
505 s.f. slopes>25%
220 s.f. slopes>25%
397 s.f. slopes>25%
2,556 s.f. slopes>25%
6,670 s.f. slopes>25%
2,762 s.f. slopes>25%
973 s.f. slopes>25%
1,321 s.f. slopes>25%
A
B
C
30' STRUCTURE AND USE SETBACK
20' PUBLIC WATER AND UTILITY EASEMENT (PLATS 9356-9358)
20' PRIVATE DRAINAGE & UTILITY EASEMENT (PLATS 9356 AND 9358)
20' PUBLIC WATER AND UTILITY EASEMENT (PLATS 9356-9358)
PARCEL A-4
PARCEL A-3
PARCEL 524
PARCEL 598
PARCEL 599
PARCEL 600
PARCEL 464
PARCEL 536
PARCEL A-5
EXISTING PUBLIC 8" WATER PER CONT. NO. 14-4201-D
EXISTING 12" PUBLIC SEWER PER CONTRACT NO. 14-4201-D
EXIST. 8" S.M.H.
EXISTING PAVEMENT
Existing Entrance Town Signage
GAS MANIFOLD
GAS/ELEC
EX. MAC. PAVING
EX. 18" S.D.
EX. 15" S.D.
EX. 12" S.D.
EX. 36" S.D.
EX. 27" S.D.
EX. 24" S.D.
EX. 6" S.W.L.
EX. 8" W.L.
EX. 4" GAS
EX. 8" SAN.
4" PVC
RuC (C)
RuB (C)
UaF
UgF
S41°44'56"W 604.81'
S50°25'56"W 1134.94'
R= 11703.73' L= 706.55'
105.01'
106.55'
MEADOWRIDGE LANDING AS
LOCAL OPEN
LOT K
PLAT 9
04999-0
ITAX ACCT. #

See Sheet 32 for FSD notes and stand information

Specimen Trees
A - 38" White Oak
B - 31" Tulip Poplar
C - 36" Tulip Poplar

FSD Legend
- Ex. Slopes 15% - 25%
- Ex. Slopes >25%
- 245 — Ex. Contours
- Ex. Forest
- Ex. Tree Line (not forest)
- W — W — Wetlands
- WB — Wetland/Stream Buffer

NO.	DESCRIPTION	BY	DATE

Owner/Developer:
Merritt-MR, LLC
2066 Lord Baltimore Drive
Baltimore, Maryland 21244
ph: 410-298-2600
fx: 410-298-9644

STATE OF MARYLAND — RAHUL DEWANGEN — PROFESSIONAL ENGINEER — 4-23-14

MATIS WARFIELD
Consulting Engineers
10540 York Road, Suite M
Hunt Valley, Maryland 21030
PHONE 410.683.7004 FAX 410.683.1798
www.matiswarfield.com

APPROVED: Howard County Department of Planning and Zoning

CHIEF, DEVELOPMENT ENGINEERING DIVISION — DATE 5.12.14
CHIEF, DIVISION OF LAND DEVELOPMENT — DATE 6.18.14
DIRECTOR — DATE 6/18/14

MD DNR Qualified Professional
USACOE Wetland Delineator
Certification # WDCP03MD0190604032
John F. Canales

Eco-Science Professionals, Inc.
Consulting Ecologists
P.O. Box 3006 Glen Arm, Maryland 21057
Telephone (410) 833-2488 Fax (410) 833-2489

WETLAND AND FOREST STAND DELINEATION
The Meadows Corporate Park
Phase 2

6510 - 6518 MEADOW RIDGE ROAD MD RTE. 103
GREEN BUILDING

TAX MAP: 37;
PARCELS: A5-A9
ELECTION DISTRICT : 1
ZONE: POR

GENERAL OFFICE
SCALE : 1" = 50'
DATE : April 23, 2014
SHEET: 31 of 35

SDP-13-070

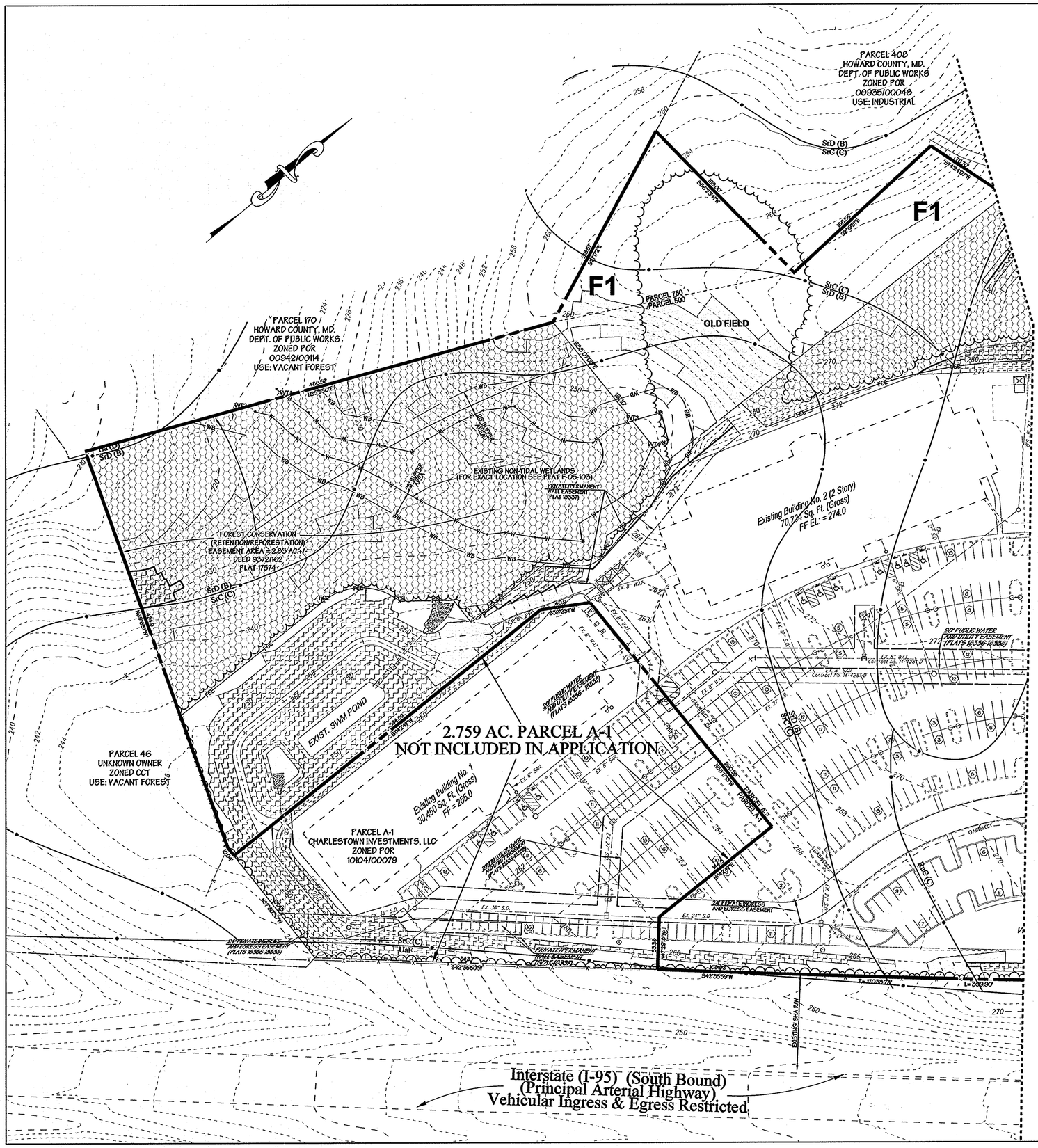

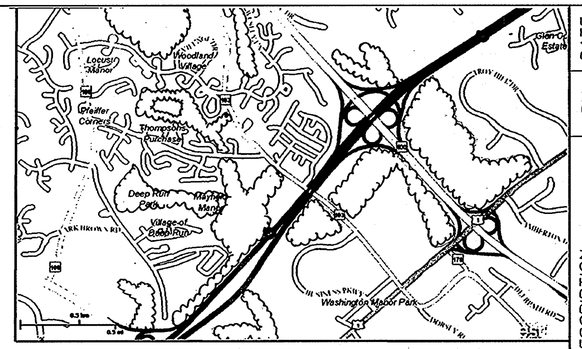

1" = 1000'

Forest Stand Data

Key	Community Type	Acreage	Dominant Vegetation	General Condition	Priority Acreage
F1	Mixed Successional	6.2	Liriodendron tulipifera, Acer rubrum, Prunus serotina, Morus rubra, Robinia, pseudo-acacia	Fair	0.1 ± buffers
F2	Oak/Pine	2.1	Quercus alba, Quercus rubra, Quercus prinus, Pinus virginiana, Liriodendron tulipifera, Acer rubrum	Good	0

See accompanying report for complete stand descriptions

FSD NOTES:

1. The FSD has been prepared for the lands added to the existing Meadows Corporate Park property. The FCA obligations for Parcels A-1, A-2, A-3 and A-4 have already been addressed.
2. No rare, threatened or endangered species were observed on the property.
3. Surrounding land use is primarily high density residential and commercial.
4. Approximately 4.4 acres of forest is present within 100 feet of the subject property.
5. No floodplain is present on the site.

FSD Legend

- Ex. Slopes 15% - 25%
- Ex. Slopes >25%
- 245 Ex. Contours
- Ex. Forest
- Ex. Tree Line (not forest)
- W Wetlands
- WB Wetland/Stream Buffer

NO.	DESCRIPTION	BY	DATE

Owner/Developer:
Merritt-MR, LLC
2066 Lord Baltimore Drive
Baltimore, Maryland 21244
ph: 410-298-2600
fx: 410-298-9644

STATE OF MARYLAND
TANVIL L. DENSINGER
No. 29179
PROFESSIONAL ENGINEER
4-23-14

MATIS WARFIELD
Consulting Engineers
10540 York Road, Suite M
Hunt Valley, Maryland 21030
PHONE 410.683.7004 FAX 410.683.1798
www.matiswarfield.com

APPROVED: Howard County Department of Planning and Zoning

CHIEF, DEVELOPMENT ENGINEERING DIVISION — DATE 5-12-14

CHIEF, DIVISION OF LAND DEVELOPMENT — DATE 6-18-14

DIRECTOR — DATE 6/18/14

MD DNR Qualified Professional
USACOE Wetland Delineator
Certification # WDCP93MD0610044E2
John P. Canales

Eco-Science Professionals, Inc.
Consulting Ecologists
P.O. Box 5906 Glen Arm, Maryland 21057 Telephone (410) 833-2400 Fax (410) 833-2408

WETLAND AND FOREST STAND DELINEATION
The Meadows Corporate Park Phase 2

6510 - 6518 MEADOW RIDGE ROAD MD RTE. 103
GREEN BUILDING

TAX MAP: 37;
PARCELS: A5-A9
ELECTION DISTRICT : 1
ZONE: POR

GENERAL OFFICE
SCALE : 1" = 50'
DATE : April 23, 2014
SHEET: 32 of 35

SDP-13-070

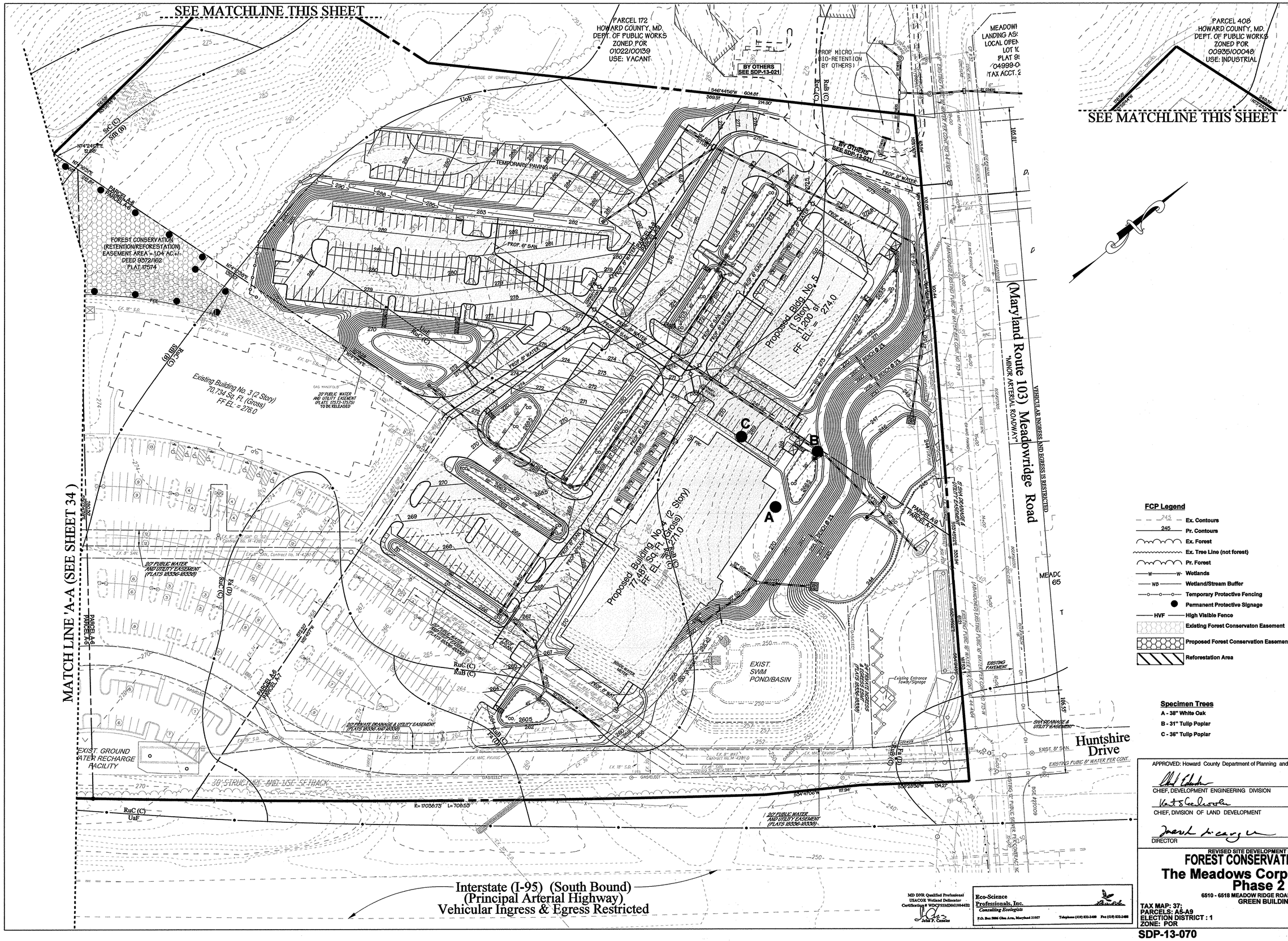

FCP Legend

- Ex. Contours
- Pr. Contours
- Ex. Forest
- Ex. Tree Line (not forest)
- Pr. Forest
- Wetlands
- Wetland/Stream Buffer
- Temporary Protective Fencing
- Permanent Protective Signage
- High Visible Fence
- Existing Forest Conservaton Easement
- Proposed Forest Conservation Easement
- Reforestation Area

Specimen Trees

A - 38" White Oak
B - 31" Tulip Poplar
C - 36" Tulip Poplar

NO.	DESCRIPTION	BY	DATE
1	Add temporary parking and submerged gravel wetland SWM-11A.	MWI	1/28/2015

Owner/Developer:
Merritt-MR, LLC
2066 Lord Baltimore Drive
Baltimore, Maryland 21244
ph: 410-298-2600
fx: 410-298-9644

STATE OF MARYLAND
TANYA L. BENSINGER
No. 29179
PROFESSIONAL ENGINEER
1-28-15

MATIS WARFIELD
Consulting Engineers
10540 York Road, Suite M
Hunt Valley, Maryland 21030
PHONE 410.683.7004 FAX 410.683.1798
www.matiswarfield.com

APPROVED: Howard County Department of Planning and Zoning

CHIEF, DEVELOPMENT ENGINEERING DIVISION — DATE 4-8-15

CHIEF, DIVISION OF LAND DEVELOPMENT — DATE 4-13-15

DIRECTOR — DATE 4/13/15

MD DNR Qualified Professional
USACOE Wetland Delineator
Certification # WDCP93MD0610044D2
John P. Canales

Eco-Science Professionals, Inc.
Consulting Ecologists
P.O. Box 5006 Glen Arm, Maryland 21057
Telephone (410) 832-2489 Fax (410) 832-2488

REVISED SITE DEVELOPMENT PLAN
FOREST CONSERVATION PLAN
The Meadows Corporate Park Phase 2
6510 - 6518 MEADOW RIDGE ROAD MD RTE. 103
GREEN BUILDING

TAX MAP: 37;
PARCELS: A5-A9
ELECTION DISTRICT : 1
ZONE: POR

GENERAL OFFICE
SCALE : 1" = 50'
DATE : April 23, 2014
SHEET: 33 of 35

SDP-13-070

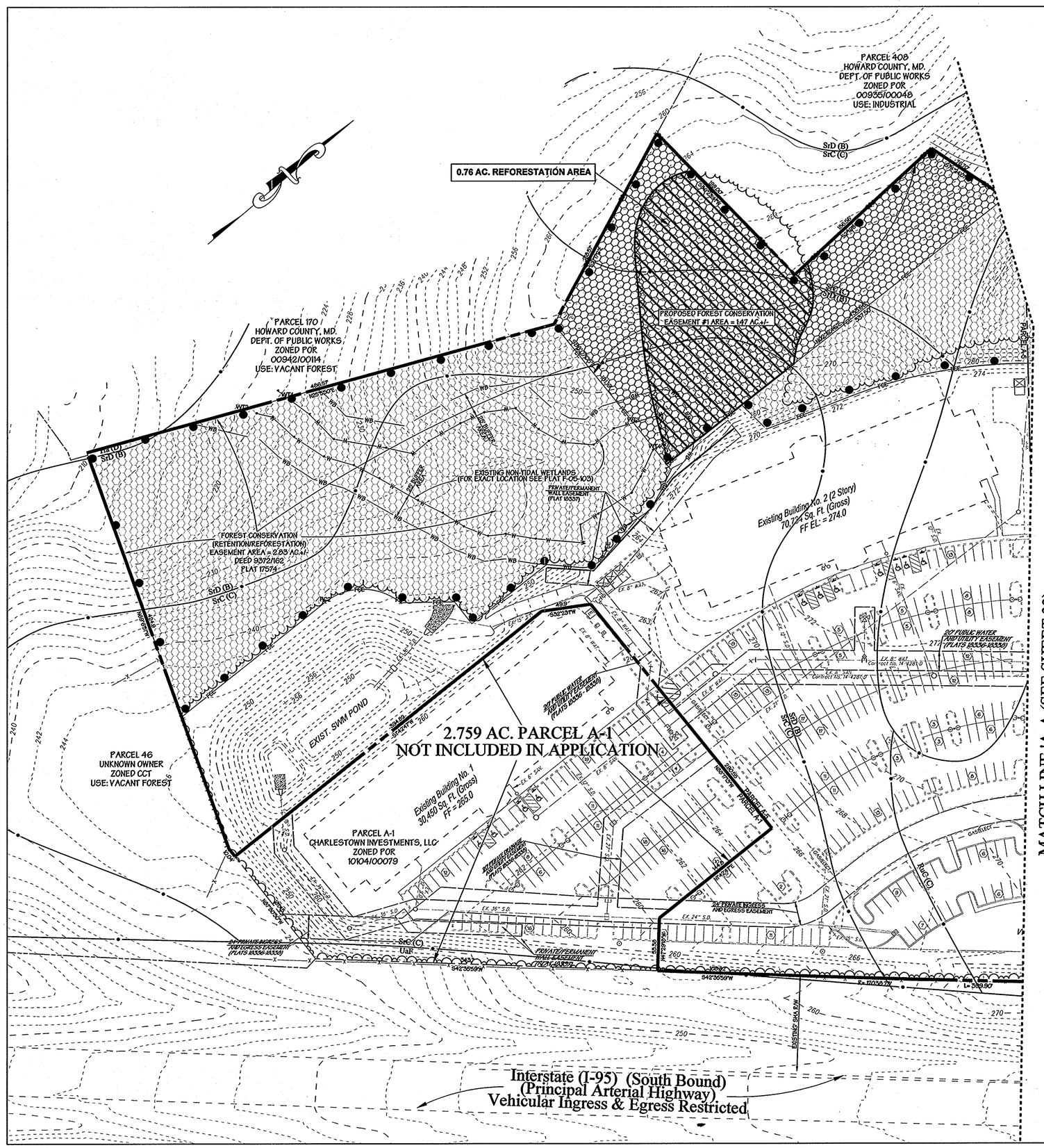

FCP Legend

- Ex. Contours
- Pr. Contours
- Ex. Forest
- Ex. Tree Line (not forest)
- Pr. Forest
- Wetlands
- Wetland/Stream Buffer
- Temporary Protective Fencing
- Permanent Protective Signage
- High Visible Fence
- Existing Forest Conservaton Easement
- Proposed Forest Conservation Easement
- Reforestation Area

Specimen Trees

A - 38" White Oak
B - 31" Tulip Poplar
C = 36" Tulip Poplar

NO.	DESCRIPTION	BY	DATE

Owner/Developer:
Merritt-MR, LLC
2066 Lord Baltimore Drive
Baltimore, Maryland 21244
ph: 410-298-2600
fx: 410-298-9644

STATE OF MARYLAND
TANYA L. BENSINGER
No. 21429
PROFESSIONAL ENGINEER
4-23-14

MATIS WARFIELD
Consulting Engineers
10540 York Road, Suite M
Hunt Valley, Maryland 21030
PHONE 410.683.7004 FAX 410.683.1798
www.matiswarfield.com

APPROVED: Howard County Department of Planning and Zoning

CHIEF, DEVELOPMENT ENGINEERING DIVISION — DATE 5.12.14

CHIEF, DIVISION OF LAND DEVELOPMENT — DATE 6-18-14

DIRECTOR — DATE 6/18/14

MD DNR Qualified Professional
USACOE Wetland Delineator
Certification # WDCP93MD0610044E2
John F. Canales

Eco-Science Professionals, Inc.
Consulting Ecologists
P.O. Box 5806 Glen Arm, Maryland 21057
Telephone (410) 832-2400 Fax (410) 832-2408

FOREST CONSERVATION PLAN
The Meadows Corporate Park Phase 2

6510 - 6518 MEADOW RIDGE ROAD MD RTE. 103
GREEN BUILDING

TAX MAP: 37;
PARCELS: A5-A9
ELECTION DISTRICT : 1
ZONE: POR

GENERAL OFFICE
SCALE : 1" = 50'
DATE : April 23, 2014
SHEET: 34 of 35

SDP-13-070

FCP NOTES

1. Any Forest Conservation Easement (FCE) area shown hereon is subject to protective covenants which may be found in the Land Records of Howard County which restrict the disturbance and use of these areas.
2. Forested areas occurring outside of the FCE shall not be considered part of the FCE and shall not be subject to protective land covenants. These areas have been considered cleared for the purpose of the FCA calculations.
3. Limits of disturbance shall be restricted to areas outside the limit of temporary fencing or the FCE boundary, whichever is greater.
4. There shall be no clearing, grading, construction or disturbance of vegetation in the Forest Conservation Easement, except as permitted by Howard County DPZ.
5. No stockpiles, parking areas, equipment cleaning areas, etc. shall occur within areas designated as Forest Conservation Easements.
6. Temporary fencing shall be used to protect forest resources during construction. Fencing shall be installed along limits of disturbance occurring within 50 feet of the proposed FCE limits. Permanent signage will be posted a at 50-100 foot intervals along all FCE limits, as shown hereon.
7. The Forest Conservation Act requirements for this project will be met through the retention of 0.7 acres of net tract area forest, 0.8 acres of onsite reforestation and purchasing 1.9 acres of credit in the Maplewood Farm Forest Mitigation Bank (SDP-13-040) to be design, constructed and monitored by Ecotone, Inc.

Specimen Tree Chart

Key	Species, Size	Comments
A	White Oak, 38"	to be removed
B	Tulip poplar, 31"	to be removed
C	Tulip poplar, 36"	to be removed

CONSTRUCTION PERIOD PROTECTION PROGRAM

A. Forest Protection Techniques

1. Soil Protection Area (Critical Root Zone)

The soil protection area, or critical root zone, of a tree is that portion of the soil column where most of a its roots may be found. The majority of roots responsible for water and nutrient uptake are located just below the soil surface. Temporary fencing shall be placed around the critical root zone of the forest in areas where the forest limits occur within 25 feet of the limit of disturbance.

2. Fencing and Signage

Existing forest limits occurring within 25 feet of the limits of disturbance shall be protected using temporary protective fencing. Permanent signage shall be placed around the afforestation area prior to plant installation, as shown on the plan.

B. Pre-Construction Meeting

Upon staking of limits of disturbance a pre- construction meeting will be held between the developer, contractor and appropriate County inspector. The purpose of the meeting will be to verify that all sediment control is in order, and to notify the contractor of possible penalties for noncompliance with the FCP.

C. Storage Facilities/Equipment Cleaning

All equipment storage, parking, sanitary facilities, material stockpiling, etc. associated with construction of the project will be restricted to those areas outside of the proposed Forest Conservation Easement. Cleaning of equipment will be limited to area within the LOD of the proposed home sites. Wastewater resulting from equipment cleaning will be controlled to prevent runoff into environmentally sensitive areas.

D. Sequence of Construction

The following timetable represents the proposed timetable for development of the subject property. The items outlined in the Forest Conservation Plan will be enacted within two (2) years of subdivision approval.

Below Find a Proposed sequence of construction

1. Install all signage and sediment control devices
2. Hold pre-Constrcution meeting between developer, contractor and County inspector
3. Build access roads, install water and sewer, and construct houses. Stabilize all distributed areas accordingly.
4. Remove sediment control
5. Hold post- construction meeting with County inspectors to assure compliance with FCP. Submit Certification of Retention

E. Construction Monitoring

Eco-Science Professionals, or another qualified professional designated by the developer, will monitor construction of the project to ensure that all activities are in compliance with the Forest Conservation Plan.

F. Post-Construction Meeting

Upon completion of construction, Eco-Science Professionals, or another qualified professional designated by the developer, will notify the County that construction has been completed and arrange for a post- construction meeting to review the project site. The meeting will allow the County inspector to verify that forest retention requirements have been met

POST- CONSTRUCTION MANAGEMENT PLAN

Howard County requires a two year post- construction management plan be prepared as part of the Forest Conservation Plan. The plan goes into effect upon acceptance of the construction certification of completion by the County. Eco-Science Professionals, or another qualified professional designated by the developer, will be responsible for implementation of the post-construction management plan.

The following items will be incorporated into the plan for the subject property:

A. Fencing and Signage

Permanent signage indicating the limits of the retention/planting area shall be maintained.

B. General Site Inspections

Site inspections will be performed to insure that retention of the forest is met in accordance with this plan and that the forest edge remains healthy and stable.

C. Education

The developer will provide appropriate materials to property owners informing them of the location and purpose of the forest conservation easement. Materials may include site plans and information explaining the intent of the forest conservation law.

D. Final Inspection

At the end of the two year post- construction management period, Eco-Science Professionals, or another qualified professional, will submit to the administrator of the Howard County Forest Conservation Program certification that all retention/afforestation requirements have been met. Upon acceptance of this certification, the County will release the developer from all future obligations and release the developer's bond.

CONSTRUCTION PERIOD PROTECTION PROGRAM

A. Forest Protection Techniques

1. Soil Protection Area (Critical Root Zone)

The soil protection area, or critical root zone, of a tree is that portion of the soil column where most of a its roots may be found. The majority of roots responsible for water and nutrient uptake are located just below the soil surface. Temporary fencing shall be placed around the critical root zone of the forest in areas where the forest limits occur within 25 feet of the limit of disturbance.

2. Fencing and Signage

Existing forest limits occurring within 25 feet of the limits of disturbance shall be protected using temporary protective fencing. Permanent signage shall be placed around the afforestation area prior to plant installation, as shown on the plan.

B. Pre-Construction Meeting

Upon staking of limits of disturbance a pre- construction meeting will be held between the developer, contractor and appropriate County inspector. The purpose of the meeting will be to verify that all sediment control is in order, and to notify the contractor of possible penalties for noncompliance with the FCP.

C. Storage Facilities/Equipment Cleaning

All equipment storage, parking, sanitary facilities, material stockpiling, etc. associated with construction of the project will be restricted to those areas outside of the proposed Forest Conservation Easement. Cleaning of equipment will be limited to area within the LOD of the proposed home sites. Wastewater resulting from equipment cleaning will be controlled to prevent runoff into environmentally sensitive areas.

D. Sequence of Construction

The following timetable represents the proposed timetable for development of the subject property. The items outlined in the Forest Conservation Plan will be enacted within two (2) years of subdivision approval.

Below find a proposed sequence of construction.

1. Install all signage and sediment control devices.
2. Hold pre- construction meeting between developer, contractor and County inspector.
3. Build access roads, install water and sewer, and construct houses. Stabilize all disturbed areas accordingly.
4. Remove sediment control.
5. Hold post- construction meeting with County inspectors to assure compliance with FCP. Submit Certification of Retention.

E. Construction Monitoring

Eco-Science Professionals, or another qualified professional designated by the developer, will monitor construction of the project to ensure that all activities are in compliance with the Forest Conservation Plan.

F. Post-Construction Meeting

Upon completion of construction, Eco-Science Professionals, or another qualified professional designated by the developer, will notify the County that construction has been completed and arrange for a post- construction meeting to review the project site. The meeting will allow the County inspector to verify that forest retention requirements have been met

POST- CONSTRUCTION MANAGEMENT PLAN

Howard County requires a two year post- construction management plan be prepared as part of the Forest Conservation Plan. The plan goes into effect upon acceptance of the construction certification of completion by the County. Eco-Science Professionals, or another qualified professional designated by the developer, will be responsible for implementation of the post-construction management plan.

The following items will be incorporated into the plan for the subject property:

A. Fencing and Signage

Permanent signage indicating the limits of the retention/planting area shall be maintained.

B. General Site Inspections

Site inspections will be performed to insure that retention of the forest is met in accordance with this plan and that the forest edge remains healthy and stable.

C. Education

The developer will provide appropriate materials to property owners informing them of the location and purpose of the forest conservation easement. Materials may include site plans and information explaining the intent of the forest conservation law.

D. Final Inspection

At the end of the two year post- construction management period, Eco-Science Professionals, or another qualified professional, will submit to the administrator of the Howard County Forest Conservation Program certification that all retention/afforestation requirements have been met. Upon acceptance of this certification, the County will release the developer from all future obligations and release the developer's bond.

FOREST CONSERVATION EASEMENTS

Easements are a legal means of providing permanent protection of forests, farmland and open space. In accordance with the criteria outlined in the Howard County Forest Conservation Manual, a forest conservation easement will be recorded for the retention areas the subject property. Submission of the easements for recordation will occur prior to commencement of construction activities.

FOREST CONSERVATION WORKSHEET

Version 1.0
Project: Meadows Corporate Park
Date: May 15,2013

NET TRACT AREA			Acres
A. Total Tract Area			35.8
B. Area within 100 Year Floodplain			0
C. Area of site having previously addressed FCA obligations			24.5
D. Net Tract Area			11.3
LAND USE CATEGORY: (fom table 3.2.1 , page 40, Manual ARA MDR IDA HDR MPD CIA X (under MPD)			
Afforestation Threshold	(percentage)	0.15	1.7
F. Conservation Threshold	(percentage)	0.15	1.7
EXISTING FOREST COVER:			
G.Existing forest cover (excluding floodplain)			8.3
H. Area of forest above afforestation threshold			6.6
I. Area of forest above conservation threshold			6.6
BREAK EVEN POINT:			
J. Forest retention above threshold with no mitigation			1.3
Break-Even Point			3.0
K. Clearing permitted without mitigation			5.3
PROPOSED FOREST CLEARING			
L. Total area of forest to be Cleared or Retained Outside FCE			7.6
M. Total area of forest to be Retained in FCE			0.7
PLANTING REQUIREMENTS			
N. Reforestation for clearing above Conservation Threshold			1.7
P. Reforestation for clearing below Conservation Threshold			2.0
Q. Credit for retention above conservation threshold			0
R. Total reforestation required			2.7
S. Total afforestation required			0
T. Total reforestation and afforestation required			2.7

PLANTING SCHEDULE

FCE #1 - Planting Area A - 0.8 acres
Planting units Required: 560
Planting units Provided: 560

Qty	Species	Size	Spacing	Total FCA units
35	Acer rubrum - Red maple	2-3' whip	11' o.c.	
35	Cornus florida - Flowering dogwood	2-3' whip	11' o.c.	
40	Liriodendron tulipifera - Tulip poplar	2-3' whip	11' o.c.	
50	Prunus serotina - Black cherry	2-3' whip	11' o.c.	
20	Quercus alba - White oak	2-3' whip	11' o.c.	
50	Robinia pseudo-acacia - Black locust	2-3' whip	11' o.c.	
50	Viburnum prunifolium - Blackhaw	2-3' whip	11' o.c.	
280	Total whip plantings x 2 units / tree = FCA unit credit			560
	Total Unit Credit			560

Planting Notes:

A. Planting density based spacing requirements: whips with shelter @ 11' on center

B. Planting may be made in a curvilinear fashion along contour. The planting should avoid a grid appearance but should be spaced to facilitate maintenance

C. Multiflora rose/heavy brush removal/control may be required prior to installation of planting.

D. All whips are required to be installed with tree shelters per Howard County FCA requirements.

E. Planting units defined by the spacing requirements established in the FCA Manual. One plant unit is defined as 1 seedling or whip without shelter. The Manual states that 700 seedlings/whips without shelters are required per acre, or 350 whips w/shelters, or 200 1" caliper trees, or 100 2" caliper trees. By conversion it has been determined that a seeding or whip without shelter = 1 unit, whip with shelter = 2 units, 1"caliper tree = 3.5 units and 2" caliper tree =7 units. The use of plant units simplifies the plant density calculations when mixing stock size.

Typical Planting Layout

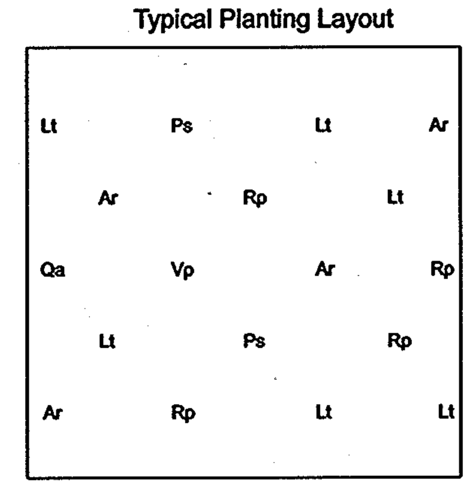

This diagram shows a typical dispersal of species within planting area. The spacing shall be in accordance with the approved planting schedule. Where the size of the planting stock varies, the planting units shall installed at averaged spacing to provide approximately uniform coverage.

NO.	DESCRIPTION	BY	DATE

Owner/Developer:
Merritt-MR, LLC
2066 Lord Baltimore Drive
Baltimore, Maryland 21244
ph: 410-298-2600
fx: 410-298-9644

STATE OF MARYLAND — TANYA L. BENSINGER — No. 29179 — PROFESSIONAL ENGINEER — 4-23-14

MATIS WARFIELD
Consulting Engineers
10540 York Road, Suite M
Hunt Valley, Maryland 21030
PHONE 410.683.7004 FAX 410.683.1798
www.matiswarfield.com

APPROVED: Howard County Department of Planning and Zoning

CHIEF, DEVELOPMENT ENGINEERING DIVISION — DATE 5.12.14

CHIEF, DIVISION OF LAND DEVELOPMENT — DATE 6-18-14

DIRECTOR — DATE 6/18/14

MD DNR Qualified Professional
USACOE Wetland Delineator
Certification # WDCP93MD0610044B2
John P. Canoles

Eco-Science Professionals, Inc.
Consulting Ecologists
P.O. Box 5006 Glen Arm, Maryland 21057 Telephone (410) 832-2480 Fax (410) 832-2488

FOREST CONSERVATION NOTES
The Meadows Corporate Park Phase 2

6510 - 6518 MEADOW RIDGE ROAD MD RTE. 103
GREEN BUILDING

TAX MAP: 37;
PARCELS: A5-A9
ELECTION DISTRICT : 1
ZONE: POR

GENERAL OFFICE
SCALE : 1" = 50'
DATE : April 23, 2014
SHEET: 35 of 35

SDP-13-070