SITE DEVELOPMENT PLAN

OXFORD SQUARE

"A Howard County Green Neighborhood"

Lots 3 Thru 103, Open Space Lots 104 Thru 116 And Parcels 'N' And 'O'

(Being A Resubdivision Of Parcels 'F' And 'J', As Shown On Plats Entitled "Revision Plat, Oxford Square, "Green Neighborhood", Parcels 'C', 'E', 'F', 'G', 'I', 'J', 'K' And 'M" And Recorded Among The Land Records Of Howard County, Maryland As Plat Nos. **22856** Thru **22859**)

ZONED: TOD

TAX MAP No. 44 GRID No. 1 & 2 PARCEL No. 761

SHEET INDEX

SHEET NO.	DESCRIPTION
1	TITLE SHEET
2	HOUSE TYPES
3-4	GEOMETRY PLAN
5-7	SITE DEVELOPMENT PLAN
8-9	STORMWATER MANAGEMENT NOTES AND DETAILS
10-17	STORMWATER MANAGEMENT PLAN VIEWS
18-20	SEDIMENT AND EROSION CONTROL PLAN
21-22	STREET TREE AND LANDSCAPE PLAN
23	LANDSCAPE NOTES AND DETAILS
24-25	DRAINAGE AREA MAP
26-28	STORM DRAIN PROFILES
29-30	ROADWAY DETAILS
31	SITE DETAILS
32	ROAD & WALL PROFILES
33-34	SEDIMENT AND EROSION CONTROL PLAN NOTES AND DETAILS
35-36	GREEN NEIGHBORHOOD PLANS
37	METES & BOUNDS PLAN
38	POOL AREA & HANDICAPPED PARKING PLAN

STREET LIGHT CHART (PRIVATE)

STREET NAME	STATION	OFFSET	FIXTURE/POLE TYPE
SOUTHMOOR STREET	3+54	24' L	175 watt METAL HALIDE TEAR DROP FIXTURE MOUNTED AT 20' ON A 23' BLACK FIBERGLASS POLE WITH SHROUD USING A 4' ARM
BEAUMONT PLACE (N)	3+47	12' L	
DANVERS STREET	0+39	16' L	100 watt METAL HALIDE HAVRE DE GRACE ACORN POST TOP FIXTURE MOUNTED ON A 14' BLACK FIBERGLASS FLUTED POLE WITH SHROUD
	0+85	16' R	
	1+75	16' L	
	1+90	29' R	
	2+75	29' R	
	3+05	12.5' L	
	4+02	12.5' R	
	4+20	16' L	
*SOUTHMOOR STREET	0+95	22' R	
	1+55	22' R	
DENE COURT	0+82	9.5' L	
	1+92	12' L	
	2+62	12' L	
	3+34	12' L	
	4+14	15' L	
SOUTHMOOR STREET	0+98	22' L	
	1+83	22' L	
	2+63	22' L	
	4+49	22' L	
	5+35	22' L	
	6+15	22' L	
BEAUMONT PLACE (N)	0+62	20' R	
	1+02	10' L	
	1+42	20' R	
	1+82	10' L	
	2+22	20' R	
	2+62	10' L	
	3+02	20' R	
	4+02	10' L	
	4+42	20' R	
	4+82	10' L	
	5+22	20' R	
	5+62	10' L	
	6+02	20' R	
	6+42	10' L	

*(south of Saint Margarets Blvd.)

ROAD CLASSIFICATION CHART

ROAD NAME	CLASSIFICATION	PAVING WIDTH
DANVERS STREET	PRIVATE ACCESS STREET	22'
SOUTHMOOR STREET	PRIVATE ACCESS STREET	22'
* DENE COURT	PRIVATE ACCESS STREET	16'/18'
* BEAUMONT PLACE (N)	PRIVATE ACCESS STREET	16'
HEADLEY STREET	PRIVATE ACCESS STREET	26'
ELMTHORPE WAY	PRIVATE ACCESS STREET	22'
KELBURNE COURT	PRIVATE ACCESS STREET	22'
FOXTON WAY	PRIVATE ACCESS STREET	22'
BRINLEY WAY	PRIVATE ACCESS STREET	22'

* DENOTES ONE-WAY ROAD

STREET SIGN CHART

STREET NAME	STATION	OFFSET	POSTED SIGN	SIGN CODE
DANVERS STREET	0+35	14' L	STOP	R1-1
DANVERS STREET	4+25	14' R	STOP	R1-1
* SOUTHMOOR STREET	0+50	18' L	STOP	R1-1
DENE COURT	0+48	12' R	DO NOT ENTER	R5-1
DENE COURT	0+51	10' L	STOP	R1-1
DENE COURT	4+47	10' L	SPEED LIMIT 25	R2-1
SOUTHMOOR STREET	0+55	15' L	STOP	R1-1
SOUTHMOOR STREET	0+96	15' R	SPEED LIMIT 25	R2-1
SOUTHMOOR STREET	6+87	15' R	STOP	R1-1
SOUTHMOOR STREET	6+58	13' L	SPEED LIMIT 25	R2-1
BEAUMONT PLACE (N)	0+68	10' R	SPEED LIMIT 25	R2-1
BEAUMONT PLACE (N)	3+77	10' L	ONE WAY	R6-1R
BEAUMONT PLACE (N)	7+00	12' R	STOP	R1-1
BEAUMONT PLACE (N)	7+00	12' R	ONE WAY	R6-1L & R6-1R
HEADLEY STREET	0+41	15' L	STOP	R1-1
HEADLEY STREET	1+01	22' R	STOP	R1-1
ELMTHORPE WAY	0+24	15' L	STOP	R1-1
ELMTHORPE WAY	3+17	14' R	STOP	R1-1
BRINLEY WAY	N 552737.56 E 1386718.31		STOP	R1-1
BRINLEY WAY	N 552552.94 E 1386631.72		STOP	R1-1
BRINLEY WAY	N 552442.75 E 1386789.04		STOP	R1-1
BRINLEY WAY	N 552633.04 E 1386930.09		STOP	R1-1

*(south of Saint Margarets Blvd.)

STREET ADDRESS CHART

LOT No.	STREET ADDRESS	LOT No.	STREET ADDRESS
3	7375 SAINT MARGARETS BOULEVARD	55	7364 SAINT MARGARETS BOULEVARD
4	7373 SAINT MARGARETS BOULEVARD	56	7362 SAINT MARGARETS BOULEVARD
5	7371 SAINT MARGARETS BOULEVARD	57	7360 SAINT MARGARETS BOULEVARD
6	7369 SAINT MARGARETS BOULEVARD	58	7356 SAINT MARGARETS BOULEVARD
7	7367 SAINT MARGARETS BOULEVARD	59	7354 SAINT MARGARETS BOULEVARD
8	7365 SAINT MARGARETS BOULEVARD	60	7352 SAINT MARGARETS BOULEVARD
9	7361 SAINT MARGARETS BOULEVARD	61	7350 SAINT MARGARETS BOULEVARD
10	7359 SAINT MARGARETS BOULEVARD	62	7003 SOUTHMOOR STREET
11	7357 SAINT MARGARETS BOULEVARD	63	7005 SOUTHMOOR STREET
12	7355 SAINT MARGARETS BOULEVARD	64	7007 SOUTHMOOR STREET
13	7353 SAINT MARGARETS BOULEVARD	65	7009 SOUTHMOOR STREET
14	7351 SAINT MARGARETS BOULEVARD	66	7011 SOUTHMOOR STREET
15	6995 SOUTHMOOR STREET	67	7013 SOUTHMOOR STREET
16	6993 SOUTHMOOR STREET	68	7015 SOUTHMOOR STREET
17	6991 SOUTHMOOR STREET	69	7021 SOUTHMOOR STREET
18	6989 SOUTHMOOR STREET	70	7023 SOUTHMOOR STREET
19	6987 SOUTHMOOR STREET	71	7025 SOUTHMOOR STREET
20	6979 SOUTHMOOR STREET	72	7027 SOUTHMOOR STREET
21	6977 SOUTHMOOR STREET	73	7029 SOUTHMOOR STREET
22	6975 SOUTHMOOR STREET	74	7202 BRINLEY WAY
23	6973 SOUTHMOOR STREET	75	7204 BRINLEY WAY
24	7101 ELMTHORPE WAY	76	7206 BRINLEY WAY
25	7103 ELMTHORPE WAY	77	7208 BRINLEY WAY
26	7105 ELMTHORPE WAY	78	7210 BRINLEY WAY
27	7107 ELMTHORPE WAY	79	7220 BRINLEY WAY
28	7109 ELMTHORPE WAY	80	7222 BRINLEY WAY
29	7111 ELMTHORPE WAY	81	7224 BRINLEY WAY
30	7115 ELMTHORPE WAY	82	7226 BRINLEY WAY
31	7117 ELMTHORPE WAY	83	7228 BRINLEY WAY
32	7119 ELMTHORPE WAY	84	7230 BRINLEY WAY
33	7121 ELMTHORPE WAY	85	7232 BRINLEY WAY
34	7123 ELMTHORPE WAY	86	7234 BRINLEY WAY
35	7125 ELMTHORPE WAY	87	7240 BRINLEY WAY
36	7038 FOXTON WAY	88	7242 BRINLEY WAY
37	7036 FOXTON WAY	89	7244 BRINLEY WAY
38	7034 FOXTON WAY	90	7246 BRINLEY WAY
39	7032 FOXTON WAY	91	7248 BRINLEY WAY
40	7030 FOXTON WAY	92	7126 BEAUMONT PLACE
41	7028 FOXTON WAY	93	7124 BEAUMONT PLACE
42	7024 FOXTON WAY	94	7122 BEAUMONT PLACE
43	7022 FOXTON WAY	95	7120 BEAUMONT PLACE
44	7020 FOXTON WAY	96	7118 BEAUMONT PLACE
45	7018 FOXTON WAY	97	7114 BEAUMONT PLACE
46	7016 FOXTON WAY	98	7112 BEAUMONT PLACE
47	7014 FOXTON WAY	99	7110 BEAUMONT PLACE
48	7010 FOXTON WAY	100	7108 BEAUMONT PLACE
49	7008 FOXTON WAY	101	7106 BEAUMONT PLACE
50	7006 FOXTON WAY	102	7104 BEAUMONT PLACE
51	7004 FOXTON WAY	103	7102 BEAUMONT PLACE
52	7002 FOXTON WAY	COMM. CTR.	7401 SAINT MARGARETS BOULEVARD
53	7368 SAINT MARGARETS BOULEVARD		
54	7366 SAINT MARGARETS BOULEVARD		

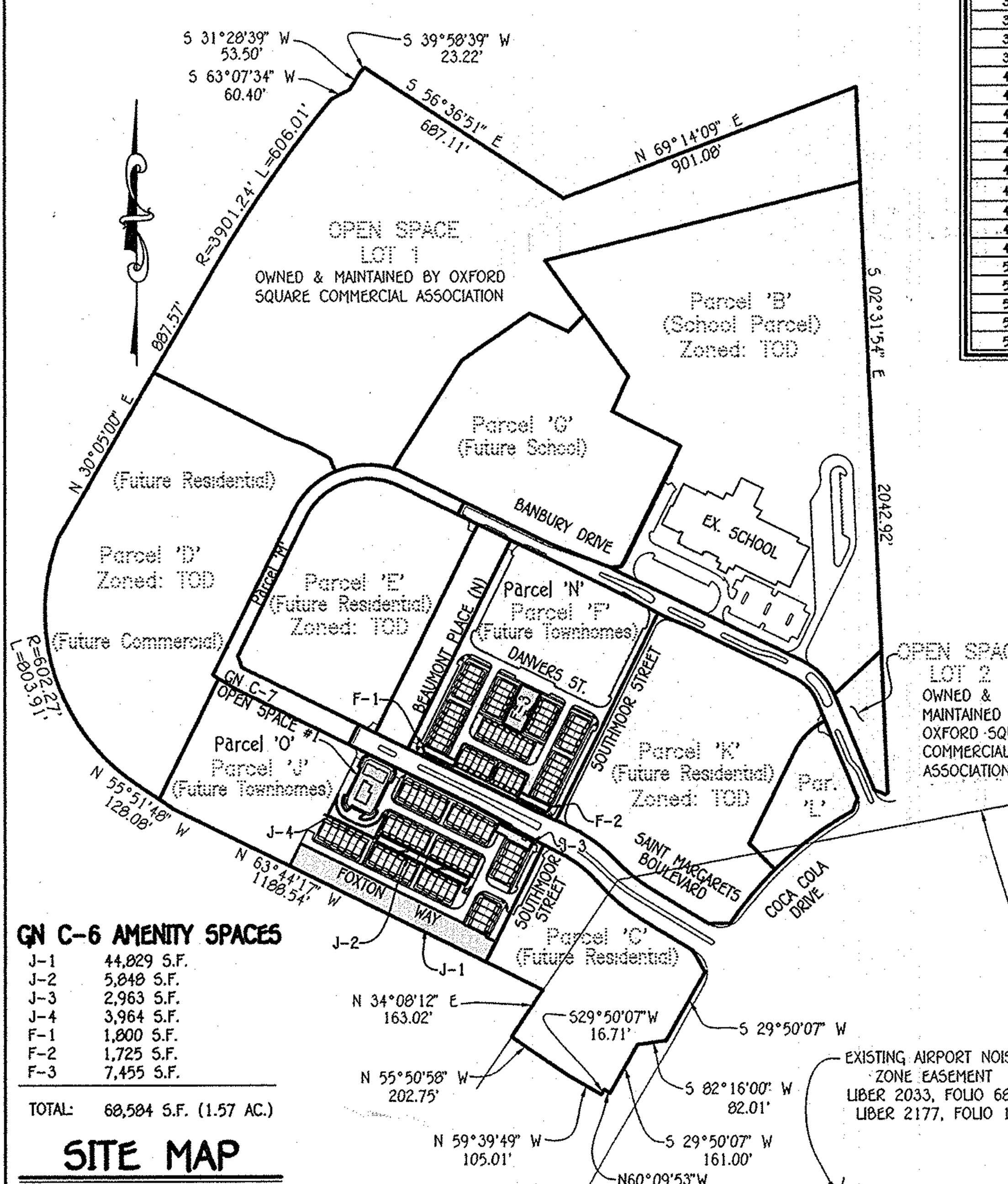

GN C-6 AMENITY SPACES

J-1	44,829 S.F.
J-2	5,848 S.F.
J-3	2,963 S.F.
J-4	3,964 S.F.
F-1	1,800 S.F.
F-2	1,725 S.F.
F-3	7,455 S.F.
TOTAL:	68,584 S.F. (1.57 AC.)

SITE MAP

SCALE: 1" = 400'

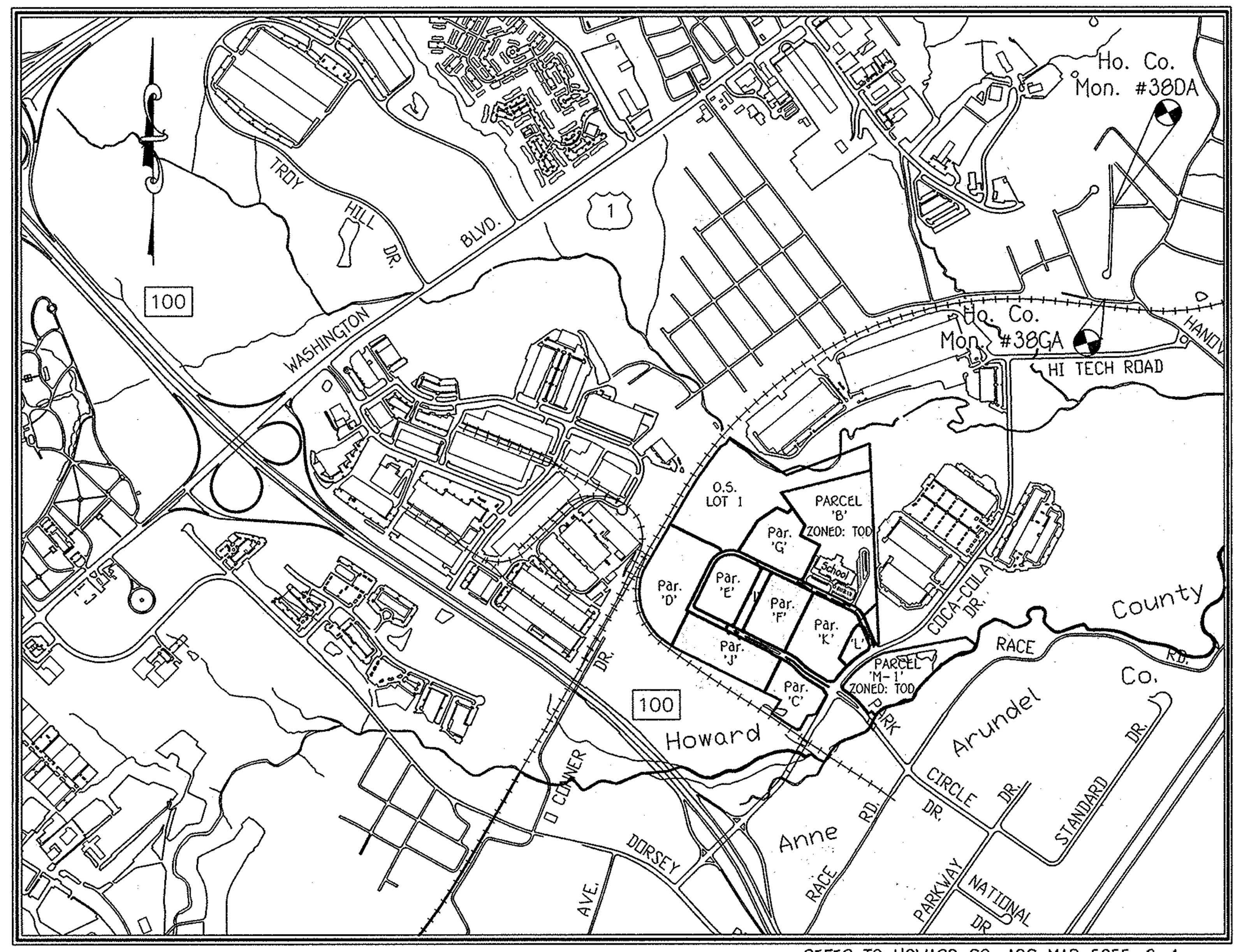

REFER TO HOWARD CO. ADC MAP 5055, B-1

VICINITY MAP

SCALE: 1" = 1200'

FIRST ELECTION DISTRICT
HOWARD COUNTY, MARYLAND

LEGEND

SYMBOL	DESCRIPTION
---102----	EXISTING CONTOUR 2' INTERVAL
—100— —	EXISTING CONTOUR 10' INTERVAL
—102—	PROPOSED CONTOUR 2' INTERVAL
—100—	PROPOSED CONTOUR 10' INTERVAL
-SF—SF-	SILT FENCE
	DRAINAGE LIMITS
L.O.D.	LIMIT OF DISTURBANCE
	EXISTING TREELINE
	WETLANDS BUFFER
	WETLANDS LIMITS
— FP —	FLOODPLAIN LIMITS
	PROPOSED CROSSWALK
ESD #21	STORMWATER MANAGEMENT DEVICE
	STORM DRAIN
	STREET LIGHT (proposed)
	STREET LIGHT (existing)
	STREET TREE (proposed)
	STREET TREE (existing)
	PROPOSED GARDEN BENCH
	PROPOSED UNIT PAVING SECTION
	PROPOSED POOL FENCE
	PROPOSED BRICK PEIR & SITE WALL
	PROPOSED MAILBOX BANK
B-12A	BORING LOCATION
---●	PROPOSED WHC
	PROPOSED SHC

GENERAL NOTES:

1. ALL CONSTRUCTION SHALL BE IN ACCORDANCE WITH THE LATEST STANDARDS AND SPECIFICATIONS OF HOWARD COUNTY PLUS MSHA STANDARDS AND SPECIFICATIONS IF APPLICABLE.

2. THE CONTRACTOR SHALL NOTIFY THE DEPARTMENT OF PUBLIC WORKS / BUREAU OF ENGINEERING / CONSTRUCTION INSPECTION DIVISION AT 410-313-1880 AT LEAST (5) WORKING DAYS PRIOR TO THE START OF WORK.

3. THE CONTRACTOR SHALL NOTIFY "MISS UTILITY" AT 1-800-257-7777 AT LEAST 48 HOURS PRIOR TO ANY EXCAVATION WORK BEING DONE.

4. THIS SUBDIVISION PLAN IS SUBJECT TO THE AMENDED FIFTH EDITION OF THE SUBDIVISION AND LAND DEVELOPMENT REGULATIONS AND THE 2004 ZONING REGULATIONS PER COUNCIL BILL NO. 45-2003 AND THE ZONING REGULATIONS AS AMENDED BY COUNCIL BILL NO. 75-2003 NAD THE COMP LITE ZONING REGULATION AMENDMENTS EFFECTIVE 7/28/06. DEVELOPMENT OR CONSTRUCTION ON THESE LOTS OR PARCELS MUST COMPLY WITH SETBACKS AND BUFFER REGULATIONS IN EFFECT AT THE TIME OF SUBMISSION OF A BUILDING OR GRADING PERMIT APPLICATION.

5. COORDINATES BASED ON NAD'83 MARYLAND COORDINATE SYSTEM AS PROJECTED BY HOWARD COUNTY GEODETIC CONTROL STATIONS NO. 38DA AND NO. 38GA
Station No. 38DA N 556,796.3221 E 1,390,221.4576 Elev. = 126.08
Station No. 38GA N 555,897.3373 E 1,390,132.0933 Elev. = 80.78

6. SUBJECT PROPERTY ZONED TOD PER ZB-1086M DATED 9/13/10, ZRA-140 DATED 8/1/12 AND ZB-1102 M.

7. BACKGROUND INFORMATION:

a. SUBDIVISION NAME: OXFORD SQUARE
b. TAX MAP NO.: 38 & 44
c. PARCELS NOS.: 761
d. ZONING: TOD
e. ELECTION DISTRICT: FIRST
f. GROSS AREA OF THIS SUBMISSION = 16.623 ACRES (PARCELS 'F' AND 'J')
g. NUMBER OF PARCELS: 2
h. NUMBER OF OPEN SPACE LOTS: 12 (EACH OPEN SPACE LOT SHALL BE OWNED AND MAINTAINED BY THE COMMERCIAL ASSOCIATION)
i. AREA OF PARCELS: 48.160 ACRES
j. AREA OF NON-CREDITED OPEN SPACE LOTS = 3.402 ACRES; CREDITED OPEN SPACE = 2.54 ACRES; TOTAL OPEN SPACE = 5.492 ACRES.
k. AREA OF PUBLIC ROADWAY TO BE DEDICATED: 0.00 ACRES
l. PREVIOUS FILE NUMBERS: S-87-066, P-87-070, F-88-055, F-89-085, SDP-89-275, F-90-125, F-91-069, SDP-90-041, F-93-023, SDP-93-055, ZB-1086M, WP-11-130, F-11-057, WP-11-147, S-11-001, ECP-11-046, F-12-026, F-13-95, F-13-108, SDP-12-075, ZB-1102 M, AA 13-014 & S-14-001.
m. AREA OF FLOODPLAIN = 0.00
n. AREA OF 25% OR GREATER SLOPES = 0.00
o. NET AREA OF SUBMISSION = 16.623 AC.±
p. "MODERATELY INCOME HOUSING UNITS" ARE REQUIRED WITH THIS SUBDIVISION.
q. TOTAL NUMBER OF "MODERATELY INCOME HOUSING UNITS" PROVIDED UNDER THIS PLAN (SDP 13-065) = 13 UNITS.
r. "THE MODERATE INCOME HOUSING UNIT (MIHU) DECLARATION OF COVENANTS AND RESTRICTIONS WAS RECORDED IN THE HOWARD COUNTY LAND RECORDS IN LIBER 15690 FOLIO 374 & 381 THE MIHU AGREEMENT WAS SIGNED BY THE DEPARTMENT OF HOUSING AND COMMUNITY DEVELOPMENT ON 4-7-14.

8. AMENITY REQUIREMENTS: T.O.D. DEVELOPMENT SHALL INCLUDE AN AMENITY AREA PER SECTION 127.4.F.I. OF THE ZONING REGULATIONS AND THE ROUTE 1 MANUAL.
a. AMENITY AREA REQUIRED: 10.2 ACRES FOR THE ENTIRE PROJECT (101.689 x 10%)
b. TOTAL AMENITY AREA PROVIDED WITH THIS SUBMISSION: = 1.57 AC.±

9. ALL FILL AREAS WITHIN ROADWAYS AND UNDER STRUCTURES SHALL BE COMPACTED TO A MINIMUM OF 95% COMPACTION OF AASHTO T-180.

10. NOISE STUDY WAS PREPARED BY MARS GROUP DATED NOVEMBER, 2009. THE 65DBA NOISE CONTOUR LINE DRAWN ON THIS PLAN IS ADVISORY AS REQUIRED BY THE HOWARD COUNTY DESIGN MANUAL CHAPTER 5, REVISED FEBRUARY, 1992, AND CANNOT BE CONSIDERED TO EXACTLY LOCATE THE 65DBA NOISE EXPOSURE. THE 65DBA NOISE LINE WAS ESTABLISHED BY HOWARD COUNTY TO ALERT DEVELOPERS, BUILDERS AND FUTURE RESIDENTS THAT AREAS BEYOND THIS THRESHOLD MAY EXCEED GENERALLY ACCEPTED NOISE LEVELS ESTABLISHED BY THE U.S. DEPARTMENT OF HOUSING AND URBAN DEVELOPMENT.

11. EXISTING WATER IS PUBLIC (CONTRACT NO. 14-4726-D) EXISTING SEWER IS PUBLIC (CONTRACT NO. 14-4726-D)

12. SOILS INFORMATION TAKEN ECS SOIL SURVEY DATED NOVEMBER 2, 2009. THE PROPERTY LIES WITHIN THE DEEP RUN TRIBUTARY TO THE PATAPSCO RIVER WATERSHED (2130906). MOST OF THE PARCEL 'Q' CONSISTS OF OVERGROWN FIELD HABITAT THAT DEVELOPED ON A PORTION OF THE SITE THAT WAS MASS GRADED IN THE LATE 1980'S. IT IS DUE TO THIS PREVIOUSLY MASS GRADED CONDITION THAT THE NORMAL HOWARD COUNTY SOIL SURVEY MAPS DATED JULY 1968 DO NOT APPLY. AS A RESULT OF THIS SITE CONDITION,THE OWNER/DEVELOPER HAVE CONTRACTED ECS-MID ATLANTIC, LLC OF HANOVER, MARYLAND. THE SOIL REPORT IS DATED NOVEMBER 2009 WITH AN ADDENDUM DATED FEBRUARY 2010 THAT SUMMARIZED THE SOIL GROUPS REQUIRED FOR THIS SWM REPORT.

13. BOUNDARY OUTLINE BASED ON FIELD RUN SURVEY PERFORMED BY FISHER COLLINS AND CARTER, INC. DATED OCTOBER, 2009.

14. TOPOGRAPHIC CONTOURS BASED ON AERIAL SURVEY PERFORMED BY HARFORD AERIAL SURVEYS, INC. DATED JANUARY, 2008 AND SUPPLEMENTED WITH FIELD RUN TOPOGRAPHY PREPARED BY FISHER, COLLINS AND CARTER, INC. DATED MAY, 2010.

15. THERE IS ONE AREA OF STEEP SLOPES LOCATED ON THIS OVERALL OXFORD SQUARE PROPERTY AS DEFINED BY THE HOWARD COUNTY SUBDIVISION AND LAND DEVELOPMENT REGULATIONS, SECTION 16.116.b., (0.298 Ac.). NO STEEP SLOPES ARE LOCATED WITHIN THE LIMITS OF THIS PLAN.

16. STORMWATER MANAGEMENT WILL BE PROVIDED IN ACCORDANCE WITH THE 2007 MDE, CHAPTER 5 REGULATIONS AND THE LATEST HOWARD COUNTY DESIGN MANUAL, VOL. I, CHAPTER 5 ADOPTED ON OR AROUND MAY 4, 2010. RECHARGE VOLUME WILL BE PROVIDED THROUGH THE USE OF A STONE RESERVOIRS. WATER QUALITY AND CHANNEL PROTECTION VOLUME WILL BE PROVIDED BY MICRO BIO-RETENTION FACILITIES & A SURFACE SAND FILTER. OVERBANK FLOOD PROTECTION VOLUME AND EXTREME FLOOD VOLUMES ARE NOT REQUIRED FOR THIS SITE. ALL STONE RESERVOIR AND MICRO-RETENTION STORMWATER MANAGEMENT FACILITIES WILL BE PRIVATELY OWNED AND MAINTAINED BY THE H.O.A. OR COMMERCIAL ASSOCIATION. THE STREET TREES, PERFORATED UNDERDRAINS, FEEDERS, PLANTINGS AND SWALES WILL BE PRIVATELY OWNED AND MAINTAINED BY OXFORD SQUARE COMMERCIAL ASSOCIATION. HOWARD COUNTY WILL ONLY MAINTAIN THE INLET STRUCTURE WITHIN THE MICRO BIO-RETENTION FACILITIES ADJACENT TO THE RIGHT-OF-WAY.

17. SEVERAL SPECIMEN TREES ARE KNOWN TO BE LOCATED WITHIN THE EXISTING FOREST; HOWEVER THEY WERE NOT SURVEYED BECAUSE THERE WILL BE NO PROPOSED DISTURBANCES WITHIN THE EXISTING FOREST.

18. FLOODPLAIN LIMITS SHOWN FOR THE OVERALL OXFORD SQUARE PROJECT WAS PREPARED BY WHITMAN REQUARDT AND ASSOCIATES AND IS DELINEATED ON PLAT 9924 (F-91-069). FOR THE LIMITS OF THIS SUBMISSION, NO FLOODPLAIN LIMITS ARE DELINEATED.

19. THE FOREST CONSERVATION ACT REQUIREMENTS FOR THIS PROJECT HAVE BEEN MET WITH PHASE ONE OF THIS PROJECT (F-12-026).

20. THE FOREST STAND DELINEATION AND WETLAND DELINEATION FOR THIS PROJECT WAS PREPARED BY ECO-SCIENCE PROFESSIONALS, INC. DATED MARCH 17, 2011 AND APPROVED UNDER S-11-001.

21. THIS PROPERTY IS LOCATED WITHIN THE METROPOLITAN DISTRICT.

22. NO CEMETERIES OR HISTORIC STRUCTURES EXIST WITHIN THIS SUBDIVISION.

23. STREET LIGHT PLACEMENT AND THE TYPE OF FIXTURES AND POLES SHALL BE IN ACCORDANCE WITH THE HOWARD COUNTY DESIGN MANUAL, VOLUME III (2006), SECTION 5.5.A. A MINIMUM SPACING OF 20' SHALL BE MAINTAINED BETWEEN ANY STREET LIGHT AND ANY STREET TREE.

24. TRAFFIC CONTROL DEVICES:
a) THE R1-1 (STOP) SIGNS AND THE STREET NAME SIGN (SNS) ASSEMBLIES FOR THIS DEVELOPMENT MUST BE INSTALLED BEFORE THE BASE PAVING IS COMPLETED.
b) THE TRAFFIC CONTROL DEVICE LOCATIONS (SIGNS & PAVING MARKINGS) SHOWN ON THE PLANS ARE APPROXIMATE AND MUST BE FIELD APPROVED BY THE HOWARD COUNTY TRAFFIC DIVISION (410-313-5752) PRIOR TO THE INSTALLATION OF ANY OF THESE TRAFFIC CONTROL DEVICES.
c) ALL TRAFFIC CONTROL DEVICES AND THEIR LOCATIONS SHALL BE IN ACCORDANCE WITH THE LATEST EDITION OF THE "MARYLAND MANUAL ON UNIFORM TRAFFIC CONTROL DEVICES" (MdMUTCD).
d) ALL SIGN POSTS USED FOR TRAFFIC CONTROL SIGNS INSTALLED IN THE COUNTY RIGHT-OF-WAY SHALL BE MOUNTED ON A 2" GALVANIZED STEEL, PERFORATED, SQUARE TUBE POST (14 GAUGE) INSERTED INTO A 2-1/2" GALVANIZED STEEL, PERFORATED, SQUARE TUBE SLEEVE (12 GAUGE) - 3' LONG. A GALVANIZED STEEL POLE CAP SHALL BE MOUNTED ON TOP OF EACH POST.

25. THE TRAFFIC STUDY FOR THIS PROJECT WAS PREPARED BY THE TRAFFIC GROUP, DATED MARCH 2011. PER THIS STUDY, ONCE THE TOTAL WEEKDAY EVENING PEAK HOUR TRIP GENERATION EXCEEDS 1100 TRIPS, THE ULTIMATE ROAD IMPROVEMENTS ARE NEEDED AT THE INTERSECTION OF COLA COLA DRIVE & PARK CIRCLE DRIVE. AN ADEQUATE ROAD RE-EVALUATION WILL BE PREFORMED FOR PARK CIRCLE DRIVE & COCA COLA DRIVE IN 2017 FOR EVENING PEAK HOUR.

26. NO CLEARING, GRADING OR CONSTRUCTION IS PERMITTED WITHIN THE WETLANDS, STREAMS, THEIR REQUIRED BUFFERS OR THEIR EXTENDED GREEN NEIGHBORHOOD BUFFERS, UNLESS THE ACTIVITIES ARE CONSIDERED NECESSARY OR WAIVERS ARE APPROVED BY THE DEPARTMENT OF PLANNING AND ZONING. ACTIVITIES PROPOSED IN WETLANDS, STREAMS, THEIR BUFFERS, AND THEIR EXTENDED GREEN NEIGHBORHOOD BUFFERS AS PART OF THE APPROVED STREAM AND WETLAND RESTORATION AND HABITAT MANAGEMENT PLANS ARE CONSIDERED NECESSARY BY THE DEPARTMENT OF PLANNING AND ZONING.

27. PERIMETER LANDSCAPING SHALL BE ADDRESSED IN ACCORDANCE WITH SECTION 16.124 OF THE HOWARD COUNTY CODE AND THE LANDSCAPE MANUAL. THE FINANCIAL SURETY FOR THE REQUIRED LANDSCAPING **(75 Shade, 67 Ornamental & 5 Evergreen)** IN THE AMOUNT OF $33,300.00 WILL BE POSTED WITH THE DEVELOPER'S AGREEMENT. IN ADDITION, FINANCIAL SURETY FOR THE ADDITIONAL **25 SHADE TREES** SHALL BE POSTED AS PART OF THE DEVELOPER'S AGREEMENT IN THE AMOUNT OF $7,500.00 TO MEET THE GN CREDIT E-1. THE DEVELOPER IS PROPOSING 100 SHADE, 67 ORNAMENTAL & 5 EVERGREEN TREES.
THE FINANCIAL SURETY FOR THE REQUIRED 63 STREET TREES IN THE AMOUNT OF $18,900.00 WILL ALSO BE POSTED WITH THE DEVELOPER'S AGREEMENT.

28. ON JANUARY 13, 2012, A LETTER WAS RECEIVED FROM HOWARD COUNTY PLANNING AND ZONING REGARDING A DESIGN MANUAL WAIVER FOR THE FOLLOWING SECTIONS OF DMV III; 2.2.G (BUS STOP TURNOUT LANE), SECTIONS 2.3.A.1.a (MINIMUM RADIUS BASED ON DESIGN SPEED), 2.3.A.3.c (HORIZONTAL DESIGN/DIVIDED HIGHWAYS), 2.4.B.1&2 (RIGHT-OF-WAY WIDTH & PAVEMENT WIDTH AND CROSS SLOPE), 2.5.B.1&4 (INTERSECTION SPACING & MINIMUM CURVATURE), 2.6.D. (SPACING AND CORNER CLEARANCE), 2.9.B. (OVERFLOW GUEST PARKING), 2.9.C. (24' DIVE LANE WIDTH), AND 2.10.E. (REFUSE STORAGE AREA LOCATION). THE FOLLOWING ARE THE RESPONSES AND CONDITIONS OF APPROVAL FROM PUBLIC WORKS, LAND DEVELOPMENT AND DEVELOPMENT ENGINEERING:

(1) SECTION 2.2.G. BUS STOPS - APPROVED FOR STA. 10+00 (SAINT MARGARETS BLVD.) AND STA. 11+75 (BANBURY DRIVE)
(2) SECTION 2.3.A.1.a., DESIGN SPEED/MINIMUM RADII - REQUEST TO REDUCE THE DESIGN SPEED FROM 40 MPH TO 30 MPH (POSTED SPEED = 25 MPH) WAS APPROVED. THE REQUEST TO REDUCE MINIMUM CENTERLINE RADII WAS APPROVED FOR SAINT MARGARETS BLVD., STA. 3+20, 4+50 AND 19+50. FOR BANBURY DRIVE, STA. 4+00, THE SIGHT DISTANCE EASEMENT WAS ADDED, GIVING APPROVAL FOR THIS LOCATION. FOR BANBURY DRIVE, STA. 19+25, THE DECISION WAS APPROVED SUBJECT TO THE REQUIRED SIGHT DISTANCE EASEMENT BEING ADDED AS PART OF PHASE 2.
(3) SECTION 2.3.A.3.c., DIVIDED ROADWAYS - REQUEST MODIFICATIONS TO ALLOW DIVIDED ROADWAY ON A MAJOR COLLECTOR AND REDUCTION OF MEDIAN WIDTH FROM 16' TO 14'. THESE REQUESTS ARE ACCEPTABLE WITH THE SWM DEVICES WITHIN THE ISLANDS TO BE MAINTAINED BY HOA OR COMMERCIAL ASSOC. ALONG SAINT MARGARETS BLVD. THE MEDIAN FOR BANBURY DRIVE WAS APPROVED SUBJECT TO ADJUSTING MEDIAN GRADES TO PROVIDE A SUMP CONDITION. THIS WAS PROVIDED ON THE PLAN.
(4) SECTION 2.4.B.1., RIGHT-OF-WAY WIDTHS-REQUEST A VARIABLE RIGHT-OF-WAY WIDTH TO EXTEND ONE FOOT BEHIND FACE OF CURB. THIS WAS APPROVED CONTINGENT ON PROVIDING AN EASEMENT ALONG SAINT MARGARETS BLVD. AND AN EASEMENT ALONG BANBURY DRIVE. THE EASEMENTS WERE PROVIDED.
(5) SECTION 2.4.B.2., PAVEMENT WIDTHS AND CROSS SLOPE-REQUEST THAT SAINT MARGARETS BLVD. HAVE LANE WIDTHS OF 16' AND ALL OTHER ROADS HAVE A TOTAL WITH OF 18' FOR ONE WAY AND 22' FOR TWO WAY TRAFFIC. APPROVED FOR ALL LOCATIONS EXCEPT THREE ALONG BANBURY DRIVE AT STA. 15+75, THE REFUGE ISLAND WAS PROVIDED. THE OTHER TWO LOCATIONS NEAR THE TRAFFIC CIRCLE AND COMMUNITY CENTER ARE DEFERRED UNTIL A FUTURE SITE PLAN PHASE, WHEN FINAL PLANS AND TURNING MOVEMENTS WILL BE PROVIDED.
(6) SECTION 2.5, TABLE 2.07, INTERSECTION SPACING-REQUEST A MINIMUM INTERSECTION SPACING OF 100 FEET. DPW RECOMMENDS APPROVAL OF THE ENTRANCES ALONG BANBURY DRIVE FOR FUTURE BUILDINGS 8, 29 & 30 (S-11-001). AND APPROVED.
(7) SECTION 2.5, TABLE 2.08, CURB FILLET RADIUS-REQUEST A REDUCTION IN THE MINIMUM CURB FILLET RADII WAS APPROVED FOR SAINT MARGARETS LANE AND BANBURY DRIVE.
(8) SECTION 2.6.D., DRIVEWAY SPACING AND CORNER CLEARANCE-REQUEST THAT THE CORNER CLEARANCE BE REDUCED FROM 75' TO 25' AND SPACING BETWEEN INTERSECTIONS BE REDUCED FROM 250' TO 100'. THE SPACING BETWEEN INTERSECTIONS REDUCTION TO 100' IS ACCEPTABLE. THE CORNER CLEARANCE REDUCTION TO 25' IS ACCEPTABLE.
(9) SECTION 2.9, TABLE 2.11, OVERFLOW/GUEST PARKING-REQUEST THAT OFF-SITE PARKING BE REDUCED FROM 2.3 SPACES PER DWELLING UNIT TO 2.0 SPACES PER DWELLING UNIT. THIS REQUEST WAS DEFERRED UNTIL FUTURE SITE PLAN PHASE ON A PARCEL BASIS.
(10) SECTION 2.10.E., SOLID WASTE STORAGE LOCATION-REQUEST THAT THE DISTANCE FROM A CENTRALIZED REFUSE STORAGE AREA TO A MULTI-FAMILY AREA BE INCREASED FROM 200' TO 300'. APPROVAL WAS GRANTED.
(11) SECTION 2.9.C., OFF STREET PARKING LOTS-REQUEST THAT THE MINIMUM AISLE WIDTHS BETWEEN ROWS OF PARKING BE REDUCED FROM 24' TO 22'. DED HAS DENIED THIS REQUEST.
(12) SECTION 5.5.A.2, STREET LIGHT LOCATION HAS BEEN APPROVED BASED ON MEETINGS WITH B.G.&E. AND HOWARD COUNTY DPW - TRAFFIC ENGINEERING.

29. IN ACCORDANCE WITH THE DESIGN MANUAL WAIVERS OUTLINED IN GENERAL NOTE No. 28 FOR REDUCED PUBLIC ROAD R/W, ALL PUBLIC ROADS SHALL PROVIDE A "PUBLIC SIGNAGE, STREET LIGHT AND UTILITY EASEMENT".

30. STREAM AND WETLAND RESTORATION AND THE HABITAT MANAGEMENT PLAN SHALL BE IMPLEMENTED WITHIN 3 YEARS OF FINAL APPROVAL OF THE SITE DEVELOPMENT PLAN ASSOCIATED WITH CONSTRUCTION OF THE 190th RESIDENTIAL UNIT. A COPY OF THE JOINT FEDERAL/STATE APPLICATION FOR AUTHORIZATION OF REGULATED ACTIVITIES ASSOCIATED WITH THE STREAM AND WETLAND RESTORATION AND HABITAT MANAGEMENT PLAN SHALL BE SUBMITTED TO DPZ AS PART OF THE SITE DEVELOPMENT PLAN APPLICATION ASSOCIATED WITH CONSTRUCTION OF THE 190th RESIDENTIAL UNIT.

31. THIS PLAN IS SUBJECT TO WAIVER PETITION WP-11-147 TO WAIVE SUBSECTIONS 16.144(g) AND 16.144(u) OF THE HOWARD COUNTY CODE. THIS ACTION RELIEVES THE REQUIREMENT TO SUBMIT A PRELIMINARY SUBDIVISION PLAN OR A PRELIMINARY EQUIVALENT SKETCH PLAN IN ORDER TO RECEIVE A GREEN NEIGHBORHOOD ALLOCATION. WAIVER PETITION WP-11-147 WAS APPROVED ON APRIL 27, 2011 BY THE DEPARTMENT OF PLANNING AND ZONING.

32. THE PROPOSED BUS STOP PAD LOCATED AT STA. 7+00, SAINT MARGARETS BLVD., IS PART OF THE GREEN NEIGHBORHOOD CREDIT B-3b. AS PART OF THIS CREDIT, A SHELTER WILL BE PROVIDED AS PART OF THIS SITE DEVELOPMENT PLAN.

33. PLAN IS SUBJECT TO WP-12-109 WHICH THE PLANNING DIRECTOR APPROVED ON JUNE 5, 2012 TO WAIVE SUBSECTIONS 16.120(C)(1), 16.121(E)(1) AND 16.134(A) WHICH REQUIRES ALL COMMERCIAL INDUSTRIAL AND APARTMENTS TO HAVE A MINIMUM OF 60' OF FRONTAGE ON A PUBLIC ROAD, OPEN SPACE LOTS WILL HAVE FRONTAGE ON A PUBLIC ROAD AND THE DEVELOPER SHALL PROVIDE FOR THE CONSTRUCTION OF SIDEWALKS. WAIVER APPROVAL IS SUBJECT TO THE FOLLOWING CONDITIONS:

A. PETITIONER SHALL SUBMIT A FINAL PLAN PROVIDING NO LESS THAN 60 FEET OF FRONTAGE ON AN APPROVED PUBLIC ROAD TO COMMERCIAL AND APARTMENT PARCELS PRIOR TO OR CONCURRENT WITH THE SUBMISSION OF A SITE DEVELOPMENT PLAN FOR COMMERCIAL OF RESIDENTIAL DEVELOPMENT OF SAID PARCELS.

B. PETITIONER SHALL PROVIDE NO LESS THAN 40 FEET OF FRONTAGE ON AN APPROVED PUBLIC ROAD TO OPEN SPACE LOT 1 FOR ACCESS BY PEDESTRIANS AND MAINTENANCE VEHICLES UPON SIGNATURE APPROVAL OF THE ROAD CONSTRUCTION DRAWINGS WHICH INCLUDE THE TRAFFIC CIRCLE INTERSECTION OF BANBURY DRIVE AND THE PRIVATE ROAD (ROAD 'B') LOCATED ON PARCEL 'I' (FINAL PLAN F-12-026). A DEVELOPER AGREEMENT SHALL BE SUBMITTED AND FINANCIAL SURETY POSTED FOR CONSTRUCTION OF SAID PUBLIC ROAD NO LATER THAN 60 DAYS FOLLOWING SUBMISSION OF THE ASSOCIATED ROAD CONSTRUCTION DRAWING ORIGINALS. PUBLIC ROAD FRONTAGE TO OPEN SPACE LOT 1 SHALL BE INDICATED ON A SUBDIVISION PLAT TO BE SUBMITTED FOR SIGNATURE AND RECORDATION NO LATER THAN 120 DAYS FOLLOWING SUBMISSION OF THE ASSOCIATED ROAD CONSTRUCTION DRAWING ORIGINALS.

C. PETITIONER SHALL, UPON APPROVAL OF THE FIRST SITE DEVELOPMENT PLAN FOR A RESIDENTIAL, OFFICE, COMMERCIAL, OR RECREATIONAL USE ABUTTING SAINT MARGARETS LANE, SUBMIT A REDLINE REVISION OF FINAL PLAN F-12-026 TO INCLUDE SIDEWALK IMPROVEMENTS ON SAINT MARGARETS LANE AS REQUIRED BY SECTION 16.134 AND THE DESIGN MANUAL.

D. PETITIONER SHALL, UPON APPROVAL OF THE FIRST SITE DEVELOPMENT PLAN FOR A RESIDENTIAL, OFFICE, COMMERCIAL, OR RECREATIONAL USE ABUTTING BANBURY DRIVE, SUBMIT A REDLINE REVISION OF FINAL PLAN F-12-026 TO INCLUDE SIDEWALK IMPROVEMENTS ON BANBURY DRIVE AS REQUIRED BY SECTION 16.134 AND THE DESIGN MANUAL.

E. PETITIONER SHALL, UPON APPROVAL OF THE FIRST SITE DEVELOPMENT PLAN FOR A RESIDENTIAL, OFFICE, COMMERCIAL, RECREATIONAL, OR INSTITUTIONAL USE WITHIN THE LIMITS OF SKETCH PLAN S-11-011, SUBMIT A REDLINE REVISION OF THE APPROPRIATE FINAL ROAD CONSTRUCTION DRAWING(S) TO THE DEPARTMENT OF PLANNING AND ZONING TO INCLUDE SIDEWALK IMPROVEMENTS ON BOTH SIDES OF COCA COLA DRIVE AS REQUIRED BY SECTION 16.134 AND THE DESIGN MANUAL, INCLUDING CONNECTION OF THE EXISTING SIDEWALK TO THE INTERSECTION OF PARK CIRCLE DRIVE AND COCA COLA DRIVE.

34. THE MARYLAND AVIATION ADMINISTRATION (MAA) APPROVED THIS PLAN ON 1/15/14 FOR SEDIMENT AND EROSION CONTROL, STORMWATER MANAGEMENT AND LANDSCAPING. PRIOR TO THE ISSUANCE OF ANY BUILDING PERMIT, AN APPROVED AIRPORT ZONING PERMIT MUST BE OBTAINED. THE MAA ALSO DETERMINED THAT ALTHOUGH OUTSIDE THE AIRPORT NOISE ZONE, OCCUPANTS OF THIS SUBDIVISION WILL EXPERIENCE NOISE FROM AIRCRAFT OVERFLIGHTS AND OTHER OPERATIONS DUE TO THE PROXIMITY OF THIS SITE TO THE AIRPORT. THE MAA HAS PREVIOUSLY APPROVED PLAN S-11-001.

35. A PRESENTATION TO THE MATERIALS SELECTION COMMITTEE WAS MADE ON JANUARY 10, 2012 FOR THE USE OF NATURAL BRICK AND COBBLESTONE AT SELECTED LOCATIONS ON THE PLAN. THE COMMITTEE HAS APPROVED THE USE OF THESE MATERIALS FOR THE TWO ENTRANCE LOCATIONS SHOWN ON THIS PLAN AS WELL AS THE FUTURE TRAFFIC CIRCLE AND ITHER MAJOR INTERSECTIONS WITH THE FUTURE LAWN AREA. ALL OTHER CROSSWALK LOCATIONS SHALL USE THERMOPLASTIC MATERIALS. A LICENSE AGREEMENT HAS BEEN PREPARED BY REAL ESTATE SERVICES BETWEEN THE DEVELOPER AND HOWARD COUNTY FOR THE REQUIRED MAINTENANCE RESPONSIBILITIES.

36. HEALTH DEPARTMENT APPROVAL OF THIS SITE DEVELOPMENT PLAN (SDP) DOES NOT ENSURE APPROVAL OF BUILDING PERMIT APPLICATIONS ASSOCIATED WITH THIS PLAN. PERMIT PLANS FOR CERTAIN FACILITIES TO BE CONSTRUCTED WITHIN THE LIMITS DESCRIBED BY THIS SDP WILL REQUIRE REVIEW AND APPROVAL BY THE HEALTH DEPARTMENT. SUCH FACILITIES MAY INCLUDE, BUT ARE NOT LIMITED TO, THOSE WHICH HAVE SWIMMING POOLS, OR THAT SELL PREPARED OR PACKAGED FOODS, OR THAT MAY HAVE EQUIPMENT THAT EMITS RADIATION.

GENERAL NOTES CONTINUED:

37. THIS PLAN IS SUBJECT TO CASE No. AA 13-014 FOR AN ADMINISTRATIVE ADJUSTMENT TO REDUCE THE 30 FOOT SETBACK FROM SIDE TO FACE BETWEEN SINGLE-FAMILY ATTACHED BUILDINGS TO UP TO 26 FEET FOR APPROXIMATELY 11 PROPOSED SINGLE-FAMILY ATTACHED DWELLINGS. THE REQUEST WAS APPROVED ON NOVEMBER 15, 2013 BY THE DIRECTOR OF THE DEPARTMENT OF PLANNING AND ZONING SUBJECT TO THE FOLLOWING CONDITIONS:

a. THE PETITIONER SHALL COMPLY WITH ALL APPLICABLE FEDERAL, STATE AND COUNTY LAWS AND REGULATIONS.

b. THE GRANTED ADMINISTRATIVE ADJUSTMENT PLAN SUBMITTED BY THE PETITIONER AND NOT TO ANY OTHER STRUCTURE, ADDITION, BUILDING OR USE.

c. THIS DECISION AND ORDER SHALL BE MAINTAINED IN THE OWNERS' PROPERTY RECORDS AND SHALL BE TRANSFERRED TO ANY SUCCEEDING OWNER OF THE PROPERTY.

PARKING REQUIREMENTS FOR PARCELS 'F' & 'J'

LAND USE	MINIMUM PARKING REQUIRED	PARKING PROVIDED
SFA TOWNHOUSES	202 2 PARKING SPACES PER DWELLING UNIT (SFA) (101 UNITS x 2 SPACES = 202 SPACES)	404 GARAGE UNITS = 101 UNITS W/2 CAR GARAGE = 101
OVERFLOW PARKING = 0.3 PARKING SPACES PER UNIT	101 x 0.3 = 31	66 8 spaces (Community center/Pool Area) 26 spaces (Ex. along Saint Margarets Blvd.) 5 spaces Along Southside of Danvers St. 5 spaces Along Westside of Southmoor St. (South of St. Margarets Blvd.) 11 spaces Along Southmoor St. (South of Danvers St.) 11 spaces Along Beaumont Place (N) (South of Danvers St.)
SWIMMING POOL	15 (per S-14-001)	
COMMUNITY CENTER	22 (per S-14-001)	
TOTAL	270	470

NO.	REVISION	DATE

FISHER, COLLINS & CARTER, INC.
CIVIL ENGINEERING CONSULTANTS & LAND SURVEYORS
CENTENNIAL SQUARE OFFICE PARK - 10272 BALTIMORE NATIONAL PIKE
ELLICOTT CITY, MARYLAND 21042
(410) 461 - 2855

STATE OF MARYLAND — MICHAEL VITUCCI — No. 20744 — PROFESSIONAL ENGINEER
6-10-14

Approved For Public Water And Public Sewerage Systems, Howard County Health Department.

B.Wilson for Maura Rossman — County Health Officer — 7/14/2014 — Date

Owner/Builder
U.S. Home Corporation,
D/B/A Lennar
c/o Joseph Fortino, Vice President
10211 Wincopin Circle
Suite 300
Columbia, Maryland 21044
Ph# 410-423-0460

Developer
Preston • Scheffenacker Properties
2330 West Joppa Road, Suite 160
Lutherville, Maryland 21093-4614
Ph# 410-296-3800

APPROVED: HOWARD COUNTY DEPARTMENT OF PLANNING AND ZONING

Chief, Division of Land Development — 7/23/14 — Date

Chief, Development Engineering Division — 6.25.14 — Date

Director - Department of Planning and Zoning — 7/23/14 — Date

SUBDIVISION	SECTION/AREA	LOT Nos.
OXFORD SQUARE	----	3 THRU 103

PLAT NO.	BLOCK NO.	ZONE	TAX/ZONE	ELEC. DIST.	CENSUS TR.
22895-22898	---	TOD	38	1st.	601101

TITLE SHEET

OXFORD SQUARE
"A Howard County Green Neighborhood"
Lots 3 Thru 103, Open Space Lots 104 Thru 116 And Parcels 'N' And 'O'
(Being A Resubdivision Of Parcels 'F' And 'J', As Shown On Plats Entitled "Revision Plat, Oxford Square, "Green Neighborhood", Parcels 'C', 'E', 'F', 'G', 'I', 'J', 'K' And 'M" And Recorded Among The Land Records Of Howard County, Maryland As Plat Nos. **22856** Thru **22859**)
Zoned: TOD

Tax Map No.: 38 Grid No.: 20 Parcel No.: 761
First Election District Howard County, Maryland
Scale: As Shown
Date: June 6, 2014
Sheet 1 Of 38

SDP-13-068

I:\2009\09014\dwg\SDP (Lennar)\09014 Sheet 1 Title Sheet.dwg, title sheet, 6/6/2014 1:44:44 PM, 1:1

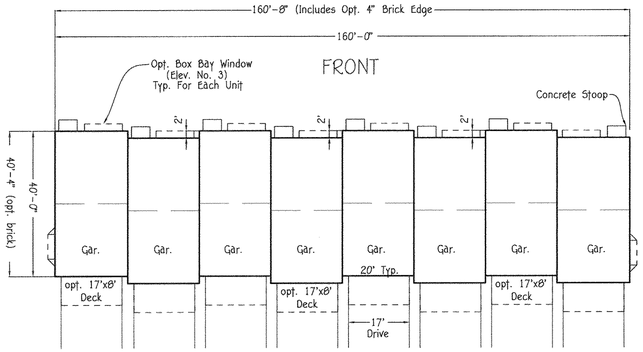

8 UNIT TOWNHOUSE
(THE CAMBRIDGE)

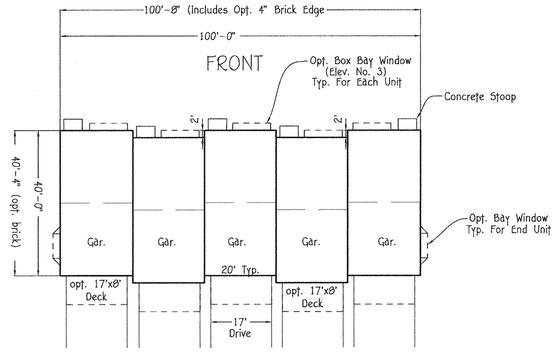

5 UNIT TOWNHOUSE
(THE CAMBRIDGE)

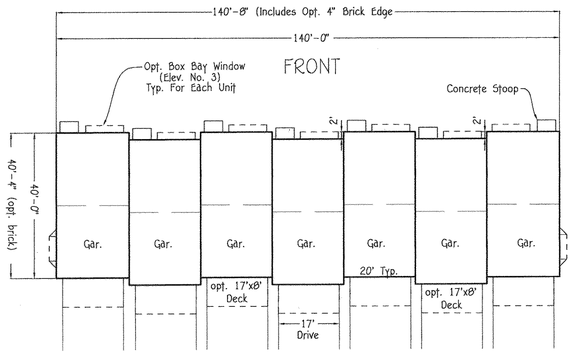

7 UNIT TOWNHOUSE
(THE CAMBRIDGE)

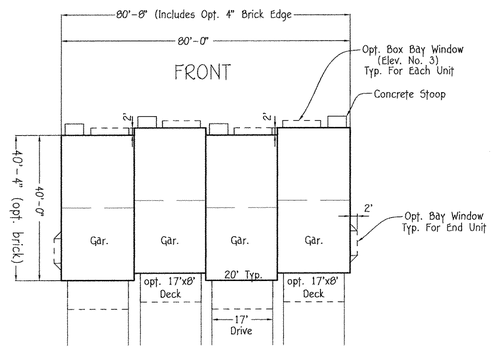

4 UNIT TOWNHOUSE
(THE CAMBRIDGE)

(Parcel 'F')
40' X 20' Units
SCALE: 1" = 20'

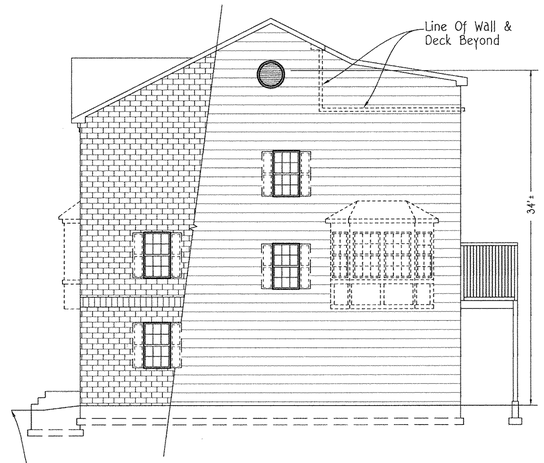

NOTE: FOR HOMES FRONTING ST. MARGARETS BLVD., SEE DETAILS ON SHEET 16 FOR MULTI-PURPOSE WALL SECTION.

(THE CAMBRIDGE)
SIDE ELEVATION
NO SCALE

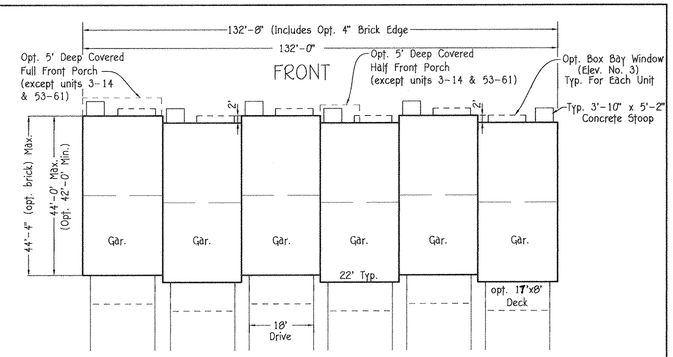

6 UNIT TOWNHOUSE
(ELLICOTT 1)

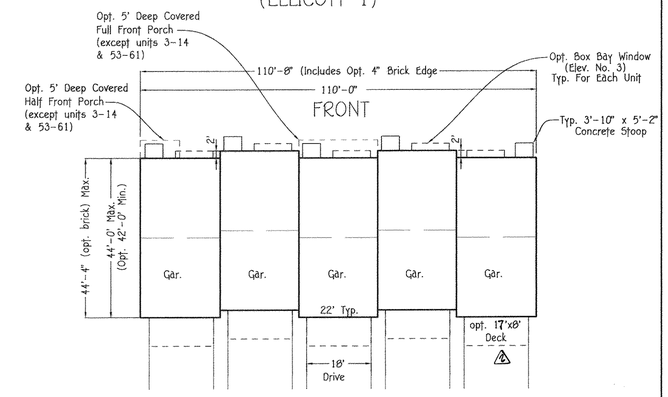

5 UNIT TOWNHOUSE
(ELLICOTT 1)

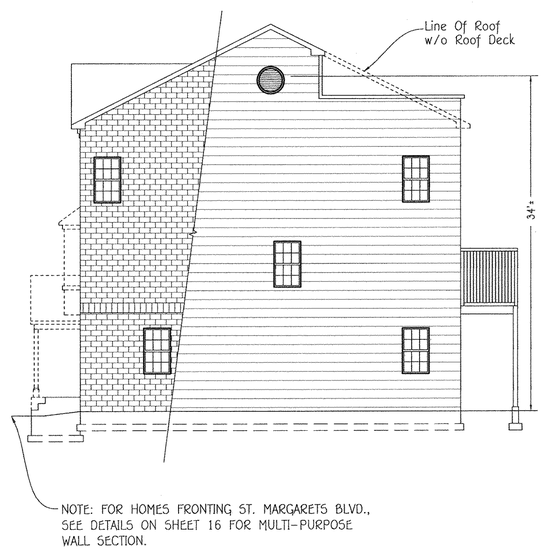

NOTE: FOR HOMES FRONTING ST. MARGARETS BLVD., SEE DETAILS ON SHEET 16 FOR MULTI-PURPOSE WALL SECTION.

(ELLICOTT 1)
SIDE ELEVATION
NO SCALE

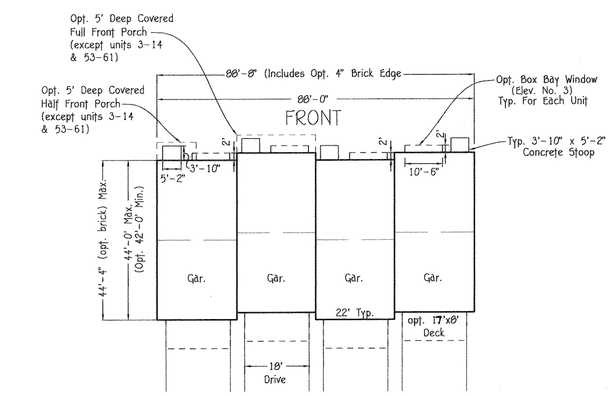

4 UNIT TOWNHOUSE
(ELLICOTT 1)

(Parcel 'J')
44' X 22' Units
SCALE: 1" = 20'

NOTE: SEE SHEET 38 FOR LARGE SCALE POOL AREA DETAIL AND COMMUNITY CENTER ELEVATION.

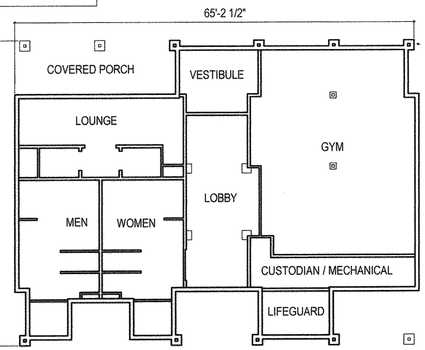

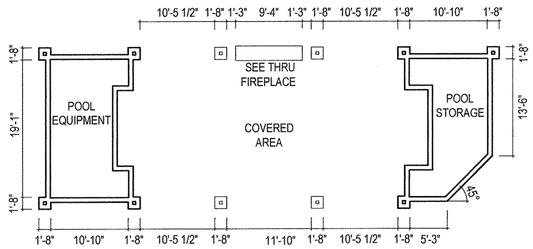

0' 20' 40' 80'
Scale: 1" = 20'

COMMUNITY CENTER & POOL BUILDINGS

FISHER, COLLINS & CARTER, INC.
CIVIL ENGINEERING CONSULTANTS & LAND SURVEYORS
CENTENNIAL SQUARE OFFICE PARK - 10272 BALTIMORE NATIONAL PIKE
ELLICOTT CITY, MARYLAND 21042
(410) 461 - 2855

NO.	REVISION	DATE
2	ADD DECK DETAIL & WAIVER APPROVAL NOTES	4/16/16
1	REVISED COMMUNITY CENTER AND POOL AREA	10/3/14

STATE OF MARYLAND
RICHARD J. CONAWAY
No. 20736
PROFESSIONAL ENGINEER
12/8/14

Owner/Builder
U.S. Home Corporation,
D/B/A Lennar
c/o Joseph Fortino, Vice President
10211 Wincopin Circle
Suite 300
Columbia, Maryland 21044
Ph# 410-423-0460

Developer
Preston - Scheffenacker Properties
2330 West Joppa Road, Suite 160
Lutherville, Maryland 21093-4614
Ph# 410-296-3800

APPROVED: HOWARD COUNTY DEPARTMENT OF PLANNING AND ZONING

Kent Sheubrooks — Chief, Division of Land Development — 2-3-15 Date
Chief, Development Engineering Division — 1-22-15 Date
Director - Department of Planning and Zoning — 2/3/15 Date

SUBDIVISION			SECTION/AREA		LOT Nos.
OXFORD SQUARE			----		3 THRU 103
PLAT NO.	BLOCK NO.	ZONE	TAX/ZONE	ELEC. DIST.	CENSUS TR.
22895-22898	---	TOD	38	1st.	601101

REVISED
HOUSE TYPES

OXFORD SQUARE
"A Howard County Green Neighborhood"

Lots 3 Thru 103, Open Space Lots 104 Thru 116 And Parcels 'N' And 'O'

(Being A Resubdivision Of Parcels 'F' And 'J', As Shown On Plats Entitled "Revision Plat, Oxford Square, "Green Neighborhood", Parcels 'C', 'E', 'F', 'G', 'I', 'J', 'K' And 'M' And Recorded Among The Land Records Of Howard County, Maryland As Plat Nos. 22896 Thru 22899)
Zoned: TOD

Tax Map No.: 38 Grid No.: 20 Parcel No.: 761
First Election District Howard County, Maryland
Scale: As Shown
Date: June 6, 2014
Sheet 2 Of 38

SDP-13-068

13020/50/50140/dwg/SDP (Lennar)/Pool Area Rev/Revisit sheet 2 mylar.dwg, 12/8/2014 11:41:03 AM, 1:1

NOTES: 1. SEE SHEET 37 FOR METES AND BOUNDS PLAN.
2. SEE SHEETS 10-17 FOR ESD DETAILED PLANS.

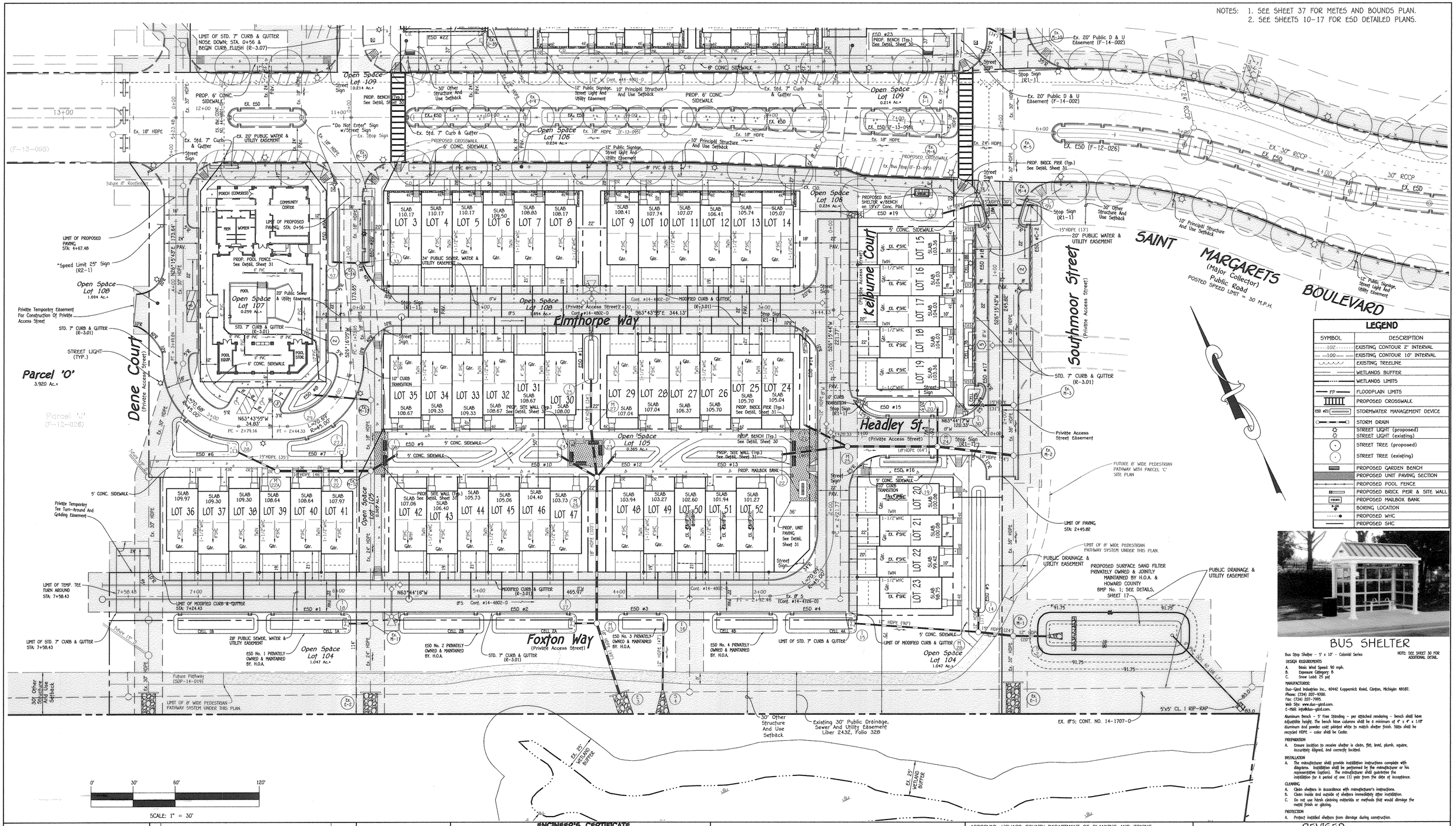

LEGEND

SYMBOL	DESCRIPTION
102	EXISTING CONTOUR 2' INTERVAL
100	EXISTING CONTOUR 10' INTERVAL
	EXISTING TREELINE
	WETLANDS BUFFER
	WETLANDS LIMITS
FP	FLOODPLAIN LIMITS
	PROPOSED CROSSWALK
ESD #21	STORMWATER MANAGEMENT DEVICE
	STORM DRAIN
	STREET LIGHT (proposed) STREET LIGHT (existing)
	STREET TREE (proposed)
	STREET TREE (existing)
	PROPOSED GARDEN BENCH
	PROPOSED UNIT PAVING SECTION
	PROPOSED POOL FENCE
	PROPOSED BRICK PEIR & SITE WALL
	PROPOSED MAILBOX BANK
	BORING LOCATION
	PROPOSED WHC
	PROPOSED SHC

BUS SHELTER

NOTE: SEE SHEET 30 FOR ADDITIONAL DETAIL.

Bus Stop Shelter – 5' x 10' – Colonial Series

DESIGN REQUIREMENTS
A. Basic Wind Speed: 90 mph.
B. Exposure Category: B
C. Snow Load: 25 psf

MANUFACTURER:
Duo-Gard Industries Inc., 40942 Koppernick Road, Canton, Michigan 48187.
Phone: (734) 207-9200.
Fax: (734) 207-7995.
Web Site: www.duo-gard.com.
E-Mail: info@duo-gard.com.

Aluminum Bench – 5' Free Standing – per attached rendering – bench shall have adjustable height. the bench base columns shall be a minimum of 6" x 6" x 11/8" aluminum and powder coat painted white to match shelter finish. Slats shall be recycled HDPE – color shall be Cedar.

PREPARATION
A. Ensure location to receive shelter is clean, flat, level, plumb, square, accurately aligned, and correctly located.

INSTALLATION
A. The manufacturer shall provide installation instructions complete with diagrams. Installation shall be performed by the manufacturer or his representative (option). The manufacturer shall guarantee the installation for a period of one (1) year from the date of acceptance.

CLEANING
A. Clean shelters in accordance with manufacturer's instructions.
B. Clean inside and outside of shelters immediately after installation.
C. Do not use harsh cleaning materials or methods that would damage the metal finish or glazing.

PROTECTION
A. Protect installed shelters from damage during construction.

FISHER, COLLINS & CARTER, INC.
CIVIL ENGINEERING CONSULTANTS & LAND SURVEYORS
CENTENNIAL SQUARE OFFICE PARK – 10272 BALTIMORE NATIONAL PIKE
ELLICOTT CITY, MARYLAND 21042
(410) 461 – 2855

NO.	REVISION	DATE
4	ADD DECK DETAIL & VARIANCE APPROVAL NOTES	4/05/16
1	REVISE COMMUNITY CENTER AND POOL AREA	10/3/14

STATE OF MARYLAND – MICHAEL J. SCHAEFER – No. 20246 – PROFESSIONAL ENGINEER
12/8/14

ENGINEER'S CERTIFICATE

"I certify that this plan for sediment and erosion control represents a practical and workable plan based on my personal knowledge of the site conditions and that it was prepared in accordance with the requirements of the Howard Soil Conservation District."

Signature of Engineer (print name below signature) — 12/8/14 Date

DEVELOPER'S CERTIFICATE

"I/We certify that all development and construction will be done according to this plan for sediment and erosion control, and that all responsible personnel involved in the construction project will have a Certificate of Attendance at a Department of the Environment Approved Training Program for the Control of Sediment and Erosion before beginning the project. I also authorize periodic on-site inspection by the Howard Soil Conservation District."

Signature of Developer (print name below signature) — 12/8/14 Date

This development plan is approved for soil erosion and sediment control by the HOWARD SOIL CONSERVATION DISTRICT.

Howard SCD — 1/6/15 Date

Owner/Builder
U.S. Home Corporation,
D/B/A Lennar
c/o Joseph Fortino, Vice President
10211 Wincopin Circle
Suite 300
Columbia, Maryland 21044
Ph# 410-423-0460

Developer
Preston - Scheffenacker Properties
2330 West Joppa Road, Suite 160
Lutherville, Maryland 21093-4614
Ph# 410-296-3800

APPROVED: HOWARD COUNTY DEPARTMENT OF PLANNING AND ZONING

Chief, Division of Land Development — 2-3-15 Date
Chief, Development Engineering Division — 2-2-15 Date
Director – Department of Planning and Zoning — 2/3/15 Date

SUBDIVISION			SECTION/AREA		LOT Nos.
OXFORD SQUARE			----		3 THRU 103
PLAT NO.	BLOCK NO.	ZONE	TAX/ZONE	ELEC. DIST.	CENSUS TR.
22895-22898	---	TOD	30	1st.	601101

REVISED
GEOMETRY PLAN

OXFORD SQUARE

"A Howard County Green Neighborhood"

Lots 3 Thru 103, Open Space Lots 104 Thru 116 And Parcels 'N' And 'O'

(Being A Resubdivision Of Parcels 'F' And 'J', As Shown On Plats Entitled "Revision Plat, Oxford Square, "Green Neighborhood", Parcels 'C', 'E', 'F', 'G', 'I', 'J', 'K' And 'M' And Recorded Among The Land Records Of Howard County, Maryland As Plat Nos. 22896 Thru 22899)
Zoned: TOD

Tax Map No.: 30 Grid No.: 20 Parcel No.: 761
First Election District Howard County, Maryland
Scale: As Shown
Date: June 6, 2014
Sheet 3 Of 30

SDP-13-068

I:\2006\06014\dwg\SDP (Lennar)\Pool Area Redline\sheet 3 mylar.dwg, 12/8/2014 12:01:48 PM, 1:1

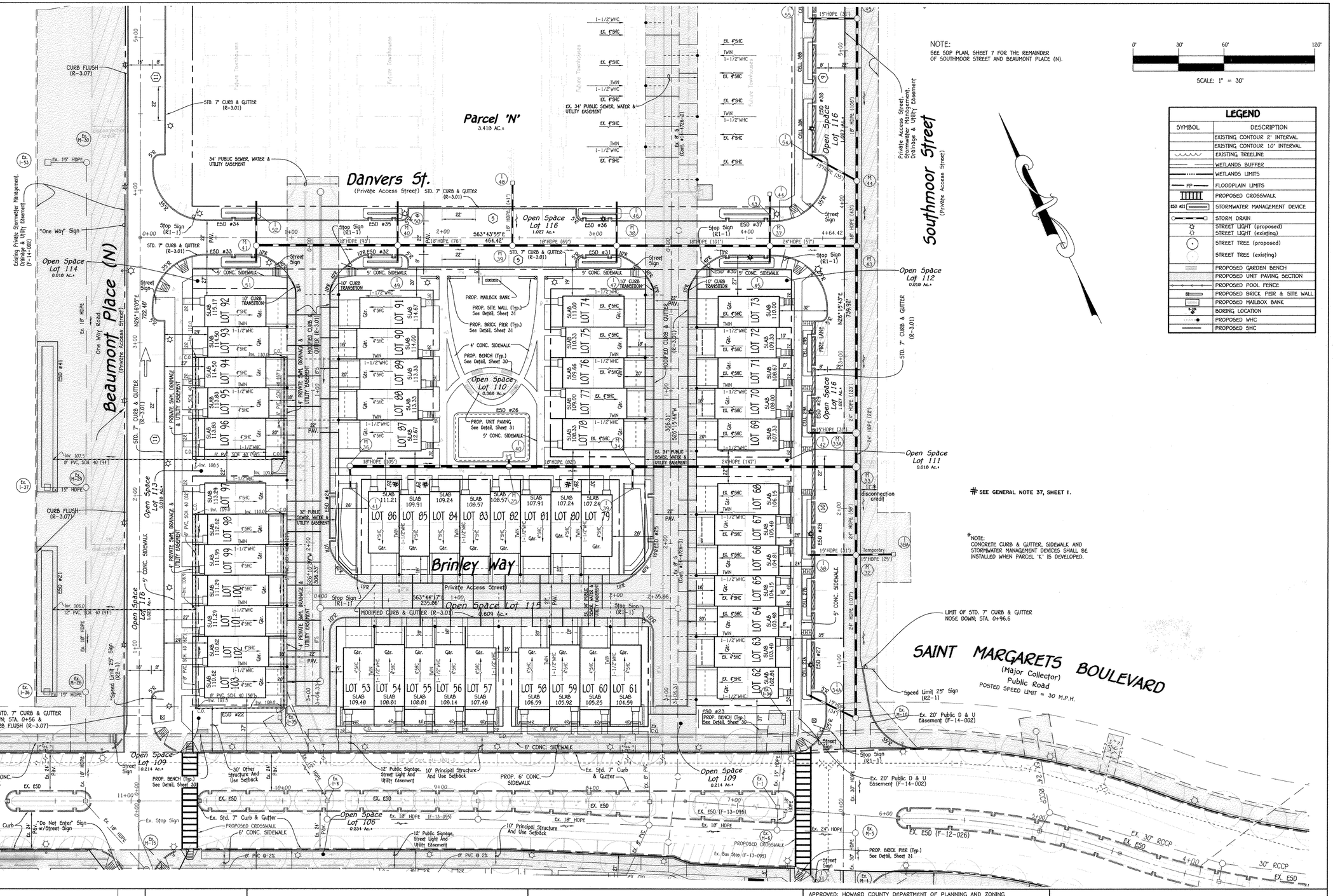

NOTE:
SEE SDP PLAN, SHEET 7 FOR THE REMAINDER OF SOUTHMOOR STREET AND BEAUMONT PLACE (N).

0' 30' 60' 120'
SCALE: 1" = 30'

SEE GENERAL NOTE 37, SHEET 1.

*NOTE:
CONCRETE CURB & GUTTER, SIDEWALK AND STORMWATER MANAGEMENT DEVICES SHALL BE INSTALLED WHEN PARCEL 'K' IS DEVELOPED.

LEGEND

SYMBOL	DESCRIPTION
	EXISTING CONTOUR 2' INTERVAL
	EXISTING CONTOUR 10' INTERVAL
	EXISTING TREELINE
	WETLANDS BUFFER
	WETLANDS LIMITS
FP	FLOODPLAIN LIMITS
	PROPOSED CROSSWALK
ESD #21	STORMWATER MANAGEMENT DEVICE
	STORM DRAIN
	STREET LIGHT (proposed) STREET LIGHT (existing)
	STREET TREE (proposed) STREET TREE (existing)
	PROPOSED GARDEN BENCH
	PROPOSED UNIT PAVING SECTION
	PROPOSED POOL FENCE
	PROPOSED BRICK PIER & SITE WALL
	PROPOSED MAILBOX BANK
	BORING LOCATION
	PROPOSED WHC
	PROPOSED SHC

FISHER, COLLINS & CARTER, INC.
CIVIL ENGINEERING CONSULTANTS & LAND SURVEYORS
CENTENNIAL SQUARE OFFICE PARK - 10272 BALTIMORE NATIONAL PIKE
ELLICOTT CITY, MARYLAND 21042
(410) 461 - 2855

NO.	REVISION	DATE
1	ADD DECK DETAIL & WAIVER APPROVAL NOTES	6/10/14

STATE OF MARYLAND
MICHAEL O'CONNOR
No. 28734
PROFESSIONAL ENGINEER
6-10-14

Owner/Builder
U.S. Home Corporation,
D/B/A Lennar
c/o Joseph Fortino, Vice President
10211 Wincopin Circle
Suite 300
Columbia, Maryland 21044
Ph# 410-423-0460

Developer
Preston • Scheffenacker Properties
2330 West Joppa Road, Suite 160
Lutherville, Maryland 21093-4614
Ph# 410-296-3800

APPROVED: HOWARD COUNTY DEPARTMENT OF PLANNING AND ZONING

Kent Sheubrooks — 7/22/14
Chief, Division of Land Development — Date

6-25-14
Chief, Development Engineering Division — Date

Director - Department of Planning and Zoning — 7-23-14 — Date

SUBDIVISION			SECTION/AREA		LOT Nos.
OXFORD SQUARE			----		3 THRU 103
PLAT NO.	BLOCK NO.	ZONE	TAX/ZONE	ELEC. DIST.	CENSUS TR.
22895-22898	---	TOD	30	1st.	601101

GEOMETRY PLAN

OXFORD SQUARE

"A Howard County Green Neighborhood"

Lots 3 Thru 103, Open Space Lots 104 Thru 116 And Parcels 'N' And 'O'

(Being A Resubdivision Of Parcels 'F' And 'J', As Shown On Plats Entitled "Revision Plat, Oxford Square, "Green Neighborhood", Parcels 'C', 'E', 'F', 'G', 'I', 'J', 'K' And 'M' And Recorded Among The Land Records Of Howard County, Maryland As Plat Nos. 22856 Thru 22859.)
Zoned: TOD

Tax Map No.: 30 Grid No.: 20 Parcel No.: 761
First Election District Howard County, Maryland
Scale: As Shown
Date: June 6, 2014
Sheet 4 Of 30

SDP-13-068

I:\2009\09014\dwg\SDP (Lennar)\09014 Sheet 3-4 geometry plan.dwg, sheet 4, 6/6/2014 1:56:45 PM, 1:1

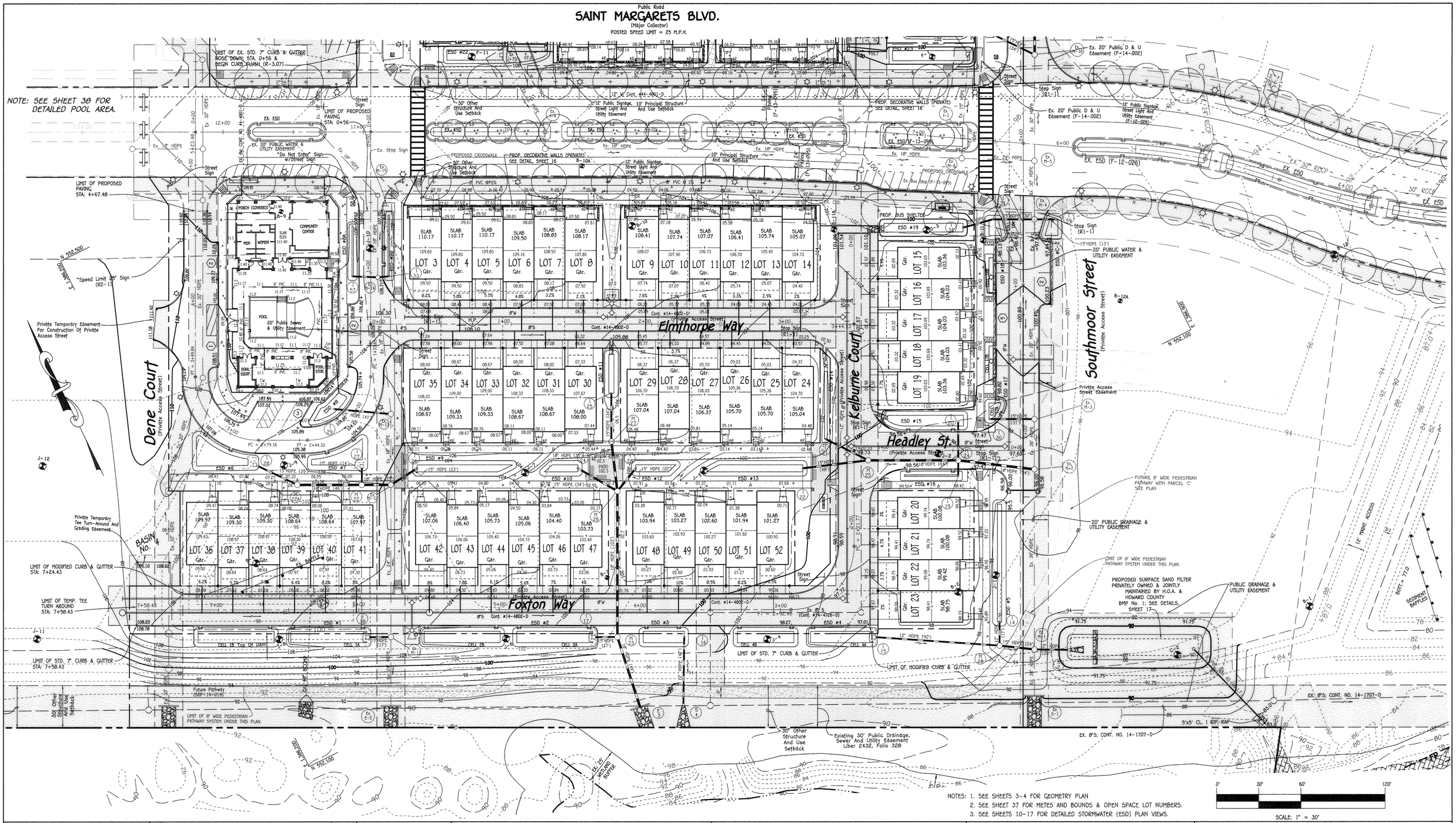

NOTES: 1. SEE SHEETS 3-4 FOR GEOMETRY PLAN
2. SEE SHEET 37 FOR METES AND BOUNDS & OPEN SPACE LOT NUMBERS.
3. SEE SHEETS 10-17 FOR DETAILED STORMWATER (ESD) PLAN VIEWS.

0' 30' 60' 120'
SCALE: 1" = 30'

FISHER, COLLINS & CARTER, INC.
CIVIL ENGINEERING CONSULTANTS & LAND SURVEYORS
CENTENNIAL SQUARE OFFICE PARK - 10272 BALTIMORE NATIONAL PIKE
ELLICOTT CITY, MARYLAND 21042
(410) 461 - 2855

NO.	REVISION	DATE
2	ADD DECK DETAIL & WAIVER APPROVAL NOTES	4/26/16
1	REVISE COMMUNITY CENTER AND POOL AREA	10/3/14

STATE OF MARYLAND
CHARLES A. CROMWELL
No. 13204
PROFESSIONAL ENGINEER

Owner/Builder
U.S. Home Corporation,
D/B/A Lennar
c/o Joseph Fortino, Vice President
10211 Wincopin Circle
Suite 300
Columbia, Maryland 21044
Ph# 410-423-0460

Developer
Preston • Scheffenacker Properties
2330 West Joppa Road, Suite 160
Lutherville, Maryland 21093-4614
Ph# 410-296-3800

APPROVED: HOWARD COUNTY DEPARTMENT OF PLANNING AND ZONING

Chief, Division of Land Development — Date 2-3-15

Chief, Development Engineering Division — Date 2-3-15

Director - Department of Planning and Zoning — Date 2/3/15

SUBDIVISION	SECTION/AREA	LOT Nos.
OXFORD SQUARE	----	3 THRU 103

PLAT NO.	BLOCK NO.	ZONE	TAX/ZONE	ELEC. DIST.	CENSUS TR.
22895-22898	---	TOD	38	1st.	601101

REVISED
SITE DEVELOPMENT PLAN

OXFORD SQUARE

"A Howard County Green Neighborhood"

Lots 3 Thru 103, Open Space Lots 104 Thru 116 And Parcels 'N' And 'O'

(Being A Resubdivision Of Parcels 'F' And 'J', As Shown On Plats Entitled "Revision Plat, Oxford Square, "Green Neighborhood", Parcels 'C', 'E', 'F', 'G', 'I', 'J', 'K' And 'M' And Recorded Among The Land Records Of Howard County, Maryland As Plat Nos. 22856 Thru 22859)
Zoned: TOD

Tax Map No.: 38 Grid No.: 20 Parcel No.: 761
First Election District Howard County, Maryland
Scale: As Shown
Date: June 6, 2014
Sheet 5 Of 38

SDP-13-068

I:\2009\09014\dwg\SDP (Lennar)\Pool Area Redline\feb 3 sheet 5 mylar.dwg, 2/3/2015 9:37:54 AM, 1:1

MATCH LINE SEE SHEET 7

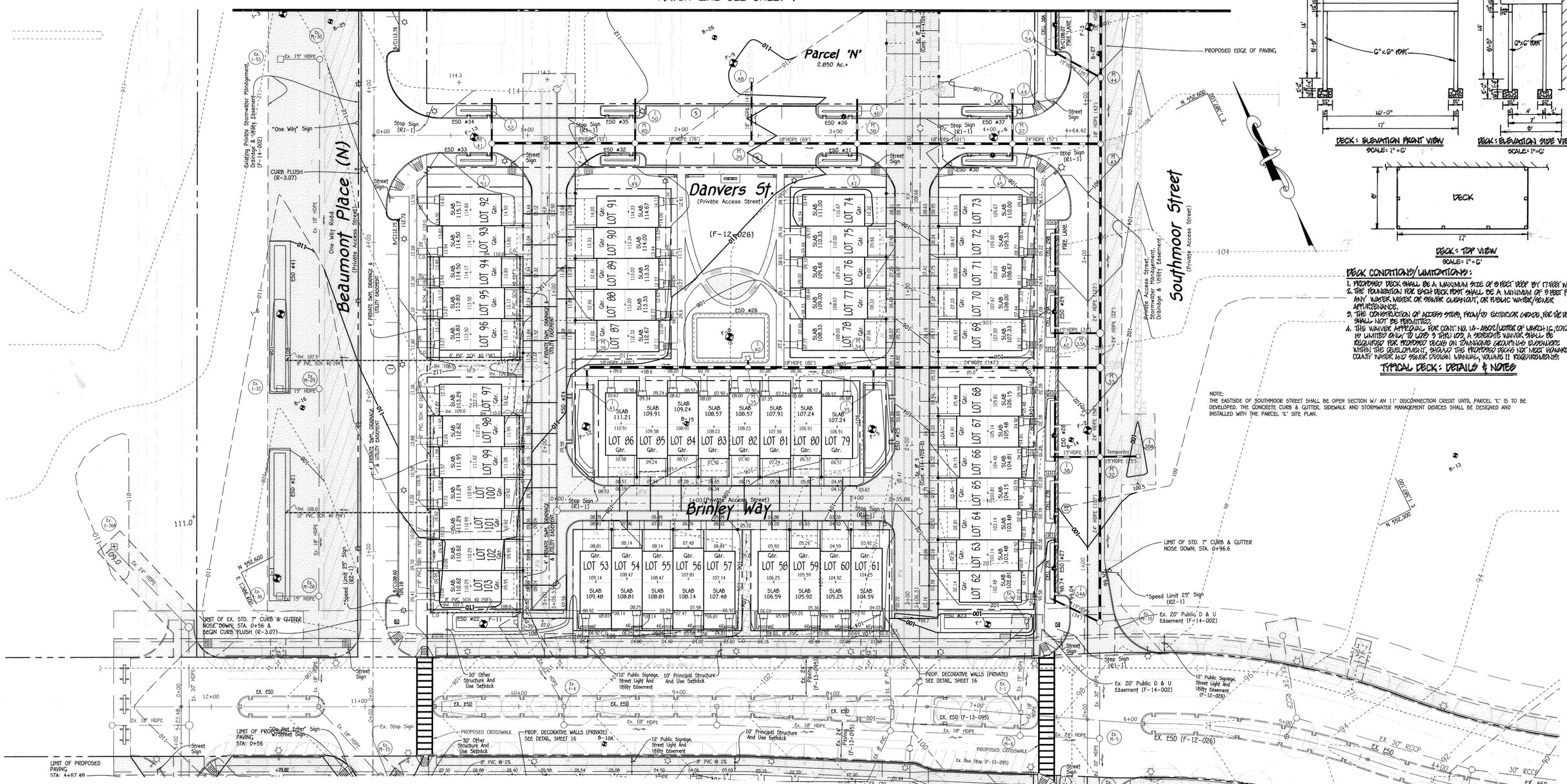

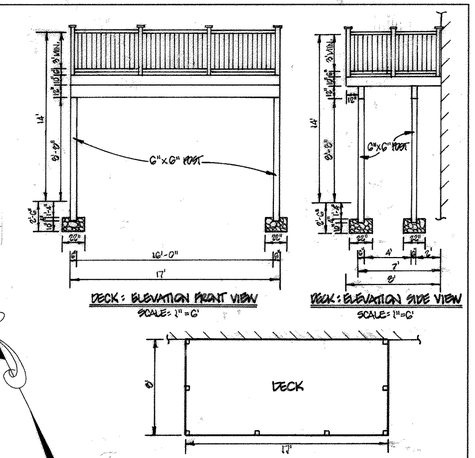

DECK CONDITIONS/LIMITATIONS:

1. PROPOSED DECK SHALL BE A MAXIMUM SIZE OF 8 FEET DEEP BY 17 FEET WIDE.
2. THE FOUNDATION FOR EACH DECK POST SHALL BE A MINIMUM OF 9 FEET FROM ANY WATER, METER OR SEWER CLEANOUT, OR PUBLIC WATER/SEWER APPURTENANCE.
3. THE CONSTRUCTION OF ACCESS STEPS, FROM/TO EXTERIOR DOORS, FOR THE DECKS SHALL NOT BE PERMITTED.
4. THE WAIVER APPROVAL FOR CONT. NO. 1A-ABOVE (LETTER OF MARCH 16, 2016) IS LIMITED ONLY TO LOTS 3 THRU 103. A DEVIATION WAIVER SHALL BE REQUIRED FOR PROPOSED DECKS ON TOWNHOUSE DWELLINGS ELSEWHERE WITHIN THE DEVELOPMENT, SHOULD THE PROPOSED DECKS NOT MEET HOWARD COUNTY WATER AND SEWER DESIGN MANUAL, VOLUME II REQUIREMENTS.

TYPICAL DECK: DETAILS & NOTES

NOTE:
THE EASTSIDE OF SOUTHMOOR STREET SHALL BE OPEN SECTION W/ AN 11' DISCONNECTION CREDIT UNTIL PARCEL 'K' IS TO BE DEVELOPED. THE CONCRETE CURB & GUTTER, SIDEWALK AND STORMWATER MANAGEMENT DEVICES SHALL BE DESIGNED AND INSTALLED WITH THE PARCEL 'K' SITE PLAN.

FISHER, COLLINS & CARTER, INC.
CIVIL ENGINEERING CONSULTANTS & LAND SURVEYORS
CENTENNIAL SQUARE OFFICE PARK - 10272 BALTIMORE NATIONAL PIKE
ELLICOTT CITY, MARYLAND 21042
(410) 461 - 2855

NO.	REVISION	DATE
1	ADD DECK DETAIL & WAIVER APPROVAL NOTES	4/12/16

STATE OF MARYLAND — JOHN MICHAEL FINN — No. 20280 — PROFESSIONAL ENGINEER — 6/10/14

Owner/Builder
U.S. Home Corporation,
D/B/A Lennar
c/o Joseph Fortino, Vice President
10211 Wincopin Circle
Suite 300
Columbia, Maryland 21044
Ph# 410-423-0460

Developer
Preston • Scheffenacker Properties
2330 West Joppa Road, Suite 160
Lutherville, Maryland 21093-4614
Ph# 410-296-3800

APPROVED: HOWARD COUNTY DEPARTMENT OF PLANNING AND ZONING

Kent Sheubrooks — Chief, Division of Land Development — 7/23/14 Date
Chief, Development Engineering Division — 6-25-14 Date
Director - Department of Planning and Zoning — 7-23-14 Date

SUBDIVISION			SECTION/AREA		LOT Nos.
OXFORD SQUARE			----		3 THRU 103
PLAT NO.	BLOCK NO.	ZONE	TAX/ZONE	ELEC. DIST.	CENSUS TR.
22895-22898	---	TOD	30	1st.	601101

SITE DEVELOPMENT PLAN

OXFORD SQUARE

"A Howard County Green Neighborhood"

Lots 3 Thru 103, Open Space Lots 104 Thru 116 And Parcels 'N' And 'O'

(Being A Resubdivision Of Parcels 'F' And 'J', As Shown On Plats Entitled "Revision Plat, Oxford Square, "Green Neighborhood", Parcels 'C', 'E', 'F', 'G', 'I', 'J', 'K' And 'M' And Recorded Among The Land Records Of Howard County, Maryland As Plat Nos. 22856 Thru 22859.)
Zoned: TOD

Tax Map No.: 30 Grid No.: 20 Parcel No.: 761
First Election District Howard County, Maryland
Scale: As Shown
Date: June 6, 2014
Sheet 6 Of 30

SDP-13-060

I:\2009\09014\dwg\SDP (Lennar)\09014 Sheet 5-7 sdp.dwg, sheet 6, 6/6/2014 2:01:13 PM, 1:1

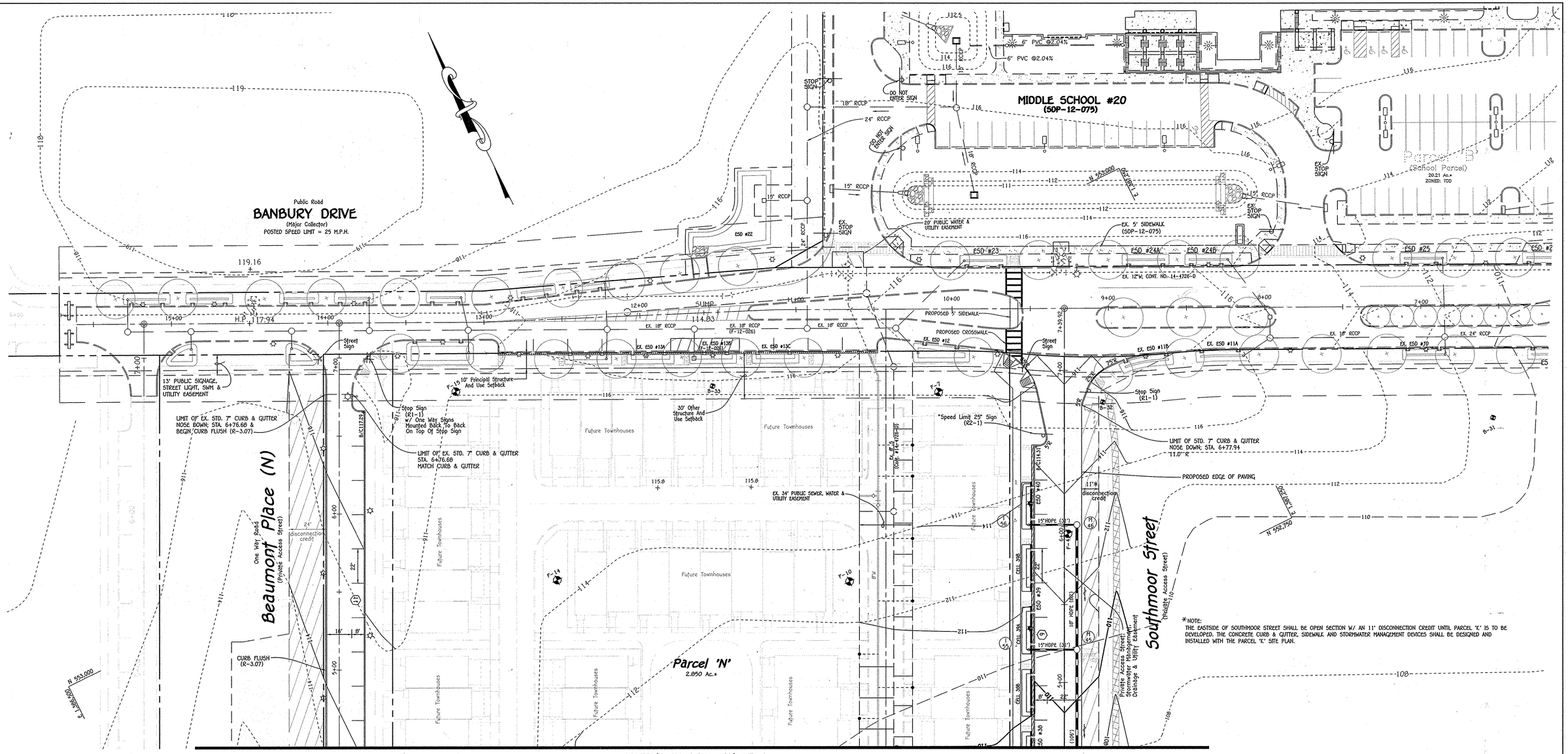

*NOTE:
THE EASTSIDE OF SOUTHMOOR STREET SHALL BE OPEN SECTION W/ AN 11' DISCONNECTION CREDIT UNTIL PARCEL 'K' IS TO BE DEVELOPED. THE CONCRETE CURB & GUTTER, SIDEWALK AND STORMWATER MANAGEMENT DEVICES SHALL BE DESIGNED AND INSTALLED WITH THE PARCEL 'K' SITE PLAN.

0' 30' 60' 120'

SCALE: 1" = 30'

FISHER, COLLINS & CARTER, INC.
CIVIL ENGINEERING CONSULTANTS & LAND SURVEYORS
CENTENNIAL SQUARE OFFICE PARK - 10272 BALTIMORE NATIONAL PIKE
ELLICOTT CITY, MARYLAND 21042
(410) 461 - 2855

NO.	REVISION	DATE

STATE OF MARYLAND
MICHAEL VITAL
No. 20748
PROFESSIONAL ENGINEER
8-10-14

Owner/Builder
U.S. Home Corporation,
D/B/A Lennar
c/o Joseph Fortino, Vice President
10211 Wincopin Circle
Suite 300
Columbia, Maryland 21044
Ph# 410-423-0460

Developer
Preston • Scheffenacker Properties
2330 West Joppa Road, Suite 160
Lutherville, Maryland 21093-4614
Ph# 410-296-3800

APPROVED: HOWARD COUNTY DEPARTMENT OF PLANNING AND ZONING

Chief, Division of Land Development — Date 7/28/14

Chief, Development Engineering Division — Date 8.25.14

Director - Department of Planning and Zoning — Date 7-23-14

SUBDIVISION	SECTION/AREA	LOT Nos.
OXFORD SQUARE	----	3 THRU 103

PLAT NO.	BLOCK NO.	ZONE	TAX/ZONE	ELEC. DIST.	CENSUS TR.
22895-22898	---	TOD	38	1st.	601101

SITE DEVELOPMENT PLAN

OXFORD SQUARE

"A Howard County Green Neighborhood"

Lots 3 Thru 103, Open Space Lots 104 Thru 116 And Parcels 'N' And 'O'

(Being A Resubdivision Of Parcels 'F' And 'J', As Shown On Plats Entitled "Revision Plat, Oxford Square, "Green Neighborhood", Parcels 'C', 'E', 'F', 'G', 'I', 'J', 'K' And 'M' And Recorded Among The Land Records Of Howard County, Maryland As Plat Nos. 22856 Thru 22859)
Zoned: TOD

Tax Map No.: 38 Grid No.: 20 Parcel No.: 761
First Election District Howard County, Maryland
Scale: As Shown
Date: June 6, 2014
Sheet 7 Of 38

SDP-13-068

I:\2009\09014\dwg\SDP (Lennar)\09014 Sheet 5-7 sdp.dwg, sheet 7, 6/6/2014 2:03:12 PM, 1:1

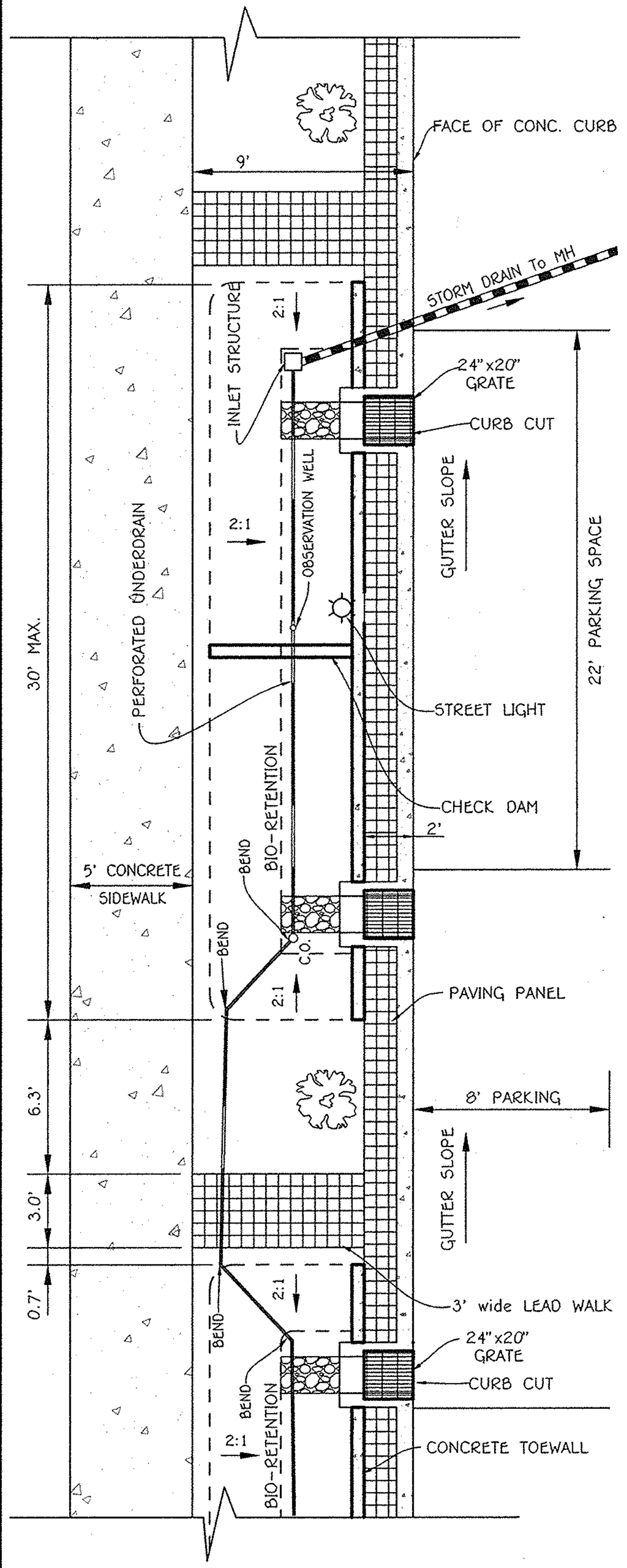

TYPICAL DOUBLE BIO-RETENTION CELL PLAN ALONG PARKING

SCALE: 1" = 5'

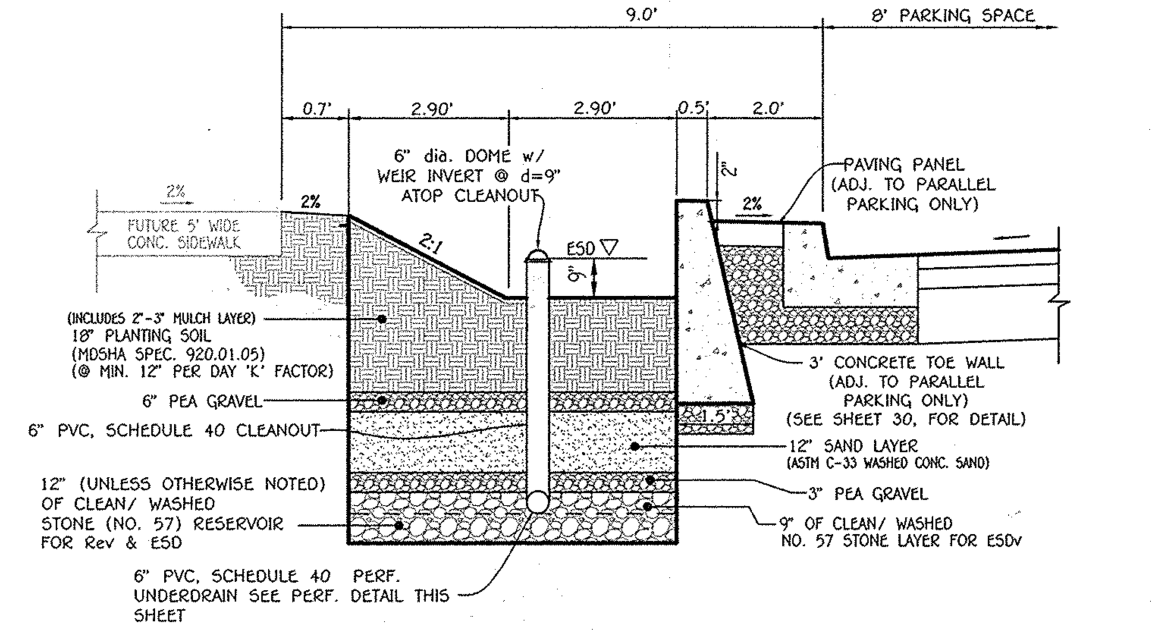

TYPICAL BIO-RETENTION ADJACENT TO ON-STREET PARKING

NO SCALE

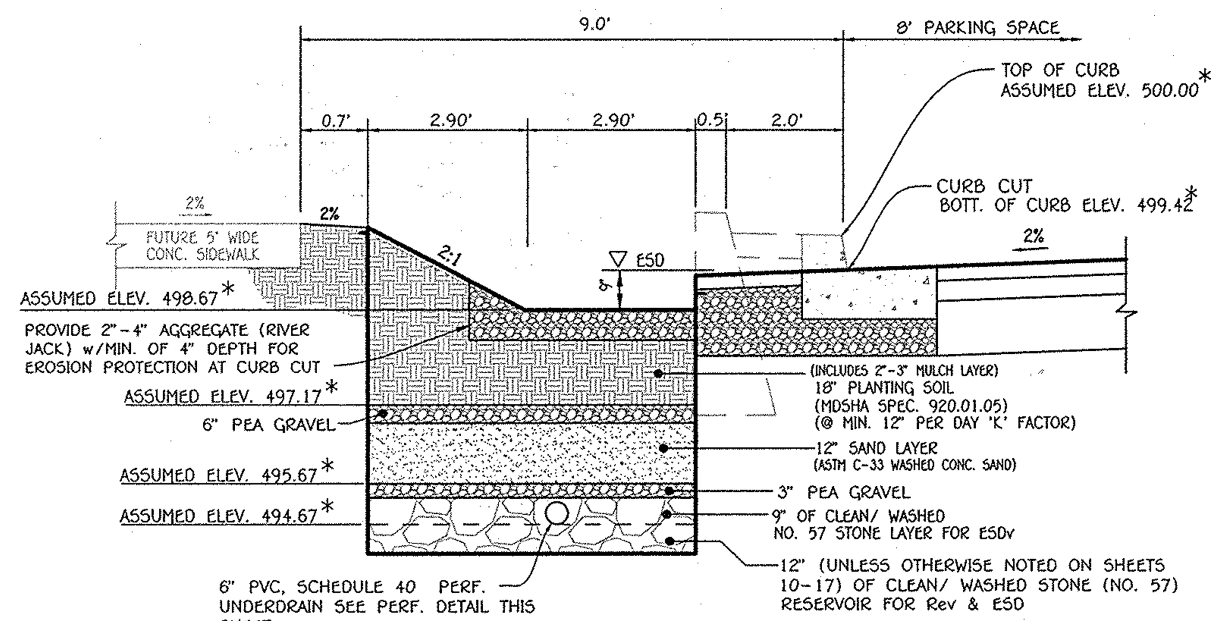

*NOTE: ASSUMED ELEVATION SHOWN THEREON FOR CONSTRUCTION PURPOSES.

TYPICAL BIO-RETENTION (M-6) ADJACENT TO ON-STREET PARKING @ CURB CUT

NO SCALE

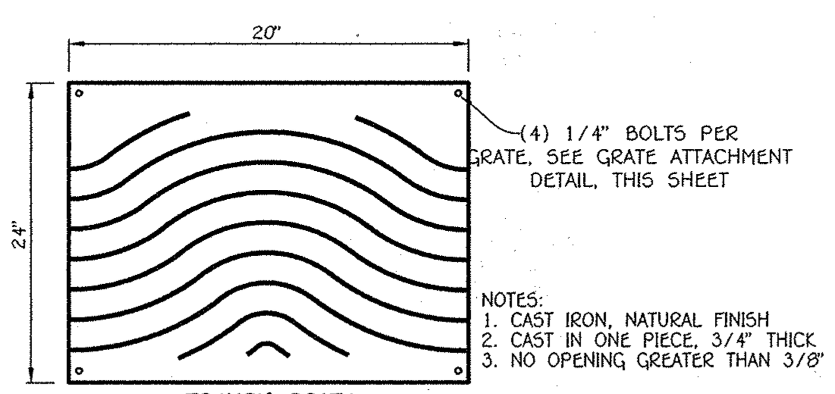

24" x 20" GRATE OVER CURB CUT

NO SCALE

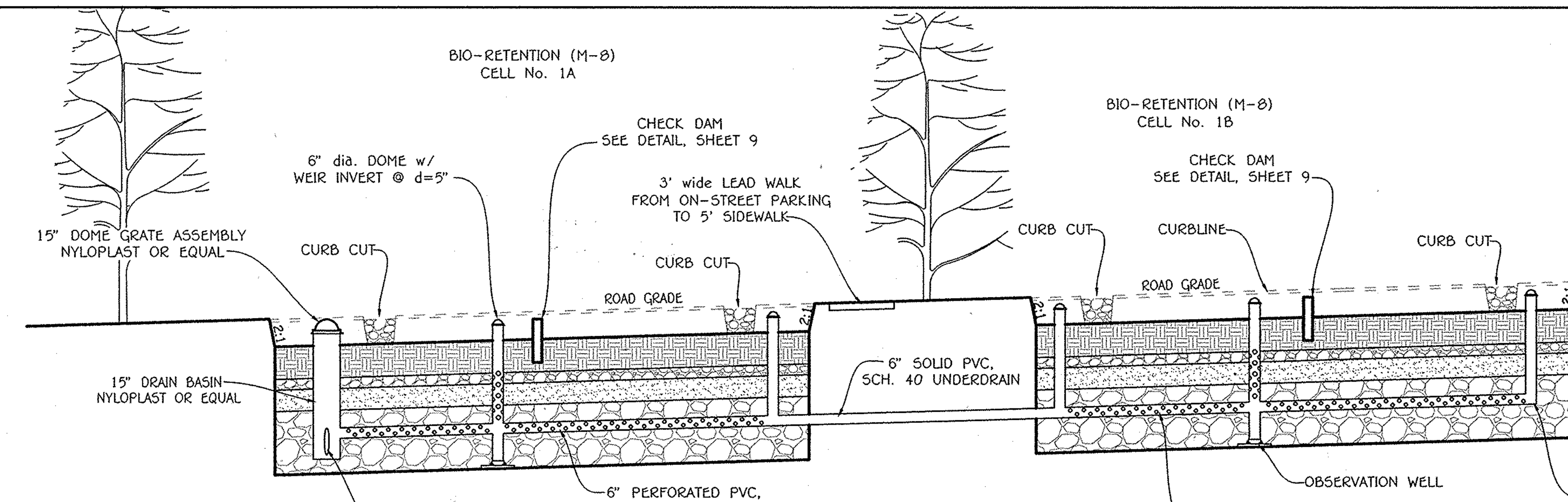

TYPICAL DOUBLE BIO-RETENTION CELL SECTION ALONG ROADWAY

SCALE: 1" = 5'

0' 5' 10' 20'

SCALE: 1" = 5'

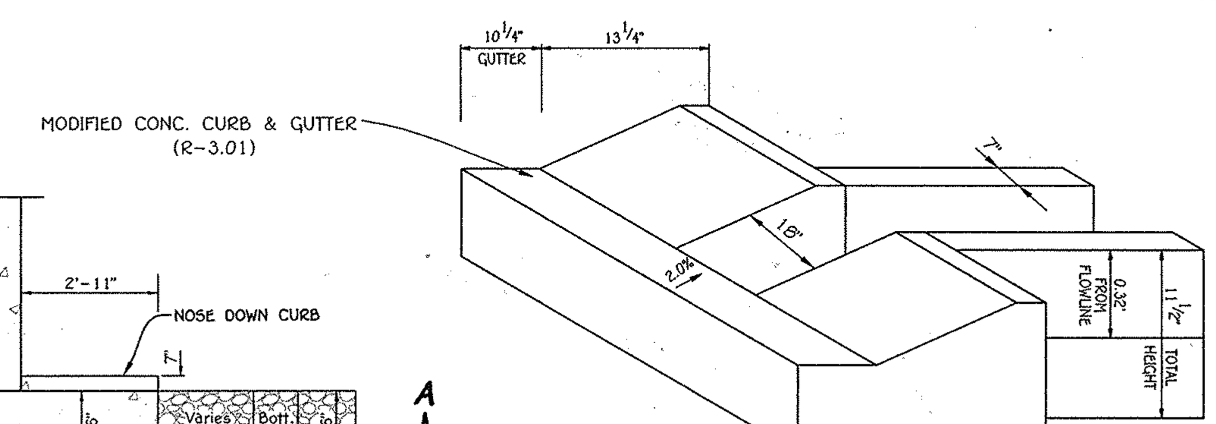

CURB SECTION

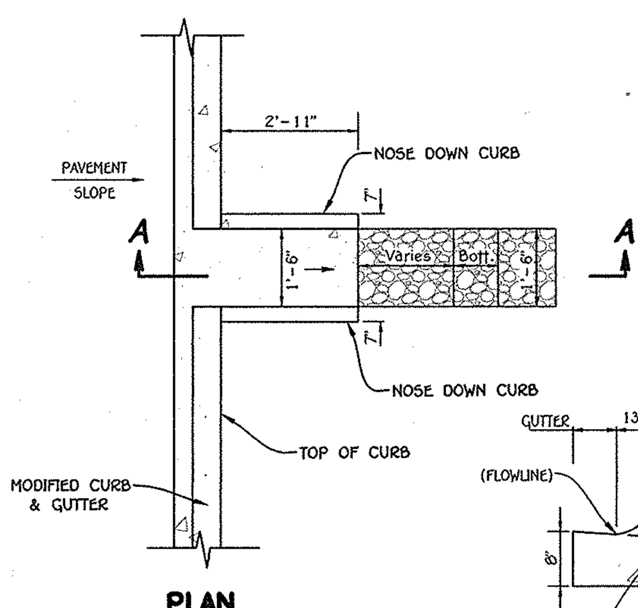

PLAN

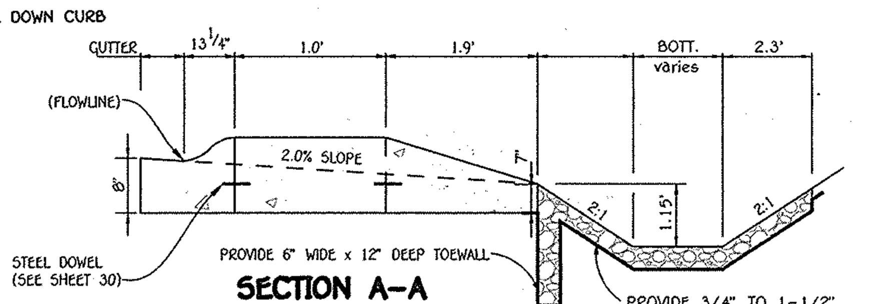

SECTION A-A

CURB OPENING DETAIL 'C' FOR MODIFIED CURB & GUTTER ALONG ROADWAY

NO SCALE

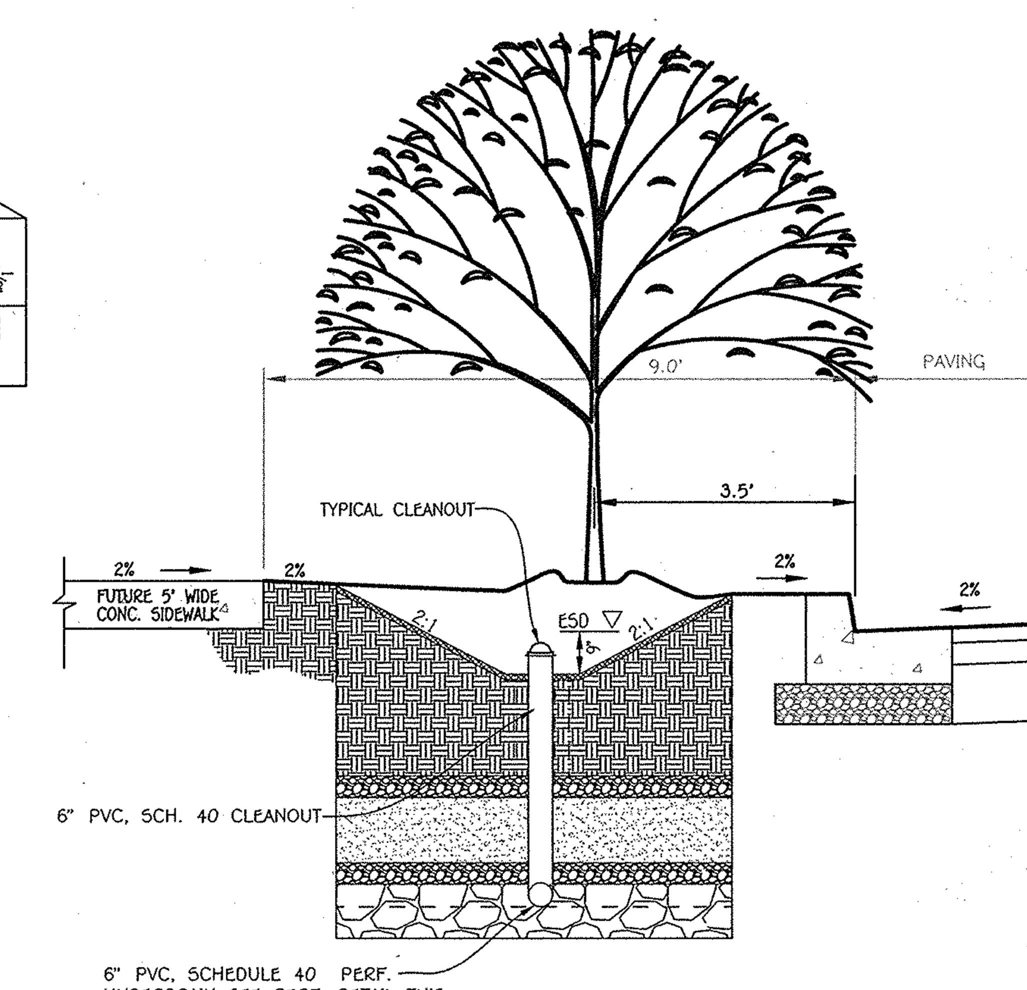

TYPICAL STREET TREE ADJACENT TO ROADWAY

NO SCALE

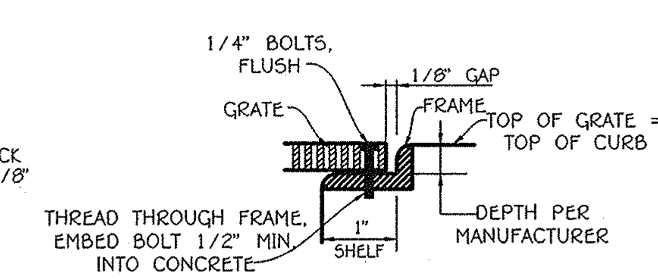

GRATE ATTACHMENT DETAIL

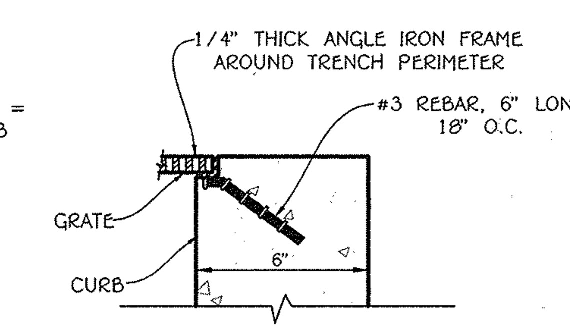

FRAME DETAIL

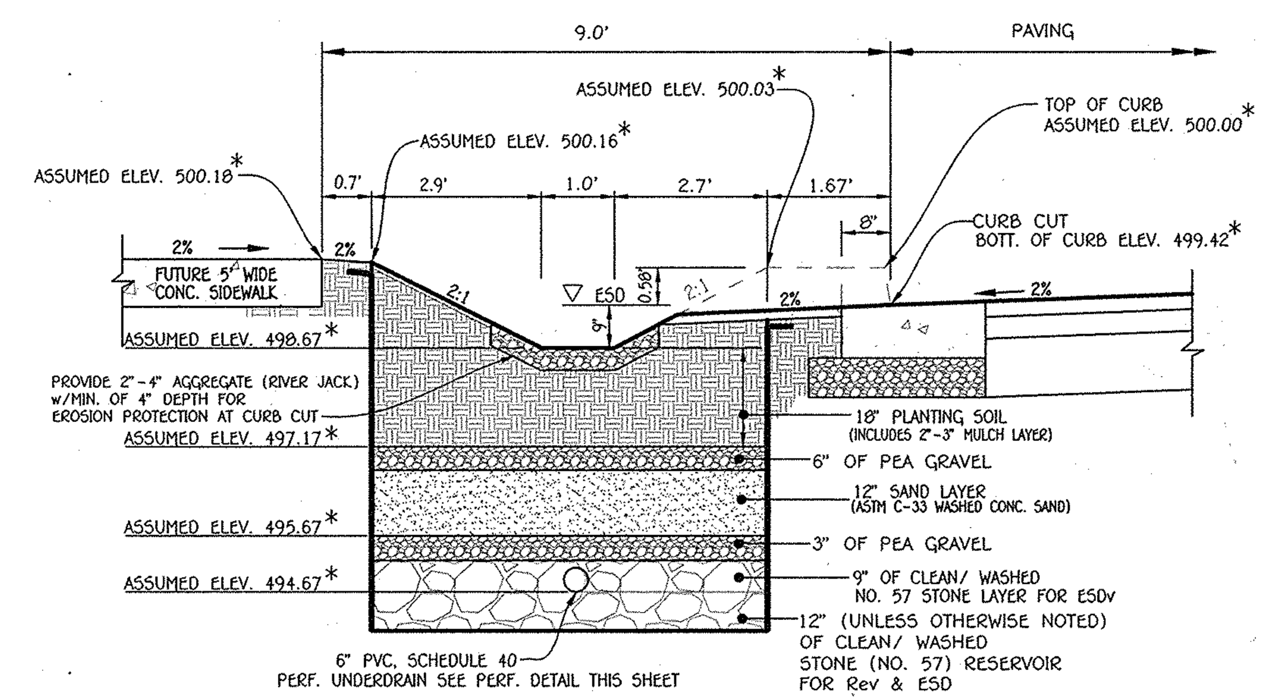

TYPICAL BIO-RETENTION (M-6) ADJACENT TO ROADWAY @ CURB CUT

NO SCALE

*NOTE: ASSUMED ELEVATION SHOWN THEREON FOR CONSTRUCTION PURPOSES.

STORAGE FOR ESD:

SURFACE/WET STORAGE = 0.75' + (0.5625' x 2) = 1.875 SQ.FT./L.F.
1.875 x 30 L.F. = 56.3 CU.FT. / 150 target = 37.5%

STONE STORAGE = 6.60 x 1.5 x 0.40 = 3.96 x 30 = 118.8 CU.FT.

TOTAL ESDv = 175.10 CU.FT. vs. 150 req'd.

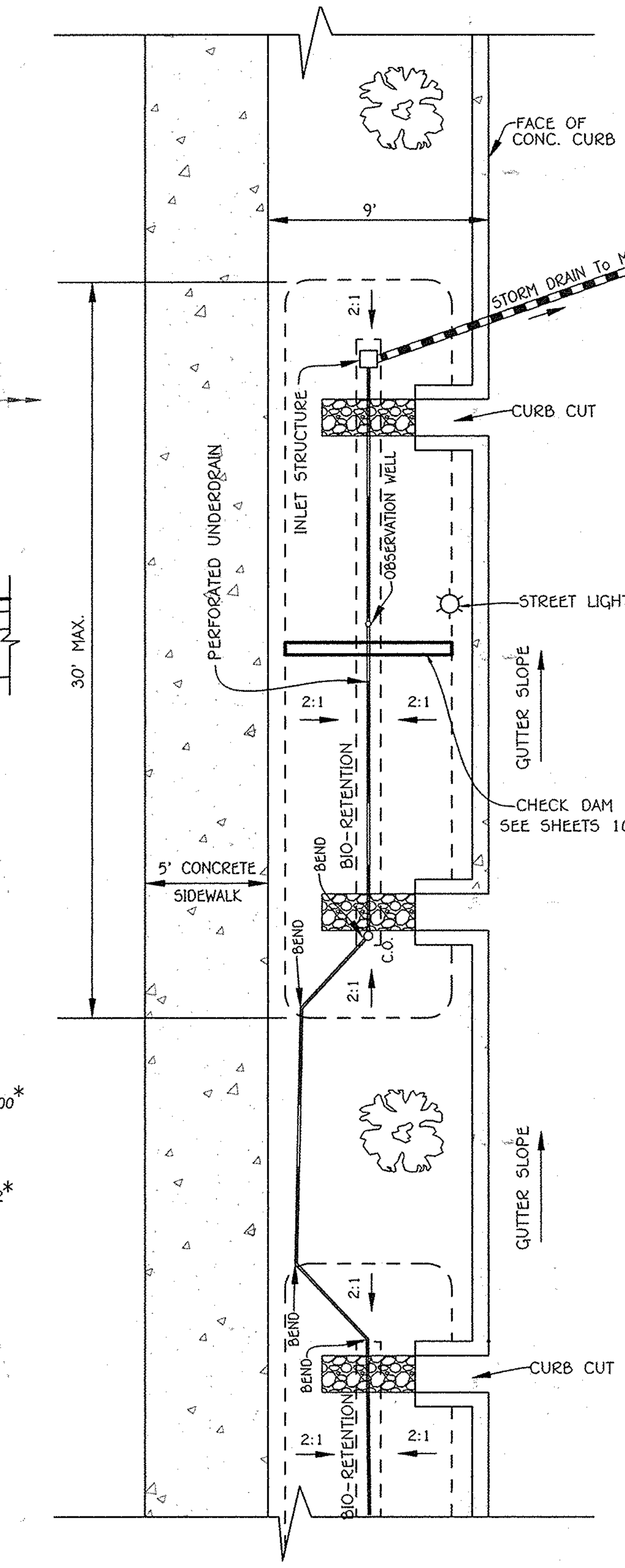

TYPICAL DOUBLE BIO-RETENTION CELL PLAN ALONG ROADWAY

SCALE: 1" = 5'

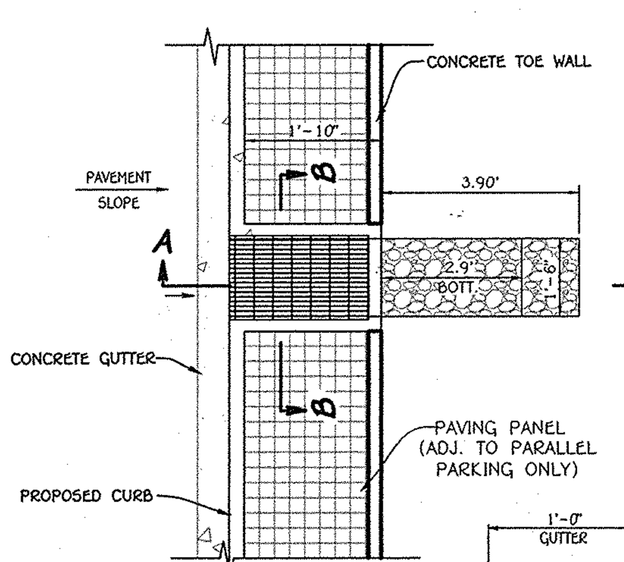

PLAN

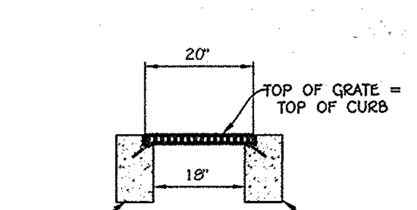

SECTION B-B

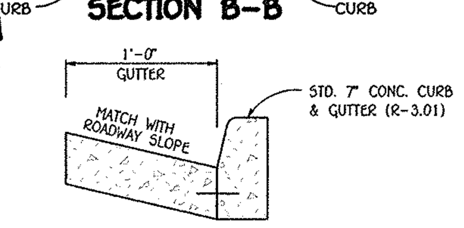

CURB SECTION

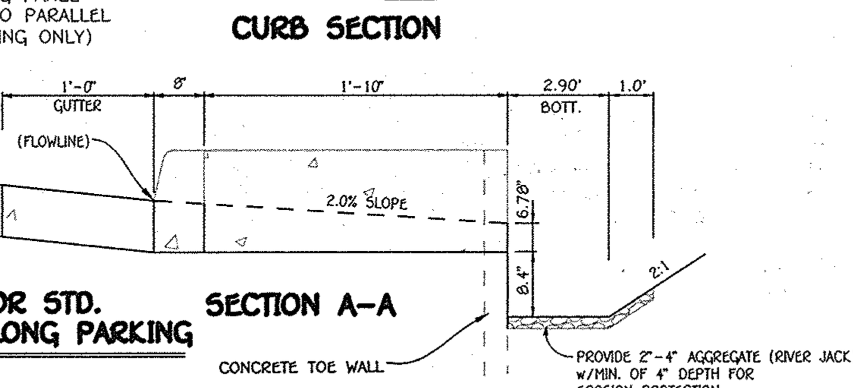

SECTION A-A

CURB OPENING DETAIL 'B' FOR STD. 7" CONCRETE CURB & GUTTER ALONG PARKING

NO SCALE

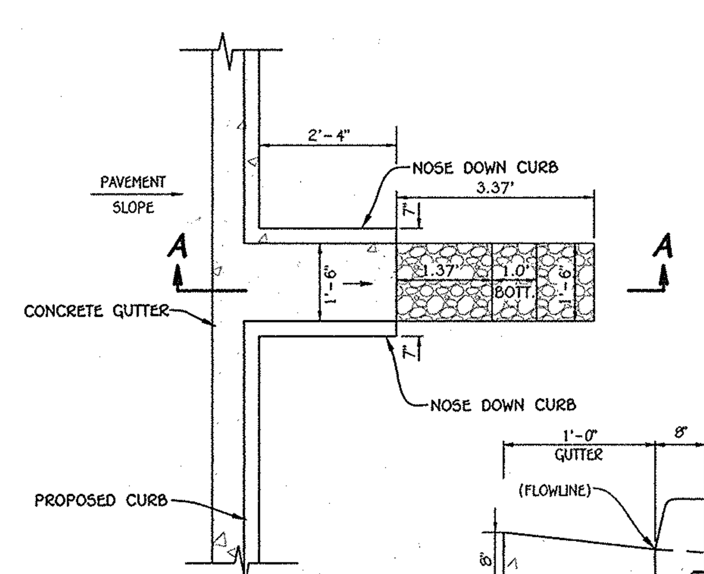

PLAN

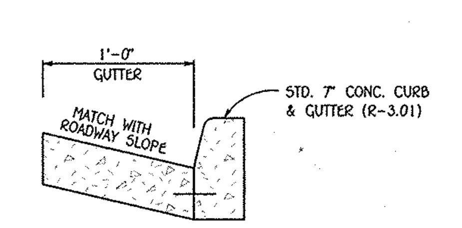

CURB SECTION

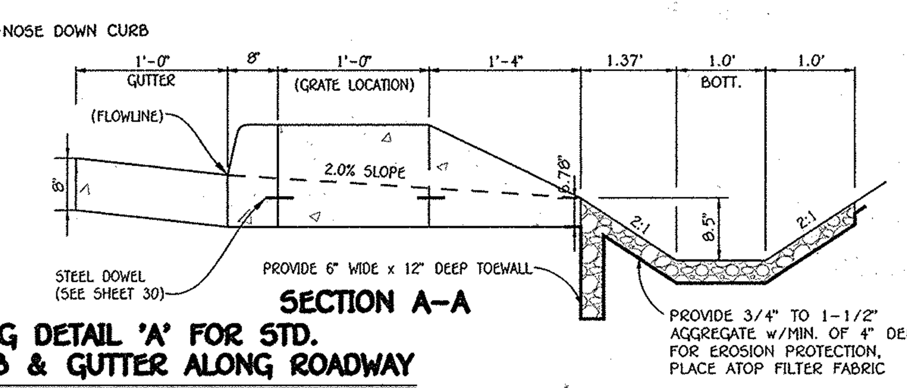

SECTION A-A

CURB OPENING DETAIL 'A' FOR STD. 7" CONCRETE CURB & GUTTER ALONG ROADWAY

NO SCALE

FISHER, COLLINS & CARTER, INC.
CIVIL ENGINEERING CONSULTANTS & LAND SURVEYORS
CENTENNIAL SQUARE OFFICE PARK - 10272 BALTIMORE NATIONAL PIKE
ELLICOTT CITY, MARYLAND 21042
(410) 461 - 2855

NO.	REVISION	DATE

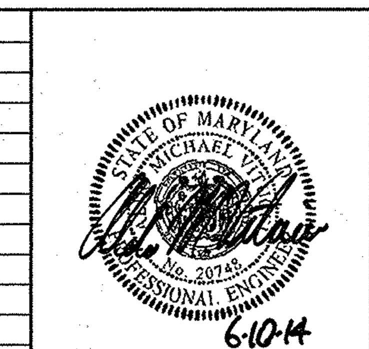

Owner/Builder

U.S. Home Corporation,
D/B/A Lennar
c/o Joseph Fortino, Vice President
10211 Wincopin Circle
Suite 300
Columbia, Maryland 21044
Ph# 410-423-0460

Developer

Preston • Scheffenacker Properties
2330 West Joppa Road, Suite 160
Lutherville, Maryland 21093-4614
Ph# 410-296-3800

APPROVED: HOWARD COUNTY DEPARTMENT OF PLANNING AND ZONING

Chief, Division of Land Development — Date 7/23/14

Chief, Development Engineering Division — Date 6-25-14

Director - Department of Planning and Zoning — Date 7-23-14

SUBDIVISION			SECTION/AREA		LOT Nos.
OXFORD SQUARE			----		3 THRU 103
PLAT NO.	BLOCK NO.	ZONE	TAX/ZONE	ELEC. DIST.	CENSUS TR.
22895-22898	---	TOD	38	1st.	601101

STORMWATER MANAGEMENT NOTES & DETAILS

OXFORD SQUARE

"A Howard County Green Neighborhood"

Lots 3 Thru 103, Open Space Lots 104 Thru 116 And Parcels 'N' And 'O'

(Being A Resubdivision Of Parcels 'F' And 'J', As Shown On Plats Entitled "Revision Plat, Oxford Square, "Green Neighborhood", Parcels 'C', 'E', 'F', 'G', 'I', 'J', 'K' And 'M" And Recorded Among The Land Records Of Howard County, Maryland As Plat Nos. 22856 Thru 22859)
Zoned: TOD

Tax Map No.: 38 Grid No.: 20 Parcel No.: 761
First Election District Howard County, Maryland
Scale: As Shown
Date: June 6, 2014
Sheet 8 Of 38

SDP-13-068

I:\2009\09014\dwg\SDP (Lennar)\09014 Sheet 8-9 swm details.dwg, swm sheet 8, 6/9/2014 8:31:27 AM, 1:1

Infiltration and Filter System Construction Specifications

Infiltration and filter systems either take advantage of existing permeable soils or create a permeable medium such as sand for WC), and Re v. In some instances where permeability is great, these facilities may be used for Qp as well. The most common systems include infiltration trenches, infiltration basins, sand filters, and organic filters.

When properly planted, vegetation will thrive and enhance the functioning of these systems. For example, pre-treatment buffers will trap sediments that often are bound with phosphorous and metals. Vegetation planted in the facility will aid in nutrient uptake and water storage. Additionally, plant roots will provide arteries for stormwater to permeate soil for groundwater recharge. Finally, successful plantings provide aesthetic value and wildlife habitat making these facilities more desirable to the public.

Design Constraints:

> Planting buffer strips of at least 20 feet will cause sediments to settle out before reaching the facility, thereby reducing the possibility of clogging.
> Determine areas that will be saturated with water and water table depth so that appropriate plants may be selected (hydrology will be similar to bioretention facilities, see figure A.5 and Table A.4 for planting material guidance).
> Plants known to send down deep taproots should be avoided in systems where filter fabric is used as part of facility design.
> Test soil conditions to determine if soil amendments are necessary.
> Plants shall be located so that access is possible for structure maintenance.
> Stabilize heavy flow areas with erosion control mats or sod.
> Temporarily divert flows from seeded areas until vegetation is established.
> See Table A.5 for additional design considerations.

Bio-retention

Soil Bed Characteristics

The characteristics of the soil for the bioretention facility are perhaps as important as the facility location, size, and treatment volume. The soil must be permeable enough to allow runoff to filter through the media, while having characteristics suitable to promote and sustain a robust vegetative cover crop. In addition, much of the nutrient pollutant uptake (nitrogen and phosphorus) is accomplished through absorption and microbial activity within the soil profile. Therefore, soils must balance their chemical and physical properties to support biotic communities above and below ground.

The planting soil should be a sandy loam, loamy sand, loam (USDA), or a loam/sand mix (should contain a minimum 35 to 60% sand, by volume). The clay content for these soils should be less than 25% by volume [Environmental Quality Resources (EQR), 1996; Engineering Technology Inc. and Biohabitats, Inc. (ETAB), 1993]. Soils should fall within the SM, ML, SC classifications or the Unified Soil Classification System (USCS). A permeability of at least 1.0 feet per day (0.5"/hr) is required (a conservative value of 0.5 feet per day is used for design). The soil should be free of stones, stumps, roots, or other woody material over 1" in diameter. Brush or seeds from noxious weeds (e.g., Johnson Grass, Mugwort, Nutsedge, and Canada Thistle or other noxious weeds as specified under COMAR 15.08.01.05.) should not be present in the soils. Placement of the planting soil should be in 12 to 18 lifts that are loosely compacted (tamped lightly with a backhoe bucket or traversed by dozer tracks). The specific characteristics are presented in Table A.3.

Table A.3 Planting Soil Characteristics

Parameter	Value
pH range	5.2 to 7.00
Organic matter	1.5 to 4.0% (by weight)
Magnesium	35 lbs. per acre, minimum
Phosphorus (phosphate – P205)	75 lbs. per acre, minimum
Potassium (potash –1(K20)	85 lbs. per acre, minimum
Soluble salts	500 ppm
Clay	10 to 25 %
Silt	30 to 55 %
Sand	35 to 60%

Mulch Layer

The mulch layer plays an important role in the performance of the bioretention system. The mulch layer helps maintain soil moisture and avoids surface sealing, which reduces permeability. Mulch helps prevent erosion, and provides a microenvironment suitable for soil biota at the mulch/soil interface. It also serves as a pretreatment layer, trapping the finer sediments, which remain suspended after the primary pretreatment.

The mulch layer should be standard landscape style, single or double shredded hardwood mulch or chips. The mulch layer should be well aged (stockpiled or stored for at least 12 months), uniform in color, and free of other materials, such as weed seeds, soil, roots, etc. The mulch should be applied to a maximum depth of three inches. Grass clippings should not be used as a mulch material.

Planting Guidance

Plant material selection should be based on the goal of simulating a terrestrial forested community of native species. Bioretention simulates an upland-species ecosystem. The community should be dominated by trees, but have a distinct community of understory trees, shrubs and herbaceous materials. By creating a diverse, dense plant cover, a bioretention facility will be able to treat stormwater runoff and withstand urban stresses from insects, disease, drought, temperature, wind, and exposure.
The proper selection and installation of plant materials is key to a successful system. There are essentially three zones within a bioretention facility (Figure A.5). The lowest elevation supports plant species adapted to standing and fluctuating water levels. The middle elevation supports plants that like drier soil conditions, but can still tolerate occasional inundation by water. The outer edge
is the highest elevation and generally supports plants adapted to dryer conditions. For appropriate plant materials for bioretention facilities, Refer To MAA Approved Species List. The layout of plant material should be flexible, but should follow the general principals described in Table A.5. The objective is to have a system, which resembles a random, and natural plant layout, while maintaining optimal conditions for plant establishment and growth. For a more extensive bioretention plan, consult ETAB, 1993 or Claytor and Schueler, 1997.

Operation And Maintenance Schedule For Commercial Association Owned & Maintained Bio-Retention Areas (M-6) & (M-8)

1. The owner shall maintain the plant material, mulch layer and soil layer annually. maintenance of mulch and soil is limited to correcting areas of erosion or wash out. Any mulch replacement shall be done in the spring. Plant material shall be checked for disease and insect infestation and maintenance will address dead material and pruning. Acceptable replacement plant material is limited to the following: 2000 Maryland stormwater design manual volume II, table A.4.1 and 2.

2. The owner shall perform a plant in the spring and in the fall each year. during the inspection, the owner shall remove dead and diseased vegetation considered beyond treatment, replace dead plant material with acceptable replacement plant material. Treat diseased trees and shrubs and replace all deficient stakes and wires.

3. The owner shall inspect the mulch each spring. The mulch shall be replaced every two to three years. The previous mulch layer shall be removed before the new layer is applied.

4. The owner shall correct soil erosion on an as needed basis, with a minimum of once per month and after each heavy storm.

5. The owner shall maintain all observation wells, clean-outs and perforated underdrains.

6. Filter material must be replaced when water remains on the surface of the filter bed for more than 24 hours following a 1 or 2 year storm event or more than 48 hours following a 10 year storm event.

B.4.C Specifications for Micro-Bioretention. Rain Gardens, Landscape Infiltration & Infiltration Berms

1. Material Specifications

The allowable materials to be used in these practices are detailed in Table B.4.1.

2. Filtering Media or Planting Soil

The soil shall be a uniform mix, free of stones, stumps, roots or other similar objects larger than two inches. No other materials or substances shall be mixed or dumped within the micro-bioretention practice that may be harmful to plant growth, or prove a hindrance to the planting or maintenance operations. The planting soil shall be free of Bermuda grass, Quackgrass, Johnson grass, or other noxious weeds as specified under COMAR 15.08.01.05.

The planting soil shall be tested and shall meet the following criteria:

Soil Component – Loamy Sand or Sandy Loam (USDA Soil Textural Classification)

Organic Content – Minimum 10% by dry weight (ASTM D 2974). In general, this can be met with a mixture of loamy sand (60%-65%) and compost (35% to 40%) or sandy loam (30%), coarse sand (30%), and compost (40%).

Clay Content – Media shall have a clay content of less than 5%.

pH Range –Should be between 5.5 – 7.0. Amendments (e.g., lime, iron sulfate plus sulfur) may be mixed into the soil to increase or decrease pH.

There shall be at least one soil test per project. Each test shall consist of both the standard soil test for pH, and additional tests of organic matter, and soluble salts. A textural analysis is required from the site stockpiled topsoil. If topsoil is imported, then a texture analysis shall be performed for each location where the topsoil was excavated.

3. Compaction

It is very important to minimize compaction of both the base of bioretention practices and the required backfill. When possible, use excavation hoes to remove original soil. If practices are excavated using a loader, the contractor should use wide track or marsh track equipment, or light equipment with turf type tires. Use of equipment with narrow tracks or narrow tires, rubber tires with large lugs, or high-pressure tires will cause excessive compaction resulting in reduced infiltration rates and is not acceptable. Compaction will significantly contribute to design failure.

Compaction can be alleviated at the base of the bioretention facility by using a primary tilling operation such as a chisel plow, ripper, or subsoiler. These tilling operations are to refracture the soil profile through the 12 inch compaction zone. Substitute methods must be approved by the engineer. Rototillers typically do not till deep enough to reduce the effects of compaction from heavy equipment.

Rototill 2 to 3 inches of sand into the base of the bioretention facility before backfilling the optional sand layer. Pump any ponded water before preparing (rototilling) base.

When backfilling the topsoil over the sand layer, first place 3 to 4 inches of topsoil over the sand, then rototill the sand/topsoil to create a gradation zone. Backfill the remainder of the topsoil to final grade.

When backfilling the bioretention facility, place soil in lifts 12"to 18". Do not use heavy equipment within the bioretention basin. Heavy equipment can be used around the perimeter of the basin to supply soils and sand. Grade bioretention materials with light equipment such as a compact loader or a dozer/loader with marsh tracks.

4. Plant Material

Recommended plant material for micro-bioretention practices can be found in Appendix A, Section A.2.3.

5. Plant Installation

Compost is a better organic material source, is less likely to float, and should be placed in the invert and other low areas. Mulch should be placed in surrounding to a uniform thickness of 2" to 3". Shredded or chipped hardwood mulch is the only accepted mulch. Pine mulch and wood chips will float and move to the perimeter of the bioretention area during a storm event and are not acceptable. Shredded mulch must be well aged (6 to 12 months) for acceptance.

Rootstock of the plant material shall be kept moist during transport and on-site storage. The plant root ball should be planted so 1/8 th of the ball is above final grade surface. The diameter of the planting pit shall be at least six inches larger than the diameter of the planting ball. Set and maintain the plant straight during the entire planting process. Thoroughly water ground bed cover after installation.

Trees shall be braced using 2" by 2" stakes only as necessary and for the first growing season only. Stakes are to be equally spaced on the outside of the tree ball.

Grasses and legume seed should be drilled into the soil to a depth of at least one inch. Grass and legume plugs shall be planted following the non-grass ground cover planting specifications.

The topsoil specifications provide enough organic material to adequately supply nutrients from natural cycling. The primary function of the bioretention structure is to improve water quality. Adding fertilizers defeats, or at a minimum, impedes this goal. Only add fertilizer if wood chips or mulch are used to amend the soil. Rototill urea fertilizer at a rate of 2 pounds per 1000 square feet.

6. Underdrains

Underdrains should meet the following criteria:

Pipe- Should be 4?to 6?diameter, slotted or perforated rigid plastic pipe (ASTMF 758, Type PS 28, or AASHTO-M-278) in a gravel layer. The preferred material is slotted, 4" rigid pipe (e.g., PVC or HDPE).

Perforations – If perforated pipe is used, perforations should be 3/8" diameter located 6" on center with a minimum of four holes per row. Pipe shall be wrapped with a 1/4" (No. 4 or 4x4) galvanized hardware cloth.

Gravel – The gravel layer (No. 57 stone preferred) shall be at least 3" thick above and below the underdrain.

The main collector pipe shall be at a minimum 0.5% slope.

A rigid, non-perforated observation well must be provided (one per every 1,000 square feet) to provide a clean-out port and monitor performance of the filter.

A 4" layer of pea gravel (1/4" to 3/8" stone) shall be located between the filter media and underdrain to prevent migration of fines into the underdrain. This layer may be considered part of the filter bed when bed thickness exceeds 24".

The main collector pipe for underdrain systems shall be constructed at a minimum slope of 0.5%. Observation wells and/or clean-out pipes must be provided (one minimum per every 1000 square feet of surface area).

7. Miscellaneous

These practices may not be constructed until all contributing drainage area has been stabilized

STORMWATER MANAGEMENT MAINTENANCE NOTE

ALL STORMWATER MANAGEMENT FACILITIES WILL BE PRIVATELY OWNED AND MAINTAINED BY THE OXFORD SQUARE COMMERCIAL ASSOCIATION, INC. THE STREET TREES, PERFORATED UNDERDRAINS, FEEDERS, PLANTINGS AND SWALES WILL ALSO BE PRIVATELY OWNED AND MAINTAINED BY THE OXFORD SQUARE COMMERCIAL ASSOCIATION. HOWARD COUNTY WILL ONLY MAINTAIN THE INLET STRUCTURE WITHIN THE MICRO BIO-RETENTION FACILITIES ADJACENT TO THE RIGHT-OF-WAY.

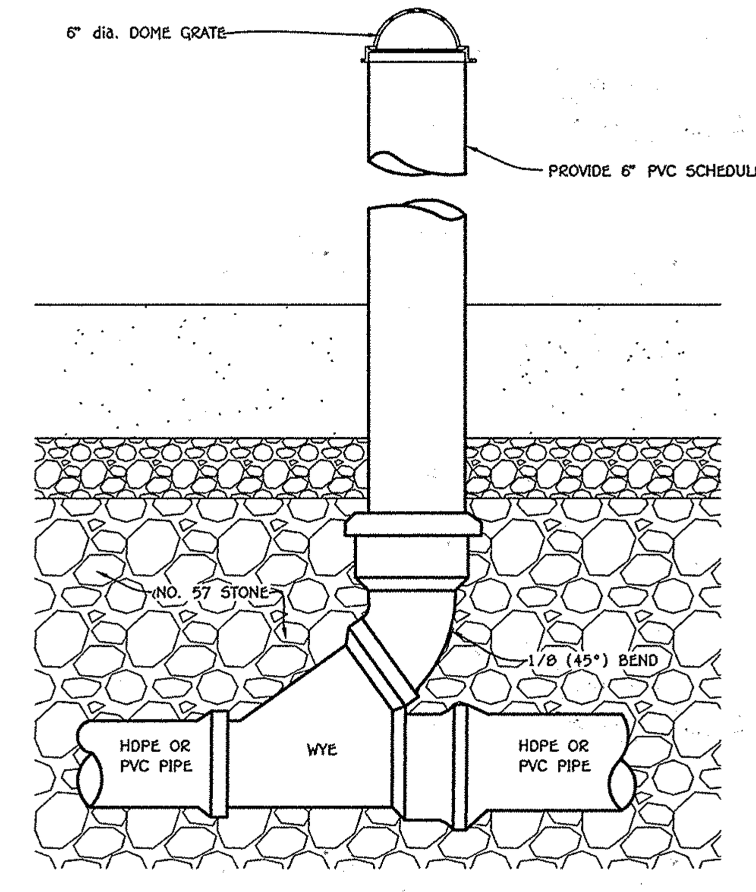

TYPICAL CLEAN-OUT DETAIL
NO SCALE

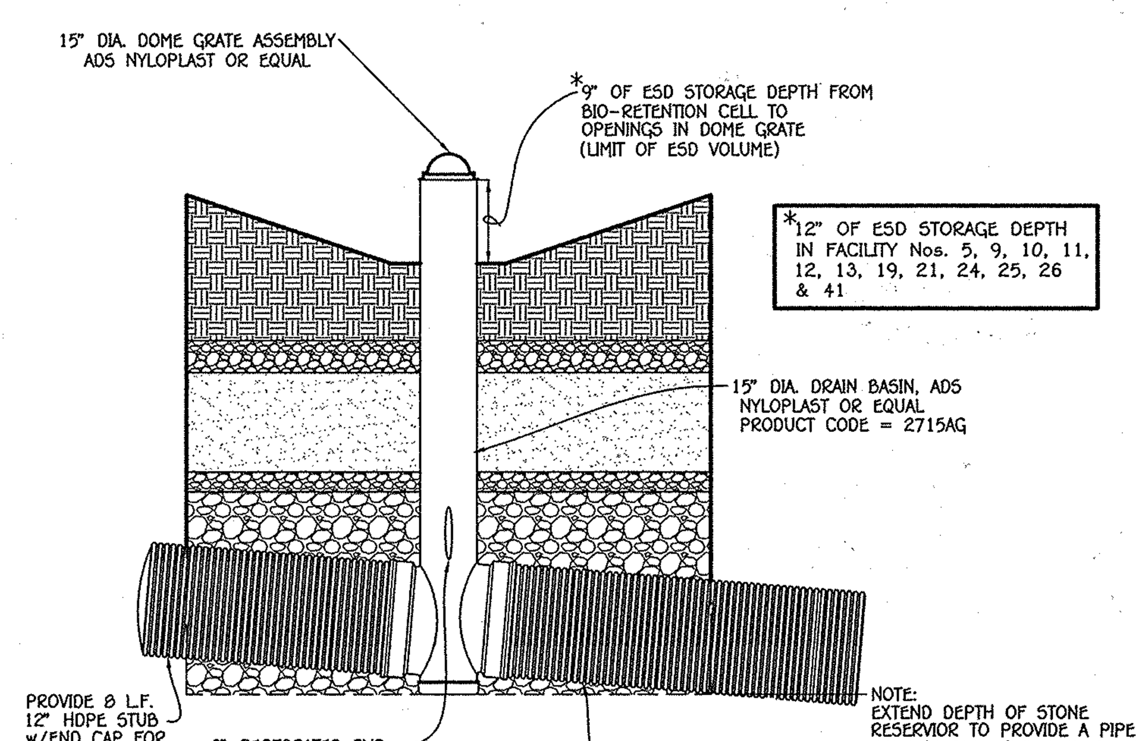

TYPICAL INLET STRUCTURE DETAIL @ BIO-RETENTION
NO SCALE

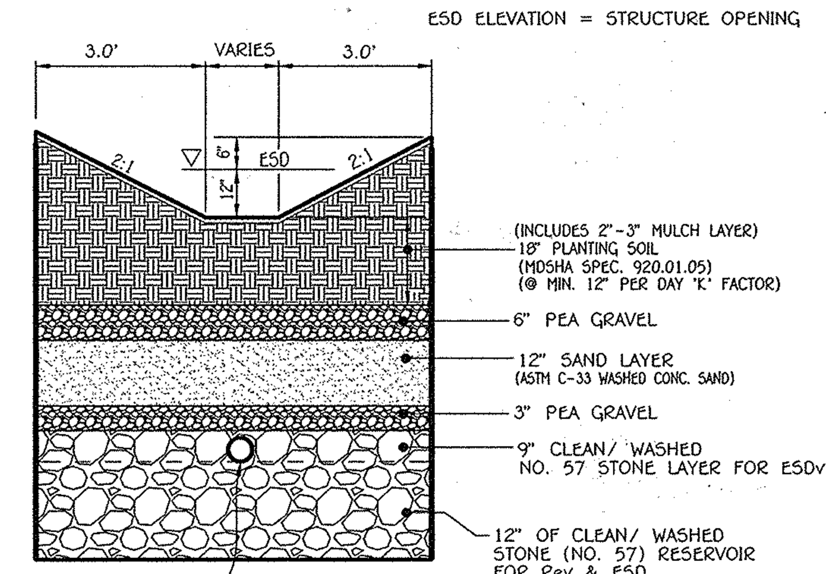

TYPICAL BIO-RETENTION (M-8) (WITHIN PARCEL)
NO SCALE

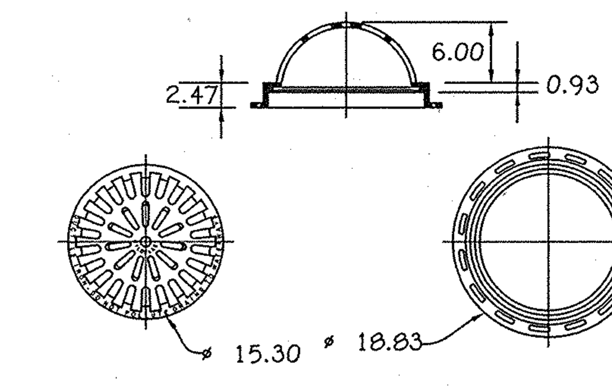

ALL DIMENSIONS IN INCHES UNLESS NOTED OTHERWISE
QUALITY: MATERIAL SHALL CONFORM TO ASTM A536 GRADE 70-50-05
PAINT: CASTINGS ARE FURNISHED WITH A BLACK PAINT LOCKING DEVICE AVAILABLE UPON REQUEST
SEE DRAWING NO. 7001-110-230

Nyloplast
3130 VERONA AVE
BUFORD, GA 30518
PHN (770) 932-2443
FAX (770) 932-2490
www.nyloplast-us.com

15" DOME GRATE ASSEMBLY
NYLOPLAST OR EQUAL

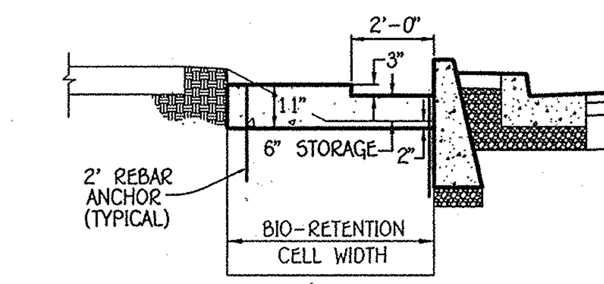

CONCRETE CHECK DAM DETAIL ADJACENT TO ON-STREET PARKING
NO SCALE

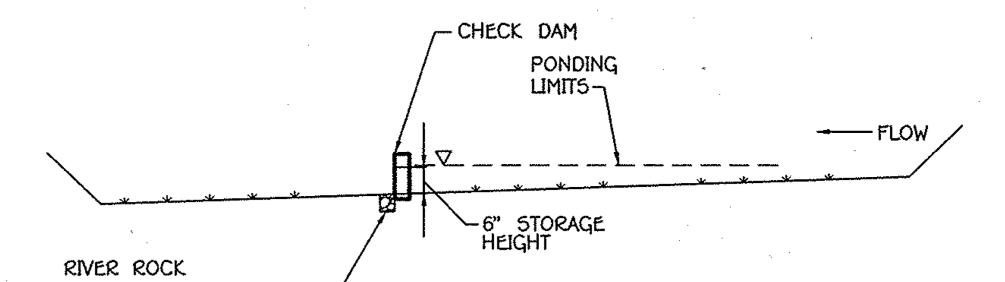

PROFILE

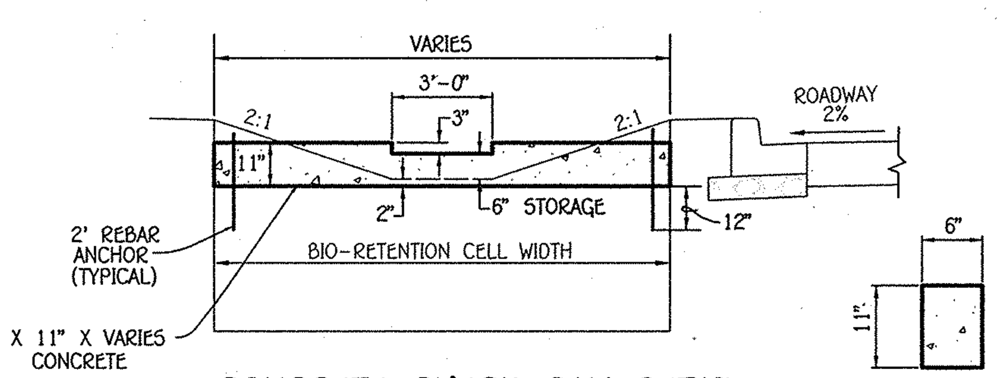

CONCRETE CHECK DAM DETAIL
NO SCALE

NOTE: SEE SHEETS 10, 11, 13, 14 & 15 FOR CHECK DAM LOCATIONS.

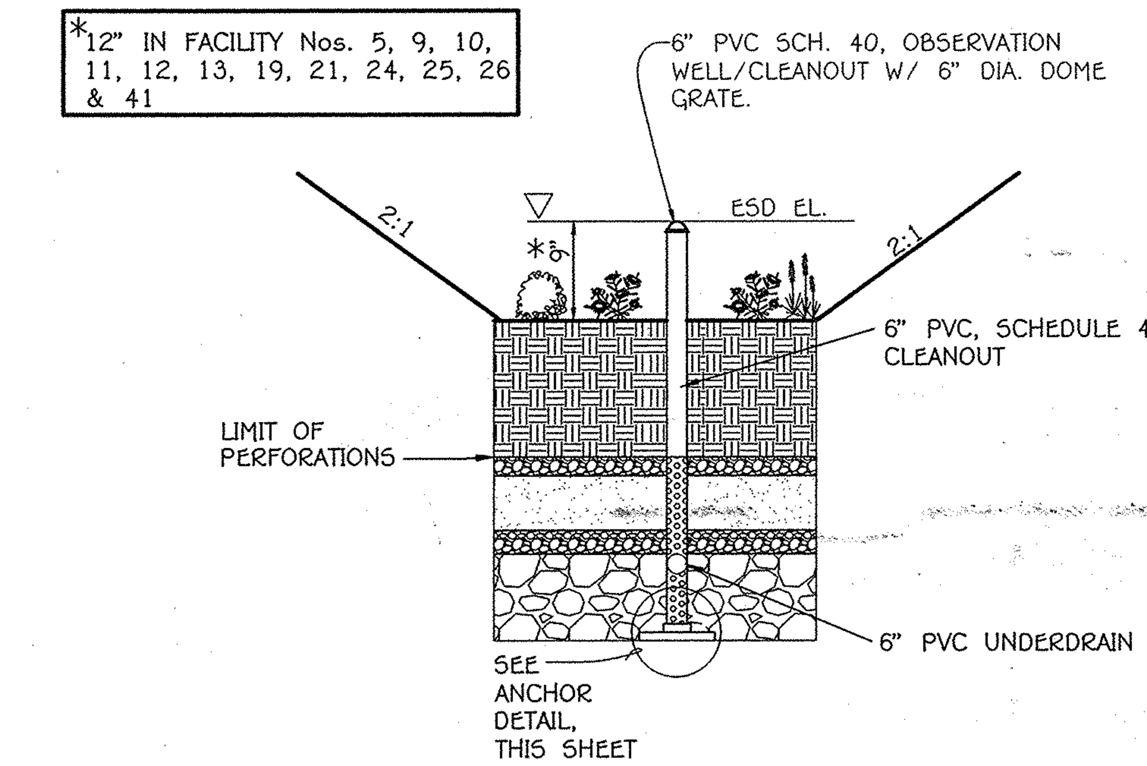

SECTION @ OBSERVATION WELL LOCATION
NOT TO SCALE

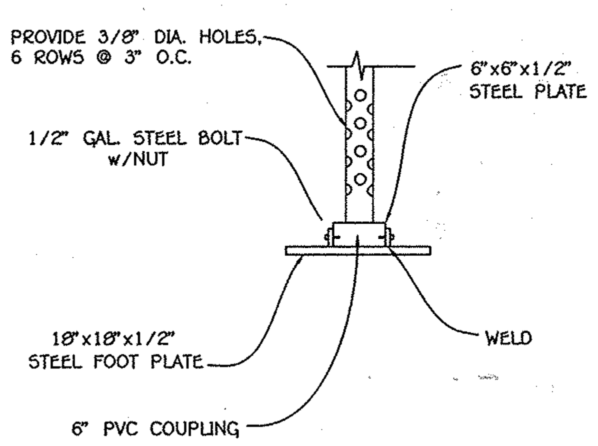

ANCHOR DETAIL
NO SCALE

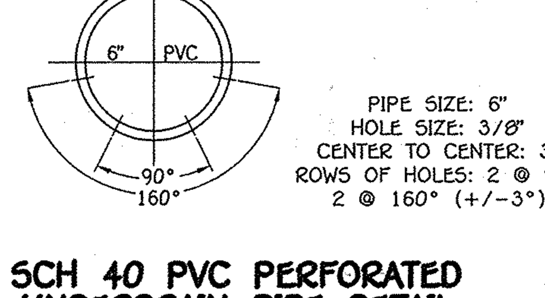

PIPE SIZE: 6"
HOLE SIZE: 3/8"
CENTER TO CENTER: 3"
ROWS OF HOLES: 2 @ 90°
2 @ 160° (+/-3°)

SCH 40 PVC PERFORATED UNDERDRAIN PIPE DETAIL FOR HORIZONTAL DRAIN PIPE
NO SCALE

NOTES:
UNDERDRAIN PIPE SHALL BE 4" TO 6" DIAMETER, SLOTTED OR PERFORATED RIGID PLASTIC PIPE (ASTMF 758, TYPE PS 28 OR AASHTO-M- 278) IN A GRAVEL LAYER. THE PREFERRED MATERIAL IS SLOTTED 4" RIGID PIPE (e.g., PVC OR HDPE).

PERFORATIONS SHALL BE 3/8" DIAMETER LOCATED 6" ON CENTER WITH A MINIMUM OF FOUR HOLES PER ROW. PIPE SHALL BE WRAPPED WITH A 1/4" (No. 4 OR 4 x 4) GALVANIZED HARDWARE CLOTH.

GRAVEL LAYER SHALL BE (No. 57 STONE PREFERRED) AT LEAST 3" THICK ABOVE AND BELOW THE UNDERDRAIN.

THE MAIN COLLECTOR PIPE SHALL BE AT A MINIMUM 0.5% SLOPE.

A RIGID, NON PERFORATED OBERSERVATION WELL MUST BE PROVIDED (ONE PER EVERY 1,000 SQ.FT.) TO PROVIDE A CLEANOUT PORT AND MONITOR PERFORMANCE OF THE FILTER.

A 4" LAYER OF PEA GRAVEL (1/8" TO 3/8" STONE) SHALL BE LOCATED BETWEEN THE FILTER MEDIA AND UNDERDRAIN TO PREVENT MIGRATION OF FINES INTO THE UNDERDRAIN. THIS LAYER MAY BE CONSIDERED PART OF THE FILTER BED WHEN BED THICKNESS EXCEEDS 24".

FISHER, COLLINS & CARTER, INC.
CIVIL ENGINEERING CONSULTANTS & LAND SURVEYORS
CENTENNIAL SQUARE OFFICE PARK - 10272 BALTIMORE NATIONAL PIKE
ELLICOTT CITY, MARYLAND 21042
(410) 461 - 2855

NO.	REVISION	DATE

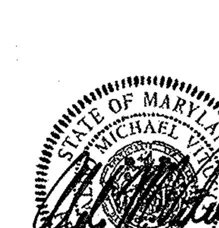

Owner/Builder
U.S. Home Corporation,
D/B/A Lennar
c/o Joseph Fortino, Vice President
10211 Wincopin Circle
Suite 300
Columbia, Maryland 21044
Ph# 410-423-0460

Developer
Preston • Scheffenacker Properties
2330 West Joppa Road, Suite 160
Lutherville, Maryland 21093-4614
Ph# 410-296-3800

APPROVED: HOWARD COUNTY DEPARTMENT OF PLANNING AND ZONING

Chief, Division of Land Development — Date 7/23/14
Chief, Development Engineering Division — Date 6-25-14
Director – Department of Planning and Zoning — Date 7-23-14

SUBDIVISION			SECTION/AREA		LOT Nos.
OXFORD SQUARE			----		3 THRU 103
PLAT NO.	BLOCK NO.	ZONE	TAX/ZONE	ELEC. DIST.	CENSUS TR.
22895-22898	---	TOD	38	1st.	601101

STORMWATER MANAGEMENT NOTES & DETAILS

OXFORD SQUARE
"A Howard County Green Neighborhood"
Lots 3 Thru 103, Open Space Lots 104 Thru 116 And Parcels 'N' And 'O'
(Being A Resubdivision Of Parcels 'F' And 'J', As Shown On Plats Entitled "Revision Plat, Oxford Square, "Green Neighborhood", Parcels 'C', 'E', 'F', 'G', 'I', 'J', 'K' And 'M' And Recorded Among The Land Records Of Howard County, Maryland As Plat Nos. 22856 Thru 22859.)
Zoned: TOD
Tax Map No.: 38 Grid No.: 20 Parcel No.: 761
First Election District Howard County, Maryland
Scale: As Shown
Date: June 6, 2014
Sheet 9 Of 38

SDP-13-068

I:\2009\09014\dwg\SDP (Lennar)\09014 Sheet 8-9 swm details.dwg, swm sheet 9, 6/9/2014 3:04:41 PM, 1:1

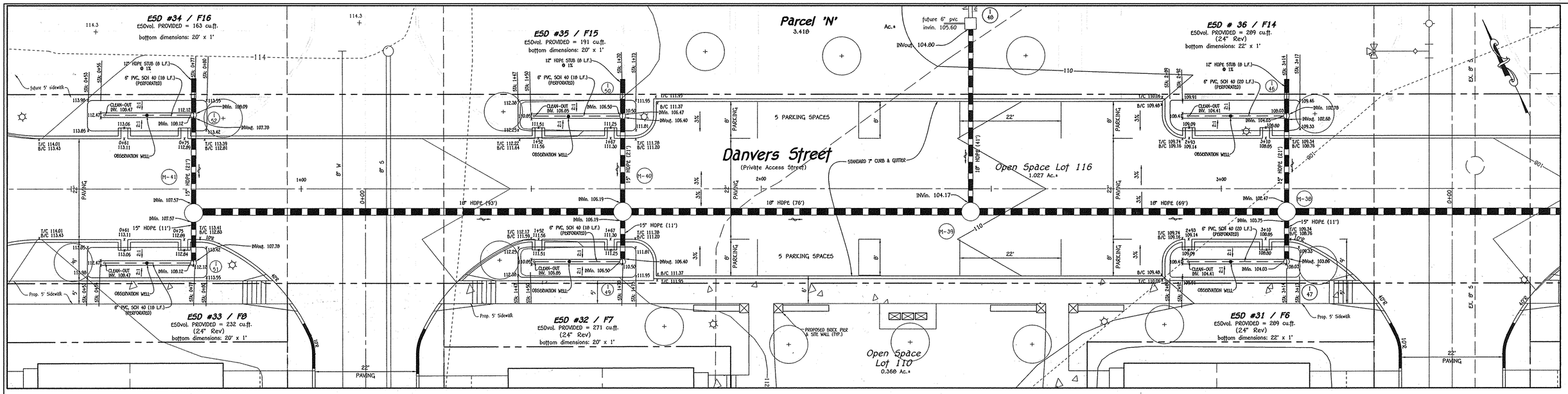

NOTE: THE F NUMBER (F34) IS THE SKETCH PLAN ESD NUMBER.

PROPOSED MICRO BIO-RETENTION (M-6)
ESD Nos. 31 thru 36 PLAN VIEW

SCALE: 1" = 10'

STORMWATER MANAGEMENT MAINTENANCE NOTE

ALL STORMWATER MANAGEMENT FACILITIES WILL BE PRIVATELY OWNED AND MAINTAINED BY THE OXFORD SQUARE COMMERCIAL ASSOCIATION, INC. THE STREET TREES, PERFORATED UNDERDRAINS, FEEDERS, PLANTINGS AND SWALES WILL ALSO BE PRIVATELY OWNED AND MAINTAINED BY THE OXFORD SQUARE COMMERCIAL ASSOCIATION. HOWARD COUNTY WILL ONLY MAINTAIN THE INLET STRUCTURE WITHIN THE MICRO BIO-RETENTION FACILITIES ADJACENT TO THE RIGHT-OF-WAY.

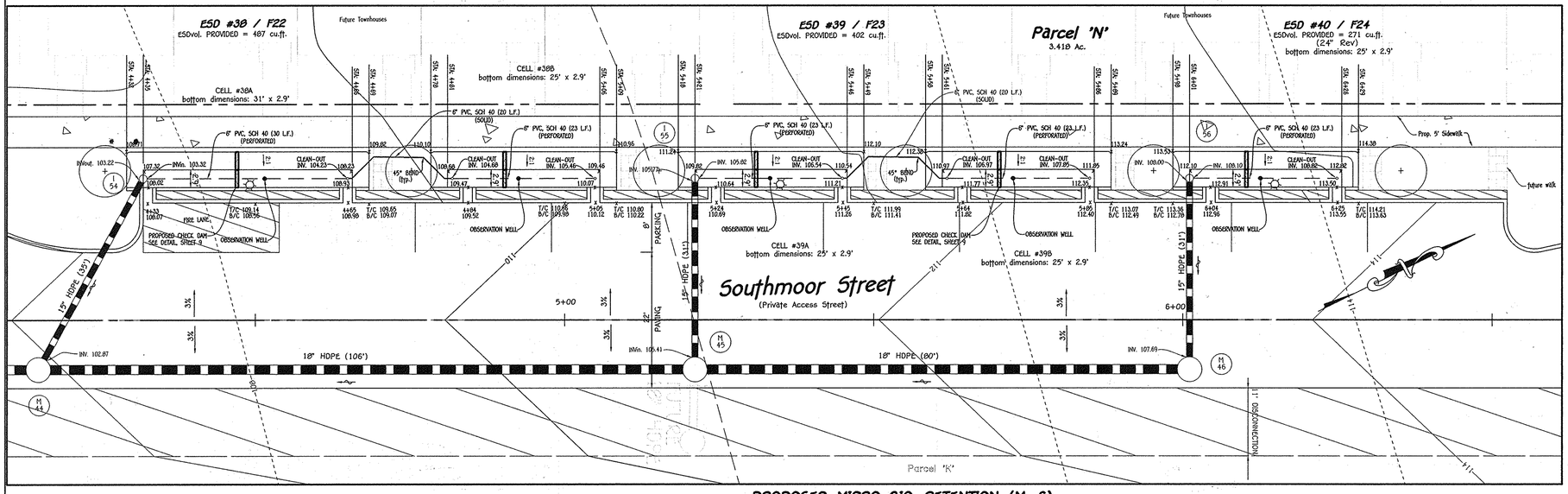

PROPOSED MICRO BIO-RETENTION (M-6)
ESD Nos. 38 thru 40 PLAN VIEW

SCALE: 1" = 10'

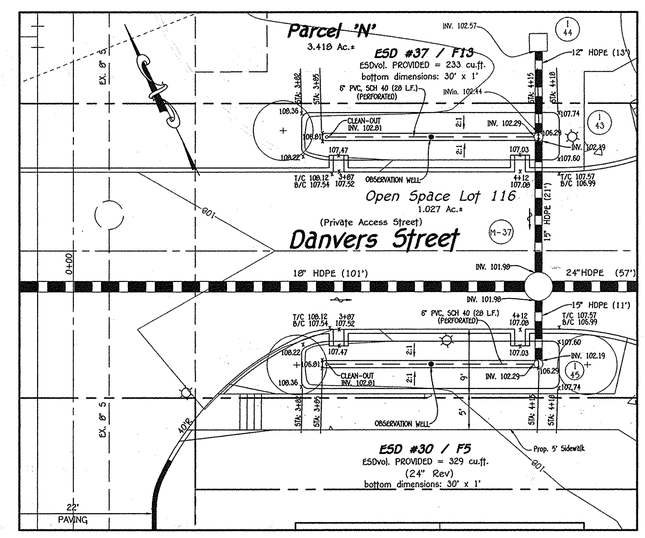

PROPOSED MICRO BIO-RETENTION (M-6)
ESD Nos. 30 & 37 PLAN VIEW

SCALE: 1" = 10'

0' 10' 15' 20'
Scale: 1" = 10'

FISHER, COLLINS & CARTER, INC.
CIVIL ENGINEERING CONSULTANTS & LAND SURVEYORS
CENTENNIAL SQUARE OFFICE PARK - 10272 BALTIMORE NATIONAL PIKE
ELLICOTT CITY, MARYLAND 21042
(410) 461 - 2855

NO.	REVISION	DATE

STATE OF MARYLAND — MICHAEL TRUITT — No. 20741 — PROFESSIONAL ENGINEER — 6-10-14

Owner/Builder
U.S. Home Corporation,
D/B/A Lennar
c/o Joseph Fortino, Vice President
10211 Wincopin Circle
Suite 300
Columbia, Maryland 21044
Ph# 410-423-0460

Developer
Preston • Scheffenacker Properties
2330 West Joppa Road, Suite 160
Lutherville, Maryland 21093-4614
Ph# 410-296-3800

APPROVED: HOWARD COUNTY DEPARTMENT OF PLANNING AND ZONING

Kent Sheubrooks — Chief, Division of Land Development — 7/23/14 Date

Chief, Development Engineering Division — 6-25-14 Date

Director - Department of Planning and Zoning — 7-23-14 Date

SUBDIVISION			SECTION/AREA		LOT Nos.
OXFORD SQUARE			----		3 THRU 103
PLAT NO.	BLOCK NO.	ZONE	TAX/ZONE	ELEC. DIST.	CENSUS TR.
22895-22898	---	TOD	30	1st.	601101

STORMWATER MANAGEMENT NOTES & DETAILS

OXFORD SQUARE

"A Howard County Green Neighborhood"

Lots 3 Thru 103, Open Space Lots 104 Thru 116 And Parcels 'N' And 'O'

(Being A Resubdivision Of Parcels 'F' And 'J', As Shown On Plats Entitled "Revision Plat, Oxford Square, "Green Neighborhood", Parcels 'C', 'E', 'F', 'G', 'I', 'J', 'K' And 'M' And Recorded Among The Land Records Of Howard County, Maryland As Plat Nos. 22856 Thru 22859.)
Zoned: TOD

Tax Map No.: 30 Grid No.: 20 Parcel No.: 761
First Election District Howard County, Maryland
Scale: As Shown
Date: June 6, 2014
Sheet 10 Of 30

SDP-13-068

I:\2009\09014\dwg\SDP (Lennar)\09014 Sheet 10-17 swm plans.dwg, swm sheet 10, 6/9/2014 2:47:50 PM, 1:1

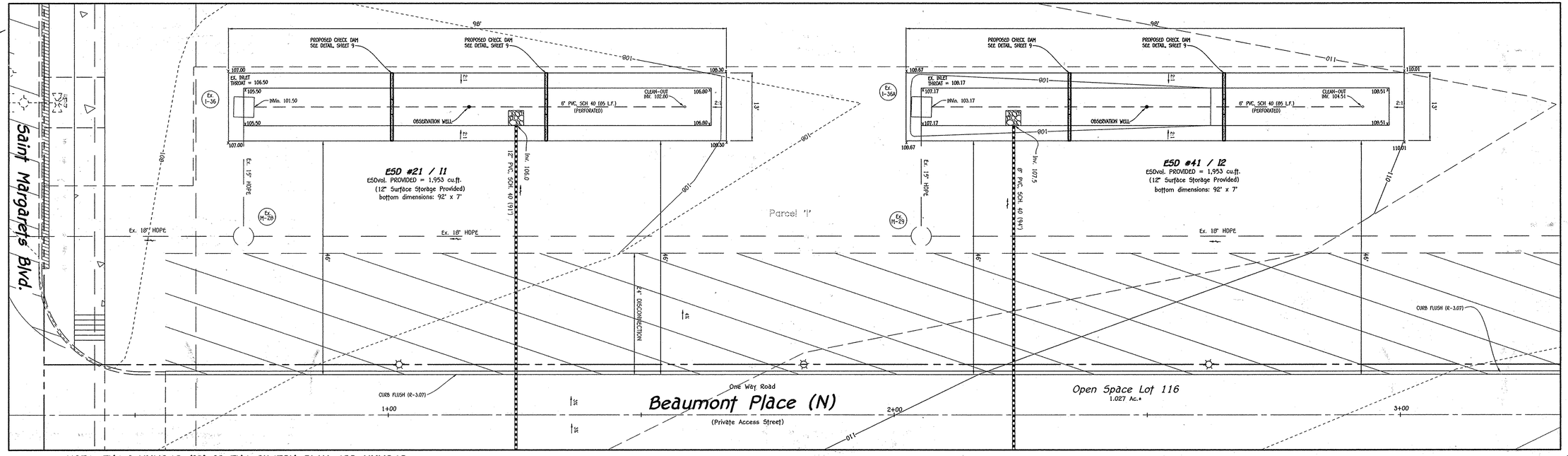

NOTE: THE I NUMBER (12) IS THE SKETCH PLAN ESD NUMBER.

PROPOSED BIO-RETENTION (F-3) ESD Nos. 21 & 41 PLAN VIEW

SCALE: 1" = 10'

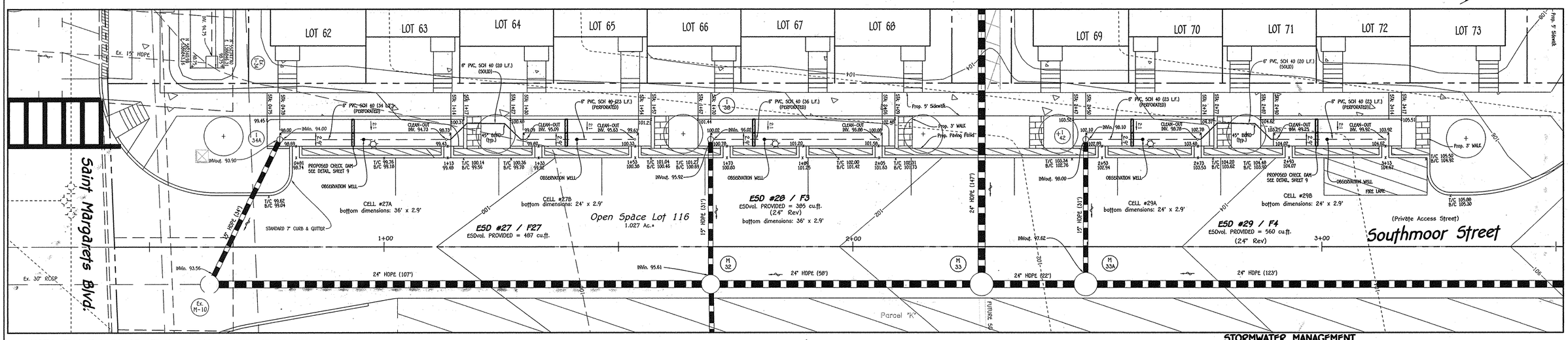

NOTE: THE F NUMBER (F34) IS THE SKETCH PLAN ESD NUMBER.

PROPOSED MICRO BIO-RETENTION (M-6) ESD Nos. 27 THRU 29 PLAN VIEW

SCALE: 1" = 10'

STORMWATER MANAGEMENT MAINTENANCE NOTE

ALL STORMWATER MANAGEMENT FACILITIES WILL BE PRIVATELY OWNED AND MAINTAINED BY THE OXFORD SQUARE COMMERCIAL ASSOCIATION, INC. THE STREET TREES, PERFORATED UNDERDRAINS, FEEDERS, PLANTINGS AND SWALES WILL ALSO BE PRIVATELY OWNED AND MAINTAINED BY THE OXFORD SQUARE COMMERCIAL ASSOCIATION. HOWARD COUNTY WILL ONLY MAINTAIN THE INLET STRUCTURE WITHIN THE MICRO BIO-RETENTION FACILITIES ADJACENT TO THE RIGHT-OF-WAY.

0' 10' 15' 20'
Scale: 1" = 10'

FISHER, COLLINS & CARTER, INC.
CIVIL ENGINEERING CONSULTANTS & LAND SURVEYORS
CENTENNIAL SQUARE OFFICE PARK – 10272 BALTIMORE NATIONAL PIKE
ELLICOTT CITY, MARYLAND 21042
(410) 461 – 2855

NO.	REVISION	DATE

STATE OF MARYLAND – MICHAEL D. WEAVER – No. 20240 – PROFESSIONAL ENGINEER
6-10-14

Owner/Builder
U.S. Home Corporation,
D/B/A Lennar
c/o Joseph Fortino, Vice President
10211 Wincopin Circle
Suite 300
Columbia, Maryland 21044
Ph# 410-423-0460

Developer
Preston • Scheffenacker Properties
2330 West Joppa Road, Suite 160
Lutherville, Maryland 21093-4614
Ph# 410-296-3800

APPROVED: HOWARD COUNTY DEPARTMENT OF PLANNING AND ZONING

Kate Calloway — Chief, Division of Land Development — 7/28/14 Date
Chief, Development Engineering Division — 6-25-14 Date
Director – Department of Planning and Zoning — 7-23-14 Date

SUBDIVISION		SECTION/AREA	LOT Nos.
OXFORD SQUARE		----	3 THRU 103
PLAT NO.	BLOCK NO.	ZONE	TAX/ZONE	ELEC. DIST.	CENSUS TR.
22895-22898	---	TOD	30	1st.	601101

STORMWATER MANAGEMENT NOTES & DETAILS

OXFORD SQUARE

"A Howard County Green Neighborhood"

Lots 3 Thru 103, Open Space Lots 104 Thru 116 And Parcels 'N' And 'O'

(Being A Resubdivision Of Parcels "F" And "J", As Shown On Plats Entitled "Revision Plat, Oxford Square, "Green Neighborhood", Parcels "C", "E", "F", "G", "I", "J", "K" And "M" And Recorded Among The Land Records Of Howard County, Maryland As Plat Nos. 22856. Thru 22859.)
Zoned: TOD

Tax Map No.: 30 Grid No.: 20 Parcel No.: 761
First Election District Howard County, Maryland
Scale: As Shown
Date: June 6, 2014
Sheet 11 Of 30

SDP-13-068

I:\2009\09214\dwg\SDP (Lennar)\09214 Sheet 10-17 swm plans.dwg, swm sheet 11, 6/9/2014 2:41:07 PM, 1:1

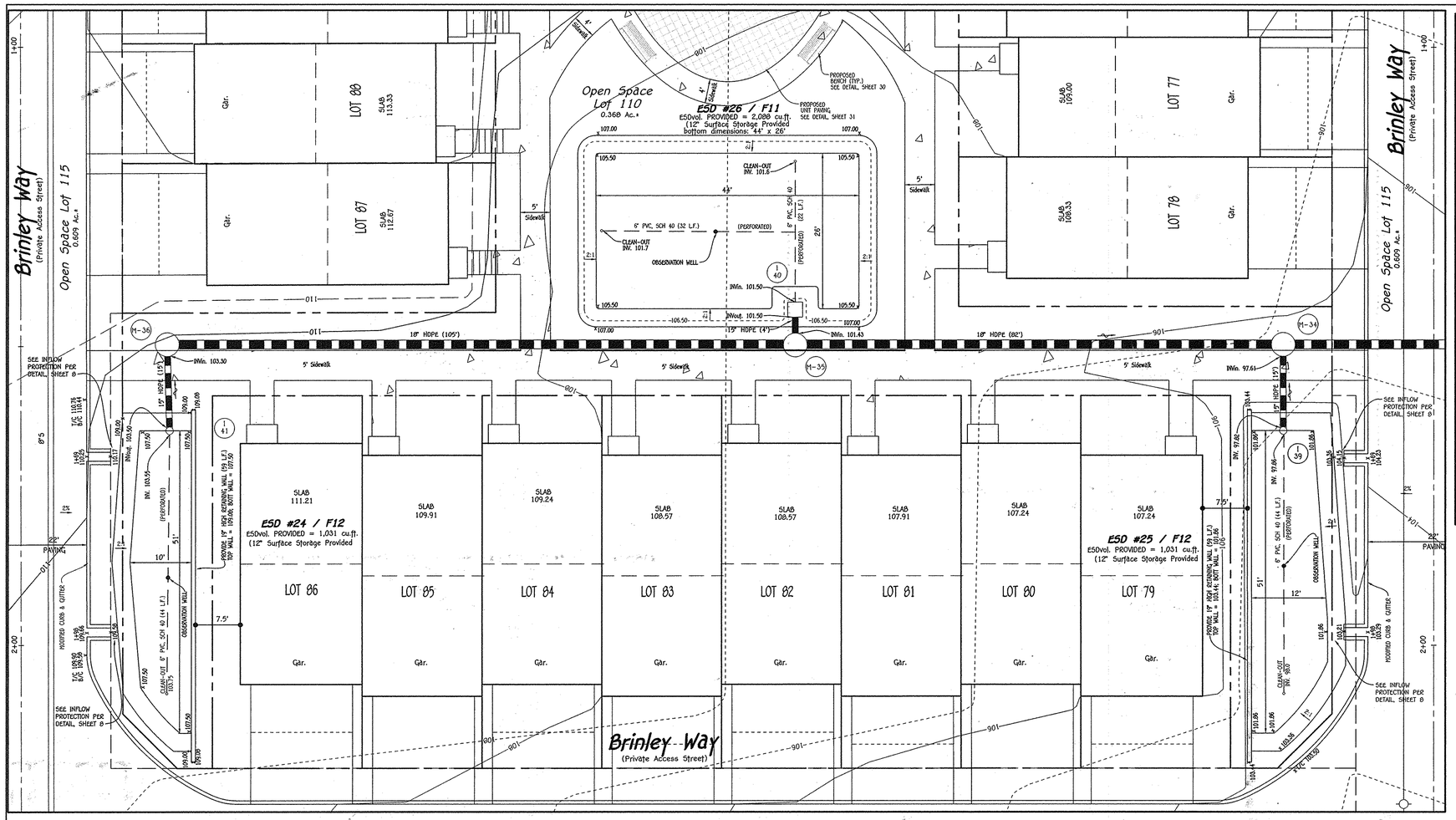

PROPOSED BIO-RETENTION (F-3)
ESD Nos. 24 THRU 26 PLAN VIEW
SCALE: 1" = 10'

NOTE: THE F NUMBER (F34) IS THE SKETCH PLAN ESD NUMBER.

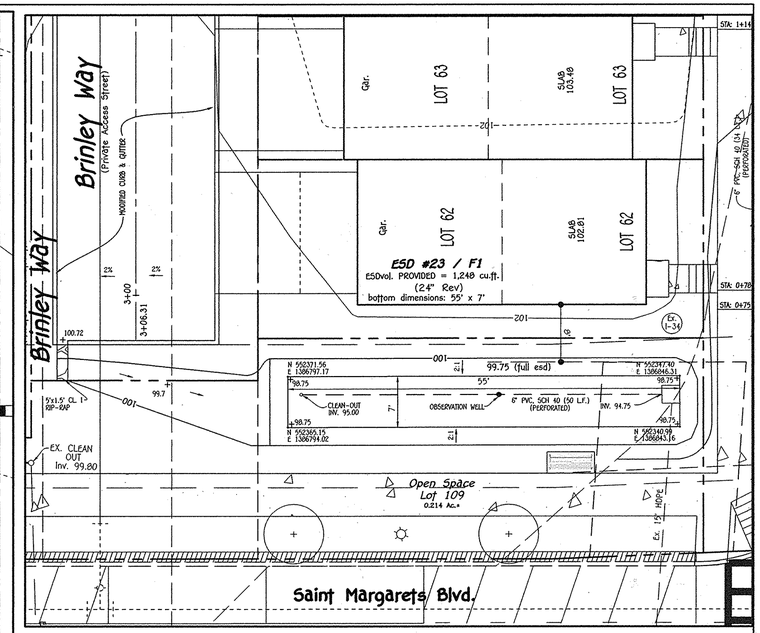

PROPOSED BIO-RETENTION (F-3)
ESD No. 23 PLAN VIEW
SCALE: 1" = 10'

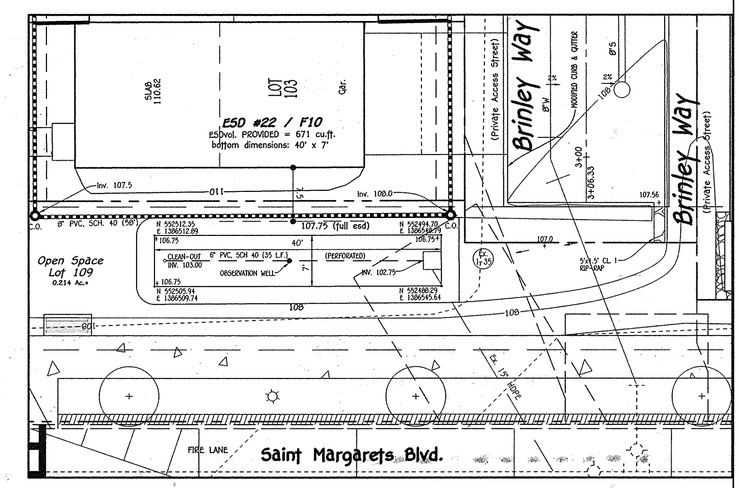

PROPOSED MICRO BIO-RETENTION (M-6)
ESD No. 22 PLAN VIEW
SCALE: 1" = 10'

STORMWATER MANAGEMENT MAINTENANCE NOTE

ALL STORMWATER MANAGEMENT FACILITIES WILL BE PRIVATELY OWNED AND MAINTAINED BY THE OXFORD SQUARE COMMERCIAL ASSOCIATION, INC. THE STREET TREES, PERFORATED UNDERDRAINS, FEEDERS, PLANTINGS AND SWALES WILL ALSO BE PRIVATELY OWNED AND MAINTAINED BY THE OXFORD SQUARE COMMERCIAL ASSOCIATION. HOWARD COUNTY WILL ONLY MAINTAIN THE INLET STRUCTURE WITHIN THE MICRO BIO-RETENTION FACILITIES ADJACENT TO THE RIGHT-OF-WAY.

0' 10' 15' 20'
Scale: 1" = 10'

FISHER, COLLINS & CARTER, INC.
CIVIL ENGINEERING CONSULTANTS & LAND SURVEYORS
CENTENNIAL SQUARE OFFICE PARK - 10272 BALTIMORE NATIONAL PIKE
ELLICOTT CITY, MARYLAND 21042
(410) 461 - 2855

NO.	REVISION	DATE

STATE OF MARYLAND
MICHAEL V. KOLB
No. 29748
PROFESSIONAL ENGINEER
6-10-14

Owner/Builder
U.S. Home Corporation,
D/B/A Lennar
c/o Joseph Fortino, Vice President
10211 Wincopin Circle
Suite 300
Columbia, Maryland 21044
Ph# 410-423-0460

Developer
Preston • Scheffenacker Properties
2330 West Joppa Road, Suite 160
Lutherville, Maryland 21093-4614
Ph# 410-296-3800

APPROVED: HOWARD COUNTY DEPARTMENT OF PLANNING AND ZONING

Chief, Division of Land Development — Date: 7/23/14

Chief, Development Engineering Division — Date: 6-25-14

Director - Department of Planning and Zoning — Date: 7-23-14

SUBDIVISION	SECTION/AREA	LOT Nos.
OXFORD SQUARE	----	3 THRU 103

PLAT NO.	BLOCK NO.	ZONE	TAX/ZONE	ELEC. DIST.	CENSUS TR.
22895-22898	---	TOD	38	1st.	601101

STORMWATER MANAGEMENT NOTES & DETAILS

OXFORD SQUARE

"A Howard County Green Neighborhood"

Lots 3 Thru 103, Open Space Lots 104 Thru 116 And Parcels 'N' And 'O'

(Being A Resubdivision Of Parcels 'F' And 'J', As Shown On Plats Entitled "Revision Plat, Oxford Square, "Green Neighborhood", Parcels 'C', 'E', 'F', 'G', 'I', 'J', 'K' And 'M' And Recorded Among The Land Records Of Howard County, Maryland As Plat Nos. 22856 Thru 22859.)
Zoned: TOD

Tax Map No.: 38 Grid No.: 20 Parcel No.: 761
First Election District Howard County, Maryland
Scale: As Shown
Date: June 6, 2014
Sheet 12 Of 38

SDP-13-068

I:\2009\09014\dwg\SDP (Lennar)\09014 Sheet 10-17 swm plans.dwg, swm sheet 12, 6/9/2014 2:27:42 PM, 1:1

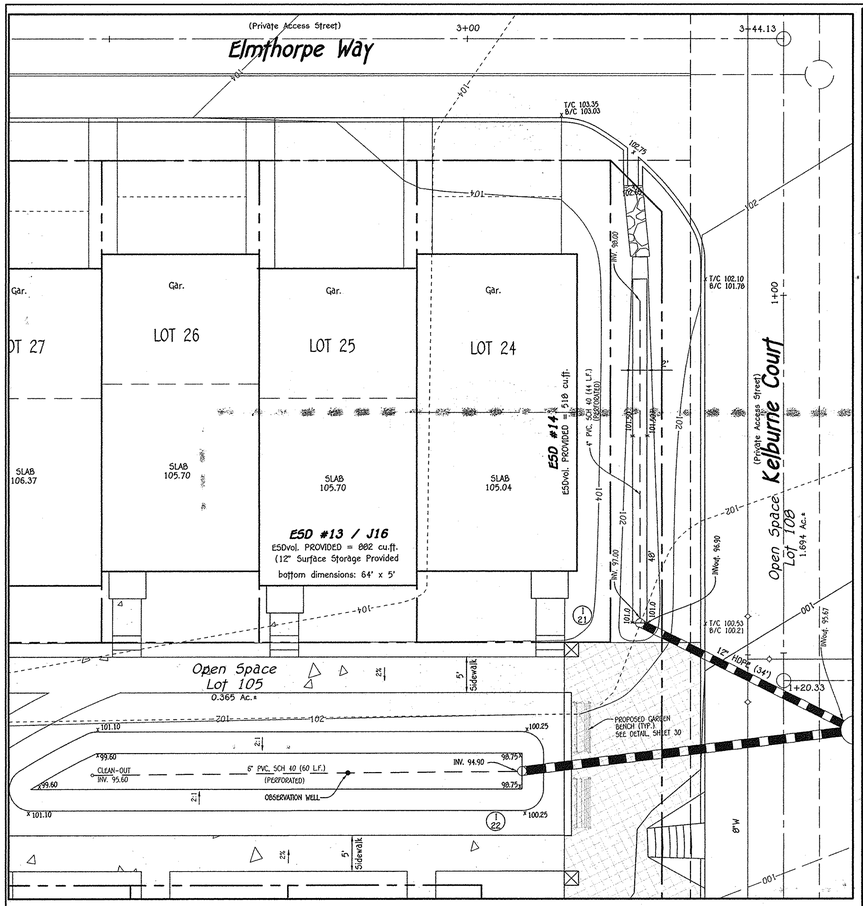

PROPOSED MICRO BIO-RETENTION (M-6)
& BIO-SWALE (M-8)
E5D Nos. 13 & 14 PLAN VIEW
SCALE: 1" = 10'

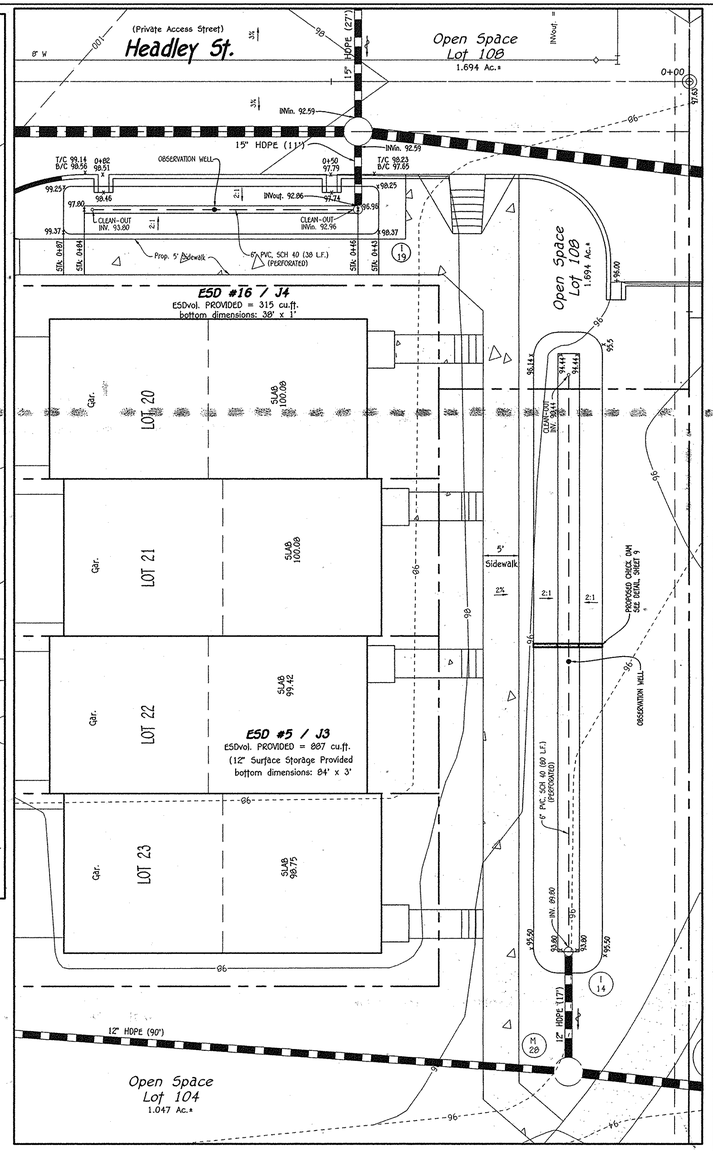

PROPOSED MICRO BIO-RETENTION (M-6)
E5D Nos. 5 & 16 PLAN VIEW
SCALE: 1" = 10'

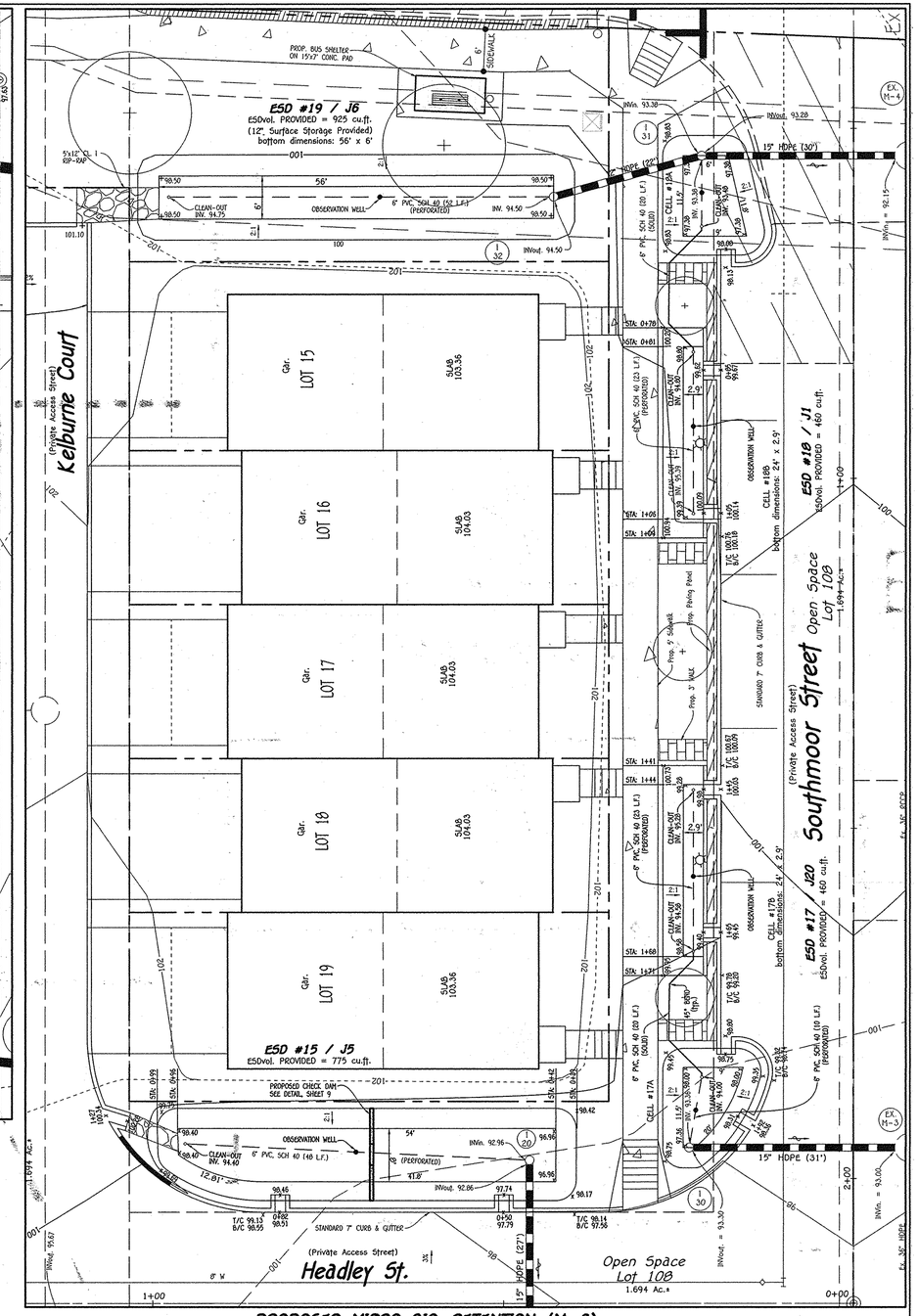

PROPOSED MICRO BIO-RETENTION (M-6)
E5D Nos.15, 17 THRU 19 PLAN VIEW
SCALE: 1" = 10'

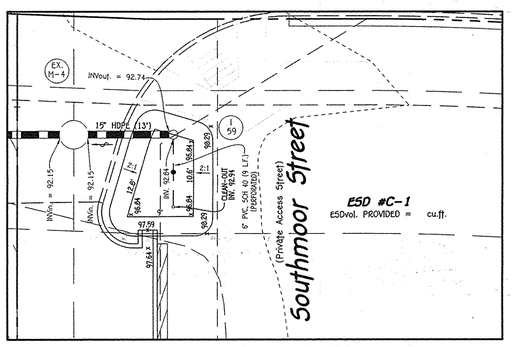

PROPOSED MICRO BIO-RETENTION (M-6)
E5D No. C-1 PLAN VIEW
SCALE: 1" = 10'

STORMWATER MANAGEMENT MAINTENANCE NOTE

ALL STORMWATER MANAGEMENT FACILITIES WILL BE PRIVATELY OWNED AND MAINTAINED BY THE OXFORD SQUARE COMMERCIAL ASSOCIATION, INC. THE STREET TREES, PERFORATED UNDERDRAINS, FEEDERS, PLANTINGS AND SWALES WILL ALSO BE PRIVATELY OWNED AND MAINTAINED BY THE OXFORD SQUARE COMMERCIAL ASSOCIATION. HOWARD COUNTY WILL ONLY MAINTAIN THE INLET STRUCTURE WITHIN THE MICRO BIO-RETENTION FACILITIES ADJACENT TO THE RIGHT-OF-WAY.

NOTE: THE J NUMBER (J20) IS THE SKETCH PLAN ESD NUMBER.

0' 10' 15' 20'
Scale: 1" = 10'

FISHER, COLLINS & CARTER, INC.
CIVIL ENGINEERING CONSULTANTS & LAND SURVEYORS
CENTENNIAL SQUARE OFFICE PARK - 10272 BALTIMORE NATIONAL PIKE
ELLICOTT CITY, MARYLAND 21042
(410) 461 - 2855

NO.	REVISION	DATE

STATE OF MARYLAND
MICHAEL J. WALSH
No. 20240
PROFESSIONAL ENGINEER
6-10-14

Owner/Builder
U.S. Home Corporation,
D/B/A Lennar
c/o Joseph Fortino, Vice President
10211 Wincopin Circle
Suite 300
Columbia, Maryland 21044
Ph# 410-423-0460

Developer
Preston • Scheffenacker Properties
2330 West Joppa Road, Suite 160
Lutherville, Maryland 21093-4614
Ph# 410-296-3600

APPROVED: HOWARD COUNTY DEPARTMENT OF PLANNING AND ZONING

Kent Sheubrooks — Chief, Division of Land Development — 7/23/14 Date
Chief, Development Engineering Division — 6-25-14 Date
Director - Department of Planning and Zoning — 7-23-14 Date

SUBDIVISION			SECTION/AREA		LOT Nos.
OXFORD SQUARE			----		3 THRU 103
PLAT NO.	BLOCK NO.	ZONE	TAX/ZONE	ELEC. DIST.	CENSUS TR.
22895-22898	---	TOD	30	1st.	601101

STORMWATER MANAGEMENT NOTES & DETAILS

OXFORD SQUARE

"A Howard County Green Neighborhood"

Lots 3 Thru 103, Open Space Lots 104 Thru 116 And Parcels 'N' And 'O'

(Being A Resubdivision Of Parcels 'F' And 'J', As Shown On Plats Entitled "Revision Plat, Oxford Square, "Green Neighborhood", Parcels 'C', 'E', 'F', 'G', 'I', 'J', 'K' And 'M' And Recorded Among The Land Records Of Howard County, Maryland As Plat Nos. 22896 Thru 22899.)
Zoned: TOD

Tax Map No.: 30 Grid No.: 20 Parcel No.: 761
First Election District Howard County, Maryland
Scale: As Shown
Date: June 6, 2014
Sheet 13 Of 30

SDP-13-068

I:\2009\09014\dwg\SDP (Lennar)\09014 Sheet 10-17 swm plans.dwg, swm sheet 13, 6/9/2014 2:25:22 PM, 1:1

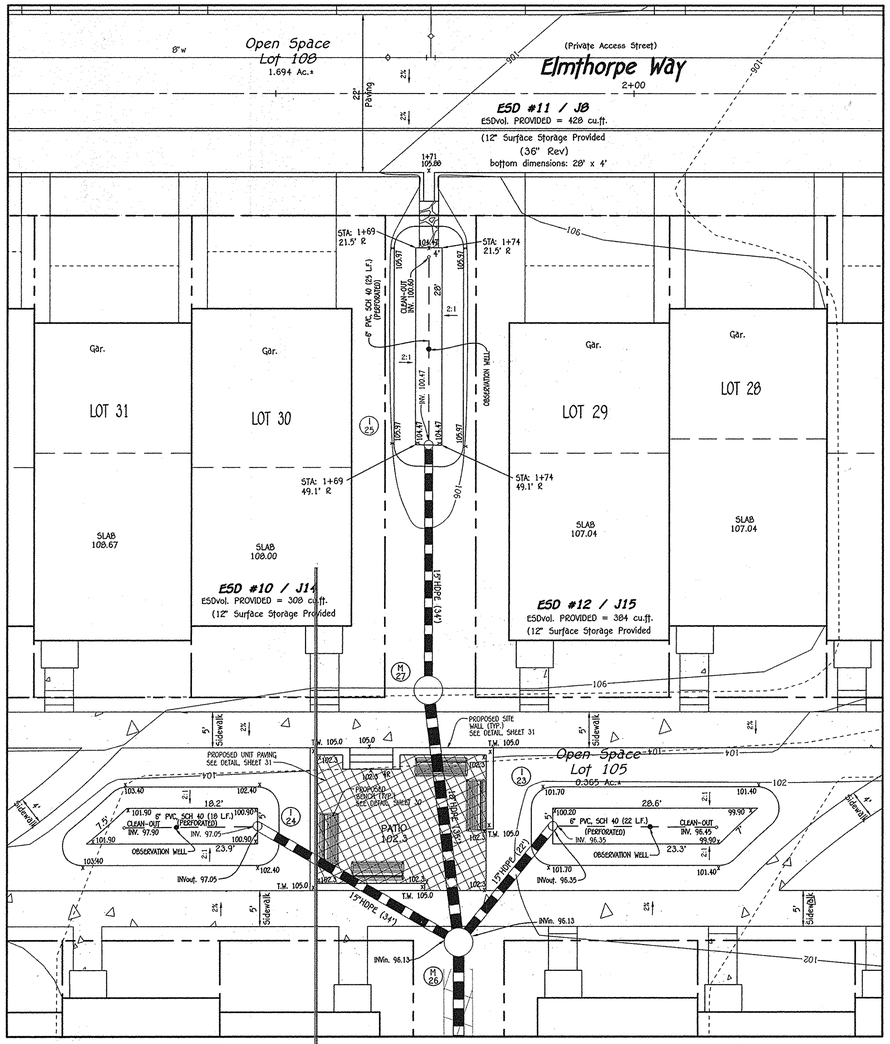

PROPOSED MICRO BIO-RETENTION (M-6)
ESD Nos. 10 THRU 12 PLAN VIEW

SCALE: 1" = 10'

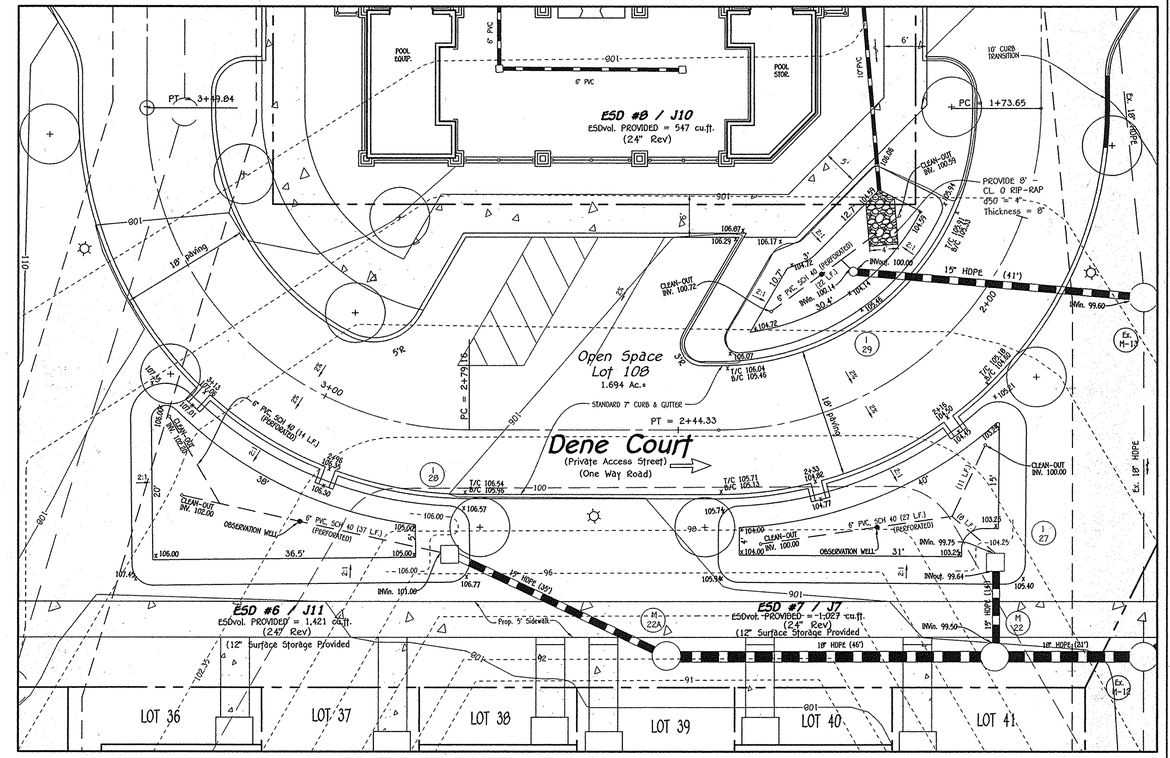

PROPOSED MICRO BIO-RETENTION (M-6)
ESD No. 8 AND
PROPOSED BIO-RETENTION (F-3)
ESD Nos. 6 & 7 PLAN VIEW

SCALE: 1" = 10'

NOTE: THE J NUMBER (J20) IS THE SKETCH PLAN ESD NUMBER.

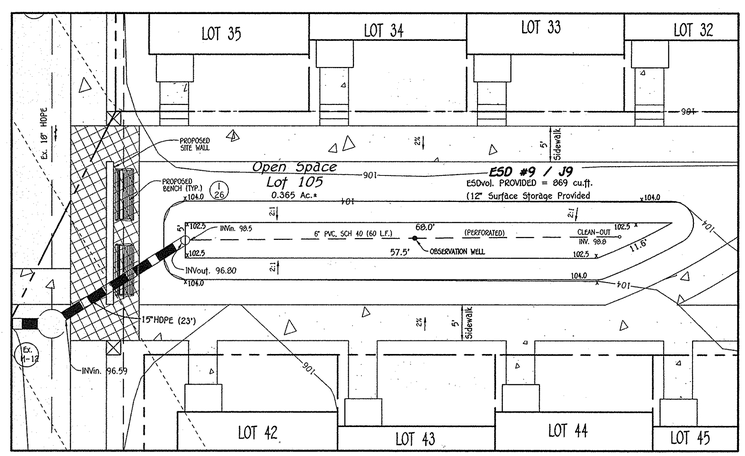

PROPOSED MICRO BIO-RETENTION (M-6)
ESD No. 9 PLAN VIEW

SCALE: 1" = 10'

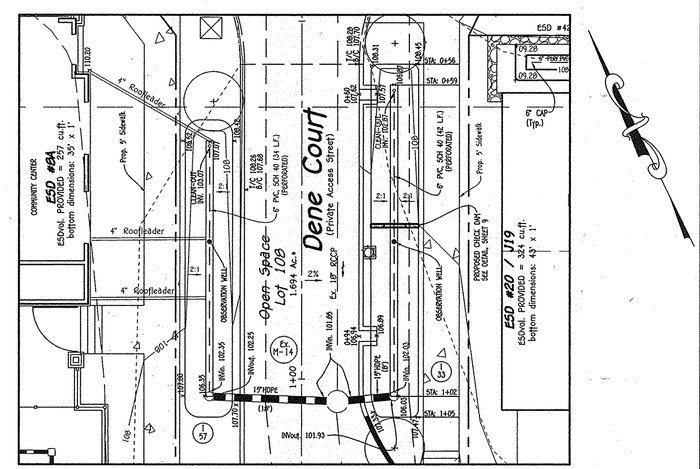

PROPOSED MICRO BIO-RETENTION (M-6)
ESD Nos. 8A & 20 PLAN VIEW

SCALE: 1" = 10'

Scale: 1" = 10'

STORMWATER MANAGEMENT MAINTENANCE NOTE

ALL STORMWATER MANAGEMENT FACILITIES WILL BE PRIVATELY OWNED AND MAINTAINED BY THE OXFORD SQUARE COMMERCIAL ASSOCIATION, INC. THE STREET TREES, PERFORATED UNDERDRAINS, FEEDERS, PLANTINGS AND SWALES WILL ALSO BE PRIVATELY OWNED AND MAINTAINED BY THE OXFORD SQUARE COMMERCIAL ASSOCIATION. HOWARD COUNTY WILL ONLY MAINTAIN THE INLET STRUCTURE WITHIN THE MICRO BIO-RETENTION FACILITIES ADJACENT TO THE RIGHT-OF-WAY.

FISHER, COLLINS & CARTER, INC.
CIVIL ENGINEERING CONSULTANTS & LAND SURVEYORS
CENTENNIAL SQUARE OFFICE PARK - 10272 BALTIMORE NATIONAL PIKE
ELLICOTT CITY, MARYLAND 21042
(410) 461 - 2855

NO.	REVISION	DATE
1	REVISE COMMUNITY CENTER AND POOL AREA	10/3/14

STATE OF MARYLAND — MICHAEL S. PALUMBO — No. 20748 — PROFESSIONAL ENGINEER — 12/9/14

Owner/Builder

U.S. Home Corporation,
D/B/A Lennar
c/o Joseph Fortino, Vice President
10211 Wincopin Circle
Suite 300
Columbia, Maryland 21044
Ph# 410-423-0460

Developer

Preston • Scheffenacker Properties
2330 West Joppa Road, Suite 160
Lutherville, Maryland 21093-4614
Ph# 410-296-3800

APPROVED: HOWARD COUNTY DEPARTMENT OF PLANNING AND ZONING

Kent Sheubrooks — Chief, Division of Land Development — 2-3-15 Date

Chief, Development Engineering Division — 1-22-15 Date

Director - Department of Planning and Zoning — 2/2/15 Date

SUBDIVISION	SECTION/AREA	LOT Nos.
OXFORD SQUARE	----	3 THRU 103

PLAT NO.	BLOCK NO.	ZONE	TAX/ZONE	ELEC. DIST.	CENSUS TR.
22895-22898	---	TOD	38	1st.	601101

REVISED
STORMWATER MANAGEMENT NOTES & DETAILS

OXFORD SQUARE

"A Howard County Green Neighborhood"

Lots 3 Thru 103, Open Space Lots 104 Thru 116 And Parcels 'N' And 'O'

(Being A Resubdivision Of Parcels 'F' And 'J', As Shown On Plats Entitled "Revision Plat, Oxford Square, "Green Neighborhood", Parcels 'C', 'E', 'F', 'G', 'I', 'J', 'K' And 'M' And Recorded Among The Land Records Of Howard County, Maryland As Plat Nos. 22896 Thru 22899)
Zoned: TOD

Tax Map No.: 38 Grid No.: 20 Parcel No.: 761
First Election District Howard County, Maryland
Scale: As Shown
Date: June 6, 2014
Sheet 14 Of 38

SDP-13-068

E:\2008\08061\Hdwg\SDP (Lennar)\Pond Area Rodlet\sheet 14 mplot.dwg, 12/8/2014 8:42:31 AM, 1:1

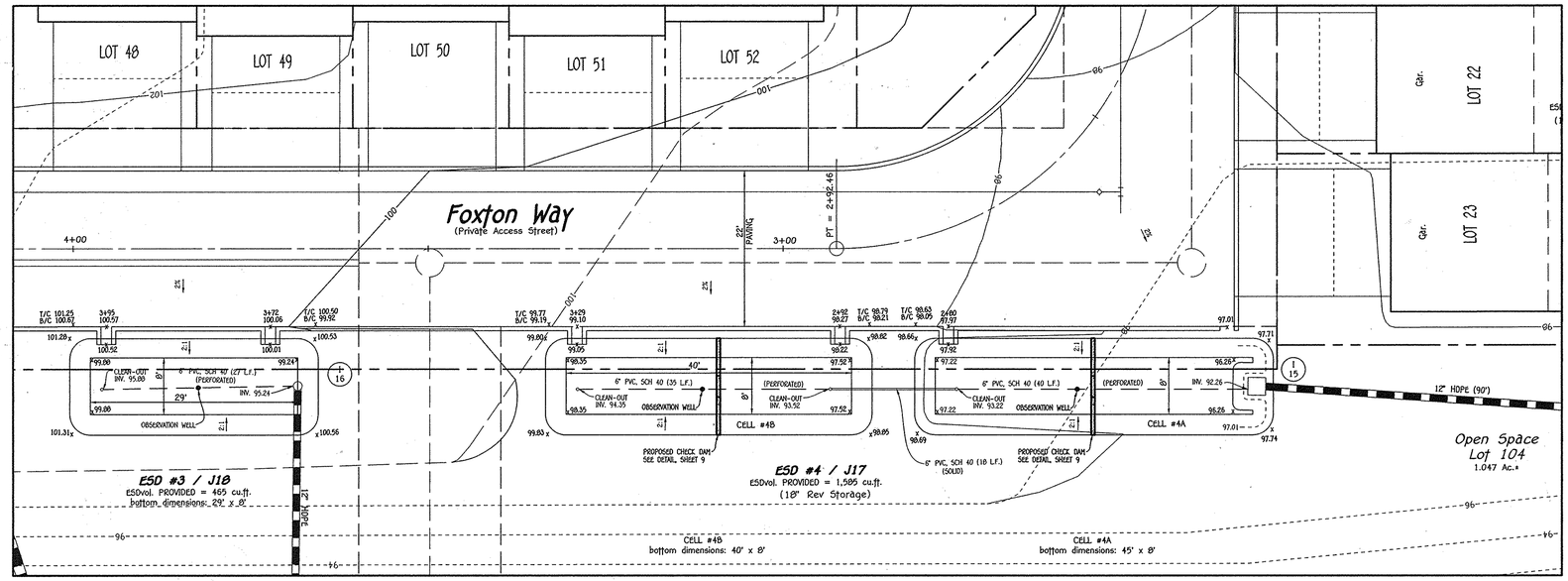

PROPOSED MICRO BIO-RETENTION (M-6)
ESD Nos. 3 & 4 PLAN VIEW

SCALE: 1" = 10'

STORMWATER MANAGEMENT MAINTENANCE NOTE

ALL STORMWATER MANAGEMENT FACILITIES WILL BE PRIVATELY OWNED AND MAINTAINED BY THE OXFORD SQUARE COMMERCIAL ASSOCIATION, INC. THE STREET TREES, PERFORATED UNDERDRAINS, FEEDERS, PLANTINGS AND SWALES WILL ALSO BE PRIVATELY OWNED AND MAINTAINED BY THE OXFORD SQUARE COMMERCIAL ASSOCIATION. HOWARD COUNTY WILL ONLY MAINTAIN THE INLET STRUCTURE WITHIN THE MICRO BIO-RETENTION FACILITIES ADJACENT TO THE RIGHT-OF-WAY.

NOTE: THE J NUMBER (J20) IS THE SKETCH PLAN ESD NUMBER.

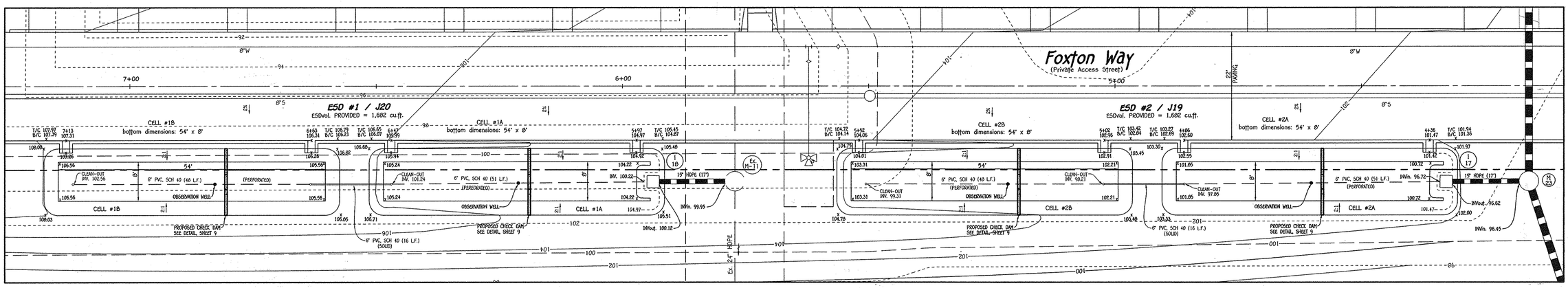

PROPOSED MICRO BIO-RETENTION (M-6)
ESD Nos. 1 & 2 PLAN VIEW

SCALE: 1" = 10'

0' 10' 15' 20'
Scale: 1" = 10'

FISHER, COLLINS & CARTER, INC.
CIVIL ENGINEERING CONSULTANTS & LAND SURVEYORS
CENTENNIAL SQUARE OFFICE PARK - 10272 BALTIMORE NATIONAL PIKE
ELLICOTT CITY, MARYLAND 21042
(410) 461 - 2855

NO.	REVISION	DATE

STATE OF MARYLAND — MICHAEL T. FISHER — No. 28248 — PROFESSIONAL ENGINEER
6-10-14

Owner/Builder
U.S. Home Corporation,
D/B/A Lennar
c/o Joseph Fortino, Vice President
10211 Wincopin Circle
Suite 300
Columbia, Maryland 21044
Ph# 410-423-0460

Developer
Preston • Scheffenacker Properties
2330 West Joppa Road, Suite 160
Lutherville, Maryland 21093-4614
Ph# 410-296-3800

APPROVED: HOWARD COUNTY DEPARTMENT OF PLANNING AND ZONING

Kent Sheubrooks — Chief, Division of Land Development — 7/23/14 Date
Chief, Development Engineering Division — 6-25-14 Date
Director - Department of Planning and Zoning — 7-23-14 Date

SUBDIVISION			SECTION/AREA		LOT Nos.
OXFORD SQUARE			----		3 THRU 103
PLAT NO.	BLOCK NO.	ZONE	TAX/ZONE	ELEC. DIST.	CENSUS TR.
22895-22898	---	TOD	30	1st.	601101

STORMWATER MANAGEMENT NOTES & DETAILS

OXFORD SQUARE

"A Howard County Green Neighborhood"

Lots 3 Thru 103, Open Space Lots 104 Thru 116 And Parcels 'N' And 'O'

(Being A Resubdivision Of Parcels 'F' And 'J', As Shown On Plats Entitled "Revision Plat, Oxford Square, "Green Neighborhood", Parcels 'C', 'E', 'F', 'G', 'I', 'J', 'K' And 'M' And Recorded Among The Land Records Of Howard County, Maryland As Plat Nos. 22856 Thru 22859)
Zoned: TOD

Tax Map No.: 30 Grid No.: 20 Parcel No.: 761
First Election District Howard County, Maryland
Scale: As Shown
Date: June 6, 2014
Sheet 15 Of 30

SDP-13-060

I:\2009\09014\dwg\SDP (Lennar)\09014 Sheet 10-17 swm plans.dwg, swm sheet 15, 6/9/2014 2:07:45 PM, 1:1

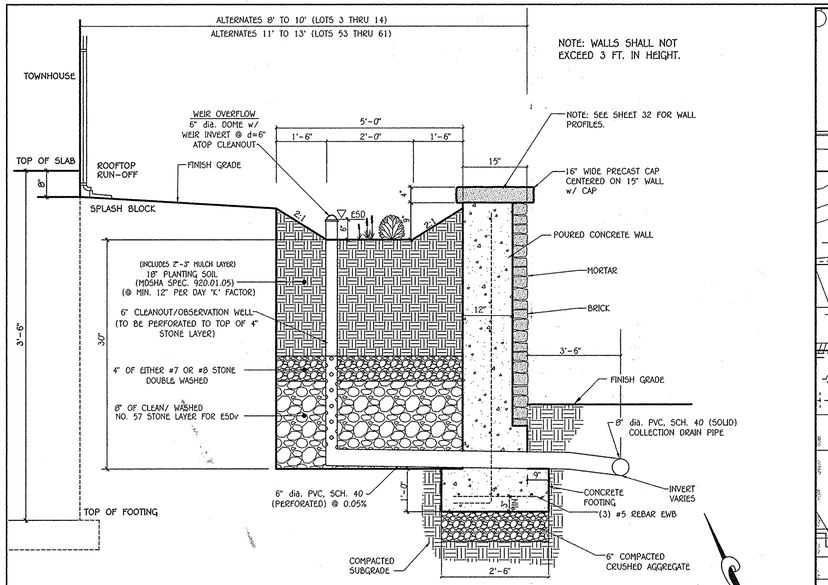

MICRO BIO-RETENTION SECTION FOR UNITS FACING SAINT MARGARETS BLVD.
NOT TO SCALE

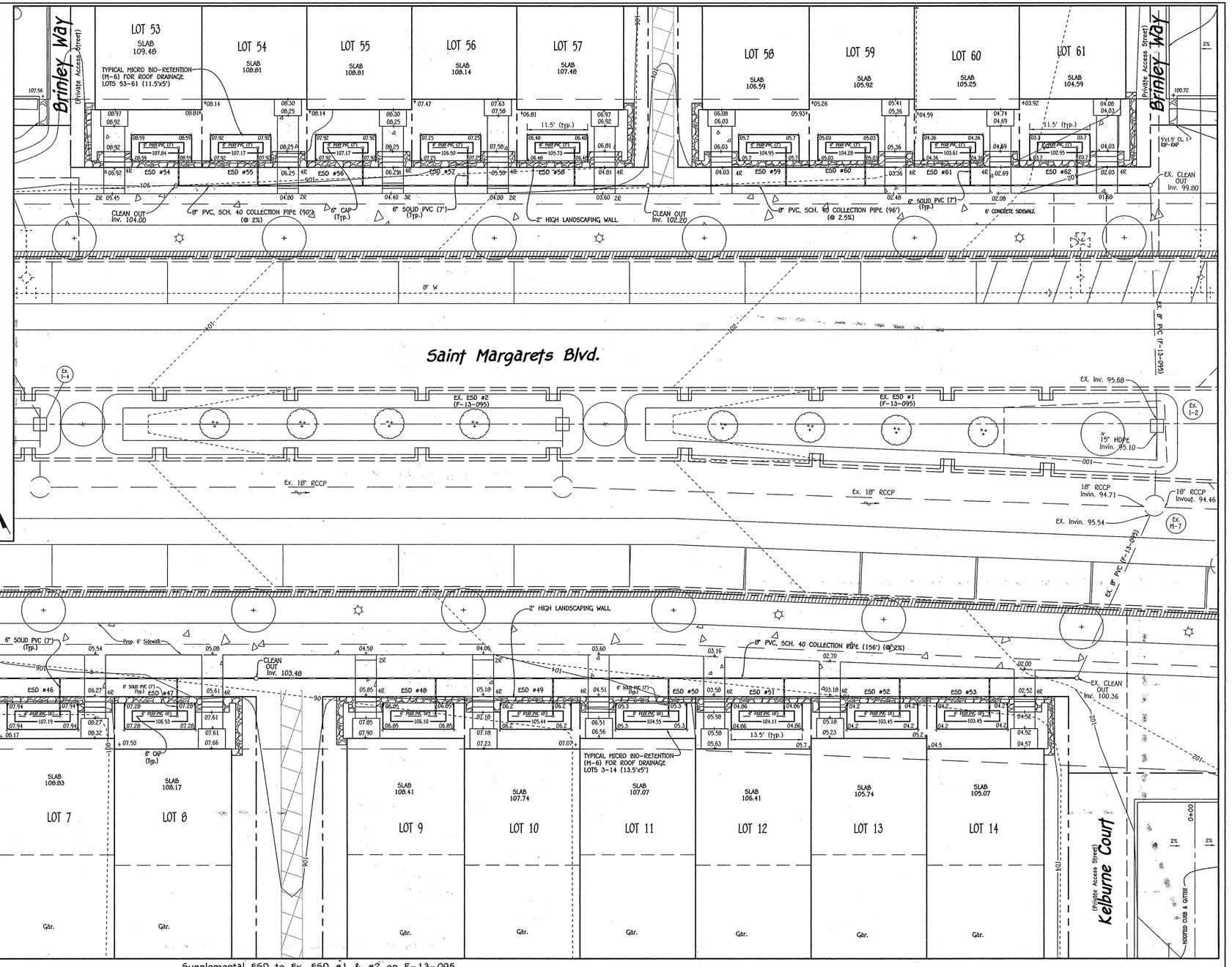

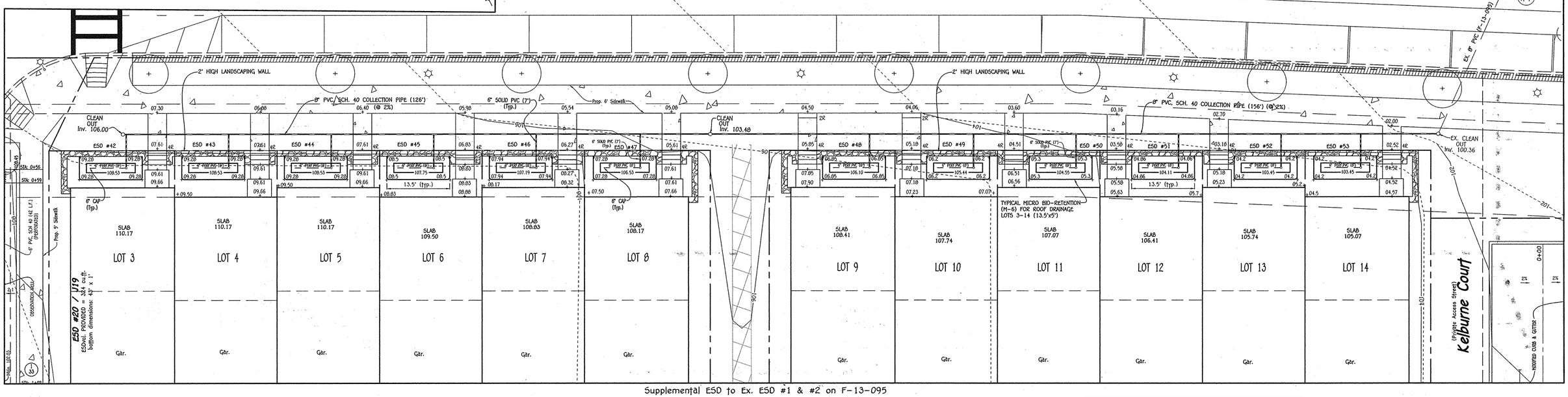

Supplemental ESD to Ex. ESD #1 & #2 on F-13-095

PROPOSED MICRO BIO-RETENTION (M-6)
ESD Nos. 42 THRU 62 PLAN VIEW
SCALE: 1" = 10'

0' 10' 15' 20'
Scale: 1" = 10'

NOTE:
SEE SHEET 32 FOR 2' HIGH LANDSCAPING WALL PROFILES

FISHER, COLLINS & CARTER, INC.
CIVIL ENGINEERING CONSULTANTS & LAND SURVEYORS
CENTENNIAL SQUARE OFFICE PARK - 10272 BALTIMORE NATIONAL PIKE
ELLICOTT CITY, MARYLAND 21042
(410) 461 - 2855

NO.	REVISION	DATE

STATE OF MARYLAND
MICHAEL E. LEE
No. 26748
PROFESSIONAL ENGINEER
6-10-14

Owner/Builder
U.S. Home Corporation,
D/B/A Lennar
c/o Joseph Fortino, Vice President
10211 Wincopin Circle
Suite 300
Columbia, Maryland 21044
Ph# 410-423-0460

Developer
Preston - Scheffenacker Properties
2330 West Joppa Road, Suite 160
Lutherville, Maryland 21093-4614
Ph# 410-296-3800

APPROVED: HOWARD COUNTY DEPARTMENT OF PLANNING AND ZONING

Chief, Division of Land Development — Date 7/23/14

Chief, Development Engineering Division — Date 6-25-14

Director - Department of Planning and Zoning — Date 7-23-14

SUBDIVISION			SECTION/AREA		LOT Nos.
OXFORD SQUARE			----		3 THRU 103
PLAT NO.	BLOCK NO.	ZONE	TAX/ZONE	ELEC. DIST.	CENSUS TR.
22895-22898	---	TOD	38	1st.	601101

STORMWATER MANAGEMENT NOTES & DETAILS

OXFORD SQUARE

"A Howard County Green Neighborhood"

Lots 3 Thru 103, Open Space Lots 104 Thru 116 And Parcels 'N' And 'O'

(Being A Resubdivision Of Parcels 'F' And 'J', As Shown On Plats Entitled "Revision Plat, Oxford Square, "Green Neighborhood", Parcels 'C', 'E', 'F', 'G', 'I', 'J', 'K' And 'M' And Recorded Among The Land Records Of Howard County, Maryland As Plat Nos. 22856 Thru 22859.)
Zoned: TOD

Tax Map No.: 38 Grid No.: 20 Parcel No.: 761
First Election District Howard County, Maryland
Scale: As Shown
Date: June 6, 2014
Sheet 16 Of 38

SDP-13-068

I:\2009\09014\dwg\SDP (Lennar)\09014 Sheet 10-17 swm plans.dwg, swm sheet 16, 6/9/2014 1:45:36 PM, 1:1

Sand Filter Specifications

1. Material Specifications for Sand Filters
The allowable materials for sand filter construction are detailed in Table B.3.1.
2. Sand Filter Testing Specifications

Underground sand filters, facilities within sensitive groundwater aquifers, and filters designed to serve urban hot spots are to be tested for water tightness prior to placement of filter media. Entrances and exits should be plugged and the system completely filled with water to demonstrate water tightness. Water tightness means no leakage for a period of 8 hours.

All overflow weirs, multiple orifices and flow distribution slots are to be field-tested to verify adequate distribution of flows.

3. Sand Filter Construction Specifications

Provide sufficient maintenance access (i.e., 12-foot-wide road with legally recorded easement). Vegetated access slopes are to be a maximum of 10% ; gravel slopes to 15% ; paved slopes to 25%.

Absolutely no runoff is to enter the filter until all contributing drainage areas have been stabilized.

Surface of filter bed is to be level.

All underground sand filters should be clearly delineated with signs so that they may be located when maintenance is due.

Surface sand filters may be planted with appropriate grasses; see MAA Approved Species List.

"Pocket" sandfilters (and residential bio-retention facilities treating areas larger than an acre) shall be sized with a' stone "window" that covers approximately 10% of the filter area. This "window" shall be filled pea gravel (3/4 inch stone).

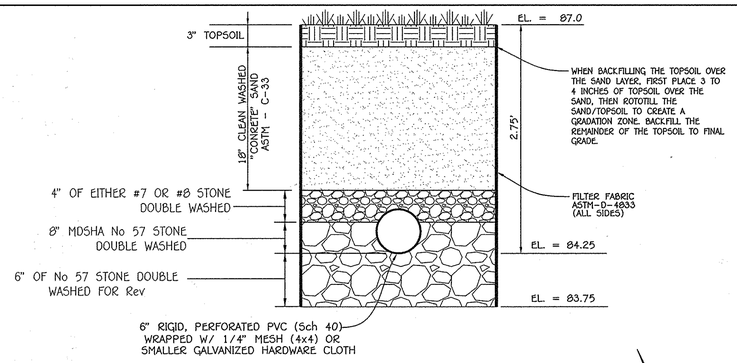

TYPICAL SECTION - SURFACE SAND FILTER

NO SCALE

Table B.3.1 Material Specifications for Sand filters

Material	Specifications/Test Method	Size	Notes
sand	clean AASHTO-M-6 of ASTM-Cconcrete sand	0.02" to 0.04"	Sand substitutions such as Diabase and Graystone #10 are note acceptable. No' "rock dust" can be used for sand:
peat	ash content: < 15% pH range: 5.2 to 4.9 loose bulk density 0.12 to 0.15 g/cc	N/a	The material must be reed-sedge hemic peat, shredded, uncompacted, uniform, and clean.
leaf compost		N/a	
underdrain gravel	AASHTO-M-43	0.375" to 0.75"	
geotextile fabric (if required)	ASTM-D-4833 (puncture strength lb.) ASTM-D-4632 (Tensile Strength lb.)	0.08" thick equivalent opening size of #80 sieve	Must maintain 125 gpm per sq. ft. flow rate. Note: a 4" pea gravel layer may be substituted for geotextiles meant to "separate" sand filter layers.
impermeable liner (if required)	ASTM-D-4833 (thickness) ASTM-D-412 (tensile strength 1,100 lb., elongation 200%) ASTM-D-624 (Tear resistance - 150 lb./in) ASTM-D-471 (water adsorption: +8 to -2% mass)	30 mil thickness	Liner to be ultraviolet resistant. A geotextile fabric should be used to protect the liner from puncture.
underdrain piping	F 758, Type PS 28 or AASHTO-M-278	4" - 6" rigid schedule 40 PVC or SDR35	3/8" perf. @ 6" on center, 4 holes per row; minimum of 3" of gravel over pipes; not necessary underneath pipes
concrete (cast-in-place)	MSHA Standards and Specs. Section 902, Mix No. 3, f'c = 3500 psi, normal weight, air-entrained; reinforcing to meet ASTM-615-60	N/a	on-site testing of poured-in-place concrete required: 28 day strength and slump test; all concrete design (cast-in-place or precast) not using previously approved State or local standards requires design drawings sealed and approved by a professional structural engineer licensed in the State of Maryland
concrete (pre-cast)	per pre-cast manufacturer	N/a	SEE ABOVE NOTE
non-rebar steel	ASTM A-36	N/a	structural steel to be hot-dipped galvanized ASTM-A-123

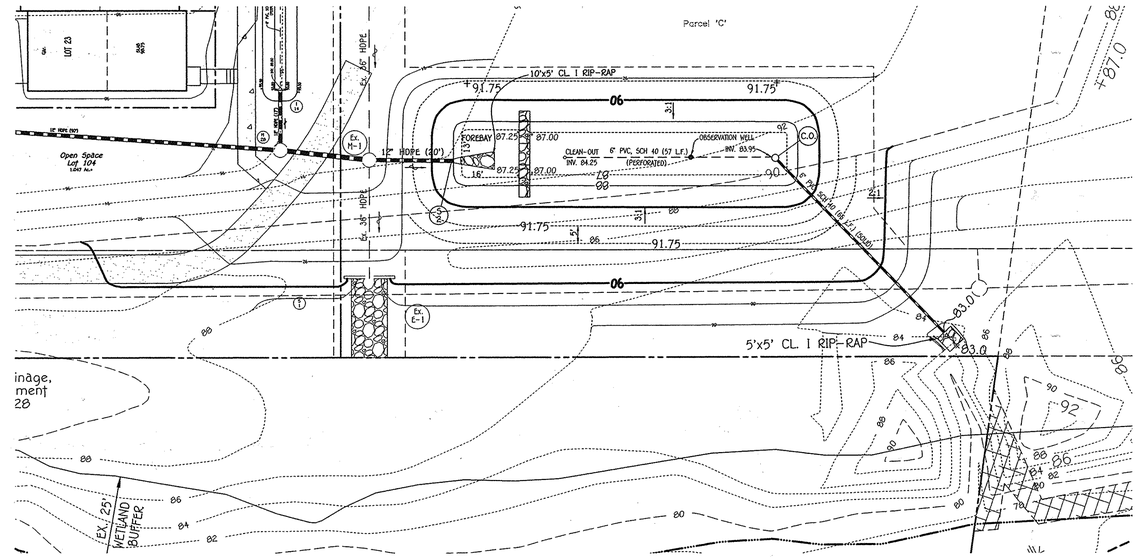

PROPOSED SURFACE SAND FILTER (OFF-LINE DESIGN) BMP No. 1 PLAN VIEW

SCALE: 1" = 20'

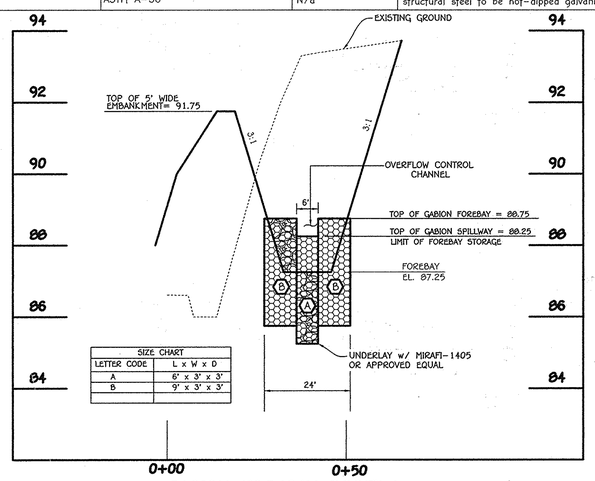

SIZE CHART	
LETTER CODE	L x W x D
A	6' x 3' x 3'
B	9' x 3' x 3'

GABION FOREBAY PROFILE

SCALE: HORIZ. 1" = 20'
VERT. 1" = 2'

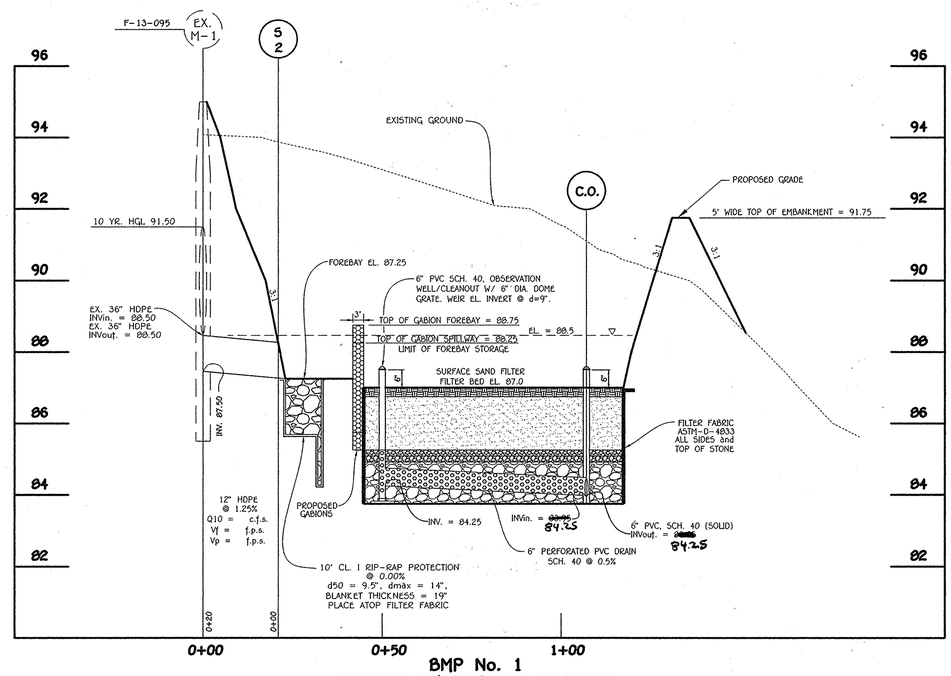

BMP No. 1 SECTION THRU S.W.M. FACILITY

SCALE: HORIZ. 1" = 20'
VERT. 1" = 2'

(TYPE F-1 SURFACE SAND FILTER)

OPERATION AND MAINTENANCE SCHEDULE FOR PRIVATELY OWNED AND MAINTAINED SURFACE STORMWATER FILTRATION SYSTEMS

1. THE STORMWATER WETLAND FACILITY SHALL BE INSPECTED ANNUALLY AND AFTER MAJOR STORMS. INSPECTIONS SHALL BE PERFORMED DURING WET WEATHER TO DETERMINE IF THE FACILITY IS FUNCTIONING PROPERLY.
2. THE TOP AND SIDE SLOPES OF THE EMBANKMENT SHALL BE MOWED A MINIMUM OF ONCE PER YEAR, WHEN VEGETATION REACHES 18" IN HEIGHT OR AS NEEDED.
3. FILTERS THAT HAVE A GRASS COVER SHALL BE MOWED A MINIMUM OF THREE (3) TIMES PER GROWING SEASON TO MAINTAIN A MAXIMUM GRASS HEIGHT OF LESS THAN 12 INCHES.
4. DEBRIS AND LITTER SHALL BE REMOVED DURING REGULAR MOWING OPERATIONS AND AS NEEDED.
5. VISIBLE SIGNS OF EROSION IN THE FACILITY SHALL BE REPAIRED AS SOON AS IT IS NOTICED.
6. REMOVE SILT WHEN IT EXCEEDS FOUR (4) INCHES DEEP IN THE FOREBAY.
7. FILTER MATERIAL MUST BE REPLACED WHEN WATER REMAINS ON THE SURFACE OF THE FILTER BED FOR MORE THAN 24 HOURS FOLLOWING A 1 OR 2 YEAR STORM EVENT OR MORE THAN 48 HOURS AFTER A 10 YEAR STORM EVENT.
8. A LOGBOOK SHALL BE MAINTAINED TO DETERMINE THE RATE AT WHICH THE FACILITY DRAINS.
9. THE MAINTENANCE LOGBOOK SHALL BE AVAILABLE TO HOWARD COUNTY FOR INSPECTION TO INSURE COMPLIANCE WITH OPERATION AND MAINTENANCE CRITERIA.
10. ONCE THE PERFORMANCE CHARACTERISTICS OF THE INFILTRATION SYSTEM HAVE BEEN VERIFIED, THE MONITORING SCHEDULE CAN BE REDUCED TO AN ANNUAL BASIS UNLESS THE PERFORMANCE DATA INDICATES THAT A MORE FREQUENT SCHEDULE IS REQUIRED.

FISHER, COLLINS & CARTER, INC.
CIVIL ENGINEERING CONSULTANTS & LAND SURVEYORS
CENTENNIAL SQUARE OFFICE PARK - 10272 BALTIMORE NATIONAL PIKE
ELLICOTT CITY, MARYLAND 21042
(410) 461 - 2855

NO.	REVISION	DATE

STATE OF MARYLAND MICHAEL VITO CARNEVALE No. 22288 PROFESSIONAL ENGINEER 6.10.14

Owner/Builder
U.S. Home Corporation,
D/B/A Lennar
c/o Joseph Fortino, Vice President
10211 Wincopin Circle
Suite 300
Columbia, Maryland 21044
Ph# 410-423-0460

Developer
Preston - Scheffenacker Properties
2330 West Joppa Road, Suite 160
Lutherville, Maryland 21093-4614
Ph# 410-296-3800

APPROVED: HOWARD COUNTY DEPARTMENT OF PLANNING AND ZONING

Chief, Division of Land Development — Date 7/23/14
Chief, Development Engineering Division — Date 6.25.14
Director - Department of Planning and Zoning — Date 7-23-14

SUBDIVISION			SECTION/AREA		LOT Nos.
OXFORD SQUARE			----		3 THRU 103
PLAT NO.	BLOCK NO.	ZONE	TAX/ZONE	ELEC. DIST.	CENSUS TR.
22895-22898	---	TOD	38	1st.	601101

STORMWATER MANAGEMENT NOTES & DETAILS (BMP No. 1 - SURFACE SAND FILTER)

OXFORD SQUARE

"A Howard County Green Neighborhood"

Lots 3 Thru 103, Open Space Lots 104 Thru 116 And Parcels 'N' And 'O'

(Being A Resubdivision Of Parcels 'F' And 'J', As Shown On Plats Entitled "Revision Plat, Oxford Square, "Green Neighborhood", Parcels 'C', 'E', 'F', 'G', 'I', 'J', 'K' And 'M' And Recorded Among The Land Records Of Howard County, Maryland As Plat Nos. 22856 Thru 22859.)
Zoned: TOD

Tax Map No.: 38 Grid No.: 20 Parcel No.: 761
First Election District Howard County, Maryland
Scale: As Shown
Date: June 6, 2014
Sheet 17 Of 38

SDP-13-068

I:\2009\09014\dwg\SDP (Lennar)\09014 Sheet 10-17 swm plans.dwg, swm sheet 17, 6/9/2014 1:43:37 PM, 1:1

SEDIMENT CONTROL LEGEND

—SSF— SSF— SSF—	SUPER-SILT FENCE
—SF— SF— SF—	SILT FENCE
S.C.E.	STABILIZED CONSTRUCTION ENTRANCE w/ MOUNTABLE BERM
TYPE A-2	EARTH DIKE
L.O.D.	LIMIT OF DISTURBANCE
E.C.M.	EROSION CONTROL MATTING
R.P.S.	REMOVEABLE PUMPING STATION
F.B.	FILTER BAG

NOTE: SEE SHEET 34 FOR TYPICAL BIO-RETENTION CELL DURING INTITIAL CONSTRUCTION PHASE DETAIL.

EXISTING TEMPORARY SEDIMENT BASIN No. 4 (F-12-026) AS MODIFIED UNDER F-13-095

FINAL D.A. = 5.70 Ac.±
STORAGE REQUIRED
WET = 1800 x 5.70 = 10260 CuFt.
DRY = 1800 x 5.70 = 10260 CuFt.
STORAGE PROVIDED
WET = 10260 CuFt. @ ELEV. 93.79
DRY = 20520 CuFt. @ ELEV. 95.85
BOTTOM ELEV. = 91.00
STORAGE DEPTH = 9.48'
TOP OF EMBANKMENT (6' wide) = 102.35 CONSTRUCTED
CLEAN OUT ELEV. = 92.60
RISER CREST ELEV. = 96.50
1 YR. ORIFICE INV. = 93.60
Q1 exist. = 1.5 c.f.s.
Q1 prop. = 0.80 c.f.s. @ EL. = 97.25

CONTRACTOR NOTES:

1. CONTRACTOR SHALL PUMP THE SEDIMENT TRAPS/ BASINS COMPLETELY DRY THROUGH A FILTERING DEVICE TO A CLEAN WATER OUTFALL WITHIN 24 HOURS FOLLOWING ANY RAINFALL EVENT.
2. CONTRACTOR SHALL REMOVE ANY AND ALL JUNK, DEBRIS AND TRASH FROM WITHIN THE FLOODPLAIN, STREAMS, WETLANDS & THEIR BUFFERS.

EXISTING TEMPORARY SEDIMENT BASIN No. 1 (F-12-026)

INITIAL D.A. = 10.00 Ac.±
FINAL D.A. = 10.00 Ac.±
STORAGE REQUIRED
WET = 1800 x 10.00 = 18000 CuFt.
DRY = 1800 x 10.00 = 18000 CuFt.
STORAGE PROVIDED
WET = 18954 CuFt. @ ELEV. 79.28
DRY = 37908 CuFt. @ ELEV. 81.00
BOTTOM ELEV. = 77.00
STORAGE DEPTH = 9.0'
TOP OF EMBANKMENT (7' wide) = 86.85 CONSTRUCTED
CLEAN OUT ELEV. = 78.20
RISER CREST ELEV. = 82.50
1 YR. ORIFICE INV. = 79.30
Q1 exist. = 6.3 c.f.s.
Q1 prop. = 5.5 c.f.s. @ EL. = 81.45

NOTE: BASIN No. 1 CAN REMAIN FOR THE DEVELOPMENT OF PARCEL "C". BASIN WILL BE REMOVED AT SITE DEVELOPMENT PLAN STAGE FOR THAT PARCEL.

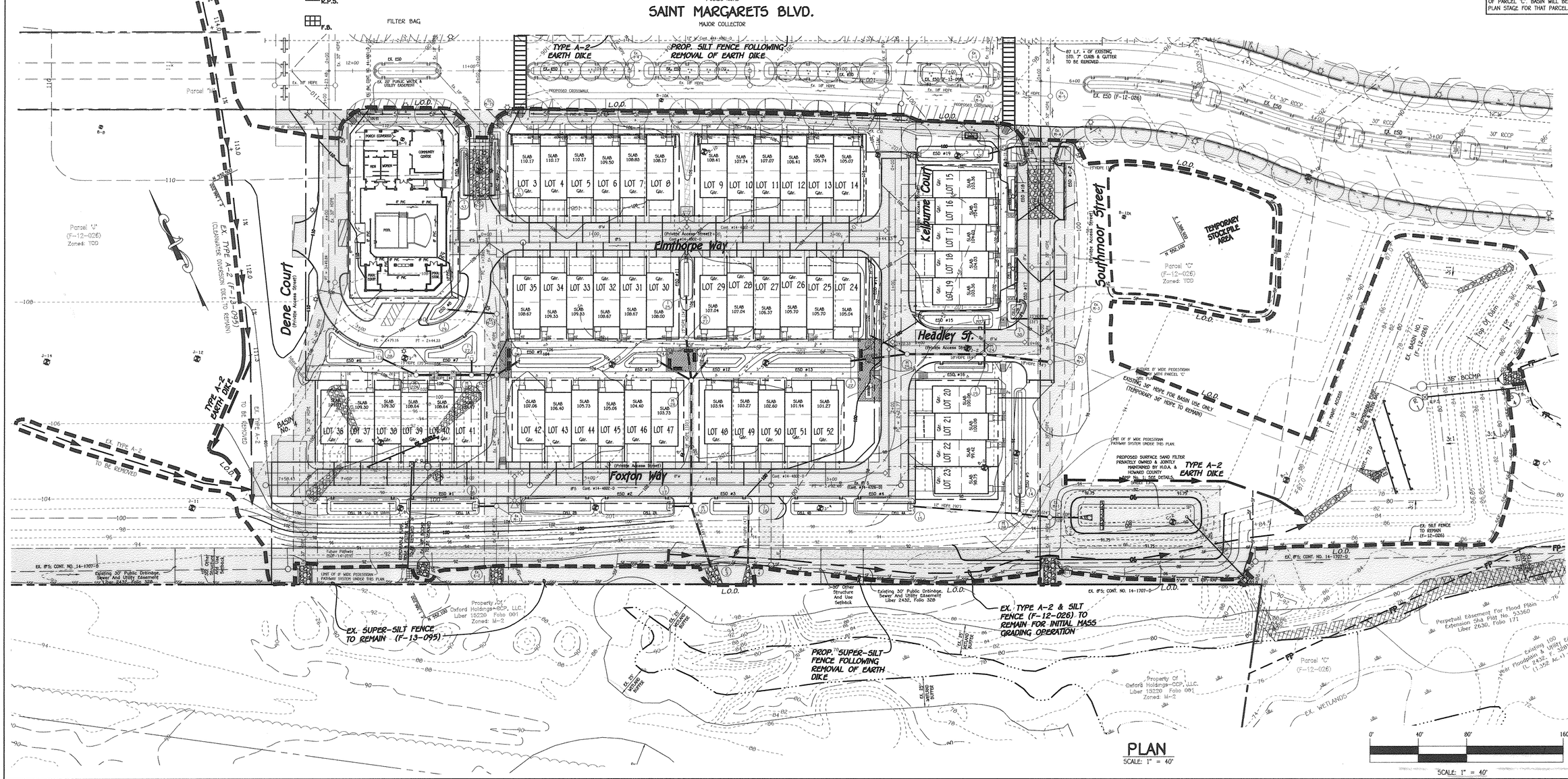

PLAN

SCALE: 1" = 40'

0' 40' 80' 160'

SCALE: 1" = 40'

FISHER, COLLINS & CARTER, INC.
CIVIL ENGINEERING CONSULTANTS & LAND SURVEYORS
CENTENNIAL SQUARE OFFICE PARK - 10272 BALTIMORE NATIONAL PIKE
ELLICOTT CITY, MARYLAND 21042
(410) 461 - 2855

NO.	REVISION	DATE
2	ADD DECK DETAIL & WAIVER APPROVAL NOTES	4/16/15
1	REVISE COMMUNITY CENTER AND POOL AREA	10/3/14

STATE OF MARYLAND — MICHAEL R. TOMLIN — No. 22294 — PROFESSIONAL ENGINEER — 12/8/14

ENGINEER'S CERTIFICATE

"I certify that this plan for sediment and erosion control represents a practical and workable plan based on my personal knowledge of the site conditions and that it was prepared in accordance with the requirements of the Howard Soil Conservation District."

Signature of Engineer (print name below signature) — Date 12/8/14

DEVELOPER'S CERTIFICATE

"I/We certify that all development and construction will be done according to this plan for sediment and erosion control, and that all responsible personnel involved in the construction project will have a Certificate of Attendance at a Department of the Environment Approved Training Program for the Control of Sediment and Erosion before beginning the project. I also authorize periodic on-site inspection by the Howard Soil Conservation District."

Signature of Developer (print name below signature) — Date 12/8/14

This development plan is approved for soil erosion and sediment control by the HOWARD SOIL CONSERVATION DISTRICT.

Howard SCD — Date 1/6/15

Owner/Builder

U.S. Home Corporation,
D/B/A Lennar
c/o Joseph Fortino, Vice President
10211 Wincopin Circle
Suite 300
Columbia, Maryland 21044
Ph# 410-423-0460

Developer

Preston - Scheffenacker Properties
2330 West Joppa Road, Suite 160
Lutherville, Maryland 21093-4614
Ph# 410-296-3800

APPROVED: HOWARD COUNTY DEPARTMENT OF PLANNING AND ZONING

Chief, Division of Land Development — Date 2-3-15
Chief, Development Engineering Division — Date 1-22-15
Director - Department of Planning and Zoning — Date 2/3/15

SUBDIVISION		SECTION/AREA		LOT Nos.
OXFORD SQUARE		----		3 THRU 103
PLAT NO.	BLOCK NO.	ZONE	TAX/ZONE	ELEC. DIST.	CENSUS TR.
22895-22898	---	TOD	30	1st.	601101

REVISED
SEDIMENT AND EROSION CONTROL PLAN

OXFORD SQUARE

"A Howard County Green Neighborhood"

Lots 3 Thru 103, Open Space Lots 104 Thru 116 And Parcels 'N' And 'O'

(Being A Resubdivision Of Parcels 'F' And 'J', As Shown On Plats Entitled "Revision Plat, Oxford Square, "Green Neighborhood", Parcels 'C', 'E', 'F', 'G', 'I', 'J', 'K' And 'M' And Recorded Among The Land Records Of Howard County, Maryland As Plat Nos. 22896 Thru 22899)
Zoned: TOD

Tax Map No.: 30 Grid No.: 20 Parcel No.: 761
First Election District Howard County, Maryland
Scale: As Shown
Date: June 6, 2014
Sheet 10 Of 30

SDP-13-068

I:\2006\06014\dwg\SDP (Lennar)\Pool Area Redlines\sheet 18.mylar dwg, 12/5/2014 12:34:37 PM, 1:1

SEDIMENT CONTROL LEGEND

—SSF—SSF—SSF—	SUPER-SILT FENCE
—SF—SF—SF—	SILT FENCE
S.C.E.	STABILIZED CONSTRUCTION ENTRANCE w/ MOUNTABLE BERM
TYPE A-2	EARTH DIKE
L.O.D.	LIMIT OF DISTURBANCE
E.C.M.	EROSION CONTROL MATTING
R.P.S.	REMOVEABLE PUMPING STATION
F.B.	FILTER BAG

EXISTING TEMPORARY SEDIMENT BASIN No. 2 (F-12-026)

INITIAL D.A. = 13.45 Ac.±
FINAL D.A. = 13.45 Ac.±
STORAGE REQUIRED
WET = 1,800 x 13.45 = 24,210 CuFt.
DRY = 1,800 x 13.45 = 24,210 CuFt.
STORAGE PROVIDED
WET = 24,210 CuFt. @ ELEV. 80.60
DRY = 48,420 CuFt. @ ELEV. 83.90
BOTTOM ELEV. = 73.00
STORAGE DEPTH = 17.25'
TOP OF EMBANKMENT (8' wide) = 91.64 CONSTRUCTED
CLEAN OUT ELEV. = 77.60
RISER CREST ELEV. = 85.50
1 YR. ORIFICE INV. = 82.60
Q1 exist. = 12.7 c.f.s.
Q1 prop. = 3.8 c.f.s. @ EL. = 83.70

CONTRACTOR NOTES:

1. CONTRACTOR SHALL PUMP THE SEDIMENT TRAPS/ BASINS COMPLETELY DRY THROUGH A FILTERING DEVICE TO A CLEAN WATER OUTFALL WITHIN 24 HOURS FOLLOWING ANY RAINFALL EVENT.
2. CONTRACTOR SHALL REMOVE ANY AND ALL JUNK, DEBRIS AND TRASH FROM WITHIN THE FLOODPLAIN, STREAMS, WETLANDS & THEIR BUFFERS.

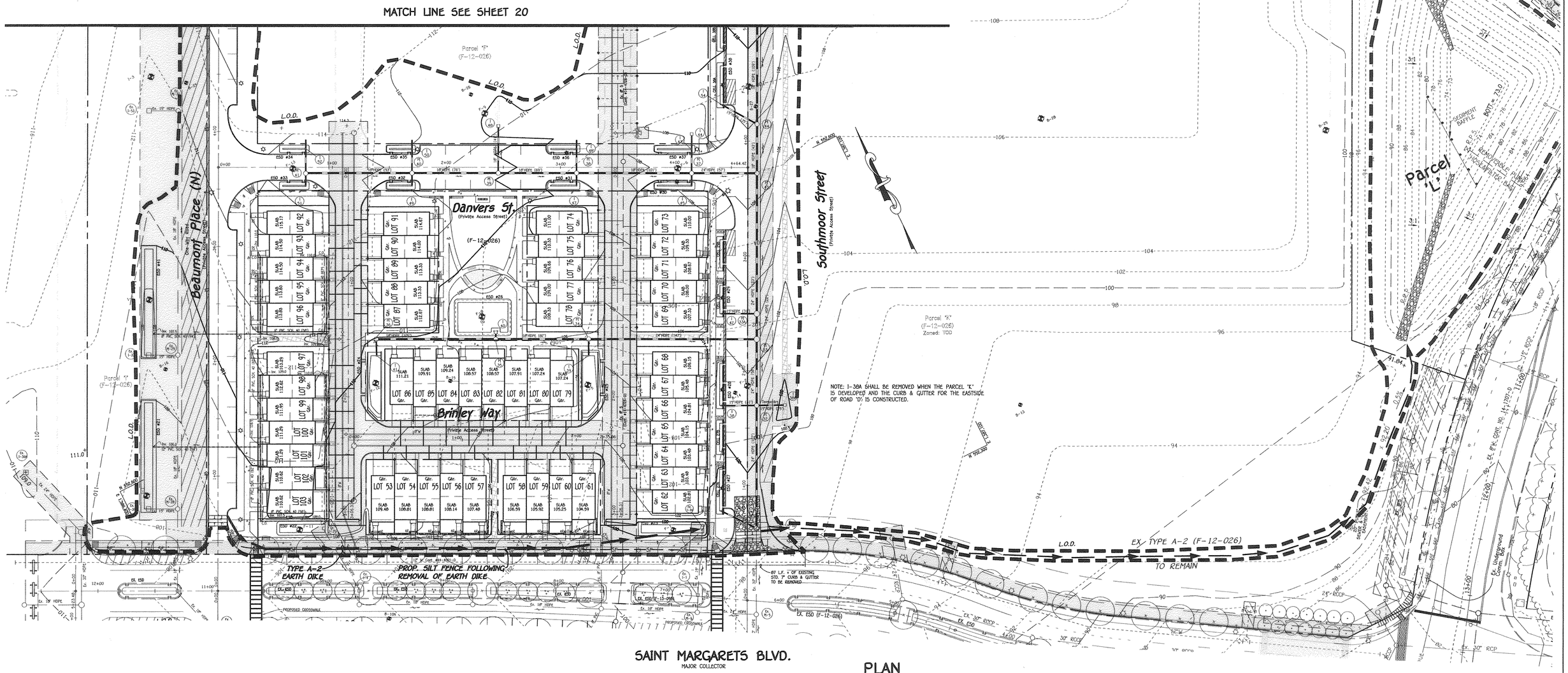

PLAN

SCALE: 1" = 40'

FISHER, COLLINS & CARTER, INC.
CIVIL ENGINEERING CONSULTANTS & LAND SURVEYORS
CENTENNIAL SQUARE OFFICE PARK - 10272 BALTIMORE NATIONAL PIKE
ELLICOTT CITY, MARYLAND 21042
(410) 461 - 2855

NO.	REVISION	DATE
1	ADD DECK DETAIL & WAIVER APPROVAL NOTES	4/02/16

STATE OF MARYLAND REGISTERED PROFESSIONAL ENGINEER No. 28234 — 6-10-14

ENGINEER'S CERTIFICATE

"I certify that this plan for sediment and erosion control represents a practical and workable plan based on my personal knowledge of the site conditions and that it was prepared in accordance with the requirements of the Howard Soil Conservation District."

Signature of Engineer (print name below signature) — Date: 6-10-14

DEVELOPER'S CERTIFICATE

"I/We certify that all development and construction will be done according to this plan for sediment and erosion control, and that all responsible personnel involved in the construction project will have a Certificate of Attendance at a Department of the Environment Approved Training Program for the Control of Sediment and Erosion before beginning the project. I also authorize periodic on-site inspection by the Howard Soil Conservation District."

Signature of Developer (print name below signature) — Date: 6/10/14

This development plan is approved for soil erosion and sediment control by the HOWARD SOIL CONSERVATION DISTRICT.

Howard SCD — Date: 6/17/14

Owner/Builder
U.S. Home Corporation,
D/B/A Lennar
c/o Joseph Fortino, Vice President
10211 Wincopin Circle
Suite 300
Columbia, Maryland 21044
Ph# 410-423-0460

Developer
Preston • Scheffenacker Properties
2330 West Joppa Road, Suite 160
Lutherville, Maryland 21093-4614
Ph# 410-296-3800

APPROVED: HOWARD COUNTY DEPARTMENT OF PLANNING AND ZONING

Chief, Division of Land Development — Date: 7/23/14
Chief, Development Engineering Division — Date: 6-25-14
Director - Department of Planning and Zoning — Date: 7-23-14

SUBDIVISION			SECTION/AREA		LOT Nos.
OXFORD SQUARE			----		3 THRU 103
PLAT NO.	BLOCK NO.	ZONE	TAX/ZONE	ELEC. DIST.	CENSUS TR.
22895-22898	---	TOD	3B	1st.	601101

SEDIMENT AND EROSION CONTROL PLAN

OXFORD SQUARE

"A Howard County Green Neighborhood"

Lots 3 Thru 103, Open Space Lots 104 Thru 116 And Parcels 'N' And 'O'

(Being A Resubdivision Of Parcels 'F' And 'J', As Shown On Plats Entitled "Revision Plat, Oxford Square, "Green Neighborhood", Parcels 'C', 'E', 'F', 'G', 'I', 'J', 'K' And 'M' And Recorded Among The Land Records Of Howard County, Maryland As Plat Nos. 22856 Thru 22859)
Zoned: TOD

Tax Map No.: 38 Grid No.: 20 Parcel No.: 761
First Election District Howard County, Maryland
Scale: As Shown
Date: June 6, 2014
Sheet 19 Of 38

SDP-13-068

I:\2009\09014\dwg\SDP (Lennar)\09014 Sheet 18-20 sec plan.dwg, sheet 19, 6/9/2014 1:31:20 PM, 1:1

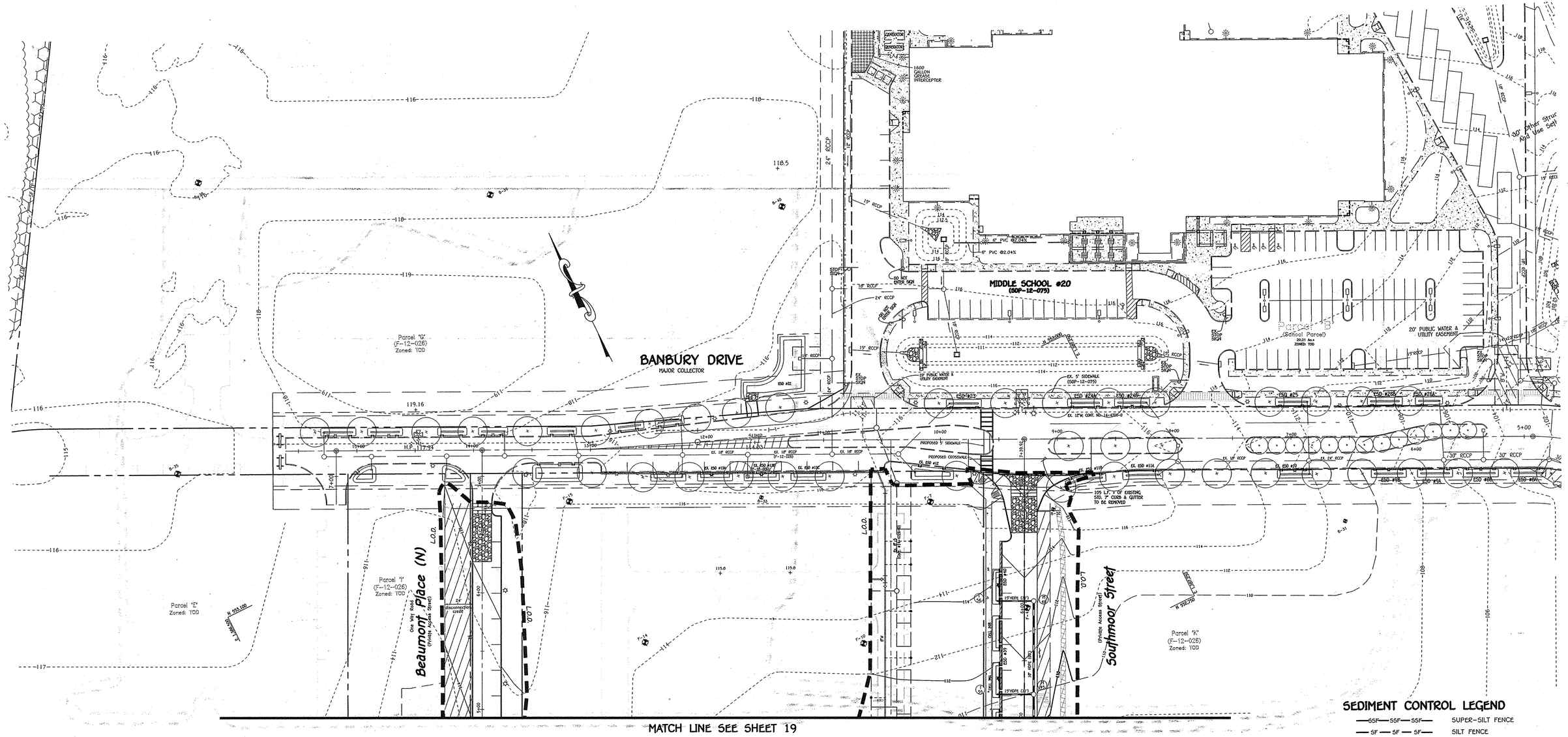

PLAN

SCALE: 1" = 40'

SEDIMENT CONTROL LEGEND

—SSF—SSF—SSF—	SUPER-SILT FENCE
—SF—SF—SF—	SILT FENCE
S.C.E.	STABILIZED CONSTRUCTION ENTRANCE w/ MOUNTABLE BERM
TYPE A-2	EARTH DIKE
L.O.D.	LIMIT OF DISTURBANCE
E.C.M.	EROSION CONTROL MATTING
R.P.S.	REMOVEABLE PUMPING STATION
F.B.	FILTER BAG

FISHER, COLLINS & CARTER, INC.
CIVIL ENGINEERING CONSULTANTS & LAND SURVEYORS
CENTENNIAL SQUARE OFFICE PARK - 10272 BALTIMORE NATIONAL PIKE
ELLICOTT CITY, MARYLAND 21042
(410) 461 - 2855

NO.	REVISION	DATE

STATE OF MARYLAND
MICHAEL VITO
No. 20748
PROFESSIONAL ENGINEER
6-10-14

ENGINEER'S CERTIFICATE

"I certify that this plan for sediment and erosion control represents a practical and workable plan based on my personal knowledge of the site conditions and that it was prepared in accordance with the requirements of the Howard Soil Conservation District."

Signature of Engineer (print name below signature) — Date: 6-10-14

DEVELOPER'S CERTIFICATE

"I/We certify that all development and construction will be done according to this plan for sediment and erosion control, and that all responsible personnel involved in the construction project will have a Certificate of Attendance at a Department of the Environment Approved Training Program for the Control of Sediment and Erosion before beginning the project. I also authorize periodic on-site inspection by the Howard Soil Conservation District."

Signature of Developer (print name below signature) — Date: 6/10/14

This development plan is approved for soil erosion and sediment control by the HOWARD SOIL CONSERVATION DISTRICT.

Howard SCD — Date: 6/17/14

Owner/Builder
U.S. Home Corporation,
D/B/A Lennar
c/o Joseph Fortino, Vice President
10211 Wincopin Circle
Suite 300
Columbia, Maryland 21044
Ph# 410-423-0460

Developer
Preston - Scheffenacker Properties
2330 West Joppa Road, Suite 160
Lutherville, Maryland 21093-4614
Ph# 410-296-3800

APPROVED: HOWARD COUNTY DEPARTMENT OF PLANNING AND ZONING

Chief, Division of Land Development — Date: 7/23/14

Chief, Development Engineering Division — Date: 6-25-14

Director - Department of Planning and Zoning — Date: 7-23-14

SUBDIVISION			SECTION/AREA		LOT Nos.
OXFORD SQUARE			----		3 THRU 103
PLAT NO.	BLOCK NO.	ZONE	TAX/ZONE	ELEC. DIST.	CENSUS TR.
22895-22898	---	TOD	38	1st.	601101

SEDIMENT AND EROSION CONTROL PLAN

OXFORD SQUARE

"A Howard County Green Neighborhood"

Lots 3 Thru 103, Open Space Lots 104 Thru 116 And Parcels 'N' And 'O'

(Being A Resubdivision Of Parcels 'F' And 'J', As Shown On Plats Entitled "Revision Plat, Oxford Square, "Green Neighborhood", Parcels 'C', 'E', 'F', 'G', 'I', 'J', 'K' And 'M' And Recorded Among The Land Records Of Howard County, Maryland As Plat Nos. 22856 Thru 22859.)
Zoned: TOD

Tax Map No.: 38 Grid No.: 20 Parcel No.: 761
First Election District Howard County, Maryland
Scale: As Shown
Date: June 6, 2014
Sheet 20 Of 38

SDP-13-068

I:\2009\09014\dwg\SDP (Lennar)\09014 Sheet 18-20 sec plan.dwg, sheet 20, 6/9/2014 1:33:43 PM, 1:1

NOTE: SEE SHEET 22 FOR CONTINUATION

Public Road
SAINT MARGARETS BLVD.
(Major Collector)
POSTED SPEED LIMIT = 25 M.P.H.

DENOTES EXISTING STREET LIGHT
DENOTES PROPOSED STREET LIGHT
DENOTES EXISTING STREET TREE
DENOTES PROPOSED STREET TREE

NOTE: SEE SHEET 23 FOR LANDSCAPING CHARTS

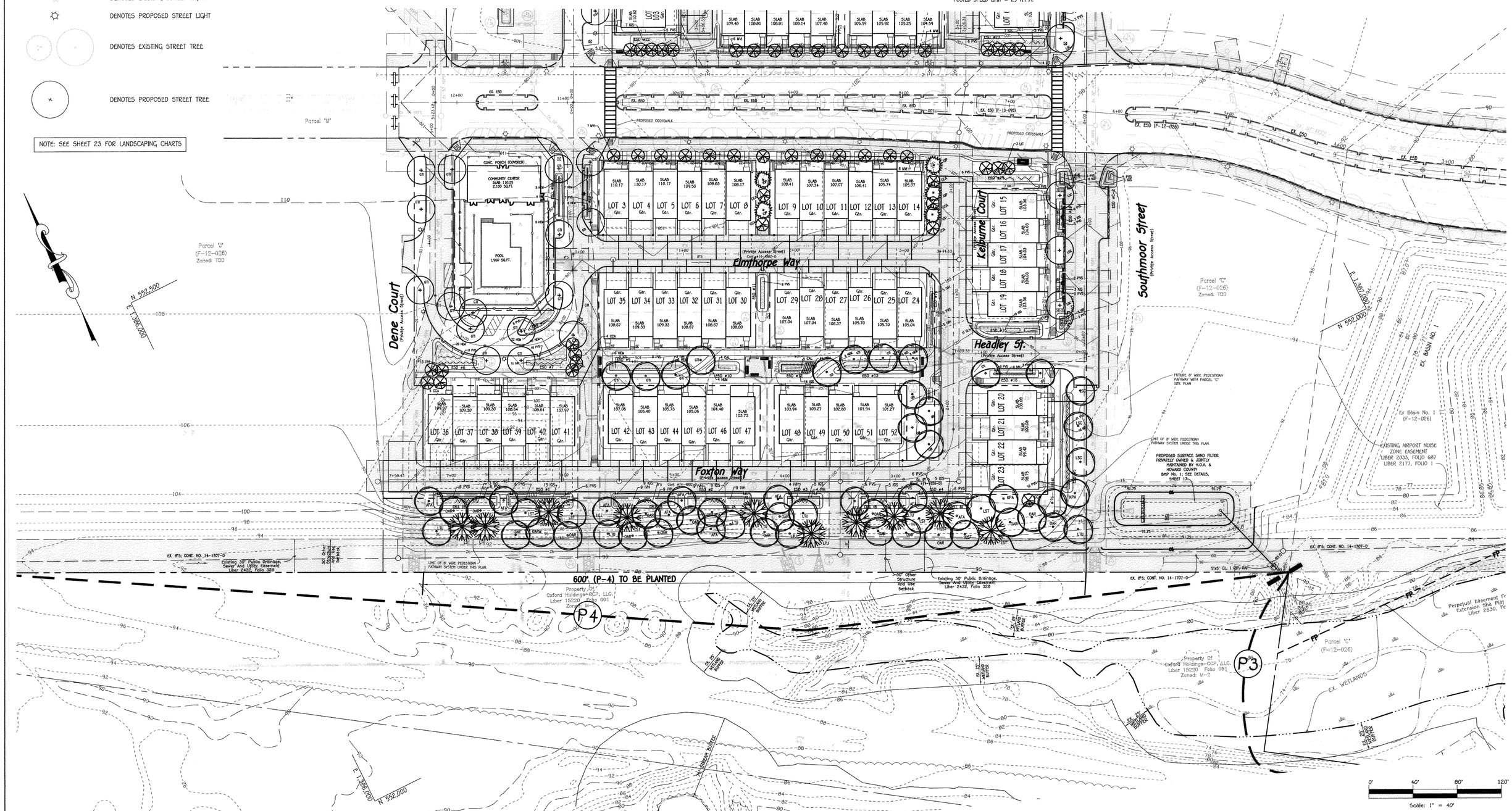

FISHER, COLLINS & CARTER, INC.
CIVIL ENGINEERING CONSULTANTS & LAND SURVEYORS
CENTENNIAL SQUARE OFFICE PARK - 10272 BALTIMORE NATIONAL PIKE
ELLICOTT CITY, MARYLAND 21042
(410) 461 - 2855

NO.	REVISION	DATE
1	ADD DECK DETAIL & WAIVER APPROVAL NOTES	4/26/16

STATE OF MARYLAND
MICHAEL VITTORIO
No. 20748
PROFESSIONAL ENGINEER
6-10-14

LANDSCAPE DEVELOPER'S CERTIFICATE

I/We certify that the landscaping shown on this plan will be done according to the plan, Section 16.124 of the Howard County Code and the Howard County Landscape Manual. I/We further certify that upon completion a letter of landscape installation accompanied by an executed one year guarantee of plant materials will be submitted to the Department of Planning and Zoning.

Name — Date 6/10/14

Owner/Builder
U.S. Home Corporation,
D/B/A Lennar
c/o Joseph Fortino, Vice President
10211 Wincopin Circle
Suite 300
Columbia, Maryland 21044
Ph# 410-423-0460

Developer
Preston • Scheffenacker Properties
2330 West Joppa Road, Suite 160
Lutherville, Maryland 21093-4614
Ph# 410-296-3800

APPROVED: HOWARD COUNTY DEPARTMENT OF PLANNING AND ZONING

Chief, Division of Land Development — Date 7/23/14
Chief, Development Engineering Division — Date 6-25-14
Director - Department of Planning and Zoning — Date 7-23-14

SUBDIVISION	SECTION/AREA	LOT Nos.
OXFORD SQUARE	----	3 THRU 103

PLAT NO.	BLOCK NO.	ZONE	TAX/ZONE	ELEC. DIST.	CENSUS TR.
22895-22898	---	TOD	38	1st.	601101

STREET TREE AND LANDSCAPE PLAN

OXFORD SQUARE

"A Howard County Green Neighborhood"

Lots 3 Thru 103, Open Space Lots 104 Thru 116 And Parcels 'N' And 'O'

(Being A Resubdivision Of Parcels 'F' And 'J', As Shown On Plats Entitled "Revision Plat, Oxford Square, "Green Neighborhood", Parcels 'C', 'E', 'F', 'G', 'I', 'J', 'K' And 'M' And Recorded Among The Land Records Of Howard County, Maryland As Plat Nos. 22856 Thru 22859)
Zoned: TOD

Tax Map No.: 38 Grid No.: 20 Parcel No.: 761
First Election District Howard County, Maryland
Scale: As Shown
Date: June 6, 2014
Sheet 21 Of 38

SDP-13-068

I:\2009\09014\dwg\SDP (Lennar)\09014 Sheet 21-23 landscape plan.dwg, sheet 21, 6/6/2014 2:29:13 PM, 1:1

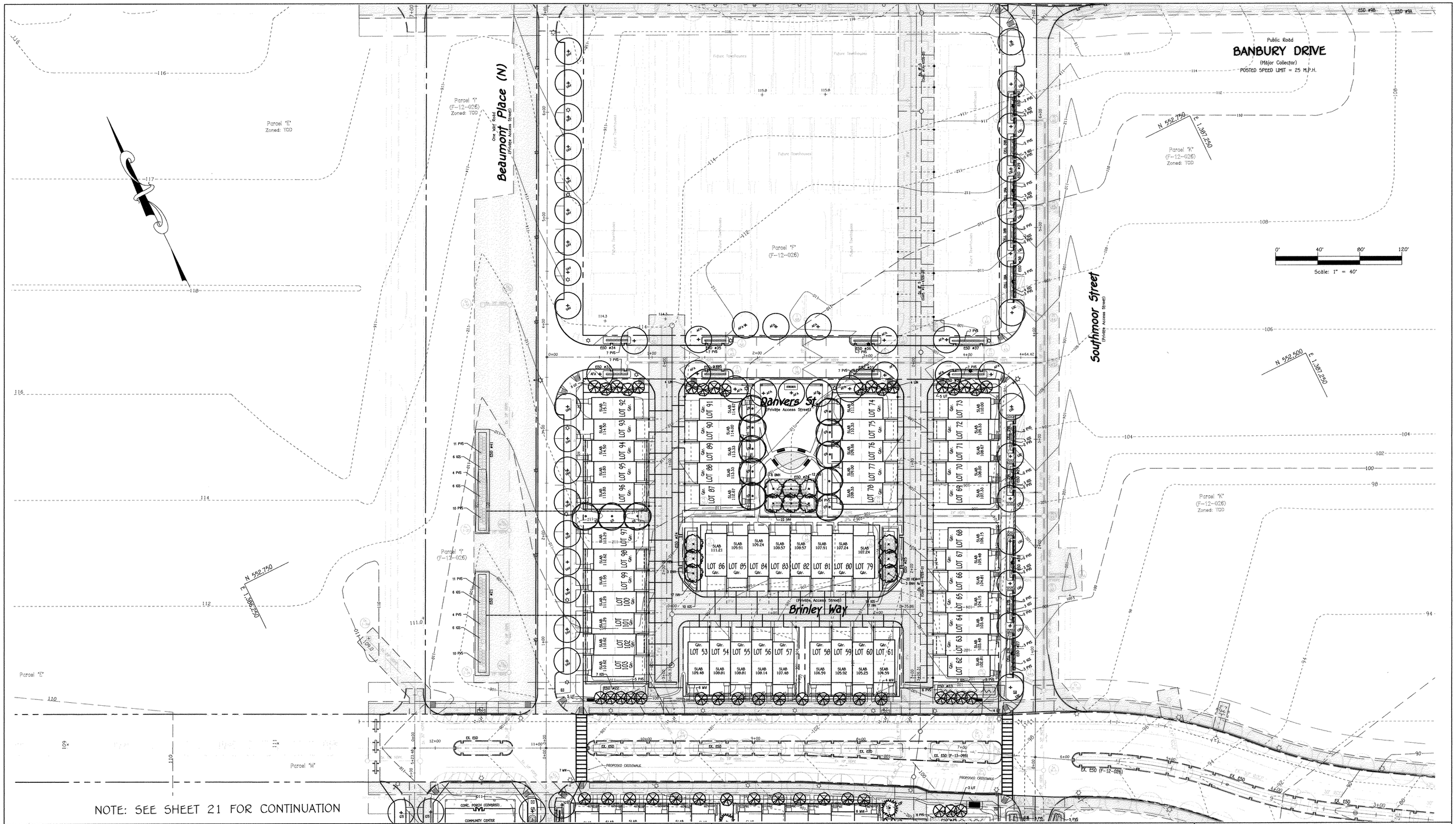

NOTE: SEE SHEET 21 FOR CONTINUATION

FISHER, COLLINS & CARTER, INC.
CIVIL ENGINEERING CONSULTANTS & LAND SURVEYORS
CENTENNIAL SQUARE OFFICE PARK - 10272 BALTIMORE NATIONAL PIKE
ELLICOTT CITY, MARYLAND 21042
(410) 461 - 2855

NO.	REVISION	DATE
1	ADD DECK DETAIL & WAIVER APPROVAL NOTES	4/26/16

STATE OF MARYLAND
MICHAEL A. SCHEFFENACKER
No. 20748
PROFESSIONAL ENGINEER
6-10-14

LANDSCAPE DEVELOPER'S CERTIFICATE

I/We certify that the landscaping shown on this plan will be done according to the plan, Section 16.124 of the Howard County Code and the Howard County Landscape Manual. I/We further certify that upon completion a letter of landscape installation accompanied by an executed one year guarantee of plant materials will be submitted to the Department of Planning and Zoning.

Name — Date 6/10/14

Owner/Builder

U.S. Home Corporation,
D/B/A Lennar
c/o Joseph Fortino, Vice President
10211 Wincopin Circle
Suite 300
Columbia, Maryland 21044
Ph# 410-423-0460

Developer

Preston • Scheffenacker Properties
2330 West Joppa Road, Suite 160
Lutherville, Maryland 21093-4614
Ph# 410-296-3800

APPROVED: HOWARD COUNTY DEPARTMENT OF PLANNING AND ZONING

Chief, Division of Land Development — Date 7/23/14

Chief, Development Engineering Division — Date 6-25-14

Director - Department of Planning and Zoning — Date 7-23-14

SUBDIVISION	SECTION/AREA	LOT Nos.
OXFORD SQUARE	----	3 THRU 103

PLAT NO.	BLOCK NO.	ZONE	TAX/ZONE	ELEC. DIST.	CENSUS TR.
22895-22898	---	TOD	38	1st.	601101

STREET TREE AND LANDSCAPE PLAN

OXFORD SQUARE

"A Howard County Green Neighborhood"

Lots 3 Thru 103, Open Space Lots 104 Thru 116 And Parcels 'N' And 'O'

(Being A Resubdivision Of Parcels 'F' And 'J', As Shown On Plats Entitled "Revision Plat, Oxford Square, "Green Neighborhood", Parcels 'C', 'E', 'F', 'G', 'I', 'J', 'K' And 'M' And Recorded Among The Land Records Of Howard County, Maryland As Plat Nos. 22856 Thru 22859.)
Zoned: TOD

Tax Map No.: 38 Grid No.: 20 Parcel No.: 761
First Election District Howard County, Maryland
Scale: As Shown
Date: June 6, 2014
Sheet 22 Of 38

SDP-13-068

I:\2009\09014\dwg\SDP (Lennar)\09014 Sheet 21-23 landscape plan.dwg, sheet 22, 6/6/2014 2:30:32 PM, 1:1

PLANT MATERIAL-BIO-RETENTION ESD No. 1A

QUANTITY	NAME	MAXIMUM SPACING (FT.)
12	MIXED PERENNIALS	36" o.c.
13	SHRUBS	40" o.c.

PLANT MATERIAL-BIO-RETENTION ESD No. 1B

QUANTITY	NAME	MAXIMUM SPACING (FT.)
12	MIXED PERENNIALS	36" o.c.
13	SHRUBS	40" o.c.

PLANT MATERIAL-BIO-RETENTION ESD No. 2A

QUANTITY	NAME	MAXIMUM SPACING (FT.)
--	MIXED PERENNIALS	--
27	SHRUBS	36"-40" o.c.

PLANT MATERIAL-BIO-RETENTION ESD No. 2B

QUANTITY	NAME	MAXIMUM SPACING (FT.)
--	MIXED PERENNIALS	--
27	SHRUBS	36"-40" o.c.

PLANT MATERIAL-BIO-RETENTION ESD No. 3

QUANTITY	NAME	MAXIMUM SPACING (FT.)
12	MIXED PERENNIALS	36" o.c.
5	SHRUBS	40" o.c.

PLANT MATERIAL-BIO-RETENTION ESD No. 4A

QUANTITY	NAME	MAXIMUM SPACING (FT.)
12	MIXED PERENNIALS	36" o.c.
5	SHRUBS	40" o.c.

PLANT MATERIAL-BIO-RETENTION ESD No. 4B

QUANTITY	NAME	MAXIMUM SPACING (FT.)
12	MIXED PERENNIALS	36" o.c.
5	SHRUBS	40" o.c.

PLANT MATERIAL-BIO-RETENTION ESD No. 5

QUANTITY	NAME	MAXIMUM SPACING (FT.)
21	MIXED PERENNIALS	36" o.c.
10	SHRUBS	40" o.c.

PLANT MATERIAL-BIO-RETENTION ESD No. 6

QUANTITY	NAME	MAXIMUM SPACING (FT.)
28	MIXED PERENNIALS	18"-36" o.c.
13	SHRUBS	36" o.c.

PLANT MATERIAL-BIO-RETENTION ESD No. 7

QUANTITY	NAME	MAXIMUM SPACING (FT.)
25	MIXED PERENNIALS	18"-36" o.c.
11	SHRUBS	36" o.c.

PLANT MATERIAL-BIO-RETENTION ESD No. 8

QUANTITY	NAME	MAXIMUM SPACING (FT.)
30	MIXED PERENNIALS	18"-36" o.c.
--	SHRUBS	--

PLANT MATERIAL-BIO-RETENTION ESD No. 9

QUANTITY	NAME	MAXIMUM SPACING (FT.)
21	MIXED PERENNIALS	18"-36" o.c.
8	SHRUBS	36"-40" o.c.

PLANT MATERIAL-BIO-RETENTION ESD No. 10

QUANTITY	NAME	MAXIMUM SPACING (FT.)
8	MIXED PERENNIALS	18"-48" o.c.
--	SHRUBS	--

PLANT MATERIAL-BIO-RETENTION ESD No. 11

QUANTITY	NAME	MAXIMUM SPACING (FT.)
8	MIXED PERENNIALS	36" o.c.
--	SHRUBS	--

PLANT MATERIAL-BIO-RETENTION ESD No. 12

QUANTITY	NAME	MAXIMUM SPACING (FT.)
8	MIXED PERENNIALS	18"-48" o.c.
--	SHRUBS	--

PLANT MATERIAL-BIO-RETENTION ESD No. 13

QUANTITY	NAME	MAXIMUM SPACING (FT.)
21	MIXED PERENNIALS	18"-36" o.c.
8	SHRUBS	36"-40" o.c.

PLANT MATERIAL-BIO-RETENTION ESD No. 14

QUANTITY	NAME	MAXIMUM SPACING (FT.)
5	MIXED PERENNIALS	36" o.c.
10	SHRUBS	36" o.c.

PLANT MATERIAL-BIO-RETENTION ESD No. 15

QUANTITY	NAME	MAXIMUM SPACING (FT.)
--	MIXED PERENNIALS	36" o.c.
36	SHRUBS	36" o.c.

PLANT MATERIAL-BIO-RETENTION ESD No. 16

QUANTITY	NAME	MAXIMUM SPACING (FT.)
6	MIXED PERENNIALS	36" o.c.
6	SHRUBS	36" o.c.

PLANT MATERIAL-BIO-RETENTION ESD No. 17A

QUANTITY	NAME	MAXIMUM SPACING (FT.)
3	MIXED PERENNIALS	36" o.c.
5	SHRUBS	40" o.c.

PLANT MATERIAL-BIO-RETENTION ESD No. 17B

QUANTITY	NAME	MAXIMUM SPACING (FT.)
4	MIXED PERENNIALS	36" o.c.
3	SHRUBS	40" o.c.

PLANT MATERIAL-BIO-RETENTION ESD No. 18A

QUANTITY	NAME	MAXIMUM SPACING (FT.)
5	MIXED PERENNIALS	36" o.c.
6	SHRUBS	40" o.c.

PLANT MATERIAL-BIO-RETENTION ESD No. 18B

QUANTITY	NAME	MAXIMUM SPACING (FT.)
4	MIXED PERENNIALS	36" o.c.
3	SHRUBS	40" o.c.

PLANT MATERIAL-BIO-RETENTION ESD No. 19

QUANTITY	NAME	MAXIMUM SPACING (FT.)
11	MIXED PERENNIALS	36" o.c.
7	SHRUBS	40" o.c.

PLANT MATERIAL-BIO-RETENTION ESD No. 20

QUANTITY	NAME	MAXIMUM SPACING (FT.)
21	MIXED PERENNIALS	18"-36" o.c.
--	SHRUBS	--

PLANT MATERIAL-BIO-RETENTION ESD No. 21

QUANTITY	NAME	MAXIMUM SPACING (FT.)
25	MIXED PERENNIALS	18"-36" o.c.
12	SHRUBS	36" o.c.

PLANT MATERIAL-BIO-RETENTION ESD No. 22

QUANTITY	NAME	MAXIMUM SPACING (FT.)
5	MIXED PERENNIALS	36" o.c.
7	SHRUBS	40" o.c.

PLANT MATERIAL-BIO-RETENTION ESD No. 23

QUANTITY	NAME	MAXIMUM SPACING (FT.)
11	MIXED PERENNIALS	36" o.c.
7	SHRUBS	40" o.c.

PLANT MATERIAL-BIO-RETENTION ESD No. 24

QUANTITY	NAME	MAXIMUM SPACING (FT.)
20	MIXED PERENNIALS	18" o.c.
27	SHRUBS	36"-40" o.c.

PLANT MATERIAL-BIO-RETENTION ESD No. 25

QUANTITY	NAME	MAXIMUM SPACING (FT.)
20	MIXED PERENNIALS	18" o.c.
27	SHRUBS	36"-40" o.c.

PLANT MATERIAL-BIO-RETENTION ESD No. 26

QUANTITY	NAME	MAXIMUM SPACING (FT.)
24	MIXED PERENNIALS	36" o.c.
34	SHRUBS	36"-40" o.c.

PLANT MATERIAL-BIO-RETENTION ESD No. 27A

QUANTITY	NAME	MAXIMUM SPACING (FT.)
6	MIXED PERENNIALS	36" o.c.
5	SHRUBS	40" o.c.

PLANT MATERIAL-BIO-RETENTION ESD No. 27B

QUANTITY	NAME	MAXIMUM SPACING (FT.)
4	MIXED PERENNIALS	36" o.c.
3	SHRUBS	40" o.c.

PLANT MATERIAL-BIO-RETENTION ESD No. 28

QUANTITY	NAME	MAXIMUM SPACING (FT.)
4	MIXED PERENNIALS	36" o.c.
3	SHRUBS	40" o.c.

PLANT MATERIAL-BIO-RETENTION ESD No. 29A

QUANTITY	NAME	MAXIMUM SPACING (FT.)
4	MIXED PERENNIALS	36" o.c.
3	SHRUBS	40" o.c.

PLANT MATERIAL-BIO-RETENTION ESD No. 29B

QUANTITY	NAME	MAXIMUM SPACING (FT.)
4	MIXED PERENNIALS	36" o.c.
3	SHRUBS	40" o.c.

PLANT MATERIAL-BIO-RETENTION ESD No. 30

QUANTITY	NAME	MAXIMUM SPACING (FT.)
7	MIXED PERENNIALS	36" o.c.
--	SHRUBS	--

PLANT MATERIAL-BIO-RETENTION ESD No. 31

QUANTITY	NAME	MAXIMUM SPACING (FT.)
7	MIXED PERENNIALS	36" o.c.
--	SHRUBS	--

PLANT MATERIAL-BIO-RETENTION ESD No. 32

QUANTITY	NAME	MAXIMUM SPACING (FT.)
7	MIXED PERENNIALS	36" o.c.
--	SHRUBS	--

PLANT MATERIAL-BIO-RETENTION ESD No. 33

QUANTITY	NAME	MAXIMUM SPACING (FT.)
7	MIXED PERENNIALS	36" o.c.
--	SHRUBS	--

PLANT MATERIAL-BIO-RETENTION ESD No. 34

QUANTITY	NAME	MAXIMUM SPACING (FT.)
7	MIXED PERENNIALS	36" o.c.
--	SHRUBS	--

PLANT MATERIAL-BIO-RETENTION ESD No. 35

QUANTITY	NAME	MAXIMUM SPACING (FT.)
7	MIXED PERENNIALS	36" o.c.
--	SHRUBS	--

PLANT MATERIAL-BIO-RETENTION ESD No. 36

QUANTITY	NAME	MAXIMUM SPACING (FT.)
7	MIXED PERENNIALS	36" o.c.
--	SHRUBS	--

PLANT MATERIAL-BIO-RETENTION ESD No. 37

QUANTITY	NAME	MAXIMUM SPACING (FT.)
7	MIXED PERENNIALS	36" o.c.
--	SHRUBS	--

PLANT MATERIAL-BIO-RETENTION ESD No. 38A

QUANTITY	NAME	MAXIMUM SPACING (FT.)
6	MIXED PERENNIALS	36" o.c.
4	SHRUBS	40" o.c.

PLANT MATERIAL-BIO-RETENTION ESD No. 38B

QUANTITY	NAME	MAXIMUM SPACING (FT.)
4	MIXED PERENNIALS	36" o.c.
3	SHRUBS	40" o.c.

PLANT MATERIAL-BIO-RETENTION ESD No. 39A

QUANTITY	NAME	MAXIMUM SPACING (FT.)
4	MIXED PERENNIALS	36" o.c.
3	SHRUBS	40" o.c.

PLANT MATERIAL-BIO-RETENTION ESD No. 39B

QUANTITY	NAME	MAXIMUM SPACING (FT.)
4	MIXED PERENNIALS	36" o.c.
3	SHRUBS	40" o.c.

PLANT MATERIAL-BIO-RETENTION ESD No. 40

QUANTITY	NAME	MAXIMUM SPACING (FT.)
4	MIXED PERENNIALS	36" o.c.
3	SHRUBS	40" o.c.

PLANT MATERIAL-BIO-RETENTION ESD No. 41

QUANTITY	NAME	MAXIMUM SPACING (FT.)
25	MIXED PERENNIALS	18"-36" o.c.
12	SHRUBS	36" o.c.

PLANT MATERIAL-BIO-RETENTION ESD No. 8A

QUANTITY	NAME	MAXIMUM SPACING (FT.)
21	MIXED PERENNIALS	18"-36" o.c.
--	SHRUBS	--

PLANT MATERIAL-BIO-RETENTION ESD No. C-2

QUANTITY	NAME	MAXIMUM SPACING (FT.)
5	MIXED PERENNIALS	36" o.c.
6	SHRUBS	40" o.c.

PLANTING SPECIFICATIONS

Plants, related material, and operations shall meet the detailed description as given on the plans and as described herein.

All plant material, unless otherwise specified, shall be nursery grown, uniformly branched, have a vigorous root system, and shall conform to the species, size, root and shape shown on the plant list and the American Association of Nurserymen (AAN) Standards. Plant material shall be healthy, vigorous, free from defects, decay, disfiguring roots, sun scald injuries, abrasions of the bark, plant disease, insect pest eggs, borers and all forms of insect infestations or objectionable disfigurements. Plant material that is weak or which has been cut back from larger grades to meet specified requirements will be rejected. Trees with forked leaders will not be accepted. All plants shall be freshly dug; no healed-in plants from cold storage will be accepted.

Unless otherwise specified, all general conditions, planting operations, details and planting specification shall conform to 'Landscape Specification Guidelines for Baltimore-Washington Metropolitan Areas', (hereinafter 'Landscape Guidelines') approved by the Landscape Contractors Association of Metropolitan Washington and the Potomac Chapter of the American Society of Landscape Architect, latest edition, including all agenda.

Contractor shall be required to guarantee all plant material for a period of one year after date of acceptance in accordance with the appropriate section of the Landscape Guidelines Contractor's attention is directed to the maintenance requirements found within the one year specifications including watering and replacement of specified plant material.

Contractor shall be responsible for notifying utility companies, utility contractors and 'Miss Utility' a minimum of 48 hours prior to beginning any work. Contractor may make minor adjustments in spacing and location of plant material to avoid conflicts with utilities. Damage to existing structure and utilities shall be repaired at the expense of the Contractor.

Protection of existing vegetation to remain shall be accomplished by the temporary installation of 4 foot high snow fence or blaze orange safety fence at the drip line.

Contractor Id responsible for installing all material in the proper planting season for each plant type. All planting is to be completed within the growing season of completion of site construction.

Bid shall be base on actual site conditions. No extra payment shall be made for work arising from site conditions differing from those indicated on drawings and specifications

Plant quantities are provided for the convenience of the contractor only. If discrepancies exist between quantities shown on plan and those shown on the plant list, the quantities on the plan take precedence

All shrubs shall be planted in continuous trenches or prepared planting beds and mulched with composted hardwood mulch as details and specified except where noted on plans.

Positive drainage shall be maintained in planting beds 2 percent slope).

Planting mix shall be as follows: Deciduous Plants - Two parts topsoil, one part well-rotted cow or horse manure. Add 3 lbs. of standard fertilizer per cubic yard of planting mix. Evergreen Plants - two parts topsoil, one part humus or other approved organic material. Add 3 lbs. of evergreen (acidic) fertilizer per cubic yard of planting mix. Topsoil shall conform to the Landscape Guidelines.

Weed Control: Incorporate a pre-emergent herbicide into the planting bed following recommended rates on the label. Caution: Be sure to carefully check the chemical used to assure its adaptability to the specific ground cover to be treated.

All areas within contract limits disturbed during or prior to construction not designated to receive plants and mulch shall be fine graded and seeded.

This plan is intended for landscape use only. see other plan sheets for more information on grading, sediment control, layout, etc.

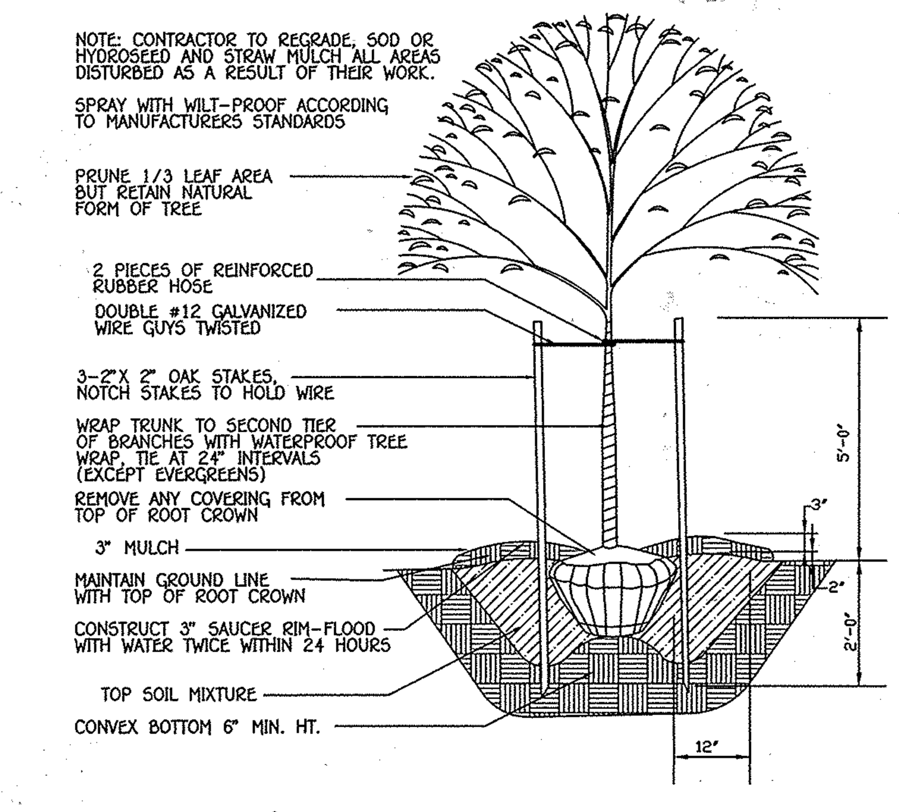

SHADE TREE PLANTING DETAIL

NO SCALE

LEGEND

HEM - Hemerocallis Mix — Variety for all season bloom

NOTE: Hemerocallis Fulva is invasive and is not acceptable for use in this project. Common names for H. Fulva, Tawny Daylily, Common Orange Daylily, Roadside Ditch Daylily and Tigerlily.

PVS - Panicum virgatum 'Shenandoah' — Red Switch Grass ✓

IVH - Itea Virginica 'Little Henry' — Virginia Sweetspire

IGS - Ilex Glabra 'Shamrock' — Shamrock Inkberry

CAL - Calamagrostis x Acutiflura — Feather Reed Grass

CLA - Clethra alnifolia 'Hummingbird' — Summersweet

NOTES:

1. Plant Material Must Cover At Least 50% Of The Surface Area Of The Bio-retention.
2. See Plant Material Charts For Quantities And Spacing.

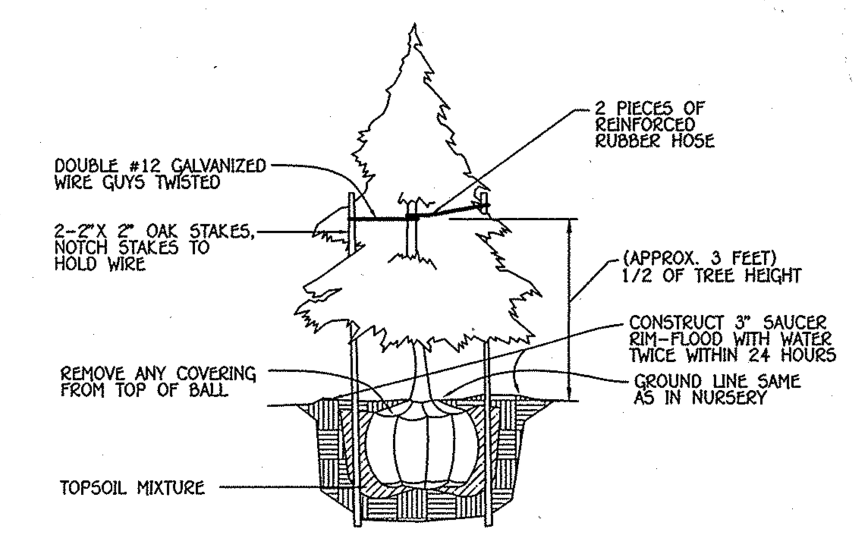

EVERGREEN TREE PLANTING DETAIL

NO SCALE

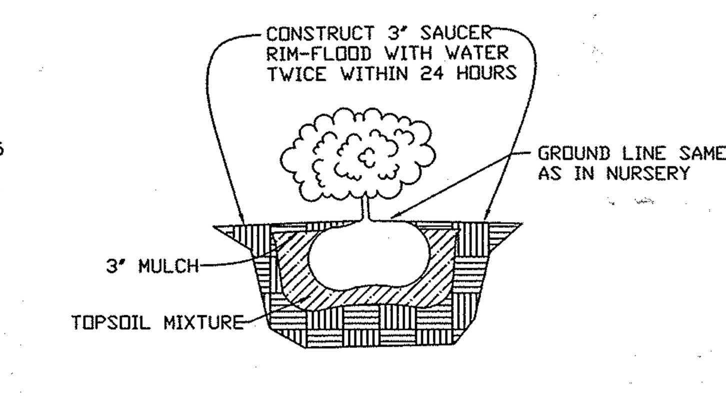

SHRUB PLANTING DETAIL

NO SCALE

SCHEDULE A - PERIMETER LANDSCAPING

PERIMETER	CATEGORY (PROPERTIES/ ROADWAYS)	LANDSCAPE TYPE	LINEAR FEET OF OF ROADWAY FRONTAGE PERIMETER	CREDIT FOR EXISTING VEGETATION (YES, NO, LINEAR FEET) (DESCRIBE BELOW IF NEEDED)	CREDIT FOR WALL, FENCE OR BERM (YES, NO, LINEAR FEET) (DESCRIBE BELOW IF NEEDED)	NUMBER OF PLANTS REQUIRED: SHADE TREES	NUMBER OF PLANTS REQUIRED: EVERGREEN TREES	NUMBER OF PLANTS REQUIRED: SHRUBS	NUMBER OF PLANTS PROVIDED: SHADE TREES	NUMBER OF PLANTS PROVIDED: EVERGREEN TREES	NUMBER OF PLANTS PROVIDED: SHRUBS
P-4	RES. ADJ. TO NON-RES	A	600'	NO	NO	10	-	-	10	-	-

SCHEDULE C
RESIDENTIAL DEVELOPMENT INTERNAL LANDSCAPING

NUMBER OF DWELLING UNITS	101 SFA
NUMBER OF TREES REQUIRED (1:DU SFA; 1:3 DU APTS)	101
NUMBER OF SHADE TREES PROVIDED SHADE TREES OTHER TREES (2:1 SUBSTITUTION)	 65 67 ornamental & 5 evergreen

LANDSCAPE PLANT LIST
(SCHEDULE 'A' & 'C')

LANDSCAPE SCHEDULE - REQUIRED PLANTING

QTY.	KEY	BOTANICAL NAME / COMMON NAME	SIZE	CONT.	REMARKS
TREES - DECIDUOUS SHADE					
16	AFA	Acer x freemanii 'Autumn Blaze' Freeman Red Maple	2-1/2" cal.	B & B	Seedless
12	BNH	Betula nigra 'Heritage' River Birch	2-1/2" cal.	B & B	Multistem (3 stems min.)
4	GBI	Ginkgo biloba Maidenhair	2-1/2" cal.	B & B	Male Only
23	GTI	Gleditsia triacanthos var. inermis 'Skyline' Skyline Honeylocust	2-1/2" cal.	B & B	Thornless
3	KPA	Koelreutarea paniculata Golden Raintree	2-1/2" cal.	B & B	
3	LSC	Liquidambar styraciflua 'Cherokee' Sweetgum	2-1/2" cal.	B & B	Seedless
10	LST	Liquidambar styraciflua Sweetgum	2-1/2" cal.	B & B	
11	LTU	Acer campestre Hedge Maple	2-1/2" cal.	B & B	
18	OAR	Oxydenron Arboreum Sour-wood	2-1/2" cal.	B & B	
TREES - EVERGREEN					
5	IOP	Ilex opaca 'Jersey Knight' American Holly	6'-8' ht.	B & B	Male Only
TREES - ORNAMENTAL					
14	CCA	Cercis canadensis Eastern Redbud	6'-8' ht.	B & B	Multistem/3 stems min.
8	LIN	Lagerstroemia indica 'Natchez' Natchez Crapemyrtle	6'-8' ht.	B & B	Multistem/3 stems min.
22	LIT	Lagerstroemia indica x fauriei 'Tuscarora' Tuscarora Crapemyrtle	6'-8' ht.	B & B	Multistem/3 stems min.
23	MVI	Magnolia virginiana Sweetbay Magnolia	6'-8' ht.	B & B	Multistem/3 stems min.

FINANCIAL SURETY FOR THE REQUIRED LANDSCAPING TREES (**75 shade, 67 ornamental & 5 evergreen**) SHALL BE POSTED AS PART OF THE DEVELOPER'S AGREEMENT IN THE AMOUNT OF $33,300.00

IN ADDITION, FINANCIAL SURETY FOR THE **25 shade trees** SHALL BE POSTED AS PART OF THE DEVELOPER'S AGREEMENT IN THE AMOUNT OF $7,500.00 TO MEET THE GN CREDIT E-1.

THE DEVELOPER IS PROPOSING 100 SHADE, 67 ORNAMENTAL & 5 EVERGREEN TREES.

STREET TREE SCHEDULE

SYMBOL	QTY.	BOTANICAL AND COMMON NAME	SIZE	COMMENTS
AFA	12	Acer x Fremmanii 'Autumn Blaze' Autumn Blaze Freeman Maple (seedless only)	2½"CAL. min.	ALONG PRIVATE ROAD DANVERS STREET (SEE PLAN)
LSC	17	Liquidambar styraciflua 'Cherokee' Cherokee Sweetgum (seedless only)	2½"CAL. min.	ALONG PRIVATE ROAD SOUTHMOOR STREET (SEE PLAN)
GTI	16	Gleditsia triacanthos var. inermis 'Skyline' Honeylocust (Thornless)	2½"CAL. min.	ALONG PRIVATE ROAD DENE COURT (SEE PLAN)
UAV	18	Ulmus americana 'Valley Forge' Valley Forge American Elm	2½"CAL. min.	ALONG PRIVATE ROAD BEAUMONT PLACE (N) (SEE PLAN)

NOTES:

1. FINAL PLACEMENT OF STREET TREES WILL OCCUR IN THE FIELD AND BE PLACED A MINIMUM OF 30 FEET FROM ALL SIGNS AND INTERSECTIONS WHEN PLANTED BETWEEN SIDEWALK AND CURB, BE LOCATED WITH CONSIDERATION OF UNDERGROUND UTILITIES AND STRUCTURES AND MAINTAIN A MINIMUM 5 FEET DISTANCE ON CENTER FROM A DRAIN INLET STRUCTURE, 5 FEET FROM AN OPEN SPACE ACCESS STRIP AND 10 FEET FROM A DRIVEWAY.
2. FINANCIAL SURETY FOR THE 63 STREET TREES SHALL BE POSTED AS PART OF THE DEVELOPER'S AGREEMENT IN THE AMOUNT OF $18,900.00
3. THE DEVELOPER IS PROVIDING 63 STREET TREES TO SATISFY THE MINIMUM REQUIREMENT FOR STREET TREE PLANTING. THE ADDITIONAL LANDSCAPING TREES PROVIDED SATISFIES THE GOAL FOR GN CREDIT E-1.

NOTE:
DENSELY SHADED AREAS ON LOTS 9, 20, 36, 42, 48 & 58 WILL BE PLANTED IN NATIVE VEGETATION.

FISHER, COLLINS & CARTER, INC.
CIVIL ENGINEERING CONSULTANTS & LAND SURVEYORS
CENTENNIAL SQUARE OFFICE PARK - 10272 BALTIMORE NATIONAL PIKE
ELLICOTT CITY, MARYLAND 21042
(410) 461 - 2855

NO.	REVISION	DATE

STATE OF MARYLAND — MICHAEL VITI — No. 20748 — PROFESSIONAL ENGINEER — 6-10-14

LANDSCAPE DEVELOPER'S CERTIFICATE

I/We certify that the landscaping shown on this plan will be done according to the plan, Section 16.124 of the Howard County Code and the Howard County Landscape Manual. I/We further certify that upon completion a letter of landscape installation accompanied by an executed one year guarantee of plant materials will be submitted to the Department of Planning and Zoning.

Name: [signature] Date: 6/10/14

Owner/Builder

U.S. Home Corporation,
D/B/A Lennar
c/o Joseph Fortino, Vice President
10211 Wincopin Circle
Suite 300
Columbia, Maryland 21044
Ph# 410-423-0460

Developer

Preston • Scheffenacker Properties
2330 West Joppa Road, Suite 160
Lutherville, Maryland 21093-4614
Ph# 410-296-3800

APPROVED: HOWARD COUNTY DEPARTMENT OF PLANNING AND ZONING

[signature] Chief, Division of Land Development — Date 7/23/14

[signature] Chief, Development Engineering Division — Date 6.25.14

[signature] Director - Department of Planning and Zoning — Date 7-23-14

SUBDIVISION			SECTION/AREA		LOT Nos.
OXFORD SQUARE			----		3 THRU 103
PLAT NO.	BLOCK NO.	ZONE	TAX/ZONE	ELEC. DIST.	CENSUS TR.
22895-22898	---	TOD	38	1st.	601101

LANDSCAPE NOTES AND DETAILS

OXFORD SQUARE

"A Howard County Green Neighborhood"

Lots 3 Thru 103, Open Space Lots 104 Thru 116 And Parcels 'N' And 'O'

(Being A Resubdivision Of Parcels 'F' And 'J', As Shown On Plats Entitled "Revision Plat, Oxford Square, "Green Neighborhood", Parcels 'C', 'E', 'F', 'G', 'I', 'J', 'K' And 'M' And Recorded Among The Land Records Of Howard County, Maryland As Plat Nos. 22856 Thru 22859)
Zoned: TOD

Tax Map No.: 38 Grid No.: 20 Parcel No.: 761
First Election District Howard County, Maryland
Scale: As Shown
Date: June 6, 2014
Sheet 23 Of 38

SDP-13-068

I:\2009\09014\dwg\SDP (Lennar)\09014 Sheet 21-23 landscape plan.dwg, sheet 23, 6/6/2014 2:31:51 PM, 1:1

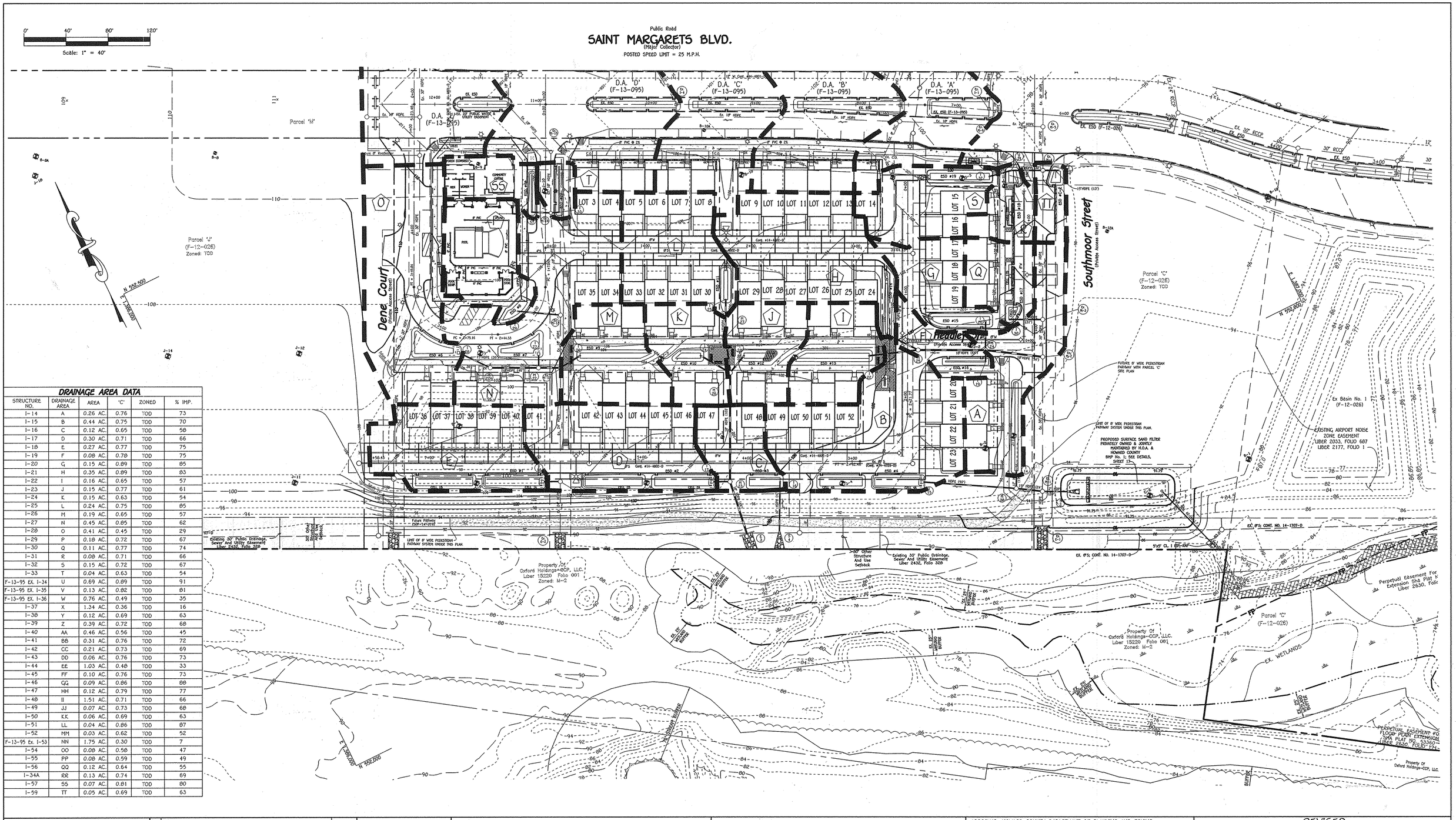

DRAINAGE AREA DATA

STRUCTURE NO.	DRAINAGE AREA	AREA	'C'	ZONED	% IMP.
I-14	A	0.26 AC.	0.76	TOD	73
I-15	B	0.44 AC.	0.75	TOD	70
I-16	C	0.12 AC.	0.65	TOD	58
I-17	D	0.30 AC.	0.71	TOD	66
I-18	E	0.27 AC.	0.77	TOD	75
I-19	F	0.08 AC.	0.78	TOD	75
I-20	G	0.15 AC.	0.89	TOD	85
I-21	H	0.35 AC.	0.89	TOD	83
I-22	I	0.16 AC.	0.65	TOD	57
I-23	J	0.15 AC.	0.77	TOD	61
I-24	K	0.15 AC.	0.63	TOD	54
I-25	L	0.24 AC.	0.75	TOD	85
I-26	M	0.19 AC.	0.65	TOD	57
I-27	N	0.45 AC.	0.85	TOD	62
I-28	O	0.41 AC.	0.45	TOD	29
I-29	P	0.18 AC.	0.72	TOD	67
I-30	Q	0.11 AC.	0.77	TOD	74
I-31	R	0.08 AC.	0.71	TOD	66
I-32	S	0.15 AC.	0.72	TOD	67
I-33	T	0.04 AC.	0.63	TOD	54
F-13-95 EX. I-34	U	0.69 AC.	0.89	TOD	91
F-13-95 EX. I-35	V	0.13 AC.	0.82	TOD	81
F-13-95 EX. I-36	W	0.76 AC.	0.49	TOD	35
I-37	X	1.34 AC.	0.36	TOD	16
I-38	Y	0.12 AC.	0.69	TOD	63
I-39	Z	0.39 AC.	0.72	TOD	68
I-40	AA	0.46 AC.	0.56	TOD	45
I-41	BB	0.31 AC.	0.76	TOD	72
I-42	CC	0.21 AC.	0.73	TOD	69
I-43	DD	0.06 AC.	0.76	TOD	73
I-44	EE	1.03 AC.	0.48	TOD	33
I-45	FF	0.10 AC.	0.76	TOD	73
I-46	GG	0.09 AC.	0.86	TOD	80
I-47	HH	0.12 AC.	0.79	TOD	77
I-48	II	1.51 AC.	0.71	TOD	66
I-49	JJ	0.07 AC.	0.73	TOD	68
I-50	KK	0.06 AC.	0.69	TOD	63
I-51	LL	0.04 AC.	0.86	TOD	87
I-52	MM	0.03 AC.	0.62	TOD	52
F-13-95 Ex. I-53	NN	1.75 AC.	0.30	TOD	7
I-54	OO	0.08 AC.	0.58	TOD	47
I-55	PP	0.08 AC.	0.59	TOD	49
I-56	QQ	0.12 AC.	0.64	TOD	55
I-34A	RR	0.13 AC.	0.74	TOD	69
I-57	SS	0.07 AC.	0.81	TOD	80
I-59	TT	0.05 AC.	0.69	TOD	63

FISHER, COLLINS & CARTER, INC.
CIVIL ENGINEERING CONSULTANTS & LAND SURVEYORS
CENTENNIAL SQUARE OFFICE PARK - 10272 BALTIMORE NATIONAL PIKE
ELLICOTT CITY, MARYLAND 21042
(410) 461 - 2855

NO.	REVISION	DATE
1	REVISE COMMUNITY CENTER AND POOL AREA	10/3/14

STATE OF MARYLAND
MICHAEL S. TAYLOR
No. 24748
PROFESSIONAL ENGINEER
12/8/14

Owner/Builder
U.S. Home Corporation,
D/B/A Lennar
c/o Joseph Fortino, Vice President
10211 Wincopin Circle
Suite 300
Columbia, Maryland 21044
Ph# 410-423-0460

Developer
Preston - Scheffenacker Properties
2330 West Joppa Road, Suite 160
Lutherville, Maryland 21093-4614
Ph# 410-296-3800

APPROVED: HOWARD COUNTY DEPARTMENT OF PLANNING AND ZONING

Chief, Division of Land Development — 2-3-15 Date
Chief, Development Engineering Division — 1-22-15 Date
Director - Department of Planning and Zoning — 2/5/15 Date

SUBDIVISION			SECTION/AREA		LOT Nos.
OXFORD SQUARE			----		3 THRU 103
PLAT NO.	BLOCK NO.	ZONE	TAX/ZONE	ELEC. DIST.	CENSUS TR.
22895-22898	---	TOD	30	1st.	601101

REVISED
STORM DRAIN DRAINAGE AREA MAP

OXFORD SQUARE

"A Howard County Green Neighborhood"

Lots 3 Thru 103, Open Space Lots 104 Thru 116 And Parcels 'N' And 'O'

(Being A Resubdivision Of Parcels 'F' And 'J', As Shown On Plats Entitled, "Revision Plat, Oxford Square, "Green Neighborhood", Parcels 'C', 'E', 'F', 'G', 'I', 'J', 'K' And 'M' And Recorded Among The Land Records Of Howard County, Maryland As Plat Nos. 22856 Thru 22859)
Zoned: TOD

Tax Map No.: 30 Grid No.: 20 Parcel No.: 761
First Election District Howard County, Maryland
Scale: As Shown
Date: June 6, 2014
Sheet 24 Of 30

SDP-13-068

I:\2006\06014\dwg\SDP (Lennar)\Pod Area Roadway\sheet 24.dwg\sheet dwg, 12/8/2014 12:47:43 PM, 1:1

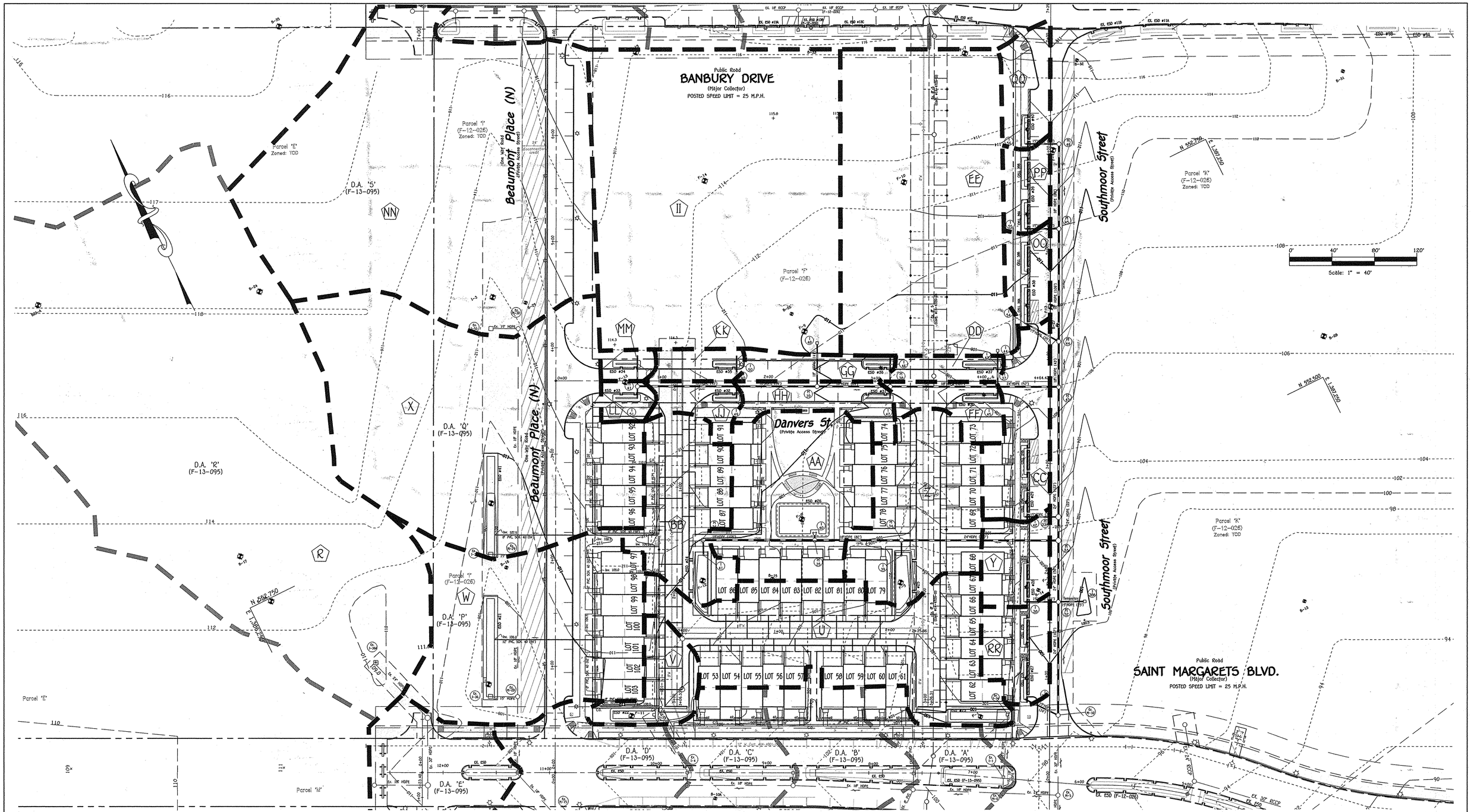

FISHER, COLLINS & CARTER, INC.
CIVIL ENGINEERING CONSULTANTS & LAND SURVEYORS
CENTENNIAL SQUARE OFFICE PARK - 10272 BALTIMORE NATIONAL PIKE
ELLICOTT CITY, MARYLAND 21042
(410) 461 - 2855

NO.	REVISION	DATE

STATE OF MARYLAND
MICHAEL VITAL
No. 20748
PROFESSIONAL ENGINEER
6-10-14

Owner/Builder
U.S. Home Corporation,
D/B/A Lennar
c/o Joseph Fortino, Vice President
10211 Wincopin Circle
Suite 300
Columbia, Maryland 21044
Ph# 410-423-0460

Developer
Preston - Scheffenacker Properties
2330 West Joppa Road, Suite 160
Lutherville, Maryland 21093-4614
Ph# 410-296-3800

APPROVED: HOWARD COUNTY DEPARTMENT OF PLANNING AND ZONING

Chief, Division of Land Development — Date 7/23/14

Chief, Development Engineering Division — Date 6-25-14

Director - Department of Planning and Zoning — Date 7-23-14

SUBDIVISION	SECTION/AREA	LOT Nos.
OXFORD SQUARE	----	3 THRU 103

PLAT NO.	BLOCK NO.	ZONE	TAX/ZONE	ELEC. DIST.	CENSUS TR.
22895-22898	---	TOD	38	1st.	601101

STORM DRAIN DRAINAGE AREA MAP

OXFORD SQUARE

"A Howard County Green Neighborhood"

Lots 3 Thru 103, Open Space Lots 104 Thru 116 And Parcels 'N' And 'O'

(Being A Resubdivision Of Parcels 'F' And 'J', As Shown On Plats Entitled "Revision Plat, Oxford Square, "Green Neighborhood", Parcels 'C', 'E', 'F', 'G', 'I', 'J', 'K' And 'M' And Recorded Among The Land Records Of Howard County, Maryland As Plat Nos. 22856 Thru 22859.)
Zoned: TOD

Tax Map No.: 38 Grid No.: 20 Parcel No.: 761
First Election District Howard County, Maryland
Scale: As Shown
Date: June 6, 2014
Sheet 25 Of 38

SDP-13-068

I:\2009\09014\dwg\SDP (Lennar)\09014 Sheet 24-25 da map.dwg, sheet 25, 6/9/2014 8:42:54 AM, 1:1

STRUCTURE SCHEDULE

STRUCTURE NO.	TOP ELEVATION	INV.IN	INV.OUT	LOCATION	ROAD STA.	OFFSET	TYPE AND WIDTH	REMARKS
I-14	* 94.80	89.80 (6")	88.33 (12")	N 551974.40 E 1386686.17	---	---	15" BASIN	NYLOPLAST OR EQUAL
I-15	* 97.01	92.26 (6")	88.34 (12")	FOXTON WAY	2+59	42.4' L	TYPE 'S' INLET	D - 4.22
I-16	* 100.00	95.24 (6")	88.72 (12")	FOXTON WAY	3+68	19.4' L	15" BASIN	NYLOPLAST OR EQUAL
I-17	* 101.47	96.72 (6")	96.62 (15")	FOXTON WAY	4+33	19.4' L	TYPE 'S' INLET	D - 4.22
I-18	* 104.97	100.22 (6")	100.12 (15")	FOXTON WAY	5+94	19.5'L	TYPE 'S' INLET	D - 4.22
I-19	* 97.71	92.96 (6")	92.86 (15")	HEADLEY STREET	0+46	18' L	15" BASIN	NYLOPLAST OR EQUAL
I-20	* 97.71	92.96 (6")	92.86 (15")	HEADLEY STREET	0+46	20' R	15" BASIN	NYLOPLAST OR EQUAL
I-21	* 101.75	97.00 (4")	96.90 (12")	KELBURNE COURT	1+46	20' R	15" BASIN	NYLOPLAST OR EQUAL
I-22	* 99.75	94.90 (6")	94.90 (15")	KELBURNE COURT	1+66	38' R	15" BASIN	NYLOPLAST OR EQUAL
I-23	* 101.20	96.35 (6")	96.35 (15")	N 552186.23 E 1386503.29	---	---	15" BASIN	NYLOPLAST OR EQUAL
I-24	* 101.90	97.05 (6")	97.05 (15")	N 552205.60 E 1386464.23	---	---	15" BASIN	NYLOPLAST OR EQUAL
I-25	* 105.47	100.47 (6")	97.64 (15")	N 552242.21 E 1386510.30	---	---	15" BASIN	NYLOPLAST OR EQUAL
I-26	* 103.50	98.50 (6")	96.80 (15")	N 552256.10 E 1386361.85	---	---	15" BASIN	NYLOPLAST OR EQUAL
I-27	* 104.25	99.75 (6")	99.64 (15")	DENE COURT	2+19	28.2' L	TYPE 'S' INLET	D - 4.22
I-28	* 106.00	101.00 (6")	100.90 (15")	DENE COURT	2+82	17.3' L	TYPE 'S' INLET	D - 4.22
I-29	* 104.89	100.14 (6")	100.00 (15")	DENE COURT	2+13	15.5' R	15" BASIN	NYLOPLAST OR EQUAL
I-30	* 98.11	93.36 (6")	93.30 (15")	** SOUTHMOOR STREET	1+95.60	21.7' R	15" BASIN	NYLOPLAST OR EQUAL
I-31	* 98.13	93.38 (6"), 93.38 (12")	93.28 (15")	** SOUTHMOOR STREET	0+53.90	21.7' R	15" BASIN	NYLOPLAST OR EQUAL
I-32	* 99.50	94.50 (6")	94.50 (12")	** SOUTHMOOR STREET	0+59.80	43.5' R	15" BASIN	NYLOPLAST OR EQUAL
I-33	* 106.78	102.03 (6")	101.93 (15")	DENE COURT	1+02	12.9' L	15" BASIN	NYLOPLAST OR EQUAL
EX. I-34	* 99.50	94.75 (6")	94.65 (15")	SAINT MARGARETS BOULEVARD	6+74.37	59.9' R	TYPE 'D' INLET	D - 4.10
I-34A	* 98.75	94.00 (6")	93.90 (15")	SOUTHMOOR STREET	0+77.79	22.9' L	15" BASIN	NYLOPLAST OR EQUAL
EX. I-35	* 107.50	102.75 (6")	101.50 (15")	SAINT MARGARETS BOULEVARD	10+01.82	54.5' R	TYPE 'D' INLET	D - 4.10
EX. I-36	* 106.25	101.50 (6")	101.25 (15")	N 552575.26 E 1386415.68	---	---	TYPE 'D' INLET	D - 4.10
EX. I-36A	* 108.17	103.17 (6")	102.92 (15")	N 552695.37 E 1386474.94	---	---	TYPE 'D' INLET	D - 4.10
I-38	* 100.77	96.02 (6")	95.92 (15")	SOUTHMOOR STREET	1+69.67	22.9' L	15" BASIN	NYLOPLAST OR EQUAL
I-38A	* 99.00	---	95.86 (15")	SOUTHMOOR STREET	1+70	33' R	TYPE 'D' INLET	D - 4.10
I-39	* 102.86	97.86 (6")	97.82 (15")	N 552523.36 E 1386820.51	---	---	15" BASIN	NYLOPLAST OR EQUAL
I-40	* 106.50	101.50 (6")	101.50 (15")	N 552579.94 E 1386757.37	---	---	TYPE 'S' INLET	D - 4.22
I-41	* 108.50	103.50 (6")	103.50 (15")	N 552605.78 E 1386653.73	---	---	15" BASIN	NYLOPLAST OR EQUAL
I-42	* 102.85	98.10 (6")	98.10 (15")	SOUTHMOOR STREET	2+49.67	22.9' L	15" BASIN	NYLOPLAST OR EQUAL
I-43	* 107.04	102.29 (6"), 102.44 (12")	102.19 (15")	DANVERS STREET	4+15.10	15.9' L	15" BASIN	NYLOPLAST OR EQUAL
I-44	* 107.33	FUTURE 102.60 (6")	102.57 (12")	DANVERS STREET	4+15.10	29' L	TYPE 'S' INLET	D - 4.22
I-45	* 107.04	102.29 (6")	102.19 (15")	DANVERS STREET	4+15.10	15.9' R	15" BASIN	NYLOPLAST OR EQUAL
I-46	* 108.78	102.78 (12"), 104.03 (6")	102.68 (15")	DANVERS STREET	3+14.2	15.9' L	15" BASIN	NYLOPLAST OR EQUAL
I-47	* 108.78	103.96 (6")	103.86 (15")	DANVERS STREET	3+14.2	15.9' R	15" BASIN	NYLOPLAST OR EQUAL
I-48	* 109.00	FUTURE 105.60 (6"), FUTURE 104.90 (18")	104.80 (18")	DANVERS STREET	2+45.43	36' L	TYPE 'S' INLET	D - 4.22
I-49	* 111.25	106.50 (6")	106.40 (15")	DANVERS STREET	1+70	15.9' R	15" BASIN	NYLOPLAST OR EQUAL
I-50	* 111.25	106.47 (12"), 106.50 (6")	106.40 (15")	DANVERS STREET	1+70	15.9' L	15" BASIN	NYLOPLAST OR EQUAL
I-51	* 112.87	107.88 (6")	107.78 (15")	DANVERS STREET	0+76.6	15.9' R	15" BASIN	NYLOPLAST OR EQUAL
I-52	* 112.87	108.09 (12"), 108.12 (6")	107.78 (15")	DANVERS STREET	0+76.6	15.9' L	15" BASIN	NYLOPLAST OR EQUAL
I-54	* 108.07	103.32 (6")	103.22 (15")	SOUTHMOOR STREET	6+01	22.9' L	15" BASIN	NYLOPLAST OR EQUAL
I-55	* 110.57	105.82 (6")	105.77 (15")	SOUTHMOOR STREET	5+21	22.9' L	15" BASIN	NYLOPLAST OR EQUAL
I-56	* 112.85	108.10 (6")	108.00 (15")	SOUTHMOOR STREET	2+17	22.9' L	15" BASIN	NYLOPLAST OR EQUAL
I-57	* 107.10	102.35 (6")	102.25 (15")	DENE COURT	1+02	12.9' R	15" BASIN	NYLOPLAST OR EQUAL
I-59	* 97.59	92.84 (6")	92.74 (15")	** SOUTHMOOR STREET	0+54	21.8' L	15" BASIN	NYLOPLAST OR EQUAL
Ex. M-1	95.00	88.58 (36")	88.58 (36") 87.58 (12")	N 551945.91 E 1386699.76	---	---	5' DIA. MANHOLE	G - 5.13
Ex. M-2	96.80	89.44 (36") 91.35 (18"), 90.83 (18")	89.34 (36")	N 552066.26 E 1386759.13	---	---	5' DIA. MANHOLE	G - 5.13
Ex. M-3	98.41	89.69 (36") 93.00 (15"), 93.00 (15")	89.59 (36")	N 552092.48 E 1386772.07	---	---	5' DIA. MANHOLE	G - 5.13
Ex. M-4	98.81	90.90 (30") 92.15 (15"), 92.15 (15")	90.40 (36")	SAINT MARGARETS BOULEVARD	6+17.81	53.1' L	5' DIA. MANHOLE	G - 5.13
Ex. M-10	98.67	92.81 (24"), 93.56 (15")	92.31 (30")	SAINT MARGARETS BOULEVARD	6+26.95	63.3' R	5' DIA. MANHOLE	G - 5.13
EX. M-11	105.30	94.51 (24") 99.95 (15")	88.49 (24")	N 552156.56 E 1386293.00	---	---	4' DIA. MANHOLE	G - 5.12
EX. M-12	105.90	95.84 (24") 99.19 (18"), 96.59 (15")	95.59 (24")	N 552253.42 E 1386340.79	---	---	4' DIA. MANHOLE	G - 5.12
EX. M-13	105.80	96.85 (18") 99.60 (15")	96.35 (24")	N 552298.47 E 1386363.02	---	---	4' DIA. MANHOLE	G - 5.12
EX. M-14	106.77	98.07 (18") 101.85 (15")	97.82 (18")	SAINT MARGARETS BOULEVARD	10+89.75	103.1' L	4' DIA. MANHOLE	G - 5.12
M-22	106.25	99.50 (15"), 99.50 (18")	99.40 (18")	N 552262.65 E 1386322.08	---	---	4' DIA. MANHOLE	G - 5.12
M-22A	107.25	100.55 (15")	100.30 (18")	N 552283.03 E 1386281.04	---	---	4' DIA. MANHOLE	G - 5.12
M-23	101.75	96.45 (15"), 89.24 (18")	88.99 (18")	FOXTON WAY	4+16	19.4' L	4' DIA. MANHOLE	G - 5.12
M-24	97.88	92.59 (15"),92.59 (15"),92.65 (18")	92.40 (18")	HEADLEY STREET	0+46	7' L	4' DIA. MANHOLE	G - 5.12
M-25	99.37	95.67 (12"), 94.42 (15")	94.17 (18")	HEADLEY STREET	1+10	7' L	4' DIA. MANHOLE	G - 5.12
M-26	102.25	96.13 (15"), 96.13 (15"), 92.68 (18")	92.43 (18")	N 552178.00 E 1386483.37	---	---	4' DIA. MANHOLE	G - 5.12
M-27	106.00	95.00 (15")	94.75 (18")	N 552211.47 E 1386495.13	---	---	4' DIA. MANHOLE	G - 5.12
M-28	95.00	89.13 (12"), 89.13 (12")	88.88 (15")	N 551959.38 E 1386678.71	---	---	4' DIA. MANHOLE	G - 5.12
M-32	101.09	94.86 (24"), 95.61 (15"), 95.61 (15")	94.61 (24")	SOUTHMOOR STREET	1+70	8'R	5' DIA. MANHOLE	G - 5.13
M-33	102.56	96.27 (24"), 96.12 (24") FUT. 96.77 (15")	96.02 (24")	SOUTHMOOR STREET	2+27	8'R	5' DIA. MANHOLE	G - 5.13
M-33A	103.18	97.62 (15"), 96.87 (24")	96.62 (24")	SOUTHMOOR STREET	2+50	8'R	5' DIA. MANHOLE	G - 5.13
M-34	105.50	97.36 (18"), 97.61 (15")	96.86 (24")	N 552537.03 E 1386827.17	---	---	4' DIA. MANHOLE	G - 5.12
M-35	107.50	101.32 (18"), 101.43 (15")	101.07 (18")	N 552572.99 E 1386754.04	---	---	4' DIA. MANHOLE	G - 5.12
M-36	110.00	103.30 (15")	103.05 (18")	N 552619.49 E 1386660.05	---	---	4' DIA. MANHOLE	G - 5.12
M-37	107.22	101.98 (15"),101.98 (15"),101.14 (18")	100.64 (24")	DANVERS STREET	4+15.12	5'R	5' DIA. MANHOLE	G - 5.13
M-38	108.95	103.75 (15"),102.47 (15"),102.64 (18")	102.22 (18")	DANVERS STREET	3+14.2	5'R	5' DIA. MANHOLE	G - 5.13
M-39	110.13	104.17 (18"), 104.17 (18")	103.92 (18")	DANVERS STREET	2+45.53	5'R	4' DIA. MANHOLE	G - 5.12
M-40	111.43	106.19 (15"),106.19 (15"),105.94 (18")	105.69 (18")	DANVERS STREET	1+69.87	5'R	5' DIA. MANHOLE	G - 5.13
M-41	113.03	107.57 (15"), 107.57 (15")	107.52 (18")	DANVERS STREET	0+76.6	5'R	4' DIA. MANHOLE	G - 5.12
M-43	106.67	101.51 (18"), 100.21 (24") FUTURE 100.86 (15")	100.18 (24")	SOUTHMOOR STREET	3+72	8'R	4' DIA. MANHOLE	G - 5.12
M-44	107.88	102.62 (18"), 102.87 (15")	102.37 (18")	SOUTHMOOR STREET	4+15	8'R	4' DIA. MANHOLE	G - 5.12
M-45	110.91	105.16 (18"), 105.41 (15")	104.91 (18")	SOUTHMOOR STREET	5+12	8'R	4' DIA. MANHOLE	G - 5.12
M-46	113.19	107.69 (15")	107.44 (18")	SOUTHMOOR STREET	6+01	8'R	4' DIA. MANHOLE	G - 5.12
E-3	90.75	88.50 (18")	---	FOXTON WAY	4+00	69.3'R	TYPE 'C' ENDWALL	D - 5.21
S-2	88.50	87.50 (12")	---	N 551936.86 E 1386717.59	---	---	FLARED END SECTION	ADS OR EQUAL
S-4	89.25	88.25 (12")	---	FOXTON WAY	3+69	68.5' L	FLARED END SECTION	ADS OR EQUAL

*- DENOTES GRATE ELEVATION ('S' INLET) OR BASIN TOP (BEFORE DOME GRATE IS INSTALLED)
** SOUTH OF SAINT MARGARETS BLVD.

PIPE SCHEDULE

SIZE	CLASS	LENGTH
4"	PVC, SCH. 40 (PERFORATED)	44 l.f.
6"	PVC, SCH. 40 (PERFORATED)	1,966 l.f.
6"	PVC, SCH. 40 (SOLID)	737 l.f.
8"	PVC, SCH. 40 (SOLID)	468 l.f.
12"	HDPE	231 l.f.
15"	HDPE	806 l.f.
18"	HDPE	1,137 l.f.
24"	HDPE	514 l.f.

NOTE: HDPE PIPE MAY BE SUBSTITUTED WITH RCCP, CL. IV PIPE.

NOTE: SEE SHEETS 10-17 FOR 10 SCALE PLAN VIEWS OF STORM DRAIN INVERT ELEVATIONS FROM THE PROPOSED ESD DEVICES TO THE MAIN STORM DRAIN PROFILE.

SOUTHMOOR STREET
(SOUTH OF ST. MARGARETS BLVD.)

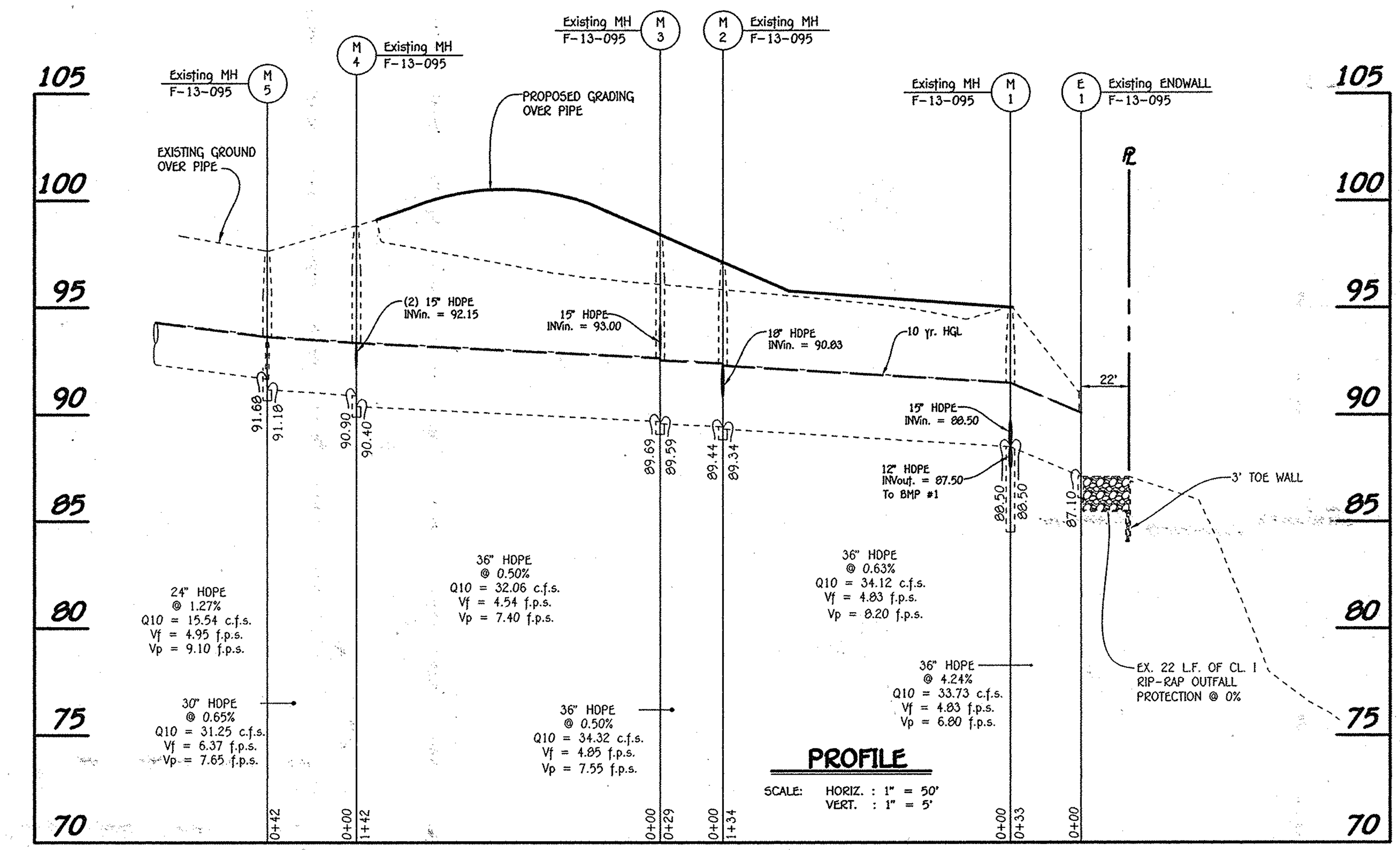

PROFILE
SCALE: HORIZ. : 1" = 50'
VERT. : 1" = 5'

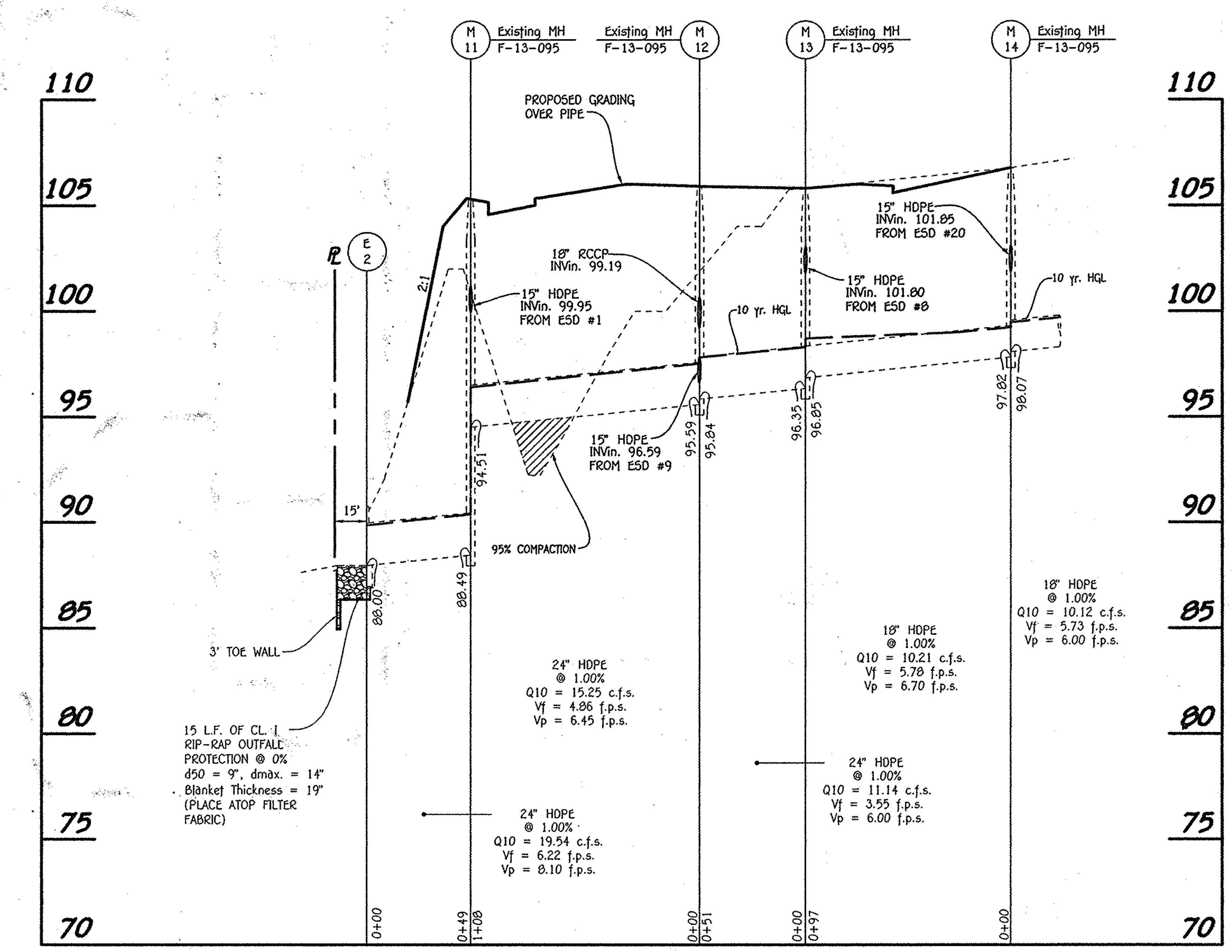

PROFILE
SCALE: HORIZ. : 1" = 50'
VERT. : 1" = 5'

Nyloplast®
3130 VERONA AVE
BUFORD, GA 30518
PHN (770) 932-2443
FAX (770) 932-2490
www.nyloplast-us.com

0' 50' 100' 150'
Scale: 1" = 50'

FISHER, COLLINS & CARTER, INC.
CIVIL ENGINEERING CONSULTANTS & LAND SURVEYORS
CENTENNIAL SQUARE OFFICE PARK - 10272 BALTIMORE NATIONAL PIKE
ELLICOTT CITY, MARYLAND 21042
(410) 461 - 2855

NO.	REVISION	DATE

STATE OF MARYLAND — MICHAEL ... — No. 20748 — PROFESSIONAL ENGINEER — 6.10.14

Owner/Builder
U.S. Home Corporation,
D/B/A Lennar
c/o Joseph Fortino, Vice President
10211 Wincopin Circle
Suite 300
Columbia, Maryland 21044
Ph# 410-423-0460

Developer
Preston • Scheffenacker Properties
2330 West Joppa Road, Suite 160
Lutherville, Maryland 21093-4614
Ph# 410-296-3800

APPROVED: HOWARD COUNTY DEPARTMENT OF PLANNING AND ZONING

Chief, Division of Land Development — Date 7/23/14
Chief, Development Engineering Division — Date 6.25.14
Director - Department of Planning and Zoning — Date 7-23-14

SUBDIVISION	SECTION/AREA	LOT Nos.
OXFORD SQUARE	----	3 THRU 103

PLAT NO.	BLOCK NO.	ZONE	TAX/ZONE	ELEC. DIST.	CENSUS TR.
22895-22898	---	TOD	38	1st.	601101

STORM DRAIN PROFILES

OXFORD SQUARE

"A Howard County Green Neighborhood"

Lots 3 Thru 103, Open Space Lots 104 Thru 116 And Parcels 'N' And 'O'

(Being A Resubdivision Of Parcels 'F' And 'J', As Shown On Plats Entitled "Revision Plat, Oxford Square, "Green Neighborhood", Parcels 'C', 'E', 'F', 'G', 'I', 'J', 'K' And 'M' And Recorded Among The Land Records Of Howard County, Maryland As Plat Nos. 22856 Thru 22859)
Zoned: TOD

Tax Map No.: 38 Grid No.: 20 Parcel No.: 761
First Election District Howard County, Maryland
Scale: As Shown
Date: June 6, 2014
Sheet 26 Of 38

SDP-13-068

I:\2009\09014\dwg\SDP (Lennar)\09014 Sheet 26-28 sd profiles.dwg, SHEET 26, 6/9/2014 9:14:31 AM, 1:1

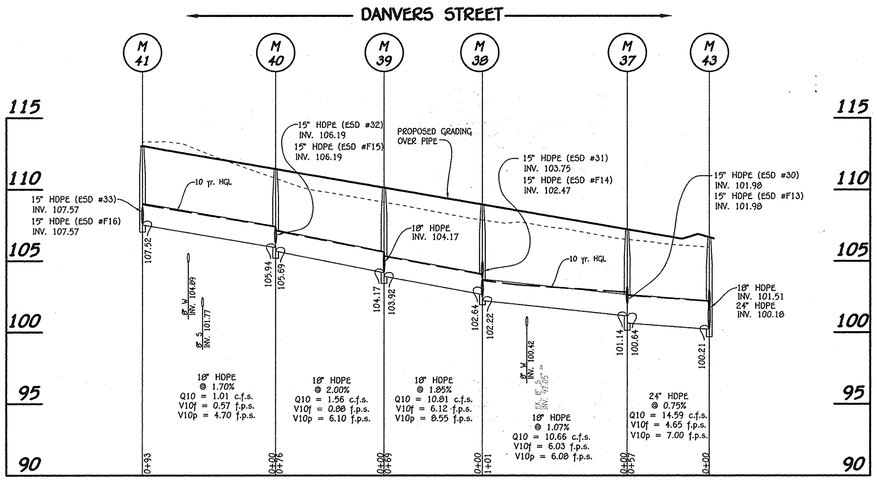

PROFILE

SCALE: HORIZ. : 1" = 50'
VERT. : 1" = 5'

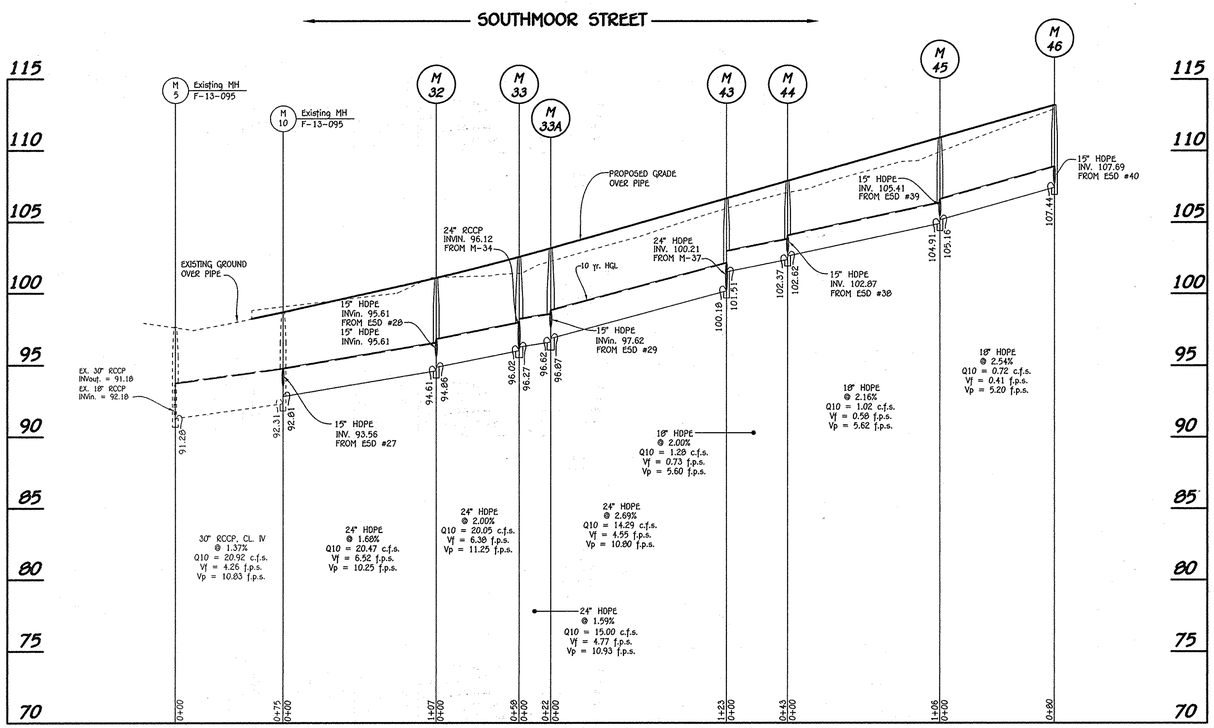

PROFILE

SCALE: HORIZ. : 1" = 50'
VERT. : 1" = 5'

0' 50' 100' 150'

Scale: 1" = 50'

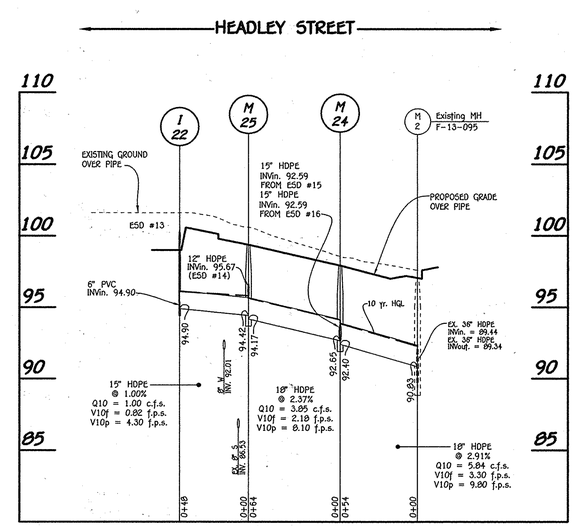

PROFILE

SCALE: HORIZ. : 1" = 50'
VERT. : 1" = 5'

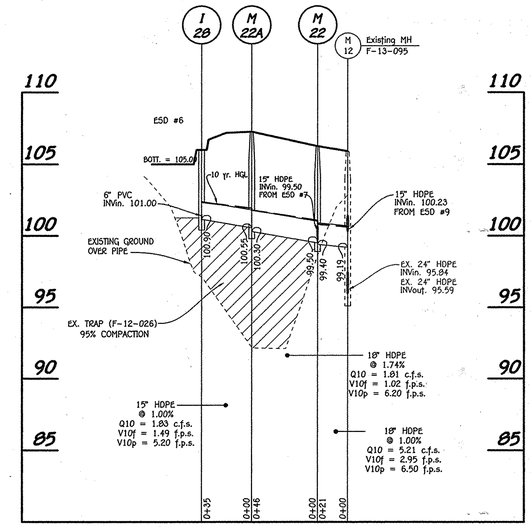

PROFILE

SCALE: HORIZ. : 1" = 50'
VERT. : 1" = 5'

FISHER, COLLINS & CARTER, INC.
CIVIL ENGINEERING CONSULTANTS & LAND SURVEYORS
CENTENNIAL SQUARE OFFICE PARK - 10272 BALTIMORE NATIONAL PIKE
ELLICOTT CITY, MARYLAND 21042
(410) 461 - 2855

NO.	REVISION	DATE

STATE OF MARYLAND
MICHAEL J. TIMMONS
No. 20742
PROFESSIONAL ENGINEER
6-10-14

Owner/Builder

U.S. Home Corporation,
D/B/A Lennar
c/o Joseph Fortino, Vice President
10211 Wincopin Circle
Suite 300
Columbia, Maryland 21044
Ph# 410-423-0460

Developer

Preston • Scheffenacker Properties
2330 West Joppa Road, Suite 160
Lutherville, Maryland 21093-4614
Ph# 410-296-3800

APPROVED: HOWARD COUNTY DEPARTMENT OF PLANNING AND ZONING

Chief, Division of Land Development — Date 7/23/14

Chief, Development Engineering Division — Date 6-25-14

Director - Department of Planning and Zoning — Date 7-23-14

SUBDIVISION			SECTION/AREA		LOT Nos.
OXFORD SQUARE			----		3 THRU 103
PLAT NO.	BLOCK NO.	ZONE	TAX/ZONE	ELEC. DIST.	CENSUS TR.
22895-22898	---	TOD	38	1st.	601101

STORM DRAIN PROFILES

OXFORD SQUARE

"A Howard County Green Neighborhood"

Lots 3 Thru 103, Open Space Lots 104 Thru 116 And Parcels 'N' And 'O'

(Being A Resubdivision Of Parcels 'F' And 'J', As Shown On Plats Entitled "Revision Plat, Oxford Square, "Green Neighborhood", Parcels 'C', 'E', 'F', 'G', 'I', 'J', 'K' And 'M' And Recorded Among The Land Records Of Howard County, Maryland As Plat Nos. 22856 Thru 22859.)
Zoned: TOD

Tax Map No.: 38 Grid No.: 20 Parcel No.: 761
First Election District Howard County, Maryland
Scale: As Shown
Date: June 6, 2014
Sheet 27 Of 38

SDP-13-068

I:\2009\09014\dwg\SDP (Lennar)\09014 Sheet 26-28 sd profiles.dwg, SHEET 27, 6/6/2014 3:20:59 PM, 1:1

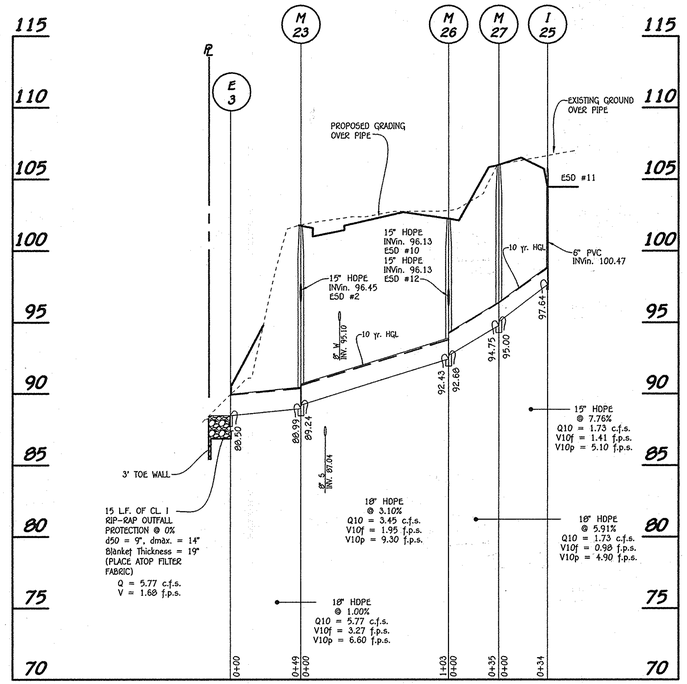

PROFILE

SCALE: HORIZ. : 1" = 50'
VERT. : 1" = 5'

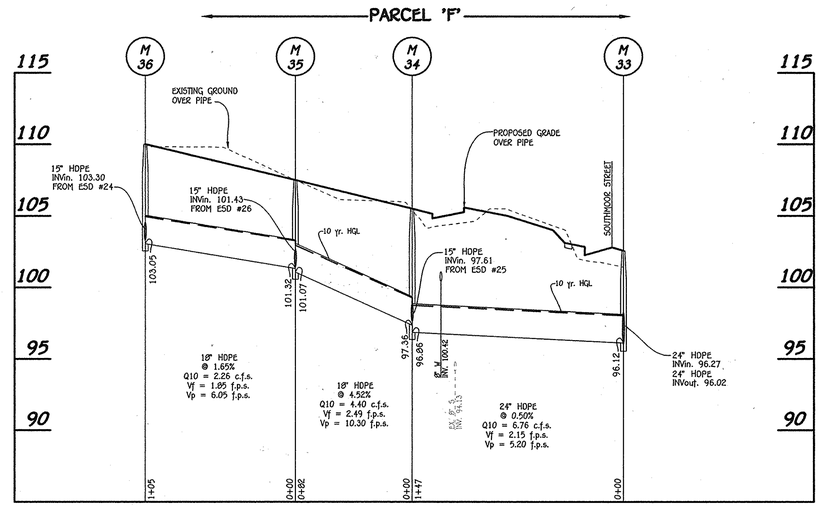

PROFILE

SCALE: HORIZ. : 1" = 50'
VERT. : 1" = 5'

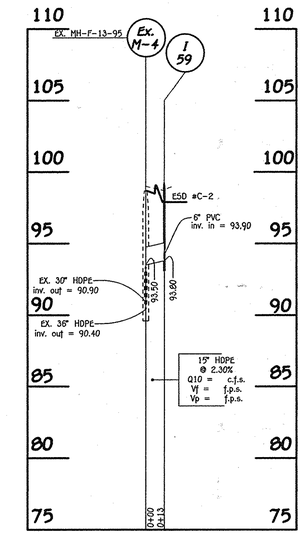

PROFILE

SCALE: HORIZ. : 1" = 50'
VERT. : 1" = 5'

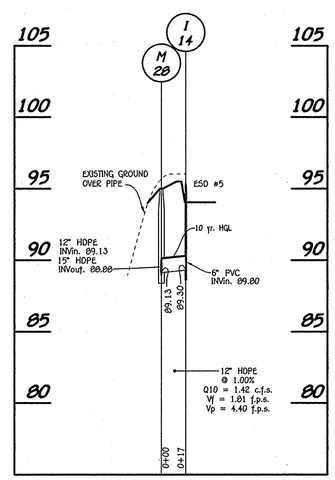

PROFILE

SCALE: HORIZ. : 1" = 50'
VERT. : 1" = 5'

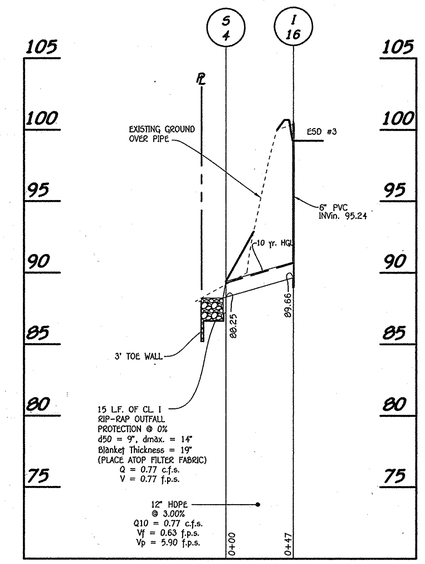

PROFILE

SCALE: HORIZ. : 1" = 50'
VERT. : 1" = 5'

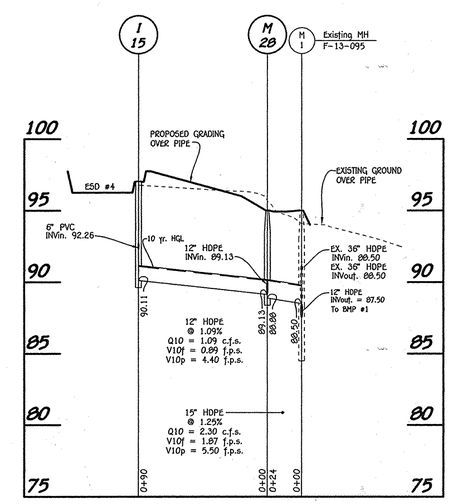

PROFILE

SCALE: HORIZ. : 1" = 50'
VERT. : 1" = 5'

0' 50' 100' 150'
Scale: 1" = 50'

FISHER, COLLINS & CARTER, INC.
CIVIL ENGINEERING CONSULTANTS & LAND SURVEYORS
CENTENNIAL SQUARE OFFICE PARK - 10272 BALTIMORE NATIONAL PIKE
ELLICOTT CITY, MARYLAND 21042
(410) 461 - 2855

NO.	REVISION	DATE

STATE OF MARYLAND
MICHAEL V. TOMAI
No. 20748
PROFESSIONAL ENGINEER
8-10-14

Owner/Builder

U.S. Home Corporation,
D/B/A Lennar
c/o Joseph Fortino, Vice President
10211 Wincopin Circle
Suite 300
Columbia, Maryland 21044
Ph# 410-423-0460

Developer

Preston • Scheffenacker Properties
2330 West Joppa Road, Suite 160
Lutherville, Maryland 21093-4614
Ph# 410-296-3800

APPROVED: HOWARD COUNTY DEPARTMENT OF PLANNING AND ZONING

Chief, Division of Land Development — Date 7/23/14
Chief, Development Engineering Division — Date 6-25-14
Director - Department of Planning and Zoning — Date 7-23-14

SUBDIVISION			SECTION/AREA		LOT Nos.
OXFORD SQUARE			----		3 THRU 103
PLAT NO.	BLOCK NO.	ZONE	TAX/ZONE	ELEC. DIST.	CENSUS TR.
22895-22898	---	TOD	30	1st.	601101

STORM DRAIN PROFILES

OXFORD SQUARE

"A Howard County Green Neighborhood"

Lots 3 Thru 103, Open Space Lots 104 Thru 116 And Parcels 'N' And 'O'

(Being A Resubdivision Of Parcels 'F' And 'J', As Shown On Plats Entitled "Revision Plat, Oxford Square, "Green Neighborhood", Parcels 'C', 'E', 'F', 'G', 'I', 'J', 'K' And 'M' And Recorded Among The Land Records Of Howard County, Maryland As Plat Nos. 22856 Thru 22859.)
Zoned: TOD

Tax Map No.: 30 Grid No.: 20 Parcel No.: 761
First Election District Howard County, Maryland
Scale: As Shown
Date: June 6, 2014
Sheet 28 Of 30

SDP-13-068

I:\2009\09014\dwg\SDP (Lennar)\09014 Sheet 26-28 sd profiles.dwg, SHEET 28, 6/6/2014 3:21:50 PM, 1:1

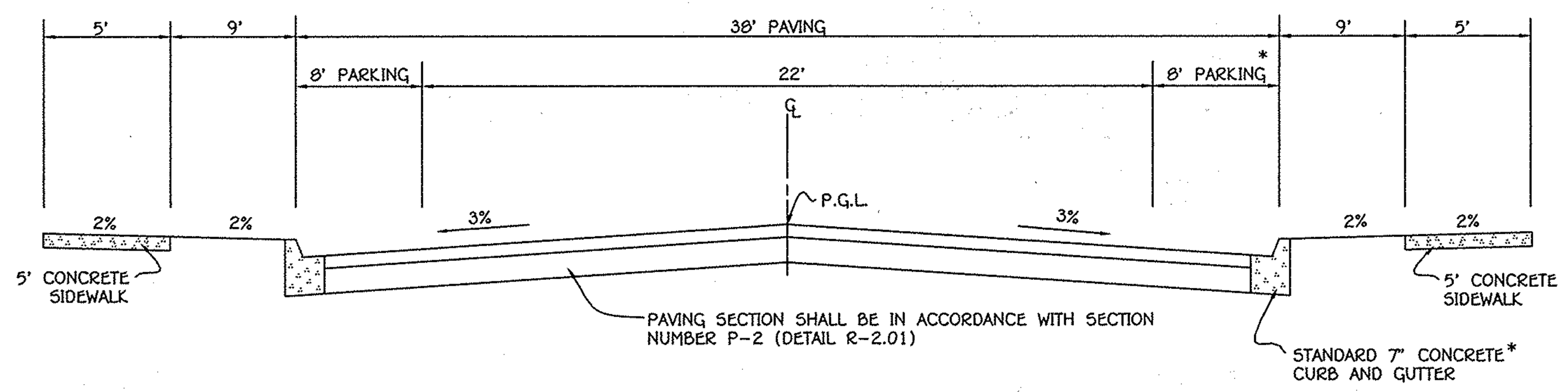

TYPICAL ROADWAY SECTION (SOUTHMOOR STREET)

NO SCALE

* STANDARD 7" CONCRETE CURB AND GUTTER & 8' PARKING IS FUTURE FOR ROAD 'D'

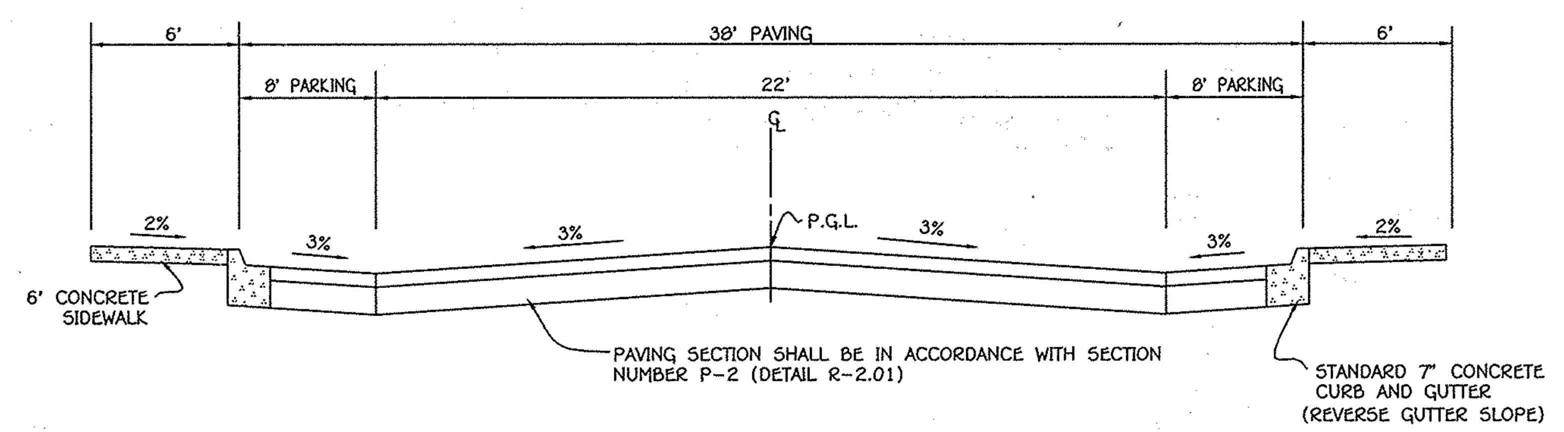

TYPICAL ROADWAY SECTION (DANVERS STREET)

NO SCALE

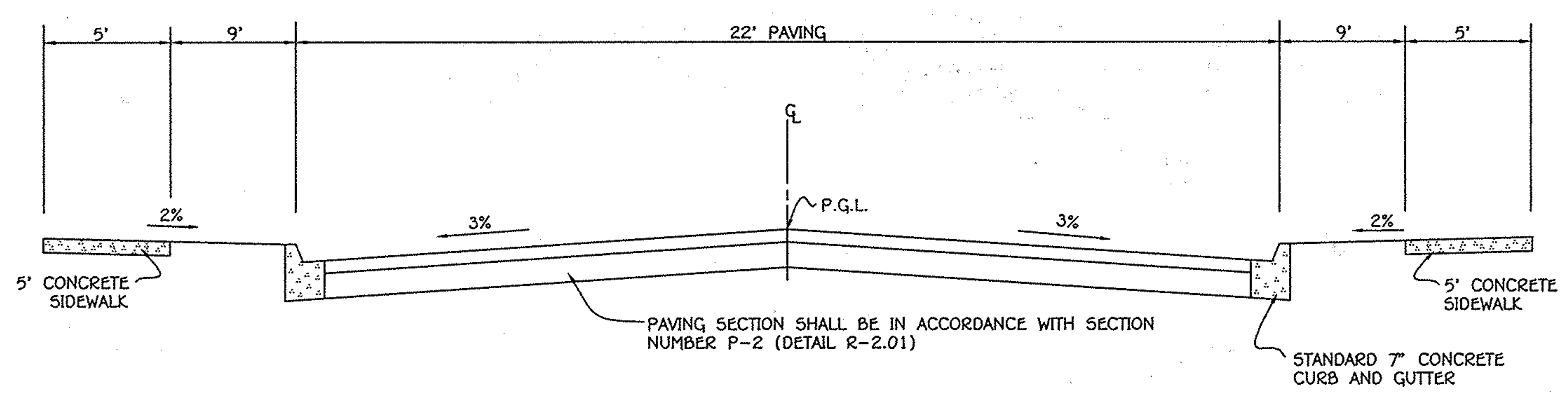

TYPICAL ROADWAY SECTION (DANVERS STREET)

NO SCALE

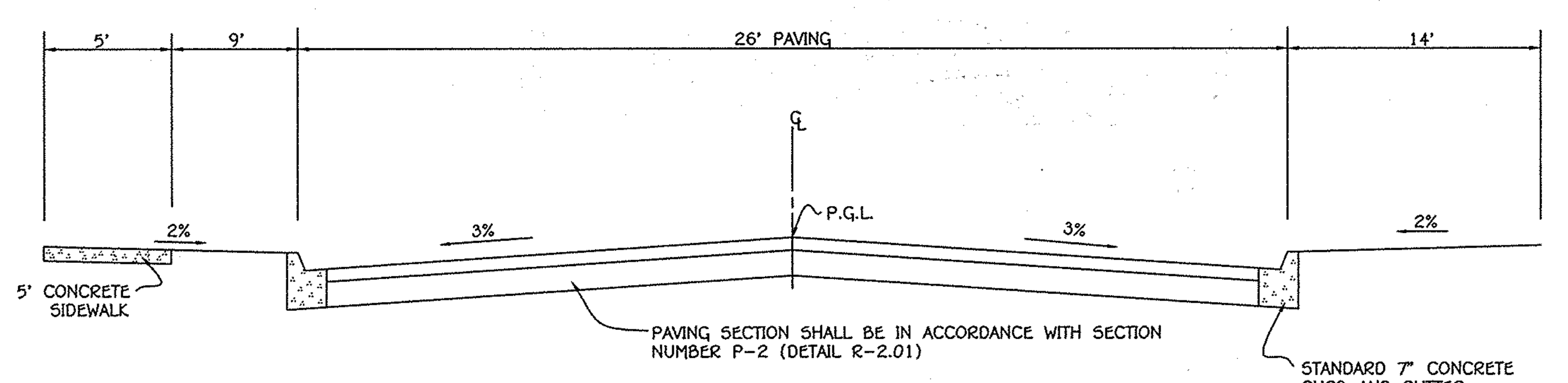

TYPICAL ROADWAY SECTION (HEADLEY STREET)

NO SCALE

DETAIL R-2.01

SECTION NUMBER	ROAD AND STREET CLASSIFICATION	CALIFORNIA BEARING RATIO (CBR)	3 TO <5	5 TO <7	≥7	3 TO <5	5 TO <7	≥7
		PAVEMENT MATERIAL (INCHES)	MIN HMA WITH GAB			HMA WITH CONSTANT GAB		
P-1	PARKING BAYS: RESIDENTIAL AND NON-RESIDENTIAL PARKING DRIVE AISLES: RESIDENTIAL AND NON-RESIDENTIAL WITH NO MORE THAN 2 HEAVY TRUCKS PER DAY	HMA SUPERPAVE FINAL SURFACE 9.5 MM, PG 64-22, LEVEL 1 (ESAL)	1.5	1.5	1.5	1.5	1.5	1.5
		HMA SUPERPAVE INTERMEDIATE SURFACE N/A	N/A	N/A	N/A	N/A	N/A	N/A
		HMA SUPERPAVE BASE 19.0 MM, PG 64-22, LEVEL 1 (ESAL)	2.0	2.0	2.0	3.5	3.0.	2.5
		* GRADED AGGREGATE BASE (GAB)	8.5	7.0	5.0	4.0	4.0	4.0
P-2	PARKING DRIVE AISLES: RESIDENTIAL AND NON-RESIDENTIAL WITH NO MORE THAN 10 HEAVY TRUCKS PER DAY LOCAL ROADS: ACCESS PLACE, ACCESS STREET CUL-DE-SACS: RESIDENTIAL	HMA SUPERPAVE FINAL SURFACE 9.5 MM, PG 64-22, LEVEL 1 (ESAL)	1.5	1.5	1.5	1.5	1.5	1.5
		HMA SUPERPAVE INTERMEDIATE SURFACE 9.5 MM, PG 64-22; LEVEL 1 (ESAL)	1.0	1.0	1.0	1.0	1.0	1.0
		HMA SUPERPAVE BASE 19.0 MM, PG 64-22, LEVEL 1 (ESAL)	2.0	2.0	2.0	3.5	2.0	2.0
		* GRADED AGGREGATE BASE (GAB)	8.0	4.0	3.0	4.0	4.0	4.0

*GAB NOTE:
IN ACCORDANCE WITH THIS PROJECTS GREEN NEIGHBORHOOD SITE PROGRAM, THE GRADED AGGREGATE BASE CAN INCLUDE RECYCLED CONCRETE STONE (RC) THAT MEETS HOWARD COUNTY CRITERIA.

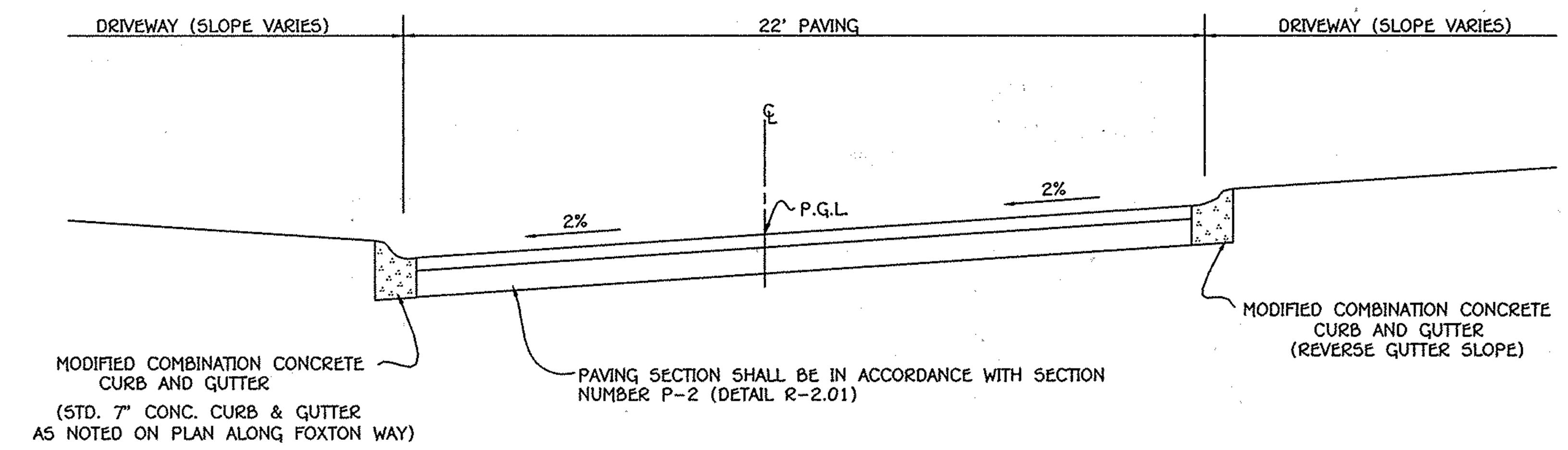

TYPICAL ROADWAY SECTION (KELBURNE COURT, FOXTON WAY, ELMTHORPE WAY & BRINLEY WAY)

NO SCALE

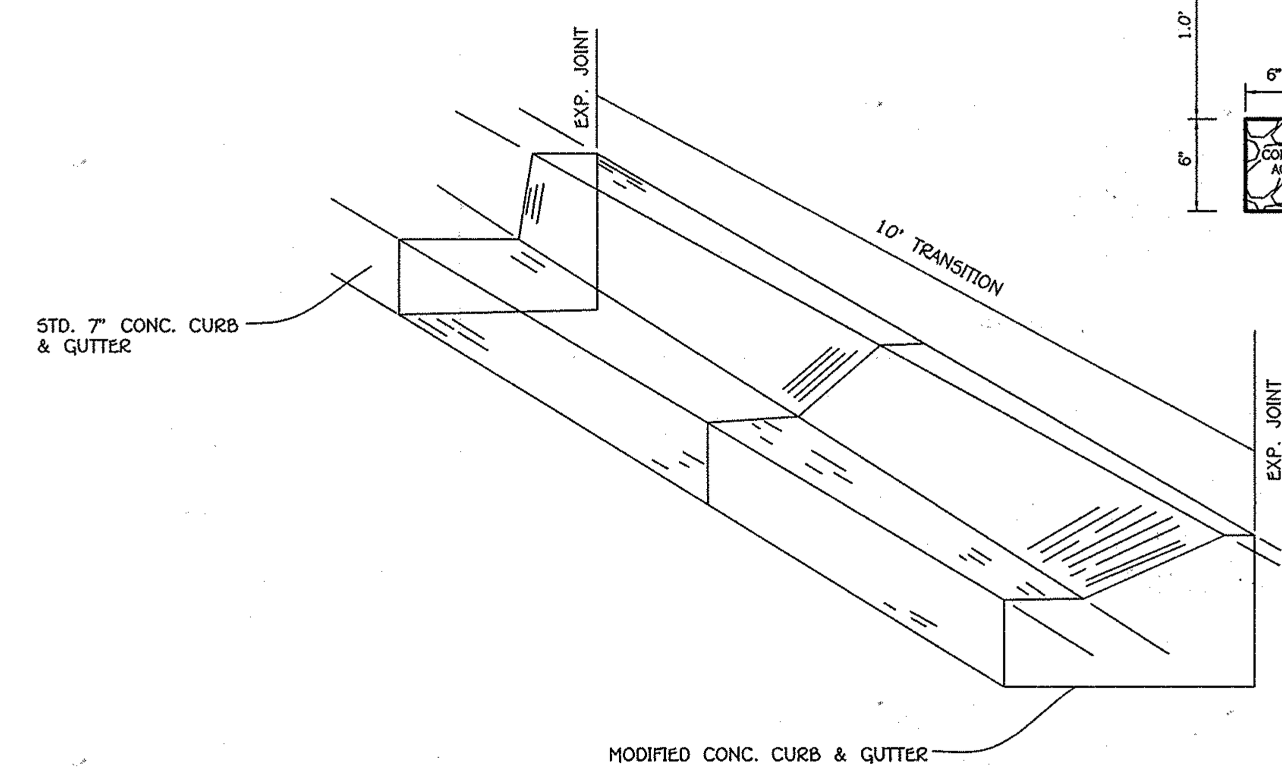

CONCRETE CURB & GUTTER TRANSITION

NO SCALE

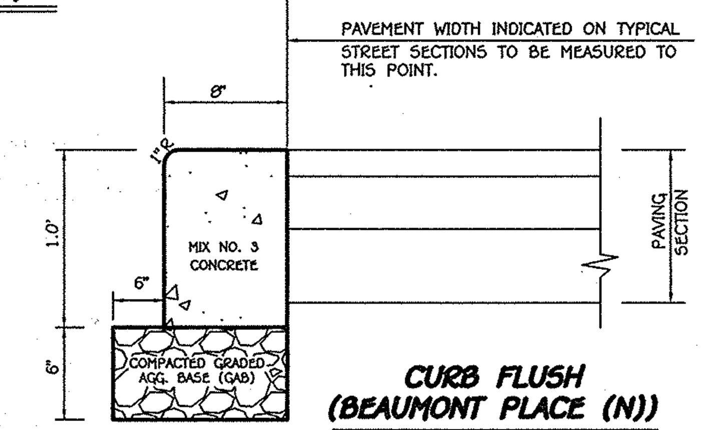

CURB FLUSH (BEAUMONT PLACE (N))

NO SCALE DETAIL R-3.07

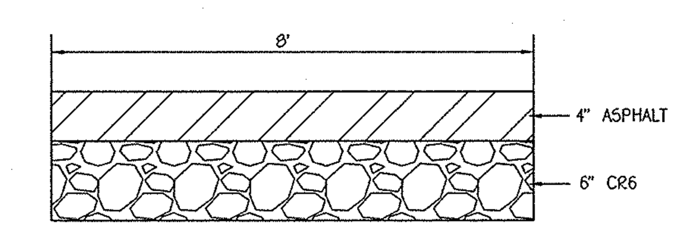

MACADAM PATHWAY DETAIL

NO SCALE

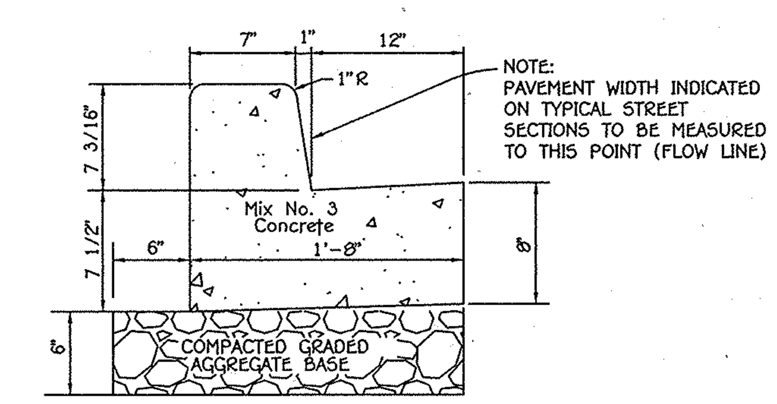

NOTE:
PAVEMENT WIDTH INDICATED ON TYPICAL STREET SECTIONS TO BE MEASURED TO THIS POINT (FLOW LINE)

STD. 7" CONC. CURB AND GUTTER

NO SCALE DETAIL R-3.01

(MATT DETAILS OR OPTIONAL 12"x12" TILE TECH PAVERS(RED))

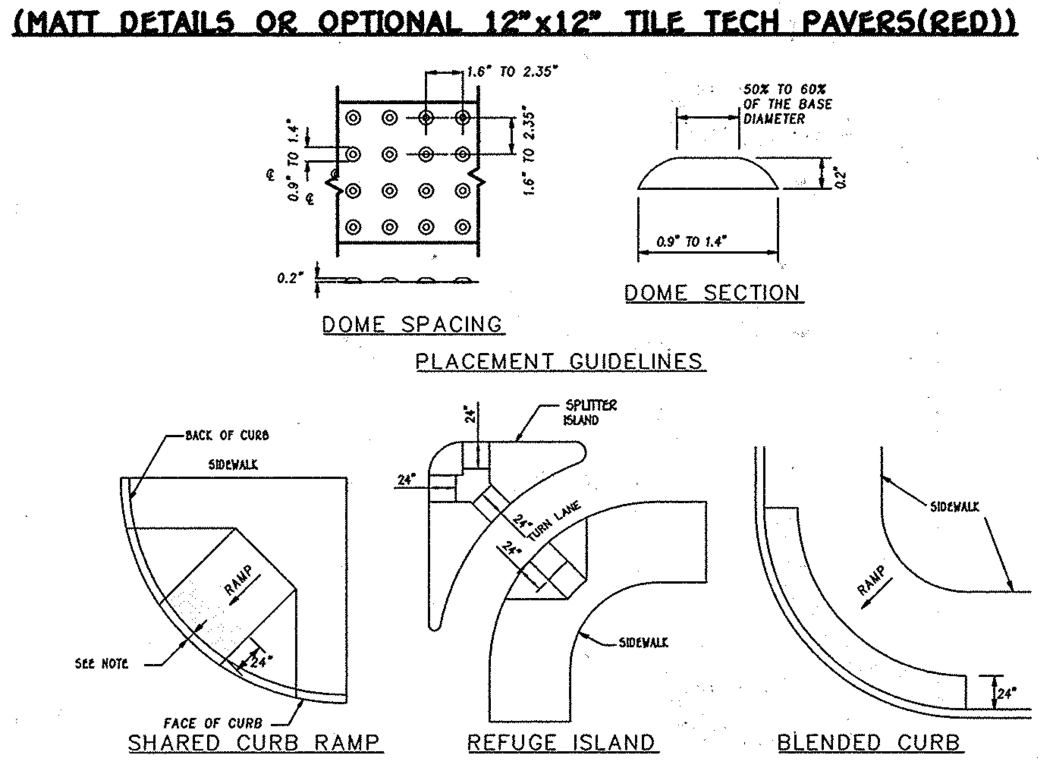

WHERE ISLANDS OR MEDIANS ARE LESS THAN 6 FEET WIDE, THE DETECTABLE WARNING SHOULD EXTEND ACROSS THE FULL LENGTH OF THE CUT THROUGH THE ISLAND OR MEDIAN

NOTES

1. THE DETECTABLE WARNING SURFACE SHALL BE LOCATED SO THAT THE EDGE NEAREST THE CURB LINE IS 6 TO 8 INCHES FROM THE FACE OF CURB.
2. FOR SKEWED APPLICATIONS DETECTABLE WARNING SHALL BE PLACED SUCH THAT THE DOMES CLOSEST TO THE BACK OF CURB ARE NO LESS THAN 0.5" AND NO MORE THAN 3.0" FROM THE BACK OF CURB. TRUNCATED DOME SURFACES SHALL BE FABRICATED TO PROVIDE FULL DOMES ONLY.
3. DETECTABLE WARNING SURFACE SHALL BE PAID FOR IN ACCORDANCE WITH SECTION 611 OF THE SPECIFICATIONS.
4. DETECTABLE WARNING SURFACES ARE REQUIRED AT STREET CROSSING & SIGNALIZED INTERSECTIONS.

DETECTABLE WARNING SURFACE GUIDELINES

STD. DETAIL NO. 655-40

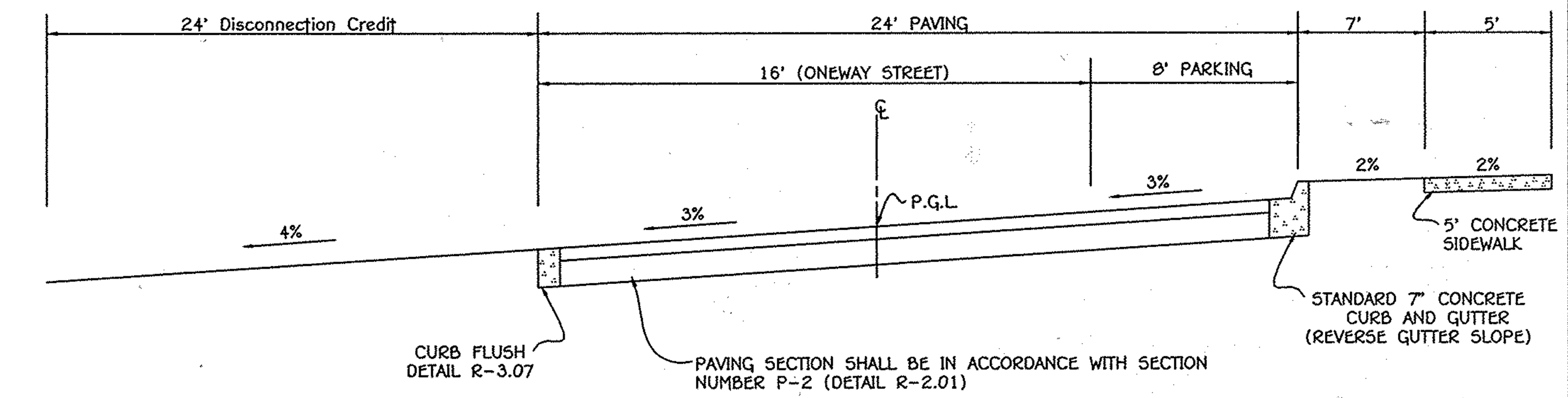

TYPICAL ROADWAY SECTION (BEAUMONT PLACE (N)) @ CENTRAL LAWN AREA (PARCEL 'I')

NO SCALE

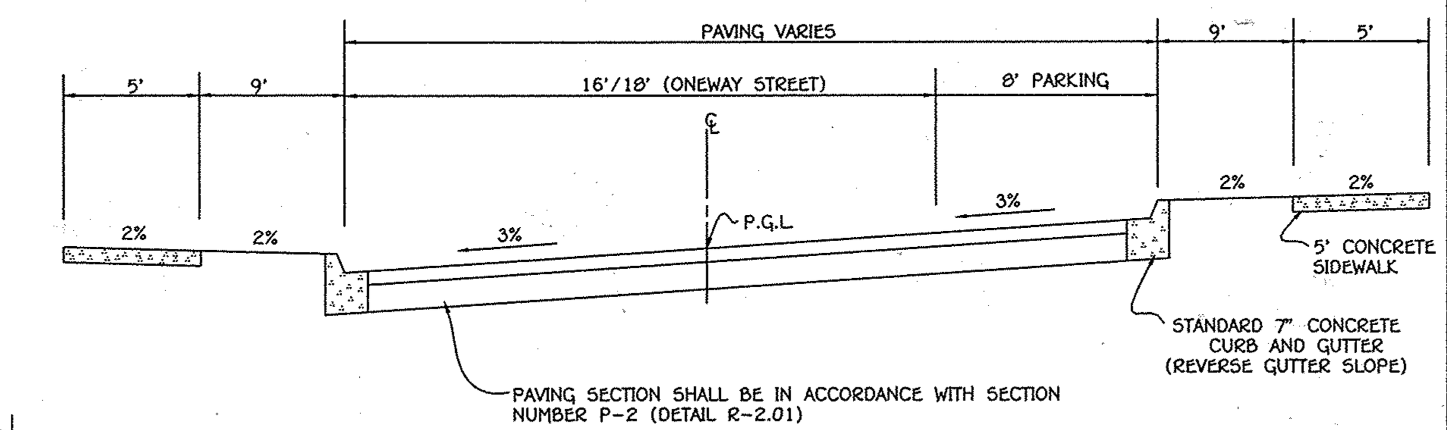

TYPICAL ROADWAY SECTION (DENE COURT)

NO SCALE

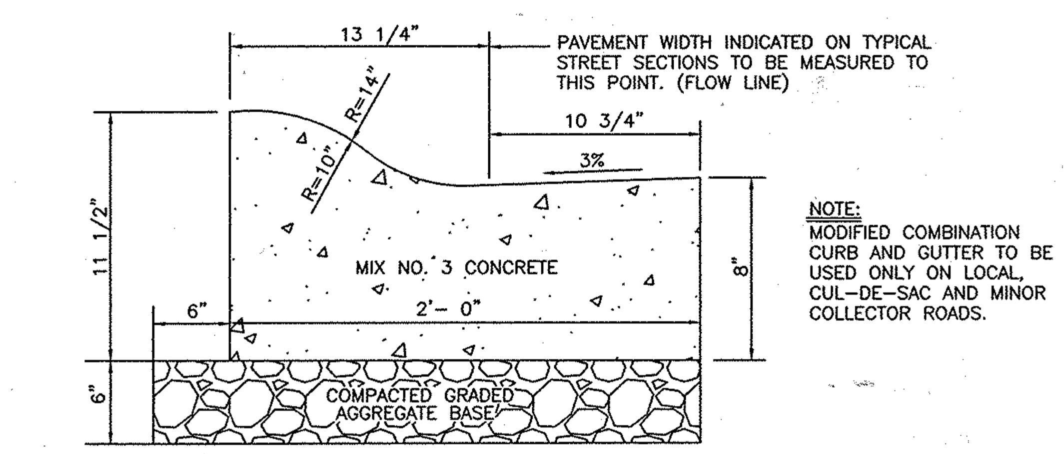

PAVEMENT WIDTH INDICATED ON TYPICAL STREET SECTIONS TO BE MEASURED TO THIS POINT. (FLOW LINE)

NOTE:
MODIFIED COMBINATION CURB AND GUTTER TO BE USED ONLY ON LOCAL, CUL-DE-SAC AND MINOR COLLECTOR ROADS.

MODIFIED COMBINATION CURB AND GUTTER

NO SCALE DETAIL R-3.01

NO PARKING FIRE LANE SIGN

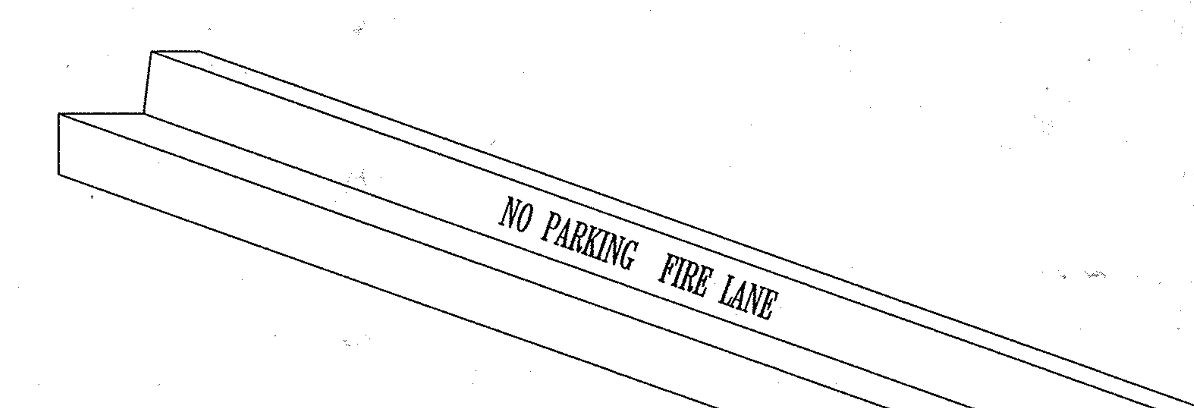

CURB MARKINGS

NOTE:
FIRE LANE CURB MARKINGS ARE FOR PRIVATE ROADS ONLY.

FISHER, COLLINS & CARTER, INC.
CIVIL ENGINEERING CONSULTANTS & LAND SURVEYORS
CENTENNIAL SQUARE OFFICE PARK - 10272 BALTIMORE NATIONAL PIKE
ELLICOTT CITY, MARYLAND 21042
(410) 461 - 2855

NO.	REVISION	DATE

STATE OF MARYLAND MICHAEL VITUCCI No. 20748 PROFESSIONAL ENGINEER 6-10-14

Owner/Builder

U.S. Home Corporation,
D/B/A Lennar
c/o Joseph Fortino, Vice President
10211 Wincopin Circle
Suite 300
Columbia, Maryland 21044
Ph# 410-423-0460

Developer

Preston • Scheffenäcker Properties
2330 West Joppa Road, Suite 160
Lutherville, Maryland 21093-4614
Ph# 410-296-3800

APPROVED: HOWARD COUNTY DEPARTMENT OF PLANNING AND ZONING

Chief, Division of Land Development — Date 7/23/14

Chief, Development Engineering Division — Date 6-25-14

Director - Department of Planning and Zoning — Date 7-23-14

SUBDIVISION			SECTION/AREA		LOT Nos.
OXFORD SQUARE			----		3 THRU 103
PLAT NO.	BLOCK NO.	ZONE	TAX/ZONE	ELEC. DIST.	CENSUS TR.
22895-22898	---	TOD	38	1st.	601101

ROADWAY DETAILS

OXFORD SQUARE

"A Howard County Green Neighborhood"

Lots 3 Thru 103, Open Space Lots 104 Thru 116 And Parcels 'N' And 'O'

(Being A Resubdivision Of Parcels 'F' And 'J', As Shown On Plats Entitled "Revision Plat, Oxford Square, "Green Neighborhood", Parcels 'C', 'E', 'F', 'G', 'I', 'J', 'K' And 'M'' And Recorded Among The Land Records Of Howard County, Maryland As Plat Nos. 22856 Thru 22859.)
Zoned: TOD

Tax Map No.: 38 Grid No.: 20 Parcel No.: 761
First Election District Howard County, Maryland
Scale: As Shown
Date: June 6, 2014
Sheet 29 Of 38

SDP-13-068

I:\2009\09014\dwg\SDP (Lennar)\09014 Sheet 29 roadway details.dwg, sheet 29, 6/6/2014 3:26:34 PM, 1:1

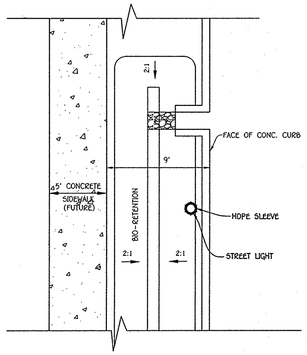

TYPICAL STREET LIGHT LOCATION WITHIN BIO-RETENTION CELL ALONG ROADWAY (NO PARKING)

NO SCALE

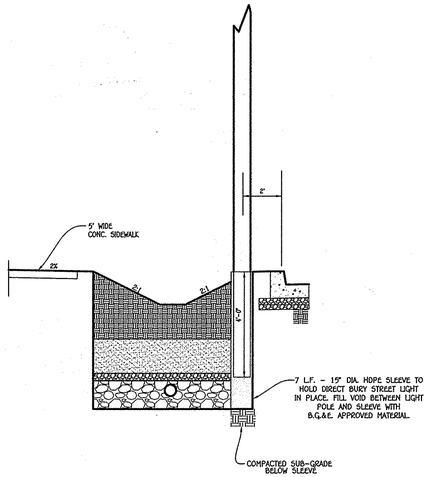

TYPICAL STREET LIGHT LOCATION WITHIN BIO-RETENTION CELL ALONG ROADWAY (NO PARKING)

NO SCALE

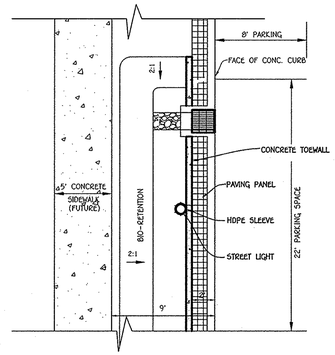

TYPICAL STREET LIGHT LOCATION WITHIN BIO-RETENTION CELL ALONG PARKING

NO SCALE

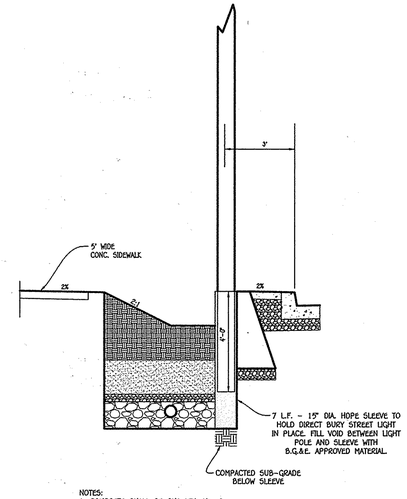

NOTES:
1. CONCRETE SHALL BE SHA MIX. No. 6.
2. CHAMFER EDGES 1/2" x 1/2".
3. REINFORCING SHALL BE No. 4 BARS @ 6" o.c. IN CENTER.

TYPICAL STREET LIGHT LOCATION WITHIN BIO-RETENTION CELL ALONG PARKING

NO SCALE

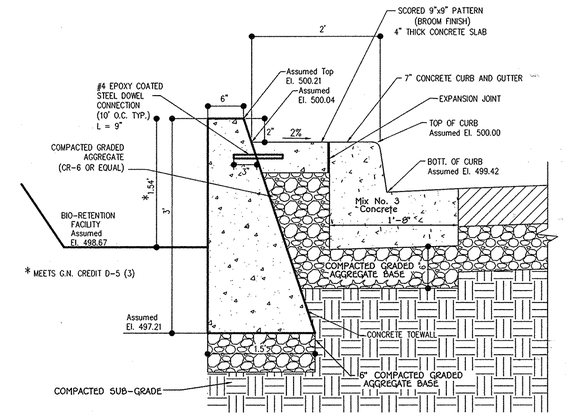

18" CONCRETE STRIP AT PARALLEL PARKING

NOT TO SCALE

Plainwell™ Product Drawing landscapeforms®

Bench, 72" Length, with Aluminum Seat, Freestanding / Surface Mount

www.landscapeforms.com Ph: 800.521.2546

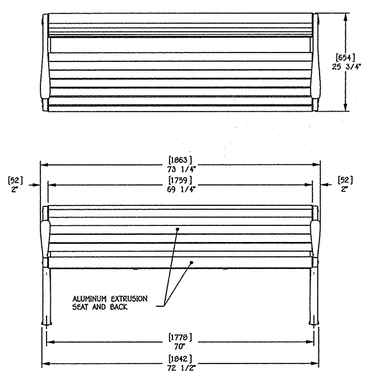

NOTE:
FREESTANDING OR SURFACE MOUNT OPTIONS. CORROSION-RESISTANT ANCHORING HARDWARE SUPPLIED BY OTHERS. Ø13/32" HOLES WITH COUNTERBORE PROVIDED FOR SOCKET HEAD CAP SCREWS.

Drawing: PL271-01
Date: 4/9/2010
Dimensions are in inches[mm]
U.S. Patent No. D419,341

CONFIDENTIAL DRAWING INFORMATION CONTAINED HEREIN IS THE PROPERTY OF LANDSCAPE FORMS, INC. INTENDED USE IS LIMITED TO DESIGN PROFESSIONALS SPECIFYING LANDSCAPE FORMS, INC. PRODUCTS AND THEIR DIRECT CLIENTS. DRAWING IS NOT TO BE COPIED OR DISCLOSED TO OTHERS WITHOUT THE CONSENT OF LANDSCAPE FORMS, INC. ©2010 LANDSCAPE FORMS, INC. ALL RIGHTS RESERVED.

BENCH DETAIL

NO SCALE

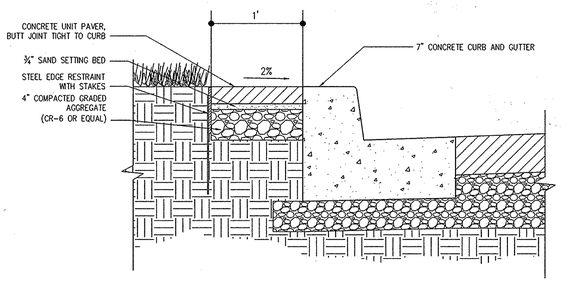

1' PAVER STRIP AT SAINT MARGARETS BOULEVARD

NOT TO SCALE

(IN ACCORDANCE WITH THE ROUTE 1 DESIGN MANUAL CRITERIA)

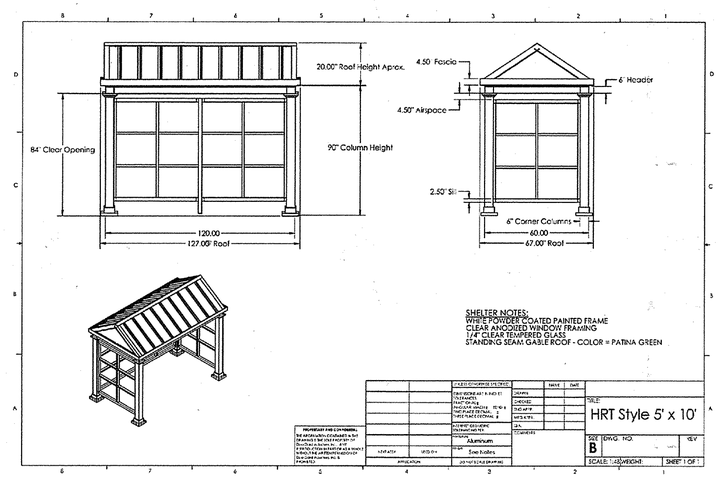

BUS STOP SHELTER DETAIL

FISHER, COLLINS & CARTER, INC.
CIVIL ENGINEERING CONSULTANTS & LAND SURVEYORS
CENTENNIAL SQUARE OFFICE PARK - 10272 BALTIMORE NATIONAL PIKE
ELLICOTT CITY, MARYLAND 21042
(410) 461 - 2855

NO.	REVISION	DATE

STATE OF MARYLAND — MICHAEL V. FISHER — No. 20748 — PROFESSIONAL ENGINEER — 6-10-14

Owner/Builder

U.S. Home Corporation,
D/B/A Lennar
c/o Joseph Fortino, Vice President
10211 Wincopin Circle
Suite 300
Columbia, Maryland 21044
Ph# 410-423-0460

Developer

Preston - Scheffenacker Properties
2330 West Joppa Road, Suite 160
Lutherville, Maryland 21093-4614
Ph# 410-296-3800

APPROVED: HOWARD COUNTY DEPARTMENT OF PLANNING AND ZONING

Kent Sheubrooks — 7/23/14
Chief, Division of Land Development — Date

Chad Edmondson — 6-25-14
Chief, Development Engineering Division — Date

Kristin Lawless — 7-23-14
Director - Department of Planning and Zoning — Date

SUBDIVISION	SECTION/AREA	LOT Nos.
OXFORD SQUARE	---	3 THRU 103

PLAT NO.	BLOCK NO.	ZONE	TAX/ZONE	ELEC. DIST.	CENSUS TR.
22895-22898	---	TOD	38	1st.	601101

ROADWAY DETAILS

OXFORD SQUARE

"A Howard County Green Neighborhood"

Lots 3 Thru 103, Open Space Lots 104 Thru 116 And Parcels 'N' And 'O'

(Being A Resubdivision Of Parcels 'F' And 'J', As Shown On Plats Entitled "Revision Plat, Oxford Square, "Green Neighborhood", Parcels 'C', 'E', 'F', 'G', 'I', 'J', 'K' And 'M' And Recorded Among The Land Records Of Howard County, Maryland As Plat Nos. 22856 Thru 22859.)
Zoned: TOD

Tax Map No.: 38 Grid No.: 20 Parcel No.: 761
First Election District Howard County, Maryland
Scale: As Shown
Date: June 6, 2014
Sheet 30 Of 38

SDP-13-068

I:\2009\09014\dwg\SDP (Lennar)\09014 Sheet 30-31 roadway details.dwg, sheet 30, 6/9/2014 3:59:11 PM, 1:1

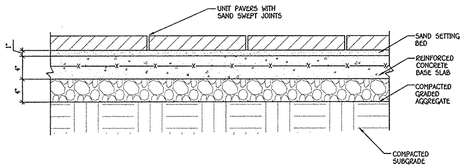

UNIT PAVING SECTION

NO SCALE

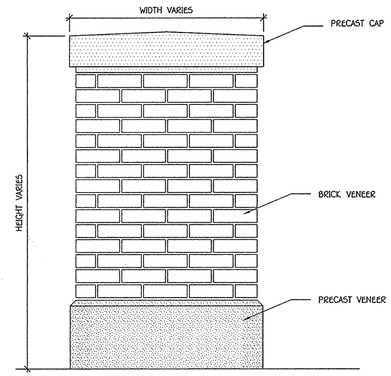

BRICK PIER – TYPICAL SECTION

NO SCALE

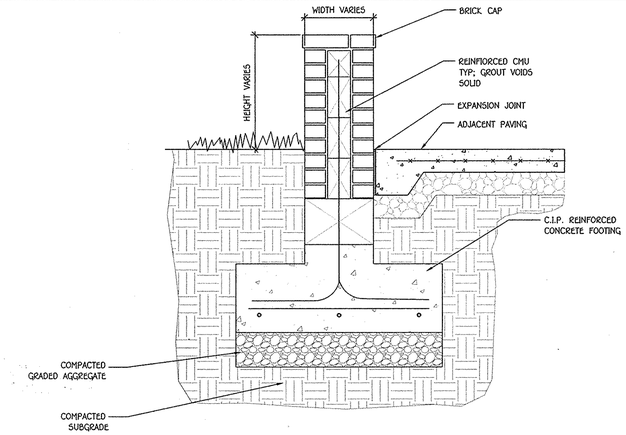

SITE WALL – TYPICAL SECTION

NO SCALE

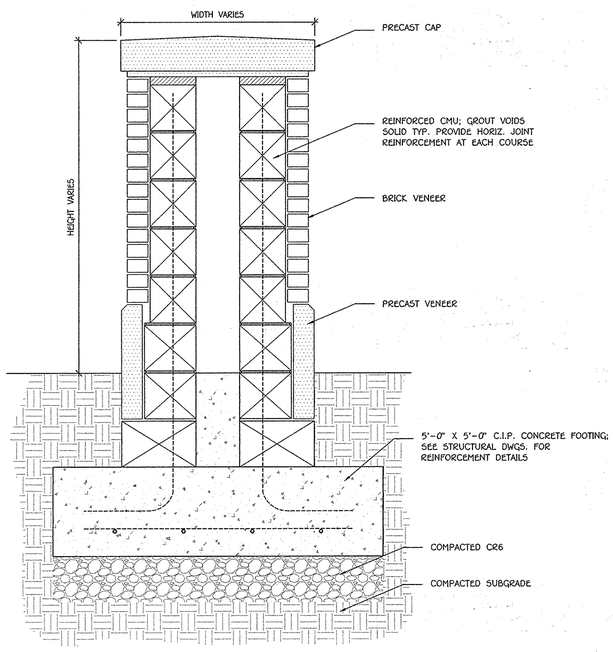

BRICK PIER – TYPICAL SECTION

NO SCALE

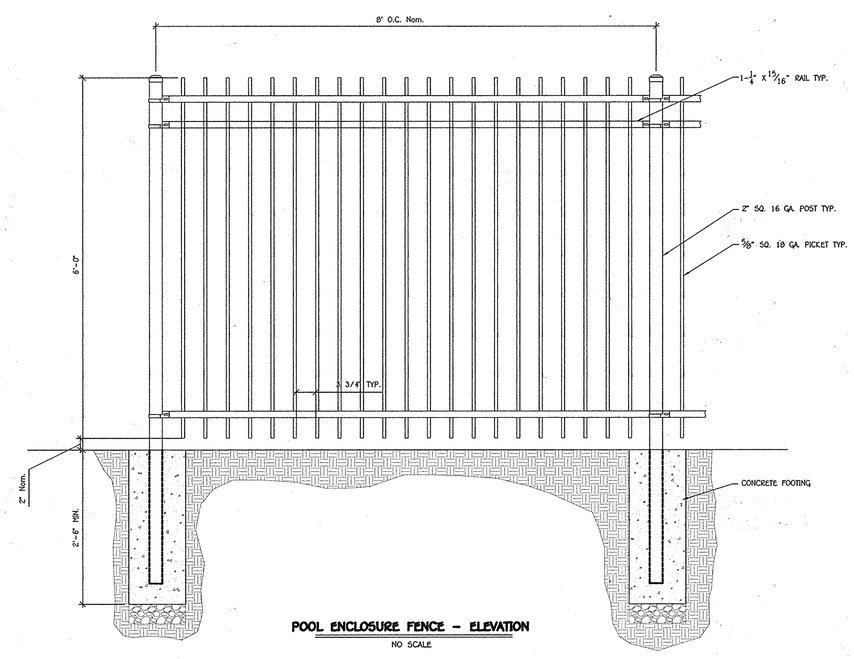

POOL ENCLOSURE FENCE – ELEVATION

NO SCALE

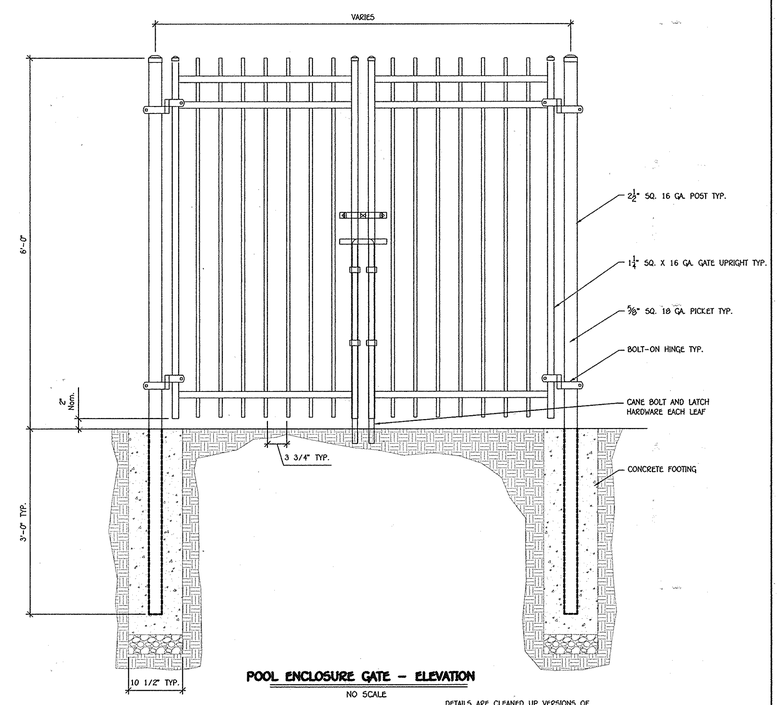

POOL ENCLOSURE GATE – ELEVATION

NO SCALE

DETAILS ARE CLEANED UP VERSIONS OF MONTAGE RAIL AND GATE DETAILS OBTAINED FROM AMERISTAR FENCE'S WEBSITE

FISHER, COLLINS & CARTER, INC.
CIVIL ENGINEERING CONSULTANTS & LAND SURVEYORS
CENTENNIAL SQUARE OFFICE PARK – 10272 BALTIMORE NATIONAL PIKE
ELLICOTT CITY, MARYLAND 21042
(410) 461 – 2855

NO.	REVISION	DATE

STATE OF MARYLAND – MICHAEL V. FISHER – No. 20248 – PROFESSIONAL ENGINEER
8-1-14

Owner/Builder

U.S. Home Corporation,
D/B/A Lennar
c/o Joseph Forjino, Vice President
10211 Wincopin Circle
Suite 300
Columbia, Maryland 21044
Ph# 410-423-0460

Developer

Preston - Scheffenacker Properties
2330 West Joppa Road, Suite 160,
Lutherville, Maryland 21093-4614
Ph# 410-296-3800

APPROVED: HOWARD COUNTY DEPARTMENT OF PLANNING AND ZONING

Chief, Division of Land Development — 7/23/14 Date

Chief, Development Engineering Division — 6-25-14 Date

Director – Department of Planning and Zoning — 7-23-14 Date

SUBDIVISION			SECTION/AREA		LOT Nos.
OXFORD SQUARE			----		3 THRU 103
PLAT NO.	BLOCK NO.	ZONE	TAX/ZONE	ELEC. DIST.	CENSUS TR.
22895-22898	---	TOD	30	1st.	601101

SITE DETAILS

OXFORD SQUARE

"A Howard County Green Neighborhood"

Lots 3 Thru 103, Open Space Lots 104 Thru 116 And Parcels 'N' And 'O'

(Being A Resubdivision Of Parcels 'F' And 'J', As Shown On Plats Entitled "Revision Plat, Oxford Square, "Green Neighborhood", Parcels 'C', 'E', 'F', 'G', 'I', 'J', 'K' And 'M' And Recorded Among The Land Records Of Howard County, Maryland As Plat Nos. 22856 Thru 22859)
Zoned: TOD

Tax Map No.: 30 Grid No.: 20 Parcel No.: 761
First Election District Howard County, Maryland
Scale: As Shown
Date: June 6, 2014
Sheet 31 Of 38

SDP-13-058

I:\2009\090914\dwg\SDP (Lennar)\09014 Sheet 30-31 roadway details.dwg, sheet 31, 6/9/2014 9:44:16 AM, 1:1

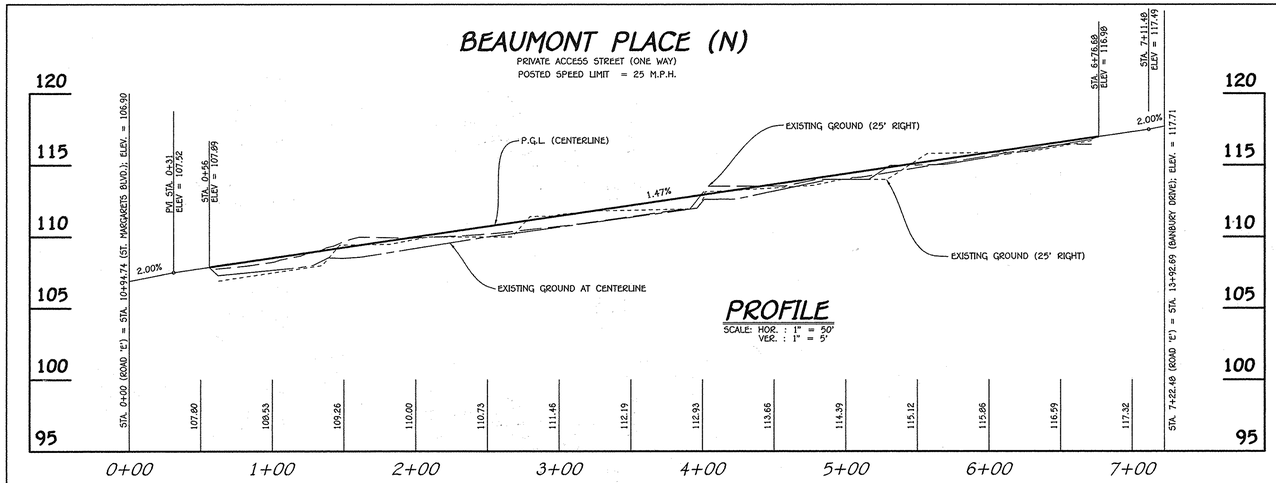

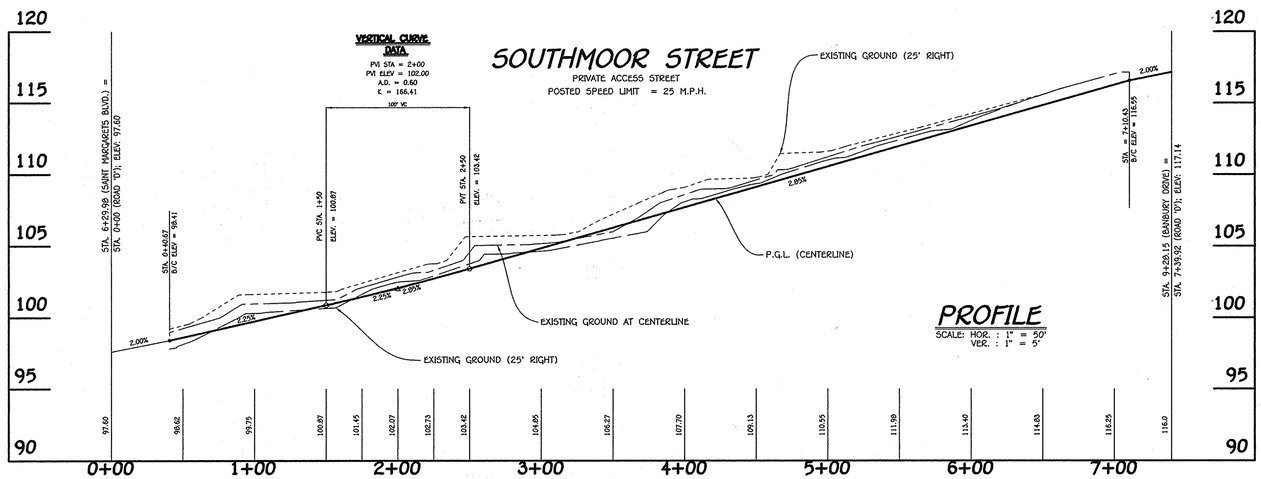

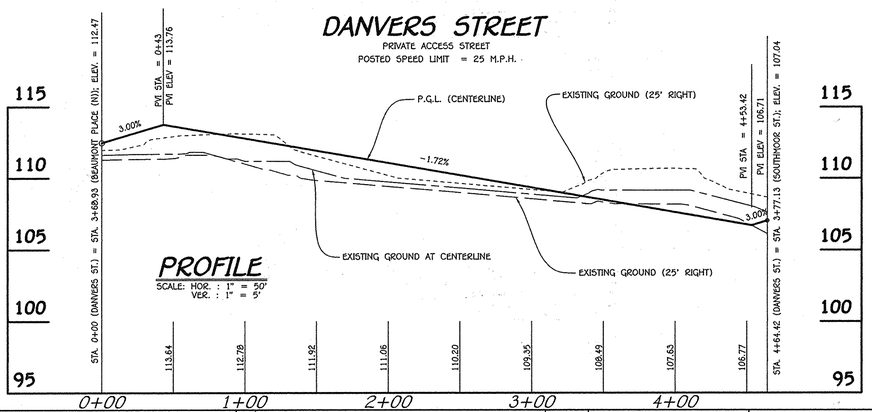

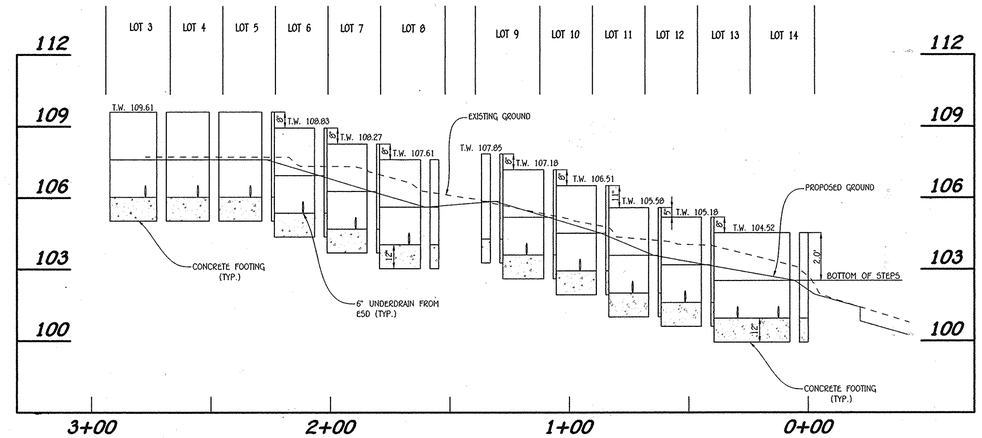

2 ft. HIGH LANDSCAPING WALL PROFILE (LOTS 3 THRU 14)

SCALE: HOR. : 1" = 30'
VER. : 1" = 3'

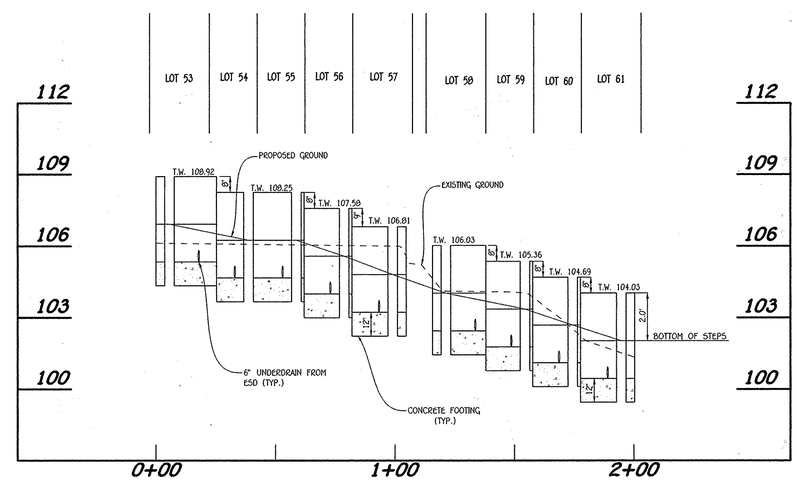

2 ft. HIGH LANDSCAPING WALL PROFILE (LOTS 53 THRU 61)

SCALE: HOR. : 1" = 30'
VER. : 1" = 3'

NOTE: SEE SHEET 16 FOR WALL PLAN VIEWS.

0' 50' 100' 150'
Scale: 1" = 50'

FISHER, COLLINS & CARTER, INC.
CIVIL ENGINEERING CONSULTANTS & LAND SURVEYORS
CENTENNIAL SQUARE OFFICE PARK - 10272 BALTIMORE NATIONAL PIKE
ELLICOTT CITY, MARYLAND 21042
(410) 461 - 2855

NO.	REVISION	DATE

STATE OF MARYLAND
MICHAEL VOLK
No. 20747
PROFESSIONAL ENGINEER
6-10-14

Owner/Builder
U.S. Home Corporation,
D/B/A Lennar
c/o Joseph Fortino, Vice President
10211 Wincopin Circle
Suite 300
Columbia, Maryland 21044
Ph# 410-423-0460

Developer
Preston • Scheffenacker Properties
2330 West Joppa Road, Suite 160
Lutherville, Maryland 21093-4614
Ph# 410-296-3800

APPROVED: HOWARD COUNTY DEPARTMENT OF PLANNING AND ZONING

Kent Sheubrooks — Chief, Division of Land Development — 7/23/14 Date
Chief, Development Engineering Division — 6-25-14 Date
Director - Department of Planning and Zoning — 7-23-14 Date

SUBDIVISION			SECTION/AREA		LOT Nos.
OXFORD SQUARE			----		3 THRU 103
PLAT NO.	BLOCK NO.	ZONE	TAX/ZONE	ELEC. DIST.	CENSUS TR.
22895-22898	---	TOD	30	1st.	601101

ROAD & WALL PROFILES

OXFORD SQUARE

"A Howard County Green Neighborhood"

Lots 3 Thru 103, Open Space Lots 104 Thru 116 And Parcels 'N' And 'O'

(Being A Resubdivision Of Parcels 'F' And 'J', As Shown On Plats Entitled "Revision Plat, Oxford Square, "Green Neighborhood", Parcels 'C', 'E', 'F', 'G', 'I', 'J', 'K' And 'H' And Recorded Among The Land Records Of Howard County, Maryland As Plat Nos. 22856. Thru 22853.)
Zoned: TOD

Tax Map No.: 30 Grid No.: 20 Parcel No.: 761
First Election District Howard County, Maryland
Scale: As Shown
Date: June 6, 2014
Sheet 32 Of 30

SDP-13-068

I:\2009\09014\dwg\SDP (Lennar)\09014 Sheet 32 road profiles.dwg, sheet 32, 6/9/2014 9:53:32 AM, 1:1

SOIL PREPARATION, TOPSOILING AND SOIL AMENDMENTS (B-4-2)

A. Soil Preparation

1. Temporary Stabilization

a. Seedbed preparation consists of loosening soil to a depth of 3 to 5 inches by means of suitable agricultural or construction equipment, such as disc harrows or chisel plows or rippers mounted on construction equipment. After the soil is loosened, it must not be rolled or dragged smooth but left in the roughened condition. Slopes 3:1 or flatter are to be tracked with ridges running parallel to the contour of the slope.

b. Apply fertilizer and lime as prescribed on the plans.

c. Incorporate lime and fertilizer into the top 3 to 5 inches of soil by disking or other suitable means.

2. Permanent Stabilization

a. A soil test is required for any earth disturbance of 5 acres or more. The minimum soil conditions required for permanent vegetative establishment are:

i. Soil pH between 6.0 and 7.0.
ii. Soluble salts less than 500 parts per million (ppm).
iii. Soil contains less than 40 percent clay but enough fine grained material (greater than 30 percent silt plus clay) to provide the capacity to hold a moderate amount of moisture. An exception: if lovegrass will be planted, then a sandy soil (less than 30 percent silt plus clay) would be acceptable.
iv. Soil contains 1.5 percent minimum organic matter by weight.
v. Soil contains sufficient pore space to permit adequate root penetration.

b. Application of amendments or topsoil is required if on-site soils do not meet the above conditions.

c. Graded areas must be maintained in a true and even grade as specified on the approved plan, then scarified or otherwise loosened to a depth of 3 to 5 inches.

d. Apply soil amendments as specified on the approved plan or as indicated by the results of a soil test.

e. Mix soil amendments into the top 3 to 5 inches of soil by disking or other suitable means. Rake lawn areas to smooth the surface, remove large objects like stones and branches, and ready the area for seed application. Loosen surface soil by dragging with a heavy chain or other equipment to roughen the surface where site conditions will not permit normal seedbed preparation. Track slopes 3:1 or flatter with tracked equipment leaving the soil in an irregular condition with ridges running parallel to the contour of the slope. Leave the top 1 to 3 inches of soil loose and friable. Seedbed loosening may be unnecessary on newly disturbed areas.

B. Topsoiling

1. Topsoil is placed over prepared subsoil prior to establishment of permanent vegetation. The purpose is to provide a suitable soil medium for vegetative growth. Soils of concern have low moisture content, low nutrient levels, low pH, materials toxic to plants, and/or unacceptable soil gradation.

2. Topsoil salvaged from an existing site may be used provided it meets the standards as set forth in these specifications. Typically, the depth of topsoil to be salvaged for a given soil type can be found in the representative soil profile section in the Soil Survey published by USDA-NRCS.

3. Topsoiling is limited to areas having 2:1 or flatter slopes where:

a. The texture of the exposed subsoil/parent material is not adequate to produce vegetative growth.

b. The soil material is so shallow that the rooting zone is not deep enough to support plants or furnish continuing supplies of moisture and plant nutrients.

c. The original soil to be vegetated contains material toxic to plant growth.

d. The soil is so acidic that treatment with limestone is not feasible.

4. Areas having slopes steeper than 2:1 require special consideration and design.

5. Topsoil Specifications: Soil to be used as topsoil must meet the following criteria:

a. Topsoil must be a loam, sandy loam, clay loam, silt loam, sandy clay loam, or loamy sand. Other soils may be used if recommended by an agronomist or soil scientist and approved by the appropriate approval authority. Topsoil must not be a mixture of contrasting textured subsoils and must contain less than 5 percent by volume of cinders, stones, slag, coarse fragments, gravel, sticks, roots, trash, or other materials larger than 1 1/2 inches in diameter.

b. Topsoil must be free of noxious plants or plant parts such as Bermuda grass, quack grass, Johnson grass, nut sedge, poison ivy, thistle, or others as specified.

c. Topsoil substitutes or amendments, as recommended by a qualified agronomist or soil scientist and approved by the appropriate approval authority, may be used in lieu of natural topsoil.

6. Topsoil Application

a. Erosion and sediment control practices must be maintained when applying topsoil.

b. Uniformly distribute topsoil in a 5 to 8 inch layer and lightly compact to a minimum thickness of 4 inches. Spreading is to be performed in such a manner that sodding or seeding can proceed with a minimum of additional soil preparation and tillage. Any irregularities in the surface resulting from topsoiling or other operations must be corrected in order to prevent the formation of depressions or water pockets.

c. Topsoil must not be placed if the topsoil or subsoil is in a frozen or muddy condition, when the subsoil is excessively wet or in a condition that may otherwise be detrimental to proper grading and seedbed preparation.

C. Soil Amendments (Fertilizer and Lime Specifications)

1. Soil tests must be performed to determine the exact ratios and application rates for both lime and fertilizer on sites having disturbed areas of 5 acres or more. Soil analysis may be performed by a recognized private or commercial laboratory. Soil samples taken for engineering purposes may also be used for chemical analyses.

2. Fertilizers must be uniform in composition, free flowing and suitable for accurate application by appropriate equipment. Manure may be substituted for fertilizer with prior approval from the appropriate approval authority. Fertilizers must all be delivered to the site fully labeled according to the applicable laws and must bear the name, trade name or trademark and warranty of the producer.

3. Lime materials must be ground limestone (hydrated or burnt lime may be substituted except when hydroseeding) which contains at least 50 percent total oxides (calcium oxide plus magnesium oxide). Limestone must be ground to such fineness that at least 50 percent will pass through a #100 mesh sieve and 98 to 100 percent will pass through a #20 mesh sieve.

4. Lime and fertilizer are to be evenly distributed and incorporated into the top 3 to 5 inches of soil by disking or other suitable means.

5. Where the subsoil is either highly acidic or composed of heavy clays, spread ground limestone at the rate of 4 to 8 tons/acre (200-400 pounds per 1,000 square feet) prior to the placement of topsoil.

TEMPORARY SEEDING NOTES (B-4-4)

Definition

To stabilize disturbed soils with vegetation for up to 6 months.

Purpose

To use fast growing vegetation that provides cover on disturbed soils.

Conditions Where Practice Applies

Exposed soils where ground cover is needed for a period of 6 months or less. For longer duration of time, permanent stabilization practices are required.

Criteria

1. Select one or more of the species or seed mixtures listed in Table B.1 for the appropriate Plant Hardiness Zone (from Figure B.3), and enter them in the Temporary Seeding Summary below along with application rates, seeding dates and seeding depths. If this Summary is not put on the plan and completed, then Table B.1 plus fertilizer and lime rates must be put on the plan.

2. For sites having soil tests performed, use and show the recommended rates by the testing agency. Soil tests are not required for Temporary Seeding.

3. When stabilization is required outside of a seeding season, apply seed and mulch or straw mulch alone as prescribed in Section B-4-3.A.1.b and maintain until the next seeding season.

Temporary Seeding Summary

Hardiness Zone (from Figure B.3): 6b Seed Mixture (from Table B.1):				Fertilizer Rate (10-20-20)	Lime Rate
Species	Application Rate (lb/ac)	Seeding Dates	Seeding Depths		
BARLEY	96	3/1 - 5/15, 8/15 - 10/15	1"	436 lb/ac (10 lb/ 1000 sf)	2 tons/ac (90 lb/ 1000 sf)
OATS	72	3/1 - 5/15, 8/15 - 10/15	1"		
RYE	112	3/1 - 5/15, 8/15 - 10/15	1"		

PERMANENT SEEDING NOTES (B-4-5)

A. Seed Mixtures

1. General Use

a. Select one or more of the species or mixtures listed in Table B.3 for the appropriate Plant Hardiness Zone (from Figure B.3) and based on the site condition or purpose found on Table B.2. Enter selected mixture(s), application rates, and seeding dates in the Permanent Seeding Summary. The Summary is to be placed on the plan.

b. Additional planting specifications for exceptional sites such as shorelines, stream banks, or dunes or for special purposes such as wildlife or aesthetic treatment may be found in USDA-NRCS Technical Field Office Guide, Section 342 - Critical Area Planting.

c. For sites having disturbed area over 5 acres, use and show the rates recommended by the soil testing agency. d. For areas receiving low maintenance, apply urea form fertilizer (46-0-0) at 3 1/2 pounds per 1000 square feet (150 pounds per acre) at the time of seeding in addition to the soil amendments shown in the Permanent Seeding Summary .

2. Turfgrass Mixtures

a. Areas where turfgrass may be desired include lawns, parks, playgrounds, and commercial sites which will receive a medium to high level of maintenance.

b. Select one or more of the species or mixtures listed below based on the site conditions or purpose. Enter selected mixture(s), application rates, and seeding dates in the Permanent Seeding Summary. The summary is to be placed on the plan.

i. Kentucky Bluegrass: Full Sun Mixture: For use in areas that receive intensive management. Irrigation required in the areas of central Maryland and Eastern Shore. Recommended Certified Kentucky Bluegrass Cultivars Seeding Rate: 1.5 to 2.0 pounds per 1000 square feet. Choose a minimum of three Kentucky bluegrass cultivars with each ranging from 10 to 35 percent of the total mixture by weight.

ii. Kentucky Bluegrass/Perennial Rye: Full Sun Mixture: For use in full sun areas where rapid establishment is necessary and when turf will receive medium to intensive management. Certified Perennial Ryegrass Cultivars/Certified Kentucky Bluegrass Seeding Rate: 2 pounds mixture per 1000 square feet. Choose a minimum of three Kentucky bluegrass cultivars with each ranging from 10 to 35 percent of the total mixture by weight.

iii. Tall Fescue/Kentucky Bluegrass: Full Sun Mixture: For use in drought prone areas and/or for areas receiving low to medium management in full sun to medium shade. Recommended mixture includes; Certified Tall Fescue Cultivars 95 to 100 percent, Certified Kentucky Bluegrass Cultivars 0 to 5 percent. Seeding Rate: 5 to 8 pounds per 1000 square feet. One or more cultivars may be blended.

iv. Kentucky Bluegrass/Fine Fescue: Shade Mixture: For use in areas with shade in Bluegrass lawns. For establishment in high quality, intensively managed turf area. Mixture includes; Certified Kentucky Bluegrass Cultivars 30 to 40 percent and Certified Fine Fescue and 60 to 70 percent. Seeding Rate: 1 1/2 to 3 pounds per 1000 square feet.

Notes:
Select turfgrass varieties from those listed in the most current University of Maryland Publication, Agronomy Memo #77, "Turfgrass Cultivar Recommendations for Maryland"

Choose certified material. Certified material is the best guarantee of cultivar purity. The certification program of the Maryland Department of Agriculture, Turf and Seed Section, provides a reliable means of consumer protection and assures a pure genetic line

c. Ideal Times of Seeding for Turf Grass Mixtures Western MD: March 15 to June 1, August 1 to October 1 (Hardiness Zones: 5b, 6a) Central MD: March 1 to May 15, August 15 to October 15 (Hardiness Zone: 6b) Southern MD, Eastern Shore: March 1 to May 15, August 15 to October 15 (Hardiness Zones: 7a, 7b)

d. Till areas to receive seed by disking or other approved methods to a depth of 2 to 4 inches, level and rake the areas to prepare a proper seedbed. Remove stones and debris over 1 1/2 inches in diameter. The resulting seedbed must be in such condition that future mowing of grasses will pose no difficulty.

e. If soil moisture is deficient, supply new seedings with adequate water for plant growth (1/2 to 1 inch every 3 to 4 days depending on soil texture) until they are firmly established. This is especially true when seedings are made late in the planting season, in abnormally dry or hot seasons, or on adverse sites.

Permanent Seeding Summary

Hardiness Zone (from Figure B.3): 6b Seed Mixture (from Table B.3): 8					Fertilizer Rate (10-20-20)			Lime Rate
No.	Species	Application Rate (lb/ac)	Seeding Dates	Seeding Depths	N	P_2O_5	K_2O	
8	TALL FESCUE	100	Mar. 1-May 15 Aug. 1-Oct. 15	1/4-1/2 in.	45 lbs. per acre (1.0 lb/ 1000 sf)	90 lb/ac (2 lb/ 1000 sf)	90 lb/ac (2 lb/ 1000 sf)	2 tons/ac (90 lb/ 1000 sf)

STANDARD STABILIZATION NOTE

FOLLOWING INITIAL SOIL DISTURBANCE OR RE-DISTURBANCE, PERMANENT OR TEMPORARY STABILIZATION MUST BE COMPLETED WITHIN:

a.) THREE (3) CALENDAR DAYS AS TO THE SURFACE OF ALL PERIMETER DIKES, SWALES, DITCHES, PERIMETER SLOPES AND ALL SLOPES STEEPER THAN 3 HORIZONTAL TO 1 VERTICAL (3:1); AND

b.) SEVEN (7) CALENDAR DAYS AS TO ALL OTHER DISTURBED OR GRADED AREAS ON THE PROJECT SITE NOT UNDER ACTIVE GRADING.

SEQUENCE OF CONSTRUCTION

1. OBTAIN GRADING PERMITS. (2 WEEKS)

2. NOTIFY "MISS UTILITY" AT LEAST 48 HOURS BEFORE BEGINNING ANY WORK AT 1-800-257-7777. NOTIFY HOWARD COUNTY OFFICE OF CONSTRUCTION/INSPECTION DIVISION AT 410-313-1870 AT LEAST 24 HOURS BEFORE STARTING ANY WORK. IN ADDITION, NOTIFY AT&T PRIOR TO ANY ACTIVITY WITHIN THEIR EASEMENT.

3. INSTALL STABILIZED CONSTRUCTION ENTRANCE, SILT/SUPER-SILT FENCE AND TREE PROTECTION WHERE SHOWN ON THE PLANS. CLEAR AND GRUB WHERE NECESSARY FOR ROADWAY CONSTRUCTION. (1 WEEK)

4. THE MAIN PERIMETER SEDIMENT CONTROL MEASURES ARE TO BE PROVIDED BY EXISTING SEDIMENT BASINS No. 1, 2 AND 4 (OXFORD SQUARE, PHASE ONE, F-12-026 AND F-13-95)

5. UTILIZE THE CLEAN WATER DIVERSION DIKE AND TEMPORARY CLEAN WATER STORM DRAIN PIPE FROM I-37 TO S-3. INSTALL REMAINING PERIMETER SEDIMENT CONTROL MEASURE AS SHOWN AND INSERT/REPAIR EXISTING EARTH DIKES (F-12-26 AND F-13-95) AS NECESSARY. (1 WEEK)

6. UTILIZE EXISTING EARTH DIKE ALONG SOUTHERN BOUNDARY THAT SERVES EX. BASIN No. 1 (F-12-026) UNTIL AREA IS BROUGHT UP TO GRADE AND STABILIZED.

7. STABILIZE ALL DISTURBED AREAS WITH TEMPORARY SEEDING. CONTACT THE COUNTY SEDIMENT EROSION CONTROL INSPECTOR BEFORE PROCEEDING. (2 DAYS)

8. GRADE SITE TO MASS GRADING CONTOURS AND GRADE ALL PRIVATE ROADWAYS TO SUB BASE. (8 WEEKS)

9. STABILIZE ALL DISTURBANCE WITH TEMPORARY SEEDING. RECEIVE PERMISSION TO CONTINUE FROM THE EROSION AND SEDIMENT CONTROL INSPECTOR. (2 DAYS)

10. INSTALL PROPOSED STORM DRAIN INCLUDING CONNECTIONS TO EACH OF THE SWM FACILITIES, WATER LINE AND SEWER LINE CONSTRUCTION FOR ALL PRIVATE ROADWAYS. (4 WEEKS)

11. ONCE STORM DRAINS ARE INSTALLED, PLACE ROADWAY SUB-BASE WITHIN ALL PRIVATE ROADWAYS. PAVE ROADWAYS UP TO THE INTERMEDIATE SURFACE LAYER WITHIN THE P-2 PAVING SECTION. SEE R-2.01 OF THE HOWARD COUNTY DESIGN MANUAL VOLUME IV. THE CONSTRUCTION OF THE FILTER MEDIA, UNDERDRAIN AND PLANTINGS FOR EACH BIO-RETENTION CELL SHALL BE DELAYED UNTIL THE CONTRIBUTING DRAINAGE AREA IS PERMANENTLY STABILIZED. (15 DAYS)

12. INSTALL ANY REMAINING STORM DRAIN ESD INLETS, WATER LINE AND SEWER LINE PER PLAN FOR TOWNHOUSES LOCATED NORTH OF SAINT MARGARETS BLVD. AND SOUTH OF BANBURY DRIVE. THE CONSTRUCTION OF THE FILTER MEDIA, UNDERDRAIN AND PLANTINGS FOR EACH BIO-RETENTION CELL SHALL BE DELAYED UNTIL THE CONTRIBUTING DRAINAGE AREA IS PERMANENTLY STABILIZED. (6 WEEKS)

13. BEGIN TOWNHOUSE ON LOTS 3 THRU 103 WITH THE EXCEPTION OF LOTS 36-41. (8 MONTHS)

14. FOLLOWING TOWNHOUSE CONSTRUCTION, INSTALL SURFACE COURSE OF PAVING FOR ALL PRIVATE ROADWAYS. (7 DAYS)

15. ONCE ALL THE AREAS AROUND THE OUTSIDE OF THE TOWNHOUSES IS STABILIZED, INSTALL THE PROPOSED SWM ESD DEVICES WITHIN THE PROPOSED TOWNHOUSE AREAS. REMOVE ANY ASSOCIATED SILT FENCE, ONCE ALL AREAS ARE STABILIZED. (3 WEEKS)

16. STABILIZE ALL REMAINING DISTURBED AREAS THAT ARE LOCATED ONSITE WITH PERMANENT SEEDING. INSTALL THE PROPOSED MICRO BIO-RETENTION FACILITIES INCLUDING THE FILTER MEDIA AND UNDERDRAINS LOCATED OUTSIDE THE PROPOSED PRIVATE ROADWAY AREAS. (3 WEEKS)

17. PROVIDE PERMANENT SEEDING TO ANY DISTURBED AREAS ONSITE AND STABILIZE THE ENTIRE SITE. (3 DAYS)

18. WITH THE APPROVAL OF THE SEDIMENT CONTROL INSPECTOR START REMOVING ANY SEDIMENT CONTROL FEATURES NOT REQUIRED TO REMAIN FOR FUTURE SITE PLAN PHASES AND STABILIZE THE AREAS WITH PERMANENT SEEDING. (1 WEEK)

19. NOTE: CONTRACTOR SHALL PUMP THE SEDIMENT TRAPS/BASINS COMPLETELY DRY THROUGH A FILTERING DEVICE TO A CLEAN WATER OUTFALL WITHIN 24 HOURS FOLLOWING ANY RAINFALL EVENT.

20. IN ACCORDANCE WITH THE GREEN NEIGHBORHOOD CRITERIA, NO FOREST IMPACT IS ANTICIPATED. HOWEVER, THE CONTRACTOR SHALL REPLACE ANY TREES IMPACTED BY THE BREACHING AND WETLAND/STREAM RESTORATION EFFORTS.

21. THE CONTRACTOR SHALL COORDINATE WITH THE INSPECTOR IN REGARDS TO THE REQUIREMENT THAT NO MORE THAN 20-ACRES OF "OPEN" GROUND SHALL BE DISTURBED AT ANY GIVEN TIME. THIS MAY BE ACCOMPLISHED BY GRADING ONE PARCEL AT A TIME, IF REQUIRED.

NOTE: CONTRACTOR SHALL CLEAN AND RESTORE THE RECEIVING PONDS OF ANY AND ALL SEDIMENT, TO THEIR ORIGINALLY DESIGNED GRADE.

NOTE: THE CONTRACTOR SHALL INSPECT AND PROVIDE NECESSARY MAINTENANCE ON ALL SEDIMENT AND EROSION CONTROL STRUCTURES SHOWN HEREON AFTER EACH RAINFALL AND ON A DAILY BASIS. REMOVE SEDIMENT FROM SEDIMENT BASIN NO.'S 1 & 2 ALONG WITH STONE OUTLET SEDIMENT TRAP #1 WHEN CLEANOUT ELEVATIONS ARE REACHED. ALL SEDIMENT MUST BE PLACED UPSTREAM OF AN APPROVED BASIN DEVICE.

NOTE: ALL CONSTRUCTION WASTE MUST BE MANAGED IN ACCORDANCE WITH THE CONSTRUCTION WASTE MANAGEMENT PLAN PER GREEN NEIGHBORHOOD CREDIT H-3.

HOWARD SOIL CONSERVATION DISTRICT STANDARD SEDIMENT CONTROL NOTES

1) A MINIMUM OF 48 HOURS NOTICE MUST BE GIVEN TO THE HOWARD COUNTY DEPARTMENT OF INSPECTIONS, LICENSES AND PERMITS, SEDIMENT CONTROL DIVISION PRIOR TO THE START OF ANY CONSTRUCTION (410-313-1855).
2) ALL VEGETATIVE AND STRUCTURAL PRACTICES ARE TO BE INSTALLED ACCORDING TO THE PROVISIONS OF THIS PLAN AND ARE TO BE IN CONFORMANCE WITH THE MOST CURRENT MARYLAND STANDARDS AND SPECIFICATIONS FOR SOIL EROSION AND SEDIMENT CONTROL AND REVISIONS THERETO.
3) FOLLOWING INITIAL SOIL DISTURBANCE OR RE-DISTURBANCE, PERMANENT OR TEMPORARY STABILIZATION SHALL BE COMPLETED WITHIN: a) 3 CALENDAR DAYS FOR ALL PERIMETER SEDIMENT CONTROL STRUCTURES, DIKES, PERIMETER SLOPES AND ALL SLOPES GREATER THAN 3:1, b) 7 DAYS AS TO ALL OTHER DISTURBED OR GRADED AREAS ON THE PROJECT SITE.
4) ALL DISTURBED AREAS MUST BE STABILIZED WITHIN THE TIME PERIOD SPECIFIED ABOVE IN ACCORDANCE WITH THE 2011 MARYLAND STANDARDS AND SPECIFICATIONS FOR SOIL EROSION AND SEDIMENT CONTROL FOR PERMANENT SEEDING (SEC. B-4-5), TEMPORARY SEEDING (SEC. B-4-4) AND MULCHING (SEC. B-4-3). TEMPORARY STABILIZATION WITH MULCH ALONE CAN ONLY BE DONE WHEN RECOMMENDED SEEDING DATES DO NOT ALLOW FOR PROPER GERMINATION AND ESTABLISHMENT OF GRASSES.
5) ALL SEDIMENT CONTROL STRUCTURES ARE TO REMAIN IN PLACE AND ARE TO BE MAINTAINED IN OPERATIVE CONDITION UNTIL PERMISSION FOR THEIR REMOVAL HAS BEEN OBTAINED FROM THE HOWARD COUNTY SEDIMENT CONTROL INSPECTOR.
6) SITE ANALYSIS:

TOTAL AREA OF SITE (THIS SUBMISSION)	41.541 ACRES
AREA DISTURBED	12.41 ACRES
AREA TO BE ROOFED OR PAVED	5.80 ACRES
AREA TO BE VEGETATIVELY STABILIZED	6.61 ACRES
TOTAL CUT	4,925 CU.YDS.
TOTAL FILL	15,466 CU.YDS.
OFFSITE WASTE/BORROW AREA LOCATION	N/A

7) ANY SEDIMENT CONTROL PRACTICE THAT IS DISTURBED BY GRADING ACTIVITY FOR PLACEMENT OF UTILITIES MUST BE REPAIRED ON THE SAME DAY OF DISTURBANCE.
8) ADDITIONAL SEDIMENT CONTROL MUST BE PROVIDED, IF DEEMED NECESSARY BY THE HOWARD COUNTY SEDIMENT CONTROL INSPECTOR.
9) ON ALL SITES WITH DISTURBED AREAS IN EXCESS OF 2 ACRES, APPROVAL OF THE INSPECTION AGENCY SHALL BE REQUESTED UPON COMPLETION OF INSTALLATION OF PERIMETER EROSION AND SEDIMENT CONTROLS, BUT BEFORE PROCEEDING WITH ANY OTHER EARTH DISTURBANCE OR GRADING. OTHER BUILDING OR GRADING INSPECTION APPROVALS MAY NOT BE AUTHORIZED UNTIL THIS INITIAL APPROVAL BY THE INSPECTION AGENCY IS MADE.
10) TRENCHES FOR THE CONSTRUCTION OF UTILITIES IS LIMITED TO THREE PIPE LENGTHS OR THAT WHICH SHALL BE BACK-FILLED AND STABILIZED BY THE END OF EACH WORKDAY, WHICHEVER IS SHORTER.
11) ANY CHANGES OR REVISIONS TO THE SEQUENCE OF CONSTRUCTION MUST BE REVIEWED AND APPROVED BY THE PLAN APPROVAL AUTHORITY PRIOR TO PROCEEDING WITH CONSTRUCTION.
12) A PROJECT IS TO BE SEQUENCED SO THAT GRADING ACTIVITIES BEGIN ON ONE GRADING UNIT (MAXIMUM ACREAGE OF 20 ACRE PER GRADING UNIT) AT A TIME. WORK MAY PROCEED TO A SUBSEQUENT GRADING UNIT WHEN AT LEAST 50 PERCENT OF THE DISTURBED AREA IN THE PROCEEDING GRADING UNIT HAS BEEN STABILIZED AND APPROVED BY THE ENFORCEMENT AUTHORITY. UNLESS OTHERWISE SPECIFIED AND APPROVED BY THE APPROVAL AUTHORITY, NO MORE THAN 30 ACRES CUMULATIVELY MAY BE DISTURBED AT A GIVEN TIME.

FISHER, COLLINS & CARTER, INC.
CIVIL ENGINEERING CONSULTANTS & LAND SURVEYORS
CENTENNIAL SQUARE OFFICE PARK - 10272 BALTIMORE NATIONAL PIKE
ELLICOTT CITY, MARYLAND 21042
(410) 461 - 2855

NO.	REVISION	DATE

STATE OF MARYLAND — MICHAEL VITAGE — No. 20748 — PROFESSIONAL ENGINEER — 6-10-14

ENGINEER'S CERTIFICATE

"I certify that this plan for sediment and erosion control represents a practical and workable plan based on my personal knowledge of the site conditions and that it was prepared in accordance with the requirements of the Howard Soil Conservation District."

Signature of Engineer (print name below signature) — Date: 6-10-14

DEVELOPER'S CERTIFICATE

"I/We certify that all development and construction will be done according to this plan for sediment and erosion control, and that all responsible personnel involved in the construction project will have a Certificate of Attendance at a Department of the Environment Approved Training Program for the Control of Sediment and Erosion before beginning the project. I also authorize periodic on-site inspection by the Howard Soil Conservation District."

Signature of Developer (print name below signature) — Date: 6/11/14

This development plan is approved for soil erosion and sediment control by the HOWARD SOIL CONSERVATION DISTRICT.

Howard SCD — Date: 6/17/14

Owner/Builder

U.S. Home Corporation,
D/B/A Lennar
c/o Joseph Fortino, Vice President
10211 Wincopin Circle
Suite 300
Columbia, Maryland 21044
Ph# 410-423-0460

Developer

Preston • Scheffenacker Properties
2330 West Joppa Road, Suite 160
Lutherville, Maryland 21093-4614
Ph# 410-296-3800

APPROVED: HOWARD COUNTY DEPARTMENT OF PLANNING AND ZONING

Chief, Division of Land Development — Date: 7/23/14

Chief, Development Engineering Division — Date: 6.25.14

Director - Department of Planning and Zoning — Date: 7-23-14

SUBDIVISION			SECTION/AREA		LOT Nos.
OXFORD SQUARE			----		3 THRU 103
PLAT NO.	BLOCK NO.	ZONE	TAX/ZONE	ELEC. DIST.	CENSUS TR.
22895-22898	---	TOD	38	1st.	601101

SEDIMENT AND EROSION CONTROL NOTES & DETAILS

OXFORD SQUARE

"A Howard County Green Neighborhood"

Lots 3 Thru 103, Open Space Lots 104 Thru 116 And Parcels 'N' And 'O'

(Being A Resubdivision Of Parcels 'F' And 'J', As Shown On Plats Entitled "Revision Plat, Oxford Square, "Green Neighborhood", Parcels 'C', 'E', 'F', 'G', 'I', 'J', 'K' And 'M' And Recorded Among The Land Records Of Howard County, Maryland As Plat Nos. 22856 Thru 22859)
Zoned: TOD

Tax Map No.: 38 Grid No.: 20 Parcel No.: 761
First Election District Howard County, Maryland
Scale: As Shown
Date: June 6, 2014
Sheet 33 Of 38

SDP-13-068

DETAIL E-1 SILT FENCE

STANDARD SYMBOL: ├──SF──┤

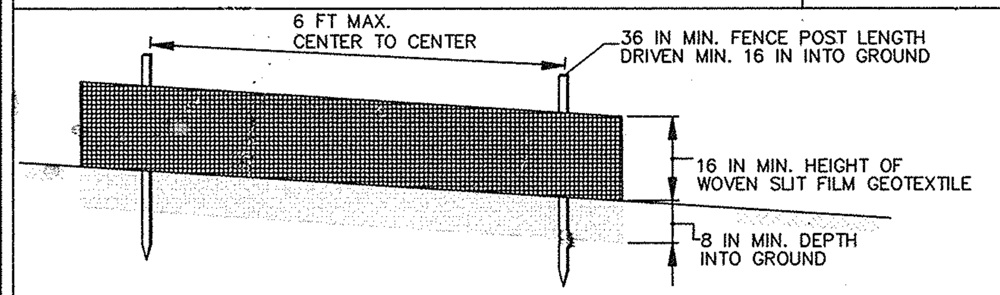

ELEVATION

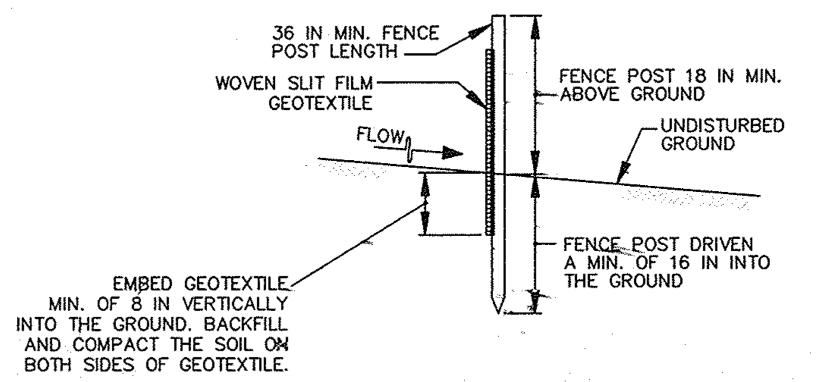

CROSS SECTION

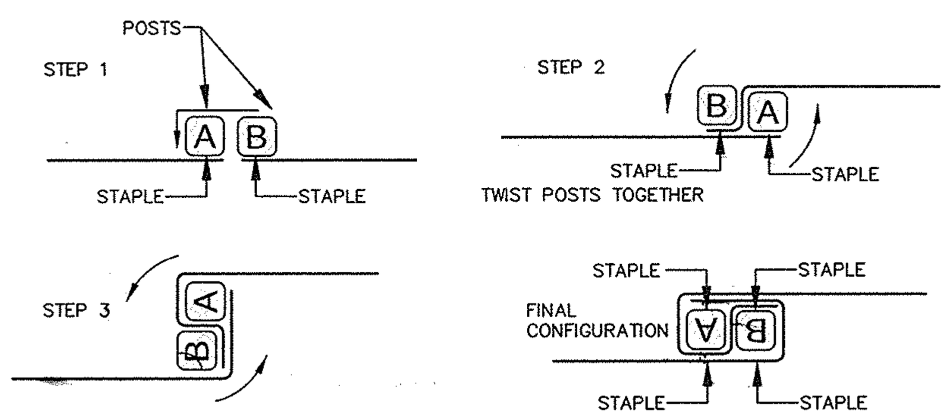

JOINING TWO ADJACENT SILT FENCE SECTIONS (TOP VIEW)

CONSTRUCTION SPECIFICATIONS

1. USE WOOD POSTS 1¾ X 1¾ ± 1/16 INCH (MINIMUM) SQUARE CUT OF SOUND QUALITY HARDWOOD. AS AN ALTERNATIVE TO WOODEN POST USE STANDARD "T" OR "U" SECTION STEEL POSTS WEIGHING NOT LESS THAN 1 POUND PER LINEAR FOOT.
2. USE 36 INCH MINIMUM POSTS DRIVEN 16 INCH MINIMUM INTO GROUND NO MORE THAN 6 FEET APART.
3. USE WOVEN SLIT FILM GEOTEXTILE AS SPECIFIED IN SECTION H-1 MATERIALS AND FASTEN GEOTEXTILE SECURELY TO UPSLOPE SIDE OF FENCE POSTS WITH WIRE TIES OR STAPLES AT TOP AND MID-SECTION.
4. PROVIDE MANUFACTURER CERTIFICATION TO THE AUTHORIZED REPRESENTATIVE OF THE INSPECTION/ENFORCEMENT AUTHORITY SHOWING THAT THE GEOTEXTILE USED MEETS THE REQUIREMENTS IN SECTION H-1 MATERIALS.
5. EMBED GEOTEXTILE A MINIMUM OF 8 INCHES VERTICALLY INTO THE GROUND. BACKFILL AND COMPACT THE SOIL ON BOTH SIDES OF FABRIC.
6. WHERE TWO SECTIONS OF GEOTEXTILE ADJOIN: OVERLAP, TWIST, AND STAPLE TO POST IN ACCORDANCE WITH THIS DETAIL.
7. EXTEND BOTH ENDS OF THE SILT FENCE A MINIMUM OF FIVE HORIZONTAL FEET UPSLOPE AT 45 DEGREES TO THE MAIN FENCE ALIGNMENT TO PREVENT RUNOFF FROM GOING AROUND THE ENDS OF THE SILT FENCE.
8. REMOVE ACCUMULATED SEDIMENT AND DEBRIS WHEN BULGES DEVELOP IN SILT FENCE OR WHEN SEDIMENT REACHES 25% OF FENCE HEIGHT. REPLACE GEOTEXTILE IF TORN. IF UNDERMINING OCCURS, REINSTALL FENCE.

MARYLAND STANDARDS AND SPECIFICATIONS FOR SOIL EROSION AND SEDIMENT CONTROL

U.S. DEPARTMENT OF AGRICULTURE NATURAL RESOURCES CONSERVATION SERVICE	2011	MARYLAND DEPARTMENT OF ENVIRONMENT WATER MANAGEMENT ADMINISTRATION

DETAIL E-3 SUPER SILT FENCE

STANDARD SYMBOL: ├──SSF──┤

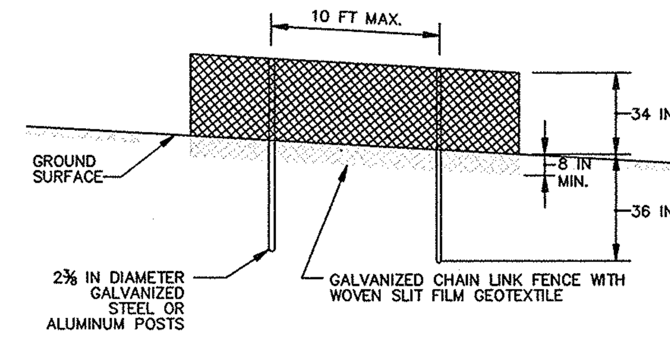

ELEVATION

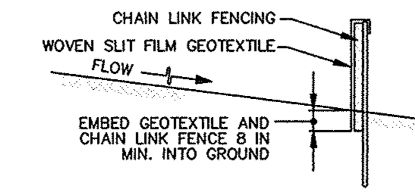

CROSS SECTION

CONSTRUCTION SPECIFICATIONS

1. INSTALL 2⅜ INCH DIAMETER GALVANIZED STEEL POSTS OF 0.095 INCH WALL THICKNESS AND SIX FOOT LENGTH SPACED NO FURTHER THAN 10 FEET APART. DRIVE THE POSTS A MINIMUM OF 36 INCHES INTO THE GROUND.
2. FASTEN 9 GAUGE OR HEAVIER GALVANIZED CHAIN LINK FENCE (2⅜ INCH MAXIMUM OPENING) 42 INCHES IN HEIGHT SECURELY TO THE FENCE POSTS WITH WIRE TIES OR HUG RINGS.
3. FASTEN WOVEN SLIT FILM GEOTEXTILE AS SPECIFIED IN SECTION H-1 MATERIALS, SECURELY TO THE UPSLOPE SIDE OF CHAIN LINK FENCE WITH TIES SPACED EVERY 24 INCHES AT THE TOP AND MID SECTION. EMBED GEOTEXTILE AND CHAIN LINK FENCE A MINIMUM OF 8 INCHES INTO THE GROUND.
4. WHERE ENDS OF THE GEOTEXTILE COME TOGETHER, THE ENDS SHALL BE OVERLAPPED BY 6 INCHES, FOLDED, AND STAPLED TO PREVENT SEDIMENT BY PASS.
5. EXTEND BOTH ENDS OF THE SUPER SILT FENCE A MINIMUM OF FIVE HORIZONTAL FEET UPSLOPE AT 45 DEGREES TO THE MAIN FENCE ALIGNMENT TO PREVENT RUNOFF FROM GOING AROUND THE ENDS OF THE SUPER SILT FENCE.
6. PROVIDE MANUFACTURER CERTIFICATION TO THE INSPECTION/ENFORCEMENT AUTHORITY SHOWING THAT GEOTEXTILE USED MEETS THE REQUIREMENTS IN SECTION H-1 MATERIALS.
7. REMOVE ACCUMULATED SEDIMENT AND DEBRIS WHEN BULGES DEVELOP IN FENCE OR WHEN SEDIMENT REACHES 25% OF FENCE HEIGHT. REPLACE GEOTEXTILE IF TORN. IF UNDERMINING OCCURS, REINSTALL CHAIN LINK FENCING AND GEOTEXTILE.

MARYLAND STANDARDS AND SPECIFICATIONS FOR SOIL EROSION AND SEDIMENT CONTROL

U.S. DEPARTMENT OF AGRICULTURE NATURAL RESOURCES CONSERVATION SERVICE	2011	MARYLAND DEPARTMENT OF ENVIRONMENT WATER MANAGEMENT ADMINISTRATION

DETAIL B-1 STABILIZED CONSTRUCTION ENTRANCE

STANDARD SYMBOL: SCE

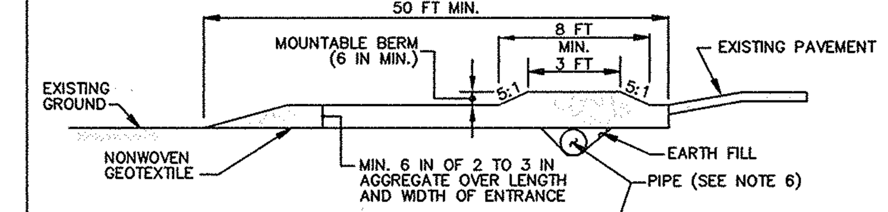

PROFILE

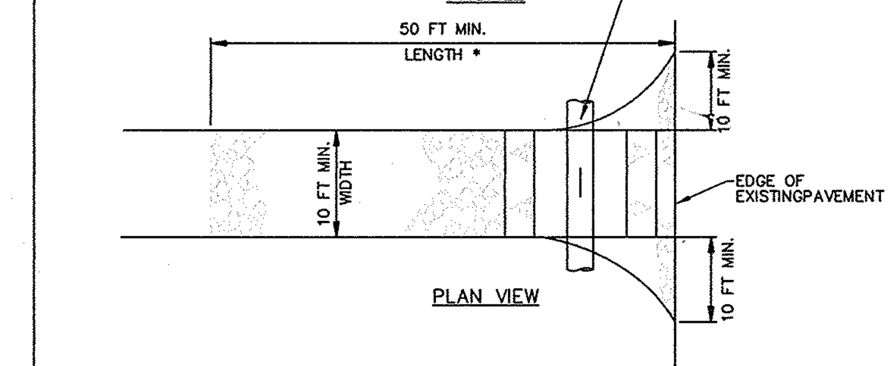

PLAN VIEW

CONSTRUCTION SPECIFICATIONS

1. PLACE STABILIZED CONSTRUCTION ENTRANCE IN ACCORDANCE WITH THE APPROVED PLAN. VEHICLES MUST TRAVEL OVER THE ENTIRE LENGTH OF THE SCE. USE MINIMUM LENGTH OF 50 FEET (*30 FEET FOR SINGLE RESIDENCE LOT). USE MINIMUM WIDTH OF 10 FEET. FLARE SCE 10 FEET MINIMUM AT THE EXISTING ROAD TO PROVIDE A TURNING RADIUS.
2. PIPE ALL SURFACE WATER FLOWING TO OR DIVERTED TOWARD THE SCE UNDER THE ENTRANCE, MAINTAINING POSITIVE DRAINAGE. PROTECT PIPE INSTALLED THROUGH THE SCE WITH A MOUNTABLE BERM WITH 5:1 SLOPES AND A MINIMUM OF 12 INCHES OF STONE OVER THE PIPE. PROVIDE PIPE AS SPECIFIED ON APPROVED PLAN. WHEN THE SCE IS LOCATED AT A HIGH SPOT AND HAS NO DRAINAGE TO CONVEY, A PIPE IS NOT NECESSARY. A MOUNTABLE BERM IS REQUIRED WHEN SCE IS NOT LOCATED AT A HIGH SPOT.
3. PREPARE SUBGRADE AND PLACE NONWOVEN GEOTEXTILE, AS SPECIFIED IN SECTION H-1 MATERIALS.
4. PLACE CRUSHED AGGREGATE (2 TO 3 INCHES IN SIZE) OR EQUIVALENT RECYCLED CONCRETE (WITHOUT REBAR) AT LEAST 6 INCHES DEEP OVER THE LENGTH AND WIDTH OF THE SCE.
5. MAINTAIN ENTRANCE IN A CONDITION THAT MINIMIZES TRACKING OF SEDIMENT. ADD STONE OR MAKE OTHER REPAIRS AS CONDITIONS DEMAND TO MAINTAIN CLEAN SURFACE, MOUNTABLE BERM, AND SPECIFIED DIMENSIONS. IMMEDIATELY REMOVE STONE AND/OR SEDIMENT SPILLED, DROPPED, OR TRACKED ONTO ADJACENT ROADWAY BY VACUUMING, SCRAPING, AND/OR SWEEPING. WASHING ROADWAY TO REMOVE MUD TRACKED ONTO PAVEMENT IS NOT ACCEPTABLE UNLESS WASH WATER IS DIRECTED TO AN APPROVED SEDIMENT CONTROL PRACTICE.

MARYLAND STANDARDS AND SPECIFICATIONS FOR SOIL EROSION AND SEDIMENT CONTROL

U.S. DEPARTMENT OF AGRICULTURE NATURAL RESOURCES CONSERVATION SERVICE	2011	MARYLAND DEPARTMENT OF ENVIRONMENT WATER MANAGEMENT ADMINISTRATION

DETAIL C-1 EARTH DIKE

STANDARD SYMBOL: A-1 (PLACE DESIGNATION (e.g. A-1) ON FLOW CHANNEL SIDE OF DIKE.)

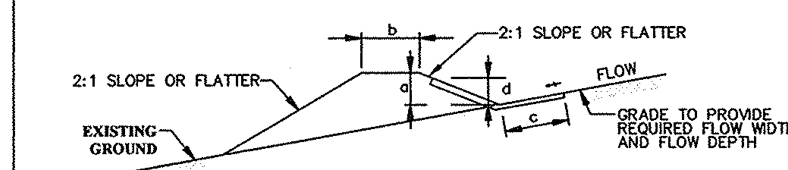

CROSS SECTION

CONTINUOUS GRADE 0.5% MIN. TO 10% MAX. SLOPE

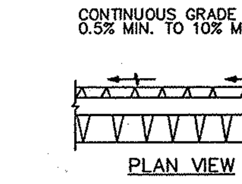

PLAN VIEW

DIKE TYPE

	A	B
a - DIKE HEIGHT	18 IN MIN.	30 IN MIN.
b - DIKE WIDTH	24 IN MIN.	36 IN MIN.
c - FLOW WIDTH	4 FT MIN.	6 FT MIN.
d - FLOW DEPTH	12 IN MIN.	24 IN MIN.

FLOW CHANNEL STABILIZATION

- A-1 SEED WITH STRAW MULCH AND TACK. (NOT ALLOWED FOR CLEAR WATER DIVERSION.)
- A-2/B-2 SEED WITH SOIL STABILIZATION MATTING OR LINE WITH SOD.
- A-3/B-3 4 TO 7 INCH STONE OR EQUIVALENT RECYCLED CONCRETE PRESSED INTO SOIL A MINIMUM OF 7 INCHES AND FLUSH WITH GROUND.

CONSTRUCTION SPECIFICATIONS

1. REMOVE AND DISPOSE OF ALL TREES, BRUSH, STUMPS, OBSTRUCTIONS, AND OTHER OBJECTIONABLE MATERIAL SO AS NOT TO INTERFERE WITH PROPER FUNCTION OF EARTHDIKE.
2. EXCAVATE OR SHAPE EARTH DIKE TO LINE, GRADE, AND CROSS SECTION AS SPECIFIED. BANK PROJECTIONS OR OTHER IRREGULARITIES ARE NOT ALLOWED.
3. COMPACT FILL.
4. CONSTRUCT FLOW CHANNEL ON AN UNINTERRUPTED, CONTINUOUS GRADE, ADJUSTING THE LOCATION DUE TO FIELD CONDITIONS AS NECESSARY TO MAINTAIN POSITIVE DRAINAGE.
5. PROVIDE OUTLET PROTECTION AS REQUIRED ON APPROVED PLAN.
6. STABILIZE EARTH DIKE WITHIN THREE DAYS OF INSTALLATION. STABILIZE FLOW CHANNEL FOR CLEAR WATER DIVERSION WITHIN 24 HOURS OF INSTALLATION.
7. MAINTAIN LINE, GRADE, AND CROSS SECTION. REMOVE ACCUMULATED SEDIMENT AND DEBRIS, AND MAINTAIN POSITIVE DRAINAGE. KEEP EARTH DIKE AND POINT OF DISCHARGE FREE OF EROSION, AND CONTINUOUSLY MEET REQUIREMENTS FOR ADEQUATE VEGETATIVE ESTABLISHMENT IN ACCORDANCE WITH SECTION B-4 VEGETATIVE STABILIZATION.
8. UPON REMOVAL OF EARTH DIKE, GRADE AREA FLUSH WITH EXISTING GROUND. WITHIN 24 HOURS OF REMOVAL STABILIZE DISTURBED AREA WITH TOPSOIL, SEED, AND MULCH, OR AS SPECIFIED ON APPROVED PLAN.

MARYLAND STANDARDS AND SPECIFICATIONS FOR SOIL EROSION AND SEDIMENT CONTROL

U.S. DEPARTMENT OF AGRICULTURE NATURAL RESOURCES CONSERVATION SERVICE	2011	MARYLAND DEPARTMENT OF ENVIRONMENT WATER MANAGEMENT ADMINISTRATION

DETAIL B-4-6-C PERMANENT SOIL STABILIZATION MATTING CHANNEL APPLICATION

STANDARD SYMBOL: PSSMC - * lb/ft² (* INCLUDE SHEAR STRESS)

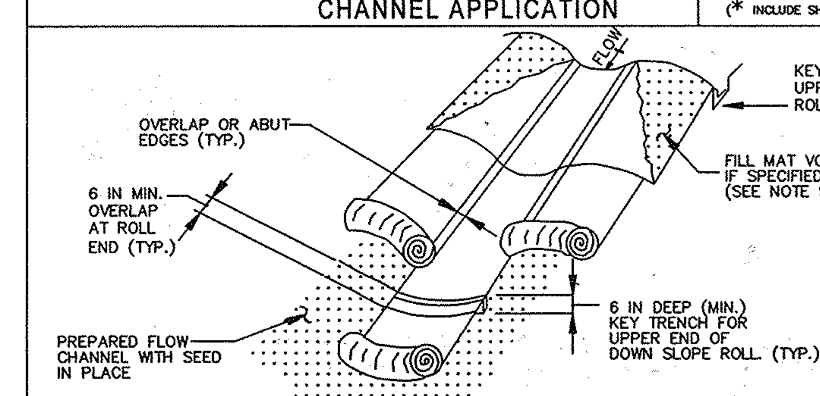

ISOMETRIC VIEW

CONSTRUCTION SPECIFICATIONS

1. USE MATTING THAT HAS A DESIGN VALUE FOR SHEAR STRESS EQUAL TO OR HIGHER THAN THE SHEAR STRESS DESIGNATED ON APPROVED PLANS.
2. USE PERMANENT SOIL STABILIZATION MATTING MADE OF OPEN WEAVE SYNTHETIC, NON-DEGRADABLE FIBERS OR ELEMENTS OF UNIFORM THICKNESS AND DISTRIBUTION THROUGHOUT. CHEMICALS USED IN THE MAT MUST BE NON-LEACHING AND NON-TOXIC TO VEGETATION AND SEED GERMINATION AND NON-INJURIOUS TO THE SKIN. IF PRESENT, NETTING MUST BE EXTRUDED PLASTIC WITH A MAXIMUM MESH OPENING OF 2x2 INCHES AND SUFFICIENTLY BONDED OR SEWN ON 2 INCH CENTERS ALONG LONGITUDINAL AXIS OF THE MATERIAL TO PREVENT SEPARATION OF THE NET FROM THE PARENT MATERIAL.
3. SECURE MATTING USING STEEL STAPLES OR WOOD STAKES. STAPLES MUST BE "U" OR "T" SHAPED STEEL WIRE HAVING A MINIMUM GAUGE OF NO. 11 AND NO. 8 RESPECTIVELY. "U" SHAPED STAPLES MUST AVERAGE 1 TO 1 ½ INCHES WIDE AND BE A MINIMUM OF 6 INCHES LONG. "T" SHAPED STAPLES MUST HAVE A MINIMUM 8 INCH MAIN LEG, A MINIMUM 1 INCH SECONDARY LEG, AND MINIMUM 4 INCH HEAD. WOOD STAKES MUST BE ROUGH-SAWN HARDWOOD, 12 TO 24 INCHES IN LENGTH, 1x3 INCH IN CROSS SECTION, AND WEDGE SHAPE AT THE BOTTOM.
4. PERFORM FINAL GRADING, TOPSOIL APPLICATION, SEEDBED PREPARATION, AND PERMANENT SEEDING IN ACCORDANCE WITH SPECIFICATIONS. PLACE MATTING WITHIN 48 HOURS OF COMPLETING SEEDING OPERATIONS, UNLESS END OF WORKDAY STABILIZATION IS SPECIFIED ON THE APPROVED EROSION AND SEDIMENT CONTROL PLAN.
5. UNROLL MATTING IN DIRECTION OF WATER FLOW, CENTERING THE FIRST ROLL ON THE CHANNEL CENTER LINE. WORK FROM CENTER OF CHANNEL OUTWARD WHEN PLACING ROLLS. LAY MATTING SMOOTHLY AND FIRMLY UPON THE SEEDED SURFACE. AVOID STRETCHING THE MATTING.
6. OVERLAP OR ABUT EDGES OF MATTING ROLLS PER MANUFACTURER RECOMMENDATIONS. OVERLAP ROLL ENDS BY 6 INCHES (MINIMUM), WITH THE UPSTREAM MAT OVERLAPPING ON TOP OF THE NEXT DOWNSTREAM MAT.
7. KEY IN THE TOP OF SLOPE END OF MAT 6 INCHES (MINIMUM) BY DIGGING A TRENCH, PLACING THE MATTING ROLL END IN THE TRENCH, STAPLING THE MAT IN PLACE, REPLACING THE EXCAVATED MATERIAL, AND TAMPING TO SECURE THE MAT END IN THE KEY.
8. STAPLE/STAKE MAT IN A STAGGERED PATTERN ON 4 FOOT (MAXIMUM) CENTERS THROUGHOUT AND 2 FOOT (MAXIMUM) CENTERS ALONG SEAMS, JOINTS, AND ROLL ENDS.
9. IF SPECIFIED BY THE DESIGNER OR MANUFACTURER AND DEPENDING ON THE TYPE OF MAT BEING INSTALLED, ONCE THE MATTING IS KEYED AND STAPLED IN PLACE, FILL THE MAT VOIDS WITH TOP SOIL OR GRANULAR MATERIAL AND LIGHTLY COMPACT OR ROLL TO MAXIMIZE SOIL/MAT CONTACT WITHOUT CRUSHING MAT.
10. ESTABLISH AND MAINTAIN VEGETATION SO THAT REQUIREMENTS FOR ADEQUATE VEGETATIVE ESTABLISHMENT ARE CONTINUOUSLY MET IN ACCORDANCE WITH SECTION B-4 VEGETATIVE STABILIZATION.

MARYLAND STANDARDS AND SPECIFICATIONS FOR SOIL EROSION AND SEDIMENT CONTROL

U.S. DEPARTMENT OF AGRICULTURE NATURAL RESOURCES CONSERVATION SERVICE	2011	MARYLAND DEPARTMENT OF ENVIRONMENT WATER MANAGEMENT ADMINISTRATION

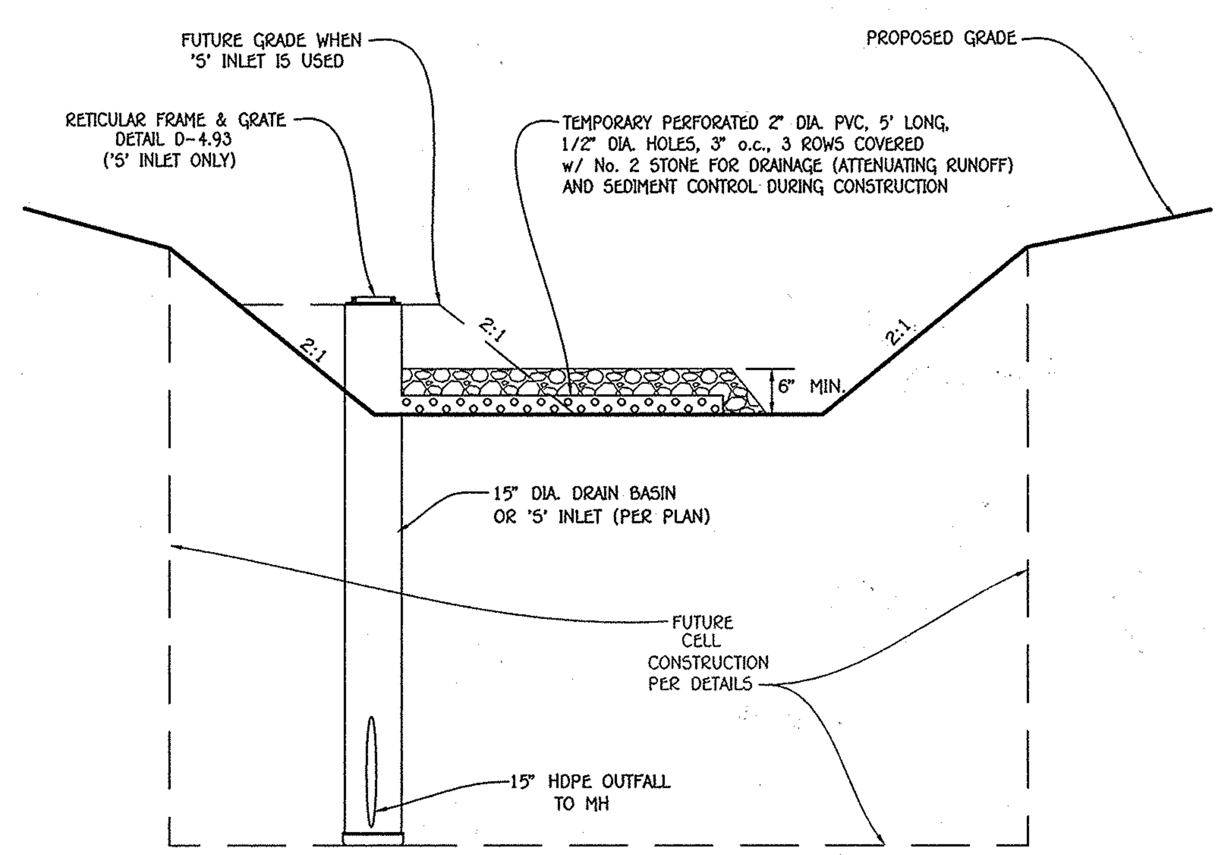

TYPICAL BIO-RETENTION CELL DURING INTITIAL CONSTRUCTION PHASE PRIOR TO DRAINAGE AREA BEING STABILIZED

NO SCALE

FISHER, COLLINS & CARTER, INC.
CIVIL ENGINEERING CONSULTANTS & LAND SURVEYORS
CENTENNIAL SQUARE OFFICE PARK - 10272 BALTIMORE NATIONAL PIKE
ELLICOTT CITY, MARYLAND 21042
(410) 461 - 2855

NO.	REVISION	DATE

STATE OF MARYLAND — MICHAEL VITA — No. 20748 — PROFESSIONAL ENGINEER — 6-10-14

ENGINEER'S CERTIFICATE

"I certify that this plan for sediment and erosion control represents a practical and workable plan based on my personal knowledge of the site conditions and that it was prepared in accordance with the requirements of the Howard Soil Conservation District."

Signature of Engineer (print name below signature) — 6-10-14 Date

DEVELOPER'S CERTIFICATE

"I/We certify that all development and construction will be done according to this plan for sediment and erosion control, and that all responsible personnel involved in the construction project will have a Certificate of Attendance at a Department of the Environment Approved Training Program for the Control of Sediment and Erosion before beginning the project. I also authorize periodic on-site inspection by the Howard Soil Conservation District."

Signature of Developer (print name below signature) — 6/10/14 Date

This development plan is approved for soil erosion and sediment control by the HOWARD SOIL CONSERVATION DISTRICT.

Howard SCD — 6/17/14 Date

Owner/Builder
U.S. Home Corporation,
D/B/A Lennar
c/o Joseph Fortino, Vice President
10211 Wincopin Circle
Suite 300
Columbia, Maryland 21044
Ph# 410-423-0460

Developer
Preston • Scheffenäcker Properties
2330 West Joppa Road, Suite 160
Lutherville, Maryland 21093-4614
Ph# 410-296-3800

APPROVED: HOWARD COUNTY DEPARTMENT OF PLANNING AND ZONING

Chief, Division of Land Development — 7/23/14 Date

Chief, Development Engineering Division — 6.25.14 Date

Director - Department of Planning and Zoning — 7-23-14 Date

SUBDIVISION			SECTION/AREA		LOT Nos.
OXFORD SQUARE			----		3 THRU 103
PLAT NO.	BLOCK NO.	ZONE	TAX/ZONE	ELEC. DIST.	CENSUS TR.
22895-22898	---	TOD	38	1st.	601101

SEDIMENT AND EROSION CONTROL NOTES & DETAILS

OXFORD SQUARE

"A Howard County Green Neighborhood"

Lots 3 Thru 103, Open Space Lots 104 Thru 116 And Parcels 'N' And 'O'

(Being A Resubdivision Of Parcels 'F' And 'J', As Shown On Plats Entitled "Revision Plat, Oxford Square, "Green Neighborhood", Parcels 'C', 'E', 'F', 'G', 'I', 'J', 'K' And 'M' And Recorded Among The Land Records Of Howard County, Maryland As Plat Nos. 22856 Thru 22859)
Zoned: TOD

Tax Map No.: 38 Grid No.: 20 Parcel No.: 761
First Election District Howard County, Maryland
Scale: As Shown
Date: June 6, 2014
Sheet 34 Of 38

SDP-13-068

I:\2009\09014\dwg\SDP (Lennar)\09014 Sheet 33-34 Sediment control details.dwg, sheet 34, 6/9/2014 11:23:11 AM, 1:1

GREEN NEIGHBORHOOD COMPLIANCE CHECKLIST

Credit No.	Credit	Champion (Name, Role)	Requirement	Sketch Plan (SDP-13-068) GN Strategies	Documentation Location	Max Points	Requested Points
A	**Innovative / Integrated Design Process**					**4**	**4**
A-1	Green Development Plan	PCM/Petitoner; HCM/Planners	Shows how plans meet criteria, includes checklist, natural resource inventory and energy analysis	Provide documentation	GN Plan GN Report	REQ'D	
A-2	Interdisciplinary Project Team	PCM/Petitoner	Includes U.S. Green Building Council Leadership in Energy and Environmental Design (LEED) Accredited professional, ecologist / environmental professional / landscape architect, and engineer	The design team includes a LEED AP professional, an ecologist, a civil engineer, an architect and landscape architect.	GN Plan GN Report	REQ'D	
A-3	Third Party Certification	PCM/Petitoner	Certification of credits by independent LEED accredited professional	Alexander Design Studio	GN Plan GN Report	REQ'D	
A-4a	Innovative Design A	HCM/Planners	Green Streets	Green Streets	GN Report SDP (SDP-13-068) Sheet 29, 30 Reference: Sketch Plan (S-14-001)	1	1
A-4b	Innovative Design B	HCM/Planners	Priority Parking for Fuel Efficient Cars	Reserve 5% for Priority Parking for Fuel Efficient Cars	Future SDP References: Sketch Plan (S-14-001)	1	1
A-4c	Innovative Design C	HCM/Planners	Compact Development	Residential Development will exceed 20 DU/AC	GN Plan GN Report References: Sketch Plan (S-14-001)	1	1
A-4d	Innovative Design D	HCM/Planners	Walkable Streets	More than 80% building frontage oriented towards public spaces; Less than 20% service and garage openings to public spaces.	GN Plan GN Report Reference: Sketch Plan (S-14-001)	1	1
B	**Location, Linkages & Community Context**					**27**	**8**
B-1a	Redevelopment Site	HCM/Planners FCC/Civil	Reuse of previously developed site (minimum 25% existing impervious, with sliding scale for credits based on amount or % impervious)	More than 25% area previously developed (former sand and gravel operation).	GN Plan GNReport Reference: Sketch Plan (S-14-001)	4	2
B-1b	Redevelopment Site (Brownfield)	N/A	Brownfield cleanup of redevelopment site	N/A	N/A	8	0
B-2	Historic Buildings	N/A	Preserve, restore or rehabilitate historic properties.	N/A	N/A	4	0
B-3a	Transit Access & Amenities for Reduced Auto Dependence (Stop)	HCM/Planners	Site is served by transit stop within 1/2 mile (1 point) or 1/4 mile (2 points) walk from property	Private Shuttle Service with 2 stops (100% DU within 1/4 mile walking distance)	GN Plan Reference: Sketch Plan (S-14-001) and F Plan (F-13-095)	2	2
B-3b	Transit Access & Amenities for Reduced Auto Dependence (Shelter)	HCM/Planners	Provide county-specified transit shelter with benches and lighting at transit stop within 1/2 mile of property and provided pedestrian link to stop if	Provide HoCo transit approved shelter for private shuttle service	Future SDP Reference: Sketch Plan (S-14-001)	4	4
B-4	Proximity to Community Resources	N/A	Credit for 1/2 mile proximity to existing or proposed community resources such as schools, parks, library, post office, etc.	N/A	N/A	5	0
C	**Compact, Complete & Connected Development**					**27**	**25**
C-1	Diversity of Uses	HCM/Planners	1 point per different landuse; minimum 100 sf for ech non-residential per DU. Minimum of 149,200 SF each of office, institutional and civic use, per 1,492 DU	Provide 3 Uses: Institutional, Civic and Office	GN Plan References: Sketch Plan (S-14-001) SDP (SDP-12-075)	3	3
C-2	Planned Service Area	HCM/Planners	Locate the project within the Planned Service Area	The project is within the Planned Service Area	GN Plan	5	5
C-3a	Pedestrian System (Path)	HCM/Planners	Provide an off-site pathway/trail system with 2 connections to internal or external sidewalks, with minimal environmental impacts, long-term maintenance	Provide a shared use path system.	GN Plan GN Report SDP (SDP-13-068) Sheet 3, 29 References: Sketch Plan (S-14-001) SDP (SDP-12-075)	2	2
C-3b	Pedestrian System (Connections)	N/A	Provide an off-site pathway/trail connection	N/A	N/A	2	0
C-3c	Pedestrian System (Amenities)	HCM/Planners	Provide at least two different pedestrian experience features	Provide pedestrian amenities at trailheads, the lawn and school site	GN Plan SDP (SDP013-068) Sheet 4 References: Sketch Plan (S-14-001) SDP (SDP-12-075)	2	2
C-4	Connected On-site Street Network	HCM/Planners	Provide a gridded street network	More than 75% connected streets	GN Plan GN Report References: Sketch Plan (S-14-001)	2	2
C-5	Parking does not exceed Required Minimum	HCM/Planners	Surface parking lots do not exceed required parking ratios (1 point); plan takes advantage of shared parking provisions parking structure provided (in deck or beneath building; does not include garages within individual units) (4 points)	Provide common parking structures (4 points)	GN Plan References: Sketch Plan (S-14-001)	4	4
C-6	Exceed Minimum Open Space Requirements	HCM/Planners	1 point for every 5% above required minimum open space for the TOD zone. 1 point for every 10% of non-buildable HOA parcels above 50% of the site (up tp 3 points).	Provide more than 25% increase in amenity space above the required minimum amenity space (TOD zoning regulations)	GN Plan GN Report SDP (SDP-13-068) Sheets 1, 3 and 4 References: Sketch Plan (S-14-001)	5	5
C-7	Green Spaces and Amenity Areas	HCM/Planners	Open space along public/private roads available for public use	Publically accessible open space will be provided at the clubhouse and pool and the nature trail.	GN Plan SDP (SDP-13-068) Sheets 1 and 3 References: Sketch Plan (S-14-001)	2	2
D	**Environmental Preservation**					**52**	**39**
D-1	Stream Restoration or Wetland Creation or Restoration	EcoScience	Restoration of degraded on-site stream channel; on-site restoration of degraded wetland or creation of additional wetlands (sliding scale based on % or length of stream restored and % or acres of wetland created or restored)	Provide wetland restoration for 91,000 SF and Stream restoration for intermittent stream segment ST-2 (100-120 FT of channel).	References: Sketch Plan (S-14-001)	16	16
D-2	Habitat Management Plan	EcoScience	Prepare and implement plan that identifies, conserves and enhances natural resources and ecological communities (may include clean up of debris, removal of invasives, etc.)	Provide Habitat Management Plan	Reference: Sketch Plan (S-14-001)	4	4
D-3	25% Steep Slope Preservation	N/A	Protect all existing steep slopes as defined by County regulations required; provide 25' minimum buffer at top of 25% slope (2 points)	N/A	N/A	2	0
D-4	15% Slope Preservation	FCC/Civil; HCM/Planners	Protect existing 15%+ slopes (protect minimum 1/2 acre, with sliding scale based on area or % protected)	Preserve between 51-75% of 15%-24.9% slopes	GN Plan GN Report References: Sketch Plan (S-14-001)	4	3
D-5	Minimize Grading and Site Disturbance	FCC/Civil; HCM/Planners	Minimize limit of disturbance: leave at least 20% of site undisturbed (1 point), 30% (2 points), 40% (3 points); balancecut and fill on site (2 points); retaining walls 3-5.9' (deduct 1 point) retaining walls 6-8.9' (deduct 2 points), walls 9' and higher (deduct 3 points), no new steep slopes over 25% (1 point)	Balance Cut and Fill on entire site-- 2 points Minimize Retaining Walls-- 0 points No new > 25% Steep slopes- 1 point Leave more than 30% of site undisturbed -- 2 points	GN Plan GN Report	5	5
D-6	Exceed Minimum Forest Conservation Requirements	EcoScience FCC/Civil; HCM/Planners	1 point for every 10% of existing forest retained above break even point; 1 point for every 10% of on-site forest planted in excess of afforestation obligation	Provide 5.25 acres of planting area (50% over afforestation obligation)	Reference: Sketch Plan (S-14-001)	5	5
D-7	Save Trees above 12" Minimum Caliper	N/A	1 point for protecting each 25% of all specimen trees (does not include specimen trees within forest conservation area or within forests that are being cleared)	N/A	N/A	4	0
D-8a	Exceed Minimum Stream Buffer Requirements	FCC/Civil;	75' buffer required for perennial and intermittent streams inside PSA, 100' buffer required for perennial and intermittent streams outside PSA	75' buffer required for perennial and intermittent streams inside PSA,	Reference: Sketch Plan (S-14-001)	REQ'D	
D-8b	Exceed Minimum Stream Buffer Requirements	EcoScience FCC/Civil; HCM/Planners	2 points for each additional 25' of buffer provided in excess of requirements in D-8a outside wetland buffer or floodplain	Provide 150 FT Stream Buffer (75 FT enhanced buffer)-- 6 points	Reference: Sketch Plan (S-14-001)	6	6
D-9	Exceed Minimum Wetland Buffer Requirements	EcoScience FCC/Civil, HCM/Planners	2 points for each additional 25' of wetland buffer buffer outside stream buffer or floodplain	N/A	N/A	4	0
D-10	Floodplain Buffer	N/A	1 point for each 25' of buffer to floodplain outside required or provided wetland or stream buffer	N/A	N/A	2	0
E	**Site Landscape Improvements**					**10**	**3**
E-1	Landscaping exceeds Minimum Requirements and Reduces Heat Island Effect	N/A	1 point for each 10% increase in number of plants (must be native plants) provided above total minimum required in Landscape Manual; retain or plant trees on south and west sides of buildings and increase trees within parking areas and along sidewalks and paths	Provide 20% increase in Landscape Requirements	GN Plan GN Report SDP-13-068 Sheet 23	5	2
E-2	Native Plants	N/A	1 point for 80%, 2 points for 90%, 3 points for 100% of all plants native to within 200 miles of site	N/A	N/A	3	0
E-3	No Invasive Plants	HCM/Planners	No plants that are on DNR, USDA or Cooperative Extension Service lists of invasive plants	Will not plant invasive plants	GN Plan GN Report SDP-13-068 Sheet 23	REQ'D	
E-4	Limit Turf	HCM/Planners	Turf does not exceed 30% of unpaved site (1 point); no turf on new created steep slopes 25%+ or in densely shaded areas (1 point); nonturf areas must be planted in native vegetation	Will not plant conventional turf in densely shaded areas and on newly created >25% steep slopes	GN Plan GN Report References: Sketch Plan (S-14-001)	2	1
F	**Water Conservation / Efficiency / Management**					**17**	**11**
F-1	Rainwater Harvesting System	Straughan	Collect and make use of water runoff from minimum 50% of roof area; provide storage system and monitoring device and maintenance / management program	Provide rainwater harvesting for school and recreational fields	Reference: Sketch Plan (S-14-001) SDP (SDP-12-075)	5	5
F-2	Water-Permeable Walkways	N/A	Use water-permeable materials in 50% or more of pathways; provide maintenance program	N/A	N/A	4	0
F-3a	Low Impact Development (LID) Stormwater Treatment	FCC/Civil	Meets minimum Design Manual requirements; no dry ponds allowed	No dry ponds	GN Plan SDP (SDP-13-068) Sheets 8-17	REQ'D	
F-3b	Low Impact Development (LID) Stormwater Treatment	FCC/Civil	Exceeds Design Manual requirements; maximize use of bioretention (esp. for parking lots), rain gardens, rain barrels, stormwater wetlands, green roof, etc.	Will provide 51% water quality volume stored and infiltrated/re-used On-Site	GN Plan GN Report SDP (SDP-13-068) Sheets 8-17	8	6
G	**Energy Efficiency**					**13**	**0**
G-1	Light Pollution Reduction	FCC/Civil; HCM/Planners	Shield all site lighting fixtures to reduce light and spillover below county code requirements; install sensors or timers on all exterior site lighting fixtures	N/A	N/A	4	0
G-2	Solar Orientation	N/A	Orient 50% (1 point) or 75% (2 points) or 100% (3 points) of buildings to make available for solar strategies	N/A	N/A	3	0
G-3	Infrastructure Energy Efficiency	N/A	Select high efficiency fixtures for parking lot and other site light fixtures	N/A	N/A	6	0
H	**Materials Beneficial to the Environment / Waste Management**					**17**	**7**
H-1	Environmentally Preferable Site Products	Straughan FCC/Civil; HCM/Planners	Select products from a list including: recycled materials (concrete, asphalt, tires, plastic, etc.), materials with recycled content, salvaged or engineered materials;	Use 26-50% environmentally preferrable materials	GN Report	8	0
H-2	Reduce Heat-Island Effect of Paving	N/A	Use light-colored or high albedo materials and/or porous paving with a minimum Solar Reflective Index of 0.6 or over for at least 30% of the site hardscape	N/A	N/A	2	0
H-3	Site Construction Waste Management	Straughan	Develop and implement a construction waste management plan to divert, reuse, recycle or reduce the amount of site material sent to the landfill by 25% (2 points) or 50% (3 points) or 75% (4 points)	Divert 75% or more site construction waste	GN Report	4	4
H-4	Regionally Provided Materials	Straughan FCC/Civil; HCM/Planners	20% of common and public infrastructure materials from within 200 miles	Use regionally produced materials for 20% of total site materials	GN Report	3	3
I	**Operations and Maintenance Education**					**0**	**0**
I-1	HOA Documents	Straughan;	Include information about green site features and maintenance requirements in HOA documents	Provide HOA document	GN Report	REQ'D	
I-2	Maintenance Manual for Owner / HOA / Manager	Straughan	Provide a manual that includes information on how to maintain the green features of the site, including paving materials, landscaping and stormwater management LID and encourages additional green activities such as recycling, gardening, etc.	Provide manual	GN Report	REQ'D	
I-3	Public Awareness of Sustainable Community	Straughan; HCM	Develop a program to advertise the environmental benefits of the community	Implement public awareness strategy	GN Report	REQ'D	

TOTAL GREEN NEIGHBORHOOD SITE POINTS	167	97
Number of points required to obtain Green Neighborhood Allocations	90	

Third Party Certification

By affixing my signature below, the undersigned does hereby declare and affirm to Howard County that the targeted Green Neighborhood Site credits and point total, as specified in this Green Neighborhood Site Compliance Checklist, are reasonable and achiev

Signature: [signature] No. 10439208 Date: 6.11.14

Name: CHARLES ALEXANDER Title: PRINCIPAL Organization: ALEXANDER DESIGN STUDIO

Submission (mark "X" where applicable): X SDP (SDP-13-068)

APPROVED
HOWARD COUNTY DEPARTMENT OF PLANNING & ZONING
GREEN NEIGHBORHOOD PLAN FOR SITES

[signature] 7-22-14
CHIEF, RESOURCE CONSERVATION DIVISION — DATE

LEED ACCREDITED PROFESSIONAL CERTIFICATE
GREEN NEIGHBORHOOD PLAN FOR SITES

I hereby certify that this plan represnets a practical and workable plan for achieving the targeted credits and point total shown on the Green Neighborhood for Sites Compliance Checklist.

[signature] 10007912 6/10/14
MATTHEW J FITZSIMMONS, LEED AP — LEED ACCREDITATION NUMBER — DATE

hord | coplan | macht
750 E. Pratt Street, Suite 1100 Baltimore MD 21202
410.837.7311 | www.hcm2.com
Hord Coplan Macht, Inc. 2014

FISHER, COLLINS & CARTER, INC.
CIVIL ENGINEERING CONSULTANTS & LAND SURVEYORS
CENTENNIAL SQUARE OFFICE PARK - 10272 BALTIMORE NATIONAL PIKE
ELLICOTT CITY, MARYLAND 21042
(410) 461 - 2855

NO.	REVISION	DATE

STATE OF MARYLAND — MICHAEL VITA — No. 20748 — PROFESSIONAL ENGINEER — 6.10.14

Owner/Builder
U.S. Home Corporation,
D/B/A Lennar
c/o Joseph Fortino, Vice President
10211 Wincopin Circle
Suite 300
Columbia, Maryland 21044
Ph# 410-423-0460

Developer
Preston • Scheffenacker Properties
2330 West Joppa Road, Suite 160
Lutherville, Maryland 21093-4614
Ph# 410-296-3800

APPROVED: HOWARD COUNTY DEPARTMENT OF PLANNING AND ZONING

[signature] 7/23/14
Chief, Division of Land Development — Date

[signature] 6-25-14
Chief, Development Engineering Division — Date

[signature] 7-23-14
Director - Department of Planning and Zoning — Date

SUBDIVISION			SECTION/AREA		LOT Nos.
OXFORD SQUARE			----		3 THRU 103
PLAT NO.	BLOCK NO.	ZONE	TAX/ZONE	ELEC. DIST.	CENSUS TR.
22895-22898	---	TOD	38	1st.	601101

GREEN NEIGHBORHOOD PLAN

OXFORD SQUARE

"A Howard County Green Neighborhood"

Lots 3 Thru 103, Open Space Lots 104 Thru 116 And Parcels 'N' And 'O'

(Being A Resubdivision Of Parcels 'F' And 'J', As Shown On Plats Entitled "Revision Plat, Oxford Square, "Green Neighborhood", Parcels 'C', 'E', 'F', 'G', 'I', 'J', 'K' And 'M' And Recorded Among The Land Records Of Howard County, Maryland As Plat Nos. 22856 Thru 22859)
Zoned: TOD

Tax Map No.: 38 Grid No.: 20 Parcel No.: 761
First Election District Howard County, Maryland
Scale: As Shown
Date: June 6, 2014
Sheet 35 Of 38

SDP-13-068

I:\2009\09014\dwg\SDP (Lennar)\09014 SHEET 35 FOR MYLAR.dwg, Sheet 35, 6/9/2014 11:03:06 AM, 1:1

GREEN NEIGHBORHOOD NOTES:

A-2 THE DESIGN AND DEVELOPMENT TEAM INCLUDES A LEED AP (MATTHEW FITZSIMMONS- HORD COPLAN MACHT), ENVIRONMENTAL PROFESSIONAL (JOHN CANOLES- ECO-SCIENCE PROFESSIONALS, INC.), LANDSCAPE ARCHITECT (JOSH KILRAIN- HORD COPLAN MACHT) AND AN ENGINEER (ALDO VITUCCI- FISHER, COLLINS & CARTER INC.)

A-3 THE THIRD PARTY CERTIFICATION IS PROVIDED BY CHARLES ALEXANDER, LEED-AP OF ALEXANDER DESIGN STUDIOS.

B-1a THE 111.1 ACRE DEVELOPMENT CONSISTS OF 28.4 ACRES OF PREVIOUSLY DEVELOPED LAND (25.6% OF THE OXFORD SQUARE DEVELOPMENT).

B-3a OXFORD SQUARE WILL PROVIDE TWO TRANSIT STOPS FOR THE PROPOSED PRIVATE SHUTTLE SERVICE CONNECTING OXFORD SQUARE TO THE DORSEY MARC COMMUTER RAIL STATION. THE STOPS WILL BE WITHIN 1/4 WALKING DISTANCE TO ALL DWELLING UNITS.

B-3b OXFORD SQUARE WILL PROVIDE ONE SHELTER AT ONE OF THE PRIVATE SHUTTLE STOPS. THE SHELTER WILL COMPLY WITH COUNTY -APPROVED CRITERIA INCLUDING BENCHES AND LIGHTING.

C-1 OXFORD SQUARE WILL PROVIDE THREE DIVERSE USES OTHER THAN RESIDENTIAL: INSTITUTIONAL (MIDDLE SCHOOL BUILDING AND OUTDOOR CLASSROOM SPACE, ELEMENTARY SCHOOL), CIVIC (SCHOOL'S RECREATIONAL PLAYING FIELDS AND SHARED-USE PATH) AND OFFICE.

C-2 OXFORD SQUARE IS LOCATED WITHIN THE EXISTING PLANNED WATER AND SEWER SERVICE AREA.

C-3c OXFORD SQUARE WILL PROVIDE A MINIMUM OF TWO PEDESTRIAN SYSTEM AMENITY EXPERIENCES: 1) SHARED USE PATH AND NATURE TRAIL (TRAIL SIGNS AND MARKERS, BENCHES, LITTER RECEPTACLES, INFORMATIONAL SIGNS, BIKE RACKS), 2) THE LAWN (BENCHES, EXTERIOR LIGHTING, SHADE TREES, INFORMATIONAL SIGNS), 3) RESIDENTIAL COURTYARDS AND MEWS (BENCHES), AND 4) SCHOOL SITES (PLAYING FIELDS, BENCHES, BIKE RACKS)

D-8b OXFORD SQUARE WILL PROVIDE A MINIMUM 75 FT ENHANCED STREAM BUFFER.

E-3 OXFORD SQUARE WILL NOT PLANT INVASIVE PLANTS.

E-4 OXFORD SQUARE WILL NOT PLANT TURF IN DENSELY SHADED AREAS.

F-3b OXFORD SQUARE WILL PROVIDE AT LEAST 51% WATER QUALITY VOLUME STORED AND INFILTRATED/RE-USED ON-SITE.

B-3a & B-3b VICINITY MAP (Scale: 1": 600')

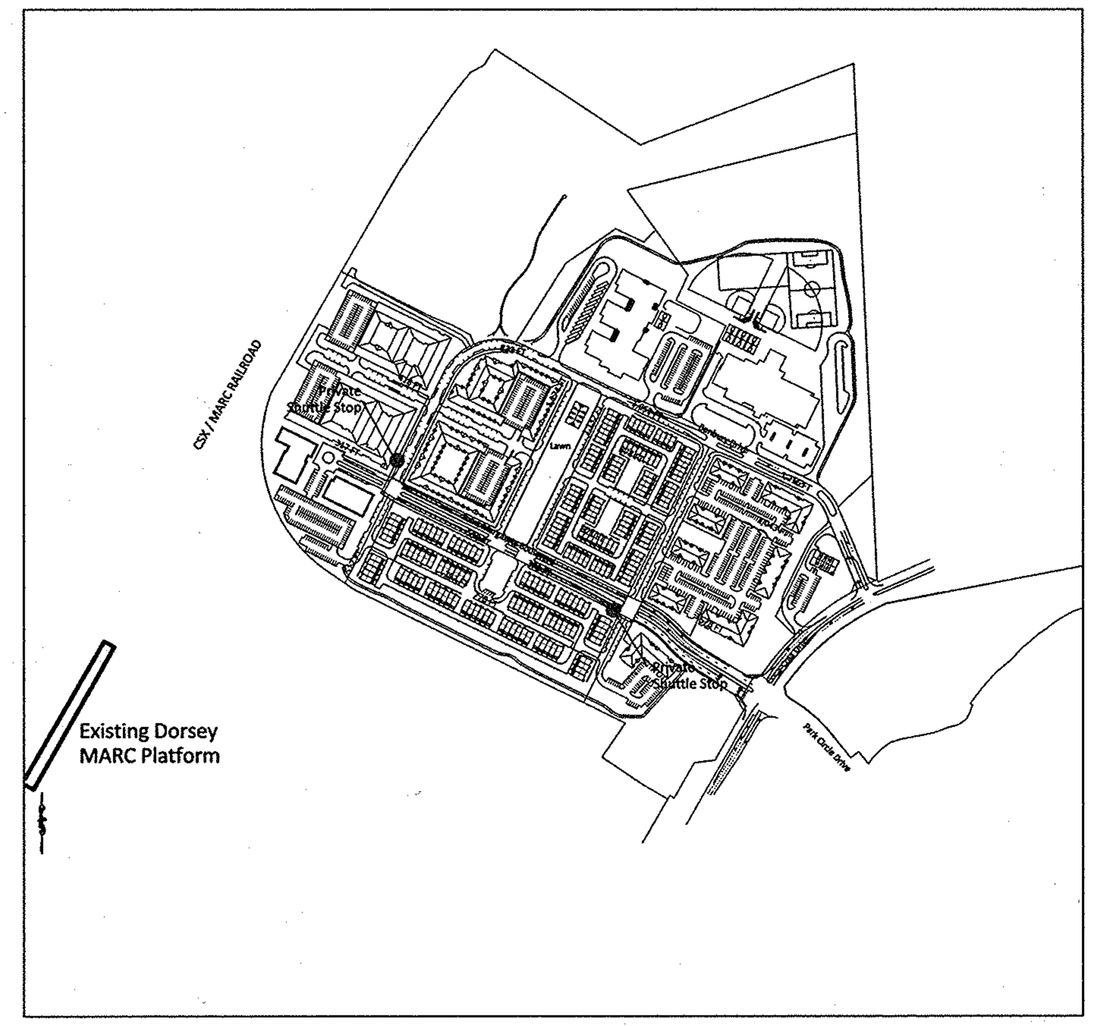

GREEN NEIGHBORHOOD CALCULATIONS & TABLES:

A-4b Priority Parking for Low-Emitting and Fuel Efficient Vehicles

	Complete Build Out	SDP
Total Number of Off-Street Parking Spaces:	3,459 Spaces	0 Spaces
Total Number of Proposed Preferred Parking Spaces:	173 Spaces	0 Spaces
Percent of Preferred Parking Spaces:	**5.0%**	

A-4c Compact Development

	Complete Build Out	SDP
Total Dwelling Units:	1,492 DU	101 DU
Total Residential Land Area:	41.0 AC	8.38 AC
Residential Density:	36.39 DU/AC	12.05 DU/AC

A-4d Walkable Streets

	Complete Build Out	SDP
Length of Buildings Frontage Oriented Towards the Public Space:	10,135 FT	2,186 FT
Total Length of Building Frontage:	11,426 FT	2,186 FT
% of Building Frontage Oriented Towards the Public Spaces:	88.7%	100.0%
Length of Building Frontage with Service or Garage Openings:	754 FT	0 FT
Length of Building Frontage Oriented Towards Public Spaces (including Service and Garage openings):	10,889 FT	2,186 FT
% of Building Frontage with Service or Garage Openings:	6.9%	0.0%

B-1a Redevelopment Site

Gross Site Area (Parcel Q):	111.1 Acres
Area of Existing Development (Acres):	28.4 Acres
Percent of Previously Developed:	**25.6%**

B-3a Transit Access & Amenities for Reduced Auto Dependence (Stop)

Building Number for Units within 1/4 Mile	Total Number of Qualifying Units	Percent of all Units
All Residential Buildings	1,492 DU	**100%**

C-1 Diversity of Uses

Residential Uses		Number of Units	Percent of Total Units
Dwelling Units		1,492 DU	**100%**

Nonresidential Uses		Area	SF per Dwelling Unit
Office		**154,000 SF**	**103 SF/DU**
Institutional:	Middle School[1]	95,747 SF	
	Middle School Outdoor Classroom Space[1]	2,500 SF	
	Elementary School	101,014 SF	
	Institutional Subtotal:	**199,261 SF**	**134 SF/DU**
Civic:	Recreational Playing Fields (School Site)[1]	236,139 SF	
	Northern Loop Shared- Use Path (8 FT wide)[2]	19,504 SF	
	Southern Loop Shared- Use Path (8 FT wide)[3]	9,240 SF	
	Civic Subtotal:	**264,883 SF**	**178 SF/DU**

Notes: [1] Revised per the approved Middle School SDP (SDP-12-075).
[2] 12,801 SF of Shared-Use Path will be constructed on Middle School site (SDP-12-075).
[3] 4,848 SF of Southern Loop Shared-Use Path will be constructed with this SDP.

C-3a Pedestrian System (Paths and Trails)

Northern Shared Use Path:	Width of Path: 8 FT *Length:* 2,438 FT (0.46 Miles)
Southerrn Shared Use Path:	Width of Path: 8 FT *Length:* 1,155 FT (0.22 Miles)
Mulch Nature Trail	Width of Path: 5 FT *Length:* 595 FT

Notes: [1] Approximately 606 linear feet of Southern Shared Use Path will be constructed with this SDP.

C-4 Street Connections

Street Name / ID (names per Sketch Plan names)	Street Length	Qualifying Street
Saint Margarets Boulevard	1,684 FT	Yes
Banbury Drive	2,589 FT	Yes
Road A	220 FT	No
Road B	514 FT	No
Road C (Banbury Drive, south of St. Margaret)	228 FT	No
Road D	740 FT	Yes
Road E (North and South)	1,450 FT	Yes
Road F	1,016 FT	Partial
Road G	120 FT	No
Road H	120 FT	No
Road J	465 FT	Yes
Road I	245 FT	No

Summary	
Total Street Length:	9,391 FT
Total Connected Street Length:	7,393 FT
Percent Connected Streets:	**78.7%**

C-5 Parking Does Not Exceed Required Minimum

	Complete Build Out	SDP
Number of Off-Street Parking Required:	3,647 spaces	202 spaces
Number of Spaces Provided:	4,592 spaces	470 spaces
Number of Shared Spaces (Public On-Street):	99 spaces	0 spaces
Number of Shared Spaces (Private On-Street):	170 spaces	66 spaces
Number of Spaces within a Common Parking Structure:	2,759 spaces	0 spaces
Number of Spaces within Private / Integral Garages:	470 spaces	202 spaces
Number of Spaces in Surface Parking Lots:	700 spaces	0 spaces
Number of Driveway Spaces:	394 spaces	202 spaces

Note: Complete Build Out Calculations are based on the submitted Sketch Plan (S-14-001),

C-6 Exceed Minimum Open Space

	Complete Build-Out	SDP
Net Acreage:	101.6 AC	8.4 AC
Required Amenity Space (TOD: 10% of Net Acreage):	10.2 AC	0.8 AC
Provided Amenity Space:	15.7 AC	1.6 AC
Percent Increase above the Minimum Required:	**53.9 %**	**100.0 %**

Note: [1] 6.6 Acres of amenity space contributed by the Middle School SDP (SDP-12-075).

C-7 Green Spaces and Amenity Areas

Parcel	Road Frontage	Amenity Type	Amenity Area
Open Space 1: The Nature Trail	160 FT	Nature Trail, Benches, Trail Signage, Educational Signage	31,266 SF (0.72 AC)
Open Space 2: Pool House and Pool	+/-138 FT (length along Private Road 'B')	Pool house, Pool, Fitness Room, and Warming Kitchen	11,282 SF (0.26 AC)

D-4 15% Slope Preservation

	Complete Development
Total Area of Slopes 15-24.9%:	504,072 SF
Area of Undisturbed Slopes 15-24.9%:	289,178 SF
Percent of Undisturbed Slopes:	**57.4 %**

Note: The area of undisturbed slopes is the summation of slopes impacted by the greatest extent of LODs within the GN for Site Boundary from Sketch Plan (S-14-001) and future environmental restoration work.

D-5 Minimize Grading and Site Disturbance

	Complete Build Out	SDP[1]
Gross Area of Site (GN Boundary)	111.1 AC	AC
Existing Impervious Cover	28.4 AC	- AC
Area of Site	82.7 AC	- AC
Area of Site to Remain Undisturbed	28.4 AC	- AC
Precent of Site to Remain Undistrubed:	**34.3 %**	**- %**
Ratio of Cut to Fill:	**1.13 Ratio**	**3.00 Ratio**
Retaining Wall:	**0 FT**	**0 FT**

Note: Complete Build Out Calculations are based on the aggregate greatest extent of LOD's from the submitted Sketch Plan (S-14-001), Approved Final Plan (F-12-026) and Approved Middle School SDP (SDP-12-075).

[1] SDP submission land area is located within the Complete Build Out LOD therefore there are no impacts to undisturbed areas.

D-6 Exceed Minimum Forest Conservation Requirements

Afforestation Obligation:	3.50 AC
Afforestation Provided in Excess of Obligation:	1.75 AC
Percentage of Provided in Excess of Obligation:	**50.00 %**

D-8b Exceed Minimum Stream Buffer Requirements

Total Stream Buffer Width:	150 FT
Width of Buffer Exceeding Requirements:	75 FT
Total Length of Stream Buffer:	1,984.2 FT
Length of Stream Buffer Outside Other Buffers:	1,352.3 FT
Percent of Stream Buffer Outside Other Buffers:	**68.2 %**

E-1 Landscaping

Plants Required

	Shade Trees	Evergreen	Shrubs	Total	Percent
Plants	174	0	0	**174**	
Plants	35	0	0	**35**	**20%**
of Plants	209	0	0	**209**	

Plants Provided

	Shade Trees	Shade Tree (Substitute)	Evergreen	Evergreen (Substitute)	Other Trees (Substitute)	Shrubs	Shrub (Sub.)	Total
Number of Plants Provided to Meet Landscape Manual	138	36		0	0	0	0	174
Number of Plants Provided to Meet GN Credits	25	--	0	0	0	0	0	**25**
Total Number of Plants Provided	163	36	0	0	0	0	0	**199**

Note: 1. Required shade tree substitute: (5 Evergreen /2)= 2.5 Shade Trees
2. Required Shade Tree Substitute: (67 ornamentals/2)= 33.5 Shade Trees
3. Excess Native Shade Trees: (3 OAR, 12 BNH, 10 LST)= 25 Excess Native Shade Trees
4. Native Shade Trees used to satisfy Required Shade Tree (18 UAV, 15 OAR)

APPROVED
HOWARD COUNTY DEPARTMENT OF PLANNING & ZONING
GREEN NEIGHBORHOOD PLAN FOR SITES

Beth Burgess — 7-22-14
CHIEF, RESOURCE CONSERVATION DIVISION — DATE

LEED ACCREDITED PROFESSIONAL CERTIFICATE
GREEN NEIGHBORHOOD PLAN FOR SITES

I hereby certify that this plan represnets a practical and workable plan for achieving the targeted credits and point total shown on the Green Neighborhood for Sites Compliance Checklist.

10007912 — 6/10/14
MATTHEW J FITZSIMMONS, LEED AP — LEED ACCREDITATION NUMBER — DATE

hord | coplan | macht
750 E. Pratt Street, Suite 1100 Baltimore MD 21202
410.837.7311 | www.hcm2.com
Hord Coplan Macht, Inc. 2014

FISHER, COLLINS & CARTER, INC.
CIVIL ENGINEERING CONSULTANTS & LAND SURVEYORS
CENTENNIAL SQUARE OFFICE PARK - 10272 BALTIMORE NATIONAL PIKE
ELLICOTT CITY, MARYLAND 21042
(410) 461 - 2855

NO.	REVISION	DATE

STATE OF MARYLAND — MICHAEL VITUCCI — No. 20748 — PROFESSIONAL ENGINEER — 6.10.14

Owner/Builder
U.S. Home Corporation,
D/B/A Lennar
c/o Joseph Fortino, Vice President
10211 Wincopin Circle
Suite 300
Columbia, Maryland 21044
Ph# 410-423-0460

Developer
Preston • Scheffenacker Properties
2330 West Joppa Road, Suite 160
Lutherville, Maryland 21093-4614
Ph# 410-296-3800

APPROVED: HOWARD COUNTY DEPARTMENT OF PLANNING AND ZONING

Chief, Division of Land Development — 7/23/14 Date
Chief, Development Engineering Division — 6-25-14 Date
Director - Department of Planning and Zoning — 7-23-14 Date

SUBDIVISION			SECTION/AREA		LOT Nos.
OXFORD SQUARE			----		3 THRU 103
PLAT NO.	BLOCK NO.	ZONE	TAX/ZONE	ELEC. DIST.	CENSUS TR.
22895-22898	---	TOD	38	1st.	601101

GREEN NEIGHBORHOOD PLAN

OXFORD SQUARE

"A Howard County Green Neighborhood"

Lots 3 Thru 103, Open Space Lots 104 Thru 116 And Parcels 'N' And 'O'

(Being A Resubdivision Of Parcels 'F' And 'J', As Shown On Plats Entitled "Revision Plat, Oxford Square, "Green Neighborhood", Parcels 'C', 'E', 'F', 'G', 'I', 'J', 'K' And 'M' And Recorded Among The Land Records Of Howard County, Maryland As Plat Nos. 22856 Thru 22859)
Zoned: TOD

Tax Map No.: 38 Grid No.: 20 Parcel No.: 761
First Election District Howard County, Maryland
Scale: As Shown
Date: June 6, 2014
Sheet 36 Of 38

SDP-13-068

I:\2009\09014\dwg\SDP (Lennar)\09014 SHEET 36 FOR MYLAR.dwg, sheet 36, 6/9/2014 11:01:34 AM, 1:1

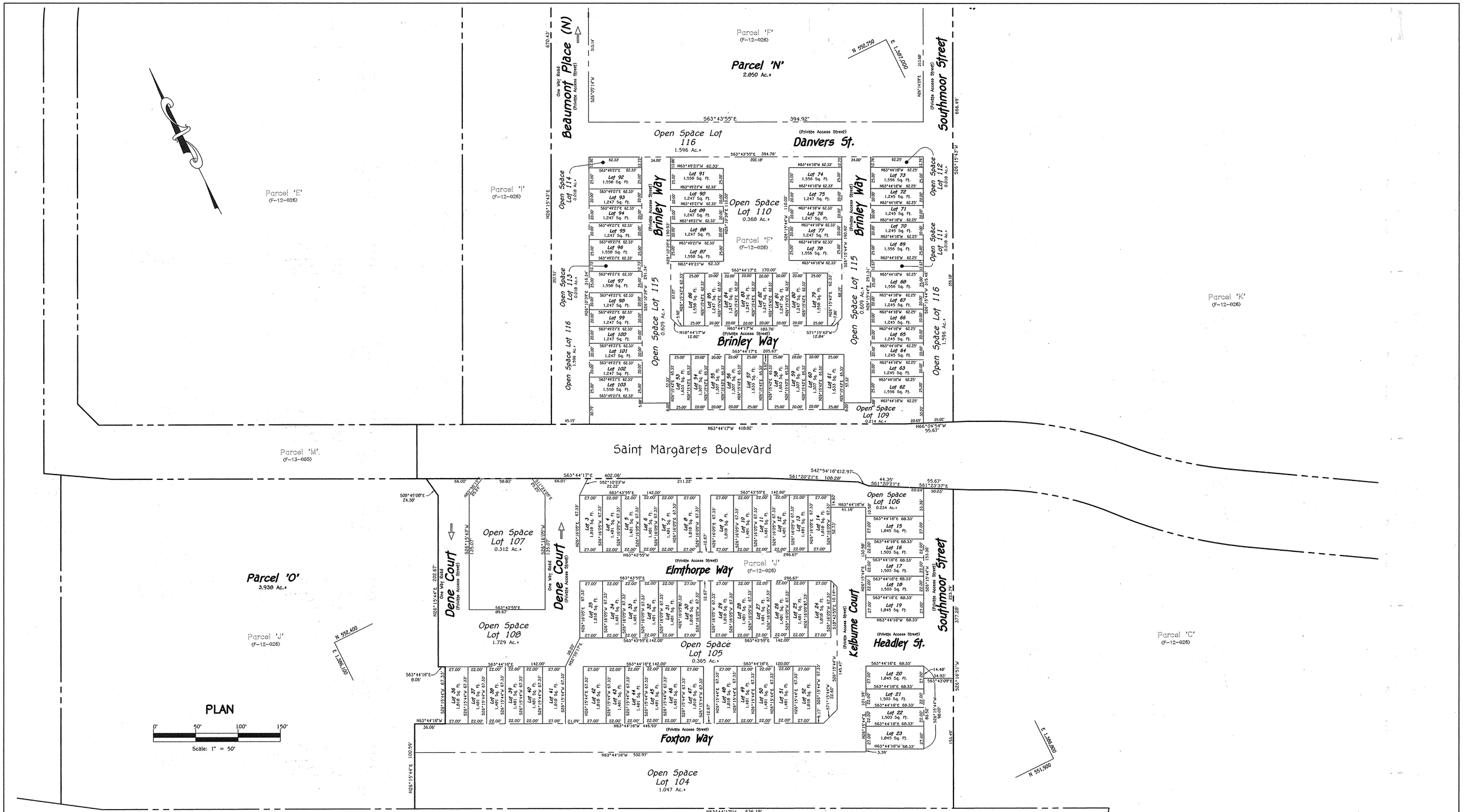

FISHER, COLLINS & CARTER, INC.
CIVIL ENGINEERING CONSULTANTS & LAND SURVEYORS
CENTENNIAL SQUARE OFFICE PARK - 10272 BALTIMORE NATIONAL PIKE
ELLICOTT CITY, MARYLAND 21042
(410) 461 - 2855

NO.	REVISION	DATE

STATE OF MARYLAND
MICHAEL V. CARTER
No. 20748
PROFESSIONAL ENGINEER
8-10-14

Owner/Builder
U.S. Home Corporation,
D/B/A Lennar
c/o Joseph Fortino, Vice President
10211 Wincopin Circle
Suite 300
Columbia, Maryland 21044
Ph# 410-423-0460

Developer
Preston • Scheffenacker Properties
2330 West Joppa Road, Suite 160
Lutherville, Maryland 21093-4614
Ph# 410-296-3800

APPROVED: HOWARD COUNTY DEPARTMENT OF PLANNING AND ZONING

Chief, Division of Land Development — Date 7/23/14

Chief, Development Engineering Division — Date 6-25-14

Director - Department of Planning and Zoning — Date 7-23-14

SUBDIVISION	SECTION/AREA	LOT Nos.
OXFORD SQUARE	----	3 THRU 103

PLAT NO.	BLOCK NO.	ZONE	TAX/ZONE	ELEC. DIST.	CENSUS TR.
22895 - 22898	---	TOD	38	1st.	601101

METES & BOUNDS PLAN

OXFORD SQUARE

"A Howard County Green Neighborhood"

Lots 3 Thru 103, Open Space Lots 104 Thru 116 And Parcels 'N' And 'O'

(Being A Resubdivision Of Parcels 'F' And 'J', As Shown On Plats Entitled "Revision Plat, Oxford Square, "Green Neighborhood", Parcels 'C', 'E', 'F', 'G', 'I', 'J', 'K' And 'M' And Recorded Among The Land Records Of Howard County, Maryland As Plat Nos. 22856 Thru 22859.)
Zoned: TOD

Tax Map No.: 38 Grid No.: 20 Parcel No.: 761
First Election District Howard County, Maryland
Scale: As Shown
Date: June 6, 2014
Sheet 37 Of 38

SDP-13-068

I:\2009\09014\dwg\SDP (Lennar)\09014 sheet 37 Metes & Bounds.dwg, SHEET 37, 6/9/2014 10:05:17 AM, 1:1

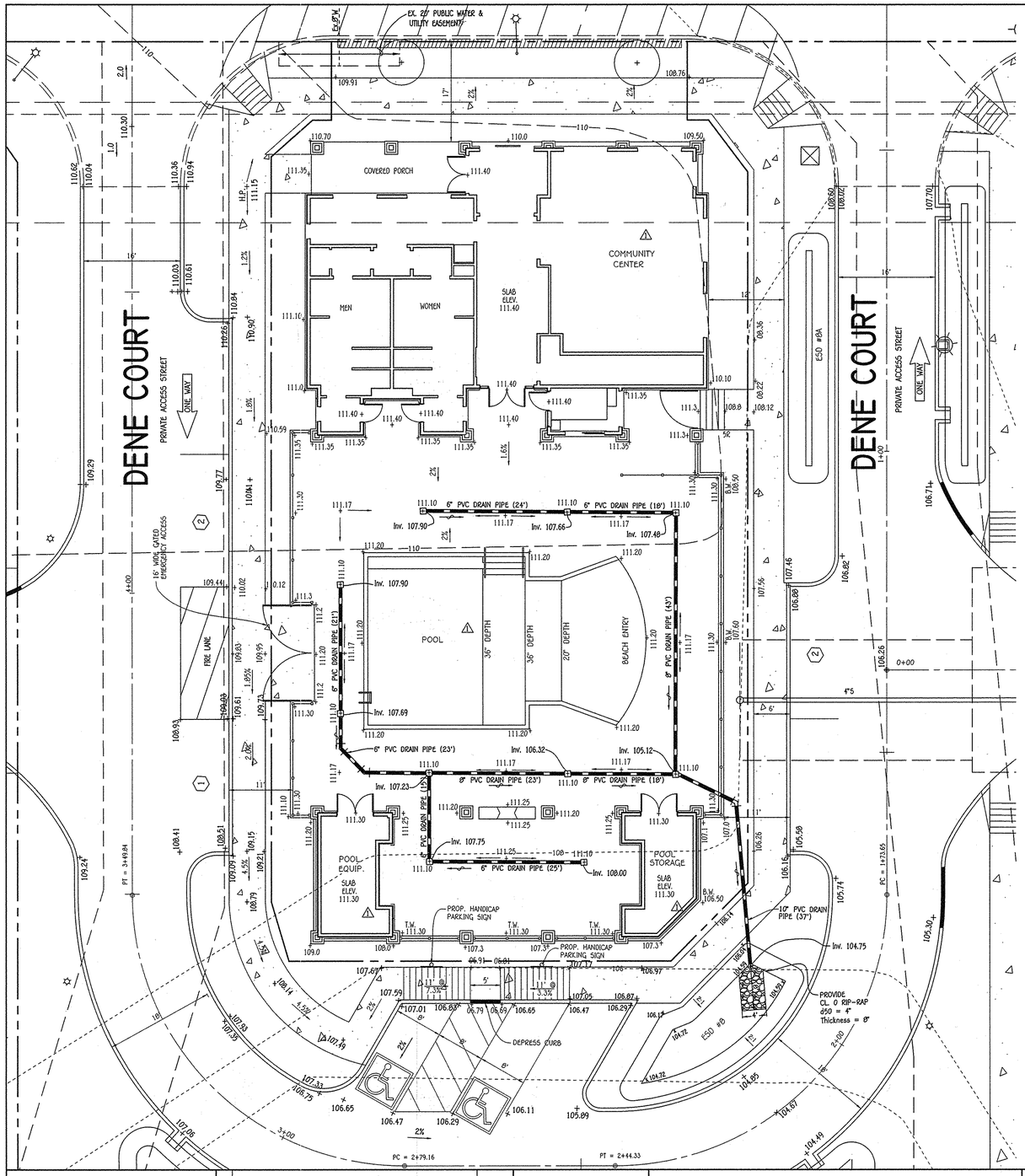

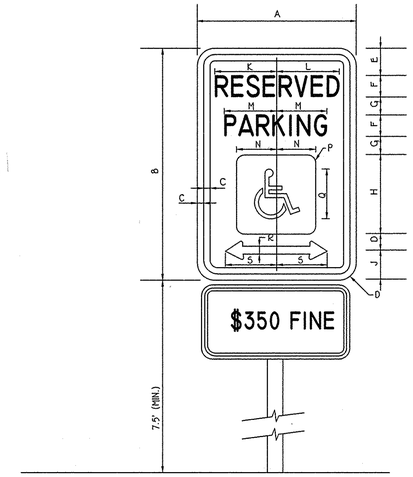

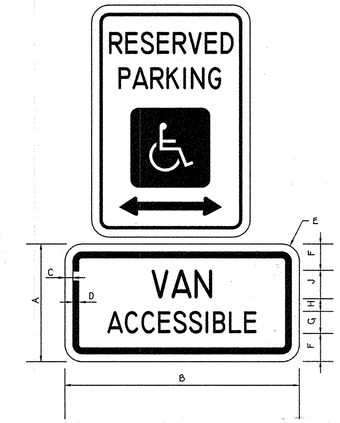

SIGN SIZE	DIMENSIONS (INCHES)								
	A	B	C	D	E	F	G	H	J
MIN.	6	12	3/8	3/8	1-1/2	1-1/2	10	1/2	1-1/20
STD.	9	18	3/8	3/8	1-1/2	2-1/4	1-1/20	1	20

SIGN SIZE	DIMENSIONS (INCHES)															
	A	B	C	D	E	F	G	H	J	K	L	M	N	P	Q	R	S
STD.	12	18	1/2	1-1/2	2	2 C	1	6	2-1/2	4-7/8	5	4-1/4	3	1/2	4	3/4	3-7/8

COLORS

DIRECTIONAL
LEGEND - WHITE
BACKGROUND - BLUE

REGULATORY
LEGEND - GREEN OR BLACK
BACKGROUND - WHITE

COMMUNITY CENTER
FRONT ELEVATION

NO SCALE

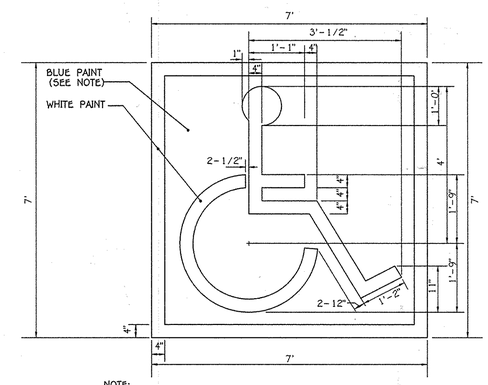

NOTE:
SYMBOL IS REQUIRED TO CONTRAST WITH BACKGROUND (WHITE ON BLUE: COLOR NO. 105090 IN FED. STANDARD 5952-DOUBLE COAT TYP.)

HANDICAP SPACE STENCIL LAYOUT

NO SCALE

0' 10' 15' 20'
Scale: 1" = 10'

NO.	REVISION	DATE
1	REVISE COMMUNITY CENTER AND POOL AREA	10/3/14

STATE OF MARYLAND
CHRISTOPHER J. MERVOSH
No. 15284
PROFESSIONAL ENGINEER

FISHER, COLLINS & CARTER, INC.
CIVIL ENGINEERING CONSULTANTS & LAND SURVEYORS
CENTENNIAL SQUARE OFFICE PARK - 10272 BALTIMORE NATIONAL PIKE
ELLICOTT CITY, MARYLAND 21042
(410) 461 - 2855

Owner/Builder
U.S. Home Corporation,
D/B/A Lennar
c/o Joseph Fortino, Vice President
10211 Wincopin Circle
Suite 300
Columbia, Maryland 21044
Ph# 410-423-0460

Developer
Preston • Scheffenäcker Properties
2330 West Joppa Road, Suite 160
Lutherville, Maryland 21093-4614
Ph# 410-296-3800

APPROVED: HOWARD COUNTY DEPARTMENT OF PLANNING AND ZONING

Chief, Division of Land Development — Date 2-3-15

Chief, Development Engineering Division — Date 2.3.15

Director - Department of Planning and Zoning — Date 2/3/15

SUBDIVISION	SECTION/AREA	LOT Nos.
OXFORD SQUARE	----	3 THRU 103

PLAT NO.	BLOCK NO.	ZONE	TAX/ZONE	ELEC. DIST.	CENSUS TR.
22895-22898	---	TOD	30	1st.	601101

REVISED
POOL AREA & HANDICAP PARKING PLAN

OXFORD SQUARE

"A Howard County Green Neighborhood"

Lots 3 Thru 103, Open Space Lots 104 Thru 116 And Parcels 'N' And 'O'

(Being A Resubdivision Of Parcels 'F' And 'J', As Shown On Plats Entitled "Revision Plat, Oxford Square, "Green Neighborhood", Parcels 'C', 'E', 'F', 'G', 'I', 'J', 'K' And 'M' And Recorded Among The Land Records Of Howard County, Maryland As Plat Nos. 22856 Thru 22859)
Zoned: TOD

Tax Map No.: 30 Grid No.: 761 Parcel No.: 20
First Election District Howard County, Maryland
Scale: As Shown
Date: June 6, 2014
Sheet 30 Of 30

SDP-13-068

I:\2009\09014\dwg\SDP (Lennar)\Pool Area Redline\09014 redline Sheet 38 mylar FEB 2 2015.dwg 2/3/2015 9:20:22 AM, 11