HOBBIT'S GLEN GOLF CLUBHOUSE

ADJOINERS CHART

	ADDRESS	OWNER	MAP	PARCEL	LOT	ZONING
1	11309 WILLOW BOTTOM DR	GELFMAN RICHARD D	0029	0211	63	NT
2	11305 WILLOW BOTTOM DR	STEURER STEPHEN J	0029	0211	62	NT
3	11301 WILLOW BOTTOM DR	MATHESON RODERICK III	0029	0211	61	NT
4	11454 HIGH HAY DR	SHAH PRAFUL B	0029	0211	39	NT
5	11225 WILLOW BOTTOM DR	PEARCE WILLIAM A & WF	0029	0211	38	NT
6	11212 GREEN DRAGON CT	SULLIVAN MARTHA	0029	0211	37	NT
7	11213 WILLOW BOTTOM DR	ANDREWS JENNIFER W	0029	0211	30	NT
8	11204 WILLOW BOTTOM DR	FENNELL FRANK F & WF	0029	0211	29	NT
9	11205 WILLOW BOTTOM DR	HUNTER GEORGE W III	0029	0211	28	NT
10	11125 IVY BUSH LANE	BUCHSBAUM LOUIS	0029	0211	27	NT
11	11135 WILLOW BOTTOM DR	FARBER LOUIS W	0029	0211	24	NT
12	11131 WILLOW BOTTOM DR	PALMIER CYRIL B JR & WF	0029	0211	23	NT
13	11127 WILLOW BOTTOM DR	SKERRETT WILLIAM R	0029	0211	22	NT
14	11123 WILLOW BOTTOM DR	ALLEN BIRCHARD B JR	0029	0211	21	NT
15	11119 WILLOW BOTTOM DR	STACY THOMAS W	0029	0211	20	NT
16	11115 WILLOW BOTTOM DR	LYNCH FRANCES M TRUSTEE	0029	0211	19	NT
17	11114 WILLOW BOTTOM DR	HEER CHRISTOPHER L	0029	0211	11	NT
18	11110 WILLOW BOTTOM DR	DAGRES KAREN D	0029	0211	10	NT
19	11106 WILLOW BOTTOM DR	HALLMAN JOHN RAY JR	0029	0211	9	NT
20	11102 WILLOW BOTTOM DR	GEE CHESTER A & WF	0029	0211	8	NT
21	11026 WILLOW BOTTOM DR	BAHAN ERICA J	0029	0211	7	NT
22	11022 WILLOW BOTTOM DR	MCDONOUGH JOHN F III	0029	0211	6	NT
23	11018 WILLOW BOTTOM DR	DUPREE DAVID	0029	0211	5	NT
24	11014 WILLOW BOTTOM DR	WEBER RICHARD H	0029	0211	4	NT
25	11010 WILLOW BOTTOM DR	DE VENECIA ELEANOR S TRUSTEE	0029	0211	3	NT
26	11006 WILLOW BOTTOM DR	EINAUDI FRANCO	0029	0211	2	NT
27	11002 WILLOW BOTTOM DR	SOERSEL PHILIP M	0029	0211	1	NT
28	5101 WELLINGHALL WAY	PHILLIPS WILLIAM J TRUSTEE	0029	0364	1	NT
29	5105 WELLINGHALL WAY	LOITER ROSLYN B	0029	0364	2	NT
30	5109 WELLINGHALL WAY	HUTCHERSON DONALD E	0029	0364	3	NT
31	5113 WELLINGHALL WAY	VAIDYA HEMAL K	0029	0364	4	NT
32	5117 WELLINGHALL WAY	RIVEST JEFFREY A	0029	0364	5	NT
33	5121 WELLINGHALL WAY	MADISON ANNE G	0029	0364	6	NT
34	5125 WELLINGHALL WAY	STANFIELD RONALD J	0029	0364	7	NT
35	5129 WELLINGHALL WAY	CHIGGONE FREDERICK G	0029	0364	8	NT
36	5124 WELLINGHALL WAY	MOON MICHAEL F	0029	0364	9	NT
37	5121 WATCHWOOD PATH	ROCA RICHARD	0029	0364	19	NT
38	5125 WATCHWOOD PATH	CHI CHANG W	0029	0364	20	NT
39	5129 WATCHWOOD PATH	ROYHANI BAHMAN A	0029	0364	21	NT
40	5133 WATCHWOOD PATH	THAN THUY T	0029	0364	22	NT
41	5137 WATCHWOOD PATH	MARIANELLI ROBERT SILVIO TRUSTEE	0029	0364	23	NT
42	5141 WATCHWOOD PATH	ADAMS KIMBERLY S	0029	0364	24	NT
43	5128 WATCHWOOD PATH	JACKSON LAWRENCE R	0029	0364	25	NT
44	5124 WATCHWOOD PATH	HURLEY JAMES M	0029	0364	26	NT
45	5120 WATCHWOOD PATH	ZIENTS STEVEN J	0029	0364	27	NT
46	5124 NORTHERN FENCES LANE	GERHARTZ STEVEN C	0029	0364	36	NT
47	5133 NORTHERN FENCES LANE	KIM JAE YOL	0029	0364	37	NT
48	5137 NORTHERN FENCES LANE	COUGHLAN WILLIAM D	0029	0364	38	NT
49	5138 NORTHERN FENCES LANE	HARLACHER DONALD S	0029	0364	39	NT
50	5134 NORTHERN FENCES LANE	BONSER JACK M	0029	0364	40	NT
51	5130 NORTHERN FENCES LANE	BURKS GREGORY L	0029	0364	41	NT
52	5126 NORTHERN FENCES LANE	JENNINGS BERNARD L	0029	0364	42	NT
53	5122 NORTHERN FENCES LANE	WANG CHRISTINE S	0029	0364	43	NT
54	5118 NORTHERN FENCES LANE	FASHOLA MAXWELL	0029	0364	44	NT
55	5114 NORTHERN FENCES LANE	HAMMANN FREDERICK B III	0029	0364	45	NT
56	5110 NORTHERN FENCES LANE	SPENCER PHILLIP M	0029	0364	46	NT
57	5106 NORTHERN FENCES LANE	KELLY JAMES P	0029	0364	47	NT
58	5100 WELLINGHALL WAY	CALLOWAY STEPHEN J	0029	0364	48	NT
59		COLUMBIA ASSOCIATION INC	0029	0361	143	NT
60	11208 RIDERMARK RON	MERGER PHILIP T	0029	0361	3	NT
61	11212 RIDERMARK RON	CAMPBELL BARBARA C	0029	0361	4	NT
62	11216 RIDERMARK RON	WILSON ROBERT W	0029	0361	5	NT
63	11220 RIDERMARK RON	CHIANG WEI-YU	0029	0361	6	NT
64	11224 RIDERMARK RON	NICKLAS BARBARA A	0029	0361	7	NT
65		COLUMBIA ASSOCIATION	0029	0361	141	NT
66	11205 SHADOWMERE MEWS	LARSON GERALD A	0029	0361	12	NT
67	11204 SHADOWMERE MEWS	BOHSE STEPHEN R	0029	0361	145	NT
68	11210 SHADOWMERE MEWS	RAMSDEN JOHN J	0029	0361	146	NT
69	11206 SHADOWMERE MEWS	HANKIN KENNETH L	0029	0361	15	NT
70	11248 RIDERMARK RON	LEAMAN BETH K	0029	0361	16	NT
71	11252 RIDERMARK RON	BISSONTZ DANIEL	0029	0361	17	NT
72	11256 RIDERMARK RON	SHEFF ARLENE H	0029	0361	18	NT
73	11260 RIDERMARK RON	DAY THOMAS BAKER	0029	0361	19	NT
74		HOWARD RESEARCH AND DEVELOPMENT	0029	0361	142	NT
75	11268 RIDERMARK RON	KIM THEODORE YOUNG	0029	0361	20	NT
76	11272 RIDERMARK RON	DAVIS JOSEPH M	0029	0361	21	NT
77	11276 RIDERMARK RON	HERDRICH WILLIAM J	0029	0361	22	NT
78	11280 RIDERMARK RON	MAGURIE CINDI S	0029	0361	23	NT
79	11284 RIDERMARK RON	GUIDA VINCENT M	0029	0361	24	NT
80	11288 RIDERMARK RON	VIOLETTE RICHARD G	0029	0361	25	NT
81	11292 RIDERMARK RON	BERGER CHARLES	0029	0361	26	NT
82	11296 RIDERMARK RON	FAST STEVEN B	0029	0361	27	NT
83	11300 RIDERMARK RON	DOUGHERTY JACK R	0029	0361	28	NT
84	11304 RIDERMARK RON	MANTENA RAJU L	0029	0361	29	NT
85	11308 RIDERMARK RON	TRELLIS ALAN R	0029	0361	30	NT

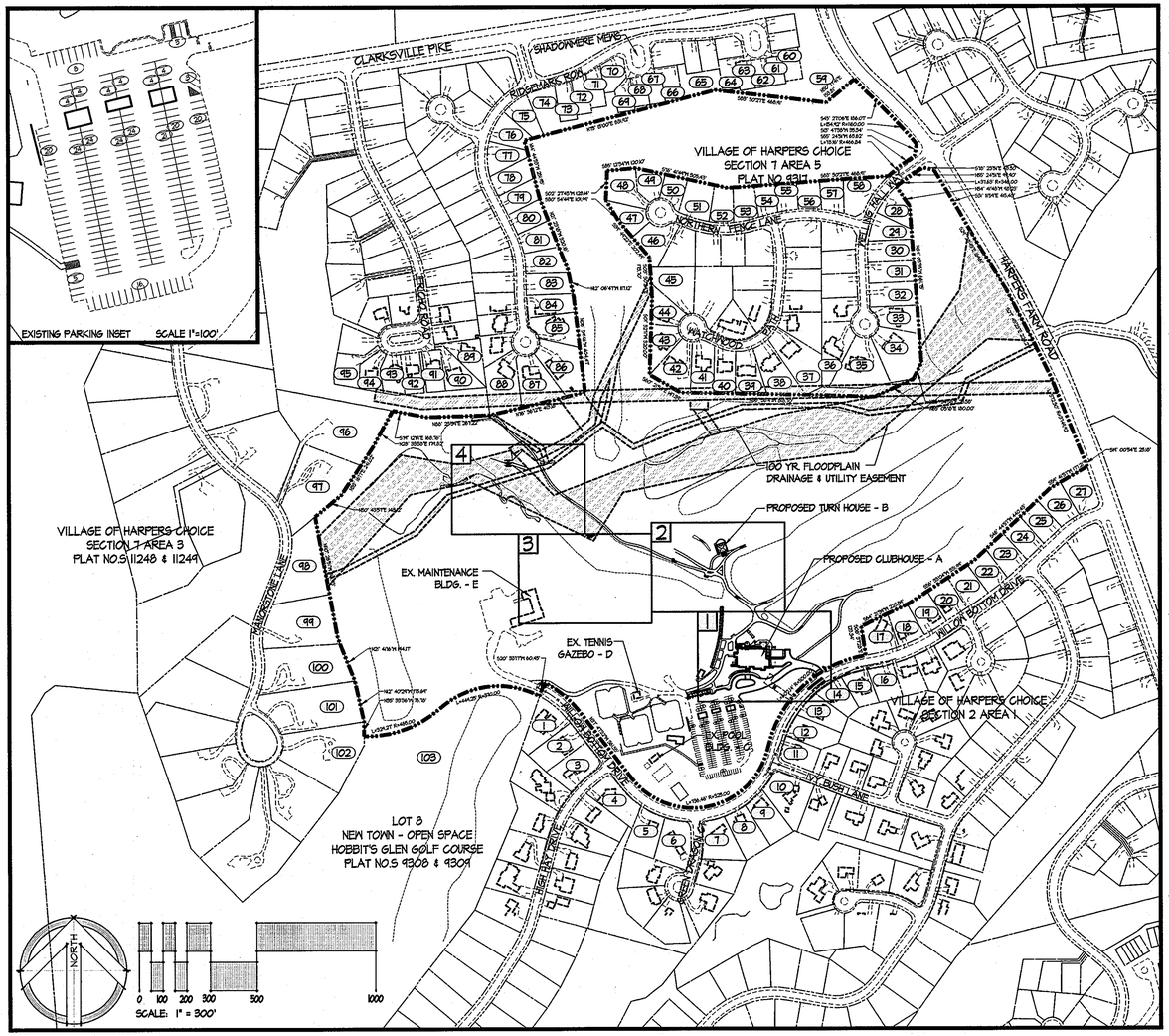

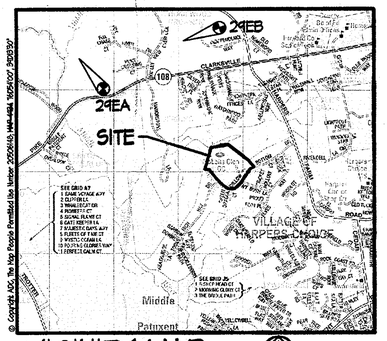

VICINITY MAP ADC MAP 26 GRID B7 — 1"=2000'

BENCHMARKS

ELEVATIONS WITHIN FIELD RUN SURVEY LIMITS ARE BASED ON THE FOLLOWING HOWARD COUNTY TRAVERSE POINTS.

#24EA	N.510,132.8414	E.1,338,186.4544	ELEVATION 436.66
#24EB	N.510,505.0594	E.1,340,430.1241	ELEVATION 442.39

SHEET INDEX

1 OF 38 CO.01- COVER SHEET
2 OF 38 CO.02- CIVIL GENERAL NOTES
3 OF 38 C1.01- SITE DEMOLITION PLAN
4 OF 38 C1.02- SITE DEMOLITION PLAN
5 OF 38 C1.11- SITE LAYOUT PLAN
6 OF 38 C1.12- SITE LAYOUT PLAN
7 OF 38 C1.21- DETAIL REFERENCE PLAN
8 OF 38 C1.22- DETAIL REFERENCE PLAN
9 OF 38 C1.23- DETAIL REFERENCE PLAN
10 OF 38 C1.24- DETAIL REFERENCE PLAN
11 OF 38 C2.01- SITE DETAILS
12 OF 38 C2.02- SITE DETAILS
13 OF 38 C2.03 - SITE DETAILS
14 OF 38 C3.01- STORM DRAIN PROFILES
15 OF 38 C3.11- SANITARY PROFILES
16 OF 38 C3.21- WATER PROFILES
17 OF 38 C3.31- ADC PLAN
18 OF 38 C4.01- GRADING PLAN
19 OF 38 C4.02- GRADING PLAN
20 OF 38 ESC1.01- EROSION & SEDIMENT CONTROL PLAN
21 OF 38 ESC1.02- EROSION & SEDIMENT CONTROL PLAN
22 OF 38 ESC1.03- EROSION & SEDIMENT CONTROL PLAN
23 OF 38 ESC1.04- EROSION & SEDIMENT CONTROL PLAN
24 OF 38 ESC2.01- EROSION & SEDIMENT CONTROL DETAILS
25 OF 38 ESC2.02- EROSION & SEDIMENT CONTROL DETAILS
26 OF 38 ESC2.03- EROSION & SEDIMENT CONTROL NOTES
27 OF 38 SWM1.01- STORMWATER MANAGEMENT PLAN
28 OF 38 SWM1.02- STORMWATER MANAGEMENT NOTES
29 OF 38 SWM2.01- SOIL BORINGS
30 OF 38 L1.01- PLANTING PLAN
31 OF 38 L1.02- PLANTING PLAN
32 OF 38 L2.01- PLANTING DETAILS & NOTES
33 OF 38 C2.04- SITE DETAILS
34 OF 38 C2.05 - SITE DETAILS
35 OF 38 C2.06 - SITE DETAILS
36 OF 38 SW1 - RETAINING WALL PLAN
37 OF 38 SW2 - RETAINING WALL DETAILS AND GENERAL NOTES
38 OF 38 SW3 - RETAINING WALL DETAILS AND GENERAL NOTES

SITE REQUIREMENT EXEMPTIONS

THE HOBBIT'S GLEN GOLF CLUBHOUSE PROJECT IS NOT SUBJECT TO FOREST CONSERVATION.

DEVELOPER'S AGREEMENTS

A DEVELOPER'S AGREEMENT IS REQUIRED FOR THE NEW STORMWATER MANAGEMENT ESD PRACTICES AND THE ADC FOR WATER CONNECTION.

TEMPORARY CART STORAGE

DURING THE CONSTRUCTION OF THE NEW CLUBHOUSE, THE ON SITE MAINTENANCE FACILITY SHALL BE TEMPORARILY USED TO STORE THE GOLF CARTS. REFER TO ECP-13-066 AND SDP-88-184 FOR ADDITIONAL INFORMATION.

	ADDRESS	OWNER	MAP	PARCEL	LOT	ZONING
86	11312 RIDERMARK ROW	JOHNSON MICHAEL C	0029	0361	91	NT
87	11316 RIDERMARK ROW	LOHRMANN STEPHEN K	0029	0361	32	NT
88	11321 RIDERMARK ROW	EGAN WILLIAM M	0029	0361	33	NT
89	5087 JERICHO ROAD	GORDON BENNY	0029	0055	16	R20
90	5093 JERICHO ROAD	COOK WILLIAM L TRUSTEE	0029	0055	17	R20
91	5108 JERICHO ROAD	FILDERMAN PETER S	0029	0055	18	R20
92	5104 JERICHO ROAD	GEEVARGHESE SALIN	0029	0055	20	R20
93	5100 JERICHO ROAD	WRIGHT WALTER J TR	0029	0055	21	R20
94	5096 JERICHO ROAD	SMITH GREGG E	0029	0055	22	R20
95	5092 JERICHO ROAD	DACRES CHESTER M	0029	0055	23	R20
96	11529 MANORSTONE LANE	WILHELM WAYNE	0029	0310	23	NT
97	11533 MANORSTONE LANE	MOORE JAMES T	0029	0310	22	NT
98		COLUMBIA ASSOCIATION INC	0029	0310	31	NT
99	11537 MANORSTONE LANE	ABRO KAMRAN	0029	0310	21	NT
100	11541 MANORSTONE LANE	RIFKIN ALAN	0029	0310	20	NT
101	11545 MANORSTONE LANE	LITTLEFIELD JEAN M	0029	0310	19	NT
102	11544 MANORSTONE LANE	SANDLER JON L	0029	0310	18	NT
103		COLUMBIA ASSOCIATION INC	0029	0135	6	FUD

SITE ANALYSIS DATA CHART

a. Total Project Area:	170.527 Ac+/-
b. Limit of Submission:	9.16 Ac+/-
c. Limit of Disturbed Area:	9.16 Ac+/-
d. Present Zoning Designation:	NT-05
e. Proposed Use for Site and Structures:	Golf Course
f. Floodplain and Buffers within Limit of Submission:	0 Ac+/-
g. Wetlands and Buffers within Limit of Submission:	0.06 Ac+/-
h. Forest within Limit of Submission:	0 Ac+/-
i. Steep Slopes 15% or greater within Limit of Submission:	0 Ac+/-
j. Proposed Impervious Area	1.03 Ac +/-
k. Erodible Soils within Limit of Submission:	0 Ac+/-
l. Area of Proposed Site Use:	2.15 Ac+/-
m. Area of Green Open Space:	170.527 Ac +/- (non-credited 1.623 Ac. +/-)
n. Employees during peak:	13

ASSOCIATED PROJECT REVIEW FILE NUMBERS

SDP-88-184, SDP-89-026, SDP-91-086, SDP-03-150, F-90-136, FDP PHASE 5-A-II (PLAT NO.30154-A-1184 TO 1193), SP-04-08, F-87-10, WP-03-140, WP-04-16. Plans Associated with Hobbit's Glen Golf Club.

PARKING DATA

A. Proposed Use: New Clubhouse to replace existing Clubhouse
B. Spaces Required Per SDP-91-86
- (18) hole Golf Course, driving range, clubhouse, tennis club and swim club — 220 spaces
- (1) short hole (3 spaces per short hole) — 3 spaces

The proposed restaurant and clubhouse facilities are slightly larger than the building being replaced, thus no additional spaces are required.
- Proposed Restaurant facilities = 4,885 s.f.
- Proposed Clubhouse = 5,445 s.f.

Total Required = 223 spaces
C. Existing Spaces = 233 spaces + 3 HC spaces = 236 spaces
D. Proposed Spaces = 225 spaces + 8 HC spaces = 233 total spaces provided
E. Handicapped Parking = 8 spaces (3.4%)

LOT COVERAGE CHART

A. Maximum Allowed: 3% by buildings or similar major structures
170.527 acres x 3% = 5.11 acres.
B. Provided:

Clubhouse Bldg Footprint	11,170 SF
Turn House	1,940 SF
Maintenance Bldg.	8,643 SF
Pool Building	400 SF
Tennis Gazebo	875 SF
Total	23,080 SF / 0.53 ac. or 0.31%

APPROVED: DEPARTMENT OF PLANNING & ZONING

CHIEF, DEVELOPMENT ENGINEERING DIVISION — DATE 1/17/14

CHIEF, DIVISION OF LAND DEVELOPMENT — DATE 1-28-14

DIRECTOR — DATE 1/29/14

APPROVED
PLANNING BOARD OF HOWARD COUNTY
DATE 09/12/13

APPROVED: FOR PUBLIC WATER AND PUBLIC SEWERAGE SYSTEMS

COUNTY HEALTH OFFICER, HOWARD COUNTY HEALTH DEPARTMENT — DATE 12/19/2013

ADDRESS CHART	
LOT/PARCEL	STREET ADDRESS
8/135	11130 WILLOW BOTTOM DRIVE, COLUMBIA, MD. 21044

PERMIT INFORMATION CHART						
SUBDIVISION NAME			SECTION/AREA		LOT/PARCEL NO.	
VILLAGE OF HARPERS CHOICE			2/1		8/135	
PLAT # OR L/F	GRID #	ZONING	TAX MAP NO.	ELECTION DISTRICT	CENSUS TRACT	
9308 & 9309	NA	NT-05	29	5TH	605502	
WATER CODE			SEWER CODE			
214 W&S			214 W&S			

COVER SHEET

HOBBIT'S GLEN GOLF CLUBHOUSE

PROPERTY OF COLUMBIA ASSOCIATION, INC.

REVISIONS

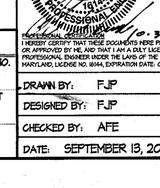

PROFESSIONAL CERTIFICATION. I HEREBY CERTIFY THAT THESE DOCUMENTS WERE PREPARED OR APPROVED BY ME, AND THAT I AM A DULY LICENSED PROFESSIONAL ENGINEER UNDER THE LAWS OF THE STATE OF MARYLAND, LICENSE NO. 19124, EXPIRATION DATE: 09/15/14. — 10-3-2013

SITE RESOURCES incorporated
Comprehensive Land Planning & Site Design Services
14315 Jarrettsville Pike • Phoenix, Maryland 21131
(410) 683-3328 • fax (410) 683-3329

DRAWN BY: FJP	CONTRACT NO: -
DESIGNED BY: FJP	SCALE: 1"=300
CHECKED BY: AFE	SRI PROJECT NO: 11059
DATE: SEPTEMBER 13, 2013	SHEET CO.01 1 OF 38

SDP-13-027

GENERAL NOTES (THESE NOTES PERTAIN TO ALL CIVIL DRAWINGS)

1. The subject property is zoned NT-05 per the 02/02/2004 Comprehensive Zoning Plan and the "Comp" Lite zoning amendments effective July 28, 2006.

2. No grading, removal of vegetative cover or trees, paving and new structures shall be permitted within the required wetlands, stream(s) or their buffers, forest conservation easement areas and 100 year floodplain.

3. This plan has been prepared in accordance with the provisions of Section 16.124 of the Howard County Code and the Landscape Manual.

4. Financial surety for the required landscaping has been posted as part of the DPW developer's agreement in the amount of $1,050 for 0 shade trees, 7 evergreen trees and 0 shrubs.

5. This project is exempt from the requirements of Section 16.1200 of the Howard County Code for Forest conservation because this lot was a part of a Planned Unit Development which had preliminary development approval and 50% or more of the land recorded and substantially developed before December 31, 1992.

6. This plan complies with the requirements of FDP-5-A-11.

7. Environmental Concept Plan ECP-12-064 for this project was approved on September 24, 2012.

8. This project is subject to WP-13-153 for a waiver of Sections 16.116(a)(2)(iv) requires: "Grading, removal of vegetative cover and tree, paving and new structures shall not be permitted within: (iv) 50 feet of a perennial streambank in nonresidential zoning districts." Approval of the waiver petition was provided on 06/18/2013.

9. The Planning Board approved this SDP on 09/12/2013

10. All construction shall be in accordance with the latest standards and specifications of Howard County plus MSHA standards and specifications if applicable.

11. The contractor shall notify the Department of Public Works/Bureau of Engineering/Construction Inspection Division at (410) 313-1880 at least five (5) working days prior to the start of work.

12. The contractor shall notify "Miss Utility" at 1-800-257-7777 at least 48 hours prior to any excavation work being done.

13. Traffic control devices, markings and signing shall be in accordance with the latest edition of the Manual of Uniform Traffic Control Devices (MUTCD). All street and regulatory signs shall be in place prior to the placement of any asphalt.

14. All plan dimensions are to face of curb unless otherwise noted.

15. The existing topography was obtained from field run survey with maximum one foot contour intervals prepared by Shandeberger & Lane dated 01/13/2012, 08/03/2012.

16. The coordinates shown hereon are based upon the Howard County Geodetic Control which is based upon the Maryland State Plane Coordinate System. Howard County Monument Nos. 24EA and 24EB were used for this project.

17. Water is public. (Contract number 214 W&S)

18. Sewer is public. (Contract number 214 W&S)

19. Stormwater Management will be provided by environmental site design (ESD) practices, including M-6 Micro-bioretention, M-7 Rain Garden, N-1 Disconnection of Rooftop Runoff, N-2 Disconnection of Non-Rooftop Runoff. The facilities will be owned by Columbia Association and privately maintained.

20. Existing utilities are based on County Record Drawings.

21. There is a 100 year floodplain easement on site. A sanitary connection to an existing sanitary manhole within the floodplain is proposed. The proposed sanitary line is to be trenched and constructed with the same day stabilization method. No fill activities will be conducted within the 100 year floodplain easement.

22. There are no wetlands within the area of disturbance for this project.

23. The traffic study for this project was prepared by "The Traffic Group", dated October 11, 2012. A full traffic analysis is not needed as the proposed clubhouse is only 144 sf. ft. larger than the existing facility. The proposed restaurant portion of the clubhouse will result in a decrease in the number of seats from the existing restaurant, and outdoor seating will also be decreased. As a result, the new clubhouse is not projected to generate any more traffic than the existing clubhouse. Therefore the proposed development satisfies Howard county Adequate Road Facilities Test Evaluation requirements.

24. ABBREVIATIONS:

PROP	Proposed*	DIP	Ductile Iron Pipe
EX	Existing	PVC	Polyvinyl Chloride Pipe
BIT	Bituminous	HDPE	High Density Polyethylene Pipe
CONC	Concrete	CMP	Corrugated Metal Pipe
MH	Manhole	RCP	Reinforced Concrete Pipe
SD	Storm Drain	C&G	Concrete Curb & Gutter
I	Inlet	INV	Invert Elevation
SAN	Sanitary Sewer	FF	Finished Floor Elevation
FH	Fire Hydrant	BF	Basement Floor Elevation
TC	Top of Curb	BC	Bottom of Curb
TS	Top of Step	BS	Bottom of Step
TW	Top of Wall	BW	Bottom of Wall
PC	Point of Curvature	PS	Parking Space
PT	Point of Tangency	HC	Handicapped Parking Space
PI	Point of Intersection	TYP	Typical

*Proposed means work included in the base contract unless accompanied by the phrases "N.I.C." or "By Others."

25. EXISTING INFORMATION AND CONDITIONS NOT GUARANTEED; VERIFY AND TEST PIT EXISTING UTILITIES: Existing site and utility information shown on these plans has been taken from a combination of the owner's historical records, public information, County GIS, field measurements, and field surveys. Many of these sources contain incomplete and / or conflicting information. Therefore the correctness and completeness of the information showing existing conditions is not guaranteed. Before beginning construction, the Contractor shall perform the following tasks:

(a) Notify Miss Utility at 1-800-257-7777, and make sure they complete the marking of utilities within the limits of construction at least 48 hours prior to installing sediment control measures. Maintain all markings throughout construction. The Contractor shall also include in his bid price marking of on-site utilities that might not be marked by MISS Utility; the contractor shall either mark these on-site utilities himself or by subcontracting with a private on-site utility location company.

(b) Verify the general accuracy of the existing conditions shown on the site drawings by visual inspection of the surface of the site and all existing structures, paving and utility appurtenances visible thereon;

(c) With regard to the structures & appurtenances observed as required per item (b) above, determine the type, size, location and elevation of all those existing utilities (including but not limited to all storm drains, sanitary lines, water lines, gas lines, steam lines, electric lines, telephone lines, and communication ducts, and all manholes, inlets, clean-outs, valves, handholes, etc. related thereto) within the limits of construction in order to: (i) avoid damaging or disrupting service, and (ii) to coordinate and facilitate construction of proposed utilities and other improvements. In addition to the Contractor's visual observation and the utility marking (as required above), the contractor shall schedule and complete Test Pitting of all existing utilities (for the purposes set forth above) and shall do so in a timely manner in order to allow time for analysis and redesign by Site Resources and/or other consultants, without delaying the project schedule.

(d) Immediately report to Site Resources, Inc. the results of steps (a), (b) and (c) which might indicate any discrepancy between actual conditions and those shown on the plan, and any potential conflicts between proposed improvements and existing condition.

Test pitting defined: For the purposes of this contract, excavation of utility trenches does not constitute test pitting. Test pitting is a separate operation completed at least seven days before utility installation is scheduled to begin. Test pitting means excavation to expose existing utilities in two situations: (i) where proposed improvements cross existing utilities (pipes, lines, structures, appurtenances) and; (ii) where proposed utilities are designed to connect to existing utilities. Test pitting includes recording the type, size, location and elevation of the exposed utilities, and faxing and mailing the record to Site Resources, Inc. and the Owner. The record may be a legible hand-written field sketch.

26. EXISTING AND PROPOSED GAS LINES, ELECTRIC LINES, TELEPHONE LINES, COMMUNICATION LINES AND OTHER UTILITIES: Existing and proposed gas lines, steam lines, electric lines, telephone lines, communication ducts and other such utilities are NOT part of the scope of work shown on these site plans and Site Resources, Inc. has no responsibility for design, specification or installation of said utilities. To the extent that some or all of such utilities (whether existing or proposed) appear on the site drawings, the correctness and completeness of the information showing these utilities is not guaranteed.

27. COORDINATION BETWEEN PROPOSED UTILITIES: The contractor shall adjust the location and elevation of proposed gas lines, electric lines, telephone lines, communication lines, and water lines as needed to construct the proposed storm drains and sanitary sewer with minimum clearances. Coordinate with the Mechanical/Electrical Drawings and Specifications and appropriate utility company.

28. RELOCATION OF EXISTING UTILITIES: In the event that the location or elevation of existing minor underground electric lines and phone lines conflict with proposed storm drains, sanitary sewer lines or water lines, the contractor shall, with the permission of the owner and without an extra cost to the project, adjust these lines to permit installation of the new utilities. In the event that any other utility is relocated to accommodate a new utility, said relocation shall be an extra cost to the project, subject to the terms and conditions of the construction contract.

29. UTILITIES TO REMAIN OPERATIONAL; ADJUSTMENT FOR FINAL GRADE: All existing utilities shall be retained unless marked otherwise. Existing utilities not to be removed are to remain operational at all times. Existing utilities to be replaced or relocated shall remain in service until replaced or relocated utilities are operational. All existing utility appurtenances shall be adjusted for final grade.

30. UTILITY TRENCHING, BACKFILL AND COMPACTION: All trenching for sanitary sewer, storm drains and water mains shall be done in accordance with the latest Howard County Standard Specifications and Details for Construction.

31. UTILITY CERTIFICATION: The Contractor shall have a professional engineer registered in the State of Maryland certify, on a form provided by the Owner, that all proposed storm drains, sanitary sewers and water lines shown hereon were installed in accordance with these plans and Howard County specifications. If said Certification is not possible because the utilities were not installed in accordance with these plans and Howard County specifications, then the Owner has the option of waiving, in writing, this Certification, in whole or part. If the Owner does not elect to waive the Certification, the Contractor shall adjust and, if necessary, reconstruct the utilities to bring them in conformance with these plans and Howard County specifications.

32. UTILITY CAPPING AND PROTECTION: All building connections shall be capped at upstream end, 5 feet from proposed buildings, caissons or column footings or as noted, and shall be protected by providing three stakes (the height being a minimum of 18 inches above proposed grade) with high visibility flagging around the capped end of the utility.

33. PROPOSED WATER LINES: Proposed water lines shall have a minimum of 4'-0" cover from finished grade, 1'-0" clearance from storm drains and 1'-0" clearance from sanitary sewers, unless otherwise noted on the plans. Turn House to Maintenance Facility water line shall be Type K copper tubing meeting the material, chemical, and mechanical requirements of ASTM B-88. Clubhouse connection to water main in Willow Bottom Drive, shall be DIP as noted on ADO Plan G3.31.

34. PROPOSED STORM DRAINS: All storm drains 12 inches and larger shall be HDPE unless indicated otherwise on these construction drawings.

35. PROPOSED SANITARY SEWERS: All pipe and fittings for sanitary house connection shall be polyvinyl chloride (PVC) meeting material requirements of ASTM D3034, (SDR-35). Joints shall be elastomeric gasketed.

36. STANDARD CONSTRUCTION SPECIFICATIONS AND DETAILS: Unless otherwise noted or detailed on the drawings, all construction shall follow the latest Howard County Standard Specifications and Details for Construction.

37. SEDIMENT CONTROL: The contractor shall coordinate installation of all utilities to avoid construction problems/conflicts with sediment and erosion control measures. Any disturbance to sediment and erosion control measures shall be repaired at the end of each working day. Contractor shall, without extra cost to the project, repair and maintain existing sediment control devices until all areas within limits of construction are stabilized. With the approval of sediment control inspector, all sediment control devices shall be removed and areas restored and stabilized. All sediment control measures referred to on these plans shall be in accordance with the publication entitled 2011 Maryland Standards and Specifications For Soil Erosion and Sediment Control.

38. DISTURBED AREAS: All areas disturbed by the contractor during or prior to construction, not designated to receive paving, mulch or solid sod shall be fine graded, seeded and mulched in accordance with the permanent seeding notes and specifications shown on the Sediment Control drawings.

39. REPAIR AND REPLACEMENT OF DAMAGE CAUSED BY CONTRACTOR AND SUBCONTRACTORS: In the event that the contractor or any of his subcontractors damage any existing curb, gutter, paving, utilities, sidewalks, trees, shrubs, lawns, or any other existing conditions (not indicated to be demolished), or any newly installed proposed improvement, the general contractor shall repair and replace said damage to owner's satisfaction, at general contractor's sole cost and expense.

40. BENCHMARKS: See Cover Sheet.

41. ELEVATION AND LABELING: All spot grade elevations in roadways and parking lots are for bottom of curb unless otherwise noted. Elevations on hard surfaces (roads, walks, walls, steps, manholes, inlets, etc.) are labeled to the hundredth of a foot (e.g. 245.45). Elevations on proposed lawn and planting areas are labeled to the tenth of a foot (e.g. 245.5).

42. DIMENSIONS: Unless otherwise noted on the drawing, all dimensions shown on the site drawings follow these conventions:

(a) dimensions to a building or retaining wall are to the face of the wall;
(b) dimensions to a curb are to the face (not the back) of the curb;
(c) dimensions to a fence are to the centerline of the fence;
(d) dimensions for sidewalks abutting a curb are from the face of curb to the back edge of the walk;
(e) dimensions for other sidewalks or open paving sections are measured to the edge of paving;
(f) dimensions to a manhole, inlet, cleanout, pipe bend, valve, fire hydrant or other utility appurtenance are to the center of the structure;
(g) dimensions for steps are to the outer edge of the staircase and the nose of the top or bottom step;
(h) layout of sediment control measures and plant material shall be scaled.

43. GRADING: It is the intent of the grading design to achieve positive drainage and aesthetically pleasing vertical curves and lines. Transitions between existing and proposed pavement shall be smooth and joints flush. Unless otherwise expressly noted on the plan (by arrow with the percent slope labeled), all proposed bituminous paving shall have a slope of at least 2 percent and all concrete shall have a minimum slope of 1.5 percent in the direction indicated by proposed contours. Unpaved areas shall have a minimum slope of 2 percent and a maximum slope of 2:1. Final grading shall achieve positive surface drainage away from buildings and to adequate drainage facilities (swales, gutters, inlets, etc.).

44. COMPACTION: All earth fill material under slabs, footings and paved areas shall be placed in 8" loose layers and compacted to 95% of maximum dry density at optimum moisture content as determined by ASTM D 698. All other fill shall be compacted to 90%.

45. HEADINGS: The headings contained in these General Notes are for the convenience of the reader only and shall not limit the responsibility of the Contractor. It shall be distinctly understood that failure to mention specifically any work which would normally be required to complete the project shall not relieve the Contractor from completing such work.

46. NATIONAL POLLUTANT DISCHARGE ELIMINATION SYSTEM (NPDES): It is the contractor's responsibility to implement all the provisions and requirements of the NPDES permit. The permit has been applied for by the Owner, but no land disturbance is permitted until the NPDES permit has been issued.

47. All sidewalks, paths and other paved areas shall be finish graded with a maximum longitudinal slope of 5% (1:20) and a maximum cross slope of 2% (1:50) unless otherwise noted.

48. It is the contractor's responsibility to ensure that all site elements are constructed in accordance with the ADA 2010 Standards for Accessible Design or most current.

49. Turf seeding per sheet L2.01 shall supercede permanent seeding notes shown on sheet ESC2.03.

50. Refer to architectural and structural drawings for details of all retaining walls connecting to the building and/or over 3' in height.

51. Street light placement and the type of fixture and pole shall be in accordance with the Howard County Design Manual, Volume III (1993) and as modified by "Guidelines for Street Lights in Residential Developments (June 1993)." A minimum spacing of 20' shall be maintained between any proposed streetlight and any tree.

52. All sign posts used for traffic control signs installed in the County right-of-way shall be mounted on a 2" galvanized steel, perforated, square tube post (14 gauge) inserted into a 2-1/2" galvanized steel, perforated, square tube sleeve (12 gauge) - 3' long. A galvanized steel pole cap shall be mounted on top of each post.

53. This plan has been prepared in accordance with Section 16.124 of the Regulations. All work on site must conform to Section 16.124 of the Howard County Code. All soils excavated from the existing hole 1 Black Tee shall be used in the reconstruction of the Black Tee as noted on C1.01, C1.11 and ESC2.03 or in manner in which the soils will not come into contact with patrons or residents.

54. Health Department signature of this site development plan does not ensure building approval of the proposed food service facility. Permit plans for the food service facility will require review and approval by the Health Department.

55. A Knox Box 3200 Series shall be installed on the column of the front entrance vestibule.

LIGHTING FIXTURE SCHEDULE

SYMBOL	TYPE	DESCRIPTION	LAMPS			MAX HT.	MOUNTING	MANU. / MODEL NO. (OR APPROVED EQUAL)
			VOLTS	NO.	TYPE			
⊙=	STREET	RELOCATION OF EXISTING STREET LIGHTS ON SITE.						

EXISTING VEGETATIVE COMMUNITIES

The site is largely covered by maintained turf grass for golf activities and successional forest approximately 20-40 years of age. The condition of most of this stand is fair with some invasive species. There are a few small stands containing some mature, larger trees.

EXISTING FLOODPLAIN EASEMENT

The site includes a 100 year floodplain easement as recorded in Howard County Plat No. 6930 with a flood study performed as a part of F-87-10. For additional information on the floodplain easement or flood study refer to Plat No. 6930 and F87-10. No fill activities are proposed within the 100 year floodplain.

BUILDING INFORMATION TABLE

EXISTING STRUCTURE	TYPE	MEAN HEIGHT	STREET ADDRESS	AGE
GOLF CLUB HOUSE & RESTAURANT	PERMANENT BUILDING	25' +/-	11130 WILLOW BOTTOM	30+ YRS
STARTER SHACK	PERMANENT BUILDING	12' +/-	11130 WILLOW BOTTOM	10+ YRS
PROPOSED STRUCTURE	**TYPE**	**MEAN HEIGHT**	**STREET ADDRESS**	**AGE**
GOLF CLUB HOUSE & RESTAURANT - A	PERMANENT BUILDING	25' +/-	11130 WILLOW BOTTOM	-
TURN HOUSE - B	PERMANENT BUILDING	15' +/-	11130 WILLOW BOTTOM	-

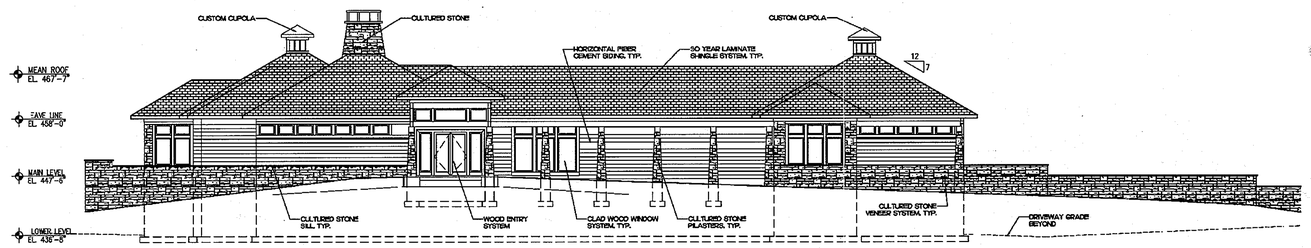

1 CLUBHOUSE (NORTH ELEVATION)

NOT TO SCALE

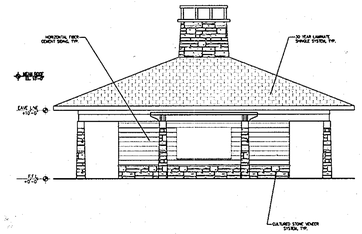

2 TURN HOUSE (WEST ELEVATION)

NOT TO SCALE

APPROVED: DEPARTMENT OF PLANNING & ZONING	
CHIEF, DEVELOPMENT ENGINEERING DIVISION	DATE 1-17-14
CHIEF, DIVISION OF LAND DEVELOPMENT	DATE 1-28-14
DIRECTOR	DATE 1/29/14

APPROVED
PLANNING BOARD OF HOWARD COUNTY
DATE 09/12/13

APPROVED: FOR PUBLIC WATER AND PUBLIC SEWERAGE SYSTEMS

BWilson for Maura Rossman 12/19/2013
COUNTY HEALTH OFFICER, HOWARD COUNTY HEALTH DEPARTMENT — DATE

ADDRESS CHART	
LOT/PARCEL	STREET ADDRESS
8/135	11130 WILLOW BOTTOM DRIVE, COLUMBIA, MD. 21044

PERMIT INFORMATION CHART						
SUBDIVISION NAME: VILLAGE OF HARPERS CHOICE			SECTION/AREA: 2/1			LOT/PARCEL NO.: 8/135
FLAT # OR L/F: 9308 & 9309	GRID #: NA	ZONING: NT-05	TAX MAP NO.: 29	ELECTION DISTRICT: 5TH	CENSUS TRACT: 605502	
WATER CODE: 214 W&S			SEWER CODE: 214 W&S			

CIVIL GENERAL NOTES

HOBBIT'S GLEN GOLF CLUBHOUSE

PROPERTY OF COLUMBIA ASSOCIATION, INC.

REVISIONS

STATE OF MARYLAND — ALBERT F. EDWARDS — 16414 — REGISTERED PROFESSIONAL ENGINEER

PROFESSIONAL CERTIFICATION. I HEREBY CERTIFY THAT THESE DOCUMENTS WERE PREPARED OR APPROVED BY ME, AND THAT I AM A DULY LICENSED PROFESSIONAL ENGINEER UNDER THE LAWS OF THE STATE OF MARYLAND, LICENSE NO. 16414, EXPIRATION DATE: 09/19/14. 10.3.2013

SITE RESOURCES incorporated
Comprehensive Land Planning & Site Design Services
14315 Jarrettsville Pike • Phoenix, Maryland 21131
(410) 683-3388 • fax (410) 683-3389

DRAWN BY: AM	CONTRACT NO.: -
DESIGNED BY: AM	SCALE: AS SHOWN
CHECKED BY: AFE	SRI PROJECT NO: 11059
DATE: SEPTEMBER 13, 2013	SHEET C0.02 2 OF 38

SDP-13-027

MATCHLINE - SEE SHEET C1.02

MATCHLINE - SEE SHEET C1.02

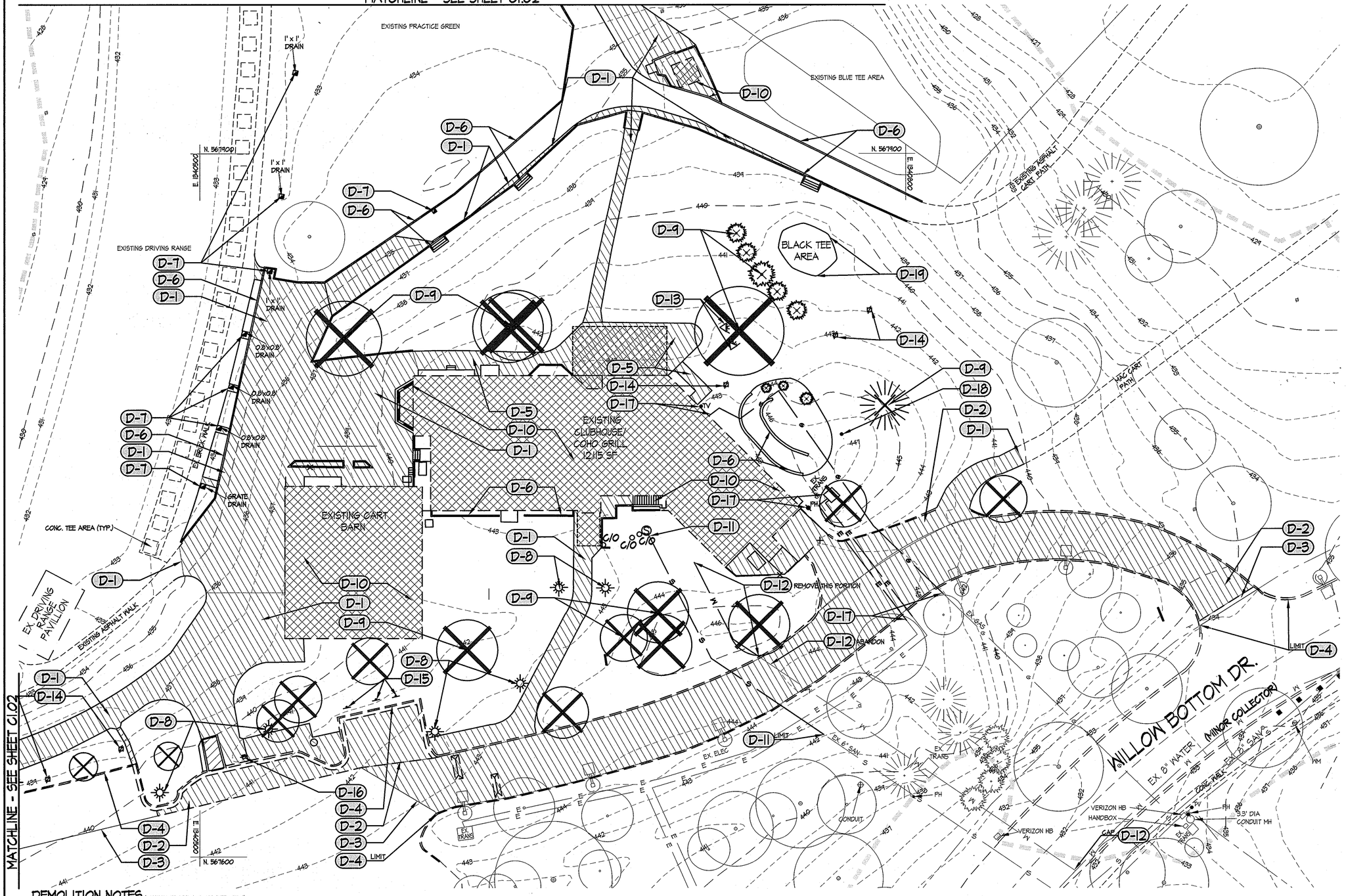

LEGEND

- PROPERTY LINE
- EXISTING CONTOURS
- EXISTING TREES TO REMAIN
- EXISTING TREES TO BE REMOVED
- EXISTING SHRUBS TO REMAIN
- EXISTING SHRUBS TO BE REMOVED
- EXISTING WALK TO REMAIN
- EXISTING ROAD TO REMAIN
- EXISTING CURB TO REMAIN
- EXISTING CURB TO BE REMOVED
- EXISTING PAVING TO BE REMOVED
- EX. 15" SD — EXISTING STORM DRAIN TO REMAIN
- EX. 15" SD — EXISTING STORM DRAIN TO BE REMOVED
- EX. 6" WATER — EXISTING WATER TO REMAIN
- EX. 6" WATER — EXISTING WATER TO BE REMOVED
- EX. 8" SAN — EXISTING SANITARY SEWER TO REMAIN
- EX. 8" SAN — EXISTING SANITARY SEWER TO BE REMOVED
- EX. 2" GAS — EXISTING GAS TO REMAIN
- EX. 2" GAS — EXISTING GAS TO BE REMOVED
- EX. TELE — EXISTING TELEPHONE TO REMAIN
- EX. TELE — EXISTING TELEPHONE TO BE REMOVED
- EX. ELEC — EXISTING ELECTRIC TO REMAIN
- EX. ELEC — EXISTING ELECTRIC TO BE REMOVED
- EXISTING LIGHTING TO REMAIN
- EXISTING LIGHTING TO BE REMOVED
- EXISTING FENCE TO BE REMOVED
- EXISTING BUILDING TO REMAIN
- EXISTING BUILDING TO BE DEMOLISHED & REMOVED
- FIELD RUN SURVEY LIMITS

NORTH

SCALE: 1" = 20'

SITE DEMOLITION PLAN

HOBBIT'S GLEN GOLF CLUBHOUSE

PROPERTY OF COLUMBIA ASSOCIATION, INC.

REVISIONS

DEMOLITION NOTES (THESE NOTES APPLY TO THIS SHEET ONLY)

D-1 SAWCUT & REMOVE EXISTING WALKWAY INCLUDING BASE MATERIAL.

D-2 SAWCUT & REMOVE EXISTING ROAD INCLUDING BASE MATERIAL.

D-3 SAWCUT & REMOVE EXISTING ROAD TO BASE MATERIAL. KEEP BASE INTACT FOR FUTURE PAVING INSTALLATION.

D-4 REMOVE EXISTING CURB AT LIMITS OF REMOVAL & PROTECT REMAINING CURB FROM DAMAGE.

D-5 REMOVE EXISTING PATIO INCLUDING BASE MATERIAL.

D-6 DEMOLISH & REMOVE RETAINING WALL / TIMBER CURB.

D-7 REMOVE EXISTING INLET AND ASSOCIATED STORM DRAIN. CAREFULLY REMOVE STORM DRAIN PIPE, ENSURING NOT TO DAMAGE ANY CROSSING UTILITIES. CAP AT NEAREST STORM MAIN SHOWN TO REMAIN.

D-8 CAREFULLY REMOVE LIGHT POLE. SALVAGE, PROTECT & STORE AT LOCATION DETERMINED BY OWNER.

D-9 REMOVE TREE, GRIND & REMOVE ROOT MAT AS NOTED IN SPECIFICATIONS.

D-10 REMOVE BUILDING AND ALL ASSOCIATED ITEMS ENTIRELY. CONSULT WITH ARCHITECT AND OWNER TO DETERMINE ANY ITEMS TO BE SALVAGED PRIOR TO DEMOLITION.

D-11 CAREFULLY REMOVE SANITARY STRUCTURE & LINE TO POINT SHOWN. CLEAN & PREPARE FOR FUTURE CONNECTION.

D-12 CUT & CAP WATER LINE AT POINT SHOWN ON PLAN. REMOVE / ABANDON REMAINING PORTION AS NOTED.

D-13 CAREFULLY REMOVE LANDSCAPE LIGHT POLE. SALVAGE, PROTECT & STORE AT LOCATION DETERMINED BY OWNER.

D-14 REMOVE IRRIGATION HEADS & LINES. CONSULT WITH GOLF COURSE MAINTENANCE DIVISION TO DETERMINE LIMITS OF REMOVAL AND CAPPING.

D-15 CAREFULLY REMOVE SIGNS, SALVAGE, PROTECT & STORE AT LOCATION DETERMINED BY OWNER.

D-16 REMOVE & SALVAGE TRASH RECEPTACLE, MOVE TO NEW LOCATION DETERMINED BY OWNER.

D-17 SEE M.E.P. PLANS FOR ALL INFORMATION ON ELECTRICAL, GAS & COMMUNICATION LINES & STRUCTURES.

D-18 CAREFULLY REMOVE BIRDHOUSE. SALVAGE, PROTECT & STORE AT LOCATION DETERMINED BY OWNER.

D-19 REMOVE BLACK TEE & ASSOCIATED UNDERDRAINS. ALL SOILS EXCAVATED FROM TEE BOX SHALL BE KEPT SEPARATE FROM SURROUNDING EXCAVATED SOILS AND USED ONLY IN THE CONSTRUCTION OF THE NEW BLACK TEE BOX.

APPROVED: DEPARTMENT OF PLANNING & ZONING

CHIEF, DEVELOPMENT ENGINEERING DIVISION — DATE 1-17-14

CHIEF, DIVISION OF LAND DEVELOPMENT — DATE 1-28-14

DIRECTOR — DATE 1/29/14

APPROVED
PLANNING BOARD OF HOWARD COUNTY
DATE 09/12/13

APPROVED: FOR PUBLIC WATER AND PUBLIC SEWERAGE SYSTEMS

COUNTY HEALTH OFFICER, HOWARD COUNTY HEALTH DEPARTMENT — DATE 12/19/2013

ADDRESS CHART	
LOT/PARCEL	STREET ADDRESS
8/135	11130 WILLOW BOTTOM DRIVE, COLUMBIA, MD. 21044

PERMIT INFORMATION CHART						
SUBDIVISION NAME: VILLAGE OF HARPERS CHOICE			SECTION/AREA: 2/1			LOT/PARCEL NO.: 8/135
PLAT # OR L/F: 9308 & 9309	GRID #: NA	ZONING: NT-05	TAX MAP NO.: 29	ELECTION DISTRICT: 5TH	CENSUS TRACT: 605502	
WATER CODE: 214 W&S			SEWER CODE: 214 W&S			

STATE OF MARYLAND — ALBERT F. EDWARDS — No. 16141 — PROFESSIONAL ENGINEER

PROFESSIONAL CERTIFICATION. I HEREBY CERTIFY THAT THESE DOCUMENTS WERE PREPARED OR APPROVED BY ME, AND THAT I AM A DULY LICENSED PROFESSIONAL ENGINEER UNDER THE LAWS OF THE STATE OF MARYLAND, LICENSE NO. 16141, EXPIRATION DATE: 09/19/14.

SITE RESOURCES incorporated
Comprehensive Land Planning & Site Design Services
14315 Jarrettsville Pike • Phoenix, Maryland 21131
(410) 683-3388 • fax (410) 683-3389

DRAWN BY: AM / FJP	CONTRACT NO.: -
DESIGNED BY: FJP / JLH	SCALE: 1"=20'
CHECKED BY: AFE	SRI PROJECT NO: 11059
DATE: SEPTEMBER 13, 2013	SHEET C1.01 3 OF 38

SDP-13-027

MATCHLINE - SEE SHEET C1.03

N. 568300
E. 1340400

EXISTING MULCH PATH

D-3 D-4 D-6 D-5 D-3

EXISTING ASPHALT CART PATH

D-11 D-2

EXISTING ASPHALT CART PATH

DRIVING RANGE SCREEN

SAND TRAP

EXISTING PRACTICE GREEN

D-1 D-2

GbC GfB GoC GfB

N. 568100
E. 1340800

EXISTING GREEN

EXISTING SAND TRAP

EXISTING ASPHALT CART PATH

EXISTING ASPHALT CART PATH

N. 568300
E. 1340600

MATCHLINE - SEE SHEET C1.01

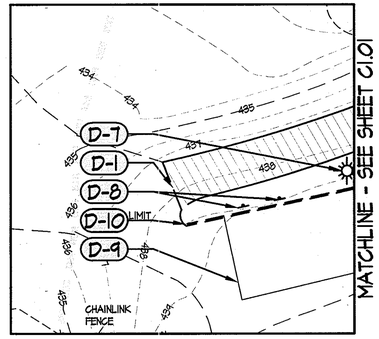

MATCHLINE - SEE SHEET C1.01

LEGEND

- PROPERTY LINE
- EXISTING CONTOURS
- EXISTING TREES TO REMAIN
- EXISTING TREES TO BE REMOVED
- EXISTING SHRUBS TO REMAIN
- EXISTING SHRUBS TO BE REMOVED
- EXISTING WALK TO REMAIN
- EXISTING ROAD TO REMAIN
- EXISTING CURB TO REMAIN
- EXISTING CURB TO BE REMOVED
- EXISTING PAVING TO BE REMOVED
- EX. 15" SD — EXISTING STORM DRAIN TO REMAIN
- EX. 15" SD D — EXISTING STORM DRAIN TO BE REMOVED
- EX. 6" WATER W — EXISTING WATER TO REMAIN
- EX. 6" WATER W — EXISTING WATER TO BE REMOVED
- EX. 8" SAN S — EXISTING SANITARY SEWER TO REMAIN
- EX. 8" SAN S — EXISTING SANITARY SEWER TO BE REMOVED
- EX. 2" GAS G — EXISTING GAS TO REMAIN
- EX. 2" GAS G — EXISTING GAS TO BE REMOVED
- EX. TELE T — EXISTING TELEPHONE TO REMAIN
- EX. TELE T — EXISTING TELEPHONE TO BE REMOVED
- EX. ELEC E — EXISTING ELECTRIC TO REMAIN
- EX. ELEC E — EXISTING ELECTRIC TO BE REMOVED
- EXISTING LIGHTING TO REMAIN
- EXISTING LIGHTING TO BE REMOVED
- FIELD RUN SURVEY LIMITS

NORTH

0 5 10 20 40 60

SCALE: 1" = 20'

DEMOLITION NOTES: (THESE NOTES APPLY TO THIS SHEET ONLY)

D-1 SAW CUT & REMOVE EXISTING WALKWAY INCLUDING BASE MATERIAL.

D-2 DEMOLISH & REMOVE RETAINING WALL.

D-3 REMOVE TREE, GRIND & REMOVE ROOT MAT AS NOTED IN SPECIFICATIONS.

D-4 CAREFULLY REMOVE LANDSCAPE LIGHT POLE. SALVAGE, PROTECT & STORE AT LOCATION DETERMINED BY OWNER.

D-5 REMOVE IRRIGATION HEADS & LINES. CONSULT WITH GOLF COURSE MAINTENANCE DIVISION TO DETERMINE LIMITS OF REMOVAL AND CAPPING.

D-6 SEE M.E.P. PLANS FOR ALL INFORMATION ON ELECTRICAL, GAS & COMMUNICATION LINES & STRUCTURES.

D-7 CAREFULLY REMOVE LIGHT POLE. SALVAGE, PROTECT & STORE AT LOCATION DETERMINED BY OWNER.

D-8 CAREFULLY REMOVE SIGNS. SALVAGE, PROTECT & STORE AT LOCATION DETERMINED BY OWNER.

D-9 SAWCUT & REMOVE EXISTING ROAD TO BASE MATERIAL. KEEP BASE INTACT FOR FUTURE PAVING INSTALLATION.

D-10 REMOVE EXISTING CURB AT LIMITS OF REMOVAL & PROTECT REMAINING CURB FROM DAMAGE.

D-11 REMOVE PLANT MATERIALS WITHIN RETAINING WALL. PROTECT FLAG POLE TO REMAIN.

APPROVED: DEPARTMENT OF PLANNING & ZONING

CHIEF, DEVELOPMENT ENGINEERING DIVISION — DATE 1-17-14

CHIEF, DIVISION OF LAND DEVELOPMENT — DATE 1-28-14

DIRECTOR — DATE 1/28/14

APPROVED
PLANNING BOARD OF HOWARD COUNTY
DATE 09/12/13

APPROVED: FOR PUBLIC WATER AND PUBLIC SEWERAGE SYSTEMS

COUNTY HEALTH OFFICER
HOWARD COUNTY HEALTH DEPARTMENT — DATE 12/18/2013

ADDRESS CHART	
LOT/PARCEL	STREET ADDRESS
8/135	11130 MILLON BOTTOM DRIVE, COLUMBIA, MD. 21044

PERMIT INFORMATION CHART					
SUBDIVISION NAME			SECTION/AREA		LOT/PARCEL NO.
VILLAGE OF HARPERS CHOICE			2/1		8/135
PLAT # OR L/F	GRID #	ZONING	TAX MAP NO.	ELECTION DISTRICT	CENSUS TRACT
9308 & 9309	NA	NT-05	29	5TH	605502
WATER CODE			SEWER CODE		
214 W&S			214 W&S		

SITE DEMOLITION PLAN

HOBBIT'S GLEN GOLF CLUBHOUSE

PROPERTY OF COLUMBIA ASSOCIATION, INC.

REVISIONS

STATE OF MARYLAND — STEVEN F. EDWARDS — 15144 — PROFESSIONAL ENGINEER

10-3-2013

PROFESSIONAL CERTIFICATION. I HEREBY CERTIFY THAT THESE DOCUMENTS WERE PREPARED OR APPROVED BY ME, AND THAT I AM A DULY LICENSED PROFESSIONAL ENGINEER UNDER THE LAWS OF THE STATE OF MARYLAND, LICENSE NO. 15144, EXPIRATION DATE: 08/14.

SITE RESOURCES incorporated
Comprehensive Land Planning & Site Design Services
14315 Jarrettsville Pike • Phoenix, Maryland 21131
(410) 683-3388 • fax (410) 683-3389

DRAWN BY: AM / FJP	CONTRACT NO.: -
DESIGNED BY: FJP / JLH	SCALE: 1"=20'
CHECKED BY: AFE	SRI PROJECT NO: 11054
DATE: SEPTEMBER 13, 2013	SHEET C1.02 4 OF 38

SDP-13-027

MATCHLINE - SEE SHEET C1.12

MATCHLINE - SEE INSET SHEET C1.12

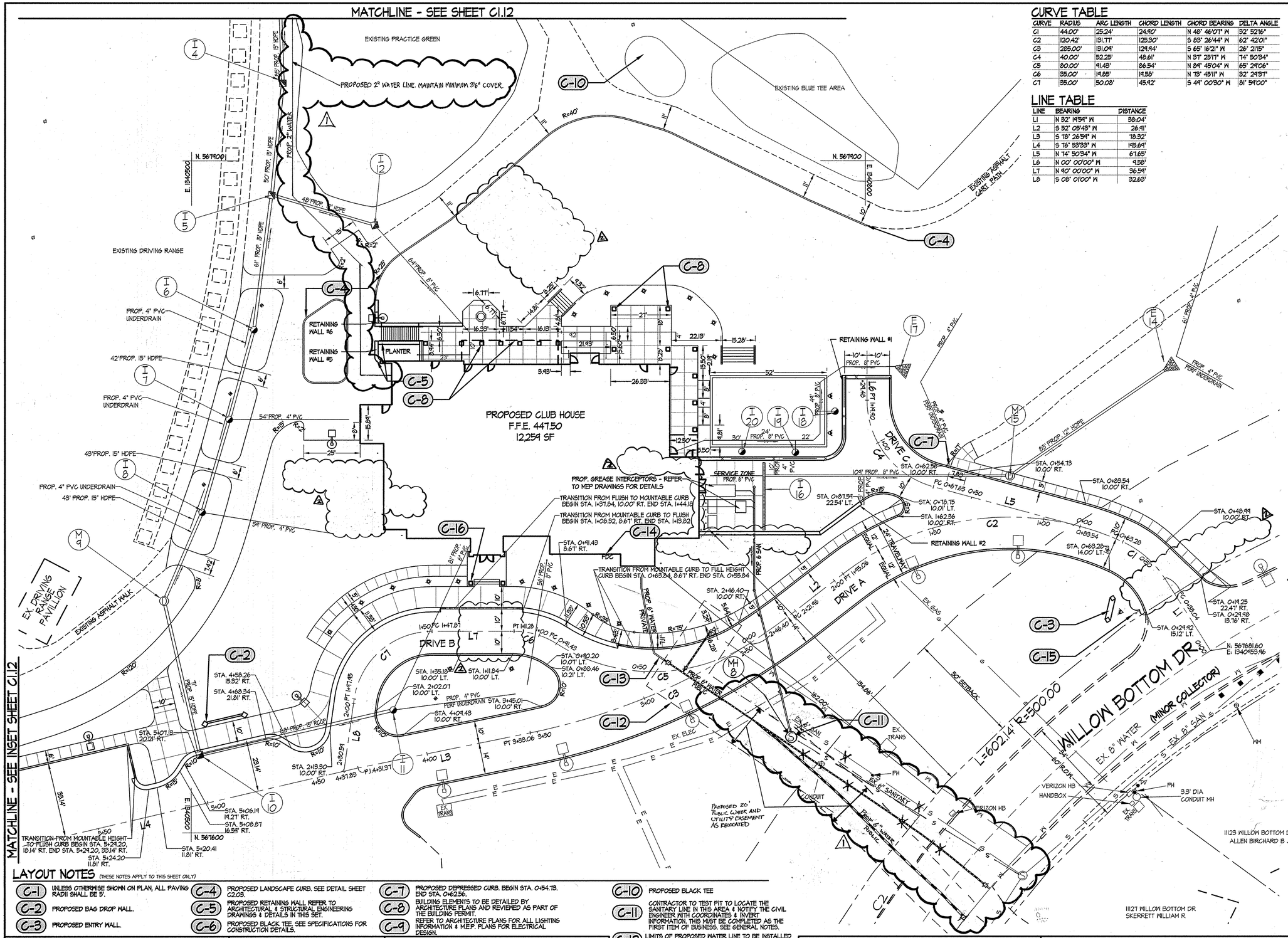

CURVE TABLE

CURVE	RADIUS	ARC LENGTH	CHORD LENGTH	CHORD BEARING	DELTA ANGLE
C1	44.00'	25.24'	24.90'	N 48° 46'07" W	32° 52'16"
C2	120.42'	131.77'	125.30'	S 83° 26'44" W	62° 42'01"
C3	285.00'	131.09'	129.94'	S 65° 16'21" W	26° 21'15"
C4	40.00'	52.25'	48.61'	N 31° 25'17" W	74° 50'34"
C5	80.00'	91.43'	86.54'	N 84° 45'04" W	65° 29'06"
C6	35.00'	19.85'	19.58'	N 73° 45'11" W	32° 29'37"
C7	35.00'	50.08'	45.92'	S 44° 00'30" W	81° 59'00"

LINE TABLE

LINE	BEARING	DISTANCE
L1	N 32° 19'59" W	38.04'
L2	S 52° 05'43" W	26.91'
L3	S 18° 26'59" W	78.32'
L4	S 76° 53'33" W	195.69'
L5	N 74° 50'34" W	61.65'
L6	N 00° 00'00" W	9.50'
L7	N 90° 00'00" W	36.59'
L8	S 08° 01'00" W	32.63'

LEGEND

- PROPERTY LINE
- EXISTING WALK
- EXISTING ROAD
- EXISTING CURB
- EX. 15" SD — EXISTING STORM DRAIN
- EX. 6" WATER — EXISTING WATER
- EX. 8" SAN — EXISTING SANITARY SEWER
- EX. 2" GAS — EXISTING GAS
- EX. ELEC — EXISTING ELECTRIC
- EXISTING LIGHTING
- PROPOSED CONCRETE WALK
- PROPOSED BUILDING
- PROP. 15" SD — PROPOSED STORM DRAIN
- PROP. 6" WATER — PROPOSED WATER
- PROP. 8" SAN — PROPOSED SANITARY SEWER
- PROPOSED LIGHTING
- PROPOSED ROAD

LAYOUT NOTES (THESE NOTES APPLY TO THIS SHEET ONLY)

C-1 UNLESS OTHERWISE SHOWN ON PLAN, ALL PAVING RADII SHALL BE 5'.

C-2 PROPOSED BAG DROP WALL.

C-3 PROPOSED ENTRY WALL.

C-4 PROPOSED LANDSCAPE CURB. SEE DETAIL SHEET C2.03.

C-5 PROPOSED RETAINING WALL. REFER TO ARCHITECTURAL & STRUCTURAL ENGINEERING DRAWINGS & DETAILS IN THIS SET.

C-6 PROPOSED BLACK TEE. SEE SPECIFICATIONS FOR CONSTRUCTION DETAILS.

C-7 PROPOSED DEPRESSED CURB. BEGIN STA. 0+54.73, END STA. 0+62.56.

C-8 BUILDING ELEMENTS TO BE DETAILED BY ARCHITECTURE PLANS AND REVIEWED AS PART OF THE BUILDING PERMIT.

C-9 REFER TO ARCHITECTURE PLANS FOR ALL LIGHTING INFORMATION & M.E.P. PLANS FOR ELECTRICAL DESIGN.

C-10 PROPOSED BLACK TEE

C-11 CONTRACTOR TO TEST FIT TO LOCATE THE SANITARY LINE IN THIS AREA & NOTIFY THE CIVIL ENGINEER WITH COORDINATES & INVERT INFORMATION. THIS MUST BE COMPLETED AS THE FIRST ITEM OF BUSINESS. SEE GENERAL NOTES.

C-12 LIMITS OF PROPOSED WATER LINE TO BE INSTALLED UNDER AN ADVANCED DEPOSIT ORDER (ADO).

C-13 PROPOSED PRIVATE WATER LINE & ASSOCIATED INDOOR METER, NOT INCLUDED WITH ADO SUBMISSION.

C-14 PROPOSED FDC CONNECTION. REFER TO ARCHITECTURE PLANS FOR ADDITIONAL INFORMATION.

C-15 EXISTING STOP SIGN TO REMAIN.

C-16 KNOX BOX 3200 SERIES TO BE MOUNTED ON VESTIBULE COLUMN.

APPROVED: DEPARTMENT OF PLANNING & ZONING

CHIEF, DEVELOPMENT ENGINEERING DIVISION — DATE 1/17/14

CHIEF, DIVISION OF LAND DEVELOPMENT — DATE 1-22-14

DIRECTOR — DATE 1/23/14

APPROVED
PLANNING BOARD OF HOWARD COUNTY
DATE 9/12/13

APPROVED: FOR PUBLIC WATER AND PUBLIC SEWERAGE SYSTEMS

B Nilsen for Maura Rossman 12/19/2013
COUNTY HEALTH OFFICER — DATE
HOWARD COUNTY HEALTH DEPARTMENT

ADDRESS CHART	
LOT/PARCEL	STREET ADDRESS
8/135	11130 WILLOW BOTTOM DRIVE, COLUMBIA, MD. 21044

PERMIT INFORMATION CHART					
SUBDIVISION NAME			SECTION/AREA		LOT/PARCEL NO.
VILLAGE OF HARPERS CHOICE			2/1		8/135
PLAT # OR L/F	GRID #	ZONING	TAX MAP NO.	ELECTION DISTRICT	CENSUS TRACT
9308 & 9309	NA	NT-05	29	5TH	605502
WATER CODE			SEWER CODE		
214 W&S			214 W&S		

⚠2 THIS SEAL IS FOR REVISION 2. BY SITE RESOURCES, INC.
12/5/2014
STATE OF MARYLAND · ALBERT F. EDMONDS · 19144 · PROFESSIONAL ENGINEER

⚠1 THIS SEAL IS FOR REVISION 1 BY SITE RESOURCES, INC.
1-9-2014
STATE OF MARYLAND · ALBERT F. EDMONDS · 19144 · PROFESSIONAL ENGINEER

NORTH
0 5 10 20 40 60
SCALE: 1" = 20'

SITE LAYOUT PLAN

HOBBIT'S GLEN GOLF CLUBHOUSE

PROPERTY OF COLUMBIA ASSOCIATION, INC.

REVISIONS

⚠2 10.31.2014 — RETAINING WALL ADJUSTMENTS AND VARIOUS SITE FEATURES

⚠1 10/21/2014 — WATER LINE RELOCATION

STATE OF MARYLAND · ALBERT F. EDMONDS · 19144 · PROFESSIONAL ENGINEER

PROFESSIONAL CERTIFICATION. I HEREBY CERTIFY THAT THESE DOCUMENTS WERE PREPARED OR APPROVED BY ME, AND THAT I AM A DULY LICENSED PROFESSIONAL ENGINEER UNDER THE LAWS OF THE STATE OF MARYLAND, LICENSE NO. 19144, EXPIRATION DATE: 09/14/14.

12-5-14

SITE RESOURCES incorporated
Comprehensive Land Planning & Site Design Services
14315 Jarrettsville Pike • Phoenix, Maryland 21131
(410) 683-3388 • fax (410) 683-3389

DRAWN BY: AM /FJP	CONTRACT NO.: -
DESIGNED BY: FJP / JLH	SCALE: 1"=20'
CHECKED BY: AFE	SRI PROJECT NO: 11054
DATE: SEPTEMBER 13, 2013	SHEET C1.11 5 OF 38

SDP-13-027

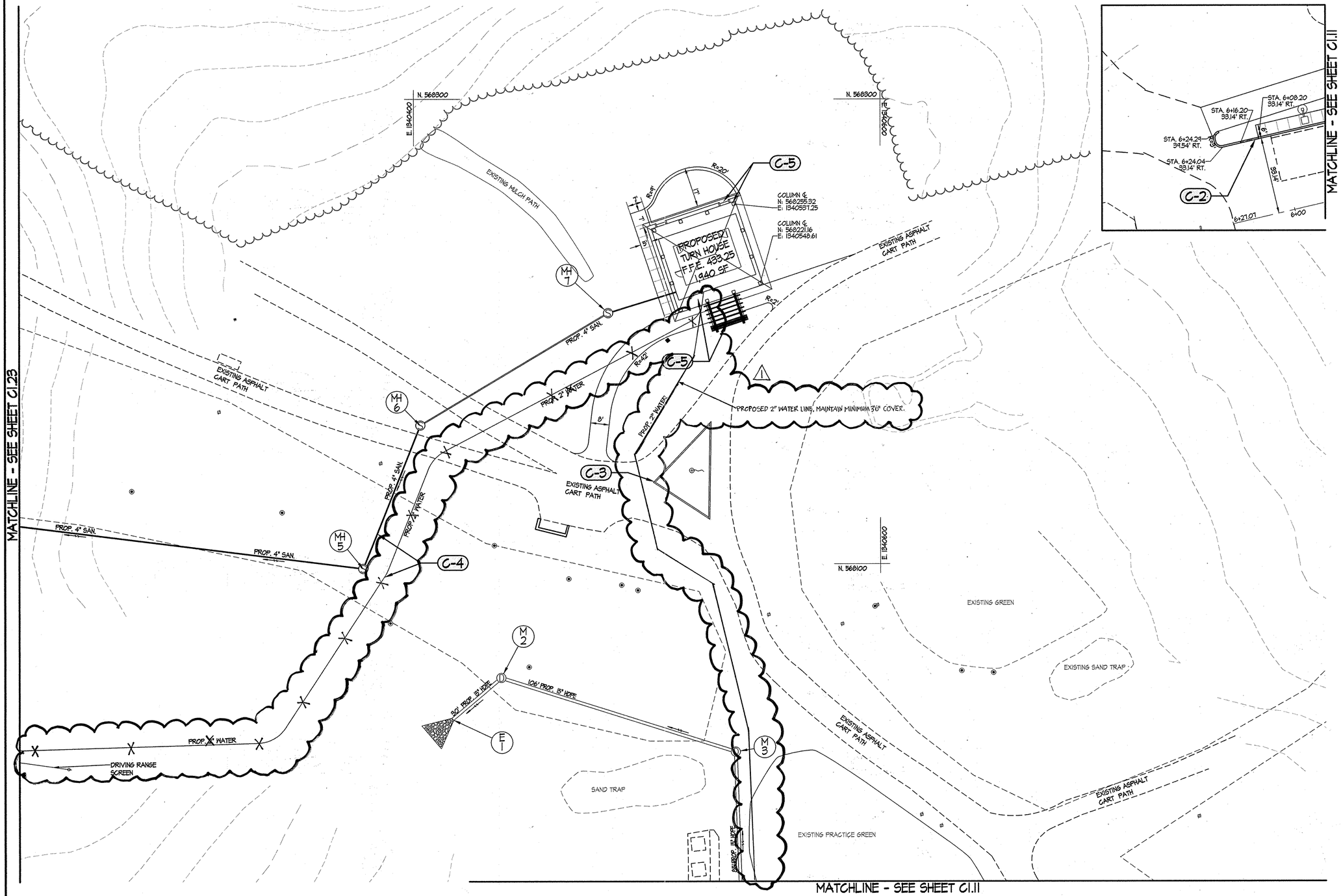

LEGEND

- PROPERTY LINE
- EXISTING WALK
- EXISTING ROAD
- EXISTING CURB
- EX. 15" SD — EXISTING STORM DRAIN
- EX. 6" WATER W — EXISTING WATER
- EX. 8" SAN S — EXISTING SANITARY SEWER
- EX. ELEC E — EXISTING ELECTRIC
- EXISTING LIGHTING
- PROPOSED CONCRETE WALK
- PROPOSED GUARDRAIL
- PROPOSED FLAGPOLE
- PROP. 15" SD — PROPOSED STORM DRAIN
- EX. IRRIGATION — EXISTING IRRIGATION TO REMAIN

LAYOUT NOTES (THESE NOTES APPLY TO THIS SHEET ONLY)

C-1 UNLESS OTHERWISE SHOWN ON PLAN, ALL PAVING RADII SHALL BE 5'

C-2 TRANSITION FROM FLUSH CURB TO FULL HEIGHT CURB. BEGIN STA. 6+10.14, END 6+13.74.

C-3 PROPOSED LANDSCAPE CURB. SEE DETAIL SHEET C2.03.

C-4 SEE WATER & SEWER PLANS FOR PROFILES.

C-5 TURN HOUSE, COVERED PORCH, STAIRS AND TRELLIS STRUCTURE. REFER TO ARCHITECTURE PLANS FOR ADDITIONAL INFORMATION.

APPROVED: DEPARTMENT OF PLANNING & ZONING

CHIEF, DEVELOPMENT ENGINEERING DIVISION — DATE 1/17/14

CHIEF, DIVISION OF LAND DEVELOPMENT — DATE 1-28-14

DIRECTOR — DATE 1/29/14

APPROVED
PLANNING BOARD OF HOWARD COUNTY
DATE 9/12/13

APPROVED: FOR PUBLIC WATER AND PUBLIC SEWERAGE SYSTEMS

B. Nixon for Maura Rossman 12/19/2013
COUNTY HEALTH OFFICER — DATE
HOWARD COUNTY HEALTH DEPARTMENT

ADDRESS CHART	
LOT/PARCEL	STREET ADDRESS
8/135	11130 WILLOW BOTTOM DRIVE, COLUMBIA, MD. 21044

PERMIT INFORMATION CHART					
SUBDIVISION NAME: VILLAGE OF HARPERS CHOICE			SECTION/AREA: 2/1		LOT/PARCEL NO.: 8/135
PLAT # OR L/F: 9308 & 9309	GRID #: NA	ZONING: NT-05	TAX MAP NO.: 29	ELECTION DISTRICT: 5TH	CENSUS TRACT: 605502
WATER CODE: 214 M&S			SEWER CODE: 214 M&S		

1 THIS SEAL IS FOR REVISION 1 BY SITE RESOURCES, INC.

STATE OF MARYLAND — ALBERT F. EDWARDS — 16144 — PROFESSIONAL ENGINEER — 9-1-2014

NORTH

0 5 10 20 40 60
SCALE: 1" = 20'

SITE LAYOUT PLAN

HOBBIT'S GLEN GOLF CLUBHOUSE

PROPERTY OF COLUMBIA ASSOCIATION, INC.

REVISIONS

1 08/21/2014 WATER LINE RELOCATION

STATE OF MARYLAND — ALBERT F. EDWARDS — 16144 — PROFESSIONAL ENGINEER

PROFESSIONAL CERTIFICATION. I HEREBY CERTIFY THAT THESE DOCUMENTS WERE PREPARED OR APPROVED BY ME, AND THAT I AM A DULY LICENSED PROFESSIONAL ENGINEER UNDER THE LAWS OF THE STATE OF MARYLAND, LICENSE NO. 16144, EXPIRATION DATE: 09/09/15. 10-3-2013

SITE RESOURCES incorporated
Comprehensive Land Planning & Site Design Services
14315 Jarrettsville Pike • Phoenix, Maryland 21131
(410) 683-3388 • fax (410) 683-3389

DRAWN BY: AM / FJP	CONTRACT NO.: -
DESIGNED BY: FJP / JLH	SCALE: 1"=20'
CHECKED BY: AFE	SRI PROJECT NO: 11059
DATE: SEPTEMBER 13, 2013	SHEET C1.12 6 OF 38

SDP-13-027

MATCHLINE - SEE SHEET C1.22

MATCHLINE - SEE INSET SHEET C1.22

EXISTING PRACTICE GREEN

FUTURE CLOCK TOWER

PROPOSED 2" WATER LINE. MAINTAIN MINIMUM 3'6" COVER

EXISTING BLUE TEE AREA

EXISTING ASPHALT CART PATH

EXISTING DRIVING RANGE

PROP. 4" PVC UNDERDRAIN

42' PROP. 15" HDPE

PROP. 4" PVC UNDERDRAIN

54' PROP. 4" PVC

43' PROP. 15" HDPE

PROP. 4" PVC UNDERDRAIN

43' PROP. 15" HDPE

59' PROP. 4" PVC

EX. DRIVING RANGE PAVILLION

EXISTING ASPHALT WALK

50' PROP. 15" HDPE

61' PROP. 15" HDPE

48' PROP. 15" HDPE

64' PROP. 8" PVC

T"R-11"T

6"R-12"T

6"R-12"T

EVENT TENT

PROP. 8" PVC

PROPOSED CLUB HOUSE
F.F.E. 447.50
12,259 SF

PROP. GREASE INTERCEPTORS - REFER TO MEP DRAWINGS FOR DETAILS

PROP. 6" PVC

104' PROP. 8" PVC

81' PROP. 8" PVC

36' PROP. 8" PVC

PROP. 6 SAN

PROP. 6" WATER PRIVATE

PROP. 4" PVC PERF UNDERDRAIN

80' PROP. 15" HDPE

71' PROP. 15" HDPE

EX. ELEC

EX. TRANS

PROP. 8" PVC

PROP. 4" PVC PERF UNDERDRAIN

85' PROP. 12" HDPE

RIVER ROCK

EX. 6" WATER

EX. 8" SAN

EX. 8" WATER (MINOR COLLECTOR)

WILLOW BOTTOM DR.

L=602.14' R=500.00

EX. TRANS

VERIZON HB

VERIZON HANDBOX

PH

3.3' DIA CONDUIT MH

EX. 6" SANITARY

EX. 6" WATER PUBLIC

EX. GAS

N. 567900

E. 1340500

N. 567600

E. 1340200

LAYOUT NOTES:

(THESE NOTES APPLY TO THIS SHEET ONLY)

C-1 INSTALL MOUNTABLE CURB AND GUTTER.

C-2 SEE WATER & SEWER PLANS FOR PROFILES.

C-3 LIMITS OF PROPOSED WATER LINE TO BE INSTALLED UNDER ANC ADVANCED DEPOSIT ORDER (ADO).

C-4 PROPOSED PRIVATE WATER LINE & ASSOCIATED INDOOR METER, NOT INCLUDED WITH ADO SUBMISSION.

LEGEND

- PROPERTY LINE
- EXISTING TREELINE
- EXISTING WALK
- EXISTING ROAD
- EXISTING CURB
- EX. 15" SD — EXISTING STORM DRAIN
- EX. 6" WATER — EXISTING WATER
- EX. 8" SAN — EXISTING SANITARY SEWER
- EX. ELEC — EXISTING ELECTRIC
- EX. ELEC OHW — EXISTING OVERHEAD ELECTRIC
- EXISTING LIGHTING
- EX. COM — EXISTING COMMUNICATIONS
- EX. CATV — EXISTING CABLE TV
- PROPOSED CONCRETE WALK
- PROPOSED HEAVY DUTY CONCRETE ROAD
- PROPOSED HEAVY DUTY ASPHALT ROAD
- PROPOSED INTERMEDIATE DUTY ASPHALT ROAD-FULL DEPTH
- PROPOSED LIGHT DUTY ASPHALT ROAD
- PROPOSED PAVERS
- PROPOSED FENCE
- PROPOSED BUILDING
- PROP. 15" SD — PROPOSED STORM DRAIN
- PROP. 6" WATER — PROPOSED WATER
- PROP. 8" SAN — PROPOSED SANITARY SEWER
- PROPOSED LIGHTING
- LOD LOD — LIMIT OF DISTURBANCE

NELSON

0 5 10 20 40 60

SCALE: 1" = 20'

APPROVED: DEPARTMENT OF PLANNING & ZONING

CHIEF, DEVELOPMENT ENGINEERING DIVISION — DATE 1-17-14

CHIEF, DIVISION OF LAND DEVELOPMENT — DATE 1-28-14

DIRECTOR — DATE 1/29/14

APPROVED
PLANNING BOARD OF HOWARD COUNTY
DATE 9/12/13

APPROVED: FOR PUBLIC WATER AND PUBLIC SEWERAGE SYSTEMS

COUNTY HEALTH OFFICER, HOWARD COUNTY HEALTH DEPARTMENT — DATE 12/19/2013

ADDRESS CHART	
LOT/PARCEL	STREET ADDRESS
8/135	11130 WILLOW BOTTOM DRIVE, COLUMBIA, MD. 21044

PERMIT INFORMATION CHART						
SUBDIVISION NAME			SECTION/AREA		LOT/PARCEL NO.
VILLAGE OF HARPERS CHOICE			2/1		8/135
PLAT # OR L/F	GRID #	ZONING	TAX MAP NO.	ELECTION DISTRICT	CENSUS TRACT
9308 & 9309	NA	NT-05	29	5TH	605502
WATER CODE			SEWER CODE		
214 W&S			214 W&S		

DETAIL REFERENCE PLAN

HOBBIT'S GLEN GOLF CLUBHOUSE

PROPERTY OF COLUMBIA ASSOCIATION, INC.

REVISIONS

2 10.31.2014 RETAINING WALL ADJUSTMENTS AND VARIOUS SITE FEATURES

1 08/21/2014 WATER LINE RELOCATION

THIS SEAL IS FOR REVISION 1 BY SITE RESOURCES, INC. 9-9-2014

THIS SEAL IS FOR REVISION 2 BY SITE RESOURCES, INC. 12-5-2014

I HEREBY CERTIFY THAT THESE DOCUMENTS WERE PREPARED OR APPROVED BY ME AND THAT I AM A DULY LICENSED PROFESSIONAL ENGINEER UNDER THE LAWS OF THE STATE OF MARYLAND, LICENSE NO. 16144, EXPIRATION DATE: 09/19/14. 11-26-2013

SITE RESOURCES incorporated
Comprehensive Land Planning & Site Design Services
14316 Jarrettsville Pike • Phoenix, Maryland 21131
(410) 683-3588 • fax (410) 683-3589

DRAWN BY: AM /FJP	CONTRACT NO.: -
DESIGNED BY: FJP / JLH	SCALE: 1"=20'
CHECKED BY: AFE	SRI PROJECT NO: 11059
DATE: SEPTEMBER 13, 2013	SHEET C1.21 7 OF 38

SDP-13-027

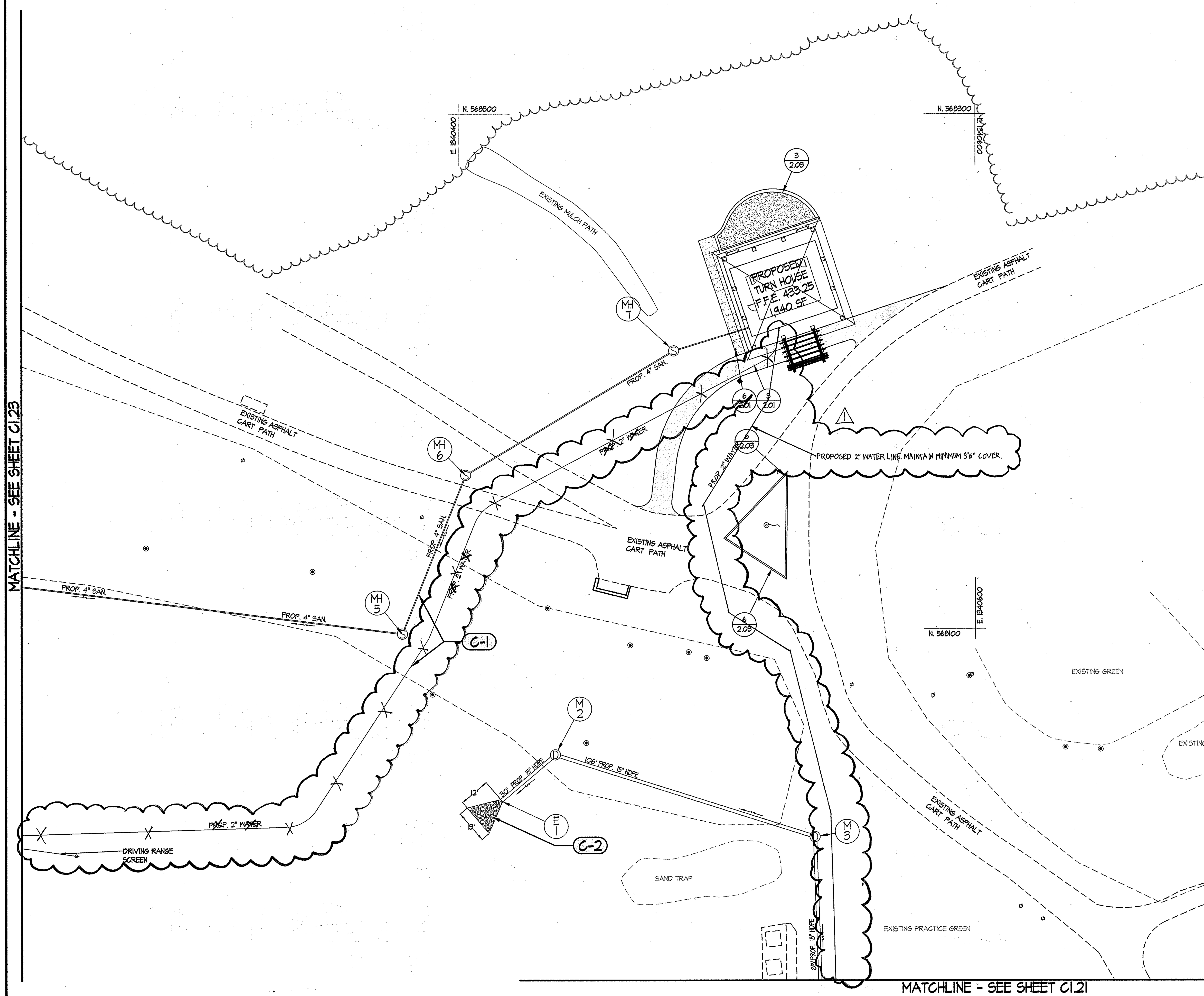

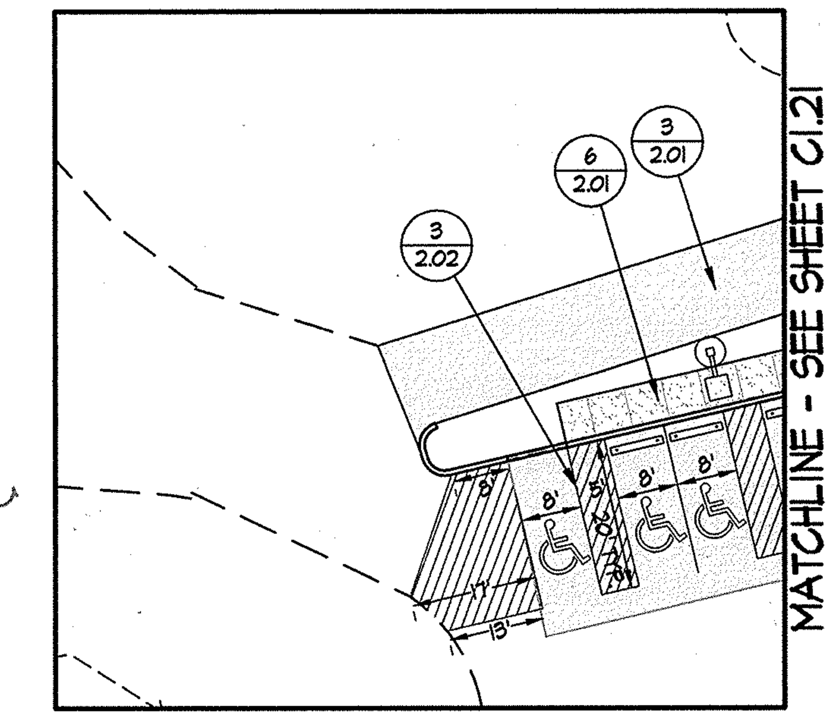

LEGEND

- PROPERTY LINE
- EXISTING TREELINE
- EXISTING WALK
- EXISTING ROAD
- EXISTING CURB
- EX. 15" SD — EXISTING STORM DRAIN
- EX. 6" WATER, W — EXISTING WATER
- EX. 8" SAN, S — EXISTING SANITARY SEWER
- EX. ELEC, E — EXISTING ELECTRIC
- EX. ELEC, OHW — EXISTING OVERHEAD ELECTRIC
- EXISTING LIGHTING
- EX. COM, COM — EXISTING COMMUNICATIONS
- EX. CATV, CATV — EXISTING CABLE TV
- PROPOSED LIGHT DUTY ASPHALT ROAD
- PROPOSED BUILDING
- # / SHT — DETAIL REFERENCE
- PROP. 15" SD — PROPOSED STORM DRAIN
- PROP. 6" WATER — PROPOSED WATER
- PROP. 8" SAN — PROPOSED SANITARY SEWER

THIS SEAL IS FOR REVISION 1 BY SITE RESOURCES, INC.

STATE OF MARYLAND · ALBERT F. EDWARDS · 16144 · PROFESSIONAL ENGINEER
7-9-14

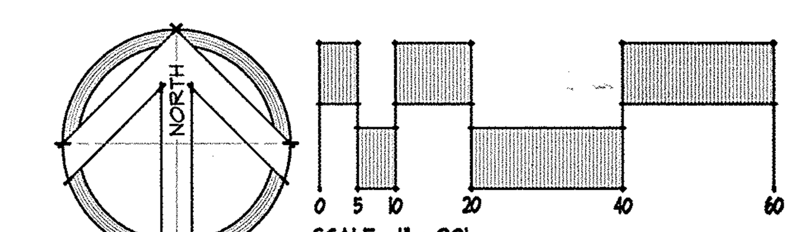

LAYOUT NOTES:

(THESE NOTES APPLY TO THIS SHEET ONLY)

- C-1 SEE WATER & SEWER PLANS FOR PROFILES.
- C-2 RIP RAP. SEE STORM DRAIN PROFILES FOR ADDITIONAL INFORMATION.

APPROVED: DEPARTMENT OF PLANNING & ZONING

CHIEF, DEVELOPMENT ENGINEERING DIVISION	DATE 1-17-14
CHIEF, DIVISION OF LAND DEVELOPMENT	DATE 1-28-14
DIRECTOR	DATE 1/29/14

APPROVED
PLANNING BOARD OF HOWARD COUNTY
DATE 9/12/13

APPROVED: FOR PUBLIC WATER AND PUBLIC SEWERAGE SYSTEMS

B Nelson for Maura Rossman 12/19/2013
COUNTY HEALTH OFFICER, HOWARD COUNTY HEALTH DEPARTMENT — DATE

ADDRESS CHART

LOT/PARCEL	STREET ADDRESS
8/135	11130 WILLOW BOTTOM DRIVE, COLUMBIA, MD. 21044

PERMIT INFORMATION CHART

SUBDIVISION NAME			SECTION/AREA		LOT/PARCEL NO.
VILLAGE OF HARPERS CHOICE			2/1		8/135
PLAT # OR L/F	GRID #	ZONING	TAX MAP NO.	ELECTION DISTRICT	CENSUS TRACT
9308 & 9309	NA	NT-OS	29	5TH	605502
WATER CODE			SEWER CODE		
214 W&S			214 W&S		

DETAIL REFERENCE PLAN

HOBBIT'S GLEN GOLF CLUBHOUSE

PROPERTY OF COLUMBIA ASSOCIATION, INC.

REVISIONS

1	08/21/2014	WATER LINE RELOCATION	SRI.

STATE OF MARYLAND · ALBERT F. EDWARDS · 16144 · PROFESSIONAL ENGINEER
10-3-2013

PROFESSIONAL CERTIFICATION
I HEREBY CERTIFY THAT THESE DOCUMENTS WERE PREPARED OR APPROVED BY ME, AND THAT I AM A DULY LICENSED PROFESSIONAL ENGINEER UNDER THE LAWS OF THE STATE OF MARYLAND, LICENSE NO. 16144, EXPIRATION DATE: 08/19/14.

SITE RESOURCES incorporated
Comprehensive Land Planning & Site Design Services
14315 Jarrettsville Pike • Phoenix, Maryland 21131
(410) 683-3388 • fax (410) 683-3389

DRAWN BY: AM / FJP	CONTRACT NO.: -
DESIGNED BY: FJP / JLH	SCALE: 1"=20'
CHECKED BY: AFE	SRI PROJECT NO: 11059
DATE: SEPTEMBER 13, 2013	SHEET C1.22 8 OF 38

SDP-13-027

MATCHLINE - SEE SHEET C1.24

EX. 100 YR. FLOODPLAIN DRAINAGE & UTILITY EASEMENT

PROP. 4" SAN.

C-1

EDGE OF FAIRWAY

N. 568200

E. 134000

EX. INLET GRATE
TOP 383.90
INV. OUT 379.98
4" INV. IN 382.24

MH 3

ASSUMED LOCATION OF EX. STORM DRAIN PIPES

MH 4

PROP. 4" SAN.

EX. 24" CMP
INV. OUT 390.02

PROP. 8" WATER

EX. INLET GRATE
TOP 399.19
INV. OUT 390.12

DRIVING RANGE SCREEN

PROP. 8" WATER

E. 134000

N. 568000

E. 133600

N. 568000

EX. MAINTENANCE BUILDING

PROP. 8" WATER

PROP. 4" WATER

MATCHLINE - SEE SHEET C1.12 & C1.22

LEGEND

- PROPERTY LINE
- EXISTING TREELINE
- EXISTING WALK
- EXISTING ROAD
- EXISTING CURB
- EX. 15" SD — EXISTING STORM DRAIN
- EX. 6" WATER W — EXISTING WATER
- EX. 8" SAN S — EXISTING SANITARY SEWER
- EX. ELEC E — EXISTING ELECTRIC
- EX. ELEC OHW — EXISTING OVERHEAD ELECTRIC
- EXISTING LIGHTING
- EX. COM COM — EXISTING COMMUNICATIONS
- EX. CATV CATV — EXISTING CABLE TV
- EXISTING BUILDING
- PROP. 15" SD — PROPOSED STORM DRAIN
- PROP. 6" WATER — PROPOSED WATER
- PROP. 8" SAN — PROPOSED SANITARY SEWER

LAYOUT NOTES: (THESE NOTES APPLY TO THIS SHEET ONLY)

C-1 SEE WATER & SEWER PLANS FOR PROFILE.

APPROVED: DEPARTMENT OF PLANNING & ZONING	
CHIEF, DEVELOPMENT ENGINEERING DIVISION	DATE 10/7/14
CHIEF, DIVISION OF LAND DEVELOPMENT	DATE 1-28-14
DIRECTOR	DATE 1/29/14

APPROVED PLANNING BOARD OF HOWARD COUNTY	
DATE	9/12/13

APPROVED: FOR PUBLIC WATER AND PUBLIC SEWERAGE SYSTEMS

BWilson for Maura Rossman 12/19/2013
COUNTY HEALTH OFFICER, HOWARD COUNTY HEALTH DEPARTMENT — DATE

ADDRESS CHART	
LOT/PARCEL	STREET ADDRESS
B/135	11130 WILLOW BOTTOM DRIVE, COLUMBIA, MD. 21044

PERMIT INFORMATION CHART					
SUBDIVISION NAME: VILLAGE OF HARPERS CHOICE			SECTION/AREA: 2/1		LOT/PARCEL NO.: B/135
PLAT # OR L/F: 4308 & 4309	GRID #: NA	ZONING: NT-05	TAX MAP NO.: 29	ELECTION DISTRICT: 5TH	CENSUS TRACT: 605502
WATER CODE: 214 M&S			SEWER CODE: 214 M&S		

THIS SEAL IS FOR REVISION 1 BY SITE RESOURCES, INC.

STATE OF MARYLAND — STEPHEN F. EDWARDS — 16144 — PROFESSIONAL ENGINEER — 1-1-14

NORTH

0 5 10 20 40 60

SCALE: 1" = 20'

DETAIL REFERENCE PLAN

HOBBIT'S GLEN GOLF CLUBHOUSE

PROPERTY OF COLUMBIA ASSOCIATION, INC.

REVISIONS

1 | 08/21/2014 | WATER LINE RELOCATION

STATE OF MARYLAND — STEPHEN F. EDWARDS — 16144 — PROFESSIONAL ENGINEER — 10-3-2013

PROFESSIONAL CERTIFICATION
I HEREBY CERTIFY THAT THESE DOCUMENTS WERE PREPARED OR APPROVED BY ME, AND THAT I AM A DULY LICENSED PROFESSIONAL ENGINEER UNDER THE LAWS OF THE STATE OF MARYLAND, LICENSE NO. 16144, EXPIRATION DATE: 09/14/14.

SITE RESOURCES incorporated
Comprehensive Land Planning & Site Design Services
14315 Jarrettsville Pike • Phoenix, Maryland 21131
(410) 683-3388 • fax (410) 683-3389

DRAWN BY: FJP /JLH	CONTRACT NO.: -
DESIGNED BY: JLH	SCALE: 1"=20'
CHECKED BY: SRI	SRI PROJECT NO: 11059
DATE: SEPTEMBER 13, 2013	SHEET C1.23 9 OF 38

SDP-13-027

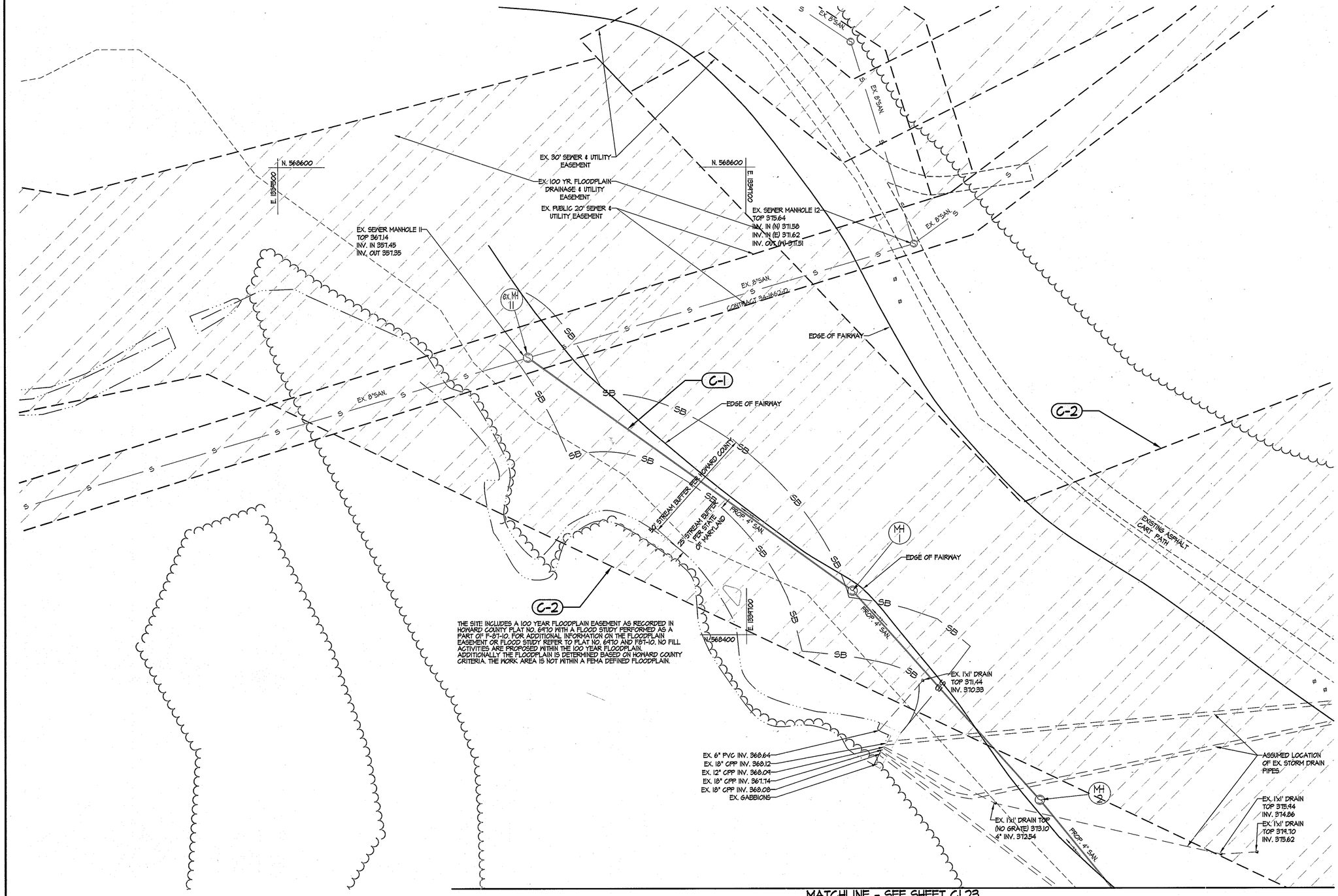

THE SITE INCLUDES A 100 YEAR FLOODPLAIN EASEMENT AS RECORDED IN HOWARD COUNTY PLAT NO. 6410 WITH A FLOOD STUDY PERFORMED AS A PART OF F-87-10. FOR ADDITIONAL INFORMATION ON THE FLOODPLAIN EASEMENT OR FLOOD STUDY REFER TO PLAT NO. 6410 AND F87-10. NO FILL ACTIVITIES ARE PROPOSED WITHIN THE 100 YEAR FLOODPLAIN. ADDITIONALLY THE FLOODPLAIN IS DETERMINED BASED ON HOWARD COUNTY CRITERIA. THE WORK AREA IS NOT WITHIN A FEMA DEFINED FLOODPLAIN.

MATCHLINE - SEE SHEET C1.23

LEGEND

- PROPERTY LINE
- EXISTING TREELINE
- EXISTING WALK
- EXISTING ROAD
- EXISTING CURB
- EX. 15" SD — EXISTING STORM DRAIN
- EX. 6" WATER — EXISTING WATER
- EX. 8" SAN — EXISTING SANITARY SEWER
- PROP. 8" SAN — PROPOSED SANITARY SEWER
- EXISTING STREAM
- SB — EXISTING STREAM BUFFER

NORTH

0 5 10 20 40 60

SCALE: 1" = 20'

LAYOUT NOTES: (THESE NOTES APPLY TO THIS SHEET ONLY)

C-1 SEE WATER & SEWER PLANS FOR PROFILE.

C-2 100 YEAR FLOODPLAIN EASEMENT.

APPROVED: DEPARTMENT OF PLANNING & ZONING

CHIEF, DEVELOPMENT ENGINEERING DIVISION — DATE 1-17-14

CHIEF, DIVISION OF LAND DEVELOPMENT — DATE 1-28-14

DIRECTOR — DATE 1/28/14

APPROVED
PLANNING BOARD OF HOWARD COUNTY
DATE 9/12/13

APPROVED: FOR PUBLIC WATER AND PUBLIC SEWERAGE SYSTEMS

B Nixon for Maura Rossman 12/19/2013
COUNTY HEALTH OFFICER, HOWARD COUNTY HEALTH DEPARTMENT — DATE

ADDRESS CHART	
LOT/PARCEL	STREET ADDRESS
8/135	11130 WILLOW BOTTOM DRIVE, COLUMBIA, MD. 21044

PERMIT INFORMATION CHART					
SUBDIVISION NAME			SECTION/AREA		LOT/PARCEL NO.
VILLAGE OF HARPERS CHOICE			2/1		8/135
PLAT # OR L/F	GRID #	ZONING	TAX MAP NO.	ELECTION DISTRICT	CENSUS TRACT
9308 & 9309	NA	NT-05	29	5TH	605502
WATER CODE			SEWER CODE		
214 W4S			214 W4S		

DETAIL REFERENCE PLAN

HOBBIT'S GLEN GOLF CLUBHOUSE

PROPERTY OF COLUMBIA ASSOCIATION, INC.

REVISIONS

STATE OF MARYLAND — ALBERT F. EDWARDS — 16144 — REGISTERED PROFESSIONAL ENGINEER

PROFESSIONAL CERTIFICATION
I HEREBY CERTIFY THAT THESE DOCUMENTS WERE PREPARED OR APPROVED BY ME, AND THAT I AM A DULY LICENSED PROFESSIONAL ENGINEER UNDER THE LAWS OF THE STATE OF MARYLAND, LICENSE NO. 16144, EXPIRATION DATE: 09/19/14.

10.3.2013

SITE RESOURCES incorporated
Comprehensive Land Planning & Site Design Services
16215 Jarrettsville Pike • Phoenix, Maryland 21131
(410) 683-3388 • fax (410) 683-3389

DRAWN BY: FJP/JLH	CONTRACT NO.: -
DESIGNED BY: FJP/JLH	SCALE: AS SHOWN
CHECKED BY: AFE	SRI PROJECT NO: 11059
DATE: SEPTEMBER 13, 2013	SHEET C1.24 10 OF 38

SDP-13-027

SECTION NUMBER	ROAD AND STREET CLASSIFICATION	CALIFORNIA BEARING RATIO (CBR) / PAVEMENT MATERIAL (INCHES)	MIN HMA WITH GAB 3 TO <5	5 TO <7	≥ 7	HMA WITH CONSTANT GAB 3 TO <5	5 TO <7	≥ 7
P-1	PARKING BAYS: RESIDENTIAL AND NON-RESIDENTIAL PARKING DRIVE AISLES: RESIDENTIAL AND NON-RESIDENTIAL WITH NO MORE THAN 2 HEAVY TRUCKS PER DAY	HMA SUPERPAVE FINAL SURFACE 9.5 MM PG 64-22, LEVEL 1 (ESAL)	1.5	1.5	1.5	1.5	1.5	1.5
		HMA SUPERPAVE INTERMEDIATE SURFACE (NA)	NA	NA	NA	NA	NA	NA
		HMA SUPERPAVE BASE 19.0 MM, PG 64-22, LEVEL 1 (ESAL)	2.0	2.0	2.0	3.5	3.0	2.5
		GRADED AGGREGATE BASE (GAB)	8.5	7.0	5.0	4.0	4.0	4.0
P-2	PARKING DRIVE AISLES: RESIDENTIAL AND NON-RESIDENTIAL WITH NO MORE THAN 10 HEAVY TRUCKS PER DAY LOCAL ROADS: ACESS PLACE, ACCESS STREET CUL-DE-SACS: RESIDENTIAL	HMA SUPERPAVE FINAL SURFACE 9.5 MM, PG 64-22, LEVEL 1 (ESAL)	1.5	1.5	1.5	1.5	1.5	1.5
		HMA SUPERPAVE INTERMEDIATE SURFACE 9.5 MM, PG 64-22, LEVEL 1 (ESAL)	1.0	1.0	1.0	1.0	1.0	1.0
		HMA SUPERPAVE BASE 19.0 MM, PG 64-22, LEVEL 1 (ESAL)	2.0	2.0	2.0	3.5	2.0	2.0
		GRADED AGGREGATE BASE (GAB)	8.0	4.0	3.0	4.0	4.0	4.0
P-3	PARKING DRIVE AISLES: RESIDENTIAL AND NON-RESIDENTIAL WITH NO MORE THAN 10 HEAVY TRUCKS PER DAY LOCAL ROADS: ACCESS PLACE, ACCESS STREET CUL-DE-SACS: NON-RESIDENTIAL MINOR COLLECTORS: RESIDENTIAL	HMA SUPERPAVE FINAL SURFACE 9.5 MM, PG 64-22, LEVEL 1 (ESAL)	1.5	1.5	1.5	1.5	1.5	1.5
		HMA SUPERPAVE INTERMEDIATE SURFACE 9.5 MM, PG 64-22, LEVEL 1 (ESAL)	1.0	1.0	1.0	1.0	1.0	1.0
		HMA SUPERPAVE BASE 19.0 MM, PG 64-22, LEVEL 1 (ESAL)	3.0	3.0	3.0	4.5	3.0	2.0
		GRADED AGGREGATE BASE (GAB)	10.0	6.0	3.0	6.0	6.0	6.0
P-4	MINOR COLLECTORS: NON-RESIDENTIAL MAJOR COLLECTORS	HMA SUPERPAVE FINAL SURFACE 12.5 MM, PG 64-22, LEVEL 2 (LOW ESAL)	2.0	2.0	2.0	2.0	2.0	2.0
		HMA SUPERPAVE INTERMEDIATE SURFACE 12.5 MM, PG 64-22, LEVEL 2 (LOW ESAL)	2.0	2.0	2.0	2.0	2.0	2.0
		HMA SUPERPAVE BASE 19.0 MM, PG 64-22, LEVEL 2 (LOW ESAL)	4.0	4.0	3.0	6.0	5.0	3.0
		GRADED AGGREGATE BASE (GAB)	13.0	7.0	4.0	6.0	6.0	6.0

Notes:
1) HEAVY TRUCKS ARE DEFINED AS THOSE WITH SIX (6) WHEELS OR MORE INCLUDING GARBAGE TRUCKS.
2) HMA SUPERPAVE LAYERS SHALL BE PLACED IN APPROPRIATE COMPACTED LIFT THICKNESS: 19.0 MM BASE (2.0" MIN TO 4.0" MAX), 12.5 MM SURFACE (1.5" MIN TO 3.0" MAX), AND 9.5 MM SURFACE (1.0" MIN TO 2.0" MAX)
3) GRADED AGGREGATE BASE (GAB) TO BE PLACED AND COMPACTED IN 6" MAX COMPACTED THICKNESS LAYERS.
4) THE INTERMEDIATE SURFACE COURSE LAYER MUST BE PLACED WITHIN 2 WEEKS OF PLACEMENT OF BASE COURSE, AND IS REQUIRED PRIOR TO SUBSTANTIAL COMPLETION INSPECTION AND BOND REDUCTION.
5) IN LIEU OF PLACING THE INTERMEDIATE SURFACE COURSE LAYER FOR COMMERCIAL/INDUSTRIAL ENTRANCE APRONS WITHIN THE COUNTY RIGHT-OF-WAY WHERE AUXILIARY LANES ARE NOT REQUIRED, THE THICKNESS OF THE INTERMEDIATE PAVEMENT LAYER CAN BE ADDED TO THE REQUIRED THICKNESS OF THE BASE ASPHALT LAYER.
6) THE CONSTRUCTION DRAWINGS SHALL SHOW THE PAVING SECTION, ROAD CLASSIFICATION AND CRB VALUE FOR EACH ROADWAY

HMA SUPERPAVE FINAL SURFACE
HMA SUPERPAVE INTERMEDIATE SURFACE
HMA SUPERPAVE BASE
GRADED AGGREGATE BASE (GAB)

Howard County, Maryland Department of Public Works — Approved: Chief, Bureau of Engineering — Revised — Revised 5/7/2007 Approved — PAVING SECTIONS P-1 to P-4 — Detail R-2.01

① HEAVY-DUTY BITUMINOUS PAVING

NOT TO SCALE

Notes: 1) HEAVY TRUCKS ARE DEFINED AS THOSE WITH SIX (6) WHEELS OR MORE INCLUDING GARBAGE TRUCKS. 2) HMA SUPERPAVE LAYERS SHALL BE PLACED IN APPROPRIATE COMPACTED LIFT THICKNESS: 19.0 MM BASE (2.0" MIN TO 4.0" MAX), 12.5 MM SURFACE (1.5" MIN TO 3.0" MAX), AND 9.5 MM SURFACE (1.0" MIN TO 2.0" MAX) 3) GRADED AGGREGATE BASE (GAB) TO BE PLACED AND COMPACTED IN 6" MAX COMPACTED THICKNESS LAYERS. 4) THE INTERMEDIATE SURFACE COURSE LAYER MUST BE PLACED WITHIN 2 WEEKS OF PLACEMENT OF BASE COURSE, AND IS REQUIRED PRIOR TO SUBSTANTIAL COMPLETION INSPECTION AND BOND REDUCTION. 5) IN LIEU OF PLACING THE INTERMEDIATE SURFACE COURSE LAYER FOR COMMERCIAL/INDUSTRIAL ENTRANCE APRONS WITHIN THE COUNTY RIGHT-OF-WAY WHERE AUXILIARY LANES ARE NOT REQUIRED, THE THICKNESS OF THE INTERMEDIATE PAVEMENT LAYER CAN BE ADDED TO THE REQUIRED THICKNESS OF THE BASE ASPHALT LAYER. 6) THE CONSTRUCTION DRAWINGS SHALL SHOW THE PAVING SECTION, ROAD CLASSIFICATION AND CRB VALUE FOR EACH ROADWAY
Howard County, Maryland Department of Public Works — PAVING SECTIONS P-1 to P-4 — Detail R-2.01

② INTERMEDIATE-DUTY BITUMINOUS PAVING

NOT TO SCALE

Howard County, Maryland Department of Public Works — PAVING SECTIONS P-1 to P-4 — Detail R-2.01

③ LIGHT-DUTY BITUMINOUS PAVING

NOT TO SCALE

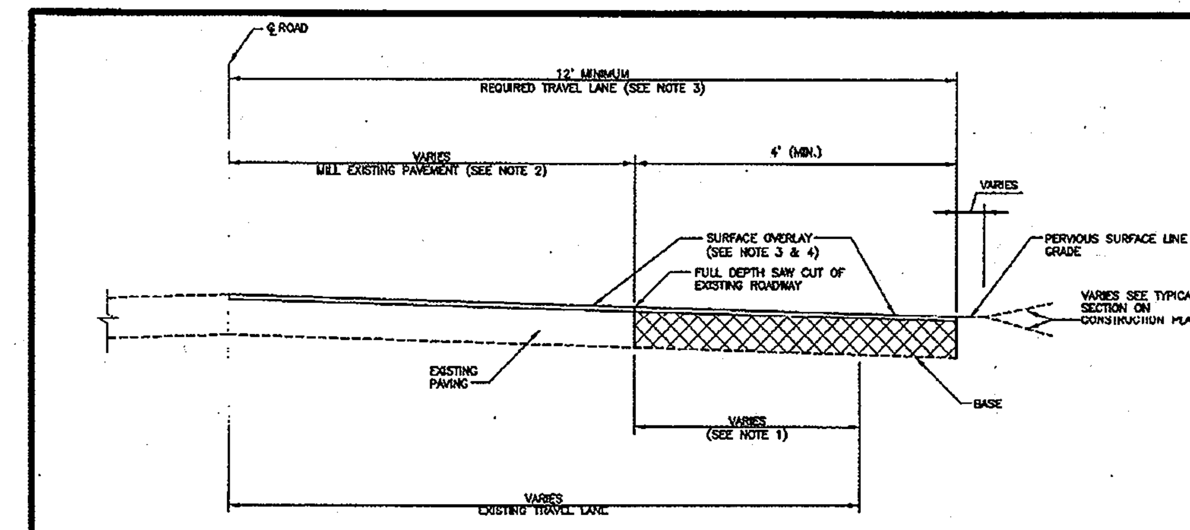

NOTES:
1. WHEN EXISTING TRAVEL LANE IS LESS THAN THE REQUIRED 12' LANE CONTRACTOR SHALL REMOVE A MINIMUM OF 1' FULL DEPTH OF THE EXISTING ROADWAY. IF CURB AND GUTTER IS INSTALLED, PROVIDE A MINIMUM OF 4' OF WIDENING FROM FACE OF GUTTER PAN.
2. THE EXISTING PAVEMENT TO BE RESURFACED SHALL BE MILLED AT DEPTH OF 1 1/2" (MINIMUM).
3. THE RESURFACING SHALL BE PLACED TO THE CENTERLINE OF THE ROADWAY.
4. RESURFACING COURSE TO BE EQUAL TO THE SURFACE COURSE OF THE TYPICAL PAVEMENT SECTION.

Howard County, Maryland Department of Public Works — Existing Roadway Widening Strip — Detail R-1.08

④ ASPHALT PAVEMENT & REPAIR DETAIL

NOT TO SCALE

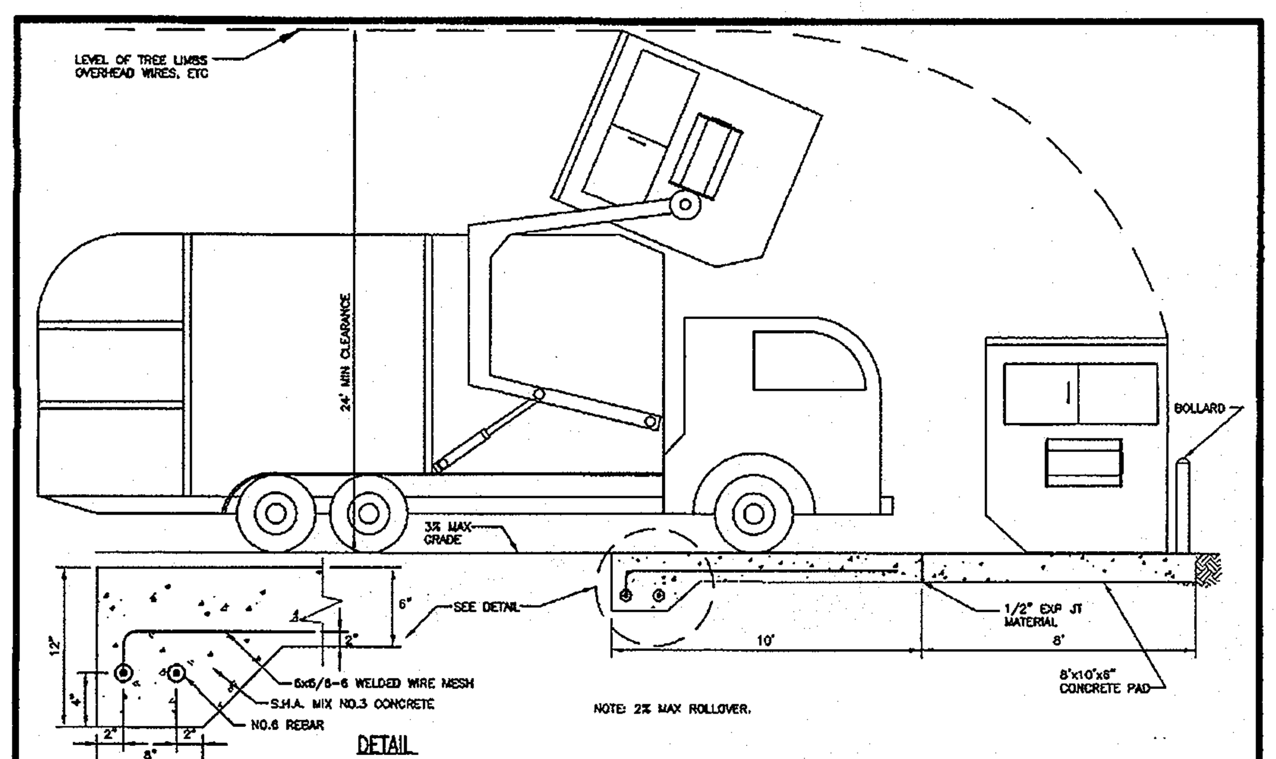

Howard County, Maryland Department of Public Works — SOLID WASTE Service Pad — Detail R-8.03

⑤ HEAVY-DUTY CONCRETE

NOT TO SCALE

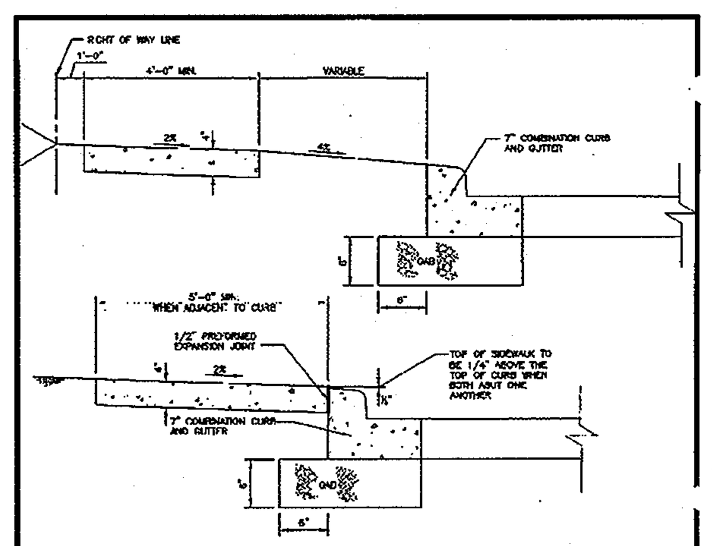

NOTES:
1. SIDEWALK TO BE SCRIBED IN 5'-0" MAXIMUM SQUARES.
2. EXPANSION JOINTS ACROSS THE SIDEWALK NOT TO BE MORE THAN 15' APART.
3. 1/2" PREFORMED EXPANSION MATERIAL IN EXPANSION JOINTS TO BE KEPT 1/4" BELOW SURFACE OF SIDEWALK.
4. CONCRETE TO BE MIX NO.3.
5. WHEN SIDEWALK ABUTS CURB, SIDEWALK SHALL BE 1/4" ABOVE CURB WITH 1/2" PREFORMED EXPANSION JOINT BETWEEN SIDEWALK AND CURB.
6. ON LONGITUDINAL SIDEWALK GRADES OF 5% OR GREATER, A CONCRETE HEADER, 6" THICK AND 6" DEEP BELOW THE NORMAL 4" SIDEWALK THICKNESS SHALL BE CONSTRUCTED FOR THE FULL WIDTH OF THE SIDEWALK AT INTERVALS OF 48 FEET. THE HEADERS SHALL BE PLACED AT THE EXPANSION JOINT LOCATIONS AND SHALL BE MONOLITHIC WITH THE SIDEWALK.
7. SIDEWALK WIDTH ADJACENT TO CURB SHALL BE 5'-0" MINIMUM EXCEPT SIDEWALK ADJACENT TO CURB IN CUL-DE-SAC BULBS MAY BE 4'-0" WIDE.
8. SIDEWALK LOCATED 2' OR MORE FROM CURB MAY BE 4'-0" IN WIDTH WITH A 5'x5' PAVED SECTION PLACED 200' APART.
9. 4'-0" SIDEWALK REQUIRES A PASSING AREA (SEE DETAIL R-4.01).

Howard County, Maryland Department of Public Works — Concrete Sidewalk — Detail R-3.05

⑥ CONCRETE SIDEWALK

NOT TO SCALE

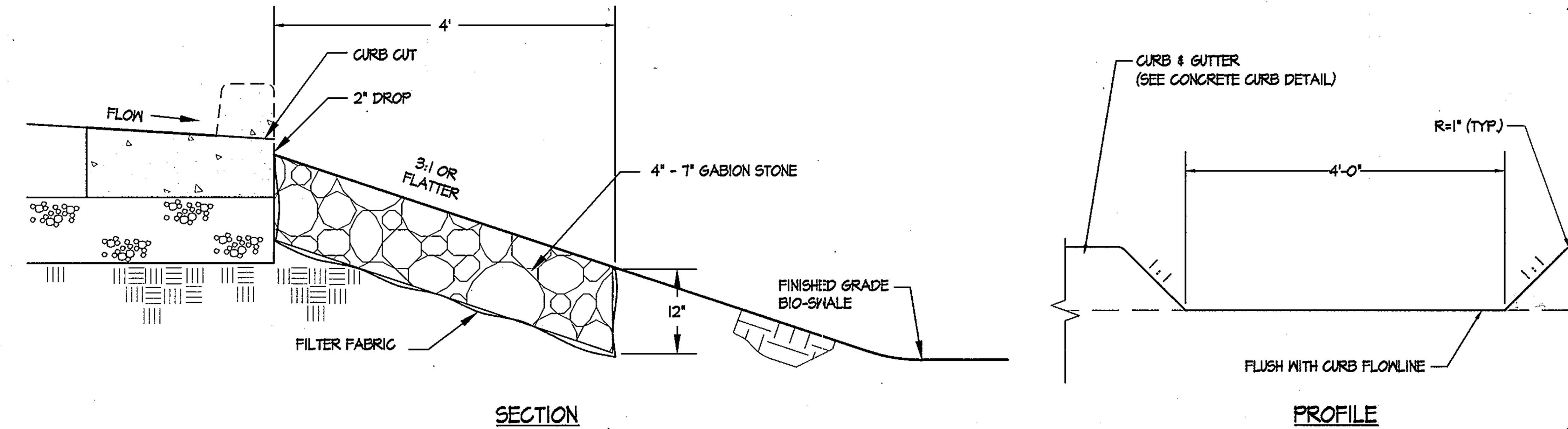

NOTE:
1. DIMENSIONS 4' X 4' X 12" TO BE INSTALLED AT EACH CURB CUT
2. MAINTAIN GUTTER SLOPE THROUGH CURB CUT OPENING.

⑦ CURB CUT STONE OUTLET DETAIL

NOT TO SCALE

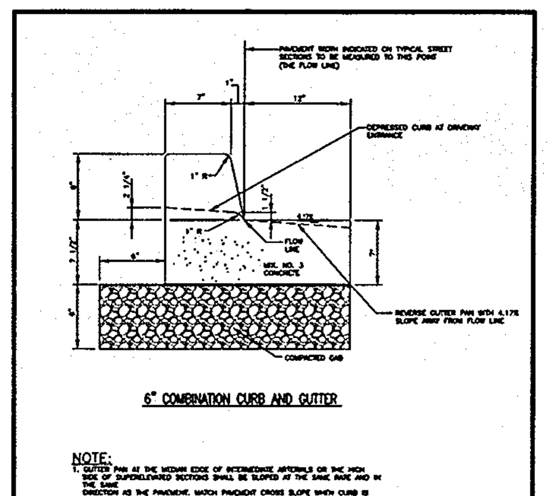

NOTE:

Howard County, Maryland Department of Public Works — CURB AND GUTTER 6" Combination Curb and Gutter Private — Detail R-9.01

⑧ CONCRETE CURB & GUTTER

NOT TO SCALE

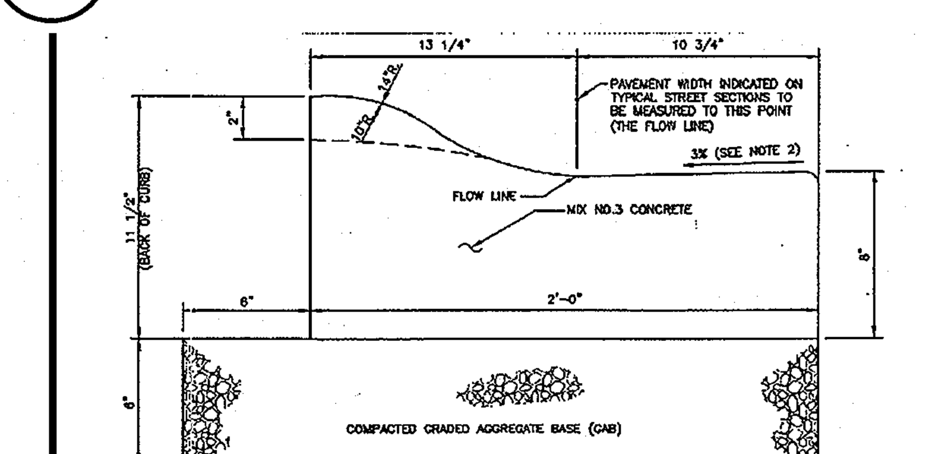

NOTE: MODIFIED COMBINATION CURB AND GUTTER
1. A REVERSE GUTTER PAN SHALL HAVE A GUTTER SLOPE OF 4.17% AWAY FROM THE FLOW LINE, AND SHALL NOT BE USED WHERE THIS DRAINAGE CREATES A HAZARDOUS CONDITION.
2. GUTTER PAN AT THE MEDIAN EDGE OF INTERMEDIATE ARTERIALS OR THE HIGH SIDE OF SUPERELEVATED SECTIONS SHALL BE SLOPED AT THE SAME RATE AND IN THE SAME DIRECTION AS THE PAVEMENT. MATCH PAVEMENT CROSS SLOPE WHEN CURB IS LOCATED ON THE LOW SIDE OF SUPERELEVATED SECTION AND THE RATE OF SUPERELEVATION IS GREATER THAN 3% FOR MODIFIED CURB & GUTTER.
3. A MINIMUM OF TWO (2) FEET OF COMPACTED STABILIZED EARTH, OR EQUIVALENT, SHALL SUPPORT THE ENTIRE BACK OF CURB.
4. POSITIVE DRAINAGE SHALL BE PROVIDED BOTH BEHIND THE CURB AND ALONG THE GUTTER AND FLOW LINE.

Howard County, Maryland Department of Public Works — CURB AND GUTTER 7" & Modified — Detail R-3.01

⑨ MOUNTABLE CURB & GUTTER

NOT TO SCALE

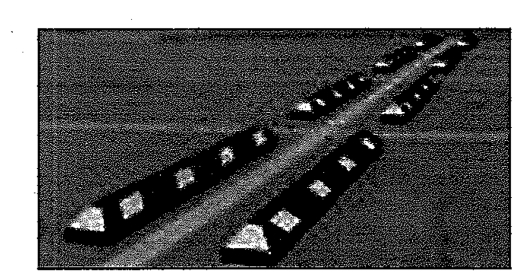

MANUFACTURER: GNR TECHNOLOGIES
ADDRESS: 990 UPTON
LA SALLE, QUEBEC CANADA H8R 2T9
CONTACT: (P) 1.800.641-4148
WEBSITE: WWW.GNRTECH.COM
PRODUCT: PARK-IT CURB - 6' LENGTH
OR APPROVED EQUAL
MATERIALS: 100% RECYCLED RUBBER
MARKING: YELLOW REFLECTIVE IN-MOLDED MARKING TAPE

⑩ WHEEL STOPS

N.T.S.

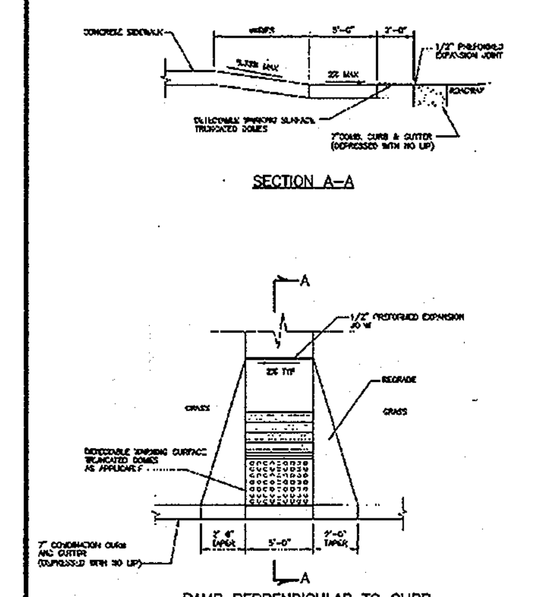

Howard County, Maryland Department of Public Works — SIDEWALK RAMP Layout & Grading Perpendicular to Curb — Detail R-4.05

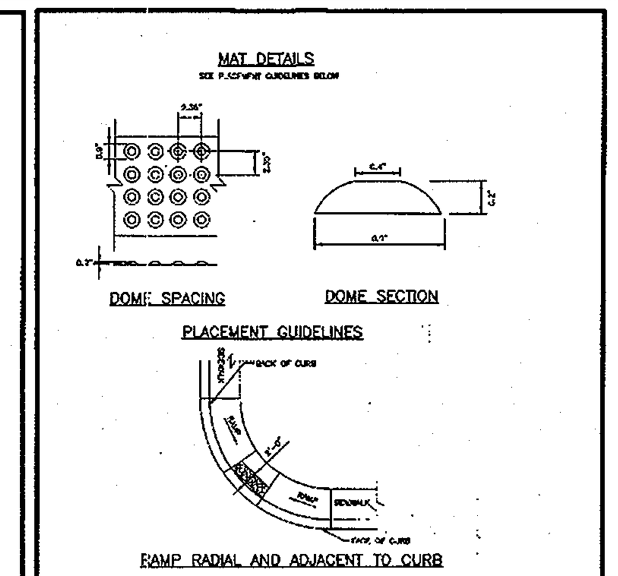

Howard County, Maryland Department of Public Works — SIDEWALK RAMP Detectable Warning Truncated Domes — Detail R-4.07

⑪ SIDEWALK RAMP & DOMES

NOT TO SCALE

APPROVED: DEPARTMENT OF PLANNING & ZONING	
CHIEF, DEVELOPMENT ENGINEERING DIVISION	1-17-14 DATE
CHIEF, DIVISION OF LAND DEVELOPMENT	1-23-14 DATE
DIRECTOR	1/29/14 DATE

APPROVED
PLANNING BOARD OF HOWARD COUNTY
DATE 9/12/13

APPROVED: FOR PUBLIC WATER AND PUBLIC SEWERAGE SYSTEMS
COUNTY HEALTH OFFICER — 12/19/2013 DATE
HOWARD COUNTY HEALTH DEPARTMENT

ADDRESS CHART	
LOT/PARCEL	STREET ADDRESS
8/135	11130 WILLOW BOTTOM DRIVE, COLUMBIA, MD. 21044

PERMIT INFORMATION CHART					
SUBDIVISION NAME: VILLAGE OF HARPERS CHOICE			SECTION/AREA: 2/1		LOT/PARCEL NO.: 8/135
PLAT # OR L/F: 9308 & 9309	GRID #: NA	ZONING: NT-OS	TAX MAP NO.: 29	ELECTION DISTRICT: 5TH	CENSUS TRACT: 605502
WATER CODE: 214 W&S			SEWER CODE: 214 W&S		

SITE DETAILS

HOBBIT'S GLEN GOLF CLUBHOUSE

PROPERTY OF COLUMBIA ASSOCIATION, INC.

REVISIONS

PROFESSIONAL CERTIFICATION 11-26-13
I HEREBY CERTIFY THAT THESE DOCUMENTS WERE PREPARED OR APPROVED BY ME, AND THAT I AM A DULY LICENSED PROFESSIONAL ENGINEER UNDER THE LAWS OF THE STATE OF MARYLAND, LICENSE NO. 16144, EXPIRATION DATE: 08/19/14.

SITE RESOURCES incorporated
Comprehensive Land Planning & Site Design Services
14315 Jarrettsville Pike • Phoenix, Maryland 21131
(410) 683-3388 • fax (410) 683-3389

DRAWN BY: FJP	CONTRACT NO.: -
DESIGNED BY: FJP	SCALE: AS SHOWN
CHECKED BY: AFE	SRI PROJECT NO: 11059
DATE: SEPTEMBER 13, 2013	SHEET C2.01 11 OF 38

SDP-13-027

MANUFACTURER: HANOVER ARCHITECTURAL PRODUCTS
ADDRESS: 5000 HANOVER ROAD
HANOVER, PA. 17331
CONTACT: (P) 1.717.637.0500
(F) 717.637.7145
WEBSITE: WWW.HANOVERPAVERS.COM
PRODUCT: TRADITION PRESTIGE BRICK
SIZE: 4"X8"
COLOR: CHOCOLATE / TAN BLEND
PATTERN: 45° HERRINGBONE

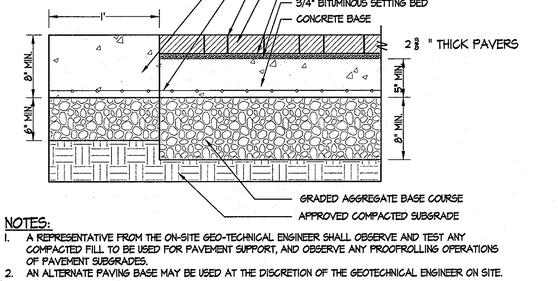

NOTES:
1. A REPRESENTATIVE FROM THE ON-SITE GEO-TECHNICAL ENGINEER SHALL OBSERVE AND TEST ANY COMPACTED FILL TO BE USED FOR PAVEMENT SUPPORT, AND OBSERVE ANY PROOFROLLING OPERATIONS OF PAVEMENT SUBGRADES.
2. AN ALTERNATE PAVING BASE MAY BE USED AT THE DISCRETION OF THE GEOTECHNICAL ENGINEER ON SITE.

1 DRIVEWAY PAVERS

NOT TO SCALE

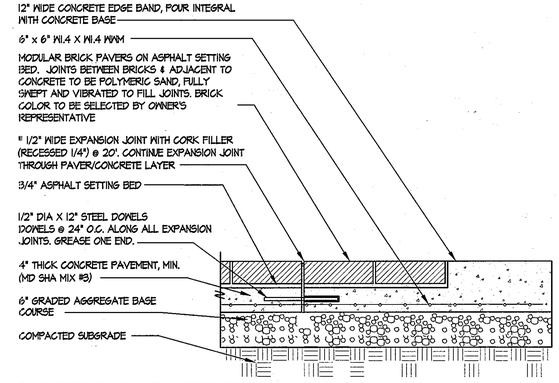

* NOTE: EXPANSION JOINT TO BE CONTINUOUS AND RUN ALONG THE LENGTH OF THE PAVER.

2 BRICK PAVER

NOT TO SCALE

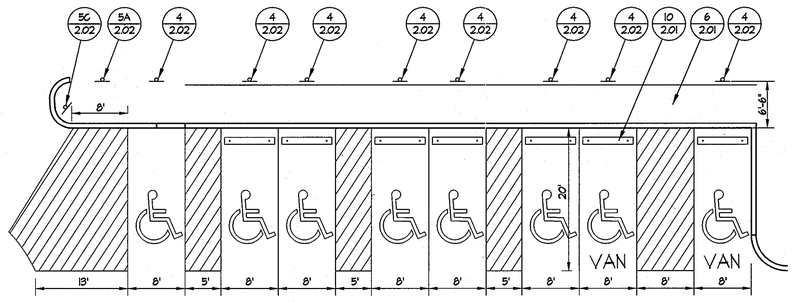

STANDARD PARKING VAN PARKING

NOTES:
1. HANDICAP PARKING AND ACCESS SHALL COMPLY WITH THE CURRENT ADA REQUIREMENTS AT TIME OF CONSTRUCTION.
2. PARKING STALL AND ACCESS AISLE WIDTHS ARE SHOWN AS MINIMUMS.
3. FLUSH CURB PER HOWARD COUNTY DESIGN MANUAL VOLUME IV DETAIL R-3.01.

3 HANDICAP PARKING CONFIGURATION

NOT TO SCALE

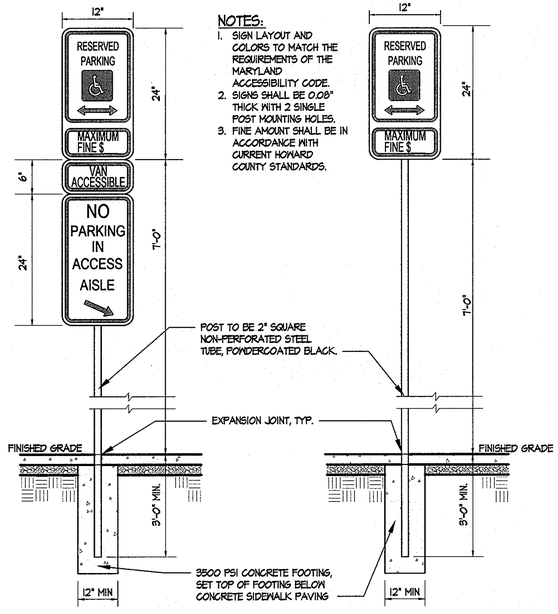

NOTES:
1. SIGN LAYOUT AND COLORS TO MATCH THE REQUIREMENTS OF THE MARYLAND ACCESSIBILITY CODE.
2. SIGNS SHALL BE 0.08" THICK WITH 2 SINGLE POST MOUNTING HOLES.
3. FINE AMOUNT SHALL BE IN ACCORDANCE WITH CURRENT HOWARD COUNTY STANDARDS.

VAN ACCESSIBLE SIGN ACCESSIBLE SIGN

4 ACCESSIBLE PARKING SIGNS

NOT TO SCALE

A NO PARKING SIGN MMUTCD R7-1
B FIRE LANE SIGN
C DO NOT ENTER SIGN MMUTCD R5-1

NOTE:
1. SIGN LAYOUT AND COLORS TO MATCH THE REQUIREMENTS OF THE MARYLAND MANUAL ON UNIFORM TRAFFIC CONTROL DEVICES.
2. SIGNS SHALL BE 0.08" THICK WITH 2 SINGLE POST MOUNTING HOLES.
3. POSTED MAXIMUM FINE SHALL BE IN ACCORDANCE WITH LOCAL CODE.
4. SIGNS SHALL BE ATTACHED TO POST WITH STAINLESS STEEL TAMPER PROOF FASTENERS.
5. SIGNS SHALL COMPLY WITH APPLICABLE MARYLAND MANUAL ON UNIFORM TRAFFIC CONTROL DEVICES GUIDELINES.
6. PROVIDE SHOP DRAWINGS OF SIGN LAYOUTS. FINAL SIGN LAYOUT TO BE APPROVED BY OWNER'S REPRESENTATIVE PRIOR TO ORDERING AND INSTALLATION.

5 PARKING LOT SIGNAGE

NOT TO SCALE

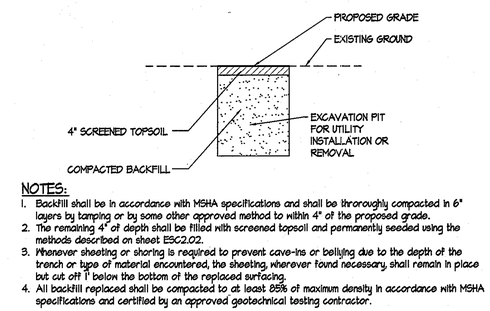

NOTES:
1. Backfill shall be in accordance with MSHA specifications and shall be throroughly compacted in 6" layers by tamping or by some other approved method to within 4" of the proposed grade.
2. The remaining 4" of depth shall be filled with screened topsoil and permanently seeded using the methods described on sheet ESC2.02.
3. Whenever sheeting or shoring is required to prevent cave-ins or bellying due to the depth of the trench or type of material encountered, the sheeting, wherever found necessary, shall remain in place but cut off 1' below the bottom of the replaced surfacing.
4. All backfill replaced shall be compacted to at least 95% of maximum density in accordance with MSHA specifications and certified by an approved geotechnical testing contractor.

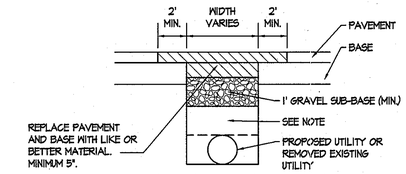

NOTE:
Backfill in trenches shall be in accordance with MSHA specifications and shall be throroughly compacted in 6" layers for the full depth of the trenches by tamping or by some other approved method to within 1' of the top of subgrade. The remaining depth of the trench shall be filled with thoroughly compacted crushed stone, slag or gravel. Whenever sheeting or shoring is required to prevent cave-ins or bellying due to the depth of the trench or type of material encountered, the sheeting, wherever found necessary, shall remain in place but cut off 1' below the bottom of the replaced surfacing. All backfill replaced shall be compacted to at least 95% of maximum density in accordance with MSHA specifications and certified by an approved geotechnical testing contractor. In lieu of controlled fill, flowable fill in accordance with MSHA specifications may be utilized.

UTILITY	COVER
TELEPHONE & CABLE	24" MIN.
ELECTRIC CABLE	36" ±
SEWER LINE	48" MIN.
WATER LINE	42" MIN.
CONCRETE, STEEL PIPES	12" MIN

6 SURFACE RESTORATION DETAIL

NOT TO SCALE

7 LANDSCAPE BOULDER DETAIL

N.T.S.

APPROVED: DEPARTMENT OF PLANNING & ZONING

CHIEF, DEVELOPMENT ENGINEERING DIVISION — DATE 1-17-14

CHIEF, DIVISION OF LAND DEVELOPMENT — DATE 1-22-14

DIRECTOR — DATE 1/28/14

APPROVED
PLANNING BOARD OF HOWARD COUNTY
DATE 9/12/13

APPROVED: FOR PUBLIC WATER AND PUBLIC SEWERAGE SYSTEMS

COUNTY HEALTH OFFICER — DATE 12/19/2013
HOWARD COUNTY HEALTH DEPARTMENT

ADDRESS CHART	
LOT/PARCEL	STREET ADDRESS
B/135	11130 WILLOW BOTTOM DRIVE, COLUMBIA, MD. 21044

PERMIT INFORMATION CHART					
SUBDIVISION NAME: VILLAGE OF HARPERS CHOICE			SECTION/AREA: 2/1		LOT/PARCEL NO.: B/135
PLAT # OR L/F: 9308 & 9309	GRID #: NA	ZONING: NT-05	TAX MAP NO.: 29	ELECTION DISTRICT: 5TH	CENSUS TRACT: 605502
WATER CODE: 214 M&S			SEWER CODE: 214 M&S		

SITE DETAILS

HOBBIT'S GLEN GOLF CLUBHOUSE

PROPERTY OF COLUMBIA ASSOCIATION, INC.

REVISIONS

PROFESSIONAL ENGINEER'S CERTIFICATE: I HEREBY CERTIFY THAT THESE DOCUMENTS WERE PREPARED OR APPROVED BY ME, AND THAT I AM A DULY LICENSED PROFESSIONAL ENGINEER UNDER THE LAWS OF THE STATE OF MARYLAND, LICENSE NO. 16144, EXPIRATION DATE: 09/19/14.

SITE RESOURCES incorporated
Comprehensive Land Planning & Site Design Services
14315 Jarrettsville Pike • Phoenix, Maryland 21131
(410) 683-3388 • fax (410) 683-3389

DRAWN BY: FJP	CONTRACT NO.: -
DESIGNED BY: FJP	SCALE: AS SHOWN
CHECKED BY: AFE	SRI PROJECT NO: 11059
DATE: SEPTEMBER 13, 2013	SHEET C2.02 12 OF 38

SDP-13-027

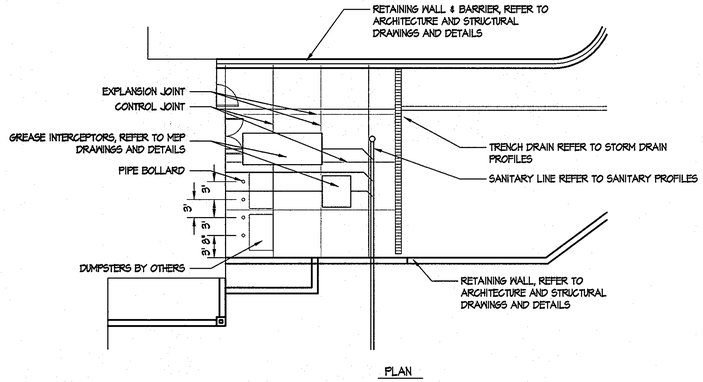

PLAN

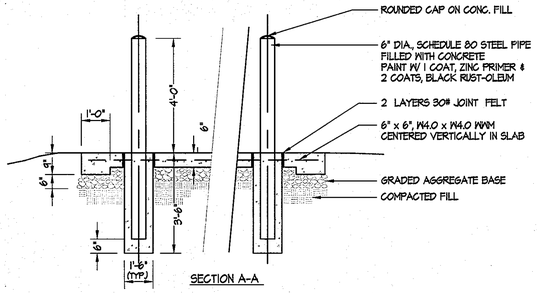

SECTION A-A

1 DUMPSTER PAD & BOLLARD

N.T.S.

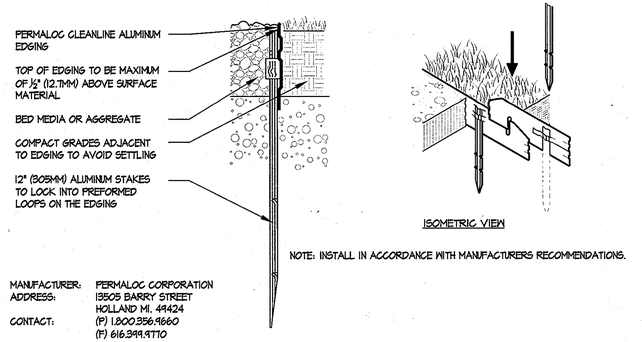

ISOMETRIC VIEW

NOTE: INSTALL IN ACCORDANCE WITH MANUFACTURERS RECOMMENDATIONS.

MANUFACTURER:	PERMALOC CORPORATION
ADDRESS:	13505 BARRY STREET HOLLAND MI. 49424
CONTACT:	(P) 1.800.356.9660 (F) 616.399.9770
WEBSITE:	WWW.PERMALOC.COM
PRODUCT:	CLEANLINE COMMERCIAL GRADE LANDSCAPE EDGING OR APPROVED EQUAL
SIZE:	3/16" X 4"
COLOR:	BLACK DURAFLEX

2 LANDSCAPE EDGING

NOT TO SCALE

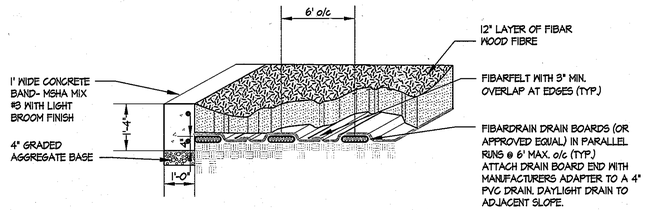

3 TURN HOUSE PATIO SURFACE

NOT TO SCALE

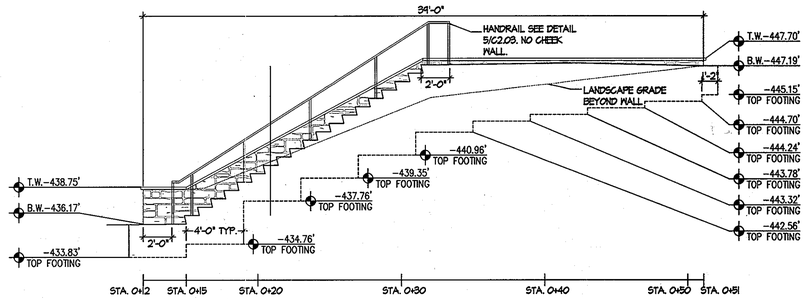

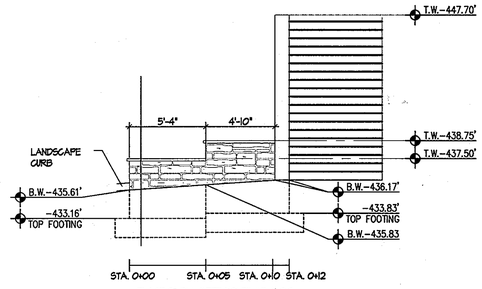

PLACE 2" DIA. WEEP HOLES AT 4' O.C.

4 RETAINING WALL #6

SCALE 1"=5'

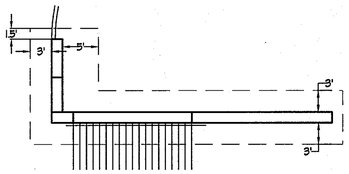

4 RETAINING WALL #6 FOOTING PLAN

SCALE 1"=10'

NOTES:
1. RAILINGS & POST TO BE SHOP FABRICATED OF 1-1/2" O.D. STAINLESS STEEL TUBING OR SQUARE POSTS WITH ALL JOINTS CONTINUOUSLY WELDED.
2. TOP OF RAILING TO BE 36" ABOVE WALKING SURFACE AND STAIR NOSE.
3. RAILING TO EXTEND A MINIMUM OF 12" BEYOND BOTTOM AND TOP RISER.
4. ALL CONCRETE TO BE SHA MIX NO. 3.
5. ALL CHEEK WALL AND STAIR NOSE RADII SHALL BE 1/2".
6. CHEEK WALL SHALL BE 8" ABOVE STAIR NOSE AND WALKING SURFACE.
7. ALL RAILING EXTERIOR RADII SHALL BE 4".
8. RAILING POSTS SHALL BE INSTALLED AT A DEPTH OF 8" INTO CHEEK WALL. CHEEK WALL SHALL BE CORE DRILLED AND POST SET WITH NON-SHRINK GROUT.
9. STAIR TREADS TO RECEIVE LIGHT BRUSHED NON-SLIP FINISH. (SEE SPECS)
10. UNLESS OTHERWISE SHOWN ON PLAN, ALL REBAR SHALL HAVE A CLEARANCE OF 3" FROM SURFACE.
11. PROVIDE HORIZONTAL RAILING AT LANDINGS.
12. SLOPE ANCHOR CEMENT AWAY FROM POSTS AND OCNTAIN CLEANLY WITHIN 2" HOLE.

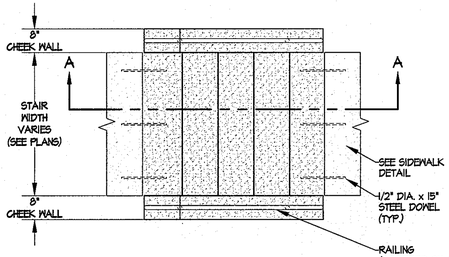

PLAN

RISER (R)	TREAD (T)	SLOPE (S)	OVERHANG (N)
7	11	1/4	1-1/2

ALL DIMENSIONS IN INCHES

RISER (R)	TREAD (T)	SLOPE (S)	OVERHANG (N)
6	12	1/4	1

ALL DIMENSIONS IN INCHES

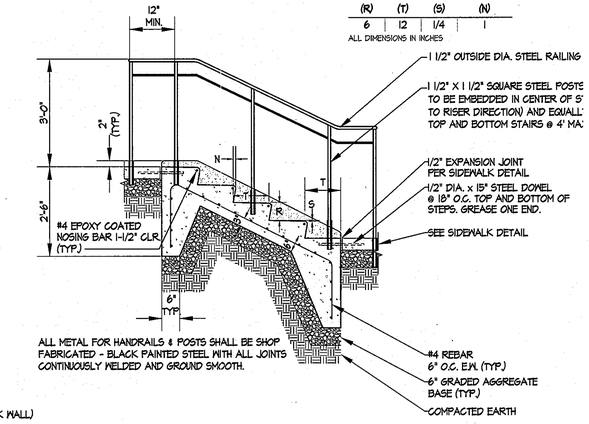

ALL METAL FOR HANDRAILS & POSTS SHALL BE SHOP FABRICATED - BLACK PAINTED STEEL WITH ALL JOINTS CONTINUOUSLY WELDED AND GROUND SMOOTH.

SECTION A-A

5 STAIR AND CHEEK WALLS

N.T.S.

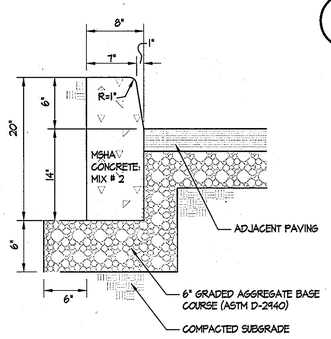

6 LANDSCAPE CURB

NTS

SITE DETAILS

HOBBIT'S GLEN GOLF CLUBHOUSE

PROPERTY OF COLUMBIA ASSOCIATION, INC.

REVISIONS

STATE OF MARYLAND — STEPHEN C. EDWARDS — 21644 — PROFESSIONAL ENGINEER

10-3-2013

PROFESSIONAL CERTIFICATION
I HEREBY CERTIFY THAT THESE DOCUMENTS WERE PREPARED OR APPROVED BY ME, AND THAT I AM A DULY LICENSED PROFESSIONAL ENGINEER UNDER THE LAWS OF THE STATE OF MARYLAND, LICENSE NO. 21644, EXPIRATION DATE: 09/09/14.

SITE RESOURCES incorporated
Comprehensive Land Planning & Site Design Services
14315 Jarrettsville Pike • Phoenix, Maryland 21131
(410) 683-3368 • fax (410) 683-3369

DRAWN BY:	FJP
DESIGNED BY:	FJP
CHECKED BY:	AFE
DATE:	SEPTEMBER 13, 2013
CONTRACT NO.:	-
SCALE:	AS SHOWN
SRI PROJECT NO:	11059
SHEET	C2.03 13 OF 38

APPROVED: DEPARTMENT OF PLANNING & ZONING

CHIEF, DEVELOPMENT ENGINEERING DIVISION — DATE 1/7/14

CHIEF, DIVISION OF LAND DEVELOPMENT — DATE 1-7-2014

DIRECTOR — DATE 1/8/14

APPROVED
PLANNING BOARD OF HOWARD COUNTY
DATE 9/12/13

APPROVED: FOR PUBLIC WATER AND PUBLIC SEWERAGE SYSTEMS

B. Wilson for Maura Rossman — 12/19/2013 DATE
COUNTY HEALTH OFFICER
HOWARD COUNTY HEALTH DEPARTMENT

ADDRESS CHART	
LOT/PARCEL	STREET ADDRESS
8/135	11130 WILLOW BOTTOM DRIVE, COLUMBIA, MD. 21044

PERMIT INFORMATION CHART						
SUBDIVISION NAME: VILLAGE OF HARPERS CHOICE			SECTION/AREA: 2/1		LOT/PARCEL NO.: 8/135	
FLAT # OR L/F: 9308 & 9309	GRID #: NA	ZONING: NT-05	TAX MAP NO.: 29	ELECTION DISTRICT: 5TH	CENSUS TRACT: 605502	
WATER CODE: 214 W&S			SEWER CODE: 214 W&S			

SDP-13-027

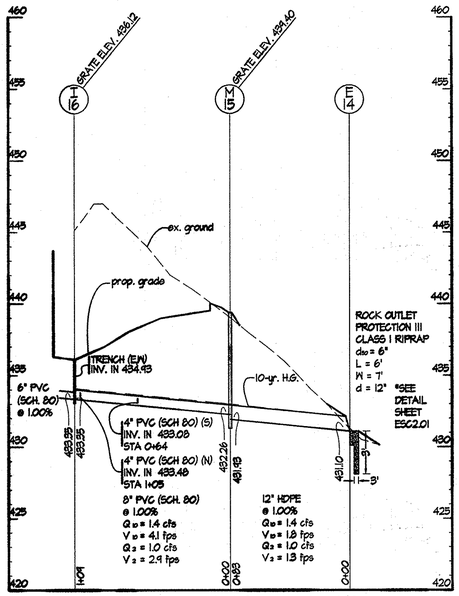

1 PROFILE - I-16 TO E-14

SCALES: HORIZ. 1" = 50'
VERT. 1" = 5'

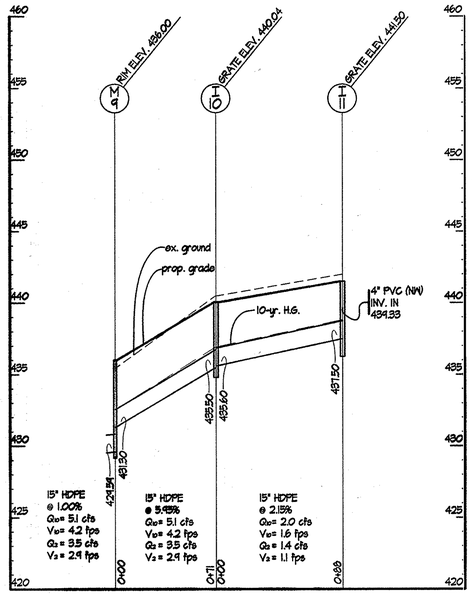

2 PROFILE I-11 TO M-9

SCALES: HORIZ. 1" = 50'
VERT. 1" = 5'

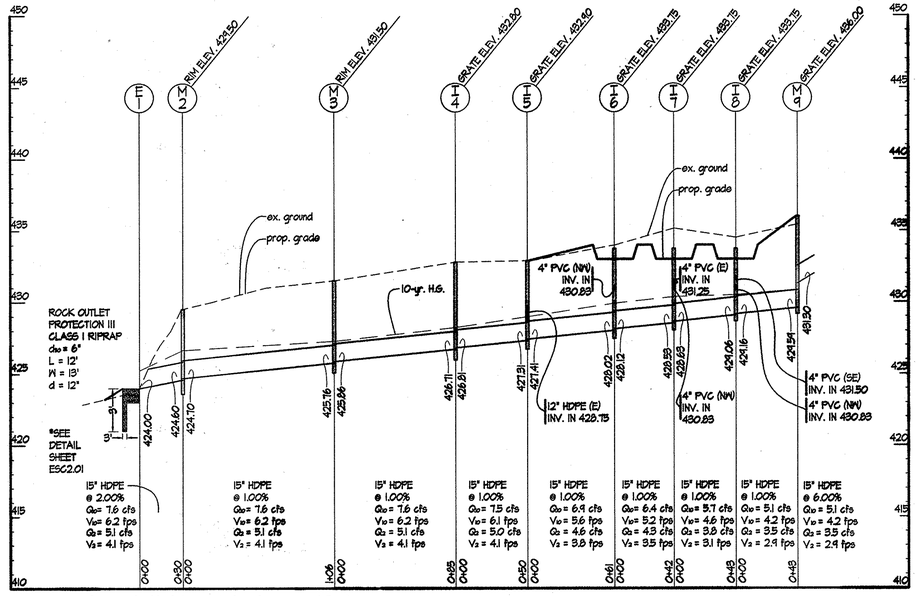

3 PROFILE - M-9 TO E-1

SCALES: HORIZ. 1" = 50'
VERT. 1" = 5'

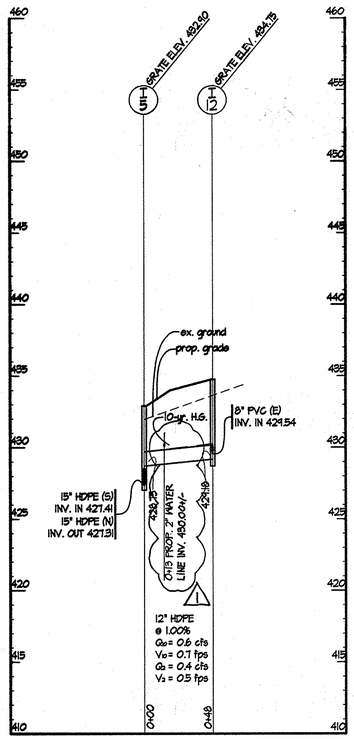

4 PROFILE - I-12 TO I-5

SCALES: HORIZ. 1" = 50'
VERT. 1" = 5'

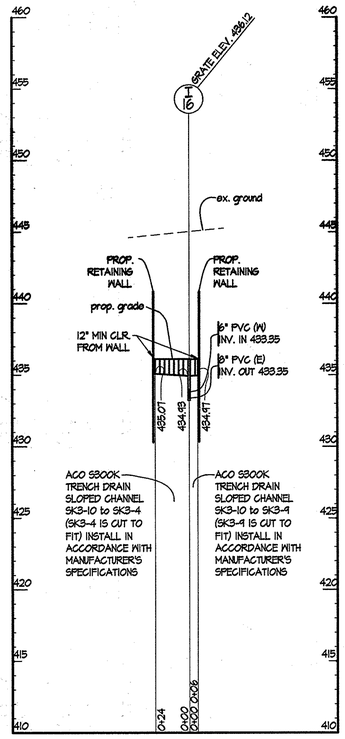

5 TRENCH DRAIN I-16

SCALES: HORIZ. 1" = 50'
VERT. 1" = 5'

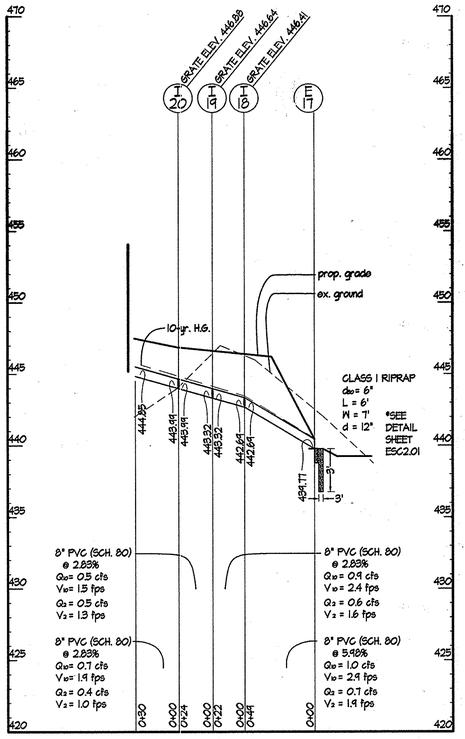

6 PROFILE - I-20 TO E-17

SCALES: HORIZ. 1" = 50'
VERT. 1" = 5'

STRUCTURE SCHEDULE

STRUCTURE NO.	DESCRIPTION	DETAIL REFERENCE	COMMENTS	DETAIL REFERENCE	TOP ELEVATION	INV. IN	INV. OUT
E-1	ADS 1210NP FLARED END SECTION (OR APPROVED EQUAL)	3 / C2.04				424.00	
M-2	NYLOPLAST DRAIN BASIN 2818AG (OR APPROVED EQUAL)	2 / C2.04	NYLOPLAST GRATE 1849GG (OR APPROVED EQUAL)	7 / C2.04	429.50	424.70	424.60
M-3	NYLOPLAST DRAIN BASIN 2818AG (OR APPROVED EQUAL)	2 / C2.04	NYLOPLAST GRATE 1849GG(OR APPROVED EQUAL)	7 / C2.04	431.50	425.86	425.76
I-4	NYLOPLAST DRAIN BASIN 2815AG (OR APPROVED EQUAL)	6 / C2.04	NYLOPLAST GRATE 1849GS (OR APPROVED EQUAL)	1 / C2.04	432.80	426.81	426.71
I-5	NYLOPLAST DRAIN BASIN 2815AG (OR APPROVED EQUAL)	6 / C2.04	NYLOPLAST GRATE 1849GS (OR APPROVED EQUAL)	1 / C2.04	432.90	427.41	427.31
I-6	NYLOPLAST DRAIN BASIN 2815AG (OR APPROVED EQUAL)	6 / C2.04	NYLOPLAST GRATE 1849GD (OR APPROVED EQUAL)	5 / C2.04	433.75	428.13 430.83	428.02
I-7	NYLOPLAST DRAIN BASIN 2815AG (OR APPROVED EQUAL)	6 / C2.04	NYLOPLAST GRATE 1849GD (OR APPROVED EQUAL)	5 / C2.04	433.75	428.53 430.83	428.53
I-8	NYLOPLAST DRAIN BASIN 2815AG (OR APPROVED EQUAL)	6 / C2.04	NYLOPLAST GRATE 1849GD (OR APPROVED EQUAL)	5 / C2.04	433.75	428.16 430.83	428.06
M-9	NYLOPLAST DRAIN BASIN 2818AG (OR APPROVED EQUAL)	2 / C2.04	NYLOPLAST GRATE 1849GG (OR APPROVED EQUAL)	7 / C2.04	436.00	431.30	424.54
I-10	HO.CO. D-4.22 TYPE S INLET		SINGLE S GRATE		440.04	435.60	435.50
I-11	NYLOPLAST DRAIN BASIN 2815AG (OR APPROVED EQUAL)	6 / C2.04	NYLOPLAST GRATE 1849GD (OR APPROVED EQUAL)	5 / C2.04	441.50	434.33	437.50
I-12	NYLOPLAST DRAIN BASIN 2815AG (OR APPROVED EQUAL)	6 / C2.04	NYLOPLAST GRATE 1849GS (OR APPROVED EQUAL)	1 / C2.04	434.75	424.54	424.19
E-14	ADS 1210NP FLARED END SECTION (OR APPROVED EQUAL)	3 / C2.04				431.14	
M-15	HO.CO D-5.12 PRECAST MH - SHALLOW 4' DIAMETER				434.64	432.36	432.03
I-16	TRENCH DRAIN - ACO S300K (OR APPROVED EQUAL)	4 / C2.04	TYPE SK3-400 CATCH BASIN W/ 612 SHORT BASE (OR APPROVED EQUAL)	8 / C2.04	436.12	434.93	433.35
E-17	ADS 1210NP FLARED END SECTION (OR APPROVED EQUAL)	3 / C2.04				434.77	
I-18	NYLOPLAST DRAIN BASIN 2815AG (OR APPROVED EQUAL)	6 / C2.04	NYLOPLAST GRATE 1849GD (OR APPROVED EQUAL)	5 / C2.04	446.41	442.64	442.84
I-19	NYLOPLAST DRAIN BASIN 2815AG (OR APPROVED EQUAL)	6 / C2.04	NYLOPLAST GRATE 1849GD (OR APPROVED EQUAL)	5 / C2.04	446.64	443.32	443.52
I-20	NYLOPLAST DRAIN BASIN 2815AG (OR APPROVED EQUAL)	6 / C2.04	NYLOPLAST GRATE 1849GD (OR APPROVED EQUAL)	5 / C2.04	446.88	443.99	443.99

CONTRACTOR SHALL REFER TO CURRENT HOWARD COUNTY DESIGN MANUAL VOLUME 4 FOR COUNTY STANDARD DETAILS AS NOTED ABOVE.

PIPE SCHEDULE

PIPE LENGTH	PIPE SIZE	TYPE
234'	8"	PVC
131'	12"	HDPE
619'	15"	HDPE

1 THIS SEAL IS FOR REVISION 1 BY SITE RESOURCES, INC.
STATE OF MARYLAND · ROBERT F. EDWARDS · 16148 · PROFESSIONAL ENGINEER
9-9-14

APPROVED: DEPARTMENT OF PLANNING & ZONING
CHIEF, DEVELOPMENT ENGINEERING DIVISION — DATE 1.17.14
CHIEF, DIVISION OF LAND DEVELOPMENT — DATE 1-23-14
DIRECTOR — DATE 1/23/14

APPROVED
PLANNING BOARD OF HOWARD COUNTY
DATE 9/12/13

APPROVED: FOR PUBLIC WATER AND PUBLIC SEWERAGE SYSTEMS
BAHamilton for Maura Rossman — 12/19/2013
COUNTY HEALTH OFFICER, HOWARD COUNTY HEALTH DEPARTMENT — DATE

ADDRESS CHART	
LOT/PARCEL	STREET ADDRESS
B/135	11130 WILLOW BOTTOM DRIVE, COLUMBIA, MD. 21044

PERMIT INFORMATION CHART						
SUBDIVISION NAME: VILLAGE OF HARPERS CHOICE			SECTION/AREA: 2/1			LOT/PARCEL NO.: B/135
PLAT # OR L/F: 9308 & 9309	GRID #: NA	ZONING: NT-05	TAX MAP NO.: 29	ELECTION DISTRICT: 5TH	CENSUS TRACT: 605502	
WATER CODE: 214 M&S			SEWER CODE: 214 M&S			

STORM DRAIN PROFILES

HOBBIT'S GLEN GOLF CLUBHOUSE

PROPERTY OF COLUMBIA ASSOCIATION, INC.

REVISIONS

1 | 08/21/2014 | WATER LINE RELOCATION

STATE OF MARYLAND · ROBERT F. EDWARDS · 16148 · PROFESSIONAL ENGINEER
10-3-2013

PROFESSIONAL CERTIFICATION. I HEREBY CERTIFY THAT THESE DOCUMENTS WERE PREPARED OR APPROVED BY ME, AND THAT I AM A DULY LICENSED PROFESSIONAL ENGINEER UNDER THE LAWS OF THE STATE OF MARYLAND, LICENSE NO. 16148, EXPIRATION DATE: 03/09/14.

SITE RESOURCES incorporated
Comprehensive Land Planning & Site Design Services
14315 Jarrettsville Pike • Phoenix, Maryland 21131
(410) 683-3388 • fax (410) 683-3389

DRAWN BY: JLH	CONTRACT NO.: -
DESIGNED BY: JLH	SCALE: AS SHOWN
CHECKED BY: AFE	SRI PROJECT NO: 11059
DATE: SEPTEMBER 13, 2013	SHEET C3.01 14 OF 38

SDP-13-027

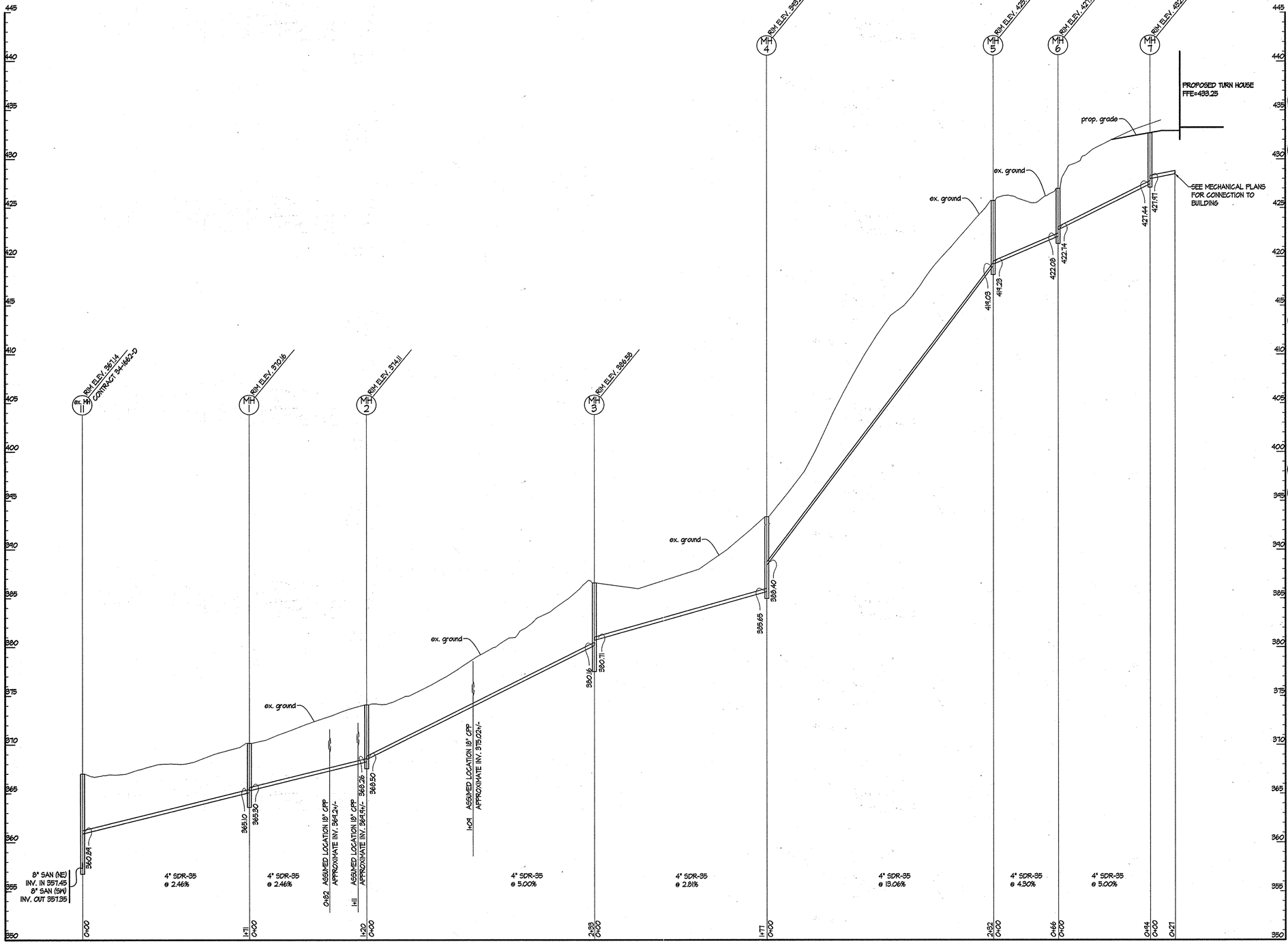

1 PROFILE - TURN HOUSE TO EX. MH-11

SCALES: HORIZ. 1" = 50'
VERT. 1" = 5'

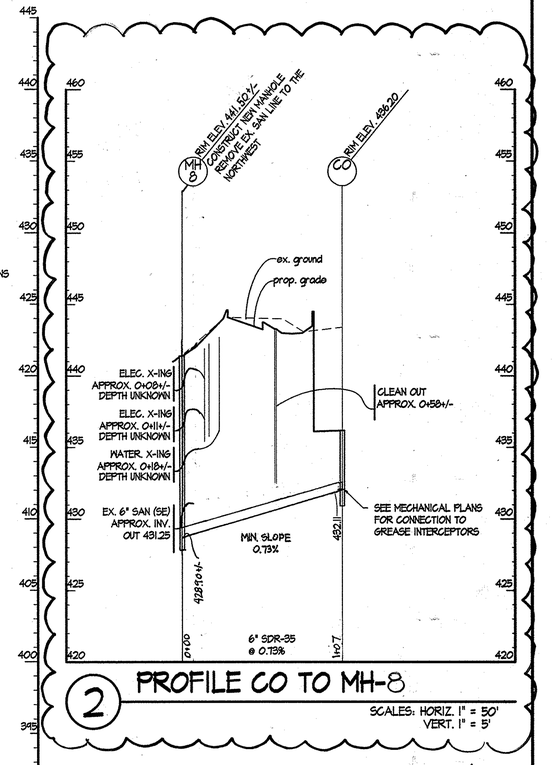

2 PROFILE CO TO MH-8

SCALES: HORIZ. 1" = 50'
VERT. 1" = 5'

STRUCTURE SCHEDULE

STRUCTURE NO.	DESCRIPTION	COMMENTS
MH-1	HO.CO. 6-5.12 PRECAST MANHOLE	STANDARD PRECAST 4' MANHOLE
MH-2	HO.CO. 6-5.12 PRECAST MANHOLE	STANDARD PRECAST 4' MANHOLE
MH-3	HO.CO. 6-5.12 PRECAST MANHOLE	STANDARD PRECAST 4' MANHOLE
MH-4	HO.CO. 6-5.12 PRECAST MANHOLE	STANDARD PRECAST 4' MANHOLE
MH-5	HO.CO. 6-5.12 PRECAST MANHOLE	STANDARD PRECAST 4' MANHOLE
MH-6	HO.CO. 6-5.12 PRECAST MANHOLE	STANDARD PRECAST 4' MANHOLE
MH-7	HO.CO. 6-5.12 PRECAST MANHOLE	STANDARD PRECAST 4' MANHOLE
MH-8	HO.CO. 6-5.12 PRECAST MANHOLE	STANDARD PRECAST 4' MANHOLE

SANITARY LINE CONTRACTOR NOTE

THE CONTRACTOR SHALL TEST PIT THE AREA OF MH-8 TO LOCATE THE SANITARY LINE AND OBTAIN INVERT INFORMATION. CONTRACTOR SHALL NOTIFY ENGINEER IMMEDIATELY OF RESULTS. SEE NOTES ON CIVIL GENERAL NOTES FOR ADDITIONAL INFORMATION.

SANITARY PROFILES

HOBBIT'S GLEN GOLF CLUBHOUSE

PROPERTY OF COLUMBIA ASSOCIATION, INC.

REVISIONS

1 | 08/21/2014 | WATER LINE RELOCATION | SRI

STATE OF MARYLAND — ALBERT F. EDWARDS — 16144 — PROFESSIONAL ENGINEER
10-3-2013

PROFESSIONAL CERTIFICATION
I HEREBY CERTIFY THAT THESE DOCUMENTS WERE PREPARED OR APPROVED BY ME, AND THAT I AM A DULY LICENSED PROFESSIONAL ENGINEER UNDER THE LAWS OF THE STATE OF MARYLAND, LICENSE NO. 16144, EXPIRATION DATE: 09/09/14.

STATE OF MARYLAND — ALBERT F. EDWARDS — 16144 — PROFESSIONAL ENGINEER
9-9-14
THIS SEAL IS FOR REVISION 1 BY SITE RESOURCES, INC.

SITE RESOURCES
incorporated
Comprehensive Land Planning & Site Design Services
14315 Jarrettsville Pike • Phoenix, Maryland 21131
(410) 683-3388 • fax (410) 683-3389

DRAWN BY:	JLH
DESIGNED BY:	JLH
CHECKED BY:	AFE
DATE:	SEPTEMBER 13, 2013
CONTRACT NO.:	-
SCALE:	AS SHOWN
SRI PROJECT NO:	11059
SHEET	C3.11 15 OF 38

APPROVED: DEPARTMENT OF PLANNING & ZONING

CHIEF, DEVELOPMENT ENGINEERING DIVISION — DATE 1-17-14

CHIEF, DIVISION OF LAND DEVELOPMENT — DATE 1-28-14

DIRECTOR — DATE 1/28/14

APPROVED
PLANNING BOARD OF HOWARD COUNTY
DATE 04/12/13

APPROVED: FOR PUBLIC WATER AND PUBLIC SEWERAGE SYSTEMS

COUNTY HEALTH OFFICER — DATE 12/19/2013
HOWARD COUNTY HEALTH DEPARTMENT

ADDRESS CHART	
LOT/PARCEL	STREET ADDRESS
8/135	11130 WILLOW BOTTOM DRIVE, COLUMBIA, MD. 21044

PERMIT INFORMATION CHART					
SUBDIVISION NAME: VILLAGE OF HARPERS CHOICE			SECTION/AREA: 2/1		LOT/PARCEL NO.: 8/135
PLAT # OR L/F: 9308 & 9309	GRID #: NA	ZONING: NT-05	TAX MAP NO.: 29	ELECTION DISTRICT: 5TH	CENSUS TRACT: 605502
WATER CODE: 214 W&S			SEWER CODE: 214 W&S		

SDP-13-027

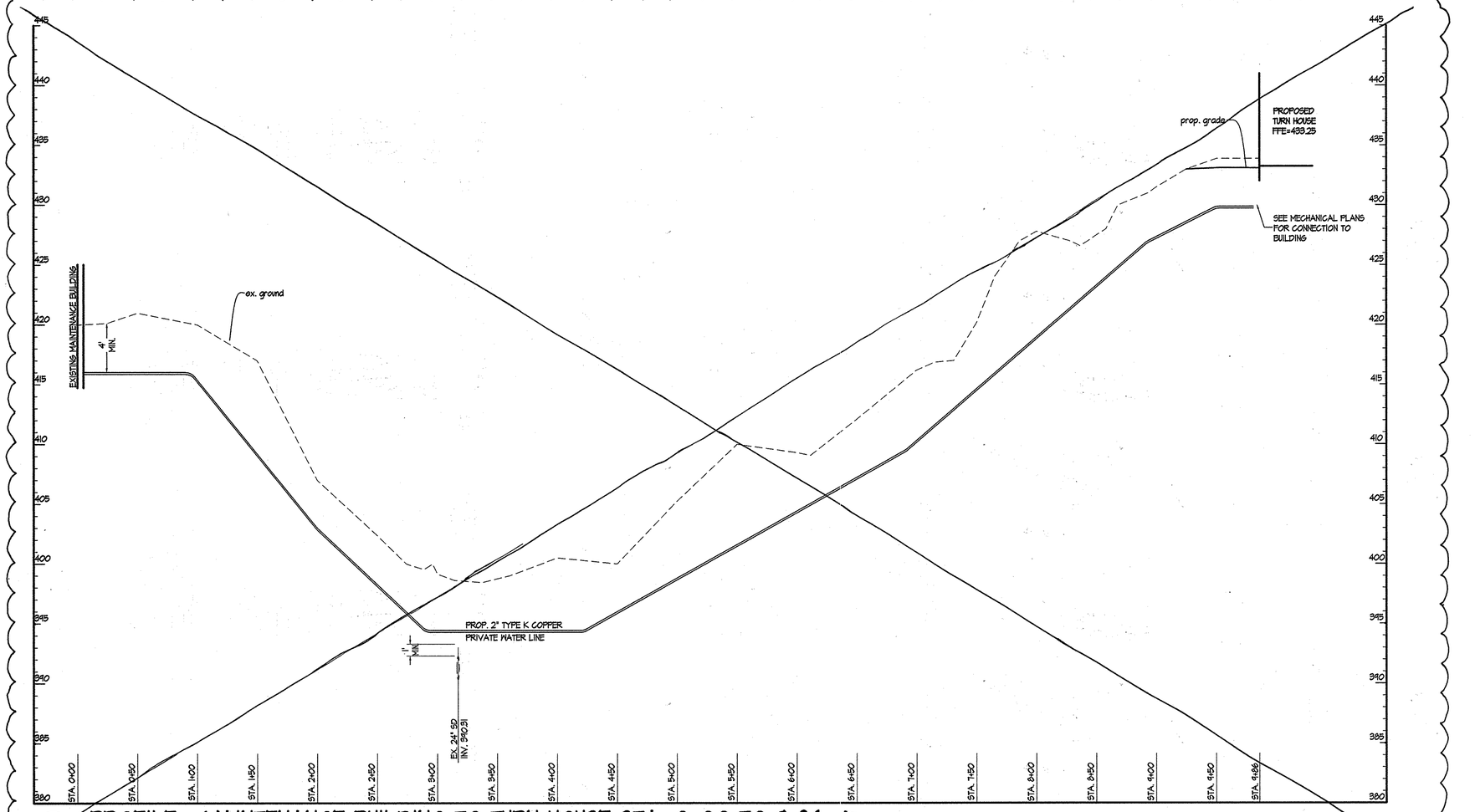

1 PROFILE - MAINTENANCE BUILDING TO TURN HOUSE STA. 0+00 TO 9+86 DELETED

SCALES: HORIZ. 1" = 50'
VERT. 1" = 5'

⚠1 THIS SEAL IS FOR REVISION 1 BY SITE RESOURCES

STATE OF MARYLAND · ALBERT F. EDWARDS · 15644 · PROFESSIONAL ENGINEER
9-9-14

WATER PROFILES

HOBBIT'S GLEN GOLF CLUBHOUSE

PROPERTY OF COLUMBIA ASSOCIATION, INC.

REVISIONS

⚠1 | 08/21/2014 | WATER LINE RELOCATION | SRI

STATE OF MARYLAND · ALBERT F. EDWARDS · 15644 · PROFESSIONAL ENGINEER
10-3-2013

PROFESSIONAL CERTIFICATION
I HEREBY CERTIFY THAT THESE DOCUMENTS WERE PREPARED OR APPROVED BY ME, AND THAT I AM A DULY LICENSED PROFESSIONAL ENGINEER UNDER THE LAWS OF THE STATE OF MARYLAND, LICENSE NO. 15644, EXPIRATION DATE: 09/14.

SITE RESOURCES incorporated
Comprehensive Land Planning & Site Design Services
14315 Jarrettsville Pike • Phoenix, Maryland 21131
(410) 683-3388 • fax (410) 683-3389

DRAWN BY: JLH	CONTRACT NO.: -
DESIGNED BY: JLH	SCALE: AS SHOWN
CHECKED BY: AFE	SRI PROJECT NO: 11059
DATE: SEPTEMBER 13, 2013	SHEET C3.21 16 OF 38

APPROVED: DEPARTMENT OF PLANNING & ZONING

CHIEF, DEVELOPMENT ENGINEERING DIVISION — DATE 1-17-14

CHIEF, DIVISION OF LAND DEVELOPMENT — DATE 1-28-14

DIRECTOR — DATE 1/29/14

APPROVED
PLANNING BOARD OF HOWARD COUNTY
DATE 09/12/13

APPROVED: FOR PUBLIC WATER AND PUBLIC SEWERAGE SYSTEMS

B Wilson for Maura Rossman 12/19/2013
COUNTY HEALTH OFFICER, HOWARD COUNTY HEALTH DEPARTMENT — DATE

ADDRESS CHART	
LOT/PARCEL	STREET ADDRESS
8/135	11130 WILLOW BOTTOM DRIVE, COLUMBIA, MD. 21044

PERMIT INFORMATION CHART					
SUBDIVISION NAME: VILLAGE OF HARPERS CHOICE			SECTION/AREA: 2/1		LOT/PARCEL NO.: 8/135
PLAT # OR L/F: 9308 & 9309	GRID #: NA	ZONING: NT-05	TAX MAP NO.: 29	ELECTION DISTRICT: 5TH	CENSUS TRACT: 605502
WATER CODE: 214 M&S			SEWER CODE: 214 M&S		

SDP-13-027

CONSTRUCTION NOTES FOR ADVANCE DEPOSIT ORDER (A.D.O.) WORK IN THE PUBLIC WATER & UTILITY EASEMENT

PART I- GENERAL CONSTRUCTION NOTES

1. For details not shown on the drawing, and for materials and construction methods, use Howard County Design Manual, Volume IV, Standard Specifications and Details for Construction (Latest Edition). The contractor shall have a copy of Volume IV on the job.
2. The A.D.O. construction work must be performed under the continuous inspection of the Howard County Bureau of Utilities. The contractor shall notify the Bureau of Utilities (Mr. Don Campbell at 410-313-1438) at least five (5) days prior to the start of any construction for this A.D.O.
3. Clear all utilities by a minimum of 12 inches. Clear all poles by 5'-0" minimum or tunnel as required unless otherwise noted. The contractor shall coordinate with the utility companies to schedule the bracing of the poles.
4. The contractor shall notify all utilities and agencies at least two (2) working days before starting work shown on the plans.
5. The contractor shall notify the Howard County Bureau of Highways, 410-313-1450, at least five working days before open cutting or boring/jacking of any County road for laying water or sewer mains or service connections.
6. Excavations must be supported for the protection of workers, the construction work area and adjacent property. Refer to Temporary Excavation Support Systems under Section 1000.03.03 of the Standard Specifications.
7. Excavations must be kept well drained at all times. Dewatering, drainage and pumping is required during construction. Refer to Dewatering, Drainage and Pumping under Section 1000.03.03 of the Standard Specifications. Pumps must be the proper type and capacity to maintain a dry work area.
8. The use of steel plates to protect the trench and roadway shall be as specified under Section 1000.03.05, Section 104 and Standard Detail Plate G-4.02 of the Standard Specifications.
9. Temporary and permanent repair of roadway openings shall be as specified under Section 1000.03.08 and Standard Detail Plate G-4.01 of the Standard Specifications unless otherwise specified by Permit from the authority having jurisdiction. Temporary paving shall consist of not less than 12 (twelve) inches of crushed stone and 2 (two) inches of bituminous cold patch material.

PART II- WATER CONSTRUCTION NOTES

1. Tops of all water pipes shall have not less than 4'-0" of cover unless otherwise noted.
2. Valves adjacent to tees shall be strapped to tees.
3. All fittings shall be buttressed or anchored with concrete in accordance with Standard Details unless otherwise provided for on the drawings.
4. The contractor shall notify the Bureau of Utilities at least 48 hours in advance of scheduled shutdowns of the existing water main. Shutdowns of the existing water main for new connections and removal of existing service connections shall be as specified under Section 1002.06- Connections of the Standard Specifications.
5. The contractor shall not operate any water main valves on the existing water system.
6. Water service connections shall be as specified under Section 1004- Water House Service and Appurtenances of the Standard Specifications and Standard Detail Plate W-3.44. Water service connections include pressure and leak testing, disinfection and bacteriological testing.
7. The new water meter assembly shall be the (type) per Howard County Detail Plate W-3.26. The water meter assembly is not part of the A.D.O. construction work.
8. If the existing water meter will be moved to the new meter connection inside the building, the contractor shall contact the Meter Division of the Bureau of Utilities at 410-313-4448 to schedule relocation of the meter setting.
9. The abandonment of existing water service connections shall be as specified under Section 1015.03 of the Standard Specifications. Removal of the existing corporation stop or tapping saddle requires a scheduled shutdown of the water main. The existing corporation stop shall be removed from the water main and the pipe repaired with a County-approved stainless steel full circle repair clamp such as Ford Meter FS2, Mueller 550 or Romac SS2 series.
10. Tracer wire and continuity test stations shall be installed on all water mains in accordance with Detail Plate G-8.21 of the Standard Specifications.
11. Tees, crosses, bends greater than 5 degrees, and similar fittings for use with C-900 PVC water pipe shall be ductile iron conforming to AWWA C153.
12. All changes in horizontal or vertical direction of PVC water pipe shall be made with high-deflection couplings, 5-degree sweeps or standard bends. No bending of pipe or deflection of PVC pipe joints is permitted.

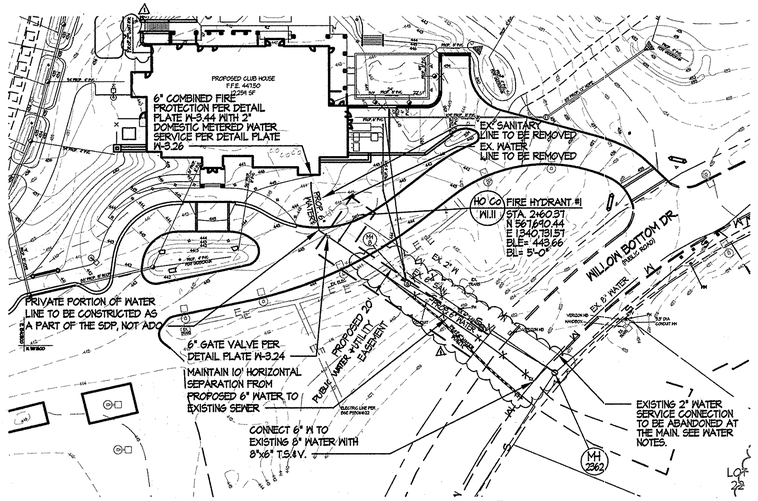

1 ADO WATER LINE PLAN

SCALE 1" = 50'

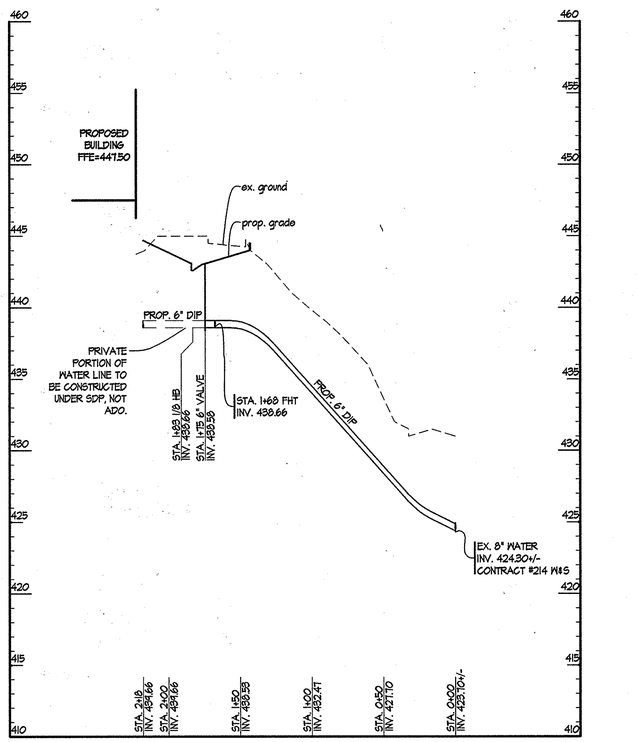

2 PROFILE - WATER SERVICE TO PROP. BLDG.

SCALES: HORIZ. 1" = 50'
VERT. 1" = 5'

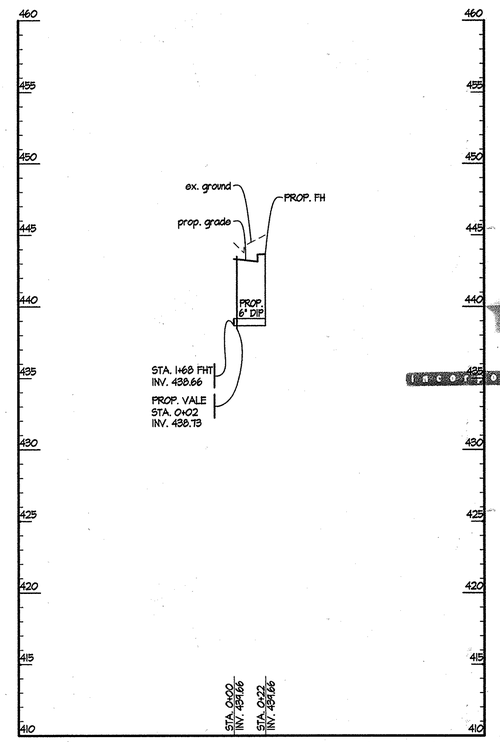

3 PROFILE - FIRE HYDRANT LEAD

SCALES: HORIZ. 1" = 50'
VERT. 1" = 5'

NOTE

THE SEWER SERVICE CONNECTION IS NOT PART OF THE A.D.O. WORK.

APPROVED: DEPARTMENT OF PLANNING & ZONING		
CHIEF, DEVELOPMENT ENGINEERING DIVISION		DATE 1-17-14
CHIEF, DIVISION OF LAND DEVELOPMENT		DATE 1-23-14
DIRECTOR		DATE 1/29/14

APPROVED PLANNING BOARD OF HOWARD COUNTY	
DATE	09/12/13

APPROVED: FOR PUBLIC WATER AND PUBLIC SEWERAGE SYSTEMS	
COUNTY HEALTH OFFICER, HOWARD COUNTY HEALTH DEPARTMENT	DATE 12/19/2013

ADDRESS CHART	
LOT/PARCEL	STREET ADDRESS
8/135	11130 WILLOW BOTTOM DRIVE, COLUMBIA, MD. 21044

PERMIT INFORMATION CHART						
SUBDIVISION NAME: VILLAGE OF HARPERS CHOICE			SECTION/AREA: 2/1		LOT/PARCEL NO.: 8/135	
PLAT # OR L/F: 9308 & 9309	GRID #: NA	ZONING: NT-05	TAX MAP NO.: 29	ELECTION DISTRICT: 5TH	CENSUS TRACT: 605502	
WATER CODE: 214 W&S			SEWER CODE: 214 W&S			

THIS SEAL IS FOR REVISION 1 BY SITE RESOURCES, INC.

STATE OF MARYLAND · ALBERT F. EDWARDS · 16144 · PROFESSIONAL ENGINEER

9-9-14

NORTH

0 10 25 50 100 150

SCALE: 1" = 50'

ADO PLAN

HOBBIT'S GLEN GOLF CLUBHOUSE

PROPERTY OF COLUMBIA ASSOCIATION, INC.

REVISIONS

1 09/9/2014 WATER LINE RELOCATION

STATE OF MARYLAND · ALBERT F. EDWARDS · 16144 · PROFESSIONAL ENGINEER

10-3-2013

PROFESSIONAL CERTIFICATION. I HEREBY CERTIFY THAT THESE DOCUMENTS WERE PREPARED OR APPROVED BY ME, AND THAT I AM A DULY LICENSED PROFESSIONAL ENGINEER UNDER THE LAWS OF THE STATE OF MARYLAND, LICENSE NO. 16144, EXPIRATION DATE: 09/14/14.

SITE RESOURCES incorporated
Comprehensive Land Planning & Site Design Services
14315 Jarrettsville Pike • Phoenix, Maryland 21131
(410) 683-3388 • fax (410) 683-3389

DRAWN BY: JLH	CONTRACT NO.: -
DESIGNED BY: JLH	SCALE: AS SHOWN
CHECKED BY: AFE	SRI PROJECT NO: 11059
DATE: SEPTEMBER 13, 2013	SHEET C3.31 17 OF 38

SDP-13-027

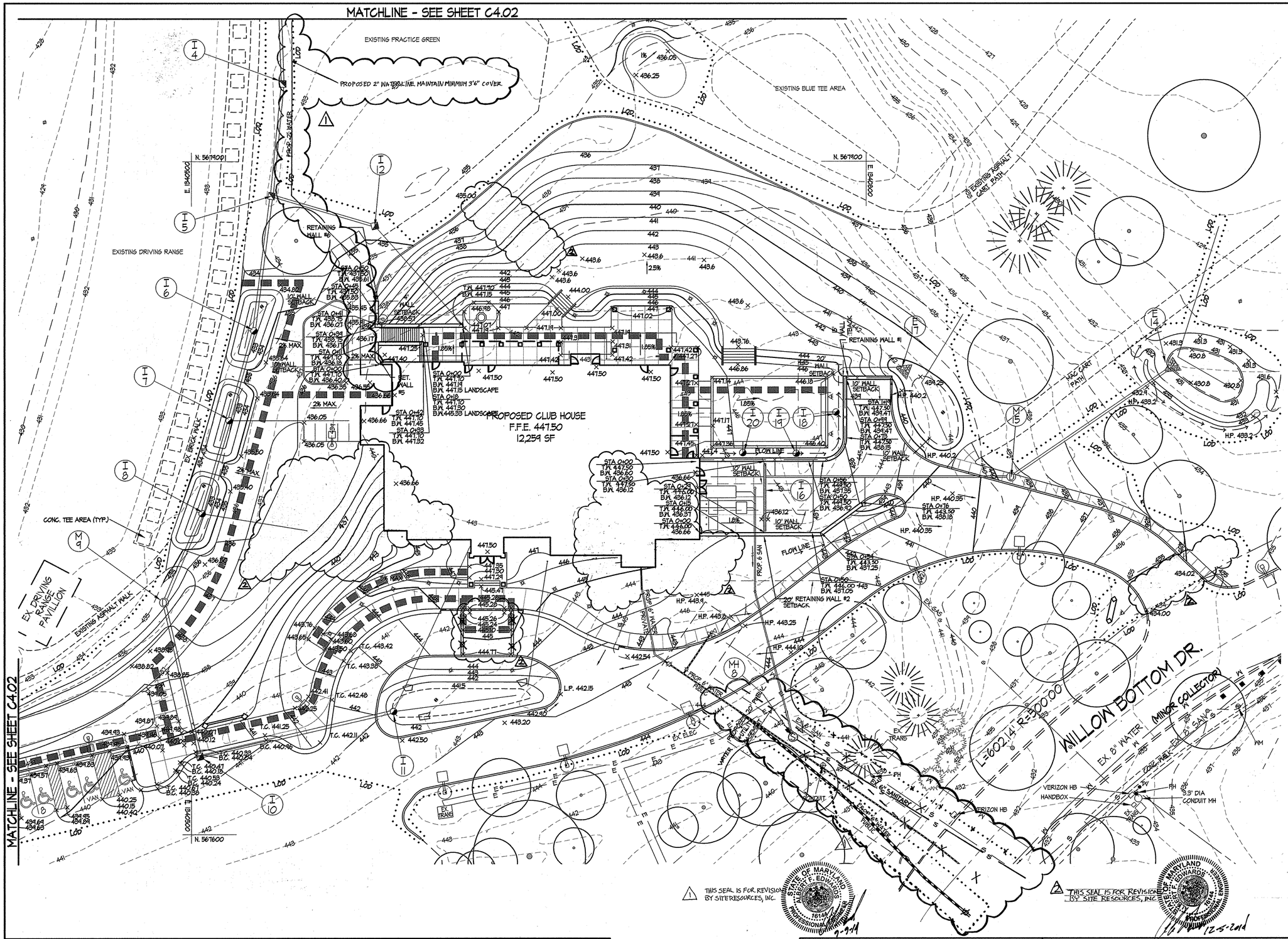

LEGEND

- PROPERTY LINE
- EXISTING CONTOURS
- EXISTING TREELINE
- EXISTING TREES
- EXISTING WALK
- EXISTING ROAD
- EXISTING CURB
- EXISTING STORM DRAIN
- EXISTING WATER
- EXISTING SANITARY SEWER
- EXISTING ELECTRIC
- EXISTING OVERHEAD ELECTRIC
- EXISTING LIGHTING
- EXISTING COMMUNICATIONS
- EXISTING CABLE TV
- PROPOSED ROAD
- PROPOSED STORM DRAIN
- PROPOSED WATER
- PROPOSED SANITARY SEWER
- PROPOSED CONTOURS
- SPOT ELEVATIONS
- PROPOSED ADA ROUTE
- LIMIT OF DISTURBANCE

BENCHMARKS

ELEVATIONS WITHIN FIELD RUN SURVEY LIMITS ARE BASED ON THE FOLLOWING HOWARD COUNTY TRAVERSE POINTS.

#29EA	N.570,132.8414	E.1,338,186.9544	ELEVATION 436.66
#29EB	N.570,505.0594	E.1,340,430.1241	ELEVATION 442.39

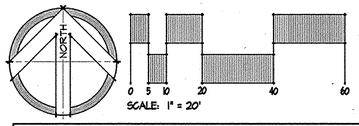

GRADING PLAN

HOBBIT'S GLEN GOLF CLUBHOUSE

PROPERTY OF COLUMBIA ASSOCIATION, INC.

REVISIONS

2	10.31.2014 RETAINING WALL ADJUSTMENTS AND VARIOUS SITE FEATURES
1	08/21/2014 WATER LINE RELOCATION

STATE OF MARYLAND ALBERT F. EDWARDS 16144 PROFESSIONAL ENGINEER

PROFESSIONAL CERTIFICATION
I HEREBY CERTIFY THAT THESE DOCUMENTS WERE PREPARED OR APPROVED BY ME, AND THAT I AM A DULY LICENSED PROFESSIONAL ENGINEER UNDER THE LAWS OF THE STATE OF MARYLAND, LICENSE NO. 16144, EXPIRATION DATE: 06/19/14.

SITE RESOURCES incorporated
Comprehensive Land Planning & Site Design Services
14315 Jarrettsville Pike • Phoenix, Maryland 21131
(410) 683-3388 • fax (410) 683-3389

DRAWN BY: FJP	CONTRACT NO.: -
DESIGNED BY: FJP	SCALE: 1"=20'
CHECKED BY: AFE	SRI PROJECT NO: 11059
DATE: SEPTEMBER 13, 2013	SHEET C4.01 18 OF 38

APPROVED: DEPARTMENT OF PLANNING & ZONING

CHIEF, DEVELOPMENT ENGINEERING DIVISION	DATE 1-28-14
CHIEF, DIVISION OF LAND DEVELOPMENT	DATE 1-28-14
DIRECTOR	DATE 1/29/14

APPROVED
PLANNING BOARD OF HOWARD COUNTY
DATE 09/12/13

APPROVED: FOR PUBLIC WATER AND PUBLIC SEWERAGE SYSTEMS

B Nilson for Maura Rossman 12/19/2013
COUNTY HEALTH OFFICER DATE
HOWARD COUNTY HEALTH DEPARTMENT

ADDRESS CHART

LOT/PARCEL	STREET ADDRESS
8/135	11130 WILLOW BOTTOM DRIVE, COLUMBIA, MD. 21044

PERMIT INFORMATION CHART

SUBDIVISION NAME			SECTION/AREA		LOT/PARCEL NO.
VILLAGE OF HARPERS CHOICE			2/1		8/135
PLAT # OR L/F	GRID #	ZONING	TAX MAP NO.	ELECTION DISTRICT	CENSUS TRACT
9308 & 9309	NA	NT-05	29	5TH	605502
WATER CODE			SEWER CODE		
214 W&S			214 W&S		

SDP-13-027

LEGEND

- PROPERTY LINE
- EXISTING CONTOURS
- EXISTING TREELINE
- EXISTING TREES (CRITICAL ROOT ZONE)
- EXISTING WALK
- EXISTING ROAD
- EXISTING CURB
- EX. 15" SD — EXISTING STORM DRAIN
- EX. 6" WATER W — EXISTING WATER
- EX. 8" SAN S — EXISTING SANITARY SEWER
- EX. ELEC E — EXISTING ELECTRIC
- EX. ELEC OHW — EXISTING OVERHEAD ELECTRIC
- EXISTING LIGHTING
- EX. COM COM — EXISTING COMMUNICATIONS
- EX. CATV CATV — EXISTING CABLE TV
- PROPOSED ROAD
- PROP. 15" SD — PROPOSED STORM DRAIN
- PROP. 6" WATER — PROPOSED WATER
- PROP. 8" SAN — PROPOSED SANITARY SEWER
- PROPOSED CONTOURS
- (220.8) EXISTING / 220.8 PROPOSED — SPOT ELEVATIONS
- PROPOSED ADA ROUTE
- LOD — LIMIT OF DISTURBANCE

BENCHMARKS

ELEVATIONS WITHIN FIELD RUN SURVEY LIMITS ARE BASED ON THE FOLLOWING HOWARD COUNTY TRAVERSE POINTS.

#29EA	N.570,132.8414	E.1,338,186.9544	ELEVATION 436.66
#29EB	N.570,505.0594	E.1,340,430.1241	ELEVATION 442.39

NORTH

0 5 10 20 40 60

SCALE: 1" = 20'

GRADING PLAN

HOBBIT'S GLEN GOLF CLUBHOUSE

PROPERTY OF COLUMBIA ASSOCIATION, INC.

REVISIONS

1	08/21/2014 WATER LINE RELOCATION

STATE OF MARYLAND ALBERT F. EDWARDS 16144 PROFESSIONAL ENGINEER

10-3-2013

PROFESSIONAL CERTIFICATION
I HEREBY CERTIFY THAT THESE DOCUMENTS WERE PREPARED OR APPROVED BY ME, AND THAT I AM A DULY LICENSED PROFESSIONAL ENGINEER UNDER THE LAWS OF THE STATE OF MARYLAND, LICENSE NO. 16144, EXPIRATION DATE: 06/19/14.

SITE RESOURCES incorporated
Comprehensive Land Planning & Site Design Services
14315 Jarrettsville Pike • Phoenix, Maryland 21131
(410) 683-3388 • fax (410) 683-3389

DRAWN BY: FJP	CONTRACT NO.: -
DESIGNED BY: FJP	SCALE: 1"=20'
CHECKED BY: AFE	SRI PROJECT NO: 11059
DATE: SEPTEMBER 13, 2013	SHEET C4.02 19 OF 38

APPROVED: DEPARTMENT OF PLANNING & ZONING

CHIEF, DEVELOPMENT ENGINEERING DIVISION — DATE 1-17-14

CHIEF, DIVISION OF LAND DEVELOPMENT — DATE 9-28-14

DIRECTOR — DATE 1/29/14

APPROVED
PLANNING BOARD OF HOWARD COUNTY
DATE 09/12/13

APPROVED: FOR PUBLIC WATER AND PUBLIC SEWERAGE SYSTEMS

B Nelson for Maura Rossman 12/19/2013
COUNTY HEALTH OFFICER — DATE
HOWARD COUNTY HEALTH DEPARTMENT

ADDRESS CHART

LOT/PARCEL	STREET ADDRESS
8/135	11130 WILLOW BOTTOM DRIVE, COLUMBIA, MD. 21044

PERMIT INFORMATION CHART

SUBDIVISION NAME			SECTION/AREA		LOT/PARCEL NO.
VILLAGE OF HARPERS CHOICE			2/1		8/135
PLAT # OR L/F	GRID #	ZONING	TAX MAP NO.	ELECTION DISTRICT	CENSUS TRACT
9308 & 9309	NA	NT-OS	29	5TH	605502
WATER CODE			SEWER CODE		
214 W&S			214 W&S		

SDP-13-027

MATCHLINE - SEE SHEET ESC1.02

1 THIS SEAL IS FOR REVISION 1 BY SITE RESOURCES, INC.

2 THIS SEAL IS FOR REVISION 2 BY SITE RESOURCES, INC.

STATE OF MARYLAND · ALBERT F. EDWARDS · 16144 · PROFESSIONAL ENGINEER

STATE OF MARYLAND · JANE E. EDWARDS · 24414 · PROFESSIONAL ENGINEER

12-5-2013

MATCHLINE - SEE SHEET ESC1.02

EXISTING PRACTICE GREEN

PROPOSED 2" WATER LINE. MAINTAIN MINIMUM 3'6" COVER.

EXISTING BLUE TEE AREA

EXISTING DRIVING RANGE

EX. DRIVING RANGE PAVILION

EXISTING ASPHALT WALK

EXISTING ASPHALT CART PATH

PROPOSED CLUB HOUSE
F.F.E. 447.50
12,259 SF

EX. BRICK PAVER

CONC. TEE AREA (TYP.)

EX. TRANS

EX. ELEC

EX. SAN MH

EX. WATER

EX. 8" WATER

EX. 8" SANITARY SEWER

EX. 6" SAN

EX. 3' DIA CONDUIT MH

VERIZON HB HANDBOX

VERIZON HB

CONDUIT

WILLOW BOTTOM DR. (MINOR COLLECTOR)

L=602.14 R=300.00

Proposed Full Pavement Milling & Overlay Extents

EC-1 EC-2 EC-3

TYPE A SIP

TYPE B SIP

PROP. 4" PVC UNDERDRAIN

PROP. 4" PVC PERF UNDERDRAIN

42' PROP. 15" HDPE

43' PROP. 15" HDPE

54' PROP. 4" PVC

86' PROP. 15" RCP

109' PROP. 8" PVC

PROP. 8" PVC

PROP. 6" PVC

PROP. 4" PVC FREE UNDERDRAIN

N. 567900 E. 1340500

N. 567600 E. 1340500

SCALE: 1" = 20'

LEGEND

- PROPERTY LINE
- EXISTING CONTOURS
- EXISTING TREELINE
- EXISTING TREES (CRITICAL ROOT ZONE)
- EXISTING WALK
- EXISTING ROAD
- EXISTING CURB
- EXISTING STORM DRAIN (EX. 15" SD)
- EXISTING WATER (EX. 6" WATER W)
- EXISTING SANITARY SEWER (EX. 8" SAN S)
- EXISTING ELECTRIC (EX. ELEC E)
- EXISTING OVERHEAD ELECTRIC (EX. ELEC OHW)
- EXISTING LIGHTING
- EXISTING COMMUNICATIONS (EX. COM COM)
- EXISTING CABLE TV (EX. CATV CATV)
- PROPOSED ROAD
- PROPOSED BUILDING
- PROPOSED STORM DRAIN (PROP. 15" SD)
- PROPOSED WATER
- PROPOSED SANITARY SEWER
- PROPOSED CONTOURS
- SILT FENCE (SF)
- SILT FENCE ON PAVING (SFOP)
- SILT FENCE ON ASPHALT (SF/AP)
- INLET PROTECTION (SIP STANDARD, AGIP AT GRADE, CIP CURB, SSFIP SUPER SILT FENCE)
- STABILIZED CONSTRUCTION ENTRANCE with MOUNTABLE BERM
- TREE PROTECTION FENCE
- LOD LIMIT OF DISTURBANCE

ESC NOTES (THESE NOTES PERTAIN TO THIS SHEET ONLY)

EC-1 USE 'SAME DAY STABILIZATION' CONSTRUCTION IN THIS AREA. SEE NOTE 'SAME DAY STABILIZATION' NOTE, THIS SHEET.

EC-2 FULL DEPTH PAVEMENT WORK SHALL BE DONE USING THE METHOD OF 'SAME DAY STABILIZATION'. SEE 'SAME DAY STABILIZATION' NOTE, THIS SHEET.

EC-3 SLOPE STABILIZATION MATTING.

EROSION AND SEDIMENT CONTROL PLAN

HOBBIT'S GLEN GOLF CLUBHOUSE

PROPERTY OF COLUMBIA ASSOCIATION, INC.

REVISIONS

2 10.31.14 RETAINING WALL ADJUSTMENTS AND VARIOUS SITE FEATURES

1 08/21/2014 WATER LINE RELOCATION

STATE OF MARYLAND · ALBERT F. EDWARDS · 16144 · PROFESSIONAL ENGINEER

ENGINEER'S CERTIFICATION: I HEREBY CERTIFY THAT THESE DOCUMENTS WERE PREPARED OR APPROVED BY ME, AND THAT I AM A DULY LICENSED PROFESSIONAL ENGINEER UNDER THE LAWS OF THE STATE OF MARYLAND, LICENSE NO. 16144, EXPIRATION DATE: 09/09/14. 12-05-2013

SITE RESOURCES incorporated
Comprehensive Land Planning & Site Design Services
14315 Jarrettsville Pike • Phoenix, Maryland 21131
(410) 683-3388 • fax (410) 683-3889

DRAWN BY:	JLH
DESIGNED BY:	JLH
CHECKED BY:	FJP
DATE:	SEPTEMBER 13, 2013
CONTRACT NO.:	-
SCALE:	1"=20'
SRI PROJECT NO:	11054
SHEET	ESC1.01 20 OF 38

SDP-13-027

DEVELOPER'S CERTIFICATE

"I/We certify that all development and construction will be done according to this plan for sediment and erosion control, and that all responsible personnel involved in the construction project will have a Certificate of Attendance at a Department of the Environment Approved Training Program for the Control of Sediment and Erosion before beginning the project. I also authorize periodic on-site inspection by the Howard Soil Conservation District."

COLUMBIA ASSOCIATION - DEVELOPER — DATE 11.13.13

ENGINEER'S CERTIFICATE

"I certify that this plan for sediment and erosion control represents a practical and workable plan based on my personal knowledge of the site conditions and that it was prepared in accordance with the requirements of the Howard Soil Conservation District."

JENNIFER J. HARRINGTON, P.E. - ENGINEER — DATE 11.27.13

THIS DEVELOPMENT PLAN IS APPROVED FOR SOIL EROSION AND SEDIMENT CONTROL BY THE HOWARD SOIL CONSERVATION DISTRICT.

HOWARD SOIL CONSERVATION DISTRICT — DATE 1/14/14

Entry drive construction shall be performed after the proposed building and associated grading is complete. SCE is then be relocated within right of way adjacent to Willow Bottom Drive.

SAME DAY STABILIZATION NOTE

The work in this area shall be done using the method of "Same Day Stabilization". No more area shall be disturbed than can be stabilized by the end of the workday. All disturbed areas that do not drain to a sediment control device shall be stabilized at the end of the workday. No disturbed area shall be left unstabilized overnight unless the runoff is directed to an MDE or County approved sediment control device.

Stabilization shall be as follows :
- For areas to be paved : Application of stone subbase.
- For areas to be vegetatively stabilized : Permanent seed and erosion control matting for all swales/channels and permanent seed and mulch for all other areas.

APPROVED: DEPARTMENT OF PLANNING & ZONING

CHIEF, DEVELOPMENT ENGINEERING DIVISION — DATE 1.17.14

CHIEF, DIVISION OF LAND DEVELOPMENT — DATE 1-23-14

DIRECTOR — DATE 1/29/14

APPROVED
PLANNING BOARD OF HOWARD COUNTY
DATE 09/12/13

APPROVED: FOR PUBLIC WATER AND PUBLIC SEWERAGE SYSTEMS

COUNTY HEALTH OFFICER
HOWARD COUNTY HEALTH DEPARTMENT — DATE 12/19/2013

ADDRESS CHART	
LOT/PARCEL	STREET ADDRESS
8/135	11130 WILLON BOTTOM DRIVE, COLUMBIA, MD. 21044

PERMIT INFORMATION CHART						
SUBDIVISION NAME			SECTION/AREA			LOT/PARCEL NO.
VILLAGE OF HARPERS CHOICE			2/1			8/135
PLAT # OR L/F	GRID #	ZONING	TAX MAP NO.	ELECTION DISTRICT	CENSUS TRACT	
9308 & 9309	NA	NT-05	29	5TH	605502	
WATER CODE			SEWER CODE			
214 W&S			214 W&S			

THIS SEAL IS FOR REVISION 1
SITE RESOURCES, INC.

STATE OF MARYLAND · JENNIFER L. EDWARDS · 21511 · REGISTERED PROFESSIONAL ENGINEER

9-9-14

MATCHLINE - SEE SHEET ESC1.03

LEGEND

- PROPERTY LINE
- EXISTING CONTOURS (350 / 340)
- EXISTING TREELINE
- EXISTING TREES (CRITICAL ROOT ZONE)
- EXISTING WALK
- EXISTING ROAD
- EXISTING CURB
- EXISTING STORM DRAIN (EX. 15" SD)
- EXISTING WATER (EX. 6" WATER)
- EXISTING SANITARY SEWER (EX. 8" SAN)
- EXISTING ELECTRIC (EX. ELEC)
- EXISTING OVERHEAD ELECTRIC (EX. ELEC OHA)
- EXISTING LIGHTING
- EXISTING COMMUNICATIONS (EX. COM)
- EXISTING CABLE TV (EX. CATV)
- PROPOSED ROAD
- PROPOSED BUILDING
- PROPOSED STORM DRAIN (PROP. 15" SD)
- PROPOSED WATER (PROP. 6" WATER)
- PROPOSED SANITARY SEWER (PROP. 8" SAN)
- PROPOSED CONTOURS (350 / 340)
- SILT FENCE (SF)
- SILT FENCE ON PAVING (SFOP)
- SILT FENCE ON ASPHALT (SF/AP)
- INLET PROTECTION (SIP STANDARD, AGIP AT GRADE, CIP CURB, SGFIP SUPER SILT FENCE)
- STABILIZED CONSTRUCTION ENTRANCE with MOUNTABLE BERM
- TREE PROTECTION FENCE
- LOD LIMIT OF DISTURBANCE

ESC NOTES (THESE NOTES PERTAIN TO THIS SHEET ONLY)

EC-1 USE 'SAME DAY STABILIZATION' CONSTRUCTION IN THIS AREA. SEE NOTE 'SAME DAY STABILIZATION' NOTE, THIS SHEET.

EROSION AND SEDIMENT CONTROL PLAN

HOBBIT'S GLEN GOLF CLUBHOUSE

PROPERTY OF COLUMBIA ASSOCIATION, INC.

REVISIONS

1 | 08/21/2014 | WATER LINE RELOCATION

DEVELOPER'S CERTIFICATE

"I/We certify that all development and construction will be done according to this plan for sediment and erosion control, and that all responsible personnel involved in the construction project will have a Certificate of Attendance at a Department of the Environment Approved Training Program for the Control of Sediment and Erosion before beginning the project. I also authorize periodic on-site inspection by the Howard Soil Conservation District"

COLUMBIA ASSOCIATION - DEVELOPER — DATE 9/19/13

ENGINEER'S CERTIFICATE

"I certify that this plan for sediment and erosion control represents a practical and workable plan based on my personal knowledge of the site conditions and that it was prepared in accordance with the requirements of the Howard Soil Conservation District."

JENNIFER L. HARRINGTON, P.E. - ENGINEER — DATE 10.3.13

THIS DEVELOPMENT PLAN IS APPROVED FOR SOIL EROSION AND SEDIMENT CONTROL BY THE HOWARD SOIL CONSERVATION DISTRICT.

HOWARD SOIL CONSERVATION DISTRICT — DATE 1/14/14

APPROVED: DEPARTMENT OF PLANNING & ZONING

CHIEF, DEVELOPMENT ENGINEERING DIVISION — DATE 1.17.14

CHIEF, DIVISION OF LAND DEVELOPMENT — DATE 1-28-14

DIRECTOR — DATE 1/28/14

APPROVED
PLANNING BOARD OF HOWARD COUNTY
DATE 09/12/13

APPROVED: FOR PUBLIC WATER AND PUBLIC SEWERAGE SYSTEMS

COUNTY HEALTH OFFICER
HOWARD COUNTY HEALTH DEPARTMENT — DATE 12/19/2013

SAME DAY STABILIZATION NOTE

The work in this area shall be done using the method of "Same Day Stabilization". No more area shall be disturbed than can be stabilized by the end of the workday. All disturbed areas that do not drain to a sediment control device shall be stabilized at the end of the workday. No disturbed area shall be left unstabilized overnight unless the runoff is directed to an MDE or County approved sediment control device.

Stabilization shall be as follows :
- For areas to be paved : Application of stone subbase.
- For areas to be vegetatively stabilized : Permanent seed and erosion control matting for all swales/channels and permanent seed and mulch for all other areas.

ADDRESS CHART	
LOT/PARCEL	STREET ADDRESS
8/135	11130 WILLOW BOTTOM DRIVE, COLUMBIA, MD. 21044

PERMIT INFORMATION CHART						
SUBDIVISION NAME: VILLAGE OF HARPERS CHOICE			SECTION/AREA: 2/I			LOT/PARCEL NO.: 8/135
PLAT # OR L/F: 4308 & 4309	GRID #: NA	ZONING: NT-05	TAX MAP NO.: 29	ELECTION DISTRICT: 5TH	CENSUS TRACT: 605502	
WATER CODE: 214 W&S			SEWER CODE: 214 W&S			

SCALE: 1" = 20'

PROFESSIONAL CERTIFICATION
I HEREBY CERTIFY THAT THESE DOCUMENTS WERE PREPARED OR APPROVED BY ME, AND THAT I AM A DULY LICENSED PROFESSIONAL ENGINEER UNDER THE LAWS OF THE STATE OF MARYLAND, LICENSE NO. 21511, EXPIRATION DATE: 09/19/15 — 09/19/15

PROFESSIONAL ENGINEER · JENNIFER LYNN HARRINGTON · No. 23111 · STATE OF MARYLAND — 10.3.13

SITE RESOURCES incorporated
Comprehensive Land Planning & Site Design Services
14315 Jarrettsville Pike • Phoenix, Maryland 21131
(410) 683-3388 • fax (410) 683-3389

DRAWN BY: FJP/JLH	CONTRACT NO.: -
DESIGNED BY: JLH	SCALE: 1"=20'
CHECKED BY: AFE	SRI PROJECT NO: 11059
DATE: SEPTEMBER 13, 2013	SHEET ESC1.02 21 OF 38

SDP-13-027

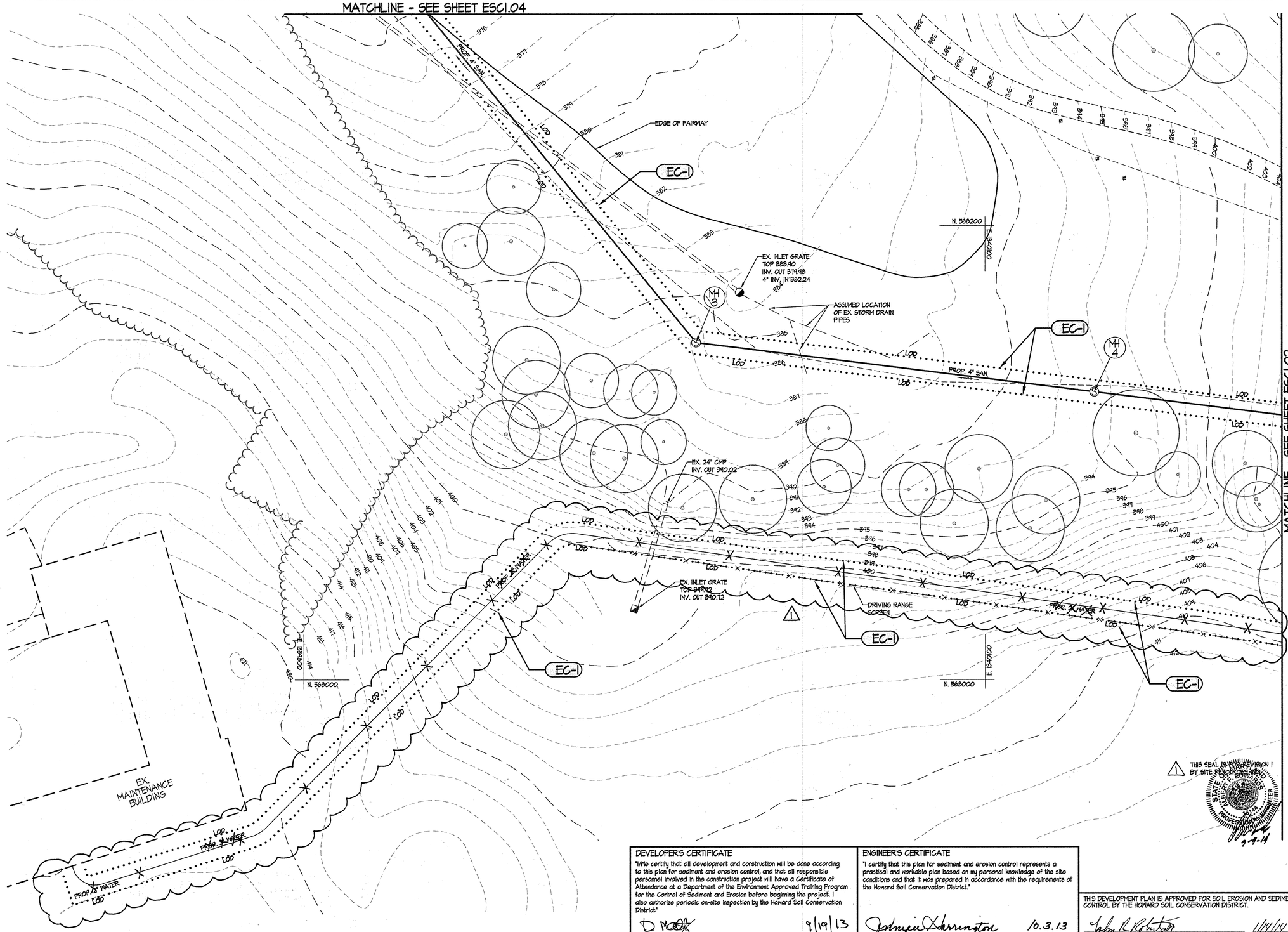

LEGEND

- PROPERTY LINE
- EXISTING CONTOURS (350 / 340)
- EXISTING TREELINE
- EXISTING TREES (CRITICAL ROOT ZONE)
- EXISTING WALK
- EXISTING ROAD
- EXISTING CURB
- EX. 15" SD — EXISTING STORM DRAIN
- EX. 6" WATER — EXISTING WATER
- EX. 8" SAN — EXISTING SANITARY SEWER
- EX. ELEC — EXISTING ELECTRIC
- EX. ELEC OHA — EXISTING OVERHEAD ELECTRIC
- EXISTING LIGHTING
- EX. COM — EXISTING COMMUNICATIONS
- EX. CATV — EXISTING CABLE TV
- PROPOSED ROAD
- PROPOSED BUILDING
- PROP. 15" SD — PROPOSED STORM DRAIN
- PROP. 6" WATER — PROPOSED WATER
- PROP. 8" SAN — PROPOSED SANITARY SEWER
- PROPOSED CONTOURS (350 / 340)
- LOD ..... LOD — LIMIT OF DISTURBANCE

ESC NOTES (THESE NOTES PERTAIN TO THIS SHEET ONLY)

EC-1 USE 'SAME DAY STABILIZATION' CONSTRUCTION IN THIS AREA. SEE NOTE "SAME DAY STABILIZATION" NOTE, THIS SHEET.

SAME DAY STABILIZATION NOTE

The work in this area shall be done using the method of "Same Day Stabilization". No more area shall be disturbed than can be stabilized by the end of the workday. All disturbed areas that do not drain to a sediment control device shall be stabilized at the end of the workday. No disturbed area shall be left unstabilized overnight unless the runoff is directed to an NDE or County approved sediment control device. If sediment control is required within a same day stabilization area, the Contractor shall provide these measures at the Contractor's cost.

Stabilization shall be as follows :
- For areas to be paved : Application of stone subbase.
- For areas to be vegetatively stabilized : Permanent seed and erosion control matting for all swales/channels and permanent seed and mulch for all other areas.

NORTH

SCALE: 1" = 20'

EROSION AND SEDIMENT CONTROL PLAN

HOBBIT'S GLEN GOLF CLUBHOUSE

PROPERTY OF COLUMBIA ASSOCIATION, INC.

REVISIONS

1 08/21/2014 WATER LINE RELOCATION SRI

THIS SEAL IS VOID AS REVISED BY SITE RESOURCES, INC. ON 9-9-14

DEVELOPER'S CERTIFICATE

"I/We certify that all development and construction will be done according to this plan for sediment and erosion control, and that all responsible personnel involved in the construction project will have a Certificate of Attendance at a Department of the Environment Approved Training Program for the Control of Sediment and Erosion before beginning the project. I also authorize periodic on-site inspection by the Howard Soil Conservation District."

COLUMBIA ASSOCIATION - DEVELOPER — DATE 9/19/13

ENGINEER'S CERTIFICATE

"I certify that this plan for sediment and erosion control represents a practical and workable plan based on my personal knowledge of the site conditions and that it was prepared in accordance with the requirements of the Howard Soil Conservation District."

JENNIFER L HARRINGTON, P.E. - ENGINEER — DATE 10.3.13

THIS DEVELOPMENT PLAN IS APPROVED FOR SOIL EROSION AND SEDIMENT CONTROL BY THE HOWARD SOIL CONSERVATION DISTRICT.

HOWARD SOIL CONSERVATION DISTRICT — DATE 11/19/14

APPROVED: DEPARTMENT OF PLANNING & ZONING

CHIEF, DEVELOPMENT ENGINEERING DIVISION — DATE 1-17-14

CHIEF, DIVISION OF LAND DEVELOPMENT — DATE 1-23-14

DIRECTOR — DATE 1/29/14

APPROVED
PLANNING BOARD OF HOWARD COUNTY
DATE 09/12/13

APPROVED: FOR PUBLIC WATER AND PUBLIC SEWERAGE SYSTEMS

COUNTY HEALTH OFFICER
HOWARD COUNTY HEALTH DEPARTMENT — DATE 12/19/2013

ADDRESS CHART	
LOT/PARCEL	STREET ADDRESS
B/135	11130 WILLOW BOTTOM DRIVE, COLUMBIA, MD. 21044

PERMIT INFORMATION CHART						
SUBDIVISION NAME			SECTION/AREA			LOT/PARCEL NO.
VILLAGE OF HARPERS CHOICE			2/1			B/135
FLAT # OR L/F	GRID #	ZONING	TAX MAP NO.	ELECTION DISTRICT	CENSUS TRACT	
4308 & 4309	NA	NT-05	29	5TH	605502	
WATER CODE			SEWER CODE			
214 W&S			214 W&S			

PROFESSIONAL CERTIFICATION. I HEREBY CERTIFY THAT THESE DOCUMENTS WERE PREPARED OR APPROVED BY ME, AND THAT I AM A DULY LICENSED PROFESSIONAL ENGINEER UNDER THE LAWS OF THE STATE OF MARYLAND, LICENSE NO. 22615, EXPIRATION DATE 09/08/15.

10.3.13

SITE RESOURCES incorporated
Comprehensive Land Planning & Site Design Services
14315 Jarrettsville Pike • Phoenix, Maryland 21131
(410) 683-3388 • fax (410) 683-3389

DRAWN BY: FJP/JLH	CONTRACT NO.: -
DESIGNED BY: JLH	SCALE: 1"=20'
CHECKED BY: AFE	SRI PROJECT NO: 11059
DATE: SEPTEMBER 13, 2013	SHEET ESC1.03 22 OF 38

SDP-13-027

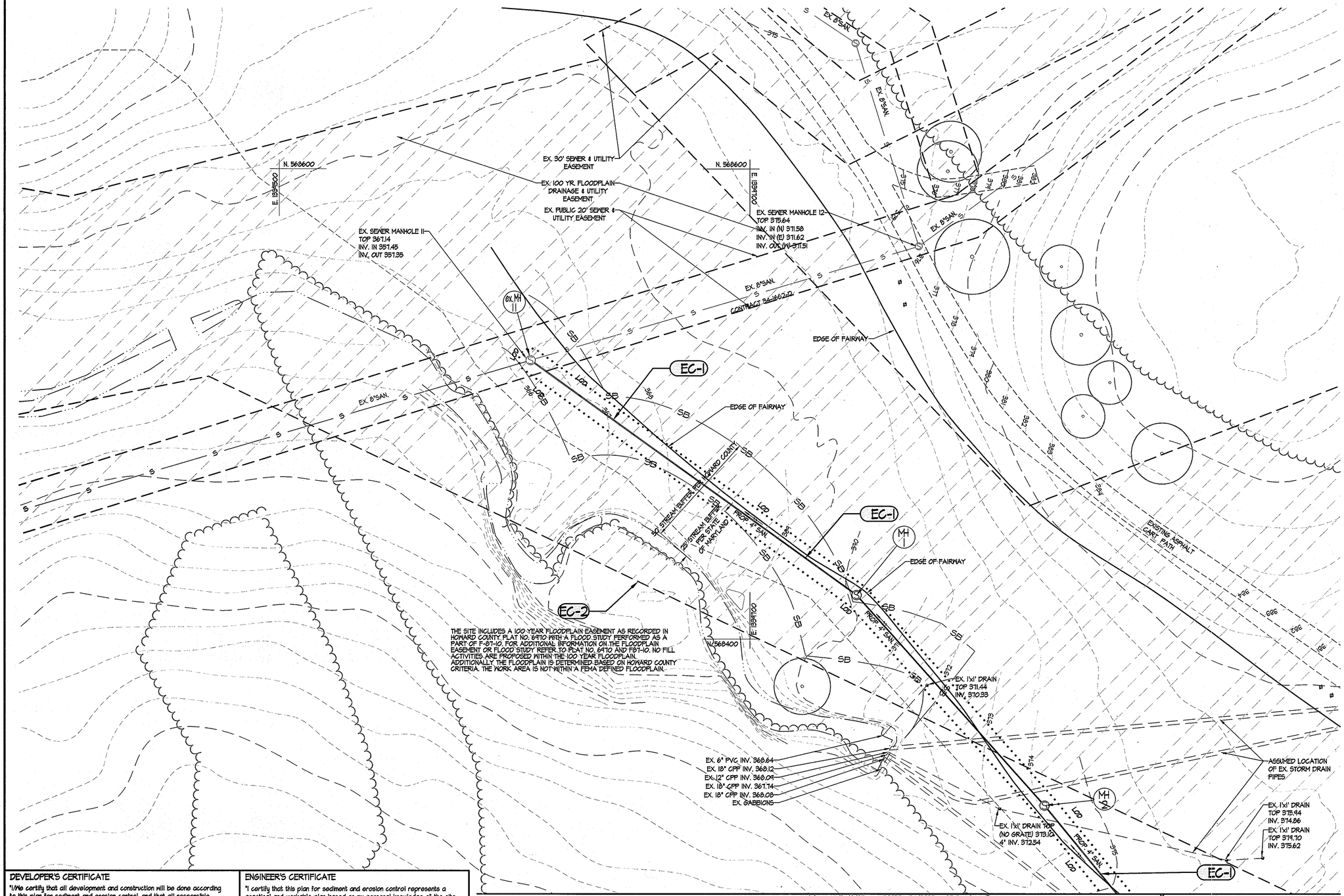

LEGEND

- PROPERTY LINE
- EXISTING CONTOURS (350 / 348)
- EXISTING TREELINE
- EXISTING TREES (CRITICAL ROOT ZONE)
- EXISTING WALK
- EXISTING ROAD
- EXISTING CURB
- EX. 15" SD — EXISTING STORM DRAIN
- EX. 6" WATER W — EXISTING WATER
- EX. 8" SAN S — EXISTING SANITARY SEWER
- EX. ELEC E — EXISTING ELECTRIC
- EX. ELEC OHX — EXISTING OVERHEAD ELECTRIC
- EXISTING LIGHTING
- EX. COM COM — EXISTING COMMUNICATIONS
- EX. CATV CATV — EXISTING CABLE TV
- PROPOSED ROAD
- PROPOSED BUILDING
- PROP. 15" SD — PROPOSED STORM DRAIN
- PROPOSED WATER
- PROP. 8" SAN — PROPOSED SANITARY SEWER
- PROPOSED CONTOURS (350 / 348)
- LOD ..... LOD — LIMIT OF DISTURBANCE
- SB — EXISTING STREAM BUFFER

ESC NOTES (THESE NOTES PERTAIN TO THIS SHEET ONLY)

EC-1 USE 'SAME DAY STABILIZATION' CONSTRUCTION IN THIS AREA. SEE NOTE "SAME DAY STABILIZATION" NOTE, THIS SHEET.

EC-2 100 YEAR FLOODPLAIN EASEMENT.

SAME DAY STABILIZATION NOTE

The work in this area shall be done using the method of "Same Day Stabilization". No more area shall be disturbed than can be stabilized by the end of the workday. All disturbed areas that do not drain to a sediment control device shall be stabilized at the end of the workday. No disturbed area shall be left unstabilized overnight unless the runoff is directed to an MDE or County approved sediment control device. If sediment control is required within a same day stabilization area, the contractor shall provide these measures at the Contractor's cost.

Stabilization shall be as follows :
- For areas to be paved : Application of stone subbase.
- For areas to be vegetatively stabilized : Permanent seed and erosion control matting for all swales/channels and permanent seed and mulch for all other areas.

EROSION AND SEDIMENT CONTROL PLAN

HOBBIT'S GLEN GOLF CLUBHOUSE

PROPERTY OF COLUMBIA ASSOCIATION, INC.

REVISIONS

DEVELOPER'S CERTIFICATE

"I/We certify that all development and construction will be done according to this plan for sediment and erosion control, and that all responsible personnel involved in the construction project will have a Certificate of Attendance at a Department of the Environment Approved Training Program for the Control of Sediment and Erosion before beginning the project. I also authorize periodic on-site inspection by the Howard Soil Conservation District."

COLUMBIA ASSOCIATION - DEVELOPER — DATE 7/19/13

ENGINEER'S CERTIFICATE

"I certify that this plan for sediment and erosion control represents a practical and workable plan based on my personal knowledge of the site conditions and that it was prepared in accordance with the requirements of the Howard Soil Conservation District."

JENNIFER L. HARRINGTON, P.E. - ENGINEER — DATE 10.3.13

THIS DEVELOPMENT PLAN IS APPROVED FOR SOIL EROSION AND SEDIMENT CONTROL BY THE HOWARD SOIL CONSERVATION DISTRICT.

HOWARD SOIL CONSERVATION DISTRICT — DATE 1/14/14

APPROVED: DEPARTMENT OF PLANNING & ZONING

CHIEF, DEVELOPMENT ENGINEERING DIVISION — DATE 1.27.14

CHIEF, DIVISION OF LAND DEVELOPMENT — DATE 1-28-14

DIRECTOR — DATE

APPROVED
PLANNING BOARD OF HOWARD COUNTY
DATE 04/02/13

APPROVED: FOR PUBLIC WATER AND PUBLIC SEWERAGE SYSTEMS

COUNTY HEALTH OFFICER
HOWARD COUNTY HEALTH DEPARTMENT — DATE B Nelson for Maura Rossman 12/19/2013

ADDRESS CHART	
LOT/PARCEL	STREET ADDRESS
B/135	11130 WILLOW BOTTOM DRIVE, COLUMBIA, MD. 21044

PERMIT INFORMATION CHART					
SUBDIVISION NAME			SECTION/AREA		LOT/PARCEL NO.
VILLAGE OF HARPERS CHOICE			2/1		B/135
PLAT # OR L/F	GRID #	ZONING	TAX MAP NO.	ELECTION DISTRICT	CENSUS TRACT
9308 & 9309	NA	NT-05	29	5TH	605502
WATER CODE			SEWER CODE		
214 W&S			214 W&S		

PROFESSIONAL ENGINEER JENNIFER LYNN HARRINGTON No. 23110 STATE OF MARYLAND — 10.3.13

PROFESSIONAL CERTIFICATION. I HEREBY CERTIFY THAT THESE DOCUMENTS WERE PREPARED OR APPROVED BY ME, AND THAT I AM A DULY LICENSED PROFESSIONAL ENGINEER UNDER THE LAWS OF THE STATE OF MARYLAND, LICENSE NO. 23110, EXPIRATION DATE 09/10/15.

SITE RESOURCES incorporated
Comprehensive Land Planning & Site Design Services
14315 Jarrettsville Pike • Phoenix, Maryland 21131
(410) 683-3388 • fax (410) 683-3389

DRAWN BY: FJP/JLH	CONTRACT NO.: -
DESIGNED BY: JLH	SCALE: AS SHOWN
CHECKED BY: AFE	SRI PROJECT NO: 11059
DATE: SEPTEMBER 13, 2013	SHEET ESC1.04 23 OF 38

SDP-13-027

DETAIL B-1 STABILIZED CONSTRUCTION ENTRANCE

STANDARD SYMBOL: SCE

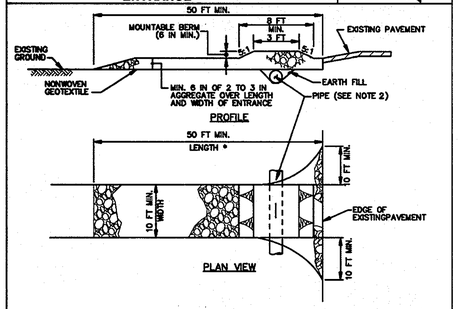

CONSTRUCTION SPECIFICATIONS

1. PLACE STABILIZED CONSTRUCTION ENTRANCE IN ACCORDANCE WITH THE APPROVED PLAN. VEHICLES MUST TRAVEL OVER THE ENTIRE LENGTH OF THE SCE. USE MINIMUM LENGTH OF 50 FEET (*30 FEET FOR SINGLE RESIDENCE LOT). USE MINIMUM WIDTH OF 10 FEET. FLARE SCE 10 FEET MINIMUM AT THE EXISTING ROAD TO PROVIDE A TURNING RADIUS.
2. PIPE ALL SURFACE WATER FLOWING TO OR DIVERTED TOWARD THE SCE UNDER THE ENTRANCE, MAINTAINING POSITIVE DRAINAGE. PROTECT PIPE INSTALLED THROUGH THE SCE WITH A MOUNTABLE BERM WITH 5:1 SLOPES AND A MINIMUM OF 12 INCHES OF STONE OVER THE PIPE. PROVIDE PIPE AS SPECIFIED ON APPROVED PLAN. WHEN THE SCE IS LOCATED AT A HIGH SPOT AND HAS NO DRAINAGE TO CONVEY, A PIPE IS NOT NECESSARY. A MOUNTABLE BERM IS REQUIRED WHEN SCE IS NOT LOCATED AT A HIGH SPOT.
3. PREPARE SUBGRADE AND PLACE NONWOVEN GEOTEXTILE, AS SPECIFIED IN SECTION H-1 MATERIALS.
4. PLACE CRUSHED AGGREGATE (2 TO 3 INCHES IN SIZE) OR EQUIVALENT RECYCLED CONCRETE (WITHOUT REBAR) AT LEAST 6 INCHES DEEP OVER THE LENGTH AND WIDTH OF THE SCE.
5. MAINTAIN ENTRANCE IN A CONDITION THAT MINIMIZES TRACKING OF SEDIMENT. ADD STONE OR MAKE OTHER REPAIRS AS CONDITIONS DEMAND TO MAINTAIN CLEAN SURFACE, MOUNTABLE BERM, AND SPECIFIED DIMENSIONS. IMMEDIATELY REMOVE STONE AND/OR SEDIMENT SPILLED, DROPPED, OR TRACKED ONTO ADJACENT ROADWAY BY VACUUMING, SCRAPING, AND/OR SWEEPING. WASHING ROADWAY TO REMOVE MUD TRACKED ONTO PAVEMENT IS NOT ACCEPTABLE UNLESS WASH WATER IS DIRECTED TO AN APPROVED SEDIMENT CONTROL PRACTICE.

MARYLAND STANDARDS AND SPECIFICATIONS FOR SOIL EROSION AND SEDIMENT CONTROL

U.S. DEPARTMENT OF AGRICULTURE NATURAL RESOURCES CONSERVATION SERVICE	2011	MARYLAND DEPARTMENT OF ENVIRONMENT WATER MANAGEMENT ADMINISTRATION

DETAIL C-8 MOUNTABLE BERM

STANDARD SYMBOL: MB

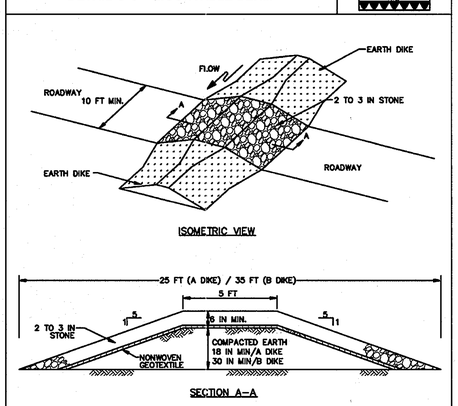

CONSTRUCTION SPECIFICATIONS

1. USE MINIMUM WIDTH OF 10 FEET TO ALLOW FOR VEHICULAR PASSAGE.
2. PLACE NONWOVEN GEOTEXTILE, AS SPECIFIED IN SECTION H-1 MATERIALS, OVER THE EARTH MOUND PRIOR TO PLACING STONE.
3. PLACE 2 TO 3 INCH STONE OR EQUIVALENT RECYCLED CONCRETE AT LEAST 6 INCHES DEEP OVER THE LENGTH AND WIDTH OF THE MOUNTABLE BERM.
4. MAINTAIN LINE, GRADE, AND CROSS SECTION. ADD STONE OR MAKE OTHER REPAIRS AS CONDITIONS DEMAND TO MAINTAIN SPECIFIED DIMENSIONS. REMOVE ACCUMULATED SEDIMENT AND DEBRIS. MAINTAIN POSITIVE DRAINAGE.

MARYLAND STANDARDS AND SPECIFICATIONS FOR SOIL EROSION AND SEDIMENT CONTROL

U.S. DEPARTMENT OF AGRICULTURE NATURAL RESOURCES CONSERVATION SERVICE	2011	MARYLAND DEPARTMENT OF ENVIRONMENT WATER MANAGEMENT ADMINISTRATION

DETAIL E-1 SILT FENCE

STANDARD SYMBOL: SF

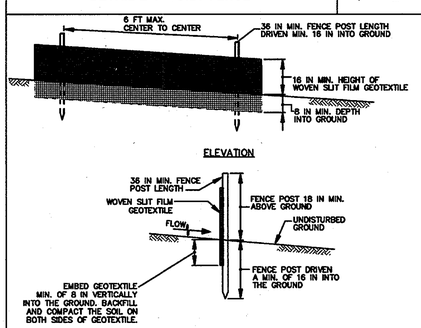

1 OF 2.

MARYLAND STANDARDS AND SPECIFICATIONS FOR SOIL EROSION AND SEDIMENT CONTROL

U.S. DEPARTMENT OF AGRICULTURE NATURAL RESOURCES CONSERVATION SERVICE	2011	MARYLAND DEPARTMENT OF ENVIRONMENT WATER MANAGEMENT ADMINISTRATION

DETAIL E-1 SILT FENCE

STANDARD SYMBOL: SF

CONSTRUCTION SPECIFICATIONS

1. USE WOOD POSTS 1⅜ X 1⅜ ± 1/8 INCH (MINIMUM) SQUARE CUT OF SOUND QUALITY HARDWOOD. AS AN ALTERNATIVE TO WOODEN POST USE STANDARD "T" OR "U" SECTION STEEL POSTS WEIGHING NOT LESS THAN 1 POUND PER LINEAR FOOT.
2. USE 36 INCH MINIMUM POSTS DRIVEN 16 INCH MINIMUM INTO GROUND NO MORE THAN 6 FEET APART.
3. USE WOVEN SLIT FILM GEOTEXTILE AS SPECIFIED IN SECTION H-1 MATERIALS AND FASTEN GEOTEXTILE SECURELY TO UPSLOPE SIDE OF FENCE POSTS WITH WIRE TIES OR STAPLES AT TOP AND MID-SECTION.
4. PROVIDE MANUFACTURER CERTIFICATION TO THE AUTHORIZED REPRESENTATIVE OF THE INSPECTION/ENFORCEMENT AUTHORITY SHOWING THAT THE GEOTEXTILE USED MEETS THE REQUIREMENTS IN SECTION H-1 MATERIALS.
5. EMBED GEOTEXTILE A MINIMUM OF 8 INCHES VERTICALLY INTO THE GROUND. BACKFILL AND COMPACT THE SOIL ON BOTH SIDES OF FABRIC.
6. WHERE TWO SECTIONS OF GEOTEXTILE ADJOIN: OVERLAP, TWIST, AND STAPLE TO POST IN ACCORDANCE WITH THIS DETAIL.
7. EXTEND BOTH ENDS OF THE SILT FENCE A MINIMUM OF FIVE HORIZONTAL FEET UPSLOPE AT 45 DEGREES TO THE MAIN FENCE ALIGNMENT TO PREVENT RUNOFF FROM GOING AROUND THE ENDS OF THE SILT FENCE.
8. REMOVE ACCUMULATED SEDIMENT AND DEBRIS WHEN BULGES DEVELOP IN SILT FENCE OR WHEN SEDIMENT REACHES 25% OF FENCE HEIGHT. REPLACE GEOTEXTILE IF TORN. IF UNDERMINING OCCURS, REINSTALL FENCE.

2 OF 2

MARYLAND STANDARDS AND SPECIFICATIONS FOR SOIL EROSION AND SEDIMENT CONTROL

U.S. DEPARTMENT OF AGRICULTURE NATURAL RESOURCES CONSERVATION SERVICE	2011	MARYLAND DEPARTMENT OF ENVIRONMENT WATER MANAGEMENT ADMINISTRATION

DETAIL E-2 SILT FENCE ON PAVEMENT

STANDARD SYMBOL: SFOP

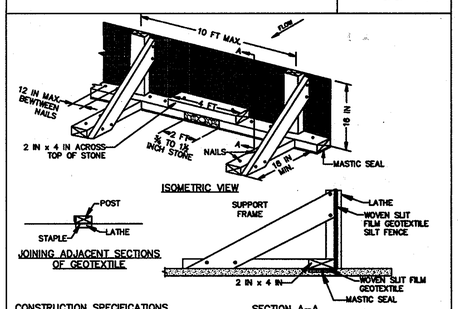

CONSTRUCTION SPECIFICATIONS

1. USE NOMINAL 2 INCH X 4 INCH LUMBER.
2. USE WOVEN SLIT FILM GEOTEXTILE, AS SPECIFIED IN SECTION H-1 MATERIALS.
3. PROVIDE MANUFACTURER CERTIFICATION TO THE AUTHORIZED REPRESENTATIVE OF THE INSPECTION/ENFORCEMENT AUTHORITY SHOWING THAT THE GEOTEXTILE USED MEETS THE REQUIREMENTS IN SECTION H-1 MATERIALS.
4. SPACE UPRIGHT SUPPORTS NO MORE THAN 10 FEET APART.
5. PROVIDE A TWO FOOT OPENING BETWEEN EVERY SET OF SUPPORTS AND PLACE STONE IN THE OPENING OVER GEOTEXTILE.
6. KEEP SILT FENCE TAUT AND SECURELY STAPLE TO THE UPSLOPE SIDE OF UPRIGHT SUPPORTS. EXTEND GEOTEXTILE UNDER 2x4.
7. WHERE TWO SECTIONS OF GEOTEXTILE ADJOIN: OVERLAP, FOLD, AND STAPLE TO POST IN ACCORDANCE WITH THIS DETAIL. ATTACH LATHE.
8. PROVIDE A MASTIC SEAL BETWEEN PAVEMENT, GEOTEXTILE, AND 2x4 TO PREVENT SEDIMENT-LADEN WATER FROM ESCAPING BENEATH SILT FENCE INSTALLATION.
9. SECURE BOARDS TO PAVEMENT WITH 40D 5 INCH MINIMUM LENGTH NAILS.
10. REMOVE ACCUMULATED SEDIMENT AND DEBRIS WHEN BULGES DEVELOP IN SILT FENCE OR WHEN SEDIMENT REACHES 25% OF FENCE HEIGHT. REPLACE GEOTEXTILE IF TORN. MAINTAIN WATER TIGHT SEAL ALONG BOTTOM. REPLACE STONE IF DISPLACED.

MARYLAND STANDARDS AND SPECIFICATIONS FOR SOIL EROSION AND SEDIMENT CONTROL

U.S. DEPARTMENT OF AGRICULTURE NATURAL RESOURCES CONSERVATION SERVICE	2011	MARYLAND DEPARTMENT OF ENVIRONMENT WATER MANAGEMENT ADMINISTRATION

DETAIL E-3 SUPER SILT FENCE

STANDARD SYMBOL: SSF

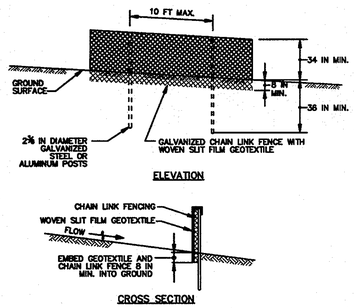

CONSTRUCTION SPECIFICATIONS

1. INSTALL 2⅜ INCH DIAMETER GALVANIZED STEEL POSTS OF 0.095 INCH WALL THICKNESS AND SIX FOOT LENGTH SPACED NO FURTHER THAN 10 FEET APART. DRIVE THE POSTS A MINIMUM OF 36 INCHES INTO THE GROUND.
2. FASTEN 9 GAUGE OR HEAVIER GALVANIZED CHAIN LINK FENCE (2⅜ INCH MAXIMUM OPENING) 42 INCHES IN HEIGHT SECURELY TO THE FENCE POSTS WITH WIRE TIES OR HOG RINGS.
3. FASTEN WOVEN SLIT FILM GEOTEXTILE AS SPECIFIED IN SECTION H-1 MATERIALS, SECURELY TO THE UPSLOPE SIDE OF CHAIN LINK FENCE WITH TIES SPACED EVERY 24 INCHES AT THE TOP AND MID SECTION. EMBED GEOTEXTILE AND CHAIN LINK FENCE A MINIMUM OF 8 INCHES INTO THE GROUND.
4. WHERE ENDS OF THE GEOTEXTILE COME TOGETHER, THE ENDS SHALL BE OVERLAPPED BY 6 INCHES, FOLDED, AND STAPLED TO PREVENT SEDIMENT BY PASS.
5. EXTEND BOTH ENDS OF THE SUPER SILT FENCE A MINIMUM OF FIVE HORIZONTAL FEET UPSLOPE AT 45 DEGREES TO THE MAIN FENCE ALIGNMENT TO PREVENT RUNOFF FROM GOING AROUND THE ENDS OF THE SUPER SILT FENCE.
6. PROVIDE MANUFACTURER CERTIFICATION TO THE INSPECTION/ENFORCEMENT AUTHORITY SHOWING THAT GEOTEXTILE USED MEETS THE REQUIREMENTS IN SECTION H-1 MATERIALS.
7. REMOVE ACCUMULATED SEDIMENT AND DEBRIS WHEN BULGES DEVELOP IN FENCE OR WHEN SEDIMENT REACHES 25% OF FENCE HEIGHT, REPLACE GEOTEXTILE IF TORN. IF UNDERMINING OCCURS, REINSTALL CHAIN LINK FENCING AND GEOTEXTILE.

MARYLAND STANDARDS AND SPECIFICATIONS FOR SOIL EROSION AND SEDIMENT CONTROL

U.S. DEPARTMENT OF AGRICULTURE NATURAL RESOURCES CONSERVATION SERVICE	2011	MARYLAND DEPARTMENT OF ENVIRONMENT WATER MANAGEMENT ADMINISTRATION

DETAIL E-6 FILTER LOG

STANDARD SYMBOL: FL-18

DESIGNATION FL-18 REFERS TO 18 INCH DIAMETER FILTER LOG.

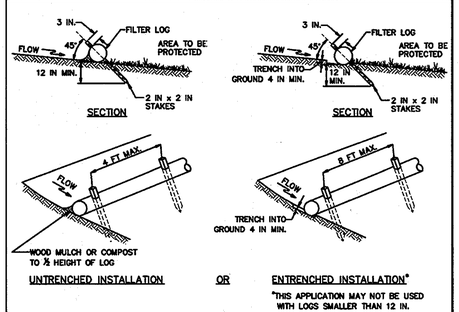

1 OF 2

MARYLAND STANDARDS AND SPECIFICATIONS FOR SOIL EROSION AND SEDIMENT CONTROL

U.S. DEPARTMENT OF AGRICULTURE NATURAL RESOURCES CONSERVATION SERVICE	2011	MARYLAND DEPARTMENT OF ENVIRONMENT WATER MANAGEMENT ADMINISTRATION

DETAIL E-6 FILTER LOG

STANDARD SYMBOL: FL-18

DESIGNATION FL-18 REFERS TO 18 INCH DIAMETER FILTER LOG.

CONSTRUCTION SPECIFICATIONS

1. PRIOR TO INSTALLATION, CLEAR ALL OBSTRUCTIONS INCLUDING ROCKS, CLODS, AND DEBRIS GREATER THAN ONE INCH THAT MAY INTERFERE WITH PROPER FUNCTION OF FILTER LOG.
2. FILL LOG NETTING UNIFORMLY WITH COMPOST (IN ACCORDANCE WITH SECTION H-1 MATERIALS), OR OTHER APPROVED BIODEGRADABLE MATERIAL TO DESIRED LENGTH SUCH THAT LOGS DO NOT DEFORM.
3. INSTALL FILTER LOGS PERPENDICULAR TO THE FLOW DIRECTION AND PARALLEL TO THE SLOPE WITH THE BEGINNING AND END OF THE INSTALLATION POINTING SLIGHTLY UP THE SLOPE CREATING A "J" SHAPE AT EACH END TO PREVENT BYPASS.
4. FOR UNTRENCHED INSTALLATION BLOW OR HAND PLACE MULCH OR COMPOST ON UPHILL SIDE OF THE SLOPE ALONG LOG.
5. STAKE FILTER LOG EVERY 4 FEET OR CLOSER ALONG ENTIRE LENGTH OF LOG OR TRENCH LOG INTO GROUND A MINIMUM OF 4 INCHES AND STAKE LOG EVERY 8 FEET OR CLOSER.
6. USE STAKES WITH A MINIMUM NOMINAL CROSS SECTION OF 2X2 INCH AND OF SUFFICIENT LENGTH TO ATTAIN A MINIMUM OF 12 INCHES INTO THE GROUND AND 3 INCHES PROTRUDING ABOVE LOG.
7. WHEN MORE THAN ONE LOG IS NEEDED, OVERLAP ENDS 12 INCHES MINIMUM AND STAKE.
8. REMOVE SEDIMENT WHEN IT HAS ACCUMULATED TO A DEPTH OF ½ THE EXPOSED HEIGHT OF LOG AND REPLACE MULCH, REPLACE FILTER LOG IF TORN. REINSTALL FILTER LOG IF UNDERMINING OR DISLODGING OCCURS. REPLACE CLOGGED FILTER LOGS. FOR PERMANENT APPLICATIONS, ESTABLISH AND CONTINUOUSLY MEET REQUIREMENTS FOR ADEQUATE VEGETATIVE ESTABLISHMENT IN ACCORDANCE WITH SECTION B-4 VEGETATIVE STABILIZATION.

2 OF 2

MARYLAND STANDARDS AND SPECIFICATIONS FOR SOIL EROSION AND SEDIMENT CONTROL

U.S. DEPARTMENT OF AGRICULTURE NATURAL RESOURCES CONSERVATION SERVICE	2011	MARYLAND DEPARTMENT OF ENVIRONMENT WATER MANAGEMENT ADMINISTRATION

DETAIL D-4-1-C ROCK OUTLET PROTECTION III

STANDARD SYMBOL: ROPIII

DISCHARGE TO AN UNCONFINED CHANNEL OR FLAT AREA

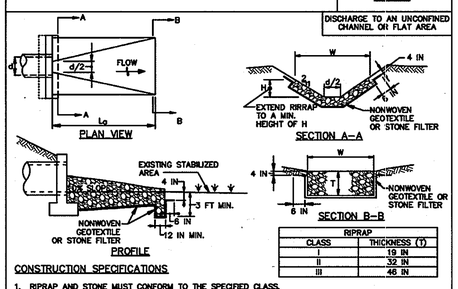

RIPRAP	
CLASS	THICKNESS (T)
I	19 IN
II	32 IN
III	46 IN

CONSTRUCTION SPECIFICATIONS

1. RIPRAP AND STONE MUST CONFORM TO THE SPECIFIED CLASS.
2. USE NONWOVEN GEOTEXTILE, AS SPECIFIED IN SECTION H-1 MATERIALS. AND PROTECT FROM PUNCTURING, CUTTING, OR TEARING. REPAIR ANY DAMAGE OTHER THAN AN OCCASIONAL SMALL HOLE BY PLACING ANOTHER PIECE OF GEOTEXTILE OVER THE DAMAGED PART OR BY COMPLETELY REPLACING THE GEOTEXTILE. PROVIDE A MINIMUM OF ONE FOOT OVERLAP FOR ALL REPAIRS AND FOR JOINING TWO PIECES OF GEOTEXTILE TOGETHER.
3. PREPARE THE SUBGRADE FOR GEOTEXTILE OR STONE FILTER (⅜ TO 1½ INCH MINIMUM STONE FOR 6 INCH MINIMUM DEPTH) AND RIPRAP TO THE REQUIRED LINES AND GRADES. COMPACT ANY FILL REQUIRED IN THE SUBGRADE TO A DENSITY OF APPROXIMATELY THAT OF THE SURROUNDING UNDISTURBED MATERIAL.
4. EXTEND GEOTEXTILE AT LEAST 6 INCHES BEYOND EDGES OF RIPRAP AND EMBED AT LEAST 4 INCHES AT SIDES OF RIPRAP.
5. CONSTRUCT RIPRAP OUTLET TO FULL COURSE THICKNESS IN ONE OPERATION AND IN SUCH A MANNER AS TO AVOID DISPLACEMENT OF UNDERLYING MATERIALS. PLACE STONE FOR RIPRAP OUTLET IN A MANNER THAT WILL ENSURE THAT IT IS REASONABLY HOMOGENOUS WITH THE SMALLER STONES AND SPALLS FILLING THE VOIDS BETWEEN THE LARGER STONES. PLACE RIPRAP IN A MANNER TO PREVENT DAMAGE TO THE FILTER BLANKET OR GEOTEXTILE. HAND PLACE TO THE EXTENT NECESSARY.
6. WHERE NO ENDWALL IS USED, CONSTRUCT THE UPSTREAM END OF THE APRON SO THAT THE WIDTH IS TWO TIMES THE DIAMETER OF THE OUTLET PIPE, AND EXTEND THE STONE UNDER THE OUTLET BY A MINIMUM OF 18 INCHES.
7. CONSTRUCT APRON WITH 0% SLOPE ALONG ITS LENGTH AND WITHOUT OBSTRUCTIONS. PLACE STONE SO THAT IT BLENDS IN WITH EXISTING GROUND.
8. MAINTAIN LINE, GRADE, AND CROSS SECTION. KEEP OUTLET FREE OF EROSION. REMOVE ACCUMULATED SEDIMENT AND DEBRIS. AFTER HIGH FLOWS INSPECT FOR SCOUR AND RIPRAP DISLODGED) RIPRAP. MAKE NECESSARY REPAIRS IMMEDIATELY.

MARYLAND STANDARDS AND SPECIFICATIONS FOR SOIL EROSION AND SEDIMENT CONTROL

U.S. DEPARTMENT OF AGRICULTURE NATURAL RESOURCES CONSERVATION SERVICE	2011	MARYLAND DEPARTMENT OF ENVIRONMENT WATER MANAGEMENT ADMINISTRATION

THIS DEVELOPMENT PLAN IS APPROVED FOR SOIL EROSION AND SEDIMENT CONTROL BY THE HOWARD SOIL CONSERVATION DISTRICT.

John R. Robertson — 1/14/14
HOWARD SOIL CONSERVATION DISTRICT — DATE

ENGINEER'S CERTIFICATE

"I certify that this plan for sediment and erosion control represents a practical and workable plan based on my personal knowledge of the site conditions and that it was prepared in accordance with the requirements of the Howard Soil Conservation District."

Jennifer L. Harrington — 10.3.13
JENNIFER L. HARRINGTON, P.E. - ENGINEER — DATE

DEVELOPER'S CERTIFICATE

"I/We certify that all development and construction will be done according to this plan for sediment and erosion control, and that all responsible personnel involved in the construction project will have a Certificate of Attendance at a Department of the Environment Approved Training Program for the Control of Sediment and Erosion before beginning the project. I also authorize periodic on-site inspection by the Howard Soil Conservation District"

D Woods — 9/19/13
COLUMBIA ASSOCIATION - DEVELOPER — DATE

EROSION AND SEDIMENT CONTROL DETAILS

HOBBIT'S GLEN GOLF CLUBHOUSE

PROPERTY OF COLUMBIA ASSOCIATION, INC.

REVISIONS

PROFESSIONAL ENGINEER — JENNIFER HARRINGTON — No. 23165 — STATE OF MARYLAND — 10.3.13

PROFESSIONAL CERTIFICATION
I HEREBY CERTIFY THAT THESE DOCUMENTS WERE PREPARED OR APPROVED BY ME, AND THAT I AM A DULY LICENSED PROFESSIONAL ENGINEER UNDER THE LAWS OF THE STATE OF MARYLAND, LICENSE NO. 23165, EXPIRATION DATE: 09/30/15

SITE RESOURCES incorporated
Comprehensive Land Planning & Site Design Services
14315 Jarrettsville Pike • Phoenix, Maryland 21131
(410) 683-3388 • fax (410) 683-5389

DRAWN BY: JLH	CONTRACT NO.: -
DESIGNED BY: JLH	SCALE: AS SHOWN
CHECKED BY: AFE	SRI PROJECT NO: 11059
DATE: SEPTEMBER 13, 2013	SHEET ESC2.01 24 OF 36

APPROVED: DEPARTMENT OF PLANNING & ZONING

CHIEF, DEVELOPMENT ENGINEERING DIVISION — DATE 1/7/14

CHIEF, DIVISION OF LAND DEVELOPMENT — DATE 1-28-14

DIRECTOR — DATE 1/29/14

APPROVED
PLANNING BOARD OF HOWARD COUNTY
DATE 09/12/13

APPROVED: FOR PUBLIC WATER AND PUBLIC SEWERAGE SYSTEMS

BWilson for Maura Rossman — 12/19/2013
COUNTY HEALTH OFFICER, HOWARD COUNTY HEALTH DEPARTMENT — DATE

ADDRESS CHART	
LOT/PARCEL	STREET ADDRESS
8/135	11130 WILLOW BOTTOM DRIVE, COLUMBIA, MD. 21044

PERMIT INFORMATION CHART					
SUBDIVISION NAME			SECTION/AREA		LOT/PARCEL NO.
VILLAGE OF HARPERS CHOICE			2/1		8/135
FLAT # OR L/F	GRID #	ZONING	TAX MAP NO.	ELECTION DISTRICT	CENSUS TRACT
9308 & 9309	NA	NT-05	29	5TH	605502
WATER CODE			SEWER CODE		
2141145			2141145		

SDP-13-027

DETAIL E-9-1 STANDARD INLET PROTECTION

STANDARD SYMBOL
SIP

TYPE A MAXIMUM DRAINAGE AREA = ¼ ACRE
TYPE B MAXIMUM DRAINAGE AREA = 1 ACRE

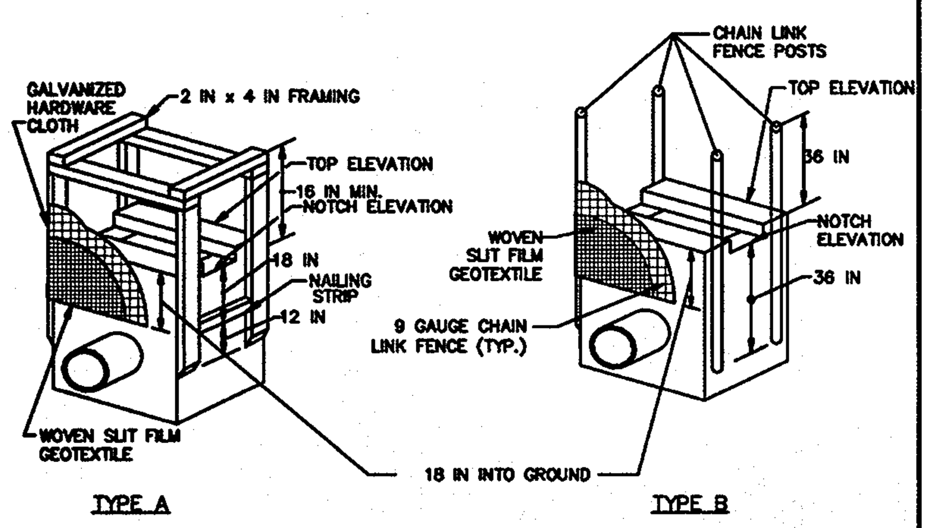

ISOMETRIC VIEW

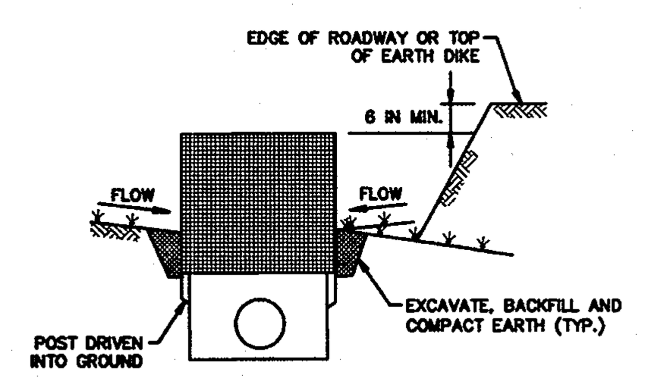

SECTION FOR TYPE A AND B

1 OF 2

MARYLAND STANDARDS AND SPECIFICATIONS FOR SOIL EROSION AND SEDIMENT CONTROL

U.S. DEPARTMENT OF AGRICULTURE NATURAL RESOURCES CONSERVATION SERVICE	2011	MARYLAND DEPARTMENT OF ENVIRONMENT WATER MANAGEMENT ADMINISTRATION

DETAIL E-9-1 STANDARD INLET PROTECTION

STANDARD SYMBOL
SIP

CONSTRUCTION SPECIFICATIONS

1. USE WOVEN SLIT FILM GEOTEXTILE AS SPECIFIED IN SECTION H-1 MATERIALS.
2. EXCAVATE COMPLETELY AROUND THE INLET TO A DEPTH OF 18 INCHES BELOW THE NOTCH ELEVATION.
3. FOR TYPE A, USE NOMINAL 2 INCH X 4 INCH CONSTRUCTION GRADE LUMBER POSTS, DRIVEN 1 FOOT INTO THE GROUND AT EACH CORNER OF THE INLET. PLACE NAIL STRIPS BETWEEN THE POSTS ON THE ENDS OF THE INLET. ASSEMBLE THE TOP PORTION OF THE 2X4 FRAME AS SHOWN. STRETCH ½ INCH GALVANIZED HARDWARE CLOTH TIGHTLY AROUND THE FRAME AND FASTEN SECURELY. FASTEN GEOTEXTILE SECURELY TO THE HARDWARE CLOTH WITH TIES SPACED EVERY 24 INCHES AT THE TOP AND MID SECTION. EMBED GEOTEXTILE AND HARDWARE CLOTH A MINIMUM OF 18 INCHES BELOW THE WEIR CREST. THE ENDS OF THE GEOTEXTILE MUST MEET AT A POST, BE OVERLAPPED AND FOLDED, THEN FASTENED TO THE POST.

   FOR TYPE B, USE 2⅜ INCH DIAMETER GALVANIZED STEEL POSTS OF 0.095 INCH WALL THICKNESS AND 6 FOOT LENGTH, DRIVEN A MINIMUM OF 36 INCHES BELOW THE WEIR CREST AT EACH CORNER OF THE STRUCTURE. FASTEN 9 GAUGE OR HEAVIER CHAIN LINK FENCE, 42 INCHES IN HEIGHT, SECURELY TO THE FENCE POSTS WITH WIRE TIES. FASTEN GEOTEXTILE SECURELY TO THE CHAIN LINK FENCE WITH TIES SPACED EVERY 24 INCHES AT THE TOP AND MID SECTION. EMBED GEOTEXTILE AND CHAIN LINK FENCE A MINIMUM OF 18 INCHES BELOW THE WEIR CREST.
4. BACKFILL AROUND THE INLET IN LOOSE 4 INCH LIFTS AND COMPACT UNTIL SOIL IS LEVEL WITH THE NOTCH ELEVATION ON THE ENDS AND TOP ELEVATION ON THE SIDES.
5. STORM DRAIN INLET PROTECTION REQUIRES FREQUENT MAINTENANCE. REMOVE ACCUMULATED SEDIMENT AFTER EACH RAIN EVENT TO MAINTAIN FUNCTION AND AVOID PREMATURE CLOGGING. IF INLET PROTECTION DOES NOT COMPLETELY DRAIN WITHIN 24 HOURS AFTER A STORM EVENT, IT IS CLOGGED. WHEN THIS OCCURS, REMOVE ACCUMULATED SEDIMENT AND CLEAN, OR REPLACE GEOTEXTILE AND STONE.

2 OF 2

MARYLAND STANDARDS AND SPECIFICATIONS FOR SOIL EROSION AND SEDIMENT CONTROL

U.S. DEPARTMENT OF AGRICULTURE NATURAL RESOURCES CONSERVATION SERVICE	2011	MARYLAND DEPARTMENT OF ENVIRONMENT WATER MANAGEMENT ADMINISTRATION

DETAIL E-9-2 AT-GRADE INLET PROTECTION

STANDARD SYMBOL
AGIP

MAXIMUM DRAINAGE AREA = 1 ACRE

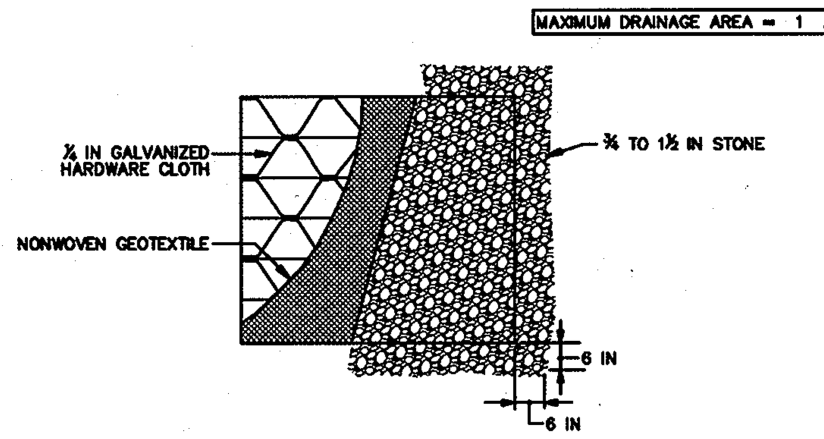

PLAN / CUT AWAY VIEW

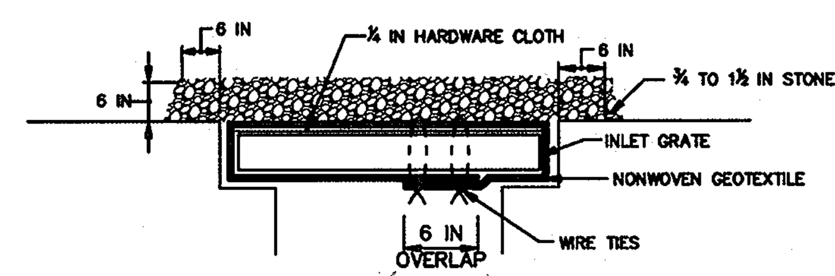

CROSS SECTION

CONSTRUCTION SPECIFICATIONS

1. USE NONWOVEN GEOTEXTILE AS SPECIFIED IN SECTION H-1 MATERIALS.
2. LIFT GRATE AND WRAP WITH NONWOVEN GEOTEXTILE TO COMPLETELY COVER ALL OPENINGS. SECURE WITH WIRE TIES AND SET GRATE BACK IN PLACE.
3. PLACE CLEAN ¾ TO 1½ INCH STONE OR EQUIVALENT RECYCLED CONCRETE 6 INCHES THICK ON THE GRATE.
4. STORM DRAIN INLET PROTECTION REQUIRES FREQUENT MAINTENANCE. REMOVE ACCUMULATED SEDIMENT AFTER EACH RAIN EVENT TO MAINTAIN FUNCTION AND AVOID PREMATURE CLOGGING. IF INLET PROTECTION DOES NOT COMPLETELY DRAIN WITHIN 24 HOURS AFTER A STORM EVENT, IT IS CLOGGED. WHEN THIS OCCURS, REMOVE ACCUMULATED SEDIMENT AND CLEAN, OR REPLACE GEOTEXTILE AND STONE.

MARYLAND STANDARDS AND SPECIFICATIONS FOR SOIL EROSION AND SEDIMENT CONTROL

U.S. DEPARTMENT OF AGRICULTURE NATURAL RESOURCES CONSERVATION SERVICE	2011	MARYLAND DEPARTMENT OF ENVIRONMENT WATER MANAGEMENT ADMINISTRATION

DETAIL B-4-6-A TEMPORARY SOIL STABILIZATION MATTING CHANNEL APPLICATION

STANDARD SYMBOL
TSSMC – * lb/ft²
(* INCLUDE SHEAR STRESS)

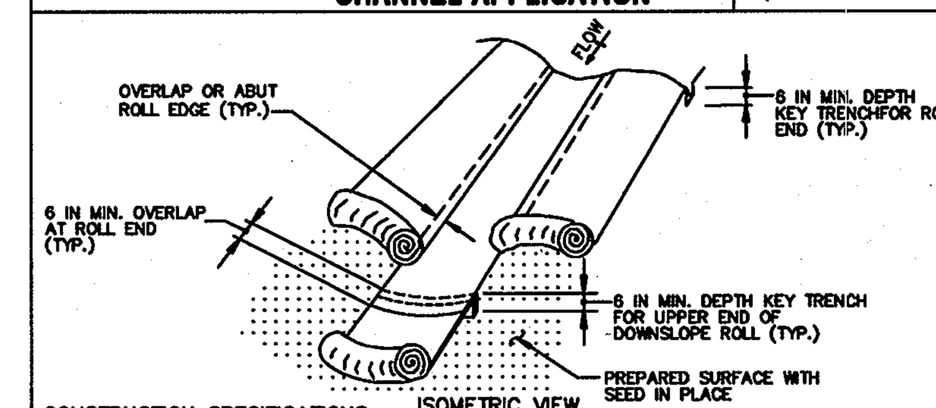

ISOMETRIC VIEW

CONSTRUCTION SPECIFICATIONS

1. USE MATTING THAT HAS A DESIGN VALUE FOR SHEAR STRESS EQUAL TO OR HIGHER THAN THE SHEAR STRESS DESIGNATED ON APPROVED PLANS.
2. USE TEMPORARY SOIL STABILIZATION MATTING MADE OF DEGRADABLE (LASTS 6 MONTHS MINIMUM) NATURAL OR MAN-MADE FIBERS (MOSTLY ORGANIC). MAT MUST HAVE UNIFORM THICKNESS AND DISTRIBUTION OF FIBERS THROUGHOUT AND BE SMOLDER RESISTANT. CHEMICALS USED IN THE MAT MUST BE NON-LEACHING AND NON-TOXIC TO VEGETATION AND SEED GERMINATION AND NON-INJURIOUS TO THE SKIN. IF PRESENT, NETTING MUST BE EXTRUDED PLASTIC WITH A MAXIMUM MESH OPENING OF 2x2 INCHES AND SUFFICIENTLY BONDED OR SEWN ON 2 INCH CENTERS ALONG LONGITUDINAL AXIS OF THE MATERIAL TO PREVENT SEPARATION OF THE NET FROM THE PARENT MATERIAL.
3. SECURE MATTING USING STEEL STAPLES, WOOD STAKES, OR BIODEGRADABLE EQUIVALENT. STAPLES MUST BE "U" OR "T" SHAPED STEEL WIRE HAVING A MINIMUM GAUGE OF NO. 11 AND NO. 8 RESPECTIVELY. "U" SHAPED STAPLES MUST AVERAGE 1 TO 1½ INCHES WIDE AND BE A MINIMUM OF 6 INCHES LONG. "T" SHAPED STAPLES MUST HAVE A MINIMUM 8 INCH MAIN LEG, A MINIMUM 1 INCH SECONDARY LEG, AND A MINIMUM 4 INCH HEAD. WOOD STAKES MUST BE ROUGH-SAWN HARDWOOD, 12 TO 24 INCHES IN LENGTH, 1x3 INCH IN CROSS SECTION, AND WEDGE SHAPED AT THE BOTTOM.
4. PERFORM FINAL GRADING, TOPSOIL APPLICATION, SEEDBED PREPARATION, AND PERMANENT SEEDING IN ACCORDANCE WITH SPECIFICATIONS. PLACE MATTING WITHIN 48 HOURS OF COMPLETING SEEDING OPERATIONS UNLESS END OF WORKDAY STABILIZATION IS SPECIFIED ON THE APPROVED EROSION AND SEDIMENT CONTROL PLAN.
5. UNROLL MATTING IN DIRECTION OF WATER FLOW, CENTERING THE FIRST ROLL ON THE CHANNEL CENTERLINE. WORK FROM CENTER OF CHANNEL OUTWARD WHEN PLACING ROLLS. LAY MAT SMOOTHLY AND FIRMLY ON THE SEEDED SURFACE. AVOID STRETCHING THE MATTING.
6. KEY-IN UPSTREAM END OF EACH MAT ROLL BY DIGGING A 6 INCH (MINIMUM) TRENCH AT THE UPSTREAM END OF THE MATTING, PLACING THE ROLL END IN THE TRENCH, STAPLING THE MAT IN PLACE, REPLACING THE EXCAVATED MATERIAL, AND TAMPING TO SECURE THE MAT END.
7. OVERLAP OR ABUT THE ROLL EDGES PER MANUFACTURER RECOMMENDATIONS. OVERLAP ROLL ENDS BY 6 INCHES (MINIMUM), WITH THE UPSTREAM MAT OVERLAPPING ON TOP OF THE NEXT DOWNSTREAM MAT.
8. STAPLE/STAKE MAT IN A STAGGERED PATTERN ON 4 FOOT (MAXIMUM) CENTERS THROUGHOUT AND 2 FOOT (MAXIMUM) CENTERS ALONG SEAMS, JOINTS, AND ROLL ENDS.
9. ESTABLISH AND MAINTAIN VEGETATION SO THAT REQUIREMENTS FOR ADEQUATE VEGETATIVE ESTABLISHMENT ARE CONTINUOUSLY MET IN ACCORDANCE WITH SECTION B-4 VEGETATIVE STABILIZATION.

MARYLAND STANDARDS AND SPECIFICATIONS FOR SOIL EROSION AND SEDIMENT CONTROL

U.S. DEPARTMENT OF AGRICULTURE NATURAL RESOURCES CONSERVATION SERVICE	2011	MARYLAND DEPARTMENT OF ENVIRONMENT WATER MANAGEMENT ADMINISTRATION

DETAIL B-4-6-B TEMPORARY SOIL STABILIZATION MATTING SLOPE APPLICATION

STANDARD SYMBOL
TSSMS – * lb/ft²
(* INCLUDE SHEAR STRESS)

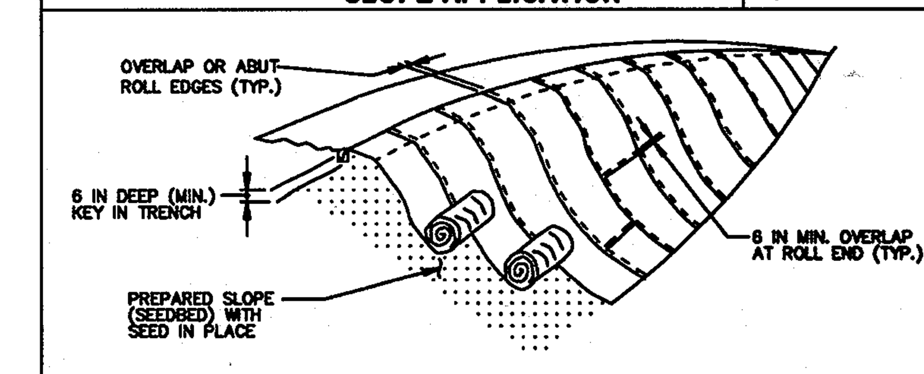

ISOMETRIC VIEW

CONSTRUCTION SPECIFICATIONS

1. USE MATTING THAT HAS A DESIGN VALUE FOR SHEAR STRESS EQUAL TO OR HIGHER THAN THE SHEAR STRESS DESIGNATED ON APPROVED PLANS.
2. USE TEMPORARY SOIL STABILIZATION MATTING MADE OF DEGRADABLE (LASTS 6 MONTHS MINIMUM) NATURAL OR MAN-MADE FIBERS (MOSTLY ORGANIC). MAT MUST HAVE UNIFORM THICKNESS AND DISTRIBUTION OF FIBERS THROUGHOUT AND BE SMOLDER RESISTANT. CHEMICALS USED IN THE MAT MUST BE NON-LEACHING AND NON-TOXIC TO VEGETATION AND SEED GERMINATION AND NON-INJURIOUS TO THE SKIN. IF PRESENT, NETTING MUST BE EXTRUDED PLASTIC WITH A MAXIMUM MESH OPENING OF 2x2 INCHES AND SUFFICIENTLY BONDED OR SEWN ON 2 INCH CENTERS ALONG LONGITUDINAL AXIS OF THE MATERIAL TO PREVENT SEPARATION OF THE NET FROM THE PARENT MATERIAL.
3. SECURE MATTING USING STEEL STAPLES, WOOD STAKES, OR BIODEGRADABLE EQUIVALENT. STAPLES MUST BE "U" OR "T" SHAPED STEEL WIRE HAVING A MINIMUM GAUGE OF NO. 11 AND NO. 8 RESPECTIVELY. "U" SHAPED STAPLES MUST AVERAGE 1 TO 1½ INCHES WIDE AND BE A MINIMUM OF 6 INCHES LONG. "T" SHAPED STAPLES MUST HAVE A MINIMUM 8 INCH MAIN LEG, A MINIMUM 1 INCH SECONDARY LEG, AND A MINIMUM 4 INCH HEAD. WOOD STAKES MUST BE ROUGH-SAWN HARDWOOD, 12 TO 24 INCHES IN LENGTH, 1x3 INCH IN CROSS SECTION, AND WEDGE SHAPED AT THE BOTTOM.
4. PERFORM FINAL GRADING, TOPSOIL APPLICATION, SEEDBED PREPARATION, AND PERMANENT SEEDING IN ACCORDANCE WITH SPECIFICATIONS. PLACE MATTING WITHIN 48 HOURS OF COMPLETING SEEDING OPERATIONS UNLESS END OF WORKDAY STABILIZATION IS SPECIFIED ON THE APPROVED EROSION & SEDIMENT CONTROL PLAN.
5. UNROLL MATTING DOWNSLOPE. LAY MAT SMOOTHLY AND FIRMLY UPON THE SEEDED SURFACE. AVOID STRETCHING THE MATTING.
6. OVERLAP OR ABUT ROLL EDGES PER MANUFACTURER RECOMMENDATIONS. OVERLAP ROLL ENDS BY 6 INCHES (MINIMUM), WITH THE UPSLOPE MAT OVERLAPPING ON TOP OF THE DOWNSLOPE MAT.
7. KEY IN THE UPSLOPE END OF MAT 6 INCHES (MINIMUM) BY DIGGING A TRENCH, PLACING THE MATTING ROLL END IN THE TRENCH, STAPLING THE MAT IN PLACE, REPLACING THE EXCAVATED MATERIAL, AND TAMPING TO SECURE THE MAT END IN THE KEY.
8. STAPLE/STAKE MAT IN A STAGGERED PATTERN ON 4 FOOT (MAXIMUM) CENTERS THROUGHOUT AND 2 FOOT (MAXIMUM) CENTERS ALONG SEAMS, JOINTS, AND ROLL ENDS.
9. ESTABLISH AND MAINTAIN VEGETATION SO THAT REQUIREMENTS FOR ADEQUATE VEGETATIVE ESTABLISHMENT ARE CONTINUOUSLY MET IN ACCORDANCE WITH SECTION B-4 VEGETATIVE STABILIZATION.

MARYLAND STANDARDS AND SPECIFICATIONS FOR SOIL EROSION AND SEDIMENT CONTROL

U.S. DEPARTMENT OF AGRICULTURE NATURAL RESOURCES CONSERVATION SERVICE	2011	MARYLAND DEPARTMENT OF ENVIRONMENT WATER MANAGEMENT ADMINISTRATION

DEVELOPER'S CERTIFICATE

"I/We certify that all development and construction will be done according to this plan for sediment and erosion control, and that all responsible personnel involved in the construction project will have a Certificate of Attendance at a Department of the Environment Approved Training Program for the Control of Sediment and Erosion before beginning the project. I also authorize periodic on-site inspection by the Howard Soil Conservation District"

D. Nott — 9/19/13
COLUMBIA ASSOCIATION - DEVELOPER — DATE

ENGINEER'S CERTIFICATE

"I certify that this plan for sediment and erosion control represents a practical and workable plan based on my personal knowledge of the site conditions and that it was prepared in accordance with the requirements of the Howard Soil Conservation District."

Jennifer Harrington — 10.3.13
JENNIFER L HARRINGTON, P.E. - ENGINEER — DATE

THIS DEVELOPMENT PLAN IS APPROVED FOR SOIL EROSION AND SEDIMENT CONTROL BY THE HOWARD SOIL CONSERVATION DISTRICT.

John R Robertson — 1/14/14
HOWARD SOIL CONSERVATION DISTRICT — DATE

APPROVED: DEPARTMENT OF PLANNING & ZONING

1.17.14
CHIEF, DEVELOPMENT ENGINEERING DIVISION — DATE
1-23-14
CHIEF, DIVISION OF LAND DEVELOPMENT — DATE
1/29/14
DIRECTOR — DATE

APPROVED
PLANNING BOARD OF HOWARD COUNTY
DATE 09/12/13

APPROVED: FOR PUBLIC WATER AND PUBLIC SEWERAGE SYSTEMS

B. Wilson for Maura Rossman — 12/19/2013
COUNTY HEALTH OFFICER — DATE
HOWARD COUNTY HEALTH DEPARTMENT

ADDRESS CHART

LOT/PARCEL	STREET ADDRESS
8/135	11130 WILLOW BOTTOM DRIVE, COLUMBIA, MD. 21044

PERMIT INFORMATION CHART

SUBDIVISION NAME			SECTION/AREA		LOT/PARCEL NO.
VILLAGE OF HARPERS CHOICE			2/1		8/135
PLAT # OR L/F	GRID #	ZONING	TAX MAP NO.	ELECTION DISTRICT	CENSUS TRACT
9308 & 9309	NA	NT-OS	29	5TH	605502
WATER CODE			SEWER CODE		
214 W&S			214 W&S		

EROSION AND SEDIMENT CONTROL DETAILS

HOBBIT'S GLEN GOLF CLUBHOUSE

PROPERTY OF COLUMBIA ASSOCIATION, INC.

REVISIONS

PROFESSIONAL ENGINEER JENNIFER HARRINGTON Reg. No. 23165 STATE OF MARYLAND
10.3.13

PROFESSIONAL CERTIFICATION
I HEREBY CERTIFY THAT THESE DOCUMENTS WERE PREPARED OR APPROVED BY ME, AND THAT I AM A DULY LICENSED PROFESSIONAL ENGINEER UNDER THE LAWS OF THE STATE OF MARYLAND, LICENSE NO. 16144 23165 EXPIRATION DATE: 07/18/15

SITE RESOURCES incorporated
Comprehensive Land Planning & Site Design Services
14315 Jarrettsville Pike • Phoenix, Maryland 21131
(410) 683-3388 • fax (410) 683-3389

DRAWN BY: JLH	CONTRACT NO.: -
DESIGNED BY: JLH	SCALE: AS SHOWN
CHECKED BY: AFE	SRI PROJECT NO: 11059
DATE: SEPTEMBER 13, 2013	SHEET ESC2.02 25 OF 38

SDP-13-027

B-4 STANDARDS AND SPECIFICATIONS FOR VEGETATIVE STABILIZATION

Definition
Using vegetation as cover to protect exposed soil from erosion.

Purpose
To promote the establishment of vegetation on exposed soil.

Conditions Where Practice Applies
On all disturbed areas not stabilized by other methods. This specification is divided into sections on incremental stabilization; soil preparation, soil amendments and topsoiling; seeding and mulching; temporary stabilization; and permanent stabilization.

Effects on Water Quality and Quantity
Stabilization practices are used to promote the establishment of vegetation on exposed soil. When soil is stabilized with vegetation, the soil is less likely to erode and more likely to allow infiltration of rainfall, thereby reducing sediment loads and runoff to downstream areas.

Planting vegetation in disturbed areas will have an effect on the water budget, especially on volumes and rates of runoff, infiltration, evaporation, transpiration, percolation, and groundwater recharge. Over time, vegetation will increase organic matter content and improve the water holding capacity of the soil and subsequent plant growth.

Vegetation will help reduce the movement of sediment, nutrients, and other chemicals carried by runoff to receiving waters. Plants will also help protect groundwater supplies by assimilating those substances present within the root zone.

Sediment control practices must remain in place during grading, seedbed preparation, seeding, mulching, and vegetative establishment.

Adequate Vegetative Establishment
Inspect seeded areas for vegetative establishment and make necessary repairs, replacements, and reseedings within the planting season.

1. Adequate vegetative stabilization requires 85 percent groundcover.
2. If an area has less than 40 percent groundcover, restabilize following the original recommendations for lime, fertilizer, seedbed preparation, and seeding.
3. If an area has between 40 and 84 percent groundcover, over-seed and fertilize using half of the rates originally specified.
4. Maintenance fertilizer rates for permanent seeding are shown in Table B.6.

STANDARD STABILIZATION NOTE

Following initial soil disturbance or re-disturbance, permanent or temporary stabilization must be completed within:

a.) Three (3) calendar days as to the surface of all perimeter dikes, swales, ditches, perimeter slopes, and all slopes steeper than 3 horizontal to 1 vertical (3:1); and

b.) Seven (7) calendar days as to all other disturbed or graded areas on the project site not under active grading.

SEDIMENT AND EROSION CONTROL NOTES

1. A minimum of 48 hours notice must be given to the Howard County Department of Inspections, Licenses and Permits, Sediment Control Division prior to the start of any construction (410-313-1855).
2. All vegetative and structural practices are to be installed according to the provisions of this plan and are to be in conformance with the most current MARYLAND STANDARDS AND SPECIFICATIONS FOR SOIL EROSION AND SEDIMENT CONTROL and revisions thereto.
3. Following initial soil disturbance or re-disturbance, permanent or temporary stabilization shall be completed within: a) 3 calendar days for all perimeter sediment control structures, dikes, perimeter slopes and all slopes greater than 3:1, b) 7 days as to all other disturbed or graded areas on the project site.
4. All sediment traps/basins shown must be fenced and warning signs posted around their perimeter in accordance with Vol.I, Chapter 12, of the HOWARD COUNTY DESIGN MANUAL, Storm Drainage.
5. All disturbed areas must be stabilized within the time period specified above in accordance with the 2011 MARYLAND STANDARDS AND SPECIFICATIONS FOR SOIL EROSION AND SEDIMENT CONTROL for permanent seedings, sod, temporary seeding and mulching. Temporary stabilization with mulch alone can only be done when recommended seeding dates do not allow for proper germination and establishment of grasses.
6. All sediment control structures are to remain in place and are to be maintained in operative conditions until permission for their removal has been obtained from the Howard County Sediment Control Inspector.
7. SITE ANALYSIS:

Total Area of Site:	170.53	Acres
Area Disturbed:	1.45	Acres
Area to be roofed or paved:	1.03	Acres
Area to be vegetatively stabilized:	0.42	Acres
Total Cut:	3500	Cu. Yds.
Total Fill:	3,000	Cu. Yds.
Offsite Waste/Borrow Area Location:	to be determined	

8. Any sediment control practice which is disturbed by grading activity for placement of utilities must be regraded on the same day of disturbance.
9. Additional sediment control must be provided, if deemed necessary by the Howard County Sediment Control Inspector.
10. On all sites with disturbed areas in excess of 2 acres, approval of the inspection agency shall be requested upon completion of installation of perimeter erosion and sediment controls, but before proceeding with any other earth disturbance or grading. Other building or grading inspection approvals may not be authorized until this initial approval by the inspection agency is made.
11. Trenches for the construction of utilities is limited to three pipe lengths or that which shall be back-filled and stabilized by the end of each work day, whichever is shorter.
12. any changes or revisions to the sequence of construction must be reviewed and approved by the plan approval authority prior to proceeding with construction.
13. A project is to be sequenced so that grading activities begin on one grading unit (maximum acreage of 20 ac. per grading unit) at a time. Work may proceed to a subsequent grading unit when at least 50 percent of the disturbed area in the preceding grading unit has been stabilized and approved by the enforcement authority, Unless otherwise specified and approved by the approval authority, no more than 30 acres cumulatively may be disturbed at a given time.

STOCKPILE MAINTENANCE

The stockpile area must continuously meet the requirements for Adequate Vegetative Establishment in accordance with Section B-4 Vegetative Stabilization. Side slopes must be maintained at no steeper than a 2:1 ratio. The stockpile area must be kept free of erosion. If the vertical height of a stockpile exceeds 20 feet for 2:1 slopes, 30 feet for 3:1 slopes, or 40 feet for 4:1 slopes, benching must be provided in accordance with Section B-3 Land Grading.

B-4-2 STANDARDS AND SPECIFICATIONS FOR SOIL PREPARATION, TOPSOILING, AND SOIL AMENDMENTS

A. Soil Preparation
   1. Temporary Stabilization
      a. Seedbed preparation consists of loosening soil to a depth of 3 to 5 inches by means of suitable agricultural or construction equipment, such as disc harrows or chisel plows or rippers mounted on construction equipment. After the soil is loosened, it must not be rolled or dragged smooth but left in the roughened condition. Slopes 3:1 or flatter are to be tracked with ridges running parallel to the contour of the slope.
      b. Apply fertilizer and lime as prescribed on the plans.
      c. Incorporate lime and fertilizer into the top 3 to 5 inches of soil by disking or other suitable means.
   2. Permanent Stabilization
      a. A soil test is required for any earth disturbance of 5 acres or more. The minimum soil conditions required for permanent vegetative establishment are:
      i. Soil pH between 6.0 and 7.0.
      ii. Soluble salts less than 500 parts per million (ppm).
      iii. Soil contains less than 40 percent clay but enough fine grained material (greater than 30 percent silt plus clay) to provide the capacity to hold a moderate amount of moisture. An exception: if lovegrass will be planted, then a sandy soil (less than 30 percent silt plus clay) would be acceptable.
      iv. Soil contains 1.5 percent minimum organic matter by weight.
      v. Soil contains sufficient pore space to permit adequate root penetration.
      b. Application of amendments or topsoil is required if on-site soils do not meet the above conditions.
      c. Graded areas must be maintained in a true and even grade as specified on the approved plan, then scarified or otherwise loosened to a depth of 3 to 5 inches.
      d. Apply soil amendments as specified on the approved plan or as indicated by the results of a soil test.
      e. Mix soil amendments into the top 3 to 5 inches of soil by disking or other suitable means. Rake lawn areas to smooth the surface, remove large objects like stones and branches, and ready the area for seed application. Loosen surface soil by dragging with a heavy chain or other equipment to roughen the surface where site conditions will not permit normal seedbed preparation. Track slopes 3:1 or flatter with tracked equipment leaving the soil in an irregular condition with ridges running parallel to the contour of the slope. Leave the top 1 to 3 inches of soil loose and friable. Seedbed loosening may be unnecessary on newly disturbed areas.

B. Topsoiling
   1. Topsoil is placed over prepared subsoil prior to establishment of permanent vegetation. The purpose is to provide a suitable soil medium for vegetative growth. Soils of concern have low moisture content, low nutrient levels, low pH, materials toxic to plants, and/or unacceptable soil gradation.
   2. Topsoil salvaged from an existing site may be used provided it meets the standards as set forth in these specifications. Typically, the depth of topsoil to be salvaged for a given soil type can be found in the representative soil profile section in the Soil Survey published by USDA-NRCS.
   3. Topsoiling is limited to areas having 2:1 or flatter slopes where:
      a. The texture of the exposed subsoil/parent material is not adequate to produce vegetative growth.
      b. The soil material is so shallow that the rooting zone is not deep enough to support plants or furnish continuing supplies of moisture and plant nutrients.
      c. The original soil to be vegetated contains material toxic to plant growth.
      d. The soil is so acidic that treatment with limestone is not feasible.
   4. Areas having slopes steeper than 2:1 require special consideration and design.
   5. Topsoil Specifications: Soil to be used as topsoil must meet the following criteria:
      a. Topsoil must be a loam, sandy loam, clay loam, silt loam, sandy clay loam, or loamy sand. Other soils may be used if recommended by an agronomist or soil scientist and approved by the appropriate approval authority. Topsoil must not be a mixture of contrasting textured subsoils and must contain less than 5 percent by volume of cinders, stones, slag, coarse fragments, gravel, sticks, roots, trash, or other materials larger than 1½ inches in diameter.
      b. Topsoil must be free of noxious plants or plant parts such as Bermuda grass, quack grass, Johnson grass, nut sedge, poison ivy, thistle, or others as specified.
      c. Topsoil substitutes or amendments, as recommended by a qualified agronomist or soil scientist and approved by the appropriate approval authority, may be used in lieu of natural topsoil.
   6. Topsoil Application
      a. Erosion and sediment control practices must be maintained when applying topsoil.
      b. Uniformly distribute topsoil in a 5 to 8 inch layer and lightly compact to a minimum thickness of 4 inches. Spreading is to be performed in such a manner that sodding or seeding can proceed with a minimum of additional soil preparation and tillage. Any irregularities in the surface resulting from topsoiling or other operations must be corrected in order to prevent the formation of depressions or water pockets.
      c. Topsoil must not be placed if the topsoil or subsoil is in a frozen or muddy condition, when the subsoil is excessively wet or in a condition that may otherwise be detrimental to proper grading and seedbed preparation.

C. Soil Amendments (Fertilizer and Lime Specifications)
   1. Soil tests must be performed to determine the exact ratios and application rates for both lime and fertilizer on sites having disturbed areas of 5 acres or more. Soil analysis may be performed by a recognized private or commercial laboratory. Soil samples taken for engineering purposes may also be used for chemical analyses.
   2. Fertilizers must be uniform in composition, free flowing and suitable for accurate application by appropriate equipment. Manure may be substituted for fertilizer with prior approval from the appropriate approval authority. Fertilizers must all be delivered to the site fully labeled according to the applicable laws and must bear the name, trade name or trademark and warranty of the producer.
   3. Lime materials must be ground limestone (hydrated or burnt lime may be substituted except when hydroseeding) which contains at least 50 percent total oxides (calcium oxide plus magnesium oxide). Limestone must be ground to such fineness that at least 50 percent will pass through a #100 mesh sieve and 98 to 100 percent will pass through a #20 mesh sieve.
   4. Lime and fertilizer are to be evenly distributed and incorporated into the top 3 to 5 inches of soil by disking or other suitable means.
   5. Where the subsoil is either highly acidic or composed of heavy clays, spread ground limestone at the rate of 4 to 8 tons/acre (200-400 pounds per 1,000 square feet) prior to the placement of topsoil.

B-4-3 STANDARDS AND SPECIFICATIONS FOR SEEDING AND MULCHING

A. Seeding
   1. Specifications
      a. All seed must meet the requirements of the Maryland State Seed Law. All seed must be subject to re-testing by a recognized seed laboratory. All seed used must have been tested within the 6 months immediately preceding the date of sowing such material on any project. Refer to Table B.4 regarding the quality of seed. Seed tags must be available upon request to the inspector to verify type of seed and seeding rate.
      b. Mulch alone may be applied between the fall and spring seeding dates only if the ground is frozen. The appropriate seeding mixture must be applied when the ground thaws.
      c. Inoculants: The inoculant for treating legume seed in the seed mixtures must be a pure culture of nitrogen fixing bacteria prepared specifically for the species. Inoculants must not be used later than the date indicated on the container. Add fresh inoculants as directed on the package. Use four times the recommended rate when hydroseeding. Note: It is very important to keep inoculant as cool as possible until used. Temperatures above 75 to 80 degrees Fahrenheit can weaken bacteria and make the inoculant less effective.
      d. Sod or seed must not be placed on soil which has been treated with soil sterilants or chemicals used for weed control until sufficient time has elapsed (14 days min.) to permit dissipation of phyto-toxic materials.
   2. Application
      a. Dry Seeding: This includes use of conventional drop or broadcast spreaders.
         i. Incorporate seed into the subsoil at the rates prescribed on Temporary Seeding Table B.1, Permanent Seeding Table B.3, or site-specific seeding summaries.
         ii. Apply seed in two directions, perpendicular to each other. Apply half the seeding rate in each direction. Roll the seeded area with a weighted roller to provide good seed to soil contact.
      b. Drill or Cultipacker Seeding: Mechanized seeders that apply and cover seed with soil.
         i. Cultipacking seeders are required to bury the seed in such a fashion as to provide at least 1/4 inch of soil covering. Seedbed must be firm after planting.
         ii. Apply seed in two directions, perpendicular to each other. Apply half the seeding rate in each direction.
      c. Hydroseeding: Apply seed uniformly with hydroseeder (slurry includes seed and fertilizer).
         i. If fertilizer is being applied at the time of seeding, the application rates should not exceed the following: nitrogen, 100 pounds per acre total of soluble nitrogen; P2O5 (phosphorous), 200 pounds per acre; K2O (potassium), 200 pounds per acre.
         ii. Lime: Use only ground agricultural limestone (up to 3 tons per acre may be applied by hydroseeding). Normally, not more than 2 tons are applied by hydroseeding at any one time. Do not use burnt or hydrated lime when hydroseeding.
         iii. Mix seed and fertilizer on site and seed immediately and without interruption.
         iv. When hydroseeding do not incorporate seed into the soil.

B. Mulching
   1. Mulch Materials (in order of preference)
      a. Straw consisting of thoroughly threshed wheat, rye, oat, or barley and reasonably bright in color. Straw is to be free of noxious weed seeds as specified in the Maryland Seed Law and not musty, moldy, caked, decayed, or excessively dusty. Note: Use only sterile straw mulch in areas where one species of grass is desired.
      b. Wood Cellulose Fiber Mulch (WCFM) consisting of specially prepared wood cellulose processed into a uniform fibrous physical state.
         i. WCFM is to be dyed green or contain a green dye in the package that will provide an appropriate color to facilitate visual inspection of the uniformly spread slurry.
         ii. WCFM, including dye, must contain no germination or growth inhibiting factors.
         iii. WCFM materials are to be manufactured and processed in such a manner that the wood cellulose fiber mulch will remain in uniform suspension in water under agitation and will blend with seed, fertilizer and other additives to form a homogeneous slurry. The mulch material must form a blotter-like ground cover, on application, having moisture absorption and percolation properties and must cover and hold grass seed in contact with the soil without inhibiting the growth of the grass seedlings.
         iv. WCFM material must not contain elements or compounds at concentration levels that will be phyto-toxic.
         v. WCFM must conform to the following physical requirements: fiber length of approximately 10 millimeters, diameter approximately 1 millimeter, pH range of 4.0 to 8.5, ash content of 1.6 percent maximum and water holding capacity of 90 percent minimum.
   2. Application
      a. Apply mulch to all seeded areas immediately after seeding.
      b. When straw mulch is used, spread it over all seeded areas at the rate of 2 tons per acre to a uniform loose depth of 1 to 2 inches. Apply mulch to achieve a uniform distribution and depth so that the soil surface is not exposed. When using a mulch anchoring tool, increase the application rate to 2.5 tons per acre.
      c. Wood cellulose fiber used as mulch must be applied at a net dry weight of 1500 pounds per acre. Mix the wood cellulose fiber with water to attain a mixture with a maximum of 50 pounds of wood cellulose fiber per 100 gallons of water.
   3. Anchoring
      a. Perform mulch anchoring immediately following application of mulch to minimize loss by wind or water. This may be done by one of the following methods (listed by preference), depending upon the size of the area and erosion hazard.
         i. A mulch anchoring tool is a tractor drawn implement designed to punch and anchor mulch into the soil surface a minimum of 2 inches. This practice is most effective on large areas, but is limited to flatter slopes where equipment can operate safely. If used on sloping land, this practice should follow the contour.
         ii. Wood cellulose fiber may be used for anchoring straw. Apply the fiber binder at a net dry weight of 750 pounds per acre. Mix the wood cellulose fiber with water at a maximum of 50 pounds of wood cellulose fiber per 100 gallons of water.
         iii. Synthetic binders such as Acrylic DLR (Agro-Tack), DCA-70, Petroset, Terra Tax II, Terra Tack AR or other approved equal may be used. Follow application rates as specified by the manufacturer. Application of liquid binders needs to be heavier at the edges where wind catches mulch, such as in valleys and on crests of banks. Use at asphalt binders is strictly prohibited.
         iv. Lightweight plastic netting may be stapled over the mulch according to manufacturer recommendations. Netting is usually available in rolls 4 to 15 feet wide and 300 to 3,000 feet long.

STABILIZATION NOTE:

Some areas not identified on the plan may require slope stabilization matting to be installed to prevent soil erosion and runoff. It is the contractor's responsibility to address all areas showing signs of erosion and install stabilization matting or other measures as necessary to prevent soil erosion, until all disturbed areas are fully vegetated and / or stabilized.

TEMPORARY SEEDING SUMMARY

HARDINESS ZONE 6b					
Species	Application Rate (lbs./ac.)	Seeding Dates	Seeding Depth	Fertilizer Rate (10-20-20)	Lime Rate
Annual Ryegrass	50 lbs./ac.	3/1 - 4/30 8/15 - 11/15	¼" - ½"	436 lb./ac. (10 lb./1000 sf	2 tons/ac. (90 lb./1000 s.f.)
Millet	50 lbs./ac.	5/1 - 8/14	½"		

PERMANENT SEEDING SUMMARY

HARDINESS ZONE 6b					Fertilizer Rate (10-20-20)			Lime Rate
No.	Species	Application Rate (lb/ac)	Seeding Dates	Seeding Depths	N	P_2O_5	K_2O	
	Turf Type Tall Fescue	218 lb/ac 5 lb/1000 sf	3/1-5/15 8/15-10/15	1"-2"	45 lb/ac (1.0 lb/ 1000sf)	90 lb/ac (2 lb/ 1000 sf)	90 lb/ac (2 lb/ 1000 sf)	2 tons/ac (90lb/ 1000 sf)

1. Till areas to receive seed by disking or other approved methods to a depth of 2 to 4 inches, level and rake the areas to prepare a proper seedbed. Remove stones and debris over 1 1/2 inches in diameter. The resulting seedbed must be in such condition that future mowing of grasses will pose no difficulty.
2. If soil moisture is deficient, supply new seedings with adequate water for plant growth (1/2 to 1 inch every 3 to 4 days depending on soil texture) until they are firmly established. This is especially true when seedings are made late in the planting season, in abnormally dry or hot seasons, or on adverse sites.

SOD SPECIFICATIONS, INSTALLATION & MAINTENANCE

1. General Specifications
   a. Class of turfgrass sod must be Maryland State Certified. Sod labels must be made available to the job foreman and inspector.
   b. Sod must be machine cut at a uniform soil thickness of ¾ inch, plus or minus ¼ inch, at the time of cutting. Measurement for thickness must exclude top growth and thatch. Broken pads and torn or uneven ends will not be acceptable.
   c. Standard size sections of sod must be strong enough to support their own weight and retain their size and shape when suspended vertically with a firm grasp on the upper 10 percent of the section.
   d. Sod must not be harvested or transplanted when moisture content (excessively dry or wet) may adversely affect its survival.
   e. Sod must be harvested, delivered, and installed within a period of 36 hours. Sod not transplanted within this period must be approved by an agronomist or soil scientist prior to its installation.
2. Sod Installation
   a. During periods of excessively high temperature or in areas having dry subsoil, lightly irrigate the subsoil immediately prior to laying the sod.
   b. Lay the first row of sod in a straight line with subsequent rows placed parallel to it and tightly wedged against each other. Stagger lateral joints to promote more uniform growth and strength. Ensure that sod is not stretched or overlapped and that all joints are butted tight in order to prevent voids which would cause air drying of the roots.
   c. Wherever possible, lay sod with the long edges parallel to the contour and with staggering joints. Roll and tamp, peg or otherwise secure the sod to prevent slippage on slopes. Ensure solid contact exists between sod roots and the underlying soil surface.
   d. Water the sod immediately following rolling and tamping until the underside of the new sod pad and soil surface below the sod are thoroughly wet. Complete the operations of laying, tamping and irrigating for any piece of sod within eight hours.
3. Sod Maintenance
   a. In the absence of adequate rainfall, water daily during the first week or as often and sufficiently as necessary to maintain moist soil to a depth of 4 inches. Water sod during the heat of the day to prevent wilting.
   b. After the first week, sod watering is required as necessary to maintain adequate moisture content.
   c. Do not mow until the sod is firmly rooted. No more than 1/3 of the grass leaf must be removed by the initial cutting or subsequent cuttings. Maintain a grass height of at least 3 inches unless otherwise specified.

SEQUENCE OF CONSTRUCTION

--	1. Assure that Grading Permit and all other necessary permits are obtained from owner.
1 DAY	2. Notify Howard County Department of Public Works at least 48 hours before start of work. Contact Miss Utility at 1-800-257-7777 at least three days in advance of starting work shown on plans.
10 DAYS	3. With the approval of the sediment control inspector, clear and grub for and install sediment controls including silt fence, super silt fence, filter logs, silt fence on paving and tree protection fencing. Construct stabilized construction entrance (SCE).
1 DAY	4. Notify Howard County sediment control inspector upon completion of the installation and receive approval to begin construction.
1 MONTH	5. Remove existing building, sidewalks, and roadway as shown on the demolition plan. Any walks, pavers, roads, curbs, etc. or any existing utility or structure damaged during construction, not scheduled for demolition, shall be repaired by the contractor in-kind. 6. Existing Black Tee Box soils shall be excavated and kept separate from surrounding excavation and earthwork activities. The existing Black Tee Box soils shall only be used for the construction of the proposed Black Tee Box or in a manner in which the soils will not come into contact with patrons or residents.
--	7. Do not disturb any utilities to remain.
10 DAYS	8. Clear and grub, and rough rade areas required for the installation of the proposed storm drain system and complete this construction using "Same Day Stabilization Note" operation if noted as such.Install storm drain structures and connecting pipes. Install inlet protection on new inlets.
3 MONTHS	9. Begin building, parking lot and sidewalk construction. Begin installation for all utilities and relocation of utilities. Contractor shall use the "Same Day Stabilization Note" for utility construction installation of utilities not within the erosion and sediment control measures.
1 MONTH	10. Complete building construction. Fine grade all pavement surfaces. Apply pavement sub-base.
2 WEEKS	11. Fine grade all remaining areas permanently stabilize those areas.
2 WEEKS	12. Pave all non-pervious surfaces.
3 WEEKS	13. Excavate the proposed Micro-Bioretention and Rain Garden areas. Do not complete installation of Micro-Bioretention or Rain Garden Facilities until the contributing drainage areas are permanently stabilized. Complete installation of the facilities per approved stormwater management plans.
1 WEEK	14. Provide landscaping installation.
3 DAYS	15. After permanent stabilization of site with established vegetation and/or pavement and with permission of the Howard County erosion and sediment control inspector, remove erosion and sediment control measures or devices and stabilize those areas disturbed by this process.
--	16. Conduct final "as-built" surveys of the stormwater management facilities and submit "as-built" plans and computations to Howard County within 30 days of completion.

THIS DEVELOPMENT PLAN IS APPROVED FOR SOIL EROSION AND SEDIMENT CONTROL BY THE HOWARD SOIL CONSERVATION DISTRICT.

HOWARD SOIL CONSERVATION DISTRICT — DATE 11/4/14

ENGINEER'S CERTIFICATE

"I certify that this plan for sediment and erosion control represents a practical and workable plan based on my personal knowledge of the site conditions and that it was prepared in accordance with the requirements of the Howard Soil Conservation District."

JENNIFER L HARRINGTON, P.E. - ENGINEER — DATE 10.3.13

DEVELOPER'S CERTIFICATE

"I/We certify that all development and construction will be done according to this plan for sediment and erosion control, and that all responsible personnel involved in the construction project will have a Certificate of Attendance at a Department of the Environment Approved Training Program for the Control of Sediment and Erosion before beginning the project. I also authorize periodic on-site inspection by the Howard Soil Conservation District"

COLUMBIA ASSOCIATION - DEVELOPER — DATE 9/19/13

EROSION AND SEDIMENT CONTROL NOTES

HOBBIT'S GLEN GOLF CLUBHOUSE

PROPERTY OF COLUMBIA ASSOCIATION, INC.

REVISIONS

PROFESSIONAL ENGINEER — JENNIFER L. HARRINGTON — No. 23181 — STATE OF MARYLAND — 10.3.13

PROFESSIONAL CERTIFICATION
I HEREBY CERTIFY THAT THESE DOCUMENTS WERE PREPARED OR APPROVED BY ME, AND THAT I AM A DULY LICENSED PROFESSIONAL ENGINEER UNDER THE LAWS OF THE STATE OF MARYLAND, LICENSE NO. 23181, EXPIRATION DATE: 5-31-2015

SITE RESOURCES incorporated
Comprehensive Land Planning & Site Design Services
14315 Jarrettsville Pike • Phoenix, Maryland 21131
(410) 683-3388 • fax (410) 683-3389

DRAWN BY:	JLH
DESIGNED BY:	JLH
CHECKED BY:	AFE
DATE:	SEPTEMBER 13, 2013
CONTRACT NO.:	-
SCALE:	AS SHOWN
SRI PROJECT NO:	11059
SHEET	ESC2.03 26 OF 38

APPROVED: DEPARTMENT OF PLANNING & ZONING

CHIEF, DEVELOPMENT ENGINEERING DIVISION — DATE 1.17.14

CHIEF, DIVISION OF LAND DEVELOPMENT — DATE 1-22-14

DIRECTOR — DATE 1/29/14

APPROVED
PLANNING BOARD OF HOWARD COUNTY
DATE 09/12/13

APPROVED: FOR PUBLIC WATER AND PUBLIC SEWERAGE SYSTEMS

COUNTY HEALTH OFFICER, HOWARD COUNTY HEALTH DEPARTMENT — DATE 12/13/2013

ADDRESS CHART	
LOT/PARCEL	STREET ADDRESS
8/135	11130 WILLOW BOTTOM DRIVE, COLUMBIA, MD. 21044

PERMIT INFORMATION CHART

SUBDIVISION NAME			SECTION/AREA		LOT/PARCEL NO.
VILLAGE OF HARPERS CHOICE			2/1		8/135
PLAT # OR L/F	GRID #	ZONING	TAX MAP NO.	ELECTION DISTRICT	CENSUS TRACT
9308 & 9309	NA	NT-05	29	5TH	605502
WATER CODE			SEWER CODE		
214 W&S			214 W&S		

SDP-13-027

T5-FT DISCONNECTION

T5-FT DISCONNECTION

T5-FT DISCONNECTION

N-1 DISCONNECTION OF ROOFTOP RUNOFF
AREA A = 1936 SF
T5-FT DISCONNECTION LENGTH

T5-FT DISCONNECTION

N-2 DISCONNECTION OF NON-ROOFTOP RUNOFF
AREA B = 1144 SF
10-FT DISCONNECTION LENGTH

PROPOSED CLUB HOUSE
F.F.E. 445.20
13,269 SF

10-FT DISCONNECTION

10-FT DISCONNECTION

PROPOSED 2" WATER LINE MAINTAIN MINIMUM 3'0" COVER

PROPOSED 2" WATER LINE MAINTAIN MINIMUM 3'0" COVER

PROPOSED M-6 MICRO-BIORETENTION #5
SURFACE ELEVATION = 433.0
OVERFLOW INLET EL = 433.75
UNDERDRAIN INVERT EL = 429.83
Af = 150 SF
MEDIA DEPTH = 2.0 FT
PONDING DEPTH = 9 IN

PROPOSED M-6 MICRO-BIORETENTION #4
SURFACE ELEVATION = 433.0
OVERFLOW INLET EL = 433.75
UNDERDRAIN INVERT EL = 429.83
Af = 135 SF
MEDIA DEPTH = 2.0 FT
PONDING DEPTH = 9 IN

PROPOSED M-6 MICRO-BIORETENTION #3
SURFACE ELEVATION = 433.0
OVERFLOW INLET EL = 433.75
UNDERDRAIN INVERT EL = 429.83
Af = 135 SF
MEDIA DEPTH = 2.0 FT
PONDING DEPTH = 9 IN

PROPOSED M-6 MICRO-BIORETENTION #1
SURFACE ELEVATION = 441.5
OVERFLOW INLET EL = 442.00
UNDERDRAIN INVERT EL = 438.33
Af = 580 SF
MEDIA DEPTH = 2.0 FT
PONDING DEPTH = 6 IN

PROPOSED M-6 MICRO-BIORETENTION #7
SURFACE ELEVATION = 439.25
OVERFLOW INLET EL = 440.00
UNDERDRAIN INVERT EL = 436.08
Af = 460 SF
MEDIA DEPTH = 2.0 FT
PONDING DEPTH = 9 IN

INV. IN 436.08
INV. OUT 431.08

INV. 436.50

INV. 427.97

INV. 428.58

PROPOSED M-7 RAIN GARDEN #6
SURFACE ELEVATION = 430.8
OVERFLOW ELEVATION = 431.3
UNDERDRAIN INVERT EL = 428.58
Af = 410 SF
MEDIA DEPTH = 1.0 FT
PONDING DEPTH = 6 IN

WILLOW BOTTOM DR.

EXISTING TENNIS BUILDING

THIS SEAL IS FOR REVISION BY SITE RESOURCES, INC.

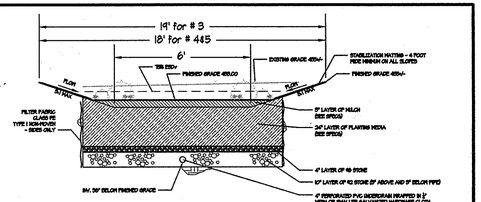

1 M-6 MICRO-BIORETENTION # 5,445

NOT TO SCALE

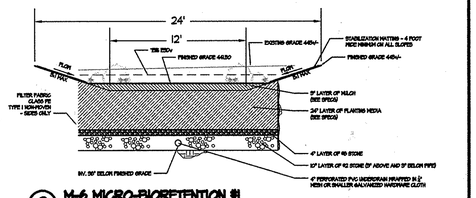

2 M-6 MICRO-BIORETENTION #1

NOT TO SCALE

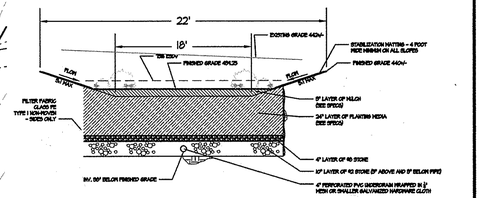

3 M-6 MICRO-BIORETENTION #7

NOT TO SCALE

LEGEND

NeB2 / GcB2 — EXISTING SOILS

DRAINAGE AREA TO SWM

IMPERVIOUS AREA FOR SWM TREATMENT

ESD TREATMENT AREA

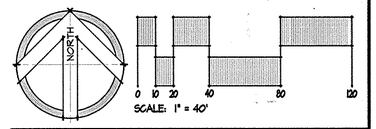

STORMWATER MANAGEMENT PLAN

HOBBIT'S GLEN GOLF CLUBHOUSE

PROPERTY OF COLUMBIA ASSOCIATION, INC.

REVISIONS

1	08/21/2014 WATER LINE RELOCATION

STATE OF MARYLAND — ALBERT F. EDWARDS — 16144 — PROFESSIONAL ENGINEER

10-3-2013

PROFESSIONAL CERTIFICATION. I HEREBY CERTIFY THAT THESE DOCUMENTS WERE PREPARED OR APPROVED BY ME, AND THAT I AM A DULY LICENSED PROFESSIONAL ENGINEER UNDER THE LAWS OF THE STATE OF MARYLAND, LICENSE NO. 16144, EXPIRATION DATE: 09/19/14.

SITE RESOURCES incorporated
Comprehensive Land Planning & Site Design Services
14315 Jarrettsville Pike • Phoenix, Maryland 21131
(410) 683-3388 • fax (410) 683-3389

DRAWN BY: JLH	CONTRACT NO.: -
DESIGNED BY: JLH	SCALE: 1"=40'
CHECKED BY: AFE	SRI PROJECT NO: 11059
DATE: SEPTEMBER 13, 2013	SHEET SWM1.01 21 OF 38

APPROVED: DEPARTMENT OF PLANNING & ZONING

CHIEF, DEVELOPMENT ENGINEERING DIVISION — DATE 1/17/14

CHIEF, DIVISION OF LAND DEVELOPMENT — DATE 1-22-14

DIRECTOR — DATE 1/22/14

APPROVED
PLANNING BOARD OF HOWARD COUNTY
DATE 09/12/13

APPROVED: FOR PUBLIC WATER AND PUBLIC SEWERAGE SYSTEMS

COUNTY HEALTH OFFICER, HOWARD COUNTY HEALTH DEPARTMENT — DATE 12/19/2013

ADDRESS CHART	
LOT/PARCEL	STREET ADDRESS
B/135	11130 WILLOW BOTTOM DRIVE, COLUMBIA, MD. 21044

PERMIT INFORMATION CHART					
SUBDIVISION NAME: VILLAGE OF HARPERS CHOICE			SECTION/AREA: 2/1		LOT/PARCEL NO.: B/135
PLAT # OR L/F: 9308 & 9309	GRID #: NA	ZONING: NT-05	TAX MAP NO.: 29	ELECTION DISTRICT: 5TH	CENSUS TRACT: 605502
WATER CODE: 214 M&S			SEWER CODE: 214 M&S		

SDP-13-027

MARYLAND STORMWATER DESIGN MANUAL
CONSTRUCTION SPECIFICATIONS FOR MICRO-BIORETENTION

B.4.C SPECIFICATIONS FOR MICRO-BIORETENTION, RAIN GARDENS, LANDSCAPE INFILTRATION AND INFILTRATION BERMS

1. Material Specifications
The allowable materials to be used in these practices are detailed in Table B.4.1.

2. Filtering Media or Planting Soil
The soil shall be a uniform mix, free of stones, stumps, roots or other similar objects larger than two inches. No other materials or substances shall be mixed or dumped within the micro-bioretention practice that may be harmful to plant growth, or prove a hindrance to the planting or maintenance operations. The planting soil shall be free of Bermuda grass, Quackgrass, Johnson grass, or other noxious weeds as specified under COMAR 15.08.01.05.

The planting soil shall be tested and shall meet the following criteria:
- Soil Component – Loamy Sand or Sandy Loam (USDA Soil Textural Classification)
- Organic Content – Minimum 10% by dry weight (ASTM D 2974). In general, this can be met with a mixture of loamy sand (60%-65%) and compost (35% to 40%) or sandy loam (30%), coarse sand (30%), and compost (40%).
- Clay Content – Media shall have a clay content of less than 5%.
- pH Range – Should be between 5.5 – 7.0. Amendments (e.g., lime, iron sulfate plus sulfur) may be mixed into the soil to increase or decrease pH.

There shall be at least one soil test per project. Each test shall consist of both the standard soil test for pH, and additional tests of organic matter, and soluble salts. A textural analysis is required from the site stockpiled topsoil. If topsoil is imported, then a texture analysis shall be performed for each location where the topsoil was excavated.

3. Compaction
It is very important to minimize compaction of both the base of bioretention practices and the required backfill. When possible, use excavation hoes to remove original soil. If practices areexcavated using a loader, the contractor should use wide track or marsh track equipment, or light equipment with turf type tires. Use of equipment with narrow tracks or narrow tires, rubber tires with large lugs, or high-pressure tires will cause excessive compaction resulting in reduced infiltration rates and is not acceptable. Compaction will significantly contribute to design failure.

Compaction can be alleviated at the base of the bioretention facility by using a primary tilling operation such as a chisel plow, ripper, or subsoiler. These tilling operations are to refracture the soil profile through the 12 inch compaction zone. Substitute methods must be approved by the engineer. Rototillers typically do not till deep enough to reduce the effects of compaction from heavy equipment.

Rototill 2 to 3 inches of sand into the base of the bioretention facility before backfilling the optional sand layer. Pump any ponded water before preparing (rototilling) base.

When backfilling the topsoil over the sand layer, first place 3 to 4 inches of topsoil over the sand, then rototill the sand/topsoil to create a gradation zone. Backfill the remainder of the topsoil to final grade.

When backfilling the bioretention facility, place soil in lifts 12" to 18" . Do not use heavy equipment within the bioretention basin. Heavy equipment can be used around the perimeter of the basin to supply soils and sand. Grade bioretention materials with light equipment such as a compact loader or a dozer/loader with marsh tracks.

4. Plant Material
Recommended plant material for micro-bioretention practices can be found in Appendix A, Section A.2.3.

5. Plant Installation
Compost is a better organic material source, is less likely to float, and should be placed in the invert and other low areas. Mulch should be placed in surrounding to a uniform thickness of 2" to 3" . Shredded or chipped hardwood mulch is the only accepted mulch. Pine mulch and wood chips will float and move to the perimeter of the bioretention area during a storm event and are not acceptable. Shredded mulch must be well aged (6 to 12 months) for acceptance.

Rootstock of the plant material shall be kept moist during transport and on-site storage. The plant root ball should be planted so 1/8th of the ball is above final grade surface. The diameter of the planting pit shall be at least six inches larger than the diameter of the planting ball. Set and maintain the plant straight during the entire planting process. Thoroughly water ground bed cover after installation.

Trees shall be braced using 2" by 2" stakes only as necessary and for the first growing season only. Stakes are to be equally spaced on the outside of the tree ball.

Grasses and legume seed should be drilled into the soil to a depth of at least one inch. Grass and legume plugs shall be planted following the non-grass ground cover planting specifications.

The topsoil specifications provide enough organic material to adequately supply nutrients from natural cycling. The primary function of the bioretention structure is to improve water quality. Adding fertilizers defeats, or at a minimum, impedes this goal. Only add fertilizer if wood chips or mulch are used to amend the soil. Rototill urea fertilizer at a rate of 2 pounds per 1000 square feet.

6. Underdrains
Underdrains should meet the following criteria:
- Pipe- Should be 4" to 6" diameter, slotted or perforated rigid plastic pipe (ASTMF 758, Type PS 28, or AASHTO-M-278) in a gravel layer. The preferred material is slotted, 4" rigid pipe (e.g., PVC or HDPE).
- Perforations – If perforated pipe is used, perforations should be ⅜" diameter located 6" on center with a minimum of four holes per ron. Pipe shall be wrapped with a ¼" (No. 4 or 4x4) galvanized hardware cloth.
- Gravel – The gravel layer (No. 57 stone preferred) shall be at least 3" thick above and below the underdrain.
- The main collector pipe shall be at a minimum 0.5% slope.
- A rigid, non-perforated observation well must be provided (one per every 1,000 square feet) to provide a clean-out port and monitor performance of the filter.

The main collector pipe for underdrain systems shall be constructed at a minimum slope of 0.5%. Observation wells and/or clean-out pipes must be provided (one minimum per every 1000 square feet of surface area).

7. Miscellaneous
These practices may not be constructed until all contributing drainage area has been stabilized

OPERATION AND MAINTENANCE SCHEDULE

OPERATION AND MAINTENANCE SCHEDULE FOR MICRO-BIORETENTION AREAS (M-6) and RAIN GARDENS (M-4)
1. Annual maintenance of plant material, mulch layer and soil layer is required. Maintenance of mulch and soil is limited to correcting areas of erosion or wash out. Any mulch replacement shall be done in the spring. Plant material shall be checked for disease and insect infestation and maintenance will address dead material and pruning. Acceptable replacement plant material is limited to the following: 2000 Maryland Stormwater Design Manual Volume II Table A.4.1 and 2.
2. Schedule of plant inspection will be twice a year in spring and fall. This inspection will include removal of dead and diseased vegetation considered beyond treatment, treatment of all diseased trees and shrubs and replacement of all deficient stakes and wires.
3. Mulch shall be inspected each spring. Replace previous mulch layer before applying new layer once every 2 to 3 years.
4. Soil erosion to be addressed on an as needed basis, with a minimum of once per month and after heavy storm events.

OPERATION AND MAINTENANCE SCHEDULE FOR DISCONNECTION OF ROOFTOP RUNOFF (N-1) and DISCONNECTION OF NON-ROOFTOP RUNOFF (N-2)
1. Maintenance of areas receiving disconnected runoff is generally no different than that required for other lawn or landscaped areas. The areas receiving runoff should be protected from future compaction or development of impervious area. In commercial area, foot traffic should be discouraged as well.

NOTE: REFER TO SEQUENCE OF CONSTRUCTION ON SHEET ESC 2.03

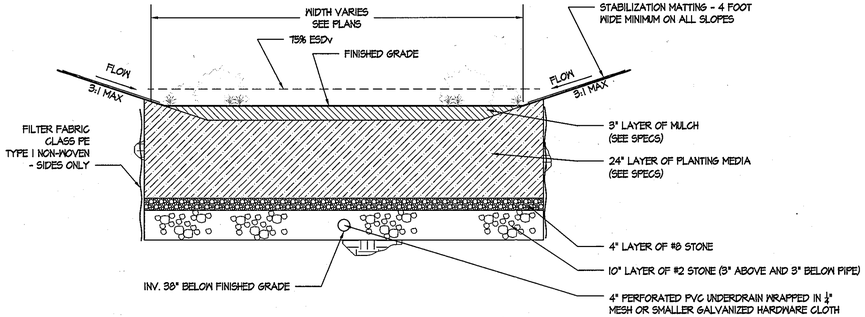

1 M-6 MICRO-BIORETENTION
NOT TO SCALE

TABLE B.4.1 MATERIAL SPECIFICATIONS FOR MICRO-BIORETENTION, RAIN GARDENS & LANDSCAPE INFILTRATION

MATERIAL	SPECIFICATION	SIZE	NOTES
PLANTINGS	SEE APPENDIX A, TABLE A.4	N/A	PLANTINGS ARE SITE-SPECIFIC
PLANTING SOIL (2' TO 4' DEEP)	LOAMY SAND (60-65%) & COMPOST (35-40%) OR SANDY LOAM (30%), COARSE SAND (30%) & COMPOST (40%)	N/A	USDA SOIL TYPES LOAMY SAND OR SANDY LOAM; CLAY CONTENT < 5%
ORGANIC CONTENT	MIN. 10% BY DRY WEIGHT (ASTM D 2974)		
MULCH	SHREDDED HARDWOOD		AGED 6 MONTHS, MINIMUM; NO PINE OR WOOD CHIPS
PEA GRAVEL DIAPHRAGM	PEA GRAVEL: ASTM-D-448	NO. 8 OR NO. 9 (1/8" TO 3/8")	
CURTAIN DRAIN	ORNAMENTAL STONE: WASHED COBBLES	STONE: 2" TO 5"	
GEOTEXTILE		N/A	PE TYPE I NONWOVEN
GRAVEL (UNDERDRAINS AND INFILTRATION BERMS)	AASHTO M-43	NO. 8 (BRIDGING LAYER) NO. 2 (BEDDING LAYER)	
UNDERDRAIN PIPING	F 758, TYPE PS 28 OR AASHTO M-278	4" TO 6" RIGID SCHEDULE 40 PVC OR SDR 35	SLOTTED OR PERFORATED PIPE. 3/8" PERF. @ 6" ON CENTER, 4 HOLES PER ROW, MINIMUM OF 3" OF GRAVEL OVER PIPES. NOT NECESSARY UNDERNEATH PIPES. PERFORATED PIPE SHALL BE WRAPPED WITH 1/4 INCH GALVANIZED HARDWARE CLOTH.
POURED IN PLACE CONCRETE (IF REQUIRED)	MSHA MIX NO. 3, F'c=3500 PSI @ 28 DAYS, NORMAL WEIGHT, AIR-ENTRAINED; REINFORCING TO MEET ASTM-615-60.	N/A	ON-SITE TESTING OF POURED-IN-PLACE CONCRETE REQUIRED: 28 DAY STRENGTH AND SLUMP TEST; ALL CONCRETE DESIGN (CAST-IN-PLACE OR PRE-CAST) NOT USING PREVIOUSLY APPROVED STATE OR LOCAL STANDARDS REQUIRES DESIGN DRAWINGS SEALED AND APPROVED BY A PROFESSIONAL STRUCTURAL ENGINEER LICENSED IN THE STATE OF MARYLAND - DESIGN TO INCLUDE MEETING ACI CODE 350R/89: VERTICAL LOADING (H-10 OR H-20); ALLOWABLE HORIZONTAL LOADING (BASED ON SOIL PRESSURES); AND ANALYSIS OF POTENTIAL CRACKING.
SAND	AASHTO-M-6 OR ASTM-C-33	0.02" TO 0.04"	SAND SUBSTITUTIONS SUCH AS DIABASE AND GRAYSTONE (AASHTO) #10 ARE NOT ACCEPTABLE. NO CALCIUM CARBONATED OR DOLOMITIC SAND SUBSTITUTIONS ARE ACCEPTABLE. NO "ROCK DUST" CAN BE USED FOR SAND.

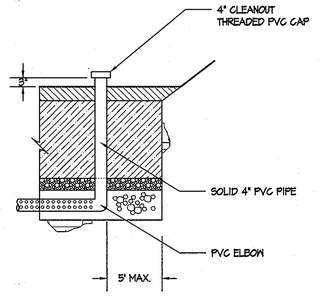

2 4" CAPPED CLEANOUT
NOT TO SCALE

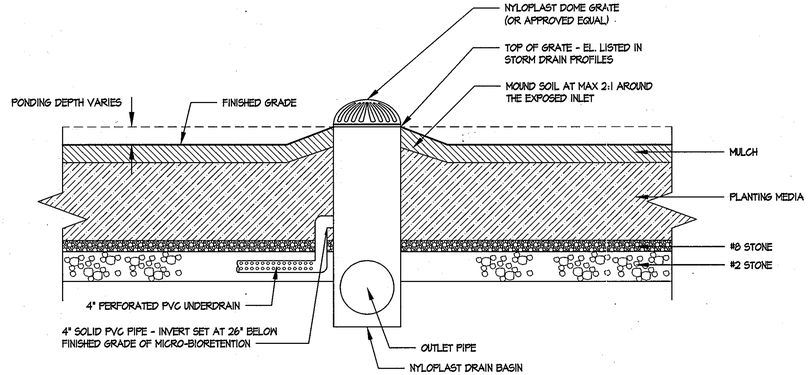

3 OVERFLOW DEVICE - MICRO-BIORETENTION FACILITY
NOT TO SCALE

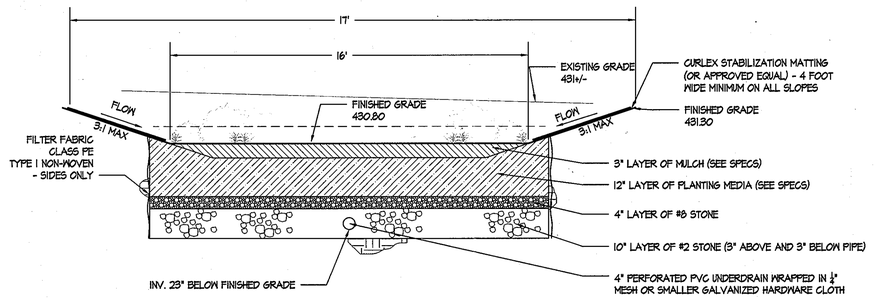

4 M-7 RAIN GARDEN #6
NOT TO SCALE

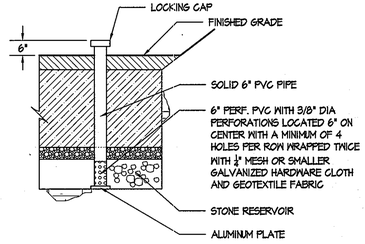

NOTE: CONTRACTOR TO MARK THE DEPTH TO THE INVERT ON THE WELL CAP.

5 6" OBSERVATION WELL
NOT TO SCALE

These plans have been reviewed for the Howard Soil Conservation District and meet the technical requirements for small pond construction, soil erosion and sediment control.

USDA - Natural Resources Conservation Service — Date

These plans for small pond construction, soil erosion and sediment control meet the requirements of the Howard Soil Conservation District.

Howard Soil Conservation District — Date 1/14/14

BY THE ENGINEER:
"I certify that this plan for ~~pond construction~~, erosion and sediment control represents a practical and workable plan based on my personal knowledge of the site conditions. This plan was prepared in accordance with the requirements of the Howard Soil Conservation District. ~~I have notified the developer that he/she must engage a registered professional engineer to supervise pond construction and provide the Howard Soil Conservation District with an "as built" plan of the pond within 30 days of completion.~~"

Signature of Engineer — Date 11.27.13

Jennifer Harrington
Printed Name of Engineer

BY THE DEVELOPER:
"I/We certify that all development and/or construction will be done according to these plans, and that any responsible personnel involved in the construction project will have a Certificate of Attendance at a Department of the Environment Approved Training Program for the Control of Sediment and Erosion before beginning the project. I shall engage a registered professional engineer to supervise pond construction and provide the Howard Soil Conservation District with an "as-built" plan of the pond within 30 days of completion. I also authorize periodic on-site inspections by the Howard Soil Conservation District."

COLUMBIA ASSOCIATION - DEVELOPER — Date 9/19/13

STORMWATER MANAGEMENT NOTES

HOBBIT'S GLEN GOLF CLUBHOUSE

PROPERTY OF COLUMBIA ASSOCIATION, INC.

REVISIONS

APPROVED: DEPARTMENT OF PLANNING & ZONING

CHIEF, DEVELOPMENT ENGINEERING DIVISION — DATE 1/17/14

CHIEF, DIVISION OF LAND DEVELOPMENT — DATE 1-22-14

DIRECTOR — DATE 1/29/14

APPROVED
PLANNING BOARD OF HOWARD COUNTY
DATE 04/12/13

APPROVED: FOR PUBLIC WATER AND PUBLIC SEWERAGE SYSTEMS

COUNTY HEALTH OFFICER
HOWARD COUNTY HEALTH DEPARTMENT — DATE 12/19/2013

ADDRESS CHART	
LOT/PARCEL	STREET ADDRESS
8/135	11130 WILLOW BOTTOM DRIVE, COLUMBIA, MD. 21044

PERMIT INFORMATION CHART						
SUBDIVISION NAME: VILLAGE OF HARPERS CHOICE			SECTION/AREA: 2/1			LOT/PARCEL NO.: 8/135
PLAT # OR L/F: 9308 & 9309	GRID #: NA	ZONING: NT-05	TAX MAP NO.: 29	ELECTION DISTRICT: 5TH		CENSUS TRACT: 605502
WATER CODE: 2141615			SEWER CODE: 2141615			

STATE OF MARYLAND — ALFRED F. EDWARDS — 16144 — REGISTERED PROFESSIONAL ENGINEER — 10-3-2013

PROFESSIONAL CERTIFICATION
I HEREBY CERTIFY THAT THESE DOCUMENTS WERE PREPARED OR APPROVED BY ME, AND THAT I AM A DULY LICENSED PROFESSIONAL ENGINEER UNDER THE LAWS OF THE STATE OF MARYLAND, LICENSE NO. 16144, EXPIRATION DATE: 09/14.

SITE RESOURCES incorporated
Comprehensive Land Planning & Site Design Services
14315 Jarrettsville Pike • Phoenix, Maryland 21131
(410) 683-3388 • fax (410) 683-3389

DRAWN BY: JLH	CONTRACT NO.: -
DESIGNED BY: JLH	SCALE: AS SHOWN
CHECKED BY: AFE	SRI PROJECT NO: 11059
DATE: SEPTEMBER 13, 2013	SHEET SWM1.02 28 OF 38

SDP-13-027

D. W. KOZERA, INC.
Baltimore, Maryland
PROFESSIONAL ENGINEERS & GEOLOGISTS

TEST BORING LOG

Boring No.: B-1
Contract No.: 11156.D
Page: 1 of 1

Project: Hobbits Glen Golf Club
Location: 11130 Willow Bottom Drive
Columbia, Maryland

Ground Surf. El. (±) : 443.0
Date Started : 10-1-12
Date Completed : 10-1-12
Contractor : GeoServices Corporation
Driller : S. Gonzalez
Rig : cme 45, Auto Hammer
Drill Method : 2 1/2 HSA
Inspector : A. MacLeod

GROUNDWATER OBSERVATIONS

	Date	Time	Depth	Casing	Caved
Encountered	10-1	10:40			
Completion	10-1	10:55	None	18.5	—
Casing Pulled	10-1	10:55	None	None	15.9
	10-2	08:30	None	None	15.9

Depth (ft)	Surf. Elev. 443.0	Samples	Blow Counts	"N" Value	Water Level	Graphic	USCS	Description	Formation	Stratum	Remarks
0		1	1-2-4	6				Silty Sand, FILL, contains trace rock fragments, moist, brown	FILL	A	Topsoil = 0.2'
440		2	2-2-4	6			CL	LEAN CLAY with sand, contains trace rock fragments, moist, brown		B	
5		3	4-4-5	9			ML	SANDY SILT, contains trace rock fragments, moist, brown			
435		4	3-4-5	9				SILTY SAND, moist, brown	Residual		
10		5	4-5-7	12			SM				
430		6	4-6-11	17							
15											
425		7	100/4.5"	100/4.5"				DISINTEGRATED ROCK, moist, brown Bottom of Test Boring @ 19.5'		C	

TEST_BORING_LOG_11156.GPJ KOZERA.GDT 11/5/13

D. W. KOZERA, INC.
Baltimore, Maryland
PROFESSIONAL ENGINEERS & GEOLOGISTS

TEST BORING LOG

Boring No.: B-2
Contract No.: 11156.D
Page: 1 of 1

Project: Hobbits Glen Golf Club
Location: 11130 Willow Bottom Drive
Columbia, Maryland

Ground Surf. El. (±) : 444.0
Date Started : 10-1-12
Date Completed : 10-1-12
Contractor : GeoServices Corporation
Driller : S. Gonzalez
Rig : cme 45, Auto Hammer
Drill Method : 2 1/2 HSA
Inspector : A. MacLeod

GROUNDWATER OBSERVATIONS

	Date	Time	Depth	Casing	Caved
Encountered	10-1	08:45	None	None	15.7
Completion	10-1	09:35	None	13.5	—
Casing Pulled	10-1	09:40	None	18.5	—
	10-2	08:50	None	None	15.7

Depth (ft)	Surf. Elev. 444.0	Samples	Blow Counts	"N" Value	Water Level	Graphic	USCS	Description	Formation	Stratum	Remarks
0		1	1-1-3	4				Silty Sand, FILL, trace gravel, contains rock fragments and organic matter, moist, brown	FILL	A	
440		2	5-6-9	15				SILTY SAND, moist, brown, contains rock fragments		B	
5		3	7-12-13	25			SM				
435		4	7-6-8	14				contains trace rock fragments @ 6.5'	Residual		
10		5	10-23-20	43				POORLY GRADED SAND with silt, moist, brown, contains rock fragments			
430							SP				
15		6	50-50-12/1"	100/14"				DISINTEGRATED ROCK, moist, light brown		C	
425		7	65-35/5"	100/8"				moist, brown @ 18.5'			
20								Bottom of Test Boring @ 20.0'			

TEST_BORING_LOG_11156.GPJ KOZERA.GDT 11/5/13

D. W. KOZERA, INC.
Baltimore, Maryland
PROFESSIONAL ENGINEERS & GEOLOGISTS

TEST BORING LOG

Boring No.: B-3
Contract No.: 11156.D
Page: 1 of 1

Project: Hobbits Glen Golf Club
Location: 11130 Willow Bottom Drive
Columbia, Maryland

Ground Surf. El. (±) : 446.0
Date Started : 10-1-12
Date Completed : 10-1-12
Contractor : GeoServices Corporation
Driller : S. Gonzalez
Rig : cme 45, Auto Hammer
Drill Method : 2 1/2 HSA
Inspector : A. MacLeod

GROUNDWATER OBSERVATIONS

	Date	Time	Depth	Casing	Caved
Encountered	10-1	11:45			
Completion	10-1	11:50	None	14.0	—
Casing Pulled	10-1	12:00	None	None	11.6
	10-2	09:05	None	None	11.4

Depth (ft)	Surf. Elev. 446.0	Samples	Blow Counts	"N" Value	Water Level	Graphic	USCS	Description	Formation	Stratum	Remarks
0		1	3-4-5	9				Silty Sand, FILL, moist, brown, contains rock fragments	FILL	A	Topsoil = 0.2'
445		2	4-7-7	14							
5		3	6-8-10	18				moist, gray-brown @ 4.0'			
440		4	8-7-14	21						B	
10		5	4-4-6	10			SM	SILTY SAND, moist, gray-brown, contains trace roots	Residual		
435		6	100/1"	100/1"				Bottom of Test Boring - Refusal @ 14.1'			

TEST_BORING_LOG_11156.GPJ KOZERA.GDT 11/5/13

D. W. KOZERA, INC.
Baltimore, Maryland
PROFESSIONAL ENGINEERS & GEOLOGISTS

TEST BORING LOG

Boring No.: B-4
Contract No.: 11156.D
Page: 1 of 1

Project: Hobbits Glen Golf Club
Location: 11130 Willow Bottom Drive
Columbia, Maryland

Ground Surf. El. (±) : 440.0
Date Started : 10-1-12
Date Completed : 10-1-12
Contractor : GeoServices Corporation
Driller : S. Gonzalez
Rig : cme 45, Auto Hammer
Drill Method : 2 1/2 HSA
Inspector : A. MacLeod

GROUNDWATER OBSERVATIONS

	Date	Time	Depth	Casing	Caved
Encountered	10-1	09:05			
Completion	10-1	09:10	None	18.5	—
Casing Pulled	10-1	09:15	None	None	15.1
	10-2	08:40	None	None	15.8

Depth (ft)	Surf. Elev. 440.0	Samples	Blow Counts	"N" Value	Water Level	Graphic	USCS	Description	Formation	Stratum	Remarks
0		1	2-2-5	7				Silty Sand, FILL, trace gravel, moist, brown	FILL	A	Topsoil = 0.3'
440		2	3-2-2	4				Silty Sand, FILL, contains rock fragments, moist, brown		B	
5		3	1-3-3	6			CL	SANDY LEAN CLAY, moist, brown			
435		4	2-3-4	7			SM	SILTY SAND, moist, brown, contains trace roots	Residual		
10		5	4-5-4	9			SP	POORLY GRADED SAND, with silt, moist, brown			
430											
15		6	4-4-4	8			SM	SILTY SAND, moist, brown			
425											
20		7	5-6-6	12				Bottom of Test Boring @ 20.0'			
420											

TEST_BORING_LOG_11156.GPJ KOZERA.GDT 11/5/13

D. W. KOZERA, INC.
Baltimore, Maryland
PROFESSIONAL ENGINEERS & GEOLOGISTS

TEST BORING LOG

Boring No.: B-5
Contract No.: 11156.D
Page: 1 of 1

Project: Hobbits Glen Golf Club
Location: 11130 Willow Bottom Drive
Columbia, Maryland

Ground Surf. El. (±) : 434.0
Date Started : 10-3-12
Date Completed : 10-3-12
Contractor : GeoServices Corporation
Driller : S. Gonzalez
Rig : cme 45, Auto Hammer
Drill Method : 2 1/2 HSA
Inspector : A. MacLeod

GROUNDWATER OBSERVATIONS

	Date	Time	Depth	Casing	Caved
Encountered	10-3	07:25	—	—	—
Completion	10-3	07:40	None	9.0	—
Casing Pulled	10-3	07:45	None	None	8.5
	10-4	07:20	None	None	8.5

Depth (ft)	Surf. Elev. 434.0	Samples	Blow Counts	"N" Value	Water Level	Graphic	USCS	Description	Formation	Stratum	Remarks
0		1	1-2-4	6				SILTY SAND, moist, brown, contains rock fragments @ 0' sample	Residual	B	Topsoil = 0.3'
430		2	4-10-11	21			SM	contains rock fragments @ 2.0'			
5		3	9-8-12	20						C	
425		4	48-67/0.3"	100/9"				DISINTEGRATED ROCK, moist, gray-brown, contains rock fragments			
		5	100/1.5"	100/1.5"				Bottom of Test Boring - Refusal @ 9.1'			

TEST_BORING_LOG_11156.GPJ KOZERA.GDT 11/5/13

D. W. KOZERA, INC.
Baltimore, Maryland
PROFESSIONAL ENGINEERS & GEOLOGISTS

TEST BORING LOG

Boring No.: SWM-1
Contract No.: 11156.D
Page: 1 of 1

Project: Hobbits Glen Golf Club
Location: 11130 Willow Bottom Drive
Columbia, Maryland

Ground Surf. El. (±) : 442.0
Date Started : 10-1-12
Date Completed : 10-1-12
Contractor : GeoServices Corporation
Driller : S. Gonzalez
Rig : cme 45, Auto Hammer
Drill Method : 2 1/2 HSA
Inspector : A. MacLeod

GROUNDWATER OBSERVATIONS

	Date	Time	Depth	Casing	Caved
Encountered	10-1	12:40	None	13.5	—
Completion	10-1	12:45	None	13.5	—
Casing Pulled	10-1	12:55	None	None	10.8
	10-2	08:30	None	None	10.8

Depth (ft)	Surf. Elev. 442.0	Samples	Blow Counts	"N" Value	Water Level	Graphic	USCS	Description	Formation	Stratum	Remarks
0		1	1-2-2	4				SANDY LEAN CLAY, moist, brown, contains trace roots at 0' sample	Residual	B	Topsoil = 0.3'
440		2	3-3-5	8			CL	contains rock fragments @ 4.0'			
5		3	5-5-4	10						C	
435		4	4-5-6	11			SC	CLAYEY SAND, moist, brown, contains rock fragments			
10		5	5-9-10	19			SM	SILTY SAND, moist brown, contains trace rock fragments @ 9.0'			
430											
15		6	3-9-13	22			SP	POORLY GRADED SAND, with silt, moist, gray-brown			
								Bottom of Test Boring @ 15.0'			

TEST_BORING_LOG_11156.GPJ KOZERA.GDT 11/5/13

D. W. KOZERA, INC.
Baltimore, Maryland
PROFESSIONAL ENGINEERS & GEOLOGISTS

TEST BORING LOG

Boring No.: SWM-2
Contract No.: 11156.D
Page: 1 of 1

Project: Hobbits Glen Golf Club
Location: 11130 Willow Bottom Drive
Columbia, Maryland

Ground Surf. El. (±) : 433.0
Date Started : 10-3-12
Date Completed : 10-3-12
Contractor : GeoServices Corporation
Driller : S. Gonzalez
Rig : cme 45, Auto Hammer
Drill Method : 2 1/2 HSA
Inspector : A. MacLeod

GROUNDWATER OBSERVATIONS

	Date	Time	Depth	Casing	Caved
Encountered	10-3	08:30	—	—	—
Completion	10-3	08:35	None	13.5	—
Casing Pulled	10-3	08:45	None	None	10.2
	10-4	07:15	None	None	10.2

Depth (ft)	Surf. Elev. 433.0	Samples	Blow Counts	"N" Value	Water Level	Graphic	USCS	Description	Formation	Stratum	Remarks
0		1	1-2-3	5			CL	SANDY LEAN CLAY, moist, brown, contains trace rock fragments	Residual	B	Topsoil = 0.4'
430		2	2-3-4	7			SC	CLAYEY SAND, moist, brown, contains rock fragments			
5		3	3-3-2	5			SM	SILTY SAND, moist, brown			
425		4	7-8-11	19			SW	WELL GRADED SAND, trace silt, contains rock fragments, moist, light brown			
10		5	8-8-17	22			SM	SILTY SAND, moist, gray-brown		C	
420		6	47-53/4"	100/10"				DISINTEGRATED ROCK, moist, light brown Bottom of Test Boring @ 14.3'			

TEST_BORING_LOG_11156.GPJ KOZERA.GDT 11/5/13

D. W. KOZERA, INC.
Baltimore, Maryland
PROFESSIONAL ENGINEERS & GEOLOGISTS

TEST BORING LOG

Boring No.: SWM-3
Contract No.: 11156.D
Page: 1 of 1

Project: Hobbits Glen Golf Club
Location: 11130 Willow Bottom Drive
Columbia, Maryland

Ground Surf. El. (±) :
Date Started : 10-3-12
Date Completed : 10-3-12
Contractor : GeoServices Corporation
Driller : S. Gonzalez
Rig : cme 45, Auto Hammer
Drill Method : 2 1/2 HSA
Inspector : A. MacLeod

GROUNDWATER OBSERVATIONS

	Date	Time	Depth	Casing	Caved
Encountered	10-3	09:25	—	—	—
Completion	10-3	09:30	None	13.5	—
Casing Pulled	10-3	09:40	None	None	10.1
	10-4	07:10	None	None	10.4

Depth (ft)	Surf. Elev.	Samples	Blow Counts	"N" Value	Water Level	Graphic	USCS	Description	Formation	Stratum	Remarks
0		1	1-2-4	6				Sandy Lean Clay, FILL, moist, brown	FILL	A	Topsoil = 0.2'
		2	2-1-1	2				contains trace roots @ 2.0'			Poor Recovery @ 2.0'
5		3	2-3-4	7			CL	LEAN CLAY with sand, moist, brown	Residual	B	
		4	4-4-4	8			SM	SILTY SAND, moist, brown, contains trace rock fragments			
10		5	4-2-4	6			ML	SANDY SILT, moist, brown			
15		6	3-3-3	6				Bottom of Test Boring @ 15.0'			

TEST_BORING_LOG_11156.GPJ KOZERA.GDT 11/5/13

SOIL BORINGS

HOBBIT'S GLEN GOLF CLUBHOUSE

PROPERTY OF COLUMBIA ASSOCIATION, INC.

REVISIONS

STATE OF MARYLAND — CLIFFORD E. EDWARDS — 19144 — PROFESSIONAL ENGINEER

10-3-2013

PROFESSIONAL CERTIFICATION
I HEREBY CERTIFY THAT THESE DOCUMENTS WERE PREPARED OR APPROVED BY ME, AND THAT I AM A DULY LICENSED PROFESSIONAL ENGINEER UNDER THE LAWS OF THE STATE OF MARYLAND, LICENSE NO. 19144, EXPIRATION DATE: 09/09/14.

SITE RESOURCES incorporated
Comprehensive Land Planning & Site Design Services
14315 Jarrettsville Pike • Phoenix, Maryland 21131
(410) 683-3388 • fax (410) 683-3389

DRAWN BY: FJP	CONTRACT NO.: -
DESIGNED BY: FJP	SCALE: AS SHOWN
CHECKED BY: AFE	SRI PROJECT NO: 11059
DATE: SEPTEMBER 13, 2013	SHEET SWM2.01 29 OF 30

APPROVED: DEPARTMENT OF PLANNING & ZONING

CHIEF, DEVELOPMENT ENGINEERING DIVISION — DATE 1/7/14

CHIEF, DIVISION OF LAND DEVELOPMENT — DATE 1-22-14

DIRECTOR — DATE 1/29/14

APPROVED
PLANNING BOARD OF HOWARD COUNTY
DATE 09/12/13

APPROVED: FOR PUBLIC WATER AND PUBLIC SEWERAGE SYSTEMS

COUNTY HEALTH OFFICER
HOWARD COUNTY HEALTH DEPARTMENT — DATE 12/19/2013

ADDRESS CHART

LOT/PARCEL	STREET ADDRESS
8/135	11130 WILLOW BOTTOM DRIVE, COLUMBIA, MD. 21044

PERMIT INFORMATION CHART

SUBDIVISION NAME			SECTION/AREA		LOT/PARCEL NO.
VILLAGE OF HARPERS CHOICE			2/1		8/135
PLAT # OR L/F	GRID #	ZONING	TAX MAP NO.	ELECTION DISTRICT	CENSUS TRACT
9308 & 9309	NA	NT-05	29	5TH	605502
WATER CODE			SEWER CODE		
214 W&S			214 W&S		

SDP-13-027

1 THIS SEAL IS FOR REVISION 1 BY SITE RESOURCES, INC.

2 THIS SEAL IS FOR REVISION 2 BY SITE RESOURCES, INC.

STATE OF MARYLAND · ALBERT F. EDWARDS · 18144 · PROFESSIONAL ENGINEER

STATE OF MARYLAND · FRANK P. PHILLIPS · 21436 · LANDSCAPE ARCHITECT

12-5-2014

EXISTING PRACTICE GREEN

EXISTING BLUE TEE AREA

EXISTING DRIVING RANGE

EX. DRIVING RANGE PAVILION

EXISTING ASPHALT PATH

EX. BRICK WALK

CONC. TEE AREA (TYP.)

PROPOSED 2" WATER LINE MAINTAIN MINIMUM 3'6" COVER.

PROP. 2" WATER

PROPOSED CLUB HOUSE
F.F.E. 447.50
12,259 SF

500 S.F. TB

M-6 MICRO-BIORETENTION FACILITY #5

M-6 MICRO-BIORETENTION FACILITY #4

M-6 MICRO-BIORETENTION FACILITY #3

M-6 MICRO-BIORETENTION FACILITY #1

M-7 RAIN GARDEN #6

M-6 MICRO-BIORETENTION FACILITY #7

2,500 S.F. MX 153

PROP. 4" PVC UNDERDRAIN

42" PROP. 15" HDPE

43" PROP. 15" HDPE

54" PROP. 4" PVC

PROP. 6" PVC

PROP. 8" PVC

PROP. 4" PVC

PROP. 6" WATER

PROP. 8" SAN

EX. 6" SANITARY

EX. 6" WATER

EX. 8" SAN

EX. 2" GAS

EX. TELE

EX. ELEC

EX. 15" SD

EX. 6" WATER

EX. 8" SAN

EX. 2" GAS

EX. TELE

EX. ELEC

EX. TRANS

EX. CONDUIT MH

EX. 8" DIA CONDUIT MH

VERIZON HB

HANDBOX

CONC. WALK

WILLOW BOTTOM DR.

L=602.14' R=2000.00'

EX. 6" WATER | MINOR COLLECTOR | EX. 8" SAN

PROPOSED 20' MULTI-USE ASPHALT PATH

MAG CART PATH

N. 567900

E. 1340500

N. 567600

E. 1340000

MATCHLINE - SEE SHEET L1.02

30 JD
170 LMBB

12 JHBC

13 CAKF
12 SNSH

14 SNSH
5 CAKF

20 BMNG
1 CCFP

3 CCFP
472 CPLB
285 LMBB
14 BMNG

5 BMNG
51 S.F. SC

31 PVHM
44 SNSR
2' SOD

36 PVHM
44 SNSR
2' SOD

25 PVHM
45 SNSR
2' SOD

12 LMV

4 ASEM
307 LMBB

12 HP

20 S.F. SC
50 S.F. SC

4 IMCG
1 IMCB
4 IMCG
1 IMCB
5 IMCG

3 IVJD
1 IVJD

31 IVRS
13 JD

5 CAKF

10 JHBC

9 TGN

1 AROG

3 TGG

15 LMV

3 AZF
7 IVIH

3 IVIH
3 AZF
3 PLOL

5 HYSG
3 PAFT

20 BMNG
24 BMNG

2 LIPN

1 LIPN

5 CAKF
7 CBB
6 CAKF
6 JHBC

52 LMV

13 IS
29 SVJ
21 JD

25 SVJ
10 IS

13 PAFT

11 IVIH
28 LMBB

19 PAFT

6 IVRS

137 ABI
63 SNSR

11 IVRS
1 IVJD

6 IVRS
1 IVJD
2' SOD STRIP

3 IVIH
8 LMBB

3 IVIH
10 LMBB

1 TSGV
66 LMBB

3 PS

1 PS

2 PS

6 IVIH
10 S.F. SC

2 TGG
3 TGG
1 BNH

LST

LEGEND

- PROPERTY LINE
- EXISTING CONTOURS
- EXISTING TREELINE
- EXISTING TREES (CRITICAL ROOT ZONE)
- EXISTING WALK
- EXISTING ROAD
- EXISTING CURB
- EXISTING STORM DRAIN (EX. 15" SD)
- EXISTING WATER (EX. 6" WATER)
- EXISTING SANITARY SEWER (EX. 8" SAN)
- EXISTING GAS (EX. 2" GAS)
- EXISTING TELEPHONE (EX. TELE)
- EXISTING ELECTRIC (EX. ELEC)
- EXISTING LIGHTING
- EXISTING BUILDING
- PROPOSED STORM DRAIN (PROP. 15" SD)
- PROPOSED WATER (PROP. 6" WATER)
- PROPOSED SANITARY SEWER (PROP. 8" SAN)
- PROPOSED LIGHTING
- PROPOSED BUILDING
- PROPOSED WALK
- PROPOSED SHADE TREE
- PROPOSED EVERGREEN TREE
- PROPOSED ORNAMENTAL TREE
- PROPOSED MULTI-STEM TREE
- PROPOSED SHRUBS
- PROPOSED GROUNDCOVER
- PROPOSED SPECIALTY SEED MIX
- PROPOSED SOD

NORTH

0 5 10 20 40 60
SCALE: 1" = 20'

PLANTING PLAN

HOBBIT'S GLEN GOLF CLUBHOUSE

PROPERTY OF COLUMBIA ASSOCIATION, INC.

REVISIONS

2 10.31.2014 RETAINING WALL ADJUSTMENTS AND VARIOUS SITE FEATURES

11/26/13

SITE RESOURCES incorporated
Comprehensive Land Planning & Site Design Services
14315 Jarrettsville Pike • Phoenix, Maryland 21131
(410) 683-3368 • fax (410) 683-3369

DRAWN BY: FJP	CONTRACT NO.: -
DESIGNED BY: FJP	SCALE: 1"=20'
CHECKED BY: FJP / FPB	SRI PROJECT NO: 11059
DATE: SEPTEMBER 13, 2013	SHEET L1.01 30 OF 38

APPROVED: DEPARTMENT OF PLANNING & ZONING

CHIEF, DEVELOPMENT ENGINEERING DIVISION — DATE 1-17-14

CHIEF, DIVISION OF LAND DEVELOPMENT — DATE 1-28-14

DIRECTOR — DATE 1/29/14

APPROVED
PLANNING BOARD OF HOWARD COUNTY
DATE 09/12/13

APPROVED: FOR PUBLIC WATER AND PUBLIC SEWERAGE SYSTEMS

COUNTY HEALTH OFFICER, HOWARD COUNTY HEALTH DEPARTMENT — DATE 12/9/2013

ADDRESS CHART	
LOT/PARCEL	STREET ADDRESS
8/135	11130 WILLOW BOTTOM DRIVE, COLUMBIA, MD. 21044

PERMIT INFORMATION CHART					
SUBDIVISION NAME: VILLAGE OF HARPERS CHOICE			SECTION/AREA: 2/1		LOT/PARCEL NO.: 8/135
PLAT # OR L/F: 9308 & 9309	GRID #: NA	ZONING: NT-05	TAX MAP NO.: 29	ELECTION DISTRICT: 5TH	CENSUS TRACT: 605502
WATER CODE: 214 W&S			SEWER CODE: 214 W&S		

SDP-13-027

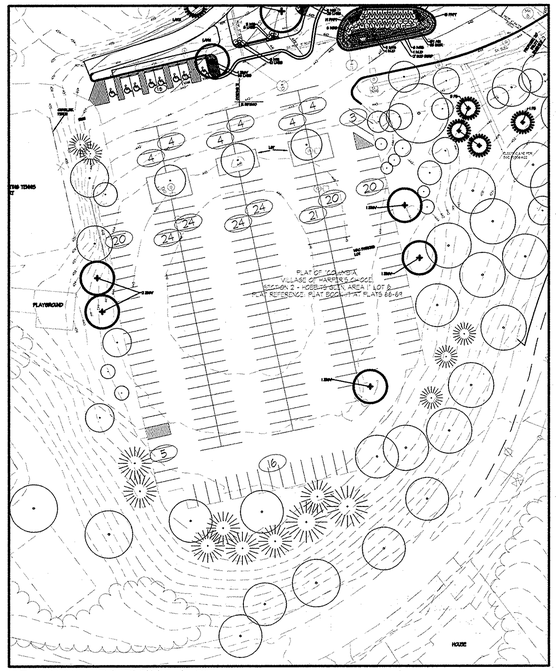

LANDSCAPE SCHEDULE	
SCHEDULE B - PARKING LOT INTERNAL LANDSCAPE	
NUMBER OF PARKING SPACES	233
NUMBER OF TREES REQUIRED	12 SHADE TREES
CREDIT FOR EXISTING TREES	YES, 12+ SHADE TREES, 10+ EVERGREEN TREES AND SHRUBS TO REMAIN
NUMBER OF TREES PROVIDED	6 SHADE TREES

INTERNAL PARKING LOT
LANDSCAPE REQUIREMENTS FOR INTERNAL PARKING LOTS per HOWARD COUNTY LANDSCAPE MANUAL

Partial Exemptions to the landscape requirements apply to expansion of existing uses under certain criteria:

- Expansion of an existing parking lot or loading area that increase the area or number of spaces by 50% or more shall be required to provide landscaping for the entire parking lot or loading area in accordnace with these regulations. Expansions of less than 50% shall be required to provide landscaping for the additional development only.

The parking lot modifications in this set of plans includes the removal of 3 spaces and restriping of 8 spaces to provide additional handicapped spaces. As no additions are being proposed and the parking will actually be reduced, no additional landscape requirements apply to the parking facility.

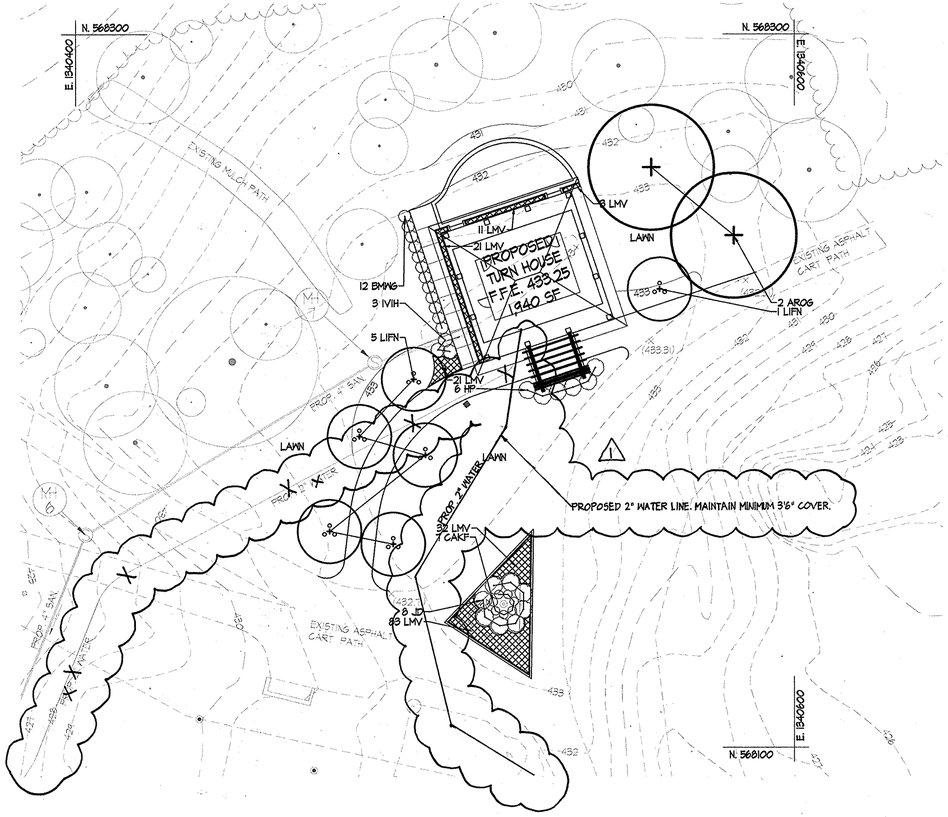

LEGEND

- PROPERTY LINE
- EXISTING CONTOURS
- EXISTING TREELINE
- EXISTING TREES (CRITICAL ROOT ZONE)
- EXISTING WALK
- EXISTING ROAD
- EXISTING CURB
- EXISTING STORM DRAIN (EX. 15" SD)
- EXISTING WATER (EX. 6" WATER)
- EXISTING SANITARY SEWER (EX. 8" SAN)
- EXISTING GAS (EX. 2" GAS)
- EXISTING TELEPHONE (EX. TELE)
- EXISTING ELECTRIC (EX. ELEC)
- EXISTING LIGHTING
- EXISTING BUILDING
- PROPOSED STORM DRAIN (PROP. 15" SD)
- PROPOSED WATER (PROP. 6" WATER)
- PROPOSED SANITARY SEWER (PROP. 8" SAN)
- PROPOSED LIGHTING
- PROPOSED BUILDING
- PROPOSED WALK
- PROPOSED SHADE TREE
- PROPOSED EVERGREEN TREE
- PROPOSED ORNAMENTAL TREE
- PROPOSED MULTI-STEM TREE
- PROPOSED SHRUBS
- PROPOSED GROUNDCOVER
- PROPOSED SPECIALTY SEED MIX
- PROPOSED SOD

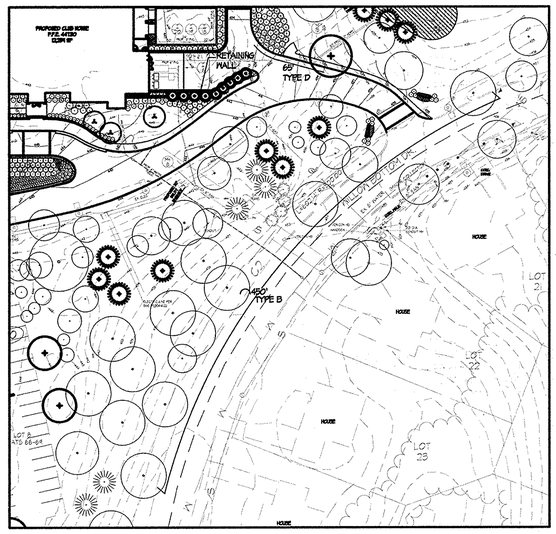

PERIMETER 1 - LANDSCAPE TYPE B

LANDSCAPE SCHEDULE	
SCHEDULE A - PERIMETER LANDSCAPE EDGE	
CATEGORY	ADJACENT TO ROADWAYS
LANDSCAPE TYPE	NON-RESIDENTIAL TO ROAD TYPE B
LINEAR FEET OF ROADWAY FRONTAGE	450'
CREDIT FOR EXISTING VEGETATION	YES, 19 SHADE TREES, 5 EVERGREEN TREES TO REMAIN
CREDIT FOR WALL, FENCE OR BERM	NO
NUMBER OF PLANTS REQUIRED	21
SHADE TREES	1 PER 50 LF = 9 REQUIRED
EVERGREEN TREES	1 PER 40 LF = 12 REQUIRED
NUMBER OF PLANTS PROVIDED	7
SHADE TREES	CRITERIA MET WITH EXISTING
EVERGREEN TREES	7

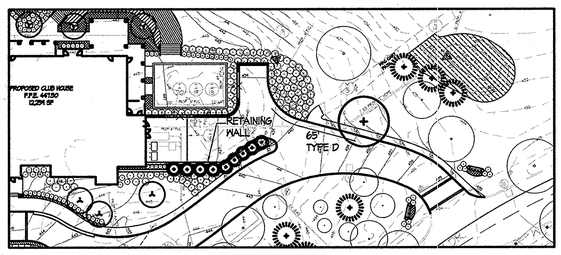

LOAD DOCK SCREEN - LANDSCAPE TYPE D

LANDSCAPE SCHEDULE	
SCHEDULE A - PERIMETER LANDSCAPE EDGE	
CATEGORY	ADJACENT TO PERIMETER PROPERTY
LANDSCAPE TYPE	LOADING ADJACENT TO RESIDENTIAL TYPE D
LINEAR FEET OF PERIMETER	65'
CREDIT FOR EXISTING VEGETATION	YES, 3 SHADE TREES
CREDIT FOR WALL, FENCE OR BERM	YES, SOLID WALL CREDIT 100%
NUMBER OF PLANTS REQUIRED	9
SHADE TREES	1 PER 60 LF = 2 REQUIRED
EVERGREEN TREES	1 PER 10 LF = 7 REQUIRED
NUMBER OF PLANTS PROVIDED	13
SHADE TREES	1 PROPOSED
EVERGREEN TREES	12 PROPOSED

NOTE: RETAINING WALLS ARE PROPOSED TO BE STONE FACED TO MATCH THE ARCHITECTURAL STYLE OF THE PROPOSED CLUBHOUSE. SEE WALL ELEVATION 2 ON SHEET C2.05.

FOREST CONSERVATION

This project is located on existing New Town Open Space lots recorded prior to 1992. The project is exempt from the forest conservation requirements considering the New Town district is a planned unit development which had preliminary development plan approval and was 50% or more developed prior to 12/31/92 in accordance with section 16.1202(b)(1)(iv) of the Howard County Code.

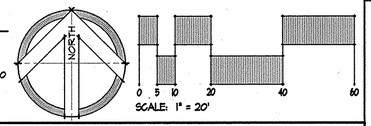

ADDRESS CHART	
LOT/PARCEL	STREET ADDRESS
8/135	11130 WILLOW BOTTOM DRIVE, COLUMBIA, MD. 21044

PERMIT INFORMATION CHART					
SUBDIVISION NAME: VILLAGE OF HARPERS CHOICE			SECTION/AREA: 2/1		LOT/PARCEL NO.: 8/135
PLAT # OR L/F: 9308 & 9309	GRID #: NA	ZONING: NT-05	TAX MAP NO.: 29	ELECTION DISTRICT: 5TH	CENSUS TRACT: 605502
WATER CODE: 214 W&S			SEWER CODE: 214 W&S		

APPROVED: DEPARTMENT OF PLANNING & ZONING

CHIEF, DEVELOPMENT ENGINEERING DIVISION — DATE 1-17-14

CHIEF, DIVISION OF LAND DEVELOPMENT — DATE 1-22-14

DIRECTOR — DATE 1/23/14

APPROVED
PLANNING BOARD OF HOWARD COUNTY
DATE 09/12/13

APPROVED: FOR PUBLIC WATER AND PUBLIC SEWERAGE SYSTEMS

BWilson for Maura Rossman — 12/19/2013 DATE
COUNTY HEALTH OFFICER
HOWARD COUNTY HEALTH DEPARTMENT

1 THIS SEAL IS FOR REVISION 1 BY SITE RESOURCES, INC.

STATE OF MARYLAND — ALBERT F. EDWARDS — #3144 — PROFESSIONAL ENGINEER
7-7-14

PLANTING PLAN

HOBBIT'S GLEN GOLF CLUBHOUSE

PROPERTY OF COLUMBIA ASSOCIATION, INC.

REVISIONS

1	08/21/2014 WATER LINE RELOCATION

STATE OF MARYLAND — JOHN F. PHILLIPS — No. 1586 — LANDSCAPE ARCHITECT
11/26/13

SITE RESOURCES incorporated
Comprehensive Land Planning & Site Design Services
14315 Jarrettsville Pike • Phoenix, Maryland 21131
(410) 683-3388 • fax (410) 683-3389

DRAWN BY: FJP	CONTRACT NO.: -
DESIGNED BY: FJP	SCALE: 1"=20'
CHECKED BY: FJP / FPB	SRI PROJECT NO: 11054
DATE: SEPTEMBER 13, 2013	SHEET L1.02 31 OF 38

SDP-13-027

NOTES:
1. THE CENTRAL LEADER SHALL NOT BE CUT.
2. CONTRACTOR SHALL LOOSEN ROOTS OF ALL CONTAINER GROWN MATERIAL TO ENCOURAGE LATERAL GROWTH OF ROOTS.
3. CONTRACTOR SHALL SCARIFY SIDES OF TREE PIT TO ELIMINATE SPADE GLAZING.

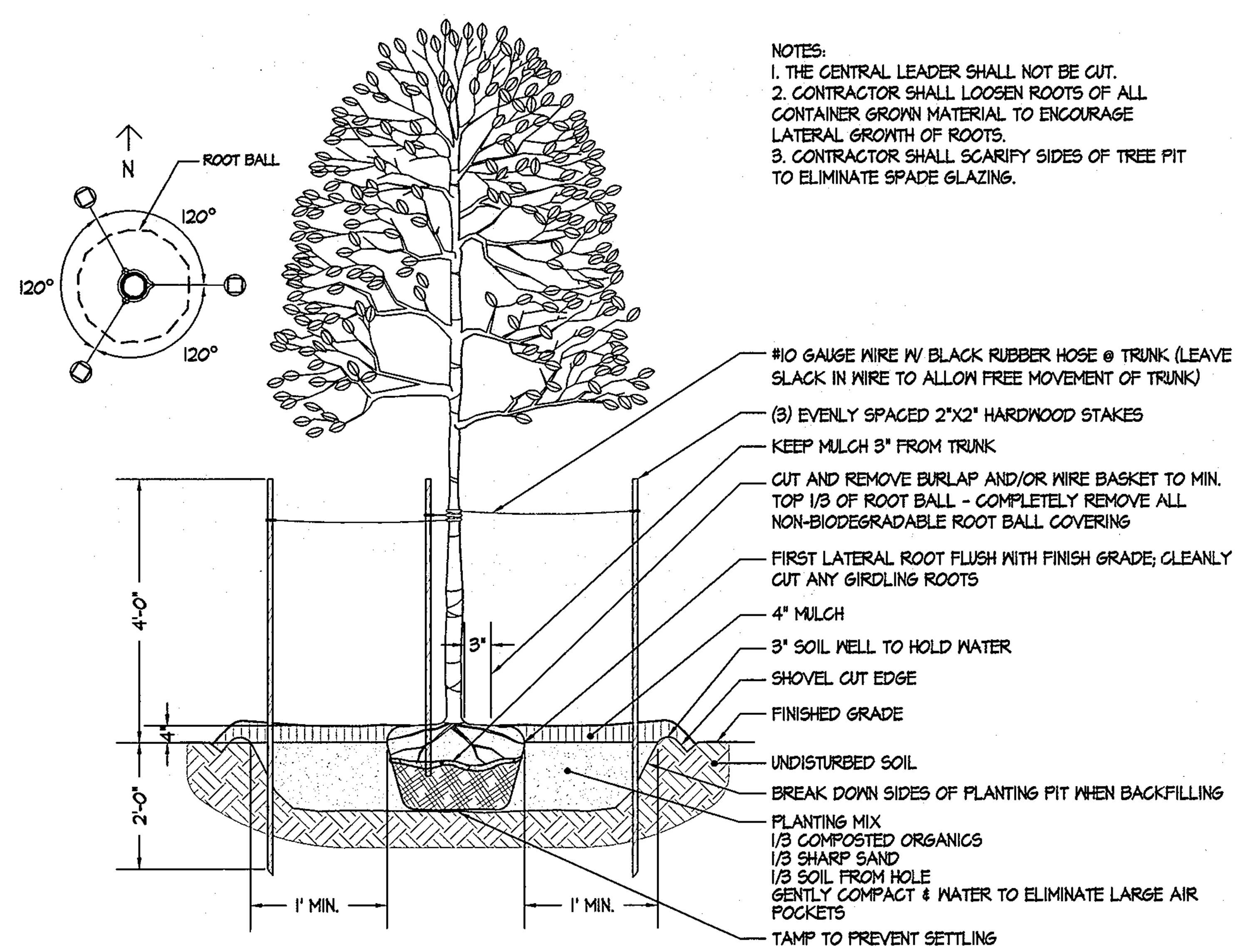

DECIDUOUS TREE DETAIL

NOTES:
1. THE CENTRAL LEADER SHALL NOT BE CUT.
2. CONTRACTOR SHALL LOOSEN ROOTS OF ALL CONTAINER GROWN MATERIAL TO ENCOURAGE LATERAL GROWTH OF ROOTS.
3. CONTRACTOR SHALL SCARIFY SIDES OF TREE PIT TO ELIMINATE SPADE GLAZING.

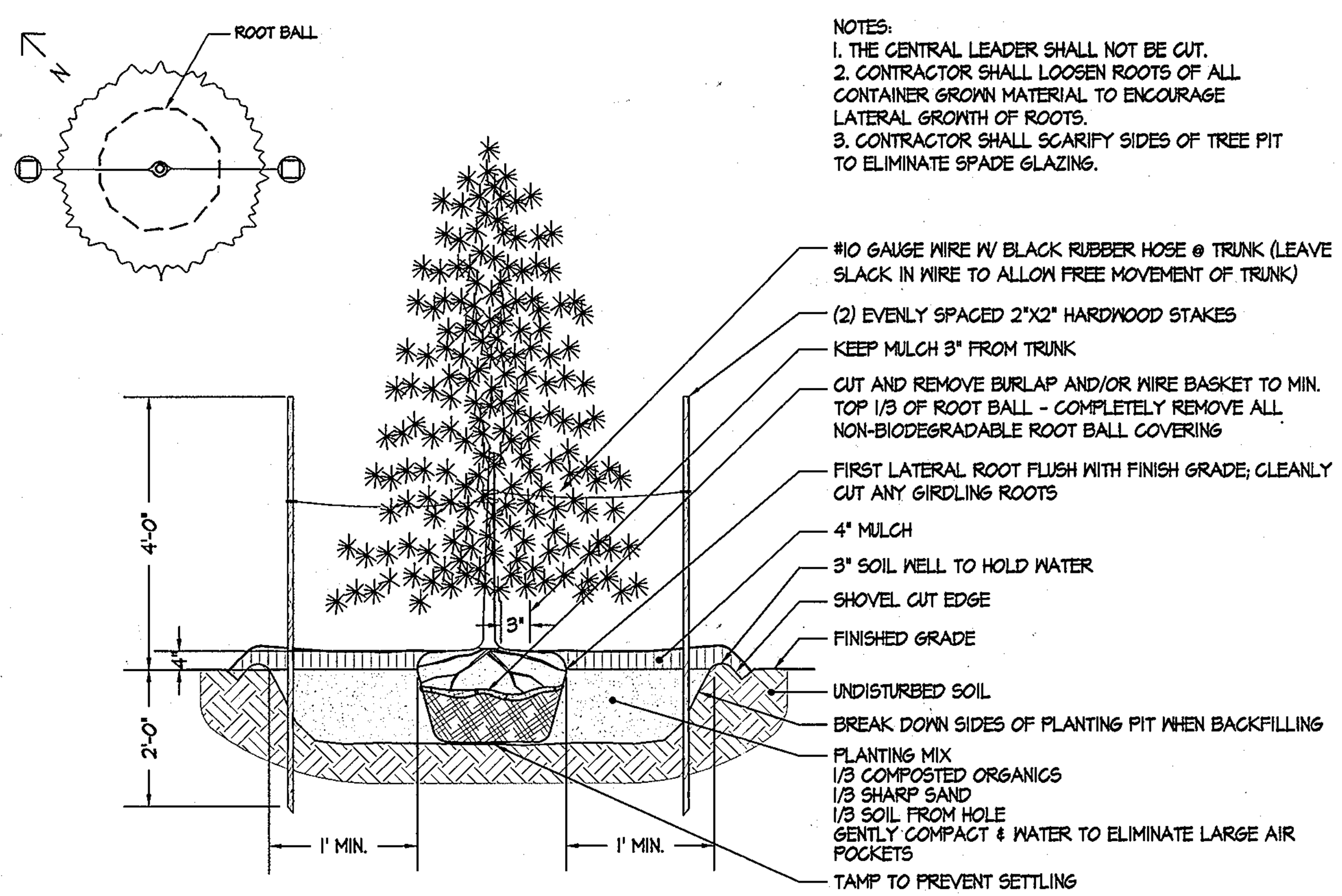

EVERGREEN TREE DETAIL

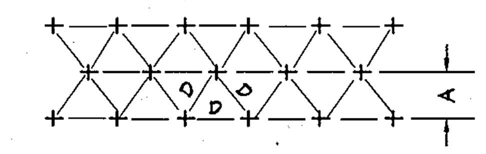

NOTE:
FOR USE ONLY WHEN PLANTS ARE SPACED EQUIDISTANT FROM EACH OTHER AS SHOWN, AND SPECIFIED IN THE PLANT LIST.

SPACING "D"	ROW "A"	PLANTS / S.F.
6" O.C.	5.20"	4.61
8" O.C.	6.93"	2.60
10" O.C.	8.66"	1.66
12" O.C.	10.40"	1.15
15" O.C.	13.00"	.738
18" O.C.	15.60"	.512
24" O.C.	20.80"	.290
30" O.C.	26.00"	.185
36" O.C.	30.00"	.128

PLANT SPACING CHART

NOTES:
1. CONTRACTOR SHALL LOOSEN ROOTS OF ALL CONTAINER GROWN MATERIAL TO ENCOURAGE LATERAL GROWTH OF ROOTS.
2. CONTRACTOR SHALL SCARIFY SIDES OF SHRUB PIT TO ELIMINATE SPADE GLAZING.
3. PERENNIALS SHALL BE PLANTED IN 12" DEPTH

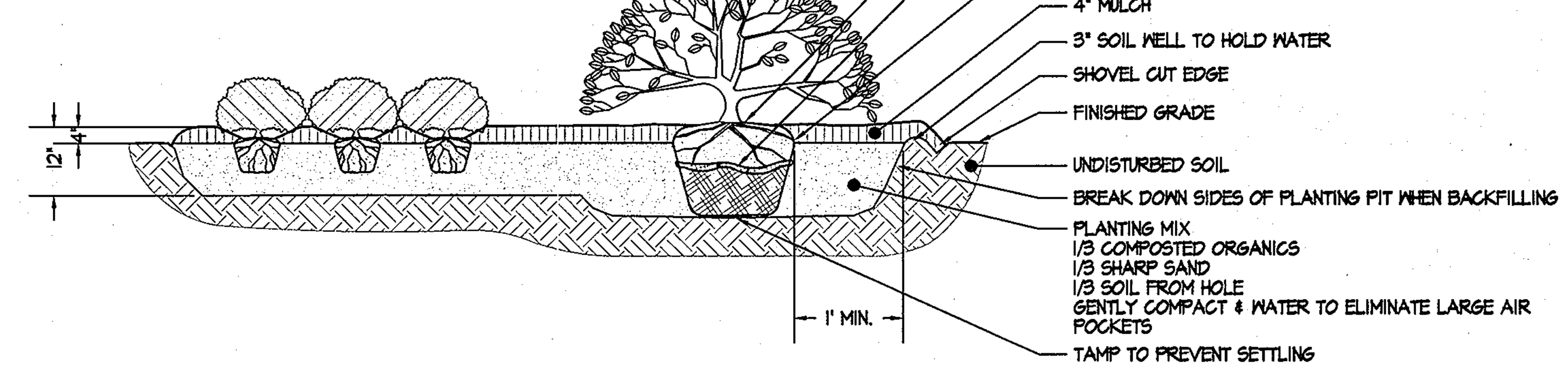

SHRUB/ PERENNIAL DETAIL

1 PLANTING DETAILS

NOT TO SCALE

PLANT LIST

CODE	QTY.	BOTANICAL NAME	COMMON NAME	SIZE	CONDITION	REMARKS
SHADE TREES						
AROG	3	ACER RUBRUM 'OCTOBER GLORY'	OCTOBER GLORY RED MAPLE	3.5-4" CAL.	B&B	
ASGM	1	ACER SACCHARUM ' GREEN MOUNTAIN'	GREEN MOUNTAIN SUGAR MAPLE	4-4.5" CAL.	B&B	
BNH	1	BETULA NIGRA 'HERRITAGE'	HERRITAGE RIVER BIRCH	14-16' HT.	B&B	MULTI-STEM- 3 TRUNK MINIMUM
ZSGV	6	ZELKOVA SERRATA 'GREEN VASE'	GREEN VASE ZELKOVA	3.5-4" CAL.	B&B	
EVERGREEN TREES						
PS	7	PINUS STROBUS	EASTERN WHITE PINE	6-8' HT.	B&B	
TGG	8	THUJA X 'GREEN GIANT'	GREEN GIANT ARBORVITE	8-10' HT.	B&B	HEAVY
TON	9	THUJA OCCIDENTALLIS 'NIGRA'	NIGRA ARBORVITE	8-10' HT.	B&B	HEAVY
ORNAMENTAL TREES						
CCFP	3	CERCIS CANADENSIS 'FOREST PANSY'	FOREST PANSY REDBUD	12' HT.	B&B	SPECIMEN
LIFN	11	LAGERSTROEMIA INDICA 'NATCHEZ'	NATCHEZ CRAPE MYRTLE	10' HT.	B&B	5 TRUNK MINIMUM / SPECIMEN
SHRUBS						
AZF	6	AZALEA ' FLAME'	FLAME AZALEA	24" HT.	#5 CONT.	HEAVY
BMWG	100	BUXUS MICROPHYLLA 'WINTER GEM'	WINTER GEM BOXWOOD	18" HT.	B&B	HEAVY
CSB	7	CORNUS SERICEA 'BAILEY'	RED TWIG DOGWOOD	30" HT.	B&B	HEAVY SPECIMEN / 5 CANE MINIMUM
HP	18	HYDRANGEA PETIOLARIS	CLIMBING HYDRANGEA	24" HT.	#3 CONT.	ON WOOD LATTICE
HYSQ	5	HYDRANGEA QUERCIFOLIA ' SNOW QUEEN'	SNOW QUEEN HYDRANGEA	24" HT.	#3 CONT.	HEAVY
IMCB	2	ILEX MESERVEAE 'CHINA BOY'	CHINA BOY HOLLY	18-24" HT.	#3 CONT.	HEAVY
IMCG	13	ILEX MESERVEAE 'CHINA GIRL'	CHINA GIRL HOLLY	18-24" HT.	#3 CONT.	HEAVY
IVRS	54	ILEX VERTICILLATA 'RED SPRITE'	RED SPRITE DWARF WINTERBERRY HOLLY	18-24" HT.	#3 CONT.	HEAVY
IVJD	6	ILEX VERTICILLATA 'JIM DANDY'	JIM DANDY WINTERBERRY HOLLY	18-24" HT.	#3 CONT.	HEAVY
IVIH	46	ITEA VIRGINICA 'LITTLE HENRY'	LITTLE HENRY VIRGINIA SWEETSPIRE	18-24" HT.	#3 CONT.	HEAVY
JD	72	JUNIPERUS DAVURICA 'PARSONII'	PARSON'S JUNIPER	24" HT.	B&B	HEAVY
JHBC	34	JUNIPERUS HIRIZONTALLIS 'BLUE CHIP'	BLUE CHIP JUNIPER	18-24" HT.	#3 CONT.	HEAVY
PLOL	3	PRUNUS LAUROCERASUS 'OTTO LUYKEN'	OTTO LUYKEN CHERRY LAUREL	24" HT.	#7 CONT.	HEAVY
TMH	33	TAXUS MEDIA 'HICKSII'	HICK'S YEW	3' HT.	B&B	HEAVY
PERENNIALS & GROUNDCOVERS						
ABI	137	AMSONIA 'BLUE ICE'	BLUE STAR		#1 CONT.	
CPLB	472	CERATOSTIGMA PLUBAGINOIDES	PLUBAGO		1 QT.	12" SPACING
IS	23	IRIS PSEUDACORUS	YELLOW FLAG IRIS		#1 CONT.	
LMBB	883	LIRIOPE MUSCARI 'BIG BLUE'	BIG BLUE LILY TURF		1 PINT	18" SPACING
LMV	377	LIRIOPE MUSCARRI 'VARIEGATA'	VARIEGATED LIRIOPE		1 PINT	18" SPACING
SNBH	26	SALVIA NEMOROSA 'BLUE HILL'	BLUE HILLL SAGE		#1 CONT.	
SNSR	196	SALVIA NEMOROSA 'SENSATION ROSE'	SENSATION ROSE SAGE		#1 CONT.	
GRASSES & SUCCULENTS						
CAKF	51	CALAMAGROSTRIS ACUTIFLORA 'KARL FOERSTER'	KARL FOERSTER FEATHER REED GRASS		1 GAL.	30" SPACING
PAFT	35	PENNISETUM ALOPERCUROIDES 'FOXTROT'	FOXTROT FOUNTAIN GRASS		#1 CONT.	24" SPACING
PAH	3	PENNISETUM ALOPERCUROIDES 'HAMELIN'	DWARF FOUNTAIN GRASS		#1 CONT.	24" SPACING
PVHM	108	PANICUM VIRGATUM 'HEAVY METAL'	BLUE SWITCHGRASS		#2 CONT.	36" SPACING
SVJ	45	SEDUM 'VERA JAMESON'	VERA JAMESON SEDUM		1 QT.	12" SPACING
SPECIALTY MIXES						
MIX 153	2,500 SF	ERNST SEED MIX 153	SHOWY NORTHEST NATIVE WILDFLOWER & GRASS MIX		SEED MIX	
TB	500 SF	TEE BOX SOD	L93 CREEPING BENTGRASS SOD			
LAWN		TURF TYPE TALL FESCUE				
SOD		TURF TYPE TALL FESCUE				

LANDSCAPING NOTES

(THESE NOTES APPLY TO ALL PLANTING IN THIS CONTRACT)

1. QUANTITIES SHOWN ON THE PLANT LIST ARE FOR THE CONTRACTOR'S CONVENIENCE ONLY. SYMBOLS ON THE PLAN SHALL TAKE PRECEDENCE. CONTRACTOR SHALL VERIFY ALL PLANT QUANTITIES TO HIS OWN SATISFACTION.
2. PLANT MATERIAL SUBSTITUTIONS ARE SUBJECT TO APPROVAL BY THE PROJECT LANDSCAPE ARCHITECT.
3. PLANT MATERIAL SHALL BE TAGGED AT THE SOURCE BY THE LANDSCAPE ARCHITECT OR OWNER'S REPRESENTATIVE UNLESS THE REQUIREMENT IS SPECIFICALLY WAIVED.
4. LOCATIONS OF ALL PLANT MATERIAL SHALL BE STAKED FOR APPROVAL BY THE PROJECT LANDSCAPE ARCHITECT.
5. ALL SHRUB AND GROUND COVER AREAS SHALL BE PLANTED IN CONTINUOUS PREPARED BEDS MULCHED WITH COMPOSTED HARDWOOD MULCH AS DETAILED AND SPECIFIED.
6. PLANTING BEDS SHALL HAVE POSITIVE DRAINAGE WITH A MINIMUM 2% SLOPE.
7. CONTRACTOR SHALL VERIFY ACCURACY OF BASE INFORMATION AND EXISTING CONDITIONS AND UTILITIES IN THE FIELD TO HIS OWN SATISFACTION. UTILITIES BID SHALL BE BASED ON ACTUAL SITE CONDITIONS. NO EXTRA PAYMENT SHALL BE MADE FOR WORK ARISING FROM SITE CONDITIONS DIFFERING FROM THOSE INDICATED ON DRAWINGS AND SPECIFICATIONS.
8. THE CONTRACTOR SHALL NOTIFY MISS UTILITY AT 1-800-257-7777 A MINIMUM OF TWO WORKING DAYS PRIOR TO BEGINNING PLANTING AND CONSTRUCTION.
9. DAMAGE TO EXISTING CONDITIONS AND UTILITIES SHALL BE REPAIRED AND RESTORED AT THE EXPENSE OF THE CONTRACTOR.
10. ALL PLANT MATERIAL SHALL BE NURSERY GROWN AND SHALL CONFORM TO AMERICAN NURSERY & LANDSCAPE ASSOCIATION'S AMERICAN STANDARD FOR NURSERY STOCK, ANSI Z60.1.
11. CONTRACTOR SHALL PROVIDE A WARRANTY ON ALL WORK FOR A MINIMUM OF ONE (1) YEAR INCLUDING ONE CONTINUOUS GROWING SEASON. COMMENCE WARRANTY ON THE DATE IDENTIFIED IN THE CERTIFICATE OF SUBSTANTIAL COMPLETION. WARRANTY TO INCLUDE COVERAGE OF PLANTS FROM DEATH OR PLANT MATERIAL WHICH DECLINES TO LESS THAN 75% OF ITS ORIGINAL HABIT OR CONDITION. REPLACEMENT OF PLANTS SHALL BE THE SAME QUALITY, SIZE AND SPECIES AS SPECIFIED AND PLANTED IN THE NEXT GROWING SEASON WITH A NEW WARRANTY COMMENCING WITH THE DATE OF REPLACEMENT.

TEE BOX SOD (PER COURSE STANDARDS)

(THESE NOTES ONLY APPLY TO TEE BOX CONSTRUCTION)

1. 7:2:1 TEE MIX INSTALLED AT A 6" DEPTH
2. 4" PERFORATED DRAIN PIPING PROTECTED WITH RICE GRAVEL PLACED AT 15' MAXIMUM SPACING.
3. L93 CREEPING BENTGRASS SOD.
4. CONSULT WITH DIRECTOR OF GOLF COURSE MAINTENANCE FOR APPROVAL OF TEE BOX STAKE OUT AND DRAIN PIPE LAYOUT PRIOR TO BACKFILLING.

MIX 153

(THESE NOTES ONLY APPLY TO MIX 153)

MIX 153- SHOWY NORTHEAST NATIVE WILDFLOWER & GRASS MIX BY ERNST SEED, 9006 MERCER PIKE, MEADVILLE, PA. 16335. PHONE (800)-873-3321. APPLY SEED MIX IN ACCORDANCE WITH MANUFACTURERS RECOMMENDATIONS FOR METHOD AND RATE OF APPLICATION.

LAWN & SOD AREAS

AREAS INDICATED TO RECEIVE SEED AND SOD (WITH THE EXCEPTION OF TEE BOX & MIX 153) SHALL BE TURF TYPE TALL FESCUE IN ACCORDANCE WITH HOBBIT'S GLEN GOLF COURSE STANDARDS. CONSULT WITH DIRECTOR OF GOLF COURSE MAINTENANCE TO ENSURE SEED AND SOD SELECTIONS ARE ACCEPTABLE PRIOR TO INSTALLATION.

MINIMUM LANDSCAPE MAINTENANCE REQUIREMENTS

1. LAWN AREAS SHALL BE MOWED TO A HEIGHT OF 2 TO 3 INCHES AND NOT ALLOWED TO REACH A HEIGHT OF 4 INCHES BEFORE MOWING.
2. ALL CURBS AND WALKS SHALL BE EDGED AS NEEDED.
3. ALL LAWN AREAS ADJACENT TO BUILDING FACES OR STRUCTURES SHALL BE TRIMMED.
4. A SLOW RELEASE NITROGEN BALANCED FERTILIZER WITH A 2-1-1 RATIO SHALL BE APPLIED AT A RATE OF 2 POUNDS OF NITROGEN PER 1000 SQUARE FEET IN SEPTEMBER, OCTOBER, AND FEBRUARY.
5. LIME SHALL BE APPLIED AT THE RATE DETERMINED BY A SOILS REPORT.
6. IT IS RECOMMENDED THAT LAWN AREAS BE TREATED IN MID-MARCH TO EARLY APRIL WITH PRE-EMERGENT HERBICIDE (BETASAN) OR EQUAL APPLIED AT THE MANUFACTURER'S RECOMMENDED RATE.
7. A POST-EMERGENT HERBICIDE (TRIMEC) OR EQUAL IS RECOMMENDED TO BE SPRAYED ON LAWN AREAS IN THE LATE SPRING OR THE EARLY FALL. FOLLOW MANUFACTURER'S RATES AND RECOMMENDATIONS.
8. INSECTICIDES AND FUNGICIDES ARE RECOMMENDED FOR INSECT AND DISEASE CONTROL.
9. RESEED BARE AREAS OF LAWN AS NECESSARY. YEARLY AERATION IS RECOMMENDED.
10. ALL TRASH, LITTER, AND DEBRIS SHALL BE REMOVED FROM LAWN AREAS, PARKING LOTS, AND SHRUB BEDS AS NEEDED.
11. MULCH ALL SHRUB AND GROUNDCOVER BEDS YEARLY WITH 3 INCHES OF SHREDDED HARDWOOD BARK.
12. PERMIT SHRUBS AND TREES TO GROW AND ENLARGE TO THEIR DESIGN SIZE. CONSULT PROJECT LANDSCAPE ARCHITECT FOR DETAILS.
13. PRUNE TREES IN ACCORDANCE WITH LANDSCAPE CONTRACTORS ASSOCIATION GUIDELINES.

STORMWATER MANAGEMENT LANDSCAPE SUMMARY

CODE	QTY.	BOTANICAL NAME	COMMON NAME
M-6 MICRO-BIORETENTION FACILITY #1			
ABI	137	AMSONIA 'BLUE ICE'	BLUE STAR
IVRS	12	ILEX VERTICILLATA 'RED SPRITE'	RED SPRITE DWARF WINTERBERRY HOLLY
IVJD	2	ILEX VERTICILLATA 'JIM DANDY'	JIM DANDY WINTERBERRY HOLLY
IS	23	IRIS PSEUDACORUS	YELLOW FLAG IRIS
JD	21	JUNIPERUS DAVURICA 'PARSONII'	PARSON'S JUNIPER
SVJ	45	SEDUM 'VERA JAMESON'	VERA JAMESON SEDUM
PAFT	32	PENNISETUM ALOPERCUROIDES 'FOXTROT'	FOXTROT FOUNTAIN GRASS
SOD		TURF TYPE TALL FESCUE	
M-6 MICRO-BIORETENTION FACILITY #3			
PVHM	35	PANICUM VIRGATUM 'HEAVY METAL'	BLUE SWITCHGRASS
SNSR	45	SALVIA NEMOROSA 'SENSATION ROSE'	SENSATION ROSE SAGE
SOD		TURF TYPE TALL FESCUE	
M-6 MICRO-BIORETENTION FACILITY #4			
PVHM	36	PANICUM VIRGATUM 'HEAVY METAL'	BLUE SWITCHGRASS
SNSR	44	SALVIA NEMOROSA 'SENSATION ROSE'	SENSATION ROSE SAGE
SOD		TURF TYPE TALL FESCUE	
M-6 MICRO-BIORETENTION FACILITY #5			
PVHM	37	PANICUM VIRGATUM 'HEAVY METAL'	BLUE SWITCHGRASS
SNSR	44	SALVIA NEMOROSA 'SENSATION ROSE'	SENSATION ROSE SAGE
SOD		TURF TYPE TALL FESCUE	
M-7 RAIN GARDEN FACILITY #6			
MIX-153	2,500 SF	SHOWY NORTHEST NATIVE WILDFLOWER & GRASS MIX	
M-6 MICRO-BIORETENTION FACILITY #7			
IVRS	31	ILEX VERTICILLATA 'RED SPRITE'	RED SPRITE DWARF WINTERBERRY HOLLY
IVJD	4	ILEX VERTICILLATA 'JIM DANDY'	JIM DANDY WINTERBERRY HOLLY
JHBC	10	JUNIPERUS HIRIZONTALLIS 'BLUE CHIP'	BLUE CHIP JUNIPER

THIS CHART PROVIDED FOR THE CONVENIENCE OF COUNTY REVIEW ONLY. CONTRACTOR SHALL USE THE PLANT LIST TO THE LEFT OF THIS SHEET.

DEVELOPER'S/BUILDER'S CERTIFICATE

I/We certify that the landscaping shown on this plan will be done according to the plan, Section 16.124 of the Howard County Subdivision and Land Development Regulations and the Landscape Manual. I/We further certify that upon completion a letter of Landscape Installation, accompanied by an executed one year guarantee of plant materials, will be submitted to the Department of Planning and Zoning.

D. Mc[illegible] — Name
11.13.13 — Date

APPROVED: DEPARTMENT OF PLANNING & ZONING

CHIEF, DEVELOPMENT ENGINEERING DIVISION — DATE 1.17.14

CHIEF, DIVISION OF LAND DEVELOPMENT — DATE 1.28.14

DIRECTOR — DATE 1/29/14

APPROVED
PLANNING BOARD OF HOWARD COUNTY
DATE 09/12/13

APPROVED: FOR PUBLIC WATER AND PUBLIC SEWERAGE SYSTEMS

B. Wilson for Maura Rossman 12/19/2013
COUNTY HEALTH OFFICER — DATE
HOWARD COUNTY HEALTH DEPARTMENT

PREPARED BY: JAMES PALMER, PLA
STATE OF MARYLAND
REGISTERED LANDSCAPE ARCHITECT
REGISTRATION NO. 3564

NAME: Jim Palmer

ADDRESS CHART

LOT/PARCEL	STREET ADDRESS
8/135	11130 WILLOW BOTTOM DRIVE, COLUMBIA, MD. 21044

PERMIT INFORMATION CHART

SUBDIVISION NAME			SECTION/AREA		LOT/PARCEL NO.
VILLAGE OF HARPERS CHOICE			2/1		8/135
PLAT # OR L/F	GRID #	ZONING	TAX MAP NO.	ELECTION DISTRICT	CENSUS TRACT
9308 & 9309	NA	NT-OS	29	5TH	605502
WATER CODE			SEWER CODE		
214 W&S			214 W&S		

PLANTING DETAILS & NOTES

HOBBIT'S GLEN GOLF CLUBHOUSE

PROPERTY OF COLUMBIA ASSOCIATION, INC.

REVISIONS

11/26/13

SITE RESOURCES incorporated
Comprehensive Land Planning & Site Design Services
14315 Jarrettsville Pike • Phoenix, Maryland 21131
(410) 683-3388 • fax (410) 683-3389

DRAWN BY: FJP	CONTRACT NO.: -
DESIGNED BY: FJP	SCALE: AS SHOWN
CHECKED BY: FJP/FPB	SRI PROJECT NO: 11059
DATE: SEPTEMBER 13, 2013	SHEET L2.01 32 OF 38

SDP-13-027

1599CGS

APPROX. DRAIN AREA = 92.70 SQ IN
APPROX. WEIGHT WITH FRAME = 59.52 LBS

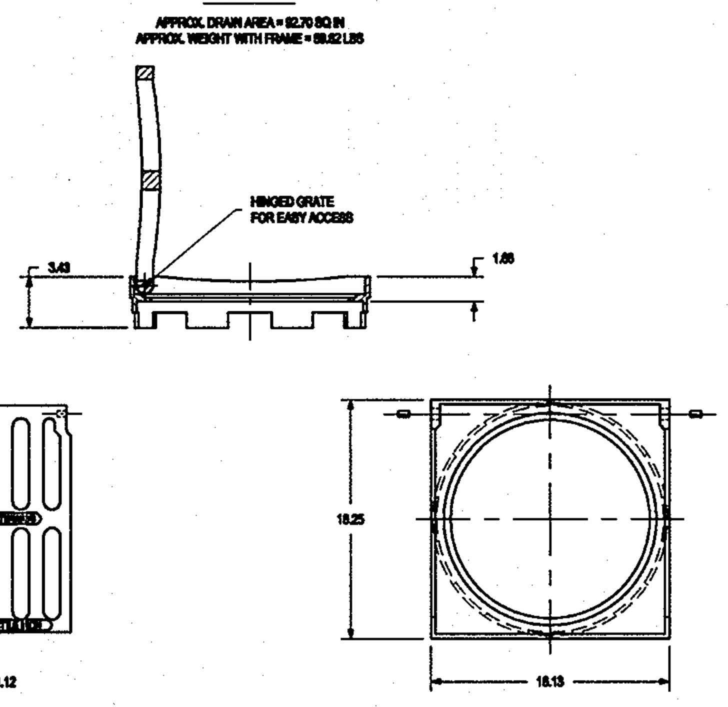

DIMENSIONS ARE FOR REFERENCE ONLY
ACTUAL DIMENSIONS MAY VARY
DIMENSIONS ARE IN INCHES
GRATE MEETS H-20 LOAD RATING
QUALITY: MATERIALS SHALL CONFORM TO ASTM A536 GRADE 70-50-05
PAINT: CASTINGS ARE FURNISHED WITH A BLACK PAINT
LOCKING DEVICE AVAILABLE UPON REQUEST SEE DRAWING NO. 7001-110-032

THIS PRINT DISCLOSES SUBJECT MATTER IN WHICH NYLOPLAST HAS PROPRIETARY RIGHTS. THE RECEIPT OR POSSESSION OF THIS PRINT DOES NOT CONFER, TRANSFER, OR LICENSE THE USE OF THE DESIGN OR TECHNICAL INFORMATION SHOWN HEREIN REPRODUCTION OF THIS PRINT OR ANY INFORMATION CONTAINED HEREIN, OR MANUFACTURE OF ANY ARTICLE HEREFROM, FOR THE DISCLOSURE TO OTHERS IS FORBIDDEN, EXCEPT BY SPECIFIC WRITTEN PERMISSION FROM NYLOPLAST.

DRAWN BY EBC | DATE 3-7-08 | REVISED BY EBC | DATE 3-7-08 | MATERIAL DUCTILE IRON | PROJECT NO./NAME
Nyloplast — 3130 VERONA AVE, BUFORD, GA 30518, PHN (770) 932-2443, FAX (770) 932-2490, www.nyloplast-us.com
TITLE 15 IN STANDARD GRATE ASSEMBLY
DWG SIZE A | SCALE 1:8 | SHEET 1 OF 1 | DWG NO. 7001-110-208 | REV C

(1) 15" STANDARD GRATE ASSEMBLY

NOT TO SCALE

NYLOPLAST 18" DRAIN BASIN: 2818AG__X

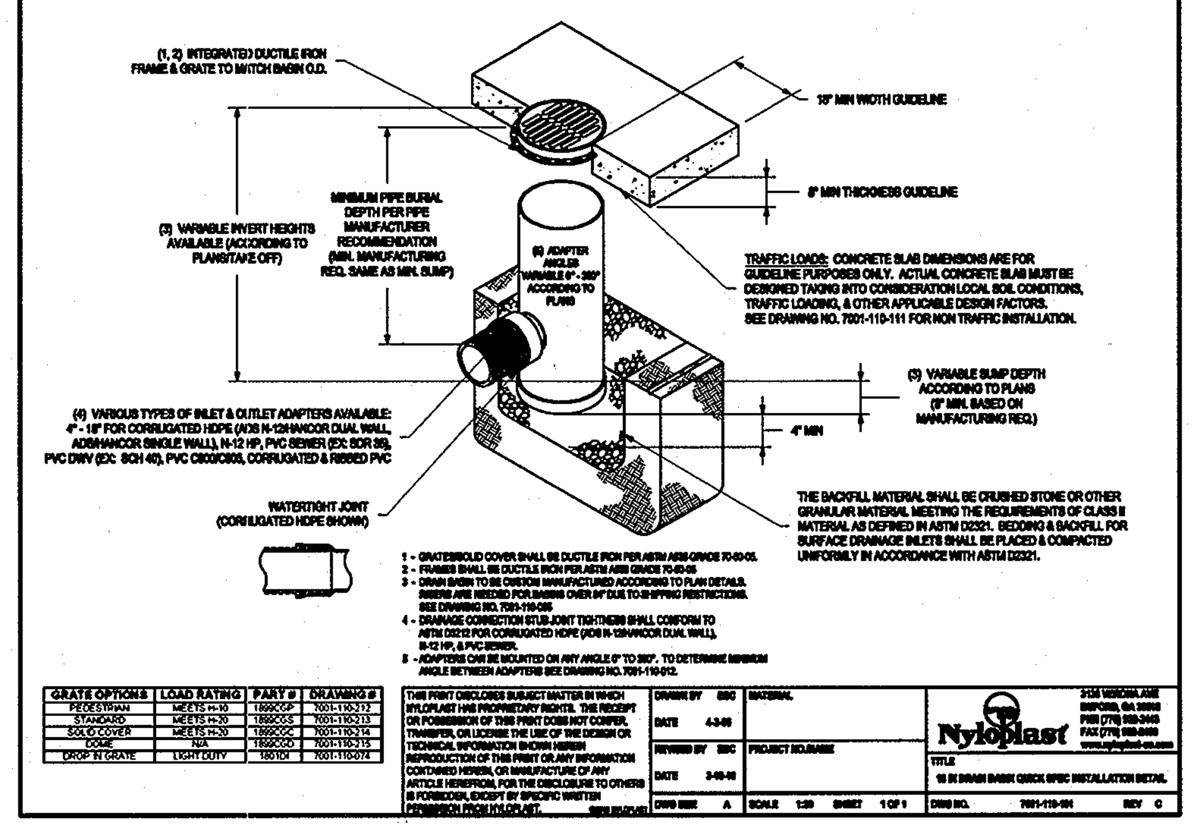

1 - GRATES/SOLID COVER SHALL BE DUCTILE IRON PER ASTM A536 GRADE 70-50-05.
2 - FRAMES SHALL BE DUCTILE IRON PER ASTM A536 GRADE 70-50-05
3 - DRAIN BASIN TO BE CUSTOM MANUFACTURED ACCORDING TO PLAN DETAILS. RISERS ARE NEEDED FOR BASINS OVER 84" DUE TO SHIPPING RESTRICTIONS. SEE DRAWING NO. 7001-110-065
4 - DRAINAGE CONNECTION STUB JOINT TIGHTNESS SHALL CONFORM TO ASTM D3212 FOR CORRUGATED HDPE (ADS N-12/HANCOR DUAL WALL), N-12 HP, & PVC SEWER.
5 - ADAPTERS CAN BE MOUNTED ON ANY ANGLE 0° TO 360°. TO DETERMINE MINIMUM ANGLE BETWEEN ADAPTERS SEE DRAWING NO. 7001-110-012.

GRATE OPTIONS	LOAD RATING	PART #	DRAWING #
PEDESTRIAN	MEETS H-10	1899CGP	7001-110-212
STANDARD	MEETS H-20	1899CGS	7001-110-213
SOLID COVER	MEETS H-20	1899CGC	7001-110-214
DOME	N/A	1899CGD	7001-110-215
DROP IN GRATE	LIGHT DUTY	1801DI	7001-110-074

THIS PRINT DISCLOSES SUBJECT MATTER IN WHICH NYLOPLAST HAS PROPRIETARY RIGHTS. THE RECEIPT OR POSSESSION OF THIS PRINT DOES NOT CONFER, TRANSFER, OR LICENSE THE USE OF THE DESIGN OR TECHNICAL INFORMATION SHOWN HEREIN REPRODUCTION OF THIS PRINT OR ANY INFORMATION CONTAINED HEREIN, OR MANUFACTURE OF ANY ARTICLE HEREFROM, FOR THE DISCLOSURE TO OTHERS IS FORBIDDEN, EXCEPT BY SPECIFIC WRITTEN PERMISSION FROM NYLOPLAST.

DRAWN BY EBC | DATE 4-3-08 | REVISED BY EBC | DATE 3-6-10 | MATERIAL | PROJECT NO./NAME
Nyloplast
TITLE 18 IN DRAIN BASIN QUICK SPEC INSTALLATION DETAIL
DWG SIZE A | SCALE 1:20 | SHEET 1 OF 1 | DWG NO. 7001-110-101 | REV C

(2) 18" DRAIN BASIN

NOT TO SCALE

ADS FLARED END SECTION SPECIFICATION

Scope
This specification describes 12- through 36-inch (300 to 900mm) ADS Flared End Sections for use in culvert and drainage outlet applications.

Requirements
The invert of the pipe and the end section shall be at the same elevation. The ADS Flared End Section shall be manufactured with polyethylene resins as described and defined in ASTM D3350.

Part Number	Pipe Diameter	A	B (max)	H	L	W
1210NP	12 in (300 mm)	6.50 in (165 mm)	10.00 in (254 mm)	6.50 in (165 mm)	25.00 in (635 mm)	29.00 in. (737 mm)
1510NP	15 in (375 mm)	6.50 in (165 mm)	10.00 in (254 mm)	6.50 in (165 mm)	25.00 in (635 mm)	29.00 in (737 mm)
1810NP	18 in (450 mm)	7.50 in (191 mm)	15.00 in (381 mm)	6.50 in (165 mm)	32.00 in (813 mm)	35.00 in (889 mm)
2410NP	24 in (600 mm)	7.50 in (191 mm)	18.00 in (457 mm)	6.50 in (165 mm)	36.00 in (914 mm)	45.00 in (1143 mm)
3015NP	30 in (750 mm)	7.50 in (191 mm)	12.00 in (305 mm)	8.60 in (218 mm)	58.00 in (1473 mm)	63.00 in (1600 mm)
3615NP	36 in (900 mm)	7.50 in (191 mm)	25.00 in (635 mm)	8.60 in (218 mm)	58.00 in (1473 mm)	63.00 in (1600 mm)

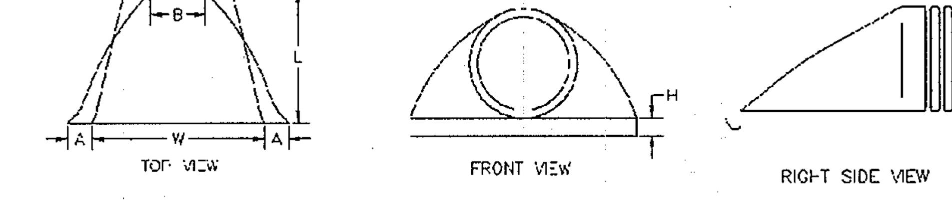

(3) FLARED END SECTION

NOT TO SCALE

ACO DRAIN

S300K trench drain system

ACO Specification Information

Description	Part No. Slotted	Part No. ADA	Invert Depth inches	Invert Depth mm	Weight lbs.
SK3-01 Neutral channel - 39.37" (1m)	93495	93496	11.89	302	233.0
SK3-1 Sloped channel - 39.37" (1m)	93502	93503	11.89 - 12.13	302 - 308	234.9
SK3-2 Sloped channel - 39.37" (1m)	93511	93512	12.13 - 12.36	308 - 314	236.7
SK3-3 Sloped channel - 39.37" (1m)	93523	93524	12.36 - 12.60	314 - 320	238.6
SK3-4 Sloped channel - 39.37" (1m)	93534	93535	12.60 - 12.83	320 - 326	240.4
SK3-5 Sloped channel - 39.37" (1m)	93546	93547	12.83 - 13.07	326 - 332	242.3
SK3-6 Sloped channel - 39.37" (1m)	93552	93553	13.07 - 12.31	332 - 338	244.1
SK3-7 Sloped channel - 39.37" (1m)	93563	93564	13.31 - 13.54	338 - 344	246.0
SK3-8 Sloped channel - 39.37" (1m)	93578	93579	13.54 - 13.78	344 - 350	247.8
SK3-9 Sloped channel - 39.37" (1m)	93585	93586	13.78 - 14.02	350 - 356	249.7
SK3-10 Sloped channel - 39.37" (1m)	93597	93598	14.02 - 14.25	356 - 362	251.5
SK3-010 Neutral channel - 39.37" (1m)	93601	93602	14.25	362	253.4
SK3-11 Sloped channel - 39.37" (1m)	93610	93611	14.25 - 14.49	362 - 368	254.6
SK3-12 Sloped channel - 39.37" (1m)	93629	93630	14.49 - 14.72	368 - 374	255.9
SK3-13 Sloped channel - 39.37" (1m)	93633	93634	14.72 - 14.96	374 - 380	257.1
SK3-14 Sloped channel - 39.37" (1m)	93644	93645	14.96 - 15.20	380 - 386	258.3
SK3-15 Sloped channel - 39.37" (1m)	93657	93658	15.20 - 15.43	386 - 392	259.6
SK3-16 Sloped channel - 39.37" (1m)	93668	93669	15.43 - 15.67	392 - 398	260.8
SK3-17 Sloped channel - 39.37" (1m)	93670	93671	15.67 - 15.91	398 - 404	262.1
SK3-18 Sloped channel - 39.37" (1m)	93681	93682	15.91 - 16.14	404 - 410	263.3
SK3-19 Sloped channel - 39.37" (1m)	93693	93694	16.14 - 16.38	410 - 416	264.5
SK3-20 Sloped channel - 39.37" (1m)	93706	93707	16.38 - 16.61	416 - 422	265.8
SK3-020 Neutral channel - 39.37" (1m)	93718	93719	16.61	422	267.0
SK3-21 Sloped channel - 39.37" (1m)	93725	93726	16.61 - 16.85	422 - 428	267.8
SK3-22 Sloped channel - 39.37" (1m)	93734	93735	16.85 - 17.09	428 - 434	268.5
SK3-23 Sloped channel - 39.37" (1m)	93741	93742	17.09 - 17.32	434 - 440	269.3
SK3-24 Sloped channel - 39.37" (1m)	93750	93751	17.32 - 17.32	440 - 446	270.1
SK3-25 Sloped channel - 39.37" (1m)	93766	93767	17.56 - 17.80	446 - 452	270.8
SK3-26 Sloped channel - 39.37" (1m)	93779	93780	17.80 - 18.03	452 - 458	271.6
SK3-27 Sloped channel - 39.37" (1m)	93782	93783	18.03 - 18.27	458 - 464	272.3
SK3-28 Sloped channel - 39.37" (1m)	93793	93794	18.27 - 18.50	464 - 470	273.1
SK3-29 Sloped channel - 39.37" (1m)	93805	93806	18.50 - 18.74	470 - 476	273.9
SK3-30 Sloped channel - 39.37" (1m)	93814	93815	18.74 - 18.98	476 - 482	274.6
SK3-030 Neutral channel - 39.37" (1m)	93820	93821	18.98	482	275.4
SK3-0303 Neutral channel - 19.69" (0.5m)	93837	93838	18.98	482	158.4
Catch Basin					
SK3-900 Catch basin top - 19.69" (0.5m)	93881	93883	-	-	152.8
Type 611 Catch basin riser section	91110	91110	-	-	48.8
Type 612 Catch basin base - short	01614	01614	-	-	63.8
Type 614 Catch basin base - deep	05641	05641	-	-	109.6
600 Series plastic trash bucket - short	98653	98653	-	-	2.8
600 Series plastic trash bucket - deep	98665	98665	-	-	4.8
Type 600 Filter bag (fits both short and deep)	98487	98487	-	-	8.0
Accessories					
Closing/outlet end cap	98132	98132	-	-	3.4
QuickLok/PowerLok grate removal tool	01318	01318	-	-	0.3

Notes:
1. PowerDrain is sold complete, i.e., channel with grate. Choose appropriate part number from table depending on required grate
2. ADA grate - Add 12.2 lbs to calculate weight for meter channel and 6.1 lbs for half meter channel and catch basin top
3. Preformed 6" dia. & 8" round drill-outs cast on underside of every channel (except SK3-0303)
4. Closing cap can be cut down to suit all channels
5. Filter bag replaces use of trash buckets
6. SK3-900 top should be used with appropriate base
7. If foul air trap required, please contact ACO
8. Add 1.17" (30mm) for overall depth of channels
9. Overall depth of catch basin varies with base
10. Grate intake area - slotted 68.3 sq. in. (440.6 cm²) per half meter; ADA 63.2 sq. in. (407.7 cm²) per half meter

Specifications

General
The surface drainage system shall be ACO Drain S300K complete with Class E ADA/Class F Slotted* gratings secured with 'PowerLok' locking as manufactured by ACO Polymer Products, Inc. or equal approved.

Materials
The trench system bodies shall be manufactured from polyester polymer concrete with minimum properties as follows:

Compressive strength: 14,000 psi
Flexural strength: 4,000 psi
Water absorption 0.07%
Frost proof
Salt proof
Dilute acid and alkali resistant

The nominal clear opening shall be 12" (300mm) with overall width of 14.17" (360mm). Pre-cast units shall be manufactured with either an invert slope of 0.6% or with neutral invert and have a wall thickness of at least 1.18" (30mm). Each unit will feature a full radius in the trench bottom and a male to female interconnecting end profile. Units shall have horizontal cast in anchoring features on the outside wall to ensure maximum mechanical bond to the surrounding bedding material and pavement surface. The ductile iron edge rail will be integrally cast in by the manufacturer to ensure maximum homogeneity between polymer concrete body and edge rail. Each edge rail shall be at least 1/4" (6mm) thick.

Grates
Grates come in ADA ductile iron or slotted ductile iron. Ductile iron to ASTM 536-84 - Grade 65-45-12. After removal of grates there shall be uninterrupted access to the trench to aid maintenance.

Installation
The trench drain system shall be installed in accordance with the manufacturer's installation instructions and recommendations.
delete as appropriate

ACO Polymer Products, Inc.

East Sales Office
P.O. Box 245
Chardon, OH 44024
Tel: (440) 285-7000
Toll free: (800) 543-4764
Fax: (440) 285-7005

West Sales Office
P.O. Box 12067
Casa Grande, AZ 85230
Tel: (520) 421-9988
Toll Free: (888) 490-9552
Fax: (520) 421-9899

Electronic Contact:
info@acousa.com
www.acousa.com

SPEC INFO ACO

(4) TRENCH DRAIN - POWERDRAIN S300K

NOT TO SCALE

1599CGD

APPROX. DRAIN AREA = 122.07 SQ IN
APPROX. WEIGHT = 26.50 LBS

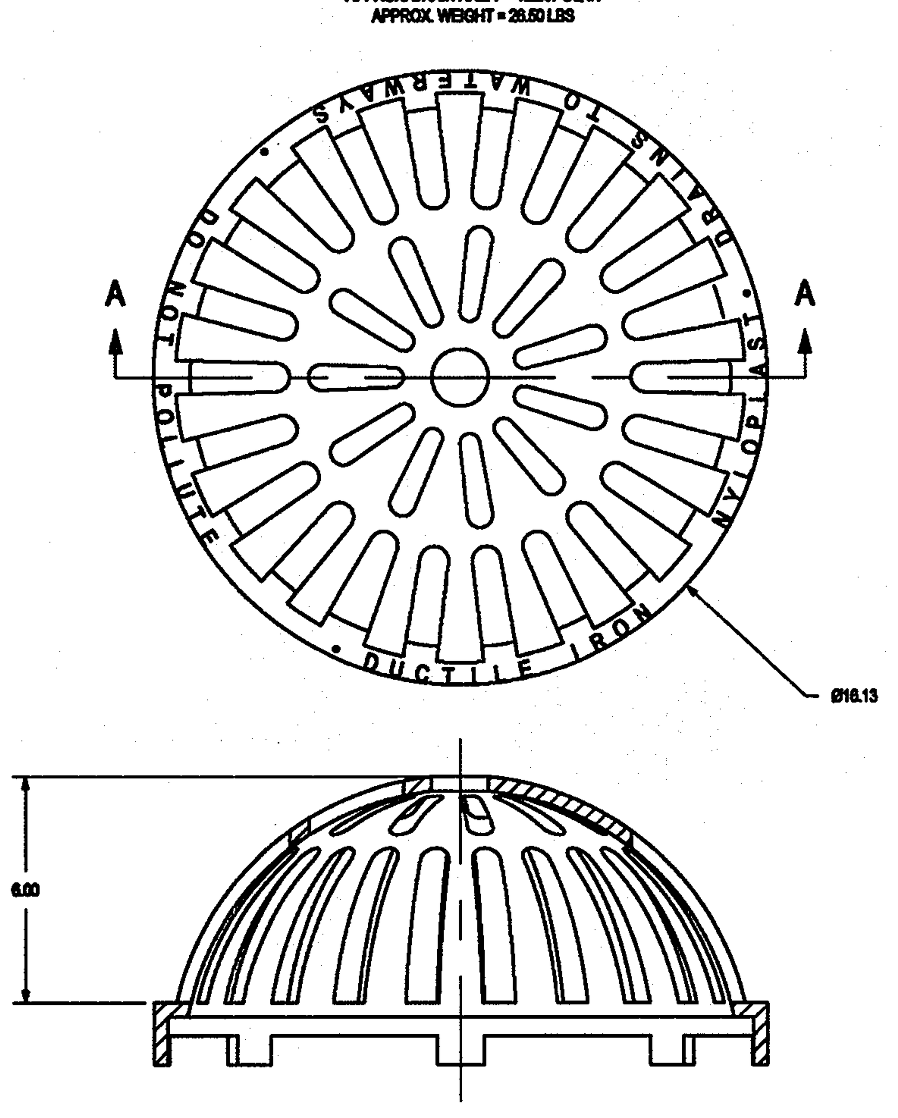

SECTION A-A

DIMENSIONS ARE FOR REFERENCE ONLY
ACTUAL DIMENSIONS MAY VARY
DIMENSIONS ARE IN INCHES
QUALITY: MATERIALS SHALL CONFORM TO ASTM A536 GRADE 70-50-05
PAINT: CASTINGS ARE FURNISHED WITH A BLACK PAINT
LOCKING DEVICE AVAILABLE UPON REQUEST

THIS PRINT DISCLOSES SUBJECT MATTER IN WHICH NYLOPLAST HAS PROPRIETARY RIGHTS. THE RECEIPT OR POSSESSION OF THIS PRINT DOES NOT CONFER, TRANSFER, OR LICENSE THE USE OF THE DESIGN OR TECHNICAL INFORMATION SHOWN HEREIN REPRODUCTION OF THIS PRINT OR ANY INFORMATION CONTAINED HEREIN, OR MANUFACTURE OF ANY ARTICLE HEREFROM, FOR THE DISCLOSURE TO OTHERS IS FORBIDDEN, EXCEPT BY SPECIFIC WRITTEN PERMISSION FROM NYLOPLAST.

DRAWN BY EBC | DATE 3-7-08 | REVISED BY EBC | DATE 3-22-11 | MATERIAL DUCTILE IRON | PROJECT NO./NAME
Nyloplast — 3130 VERONA AVE, BUFORD, GA 30518, PHN (770) 932-2443, FAX (770) 932-2490, www.nyloplast-us.com
TITLE 15 IN DOME GRATE
DWG SIZE A | SCALE 1:4 | SHEET 1 OF 1 | DWG NO. 7001-110-211 | REV D

(5) 15" DOME GRATE

NOT TO SCALE

NYLOPLAST 15" DRAIN BASIN: 2815AG__X

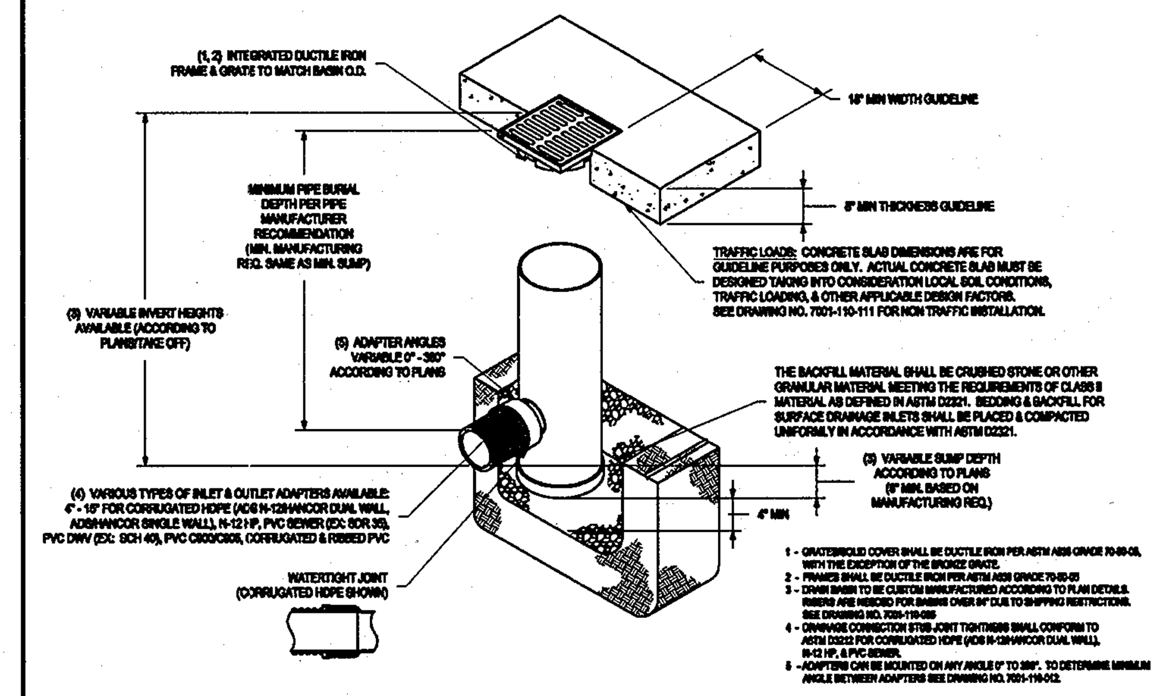

1 - GRATES/SOLID COVER SHALL BE DUCTILE IRON PER ASTM A536 GRADE 70-50-05, WITH THE EXCEPTION OF THE BRONZE GRATE.
2 - FRAMES SHALL BE DUCTILE IRON PER ASTM A536 GRADE 70-50-05
3 - DRAIN BASIN TO BE CUSTOM MANUFACTURED ACCORDING TO PLAN DETAILS. RISERS ARE NEEDED FOR BASINS OVER 84" DUE TO SHIPPING RESTRICTIONS. SEE DRAWING NO. 7001-110-065
4 - DRAINAGE CONNECTION STUB JOINT TIGHTNESS SHALL CONFORM TO ASTM D3212 FOR CORRUGATED HDPE (ADS N-12/HANCOR DUAL WALL), N-12 HP, & PVC SEWER.
5 - ADAPTERS CAN BE MOUNTED ON ANY ANGLE 0° TO 360°. TO DETERMINE MINIMUM ANGLE BETWEEN ADAPTERS SEE DRAWING NO. 7001-110-012.

GRATE OPTIONS	LOAD RATING	PART #	DRAWING #
PEDESTRIAN	MEETS H-10	1599CGP	7001-110-207
STANDARD	MEETS H-20	1599CGS	7001-110-208
SOLID COVER	MEETS H-20	1599CGC	7001-110-209
PEDESTRIAN BRONZE	N/A	1599CGPB	7001-110-210
DOME	N/A	1599CGD	7001-110-211
DROP IN GRATE	LIGHT DUTY	1501DI	7001-110-073

THIS PRINT DISCLOSES SUBJECT MATTER IN WHICH NYLOPLAST HAS PROPRIETARY RIGHTS. THE RECEIPT OR POSSESSION OF THIS PRINT DOES NOT CONFER, TRANSFER, OR LICENSE THE USE OF THE DESIGN OR TECHNICAL INFORMATION SHOWN HEREIN REPRODUCTION OF THIS PRINT OR ANY INFORMATION CONTAINED HEREIN, OR MANUFACTURE OF ANY ARTICLE HEREFROM, FOR THE DISCLOSURE TO OTHERS IS FORBIDDEN, EXCEPT BY SPECIFIC WRITTEN PERMISSION FROM NYLOPLAST.

DRAWN BY EBC | DATE 3-30-08 | REVISED BY EBC | DATE 3-6-10 | MATERIAL | PROJECT NO./NAME
Nyloplast
TITLE 15 IN DRAIN BASIN QUICK SPEC INSTALLATION DETAIL
DWG SIZE A | SCALE 1:20 | SHEET 1 OF 1 | DWG NO. 7001-110-100 | REV C

(6) 15" DRAIN BASIN

NOT TO SCALE

1899CGC

APPROX. WEIGHT WITH FRAME = 65.50 LBS

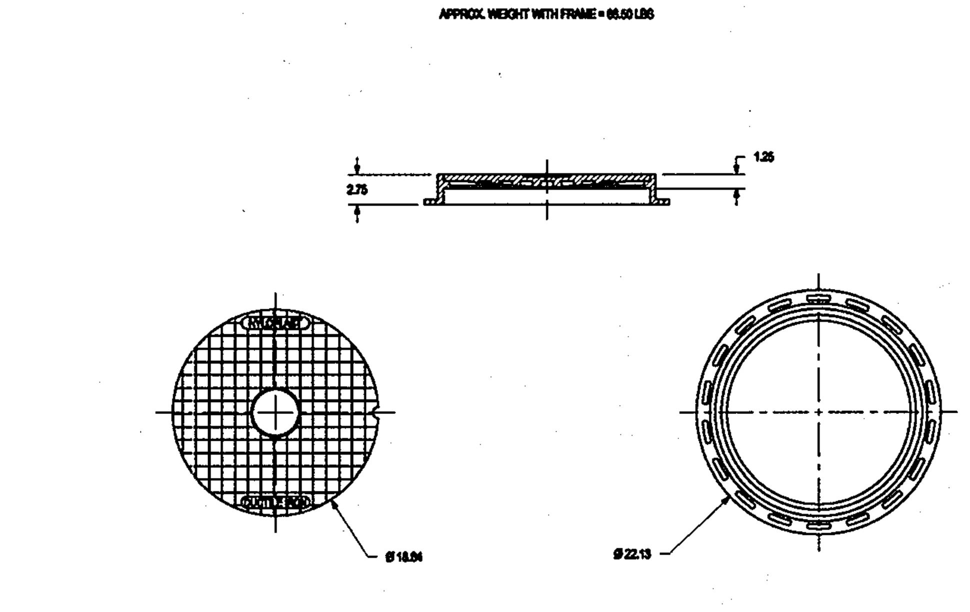

DIMENSIONS ARE FOR REFERENCE ONLY
ACTUAL DIMENSIONS MAY VARY
DIMENSIONS ARE IN INCHES
GRATE MEETS H-20 LOAD RATING
QUALITY: MATERIALS SHALL CONFORM TO ASTM A536 GRADE 70-50-05
PAINT: CASTINGS ARE FURNISHED WITH A BLACK PAINT
LOCKING DEVICE AVAILABLE UPON REQUEST SEE DRAWING NO. 7001-110-027

THIS PRINT DISCLOSES SUBJECT MATTER IN WHICH NYLOPLAST HAS PROPRIETARY RIGHTS. THE RECEIPT OR POSSESSION OF THIS PRINT DOES NOT CONFER, TRANSFER, OR LICENSE THE USE OF THE DESIGN OR TECHNICAL INFORMATION SHOWN HEREIN REPRODUCTION OF THIS PRINT OR ANY INFORMATION CONTAINED HEREIN, OR MANUFACTURE OF ANY ARTICLE HEREFROM, FOR THE DISCLOSURE TO OTHERS IS FORBIDDEN, EXCEPT BY SPECIFIC WRITTEN PERMISSION FROM NYLOPLAST.

DRAWN BY EBC | DATE 3-8-08 | REVISED BY EBC | DATE 3-13-10 | MATERIAL DUCTILE IRON | PROJECT NO./NAME
Nyloplast
TITLE 18 IN SOLID COVER ASSEMBLY - TYPE C
DWG SIZE A | SCALE 1:10 | SHEET 1 OF 1 | DWG NO. 7001-110-214 | REV C

(7) 18" SOLID COVER

NOT TO SCALE

ACO DRAIN — Apr 07

PowerDrain - S300K

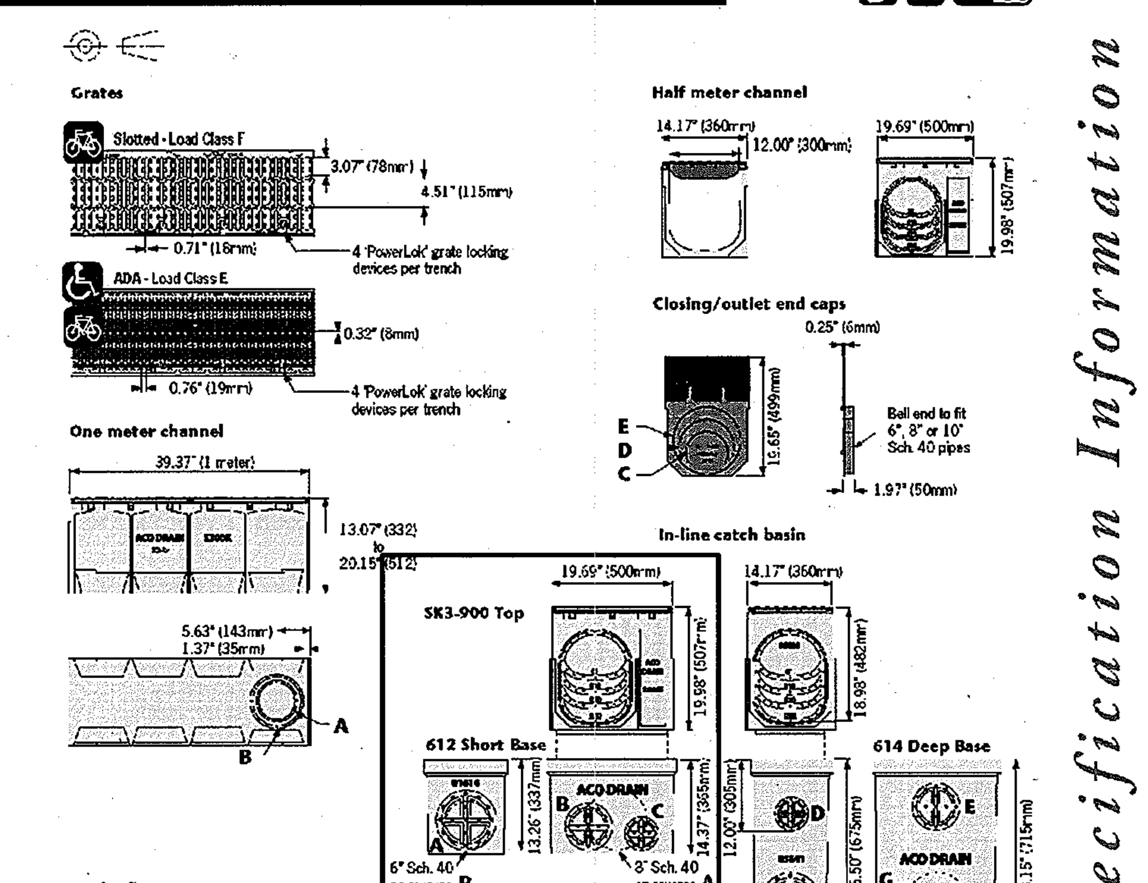

Total capacity of SK3-900 with 612 = 24.00 gallons
Total capacity of SK3-900 with 614 = 34.50 gallons

Outlet flow rates

Outlet	Product	Outlet size (Sch. 40)	Invert Depth	GPM	CFS
A	Bottom outlet - SK3-01	6" round	11.89	426	0.94
A	Bottom outlet - SK3-030	6" round	18.98	533	1.18
B	Bottom outlet - SK3-01	8" round	11.89	758	1.68
B	Bottom outlet - SK3-030	8" round	18.98	948	2.11
C	Outlet cap - SK3-01	6" round	11.89	370	0.82
C	Outlet cap - SK3-030	6" round	18.98	489	1.08
D	Outlet cap - SK3-5	8" round	13.07	656	1.46
D	Outlet cap - SK3-030	8" round	18.98	842	1.87
E	Outlet cap - SK3-13	10" round	14.96	1073	2.39
E	Outlet cap - SK3-030	10" round	18.98	1271	2.83
F	SK3-900 - 612*	8" round	33.25	1177	2.62
G	SK3-900 - 612*	6" round	33.25	673	1.55
H	SK3-900 - 612*	4" round	33.25	304	0.67
I	SK3-900 - 614*	4" round	32.00	298	0.66
J	SK3-900 - 614*	6" round	32.00	560	1.25
K	SK3-900 - 614*	8" round	46.40	1417	3.16
L	SK3-900 - 614*	6" round	46.40	810	1.80
M	SK3-900 - 614*	4" round	46.40	360	0.80

Note: These are the pipe flow rates at the specified outlet NOT channel flow rates.
*Catch basin flow rates are without trash bucket. Using trash bucket or filter bag reduces flow. Using Type 611 riser will affect flow rates.

www.acousa.com

ACO Specification Information

ACO

(8) DRAIN BASIN - POWERDRAIN S300K

NOT TO SCALE

APPROVED: DEPARTMENT OF PLANNING & ZONING

[signature] 1-17-14
CHIEF, DEVELOPMENT ENGINEERING DIVISION — DATE

[signature] 1-28-14
CHIEF, DIVISION OF LAND DEVELOPMENT — DATE

[signature] 1/29/14
DIRECTOR — DATE

APPROVED
PLANNING BOARD OF HOWARD COUNTY
DATE 09/12/13 [signature]

APPROVED: FOR PUBLIC WATER AND PUBLIC SEWERAGE SYSTEMS

B Nelson for Maura Rossman 12/19/2013
COUNTY HEALTH OFFICER — DATE
HOWARD COUNTY HEALTH DEPARTMENT

ADDRESS CHART	
LOT/PARCEL	STREET ADDRESS
8/135	11130 WILLOW BOTTOM DRIVE, COLUMBIA, MD. 21044

PERMIT INFORMATION CHART					
SUBDIVISION NAME: VILLAGE OF HARPERS CHOICE			SECTION/AREA: 2/1		LOT/PARCEL NO.: 8/135
PLAT # OR L/F: 9308 & 9309	GRID #: NA	ZONING: NT-OS	TAX MAP NO.: 29	ELECTION DISTRICT: 5TH	CENSUS TRACT: 605502
WATER CODE: 214 W&S			SEWER CODE: 214 W&S		

SITE DETAILS

HOBBIT'S GLEN GOLF CLUBHOUSE

PROPERTY OF COLUMBIA ASSOCIATION, INC.

REVISIONS

STATE OF MARYLAND — ALBERT F. EDWARDS — 16144 — PROFESSIONAL ENGINEER — 10-3-2013

PROFESSIONAL CERTIFICATION
I HEREBY CERTIFY THAT THESE DOCUMENTS WERE PREPARED OR APPROVED BY ME, AND THAT I AM A DULY LICENSED PROFESSIONAL ENGINEER UNDER THE LAWS OF THE STATE OF MARYLAND, LICENSE NO. 16144, EXPIRATION DATE: 08/19/14.

SITE RESOURCES incorporated
Comprehensive Land Planning & Site Design Services
14315 Jarrettsville Pike • Phoenix, Maryland 21131
(410) 683-3388 • fax (410) 683-3389

DRAWN BY: FJP	CONTRACT NO.: -
DESIGNED BY: FJP	SCALE: AS SHOWN
CHECKED BY: AFE	SRI PROJECT NO: 11059
DATE: SEPTEMBER 13, 2013	SHEET C2.04 33 OF 38

SDP-13-027

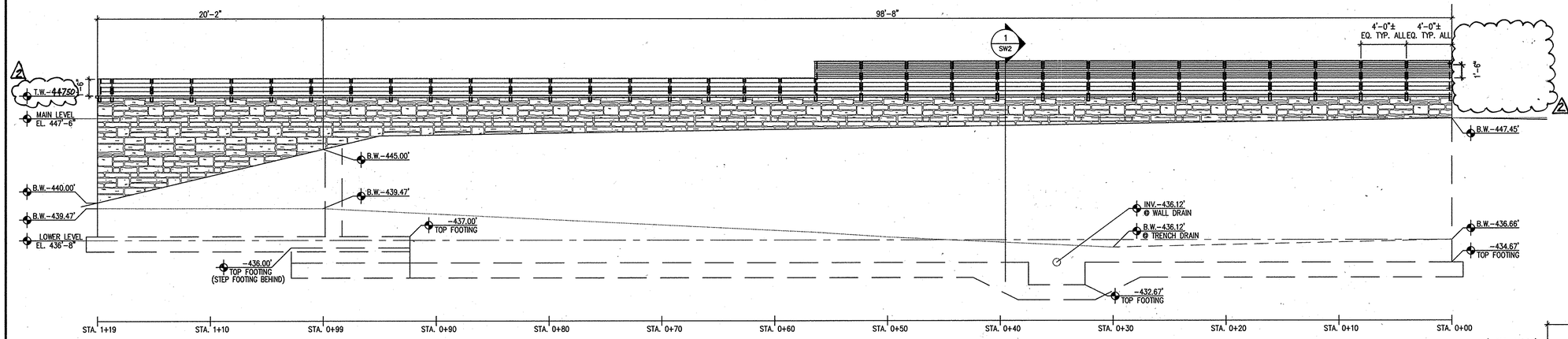

1 RETAINING WALL #1 & BARRIER

SCALE 1"=5'

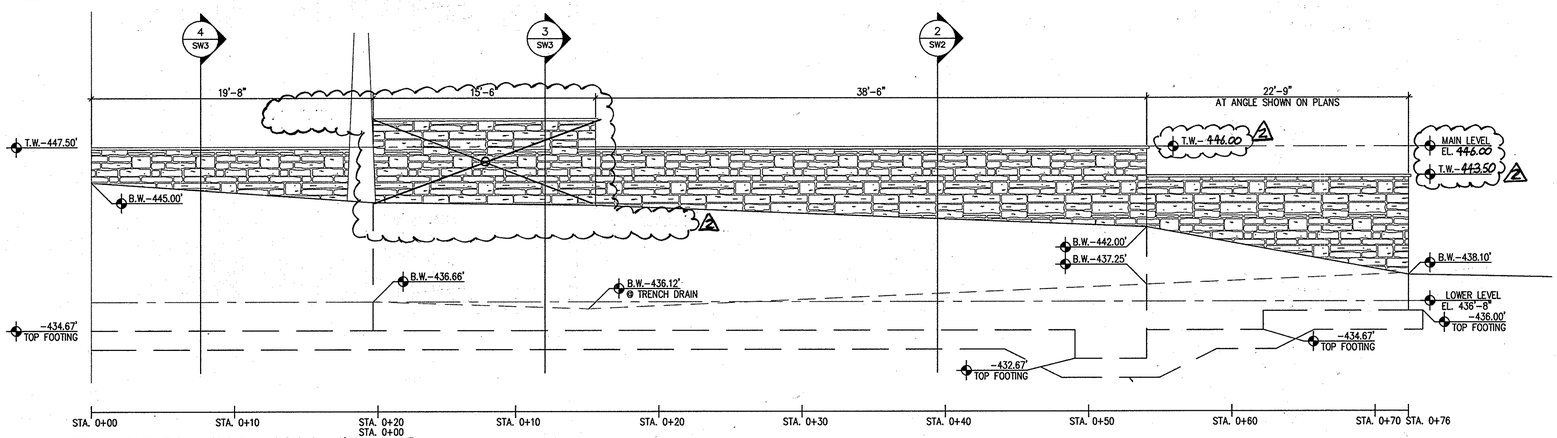

2 RETAINING WALL #2 & 3

SCALE 1"=5'

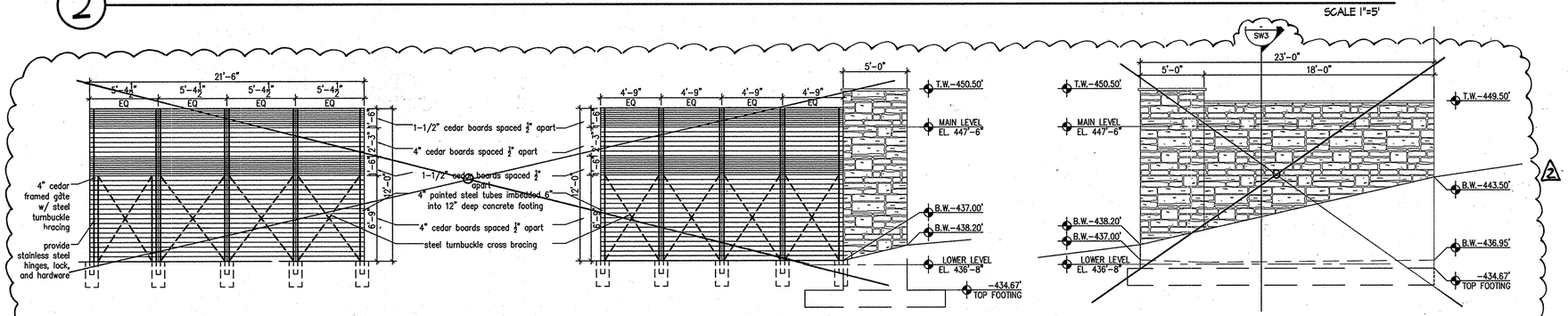

3 RETAINING WALL #4 & SCREEN

SCALE 1"=5'

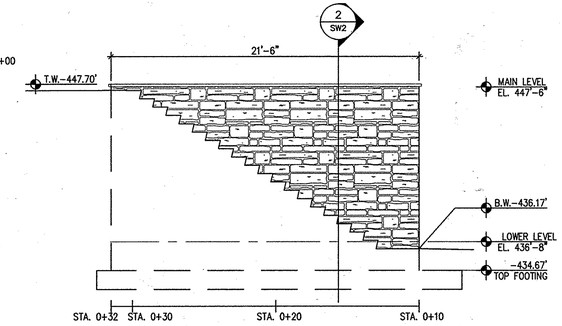

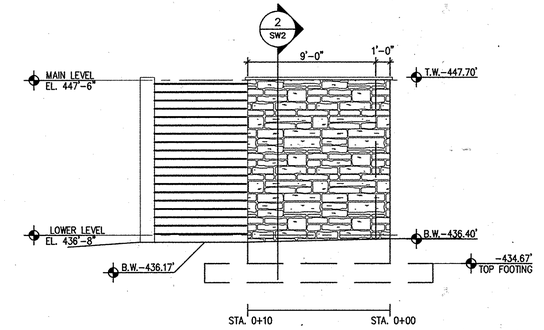

4 RETAINING WALL #5

SCALE 1"=5'

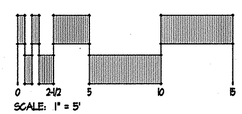

I HEREBY CERTIFY THAT THIS PLAN WAS PREPARED OR APPROVED BY ME AND THAT I AM A LICENSED ARCHITECT UNDER THE LAWS OF THE STATE OF MARYLAND LICENSE #5314-A, EXPIRATION DATE 7.13.15

ARCHITECTURAL REGISTRATION BOARD 5314-A STATE OF MARYLAND

SITE DETAILS

HOBBIT'S GLEN GOLF CLUBHOUSE

PROPERTY OF COLUMBIA ASSOCIATION, INC.

REVISIONS

2 10.31.2014 RETAINING WALL ADJUSTMENTS AND VARIOUS SITE FEATURES

ARCHITECTURAL REGISTRATION BOARD 5314-A STATE OF MARYLAND

SITE RESOURCES incorporated
Comprehensive Land Planning & Site Design Services
14315 Jarrettsville Pike • Phoenix, Maryland 21131
(410) 683-3388 • fax (410) 683-3389

DRAWN BY:	CONTRACT NO.: -
DESIGNED BY:	SCALE: AS SHOWN
CHECKED BY:	SRI PROJECT NO: 11059
DATE: SEPTEMBER 13, 2013	SHEET G2.05 34 OF 38

APPROVED: DEPARTMENT OF PLANNING & ZONING

CHIEF, DEVELOPMENT ENGINEERING DIVISION — DATE 1-17-14

CHIEF, DIVISION OF LAND DEVELOPMENT — DATE 1-22-14

DIRECTOR — DATE 1/29/14

APPROVED PLANNING BOARD OF HOWARD COUNTY

DATE 09/12/13

APPROVED: FOR PUBLIC WATER AND PUBLIC SEWERAGE SYSTEMS

COUNTY HEALTH OFFICER, HOWARD COUNTY HEALTH DEPARTMENT — DATE 12/19/2013

ADDRESS CHART	
LOT/PARCEL	STREET ADDRESS
8/135	11130 WILLOW BOTTOM DRIVE, COLUMBIA, MD. 21044

PERMIT INFORMATION CHART

SUBDIVISION NAME: VILLAGE OF HARPERS CHOICE			SECTION/AREA: 2/1		LOT/PARCEL NO.: 8/135
PLAT # OR L/F: 9308 & 9309	GRID #: NA	ZONING: NT-05	TAX MAP NO.: 24	ELECTION DISTRICT: 5TH	CENSUS TRACT: 605502
WATER CODE: 214 W&S			SEWER CODE: 214 W&S		

SDP-13-027

Z:\W\GS\Hobbits Glen Golf Course - CA\Dwg\G2.05 Site Details.dwg, Layout1 Sep 11, 2013 08:38am RJP

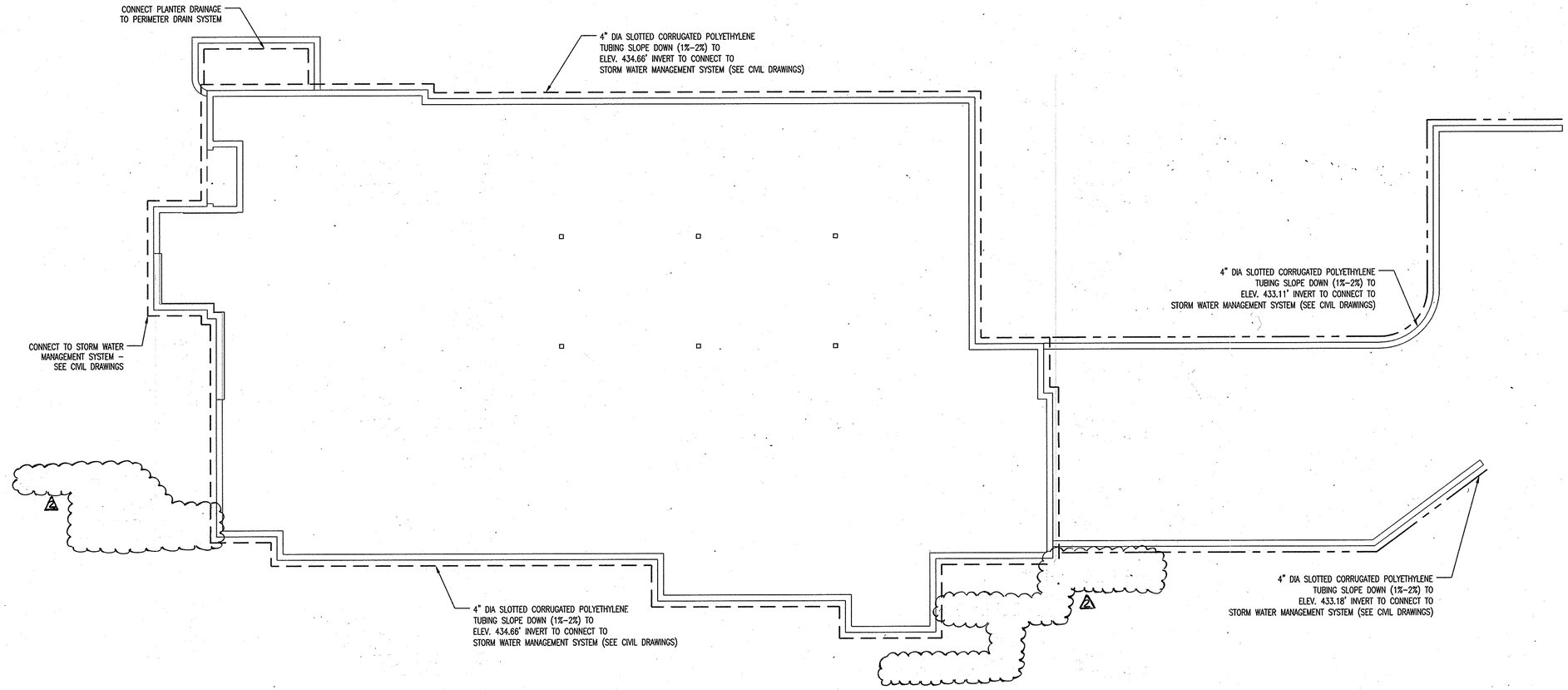

1 FOUNDATION & WALL DRAIN PLAN

SCALE 1"=10'

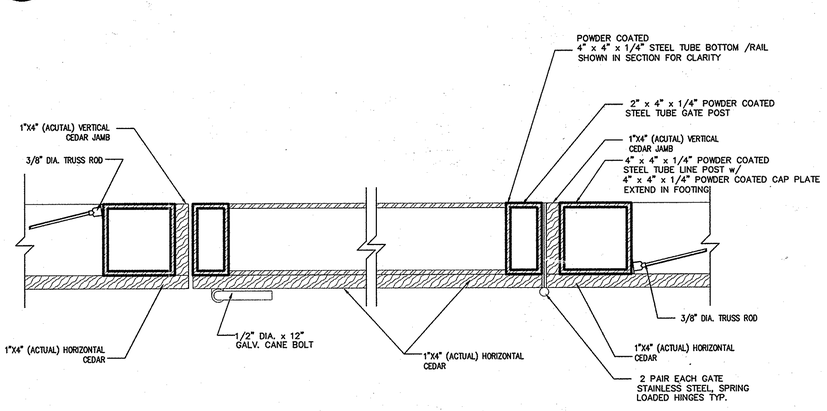

4 GATE SECTION

SCALE N.T.S.

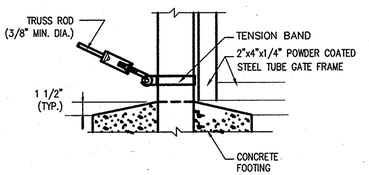

5 TRUSS ROD & BAND

SCALE N.T.S.

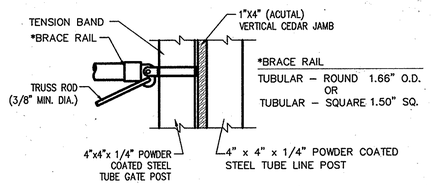

6 POST DETAIL / JAMB

SCALE N.T.S.

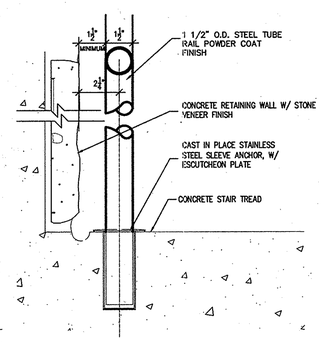

7 HANDRAIL FLOOR & WALL ANCHOR

SCALE N.T.S.

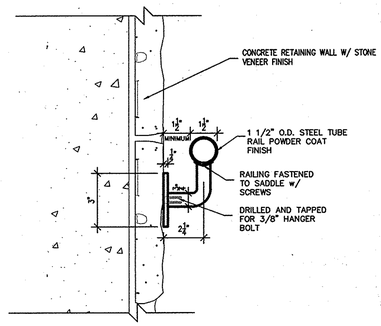

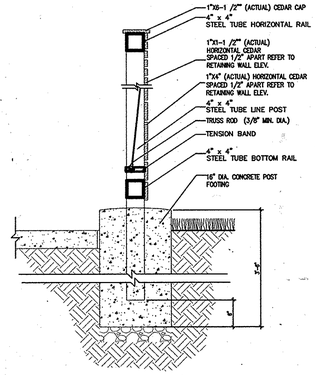

2 FENCE POST

SCALE N.T.S.

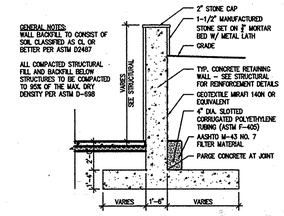

3 TYPICAL WALL SECTION

SCALE 1"=5'

I HEREBY CERTIFY THAT THIS PLAN WAS PREPARED OR APPROVED BY ME AND THAT I AM A LICENSED ARCHITECT UNDER THE LAWS OF THE STATE OF MARYLAND LICENSE #5314-A, EXPIRATION DATE 7.15.15

ARCHITECTURAL REGISTRATION BOARD 5314-A STATE OF MARYLAND

SITE DETAILS

HOBBIT'S GLEN GOLF CLUBHOUSE

PROPERTY OF COLUMBIA ASSOCIATION, INC.

REVISIONS

2 10.31.2014 RETAINING WALL ADJUSTMENTS AND VARIOUS SITE FEATURES

ARCHITECTURAL REGISTRATION BOARD 5314-A STATE OF MARYLAND

SITE RESOURCES incorporated
Comprehensive Land Planning & Site Design Services
14315 Jarrettsville Pike • Phoenix, Maryland 21131
(410) 683-3388 • fax (410) 683-3389

DRAWN BY:	CONTRACT NO.: -
DESIGNED BY:	SCALE: AS SHOWN
CHECKED BY:	SRI PROJECT NO: 11059
DATE: SEPTEMBER 13, 2013	SHEET C2.06 35 OF 38

APPROVED: DEPARTMENT OF PLANNING & ZONING

CHIEF, DEVELOPMENT ENGINEERING DIVISION — DATE 1.17.14

CHIEF, DIVISION OF LAND DEVELOPMENT — DATE 1-30-14

DIRECTOR — DATE 1/29/14

APPROVED
PLANNING BOARD OF HOWARD COUNTY
DATE 09/12/13

APPROVED: FOR PUBLIC WATER AND PUBLIC SEWERAGE SYSTEMS

B. Dixon for Maura Rossman 12/19/2013
COUNTY HEALTH OFFICER — DATE
HOWARD COUNTY HEALTH DEPARTMENT

ADDRESS CHART	
LOT/PARCEL	STREET ADDRESS
8/135	11130 WILLOW BOTTOM DRIVE, COLUMBIA, MD. 21044

PERMIT INFORMATION CHART						
SUBDIVISION NAME: VILLAGE OF HARPERS CHOICE			SECTION/AREA: 2/1			LOT/PARCEL NO.: 8/135
PLAT # OR L/F: 9308 & 9309	GRID #: NA	ZONING: NT-05	TAX MAP NO.: 29	ELECTION DISTRICT: 5TH	CENSUS TRACT: 605502	
WATER CODE: 214 W&S			SEWER CODE: 214 W&S			

SDP-13-027

Z:\11\05A-Hobbits Glen Golf Course CAD\dwg\C2.06 Site Details.dwg-Layout1 Sep 17, 2013 08:38pm rLp

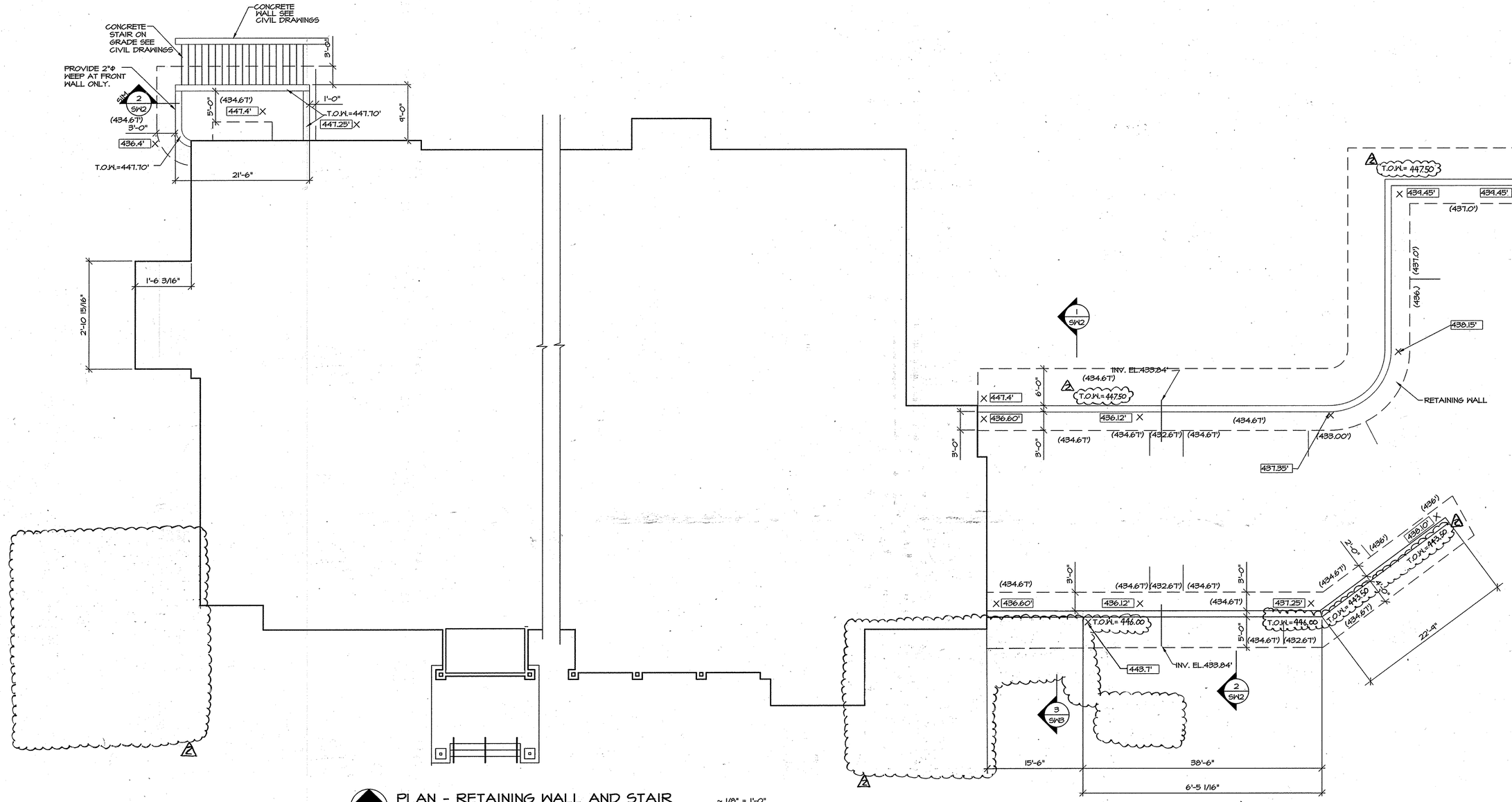

PLAN - RETAINING WALL AND STAIR

~ 1/8" = 1'-0"

NORTH

1. TOP OF SLAB /GRADE ELEVATION NOTED THUS [ ] IN PLAN, CORRDINATE WITH SITE DRAWINGS
2. CORRIDINATE ALL ELEVATIONS AND DIMENSIONS WITH SITE DRAWINGS AND FINAL GRADE ELEVATIONS.
3. TOP OF FOOTINGS ARE NOTED THUS (00.000) IN PLAN.

APPROVED: DEPARTMENT OF PLANNING & ZONING	APPROVED PLANNING BOARD OF HOWARD COUNTY	APPROVED: FOR PUBLIC WATER AND PUBLIC SEWERAGE SYSTEMS
CHIEF, DEVELOPMENT ENGINEERING DIVISION — DATE 1.17.14	DATE 09/12/13	COUNTY HEALTH OFFICER, HOWARD COUNTY HEALTH DEPARTMENT — DATE 12/18/2013
CHIEF, DIVISION OF LAND DEVELOPMENT — DATE 1/28/14		
DIRECTOR — DATE 1/29/14		

ADDRESS CHART	
LOT/PARCEL	STREET ADDRESS
8/135	11130 WILLOW BOTTOM DRIVE, COLUMBIA, MD. 21044

PERMIT INFORMATION CHART				
SUBDIVISION NAME: VILLAGE OF HARPERS CHOICE			SECTION/AREA: 2/1	8/135
PLAT # OR L/F: 9308 & 9309	GRID #: NA	ZONING: NT-OS	TAX MAP NO.: 29	ELECTION DISTRICT: 5TH
CENSUS TRACT: 605502				
WATER CODE: 214 W&S			SEWER CODE: 214 W&S	

ARCHITECTURAL REGISTRATION BOARD
5314-A
STATE OF MARYLAND

PROFESSIONAL CERTIFICATION
I HEREBY CERTIFY THAT THESE DOCUMENTS WERE PREPARED OR APPROVED BY ME, AND THAT I AM A DULY LICENSED PROFESSIONAL ENGINEER UNDER THE LAWS OF THE STATE OF MARYLAND.

PROFESSIONAL CERTIFICATION. I HEREBY CERTIFY THAT THESE DOCUMENTS WERE PREPARED OR APPROVED BY ME, AND THAT I AM A DULY LICENSED PROFESSIONAL ENGINEER UNDER THE LAWS THE STATE OF MARYLAND, LICENSE NO. 33478 EXP. DATE: 9-15-2014

10.31.2014
RETAINING WALL ADJUSTMENTS AND VARIOUS SITE FEATURES

Project
HOBBIT'S GLEN GOLF CLUBHOUSE
11130 WILLOW BOTTOM DRIVE

Drawing:
PLAN AND DETAILS

6-7-13

Scale:
SCALE AS NOTED

Adams – Mirza Engineering, Inc.
1308 South Bayla Street Baltimore, MD 21224
Phone 410.563.4131 Fax 410.563.4145
mmirza@bodoms-mirza-eng.com

STATE OF MARYLAND
DAVID R. WHITE
No. 33478
PROFESSIONAL ENGINEER
9-18-13

SHEET 36 OF 38

Sheet No:
SW1

AME #: 12001.1
SDP 13-027

SDP 13-027

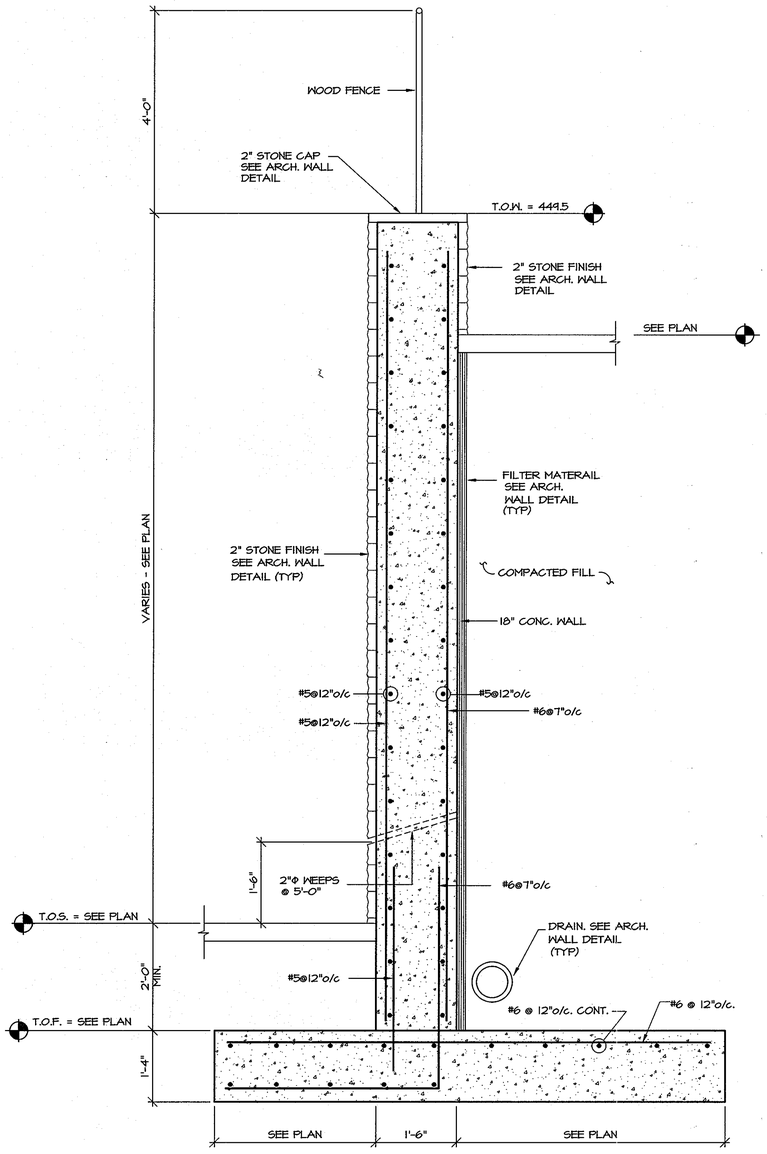

DETAIL 1/SW2 ~ 3/4" = 1'-0"

RETAINING WALL

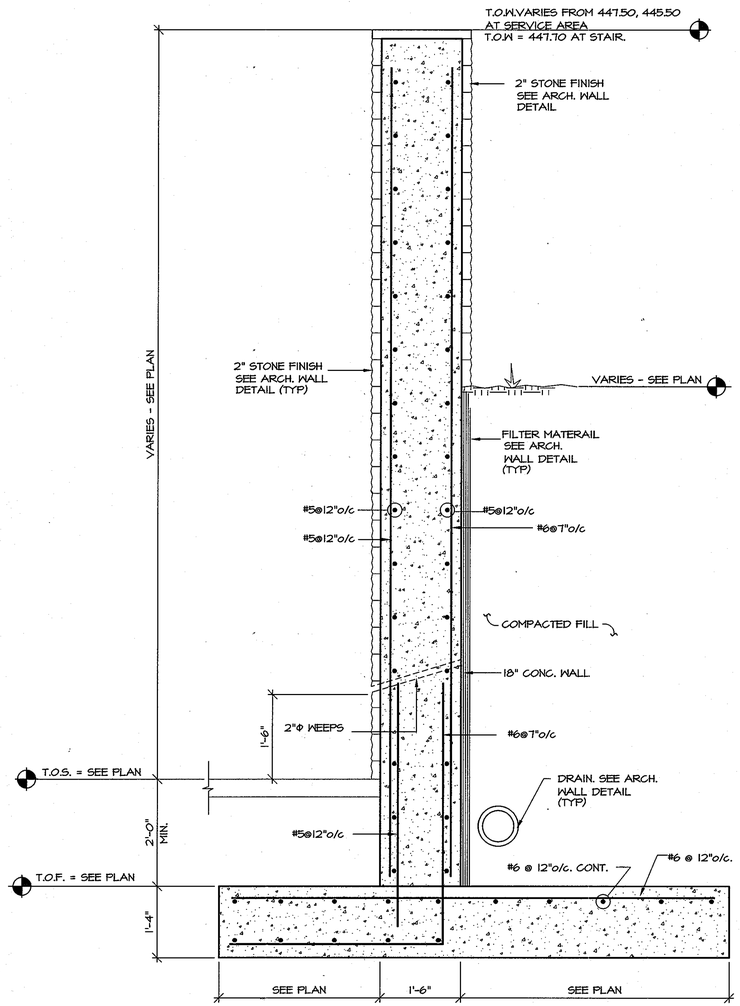

DETAIL 2/SW2 ~ 3/4" = 1'-0"

RETAINING WALL

GENERAL NOTES

CONCRETE
1. CEMENT - ASTM C150, TYPE I OR III.
2. AGGREGATES - ASTM C33 ACI 304, ACI 211.1.
COARSE AGGREGATE - SIZE #57
3. REINFORCING - ATSM A615, GRADE 60.

CAST IN PLACE CONCRETE AND REINFORCING
ALL CONCRETE SHALL CONFORM TO ACI 301, ACI 318, ACI 315.
ALL CONCRETE SHALL HAVE A 28 DAY COMPRESSIVE STRENGTH OF 4000 PSI.
REINFORCING - ASTM A 615, GRADE 60.

FOUNDATIONS
A BEARING CAPACITY OF 3000 PSF WAS USED BASED ON SOIL REPORT FROM D.W.KOZIERA, INC, DATED NOVEMBER 2,2012 FOR FOOTING DESIGN.

SOIL WT. USED FOR DESIGN = 110 PCF. , EQ. FLUID PRESSURE=45H PSF

SHOP DRAWINGS
ORIGINAL SHOP DRAWINGS SHALL BE SUBMITTED FOR ARCHITECT/ENGINEER's REVIEW FOR THE FOLLOWING ITEMS:
CONCRETE REINFORCING STEEL

IF A CONTRACTOR OR OWNER FAILS TO SUBMIT THE SHOP DRAWINGS, THE FIRM, ADAMS-MIRZA ENGINEERING, Inc. WILL NOT BE RESPONSIBLE FOR THE CONTRACTORS INTERPRETATION OF THE INTENT OF THE STRUCTURAL DRAWINGS.

AT THE SAME TIME OF THE SHOP DRAWING SUBMISSION, THE GENERAL CONTRACTOR SHALL STATE IN WRITING ANY DEVIATION OR OMISSION FROM THE CONTRACT DOCUMENTS. THE GENERAL CONTRACTOR SHALL REVIEW ALL SHOP DRAWINGS PRIOR TO SUBMISSION TO THE A/E AND SHALL MAKE ALL CORRECTIONS AS HE DEEMS NECESSARY.

INSPECTION
AN INDEPENDENT INSPECTION AGENCY, APPROVED BY THE ARCHITECT/ENGINEER, SHALL INSPECT/MONITOR/TEST THE FOLLOWING ITEMS:
CAST IN PLACE CONCRETE AND REINFORCING STEEL

EARTHWORK OPERATIONS INCLUDING VERIFICATION OF
SOIL BEARING CAPACITY
STEEL STAIR

COPIES OF THE INSPECTORS WEEKLY LOGS AND FINAL REPORTS CERTIFYING THAT THE ITEMS INSPECTED HAVE BEEN INSTALLED IN ACCORDANCE WITH THE REQUIREMENTS OF THE CONTRACT DOCUMENTS SHALL BE SUBMITTED TO THE ARCHITECT/ENGINEER.

BUILDING CODE
ALL BUILDING CODE SHALL CONFORM WITH THE 2012 ITERNATIONAL BUILDING CODE (IBC) AND ALL SUBSEQUENT SUPPLEMENTS

WIND 120 MPH (Vult)

APPROVED: DEPARTMENT OF PLANNING & ZONING

CHIEF, DEVELOPMENT ENGINEERING DIVISION — DATE 1/23/14

CHIEF, DIVISION OF LAND DEVELOPMENT — DATE 1-22-14

DIRECTOR — DATE 1/29/14

APPROVED
PLANNING BOARD OF HOWARD COUNTY
DATE 09/12/13

APPROVED: FOR PUBLIC WATER AND PUBLIC SEWERAGE SYSTEMS

COUNTY HEALTH OFFICER
HOWARD COUNTY HEALTH DEPARTMENT — DATE 12/19/2013

ADDRESS CHART	
LOT/PARCEL	STREET ADDRESS
8/135	11130 WILLOW BOTTOM DRIVE, COLUMBIA, MD. 21044

PERMIT INFORMATION CHART

SUBDIVISION NAME: VILLAGE OF HARPERS CHOICE				SECTION/AREA 2/1		8/135
PLAT # OR L/F 9308 & 9309	GRID # NA	ZONING NT-05	TAX MAP NO. 29	ELECTION DISTRICT 5TH	CENSUS TRACT 605502	
WATER CODE 214 W&S			SEWER CODE 214 W&S			

PROFESSIONAL CERTIFICATION. I HEREBY CERTIFY THAT THESE DOCUMENTS WERE PREPARED OR APPROVED BY ME, AND THAT I AM A DULY LICENSED PROFESSIONAL ENGINEER UNDER THE LAWS THE STATE OF MARYLAND, LICENSE NO. 33478 EXP. DATE: 9-15-2014

Project
HOBBIT'S GLEN GOLF CLUBHOUSE
11130 WILLOW BOTTOM DRIVE

Drawing:
DETAILS AND GENERAL NOTES
6-7-13

Scale:
SCALE AS NOTED

Adams - Mirza Engineering, Inc.
1308 South Boyle Street Baltimore, MD 21224
Phone 410.563.4131 Fax. 410.563.4145
mmirza@adams-mirza-eng.com

STATE OF MARYLAND
WAJID R. MIRZA
No. 33478
PROFESSIONAL ENGINEER
9-18-13

SHEET 37 OF 38
Sheet No:
SW2
AME #: 12001.1
SDP 13-027

SDP-13-027

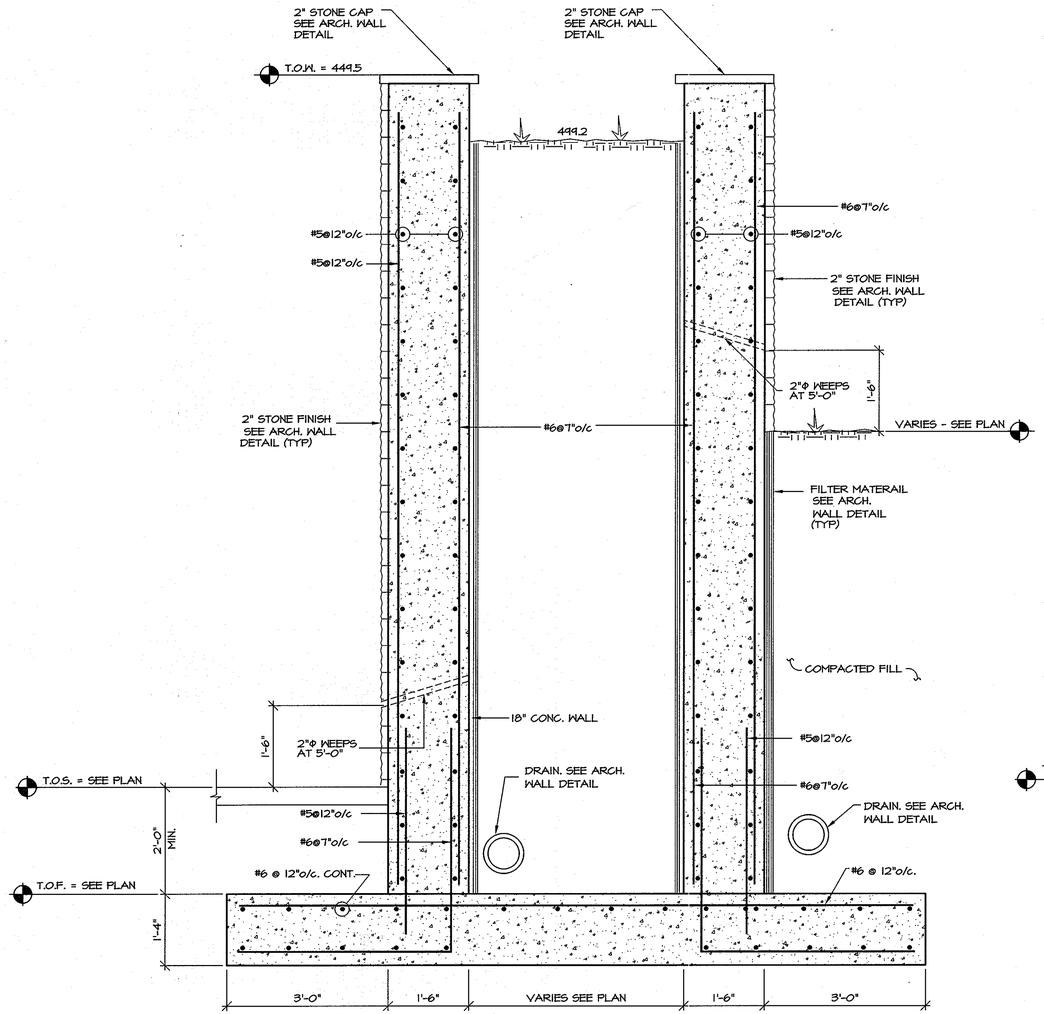

DETAIL 3 SW3 ~ 3/4" = 1'-0"

RETAINING WALL

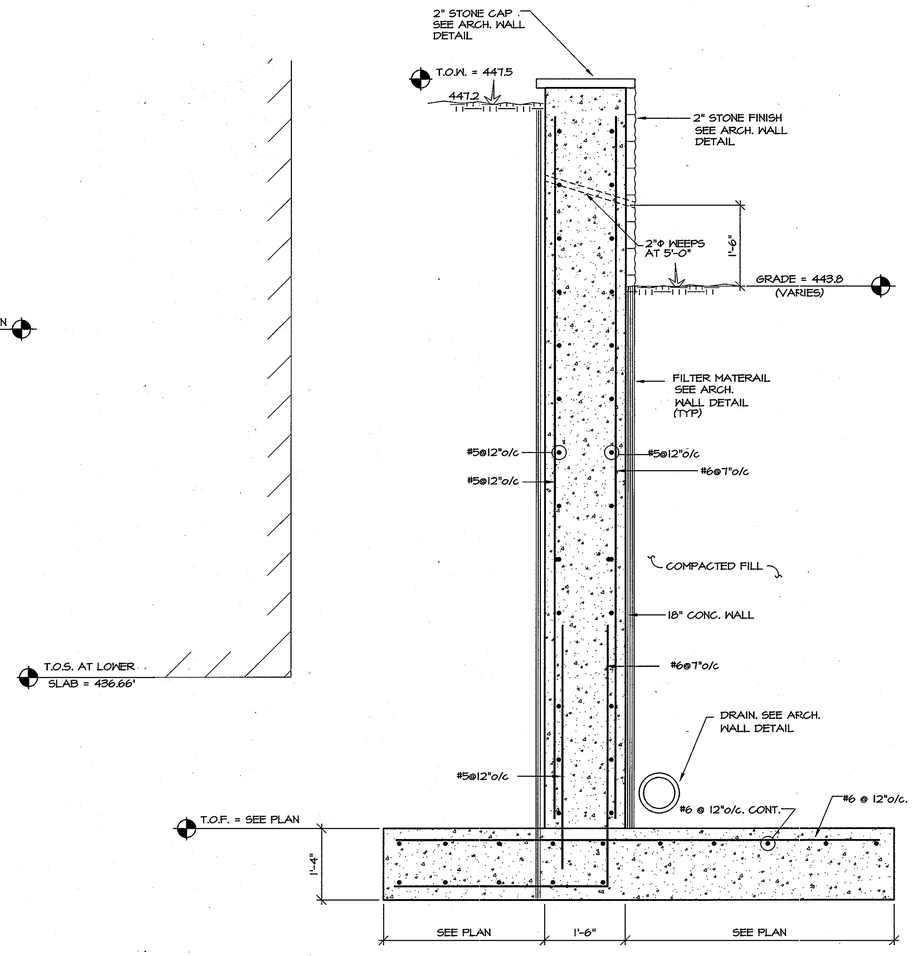

DETAIL 4 SW3 ~ 3/4" = 1'-0"

RETAINING WALL

HOBBIT'S GLEN GOLF CLUBHOUSE
11130 WILLOW BOTTOM DRIVE

Project

Drawing:

DETAILS AND GENERAL NOTES

6-7-13

Scale:

SCALE AS NOTED

Adams - Mirza Engineering, Inc.
1308 South Boyle Street Baltimore, MD 21224
Phone 410.563.4131 Fax 410.563.4145
mmirza@adams-mirza-eng.com

STATE OF MARYLAND — DAVID R. MIRZA — No. 33478 — PROFESSIONAL ENGINEER

9-13-13

SHEET 38 OF 38

Sheet No:

SW3

AME #: 12001.1

SDP 13-027

APPROVED: DEPARTMENT OF PLANNING & ZONING		
CHIEF, DEVELOPMENT ENGINEERING DIVISION		DATE 1-17-14
CHIEF, DIVISION OF LAND DEVELOPMENT		DATE 1-28-14
DIRECTOR		DATE 1/29/14

APPROVED
PLANNING BOARD OF HOWARD COUNTY
DATE 09/12/13

APPROVED: FOR PUBLIC WATER AND PUBLIC SEWERAGE SYSTEMS

for Maura Rossman 12/19/2013
COUNTY HEALTH OFFICER
HOWARD COUNTY HEALTH DEPARTMENT
DATE

ADDRESS CHART	
LOT/PARCEL	STREET ADDRESS
8/135	11130 WILLOW BOTTOM DRIVE, COLUMBIA, MD. 21044

PERMIT INFORMATION CHART					
SUBDIVISION NAME VILLAGE OF HARPERS CHOICE			SECTION/AREA 2/1		8/135
PLAT # OR L/F 9308 & 9309	GRID # NA	ZONING NT-OS	TAX MAP NO. 29	ELECTION DISTRICT 5TH	CENSUS TRACT 605502
WATER CODE 214 W&S			SEWER CODE 214 W&S		

PROFESSIONAL CERTIFICATION. I HEREBY CERTIFY THAT THESE DOCUMENTS WERE PREPARED OR APPROVED BY ME, AND THAT I AM A DULY LICENSED PROFESSIONAL ENGINEER UNDER THE LAWS THE STATE OF MARYLAND, LICENSE NO. 33478 EXP. DATE: 9-15-2014

SDP-13-027