BLANDAIR REGIONAL PARK - PHASE 2

HOWARD COUNTY, MARYLAND
CAPITAL PROJECT #N-3102
SITE DEVELOPMENT PLAN SDP-12-063

REVISIONS		

BENCHMARK DATA

30HA: N 566030.6258, E 1357989.5444, ELEV. 386.983

36BC: N 563264.1261, E 1359585.7197, ELEV. 409.981

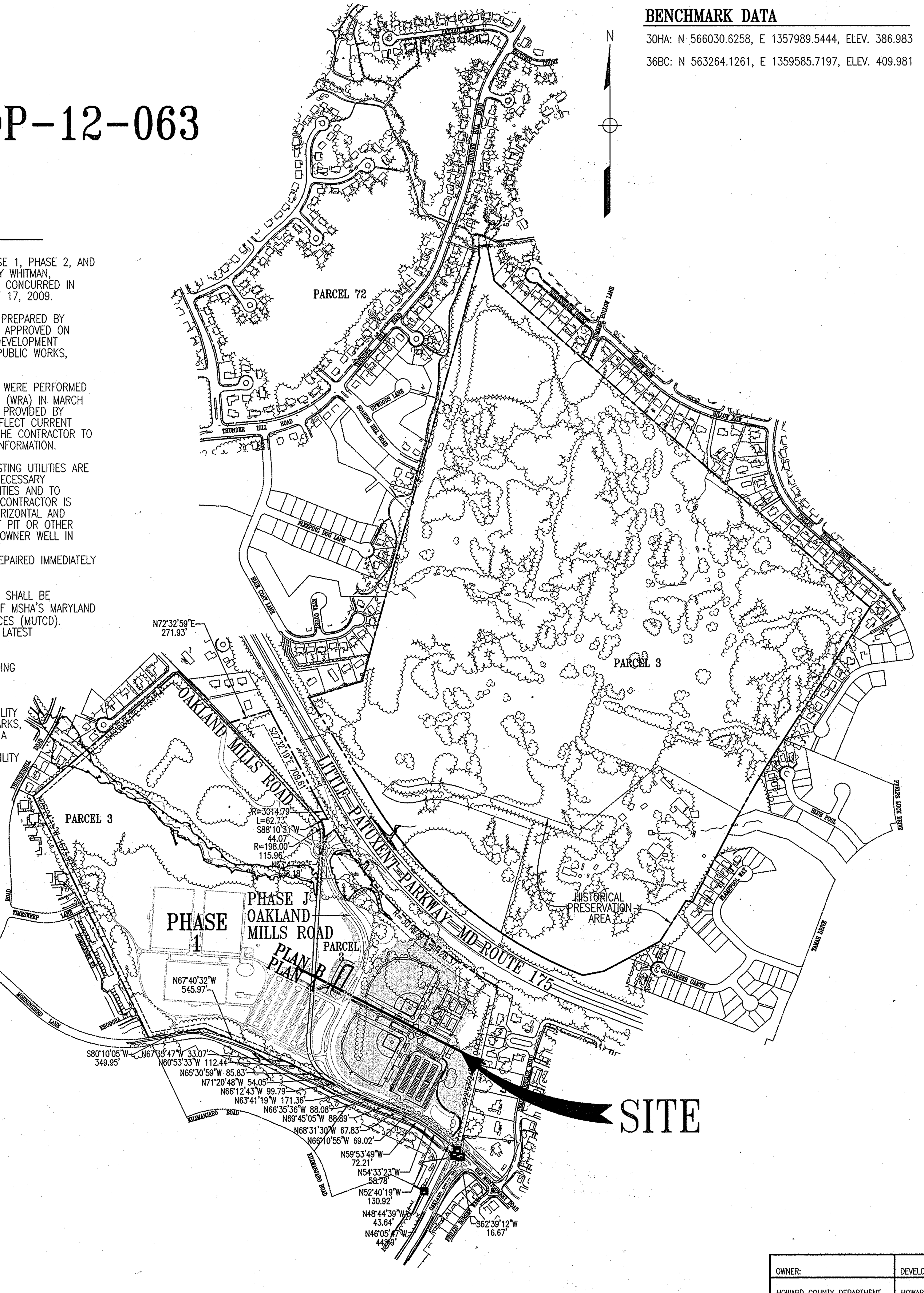

LOCATION MAP
1" = 400'

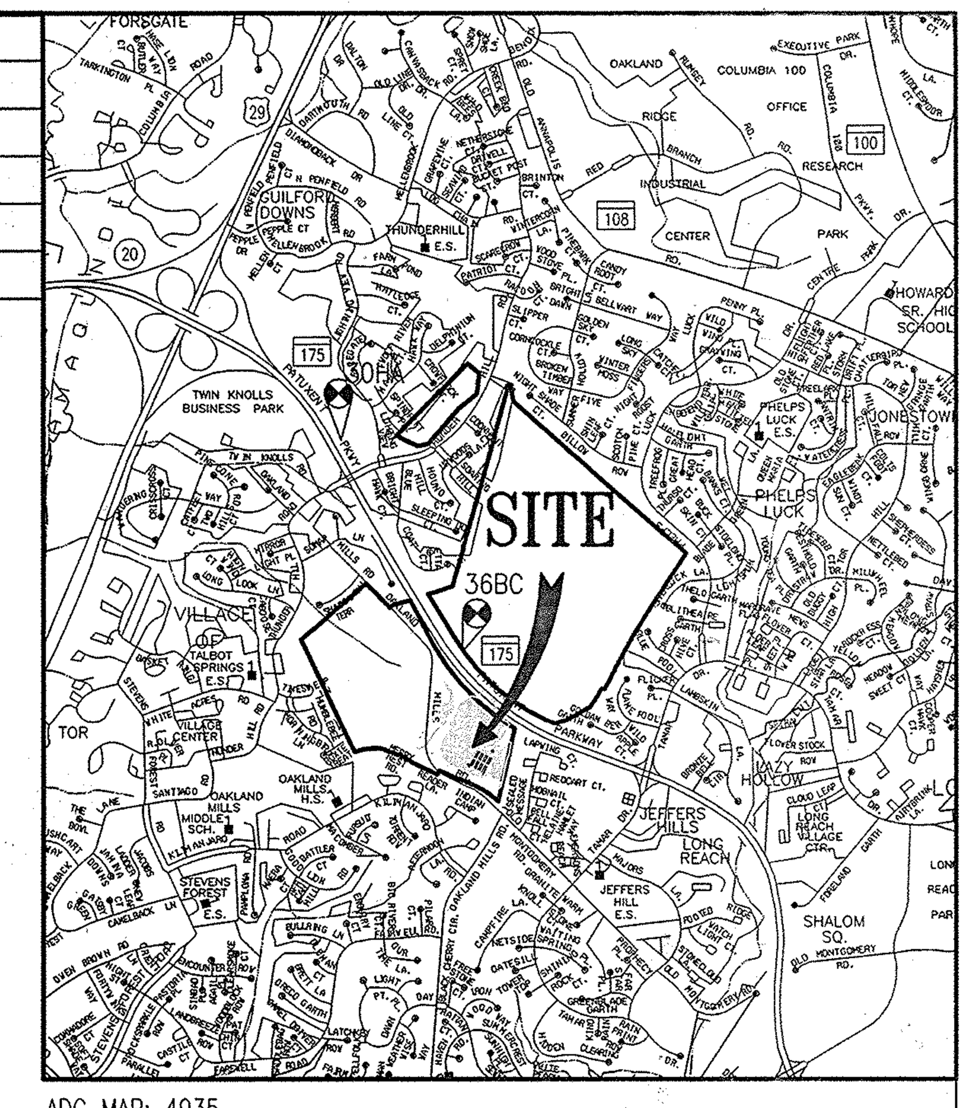

ADC MAP: 4935
GRID: G7

VICINITY MAP
1" = 2000'

GENERAL NOTES

1. ALL CONSTRUCTION SHALL BE IN ACCORDANCE WITH THE LATEST STANDARDS AND SPECIFICATIONS OF HOWARD COUNTY SPECIFICATIONS AND DETAILS FOR CONSTRUCTION PLUS MSHA STANDARDS AND SPECIFICATIONS, IF APPLICABLE.
2. THE CONTRACTOR SHALL NOTIFY THE DEPARTMENT OF PUBLIC WORKS/BUREAU OF ENGINEERING/CONSTRUCTION INSPECTION DIVISION AT (410) 313-1880 AT LEAST FIVE (5) WORKING DAYS PRIOR TO THE START OF WORK.
3. THE CONTRACTOR SHALL NOTIFY "MISS UTILITY" AT 1-800-257-7777 AT LEAST 48 HOURS PRIOR TO ANY EXCAVATION WORK BEING DONE.
4. THE SUBJECT PROPERTY IS ZONED RC-DEO PER THE 2/2/04 COMPREHENSIVE ZONING PLAN AND PER THE "COMP LITE" ZONING REGULATION AMENDMENTS EFFECTIVE 7/28/06.
5. NO GRADING, REMOVAL OF VEGETATIVE COVER OR TREES, PAVING OR NEW STRUCTURES SHALL BE PERMITTED WITHIN WETLANDS, STREAMS, WETLAND OR STREAM BUFFERS, 100-YEAR FLOODPLAIN, OR FOREST CONSERVATION EASEMENTS UNLESS APPROVED BY THE DEPARTMENT OF PLANNING AND ZONING.
6. THIS PLAN HAS BEEN PREPARED IN ACCORDANCE WITH THE PROVISIONS OF SECTION 16.124 OF THE HOWARD COUNTY CODE AND THE LANDSCAPE MANUAL.
7. THIS PROJECT WILL PHASE THE REQUIREMENTS OF SUBSECTION 16.1202(a)(1) OF THE HOWARD COUNTY CODE FOR FOREST CONSERVATION AS ALLOWED BY WAIVER PETITION WP-10-013, APPROVED OCTOBER 15, 2009. THE TOTAL PROJECT FOREST CONSERVATION OBLIGATION WILL BE UPDATED UPON SUBMITTAL OF EACH NEW PHASE. IN ADDITION, RECONSIDERATION OF WP-10-013, APPROVED JANUARY 27, 2010, WILL WAIVE SUBSECTION 16.1204(d) TO ALLOW TEMPORARY DEFERRAL OF RECORDATION OF FOREST CONSERVATION EASEMENTS. PRIOR TO APPROVAL OF THE SDP FOR THE FINAL PHASE OF THE PARK, A FINAL PLAN APPLICATION SHALL BE SUBMITTED CONCURRENTLY TO DEPICT THE FOREST CONSERVATION EASEMENTS OF THE FINAL PHASE AND ALL FOREST CONSERVATION EASEMENTS PREVIOUSLY APPROVED ON PRIOR SDP'S FOR THE PARK.

   TOTAL EXISTING FOREST (EXCLUDING FLOODPLAIN): 109.45 AC
   ESTIMATED TOTAL CLEARING PER MASTERPLAN: 44.14 AC
   ESTIMATED TOTAL FOREST RETAINED: 63.85 AC

   PHASE 1 PROPOSED CLEARING: 2.87 AC
   PHASE 1 PROPOSED RETENTION: 1.94 AC
   PHASE 2 PROPOSED CLEARING: 2.99 AC
   PHASE 2 PROPOSED RETENTION: 0.72 AC
   TOTAL PROPOSED CLEARING: 5.86 AC
   TOTAL PROPOSED RETENTION: 2.66 AC
8. WATER IS PUBLIC: CONTRACT NUMBER 24-4751-D.
9. SEWER IS PUBLIC: CONTRACT NUMBER 24-4751-D.
10. THE COORDINATES SHOWN HEREON ARE BASED UPON THE HOWARD COUNTY GEODETIC CONTROL WHICH IS BASED UP ON THE MARYLAND STATE PLANE COORDINATE SYSTEM: HORIZONTAL NAD'83/91 VERTICAL NAVD'88.

    HOWARD COUNTY MONUMENTS USED FOR THIS PROJECT:
    30HA: N 566030.6258, E 1357989.5444
    36BC: N 563264.1261, E 1359585.7197
11. THE 100-YEAR APPROXIMATE FLOODPLAIN IS SHOWN ON NFIP FIRM PANEL 240044 0034B, DATED 12/4/1986 AND NFIP LOMR, DATED 10/14/1999. A FLOODPLAIN STUDY FOR THIS PROJECT WAS PREPARED BY WHITMAN, REQUARDT & ASSOCIATES AND AND WAS APPROVED ON NOVEMBER 5, 2009 BY PLANNING AND ZONING, DEVELOPMENT ENGINEERING DIVISION.
12. THE WETLANDS DELINEATION STUDY FOR PHASE 1, PHASE 2, AND PHASE J OF THE PROJECT WAS PREPARED BY WHITMAN, REQUARDT & ASSOCIATES AND REVIEWED AND CONCURRED IN THE FIELD WITH MDE AND USACE ON AUGUST 17, 2009.
13. THE TRAFFIC STUDY FOR THIS PROJECT WAS PREPARED BY WHITMAN, REQUARDT & ASSOCIATES AND WAS APPROVED ON JULY 26, 2012 BY PLANNING AND ZONING, DEVELOPMENT ENGINEERING DIVISION AND DEPARTMENT OF PUBLIC WORKS, TRAFFIC ENGINEERING DIVISION.
14. TOPOGRAPHICAL FIELD SURVEYS OF THE SITE WERE PERFORMED BY WHITMAN, REQUARDT AND ASSOCIATES LLP (WRA) IN MARCH 2008. ADDITIONAL UTILITY INFORMATION WAS PROVIDED BY HOWARD COUNTY RECORDS AND MAY NOT REFLECT CURRENT CONDITIONS. IT IS THE RESPONSIBILITY OF THE CONTRACTOR TO VERIFY CURRENT TOPOGRAPHIC AND UTILITY INFORMATION.
15. APPROXIMATE LOCATION AND INVERTS OF EXISTING UTILITIES ARE SHOWN. THE CONTRACTOR SHALL TAKE ALL NECESSARY PRECAUTIONS TO PROTECT THE EXISTING UTILITIES AND TO MAINTAIN AN UNINTERRUPTED SERVICE. THE CONTRACTOR IS ULTIMATELY RESPONSIBLE FOR THE EXACT HORIZONTAL AND VERTICAL LOCATION OF ALL UTILITIES BY TEST PIT OR OTHER MEANS OF INVESTIGATION APPROVED BY THE OWNER WELL IN ADVANCE OF CONSTRUCTION. ANY DAMAGE BY THE CONTRACTOR'S OPERATIONS SHALL BE REPAIRED IMMEDIATELY AT THE CONTRACTOR'S EXPENSE.
16. ALL TRAFFIC SIGNS AND PAVEMENT MARKINGS SHALL BE IN ACCORDANCE WITH THE LATEST VERSION OF MSHA'S MARYLAND MANUAL ON UNIFORM TRAFFIC CONTROL DEVICES (MUTCD). ALL TRAFFIC SIGNS SHALL CONFORM TO THE LATEST VERSION OF MSHA'S STANDARD SIGN BOOK.
17. LETTERS SHALL BE OBTAINED PRIOR TO GRADING PERMIT APPROVAL FROM ADJACENT PROPERTY OWNERS AUTHORIZING OFF-SITE ACTIVITIES.
18. ALL TRASH AND REFUSE WILL BE RESPONSIBILITY OF THE DEPARTMENT OF RECREATION AND PARKS, AND WILL BE REMOVED FROM THE PARK ON A WEEKLY BASIS. DURING CONSTRUCTION, ALL TRASH AND REFUSE WILL BE THE RESPONSIBILITY OF THE CONTRACTOR.
19. ENVIRONMENTAL SITE DESIGN (ESD) IS INCORPORATED INTO THE PHASE 2 DEVELOPMENT AT THE MAXIMUM EXTENT POSSIBLE. ESD FACILITIES INCLUDE BIO-SWALES AND PERVIOUS PAVEMENT. AN EXTENDED DETENTION SHALLOW WETLAND (W-2) CONSTRUCTED UNDER PHASE J WILL PROVIDE ADDITIONAL ESD VOLUME AS WATER QUALITY VOLUME (WQv), AN EXTENDED DETENTION SHALLOW WETLAND POND WAS ALSO CONSTRUCTED UNDER PHASE 1 AND WILL PROVIDE MITIGATION OF THE 100-YEAR EVENT. HOWARD COUNTY DEPARTMENT OF RECREATION AND PARKS WILL BE RESPONSIBLE FOR MAINTENANCE OF ALL STORMWATER MANAGEMENT FACILITIES.

SITE ANALYSIS DATA CHART

TOTAL PROPERTY AREA: 298.08 ACRES
AREA OF PLAN SUBMISSION: 16.3 ACRES
LIMIT OF DISTURBED AREA: 16.3 ACRES

PRESENT ZONING DESIGNATION: RC-DEO

PROPOSED USES: REGIONAL PARK, BASEBALL FIELDS, PLAYGROUND, PICNIC SHELTER, COMFORT STATION

FLOOR SPACE:
PICNIC SHELTER - 1ST FLOOR: 1470 SF;
COMFORT STATION - 1ST FLOOR: 1270 SF

PARKING REQUIREMENTS (PER HOWARD COUNTY RECREATION & PARKS)
BASEBALL FIELD: 35 SPACES X 2 = 70 SPACES
PICNIC SHELTER: 50 SPACES
PLAYGROUND: 10 SPACES
TENNIS COURTS: 2 SPACES X 5 = 10 SPACES
TOTAL REQUIRED: 140 SPACES

PARKING SPACES PROVIDED: 183 SPACES, 6 HANDICAP (189 TOTAL)

APPLICABLE DPZ FILE NUMBERS: ECP-11-023, SDP-10-007; WP-10-013

LIST OF DRAWINGS

CIVIL
1. C0.1 COVER SHEET
2. C0.2 ABBREVIATIONS, NOTES, AND LEGENDS
3. C1.0 EXISTING SITE PLAN
4. C1.1 OVERALL SITE DEVELOPMENT PLAN
5. C1.2 SITE PLAN A
6. C1.3 SITE PLAN B
7. C1.4 STAKEOUT PLAN A
8. C1.5 STAKEOUT PLAN B
9. C1.6 OVERALL EROSION & SEDIMENT CONTROL PLAN
10. C1.7 EROSION & SEDIMENT CONTROL/GRADING PLAN A
11. C1.8 EROSION & SEDIMENT CONTROL/GRADING PLAN B
12. C1.9 PHOTOMETRIC TEST PLAN
13. C2.1 STORM DRAIN PROFILES
14. C2.2 STORM DRAIN PROFILES
15. C3.1 ENLARGED SITE PLANS
16. C3.2 ENLARGED SITE PLANS
17. C4.1 SITE DETAILS
18. C4.2 SITE DETAILS
19. C4.3 SITE DETAILS
20. C4.4 STORMWATER MANAGEMENT DETAILS AND NOTES
21. C5.1 EROSION AND SEDIMENT CONTROL - NOTES
22. C5.2 EROSION AND SEDIMENT CONTROL - NOTES/DETAILS
23. C5.3 BORING LOGS

LANDSCAPE
24. L1.1 LANDSCAPE PLAN
25. L1.2 LANDSCAPE PLAN
26. L1.3 CENTRAL PLAZA MATERIALS PLAN ENLARGEMENT
27. L1.4 CENTRAL PLAZA PLANTING PLAN ENLARGEMENT
28. L1.5 PLAYGROUND ENLARGEMENT
29. L1.6 SEEDING PLAN
30. L2.1 BALLFIELD ENLARGEMENTS
31. L2.2 HARDSCAPE DETAILS
32. L2.3 HARDSCAPE DETAILS
33. L2.4 HARDSCAPE DETAILS
34. L2.5 HARDSCAPE DETAILS
35. L2.6 HARDSCAPE DETAILS
36. L3.1 PLANTING DETAILS
37. L3.2 PLANTING SCHEDULES

FOREST CONSERVATION
38. F2.1 FOREST CONSERVATION PLAN
39. F2.2 FOREST CONSERVATION PLAN
40. F2.3 FOREST CONSERVATION PLAN
41. F2.4 FOREST CONSERVATION PLAN DETAILS

WHITMAN, REQUARDT & ASSOCIATES, LLP
801 South Caroline Street, Baltimore, Maryland 21231
Phone: 410-235-3450 Fax: 410-243-5716

GRAPHIC SCALES

0 2000' 4000'
SCALE: 1" = 2000'

0 400' 800'
SCALE: 1" = 400'

SIGNATURE

STATE OF MARYLAND ANTHONY USABURO OLSEN No. 19376 PROFESSIONAL ENGINEER

PROFESSIONAL CERTIFICATION.
I HEREBY CERTIFY THAT THESE DOCUMENTS WERE PREPARED OR APPROVED BY ME, AND THAT I AM A DULY LICENSED PROFESSIONAL ENGINEER UNDER THE LAWS OF THE STATE OF MARYLAND, LICENSE NO. 19376
EXPIRATION DATE: 09/22/2015

APPROVED: DEPARTMENT OF PUBLIC WORKS	
DIRECTOR OF PUBLIC WORKS	DATE
CHIEF, BUREAU OF ENGINEERING	DATE
CHIEF, TRANSPORTATION AND SPECIAL PROJECTS	DATE

APPROVED: DEPARTMENT OF PLANNING AND ZONING	
CHIEF, DEVELOPMENT ENGINEERING DIVISION	DATE 6-17-14
CHIEF, DIVISION OF LAND DEVELOPMENT	DATE 7-28-14
DIRECTOR	DATE 7-28-14

APPROVED: DEPARTMENT OF RECREATION AND PARKS	
DIRECTOR	DATE 5-28-14

ADDRESS CHART	
PARCEL #	STREET ADDRESS
3/72	COMFORT STATION: 5749 OAKLAND MILLS ROAD

OWNER:	DEVELOPER:
HOWARD COUNTY DEPARTMENT OF RECREATION AND PARKS 7120 OAKLAND MILLS ROAD COLUMBIA, MD 21046 ATTN: MR. RAUL DELERME VOICE 410-313-4689 FAX 410-313-4646	HOWARD COUNTY DEPARTMENT OF PUBLIC WORKS 9250 BENDIX ROAD COLUMBIA, MD 21045 ATTN: MR. MARK KOVACH VOICE 410-313-6153 FAX 410-313-6144

PERMIT INFORMATION CHART						
WATER CODE: PUBLIC	SEWER CODE: PUBLIC		BUILDING N/A	STREET ADDRESS N/A		
PROJECT NAME: BLANDAIR REGIONAL PARK - PHASE 2			SECTION/AREA N/A		PARCEL 3/72	
L/F 4391/55 5203/439	GRID #5	ZONING RC-DEO	TAX MAP 36	BLOCK 5	ELEC. DIST. 3/7	CENSUS TRACT 60603

BLANDAIR REGIONAL PARK - PHASE 2

COVER SHEET

Drawing No.

C0.1

Scale: AS SHOWN		
Date: 03/31/2014	Sheet 1 of 41	
Des: CYH	Drawn: SAD	Check: AUO

SDP-12-063

PLOT DATE: 4/3/2014 4:48:11 PM PAGE SETUP: WRA-PDF (36X24) PLOT STYLE: WRA_2006.CTB PAPER SIZE:36X24
FILENAME: N:\42038-002\CADD\42038002C001.DWG

ABBREVIATIONS

AASHTO	AMERICAN ASSOCIATION OF STATE HIGHWAY AND TRANSPORTATION OFFICIALS
ABAN, ABAND	ABANDON
APPROX	APPROXIMATELY
ASTM	ASSOCIATION FOR STANDARD TESTING METHODS
BLDG	BUILDING
BIT	BITUMINOUS
B.M.	BENCH MARK
CFS	CUBIC FEET PER SECOND
C.I.	CAST IRON
C.I.P	CAST IRON PIPE
C/L	CENTERLINE
CO	CLEAN OUT
COMM	COMMUNICATION
CONTR. JT	CONTRACTION JOINT
CONC	CONCRETE
CMP	CORRUGATED METAL PIPE
DEMO	DEMOLITION
DIP	DUCTILE IRON PIPE
DIA, DIAM	DIAMETER
DWG, DRWG	DRAWING
E	EAST
EL, ELEV	ELEVATION
ELECT, ELEC	ELECTRICAL
EMBED	EMBEDDED
EX	EXISTING
EXP JT	EXPANSION JOINT
EW	EACH WAY
F&C	FRAME AND COVER
FH	FIRE HYDRANT
FIN, FL, F.F.	FINISHED FLOOR
FT	FEET
FPS	FEET PER SECOND
HB	HORIZONTAL BEND
HO. CO.	HOWARD COUNTY
HC	HANDICAPPED
HP	HIGH POINT
IN	INCH
INV	INVERT
IP	INLET PROTECTION
JT	JOINT
LT	LEFT
LOD	LIMIT OF DISTURBANCE
LP	LOW POINT
MAX	MAXIMUM
MECH	MECHANICAL
MH	MANHOLE
MIN	MINIMUM
MW	MONITORING WELL
N	NORTH
NE	NORTHEAST
NIC	NOT IN CONTRACT
NTS	NOT TO SCALE
NW	NORTHWEST
OC, O/C	ON CENTER
OD	OUTSIDE DIAMETER
OHE	OVERHEAD ELECTRIC
OHT	OVERHEAD TELEPHONE
PC	POINT OF CURVATURE
PCC	POINT OF COMPOUND CURVATURE
PERF	PERFORATED
PI	POINT OF INTERSECTION, POST INDICATOR
POB	POINT OF BEGINNING
POC	POINT ON CURVE
POE	POINT OF END
POT	POINT ON TRAVERSE
PT	POINT OF TANGENCY
PVC	POLYVINYL CHLORIDE, POINT OF VERTICAL CURVE
PVI	POINT OF VERTICAL INTERSECTION
PVMT	PAVEMENT
PVT	POINT OF VERTICAL TANGENCY
PP	POWER POLE
PIV	POST INDICATOR VALVE
PROP	PROPOSED
R	RADIUS, RIGHT
RD	ROAD
RCCP	REINFORCED CONCRETE CULVERT PIPE
RCP	REINFORCED CONCRETE PIPE
REIN, REINF	REINFORCED
RR	RAILROAD
S	SOUTH, SLOPE, SANITARY
SAN	SANITARY
SCE	STABILIZED CONSTRUCTION ENTRANCE
SCH	SCHEDULE
SD	STORM DRAIN
SDR	STANDARD DIMENSION RATIO
SE	SOUTHEAST
SF	SILT FENCE
SHT	SHEET
SP	STUDY POINT
SS	STAINLESS STEEL
STA	STATION
STD	STANDARD
STRUCT, STR	STRUCTURAL
SW	SOUTHWEST
TEL	TELEPHONE
TS&V	TAPPING SLEEVE & VALVE
T/C	TOP OF CURB
TC	TOP OF COVER
TG	TOP OF GRATE
TW	TOP OF WALL
TYP	TYPICAL
UG	UNDERGROUND
UE	UNDERGROUND ELECTRIC DUCT
UMH	UNKNOWN MANHOLE
UT	UNDERGROUND TELEPHONE DUCT
UFA	UNDERGROUND FIRE ALARM
VB	VERTICAL BEND
VC	VERTICAL CURVE
W	WEST, WATT, WATER, WIDE
W/	WITH
WWF	WELDED WIRE FABRIC

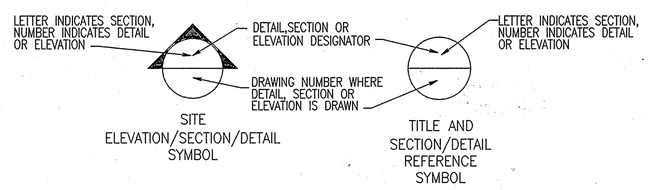

LEGEND

EXISTING	PROPOSED	DESCRIPTION
145	145	CONTOUR
× 145.50	145.50	SPOT ELEVATION
D 12"RCP D	12"SD	STORM DRAIN
W 8"WATER W	8"W	WATER
S 6"SAN S	6"SAN	SANITARY SEWER
E E	E E	UNDERGROUND ELECTRIC
T T	T T	UNDERGROUND TELEPHONE
		CONCRETE CURB AND GUTTER
X	X	FENCE
		BUILDING
CONC		CONCRETE PAVEMENT
		HEAVY DUTY CONCRETE PAVEMENT
MAC		BITUMINOUS CONCRETE PAVEMENT
		PLAYGROUND PAVEMENT
		POROUS PAVEMENT
		TENNIS COURT PAVEMENT
		ARTIFICIAL TURF
		REINFORCED TURF
		WATER VALVE
		FIRE HYDRANT
		STORM DRAIN INLET
D	D	STORM DRAIN MANHOLE
S	S	SANITARY SEWER MANHOLE
E		ELECTRIC MANHOLE
T		TELEPHONE MANHOLE
		LIGHT POLE
		UTILITY POLE
	T	TRANSFORMER
UTIL		UTILITY MARKER
EJB		ELECTRIC JUNCTION BOX
		GUY WIRE
		SIGN
		EVERGREEN TREE
		DECIDUOUS TREE
		WOODSLINE
		RIPRAP
		15–24.9% SLOPES
		>25% SLOPES
		100–YR FLOODPLAIN
		STREAM
SB		75' STREAM BUFFER
WRA FLY		FLY MONUMENT
GPS		GPS MONUMENT
WRA		SURVEY TRAVERSE MONUMENT
LOD		LIMIT OF DISTURBANCE
		PROPERTY LINE
		SETBACK
		BORING LOCATION

APPROVED: DEPARTMENT OF PLANNING AND ZONING

CHIEF, DEVELOPMENT ENGINEERING DIVISION	DATE 6.17.14
CHIEF, DIVISION OF LAND DEVELOPMENT	DATE 6.18.14
DIRECTOR	DATE 7-28-14

REVISIONS

HOWARD COUNTY

DEPARTMENT OF RECREATION AND PARKS
7120 OAKLAND MILLS ROAD
COLUMBIA, MD 21046

DEPARTMENT OF PUBLIC WORKS
9250 BENDIX ROAD
ELLICOTT CITY, MD 21043

WHITMAN, REQUARDT & ASSOCIATES, LLP
801 South Caroline Street, Baltimore, Maryland 21231
Phone: 410-235-3450 Fax: 410-243-5716

PROPERTY

TAX MAP 36, GRID 5, PARCEL 3,72

ZONING: RC-DEO

ELECTION DISTRICT 3/7

GRAPHIC SCALES

SIGNATURE

STATE OF MARYLAND — ANTHONY USABURO OKADA — No. 19376 — PROFESSIONAL ENGINEER

PROFESSIONAL CERTIFICATION.
I HEREBY CERTIFY THAT THESE DOCUMENTS WERE PREPARED OR APPROVED BY ME, AND THAT I AM A DULY LICENSED PROFESSIONAL ENGINEER UNDER THE LAWS OF THE STATE OF MARYLAND, LICENSE NO. 19376
EXPIRATION DATE: 09/22/2015

BLANDAIR REGIONAL PARK – PHASE 2

ABBREVIATIONS, NOTES AND LEGENDS

Drawing No.

CO-2

Scale: NONE		
Date: 03/31/2014	Sheet 2 of 41	
Des: CJK	Drawn: CJK	Check: AUO

SDP-12-063

PLOT DATE: 4/4/2014 8:06:25 AM PAGE SETUP: VRA-PDF CS:C24 PLOT STYLE: VRA_D0.6.CTB PAPER SIZE:36X24

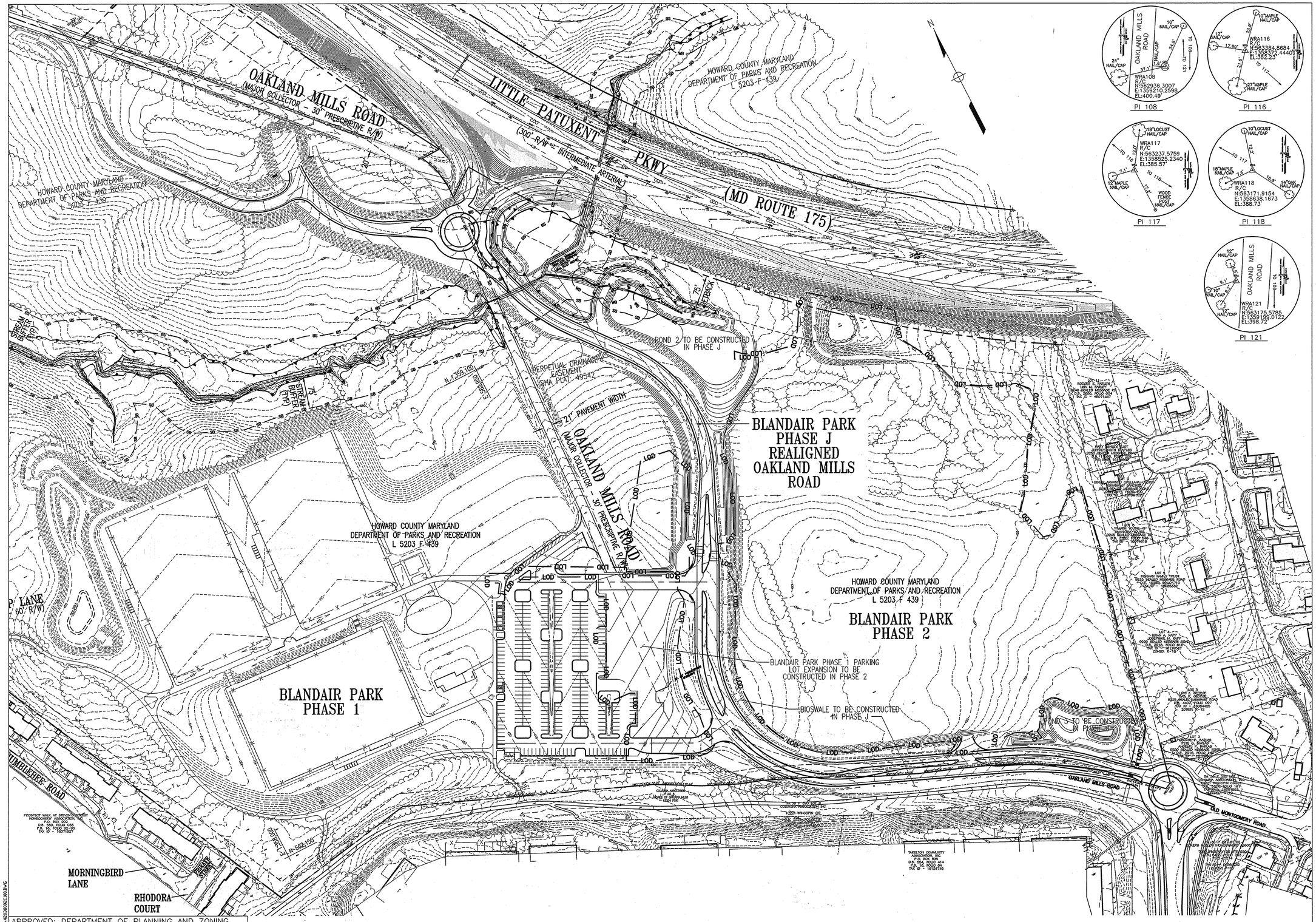

APPROVED: DEPARTMENT OF PLANNING AND ZONING

CHIEF, DEVELOPMENT ENGINEERING DIVISION	DATE 6-17-14
CHIEF, DIVISION OF LAND DEVELOPMENT	DATE 6-28-14
DIRECTOR	DATE 7-28-14

NOTE:
ALL ADJACENT PROPERTIES SHOWN ARE WITHIN THE VILLAGE OF OAKLAND MILLS AND ZONED NT, UNLESS OTHERWISE NOTED

REVISIONS

HOWARD COUNTY

DEPARTMENT OF RECREATION AND PARKS
7120 OAKLAND MILLS ROAD
COLUMBIA, MD 21046

DEPARTMENT OF PUBLIC WORKS
9250 BENDIX ROAD
ELLICOTT CITY, MD 21043

WHITMAN, REQUARDT & ASSOCIATES, LLP
801 South Caroline Street, Baltimore, Maryland 21231
Phone: 410-235-3450 Fax: 410-243-5716

PROPERTY

TAX MAP 36, GRID 5, PARCEL 3,72

ZONING: RC-DEO

ELECTION DISTRICT 3/7

GRAPHIC SCALES

0 50' 100' 200'
SCALE: 1" = 100'

SIGNATURE

STATE OF MARYLAND — ANTHONY USABURO OSUGI — No. 19376 — PROFESSIONAL ENGINEER

PROFESSIONAL CERTIFICATION.
I HEREBY CERTIFY THAT THESE DOCUMENTS WERE PREPARED OR APPROVED BY ME, AND THAT I AM A DULY LICENSED PROFESSIONAL ENGINEER UNDER THE LAWS OF THE STATE OF MARYLAND, LICENSE NO. 19376
EXPIRATION DATE: 09/22/2015

BLANDAIR REGIONAL PARK - PHASE 2

EXISTING SITE PLAN

Drawing No.
C1.0

Scale: 1" = 100'		
Date: 03/31/2014	Sheet 3 of 41	
Des: CYH	Drawn: CYH	Check: AUO

SDP-12-063

PLOT DATE: 4/4/2014 9:12:27 AM PAGE SETUP: VGN-PDF CS:C3D3 PLOT STYLE: VGN_2006LTB PAPER SIZE:36X24

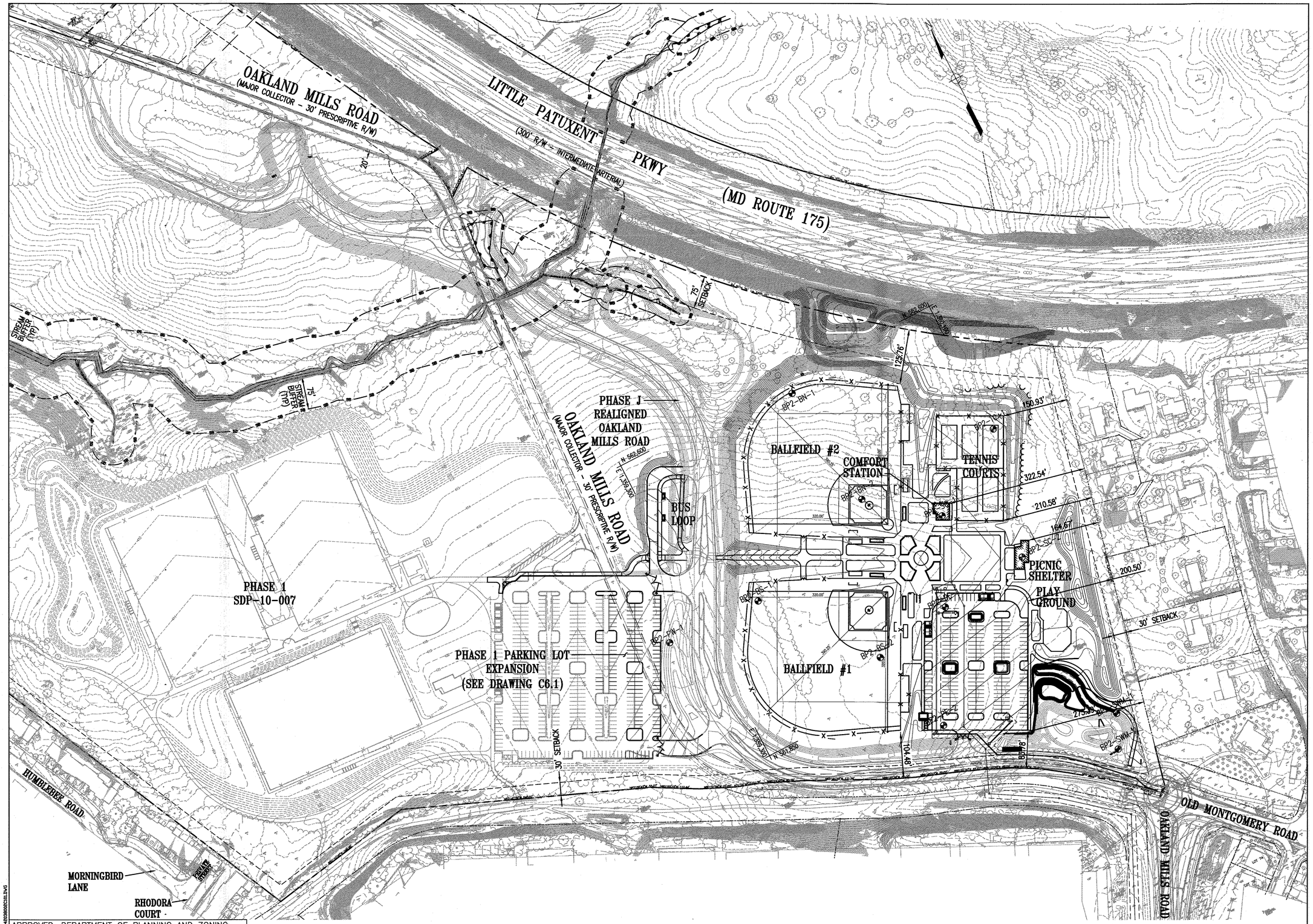

APPROVED: DEPARTMENT OF PLANNING AND ZONING

CHIEF, DEVELOPMENT ENGINEERING DIVISION	DATE 1-6-17
CHIEF, DIVISION OF LAND DEVELOPMENT	DATE 1-11-17
DIRECTOR	DATE 1-11-17

FILENAME: W:\42039-000\CADD\42039000C6C0.DWG

REVISIONS		
1	REVISED SITE DEVELOPMENT PLAN	10/26/16

HOWARD COUNTY

DEPARTMENT OF RECREATION AND PARKS
7120 OAKLAND MILLS ROAD
COLUMBIA, MD 21046

DEPARTMENT OF PUBLIC WORKS
9250 BENDIX ROAD
ELLICOTT CITY, MD 21043

WR&A

WHITMAN, REQUARDT & ASSOCIATES, LLP
801 South Caroline Street, Baltimore, Maryland 21231
Phone: 410-235-3450 Fax: 410-243-5716

PROPERTY

TAX MAP 36, GRID 5, PARCEL 3,72

ZONING: RC-DEO

ELECTION DISTRICT 3/7

GRAPHIC SCALES

0 50' 100' 200'
SCALE: 1" = 100'

SIGNATURE

STATE OF MARYLAND — ANTHONY U. AMELLO — No. 19376 — PROFESSIONAL ENGINEER

PROFESSIONAL CERTIFICATION.
I HEREBY CERTIFY THAT THESE DOCUMENTS WERE PREPARED OR APPROVED BY ME, AND THAT I AM A DULY LICENSED PROFESSIONAL ENGINEER UNDER THE LAWS OF THE STATE OF MARYLAND, LICENSE NO. 19376
EXPIRATION DATE: 09/22/2017

BLANDAIR REGIONAL PARK - PHASE 2

OVERALL SITE DEVELOPMENT PLAN

Drawing No.

C1.1

Scale: 1" = 100'		
Date: 03/24/16	Sheet 4 of 41	
Des: CYH	Drawn: CYH	Check: AUO

SDP-12-063

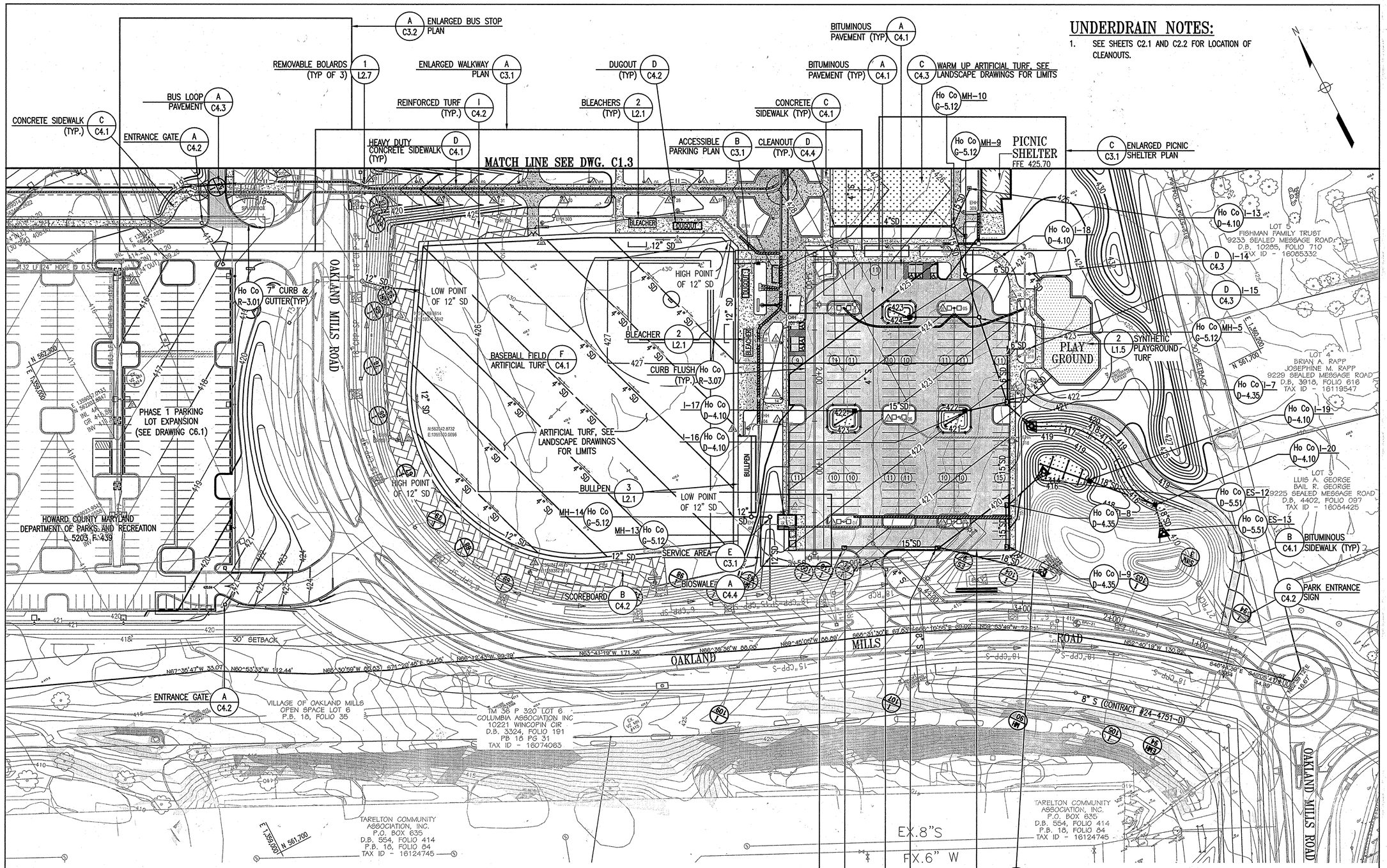

UNDERDRAIN NOTES:

1. SEE SHEETS C2.1 AND C2.2 FOR LOCATION OF CLEANOUTS.

BASEBALL FIELD NOTES:

1. FIELDTURF TO PROVIDE ALL ITEMS FOR ARTIFICIAL TURF BASEBALL FIELDS INCLUDING:
   - CONCRETE CURB SURROUNDING FIELD
   - 12 IN PERFORATED PVC PERIMETER DRAIN
   - 4 IN PERFORATED PVC INTERIOR DRAIN
   - ALL SUBDRAINAGE STONE AND GEOTEXTILE
   - FIELDTURF 2" DOUBLE PLAY ARTIFICIAL TURF

NOTE:

1. SEE SHEET C4.5 FOR THE STORMWATER MANAGEMENT ENLARGED PLAN.

REDLINE REVISION 7 PURPOSE STATEMENT:

1. REMOVAL OF THE PERVIOUS PAVEMENT REQUIRED THE DESIGN OF MICRO-BIORETENTION AND A BIO-SWALE FACILITY TO TREAT THE STORMWATER REQUIREMENTS

APPROVED: DEPARTMENT OF PLANNING AND ZONING

CHIEF, DEVELOPMENT ENGINEERING DIVISION	DATE 5-17-16
CHIEF, DIVISION OF LAND DEVELOPMENT	DATE 5-19-16
DIRECTOR	DATE 5-19-16

FILENAME: N:\42038-002\CADD\42038002C102.DWG

REVISIONS	
REDLINE REVISION 7	3/22/16

HOWARD COUNTY

DEPARTMENT OF RECREATION AND PARKS
7120 OAKLAND MILLS ROAD
COLUMBIA, MD 21046

DEPARTMENT OF PUBLIC WORKS
9250 BENDIX ROAD
ELLICOTT CITY, MD 21043

WR&A

WHITMAN, REQUARDT & ASSOCIATES, LLP
801 South Caroline Street, Baltimore, Maryland 21231
Phone: 410-235-3450 Fax: 410-243-5716

PROPERTY

TAX MAP 36, GRID 5, PARCEL 3,72

ZONING: RC-DEO

ELECTION DISTRICT 3/7

GRAPHIC SCALES

0 25' 50' 100'
SCALE: 1" = 50'

SIGNATURE

STATE OF MARYLAND ANTHONY USABURO OLSEN No. 19376 PROFESSIONAL ENGINEER

PROFESSIONAL CERTIFICATION.
I HEREBY CERTIFY THAT THESE DOCUMENTS WERE PREPARED OR APPROVED BY ME, AND THAT I AM A DULY LICENSED PROFESSIONAL ENGINEER UNDER THE LAWS OF THE STATE OF MARYLAND, LICENSE NO. 19376
EXPIRATION DATE: 09/22/2017

BLANDAIR REGIONAL PARK - PHASE 2

SITE PLAN A
REVISED SITE DEVELOPMENT PLAN
Drawing No.
C1.2

Scale: 1" = 50'		
Date: 03/24/16	Sheet 5 of 41	
Des: CYH	Drawn: SAD	Check: AUO

SDP-12-063

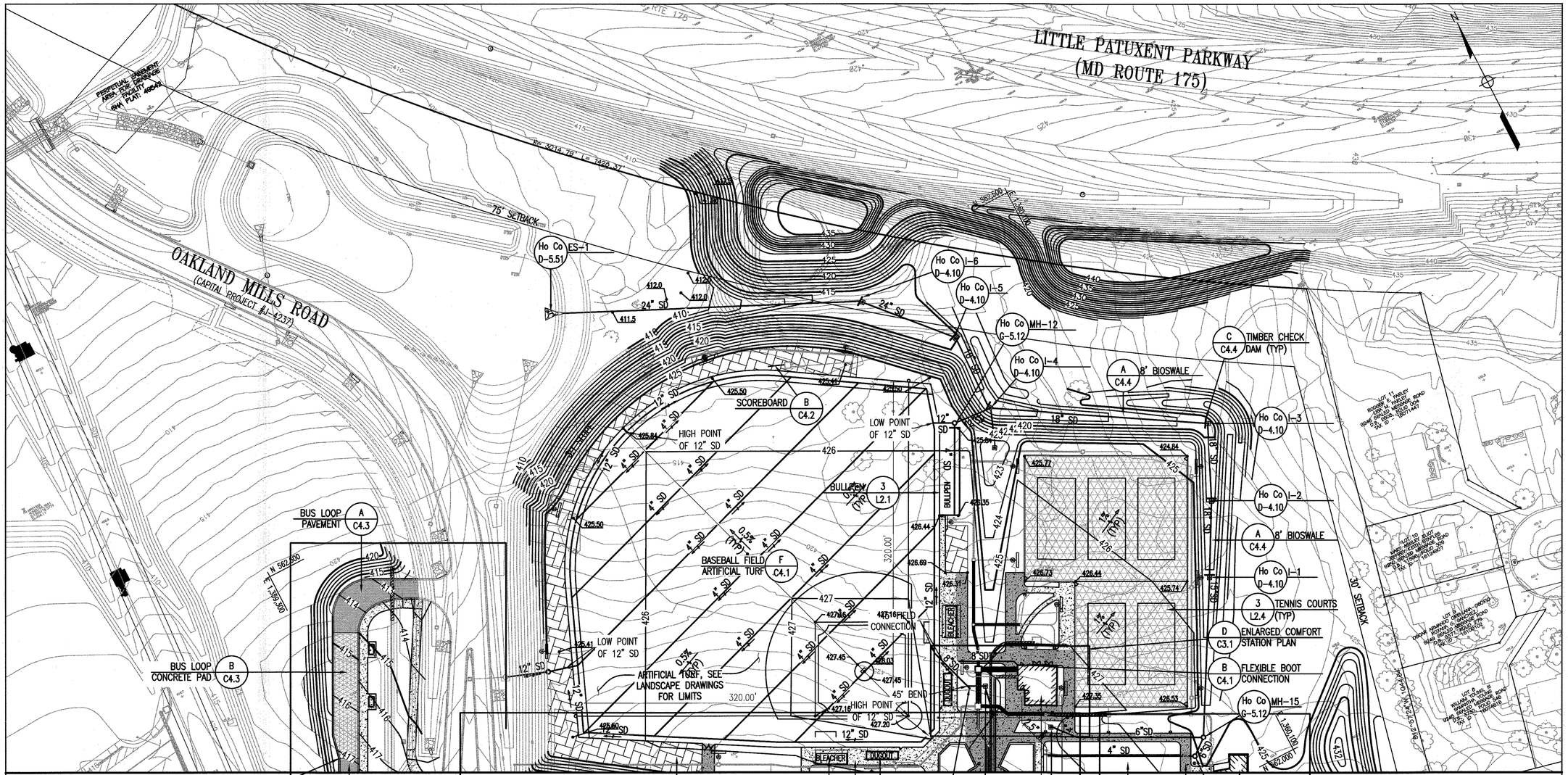

BASEBALL FIELD NOTES:

1. FIELDTURF TO PROVIDE ALL ITEMS FOR ARTIFICIAL TURF BASEBALL FIELDS INCLUDING:
   - -CONCRETE CURB SURROUNDING FIELD
   - -12 IN PERFORATED PVC PERIMETER DRAIN
   - -4 IN PERFORATED PVC INTERIOR DRAIN
   - -ALL SUBDRAINAGE STONE AND GEOTEXTILE
   - -FIELDTURF 2" DOUBLE PLAY ARTIFICIAL TURF

LEGEND

CONCRETE PAVEMENT

HEAVY DUTY CONCRETE PAVEMENT

REVISED SITE DEVELOPMENT PLAN PURPOSE STATEMENT

THE GRADING PLAN HAS BEEN REVISED TO INCLUDE A BERM ALONG MD 175 TO ALLOW FOR THE PLACEMENT OF UNANTICIPATED ACCESS TOPSOIL AND TO PROVIDE CONSTRUCTION ACCESS ALONG THE EASTERN EDGE OF THE PARK TO ACCESS THE BERMS.

APPROVED: DEPARTMENT OF PLANNING AND ZONING

CHIEF, DEVELOPMENT ENGINEERING DIVISION	DATE 1-6-17
CHIEF, DIVISION OF LAND DEVELOPMENT	DATE 1-11-17
DIRECTOR	DATE 1-11-17

FILENAME: W-4209-PDP-QADTV-4209SDP02C03.DWG

REVISIONS		
1	REVISED SITE DEVELOPMENT PLAN	10/26/16

HOWARD COUNTY

DEPARTMENT OF RECREATION AND PARKS
7120 OAKLAND MILLS ROAD
COLUMBIA, MD 21046

DEPARTMENT OF PUBLIC WORKS
9250 BENDIX ROAD
ELLICOTT CITY, MD 21043

WHITMAN, REQUARDT & ASSOCIATES, LLP
801 South Caroline Street, Baltimore, Maryland 21231
Phone: 410-235-3450 Fax: 410-243-5716

PROPERTY

TAX MAP 36, GRID 5, PARCEL 3,72

ZONING: RC-DEO

ELECTION DISTRICT 3/7

GRAPHIC SCALES

0 25' 50' 100'
SCALE: 1" = 50'

SIGNATURE

STATE OF MARYLAND — ANTHONY USABUTO CHOO — No. 19376 — PROFESSIONAL ENGINEER

PROFESSIONAL CERTIFICATION.
I HEREBY CERTIFY THAT THESE DOCUMENTS WERE PREPARED OR APPROVED BY ME, AND THAT I AM A DULY LICENSED PROFESSIONAL ENGINEER UNDER THE LAWS OF THE STATE OF MARYLAND, LICENSE NO. 19376
EXPIRATION DATE: 09/22/2017

BLANDAIR REGIONAL PARK – PHASE 2

SITE PLAN B

Drawing No.

C1.3

Scale: 1" = 50'		
Date: 03/24/16	Sheet 6 of 41	
Des: CYH	Drawn: SAD	Check: AUO

SDP-12-063

PARKING LOT STAKEOUT

POINT	NORTHING	EASTING	R	Δ	T
P1	561625.63	1359748.62	–	–	–
C1	561641.24	1359711.23	40.00'	090°44'19"	40.52'
C2	561693.17	1359733.71	15.00'	093°56'52"	16.07'
P2	561629.29	1359857.22	–	–	–
P3	561751.87	1359920.62	–	–	–
C3	561760.13	1359904.63	6.00'	090°00'00"	6.00'
C4	561778.79	1359914.28	6.00'	090°00'00"	6.00'
P4	561770.52	1359930.27	–	–	–
P5	561858.45	1359975.75	–	–	–
C5	561866.72	1359959.76	6.00'	090°00'00"	6.00'
C6	561901.36	1359977.67	30.00'	090°00'00"	30.00'
C7	561928.93	1359924.38	5.00'	090°00'00"	5.00'

POINT	NORTHING	EASTING	R	Δ	T
P6	561944.92	1359932.65	–	–	–
P7	561994.99	1359835.83	–	–	–
C8	561979.00	1359827.56	5.00'	090°00'00"	5.00'
C9	561995.08	1359796.47	30.00'	090°00'00"	30.00'
C10	561953.33	1359774.88	5.00'	090°00'00"	5.00'
P8	561961.60	1359758.89	–	–	–
P9	561880.77	1359717.09	–	–	–
C11	561872.50	1359733.08	6.00'	090°00'00"	6.00'
C12	561853.85	1359723.43	6.00'	090°00'00"	6.00'
P10	561862.12	1359707.44	–	–	–
P11	561774.18	1359661.96	–	–	–

POINT	NORTHING	EASTING	R	Δ	T
P12	561735.87	1359651.15	–	–	–
C13	561705.84	1359709.20	15.00'	074°12'25"	11.35'
C14	561647.10	1359697.19	40.00'	101°06'25"	48.62'
P13	561665.83	1359652.33	–	–	–

PATHWAY STAKEOUT

POINT	NORTHING	EASTING	R	Δ	T
1	561448.86	1360028.00	–	–	–
2	561573.04	1360130.68	66.00'	113°16'58"	100.25'
3	561633.16	1359925.12	139.00'	078°40'11"	113.91'
4	561774.13	1359937.39	74.00'	022°22'34"	14.64'
5	561918.19	1360011.89	40.00'	089°59'59"	40.00'
12	562069.85	1359865.22	–	–	–
13	562094.20	1359818.15	–	–	–
14	562119.01	1359770.19	–	–	–
15	562175.31	1359661.31	–	–	–
16	562218.50	1359577.82	–	–	–
17	562199.93	1359567.92	–	–	–
18	562186.15	1359560.79	–	–	–

POINT	NORTHING	EASTING	R	Δ	T
19	562252.47	1359595.70	–	–	–
20	562218.50	1359577.82	–	–	–
21	562263.20	1359601.95	–	–	–

STAKEOUT NOTES

1. ALL PARKING LOT STAKEOUT IS FROM FACE OF CURB, UNLESS OTHERWISE NOTED.
2. ALL CURB FILLETS ARE 6' UNLESS OTHERWISE NOTED.
3. ALL CONCRETE SIDEWALK FILLETS ARE 5' UNLESS OTHERWISE NOTED.
4. ALL ASPHALT PATHWAY FILLETS ARE 15' UNLESS OTHERWISE NOTED.
5. ATHLETIC FIELD STAKEOUT ARE AT C/L OF FENCE.
6. CURVE COORDINATES SHOWN ARE AT THE POINT OF INTERSECTION.
7. SEE DRAWING C1.5 FOR BUS LOOP STAKEOUT.

PLAYGROUND STAKEOUT

POINT	NORTHING	EASTING
22	561760.66	1360037.02
23	561752.86	1360012.52
24	561765.42	1359988.25
25	561789.91	1359980.45
26	561836.56	1360004.58
27	561847.34	1360001.14
28	561871.11	1360013.43
29	561880.05	1360028.34
30	561868.78	1360050.12
31	561859.33	1360053.13
32	561845.44	1360045.94
33	561838.71	1360058.96
34	561828.74	1360062.12
35	561800.04	1360047.28
36	561787.93	1360051.13

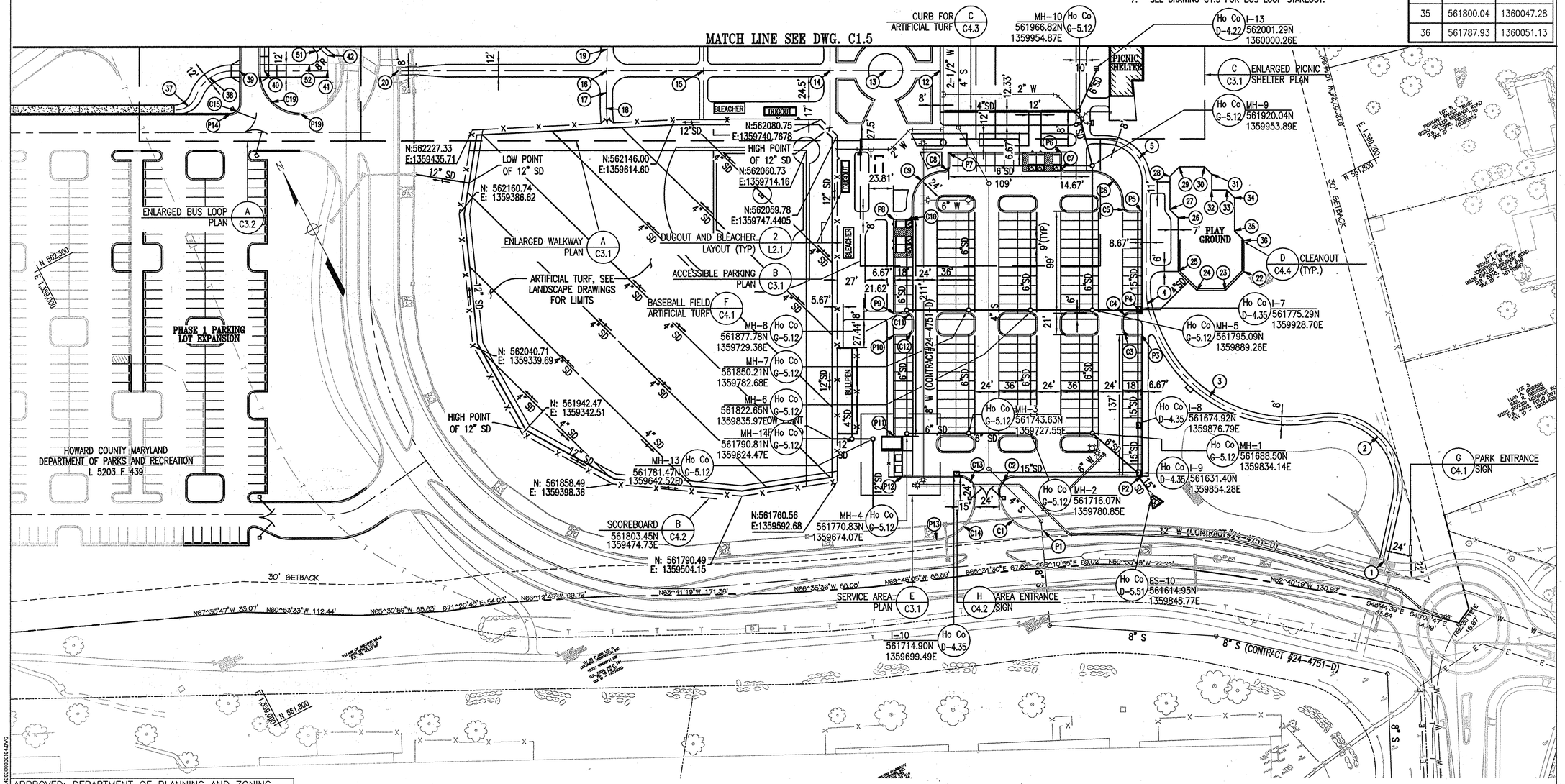

APPROVED: DEPARTMENT OF PLANNING AND ZONING

CHIEF, DEVELOPMENT ENGINEERING DIVISION	DATE 6-17-14
CHIEF, DIVISION OF LAND DEVELOPMENT	DATE 7-28-14
DIRECTOR	DATE 7-28-14

PLOT DATE: 4/4/2014 8:08:45 AM PAGE SETUP: VWA-PDF CS:ISO4 PLOT STYLE: VWA_2006CTB PAPER SIZE:36X24

REVISIONS		

HOWARD COUNTY

DEPARTMENT OF RECREATION AND PARKS
7120 OAKLAND MILLS ROAD
COLUMBIA, MD 21046

DEPARTMENT OF PUBLIC WORKS
9250 BENDIX ROAD
ELLICOTT CITY, MD 21043

WR&A

WHITMAN, REQUARDT & ASSOCIATES, LLP
801 South Caroline Street, Baltimore, Maryland 21231
Phone: 410-235-3450 Fax: 410-243-5716

PROPERTY

TAX MAP 36, GRID 5, PARCEL 3,72

ZONING: RC-DEO

ELECTION DISTRICT 3/7

GRAPHIC SCALES

0 25' 50' 100'
SCALE: 1" = 50'

SIGNATURE

STATE OF MARYLAND ANTHONY USABURO OSHIRO No. 19376 PROFESSIONAL ENGINEER

PROFESSIONAL CERTIFICATION.
I HEREBY CERTIFY THAT THESE DOCUMENTS WERE PREPARED OR APPROVED BY ME, AND THAT I AM A DULY LICENSED PROFESSIONAL ENGINEER UNDER THE LAWS OF THE STATE OF MARYLAND, LICENSE NO. 19376
EXPIRATION DATE: 09/22/2015

BLANDAIR REGIONAL PARK - PHASE 2

STAKEOUT PLAN A

Drawing No.

C1.4

Scale: 1" = 50'		
Date: 03/31/2014	Sheet 7 of 41	
Des: CYH	Drawn: SAD	Check: AUO

SDP-12-063

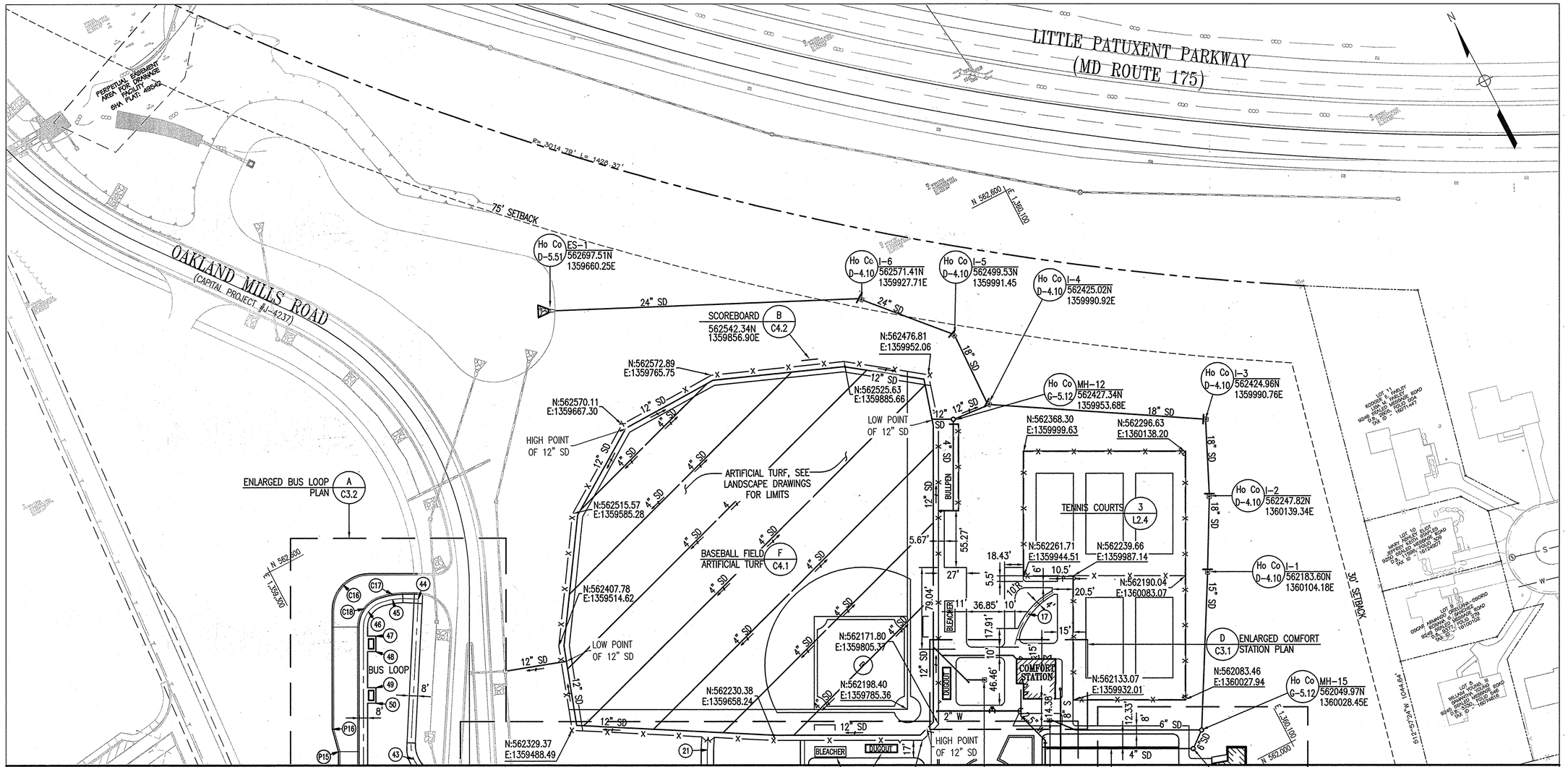

STAKEOUT NOTES

1. ALL PARKING LOT STAKEOUT IS FROM FACE OF CURB, UNLESS OTHERWISE NOTED.
2. ALL CURB FILLETS ARE 6' UNLESS OTHERWISE NOTED.
3. ALL CONCRETE SIDEWALK FILLETS ARE 5' UNLESS OTHERWISE NOTED.
4. ALL ASPHALT PATHWAY FILLETS ARE 15' UNLESS OTHERWISE NOTED.
5. ATHLETIC FIELD AND TENNIS COURT STAKEOUT ARE AT C/L OF FENCE.
6. CURVE COORDINATES SHOWN ARE AT THE POINT OF INTERSECTION.

BUS LOOP STAKEOUT

POINT	NORTHING	EASTING	R	Δ	T
P14	562349.41	1359234.09	–	–	–
C15	562344.82	1359242.98	10.00'	090°00'00"	10.00'
P15	562414.69	1359279.12	–	–	–
P16	562436.72	1359283.76	–	–	–
C16	562570.21	1359352.80	35.00'	090°00'00"	35.00'
C17	562526.81	1359395.36	80.00'	017°41'00"	12.44'
C18	562532.58	1359361.48	30.00'	072°19'00"	21.92'
C19	562336.09	1359259.85	40.00'	090°00'00"	40.00'
P19	562317.71	1359295.38	–	–	–

BUS LOOP PATHWAY STAKEOUT

POINT	NORTHING	EASTING	R	Δ	T
37	562370.32	1359202.44	21.00'	069°22'15"	14.53'
38	562397.46	1359231.80	36.00'	070°30'42"	25.45'
39	562382.09	1359261.51	–	–	–
40	562370.92	1359283.12	–	–	–
41	562342.73	1359337.62	–	–	–
42	562356.14	1359344.56	–	–	–
43	562375.26	1359336.23	30.00'	053°41'21"	15.18'
44	562510.65	1359414.89	–	–	–

POINT	NORTHING	EASTING	R	Δ	T
45	562522.48	1359393.03	74.83'	016°32'26"	10.87'
46	562527.41	1359364.06	25.33'	072°19'00"	18.51'
47	562497.71	1359362.21	–	–	–
48	562484.38	1359355.31	–	–	–
49	562453.30	1359339.24	–	–	–
50	562439.97	1359332.34	–	–	–
51	562365.35	1359336.09	–	–	–
52	562356.17	1359324.69	–	–	–

APPROVED: DEPARTMENT OF PLANNING AND ZONING

CHIEF, DEVELOPMENT ENGINEERING DIVISION	DATE 6.17.14
CHIEF, DIVISION OF LAND DEVELOPMENT	DATE 7.28.14
DIRECTOR	DATE 7-28-14

REVISIONS		

HOWARD COUNTY

DEPARTMENT OF RECREATION AND PARKS
7120 OAKLAND MILLS ROAD
COLUMBIA, MD 21046

DEPARTMENT OF PUBLIC WORKS
9250 BENDIX ROAD
ELLICOTT CITY, MD 21043

WR&A

WHITMAN, REQUARDT & ASSOCIATES, LLP
801 South Caroline Street, Baltimore, Maryland 21231
Phone: 410-235-3450 Fax: 410-243-5716

PROPERTY

TAX MAP 36, GRID 5, PARCEL 3,72

ZONING: RC-DEO

ELECTION DISTRICT 3/7

GRAPHIC SCALES

0 25' 50' 100'
SCALE: 1" = 50'

SIGNATURE

STATE OF MARYLAND
ANTHONY USABURO OGATA
No. 19376
PROFESSIONAL ENGINEER

PROFESSIONAL CERTIFICATION.
I HEREBY CERTIFY THAT THESE DOCUMENTS WERE PREPARED OR APPROVED BY ME, AND THAT I AM A DULY LICENSED PROFESSIONAL ENGINEER UNDER THE LAWS OF THE STATE OF MARYLAND, LICENSE NO. 19376
EXPIRATION DATE: 09/22/2015

BLANDAIR REGIONAL PARK – PHASE 2

STAKEOUT PLAN B

Drawing No.

C1.5

Scale: 1" = 50'		
Date: 03/31/2014	Sheet 8 of 41	
Des: CYH	Drawn: SAD	Check: AUO

SDP-12-063

PLOT DATE: 4/4/2014 9:09:09 AM PAGE SETUP: VRA-PDF (36X24) PLOT STYLE: VRA_2006.CTB PAPER SIZE:36X24

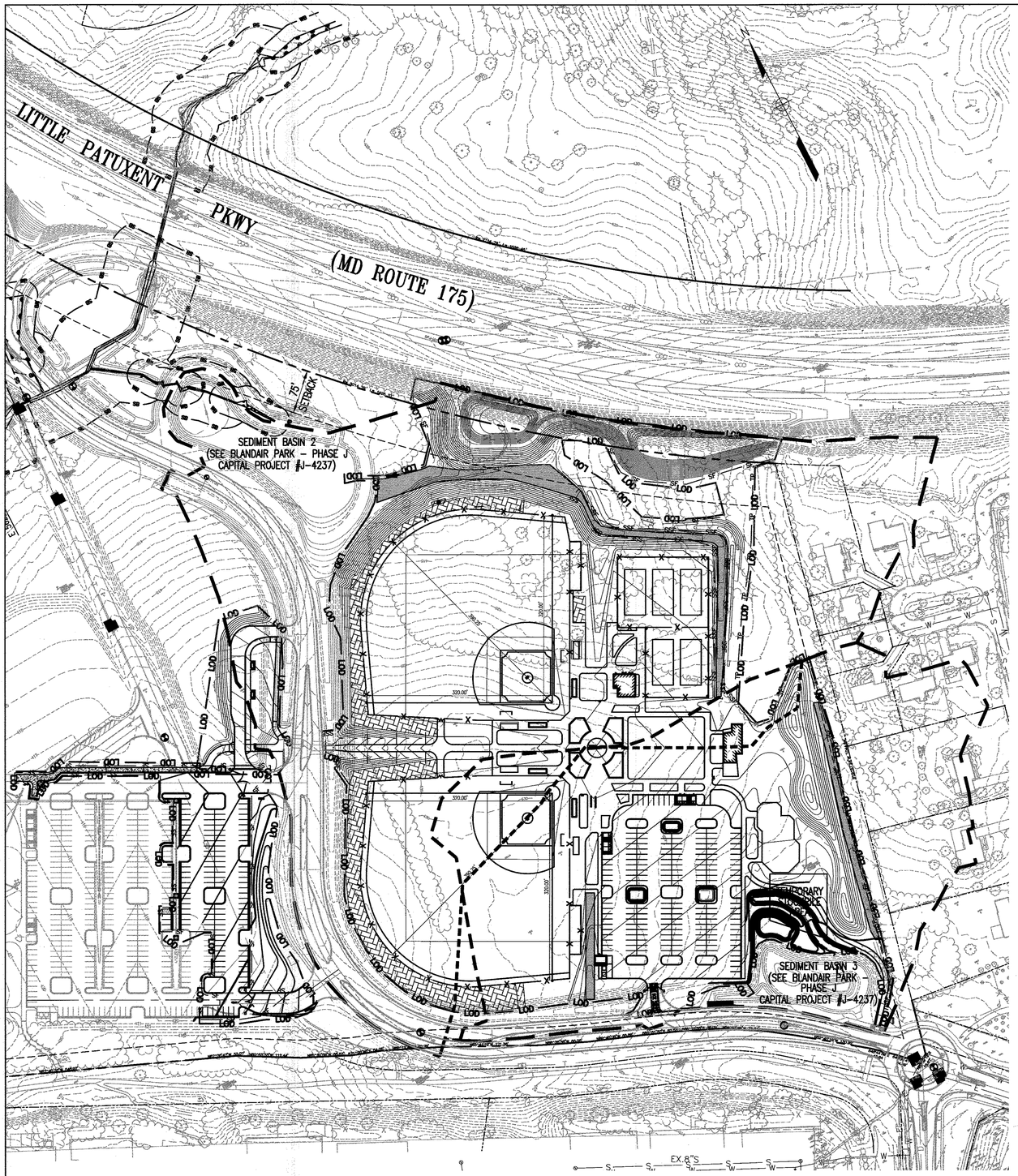

SEQUENCE OF CONSTRUCTION

***CONSTRUCTION OF PHASE 2 MAY NOT BEGIN UNTIL THE RELEVANT DOWNSTREAM CONTROLS IN PHASE J (CAPTIAL PROJECT #J-4237) ARE INSTALLED AND FUNCTIONING.

1. OBTAIN A GRADING PERMIT AND ARRANGE FOR AN ON-SITE PRE-CONSTRUCTION MEETING. (1 DAY)
2. NOTIFY THE SEDIMENT CONTROL INSPECTION OFFICE 24 HOURS PRIOR TO CONSTRUCTION. (1 DAY)
3. INSTALL THE STONE CONSTRUCTION ENTRANCE AND PERIMETER CONTROLS INCLUDING SILT FENCE AND EARTH DIKE. (1 WEEK)
4. COORDINATE WITH PHASE J CONTRACTOR AND DIRECT ALL RUNOFF TO SEDIMENT BASINS 2 AND 3. (1 WEEK)
5. PERFORM ROUGH GRADING. (3 MONTHS)
6. INSTALL ALL UTILITIES AND COORDINATE WITH GRADING OPERATION. DURING INSTALLATION OF SANITARY AND WATER, ONLY EXCAVATE AMOUNT OF TRENCH TO ALLOW INSTALLATION OF PIPE AND BACKFILL WITHIN 1 WORK DAY. PLACE EXCAVATED MATERIAL ON UPHILL SIDED OF TRENCH AND IMMEDIATELY STABILIZE ALL DISTURBED AREA AROUND TRENCH AT THE END OF EACH WORK DAY. (1 MONTH)
7. INSTALL SUBBASE FOR TENNIS COURT AND PARKING LOT. (1 MONTH)
8. INSTALL PARKING CURB AND GUTTER, SIDEWALKS AND PAVE ALL AREAS TO BE PAVED. (1 MONTH)
9. STABILIZE ALL OTHER AREAS WITH PERMANENT SEEDING, MULCH, AND LANDSCAPING. COMPLETE UTILITY, BUILDING AND REMAINING SITE CONSTRUCTION. (1 MONTH)
10. UPON STABILIZATION OF ALL CONTRIBUTING AREAS, INSTALL BIO-SWALES. (1 WEEK)
11. UPON STABILIZAION OF ALL CONTRIBUTING DRAINAGE AREAS, INSTALL PERVIOUS PAVEMENT AND ASHPALT PAVING OF PARKING LOT. INSTALLATION OF THE FINAL PAVEMENT COURSE MUST BE INSPECTED BY THE ON-SITE GEO-TECHNICAL ENGINEER. (1 MONTH)
12. FLUSH AND PUMP CLEAN THE STORM DRAIN SYSTEM. (1 DAY)
13. UPON PERMANENT STABILIZATION OF ALL DISTURBED AREAS AND WITH APPROVAL OF SEDIMENT CONTROL INSPECTOR, REMOVE ANY REMAINING SEDIMENT CONTROL DEVICES AND ALL NON-NATURAL ITEMS FROM FORESTS, FLOODPLAIN, STREAMS, WETLANDS AND THEIR BUFFERS.

***ALL ROOT PRUNING SHALL BE COMPLETED PRIOR TO ANY CONSTRUCTION ACTIVITIES

***NO CLEARING OR GRUBBING SHALL COMMENCE PRIOR TO THE INSTALLATION OF THE TREE PROTECTION FENCING AND SIGNAGE ADJACENT TO THE CLEARING/GRUBBING AREA WHERE APPLICABLE.

***TREE PROTECTION FENCING AND SIGNAGE SHOULD BE INSTALLED SIMULTANEOUSLY WITH SILT FENCE/SUPER SILT FENCE/IMBRICATED SILT FENCE AND PRIOR TO INSTALLATION OF EARTHS DIKES. (STEP 3)

***ALL TREE PROTECTION FENCING AND SIGNAGE AS INDICATED ON FOREST CONSERVATION PLAN SHEETS FCP2.2 THROUGH FCP2.4 SHALL BE INSTALLED IN STEPS 1 THROUGH 4, BEFORE BEGINNING ROUGH GRADING OF THE ENTIRE SITE.

***TREE PROTECTION FENCING AND SPECIMEN TREE SIGNAGE SHALL BE REMOVED UPON PERMANENT STABILIZATION OF ALL DISTURBED AREAS. FOREST RETENTION SIGNAGE SHALL REMAIN. (STEP 13)

APPROVED: DEPARTMENT OF PLANNING AND ZONING

CHIEF, DEVELOPMENT ENGINEERING DIVISION	DATE 1-6-17
CHIEF, DIVISION OF LAND DEVELOPMENT	DATE 1-11-17
DIRECTOR	DATE 1/11-17

THESE PLANS FOR SMALL POND CONSTRUCTION, SOIL EROSION AND SEDIMENT CONTROL MEET THE REQUIREMENTS OF THE HOWARD SOIL CONSERVATION DISTRICT.

HOWARD SOIL CONSERVATION DISTRICT — DATE 12/21/16

ENGINEER'S CERTIFICATION

"I CERTIFY THAT THIS PLAN FOR POND CONSTRUCTION, EROSION AND SEDIMENT CONTROL REPRESENTS A PRACTICAL AND WORKABLE PLAN BASED ON MY PERSONAL KNOWLEDGE OF THE SITE CONDITIONS. THIS PLAN WAS PREPARED IN ACCORDANCE WITH THE REQUIREMENTS OF THE HOWARD SOIL CONSERVATION DISTRICT. I HAVE NOTIFIED THE DEVELOPER THAT HE/SHE MUST ENGAGE A REGISTERED PROFESSIONAL ENGINEER TO SUPERVISE POND CONSTRUCTION AND PROVIDE THE HOWARD SOIL CONSERVATION DISTRICT WITH AN "AS-BUILT" PLAN OF THE POND WITHIN 30 DAYS OF COMPLETION."

SIGNATURE OF ENGINEER (PRINT NAME BELOW SIGNATURE) Anthony H. Olsen — DATE 11/7/16

DEVELOPER'S CERTIFICATION

"I/WE CERTIFY THAT ALL DEVELOPMENT AND/OR CONSTRUCTION WILL BE DONE ACCORDING TO THESE PLANS, AND THAT ANY RESPONSIBLE PERSONNEL INVOLVED IN THE CONSTRUCTION PROJECT WILL HAVE A CERTIFICATE OF ATTENDANCE AT A DEPARTMENT OF THE ENVIRONMENT APPROVED TRAINING PROGRAM FOR THE CONTROL OF SEDIMENT AND EROSION BEFORE BEGINNING THE PROJECT. I SHALL ENGAGE A REGISTERED PROFESSIONAL ENGINEER TO SUPERVISE POND CONSTRUCTION AND PROVIDE THE HOWARD SOIL CONSERVATION DISTRICT WITH AN "AS-BUILT" PLAN OF THE POND WITHIN 30 DAY OF COMPLETION. I ALSO AUTHORIZE PERIODIC ON-SITE INSPECTIONS BY THE HOWARD SOIL CONSERVATION DISTRICT."

SIGNATURE OF DEVELOPER (PRINT NAME BELOW SIGNATURE) A. RAUL DELERME — DATE 11/10/16

LEGEND

- EXISTING DRAINAGE DIVIDE
- PROPOSED DRAINAGE DIVIDE
- INTERMEDIATE DRAINAGE DIVIDE
- EXISTING/PROPOSED DRAINAGE DIVIDE
- EXISTING TIME OF CONCETRATION FLOW PATH
- SF — SILT FENCE
- SSF — SUPER SILT FENCE
- STABLIZED CONSTRUCTION ENTRANCE
- EROSION CONTROL MATTING
- EXISTING CONTOURS
- FINISHED CONTOURS
- LOD — LIMIT OF DISTURBANCE

REVISIONS		
1	REVISED SITE DEVELOPMENT PLAN	10/26/16

HOWARD COUNTY

DEPARTMENT OF RECREATION AND PARKS
7120 OAKLAND MILLS ROAD
COLUMBIA, MD 21046

DEPARTMENT OF PUBLIC WORKS
9250 BENDIX ROAD
ELLICOTT CITY, MD 21043

WR&A
WHITMAN, REQUARDT & ASSOCIATES, LLP
801 South Caroline Street, Baltimore, Maryland 21231
Phone: 410-235-3450 Fax: 410-243-5716

PROPERTY

TAX MAP 36, GRID 5, PARCEL 3,72

ZONING: RC-DEO

ELECTION DISTRICT 3/7

GRAPHIC SCALES

0 50' 100' 200'
SCALE: 1" = 100'

SIGNATURE

STATE OF MARYLAND — ANTHONY HAMILTON OLSEN — No. 19376 — PROFESSIONAL ENGINEER

PROFESSIONAL CERTIFICATION.
I HEREBY CERTIFY THAT THESE DOCUMENTS WERE PREPARED OR APPROVED BY ME, AND THAT I AM A DULY LICENSED PROFESSIONAL ENGINEER UNDER THE LAWS OF THE STATE OF MARYLAND, LICENSE NO. 19376
EXPIRATION DATE: 09/22/2017

BLANDAIR REGIONAL PARK - PHASE 2

OVERALL SEDIMENT/EROSION CONTROL PLAN

Drawing No.

C1.6

Scale: 1" = 100'		
Date: 03/24/16	Sheet 9 of 41	
Des: CYH	Drawn: CYH	Check: AUO

SDP-12-063

FILENAME: W:\49028-002\CADD\49028002C06.DWG

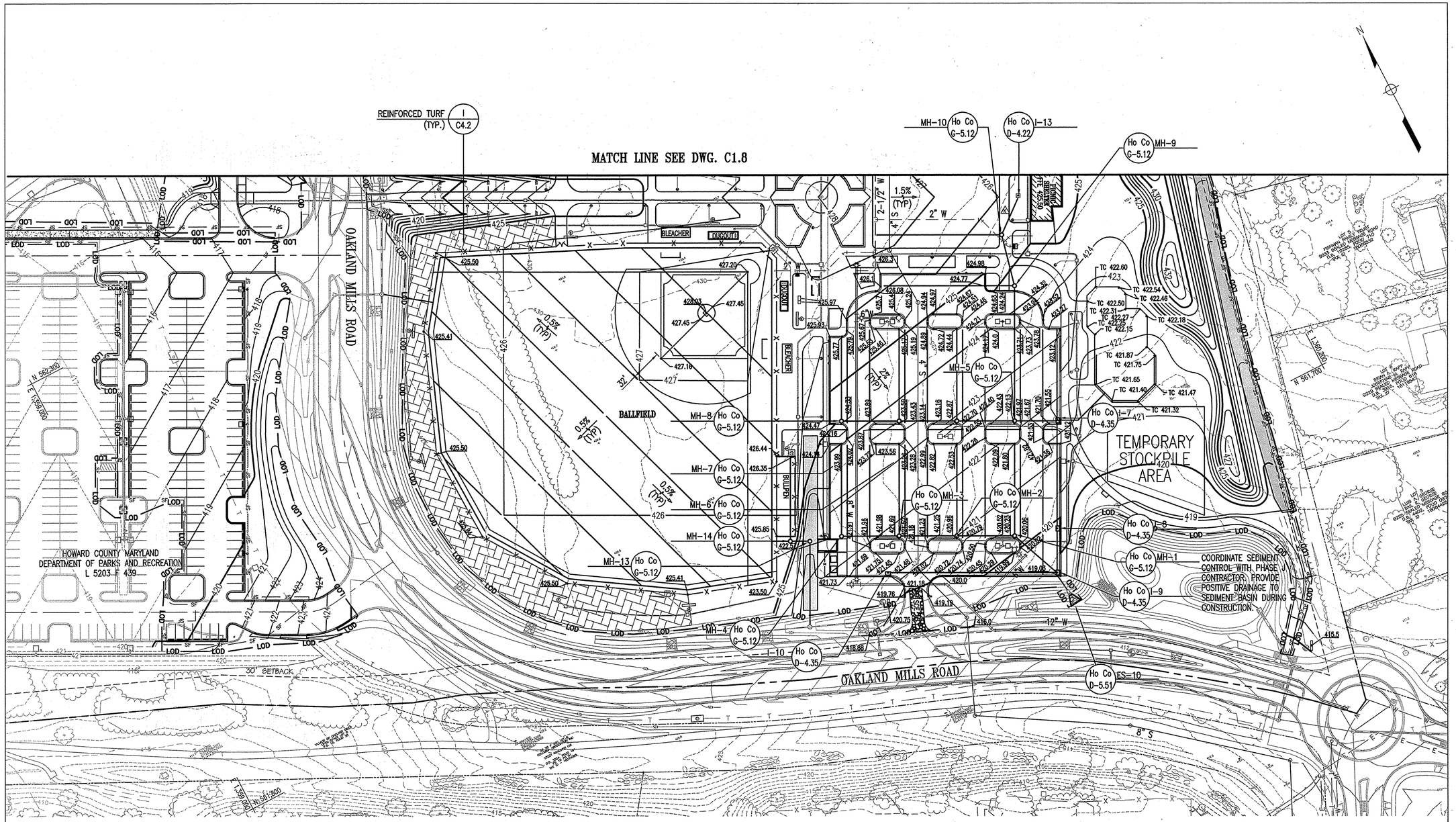

SPOT ELEVATION NOTE:
ALL SPOT ELEVATIONS SHOWN ALONG CURB ARE AT THE BASE OF CURB, ALONG THE FLOW LINE.

DEVELOPER'S CERTIFICATION

"I/WE CERTIFY THAT ALL DEVELOPMENT AND/OR CONSTRUCTION WILL BE DONE ACCORDING TO THESE PLANS, AND THAT ANY RESPONSIBLE PERSONNEL INVOLVED IN THE CONSTRUCTION PROJECT WILL HAVE A CERTIFICATE OF ATTENDANCE AT A DEPARTMENT OF THE ENVIRONMENT APPROVED TRAINING PROGRAM FOR THE CONTROL OF SEDIMENT AND EROSION BEFORE BEGINNING THE PROJECT. ~~I SHALL ENGAGE A REGISTERED PROFESSIONAL ENGINEER TO SUPERVISE POND CONSTRUCTION AND PROVIDE THE HOWARD SOIL CONSERVATION DISTRICT WITH AN "AS-BUILT" PLAN OF THE POND WITHIN 30 DAY OF COMPLETION.~~ I ALSO AUTHORIZE PERIODIC ON-SITE INSPECTIONS BY THE HOWARD SOIL CONSERVATION DISTRICT."

SIGNATURE OF DEVELOPER (PRINT NAME BELOW SIGNATURE) A. RAUL DELERME — DATE 3/27/14

APPROVED: DEPARTMENT OF PLANNING AND ZONING

CHIEF, DEVELOPMENT ENGINEERING DIVISION — DATE 6.17.14

CHIEF, DIVISION OF LAND DEVELOPMENT — DATE 7-28-14

DIRECTOR — DATE 7-28-14

THESE PLANS FOR ~~SMALL POND~~ CONSTRUCTION, SOIL EROSION AND SEDIMENT CONTROL MEET THE REQUIREMENTS OF THE HOWARD SOIL CONSERVATION DISTRICT.

HOWARD SOIL CONSERVATION DISTRICT — DATE 3/27/14

EP1234

ENGINEER'S CERTIFICATION

"I CERTIFY THAT THIS PLAN FOR ~~POND~~ CONSTRUCTION, EROSION AND SEDIMENT CONTROL REPRESENTS A PRACTICAL AND WORKABLE PLAN BASED ON MY PERSONAL KNOWLEDGE OF THE SITE CONDITIONS. THIS PLAN WAS PREPARED IN ACCORDANCE WITH THE REQUIREMENTS OF THE HOWARD SOIL CONSERVATION DISTRICT. ~~I HAVE NOTIFIED THE DEVELOPER THAT HE/SHE MUST ENGAGE A REGISTERED PROFESSIONAL ENGINEER TO SUPERVISE POND CONSTRUCTION AND PROVIDE THE HOWARD SOIL CONSERVATION DISTRICT WITH AN "AS-BUILT" PLAN OF THE POND WITHIN 30 DAYS OF COMPLETION.~~"

SIGNATURE OF ENGINEER (PRINT NAME BELOW SIGNATURE) Anthony U. Olsen — DATE 3/27/14

REVISIONS

HOWARD COUNTY

DEPARTMENT OF RECREATION AND PARKS
7120 OAKLAND MILLS ROAD
COLUMBIA, MD 21046

DEPARTMENT OF PUBLIC WORKS
9250 BENDIX ROAD
ELLICOTT CITY, MD 21043

WHITMAN, REQUARDT & ASSOCIATES, LLP
801 South Caroline Street, Baltimore, Maryland 21231
Phone: 410-235-3450 Fax: 410-243-5716

PROPERTY

TAX MAP 36, GRID 5, PARCEL 3,72

ZONING: RC-DEO

ELECTION DISTRICT 3/7

GRAPHIC SCALES

0 25' 50' 100'
SCALE: 1" = 50'

SIGNATURE

STATE OF MARYLAND — ANTHONY USABURO OLSEN — No. 19376 — PROFESSIONAL ENGINEER

PROFESSIONAL CERTIFICATION.
I HEREBY CERTIFY THAT THESE DOCUMENTS WERE PREPARED OR APPROVED BY ME, AND THAT I AM A DULY LICENSED PROFESSIONAL ENGINEER UNDER THE LAWS OF THE STATE OF MARYLAND, LICENSE NO. 19376
EXPIRATION DATE: 09/22/2015

BLANDAIR REGIONAL PARK - PHASE 2

EROSION & SEDIMENT CONTROL / GRADING PLAN A

Drawing No.

C1.7

Scale: 1" = 50'	
Date: 03/31/2014	Sheet 10 of 41
Des: CYH	Drawn: SAD	Check: AUO

SDP-12-063

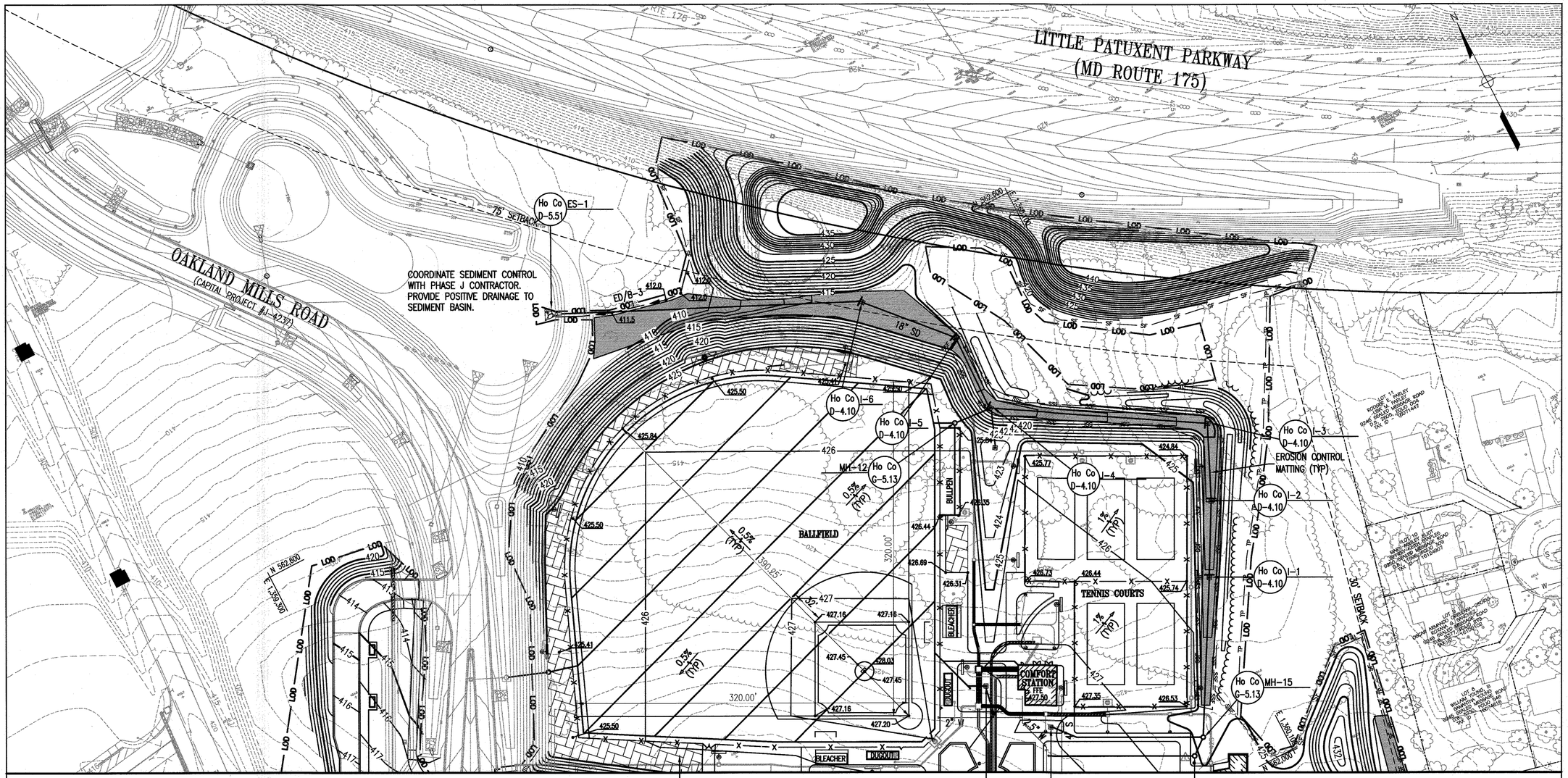

REVISIONS		
1	REVISED SITE DEVELOPMENT PLAN	10/26/16

HOWARD COUNTY

DEPARTMENT OF RECREATION AND PARKS
7120 OAKLAND MILLS ROAD
COLUMBIA, MD 21046

DEPARTMENT OF PUBLIC WORKS
9250 BENDIX ROAD
ELLICOTT CITY, MD 21043

WR&A
WHITMAN, REQUARDT & ASSOCIATES, LLP
801 South Caroline Street, Baltimore, Maryland 21231
Phone: 410-235-3450 Fax: 410-243-5716

PROPERTY

TAX MAP 36, GRID 5, PARCEL 3,72

ZONING: RC-DEO

ELECTION DISTRICT 3/7

GRAPHIC SCALES

0 25' 50' 100'
SCALE: 1" = 50'

SIGNATURE

STATE OF MARYLAND — ANTHONY UGABURO OLSEN — No. 19376 — PROFESSIONAL ENGINEER

PROFESSIONAL CERTIFICATION.
I HEREBY CERTIFY THAT THESE DOCUMENTS WERE PREPARED OR APPROVED BY ME, AND THAT I AM A DULY LICENSED PROFESSIONAL ENGINEER UNDER THE LAWS OF THE STATE OF MARYLAND, LICENSE NO. 19376
EXPIRATION DATE: 09/22/2017

BLANDAIR REGIONAL PARK - PHASE 2

EROSION & SEDIMENT CONTROL / GRADING PLAN B

Drawing No.

C1.8

Scale: 1" = 50'		
Date: 03/24/16	Sheet 11 of 41	
Des: CYH	Drawn: SAD	Check: AUO

SDP-12-063

DEVELOPER'S CERTIFICATION

"I/WE CERTIFY THAT ALL DEVELOPMENT AND/OR CONSTRUCTION WILL BE DONE ACCORDING TO THESE PLANS, AND THAT ANY RESPONSIBLE PERSONNEL INVOLVED IN THE CONSTRUCTION PROJECT WILL HAVE A CERTIFICATE OF ATTENDANCE AT A DEPARTMENT OF THE ENVIRONMENT APPROVED TRAINING PROGRAM FOR THE CONTROL OF SEDIMENT AND EROSION BEFORE BEGINNING THE PROJECT. I SHALL ENGAGE A REGISTERED PROFESSIONAL ENGINEER TO SUPERVISE POND CONSTRUCTION AND PROVIDE THE HOWARD SOIL CONSERVATION DISTRICT WITH AN "AS-BUILT" PLAN OF THE POND WITHIN 30 DAY OF COMPLETION. I ALSO AUTHORIZE PERIODIC ON-SITE INSPECTIONS BY THE HOWARD SOIL CONSERVATION DISTRICT."

SIGNATURE OF DEVELOPER A. RAUL DELERME DATE 11/10/16
(PRINT NAME BELOW SIGNATURE)

APPROVED: DEPARTMENT OF PLANNING AND ZONING

CHIEF, DEVELOPMENT ENGINEERING DIVISION DATE 1-6-17
CHIEF, DIVISION OF LAND DEVELOPMENT DATE 1-11-17
DIRECTOR DATE 1-11-17

THESE PLANS FOR SMALL POND CONSTRUCTION, SOIL EROSION AND SEDIMENT CONTROL MEET THE REQUIREMENTS OF THE HOWARD SOIL CONSERVATION DISTRICT.

HOWARD SOIL CONSERVATION DISTRICT DATE 12/22/16

ENGINEER'S CERTIFICATION

"I CERTIFY THAT THIS PLAN FOR POND CONSTRUCTION, EROSION AND SEDIMENT CONTROL REPRESENTS A PRACTICAL AND WORKABLE PLAN BASED ON MY PERSONAL KNOWLEDGE OF THE SITE CONDITIONS. THIS PLAN WAS PREPARED IN ACCORDANCE WITH THE REQUIREMENTS OF THE HOWARD SOIL CONSERVATION DISTRICT. I HAVE NOTIFIED THE DEVELOPER THAT HE/SHE MUST ENGAGE A REGISTERED PROFESSIONAL ENGINEER TO SUPERVISE POND CONSTRUCTION AND PROVIDE THE HOWARD SOIL CONSERVATION DISTRICT WITH AN "AS-BUILT" PLAN OF THE POND WITHIN 30 DAYS OF COMPLETION."

SIGNATURE OF ENGINEER Anthony U. Olsen DATE 11/7/16
(PRINT NAME BELOW SIGNATURE)

FILENAME: W:\4169B-BDE\CADD\4169BBDE08B.DWG

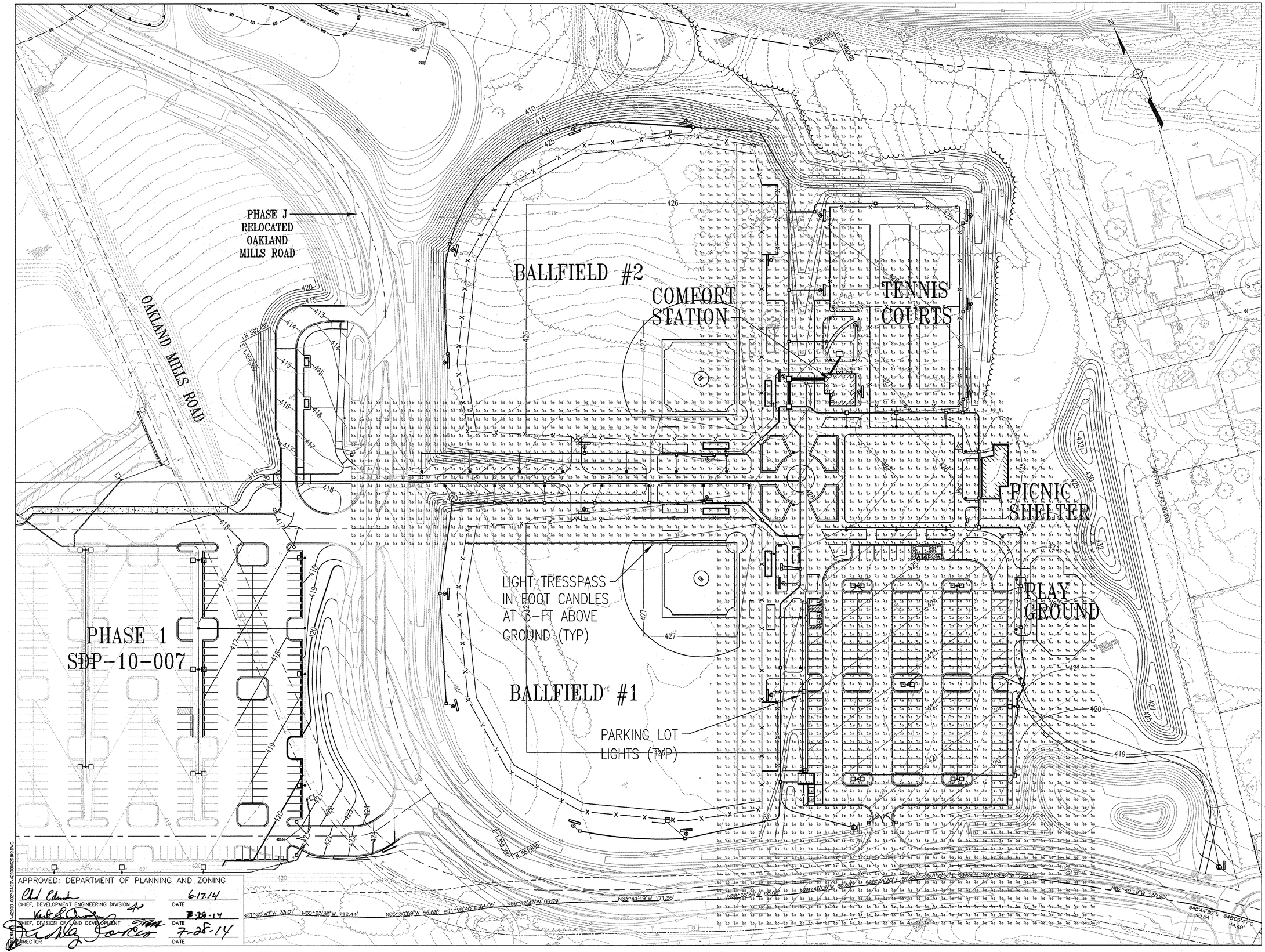

APPROVED: DEPARTMENT OF PLANNING AND ZONING

CHIEF, DEVELOPMENT ENGINEERING DIVISION	DATE 6.17.14
CHIEF, DIVISION OF LAND DEVELOPMENT	DATE 7-28-14
DIRECTOR	DATE 7-28-14

REVISIONS

HOWARD COUNTY

DEPARTMENT OF
RECREATION AND PARKS
7120 OAKLAND MILLS ROAD
COLUMBIA, MD 21046

DEPARTMENT OF
PUBLIC WORKS
9250 BENDIX ROAD
ELLICOTT CITY, MD 21043

WR&A

WHITMAN, REQUARDT
& ASSOCIATES, LLP
801 South Caroline Street, Baltimore, Maryland 21231
Phone: 410-235-3450 Fax: 410-243-5716

PROPERTY

TAX MAP 36, GRID 5, PARCEL 3,72

ZONING: RC-DEO

ELECTION DISTRICT 3/7

GRAPHIC SCALES

0 25' 50' 100'
SCALE: 1" = 50'

SIGNATURE

STATE OF MARYLAND
ANTHONY USABURO OLSEN
No. 19376
PROFESSIONAL ENGINEER

PROFESSIONAL CERTIFICATION.
I HEREBY CERTIFY THAT THESE DOCUMENTS WERE PREPARED OR APPROVED BY ME, AND THAT I AM A DULY LICENSED PROFESSIONAL ENGINEER UNDER THE LAWS OF THE STATE OF MARYLAND, LICENSE NO. 19376
EXPIRATION DATE: 09/22/2015

BLANDAIR REGIONAL
PARK - PHASE 2

PHOTOMETRIC TEST DIAGRAM

Drawing No.

C1.9

Scale: 1" = 50'		
Date: 03/31/2014	Sheet 12 of 41	
Des: CYH	Drawn: CYH	Check: AUO

SDP-12-063

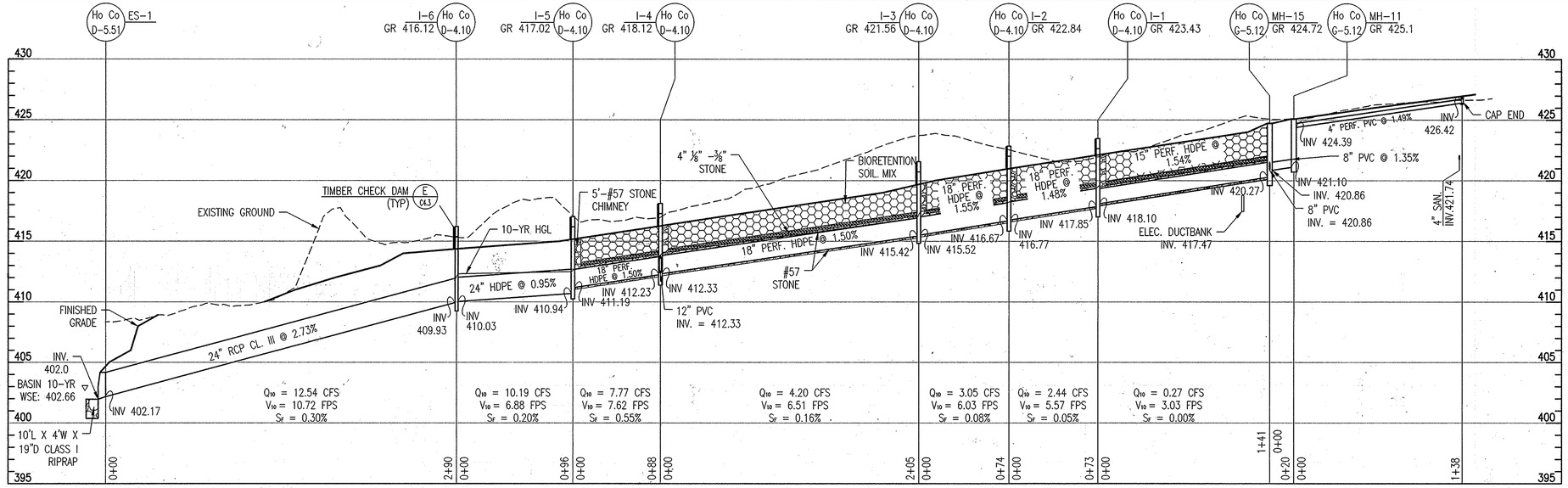

STORM DRAIN PROFILE: I-1 TO ES-1

SCALE: 1" = 50' HORIZONTAL, 1" = 5' VERTICAL

ESD FACILITY ELEVATION CHART

ESD FACILITY	FILTER BED ELEVATION	INLET	INLET TOP ELEV.	INLET INV. OUT	UNDERDRAIN INV. ELEV.	FACILITY BOTTOM
MB-1	422.75	I-18	423.75	419.50	419.75	419.58
MB-2	420.10	I-16	421.10	417.48	417.50	416.93
MB-3	421.50	I-17	422.50	418.18	418.50	418.33
MB-4	414.00	I-19	415.00	410.77	410.80	410.83
BS-2	415.55	I-20	415.55*	410.10	412.40	412.38

* CHECK DAM AT INLET WEIR ELEV. = 416.55

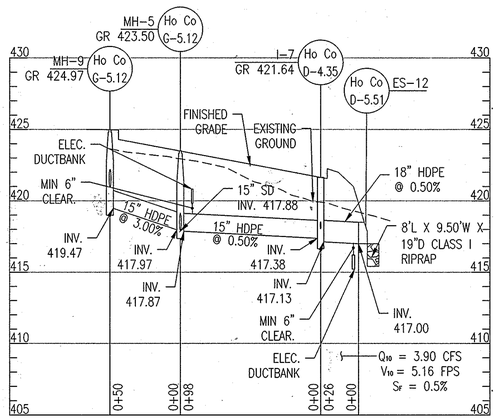

STORM DRAIN PROFILE: MH-9 TO ES-12

SCALE: 1" = 50' HORIZONTAL, 1" = 5' VERTICAL

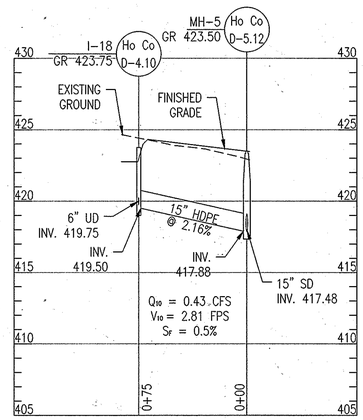

STORM DRAIN PROFILE: I-18 TO MH-5

SCALE: 1" = 50' HORIZONTAL, 1" = 5' VERTICAL

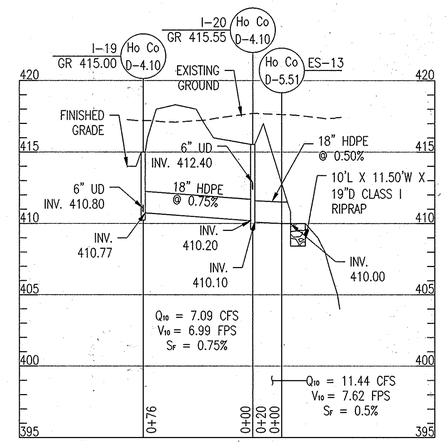

STORM DRAIN PROFILE: I-19 TO ES-13

SCALE: 1" = 50' HORIZONTAL, 1" = 5' VERTICAL

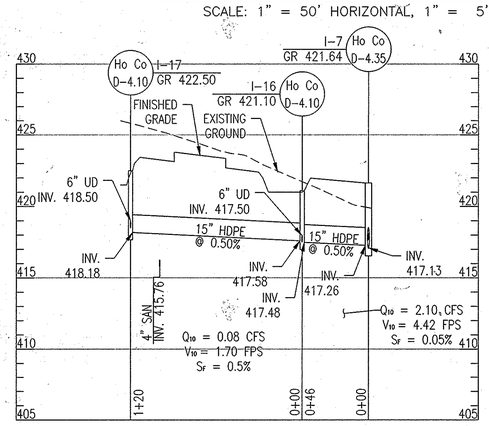

STORM DRAIN PROFILE: I-17 TO I-7

SCALE: 1" = 50' HORIZONTAL, 1" = 5' VERTICAL

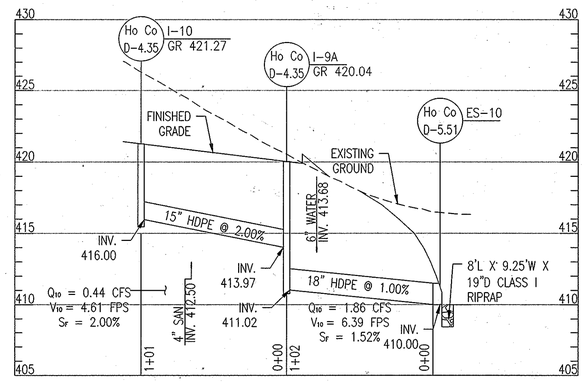

STORM DRAIN PROFILE: I-10 TO ES-10

SCALE: 1" = 50' HORIZONTAL, 1" = 5' VERTICAL

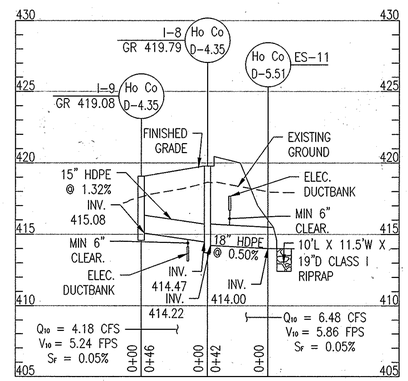

STORM DRAIN PROFILE: I-9 TO ES-11

SCALE: 1" = 50' HORIZONTAL, 1" = 5' VERTICAL

APPROVED: DEPARTMENT OF PLANNING AND ZONING

CHIEF, DEVELOPMENT ENGINEERING DIVISION	DATE 5-17-16
CHIEF, DIVISION OF LAND DEVELOPMENT	DATE 5-19-16
DIRECTOR	DATE 5-19-16

FILENAME: W:\4598-09\CADD\4598SDP2C01-R4.DWG

REVISIONS		
	REDLINE REVISION 7	3/22/16

HOWARD COUNTY

DEPARTMENT OF RECREATION AND PARKS
7120 OAKLAND MILLS ROAD
COLUMBIA, MD 21046

DEPARTMENT OF PUBLIC WORKS
9250 BENDIX ROAD
ELLICOTT CITY, MD 21043

WHITMAN, REQUARDT & ASSOCIATES, LLP
801 South Caroline Street, Baltimore, Maryland 21231
Phone: 410-235-3450 Fax: 410-243-5716

PROPERTY

TAX MAP 36, GRID 5, PARCEL 3,72

ZONING: RC-DEO

ELECTION DISTRICT 3/7

GRAPHIC SCALES

0 25' 50' 100'
SCALE: 1" = 50'

0 5' 10'
SCALE: 1" = 5'

SIGNATURE

STATE OF MARYLAND — WILLIAM USABURO OSHIRO — No. 19376 — PROFESSIONAL ENGINEER

PROFESSIONAL CERTIFICATION.
I HEREBY CERTIFY THAT THESE DOCUMENTS WERE PREPARED OR APPROVED BY ME, AND THAT I AM A DULY LICENSED PROFESSIONAL ENGINEER UNDER THE LAWS OF THE STATE OF MARYLAND, LICENSE NO. 19376
EXPIRATION DATE: 09/22/2017

BLANDAIR REGIONAL PARK - PHASE 2

STORM DRAIN PROFILES
REVISED SITE DEVELOPMENT PLAN

Drawing No.

C2.1

Scale: AS SHOWN		
Date: 03/24/16	Sheet 13 of 41	
Des: SAD	Drawn: SAD	Check: AUO

SDP-12-063

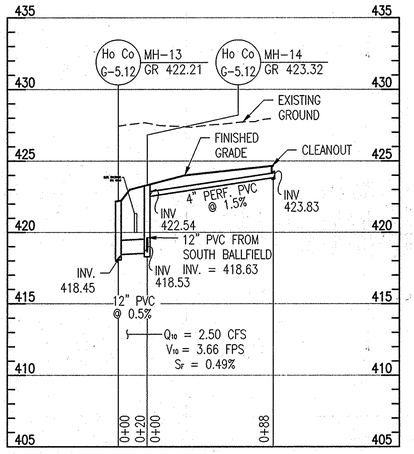

UNDERDRAIN PROFILE: MH-13 TO MH-14

SCALE: 1" = 50' HORIZONTAL, 1" = 5' VERTICAL

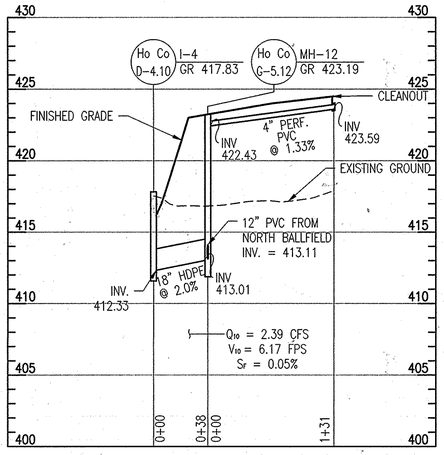

UNDERDRAIN PROFILE: I-4 TO MH-12

SCALE: 1" = 50' HORIZONTAL, 1" = 5' VERTICAL

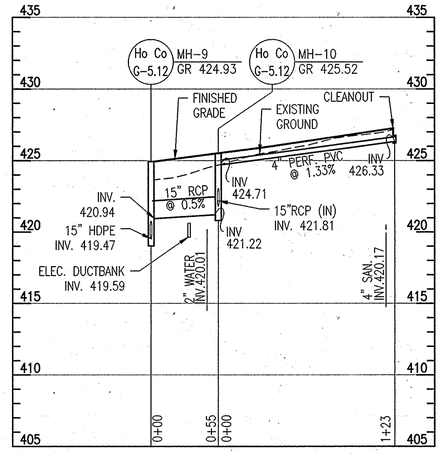

UNDERDRAIN PROFILE: MH-9 TO MH-10

SCALE: 1" = 50' HORIZONTAL, 1" = 5' VERTICAL

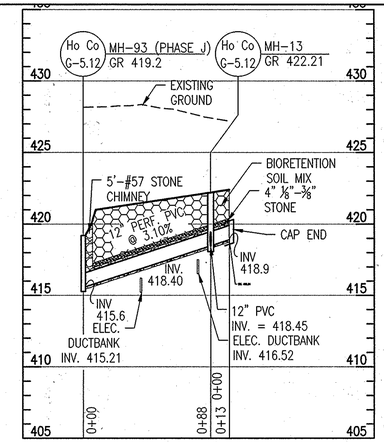

UNDERDRAIN PROFILE: BIOSWALE 9A2-B

SCALE: 1" = 50' HORIZONTAL, 1" = 5' VERTICAL

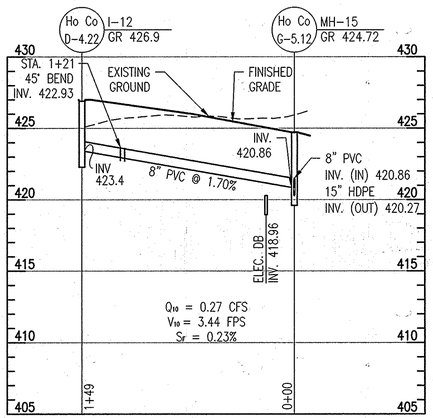

STORM DRAIN PROFILE: I-12 TO MH-15

SCALE: 1" = 50' HORIZONTAL, 1" = 5' VERTICAL

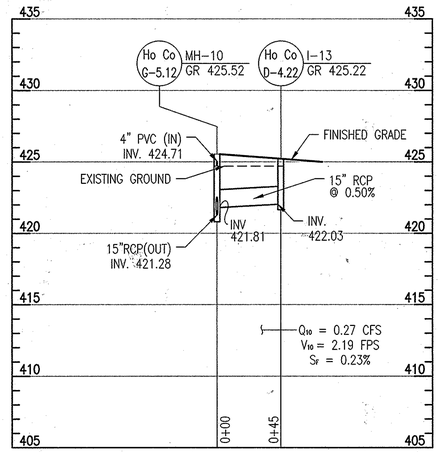

STORM DRAIN PROFILE: MH-10 TO I-13

SCALE: 1" = 50' HORIZONTAL, 1" = 5' VERTICAL

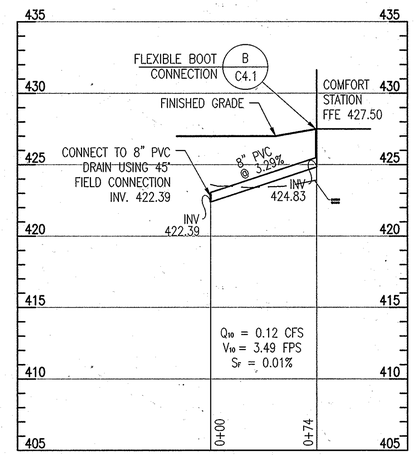

STORM DRAIN PROFILE: COMFORT STATION DRAIN

SCALE: 1" = 50' HORIZONTAL, 1" = 5' VERTICAL

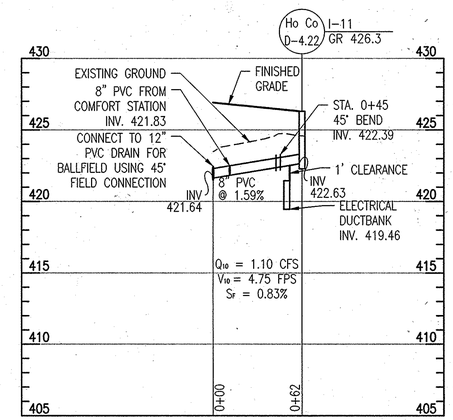

STORM DRAIN PROFILE: I-11 TO BALLFIELD

SCALE: 1" = 50' HORIZONTAL, 1" = 5' VERTICAL

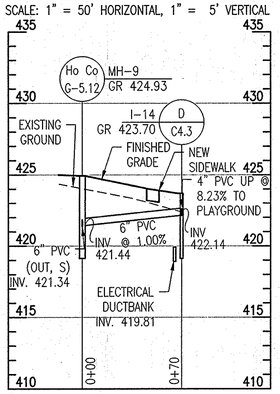

STORM DRAIN PROFILE: I-14 TO MH-9

SCALE: 1" = 50' HORIZONTAL, 1" = 5' VERTICAL

STORM DRAIN PIPE SCHEDULE

FROM	TO	SIZE	TYPE	LENGTH
CAP	MH-11	4	PVC	138
MH-11	MH-15	8	PVC	20
I-12	MH-15	8	PVC	149
MH-15	I-1	15	HDPE	141
I-1	I-2	15	HDPE	73
I-2	I-3	15	HDPE	74
I-3	I-4	15	HDPE	205
MH-12	I-4	18	HDPE	38
CAP	MH-12	4	PVC	131
I-4	I-5	18	HDPE	88
I-5	I-6	21	HDPE	96
I-6	ES-1	21	HDPE	290
CAP	MH-9	6	PVC	135
CAP	MH-10	15	RCP	123
MH-10	MH-9	15	RCP	55
MH-9	MH-5	15	HDPE	50
MH-5	I-7	15	HDPE	98
I-7	ES-12	18	HDPE	26
I-10	I-9A	15	HDPE	101
I-9A	ES-10	18	HDPE	102
I-9	I-8	15	HDPE	46
I-8	ES-11	18	HDPE	42
I-17	I-16	15	HDPE	120
I-16	I-7	15	HDPE	46
I-18	MH-5	15	HDPE	75
I-19	I-20	18	HDPE	76
I-20	ES-13	18	HDPE	20

STORM DRAIN PIPE SCHEDULE

FROM	TO	SIZE	TYPE	LENGTH
MH-1	I-9	6	PVC	59
CAP	I-7	6	PVC	94
CAP	I-7	4	PVC	60
MH-14	MH-13	12	PVC	20
MH-13	MH-93	12	PVC	88
CAP	MH-13	12	PVC	13
I-13	MH-10	6	PVC	45
CS	I-11	8	PVC	74
I-11	BALLFIELD	8	PVC	62
I-14	MH-9	6	PVC	68
I-15	PP	6	PVC	25

STORM DRAIN STRUCTURE SCHEDULE

NO.	TYPE	STANDARD DETAIL	GRATE/RIM ELEV	THROAT ELEV
ES-1	CONCRETE END SECTION	HO.CO. D-5.51		-
ES-10	CONCRETE END SECTION	HO.CO. D-5.51		-
ES-11	CONCRETE END SECTION	HO.CO. D-5.51		-
ES-12	CONCRETE END SECTION	HO.CO. D-5.51		-
ES-13	CONCRETE END SECTION	HO.CO. D-5.51		-
I-1	TYPE 'D' INLET	HO.CO. D-4.10		422.63
I-2	TYPE 'D' INLET	HO.CO. D-4.10		422.01
I-3	TYPE 'D' INLET	HO.CO. D-4.10		420.73
I-4	TYPE 'D' INLET	HO.CO. D-4.10		417.29
I-5	TYPE 'D' INLET	HO.CO. D-4.10		416.19
I-6	TYPE 'D' INLET	HO.CO. D-4.10		415.38
I-7	DOUBLE WR INLET	HO.CO. D-4.35	421.64	-
I-8	DOUBLE WR INLET	HO.CO. D-4.35	419.79	-
I-9	DOUBLE WR INLET	HO.CO. D-4.35	419.08	-
I-9A	DOUBLE WR INLET	HO.CO. D-4.36	420.04	-
I-10	DOUBLE WR INLET	HO.CO. D-4.35	421.27	-
I-11	TYPE 'S' INLET	HO.CO. D-4.22	426.30	-
I-12	TYPE 'S' INLET	HO.CO. D-4.22	426.90	-
I-13	TYPE 'S' INLET	HO.CO. D-4.22	425.22	-
I-14	24" NYLOPLAST INLET	DETAIL D/C4.3	423.70	
I-15	24" NYLOPLAST INLET	DETAIL D/C4.3	422.50	-
I-16	TYPE 'D' INLET	HO.CO. D-4.10	421.10	-
I-17	TYPE 'D' INLET	HO.CO. D-4.10	422.50	-
I-18	TYPE 'D' INLET	HO.CO. D-4.10	423.75	-
I-19	TYPE 'D' INLET	HO.CO. D-4.10	415.00	-
I-20	TYPE 'D' INLET	HO.CO. D-4.10	415.55	-
MH-5	4'-0" PRECAST MANHOLE	HO.CO. G-5.12	423.50	-
MH-6	4'-0" PRECAST MANHOLE	HO.CO. G-5.12	422.91	-
MH-7	4'-0" PRECAST MANHOLE	HO.CO. G-5.12	423.64	-
MH-8	4'-0" PRECAST MANHOLE	HO.CO. G-5.12	424.35	-
MH-9	4'-0" PRECAST MANHOLE	HO.CO. G-5.12	424.97	-
MH-10	4'-0" PRECAST MANHOLE	HO.CO. G-5.12	425.52	-
MH-11	4'-0" PRECAST MANHOLE	HO.CO. G-5.12	425.11	-
MH-12	4'-0" PRECAST MANHOLE	HO.CO. G-5.12	423.19	-
MH-13	4'-0" PRECAST MANHOLE	HO.CO. G-5.12	422.21	-
MH-14	4'-0" PRECAST MANHOLE	HO.CO. G-5.12	423.32	-
MH-15	4'-0" PRECAST MANHOLE	HO.CO. G-5.12	424.72	-

APPROVED: DEPARTMENT OF PLANNING AND ZONING

CHIEF, DEVELOPMENT ENGINEERING DIVISION	DATE 5-17-16
CHIEF, DIVISION OF LAND DEVELOPMENT	DATE 5-19-16
DIRECTOR	DATE 5-19-16

FILENAME: IN-42939-002\CADD\42939002C202-R3.DWG

REVISIONS		
	REDLINE REVISION 7	3/22/16

HOWARD COUNTY

DEPARTMENT OF RECREATION AND PARKS
7120 OAKLAND MILLS ROAD
COLUMBIA, MD 21046

DEPARTMENT OF PUBLIC WORKS
9250 BENDIX ROAD
ELLICOTT CITY, MD 21043

WR&A
WHITMAN, REQUARDT & ASSOCIATES, LLP
801 South Caroline Street, Baltimore, Maryland 21231
Phone: 410-235-3450 Fax: 410-243-5716

PROPERTY

TAX MAP 36, GRID 5, PARCEL 3,72

ZONING: RC-DEO

ELECTION DISTRICT 3/7

GRAPHIC SCALES

0 25' 50' 100'
SCALE: 1" = 50'

0 5' 10'
SCALE: 1" = 5'

SIGNATURE

STATE OF MARYLAND — WILLIAM USABUTO CHEN — No. 19376 — PROFESSIONAL ENGINEER

PROFESSIONAL CERTIFICATION.
I HEREBY CERTIFY THAT THESE DOCUMENTS WERE PREPARED OR APPROVED BY ME, AND THAT I AM A DULY LICENSED PROFESSIONAL ENGINEER UNDER THE LAWS OF THE STATE OF MARYLAND, LICENSE NO. 19376
EXPIRATION DATE: 09/22/2017

BLANDAIR REGIONAL PARK - PHASE 2

STORM DRAIN PROFILES
REVISED SITE DEVELOPMENT PLAN

Drawing No.
C2.2

Scale: AS SHOWN		
Date: 03/24/16	Sheet 14 of 41	
Des: SAD	Drawn: SAD	Check: AUO

SDP-12-063

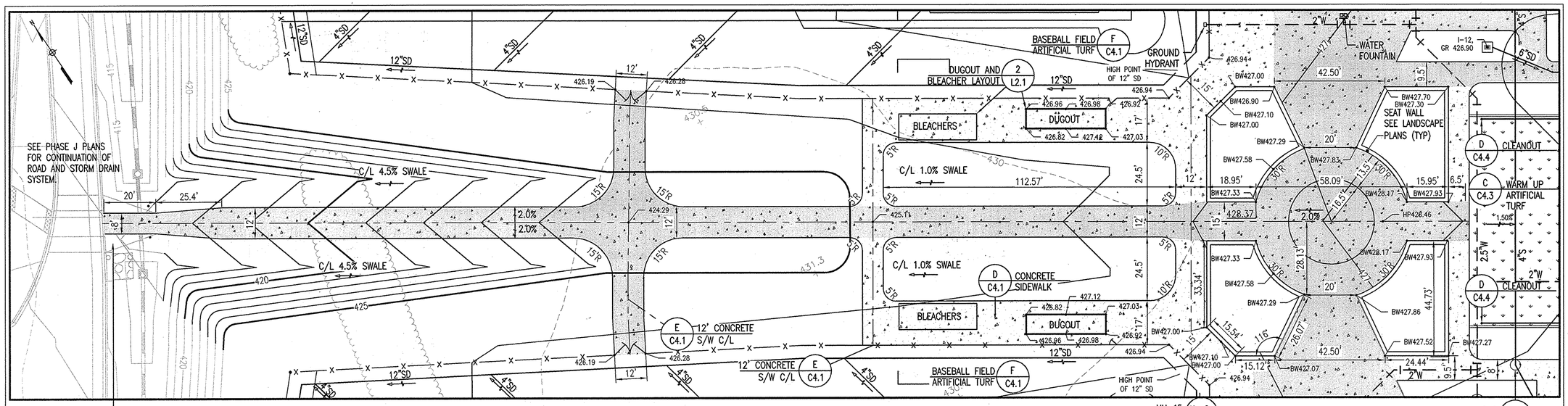

A C3.1 ENLARGED WALKWAY PLAN
1" = 20'

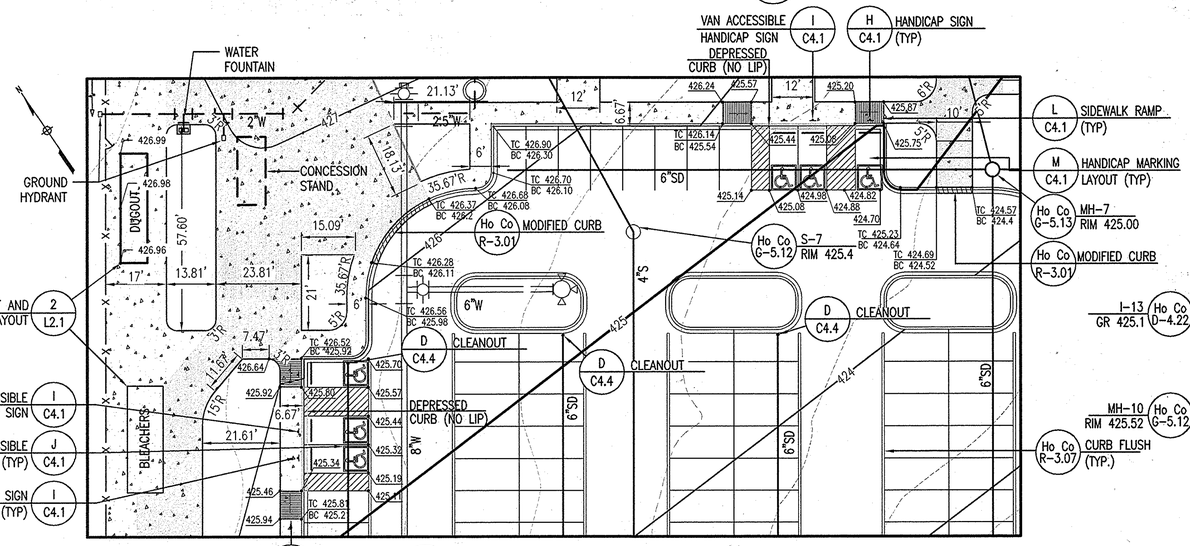

B C3.1 ACCESSIBLE PARKING PLAN
1" = 20'

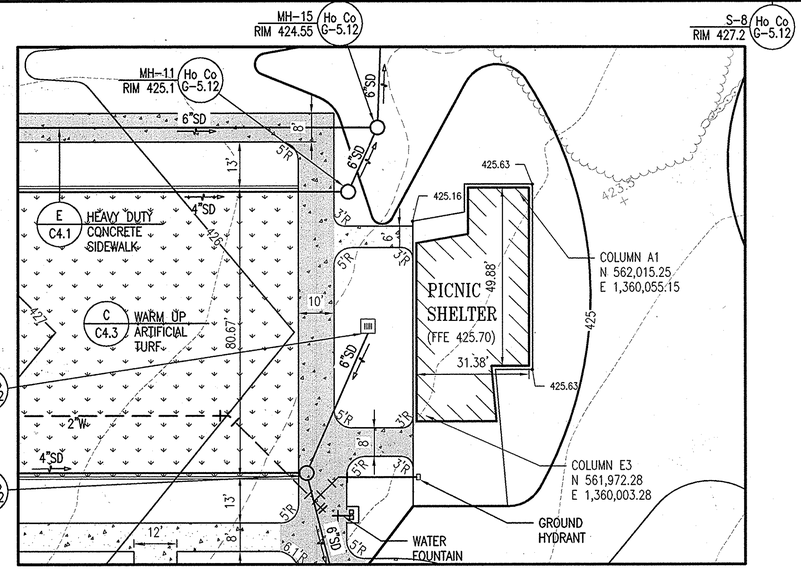

C C3.1 ENLARGED PICNIC SHELTER PLAN
1" = 20'

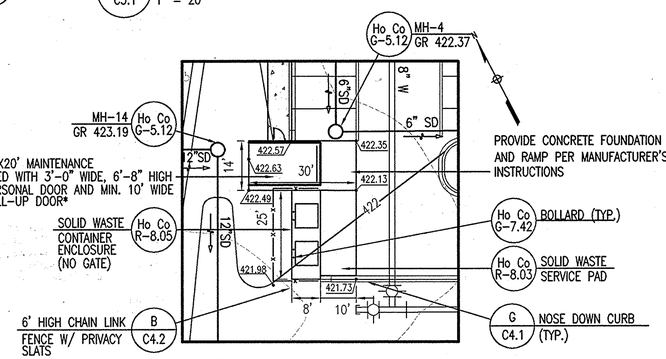

E C3.1 SERVICE AREA PLAN
1" = 20'

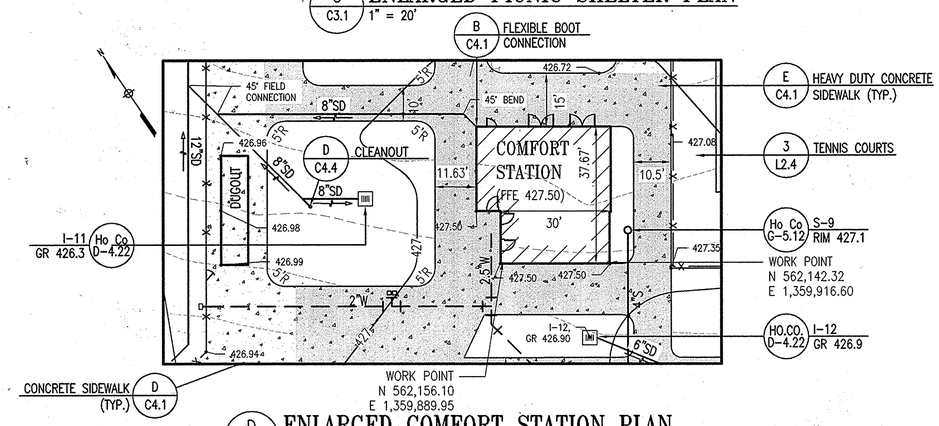

D C3.1 ENLARGED COMFORT STATION PLAN
1" = 20'

LEGEND

CONCRETE PAVEMENT

HEAVY DUTY CONCRETE PAVEMENT

*DELEGATED DESIGN: MAINTENANCE SHED AND ASSOCIATED RAMP AND CONCRETE FOUNDATION TO RECEIVE A COMPREHENSIVE ENGINEERING ANALYSIS PERFORMED BY A MARYLAND LICENSED PROFESSIONAL ENGINEER (PE), USING PERFORMANCE REQUIREMENTS AND DESIGN CRITERIA INDICATED ON THIS DRAWING AND BY MANUFACTURER. PE TO PROVIDE STAMPED DRAWINGS AND OBTAIN BUILDING PERMIT AS REQUIRED BY HOWARD COUNTY CODES.

APPROVED: DEPARTMENT OF PLANNING AND ZONING

CHIEF, DEVELOPMENT ENGINEERING DIVISION	DATE 6-17-14
CHIEF, DIVISION OF LAND DEVELOPMENT	DATE 6-28-14
DIRECTOR	DATE 7-28-14

NOTE:
PLEASE SEE DRAWING WS0.1–WS0.4 FOR WATER AND SEWER CONSTRUCTION.

REVISIONS

HOWARD COUNTY
DEPARTMENT OF RECREATION AND PARKS
7120 OAKLAND MILLS ROAD
COLUMBIA, MD 21046

DEPARTMENT OF PUBLIC WORKS
9250 BENDIX ROAD
ELLICOTT CITY, MD 21043

WHITMAN, REQUARDT & ASSOCIATES, LLP
801 South Caroline Street, Baltimore, Maryland 21231
Phone: 410-235-3450 Fax: 410-243-5716

PROPERTY

TAX MAP 36, GRID 5, PARCEL 3,72

ZONING: RC-DEO

ELECTION DISTRICT 3/7

GRAPHIC SCALES

0 10' 20' 40'
SCALE: 1" = 20'

SIGNATURE

STATE OF MARYLAND — ANTHONY USABURO UCHIDA — No. 19376 — PROFESSIONAL ENGINEER

PROFESSIONAL CERTIFICATION.
I HEREBY CERTIFY THAT THESE DOCUMENTS WERE PREPARED OR APPROVED BY ME, AND THAT I AM A DULY LICENSED PROFESSIONAL ENGINEER UNDER THE LAWS OF THE STATE OF MARYLAND, LICENSE NO. 19376
EXPIRATION DATE: 09/22/2015

BLANDAIR REGIONAL PARK – PHASE 2

ENLARGED SITE PLANS

Drawing No.
C3.1

Scale: 1" = 20'		
Date: 03/31/2014	Sheet 15 of 41	
Des: CYH	Drawn: SAD	Check: AUO

SDP-12-063

PLOT DATE: 4/4/2014 9:53:54 AM PAGE SETUP: V:\R+P\P GRXERO PLOT STYLE: VRA_B096.CTB PAPER SIZE:36X24

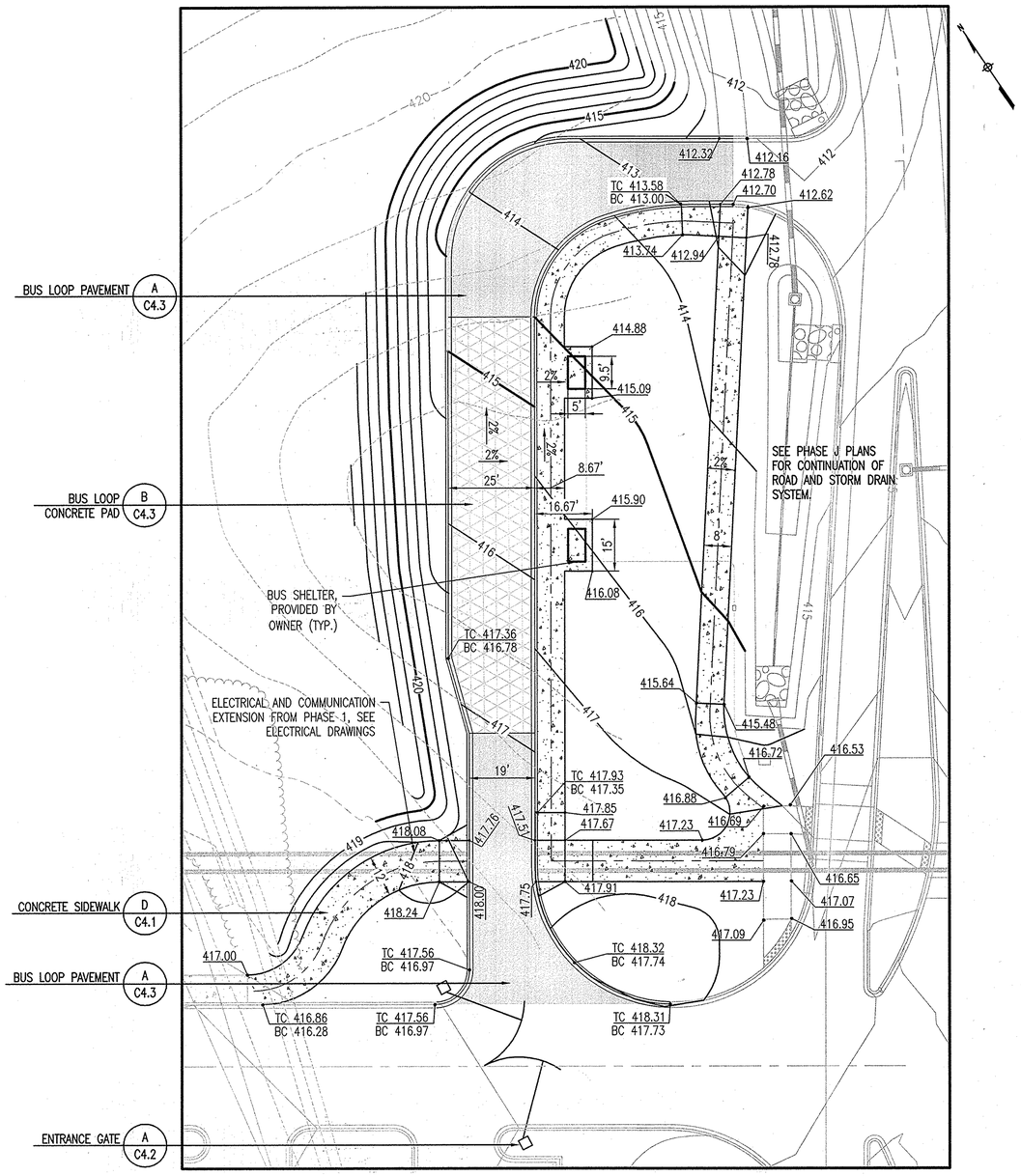

A C3.2 ENLARGED BUS LOOP PLAN
1" = 20'

APPROVED: DEPARTMENT OF PLANNING AND ZONING

CHIEF, DEVELOPMENT ENGINEERING DIVISION	DATE 6-17-14
CHIEF, DIVISION OF LAND DEVELOPMENT	DATE 7-28-14
DIRECTOR	DATE 7-28-14

REVISIONS

HOWARD COUNTY

DEPARTMENT OF RECREATION AND PARKS
7120 OAKLAND MILLS ROAD
COLUMBIA, MD 21046

DEPARTMENT OF PUBLIC WORKS
9250 BENDIX ROAD
ELLICOTT CITY, MD 21043

WHITMAN, REQUARDT & ASSOCIATES, LLP
801 South Caroline Street, Baltimore, Maryland 21231
Phone: 410-235-3450 Fax: 410-243-5716

PROPERTY

TAX MAP 36, GRID 5, PARCEL 3,72

ZONING: RC-DEO

ELECTION DISTRICT 3/7

GRAPHIC SCALES

0 10' 20' 40'
SCALE: 1" = 20'

SIGNATURE

STATE OF MARYLAND
ANTHONY USABURO OLSEN
No. 19376
PROFESSIONAL ENGINEER

PROFESSIONAL CERTIFICATION:
I HEREBY CERTIFY THAT THESE DOCUMENTS WERE PREPARED OR APPROVED BY ME, AND THAT I AM A DULY LICENSED PROFESSIONAL ENGINEER UNDER THE LAWS OF THE STATE OF MARYLAND, LICENSE NO. 19376
EXPIRATION DATE: 09/22/2015

BLANDAIR REGIONAL PARK - PHASE 2

ENLARGED SITE PLANS

Drawing No.

C3.2

Scale: 1" = 20'		
Date: 03/31/2014	Sheet 16 of 41	
Des: BWJ/SAD	Drawn: SAD	Check: AUO

SDP-12-063

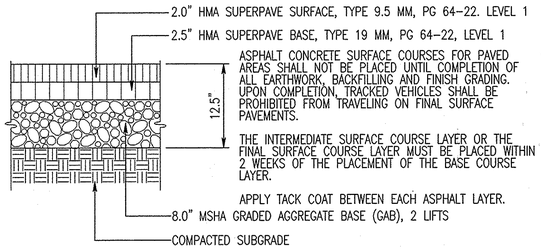

A C4.1 BITUMINOUS CONCRETE PAVEMENT
NOT TO SCALE

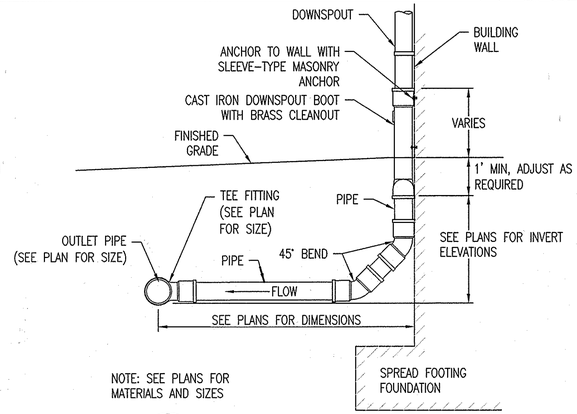

NOTE: SEE PLANS FOR MATERIALS AND SIZES

B C4.1 FLEXIBLE BOOT CONNECTION
NOT TO SCALE

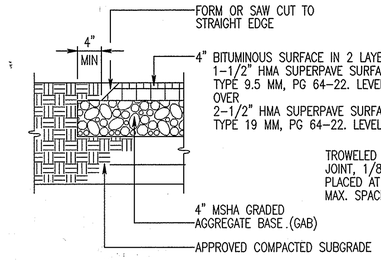

C C4.1 BITUMINOUS SIDEWALK
NOT TO SCALE

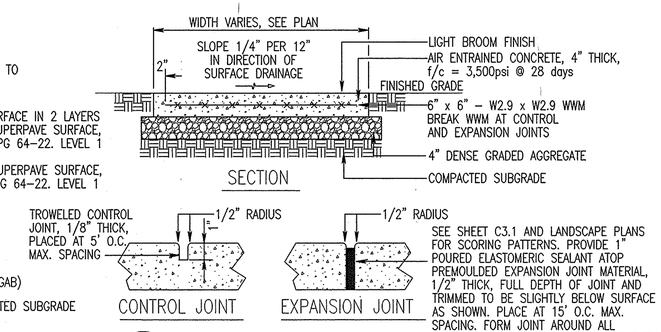

SEE SHEET C3.1 AND LANDSCAPE PLANS FOR SCORING PATTERNS. PROVIDE 1" POURED ELASTOMERIC SEALANT ATOP PREMOULDED EXPANSION JOINT MATERIAL, 1/2" THICK, FULL DEPTH OF JOINT AND TRIMMED TO BE SLIGHTLY BELOW SURFACE AS SHOWN. PLACE AT 15' O.C. MAX. SPACING. FORM JOINT AROUND ALL APPURTENANCES EXTENDING INTO OR THRU CONCRETE AND BETWEEN CONCRETE AND ANY FIXED STRUCTURE (BUILDING, CURB, ETC.)

D C4.1 CONCRETE SIDEWALK
NOT TO SCALE

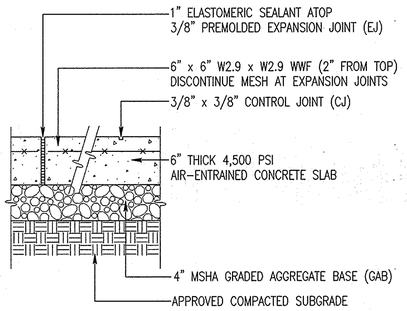

E C4.1 HEAVY-DUTY CONCRETE PAVEMENT
NOT TO SCALE

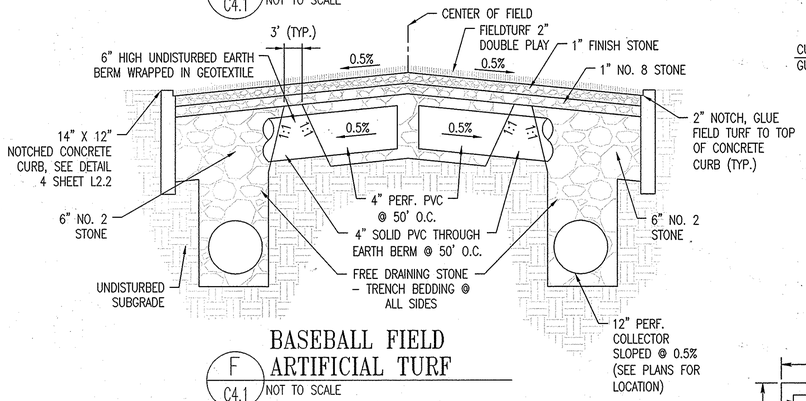

F C4.1 BASEBALL FIELD ARTIFICIAL TURF
NOT TO SCALE

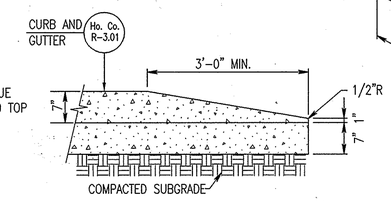

G C4.1 NOSE DOWN CURB
NOT TO SCALE

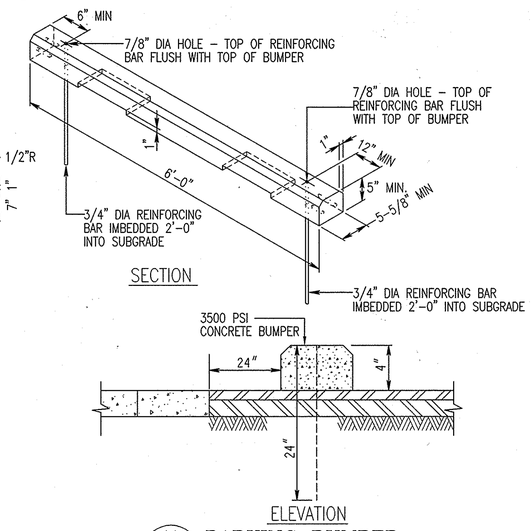

K C4.1 PARKING BUMPER
NOT TO SCALE

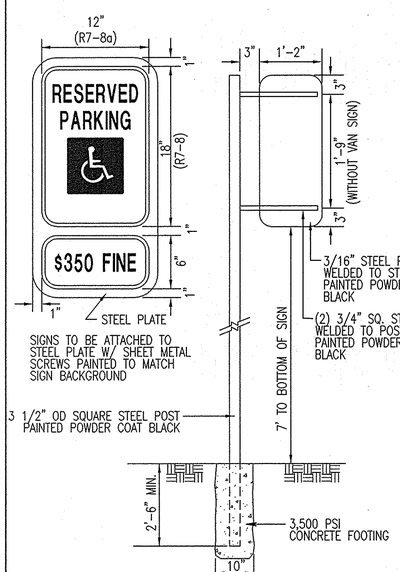

H C4.1 HANDICAP SIGN
NOT TO SCALE

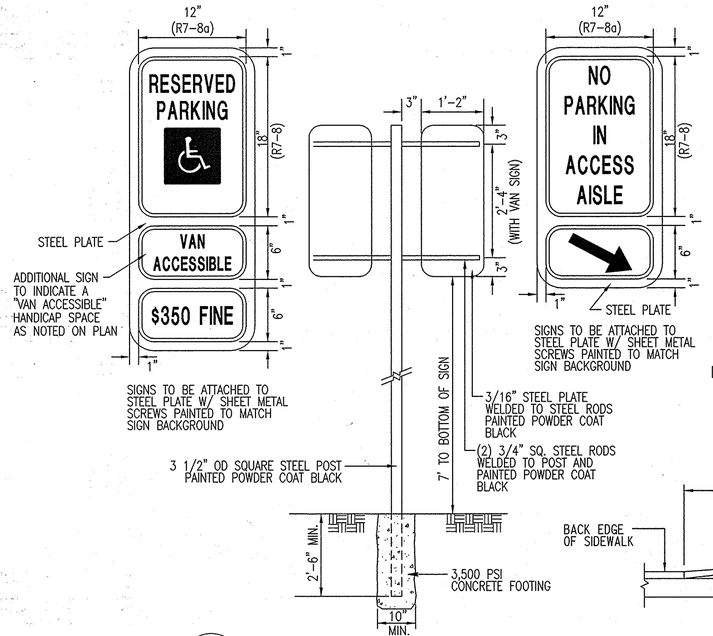

I C4.1 VAN ACCESSIBLE HANDICAP SIGN
NOT TO SCALE

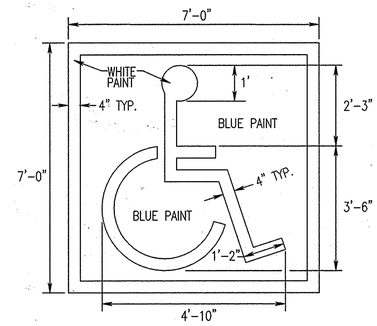

J C4.1 ACCESSIBLE STENCIL
NOT TO SCALE

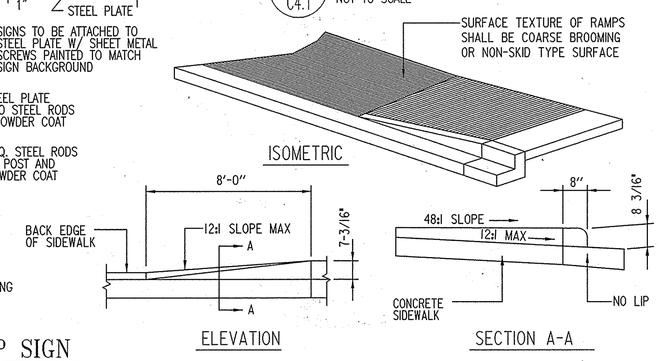

L C4.1 SIDEWALK RAMP DETAIL
NO SCALE

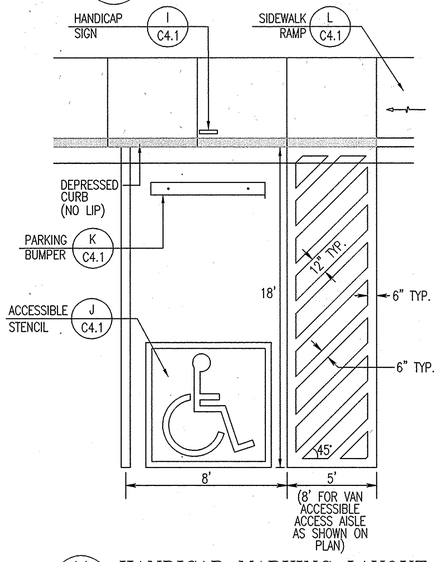

M C4.1 HANDICAP MARKING LAYOUT
NOT TO SCALE

APPROVED: DEPARTMENT OF PLANNING AND ZONING

CHIEF, DEVELOPMENT ENGINEERING DIVISION	DATE 6-17-14
CHIEF, DIVISION OF LAND DEVELOPMENT	DATE 7-23-14
DIRECTOR	DATE 7-28-14

REVISIONS		

HOWARD COUNTY

DEPARTMENT OF RECREATION AND PARKS
7120 OAKLAND MILLS ROAD
COLUMBIA, MD 21046

DEPARTMENT OF PUBLIC WORKS
9250 BENDIX ROAD
ELLICOTT CITY, MD 21043

WHITMAN, REQUARDT & ASSOCIATES, LLP
801 South Caroline Street, Baltimore, Maryland 21231
Phone: 410-235-3450 Fax: 410-243-5716

PROPERTY

TAX MAP 36, GRID 5, PARCEL 3,72

ZONING: RC-DEO

ELECTION DISTRICT 3/7

GRAPHIC SCALES

SIGNATURE

STATE OF MARYLAND — ANTHONY USABURO OKASHI — No. 19376 — PROFESSIONAL ENGINEER

PROFESSIONAL CERTIFICATION.
I HEREBY CERTIFY THAT THESE DOCUMENTS WERE PREPARED OR APPROVED BY ME, AND THAT I AM A DULY LICENSED PROFESSIONAL ENGINEER UNDER THE LAWS OF THE STATE OF MARYLAND, LICENSE NO. 19376
EXPIRATION DATE: 09/22/2015

BLANDAIR REGIONAL PARK - PHASE 2

SITE DETAILS

Drawing No.
C4.1

Scale: NONE		
Date: 03/31/2014	Sheet 17 of 41	
Des: CYH	Drawn: CJK	Check: AUO

SDP-12-063

PLOT DATE: 4/4/2014 9:30:58 AM PAGE SETUP: V06-PDF (36X24) PLOT STYLE: VRA_2006.CTB PAPER SIZE:36X24

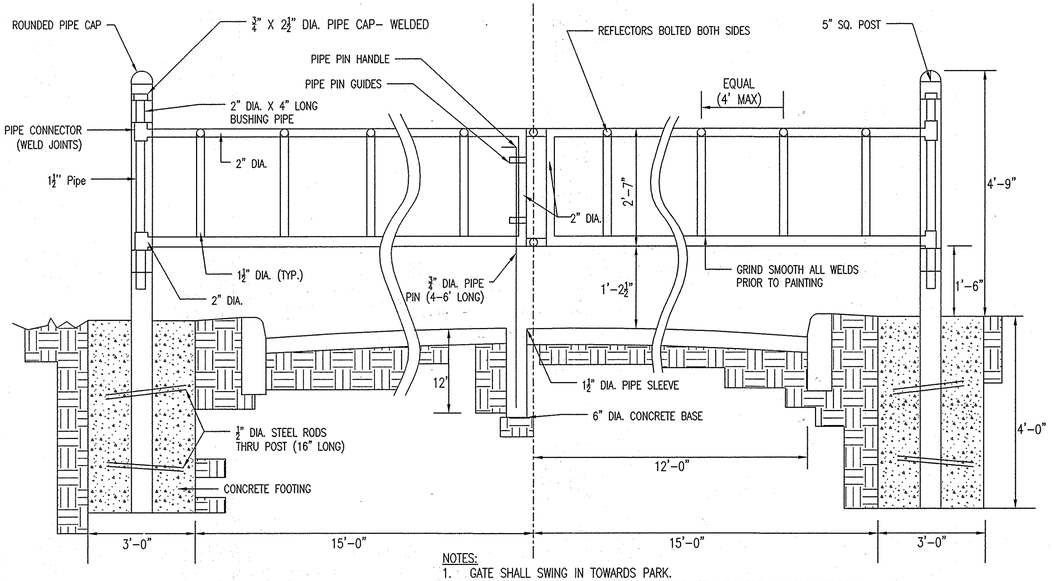

NOTES:
1. GATE SHALL SWING IN TOWARDS PARK.
2. CONTRACTOR TO PROVIDE SHOP DRAWINGS OF GATE FOR OWNERS APPROVAL.
3. PAINT GATES AND POST WITH TWO (2) COATS OF GLOSS BLACK, POLYURETHANE PAINT, PRIME FIRST.
4. INSTALL 4"X4" HOLD–OPEN POSTS ON EACH SIDE OF GATE, 2 FT. 7 IN. FROM EDGE OF ROADWAY, AND APPROPRIATE DISTANCE FROM GATE.

A / C4.2 ENTRANCE GATE
NOT TO SCALE

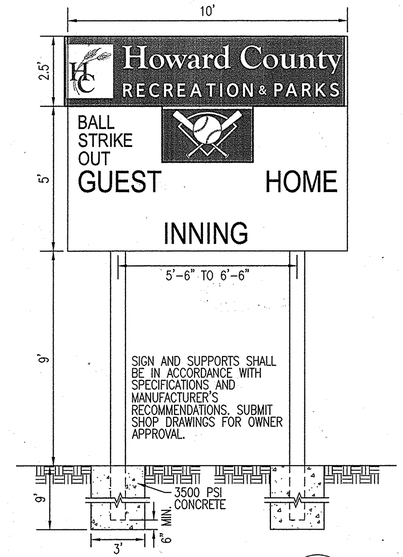

SCOREBOARD ELEVATION B / C4.2
NOT TO SCALE

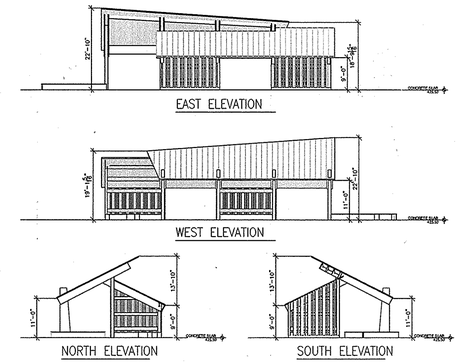

C / C4.2 PICNIC SHELTER ELEVATIONS
SCALE: 1" = 20'

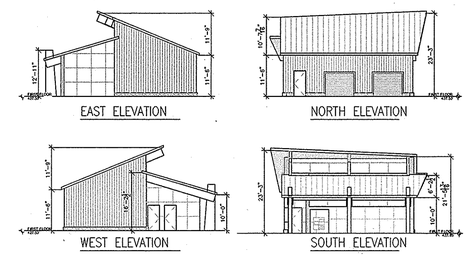

E / C4.2 COMFORT STATION ELEVATIONS
SCALE: 1" = 20'

NOTES:

1. A REVERSE GUTTER PAN SHALL HAVE A GUTTER SLOPE OF 4.17% AWAY FROM THE FLOW LINE, AND SHALL NOT BE USED WHERE THIS DRAINAGE CREATES A HAZARDOUS CONDITION.
2. GUTTER PAN AT THE MEDIAN EDGE OF INTERMEDIATE ARTERIALS OR THE HIGH SIDE OF SUPERELEVATED SECTIONS SHALL BE SLOPED AT THE SAME RATE AND IN THE SAME DIRECTION AS THE PAVEMENT. MATCH PAVEMENT CROSS SLOPE WHEN CURB IS LOCATED ON THE LOW SIDE OF SUPERELEVATED SECTION AND THE RATE OF SUPERELEVATION IS GREATER THAN 3% FOR MODIFIED CURB & GUTTER.
3. A MINIMUM OF TWO (2) FEET OF COMPACTED STABILIZED EARTH, OR EQUIVALENT, SHALL SUPPORT THE ENTIRE BACK OF CURB.
4. POSITIVE DRAINAGE SHALL BE PROVIDED BOTH BEHIND THE CURB AND ALONG THE GUTTER AND FLOW LINE.
5. DETAIL PROVIDED FOR REFERENCE ONLY. SEE HOWARD COUNTY STANDARD DETAILS.

Ho. Co. R–3.01 HOWARD CO. 7" CURB
NOT TO SCALE

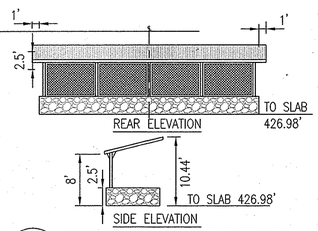

D / C4.2 DUGOUT ELEVATIONS
SCALE: 1" = 10'

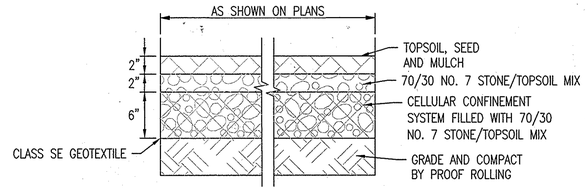

I / C4.2 REINFORCED TURF
NOT TO SCALE

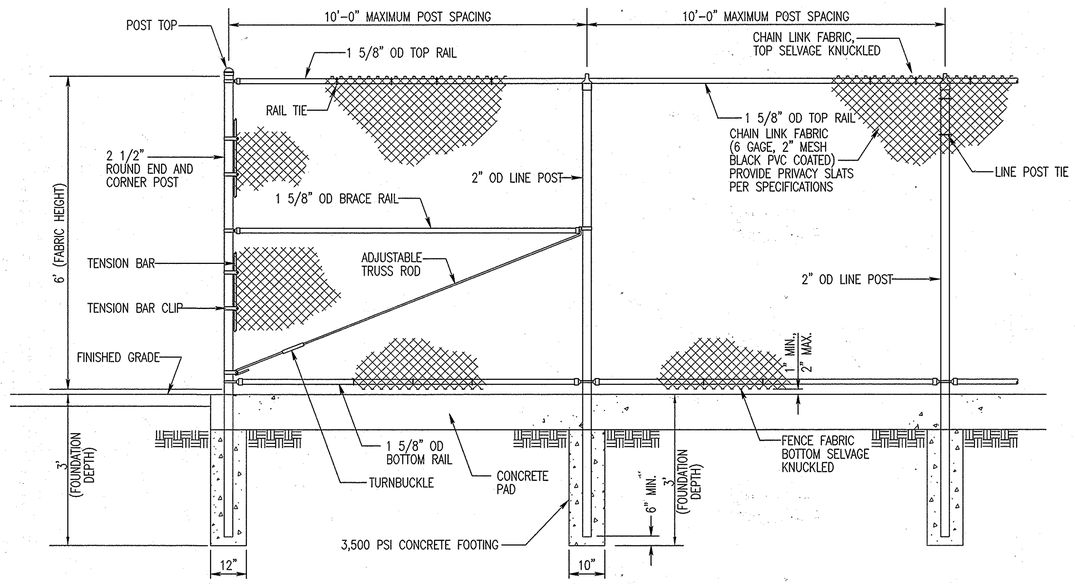

F / C4.2 CHAIN LINK FENCE FOR SOLID WASTE ENCLOSURE
NOT TO SCALE

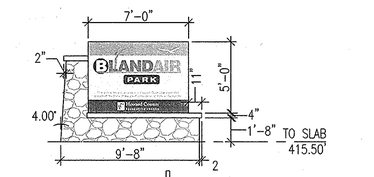

SEE ARCHITECTURAL PLANS FOR DETAILS

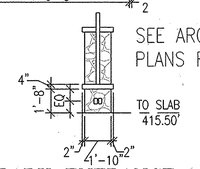

G / C4.2 PARK ENTRANCE SIGN ELEVATIONS
SCALE: 1" = 5'

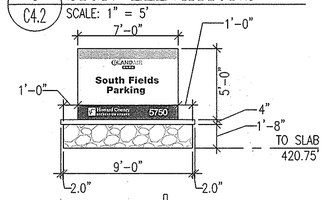

SEE ARCHITECTURAL PLANS FOR DETAILS

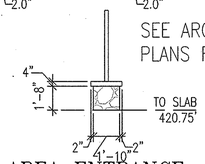

H / C4.2 AREA ENTRANCE SIGN ELEVATIONS
SCALE: 1" = 5'

APPROVED: DEPARTMENT OF PLANNING AND ZONING

CHIEF, DEVELOPMENT ENGINEERING DIVISION	DATE 6-17-14
CHIEF, DIVISION OF LAND DEVELOPMENT	DATE 7-28-14
DIRECTOR	DATE 7-28-14

REVISIONS		

HOWARD COUNTY
DEPARTMENT OF RECREATION AND PARKS
7120 OAKLAND MILLS ROAD
COLUMBIA, MD 21046

DEPARTMENT OF PUBLIC WORKS
9250 BENDIX ROAD
ELLICOTT CITY, MD 21043

WR&A
WHITMAN, REQUARDT & ASSOCIATES, LLP
801 South Caroline Street, Baltimore, Maryland 21231
Phone: 410-235-3450 Fax: 410-243-5716

PROPERTY

TAX MAP 36, GRID 5, PARCEL 3,72

ZONING: RC–DEO

ELECTION DISTRICT 3/7

GRAPHIC SCALES
0 10' 20' 40'
SCALE: 1" = 20'–0"
0 5' 10' 20'
SCALE: 1" = 10'–0"
0 5' 10'
SCALE: 1" = 5'–0"

SIGNATURE

STATE OF MARYLAND — ANTHONY USABURO QUIJADA — No. 19376 — PROFESSIONAL ENGINEER

PROFESSIONAL CERTIFICATION.
I HEREBY CERTIFY THAT THESE DOCUMENTS WERE PREPARED OR APPROVED BY ME, AND THAT I AM A DULY LICENSED PROFESSIONAL ENGINEER UNDER THE LAWS OF THE STATE OF MARYLAND, LICENSE NO. 19376
EXPIRATION DATE: 09/22/2015

BLANDAIR REGIONAL PARK – PHASE 2

SITE DETAILS

Drawing–No.
C4.2

Scale: AS SHOWN		
Date: 03/31/2014	Sheet 18 of 41	
Des: CYH	Drawn: CJK	Check: AUQ

SDP–12–063

PLOT DATE: 4/4/2014 8:07:52 AM PAGE SETUP: VORA-PDF (36X24) PLOT STYLE: VORA_DRAFT.CTB PAPER SIZE:36X24

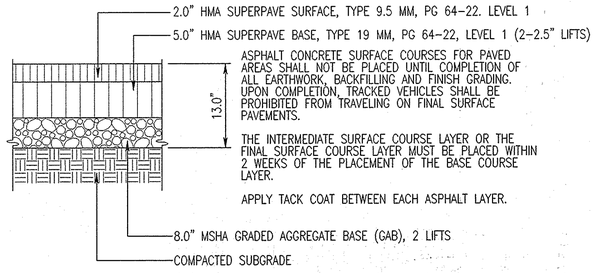

A C4.3 BUS LOOP PAVEMENT

NOT TO SCALE

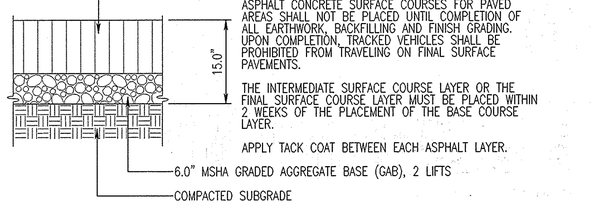

B C4.3 BUS LOOP CONCRETE PAD

NOT TO SCALE

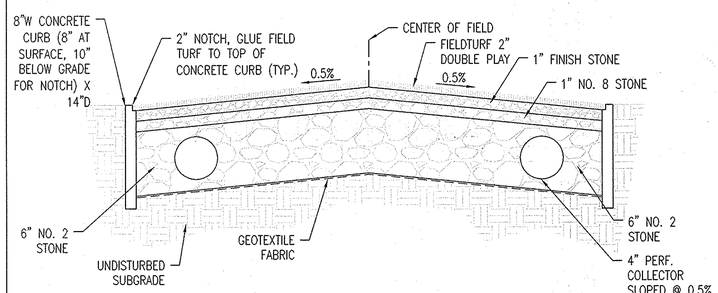

C C4.3 WARM-UP ARTIFICIAL TURF

NOT TO SCALE

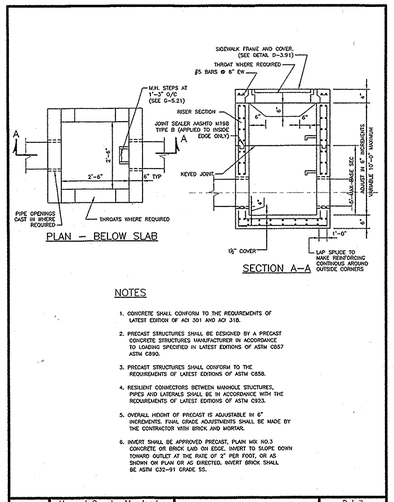

NOTES

1. CONCRETE SHALL CONFORM TO THE REQUIREMENTS OF LATEST EDITION OF ACI 301 AND ACI 318.
2. PRECAST STRUCTURES SHALL BE DESIGNED BY A PRECAST CONCRETE STRUCTURES MANUFACTURER IN ACCORDANCE TO LOADING SPECIFIED IN LATEST EDITIONS OF ASTM C857 ASTM C890.
3. PRECAST STRUCTURES SHALL CONFORM TO THE REQUIREMENTS OF LATEST EDITIONS OF ASTM C858.
4. RESILIENT CONNECTORS BETWEEN MANHOLE STRUCTURES, PIPES AND LATERALS SHALL BE IN ACCORDANCE WITH THE REQUIREMENTS OF LATEST EDITIONS OF ASTM C923.
5. OVERALL HEIGHT OF PRECAST IS ADJUSTABLE IN 6" INCREMENTS. FINAL GRADE ADJUSTMENTS SHALL BE MADE BY THE CONTRACTOR WITH BRICK AND MORTAR.
6. INVERT SHALL BE APPROVED PRECAST, PLAN NO. NO.3 CONCRETE OR BRICK LAID ON EDGE. INVERT TO SLOPE DOWN TOWARD OUTLET AT THE RATE OF 2" PER FOOT, OR AS SHOWN ON PLAN OR AS DIRECTED. INVERT BRICK SHALL BE ASTM C32-91 GRADE SS.

Revised	Howard County, Maryland Department of Public Works	Type 'D' Inlet Precast	Detail D-4.10
Revised			
Revised 5/1/2003	Approved: Chief, Bureau of Engineering		
Approved			

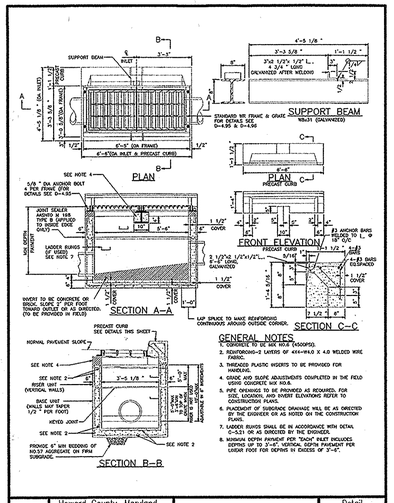

GENERAL NOTES

1. CONCRETE TO BE MIX NO.6B (6000PSI).
2. REINFORCING-2 LAYERS OF 4X4-W4.0 X 4.0 WELDED WIRE FABRIC.
3. THREADED PLASTIC INSERTS TO BE PROVIDED FOR LIFTING HOLES.
4. GRADE AND SLOPE ADJUSTMENTS COMPLETED IN THE FIELD USING CONCRETE MIX NO.6.
5. PIPE OPENINGS TO BE PROVIDED AS REQUIRED. FOR SIZE, LOCATION, AND INVERT ELEVATIONS REFER TO CONSTRUCTION PLANS.
6. PLACEMENT OF SUBGRADE DRAINAGE WILL BE AS DIRECTED BY THE ENGINEER OR AS NOTED ON THE CONSTRUCTION PLANS.
7. LADDER RUNG SHALL BE ASSEMBLED WITH DETAIL C-5.21 "MANHOLE STEP" (TYPICAL).
8. MINIMUM DEPTH PAVEMENT PER "TRENCH" INLET INCLUDES DEPTHS UP TO 2'-6". VERTICAL DEPTH PAVEMENT PER LINEAR FOOT FOR DEPTHS IN EXCESS OF 2'-6".

Revised	Howard County, Maryland Department of Public Works	Double WR' Inlet Precast	Detail D-4.35
Revised			
Revised 5/1/2003	Approved: Chief, Bureau of Engineering		
Approved			

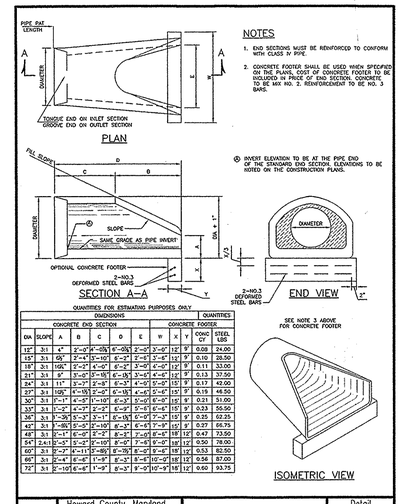

NOTES

1. END SECTIONS MUST BE REINFORCED TO CONFORM WITH CLASS IV PIPE.
2. CONCRETE FOOTER SHALL BE USED WHEN SPECIFIED ON THE PLANS. COST OF CONCRETE FOOTER TO BE INCLUDED IN PRICE OF END SECTION. CONCRETE TO BE MIX NO. 2. REINFORCEMENT TO BE NO. 3 BARS.
3. INVERT ELEVATION TO BE AT THE PIPE END OF THE STANDARD END SECTION. ELEVATIONS TO BE NOTED ON THE CONSTRUCTION PLANS.

QUANTITIES FOR ESTIMATING PURPOSES ONLY

DIMENSIONS									QUANTITIES	
					CONCRETE END SECTION			CONCRETE FOOTER		
DIA	SLOPE	A	B	C	D	E	W	X	Y	CONC CY	STEEL LBS
12"	3:1	4"	2'-0"	1'-03 5/8"	1'-0½"	2'-0"	3'-0"	12"	9"	0.08	24.00
15"	3:1	6¾"	2'-4"	1'-10"	1'-2"	2'-6"	3'-6"	12"	9"	0.10	28.50
18"	3:1	10¼"	2'-7"	1'-4"-0"	1'-2"	2'-10"	4'-0"	12"	9"	0.11	33.00
21"	3:1	9"	3'-0"	1'-10"	1'-1½"	3'-4"	4'-6"	12"	9"	0.13	37.50
24"	3:1	11"	3'-3"	2'-0"	1'-3"	3'-10"	5'-0"	12"	9"	0.17	42.00
27"	3:1	10¾"	4'-10"	2'-0"	1'-1½"	4'-4"	5'-6"	12"	9"	0.19	46.50
30"	3:1	1'-1"	4'-5"	1'-10"	1'-3"	5'-0"	6'-0"	12"	9"	0.21	51.00
33"	3:1	1'-2"	4'-7"	2'-2"	1'-3"	5'-6"	6'-6"	12"	9"	0.33	56.50
36"	3:1	1'-3½"	5'-3"	3'-1"	1'-1½"	6'-0"	7'-0"	12"	9"	0.25	62.25
42"	3:1	1'-4¾"	6'-0"	3'-10"	1'-3"	6'-6"	7'-6"	12"	9"	0.27	66.75
48"	3:1	2'-1"	6'-0"	2'-2"	1'-3"	7'-0"	8'-6"	18"	12"	0.47	72.50
54"	2.4:1	2'-5"	5'-0"	3'-10"	1'-6"	8'-0"	9'-0"	18"	12"	0.50	78.00
60"	2.4:1	2'-7"	4'-11"	3'-10"	1'-7½"	8'-6"	9'-6"	18"	12"	0.53	82.50
66"	3:1	2'-4"	6'-6"	1'-9"	1'-3"	9'-6"	10'-0"	18"	12"	0.56	87.00
72"	3:1	2'-10"	6'-6"	1'-9"	1'-3"	10'-0"	10'-6"	18"	12"	0.60	93.75

Revised	Howard County, Maryland Department of Public Works	Concrete End Section Circular Concrete Pipe	Detail D-5.51
Revised			
Revised 5/1/2003	Approved: Chief, Bureau of Engineering		
Approved			

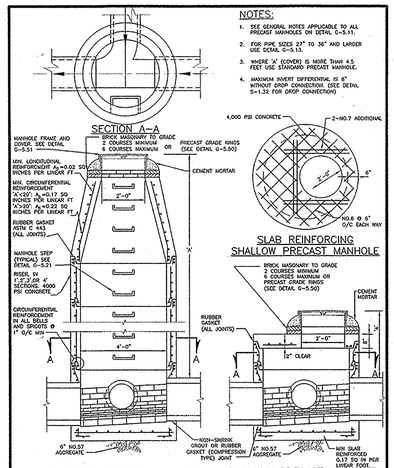

NOTES:

1. SEE GENERAL NOTES APPLICABLE TO ALL PRECAST MANHOLES ON DETAIL G-5.11.
2. FOR PIPE SIZES 27" TO 36" AND LARGER USE DETAIL G-5.13.
3. WHERE 'A' (COVER) IS MORE THAN 4.5 FEET USE STANDARD PRECAST MANHOLE.
4. MAXIMUM INVERT DIFFERENTIAL IS 6" WITHOUT DROP CONNECTION. (SEE DETAIL S-1.32 FOR DROP CONNECTION)

Revised	Howard County, Maryland Department of Public Works	PRECAST MANHOLE Standard and Shallow 4'-0" for 24" Pipe and smaller	Detail G-5.12
Revised			
Revised 5/1/2003	Approved: Chief, Bureau of Engineering		
Approved			

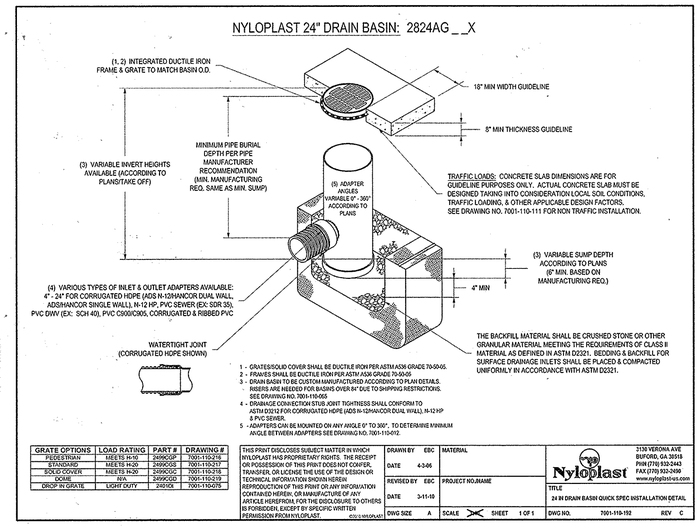

1 - GRATES/SOLID COVER SHALL BE DUCTILE IRON PER ASTM A536 GRADE 70-50-05.
2 - FRAMES SHALL BE DUCTILE IRON PER ASTM A536 GRADE 70-50-05
3 - DRAIN BASIN TO BE CUSTOM MANUFACTURED ACCORDING TO PLAN DETAILS.
RISERS ARE NEEDED FOR BASINS OVER 84" DUE TO SHIPPING RESTRICTIONS. SEE DRAWING NO. 7001-110-055
4 - DRAINAGE CONNECTION STUB JOINT TIGHTNESS SHALL CONFORM TO ASTM D3212 FOR CORRUGATED HDPE (ADS N-12/HANCOR DUAL WALL), N-12 HP & PVC SEWER.
5 - ADAPTERS CAN BE MOUNTED ON ANY ANGLE 0° TO 360°. TO DETERMINE MINIMUM ANGLE BETWEEN ADAPTERS SEE DRAWING NO. 7001-110-012.

GRATE OPTIONS	LOAD RATING	PART #	DRAWING #
PEDESTRIAN	MEETS H-10	2499CGP	7001-110-215
STANDARD	MEETS H-20	2499CGS	7001-110-212
SOLID COVER	MEETS H-20	2499CGC	7001-110-216
DOME	N/A	2499CGD	7001-110-219
DROP IN GRATE	LIGHT DUTY	2401GI	7001-110-075

THIS PRINT DISCLOSES SUBJECT MATTER IN WHICH NYLOPLAST HAS PROPRIETARY RIGHTS. THE RECEIPT OR POSSESSION OF THIS PRINT DOES NOT CONFER, TRANSFER, OR LICENSE THE USE OF THE DESIGN OR TECHNICAL INFORMATION SHOWN HEREIN REPRODUCTION OF THIS PRINT OR ANY INFORMATION CONTAINED HEREIN, OR MANUFACTURE OF ANY ARTICLE HEREFROM, FOR THE DISCLOSURE TO OTHERS IS FORBIDDEN, EXCEPT BY SPECIFIC WRITTEN PERMISSION FROM NYLOPLAST.

DRAWN BY EBC	MATERIAL	Nyloplast 3130 VERONA AVE BUFORD, GA 30518 PHN (770) 932-2443 FAX (770) 932-2496 www.nyloplastusa.com	
DATE 4-3-06		TITLE 24 IN DRAIN BASIN QUICK SPEC INSTALLATION DETAIL	
REVISED BY EBC	PROJECT NO./NAME		
DATE 3-11-10			
DWG SIZE A	SCALE NONE	SHEET 1 OF 1	DWG NO. 7001-110-192 REV C

D C4.3 24" NYLOPLAST DRAIN BASIN

NOT TO SCALE

APPROVED: DEPARTMENT OF PLANNING AND ZONING

CHIEF, DEVELOPMENT ENGINEERING DIVISION	DATE 6-17-14
CHIEF, DIVISION OF LAND DEVELOPMENT	DATE 8-28-14
DIRECTOR	DATE 7-28-14

REVISIONS		

HOWARD COUNTY

DEPARTMENT OF RECREATION AND PARKS
7120 OAKLAND MILLS ROAD
COLUMBIA, MD 21046

DEPARTMENT OF PUBLIC WORKS
9250 BENDIX ROAD
ELLICOTT CITY, MD 21043

WHITMAN, REQUARDT & ASSOCIATES, LLP
801 South Caroline Street, Baltimore, Maryland 21231
Phone: 410-235-3450 Fax: 410-243-5716

PROPERTY

TAX MAP 36, GRID 5, PARCEL 3,72

ZONING: RC-DEO

ELECTION DISTRICT 3/7

GRAPHIC SCALES

SIGNATURE

STATE OF MARYLAND — ANTHONY USARUSO OSBORNE — No. 19376 — PROFESSIONAL ENGINEER

PROFESSIONAL CERTIFICATION.
I HEREBY CERTIFY THAT THESE DOCUMENTS WERE PREPARED OR APPROVED BY ME, AND THAT I AM A DULY LICENSED PROFESSIONAL ENGINEER UNDER THE LAWS OF THE STATE OF MARYLAND, LICENSE NO. 19376
EXPIRATION DATE: 09/22/2015

BLANDAIR REGIONAL PARK – PHASE 2

SITE DETAILS

Drawing No.

C4.3

Scale: NONE		
Date: 03/31/2014	Sheet 19 of 41	
Des: CYH	Drawn: SAD	Check: AUO

SDP-12-063

PLOT DATE: 4/4/2014 9:55:50 AM PAGE SCRIPT: VRA-PDF CONVERT PLOT STYLE: VRA_2006.CTB PAPER SIZE:36X24

B.4.C SPECIFICATIONS FOR MICRO-BIORETENTION AND BIO-SWALES

1. MATERIAL SPECIFICATIONS

THE ALLOWABLE MATERIALS TO BE USED IN THESE PRACTICES ARE DETAILED IN TABLE B.4.1.

2. FILTERING MEDIA OR PLANTING SOIL

THE SOIL SHALL BE A UNIFORM MIX, FREE OF STONES, STUMPS, ROOTS OR OTHER SIMILAR OBJECTS LARGER THAN TWO INCHES. NO OTHER MATERIALS OR SUBSTANCES SHALL BE MIXED OR DUMPED WITHIN THE MICRO-BIORETENTION PRACTICE THAT MAY BE HARMFUL TO PLANT GROWTH, OR PROVE A HINDRANCE TO THE PLANTING OR MAINTENANCE OPERATIONS. THE PLANTING SOIL SHALL BE FREE OF BERMUDA GRASS, QUACKGRASS, JOHNSON GRASS, OR OTHER NOXIOUS WEEDS AS SPECIFIED UNDER COMAR 15.08.01.05.

THE PLANTING SOIL SHALL BE TESTED AND SHALL MEET THE FOLLOWING CRITERIA:

-SOIL COMPONENT – LOAMY SAND OR SANDY LOAM (USDA SOIL TEXTURAL CLASSIFICATION)
-ORGANIC CONTENT – MINIMUM 10% BY DRY WEIGHT (ASTM D 2974). IN GENERAL, THIS CAN BE MET WITH A MIXTURE OF LOAMY SAND (60%-65%) AND COMPOST (35% TO 40%) OR SANDY LOAM (30%), COARSE SAND (30%), AND COMPOST (40%).

-CLAY CONTENT – MEDIA SHALL HAVE A CLAY CONTENT OF LESS THAN 5%.

-PH RANGE – SHOULD BE BETWEEN 5.5 – 7.0. AMENDMENTS (E.G., LIME, IRON SULFATE PLUS SULFUR) MAY BE MIXED INTO THE SOIL TO INCREASE OR DECREASE PH.

THERE SHALL BE AT LEAST ONE SOIL TEST PER PROJECT. EACH TEST SHALL CONSIST OF BOTH THE STANDARD SOIL TEST FOR PH, AND ADDITIONAL TESTS OF ORGANIC MATTER, AND SOLUBLE SALTS. A TEXTURAL ANALYSIS IS REQUIRED FROM THE SITE STOCKPILED TOPSOIL. IF TOPSOIL IS IMPORTED, THEN A TEXTURE ANALYSIS SHALL BE PERFORMED FOR EACH LOCATION WHERE THE TOPSOIL WAS EXCAVATED.

3. COMPACTION

IT IS VERY IMPORTANT TO MINIMIZE COMPACTION OF BOTH THE BASE OF BIORETENTION PRACTICES AND THE REQUIRED BACKFILL. WHEN POSSIBLE, USE EXCAVATION HOES TO REMOVE ORIGINAL SOIL. IF PRACTICES ARE

EXCAVATED USING A LOADER, THE CONTRACTOR SHOULD USE WIDE TRACK OR MARSH TRACK EQUIPMENT, OR LIGHT EQUIPMENT WITH TURF TYPE TIRES. USE OF EQUIPMENT WITH NARROW TRACKS OR NARROW TIRES, RUBBER TIRES WITH LARGE LUGS, OR HIGH-PRESSURE TIRES WILL CAUSE EXCESSIVE COMPACTION RESULTING IN REDUCED INFILTRATION RATES AND IS NOT ACCEPTABLE. COMPACTION WILL SIGNIFICANTLY CONTRIBUTE TO DESIGN FAILURE.

COMPACTION CAN BE ALLEVIATED AT THE BASE OF THE BIORETENTION FACILITY BY USING A PRIMARY TILLING OPERATION SUCH AS A CHISEL PLOW, RIPPER, OR SUBSOILER. THESE TILLING OPERATIONS ARE TO REFRACTURE THE SOIL PROFILE THROUGH THE 12 INCH COMPACTION ZONE. SUBSTITUTE METHODS MUST BE APPROVED BY THE ENGINEER. ROTOTILLERS TYPICALLY DO NOT TILL DEEP ENOUGH TO REDUCE THE EFFECTS OF COMPACTION FROM HEAVY EQUIPMENT.

ROTOTILL 2 TO 3 INCHES OF SAND INTO THE BASE OF THE BIORETENTION FACILITY BEFORE BACKFILLING THE OPTIONAL SAND LAYER. PUMP ANY PONDED WATER BEFORE PREPARING (ROTOTILLING) BASE.

WHEN BACKFILLING THE TOPSOIL OVER THE SAND LAYER, FIRST PLACE 3 TO 4 INCHES OF TOPSOIL OVER THE SAND, THEN ROTOTILL THE SAND/TOPSOIL TO CREATE A GRADATION ZONE. BACKFILL THE REMAINDER OF THE TOPSOIL TO FINAL GRADE.

WHEN BACKFILLING THE BIORETENTION FACILITY, PLACE SOIL IN LIFTS 12" TO 18". DO NOT USE HEAVY EQUIPMENT WITHIN THE BIORETENTION BASIN. HEAVY EQUIPMENT CAN BE USED AROUND THE PERIMETER OF THE BASIN TO SUPPLY SOILS AND SAND. GRADE BIORETENTION MATERIALS WITH LIGHT EQUIPMENT SUCH AS A COMPACT LOADER OR A DOZER/LOADER WITH MARSH TRACKS.

4. PLANT MATERIAL

SEE LANDSCAPING PLANS.

5. PLANT INSTALLATION

COMPOST IS A BETTER ORGANIC MATERIAL SOURCE, IS LESS LIKELY TO FLOAT, AND SHOULD BE PLACED IN THE INVERT AND OTHER LOW AREAS. MULCH SHOULD BE PLACED IN SURROUNDING TO A UNIFORM THICKNESS OF 2" TO 3". SHREDDED OR CHIPPED HARDWOOD MULCH IS THE ONLY ACCEPTED MULCH. PINE MULCH AND WOOD CHIPS WILL FLOAT AND MOVE TO THE PERIMETER OF THE BIORETENTION AREA DURING A STORM EVENT AND ARE NOT ACCEPTABLE. SHREDDED MULCH MUST BE WELL AGED (6 TO 12 MONTHS) FOR ACCEPTANCE.

ROOTSTOCK OF THE PLANT MATERIAL SHALL BE KEPT MOIST DURING TRANSPORT AND ON-SITE STORAGE. THE PLANT ROOT BALL SHOULD BE PLANTED SO 1/8TH OF THE BALL IS ABOVE FINAL GRADE SURFACE. THE DIAMETER OF THE PLANTING PIT SHALL BE AT LEAST SIX INCHES LARGER THAN THE DIAMETER OF THE PLANTING BALL. SET AND MAINTAIN THE PLANT STRAIGHT DURING THE ENTIRE PLANTING PROCESS. THOROUGHLY WATER GROUND BED COVER AFTER INSTALLATION.

TREES SHALL BE BRACED USING 2" BY 2" STAKES ONLY AS NECESSARY AND FOR THE FIRST GROWING SEASON ONLY. STAKES ARE TO BE EQUALLY SPACED ON THE OUTSIDE OF THE TREE BALL.

GRASSES AND LEGUME SEED SHOULD BE DRILLED INTO THE SOIL TO A DEPTH OF AT LEAST ONE INCH. GRASS AND LEGUME PLUGS SHALL BE PLANTED FOLLOWING THE NON-GRASS GROUND COVER PLANTING SPECIFICATIONS.

THE TOPSOIL SPECIFICATIONS PROVIDE ENOUGH ORGANIC MATERIAL TO ADEQUATELY SUPPLY NUTRIENTS FROM NATURAL CYCLING. THE PRIMARY FUNCTION OF THE BIORETENTION STRUCTURE IS TO IMPROVE WATER QUALITY. ADDING FERTILIZERS DEFEATS, OR AT A MINIMUM, IMPEDES THIS GOAL. ONLY ADD FERTILIZER IF WOOD CHIPS OR MULCH ARE USED TO AMEND THE SOIL. ROTOTILL UREA FERTILIZER AT A RATE OF 2 POUNDS PER 1000 SQUARE FEET.

6. UNDERDRAINS

UNDERDRAINS SHOULD MEET THE FOLLOWING CRITERIA:

-PIPE- SHOULD BE 4" TO 6" DIAMETER, SLOTTED OR PERFORATED RIGID PLASTIC PIPE (ASTMF 758, TYPE PS 28, OR AASHTO-M-278) IN A GRAVEL LAYER. THE PREFERRED MATERIAL IS SLOTTED, 4" RIGID PIPE (E.G., PVC OR HDPE).
-PERFORATIONS – IF PERFORATED PIPE IS USED, PERFORATIONS SHOULD BE 3/8" DIAMETER LOCATED 6" ON CENTER WITH A MINIMUM OF FOUR HOLES PER ROW. PIPE SHALL BE WRAPPED WITH A 1/4" (NO. 4 OR 4X4) GALVANIZED HARDWARE CLOTH.

-GRAVEL – THE GRAVEL LAYER (NO. 57 STONE PREFERRED) SHALL BE AT LEAST 3" THICK ABOVE AND BELOW THE UNDERDRAIN.

-THE MAIN COLLECTOR PIPE SHALL BE AT A MINIMUM 0.5% SLOPE.

-A RIGID, NON-PERFORATED OBSERVATION WELL MUST BE PROVIDED (ONE PER EVERY 1,0000 SQUARE FEET) TO PROVIDE A CLEAN-OUT PORT AND MONITOR PERFORMANCE OF THE FILTER.

-A 4" LAYER OF PEA GRAVEL (1/8" TO 3/8" STONE) SHALL BE LOCATED BETWEEN THE FILTER MEDIA AND UNDERDRAIN TO PREVENT MIGRATION OF FINES INTO THE UNDERDRAIN. THIS LAYER MAY BE CONSIDERED PART OF THE FILTER BED WHEN BED THICKNESS EXCEEDS 24".

THE MAIN COLLECTOR PIPE FOR UNDERDRAIN SYSTEMS SHALL BE CONSTRUCTED AT A MINIMUM SLOPE OF 0.5%. OBSERVATION WELLS AND/OR CLEAN-OUT PIPES MUST BE PROVIDED (ONE MINIMUM PER EVERY 1000 SQUARE FEET OF SURFACE AREA).

7. MISCELLANEOUS

THESE PRACTICES MAY NOT BE CONSTRUCTED UNTIL ALL CONTRIBUTING DRAINAGE AREA HAS BEEN STABILIZED.

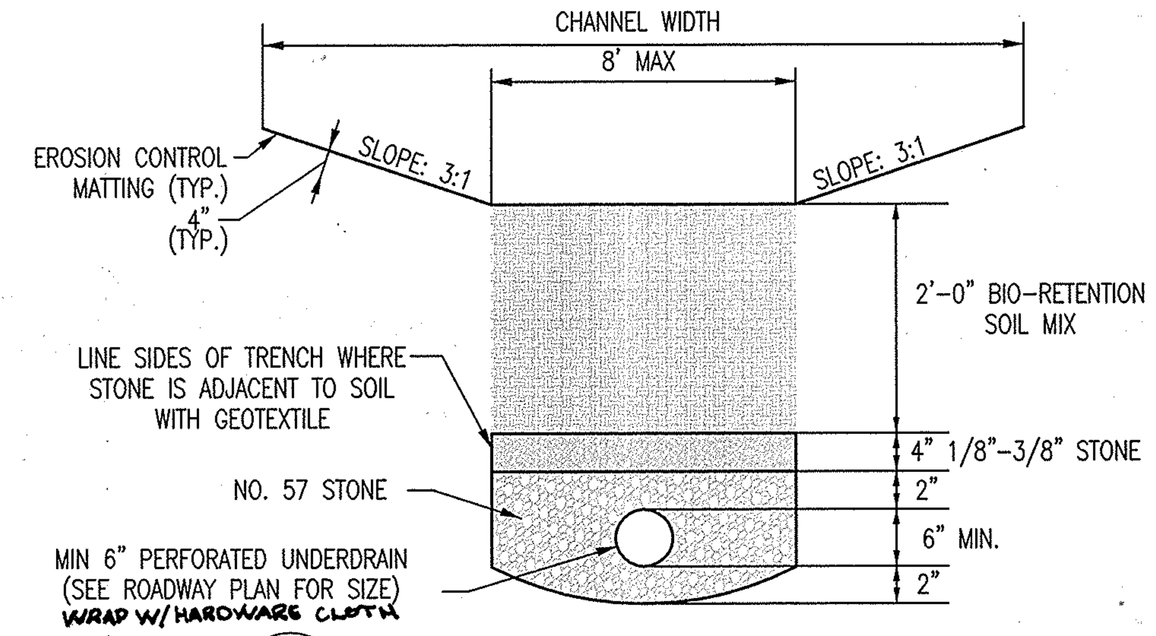

A / C4.4 BIOSWALE DETAIL
NOT TO SCALE

BIO-SWALE TYPICAL SECTION

Table B.4.1 Materials Specifications for Micro-Bioretention and Bio-Swales-

Material	Specification	Size	Notes
Planting soil [2' to 4' deep]	loamy sand (60 – 65%) & compost (35 – 40%) or sandy loam (30%), coarse sand (30%) & compost (40%)	n/a	USDA soil types loamy sand or sandy loam; clay content <5%
Organic content	Min. 10% by dry weight (ASTM D 2974)		
Mulch	shredded hardwood		aged 6 months, minimum; no pine or wood chips
Pea Gravel	ASTM-D-448	No. 8 or No. 9 (1/8" or 3/8")	
Geotextile		n/a	PE Type 1 nonwoven
Gravel (underdrains)	AASHTO M-43	NO. 57 OR NO. 6 AGGREGATE	
Underdrain piping	F 758, Type PS 28 or AASHTO M-278	6" rigid schedule 40 PVC or as shown on plan	Slotted or perforated pipe; 3/8" perf. @ 6" on center, 4 holes per row; minimum of 3" of gravel over pipes; not necessary underneath pipes. Perforated pipe shall be wrapped with ¼-inch galvanized hardware cloth

OPERATION AND MAINTENANCE SCHEDULE FOR BIORETENTION SWALES

a) THE OWNER SHALL MAINTAIN THE PLANT MATERIAL, MULCH LAYER AND SOIL LAYER ANNUALLY. MAINTENANCE OF MULCH AND SOIL IS LIMITED TO CORRECTING AREAS OF EROSION OR WASH OUT. ANY MULCH REPLACEMENT SHALL BE DONE IN THE SPRING. PLANT MATERIAL SHALL BE CHECKED FOR DISEASE AND INSECT INFESTATION AND MAINTENANCE WILL ADDRESS DEAD MATERIAL AND PRUNING. ACCEPTABLE REPLACEMENT PLANT MATERIAL IS LIMITED TO THE FOLLOWING: 2000 MARYLAND STORMWATER DESIGN MANUAL VOLUME II, TABLE A.4.1 AND 2.
b) THE OWNER SHALL PERFORM A PLANT IN THE SPRING AND IN THE FALL OF EACH YEAR. DURING THE INSPECTION, THE OWNER SHALL REMOVE DEAD AND DISEASED VEGETATION CONSIDERED BEYOND TREATMENT, REPLACE DEAD PLANT MATERIAL WITH ACCEPTABLE REPLACEMENT PLANT MATERIAL, TREAT DISEASED TREES AND SHRUBS, AND REPLACE ALL DEFICIENT STAKES AND WIRES.
c) THE OWNER SHALL INSPECT THE MULCH EACH SPRING. THE MULCH SHALL BE REPLACED EVERY TWO TO THREE YEARS. THE PREVIOUS MULCH LAYER SHALL BE REMOVED BEFORE THE NEW LAYER IS APPLIED.
d) THE OWNER SHALL CORRECT SOIL EROSION ON AN AS NEEDED BASIS, WITH A MINIMUM OF ONCE PER MONTH AND AFTER EACH HEAVY STORM.

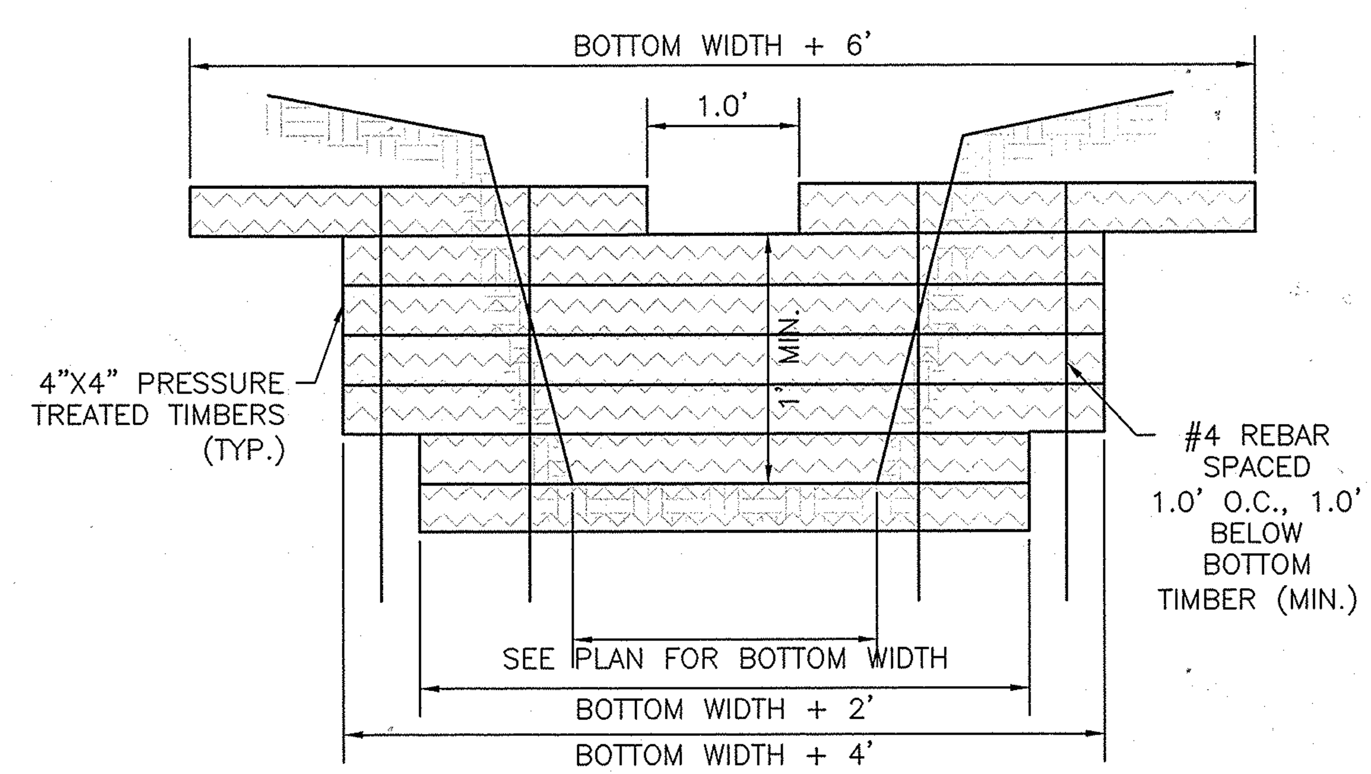

C / C4.4 TIMBER CHECK DAM
NOT TO SCALE

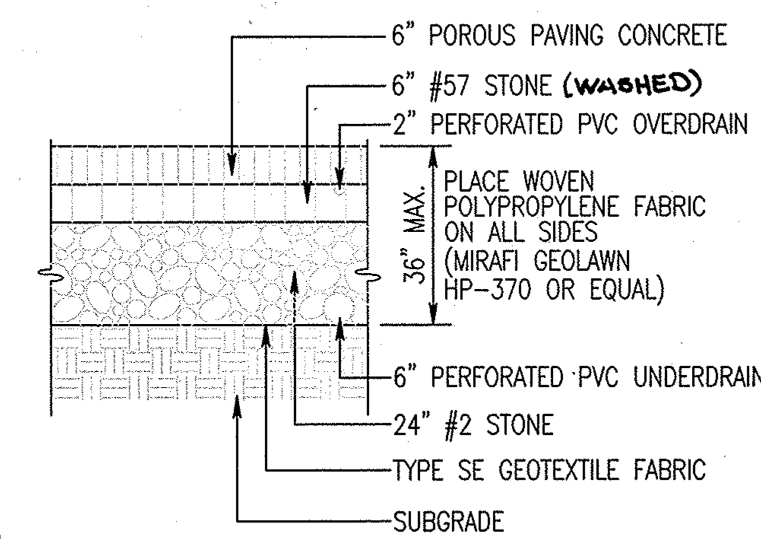

B / C4.4 POROUS PAVEMENT
NOT TO SCALE

1) CONTRACTOR SHALL PROVIDE EVIDENCE OF EMPLOYMENT OF ONE (1) NRMCA CERTIFIED PERVIOUS CONCRETE CRAFTSMAN WHO MUST BE ON-SITE, OVERSEEING EACH PLACEMENT CREW, DURING ALL CONCRETE PLACEMENT, OR WITH THE APPROVAL OF ARCHITECT/ENGINEER, CONTRACTOR MAY PROVIDE WRITTEN EVIDENCE OF PROJECT EXPERIENCE AND PROFICIENCY IN SUCCESSFULLY COMPLETING PERVIOUS CONCRETE PAVEMENT CONSTRUCTION, AND SUBMIT EVIDENCE OF COMPLETION OF A PERVIOUS CONCRETE CRAFTSMAN CERTIFICATION PROGRAM.
2) POROUS CONCRETE MUST BE COVERED WITH PLASTIC FOR A MINIMUM OF 7 DAYS IMMEDIATELY AFTER PLACEMENT.
3) 6" PERFORATED PLUG SCHEDULE 40, ⅜" DIAMETER PERFORATIONS AT 4" O.C. LENGTH WIDE AND 90 DEGREES RADIALLY AROUND. INSTALL END CAP ON OPEN END.

OPERATION AND MAINTENANCE SCHEDULE FOR PERMEABLE PAVEMENT

a) THE OWNER SHALL PERIODICALLY SWEEP (OR VACUUM POROUS CONCRETE PAVEMENT) THE PAVEMENT SURFACES TO REDUCE SEDIMENT ACCUMULATION AND ENSURE CONTINUED SURFACE POROSITY. SWEEPING SHOULD BE PERFORMED AT LEAST TWICE ANNUALLY WITH A COMMERCIAL CLEANING UNIT. WASHING OR COMPRESSED AIR UNITS SHOULD NOT BE USED TO PERFORM SURFACE CLEANING.
b) THE OWNER SHALL PERIODICALLY CLEAN DRAINAGE PIPES, INLETS, STONE EDGE DRAINS AND OTHER STRUCTURES WITHIN OR DRAINING TO THE SUBBASE.
c) THE OWNER SHALL USE DEICERS IN MODERATION. DEICERS SHOULD BE NON-TOXIC AND BE APPLIED EITHER AS CALCIUM MAGNESIUM ACETATE OR AS PRETREATED SALT.
d) THE OWNER SHALL ENSURE SNOW PLOWING IS PERFORMED CAREFULLY WITH BLADES SET ONE-INCH ABOVE THE SURFACE. PLOWED SNOW PILES AND SNOWMELT SHOULD NOT BE DIRECTED TO PERMEABLE PAVEMENT.

B.4.B SPECIFICATIONS FOR PERMEABLE PAVEMENTS & REINFORCED TURF

1. PERVIOUS CONCRETE SPECIFICATIONS (ALSO SEE ACI 522.1-08)

DESIGN THICKNESS – PERVIOUS CONCRETE APPLICATIONS SHALL BE DESIGNED SO THAT THE THICKNESS OF THE CONCRETE SLAB SHALL SUPPORT THE TRAFFIC AND VEHICLE TYPES THAT WILL BE CARRIED. APPLICATIONS MAY BE DESIGNED USING EITHER STANDARD PAVEMENT PROCEDURES (E.G. ASSHTO, ACI 325.9R, ACI 330R) OR USING STRUCTURAL VALUES DERIVED FROM FLEXIBLE PAVEMENT DESIGN PROCEDURES.

MIX & INSTALLATION – TRADITIONAL PORTLAND CEMENTS (ASTM C 150, C 1157) MAY BE USED IN PERVIOUS CONCRETE APPLICATIONS. PHOSPHORUS ADMIXTURES MAY ALSO BE USED. MATERIALS SHOULD BE TESTED (E.G. TRIAL BATCHING) PRIOR TO CONSTRUCTION SO THAT CRITICAL PROPERTIES (E.G., SETTLING TIME, RATE OF STRENGTH DEVELOPMENT, POROSITY, PERMEABILITY) CAN BE DETERMINED.

AGGREGATE – PERVIOUS CONCRETE CONTAINS A LIMITED FINE AGREGATE CONTENT. COMMONLY USED GRADATIONS INCLUDE ASTM C 33 NO. 67 (¾ IN. TO NO. 4), NO. 8 (⅜ IN. TO NO. 16) AND NO. 89 (⅜ IN. TO NO. 50) SIEVES. SINGLE-SIZED AGGREGATE (UP TO 1 INCH) MAY ALSO BE USED.

WATER CONTENT – WATER-TO-CEMENT RATIOS BETWEEN 0.27 AND 0.30 ARE USED ROUTINELY WITH PROPER INCLUSION OF CHEMICAL ADMIXTURES. WATER QUALITY SHOULD MEET ACI 30A. AS A GENERAL RULE, POTABLE WATER SHOULD BE USED ALTHOUGH RECYCLED CONCRETE PRODUCTION WATER MEETING ASTM C 94 OR AASHTO M 157 MAY ALSO BE USED.

ADMIXTURES – CHEMICAL ADMIXTURES (E.G. RETARDERS OR HYDRATION-STABILIZERS) ARE USED TO OBTAIN SPECIAL PROPERTIES IN PERVIOUS CONCRETE. USE OF ADMIXTURES SHOULD MEET ASTM C 494 (CHEMICAL ADMIXTURES) AND ASTM C 260 (AIR ENTRAINING ADMIXTURES) AND CLOSELY FOLLOW MANUFACTURER'S RECOMMENDATIONS.

BASE COURSE – THE BASE COURSE SHALL BE AASHTO NO. 3 OR 4 COURSE AGGREGATE WITH AN ASSUMED OPEN PORE SPACE OF 30% (N = 0.30).

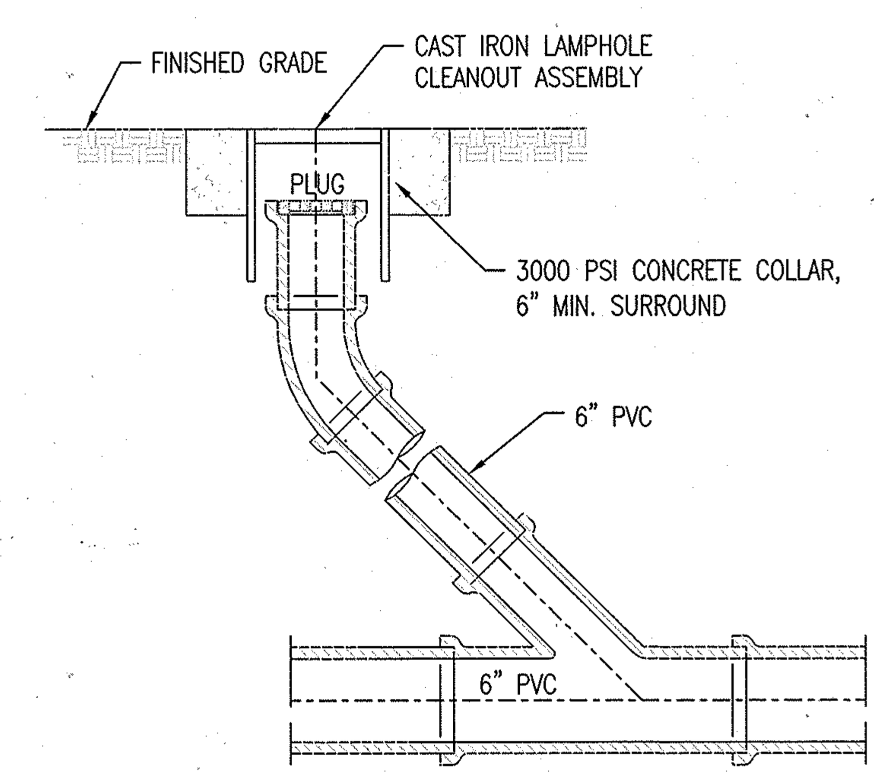

D / C4.4 CLEANOUT
NOT TO SCALE

APPROVED: DEPARTMENT OF PLANNING AND ZONING

CHIEF, DEVELOPMENT ENGINEERING DIVISION	DATE 6.17.14
CHIEF, DIVISION OF LAND DEVELOPMENT	DATE 7-28-14
DIRECTOR	DATE 7-28-14

PLOT DATE: 4/4/2014 9:58:09 AM PAGE SETUP: WRA-PDF (36X24) PLOT STYLE: WRA_2006.CTB PAPER SIZE:36X24
FILENAME: N:\42038-002\CADD\42038002C404.DWG

REVISIONS

HOWARD COUNTY

DEPARTMENT OF RECREATION AND PARKS
7120 OAKLAND MILLS ROAD
COLUMBIA, MD 21046

DEPARTMENT OF PUBLIC WORKS
9250 BENDIX ROAD
ELLICOTT CITY, MD 21043

WHITMAN, REQUARDT & ASSOCIATES, LLP
801 South Caroline Street, Baltimore, Maryland 21231
Phone: 410-235-3450 Fax: 410-243-5716

PROPERTY

TAX MAP 36, GRID 5, PARCEL 3,72

ZONING: RC-DEO

ELECTION DISTRICT 3/7

GRAPHIC SCALES

SIGNATURE

STATE OF MARYLAND ANTHONY USABURO OLSEN No. 19376 PROFESSIONAL ENGINEER

PROFESSIONAL CERTIFICATION.
I HEREBY CERTIFY THAT THESE DOCUMENTS WERE PREPARED OR APPROVED BY ME, AND THAT I AM A DULY LICENSED PROFESSIONAL ENGINEER UNDER THE LAWS OF THE STATE OF MARYLAND, LICENSE NO. 19376
EXPIRATION DATE: 09/22/2015

BLANDAIR REGIONAL PARK – PHASE 2

STORMWATER MANAGMENT DETAILS AND NOTES

Drawing No.

C4.4

Scale: NONE	
Date: 03/31/2014	Sheet 20 of 41
Des: CYH	Drawn: SAD / Check: AUO

SDP-12-063

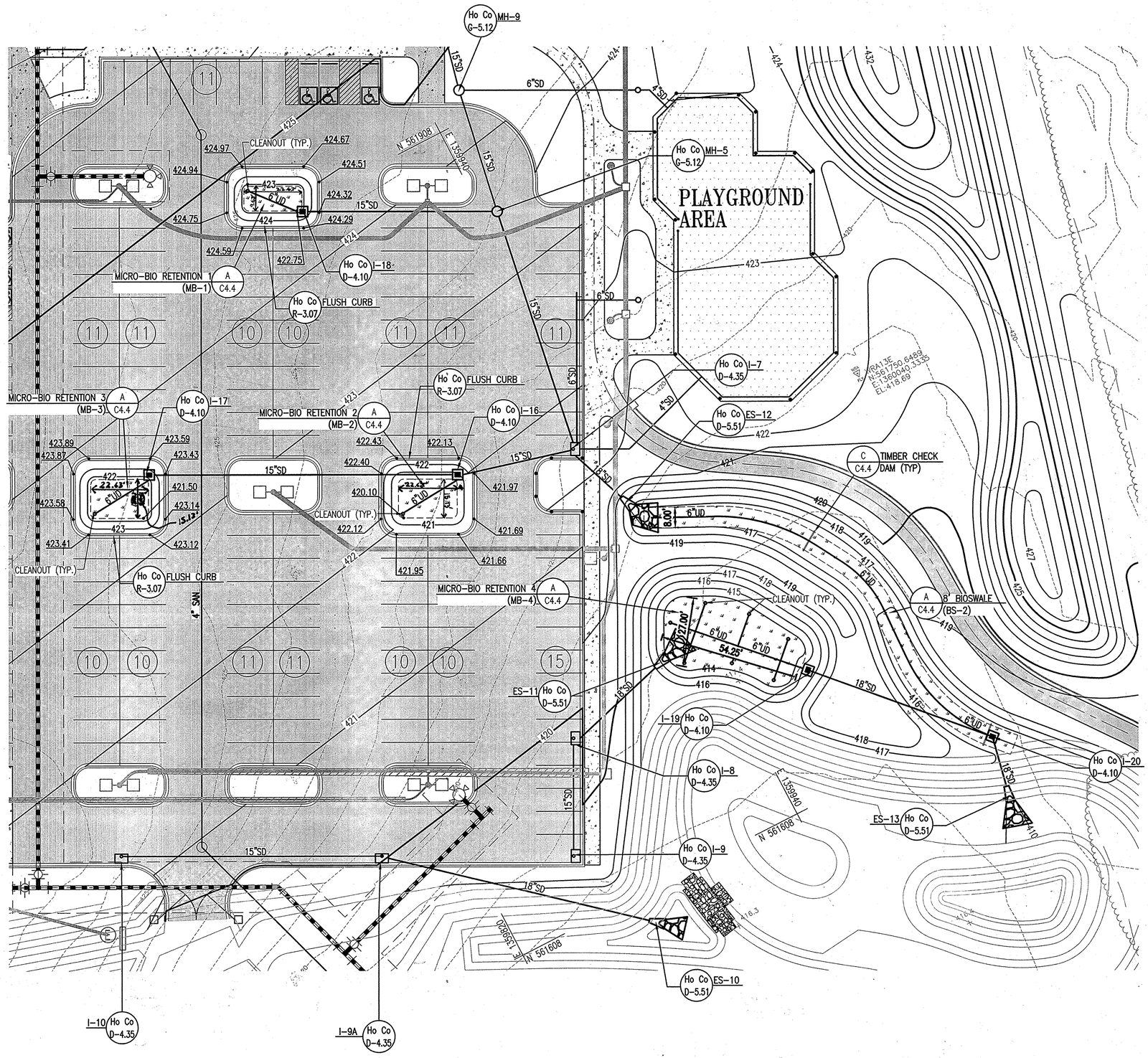

REVISIONS		
	REDLINE REVISION 7	3/22/16

HOWARD COUNTY

DEPARTMENT OF RECREATION AND PARKS
7120 OAKLAND MILLS ROAD
COLUMBIA, MD 21046

DEPARTMENT OF PUBLIC WORKS
9250 BENDIX ROAD
ELLICOTT CITY, MD 21043

WR&A

WHITMAN, REQUARDT & ASSOCIATES, LLP
801 South Caroline Street, Baltimore, Maryland 21231
Phone: 410-235-3450 Fax: 410-243-5716

PROPERTY

TAX MAP 36, GRID 5, PARCEL 3,72

ZONING: RC-DEO

ELECTION DISTRICT 3/7

GRAPHIC SCALES

0 10' 20' 40'
SCALE: 1" = 20'

SIGNATURE

STATE OF MARYLAND ANTHONY USABURO OLSEN No. 19376 PROFESSIONAL ENGINEER

PROFESSIONAL CERTIFICATION.
I HEREBY CERTIFY THAT THESE DOCUMENTS WERE PREPARED OR APPROVED BY ME, AND THAT I AM A DULY LICENSED PROFESSIONAL ENGINEER UNDER THE LAWS OF THE STATE OF MARYLAND, LICENSE NO. 19376
EXPIRATION DATE: 09/22/2017

BLANDAIR REGIONAL PARK - PHASE 2

STORMWATER MANAGEMENT ENLARGED PLAN
REVISED SITE DEVELOPMENT PLAN

Drawing No.

C4.5

Scale: 1" = 20'		
Date: 03/24/16	Sheet 20A of 41	
Des: BWJ	Drawn: AKC	Check: AUO

SDP-12-063

APPROVED: DEPARTMENT OF PLANNING AND ZONING

CHIEF, DEVELOPMENT ENGINEERING DIVISION	DATE 5-17-16
CHIEF, DIVISION OF LAND DEVELOPMENT	DATE 5-19-16
DIRECTOR	DATE 5-19-16

HOWARD SOIL CONSERVATION DISTRICT
STANDARD SEDIMENT CONTROL NOTES

1. A MINIMUM OF 48 HOURS NOTICE MUST BE GIVEN TO THE HOWARD COUNTY DEPARTMENT OF INSPECTIONS, LICENSES AND PERMITS, SEDIMENT CONTROL DIVISION PRIOR TO THE START OF ANY CONSTRUCTION (410-313-1855).

2. ALL VEGETATIVE AND STRUCTURAL PRACTICES ARE TO BE INSTALLED ACCORDING TO THE PROVISIONS OF THIS PLAN AND ARE TO BE IN CONFORMANCE WITH THE MOST CURRENT MARYLAND STANDARDS AND SPECIFICATIONS FOR SOIL EROSION AND SEDIMENT CONTROL AND REVISIONS THERETO.

3. FOLLOWING INITIAL SOIL DISTURBANCE OR RE-DISTURBANCE, PERMANENT OR TEMPORARY STABILIZATION SHALL BE COMPLETED WITHIN: A) ~~7~~ 3 CALENDAR DAYS FOR ALL PERIMETER SEDIMENT CONTROL STRUCTURES, DIKES, PERIMETER SLOPES AND ALL SLOPES GREATER THAN 3:1, B) ~~14~~ 7 DAYS AS TO ALL OTHER DISTURBED OR GRADED AREAS ON THE PROJECT SITE.

4. ALL SEDIMENT TRAPS/BASINS SHOWN MUST BE FENCED AND WARNING SIGNS POSTED AROUND THEIR PERIMETER IN ACCORDANCE WITH VOL 1, CHAPTER 12 OF THE HOWARD COUNTY DESIGN MANUAL, STORM DRAINAGE.

5. ALL DISTURBED AREAS MUST BE STABILIZED WITHIN THE TIME PERIOD SPECIFIED ABOVE IN ACCORDANCE WITH THE 1994 MARYLAND STANDARDS AND SPECIFICATIONS FOR SOIL EROSION AND SEDIMENT CONTROL FOR PERMANENT SEEDING (SEC. 51), SOD (SEC. 54), TEMPORARY SEEDING (SEC. 50) AND MULCHING (SEC. 52). TEMPORARY STABILIZATION WITH MULCH ALONE CAN ONLY BE DONE WHEN RECOMMENDED SEEDING DATES DO NOT ALLOW FOR PROPER GERMINATION AND ESTABLISHMENT OF GRASSES.

6. ALL SEDIMENT CONTROL STRUCTURES ARE TO REMAIN IN PLACE AND ARE TO BE MAINTAINED IN OPERATIVE CONDITION UNTIL PERMISSION FOR THEIR REMOVAL HAS BEEN OBTAINED FROM THE HOWARD COUNTY SEDIMENT CONTROL INSPECTOR.

7. SITE ANALYSIS:

   TOTAL AREA OF SITE: 17.15 ACRES
   AREA DISTURBED: 17.15 ACRES
   AREA TO BE ROOFED OR PAVED ACRES: 3.20 ACRES
   AREA TO BE VEGETATIVELY STABILIZED ACRES: 13.95 ACRES
   TOTAL CUT CU. YDS.: 42,061 CU. YDS.
   TOTAL FILL: 50,151 CU. YDS.
   OFFSITE WASTE/BORROW AREA LOCATION: TO BE DETERMINED BY CONTRACTOR

8. ANY SEDIMENT CONTROL PRACTICE WHICH IS DISTURBED BY GRADING ACTIVITY FOR PLACEMENT OF UTILITIES MUST BE REPAIRED ON THE SAME DAY OF DISTURBANCE.

9. ADDITIONAL SEDIMENT CONTROL MUST BE PROVIDED, IF DEEMED NECESSARY BY THE HOWARD COUNTY SEDIMENT CONTROL INSPECTOR.

10. ON ALL SITES WITH DISTURBED AREAS IN EXCESS OF 2 ACRES, APPROVAL OF THE INSPECTION AGENCY SHALL BE REQUESTED UPON COMPLETION OF INSTALLATION OF PERIMETER EROSION AND SEDIMENT CONTROLS, BUT BEFORE PROCEEDING WITH ANY OTHER EARTH DISTURBANCE OR GRADING. OTHER BUILDING OR GRADING INSPECTION APPROVALS MAY NOT BE AUTHORIZED UNTIL THIS INITIAL APPROVAL BY THE INSPECTION AGENCY IS MADE.

11. TRENCHES FOR THE CONSTRUCTION OF UTILITIES IS LIMITED TO THREE PIPE LENGTHS OR THAT WHICH SHALL BE BACK-FILLED AND STABILIZED BY THE END OF EACH WORK DAY, WHICHEVER IS SHORTER.

HOWARD SOIL CONSERVATION DISTRICT
TEMPORARY SEEDING NOTES

APPLY TO GRADED OR CLEARED AREAS LIKELY TO BE RE-DISTURBED WHERE A SHORT-TERM VEGETATIVE COVER IS NEEDED.

SEEDBED PREPARATION: -- LOOSEN UPPER THREE INCHES OF SOIL BY RAKING, DISKING OR OTHER ACCEPTABLE MEANS BEFORE SEEDING, IF NOT PREVIOUSLY LOOSENED.

SOIL AMENDMENTS: -- APPLY 600 IBS/ACRE 10-10-10 FERTILIZER (14 IBS/1000 SQ. FT.).

SEEDING: -- FOR PERIODS MARCH 1 -- APRIL 30 AND FROM AUGUST 15 -- OCTOBER 15, SEED WITH 2-1/2 BUSHEL PER ACRE OF ANNUAL RYE (3.2 IBS/1000 SQ. FT.). FOR THE PERIOD MAY 1 -- AUGUST 14, SEED WITH 3 IBS/ACRE OF WEEPING LOVEGRASS (.07 IBS/1000 SQ. FT.). FO~ THE PERIOD NOVEMBER 16 -- FEBRUARY 28, PROTECT SITE BY APPLYING 2 TONS/ACRE OF WELL ANCHORED STRAW MULCH AND SEED AS SOON AS POSSIBLE IN THE SPRING, OR USE SOD.

MULCHING: -- APPLY L-1/2 TO 2 TONS/ACRE (70 TO 90 IBS/1000 SQ. FT.) OF UNROTTED WEED-FREE, SMALL GRAIN STRAW IMMEDIATELY AFTER SEEDING. ANCHOR MULCH IMMEDIATELY AFTER APPLICATION USING MULCH ANCHORING TOOL OR 218 GAL. PER ACRE (5 GAL/1000 SQ. FT.) OF EMULSIFIED ASPHALT ON FLAT AREAS. ON SLOPE 8 FT. OR HIGHER, USE 348 GAL. PER ACRE (8 GAL/1000 SQ. FT.) FOR ANCHORING.

REFER TO THE ~~1994~~ 2011 MAR4AND STANDARDS AND SPECIFICATIONS FOR SOIL EROSION AND SEDIMENT CONTROL FOR ADDITIONAL RATES AND METHODS NOT COVERED.

This plan revision must meet the 2011 Maryland Standards and Specifications for Soil Erosion and Sediment Control Sections B-4-2, B-4-3, B-4-4, B-4-5, and where applicable Section B-4-8

HOWARD SOIL CONSERVATION DISTRICT
PERMANENT SEEDING NOTES

APPLY TO GRADED OR CLEARED AREAS NOT SUBJECT TO IMMEDIATE FURTHER DISTURBANCE WHERE A PERMANENT LONG-LIVED VEGETATIVE COVER IS NEEDED.

SEEDBED PREPARATION: LOOSEN UPPER THREE INCHES OF SOIL BY RAKING, DISKING OR OTHER ACCEPTABLE MEANS BEFORE SEEDING, IF NOT PREVIOUSLY LOOSENED.

SOIL AMENDMENTS: IN LIEU OF SOIL TEST RECOMMENDATIONS, USE ONE OF THE FOLLOWING SCHEDULES:

1. PREFERRED -- APPLY 2 TONS/ACRE DOLOMITIC LIMESTONE (92 IBS/1000 SQ. FT.) AND 600 IBS/ACRE 10-10-10 FERTILIZER (14 IBS/1000 SQ. FT.) BEFORE SEEDING. HARROW OR DISK INTO UPPER THREE INCHES OF SOIL. AT TIME OF SEEDING, APPLY 400 IBS/ACRE 30-0-0 UREAFORM FERTILIZER (9 IBS/1000 SQ. FT.)

2. ACCEPTABLE -- APPLY 2 TONS/ACRE DOLOMITIC LIMESTONE (92 IBS/1000 SQ. FT.) AND 1000 IBS/ACRE 10-10-10 FERTILIZER (23 IBS/1000 SQ. FT.) BEFORE SEEDING. HARROW OR DISK INTO UPPER THREE INCHES OF SOIL.

SEEDING -- FOR THE PERIODS MARCH 1 -- APRIL 30, AND AUGUST 1 -- OCTOBER 15, SEED WITH 60 IBS/ACRE (1.4 IBS/1000 SQ. FT.) OF KENTUCKY 31 TALL FESCUE. FOR THE PERIOD MAY 1 -- JULY 31, SEED WITH 60 IBS KENTUCKY 31 TALL FESCUE PER ACRE AND 2 IBS/ACRE (.05 IBS/100() SQ. FT.) OF WEEPING LOVEGRASS. DURING THE PERIOD OF OCTOBER 16 -- FEBRUARY 28, PROTECT SITE BY:
OPTION 1 - TWO TONS PER ACRE OF WELL ANCHORED STRAW MULCH AND SEED AS SOON AS POSSIBLE IN THE SPRING.
OPTION 2 -USE SOD.
OPTION 3 - SEER: WITH 60 IBS/ACRE KENTUCKY 30 TALL FESCUE AND MULCH WITH 2 TONS/ACRE WELL ANCHORED STRAW.

MULCHING -- APPLY 1-1/2 TO 2 TONS PER ACRE (70 TO 90 IBS/1000 SQ. FT.) OF UNROTTED SMALL GRAIN STRAW IMMEDIATELY AFTER SEEDING. ANCHOR MULCH IMMEDIATELY AFTER APPLICATION USING MULCH ANCHORING TOOL OR 218 GALLONS PER ACRE (5 GAL/1000 SQ. FT.) OF EMULSIFIED ASPHALT ON FLAT AREAS. ON SLOPE 8 FEET OR HIGHER, USE 348 GALLONS PER ACRE (8 GAL/1000 SQ. FT.) FOR ANCHORING.

MAINTENANCE -- INSPECT ALL SEEDING AREAS AND MAKE NEEDED REPAIRS, REPLACEMENTS AND RESEEDINGS.

B-4 STANDARDS AND SPECIFICATIONS FOR VEGETATIVE STABILIZATION

Definition
Using vegetation as cover to protect exposed soil from erosion.
Purpose
To promote the establishment of vegetation on exposed soil.
Conditions Where Practice Applies
On all disturbed areas not stabilized by other methods. This specification is divided into sections on incremental stabilization; soil preparation, soil amendments and topsoiling; seeding and mulching; temporary stabilization; and permanent stabilization.
Effects on Water Quality and Quantity
Stabilization practices are used to promote the establishment of vegetation on exposed soil. When soil is stabilized with vegetation, the soil is less likely to erode and more likely to allow infiltration of rainfall, thereby reducing sediment loads and runoff to downstream areas.

Planting vegetation in disturbed areas will have an effect on the water budget, especially on volumes and rates of runoff, infiltration, evaporation, transpiration, percolation, and groundwater recharge. Over time, vegetation will increase organic matter content and improve the water holding capacity of the soil and subsequent plant growth.

Vegetation will help reduce the movement of sediment, nutrients, and other chemicals carried by runoff to receiving waters. Plants will also help protect groundwater supplies by assimilating those substances present within the root zone.

Sediment control practices must remain in place during grading, seedbed preparation, seeding, mulching, and vegetative establishment.
Adequate Vegetative Establishment
Inspect seeded areas for vegetative establishment and make necessary repairs, replacements, and reseedings within the planting season.

1. Adequate vegetative stabilization requires 95 percent groundcover.
2. If an area has less than 40 percent groundcover, restabilize following the original recommendations for lime, fertilizer, seedbed preparation, and seeding.
3. If an area has between 40 and 94 percent groundcover, over-seed and fertilize using half of the rates originally specified.
4. Maintenance fertilizer rates for permanent seeding are shown in Table B.6.

B-4-1 STANDARDS AND SPECIFICATIONS FOR INCREMENTAL STABILIZATION

Definition
Establishment of vegetative cover on cut and fill slopes.
Purpose
To provide timely vegetative cover on cut and fill slopes as work progresses.
Conditions Where Practice Applies
Any cut or fill slope greater than 15 feet in height. This practice also applies to stockpiles.
Criteria
A. Incremental Stabilization – Cut Slopes
 1. Excavate and stabilize cut slopes in increments not to exceed 15 feet in height. Prepare seedbed and apply seed and mulch on all cut slopes as the work progresses.
 2. Construction sequence example (Refer to Figure B.1)
  a. Construct and stabilize all temporary swales or dikes that will be used to convey runoff around the excavation.
  b. Perform Phase 1 excavation, prepare seedbed, and stabilize.
  c. Perform Phase 2 excavation, prepare seedbed, and stabilize. Overseed Phase 1 areas as necessary.
  d. Perform final phase excavation, prepare seedbed, and stabilize. Overseed previously seeded areas as necessary.

Note: Once excavation has begun, the operation should be continuous from grubbing through the completion of grading and placement of topsoil (if required) and permanent seed and mulch. Any interruptions in the operation or completing the operation out of the seeding season will necessitate the application of temporary stabilization.

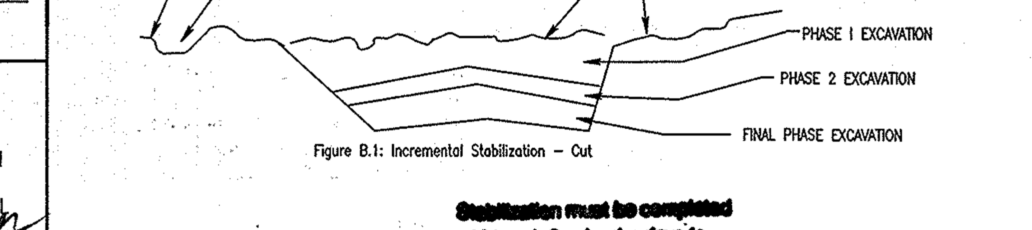

Figure B.1: Incremental Stabilization – Cut

Stabilization must be completed within: a). 3 calendar days to all perimeter controls, all slopes 3:1 or greater and b). 7 calendar days to all other disturbances. Temp Seed - 3/1 to 5/15 and 8/1 to 10/15; Perm Seed 3/1 to 5/15 and 8/15 to 10/15.

B. Incremental Stabilization – Fill Slopes
 1. Construct and stabilize fill slopes in increments not to exceed 15 feet in height. Prepare seedbed and apply seed and mulch on all slopes as the work progresses.
 2. Stabilize slopes immediately when the vertical height of a lift reaches 15 feet, or when the grading operation ceases as prescribed in the plans.
 3. At the end of each day, install temporary water conveyance practice(s), as necessary, to intercept surface runoff and convey it down the slope in a non-erosive manner.
 4. Construction sequence example (Refer to Figure B.2):
  a. Construct and stabilize all temporary swales or dikes that will be used to divert runoff around the fill. Construct silt fence on low side of fill unless other methods shown on the plans address this area.
  b. At the end of each day, install temporary water conveyance practice(s), as necessary, to intercept surface runoff and convey it down the slope in a non-erosive manner.
  c. Place Phase 1 fill, prepare seedbed, and stabilize.
  d. Place Phase 2 fill, prepare seedbed, and stabilize.
  e. Place final phase fill, prepare seedbed, and stabilize. Overseed previously seeded area as necessary.

Note: Once the placement of fill has begun, the operation should be continuous from grubbing through the completion of grading and placement of topsoil (if required) and permanent seed and mulch. Any interruptions in the operation or completing the operation out of the seeding season will necessitate the application of temporary stabilization.

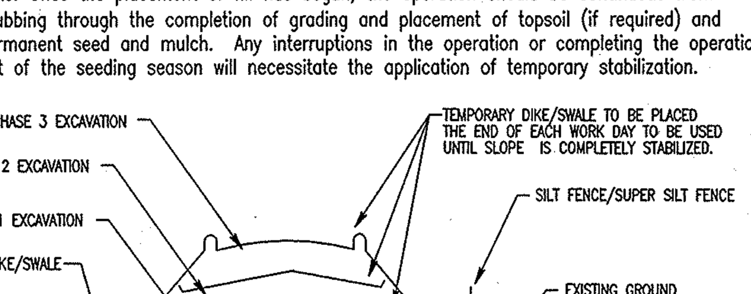

Figure B.2: Incremental Stabilization – Fill

B-4-2 STANDARDS AND SPECIFICATIONS FOR SOIL PREPARATION, TOPSOILING, AND SOIL AMENDMENTS

Definition
The process of preparing the soils to sustain adequate vegetative stabilization.
Purpose
To provide a suitable soil medium for vegetative growth.
Conditions Where Practice Applies
Where vegetative stabilization is to be established.
Criteria
A. Soil Preparation
 1. Temporary Stabilization.
  a. Seedbed preparation consists of loosening soil to a depth of 3 to 5 inches by means of suitable agricultural or construction equipment, such as disc harrows or chisel plows or rippers mounted on construction equipment. After the soil is loosened, it must not be rolled or dragged smooth but left in the roughened condition. Slopes 3:1 or flatter are to be tracked with ridges running parallel to the contour of the slope.
  b. Apply fertilizer and lime as prescribed on the plans.
  c. Incorporate lime and fertilizer into the top 3 to 5 inches of soil by disking or other suitable means.
 2. Permanent Stabilization
  a. A soil test is required for any earth disturbance of 5 acres or more. The minimum soil conditions required for permanent vegetative establishment are:
   a.a. Soil pH between 6.0 and 7.0.
   a.b. Soluble salts less than 500 parts per million (ppm).
   a.c. Soil contains less than 40 percent clay but enough fine grained material (greater than 30 percent silt plus clay) to provide the capacity to hold a moderate amount of moisture. An exception: if lovegrass will be planted, then a sandy soil (less than 30 percent silt plus clay) would be acceptable.
   a.d. Soil contains 1.5 percent minimum organic matter by weight.
   a.e. Soil contains sufficient pore space to permit adequate root penetration.
  b. Application of amendments or topsoil is required if on-site soils do not meet the above conditions.
  c. Graded areas must be maintained in a true and even grade as specified on the approved plan, then scarified or otherwise loosened to a depth of 3 to 5 inches.
  d. Apply soil amendments as specified on the approved plan or as indicated by the results of a soil test.
  e. Mix soil amendments into the top 3 to 5 inches of soil by disking or other suitable means. Take lawn areas to smooth the surface, remove large objects like stones and branches, and ready the area for seed application. Loosen surface soil by dragging with a heavy chain or other equipment to roughen the surface where site conditions will not permit normal seedbed preparation. Track slopes 3:1 or flatter with tracked equipment leaving the soil in an irregular condition with ridges running parallel to the contour of the slope. Leave the top 1 to 3 inches of soil loose and friable. Seedbed loosening may be unnecessary on newly disturbed areas.

B. Topsoiling
 1. Topsoil is placed over prepared subsoil prior to establishment of permanent vegetation. The purpose is to provide a suitable soil medium for vegetative growth. Soils of concern have low moisture content, low nutrient levels, low pH, materials toxic to plants, and/or unacceptable soil gradation.
 2. Topsoil salvaged from an existing site may be used provided it meets the standards as set forth in these specifications. Typically, the depth of topsoil to be salvaged for a given soil type can be found in the representative soil profile section in the Soil Survey published by USDA-NRCS.
 3. Topsoiling is limited to areas having 2:1 or flatter slopes where:
  a. The texture of the exposed subsoil/parent material is not adequate to produce vegetative growth.
  b. The soil material is so shallow that the rooting zone is not deep enough to support plants or furnish continuing supplies of moisture and plant nutrients.
  c. The original soil to be vegetated contains material toxic to plant growth.
  d. The soil is so acidic that treatment with limestone is not feasible.
 4. Areas having slopes steeper than 2:1 require special consideration and design.
 5. Topsoil specifications: Soil to be used as topsoil must meet the following criteria:
  a. Topsoil must be a loam, sandy loam, clay loam, silt loam, sandy clay loam, or loamy sand. Other soils may be used if recommended by an agronomist or soil scientist and approved by the appropriate approval authority. Topsoil must not be a mixture of contrasting textured subsoils and must contain less than 5 percent by volume of cinders, stones, slag, coarse fragments, gravel, sticks, roots, trash, or other materials larger than 1 1/2 inches in diameter.
  b. Topsoil must be free of noxious plants or plant parts such as Bermuda grass, quack grass, Johnson grass, nut sedge, poison ivy, thistle, or others as specified.
  c. Topsoil substitutes or amendments, as recommended by a qualified agronomist or soil scientist and approved by the appropriate approval authority, may be used in lieu of natural topsoil.
 6. Topsoil Application
  a. Erosion and sediment control practices must be maintained when applying topsoil.
  b. Uniformly distribute topsoil in a 5 to 8 inch layer and lightly compact to a minimum thickness of 4 inches. Spreading is to be performed in such a manner that sodding or seeding can proceed with a minimum of additional soil preparation and tillage. Any irregularities in the surface resulting from topsoiling or other operations must be corrected in order to prevent the formation of depressions or water pockets.
  c. Topsoil must not be placed if the topsoil or subsoil is in a frozen or muddy condition, when the subsoil is excessively wet or in a condition that may otherwise be detrimental to proper grading and seedbed preparation.

C. Soil Amendments (Fertilizer and Lime Specifications)
 1. Soil tests must be performed to determine the exact ratios and application rates for both lime and fertilizer on sites having disturbed areas of 5 acres or more. Soil analysis may be performed by a recognized private or commercial laboratory. Soil samples taken for engineering purposes may also be used for chemical analyses.
 2. Fertilizers must be uniform in composition, free flowing and suitable for accurate application by appropriate equipment. Manure may be substituted for fertilizer with prior approval from the appropriate approval authority. Fertilizers must all be delivered to the site fully labeled according to the applicable laws and must bear the name, trade name or trademark and warranty of the producer.
 3. Lime materials must be ground limestone (hydrated or burnt lime may be substituted except when hydroseeding) which contains at least 50 percent total oxides (calcium oxide plus magnesium oxide). Limestone must be ground to such fineness that at least 50 percent will pas through a #100 mesh sieve and 98 to 100 percent will pass through a #20 mesh sieve.
 4. Lime and fertilizer are to be evenly distributed and incorporated into the top 3 to 5 inches of soil by disking or other suitable means.
 5. Where the subsoil is either highly acidic or composed of heavy clays, spread ground limestone at the rate of 4 to 8 tons/acre (200-400 pounds per 1,000 square feet) prior to the placement of topsoil.

B-4-3 STANDARDS AND SPECIFICATIONS FOR SEEDING AND MULCHING

Definition
The application of seed and mulch to establish vegetative cover.
Purpose
To protect disturbed soils from erosion during and at the end of construction.
Conditions Where Practice Applies
To the surface of all perimeter controls, slopes, and any disturbed area not under active grading.
Criteria
A. Seeding
 1. Specifications
  a. All seed must meet the requirements of the Maryland State Seed Law. All seed must be subject to re-testing by a recognized seed laboratory. All seed used must have been tested within the 6 months immediately preceding the date of sowing such material on any project. Refer to Table B.4 regarding the quality of seed. Seed tags must be available upon request to the inspector to verify type of seed and seeding rate.
  b. Mulch alone may be applied between the fall and spring seeding dates only if the ground is frozen. The appropriate seeding mixture must be applied when the ground thaws.
  c. Inoculants: The inoculant for treating legume seed in the seed mixtures must be a pure culture of nitrogen fixing bacteria prepared specifically for the species. Inoculants must not be used later than the date indicated on the container. Add fresh inoculants as directed on the package. Use four times the recommended rate when hydroseeding. Note: It is very important to keep inoculant as cool as possible until used. Temperatures above 75 to 80 degrees Fahrenheit can weaken bacteria and make the inoculant less effective.
  d. Sod or seed must not be placed on soil which has been treated with soil sterilants or chemicals used for weed control until sufficient time has elapsed (14 days min.) to permit dissipation of phyto-toxic materials.
 2. Application
  a. Dry Seeding: This includes use of conventional drop or broadcast spreaders.
   a.a. Incorporate seed into the subsoil at the rates prescribed on Temporary Seeding Table B.1, Permanent Seeding Table B.3, or site-specific seeding summaries.
   a.b. Apply seed in two directions, perpendicular to each other. Apply half the seeding rate in each direction. Roll the seeded area with a weighted roller to provide good seed to soil contact.
  b. Drill or Cultipacker Seeding: Mechanized seeders that apply and cover seed with soil.
   b.a. Cultipacking seeders are required to bury the seed in such a fashion as to provide at least ¼ inch of soil covering. Seedbed must be firm after planting.
   b.b. Apply seed in two directions, perpendicular to each other. Apply half the seeding rate in each direction.
  c. Hydroseeding: Apply seed uniformly with hydroseeder (slurry includes seed and fertilizer).
   c.a. If fertilizer is being applied at the time of seeding, the application rates should not exceed the following: nitrogen, 100 pounds per acre total of soluble nitrogen; P205 (phosphorous), 200 pounds per acre; K20 (potassium), 200 pounds per acre.
   c.b. Lime: Use only ground agricultural limestone (up to 3 tons per acre may be applied by hydroseeding). Normally, not more than 2 tons are applied by hydroseeding at any one time. Do not use burnt or hydrated lime when hydroseeding.
   c.c. Mix seed and fertilizer on site and seed immediately and without interruption.
   c.d. When hydroseeding do not incorporate seed into the soil.
B. Mulching
 1. Mulch Materials (in order of preference)
  a. Straw consisting of thoroughly threshed wheat, rye, oat, or barley and reasonably bright in color. Straw is to be free of noxious weed seeds as specified in the Maryland Seed Law and not musty, moldy, caked, decayed, or excessively dusty. Note: Use only sterile straw mulch in areas where on species of grass is desired.
  b. Wood Cellulose Fiber Mulch (WCFM) consisting of specially prepared wood cellulose processed into a uniform fibrous physical state.
   b.a. WSFM is to be dyed green or contain a green dye in the package that will provide an appropriate color to facilitate visual inspection of the uniformly spread slurry.
   b.b. WSFM, including dye, must contain no germination or growth inhibiting factors.
   b.c. WSFM materials are to be manufactured and processed in such a manner that the wood cellulose fiber mulch will remain in uniform suspension in water under agitation and will blend with seed, fertilizer and other additives to form a homogeneous slurry. The mulch material must form a blotter-like ground cover, on application, having moisture absoption and percolation properties and must cover and hold grass seed in contact with the soil without inhibiting the growth of the grass seedlings.
   b.d. WSFM material must not contain elements or compounds at concentration leveles that will be phyto-toxic.
   b.e. WSFM must conform to the following physical requirements: fiber length of approximately 10 millimeters, diameter approximately 1 millimeter, pH range of 4.0 to 8.5, ash content of 1.6 percent maximum and water holding capacity of 90 percent minimum.
 2. Application
  a. Apply mulch to all seeded areas immediately after seeding.
  b. When straw mulch is used, spread it over all seeded areas at the rate of 2 tons per acre to a uniform loose depth of 1 to 2 inches. Apply mulch to achieve a uniform distribution and depth so that the soil surface is not exposed. When using a mulch anchoring tool, increase the application rate to 2.5 tons per acre.
  c. Wood cellulose fiber used as mulch must be applied at a net dry weight of 1500 pounds per acre. Mix the wood cellulose fiber with water to attain a mixture with a maximum of 50 pounds of wood cellulose fiber per 100 gallons of water.
 3. Anchoring
  a. Perform mulch anchoring immediately following application of mulch to minimize loss by wind or water. This may be done by one of the following methods (listed by preference), depending upon the size of the area and erosion hazard:
   a.a. A mulch anchoring tool is a tractor drawn implement designed to punch and anchor mulch into the soil surface a minimum of 2 inches. This practice is most effective on large areas, but is limited to flatter slopes where equipment can operate safely. If used on sloping land, this practice should follow the contour.
   a.b. Wood cellulose fiber may be used for anchoring straw. Apply the fiber binder at a net dry weight of 750 pounds per acre. Mis the wood cellulose fiber with water at a maximum of 50 pounds of wood cellulose fiber per 100 gallons of water.
   a.c. Synthetic binders such as Acrylic DLR (Agro-Tack), DCA-70, Petroset, Terra Tax II, Terra Tack AR or other approved equal may be used. Follow application rates as specified by the manufacturer. Application of liquid binders needs to be heaver at the edges where wind catches mulch, such as in valleys and on crests of banks. Use of asphalt binders is strictly prohibited.
   a.d. Lightweight plastic netting may be stapled over the mulch according to manufacturer recommendations. Netting is usually available in rolls 4 to 15 feet wide and 300 to 3,000 feet long.

B-4-4 STANDARDS AND SPECIFICATIONS FOR TEMPORARY STABILIZATION

Definition
To stabilize disturbed soils with vegetation for up to 6 months.
Purpose
To use fast growing vegetation that provides cover on disturbed soils.
Conditions Where Practice Applies
Exposed soils where ground cover is needed for a period of 6 months or less. For longer duration of time, permanent stabilization practices are required.
Criteria
 1. Select one or more of the species or seed mixtures listed in Table B.1 for the appropriate Plant Hardiness Zone (from Figure B.3), and enter them in the Temporary Seeding Summary below along with application rates, seeding dates and seeding depths. if this Summary is not put on the plan and completed, then Table B.1 plus fertilizer and lime rates must be put on the plan.
 2. For sites having soil tests performed, use and show the recommended rates by the testing agency. Soil tests are not required for Temporary Seeding.
 3. When stabilization is required outside of a seeding season, apply seed and mulch or straw mulch alone as prescribed in Section B-4-3.A.1.b and maintain until the next seeding season.

Temporary Seeding Summary

Hardiness Zone (from Figure B.3): 6b Seed Mixture (from Table B.1):					Fertilizer Rate (10-20-20)	Lime Rate
No.	Species	Application Rate (lb/ac)	Seeding Dates	Seeding Depths		
	Annual Ryegrass	40	3/1-5/15 8/1-10/15	½"	436 lb/ac (10lb/1000sf)	2 tons/ac (90 lb/1000sf)
	Foxtail Millet	30	5/16-7/31	½"		

B-4-5 STANDARDS AND SPECIFICATIONS FOR PERMANENT STABILIZATION

Definition
To stabilize disturbed soils with permanent vegetation.
Purpose
To use long-lived perennial grasses and legumes to establish permanent ground cover on disturbed soils.
Conditions Where Practice Applies
Exposed soils where ground cover is needed for 6 months or more.
Criteria
A. Seed Mixtures
 1. General Use
  a. Select one or more of the species or mixtures listed in Table B.3 for the appropriate Plant Hardiness Zone (from Figure B.3) and based on the site condition or purpose found on Table B.2. Enter selected mixture(s), application rates, and seeding dates in the Permanent Seeding Summary. The Summary is to be place don the plan.
  b. Additional planting specifications for exceptional sites such as shorelines, stream banks, or dunes or for special purposes such as wildlife or aesthetic treatment may be found in USDA-NRCS Technical Field Office Guide, Section 342 – Critical Area Planting.
  c. For sites having disturbed area over 5 acres, use and show the rates recommended by the soil testing agency.
  d. For areas receiving low maintenance, apply urea form fertilizer (46-0-0) at 3 ½ pounds per 1000 square feet (150 pounds per acre) at the time of seeding in addition to the soil amendments shown in the Permanent Seeding Summary.
 2. Turfgrass Mixtures
  a. Areas where turfgrass may be desired include lawns, parks, playground, and commercial sites which will receive a medium to high level of maintenance.
  b. Select one or more of the species or mixtures listed below based on the site conditions or purpose. Enter selected mixture(s), application rates, and seeding dates in the Permanent Seeding Summary. The summary is to be place don the plan.
   b.a. Kentucky Bluegrass: Full Sun Mixture: For use in areas that receive intensive management. Irrigation required in the areas of central Maryland and Eastern Shore. Recommended Certified Kentucky Bluegrass Cultivars Seeding Rate: 1.5 to 2.0 pounds per 1000 square feet. Choose a minimum of three Kentucky bluegrass cultivars with each ranging from 10 to 35 percent of the total mixture by weight.
   b.b. Kentucky Bluegrass/Perennial Rye: Full Sun Mixture: For use in full sun areas where rapid establishment is necessary and when turf will receive medium to intensive management. Certified Perennial Ryegrass Cultivars/Certified Kentucky Bluegrass Seeding Rate: 2 pounds mixture per 1000 sqaure feet. Choose a minimum of three Kentucky bluegrass cultivars with each ranging from 10 to 35 percent of the total mixture by weight.
   b.c. Tall Fescue/Kentucky Bluegrass: Full Sun Mixture: For use in drought prone areas and/or for areas receiveing low to medium management in full sun to medium shade. Recommended mixture includes; Certified Tall Fescure Cultivars 95 to 100 percent, Certified Kentucky Bluegrass Cultivars 0 to 5 percent. Seeding Rate: 5 to 8 pounds per 1000 square feet. One or more cultivars may be blended.
   b.d. Kentucky Bluegrass/Fine Fescue: Shade Mixture: For use in areas with shade in Bluegrass lawns. For establishment in high quality, intensively managed turf area. Mixture includes; Certified Kentucky Bluegrass Cultivars 30 to 40 percent and Certified Fine Fescue and 60 to 70 percent. Seeding Rate: 1 ½ to 3 pounds per 1000 square feet.
   Notes: Select turfgrass varieties from those listed in the most current University of Maryland Publication, Agronomy Memo #77, "Turfgrass Cultivar Recommendations for Maryland"

   Choose certified material. Certified material is the best guarantee of cultivar purity. The certification program of the Maryland Department of Agriculture, Turf and Seed Section, provides a reliable means of consumer protection and assures a pure genetic line.
  c. Ideal Times of Seeding for Turf Grass Mixtures
   Western MD: March 15 to June 1, August 1 to October 1 (Hardiness Zones: 5b, 6a)
   Central MD: March 1 to May 15, August 15 to October 15 (Hardiness Zone: 6b)
   Southern MD, Eastern Shore: March 1 to May 15, August 15 to October 15 (Hardiness Zones: 7a, 7b)
  d. Till areas to receive seed by disking or other approved methods to a depth of 2 to 4 inches, level and rake the areas to prepare a proper seedbed. Remove stones and debris over 1 ½ inches in diameter. The resulting seedbed must be in such condition that future mowing of grasses will pose no difficulty.
  e. If soil moisture is deficient, supply new seedings with adequate water for plant growth (½ to 1 inch every 3 to 4 days depending on soil texture) until they are firmly established. This is especially true when seedings are made late in the planting season, in abnormally dry or hot seasons, or on adverse sites.

Permanent Seeding Summary

Hardiness Zone (from Figure B.3): 6b Seed Mixture (from Table B.1): 11				Fertilizer Rate (10-20-20)			Lime Rate
Species	Application Rate (lb/ac)	Seeding Dates	Seeding Depths	N	P205	K20	
Creeping Red Fescue	30	3/1-10/15	¼"-½"	45 lb/ac (1.0lb/ 1000sf)	90 lb/ac (2lb/ 1000sf)	90 lb/ac (2lb/ 1000sf)	2 tons/ac (90 lb/1000sf)
Chewings Fescue	30	3/1-10/15	¼"-½"				
Kentucky Bluegrass	15	3/1-10/15	¼"-½"				

ENGINEER'S CERTIFICATION

"I CERTIFY THAT THIS PLAN FOR ~~POND CONSTRUCTION~~, EROSION AND SEDIMENT CONTROL REPRESENTS A PRACTICAL AND WORKABLE PLAN BASED ON MY PERSONAL KNOWLEDGE OF THE SITE CONDITIONS. THIS PLAN WAS PREPARED IN ACCORDANCE WITH THE REQUIREMENTS OF THE HOWARD SOIL CONSERVATION DISTRICT. ~~I HAVE NOTIFIED THE DEVELOPER THAT HE/SHE MUST ENGAGE A REGISTERED PROFESSIONAL ENGINEER TO SUPERVISE POND CONSTRUCTION AND PROVIDE THE HOWARD SOIL CONSERVATION DISTRICT WITH AN "AS-BUILT" PLAN OF THE POND WITHIN 30 DAYS OF COMPLETION.~~"

SIGNATURE OF ENGINEER (PRINT NAME BELOW SIGNATURE) Anthony U. Olsen — DATE 3/27/14

DEVELOPER'S CERTIFICATION

"I/WE CERTIFY THAT ALL DEVELOPMENT AND/OR CONSTRUCTION WILL BE DONE ACCORDING TO THESE PLANS, AND THAT ANY RESPONSIBLE PERSONNEL INVOLVED IN THE CONSTRUCTION PROJECT WILL HAVE A CERTIFICATE OF ATTENDANCE AT A DEPARTMENT OF THE ENVIRONMENT APPROVED TRAINING PROGRAM FOR THE CONTROL OF SEDIMENT AND EROSION BEFORE BEGINNING THE PROJECT. ~~I SHALL ENGAGE A REGISTERED PROFESSIONAL ENGINEER TO SUPERVISE POND CONSTRUCTION AND PROVIDE THE HOWARD SOIL CONSERVATION DISTRICT WITH AN "AS-BUILT" PLAN OF THE POND WITHIN 30 DAY OF COMPLETION.~~ I ALSO AUTHORIZE PERIODIC ON-SITE INSPECTIONS BY THE HOWARD SOIL CONSERVATION DISTRICT."

SIGNATURE OF DEVELOPER (PRINT NAME BELOW SIGNATURE) Anthony U. Olsen, Araul Delerme — DATE 3/27/14 3/27/14

APPROVED: DEPARTMENT OF PLANNING AND ZONING

CHIEF, DEVELOPMENT ENGINEERING DIVISION — DATE 6.17.14
CHIEF, DIVISION OF LAND DEVELOPMENT — DATE 7.28.14
DIRECTOR — DATE 7-28-14

THESE PLANS FOR ~~SMALL POND~~ CONSTRUCTION, SOIL EROSION AND SEDIMENT CONTROL MEET THE REQUIREMENTS OF THE HOWARD SOIL CONSERVATION DISTRICT.

HOWARD SOIL CONSERVATION DISTRICT — DATE 3/27/14
EP-1234

REVISIONS

HOWARD COUNTY

DEPARTMENT OF RECREATION AND PARKS
7120 OAKLAND MILLS ROAD
COLUMBIA, MD 21046

DEPARTMENT OF PUBLIC WORKS
9250 BENDIX ROAD
ELLICOTT CITY, MD 21043

WR&A
WHITMAN, REQUARDT & ASSOCIATES, LLP
801 South Caroline Street, Baltimore, Maryland 21231
Phone: 410-235-3450 Fax: 410-243-5716

PROPERTY

TAX MAP 36, GRID 5, PARCEL 3,72

ZONING: RC-DEO

ELECTION DISTRICT 3/7

GRAPHIC SCALES

SIGNATURE

STATE OF MARYLAND — ANTHONY USABURO OLSEN — No. 19376 — PROFESSIONAL ENGINEER

PROFESSIONAL CERTIFICATION.
I HEREBY CERTIFY THAT THESE DOCUMENTS WERE PREPARED OR APPROVED BY ME, AND THAT I AM A DULY LICENSED PROFESSIONAL ENGINEER UNDER THE LAWS OF THE STATE OF MARYLAND, LICENSE NO. 19376
EXPIRATION DATE: 09/22/2015

BLANDAIR REGIONAL PARK - PHASE 2

EROSION AND SEDIMENT CONTROL - NOTES

Drawing No.
C5.1

Scale: NONE
Date: 03/31/2014 | Sheet 21 of 41
Des: BWJ | Drawn: SAD | Check: AUO

SDP-12-063

PLOT DATE: 3/27/2014 9:11:24 AM PAGE SETUP: WRA-PDF (36X24) PLOT STYLE: WRA_2006.CTB PAPER SIZE:36X24
FILENAME: N:\42038-002\CADD\42038002C501.DWG

DETAIL B-1 STABILIZED CONSTRUCTION ENTRANCE

STANDARD SYMBOL: SCE

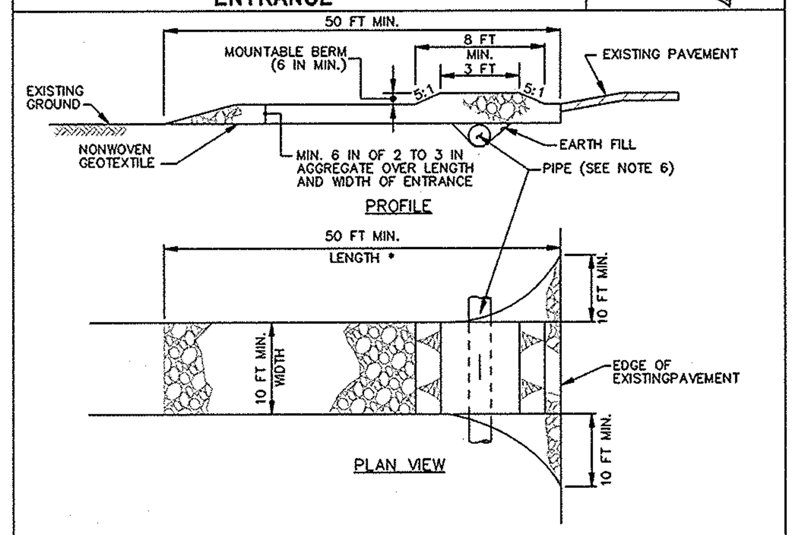

CONSTRUCTION SPECIFICATIONS

1. PLACE STABILIZED CONSTRUCTION ENTRANCE IN ACCORDANCE WITH THE APPROVED PLAN. VEHICLES MUST TRAVEL OVER THE ENTIRE LENGTH OF THE SCE. USE MINIMUM LENGTH OF 50 FEET (*30 FEET FOR SINGLE RESIDENCE LOT). USE MINIMUM WIDTH OF 10 FEET. FLARE SCE 10 FEET MINIMUM AT THE EXISTING ROAD TO PROVIDE A TURNING RADIUS.
2. PIPE ALL SURFACE WATER FLOWING TO OR DIVERTED TOWARD THE SCE UNDER THE ENTRANCE, MAINTAINING POSITIVE DRAINAGE. PROTECT PIPE INSTALLED THROUGH THE SCE WITH A MOUNTABLE BERM WITH 5:1 SLOPES AND A MINIMUM OF 12 INCHES OF STONE OVER THE PIPE. PROVIDE PIPE AS SPECIFIED ON APPROVED PLAN. WHEN THE SCE IS LOCATED AT A HIGH SPOT AND HAS NO DRAINAGE TO CONVEY, A PIPE IS NOT NECESSARY. A MOUNTABLE BERM IS REQUIRED WHEN SCE IS NOT LOCATED AT A HIGH SPOT.
3. PREPARE SUBGRADE AND PLACE NONWOVEN GEOTEXTILE, AS SPECIFIED IN SECTION H-1 MATERIALS.
4. PLACE CRUSHED AGGREGATE (2 TO 3 INCHES IN SIZE) OR EQUIVALENT RECYCLED CONCRETE (WITHOUT REBAR) AT LEAST 6 INCHES DEEP OVER THE LENGTH AND WIDTH OF THE SCE.
5. MAINTAIN ENTRANCE IN A CONDITION THAT MINIMIZES TRACKING OF SEDIMENT. ADD STONE OR MAKE OTHER REPAIRS AS CONDITIONS DEMAND TO MAINTAIN CLEAN SURFACE, MOUNTABLE BERM, AND SPECIFIED DIMENSIONS. IMMEDIATELY REMOVE STONE AND/OR SEDIMENT SPILLED, DROPPED, OR TRACKED ONTO ADJACENT ROADWAY BY VACUUMING, SCRAPING, AND/OR SWEEPING. WASHING ROADWAY TO REMOVE MUD TRACKED ONTO PAVEMENT IS NOT ACCEPTABLE UNLESS WASH WATER IS DIRECTED TO AN APPROVED SEDIMENT CONTROL PRACTICE.

MARYLAND STANDARDS AND SPECIFICATIONS FOR SOIL EROSION AND SEDIMENT CONTROL

U.S. DEPARTMENT OF AGRICULTURE NATURAL RESOURCES CONSERVATION SERVICE	2011	MARYLAND DEPARTMENT OF ENVIRONMENT WATER MANAGEMENT ADMINISTRATION

DETAIL E-3 SUPER SILT FENCE

STANDARD SYMBOL: ——SSF——

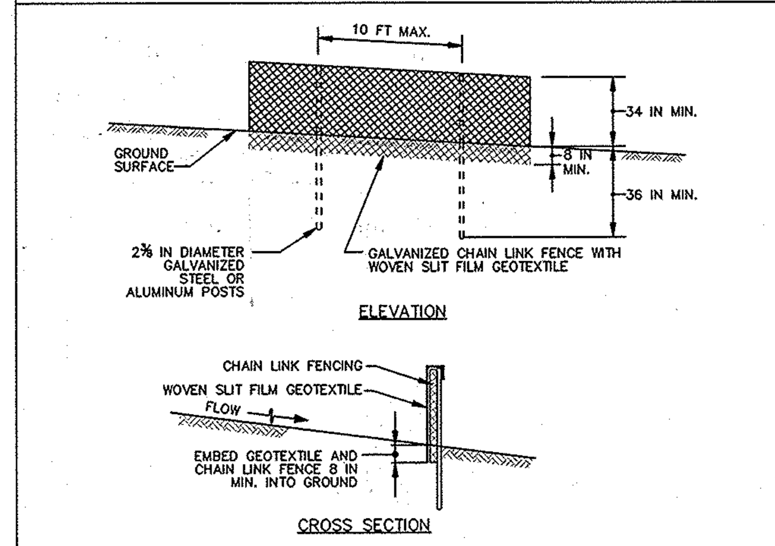

CONSTRUCTION SPECIFICATIONS

1. INSTALL 2⅜ INCH DIAMETER GALVANIZED STEEL POSTS OF 0.095 INCH WALL THICKNESS AND SIX FOOT LENGTH SPACED NO FURTHER THAN 10 FEET APART. DRIVE THE POSTS A MINIMUM OF 36 INCHES INTO THE GROUND.
2. FASTEN 9 GAUGE OR HEAVIER GALVANIZED CHAIN LINK FENCE (2⅜ INCH MAXIMUM OPENING) 42 INCHES IN HEIGHT SECURELY TO THE FENCE POSTS WITH WIRE TIES OR HUG RINGS.
3. FASTEN WOVEN SLIT FILM GEOTEXTILE AS SPECIFIED IN SECTION H-1 MATERIALS, SECURELY TO THE UPSLOPE SIDE OF CHAIN LINK FENCE WITH TIES SPACED EVERY 24 INCHES AT THE TOP AND MID SECTION. EMBED GEOTEXTILE AND CHAIN LINK FENCE A MINIMUM OF 8 INCHES INTO THE GROUND.
4. WHERE ENDS OF THE GEOTEXTILE COME TOGETHER, THE ENDS SHALL BE OVERLAPPED BY 6 INCHES, FOLDED, AND STAPLED TO PREVENT SEDIMENT BY PASS.
5. EXTEND BOTH ENDS OF THE SUPER SILT FENCE A MINIMUM OF FIVE HORIZONTAL FEET UPSLOPE AT 45 DEGREES TO THE MAIN FENCE ALIGNMENT TO PREVENT RUNOFF FROM GOING AROUND THE ENDS OF THE SUPER SILT FENCE.
6. PROVIDE MANUFACTURER CERTIFICATION TO THE INSPECTION/ENFORCEMENT AUTHORITY SHOWING THAT GEOTEXTILE USED MEETS THE REQUIREMENTS IN SECTION H-1 MATERIALS.
7. REMOVE ACCUMULATED SEDIMENT AND DEBRIS WHEN BULGES DEVELOP IN FENCE OR WHEN SEDIMENT REACHES 25% OF FENCE HEIGHT. REPLACE GEOTEXTILE IF TORN. IF UNDERMINING OCCURS, REINSTALL CHAIN LINK FENCING AND GEOTEXTILE.

MARYLAND STANDARDS AND SPECIFICATIONS FOR SOIL EROSION AND SEDIMENT CONTROL

U.S. DEPARTMENT OF AGRICULTURE NATURAL RESOURCES CONSERVATION SERVICE	2011	MARYLAND DEPARTMENT OF ENVIRONMENT WATER MANAGEMENT ADMINISTRATION

DETAIL E-1 SILT FENCE

STANDARD SYMBOL: ——SF——

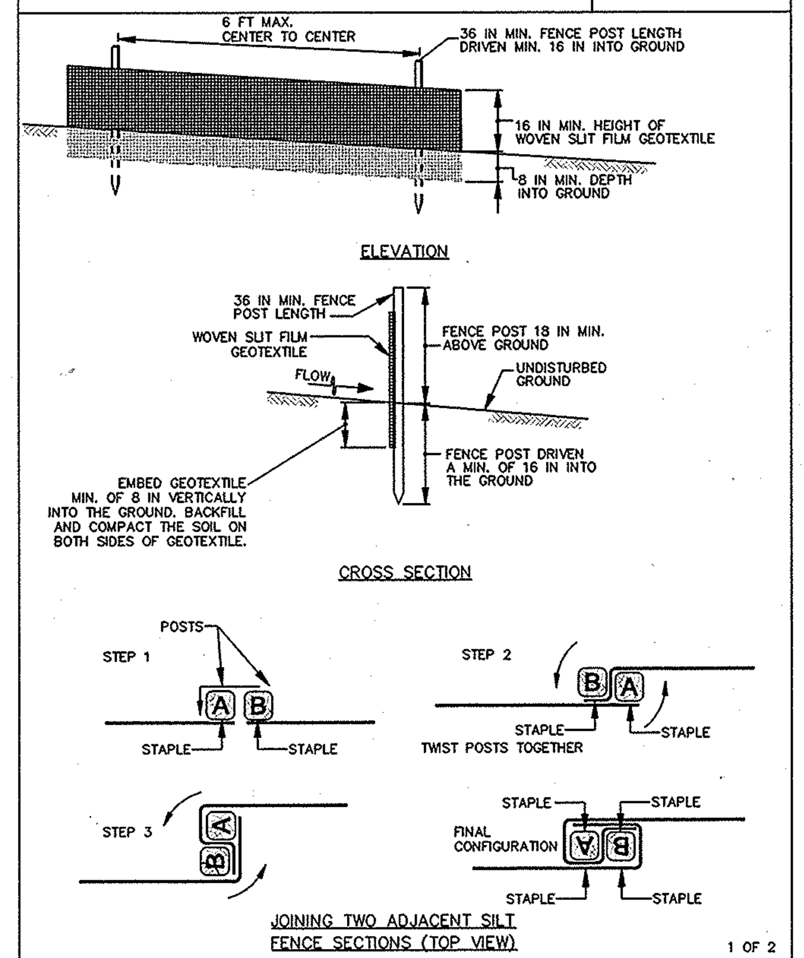

1 OF 2

MARYLAND STANDARDS AND SPECIFICATIONS FOR SOIL EROSION AND SEDIMENT CONTROL

U.S. DEPARTMENT OF AGRICULTURE NATURAL RESOURCES CONSERVATION SERVICE	2011	MARYLAND DEPARTMENT OF ENVIRONMENT WATER MANAGEMENT ADMINISTRATION

DETAIL E-1 SILT FENCE

STANDARD SYMBOL: ——SF——

CONSTRUCTION SPECIFICATIONS

1. USE WOOD POSTS 1¾ X 1¾ ± ⅛ INCH (MINIMUM) SQUARE CUT OF SOUND QUALITY HARDWOOD. AS AN ALTERNATIVE TO WOODEN POST USE STANDARD "T" OR "U" SECTION STEEL POSTS WEIGHING NOT LESS THAN 1 POUND PER LINEAR FOOT.
2. USE 36 INCH MINIMUM POSTS DRIVEN 16 INCH MINIMUM INTO GROUND NO MORE THAN 6 FEET APART.
3. USE WOVEN SLIT FILM GEOTEXTILE AS SPECIFIED IN SECTION H-1 MATERIALS AND FASTEN GEOTEXTILE SECURELY TO UPSLOPE SIDE OF FENCE POSTS WITH WIRE TIES OR STAPLES AT TOP AND MID-SECTION.
4. PROVIDE MANUFACTURER CERTIFICATION TO THE AUTHORIZED REPRESENTATIVE OF THE INSPECTION/ENFORCEMENT AUTHORITY SHOWING THAT THE GEOTEXTILE USED MEETS THE REQUIREMENTS IN SECTION H-1 MATERIALS.
5. EMBED GEOTEXTILE A MINIMUM OF 8 INCHES VERTICALLY INTO THE GROUND. BACKFILL AND COMPACT THE SOIL ON BOTH SIDES OF FABRIC.
6. WHERE TWO SECTIONS OF GEOTEXTILE ADJOIN: OVERLAP, TWIST, AND STAPLE TO POST IN ACCORDANCE WITH THIS DETAIL.
7. EXTEND BOTH ENDS OF THE SILT FENCE A MINIMUM OF FIVE HORIZONTAL FEET UPSLOPE AT 45 DEGREES TO THE MAIN FENCE ALIGNMENT TO PREVENT RUNOFF FROM GOING AROUND THE ENDS OF THE SILT FENCE.
8. REMOVE ACCUMULATED SEDIMENT AND DEBRIS WHEN BULGES DEVELOP IN SILT FENCE OR WHEN SEDIMENT REACHES 25% OF FENCE HEIGHT. REPLACE GEOTEXTILE IF TORN. IF UNDERMINING OCCURS, REINSTALL FENCE.

2 OF 2

MARYLAND STANDARDS AND SPECIFICATIONS FOR SOIL EROSION AND SEDIMENT CONTROL

U.S. DEPARTMENT OF AGRICULTURE NATURAL RESOURCES CONSERVATION SERVICE	2011	MARYLAND DEPARTMENT OF ENVIRONMENT WATER MANAGEMENT ADMINISTRATION

DETAIL B-4-6-C PERMANENT SOIL STABILIZATION MATTING CHANNEL APPLICATION

STANDARD SYMBOL: PSSMC – * lb/ft² (* INCLUDE SHEAR STRESS)

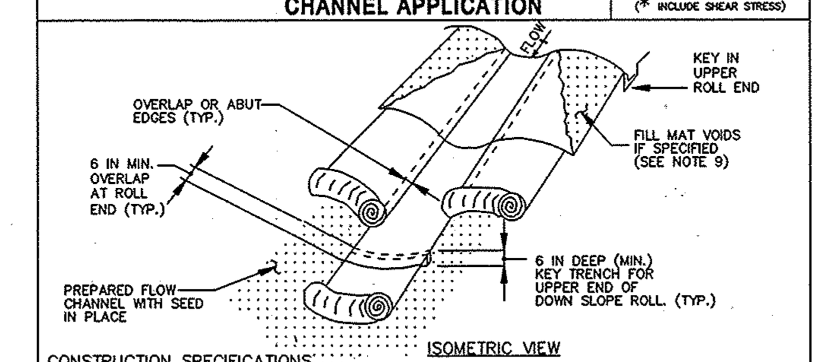

CONSTRUCTION SPECIFICATIONS

1. USE MATTING THAT HAS A DESIGN VALUE FOR SHEAR STRESS EQUAL TO OR HIGHER THAN THE SHEAR STRESS DESIGNATED ON APPROVED PLANS.
2. USE PERMANENT SOIL STABILIZATION MATTING MADE OF OPEN WEAVE SYNTHETIC, NON-DEGRADABLE FIBERS OR ELEMENTS OF UNIFORM THICKNESS AND DISTRIBUTION THROUGHOUT. CHEMICALS USED IN THE MAT MUST BE NON-LEACHING AND NON-TOXIC TO VEGETATION AND SEED GERMINATION AND NON-INJURIOUS TO THE SKIN. IF PRESENT, NETTING MUST BE EXTRUDED PLASTIC WITH A MAXIMUM MESH OPENING OF 2x2 INCHES AND SUFFICIENTLY BONDED OR SEWN ON 2 INCH CENTERS ALONG LONGITUDINAL AXIS OF THE MATERIAL TO PREVENT SEPARATION OF THE NET FROM THE PARENT MATERIAL.
3. SECURE MATTING USING STEEL STAPLES OR WOOD STAKES. STAPLES MUST BE "U" OR "T" SHAPED STEEL WIRE HAVING A MINIMUM GAUGE OF NO. 11 AND NO. 8 RESPECTIVELY. "U" SHAPED STAPLES MUST AVERAGE 1 TO 1 ½ INCHES WIDE AND BE A MINIMUM OF 6 INCHES LONG. "T" SHAPED STAPLES MUST HAVE A MINIMUM 8 INCH MAIN LEG, A MINIMUM 1 INCH SECONDARY LEG, AND MINIMUM 4 INCH HEAD. WOOD STAKES MUST BE ROUGH-SAWN HARDWOOD, 12 TO 24 INCHES IN LENGTH, 1x3 INCH IN CROSS SECTION, AND WEDGE SHAPE AT THE BOTTOM.
4. PERFORM FINAL GRADING, TOPSOIL APPLICATION, SEEDBED PREPARATION, AND PERMANENT SEEDING IN ACCORDANCE WITH SPECIFICATIONS. PLACE MATTING WITHIN 48 HOURS OF COMPLETING SEEDING OPERATIONS, UNLESS END OF WORKDAY STABILIZATION IS SPECIFIED ON THE APPROVED EROSION AND SEDIMENT CONTROL PLAN.
5. UNROLL MATTING IN DIRECTION OF WATER FLOW, CENTERING THE FIRST ROLL ON THE CHANNEL CENTER LINE. WORK FROM CENTER OF CHANNEL OUTWARD WHEN PLACING ROLLS. LAY MATTING SMOOTHLY AND FIRMLY UPON THE SEEDED SURFACE. AVOID STRETCHING THE MATTING.
6. OVERLAP OR ABUT EDGES OF MATTING ROLLS PER MANUFACTURER RECOMMENDATIONS. OVERLAP ROLL ENDS BY 6 INCHES (MINIMUM), WITH THE UPSTREAM MAT OVERLAPPING ON TOP OF THE NEXT DOWNSTREAM MAT.
7. KEY IN THE TOP OF SLOPE END OF MAT 6 INCHES (MINIMUM) BY DIGGING A TRENCH, PLACING THE MATTING ROLL END IN THE TRENCH, STAPLING THE MAT IN PLACE, REPLACING THE EXCAVATED MATERIAL, AND TAMPING TO SECURE THE MAT END IN THE KEY.
8. STAPLE/STAKE MAT IN A STAGGERED PATTERN ON 4 FOOT (MAXIMUM) CENTERS THROUGHOUT AND 2 FOOT (MAXIMUM) CENTERS ALONG SEAMS, JOINTS, AND ROLL ENDS.
9. IF SPECIFIED BY THE DESIGNER OR MANUFACTURER AND DEPENDING ON THE TYPE OF MAT BEING INSTALLED, ONCE THE MATTING IS KEYED AND STAPLED IN PLACE, FILL THE MAT VOIDS WITH TOP SOIL OR GRANULAR MATERIAL AND LIGHTLY COMPACT OR ROLL TO MAXIMIZE SOIL/MAT CONTACT WITHOUT CRUSHING MAT.
10. ESTABLISH AND MAINTAIN VEGETATION SO THAT REQUIREMENTS FOR ADEQUATE VEGETATIVE ESTABLISHMENT ARE CONTINUOUSLY MET IN ACCORDANCE WITH SECTION B-4 VEGETATIVE STABILIZATION.

MARYLAND STANDARDS AND SPECIFICATIONS FOR SOIL EROSION AND SEDIMENT CONTROL

U.S. DEPARTMENT OF AGRICULTURE NATURAL RESOURCES CONSERVATION SERVICE	2011	MARYLAND DEPARTMENT OF ENVIRONMENT WATER MANAGEMENT ADMINISTRATION

DETAIL E-9-2 AT-GRADE INLET PROTECTION

STANDARD SYMBOL: AGIP

MAXIMUM DRAINAGE AREA = 1 ACRE

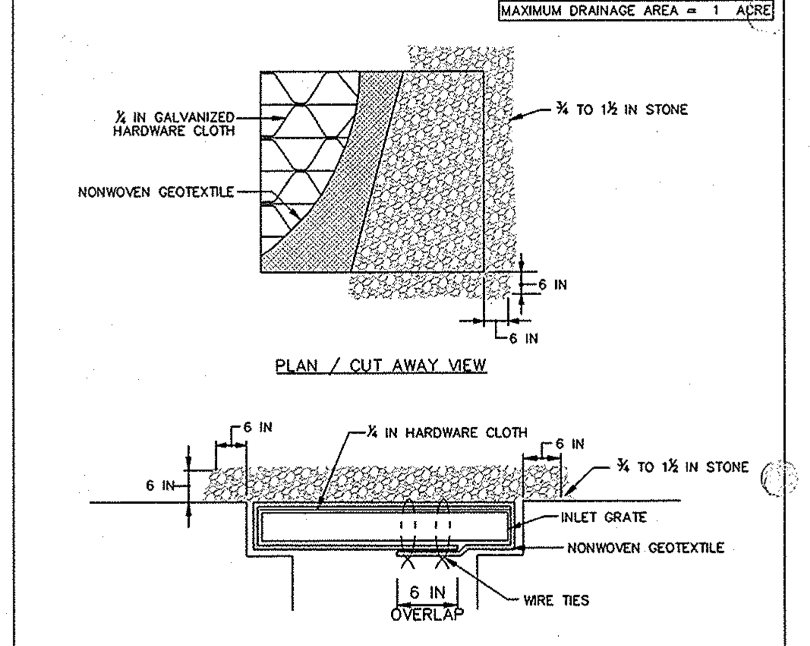

CONSTRUCTION SPECIFICATIONS

1. USE NONWOVEN GEOTEXTILE AS SPECIFIED IN SECTION H-1 MATERIALS.
2. LIFT GRATE AND WRAP WITH NONWOVEN GEOTEXTILE TO COMPLETELY COVER ALL OPENINGS. SECURE WITH WIRE TIES AND SET GRATE BACK IN PLACE.
3. PLACE CLEAN ¾ TO 1½ INCH STONE OR EQUIVALENT RECYCLED CONCRETE 6 INCHES THICK ON THE GRATE.
4. STORM DRAIN INLET PROTECTION REQUIRES FREQUENT MAINTENANCE. REMOVE ACCUMULATED SEDIMENT AFTER EACH RAIN EVENT TO MAINTAIN FUNCTION AND AVOID PREMATURE CLOGGING. IF INLET PROTECTION DOES NOT COMPLETELY DRAIN WITHIN 24 HOURS AFTER A STORM EVENT, IT IS CLOGGED. WHEN THIS OCCURS, REMOVE ACCUMULATED SEDIMENT AND CLEAN, OR REPLACE GEOTEXTILE AND STONE.

MARYLAND STANDARDS AND SPECIFICATIONS FOR SOIL EROSION AND SEDIMENT CONTROL

U.S. DEPARTMENT OF AGRICULTURE NATURAL RESOURCES CONSERVATION SERVICE	2011	MARYLAND DEPARTMENT OF ENVIRONMENT WATER MANAGEMENT ADMINISTRATION

DETAIL 31 TREE PROTECTION

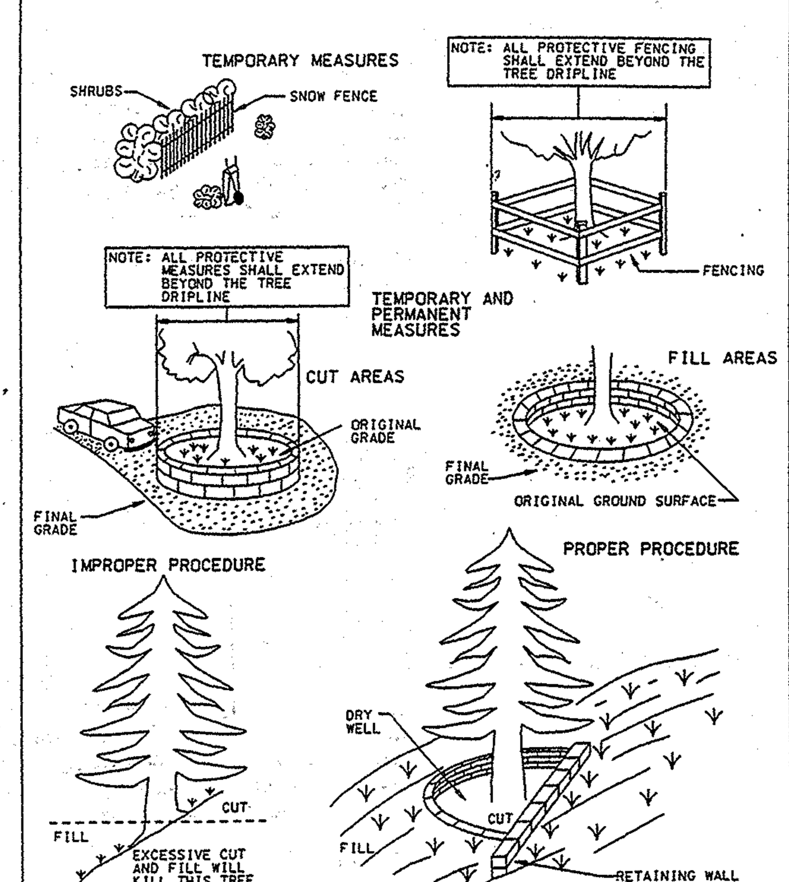

U.S. DEPARTMENT OF AGRICULTURE SOIL CONSERVATION SERVICE	PAGE G - 23 - 3	MARYLAND DEPARTMENT OF ENVIRONMENT WATER MANAGEMENT ADMINISTRATION

DETAIL C-1 EARTH DIKE

STANDARD SYMBOL: A-1 — PLACE DESIGNATION (e.g. A-1) ON FLOW CHANNEL SIDE OF DIKE.

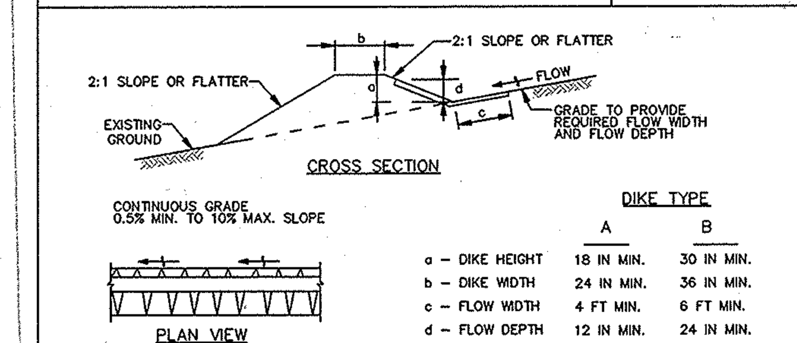

DIKE TYPE

	A	B
a – DIKE HEIGHT	18 IN MIN.	30 IN MIN.
b – DIKE WIDTH	24 IN MIN.	36 IN MIN.
c – FLOW WIDTH	4 FT MIN.	6 FT MIN.
d – FLOW DEPTH	12 IN MIN.	24 IN MIN.

FLOW CHANNEL STABILIZATION

A-1	SEED WITH STRAW MULCH AND TACK. (NOT ALLOWED FOR CLEAR WATER DIVERSION.)
A-2/B-2	SEED WITH SOIL STABILIZATION MATTING OR LINE WITH SOD.
A-3/B-3	4 TO 7 INCH STONE OR EQUIVALENT RECYCLED CONCRETE PRESSED INTO SOIL A MINIMUM OF 7 INCHES AND FLUSH WITH GROUND.

CONSTRUCTION SPECIFICATIONS

1. REMOVE AND DISPOSE OF ALL TREES, BRUSH, STUMPS, OBSTRUCTIONS, AND OTHER OBJECTIONABLE MATERIAL SO AS NOT TO INTERFERE WITH PROPER FUNCTION OF EARTHDIKE.
2. EXCAVATE OR SHAPE EARTH DIKE TO LINE, GRADE, AND CROSS SECTION AS SPECIFIED. BANK PROJECTIONS OR OTHER IRREGULARITIES ARE NOT ALLOWED.
3. COMPACT FILL.
4. CONSTRUCT FLOW CHANNEL ON AN UNINTERRUPTED, CONTINUOUS GRADE, ADJUSTING THE LOCATION DUE TO FIELD CONDITIONS AS NECESSARY TO MAINTAIN POSITIVE DRAINAGE.
5. PROVIDE OUTLET PROTECTION AS REQUIRED ON APPROVED PLAN.
6. STABILIZE EARTH DIKE WITHIN THREE DAYS OF INSTALLATION. STABILIZE FLOW CHANNEL FOR CLEAR WATER DIVERSION WITHIN 24 HOURS OF INSTALLATION.
7. MAINTAIN LINE, GRADE, AND CROSS SECTION. REMOVE ACCUMULATED SEDIMENT AND DEBRIS, AND MAINTAIN POSITIVE DRAINAGE. KEEP EARTH DIKE AND POINT OF DISCHARGE FREE OF EROSION, AND CONTINUOUSLY MEET REQUIREMENTS FOR ADEQUATE VEGETATIVE ESTABLISHMENT IN ACCORDANCE WITH SECTION B-4 VEGETATIVE STABILIZATION.
8. UPON REMOVAL OF EARTH DIKE, GRADE AREA FLUSH WITH EXISTING GROUND. WITHIN 24 HOURS OF REMOVAL STABILIZE DISTURBED AREA WITH TOPSOIL, SEED, AND MULCH, OR AS SPECIFIED ON APPROVED PLAN.

MARYLAND STANDARDS AND SPECIFICATIONS FOR SOIL EROSION AND SEDIMENT CONTROL

U.S. DEPARTMENT OF AGRICULTURE NATURAL RESOURCES CONSERVATION SERVICE	2011	MARYLAND DEPARTMENT OF ENVIRONMENT WATER MANAGEMENT ADMINISTRATION

B-4-8 STANDARDS AND SPECIFICATIONS

FOR

STOCKPILE AREA

Definition

A mound or pile of soil protected by appropriately designed erosion and sediment control measures.

Purpose

To provide a designated location for the temporary storage of soil that controls the potential for erosion, sedimentation, and changes to drainage patterns.

Conditions Where Practice Applies

Stockpile areas are utilized when it is necessary to salvage and store soil for later use.

Criteria

1. The stockpile location and all related sediment control practices must be clearly indicated on the erosion and sediment control plan.
2. The footprint of the stockpile must be sized to accommodate the anticipated volume of material and based on a side slope ratio no steeper than 2:1. Benching must be provided in accordance with Section B-3 Land Grading.
3. Runoff from the stockpile area must drain to a suitable sediment control practice.
4. Access the stockpile area from the upgrade side.
5. Clear water runoff into the stockpile area must be minimized by use of a diversion device such as an earth dike, temporary swale or diversion fence. Provisions must be made for discharging concentrated flow in a non-erosive manner.
6. Where runoff concentrates along the toe of the stockpile fill, an appropriate erosion/sediment control practice must be used to intercept the discharge.
7. Stockpiles must be stabilized in accordance with the 3/7 day stabilization requirement as well as Standard B-4-1 Incremental Stabilization and Standard B-4-4 Temporary Stabilization.
8. If the stockpile is located on an impervious surface, a liner should be provided below the stockpile to facilitate cleanup. Stockpiles containing contaminated material must be covered with impermeable sheeting.

Maintenance

The stockpile area must continuously meet the requirements for Adequate Vegetative Establishment in accordance with Section B-4 Vegetative Stabilization. Side slopes must be maintained at no steeper than a 2:1 ratio. The stockpile area must be kept free of erosion. If the vertical height of a stockpile exceeds 20 feet for 2:1 slopes, 30 feet for 3:1 slopes, or 40 feet for 4:1 slopes, benching must be provided in accordance with Section B-3 Land Grading.

B.43

DETAIL D-4-1-C ROCK OUTLET PROTECTION III

STANDARD SYMBOL: ROPIII

DISCHARGE TO AN UNCONFINED CHANNEL OR FLAT AREA

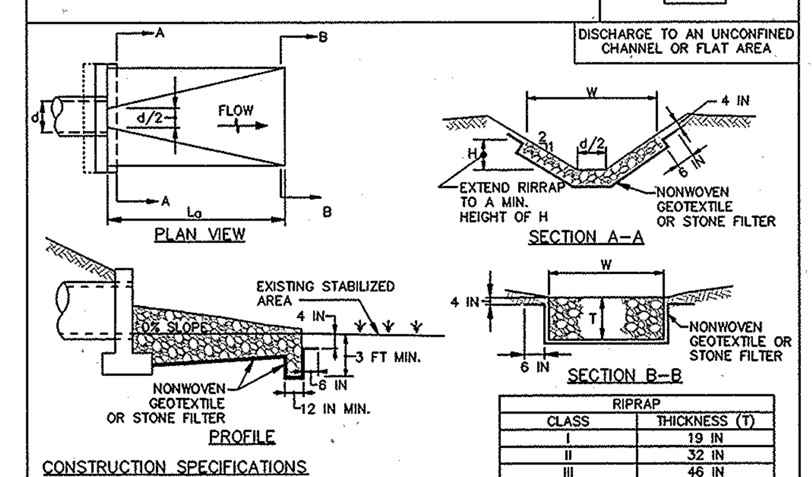

RIPRAP	
CLASS	THICKNESS (T)
I	19 IN
II	32 IN
III	46 IN

CONSTRUCTION SPECIFICATIONS

1. RIPRAP AND STONE MUST CONFORM TO THE SPECIFIED CLASS.
2. USE NONWOVEN GEOTEXTILE, AS SPECIFIED IN SECTION H-1 MATERIALS, AND PROTECT FROM PUNCTURING, CUTTING, OR TEARING. REPAIR ANY DAMAGE OTHER THAN AN OCCASIONAL SMALL HOLE BY PLACING ANOTHER PIECE OF GEOTEXTILE OVER THE DAMAGED PART OR BY COMPLETELY REPLACING THE GEOTEXTILE. PROVIDE A MINIMUM OF ONE FOOT OVERLAP FOR ALL REPAIRS AND FOR JOINING TWO PIECES OF GEOTEXTILE TOGETHER.
3. PREPARE THE SUBGRADE FOR GEOTEXTILE OR STONE FILTER (⅜ TO 1½ INCH MINIMUM STONE FOR 6 INCH MINIMUM DEPTH) AND RIPRAP TO THE REQUIRED LINES AND GRADES. COMPACT ANY FILL REQUIRED IN THE SUBGRADE TO A DENSITY OF APPROXIMATELY THAT OF THE SURROUNDING UNDISTURBED MATERIAL.
4. EXTEND GEOTEXTILE AT LEAST 6 INCHES BEYOND EDGES OF RIPRAP AND EMBED AT LEAST 4 INCHES AT SIDES OF RIPRAP.
5. CONSTRUCT RIPRAP OUTLET TO FULL COURSE THICKNESS IN ONE OPERATION AND IN SUCH A MANNER AS TO AVOID DISPLACEMENT OF UNDERLYING MATERIALS. PLACE STONE FOR RIPRAP OUTLET IN A MANNER THAT WILL ENSURE THAT IT IS REASONABLY HOMOGENOUS WITH THE SMALLER STONES AND SPALLS FILLING THE VOIDS BETWEEN THE LARGER STONES. PLACE RIPRAP IN A MANNER TO PREVENT DAMAGE TO THE FILTER BLANKET OR GEOTEXTILE. HAND PLACE TO THE EXTENT NECESSARY.
6. WHERE NO ENDWALL IS USED, CONSTRUCT THE UPSTREAM END OF THE APRON SO THAT THE WIDTH IS TWO TIMES THE DIAMETER OF THE OUTLET PIPE, AND EXTEND THE STONE UNDER THE OUTLET BY A MINIMUM OF 18 INCHES.
7. CONSTRUCT APRON WITH 0% SLOPE ALONG ITS LENGTH AND WITHOUT OBSTRUCTIONS. PLACE STONE SO THAT IT BLENDS IN WITH EXISTING GROUND.
8. MAINTAIN LINE, GRADE, AND CROSS SECTION. KEEP OUTLET FREE OF EROSION. REMOVE ACCUMULATED SEDIMENT AND DEBRIS. AFTER HIGH FLOWS INSPECT FOR SCOUR AND RIPRAP DISLODGED RIPRAP. MAKE NECESSARY REPAIRS IMMEDIATELY.

MARYLAND STANDARDS AND SPECIFICATIONS FOR SOIL EROSION AND SEDIMENT CONTROL

U.S. DEPARTMENT OF AGRICULTURE NATURAL RESOURCES CONSERVATION SERVICE	2011	MARYLAND DEPARTMENT OF ENVIRONMENT WATER MANAGEMENT ADMINISTRATION

DETAIL F-2 SUMP PIT

STANDARD SYMBOL: ⊠SP

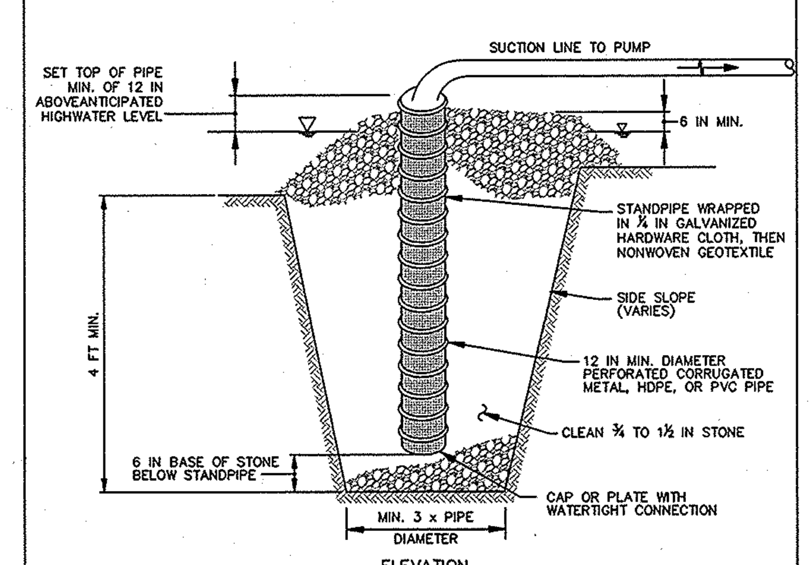

CONSTRUCTION SPECIFICATIONS

1. USE 12 INCH OR LARGER DIAMETER CORRUGATED METAL, HDPE, OR PVC PIPE WITH 1 INCH DIAMETER PERFORATIONS, 6 INCHES ON CENTER. BOTTOM OF PIPE MUST BE CAPPED WITH WATERTIGHT SEAL.
2. WRAP PIPE WITH ¼ INCH GALVANIZED HARDWARE CLOTH AND WRAP NONWOVEN GEOTEXTILE, AS SPECIFIED IN SECTION H-1 MATERIALS, OVER THE HARDWARE CLOTH.
3. EXCAVATE PIT TO THREE TIMES THE PIPE DIAMETER AND FOUR FEET IN DEPTH. PLACE ¾ TO 1½ INCH STONE OR EQUIVALENT RECYCLED CONCRETE, 6 INCHES IN DEPTH PRIOR TO PIPE PLACEMENT.
4. SET TOP OF PIPE MINIMUM 12 INCHES ABOVE ANTICIPATED WATER SURFACE ELEVATION.
5. BACKFILL PIT AROUND THE PIPE WITH ¾ TO 1½ INCH CLEAN STONE OR EQUIVALENT RECYCLED CONCRETE AND EXTEND STONE A MINIMUM OF 6 INCHES ABOVE ANTICIPATED WATER SURFACE ELEVATION.
6. DISCHARGE TO A STABLE AREA AT A NONEROSIVE RATE.
7. A SUMP PIT REQUIRES FREQUENT MAINTENANCE. IF SYSTEM CLOGS, REMOVE PERFORATED PIPE AND REPLACE GEOTEXTILE AND STONE. KEEP POINT OF DISCHARGE FREE OF EROSION.

MARYLAND STANDARDS AND SPECIFICATIONS FOR SOIL EROSION AND SEDIMENT CONTROL

U.S. DEPARTMENT OF AGRICULTURE NATURAL RESOURCES CONSERVATION SERVICE	2011	MARYLAND DEPARTMENT OF ENVIRONMENT WATER MANAGEMENT ADMINISTRATION

DETAIL B-3-1 BENCHING

STANDARD SYMBOL: BENCHING

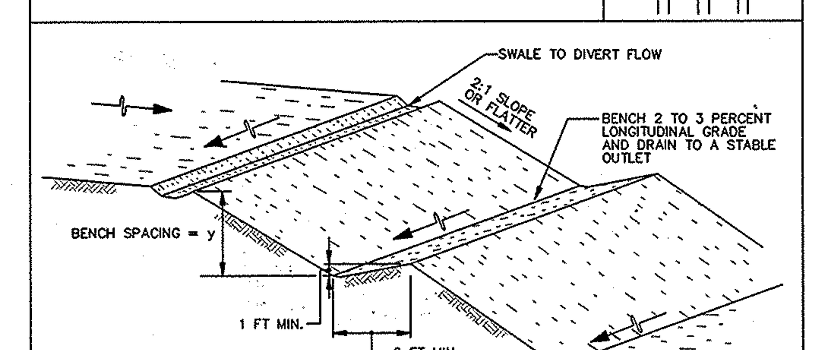

SLOPE	y (MAX.)
2:1	20 FT
3:1	30 FT
4:1	40 FT

CONSTRUCTION SPECIFICATIONS

1. USE FILL MATERIAL FREE OF BRUSH, RUBBISH, ROCKS, LOGS, STUMPS, BUILDING DEBRIS, AND OTHER OBJECTIONABLE MATERIALS THAT WOULD INTERFERE WITH OR PREVENT CONSTRUCTION OF SATISFACTORY FILLS.
2. DO NOT INCORPORATE FROZEN, SOFT, MUCKY, OR HIGHLY COMPRESSIBLE MATERIALS INTO FILL SLOPES OR STRUCTURAL FILLS. DO NOT PLACE FILL ON A FROZEN FOUNDATION.
3. PLACE ALL FILL IN LOOSE LIFTS NOT TO EXCEED 8 INCHES AND THEN COMPACT.
4. COMPACT ALL FILLS AS REQUIRED TO REDUCE EROSION, SLIPPAGE, SETTLEMENT, OR OTHER RELATED PROBLEMS. COMPACT FILL INTENDED TO SUPPORT BUILDINGS, STRUCTURES, CONDUITS, ETC., IN ACCORDANCE WITH LOCAL REQUIREMENTS OR CODES.
5. HANDLE SEEPS OR SPRINGS ENCOUNTERED DURING CONSTRUCTION IN ACCORDANCE WITH SECTION H-2 SUBSURFACE DRAINS OR OTHER APPROVED METHODS.
6. MAINTAIN LINE, GRADE, AND CROSS SECTION OF BENCHING. STABILIZE IN ACCORDANCE WITH THE 3/7 DAY STABILIZATION CRITERIA OR AS SPECIFIED ON THE APPROVED EROSION AND SEDIMENT CONTROL PLAN. INSTALLATION OF EROSION CONTROL MATTING MAY BE NECESSARY IN BENCH/SWALE INVERTS. CONTINUOUSLY MEET REQUIREMENTS FOR ADEQUATE VEGETATIVE ESTABLISHMENT IN ACCORDANCE WITH SECTION B-4 VEGETATIVE STABILIZATION.
7. KEEP ALL BENCHES FREE OF SEDIMENT DURING ALL PHASES OF DEVELOPMENT.

MARYLAND STANDARDS AND SPECIFICATIONS FOR SOIL EROSION AND SEDIMENT CONTROL

U.S. DEPARTMENT OF AGRICULTURE NATURAL RESOURCES CONSERVATION SERVICE	2011	MARYLAND DEPARTMENT OF ENVIRONMENT WATER MANAGEMENT ADMINISTRATION

This plan revision must meet the 2011 Maryland Standards and Specifications for Soil Erosion and Sediment Control Sections B-4-2, B-4-3, B-4-4, B-4-5, and where applicable Section B-4-8

Stabilization must be completed within: a). 3 calendar days to all perimeter controls, all slopes 3:1 or greater and b). 7 calendar days to all other disturbances. Temp Seed - 3/1 to 5/15 and 8/1 to 10/15; Perm Seed 3/1 to 5/15 and 8/15 to 10/15

THESE PLANS FOR ~~SMALL POND~~ CONSTRUCTION, SOIL EROSION AND SEDIMENT CONTROL MEET THE REQUIREMENTS OF THE HOWARD SOIL CONSERVATION DISTRICT.

John R. Robertson 3/27/14
HOWARD SOIL CONSERVATION DISTRICT DATE

EP-1234

ENGINEER'S CERTIFICATION

"I CERTIFY THAT THIS PLAN FOR ~~POND~~ CONSTRUCTION, EROSION AND SEDIMENT CONTROL REPRESENTS A PRACTICAL AND WORKABLE PLAN BASED ON MY PERSONAL KNOWLEDGE OF THE SITE CONDITIONS. THIS PLAN WAS PREPARED IN ACCORDANCE WITH THE REQUIREMENTS OF THE HOWARD SOIL CONSERVATION DISTRICT. ~~I HAVE NOTIFIED THE DEVELOPER THAT HE/SHE MUST ENGAGE A REGISTERED PROFESSIONAL ENGINEER TO SUPERVISE POND CONSTRUCTION AND PROVIDE THE HOWARD SOIL CONSERVATION DISTRICT WITH AN "AS-BUILT" PLAN OF THE POND WITHIN 30 DAYS OF COMPLETION.~~"

SIGNATURE OF ENGINEER ANTHONY U. OLSEN 3/27/14
(PRINT NAME BELOW SIGNATURE) DATE

APPROVED: DEPARTMENT OF PLANNING AND ZONING

CHIEF, DEVELOPMENT ENGINEERING DIVISION 6.17.14
DATE

CHIEF, DIVISION OF LAND DEVELOPMENT 7.28-14
DATE

DIRECTOR 7-28-14
DATE

DEVELOPER'S CERTIFICATION

"I/WE CERTIFY THAT ALL DEVELOPMENT AND/OR CONSTRUCTION WILL BE DONE ACCORDING TO THESE PLANS, AND THAT ANY RESPONSIBLE PERSONNEL INVOLVED IN THE CONSTRUCTION PROJECT WILL HAVE A CERTIFICATE OF ATTENDANCE AT A DEPARTMENT OF THE ENVIRONMENT APPROVED TRAINING PROGRAM FOR THE CONTROL OF SEDIMENT AND EROSION BEFORE BEGINNING THE PROJECT. ~~I SHALL ENGAGE A REGISTERED PROFESSIONAL ENGINEER TO SUPERVISE POND CONSTRUCTION AND PROVIDE THE HOWARD SOIL CONSERVATION DISTRICT WITH AN "AS-BUILT" PLAN OF THE POND WITHIN 30 DAY OF COMPLETION.~~ I ALSO AUTHORIZE PERIODIC ON-SITE INSPECTIONS BY THE HOWARD SOIL CONSERVATION DISTRICT."

SIGNATURE OF DEVELOPER 3/27/14
(PRINT NAME BELOW SIGNATURE) A. RAUL DELERME DATE

PLOT DATE: 3/27/2014 9:12:11 AM PAGE SETUP: WRA-PDF (36X24) PLOT STYLE: WRA_2006.CTB PAPER SIZE:36X24

REVISIONS

HOWARD COUNTY

DEPARTMENT OF RECREATION AND PARKS
7120 OAKLAND MILLS ROAD
COLUMBIA, MD 21046

DEPARTMENT OF PUBLIC WORKS
9250 BENDIX ROAD
ELLICOTT CITY, MD 21043

WHITMAN, REQUARDT & ASSOCIATES, LLP
801 South Caroline Street, Baltimore, Maryland 21231
Phone: 410-235-3450 Fax: 410-243-5716

PROPERTY

TAX MAP 36, GRID 5, PARCEL 3,72

ZONING: RC-DEO

ELECTION DISTRICT 3/7

GRAPHIC SCALES

SIGNATURE

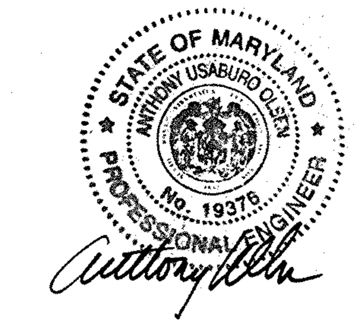

PROFESSIONAL CERTIFICATION.
I HEREBY CERTIFY THAT THESE DOCUMENTS WERE PREPARED OR APPROVED BY ME, AND THAT I AM A DULY LICENSED PROFESSIONAL ENGINEER UNDER THE LAWS OF THE STATE OF MARYLAND, LICENSE NO. 19376
EXPIRATION DATE: 09/22/2015

BLANDAIR REGIONAL PARK - PHASE 2

EROSION AND SEDIMENT CONTROL - NOTES/DETAILS

Drawing No.

C5.2

Scale: NONE		
Date: 03/31/2014	Sheet 22 of 41	
Des: BWJ	Drawn: SAD	Check: AUO

SDP-12-063

BORING LOGS

E2CR, Inc. — BORING LOG BP-10

Field	Value	Field	Value
Project	Blandair Park	Project No.	09512-03
Boring No.	BP-10	Site	
Begun	3-30-09	Completed	3-30-09
Hole Size		Ground Elevation	416.312'
Coordinates	N562365.0215 E1359049.4156	Depth Water Enc.	Dry
At End Drill	Dry	At 24 Hrs	
Caved Depth	6.4'	Driller	S. Lyons
Weight of Hammer		Height of Fall	
Type of Core		Depth of Boring	10
Type of Drill Rig & Method		Depth to Rock	
Logged By	K. Habib	Page No.	1 of 1

Strata Elev./Depth	Description	Sample No.	Sample Length	N-Value/RQD (%)	Sample Type and Diameter	Sample Recovery	Remarks
416.3	Tan, Brown, Moist, Silty CLAY Little Sand (CL)	S-1	18"	2-7-9	DS	12"	5" Top soil
413.3	Tan, Brown, White, Moist, Clayey SILT, Little to trace Sand, Micaceous (ML)	S-2	18"	4-5-5	DS	18"	
		S-3	18"	4-4-5	DS	18"	
408.3	Orange, Tan, Black, Moist, Clayey SILT, Little to trace Sand, Micaceous (ML)	S-4	18"	4-5-9	DS	18"	
406.3	Bottom of boring at 10.0 feet						

E2CR, Inc. — BORING LOG BP-13

Field	Value	Field	Value
Project	Blandair Park	Project No.	09512-03
Boring No.	BP-13	Site	
Begun	3-30-09	Completed	3-30-09
Hole Size		Ground Elevation	422.476'
Coordinates	N562222.8588 E1359034.8312	Depth Water Enc.	Dry
At End Drill	Dry	At 24 Hrs	
Caved Depth	5.10'	Driller	S. Lyons
Weight of Hammer		Height of Fall	
Type of Core		Depth of Boring	10
Type of Drill Rig & Method		Depth to Rock	
Logged By	K. Habib	Page No.	1 of 1

Strata Elev./Depth	Description	Sample No.	Sample Length	N-Value/RQD (%)	Sample Type and Diameter	Sample Recovery	Remarks
422.5	Tan, Brown, Moist, Silty CLAY, trace Sand (CL)	S-1	18"	2-3-3	DS	16"	5" Top soil
419.5	Tan, Brown, Moist, Clayey SILT, trace Sand (ML)	S-2	18"	3-4-6	DS	18"	
		S-3	18"	4-6-7	DS	15"	
		S-4	18"	3-4-6	DS	18"	
412.5	Bottom of boring at 10.0 feet						

E2CR, Inc. — BORING LOG BP-14

Field	Value	Field	Value
Project	Blandair Park	Project No.	09512-03
Boring No.	BP-14	Site	
Begun	3-30-09	Completed	3-30-09
Hole Size		Ground Elevation	420.024'
Coordinates	N562048.0509 E1359021.0532	Depth Water Enc.	Dry
At End Drill	Dry	At 24 Hrs	
Caved Depth	5.4'	Driller	S. Lyons
Weight of Hammer		Height of Fall	
Type of Core		Depth of Boring	10
Type of Drill Rig & Method		Depth to Rock	
Logged By	K. Habib	Page No.	1 of 1

Strata Elev./Depth	Description	Sample No.	Sample Length	N-Value/RQD (%)	Sample Type and Diameter	Sample Recovery	Remarks
420.0	Tan, Brown, Moist, Silty CLAY, Little to trace Sand (CL)	S-1	18"	2-5-5	DS	14"	5" Top soil
417.0	Tan, Brown, Moist, Clayey SILT, trace Sand (ML)	S-2	18"	7-10-15	DS	18"	
414.5	Tan, Brown, Moist, Sandy SILT, trace Clay (ML)	S-3	18"	5-7-8	DS	15"	
		S-4	18"	4-4-7	DS	18"	
410.0	Bottom of boring at 10.0 feet						

E2CR, Inc. — BORING LOG BPJ-18

Field	Value	Field	Value
Project	Blandair Park	Project No.	09512-03
Boring No.	BPJ-18	Site	Blandair Park
Begun	4-11-09	Completed	4-11-09
Hole Size		Ground Elevation	406.608'
Coordinates	N562815.5077 E1359432.7925	Depth Water Enc.	11.8
At End Drill	9.3	At 24 Hrs	
Caved Depth	10.4'	Driller	S. Lyons
Weight of Hammer		Height of Fall	
Type of Core		Depth of Boring	20
Type of Drill Rig & Method	ATV 550	Depth to Rock	
Logged By	E. Abolghasem	Page No.	1 of 1

Strata Elev./Depth	Description	Sample No.	Sample Length	N-Value/RQD (%)	Sample Type and Diameter	Sample Recovery	Remarks
406.6 / 405.6	Gray, Orange Brown, Moist, Sandy CLAY, trace Micaceous, Saprolite (Residual) (ML)	S-1	18"	2-6-7	DS	18"	4" Top soil
403.6	Gray, Orange Brown, Moist, Clayey SAND, trace Micaceous, Saprolite	S-2	18"	7-6-7	DS	18"	
401.6	Gray, Orange [illegible], Brown, Moist, Sandy SILT trace Micaceous, Saprolite (ML)	S-3	18"	4-5-5	DS	18"	
		S-4	18"	4-5-5	DS	18"	
394.1	Pink, Gray, Orange, Brown, Very Moist, Clay SAND, Saprolite (SC)	S-5	18"	2-3-3	DS	18"	
		S-6	18"	3-5-7	DS	18"	
386.6	Bottom of boring at 20.0 feet						

E2CR, Inc. — BORING LOG BPJ-19

Field	Value	Field	Value
Project	Blandair Park	Project No.	09512-03
Boring No.	BPJ-19	Site	Blandair Park
Begun	4-9-09	Completed	4-9-09
Hole Size		Ground Elevation	417.284'
Coordinates	N562452.6507 E1359164.1077	Depth Water Enc.	None
At End Drill	Dry	At 24 Hrs	
Caved Depth	14.8'	Driller	S. Lyons
Weight of Hammer		Height of Fall	
Type of Core		Depth of Boring	20
Type of Drill Rig & Method	ATV 550	Depth to Rock	
Logged By	E. Abolghasem	Page No.	1 of 1

Strata Elev./Depth	Description	Sample No.	Sample Length	N-Value/RQD (%)	Sample Type and Diameter	Sample Recovery	Remarks
417.3 / 416.3	Gray, Orange Brown, Moist, Sandy CLAY, trace Micaceous, Saprolite (Residual) (ML)	S-1	18"	2-6-7	DS	18"	4" Top soil
414.3	Gray, Orange Brown, Moist, Clayey SAND, trace Micaceous, Saprolite	S-2	18"	7-6-7	DS	18"	
412.3	Gray, Orange Brow, Brown, Moist, Sandy SILT trace Micaceous, Saprolite (ML)	S-3	18"	4-5-5	DS	18"	
		S-4	18"	4-5-5	DS	18"	
404.8	Pink, Gray, Orange, Brown, Very Moist, Clay SAND, Saprolite (SC)	S-5	18"	2-3-3	DS	18"	
		S-6	18"	3-5-7	DS	18"	
397.3	Bottom of boring at 20.0 feet						

E2CR, Inc. — BORING LOG BPJ-20

Field	Value	Field	Value
Project	Blandair Park	Project No.	09512-03
Boring No.	BPJ-20	Site	Blandair Park
Begun	4-9-09	Completed	4-9-09
Hole Size		Ground Elevation	428.179'
Coordinates	N561802.0454 E1359323.6863	Depth Water Enc.	None
At End Drill	Dry	At 24 Hrs	
Caved Depth	14.0'	Driller	S. Lyons
Weight of Hammer		Height of Fall	
Type of Core		Depth of Boring	20
Type of Drill Rig & Method	ATV 550	Depth to Rock	
Logged By	E. Abolghasem	Page No.	1 of 1

Strata Elev./Depth	Description	Sample No.	Sample Length	N-Value/RQD (%)	Sample Type and Diameter	Sample Recovery	Remarks
428.2 / 427.2	Gray, Tan, Moist,Silty CLAY, trace Fine Sand, Possible FILL (CL)	S-1	18"	12-10-8	DS	5"	10" Blacktop 2" Base
424.7	Reddish Brown, Moist, Sandy CLAY, trace Mica, Saprolite, Residual	S-2	18"	6-8-10	DS	14"	
		S-3	18"	6-7-9	DS	16"	
420.2	Medium Brown, Red, Moist, Clayey SAND, trace gravel, trace Mica, Saprolite (SC)	S-4	18"	5-7-9	DS	8"	
415.7	Light Brown, Moist, Clayey SAND, Saprolite (SC)	S-5	18"	6-6-8	DS	18"	
		S-6	18"	6-7-10	DS	18"	
408.2	Bottom of boring at 20.0 feet						

E2CR, Inc. — BORING LOG BPJ-21

Field	Value	Field	Value
Project	Blandair Park	Project No.	09512-03
Boring No.	BPJ-21	Site	Blandair Park
Begun	4-13-09	Completed	4-13-09
Hole Size		Ground Elevation	415.630'
Coordinates	N561524.1480 E1359885.6500	Depth Water Enc.	None
At End Drill	Dry	At 24 Hrs	
Caved Depth	15.4'	Driller	S. Lyons
Weight of Hammer		Height of Fall	
Type of Core		Depth of Boring	19
Type of Drill Rig & Method	ATV 550	Depth to Rock	
Logged By	E. Abolghasem	Page No.	1 of 1

Strata Elev./Depth	Description	Sample No.	Sample Length	N-Value/RQD (%)	Sample Type and Diameter	Sample Recovery	Remarks
415.6	Brownish Gray, Moist, Silty CLAY, trace to Little Fine SAND, (Possible Fill) (CL)	S-1	18"	14-14-6	DS	18"	8" Blacktopp 3" Base 8' Offset South West Hard Auger 7' - 8' "Quartz"
412.6	Light Gray, Orange Brown, Moist, Silty CLAY, Weathered Residual (CL-CH)	S-2	18"	4-9-14	DS	18"	
		S-3	18"	9-14-14	DS	18"	
408.1	Dark Orange, Brown, Moist, Clayey SAND, Saprolite (Residual) SC	S-4	18"	8-9-10	DS	16"	Hard Auger @ 13'.0 to 18'.5 Possible Boulder
403.1	Gray, Moist, Silty Fine SAND, trace Clay, trace Gravel, DECOMPOSED ROCK (SM)	S-5	~~18"~~ 3"	50/3"	DS	3"	
		~~S-6~~	~~1"~~	~~50/1"~~	~~DS~~	~~1"~~	Auger Refusal @ 19'.0
398.6	Bottom of boring at 19.0 feet						

E2CR, Inc. — BORING LOG SOM-7 (~~SWM-10-7~~)

Field	Value	Field	Value
Project	Blandair Park	Project No.	09512-03
Boring No.	SOM-7 (~~SWM-10-7~~)	Site	Columbia, MD
Begun	9-29-10	Completed	9-29-10
Hole Size		Surface Elevation	
Coordinates		Depth Water Enc.	DRY
At End Drill	DRY	At 24 Hrs	Filled
Caved Depth	1.0 ft	Driller	E. Hill
Weight of Hammer	140 lbs.	Height of Fall	30 inches
Type of Core		Depth of Boring	15.0 ft
Type of Drill Rig & Method	CME 550	Depth to Rock	
Logged By	J. Cunningham	Page No.	1 of 1

Strata Elev./Depth	Description	Sample No.	Sample Length	N-Value/RQD (%)	Sample Type and Diameter	Sample Recovery	Remarks
0.0 / -1.0	Brown, Damp, medium dense, fine Sandy SILT (ML)	S-1	18"	5-5-6	DS	18"	12" Topsoil
		S-2	18"	5-7-7	DS	18"	
-4.5	Brown, to orange, damp, dense, Silty fine SAND (SM)	S-3	18"	5-7-9	DS	18"	
-7.0	Tan, Moist, dense brown, Silty medium-coarse SAND, with little to some Clay and mica (SM)	S-4	18"	10-9-10	DS	18"	
-12.0	Gray, Dry, Compact, fine Sandy SILT (ML) (WEATHERED ROCK)	S-5	18"	50/2"	DS	2"	
-15.0	Bottom of boring at 15.0 ft						

E2CR, Inc. — BORING LOG SOM-8 (~~SWM-10-8~~)

Field	Value	Field	Value
Project	Blandair Park	Project No.	09512-03
Boring No.	SOM-8 (~~SWM-10-8~~)	Site	Columbia, MD
Begun	9-29-10	Completed	9-29-10
Hole Size		Surface Elevation	
Coordinates		Depth Water Enc.	DRY
At End Drill	DRY	At 24 Hrs	Filled
Caved Depth	7.8 ft	Driller	E. Hill
Weight of Hammer	140 lbs	Height of Fall	30 inches
Type of Core		Depth of Boring	11.2 ft
Type of Drill Rig & Method	CME 550	Depth to Rock	
Logged By	J. Cunningham	Page No.	1 of 1

Strata Elev./Depth	Description	Sample No.	Sample Length	N-Value/RQD (%)	Sample Type and Diameter	Sample Recovery	Remarks
0.0 / -1.0	Brown, damp, medium dense, fine Sandy SILT with trace mica (ML)	S-1	18"	6-6-8	DS	9"	12" Topsoil
		S-2	18"	5-6-7	DS	16"	
-4.5	Tan, damp, medium dense, Silty fine micaceous SAND (SM)	S-3	18"	7-8-8	DS	18"	
-6.0	Brown, tan, damp, dense, Silty medium to coarse SAND with mica, little to some Quartz (SM)	S-4	18"	9-13-22	DS	18"	
-9.0	Light gray, brown, damp, compact, Silty fine SAND with Rock Fragments (SM)	S-5	18"	22-50/5"	DS	11"	
		S-6	2"	50/2"	DS	2"	
-11.2	Bottom of boring at 11.2 ft						

E2CR, Inc. — BORING LOG SOM-9 (~~SWM-10-9~~)

Field	Value	Field	Value
Project	Blandair Park	Project No.	09512-03
Boring No.	SOM-9 (~~SWM-10-9~~)	Site	Columbia, MD
Begun	9-28-10	Completed	9-28-10
Hole Size		Surface Elevation	
Coordinates		Depth Water Enc.	DRY
At End Drill	DRY	At 24 Hrs	Filled
Caved Depth	3.8 ft	Driller	E. Hill
Weight of Hammer	140 lbs.	Height of Fall	30 inches
Type of Core		Depth of Boring	12.5 ft
Type of Drill Rig & Method	CME 550	Depth to Rock	
Logged By	J. Cunningham	Page No.	1 of 1

Strata Elev./Depth	Description	Sample No.	Sample Length	N-Value/RQD (%)	Sample Type and Diameter	Sample Recovery	Remarks
0.0	TOPSOIL						12" Topsoil
-1.0	Brown, damp, dense, fine Sandy SILT with little mica (ML)	S-1	18"	6-10-11	DS	12"	
		S-2	18"	11-16-18	DS	12"	
-4.0	Light brown, damp, dense, fine Sandy micaceous SILT (ML)	S-3	18"	10-14-17	DS	18"	
-7.0	Tan, damp, dense, fine Silty SAND and Weathered Rock fragmanets (SM)	S-4	18"	50/6"	DS	6"	
		S-5	18"	50/0"	DS	0"	
-12.0	Bottom of boring at 12 feet						Auger Refusal @ 12.5 ft

APPROVED: DEPARTMENT OF PLANNING AND ZONING

Signature	Date
CHIEF, DEVELOPMENT ENGINEERING DIVISION	6.17.14
CHIEF, DIVISION OF LAND DEVELOPMENT	7-28-14
DIRECTOR	7-28-14

REVISIONS

HOWARD COUNTY

DEPARTMENT OF RECREATION AND PARKS
7120 OAKLAND MILLS ROAD
COLUMBIA, MD 21046

DEPARTMENT OF PUBLIC WORKS
9250 BENDIX ROAD
ELLICOTT CITY, MD 21043

WHITMAN, REQUARDT & ASSOCIATES, LLP
801 South Caroline Street, Baltimore, Maryland 21231
Phone: 410-235-3450 Fax: 410-243-5716

PROPERTY

TAX MAP 36, GRID 5, PARCEL 3,72

ZONING: RC-DEO

ELECTION DISTRICT 3/7

GRAPHIC SCALES

SIGNATURE

STATE OF MARYLAND — ANTHONY USABURO OLSEN — No. 19376 — PROFESSIONAL ENGINEER

PROFESSIONAL CERTIFICATION.
I HEREBY CERTIFY THAT THESE DOCUMENTS WERE PREPARED OR APPROVED BY ME, AND THAT I AM A DULY LICENSED PROFESSIONAL ENGINEER UNDER THE LAWS OF THE STATE OF MARYLAND, LICENSE NO. 19376
EXPIRATION DATE: 09/22/2015

BLANDAIR REGIONAL PARK - PHASE 2

BORING LOGS

Drawing No.

C5.3

Scale: NONE	
Date: 03/31/2014	Sheet 23 of 41
Des: RBC	Drawn: CJK · Check: AUO

SDP-12-063

PLOT DATE: 4/4/2014 9:57:04 AM PAGE SETUP: WRA-PDF (36X24) PLOT STYLE: WRA_2006.CTB PAPER SIZE:36X24

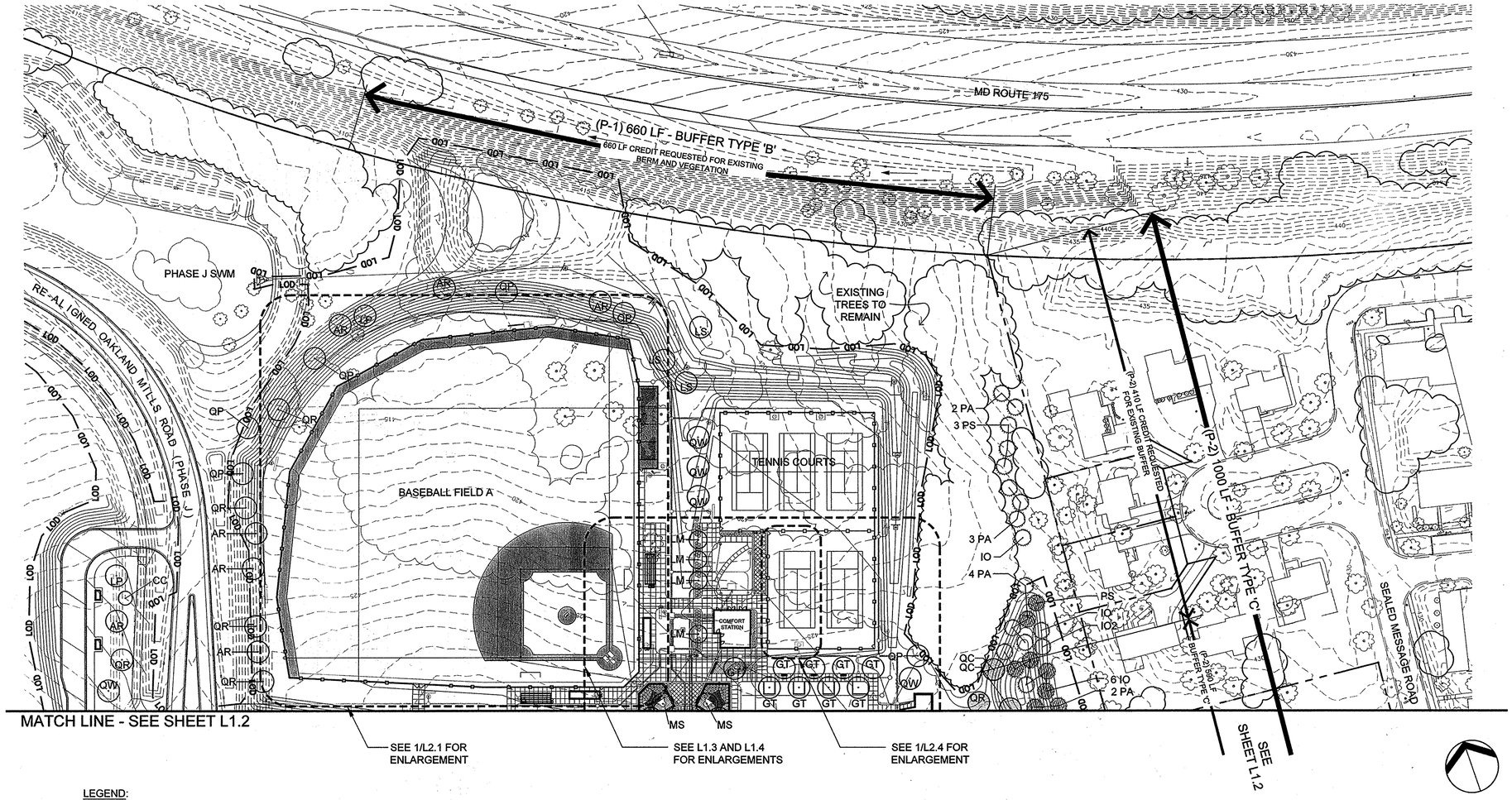

LEGEND:

- LIMIT OF DISTURBANCE
- EXISTING TREE
- PROPOSED DECIDUOUS TREE
- PROPOSED EVERGREEN TREE
- PROPOSED SHRUBS
- PHASE 1 DECIDUOUS TREE
- PHASE 1 EVERGREEN TREE

NOTES:

1. ALL PLANT LOCATIONS TO BE MARKED IN THE FIELD AND APPROVED BY HOWARD COUNTY DEPARTMENT OF RECREATION AND PARKS REPRESENTATIVE PRIOR TO PLANTING.
2. FOR SEEDING PLAN, SEE SHEET L1.6
3. SEE L3.2 FOR MINIMUM LANDSCAPE REQUIREMENT CHART FOR PERIMETER BUFFER PLANTING.

SHADED TREES ALONG EAST PROPERTY LINE REPRESENT PLANTS REQUIRED BY HOWARD COUNTY LANDSCAPE MANUAL

PLANT LIST (THIS SHEET ONLY)

Qty.	Key	Botanical/Common Name	Size	Root	Comments
		SHADE TREES			
7	AR	Acer rubrum 'Red Sunset' / Red Sunset Maple	2-1/2" Cal.	B&B	Full, central leader
9	GT	Gleditsia triacanthos var. inermis / Thornless Honeylocust	2-1/2" Cal.	B&B	Full, matched
11	LP	Platanus acerifolia 'Bloodgood' / Bloodgood London Plane Tree	2-1/2" Cal.	B&B	Full, central leader
3	LS	Liquidambar styraciflua 'Rotundiloba' / Seedless Sweetgum	2-1/2" Cal.	B&B	Full, central leader
2	MS	Magnolia soulangiana / Saucer Magnolia	6' Ht.	B&B	Multi-stemmed, 3-5 canes, matched, specimen, white flowering
2	QC	Quercus coccinea / Scarlet Oak	2-1/2" Cal.	B&B	Full, central leader
6	QP	Quercus palustris / Pin Oak	2-1/2" Cal.	B&B	Full, central leader
6	QR	Quercus rubra / Red Oak	2-1/2" Cal.	B&B	Full, central leader
5	QW	Quercus phellos 'Hightower' / Hightower® Willow Oak	2-1/2" Cal.	B&B	Full, central leader, matched
		UNDERSTORY TREES			
1	CC	Cercis canadensis 'Appalachian Red' / Appalachian Red Eastern Redbud	8' Ht.	B&B	Full, central leader
4	LM	Lagerstroemia 'muskogee' / Muskogee Crape Myrtle	6' Ht.	B&B	Full to base, central leader

Qty.	Key	Botanical/Common Name	Size	Root	Comments
		EVERGREEN TREES			
8	IO	Ilex opaca 'Miss Helen' / Miss Helen American Holly	6' Ht.	B&B	Full to base, central leader
1	IO2	Ilex opaca 'Jersey Knight' / Jersey Knight American Holly	6' Ht.	B&B	Full to base, central leader
11	PA	Picea abies / Norway Spruce	6' Ht.	B&B	Full to base, central leader
4	PS	Pinus strobus / Eastern White Pine	6' Ht.	B&B	Full to base, central leader

APPROVED: DEPARTMENT OF PLANNING AND ZONING

CHIEF, DEVELOPMENT ENGINEERING DIVISION	DATE 6-17-14
CHIEF, DIVISION OF LAND DEVELOPMENT	DATE 7-28-14
DIRECTOR	DATE 7-28-14

BOARD OF LICENSED LANDSCAPE ARCHITECTS 778 CHARLES EUGENE BAILEY, JR. STATE OF MARYLAND

MAHAN RYKIEL ASSOCIATES INC
The Stieff Silver Building. 800 Wyman Park Drive., Suite 100. Baltimore, MD 21211 410.235.6001

REVISIONS

HOWARD COUNTY

DEPARTMENT OF RECREATION AND PARKS
7120 OAKLAND MILLS ROAD
COLUMBIA, MD 21046

DEPARTMENT OF PUBLIC WORKS
9250 BENDIX ROAD
ELLICOTT CITY, MD 21043

WR&A
WHITMAN, REQUARDT & ASSOCIATES, LLP
801 South Caroline Street, Baltimore, Maryland 21231
Phone: 410-235-3450 Fax: 410-243-5716

PROPERTY

TAX MAP 36, GRID 5, PARCEL 3,72

ZONING: RC-DEO

ELECTION DISTRICT 3/7

GRAPHIC SCALES

0 30 60 120

SIGNATURE

BLANDAIR REGIONAL PARK - PHASE 2

Landscape Plan

Drawing No.

L1.1

Scale: 1"=60'		
Date: 03/31/2014	Sheet 24 of 41	
Des: CB/NS	Drawn: CO	Check: CB

SDP-12-063

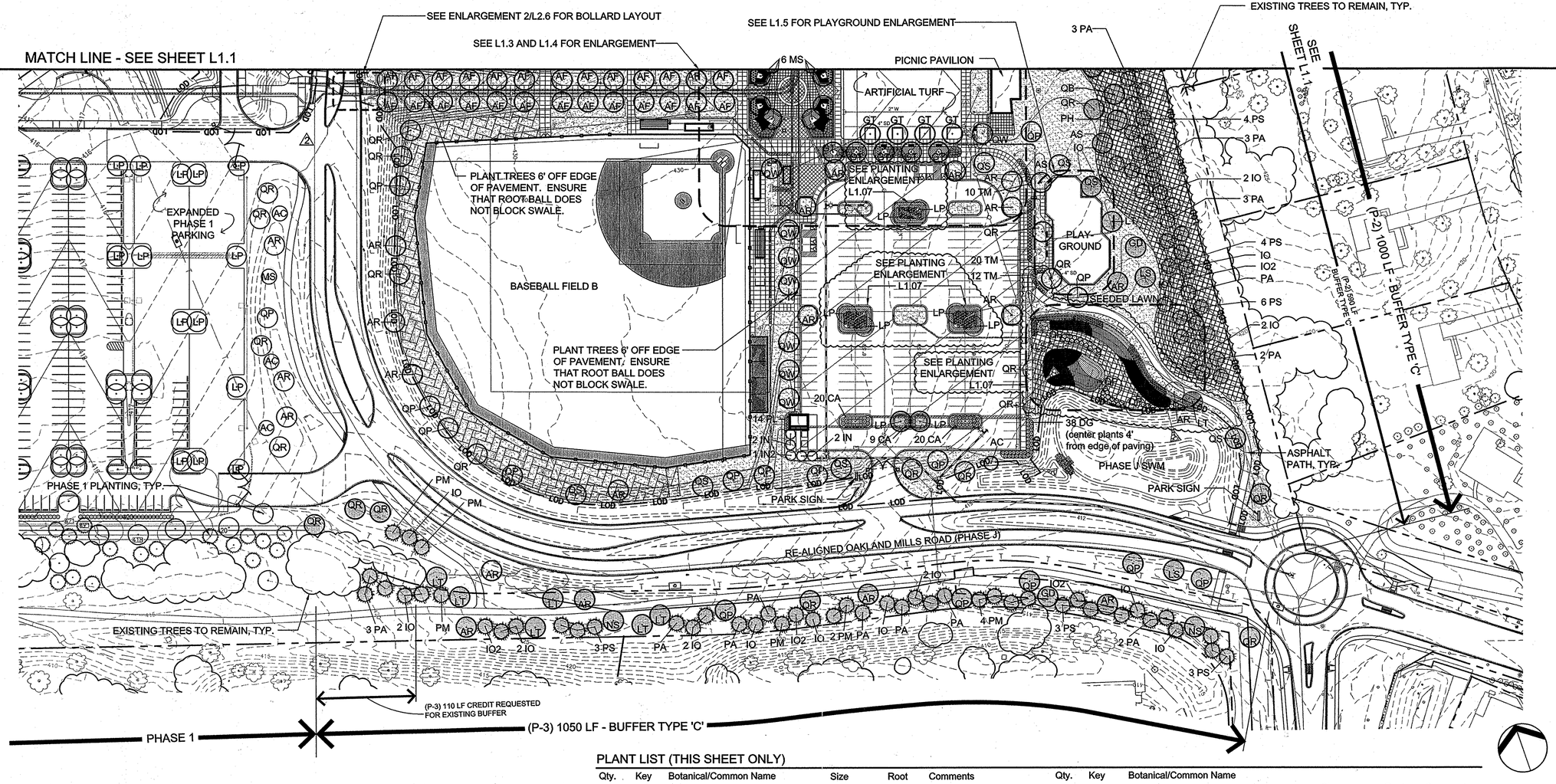

LEGEND:

- LIMIT OF DISTURBANCE
- EXISTING TREE
- PROPOSED DECIDUOUS TREE
- PROPOSED EVERGREEN TREE
- PROPOSED SHRUBS
- PHASE 1 DECIDUOUS TREE
- PHASE 1 EVERGREEN TREE

NOTES:

1. ALL PLANT LOCATIONS TO BE MARKED IN THE FIELD AND APPROVED BY HOWARD COUNTY DEPARTMENT OF RECREATION AND PARKS REPRESENTATIVE PRIOR TO PLANTING.
2. FOR SEEDING PLAN, SEE SHEET L1.6
3. INSTALLATION OF PLANT MATERIAL SHOWN OFF RECREATION AND PARKS PROPERTY ALONG SOUTH PROPERTY BOUNDARY TO BE COORDINATED WITH THE COLUMBIA ASSOCIATION.
4. SEE L3.2 FOR MINIMUM LANDSCAPE REQUIREMENT CHART FOR PERIMETER BUFFER PLANTING.

SHADED TREES ALONG EAST PROPERTY LINE REPRESENT PLANTS REQUIRED BY HOWARD COUNTY LANDSCAPE MANUAL

PLANT LIST (THIS SHEET ONLY)

Qty.	Key	Botanical/Common Name	Size	Root	Comments
		SHADE TREES			
26	AF	Acer freemanii 'Jeffsred' / Autumn Blaze Maple	2-1/2" Cal.	B&B	Full, central leader
21	AR	Acer rubrum 'Red Sunset' / Red Sunset Maple	2-1/2" Cal.	B&B	Full, central leader
2	AS	Acer saccharum 'Green Mountain' / Green Mountain Sugar Maple	2-1/2" Cal.	B&B	Full, central leader
2	GD	Gymnocladus dioica / Kentucky Coffee Tree	2-1/2" Cal.	B&B	Full, central leader
9	GT	Gleditsia triacanthos var. inermis / Thornless Honeylocust	2-1/2" Cal.	B&B	Full, matched
22	LP	Platanus acerifolia 'Bloodgood' / Bloodgood London Plane Tree	2-1/2" Cal.	B&B	Full, central leader
3	LS	Liquidambar styraciflua 'Rotundiloba' / Sweetgum	2-1/2" Cal.	B&B	Full, central leader
8	LT	Liriodendron tulipifera / Tulip Tree	2-1/2" Cal.	B&B	Full, central leader
2	NS	Nyssa sylvatica / Black Gum	2-1/2" Cal.	B&B	Full, central leader
1	PH	Phellodendron lavallei / Lavalle Corktree	2-1/2" Cal.	B&B	Full, central leader
1	QB	Quercus bicolor / Swamp White Oak	2-1/2" Cal.	B&B	Full, central leader
19	QP	Quercus palustris / Pin Oak	2-1/2" Cal.	B&B	Full, central leader
21	QR	Quercus rubra / Red Oak	2-1/2" Cal.	B&B	Full, central leader
7	QS	Quercus coccinea / Scarlet Oak	2-1/2" Cal.	B&B	Full, central leader
8	QW	Quercus phellos / Willow Oak	2-1/2" Cal.	B&B	Full, central leader, matched

Qty.	Key	Botanical/Common Name	Size	Root	Comments
		EVERGREEN TREES			
4	IN	Ilex x 'Nellie R. Stevens' / Nellie Stevens Holly	6' Ht.	B&B	Full to base, central leader
1	IN2	Ilex x 'Edward J. Stevens' / Edward Stevens Holly	6' Ht.	B&B	Full to base, central leader
21	IO	Ilex opaca 'Miss Helen' / Miss Helen American Holly	6' Ht.	B&B	Full to base, central leader
4	IO2	Ilex opaca 'Jersey Knight' / Jersey Knight American Holly	6' Ht.	B&B	Full to base, central leader
23	PA	Picea abies / Norway Spruce	6' Ht.	B&B	Full to base, central leader
10	PM	Psueditsuga menziesii / Douglas Fir	6' Ht.	B&B	Full to base, central leader
23	PS	Pinus strobus / White Pine	6' Ht.	B&B	Full to base, central leader
		UNDERSTORY TREES			
7	MS	Magnolia soulangiana / Saucer Magnolia	6' Ht.	B&B	Multi-stemmed, 3-5 canes, matched, specimen, white flowering
4	AC	Amelanchier canadensis / Shadblow Serviceberry	6' Ht.	B&B	Full, central leader
		SHRUBS			
38	DG	Deutzia gracilis / Slender Deutzia	24" Spd.	Cont.	4" O.C., staggered rows
14	PL	Prunus laurocerasus 'Otto Luyken' / Otto Luyken Cherry Laurel	30" Spd.	B&B/Cont.	Full, 3' O.C., staggered rows
43	TM	Taxus x media 'Densiformis'/ Dense Yew	#5	B&B	3' O.C., 24" Spd.
49	CA	Clethra alnifolia 'Hummingbird' / Sweet Pepperbush	36" Spd.	B&B	3' O.C, staggered rows

APPROVED: DEPARTMENT OF PLANNING AND ZONING

CHIEF, DEVELOPMENT ENGINEERING DIVISION	DATE 5.17.16
CHIEF, DIVISION OF LAND DEVELOPMENT	DATE 5-19-16
DIRECTOR	DATE 5-19-16

MAHAN RYKIEL ASSOCIATES INC
The Stieff Silver Building. 800 Wyman Park Drive., Suite 100. Baltimore, MD 21211 410.235.6001

REVISIONS		
1	ADDENDUM NO. 1	10/20/14
2	ADDENDUM NO. 2	11/12/14
	REDLINE REVISION 7	3/22/16

HOWARD COUNTY

DEPARTMENT OF RECREATION AND PARKS
7120 OAKLAND MILLS ROAD
COLUMBIA, MD 21046

DEPARTMENT OF PUBLIC WORKS
9250 BENDIX ROAD
ELLICOTT CITY, MD 21043

WR&A
WHITMAN, REQUARDT & ASSOCIATES, LLP
801 South Caroline Street, Baltimore, Maryland 21231
Phone: 410-235-3450 Fax: 410-243-5716

PROPERTY

TAX MAP 36, GRID 5, PARCEL 3,72

ZONING: RC-DEO

ELECTION DISTRICT 3/7

GRAPHIC SCALES

0 30 60 120

SIGNATURE

BLANDAIR REGIONAL PARK - PHASE 2

Landscape Plan
Revised Site Development Plan

Drawing No.

L1.2

Scale: 1"=60'		
Date: 03/24/2016	Sheet 25 of 41	
Des: CB/NS	Drawn: CO	Check: CB

SDP-12-063

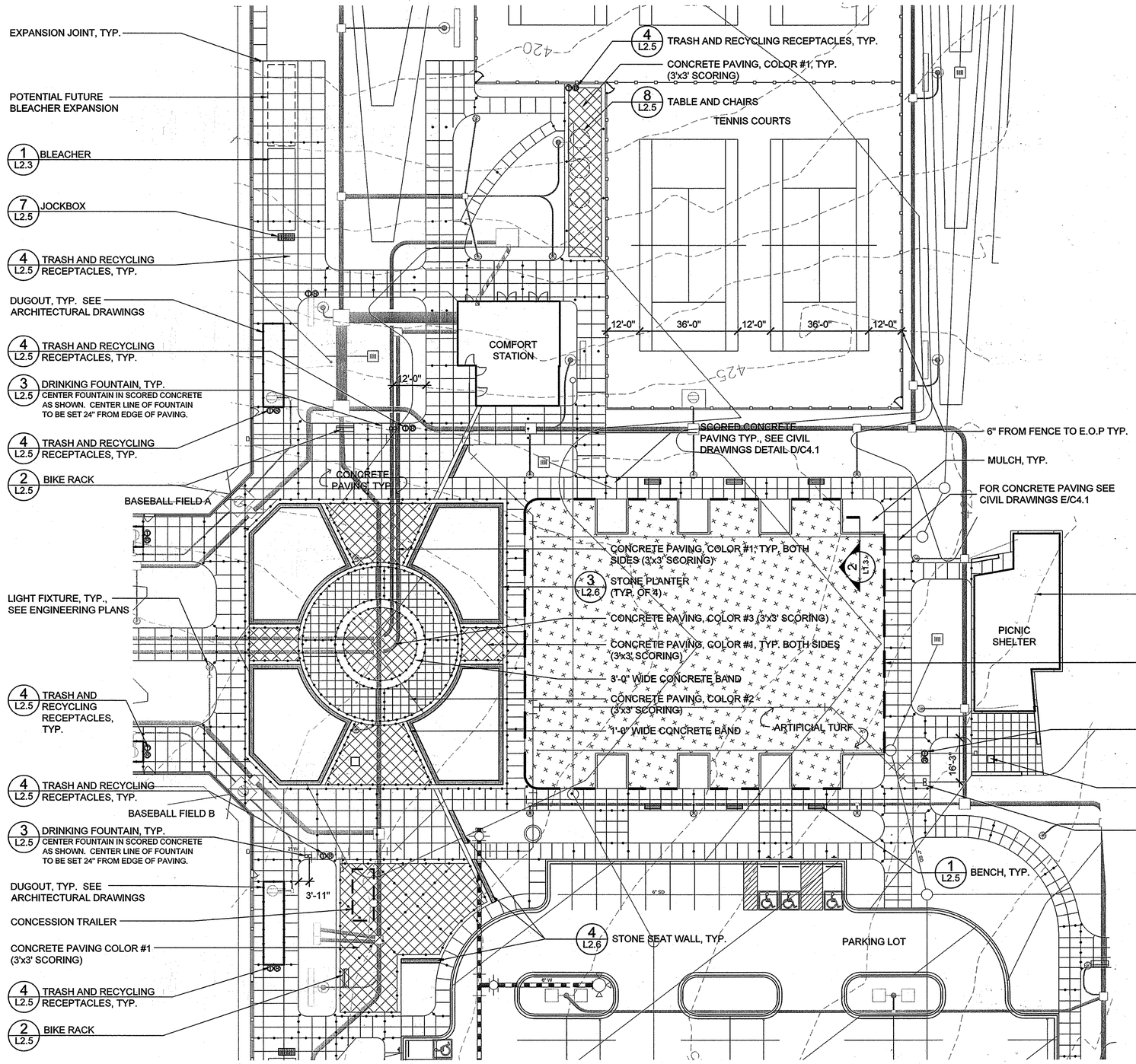

1 Materials Plan Enlargement

Scale: 1" = 20'-0"

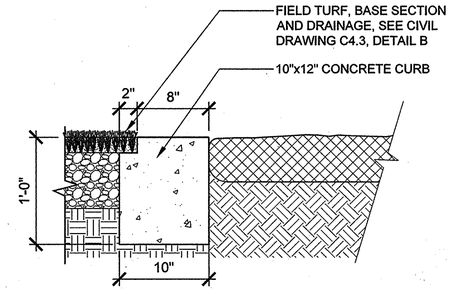

2 Mulch Bed Detail

Scale: 1" = 1'-0"

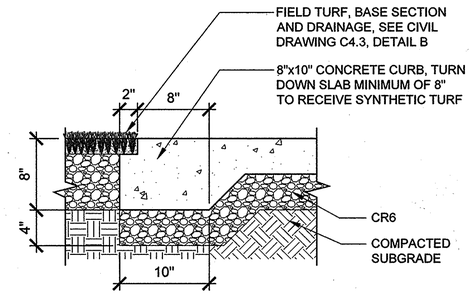

3 Concrete Edge at Synthetic Turf

Scale: 1" = 1'-0"

NOTES:

1. PROVIDE EXPANSION JOINTS AT ALL CURBS, WALLS, BUILDINGS AND OTHER VERTICAL CONSTRUCTION. SPACE EXPANSION JOINTS AS SHOWN ON THIS PLAN AND NO GREATER THAN 25' O.C. EXPANSION JOINT LOCATIONS ARE SHOWN WITH DOTS IN CONCRETE SCORING ON THIS SHEET.
2. COLORED CONCRETE #1, 2, & 3 TO BE SELECTED BY LANDSCAPE ARCHITECT FROM LM SCOFIELD'S.INTEGRAL CHROMIX ADMIXTURES. COLORS TO BE SELECTED TO COMPLEMENT COLORS IN STONEWORK ON STRUCTURES AND SEAT WALLS.
3. CONCRETE BANDING SHOWN AROUND COLORED CONCRETE AND AROUND PLANTERS TO BE SCORED 6'-0" O.C. MAX. EXPANSION JOINTS AT 24' O.C. TYP.
4. ALL CONCRETE NOT SPECIFIED AS COLORED TO BE STANDARD CONCRETE WITH BROOM FINISH.
5. WHERE NOT SHOWN ON DRAWINGS, PROVIDE EXPANSION JOINTS IN SIDEWALKS AT 24' O.C. MAX.

BOARD OF REGISTRATION OF LANDSCAPE ARCHITECTS 778 CHARLES EUGENE BAILEY STATE OF MARYLAND

APPROVED: DEPARTMENT OF PLANNING AND ZONING

CHIEF, DEVELOPMENT ENGINEERING DIVISION	DATE 6-17-14
CHIEF, DIVISION OF LAND DEVELOPMENT	DATE 7-28-14
DIRECTOR	DATE 7-28-14

MAHAN RYKIEL ASSOCIATES INC
The Stieff Silver Building. 800 Wyman Park Drive., Suite 100. Baltimore, MD 21211 410.235.6001

REVISIONS		

HOWARD COUNTY

DEPARTMENT OF RECREATION AND PARKS
7120 OAKLAND MILLS ROAD
COLUMBIA, MD 21046

DEPARTMENT OF PUBLIC WORKS
9250 BENDIX ROAD
ELLICOTT CITY, MD 21043

WR&A
WHITMAN, REQUARDT & ASSOCIATES, LLP
801 South Caroline Street, Baltimore, Maryland 21231
Phone: 410-235-3450 Fax: 410-243-5716

PROPERTY

TAX MAP 36, GRID 5, PARCEL 3,72

ZONING: RC-DEO

ELECTION DISTRICT 3/7

GRAPHIC SCALES

0 10 20 40

SIGNATURE

BLANDAIR REGIONAL PARK - PHASE 2

Central Plaza Materials Plan Enlargement

Drawing No.

L1.3

Scale: 1"=20'		
Date: 03/31/2014	Sheet 26 of 41	
Des: CB/NS	Drawn: CO	Check: CB

SDP-12-063

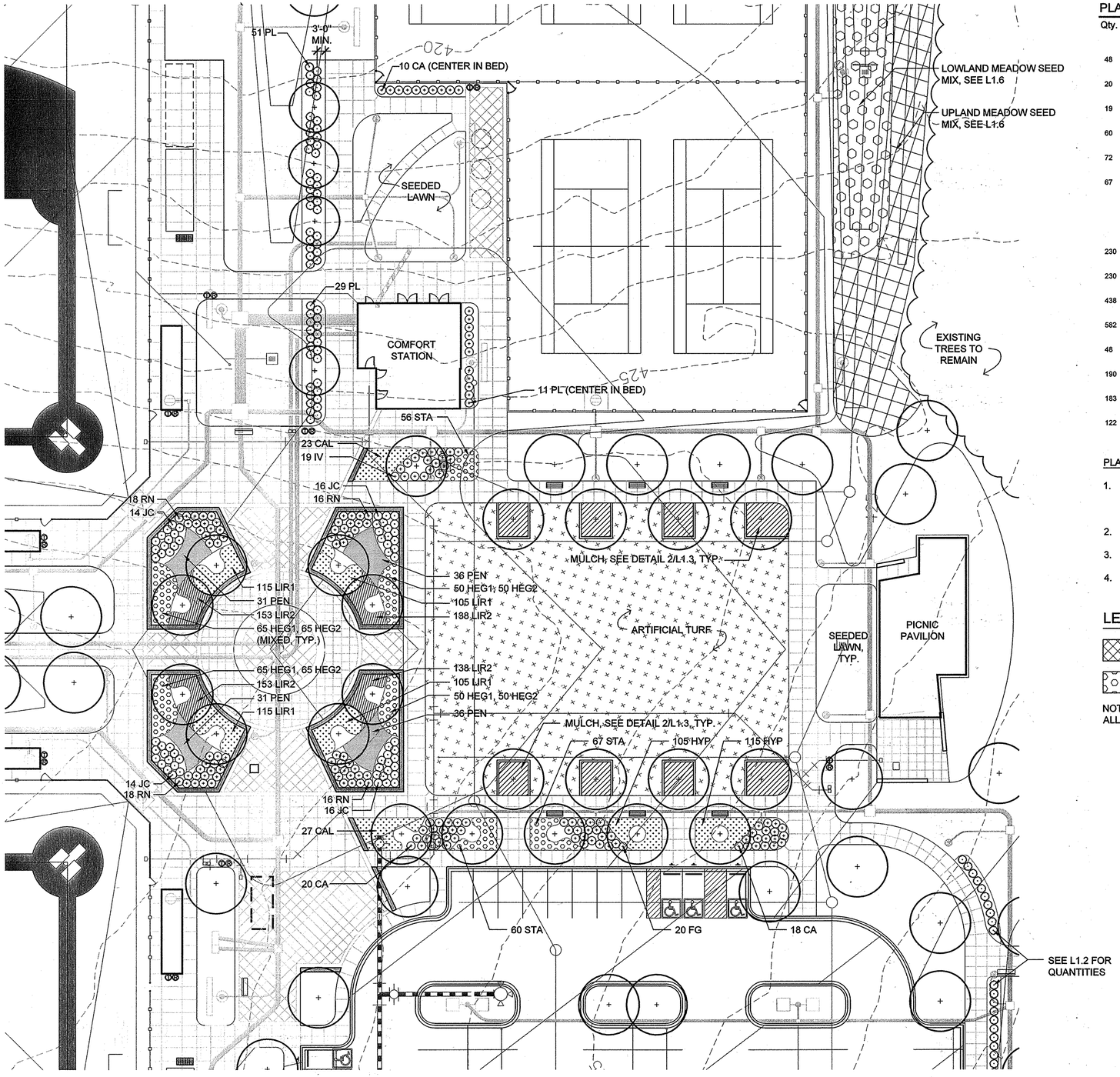

1 Planting Plan Enlargement

Scale: 1" = 20'-0"

PLANT LIST (THIS SHEET ONLY)

Qty.	Key	Botanical/Common Name	Size	Root	Comments
		SHRUBS			
48	CA	Clethra alnifolia 'Hummingbird' / Sweet Pepperbush	36" Spd.	B&B	3' O.C, staggered rows
20	FG	Fothergilla gardenii Dwarf Fothergilla	#3	Cont.	18" Spd., 3'O.C.
19	IV	Itea virginica 'Little Henry' / Little Henry Itea	#3	Cont.	24" Spd., 3' O.C.
60	JC	Juniperus conferta / Shore Juniper	#3	Cont.	18" Spd., 3' O.C.
72	PL	Prunus laurocerasus 'Otto Luyken' / Otto Luyken Cherry Laurel	#3	Cont.	24" Spd., 3' O.C.
67	RN	Rosa x 'Noatraum' Flower Carpet Pink Groundcover Rose	#3	Cont.	18" Spd., 3' O.C.
		GROUNDCOVERS, PERENNIALS, ORNAMENTAL GRASSES			
230	HEG1	Hemerocallis x 'Happy Returns' / Happy Returns Dwarf Daylily	#1	Cont.	15" O.C.
230	HEG2	Hemerocallis x 'Stella de Oro'/. Stella De Oro Dwarf Daylily	#1	Cont.	15" O.C.
438	LIR1	Liriope muscari 'Variegata' / Variegated Lilyturf	#1	Cont.	15" O.C.
582	LIR2	Liriope muscari 'Royal Purple' / Royal Purple Lilyturf	#1	Cont.	12" O.C.
48	CAL	Calamagrostis x acutiflora 'Overdam' / Overdam Feather Reed Grass	#3	Cont.	36" O.C.
190	HYP	Hypericum calycinum / St. John's Wort	#1	Cont.	18" O.C.
183	STA	Stachys 'Helene von Stein' / Lamb's Ear	#1	Cont.	18" O.C.
122	PEN	Pennisetum orientale 'Karley Rose' / Oriental Pink Fountain Grass	#3	Cont.	30" O.C.

PLANTING NOTES:

1. ALL PLANT LOCATIONS TO BE MARKED IN THE FIELD AND APPROVED BY HOWARD COUNTY DEPARTMENT OF RECREATION AND PARKS REPRESENTATIVE PRIOR TO PLANTING.
2. SHRUB AND GROUNDCOVER SPACING TO BE STAGGERED.
3. FOR SEEDING PLAN, SEE SHEET L1.6
4. FOR TREE PLANTINGS, SEE SHEETS L1.1 AND L1.2

LEGEND

UPLAND MEADOW SEED MIX

LOWLAND MEADOW SEED MIX

NOTE:
ALL OTHER DISTURBED AREAS TO BE SEEDED WITH STANDARD TURF MIX

APPROVED: DEPARTMENT OF PLANNING AND ZONING

CHIEF, DEVELOPMENT ENGINEERING DIVISION	DATE 6-17-14
CHIEF, DIVISION OF LAND DEVELOPMENT	DATE 7-28-14
DIRECTOR	DATE 7-28-14

MAHAN RYKIEL ASSOCIATES INC
The Stieff Silver Building. 800 Wyman Park Drive., Suite 100. Baltimore, MD 21211 410.235.6001

BOARD OF EXAMINERS OF LANDSCAPE ARCHITECTS 778 CHARLES EUGENE BAILEY, JR. STATE OF MARYLAND

REVISIONS

HOWARD COUNTY
DEPARTMENT OF RECREATION AND PARKS
7120 OAKLAND MILLS ROAD
COLUMBIA, MD 21046

DEPARTMENT OF PUBLIC WORKS
9250 BENDIX ROAD
ELLICOTT CITY, MD 21043

WR&A
WHITMAN, REQUARDT & ASSOCIATES, LLP
801 South Caroline Street, Baltimore, Maryland 21231
Phone: 410-235-3450 Fax: 410-243-5716

PROPERTY

TAX MAP 36, GRID 5, PARCEL 3,72

ZONING: RC-DEO

ELECTION DISTRICT 3/7

GRAPHIC SCALES

0 10 20 40

SIGNATURE

BLANDAIR REGIONAL PARK - PHASE 2

Central Plaza Planting Plan Enlargement

Drawing No.

L1.4

Scale: 1"=20'		
Date: 03/31/2014	Sheet 27 of 41	
Des: CB/NS	Drawn: CO	Check: CB

SDP-12-063

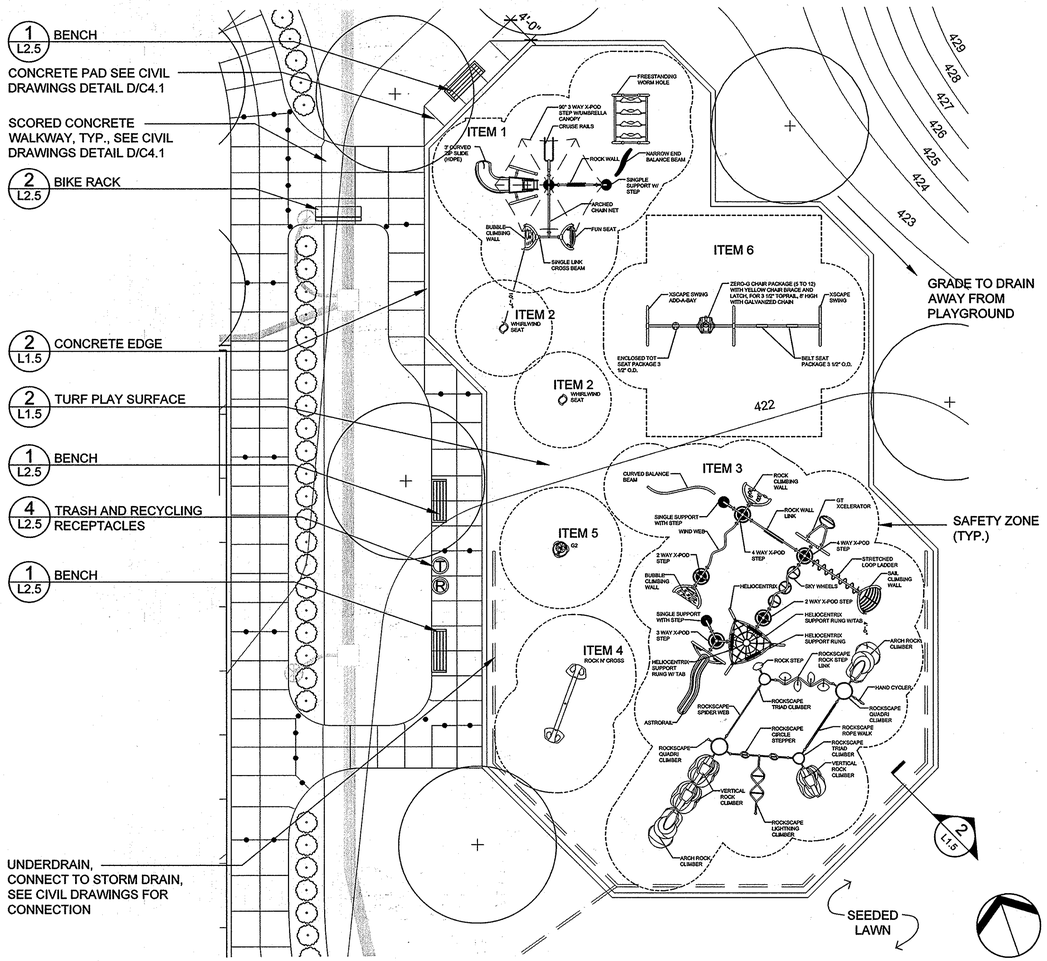

1 Playground Enlargement

Scale: 1" = 10'-0"

0' 5' 10' 20' 30'

SCALE: 1" = 10'

PLAYGROUND EQUIPMENT LIST				
ITEM	QUANTITY	MANUFACTURER	PART NUMBER	DESCRIPTION
1	1	GAMETIME	CUSTOM	XSCAPE PLAY STRUCTURE FOR AGES 2-5
2	2	GAMETIME	6143	WHIRLWIND SEAT
3	1	GAMETIME	CUSTOM	XSCAPE/ROCKSCAPE PLAY STRUCTURE FOR AGES 5-12
4	1	GAMETIME	7003	ROCK N' CROSS
5	1	GAMETIME	6231	G2
6	1	GAMETIME	26119, 26120, 1483, 8552, 1470	DOUBLE BAY XSCAPE SWING FRAME - (2) BELT SEATS, (1) ZERO-G CHAIR, (1) ENCLOSED TOT SEAT

PLAYGROUND NOTES:
1. PLAYGROUND EQUIPMENT TO BE STAKED OUT IN FIELD AND APPROVED BY COUNTY REPRESENTATIVE PRIOR TO INSTALLATION.
2. INSTALLATION PER MANUFACTURER'S RECOMMENDATIONS.
3. COLORS TO BE SELECTED BY RECREATION AND PARKS REPRESENTATIVE FROM STANDARD COLORS.

PROVIDED BY:
WEST RECREATION, INC.
P.O. BOX 487
QUEENSTOWN, MD 21658
PHONE: (800) 233-0529
FAX: (410) 827-8855

THE PLAY COMPONENTS IDENTIFIED IN THIS PLAY AREA ARE IPEMA CERTIFIED. THE USE AND LAYOUT OF THESE COMPONENTS CONFORM TO THE REQUIREMENTS OF ASTM F1487-01.

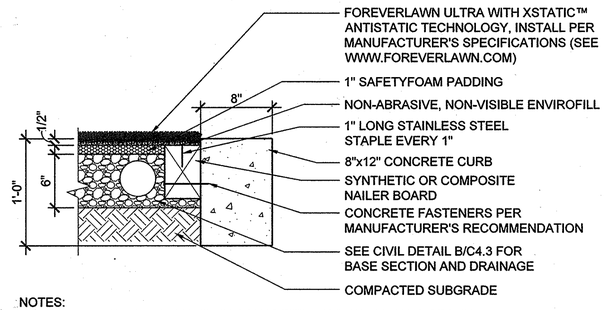

NOTES:
1. PROVIDE EXPANSION JOINTS IN CONCRETE CURB AT ALL CHANGES IN DIRECTION. PROVIDE ADDITIONAL EXPANSION JOINTS AS NECESSARY TO ENSURE THAT STRAIGHT LENGTHS ARE NO GREATER THAN 35'.
2. CONCRETE CURBS TO BE SCORED 6' O.C. MAX.

2 Synthetic Playground Turf

Scale: 1 1/2" = 1'-0"

BOARD OF EXAMINERS OF LANDSCAPE ARCHITECTS 778 CHARLES EUGENE BAILEY, JR. STATE OF MARYLAND

MAHAN RYKIEL ASSOCIATES INC
The Stieff Silver Building. 800 Wyman Park Drive., Suite 100. Baltimore, MD 21211 410.235.6001

APPROVED: DEPARTMENT OF PLANNING AND ZONING

CHIEF, DEVELOPMENT ENGINEERING DIVISION	DATE 6.17.14
CHIEF, DIVISION OF LAND DEVELOPMENT	DATE 7-28-14
DIRECTOR	DATE 7-28-14

REVISIONS

HOWARD COUNTY
DEPARTMENT OF RECREATION AND PARKS
7120 OAKLAND MILLS ROAD
COLUMBIA, MD 21046

DEPARTMENT OF PUBLIC WORKS
9250 BENDIX ROAD
ELLICOTT CITY, MD 21043

WR&A
WHITMAN, REQUARDT & ASSOCIATES, LLP
801 South Caroline Street, Baltimore, Maryland 21231
Phone: 410-235-3450 Fax: 410-243-5716

PROPERTY

TAX MAP 36, GRID 5, PARCEL 3,72

ZONING: RC-DEO

ELECTION DISTRICT 3/7

GRAPHIC SCALES

SIGNATURE

BLANDAIR REGIONAL PARK - PHASE 2

Playground Enlargement

Drawing No.
L1.5

Scale: AS NOTED		
Date: 03/31/2014	Sheet 28 of 41	
Des: CB/NS	Drawn: CO	Check: CB

SDP-12-063

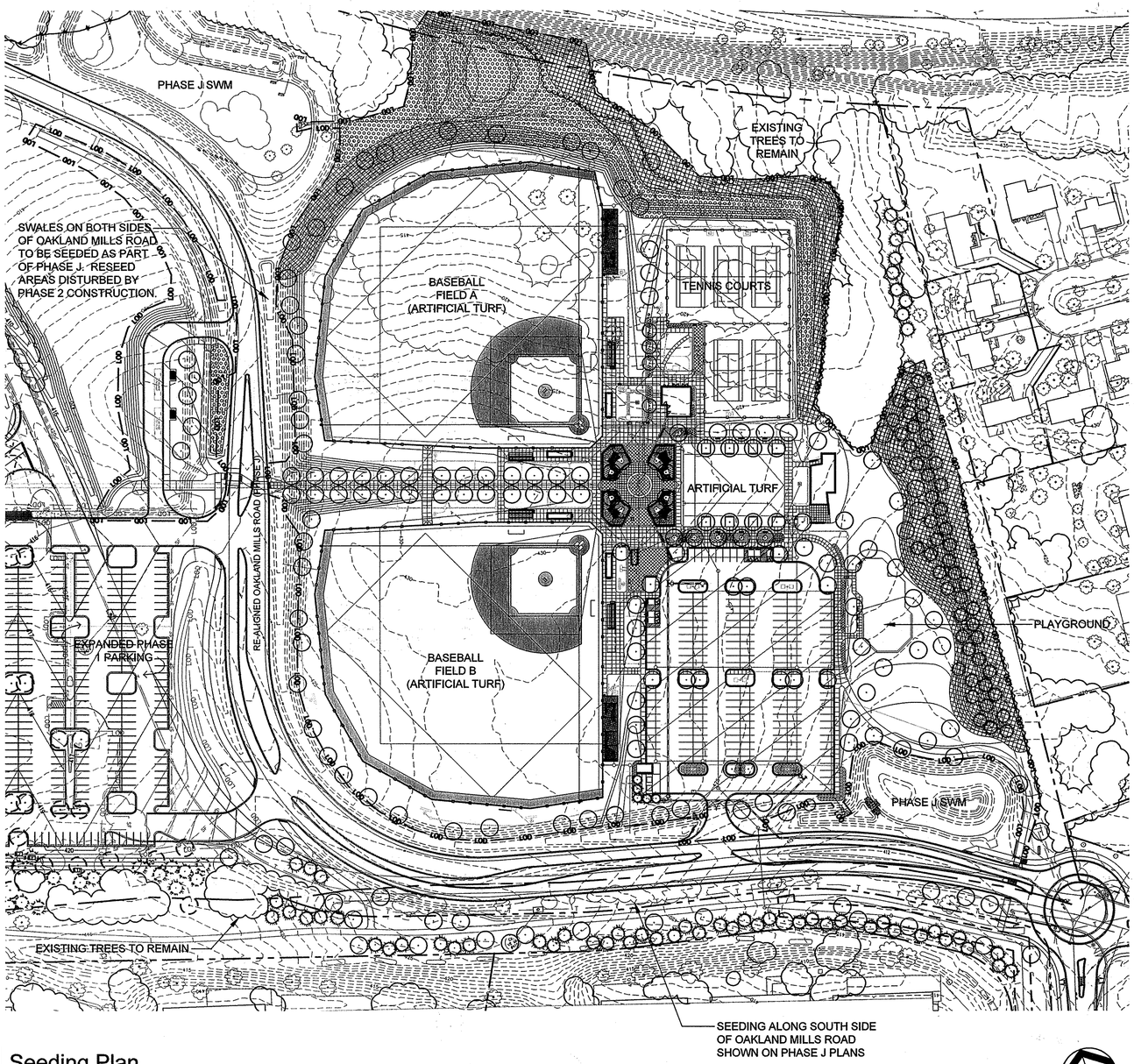

1 Seeding Plan
Scale: 1" = 80'

STANDARD SHA SEED MIXES

UPLAND MEADOW MIX
Use: Meadow Sites

Common Name
Blackeyed Susan
Eastern Purple Coneflower
Gray Goldenrod
Lanceleaf Tickseed
Partridge Pea
Sundial Lupine
Talus Slope Penstemon
Wild Bergamot

LOWLAND MEADOW MIX
Use: Swales

Common Name
Common Boneset
Maximilian Sunflower
New England Aster
New York Ironweed
Showy Tickseed
Stiff Goldenrod
Swamp Verbena
Trumpetweed

NOTE:
SEE SHA STANDARD SPECIFICATIONS AND SPECIAL PROVISIONS FOR CONSTRUCTION MATERIALS AND METHODS FOR MEADOW INSTALLATION. SEED VARIETIES LISTED ABOVE ARE THE EIGHT (8) FORBS PROPOSED FOR THE SEED MIXES FOR THIS PROJECT. FOLLOW SHA SPECS FOR OTHER SEED VARIETIES AND SPECIAL PURPOSE MIX.

SPECIAL PURPOSE SEED MIX

% of Total	Botanical Name	Common Name
75%	*Festuca brevipila Tracey*	Hard Fescue
20%	*Festuca rubra L. ssp. fallax (Thuill.) Nyman*	Chewings fescue
5%	*Poa pratensis L. spp. pratensis*	Kentucky Bluegrass

NOTE:
SEED UPLAND MEADOW MIX AND LOWLAND MEADOW MIX WITH SPECIAL PURPOSE SEED MIX AT A RATE OF 20 LB PER ACRE.

LEGEND

—LOD— LIMIT OF DISTURBANCE

UPLAND MEADOW SEED MIX

LOWLAND MEADOW SEED MIX

NOTE:
ALL OTHER DISTURBED AREAS TO BE SEEDED WITH STANDARD TURF MIX

APPROVED: DEPARTMENT OF PLANNING AND ZONING

CHIEF, DEVELOPMENT ENGINEERING DIVISION	DATE 6.17.14
CHIEF, DIVISION OF LAND DEVELOPMENT	DATE 7-28-14
DIRECTOR	DATE 7-28-14

MAHAN RYKIEL ASSOCIATES INC
The Stieff Silver Building. 800 Wyman Park Drive., Suite 100. Baltimore, MD 21211 410.235.6001

REVISIONS	
BUILDING PERMIT REVIEW	

HOWARD COUNTY
DEPARTMENT OF RECREATION AND PARKS
7120 OAKLAND MILLS ROAD
COLUMBIA, MD 21046

DEPARTMENT OF PUBLIC WORKS
9250 BENDIX ROAD
ELLICOTT CITY, MD 21043

WR&A
WHITMAN, REQUARDT & ASSOCIATES, LLP
801 South Caroline Street, Baltimore, Maryland 21231
Phone: 410-235-3450 Fax: 410-243-5716

PROPERTY

TAX MAP 36, GRID 5, PARCEL 3,72

ZONING: RC-DEO

ELECTION DISTRICT 3/7

GRAPHIC SCALES

0 40 80 160

SIGNATURE

BLANDAIR REGIONAL PARK - PHASE 2

Seeding Plan

Drawing No.
L1.6

Scale: 1"=80'		
Date: 03/31/2014	Sheet 29 of 41	
Des: CB/NS	Drawn: CO	Check: CB

SDP-12-063

STANDARD SHA SEED MIXES

UPLAND MEADOW MIX
Use: Meadow Sites

Common Name
Blackeyed Susan
Eastern Purple Coneflower
Gray Goldenrod
Lanceleaf Tickseed
Partridge Pea
Sundial Lupine
Talus Slope Penstemon
Wild Bergamot

SEED MIX NOTE:
SEE SHA STANDARD SPECIFICATIONS AND SPECIAL PROVISIONS FOR CONSTRUCTION MATERIALS AND METHODS FOR MEADOW INSTALLATION. SEED VARIETIES LISTED ABOVE ARE THE EIGHT (8) FORBS PROPOSED FOR THE SEED MIXES FOR THIS PROJECT. FOLLOW SHA SPECS FOR OTHER SEED VARIETIES AND SPECIAL PURPOSE MIX.

PLANT SCHEDULE (THIS SHEET ONLY)

QTY.	KEY	BOTANICAL/COMMON NAME	SIZE	ROOT	COMMENTS
		SHRUBS			
17	CA	Clethra alnifolia Sweet Pepperbush	#5	Cont.	30" Ht.
25	VD	Viburnum dentatum Arrowwood Viburnum	#5	Cont.	24" Spd.
107	IG	Ilex galabra 'Charzin' Nordic Inkberry Holly	#3	Cont.	24" Spd.
71	RA	Rhus aromatica 'Gro Low' Gro Low Fragrant Sumac	#3	Cont.	24" Spd.
		PERENNIALS / GROUNDCOVERS / GRASSES			
393	ASC	Asclepias tuberosa Butterfly Weed	SP#4	Cont.	15" O.C.
458	DES	Deschampsia cespiosa 'Goldtau' Tufted Hair Grass	#1	Cont.	24" O.C.
355	EDL	Eupatorium dubium 'Little Joe' Joe Pye Weed	#1	Cont.	18" O.C.
241	EPM	Echinacea purpurea 'Magnus' Purple Coneflower	#1	Cont.	18" O.C.
323	IRI	Iris versicolor Blue Flag Iris	#1	Cont.	18" O.C.
323	JUE	Juncus effusus Soft Rush	#1	Cont.	18" O.C.
128	MOD	Monarda didyma Bee Balm	#1	Cont.	18" O.C.
159	PVR	Panicum virgatum 'Rostrahlbush' Red Switchgrass	#1	Cont.	36" O.C.
269	SSH	Solidgao shortii 'Solar Cascade' Goldenrod	#1	Cont.	15" O.C.
227	SYP	Symphiotrichum novae-angliae 'Purple Dome' New England Aster	#1	Cont.	18" O.C.

SCHEDULE NOTES:

1. PLANT IN DOUBLE STAGGERED ROWS UNLESS OTHERWISE INDICATED.
2. ADJUST SEEDED LAWN AND UPLAND MEADOW SEED MIX QUANTITY BASED ON AREAS SHOWN ON BOTH L1.6 AND L1.7.
3. AREAS INDICATING TWO PLANT SPECIES ARE TO BE PLANTED IN GROUPS OF 10 TO 15 PLANTS FROM EACH SPECIES.

LEGEND:

- LOD — LIMIT OF DISTURBANCE
- EXISTING TREE
- PROPOSED DECIDUOUS TREE
- PROPOSED EVERGREEN TREE
- PROPOSED SHRUBS
- UPLAND MEADOW MIX

NOTES:

1. ALL PLANT LOCATIONS TO BE MARKED IN THE FIELD AND APPROVED BY HOWARD COUNTY DEPARTMENT OF RECREATION AND PARKS REPRESENTATIVE PRIOR TO PLANTING.
2. FOR TREE TYPES AND QUANTITIES, SEE SHEET L1.2
3. FOR SEEDING PLAN, SEE SHEET L1.6
4. INSTALLATION OF PLANT MATERIAL SHOWN OFF RECREATION AND PARKS PROPERTY ALONG SOUTH PROPERTY BOUNDARY TO BE COORDINATED WITH THE COLUMBIA ASSOCIATION.
5. SEE L3.2 FOR MINIMUM LANDSCAPE REQUIREMENT CHART FOR PERIMETER BUFFER PLANTING.

APPROVED: DEPARTMENT OF PLANNING AND ZONING

CHIEF, DEVELOPMENT ENGINEERING DIVISION	DATE 5-17-16
CHIEF, DIVISION OF LAND DEVELOPMENT	DATE 5-19-16
DIRECTOR	DATE 5-19-16

MAHAN RYKIEL ASSOCIATES INC
The Stieff Silver Building. 800 Wyman Park Drive., Suite 100. Baltimore, MD 21211 410.235.6001

REVISIONS	
REDLINE REVISION 7	3/22/16

HOWARD COUNTY
DEPARTMENT OF RECREATION AND PARKS
7120 OAKLAND MILLS ROAD
COLUMBIA, MD 21046

DEPARTMENT OF PUBLIC WORKS
9250 BENDIX ROAD
ELLICOTT CITY, MD 21043

WR&A
WHITMAN, REQUARDT & ASSOCIATES, LLP
801 South Caroline Street, Baltimore, Maryland 21231
Phone: 410-235-3450 Fax: 410-243-5716

PROPERTY

TAX MAP 36, GRID 5, PARCEL 3,72

ZONING: RC-DEO

ELECTION DISTRICT 3/7

GRAPHIC SCALES

0 30 60 120

SIGNATURE

BLANDAIR REGIONAL PARK - PHASE 2

Stormwater Management Planting Plan Enlargement Revised Site Development Plan

Drawing No.

L1.7

Scale: 1"=20'		
Date: 03/24/2016	Sheet 29A of 41	
Des: CB/NS	Drawn: CO	Check: CB

SDP-12-063

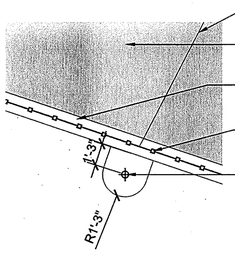

FOUL POLE ENLARGEMENT
Scale: 1/4"=1'-0"

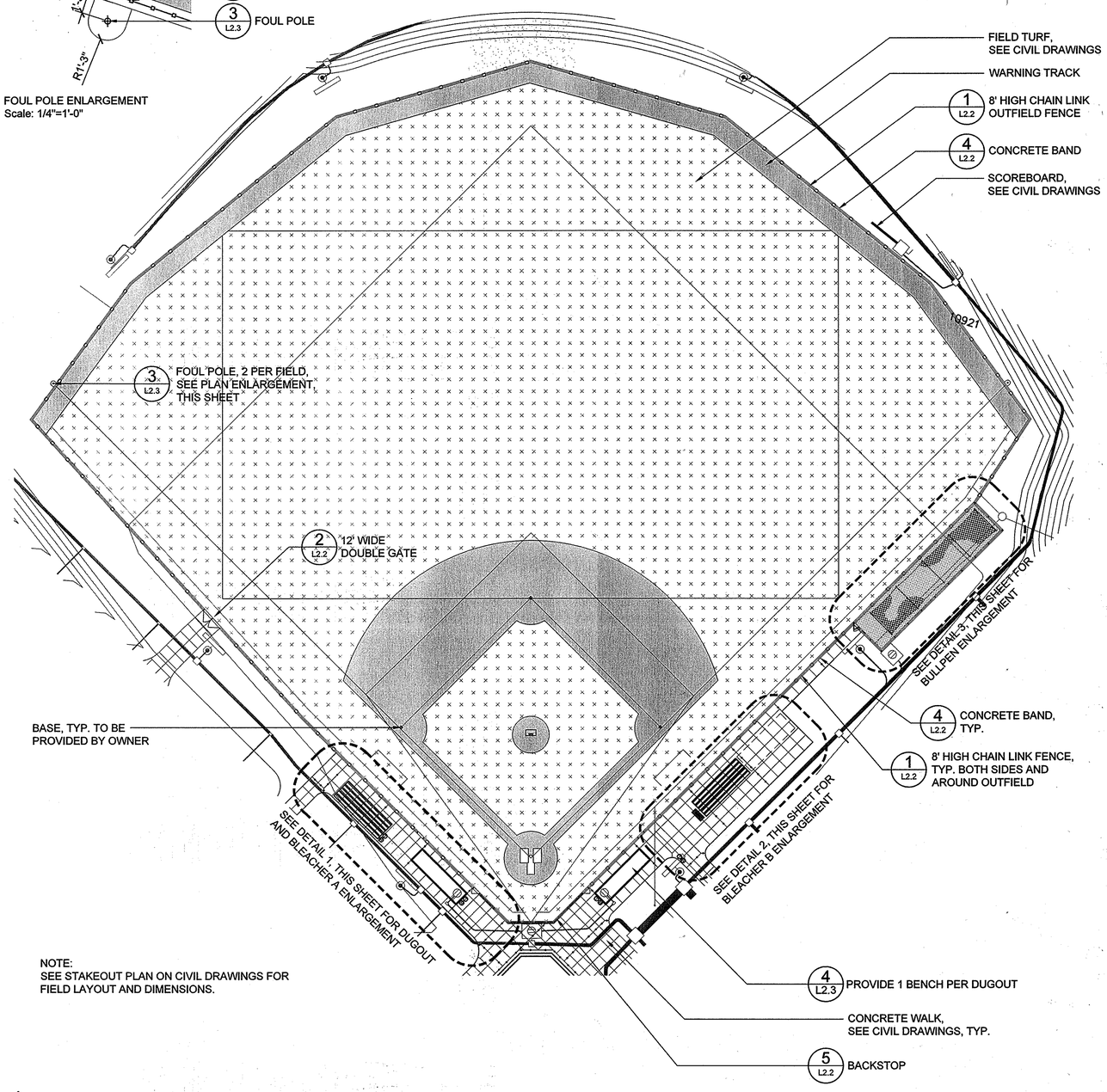

NOTE:
SEE STAKEOUT PLAN ON CIVIL DRAWINGS FOR FIELD LAYOUT AND DIMENSIONS.

1 Baseball Field Layout
Scale: 1" = 30'-0"

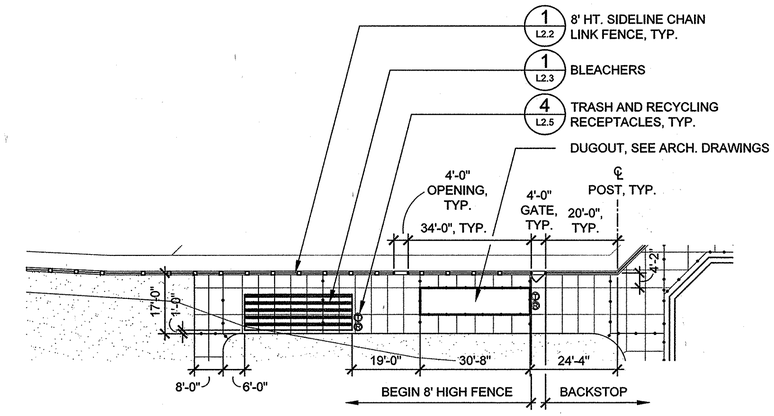

1 Typical Dugout and Bleacher A Layout (Typ. of 2)
Scale: 1" = 20'-0"

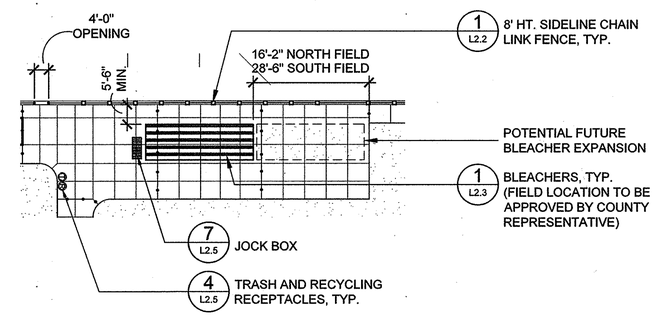

2 Typical Bleacher B Layout (Typ. of 2)
Scale: 1" = 20'-0"

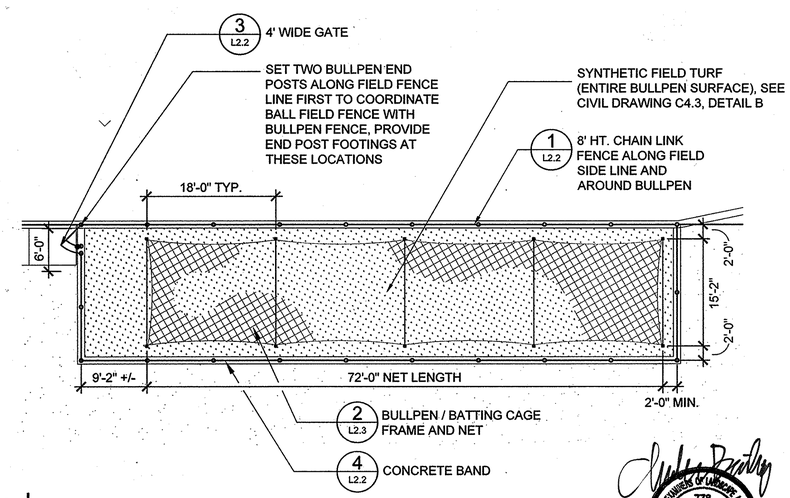

3 Bullpen Enlargement (Typ. of 2)
Scale: 1" = 10'-0"

APPROVED: DEPARTMENT OF PLANNING AND ZONING

CHIEF, DEVELOPMENT ENGINEERING DIVISION	DATE 6.17.14
CHIEF, DIVISION OF LAND DEVELOPMENT	DATE 6-28-14
DIRECTOR	DATE 7-28-14

MAHAN RYKIEL ASSOCIATES INC
The Stieff Silver Building. 800 Wyman Park Drive., Suite 100. Baltimore, MD 21211 410.235.6001

REVISIONS		

HOWARD COUNTY

DEPARTMENT OF RECREATION AND PARKS
7120 OAKLAND MILLS ROAD
COLUMBIA, MD 21046

DEPARTMENT OF PUBLIC WORKS
9250 BENDIX ROAD
ELLICOTT CITY, MD 21043

WR&A
WHITMAN, REQUARDT & ASSOCIATES, LLP
801 South Caroline Street, Baltimore, Maryland 21231
Phone: 410-235-3450 Fax: 410-243-5716

PROPERTY

TAX MAP 36, GRID 5, PARCEL 3,72

ZONING: RC-DEO

ELECTION DISTRICT 3/7

GRAPHIC SCALES

SIGNATURE

BLANDAIR REGIONAL PARK - PHASE 2

Ballfield Enlargements

Drawing No.
L2.1

Scale: AS SHOWN		
Date: 03/31/2014	Sheet 30 of 41	
Des: CB/NS	Drawn: CO	Check: CB

SDP-12-063

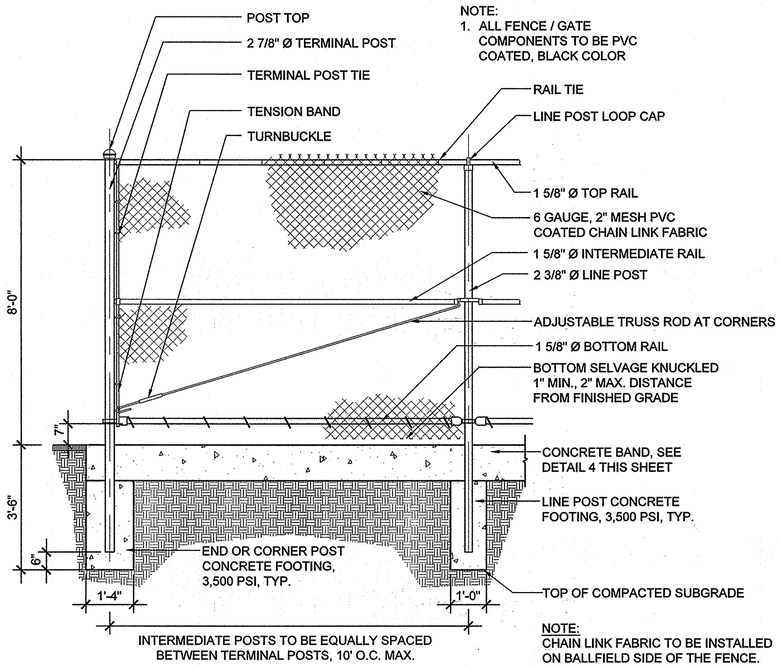

NOTE:
1. ALL FENCE / GATE COMPONENTS TO BE PVC COATED, BLACK COLOR

NOTE:
CHAIN LINK FABRIC TO BE INSTALLED ON BALLFIELD SIDE OF THE FENCE.

1 | 8' High Chain Link Fence
Scale: 1/2" = 1' - 0"

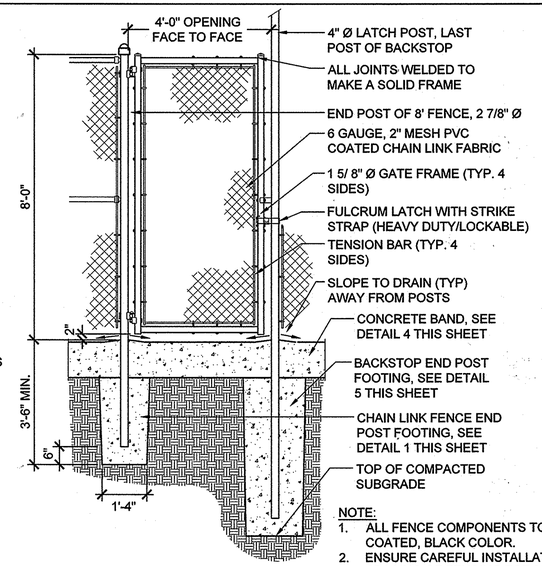

NOTE:
1. ALL FENCE COMPONENTS TO BE PVC COATED, BLACK COLOR.
2. ENSURE CAREFUL INSTALLATION AND SPACING OF FENCING FOR MAXIMUM FUNCTIONALITY OF FULCRUM LATCHES.

3 | 4' Wide Single Gate
Scale: 1/2" = 1'-0"

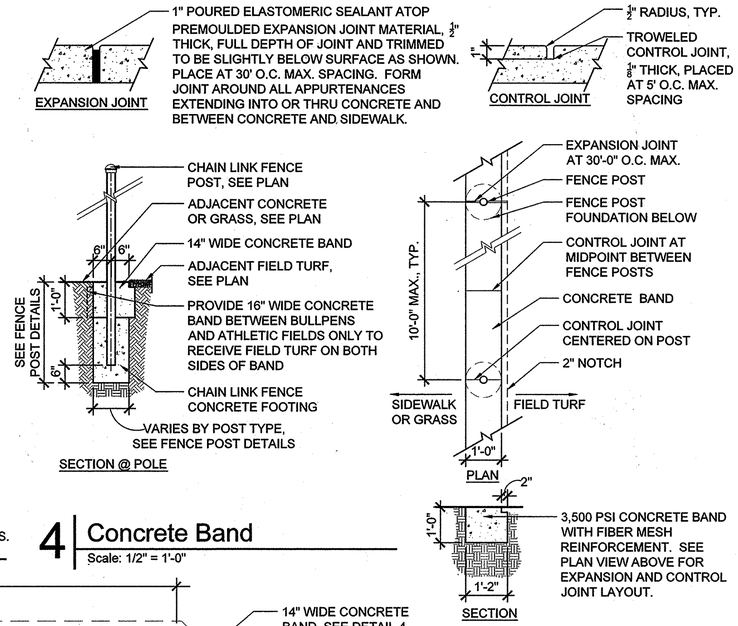

4 | Concrete Band
Scale: 1/2" = 1'-0"

NOTE:
1. SUBMIT ALL FENCING AND BACKSTOP PRODUCT DATA FOR APPROVAL.
2. PROVIDE SHOP DRAWING OF POST, GATE, AND FENCE LAYOUT.

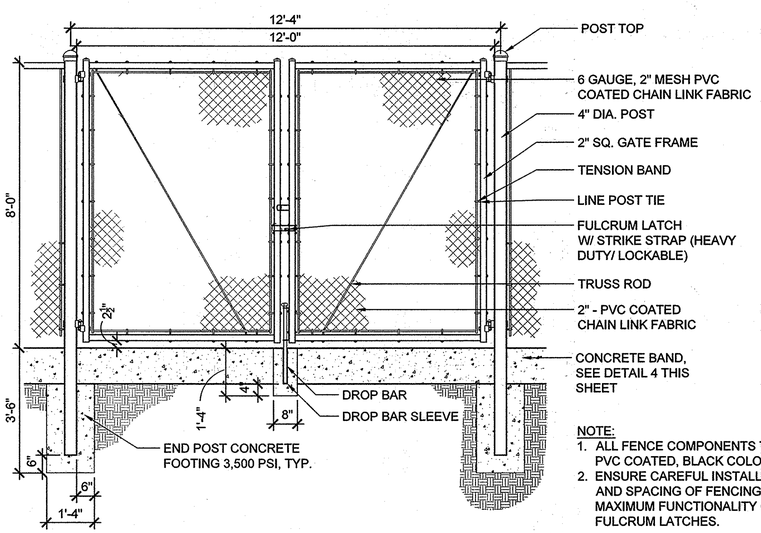

NOTE:
1. ALL FENCE COMPONENTS TO BE PVC COATED, BLACK COLOR.
2. ENSURE CAREFUL INSTALLATION AND SPACING OF FENCING FOR MAXIMUM FUNCTIONALITY OF FULCRUM LATCHES.

2 | 8' High Chain Link Double Swing Gate
Scale: 1/ 2" = 1' - 0"

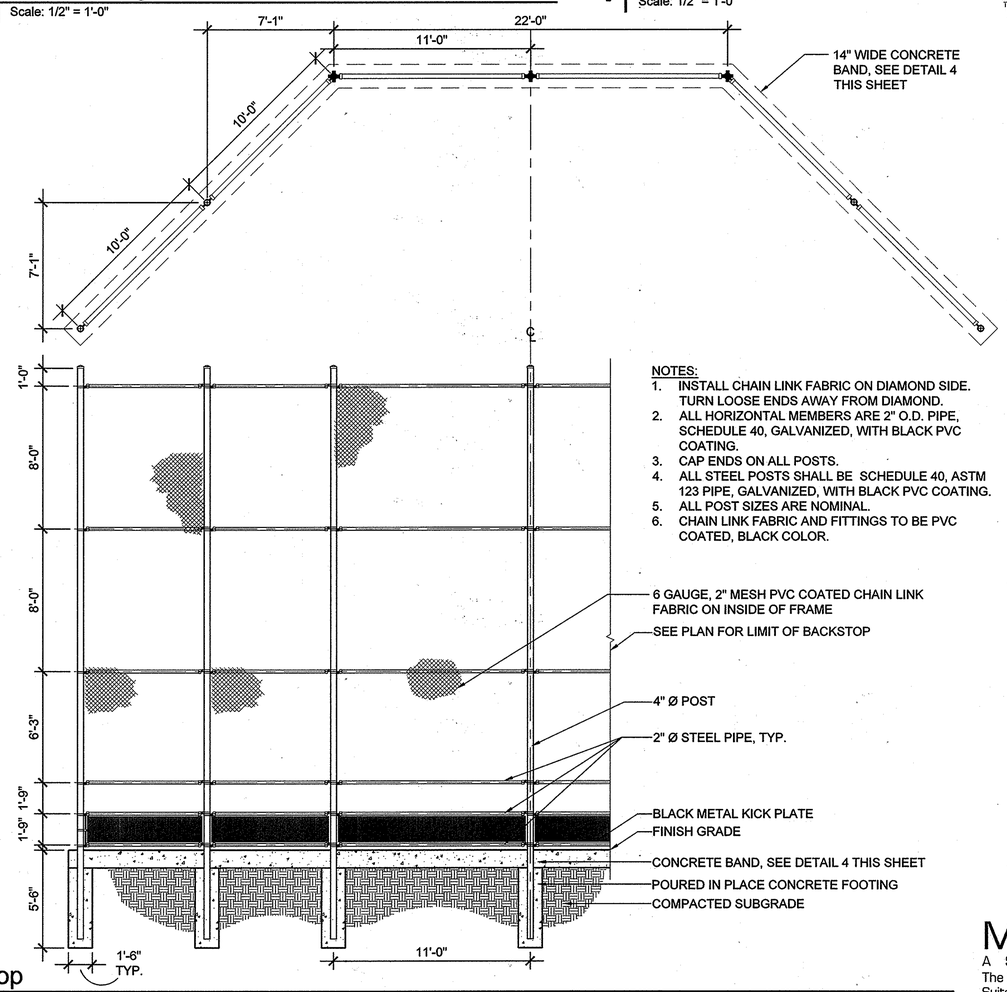

NOTES:
1. INSTALL CHAIN LINK FABRIC ON DIAMOND SIDE. TURN LOOSE ENDS AWAY FROM DIAMOND.
2. ALL HORIZONTAL MEMBERS ARE 2" O.D. PIPE, SCHEDULE 40, GALVANIZED, WITH BLACK PVC COATING.
3. CAP ENDS ON ALL POSTS.
4. ALL STEEL POSTS SHALL BE SCHEDULE 40, ASTM 123 PIPE, GALVANIZED, WITH BLACK PVC COATING.
5. ALL POST SIZES ARE NOMINAL.
6. CHAIN LINK FABRIC AND FITTINGS TO BE PVC COATED, BLACK COLOR.

5 | Backstop
Scale: 1/4" = 1'-0"

APPROVED: DEPARTMENT OF PLANNING AND ZONING

CHIEF, DEVELOPMENT ENGINEERING DIVISION	DATE 6.17.14
CHIEF, DIVISION OF LAND DEVELOPMENT	DATE 7-28-14
DIRECTOR	DATE 7-28-14

MAHAN RYKIEL ASSOCIATES INC
The Stieff Silver Building. 800 Wyman Park Drive., Suite 100. Baltimore, MD 21211 410.235.6001

REVISIONS		

HOWARD COUNTY
DEPARTMENT OF RECREATION AND PARKS
7120 OAKLAND MILLS ROAD
COLUMBIA, MD 21046

DEPARTMENT OF PUBLIC WORKS
9250 BENDIX ROAD
ELLICOTT CITY, MD 21043

WR&A
WHITMAN, REQUARDT & ASSOCIATES, LLP
801 South Caroline Street, Baltimore, Maryland 21231
Phone: 410-235-3450 Fax: 410-243-5716

PROPERTY
TAX MAP 36, GRID 5, PARCEL 3,72
ZONING: RC-DEO
ELECTION DISTRICT 3/7

GRAPHIC SCALES

SIGNATURE

BLANDAIR REGIONAL PARK - PHASE 2

Hardscape Details

Drawing No.
L2.2

Scale: AS SHOWN		
Date: 03/31/2014	Sheet 31 of 41	
Des: CB/NS	Drawn: CO	Check: CB

SDP-12-063

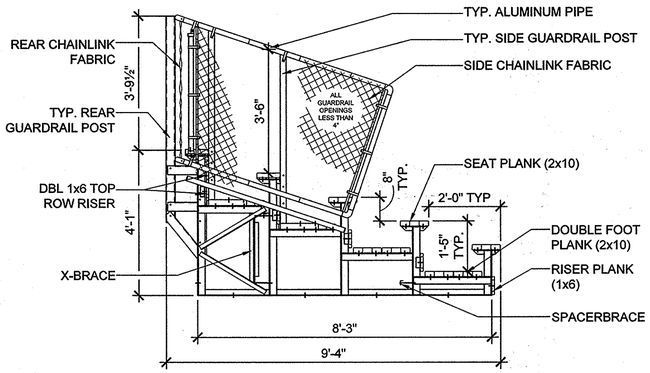

ELEVATION

NOTE:
- END CAPS FOR SEAT BOARDS AND FOOT BOARDS ARE TO BE FIELD-APPLIED BY USING A RUBBER MALLET AND DRIVING THEM IN PLACE.
- END CAPS FOR RISER BOARDS ARE TO BE FIELD-APPLIED WITH ALUMINUM POP-RIVETS (3 POP-RIVETS PER RISER END CAP.)
- RISER BOARDS GET END CAPS ON CLOSED-DECK UNITS ONLY.

NOTE:
A BUILDING PERMIT WILL BE REQUIRED FOR THE BLEACHERS, TO BE SIGNED AND SEALED BY A PROFESSIONAL ENGINEER LICENSED IN THE STATE OF MARYLAND.

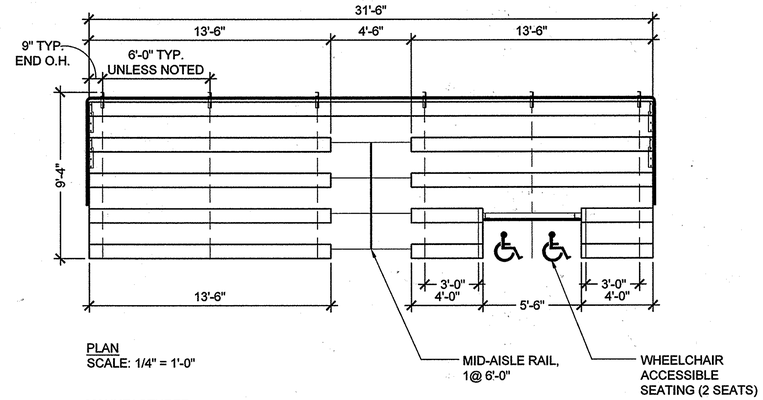

PLAN
SCALE: 1/4" = 1'-0"

MANUFACTURER:
NATIONAL RECREATION SYSTEMS
5120 INVESTMENT DRIVE,
FORT WAYNE, IN 46808
(888) 568-9064
(OR EQUAL)

MODEL:
ADA SERIES 5-ROW, 31'-6" LONG NON-ELEVATED DELUX ALUMINUM BLEACHER, MODEL NB-0531.5AADA

1 Bleacher
Scale: 1/2" = 1' - 0"

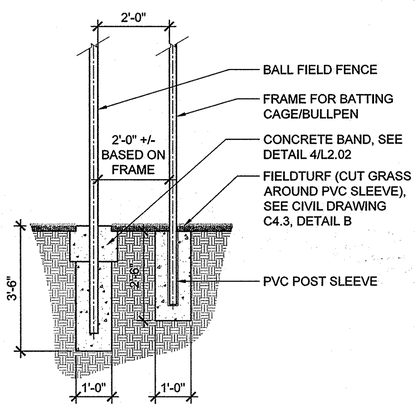

2 Bull Pen: Frame Post Detail
1/2" = 1'-0"

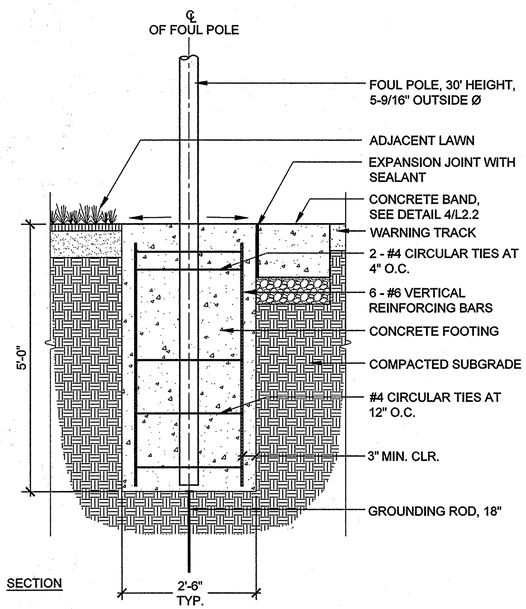

SECTION

3 Foul Pole Footing
Scale: 3/4" = 1'-0"

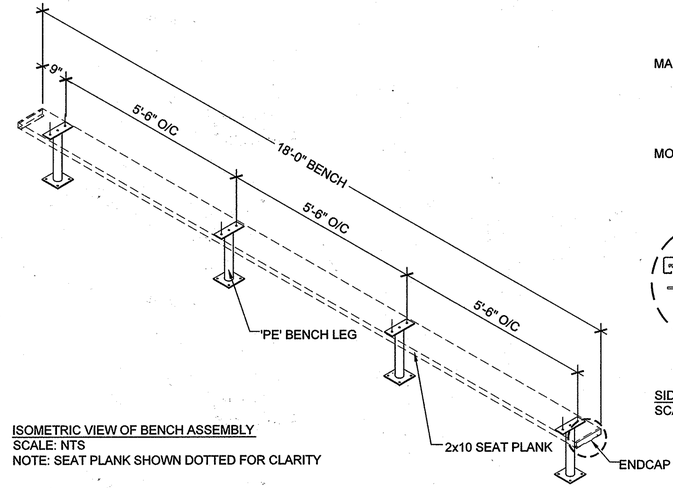

ISOMETRIC VIEW OF BENCH ASSEMBLY
SCALE: NTS
NOTE: SEAT PLANK SHOWN DOTTED FOR CLARITY

MANUFACTURER:
NATIONAL RECREATION SYSTEMS
5120 INVESTMENT DRIVE,
FORT WAYNE, IN 46808
(888) 568-9064
(OR EQUAL)

MODEL:
'PE' PERMANENT BENCH W/O BACK, 18' LONG

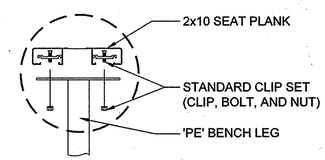

SIDE VIEW OF BENCH ASSEMBLY
SCALE: 1 1/2" = 1' - 0"

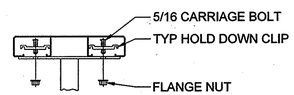

TYP. 2x10 PLANK ATTACHMENT
SCALE: NTS

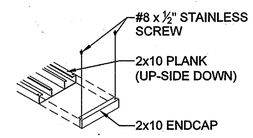

TYP. 2x10 ENDCAP ATTACHMENT
SCALE: NTS

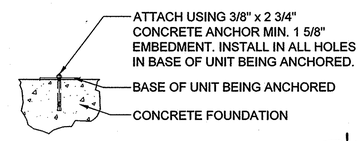

WEDGE ANCHOR DETAIL 2 3/4"
SCALE: NTS

4 Dugout Bench
Scale: As Noted

BOARD OF EXAMINERS OF ENGINEERS AND ARCHITECTS
778
CHARLES EUGENE BALLEY, JR.
STATE OF MARYLAND

MAHAN RYKIEL
ASSOCIATES INC
The Stieff Silver Building. 800 Wyman Park Drive., Suite 100. Baltimore, MD 21211 410.235.6001

APPROVED: DEPARTMENT OF PLANNING AND ZONING

CHIEF, DEVELOPMENT ENGINEERING DIVISION	DATE 6-17-14
CHIEF, DIVISION OF LAND DEVELOPMENT	DATE 7-28-14
DIRECTOR	DATE 7-28-14

REVISIONS

HOWARD COUNTY
DEPARTMENT OF RECREATION AND PARKS
7120 OAKLAND MILLS ROAD
COLUMBIA, MD 21046

DEPARTMENT OF PUBLIC WORKS
9250 BENDIX ROAD
ELLICOTT CITY, MD 21043

WR&A
WHITMAN, REQUARDT & ASSOCIATES, LLP
801 South Caroline Street, Baltimore, Maryland 21231
Phone: 410-235-3450 Fax: 410-243-5716

PROPERTY

TAX MAP 36, GRID 5, PARCEL 3,72

ZONING: RC-DEO

ELECTION DISTRICT 3/7

GRAPHIC SCALES

SIGNATURE

BLANDAIR REGIONAL PARK - PHASE 2

Hardscape Details

Drawing No.
L2.3

Scale: AS SHOWN		
Date: 03/31/2014	Sheet 32 of 41	
Des: CB/NS	Drawn: CO	Check: CB

SDP-12-063

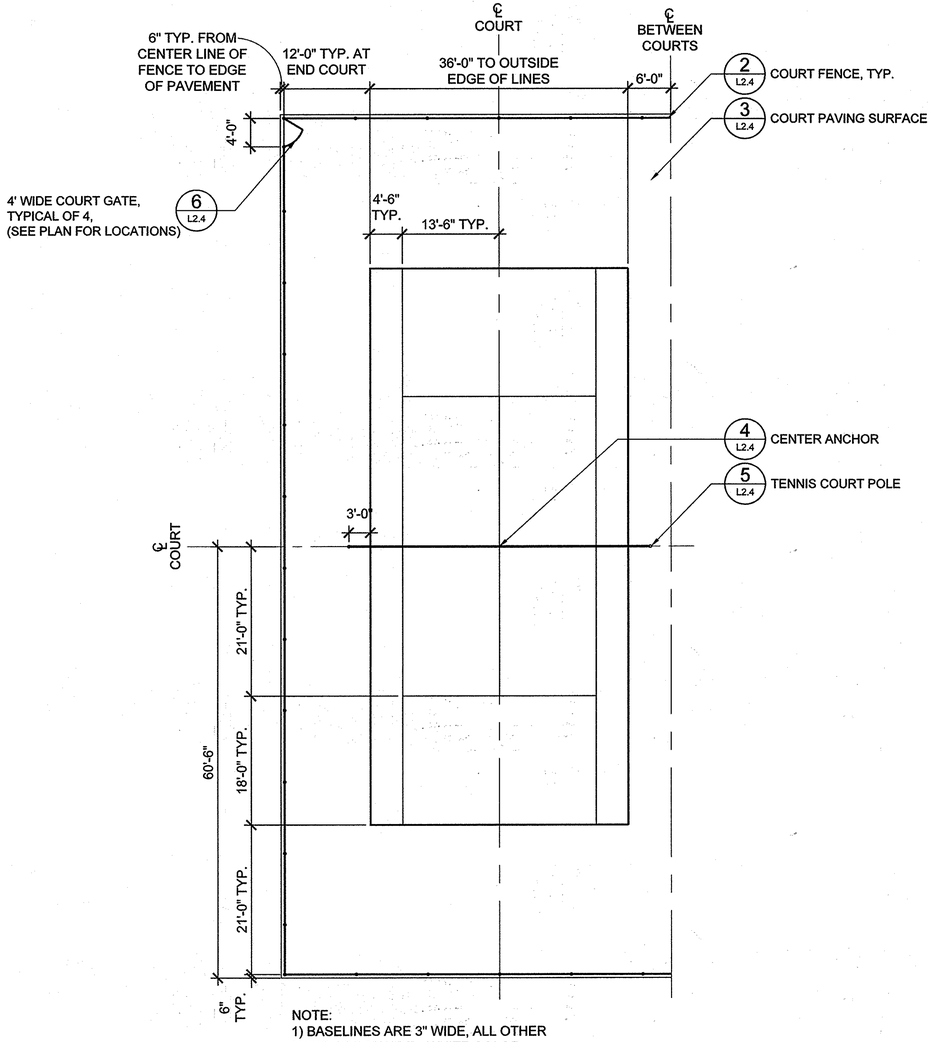

NOTE:
1) BASELINES ARE 3" WIDE, ALL OTHER LINES ARE 2" WIDE - WHITE COLOR

1 Tennis Court Enlargement
Scale: 1" = 10'

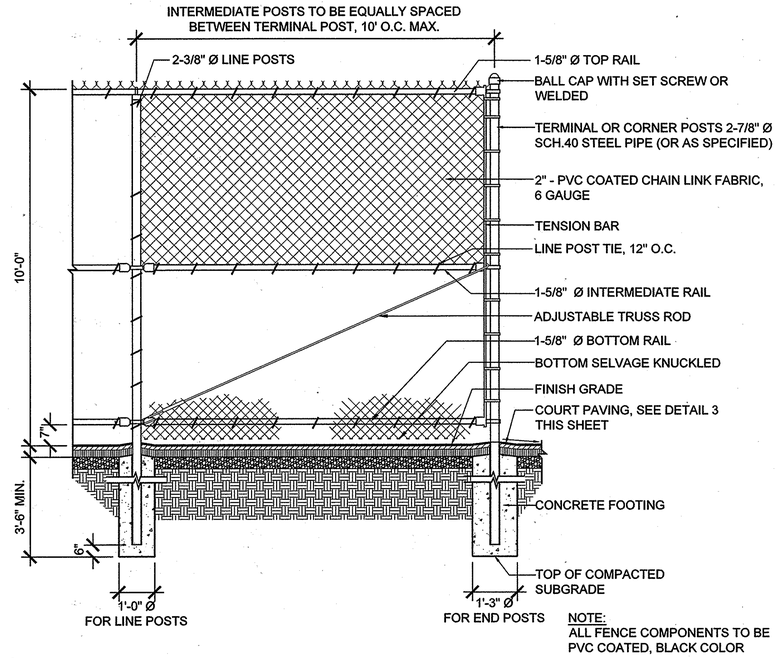

NOTE:
ALL FENCE COMPONENTS TO BE PVC COATED, BLACK COLOR

2 Court Fence
Scale: 1/2" = 1'-0"

3 Court Paving Surface
Scale: 3/4" = 1'-0"

4 Center Anchor
Scale: 1" = 1'-0"

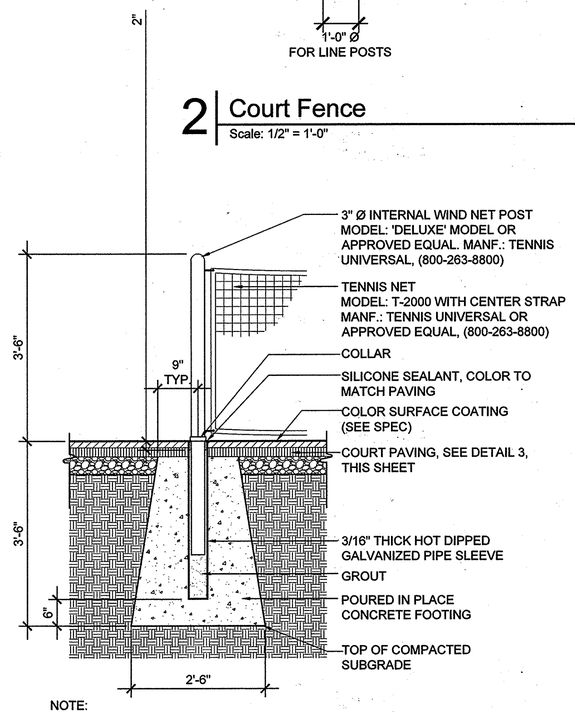

NOTE:
THIS DETAIL IS A REPRESENTATION OF DESIGN INTENT AND AS SUCH DENOTES VERTICAL AND HORIZONTAL RELATIONSHIPS, MATERIALS, AND FINISHES. CONTRACTOR SHALL SUBMIT SHOP DRAWINGS TO INDICATE STRUCTURAL DESIGN APPROPRIATE TO ENSURE LOCAL CODES AND DESIGN INTENT ARE MET.

5 Tennis Court Pole
Scale: 3/4" = 1'-0"

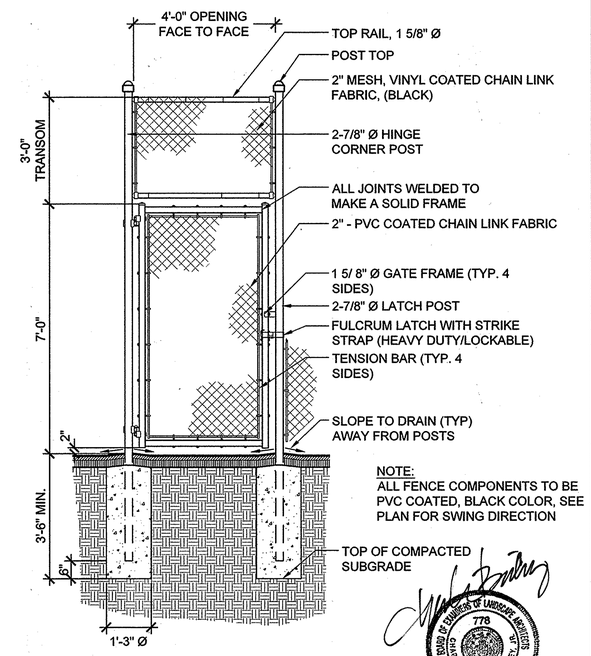

NOTE:
ALL FENCE COMPONENTS TO BE PVC COATED, BLACK COLOR, SEE PLAN FOR SWING DIRECTION

6 Court Gate
Scale: 1/2" = 1'-0"

BOARD OF EXAMINERS OF LANDSCAPE ARCHITECTS
778
CHARLES EUGENE BAILEY, JR.
STATE OF MARYLAND

APPROVED: DEPARTMENT OF PLANNING AND ZONING

CHIEF, DEVELOPMENT ENGINEERING DIVISION	DATE 6-17-14
CHIEF, DIVISION OF LAND DEVELOPMENT	DATE 7-28-14
DIRECTOR	DATE 7-28-14

MAHAN RYKIEL
ASSOCIATES INC
The Stieff Silver Building. 800 Wyman Park Drive., Suite 100. Baltimore, MD 21211 410.235.6001

REVISIONS

HOWARD COUNTY

DEPARTMENT OF RECREATION AND PARKS
7120 OAKLAND MILLS ROAD
COLUMBIA, MD 21046

DEPARTMENT OF PUBLIC WORKS
9250 BENDIX ROAD
ELLICOTT CITY, MD 21043

WR&A
WHITMAN, REQUARDT & ASSOCIATES, LLP
801 South Caroline Street, Baltimore, Maryland 21231
Phone: 410-235-3450 Fax: 410-243-5716

PROPERTY

TAX MAP 36, GRID 5, PARCEL 3,72

ZONING: RC-DEO

ELECTION DISTRICT 3/7

GRAPHIC SCALES

SIGNATURE

BLANDAIR REGIONAL PARK - PHASE 2

Hardscape Details

Drawing No.
L2.4

Scale: AS SHOWN		
Date: 03/31/2014	Sheet 33 of 41	
Des: CB/NS	Drawn: CO	Check: CB

SDP-12-063

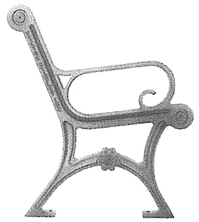

MANUFACTURER INFORMATION:
Victor Stanley, Inc.
P.O. Drawer 330
Dunkirk, MD 20754
1-800-368-2573
www.victorstanley.com

Classic Series by Victor Stanley
6' Bench
Casting #196 with 2nd Site System
Frame Color: Bronze
Recycled Plastic Slats, Color: Maple

Total Benches: Nine (9)

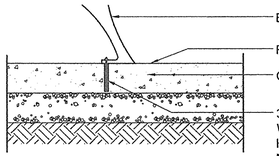

3/8" DIA. x 6" NON-CORROSIVE SLEEVE ANCHOR WITH ROUND HEAD. PLACE THROUGH 3/8" DIA. HOLE DRILLED INTO PAVING USING A CARBIDE BIT. MARK PAVEMENT THROUGH HOLE AND REMOVE BENCH TO DRILL. REPLACE BENCH AND FASTEN ANCHOR SNUG AGAINST SITE FURNITURE.

1 Bench
NTS

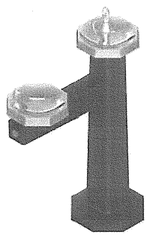

MANUFACTURER INFORMATION:
Murdock Manufacturing
15125 Proctor Avenue
City of Industry, CA 91746
1-800-453-7465
www.murdockmfg.com

Model M-43B by Murdock
Pedestal mount with bi-level bowls,
cast iron pedestal, cast brass bowl
Color: **BROWN**
JF2: jug filler
Submit shop drawing for approval.

Total drinking fountains: Three (3)

3 Drinking Fountain
NTS

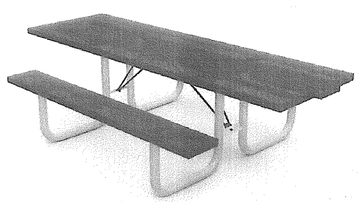

VENDOR INFORMATION:
Playground Specialists, Inc.
11700 Whates Lane
Thurmont, MD 21788
1-800-385-0075
www.playspecva.com/

Model ZZXX1405 by Playworld Systems
8' accessible park table
Eco-Armor tops and frames
Top color: green, Frame color: brown

Total Quantity: Eleven (11)

5 Picnic Table
NTS

MANUFACTURER INFORMATION:
KNAACK, Crystal Lake, Illinois Facility
420 East Terra Cotta Avenue
Crystal Lake, IL 60014
1-800-456-7865
www.knaack.com

Model 91 STORAGEMASTER Chest with Ramp
Height: 46"
Width: 30"
Length: 72"
Weight: 409 lbs.
Cubic Feet: 57.5

Total Quantity: Two (2)

7 Jock Box
NTS

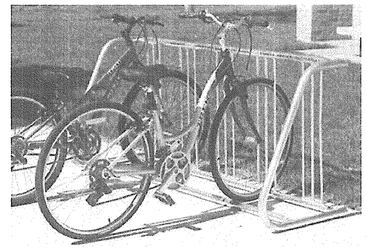

MANUFACTURER INFORMATION:
Pilot Rock / R.J. Thomas Manufacturing Co., Inc.
PO Box 946
5648 Hwy. 59 South
Cherokee, Iowa 51015
1-800-762-5002
www.pilotrock.com

Model BR205SS/CA by Pilot Rock
Single-sided Bike Rack (Holds 5 Bikes)
Finish / Color: Galvanized
Anchor to concrete with heavy duty kit #ANC2-4
provided by manufacturer

Total Bike Racks: Three (3)

2 Bike Rack
NTS

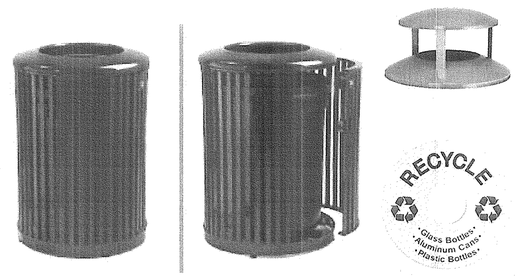

MANUFACTURER INFORMATION:
Victor Stanley, Inc.
P.O. Drawer 330
Dunkirk, MD 20754
1-800-368-2573
www.victorstanley.com

Steelsites Series Model NSDC-45 by Victor Stanley
45-gallon capacity side-door litter/recycling receptacle
Black plastic liner, four leveling feet, bottom recessed pedestal
(Anchor per manufacturer's recommendations)

Trash receptacle color: bronze
Recycling receptacle color: blue

Trash and recycling receptacles to receive rain bonnet lid. Rain bonnet lid to be riveted or welded in place. Adjust "RECYCLE" decals as necessary. Submit product data for review.

Total trash receptacles: Twelve (12)
Total recycling receptacles: Twelve (12)

4 Trash / Recycling Receptacle
NTS

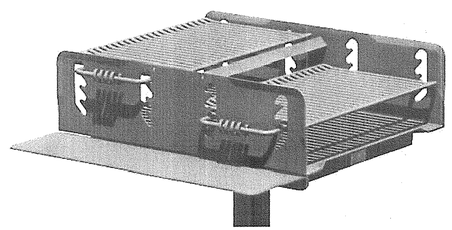

MANUFACTURER INFORMATION:
Pilot Rock / R.J. Thomas Manufacturing Co., Inc.
PO Box 946
5648 Hwy. 59 South
Cherokee, Iowa 51015
1-800-762-5002
www.pilotrock.com

Model P-1000/S B7 by Pilot Rock
In-ground mounting option with one standard shelf
Mount per manufacturer's recommendation(Confirm with Structural dwgs.)

Total Quantity: One (1)

6 Grill
NTS

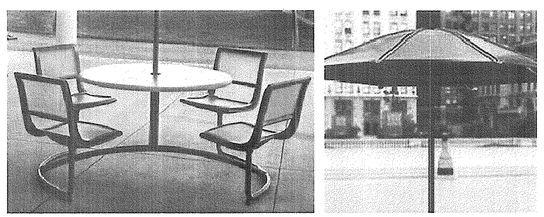

MANUFACTURER INFORMATION:
LandscapeForms, Inc.
431 Lawndale Ave.
Kalamazoo, MI 49048
269.381.3455 fax
800.430.6209 phone

Mingle series, backed seating
Surface mounted per manufacturer's spec
Catena style table-top: Metallic Bronze Color
Altair Soltice Umbrella, 84"x87" Table Mount
Perforated Panels, Metallic Bronze Color

Total Quantity: One (1) 3-seat unit (handicap accessible)
Two (2) 4-seat unit

8 Table and Umbrella
NTS

NOTE:
SUBMIT ALL SITE FURNISHING PRODUCT DATA FOR APPROVAL.

APPROVED: DEPARTMENT OF PLANNING AND ZONING

CHIEF, DEVELOPMENT ENGINEERING DIVISION	DATE 6-17-14
CHIEF, DIVISION OF LAND DEVELOPMENT	DATE 7-28-14
DIRECTOR	DATE 7-28-14

BOARD OF EXAMINERS OF LANDSCAPE ARCHITECTS
CHARLES EUGENE BAILEY III
778
STATE OF MARYLAND

MAHAN RYKIEL
ASSOCIATES INC
The Stieff Silver Building. 800 Wyman Park Drive.,
Suite 100. Baltimore, MD 21211 410.235.6001

REVISIONS		

HOWARD COUNTY

DEPARTMENT OF RECREATION AND PARKS
7120 OAKLAND MILLS ROAD
COLUMBIA, MD 21046

DEPARTMENT OF PUBLIC WORKS
9250 BENDIX ROAD
ELLICOTT CITY, MD 21043

WR&A
WHITMAN, REQUARDT & ASSOCIATES, LLP
801 South Caroline Street, Baltimore, Maryland 21231
Phone: 410-235-3450 Fax: 410-243-5716

PROPERTY

TAX MAP 36, GRID 5, PARCEL 3,72

ZONING: RC-DEO

ELECTION DISTRICT 3/7

GRAPHIC SCALES

SIGNATURE

BLANDAIR REGIONAL PARK - PHASE 2

Hardscape Details

Drawing No.
L2.5

Scale: AS SHOWN		
Date: 03/31/2014	Sheet 34 of 41	
Des: CB/NS	Drawn: CO	Check: CB

SDP-12-066

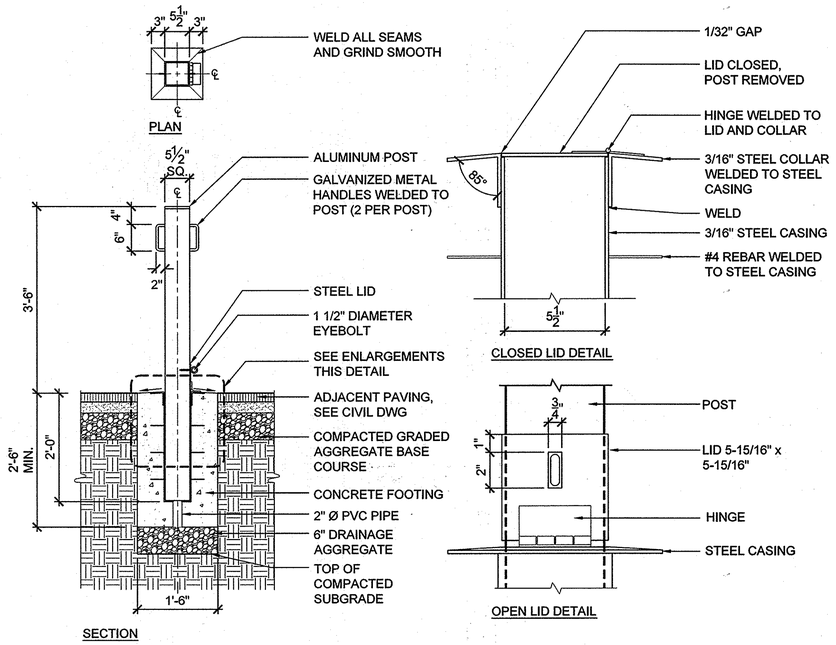

NOTE:
1. ORIENT HANDLES PARALLEL TO DIRECTION OF PATHWAY
2. GRIND ALL EXPOSED SURFACES SMOOTH AND FREE FROM BURRS. PAINT ALL EXPOSED SURFACES WITH 2 COATS 'GLIDDEN GLID GUARD' ALKYD INDUSTRIAL ENAMEL OR APPROVED EQUAL. COLOR TO MATCH BENCH FRAME (BROWN), PROVIDE A SAMPLE FOR APPROVAL.
3. CONTRACTOR TO SUBMIT SHOP DWGS. FOR REVIEW PRIOR TO FABRICATION.

1 | Removable Metal Bollard
Scale: 3/4" = 1' - 0"

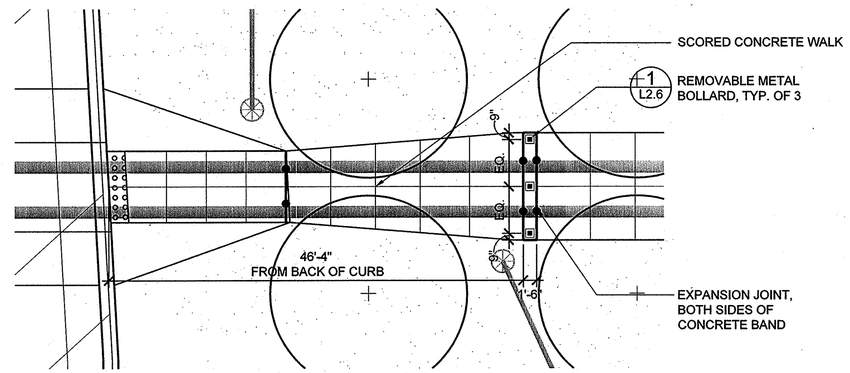

2 | Removable Metal Bollard Plan Enlargement
Scale: 1/8" = 1' - 0"

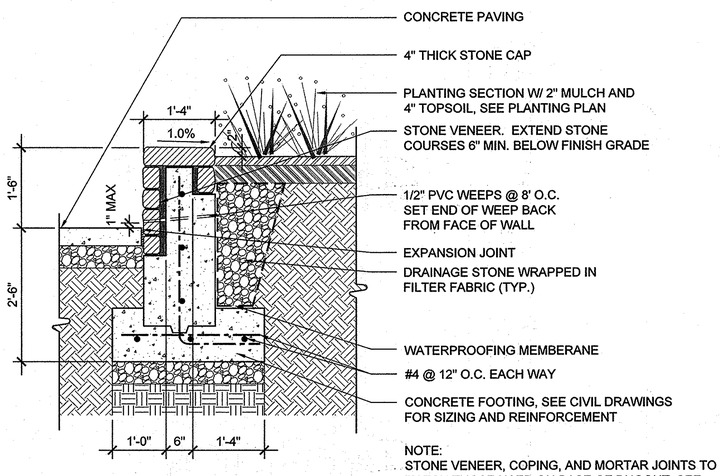

NOTE:
STONE VENEER, COPING, AND MORTAR JOINTS TO MATCH THOSE USED ON BASE OF DUGOUT, SEE ARCHITECT DRAWINGS.

3 | Stone Planter Wall
Scale: 3/4" = 1' - 0"

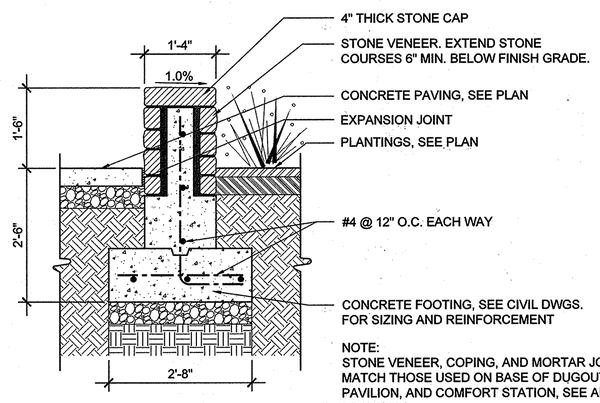

NOTE:
STONE VENEER, COPING, AND MORTAR JOINTS TO MATCH THOSE USED ON BASE OF DUGOUT, AT PICNIC PAVILION, AND COMFORT STATION, SEE ARCHITECT DRAWINGS.

4 | Stone Seat Wall
Scale: 3/4" = 1' - 0"

APPROVED: DEPARTMENT OF PLANNING AND ZONING

CHIEF, DEVELOPMENT ENGINEERING DIVISION	DATE 6-17-14
CHIEF, DIVISION OF LAND DEVELOPMENT	DATE 7-28-14
DIRECTOR	DATE 7-28-14

REVISIONS

HOWARD COUNTY

DEPARTMENT OF RECREATION AND PARKS
7120 OAKLAND MILLS ROAD
COLUMBIA, MD 21046

DEPARTMENT OF PUBLIC WORKS
9250 BENDIX ROAD
ELLICOTT CITY, MD 21043

WHITMAN, REQUARDT & ASSOCIATES, LLP
801 South Caroline Street, Baltimore, Maryland 21231
Phone: 410-235-3450 Fax: 410-243-5716

PROPERTY

TAX MAP 36, GRID 5, PARCEL 3,72

ZONING: RC-DEO

ELECTION DISTRICT 3/7

GRAPHIC SCALES

SIGNATURE

BLANDAIR REGIONAL PARK - PHASE 2

Hardscape Details

Drawing No.
L2.6

Scale: AS SHOWN		
Date: 03/31/2014	Sheet 35 of 41	
Des: CB/NS	Drawn: CO	Check: CB

MAHAN RYKIEL ASSOCIATES INC
The Stieff Silver Building. 800 Wyman Park Drive., Suite 100. Baltimore, MD 21211 410.235.6001

BOARD OF EXAMINERS OF LANDSCAPE ARCHITECTS 778 CHARLES EUGENE BAILEY, JR. STATE OF MARYLAND

SDP-12-063

Notes:

1. DO NOT CUT CENTRAL LEADER.
2. FOR PLANTS IN WIRE BASKETS, REFER TO SPECIFICATIONS.
3. DO NOT PLACE MULCH AGAINST TRUNK.
4. TREES TO HAVE SINGLE LEADER.
5. CUT AND REMOVE TOP HALF OF WIRE BASKETS.

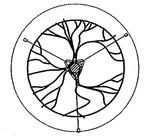

Plan

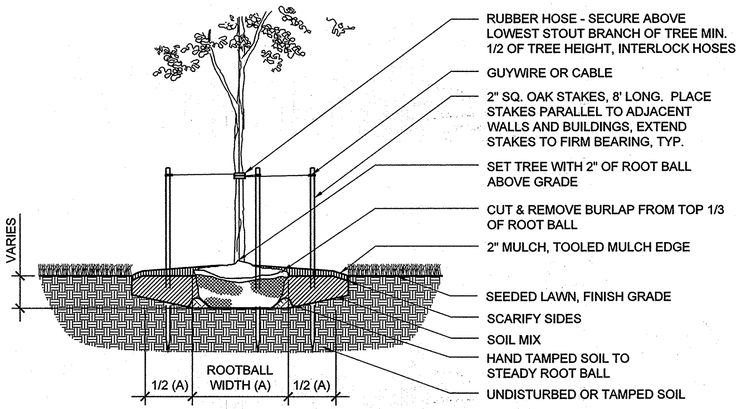

1 Typical Deciduous Tree Planting

Scale: 1/2" = 1'-0"

Notes:

1. NEVER CUT CENTRAL LEADER.
2. NEVER MULCH AGAINST TRUNK.
3. SET TREE WITH 1/8 OF ROOT BALL ABOVE GRADE.
4. STAKES, WIRES, AND HOSES SHALL BE REMOVED AFTER ONE YEAR.
5. SCARIFY SUBSOIL AND SIDES OF TREE PIT TO A MIN. OF 4" DEPTH.
6. TREES UNDER 2-1/2" CAL.: 10' x 2" x 2" STAKES SET VERTICAL, MIN. TWO FEET INTO COMPACTED SUBGRADE.
7. TREES TO HAVE SINGLE LEADER.
8. CUT AND REMOVE TOP HALF OF WIRE BASKETS.

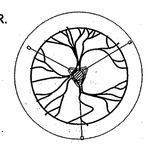

Plan

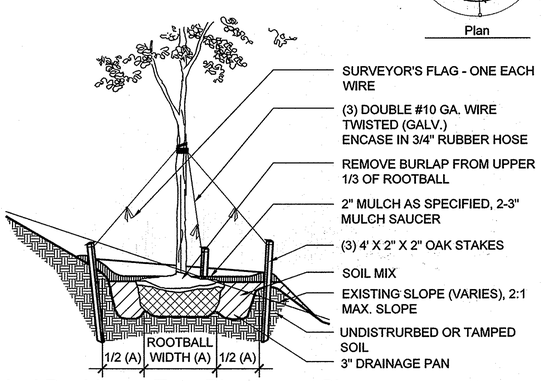

4 Typical Deciduous Tree Planting on Slope

Scale: 1/2" = 1'-0"

Notes:

1. NEVER CUT CENTRAL LEADER.
2. FOR PLANTS IN WIRE BASKETS, REFER TO SPECIFICATIONS.
3. TREES TO HAVE SINGLE LEADER.
4. CUT AND REMOVE TOP HALF OF WIRE BASKETS.
5. DO NOT PLACE MULCH AGAINST TRUNK.

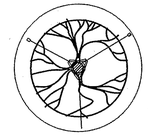

Plan

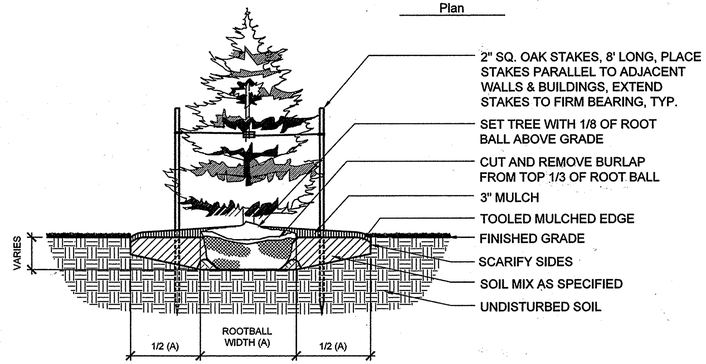

2 Typical Evergreen Tree Planting

Scale: 1/2" = 1'-0"

Notes:

1. NEVER CUT CENTRAL LEADER
2. FOR PLANTS IN WIRE BASKETS, REFER TO SPECIFICATIONS.
3. DO NOT PLACE MULCH AGAINST TRUNK.
4. TREES TO HAVE SINLGLE LEADER.
5. CUT AND REMOVE TOP HALF OF WIRE BASKETS.

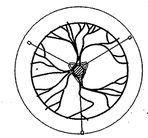

Plan

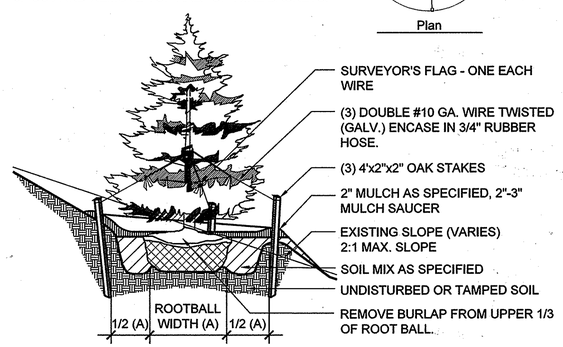

5 Typical Evergreen Tree Planting on Slope

Scale: 1/2" = 1'-0"

Notes:

1. FOR B&B TREES, REMOVE TOP 1/3 OF BALL WRAP.
2. CUT WIRE BASKET IN AT LEAST FOUR LOCATIONS CIRCLING ROOTBALL.
3. DO NOT PLACE MULCH AGAINST TRUNK.

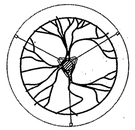

PLAN

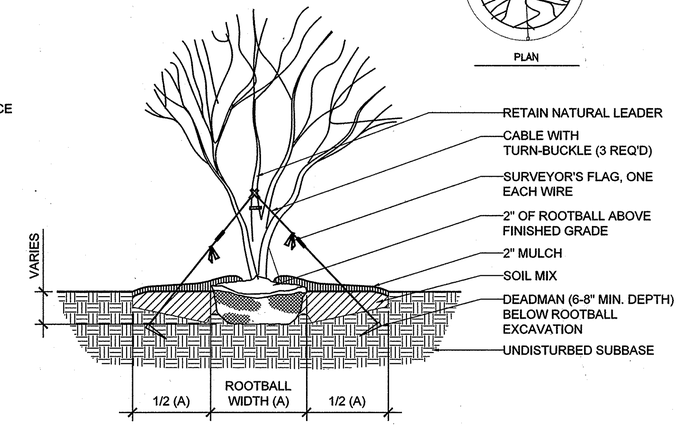

3 Typical Flowering Tree Planting

Scale: 1/2" = 1'-0"

Notes:

1. FOR B&B TREES, REMOVE TOP 1/3 OF BALL WRAP.
2. CUT WIRE BASKET IN AT LEAST FOUR LOCATIONS CIRCLING ROOTBALL.
3. DO NOT PLACE MULCH AGAINST TRUNK.

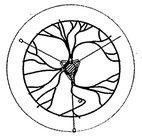

Plan

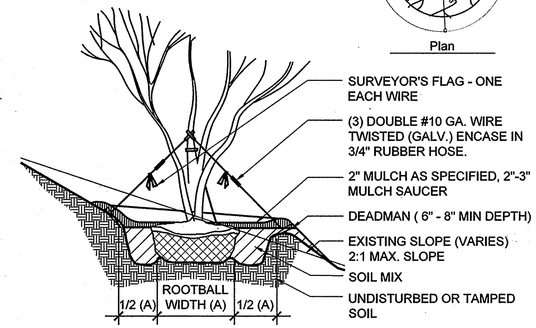

6 Typical Flowering Tree Planting on Slope

Scale: 1/2" = 1'-0"

SEQUENCE OF CONSTRUCTION (GENERAL), REFER TO SPECIFICATIONS

1. STAKE OUT PLANT/BED LOCATIONS.
2. CUT EDGE OF PLANT BED.
3. TILL SOIL AND APPLY AMENDMENTS TO ENTIRE PLANTING AREA.
4. APPLY PRE-EMERGENT HERBICIDE (TWO WEEKS PRIOR TO PLANTING).
5. INSTALL PLANTS.
6. INSTALL FERTILIZER TABLETS IN EACH PLANT PIT.
7. PLACE BACKFILL.
8. WATER EACH INDIVIDUAL PLANT THOROUGHLY.
9. PLACE MULCH OVER ENTIRE PLANT BED.
10. WATER ENTIRE PLANT BED THOROUGHLY.

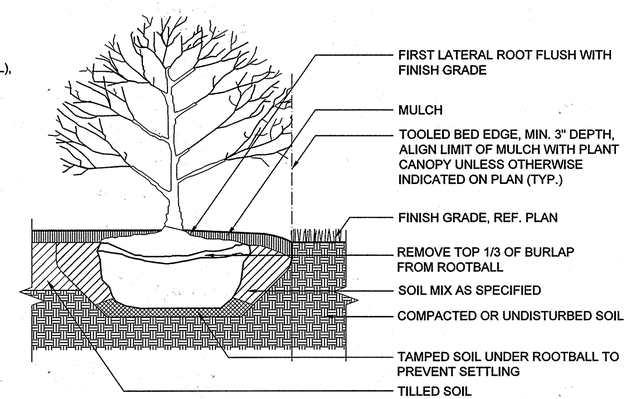

7 Typical Shrub Planting

Scale: 1" = 1'-0"

APPROVED: DEPARTMENT OF PLANNING AND ZONING

CHIEF, DEVELOPMENT ENGINEERING DIVISION	DATE 6-17-14
CHIEF, DIVISION OF LAND DEVELOPMENT	DATE 7-28-14
DIRECTOR	DATE 7-28-14

BOARD OF EXAMINERS OF LANDSCAPE ARCHITECTS 778 CHARLES EUGENE BALLEW STATE OF MARYLAND

MAHAN RYKIEL ASSOCIATES INC
The Stieff Silver Building. 800 Wyman Park Drive., Suite 100. Baltimore, MD 21211 410.235.6001

REVISIONS

HOWARD COUNTY

DEPARTMENT OF RECREATION AND PARKS
7120 OAKLAND MILLS ROAD
COLUMBIA, MD 21046

DEPARTMENT OF PUBLIC WORKS
9250 BENDIX ROAD
ELLICOTT CITY, MD 21043

WR&A
WHITMAN, REQUARDT & ASSOCIATES, LLP
801 South Caroline Street, Baltimore, Maryland 21231
Phone: 410-235-3450 Fax: 410-243-5716

PROPERTY

TAX MAP 36, GRID 5, PARCEL 3,72

ZONING: RC-DEO

ELECTION DISTRICT 3/7

GRAPHIC SCALES

SIGNATURE

PROFESSIONAL CERTIFICATION.
I HEREBY CERTIFY THAT THESE DOCUMENTS WERE PREPARED OR APPROVED BY ME, AND THAT I AM A DULY LICENSED PROFESSIONAL ENGINEER UNDER THE LAWS OF THE STATE OF MARYLAND, LICENSE NO. 19376
EXPIRATION DATE: 09/22/2015

BLANDAIR REGIONAL PARK - PHASE 2

Planting Details

Drawing No.

L3.1

Scale: AS SHOWN		
Date: 03/31/2014	Sheet 36 of 41	
Des: CB/NS	Drawn: CO	Check: CB

SDP-12-063

SCHEDULE A PERIMETER LANDSCAPE EDGE			
CATEGORY	ADJACENT TO PERIMETER AND ROADWAYS		
Perimeter	P-1	P-2	P-3
Perimeter/Frontage Designation Landscape Type	C	C	C
Linear Feet of Roadway Frontage/Perimeter	660	1000	1050
Credit for Existing Vegetation (Yes, No, Linear Feet Describe below if needed)	Yes 660	Yes 410	Yes 110
Credit for Wall, Fence or Berm (Yes, No, Linear Feet Describe below if needed)	No	No	No
Subtotal (linear feet of perimeter - credits)	0	590	940
Number of Plants Required Shade Trees Evergreen Trees Shrubs	 1:40=0 1:20=0 -	 1:40=15 1:20=30 -	 1:40=24 1:20=47 -
Number of Plants Provided Shade Trees Evergreen Trees Other Trees (2:1 Substitution) Shrubs (10:1 Substitution) Describe Plant Substitution Credits Below if needed	 0 0 - -	 15 30 - -	 24 47 - -

SCHEDULE B PARKING LOT INTERNAL LANDSCAPING	
Number of parking spaces	150
Number of trees required (1 TREE: 20 SPACES)	8
Number of trees provided Shade Trees Other Trees (2:1 Substitution)	 8 -

At the time of plant installation, all shrubs and trees listed and approved on the Landscape Plan, shall comply with the proper height requirement in accordance with the Howard County Landscape Manual. In addition, no substitutions or relocations of the required plantings may be made without prior review and approval from the Department of Planning and Zoning. Any deviation from the approved Landscape Plan may result in denial or delay in the final release of the landscape plan until such time as all required materials are planted and/or revisions are made to the applicable plans

The owner, tenants, and/or their agents shall be responsible for maintenance of the required landscaping including both plant materials and berms, fences and walls. All plant materials shall be maintained in good growing condition, and when necessary, replaced with new materials to ensure continued compliance with applicable regulations. All other required landscaping shall be permanently maintained in good condition, and when necessary, repaired or replaced.

This plan has been prepared in accordance with Section 16.124 of the Howard County Code and Landscape Manual with 47 shade trees, ___ ornamental trees, 77 evergreen trees and ___ shrubs.

Developer's/Owner's Landscape Certificate

I/we certify that the landscaping shown on this plan will be done according to the plan, Section 16.124 of the Howard County Code and the Landscape Manual. I/we further certify that upon completion a Letter of Landscape Installation, accompanied by an executed one year guarantee of plant materials, will be submitted to the Department of Planning and Zoning.

Developer's/Owner's Name

APPROVED: DEPARTMENT OF PLANNING AND ZONING

CHIEF, DEVELOPMENT ENGINEERING DIVISION	DATE 6.17.14
CHIEF, DIVISION OF LAND DEVELOPMENT	DATE 7-28-14
DIRECTOR	DATE 7-28-14

MAHAN RYKIEL
ASSOCIATES INC
The Stieff Silver Building. 800 Wyman Park Drive., Suite 100. Baltimore, MD 21211 410.235.6001

REVISIONS

HOWARD COUNTY

DEPARTMENT OF RECREATION AND PARKS
7120 OAKLAND MILLS ROAD
COLUMBIA, MD 21046

DEPARTMENT OF PUBLIC WORKS
9250 BENDIX ROAD
ELLICOTT CITY, MD 21043

WR&A
WHITMAN, REQUARDT & ASSOCIATES, LLP
801 South Caroline Street, Baltimore, Maryland 21231
Phone: 410-235-3450 Fax: 410-243-5716

PROPERTY

TAX MAP 36, GRID 5, PARCEL 3,72

ZONING: RC-DEO

ELECTION DISTRICT 3/7

GRAPHIC SCALES

SIGNATURE

PROFESSIONAL CERTIFICATION.
I HEREBY CERTIFY THAT THESE DOCUMENTS WERE PREPARED OR APPROVED BY ME, AND THAT I AM A DULY LICENSED PROFESSIONAL ENGINEER UNDER THE LAWS OF THE STATE OF MARYLAND, LICENSE NO. 23399
EXPIRATION DATE: 08/25/2014

BOARD OF EXAMINERS OF LANDSCAPE ARCHITECTS 778 CHARLES EUGENE BAILEY STATE OF MARYLAND

BLANDAIR REGIONAL PARK - PHASE 2

Plant Schedules

Drawing No.
L3.2

Scale: AS SHOWN		
Date: 03/31/2014	Sheet 37 of 41	
Des: CB/NS	Drawn: CO	Check: CB

SDP-12-063

PHASE 2 FCP TABLES

This sheet Phase 2 only

Phase 2 Forest to be Retained
No additional Retention for Phase 2

Phase 2 Forest to be Cleared
No additional Clearing for Phase 2

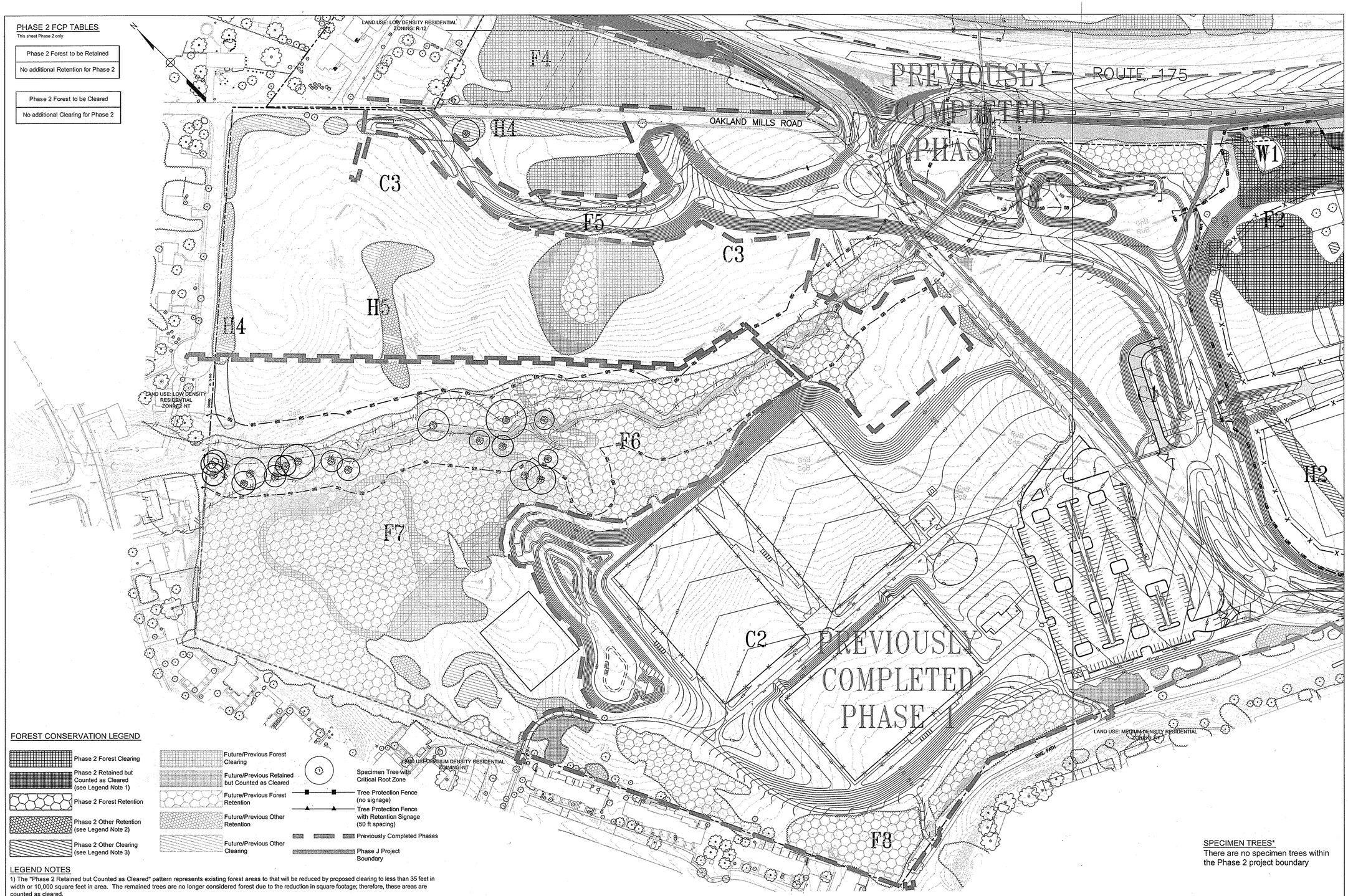

FOREST CONSERVATION LEGEND

- Phase 2 Forest Clearing
- Phase 2 Retained but Counted as Cleared (see Legend Note 1)
- Phase 2 Forest Retention
- Phase 2 Other Retention (see Legend Note 2)
- Phase 2 Other Clearing (see Legend Note 3)
- Future/Previous Forest Clearing
- Future/Previous Retained but Counted as Cleared
- Future/Previous Forest Retention
- Future/Previous Other Retention
- Future/Previous Other Clearing
- Specimen Tree with Critical Root Zone
- Tree Protection Fence (no signage)
- Tree Protection Fence with Retention Signage (50 ft spacing)
- Previously Completed Phases
- Phase J Project Boundary

LEGEND NOTES

1) The "Phase 2 Retained but Counted as Cleared" pattern represents existing forest areas to that will be reduced by proposed clearing to less than 35 feet in width or 10,000 square feet in area. The remained trees are no longer considered forest due to the reduction in square footage; therefore, these areas are counted as cleared.

2) The "Phase 2 Other Retention" pattern represents existing tree areas (non-forest) less than 35 feet in width or 10,000 square feet in area that will be retained. These areas are not counted as cleared, nor are they counted as retained.

3) The "Phase 2 Other Clearing" pattern represents existing tree areas (non-forest) less than 35 feet in width or 10,000 square feet in area that will be cleared.

APPROVED: DEPARTMENT OF PLANNING AND ZONING

CHIEF, DEVELOPMENT ENGINEERING DIVISION	DATE 6.17.14
CHIEF, DIVISION OF LAND DEVELOPMENT	DATE 7-28-14
DIRECTOR	DATE 7-28-14

SOILS TABLE

SOIL MAP UNIT	SOIL NAME	ERODIBLE*	HYDRIC
GgB	Glenelg loam, 3-8% slopes	No	No
GgC	Glenelg loam, 8-15% slopes	No	No
GhB	Glenelg-Urban land complex, 0-8% slopes	No	No
GnB	Glenville-Baile silt loams, 0-8% slopes	Yes	Partial†
GoB	Glenville-Codorus silt loams, 0-8% slopes	Yes	No
GuB	Glenville-Urban land-Udorthents complex, 0-8% slopes	Partial‡	No
MaC	Manor loam, 8-15% slopes	No	No
RuB	Russett and Beltsville soils, 2-5% slopes	Partial‡	No

* Erodible soils have a K value greater than 0.35
† Only the Baile component of the Glenville-Baile soil type is hydric
‡ Only the Glenville and Beltsville components of soil types GuB and RuB are erodible.

VEGETATIVE COMMUNITIES

- F - Forest Stand
- T - Tree Group
- AF - Abandoned Field
- OM - Open Meadow
- C - Crop Field
- W - Wetland
- H - Hedgerow

SPECIMEN TREES*

There are no specimen trees within the Phase 2 project boundary

LEGEND

- Treeline
- Shrubline
- Individual Trees/Shrubs
- Existing Reforestation Plantings
- Gravel Path/Driveway
- Wetland
- Stream
- Wetland Buffer (WB)
- Stream Buffer (SB)
- Floodplain Line
- Grass Trail
- Limit of Disturbance (LOD)
- 15%< Slopes <25%
- Slopes >25%
- Property Line
- Soil Boundary (GgB GgC)
- Existing Structure

REVISIONS		

HOWARD COUNTY

DEPARTMENT OF RECREATION AND PARKS
7120 OAKLAND MILLS ROAD
COLUMBIA, MD 21046

DEPARTMENT OF PUBLIC WORKS
9250 BENDIX ROAD
ELLICOTT CITY, MD 21043

WR&A

WHITMAN, REQUARDT & ASSOCIATES, LLP
801 South Caroline Street, Baltimore, Maryland 21231
Phone: 410-235-3450 Fax: 410-243-5716

PROPERTY

TAX MAP 36, GRID 5, PARCEL 3,72

ZONING: RC-DEO

ELECTION DISTRICT 3/7

GRAPHIC SCALES

0 50' 100' 200'
SCALE: 1" = 100'

SIGNATURE

2/27/14

TIMOTHY R. HESS — DATE
MD DNR QUALIFIED PROFESSIONAL

BLANDAIR REGIONAL PARK – PHASE 2

FOREST CONSERVATION PLAN

Drawing No.

F2.1

Scale: 1" = 100'		
Date: 03/31/2014	Sheet 38 of 41	
Des: TRH	Drawn: TRH	Check: ATD

SDP-12-063

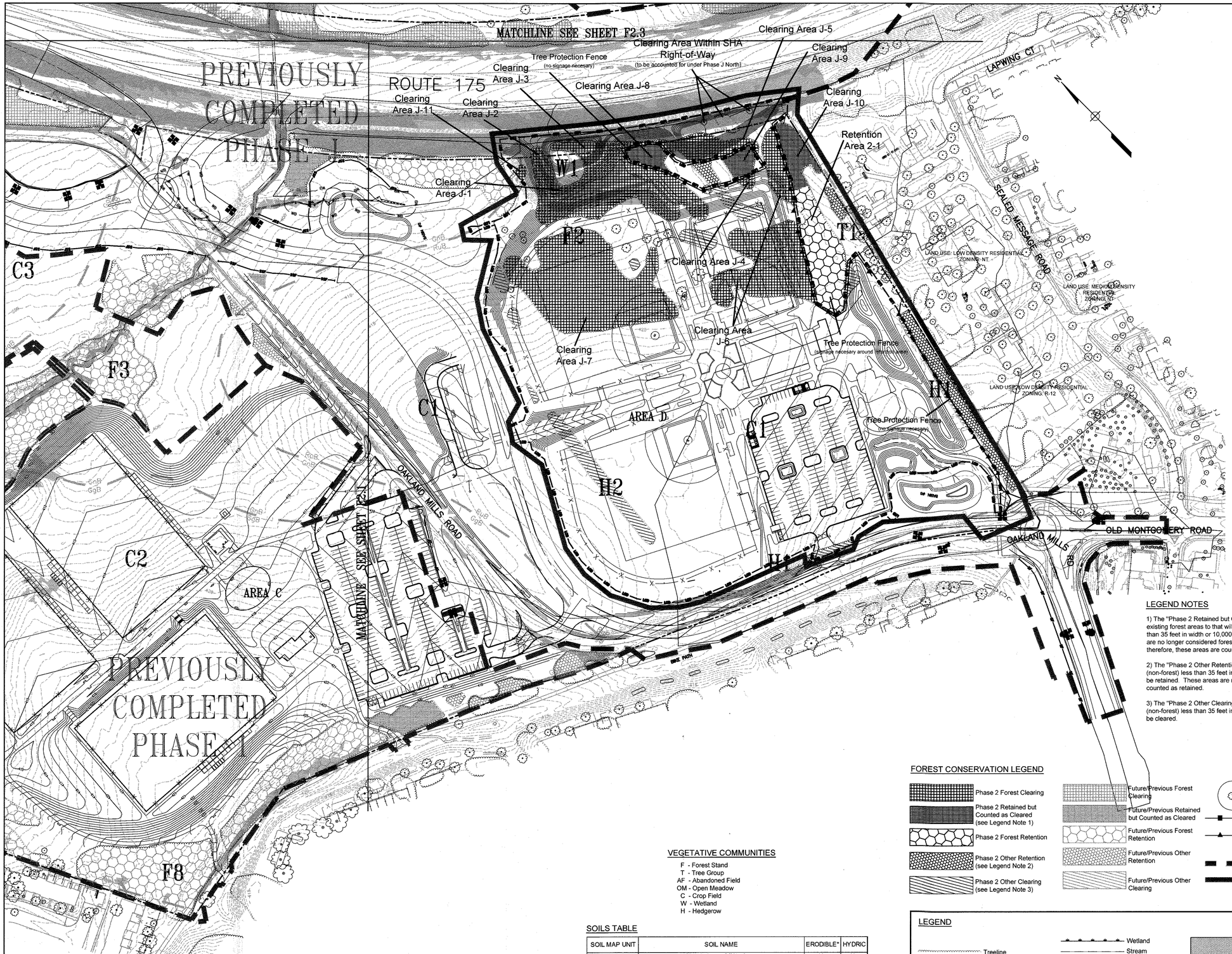

PHASE 2 FCP TABLES

This sheet Phase 2 only

Phase 2 Forest to be Cleared	
Area 1	35,967.9 SF
Area 2**	556.5 SF
Area 3**	3,747.4 SF
Area 4	904.1 SF
Area 5*	7,778.7 SF
Area 6	32,323.8 SF
Area 7	50,933.7 SF
Area 8	3,396.7 SF
Area 9	3,160.5 SF
Area 10	6,698.3 SF
Area 11	588.0 SF
Total	146,055.6 SF / 3.35 Acres

* - Includes Some Offsite Clearing
** - All Offsite Clearing

Phase 2 Forest to be Retained	
Area 1	17,005.4 SF
Total	17,005.4 SF / 0.39 Acres

SHA RIGHT-OF-WAY CLEARING

Due to minor adjustments in the limit of disturbance 2 individual trees and 1,191 sq. ft. of hedgerow will be cleared in the SHA Right-of-Way that is not accounted for under this FCP. Phase J North is currently under review and proposing mitigation for similar impacts associated with that phase. The roadside tree clearing not covered in this Phase 2 FCP clearing will be included in that mitigation effort in the Landscape Plans associated with Phase J North.

LEGEND NOTES

1) The "Phase 2 Retained but Counted as Cleared" pattern represents existing forest areas to that will be reduced by proposed clearing to less than 35 feet in width or 10,000 square feet in area. The remained trees are no longer considered forest due to the reduction in square footage; therefore, these areas are counted as cleared.

2) The "Phase 2 Other Retention" pattern represents existing tree areas (non-forest) less than 35 feet in width or 10,000 square feet in area that will be retained. These areas are not counted as cleared, nor are they counted as retained.

3) The "Phase 2 Other Clearing" pattern represents existing tree areas (non-forest) less than 35 feet in width or 10,000 square feet in area that will be cleared.

FOREST CONSERVATION LEGEND

- Phase 2 Forest Clearing
- Phase 2 Retained but Counted as Cleared (see Legend Note 1)
- Phase 2 Forest Retention
- Phase 2 Other Retention (see Legend Note 2)
- Phase 2 Other Clearing (see Legend Note 3)
- Future/Previous Forest Clearing
- Future/Previous Retained but Counted as Cleared
- Future/Previous Forest Retention
- Future/Previous Other Retention
- Future/Previous Other Clearing
- Specimen Tree with Critical Root Zone
- Tree Protection Fence (no signage)
- Tree Protection Fence with Retention Signage (50 ft spacing)
- Previously Completed Phases
- Phase J Project Boundary

VEGETATIVE COMMUNITIES

F - Forest Stand
T - Tree Group
AF - Abandoned Field
OM - Open Meadow
C - Crop Field
W - Wetland
H - Hedgerow

SOILS TABLE

SOIL MAP UNIT	SOIL NAME	ERODIBLE*	HYDRIC
GgB	Glenelg loam, 3-8% slopes	No	No
GgC	Glenelg loam, 8-15% slopes	No	No
GhB	Glenelg-Urban land complex, 0-8% slopes	No	No
GnB	Glenville-Baile silt loams, 0-8% slopes	Yes	Partial†
GoB	Glenville-Codorus silt loams, 0-8% slopes	Yes	No
GuB	Glenville-Urban land-Udorthents complex, 0-8% slopes	Partial‡	No
MaC	Manor loam, 8-15% slopes	No	No
RuB	Russett and Beltsville soils, 2-5% slopes	Partial‡	No

* Erodible soils have a K value greater than 0.35
† Only the Baile component of the Glenville-Baile soil type is hydric
‡ Only the Glenville and Beltsville components of soil types GuB and RuB are erodible.

LEGEND

- Treeline
- Shrubline
- Individual Trees/Shrubs
- Reforestation Plantings
- Gravel Path/Driveway
- Wetland
- Stream
- Wetland Buffer
- Stream Buffer
- Grass Trail
- 15%< Slopes <25%
- Slopes >25%
- Property Line
- Soil Boundary
- Existing Structure

APPROVED: DEPARTMENT OF PLANNING AND ZONING

CHIEF, DEVELOPMENT ENGINEERING DIVISION	DATE 1-6-17
CHIEF, DIVISION OF LAND DEVELOPMENT	DATE 1-11-17
DIRECTOR	DATE 1-11-17

REVISIONS		
1	REVISED SITE DEVELOPMENT PLAN	10/26/16

HOWARD COUNTY

DEPARTMENT OF RECREATION AND PARKS
7120 OAKLAND MILLS ROAD
COLUMBIA, MD 21046

DEPARTMENT OF PUBLIC WORKS
9250 BENDIX ROAD
ELLICOTT CITY, MD 21043

WHITMAN, REQUARDT & ASSOCIATES, LLP
801 South Caroline Street, Baltimore, Maryland 21231
Phone: 410-235-3450 Fax: 410-243-5716

PROPERTY

TAX MAP 36, GRID 5, PARCEL 3,72

ZONING: RC-DEO

ELECTION DISTRICT 3/7

GRAPHIC SCALES

0 50' 100' 200'
SCALE: 1" = 100'

SIGNATURE

TIMOTHY R. HESS 11/2/16 DATE
MD DNR QUALIFIED PROFESSIONAL

PROFESSIONAL CERTIFICATION.
I HEREBY CERTIFY THAT THESE DOCUMENTS WERE PREPARED OR APPROVED BY ME, AND THAT I AM A DULY LICENSED PROFESSIONAL ENGINEER UNDER THE LAWS OF THE STATE OF MARYLAND, LICENSE NO. 19376
EXPIRATION DATE: 09/22/2017

BLANDAIR REGIONAL PARK - PHASE 2

FOREST CONSERVATION PLAN

Drawing No.

F2.2

Scale: 1" = 100'		
Date: 03/24/16	Sheet 39 of 41	
Des: TRH	Drawn: TRH	Check: ATD

SDP-12-063

SOILS TABLE

SOIL MAP UNIT	SOIL NAME	ERODIBLE*	HYDRIC
GgB	Glenelg loam, 3-8% slopes	No	No
GgC	Glenelg loam, 8-15% slopes	No	No
GnB	Glenelg-Urban land complex, 0-8% slopes	No	No
GnB	Glenville-Baile silt loams, 0-8% slopes	Yes	Partial[1]
GoB	Glenville-Codorus silt loams, 0-8% slopes	Yes	No
GuB	Glenville-Urban land-Udorthents complex, 0-8% slopes	Partial[2]	No
MaC	Manor loam, 8-15% slopes	No	No
RuB	Russett and Beltsville soils, 2-5% slopes	Partial[2]	No

*Erodible soils have a K factor value greater than 0.35.
[1]Only the Baile component of soil type Glenville-Baile silt loams is hydric.
[2]Only the xx component of this soil type is erodible.

SPECIMEN TREES*

*This sheet only. See Sheet 04 of 04 for complete list.

Label	Common Name	Scientific Name	DBH	Condition	Stand	Save or Remove
T36	Red Maple	*Acer rubrum*	44.7"	Poor	10	S
T37	White Oak	*Quercus alba*	34.0"	Good	10	S
T66	Red Maple	*Acer rubrum*	30.0"	Poor	10	S
T67	White Oak	*Quercus alba*	32.3"	Fair	10	S
T68	White Oak	*Quercus alba*	30.5"	Good	10	S
T69	Black Cherry	*Prunus serotina*	39.3"	Poor	10	S

Label	Common Name	Scientific Name	DBH	Condition	Stand	Save or Remove
T40	Red Maple	*Acer rubrum*	43.5"	Fair	13	S
T71	Red Maple	*Acer rubrum*	39.4"	Fair	13	S

Label	Common Name	Scientific Name	DBH	Condition	Stand	Save or Remove
T70	Silver Maple	*Acer saccharinum*	46.5"	Fair	T2	S

PHASE 2 FCP TABLES

This sheet Phase 2 only

Label	Common Name	Scientific Name	DBH	Condition	Stand	Save or Remove
T41	Red Maple	*Acer rubrum*	30.7"	Fair	12	S
T42	Red Maple	*Acer rubrum*	34.5"	Poor	12	S
T43	Pin Oak	*Quercus palustris*	34.5"	Fair	12	S
T44	Red Maple	*Acer rubrum*	39.0"	Fair	12	S
T45	Red Maple	*Acer rubrum*	36.0"	Fair	12	S
T46	Tulip Poplar	*Liriodendron tulipifera*	35.3"	Good	12	S
T47	Tulip Poplar	*Liriodendron tulipifera*	35.3"	Good	12	S
T48	Tulip Poplar	*Liriodendron tulipifera*	38.9"	Good	12	S
T49	Tulip Poplar	*Liriodendron tulipifera*	37.2"	Good	12	S
T72	Tulip Poplar	*Liriodendron tulipifera*	32.5"	Good	12	S
T101	Tulip Poplar	*Liriodendron tulipifera*	35.9"	Good	12	S
T102	Tulip Poplar	*Liriodendron tulipifera*	30.3"	Good	12	S
T103	Tulip Poplar	*Liriodendron tulipifera*	34.8"	Good	12	S
T104	Tulip Poplar	*Liriodendron tulipifera*	35.2"	Good	12	S

Phase 2 Forest to be Retained
No additional Retention for Phase 2
Phase 2 Forest to be Cleared
No additional Clearing for Phase 2

VEGETATIVE COMMUNITIES

F - Forest Stand
T - Tree Group
AF - Abandoned Field
OM - Open Meadow
C - Crop Field
W - Wetland
H - Hedgerow

FOREST CONSERVATION LEGEND

- Phase 2 Forest Clearing
- Phase 2 Retained but Counted as Cleared (see Legend Note 1)
- Phase 2 Forest Retention
- Phase 2 Other Retention (see Legend Note 2)
- Phase 2 Other Clearing (see Legend Note 3)
- Future/Previous Forest Clearing
- Future/Previous Retained but Counted as Cleared
- Future/Previous Forest Retention
- Future/Previous Other Retention
- Future/Previous Other Clearing
- Tree Protection Fence (no signage)
- Tree Protection Fence with Retention Signage (50 ft spacing)

LEGEND

- Treeline
- Shrubline
- Individual Trees/Shrubs
- Reforestation Plantings
- Specimen Tree
- Gravel Path/Driveway
- Previously Completed Phases
- LOD — Limit of Disturbance
- Wetland
- Stream
- WB — Wetland Buffer
- SB — Stream Buffer
- Floodplain Line
- Grass Trail
- 15%< Slopes <25%
- Slopes >25%
- Property Line
- Soil Boundary

REVISIONS		

HOWARD COUNTY

DEPARTMENT OF RECREATION AND PARKS
7120 OAKLAND MILLS ROAD
COLUMBIA, MD 21046

DEPARTMENT OF PUBLIC WORKS
9250 BENDIX ROAD
ELLICOTT CITY, MD 21043

WHITMAN, REQUARDT & ASSOCIATES, LLP
801 South Caroline Street, Baltimore, Maryland 21231
Phone: 410-235-3450 Fax: 410-243-5716

PROPERTY

TAX MAP 36, GRID 5, PARCEL 3,72

ZONING: RC-DEO

ELECTION DISTRICT 3/7

GRAPHIC SCALES

0 50' 100' 200'
SCALE: 1" = 100'

SIGNATURE

2/27/14
TIMOTHY R. HESS — DATE
MD DNR QUALIFIED PROFESSIONAL

APPROVED: DEPT. OF PLANNING AND ZONING

CHIEF, DEVELOPMENT ENG. DIV. — 6.17.14

CHIEF, DIV. OF LAND DEVELOPMENT — 7-28-14

DIRECTOR

BLANDAIR REGIONAL PARK – PHASE 2

FOREST CONSERVATION PLAN

Drawing No.

F2.3

Scale: 1" = 100'		
Date: 03/31/2014	Sheet 40 of 41	
Des: TRH	Drawn: TRH	Check: ATD

SDP-12-063

FILENAME: W:\49295-005\CAD\ENV\ENVIRONMENTAL-F2B RST CONFIG\49295005F2.3.DWG
PLOT DATE: 4/4/2014 10:02:20 AM PAGE SETUP: WRA-PDF (36X24) PLOT STYLE: WRA_2006CTB PAPER SIZE:36X24

CONSTRUCTION PERIOD PROTECTION PROGRAM

1. PRIOR TO THE START OF ANY CONSTRUCTION ACTIVITIES, THE CONTRACTOR SHALL LOCATE THE LIMITS OF DISTURBANCE (LOD) IN THE FIELD

2. PRIOR TO THE START OF ANY CONSTRUCTION ACTIVITIES, BLAZE ORANGE FENCING SHALL BE INSTALLED AS PER DETAIL THIS SHEET ALONG ALL LIMITS OF DISTURBANCE ADJACENT TO WOODLANDS AND AS INDICATED ON FOREST CONSERVATION PLAN SHEETS FCP02 THROUGH FCP06.

3. PROTECTIVE SIGNAGE SHALL BE INSTALLED AS PER DETAIL THIS SHEET AND AS INDICATION ON FOREST CONSERVATION PLAN SHEETS FCP02 THROUGH FCP06.

4. TREES TO BE REMOVED SHALL BE TAKEN OUT WITHOUT DAMAGING PROTECTED TREES.

5. ALL EQUIPMENT AND MACHINERY SHALL BE KEPT INSIDE THE BLAZE ORANGE FENCING AND WITHIN THE LOD.

6. ANY TYPE OF DISTURBANCE BEYOND THE LOD IS STRICTLY PROHIBITED.

7. PLACEMENT OF EXCAVATED/BACKFILL MATERIAL AND STORAGE OF EQUIPMENT/MACHINERY SHALL BE AVOIDED WITHIN THE CRITICAL ROOT ZONE AREAS OF SPECIMEN TREES IN ORDER TO MINIMIZE SOIL COMPACTION IN THESE SENSITIVE AREAS.

8. ROOT PRUNING AS PER DETAIL THIS SHEET SHALL BE UTILIZED FOR PROTECTION OF SPECIMEN TREES IN AREAS WHERE SPECIMEN TREE CRITICAL ROOT ZONES ARE LOCATED INSIDE THE LOD.

9. QUALIFIED PROFESSIONAL(S) RESPONSIBLE FOR MONITORING FOREST CONSERVATION REQUIREMENTS AND PERFORMING ANY NECESSARY CONSTRUCTION PERIOD MANAGEMENT SHALL VISIT THE PROJECT SITE ON TWO OCCASSIONS:
- THE FIRST VISIT SHALL VERIFY PROPER INSTALLATION OF PROTECTIVE DEVICES AND COMPLETION OF OTHER PROTECTIVE MEASURES AND SHALL OCCUR BEFORE ANY CONSTUCTION BEGINS.
- THE SECOND VISIT SHALL VERIFY CONTINUED COMPLIANCE WITH THE FOREST CONSERVATION PLAN AND ACCESS THE NEED FOR ADDITIONAL PROTECTIVE MEASURES TO MAINTAIN THE HEALTH OF THE RETENTION AREAS. THIS VISIT WILL OCCUR DURING THE CONSTRUCTION PERIOD.

POST-CONSTRUCTION PERIOD PROTECTION PROGRAM

A POST CONSTRUCTION PROTECTION PROGRAM IS REQUIRED TO GIVE THE FOREST RESOURCES SAVED OR PLANTED AS PART OF THE DEVELOPMENT PROPOSAL A HIGH PROBABILITY OF ACHIEVING THE SURVIVAL RATES REQUIRED FOR RELEASE OF SURETY, AS WELL AS LONG-TERM SURVIVAL. THE POST-CONSTRUCTION PROTECTION PROGRAM PERIOD SHALL BE FOR A MINIMUM OF TWO GROWING SEASONS, AS SPECIFIED IN THE HOWARD COUNTY FOREST CONSERVATION MANUAL.

PRESERVATION REQUIREMENTS

THE AREAS FOR FOREST RETENTION, REFORESTATION OR AFFORESTATION BY AN APPROVED FOREST CONSERVATION PLAN MUST BE PERMANENTLY PROTECTED AND RECORDED AS EITHER NON-DEVELOPABLE OPEN SPACE OR AS CONSERVATION EASEMENTS.

FOREST CONSERVATION WORKSHEET
VERSION 1.0
(Enter in Yellow Cells)

NET TRACT AREA:

A. Total tract area.....=	309.21
B. Area within 100 year floodplain .....=	3.40
C. Area to remain in agricultural production.....=	0.00
D. Net tract area.....=	305.81

LAND USE CATEGORY: (from table 3.2.1, page 40, Manual)

Input the number "1" under the appropriate land use zoning, and limit to only one entry.

ARA	MDR	IDA	HDR	MPD	CIA
0	0	1	0	0	0

E. Afforestation Threshold.....	15% x D =	45.87
F. Conservation Threshold.....	20% x D =	61.16

EXISTING FOREST COVER:

G. Existing forest cover (excluding floodplain).....=	108.52
H. Area of forest above afforestaion threshold .....=	62.65
I. Area of forest above conservation threshold .....=	47.36

BREAK EVEN POINT:

J. Forest retention above threshold with no mitigation.....=	70.63
K. Clearing permitted without mitigation.....=	37.89

PROPOSED FOREST CLEARING:

L. Total area of forest to be cleared.....=	45.33	Phase 1-2 clearing = 10.12 acres. The remaining acreage is future estimated clearing.
M. Total area of forest to be retained.....=	63.19	Phase 1-2 retention = 3.61 acres. The remaining acreage is future estimated retention.

PLANTING REQUIREMENTS:

N. Reforestation for clearing above conservation threshold...=	11.33
P. Reforestation for clearing below conservation threshold...=	0.00
Q. Credit for retention above conservation threshold.....=	2.03
R. Total reforestation required.....=	9.30
S. Total afforestation required.....=	0.00
T. Total reforestation and afforestation required.....=	9.30

PHASE 2 FOREST CONSERVATION TABLE

Total Forest Cleared	130,407.3 SF / 3.00 Acres
Total Forest Retained	31,357.5 SF / 0.72 Acres
Total Other Clearing	19,804.5 SF / 0.45 Acres
Total Other Retention	12,760.7 SF / 0.29 Acres
Total Forest to be Protected by Conservation Easement	31,357.5 SF / 0.72 Acres

PHASE 3 FOREST CONSERVATION TABLE

Total Forest Cleared	SF / Acres
Total Forest Retained	SF / Acres
Total Other Clearing	SF / Acres
Total Other Retention	SF / Acres
Total Forest to be Protected by Conservation Easement	SF / Acres

PHASE 4 FOREST CONSERVATION TABLE

Total Forest Cleared	SF / Acres
Total Forest Retained	SF / Acres
Total Other Clearing	SF / Acres
Total Other Retention	SF / Acres
Total Forest to be Protected by Conservation Easement	SF / Acres

PHASE 5 FOREST CONSERVATION TABLE

Total Forest Cleared	SF / Acres
Total Forest Retained	SF / Acres
Total Other Clearing	SF / Acres
Total Other Retention	SF / Acres
Total Forest to be Protected by Conservation Easement	SF / Acres

PHASE 6 FOREST CONSERVATION TABLE

Total Forest Cleared	SF / Acres
Total Forest Retained	SF / Acres
Total Other Clearing	SF / Acres
Total Other Retention	SF / Acres
Total Forest to be Protected by Conservation Easement	SF / Acres

PHASE 7 FOREST CONSERVATION TABLE

Total Forest Cleared	SF / Acres
Total Forest Retained	SF / Acres
Total Other Clearing	SF / Acres
Total Other Retention	SF / Acres
Total Forest to be Protected by Conservation Easement	SF / Acres

OVERALL FOREST CONSERVATION TABLE

Total Forest Cleared	440,873.1 SF /10.12 Acres
Total Forest Retained	157,404.7 SF / 3.61 Acres
Total Other Clearing	143,272.2 SF / 3.29 Acres
Total Other Retention	19,442.6 SF / 0.45 Acres
Total Forest to be Protected by Conservation Easement	157,404.7 SF / 3.61 Acres

PREVIOUS PHASES

PHASE 1 FOREST CONSERVATION TABLE

Total Forest Cleared	125,176.3 SF / 2.87 Acres
Total Forest Retained	84,750.4 SF / 1.94 Acres
Total Other Clearing	50,244.6 SF / 1.15 Acres
Total Other Retention	4,561.8 SF / 0.10 Acres
Total Forest to be Protected by Conservation Easement	84,750.4 SF / 1.94 Acres

PHASE J FOREST CONSERVATION TABLE

Total Forest Cleared	185,289.6 SF / 4.26 Acres
Total Forest Retained	41,296.8 SF / 0.95 Acres
Total Other Clearing	73,223.1 SF / 1.68 Acres
Total Other Retention	2,120.1 SF / 0.23 Acres
Total Forest to be Protected by Conservation Easement	41,296.8 SF / 0.95 Acres

SPECIMEN TREE TABLE

Label	Common Name	Scientific Name	DBH	Condition	Stand*	Save or Remove
T1	Tulip Poplar	*Liriodendron tulipifera*	44.0"	Fair	offsite	S
T2	White Oak	*Quercus alba*	34.5"	Fair	1	S
T3	White Oak	*Quercus alba*	36.2"	Fair	1	S
T4	White Oak	*Quercus alba*	32.5"	Fair	1	S
T5	Black Oak	*Quercus velutina*	32.4"	Good	1	S
T6	Tulip Poplar	*Liriodendron tulipifera*	35.0"	Good	1	S
T7	Tulip Poplar	*Liriodendron tulipifera*	31.9"	Excellent	1	S
T8	Tulip Poplar	*Liriodendron tulipifera*	32.0"	Good	1	S
T9	Tulip Poplar	*Liriodendron tulipifera*	42.1"	Fair	1	S
T10	Tulip Poplar	*Liriodendron tulipifera*	32.0"	Excellent	1	S
T11	White Oak	*Quercus alba*	37.6"	Good	1	S
T12	Tulip Poplar	*Liriodendron tulipifera*	34.9"	Good	1	S
T13	White Oak	*Quercus alba*	32.5"	Good	1	S
T14	White Oak	*Quercus alba*	30.7"	Excellent	1	S
T15	Black Oak	*Quercus velutina*	44.0"	Poor	offsite	S
T16	Tulip Poplar	*Liriodendron tulipifera*	36.4"	Good	1	S
T17	White Oak	*Quercus alba*	35.3"	Fair	offsite	S
T18	Tulip Poplar	*Liriodendron tulipifera*	33.5"	Good	1	S
T19	Black Oak	*Quercus velutina*	38.3"	Poor/Dead	1	S
T20	Tulip Poplar	*Liriodendron tulipifera*	43.1"	Good	1	S
T21	Tulip Poplar	*Liriodendron tulipifera*	31.0	Good	1	S
T22	Northern Red Oak	*Quercus rubra*	38.5"	Good	offsite	S
T23	Black Oak	*Quercus velutina*	36.3"	Fair	1	S
T24	White Oak	*Quercus alba*	33.0"	Good	1	S
T25	Tulip Poplar	*Liriodendron tulipifera*	30.5"	Fair	1	S
T26	Tulip Poplar	*Liriodendron tulipifera*	31.3"	Good	1	S
T27	Tulip Poplar	*Liriodendron tulipifera*	30.3"	Good	1	S
T28	Tulip Poplar	*Liriodendron tulipifera*	45.2"	Good	6	S
T29	Tulip Poplar	*Liriodendron tulipifera*	36.4"	Good	6	S
T30	Tulip Poplar	*Liriodendron tulipifera*	35.8"	Fair	6	S
T31	Black Cherry	*Prunus serotina*	35.8"	Fair	6	S
T32	Tulip Poplar	*Liriodendron tulipifera*	38.0"	Excellent	1	S
T33	Tulip Poplar	*Liriodendron tulipifera*	33.8"	Good	1	S
T34	Tulip Poplar	*Liriodendron tulipifera*	34.0"	Fair	1	S
T35	White Oak	*Quercus alba*	31.8"	Poor	1	S
T36	Red Maple	*Acer rubrum*	44.7"	Poor	10	S
T37	White Oak	*Quercus alba*	34.0"	Good	10	S
T38	Tulip Poplar	*Liriodendron tulipifera*	33.0"	Good	6	S
T39	Tulip Poplar	*Liriodendron tulipifera*	33.5"	Good	6	S
T40	Red Maple	*Acer rubrum*	43.5"	Fair	13	S
T41	Red Maple	*Acer rubrum*	30.7"	Fair	12	S
T42	Red Maple	*Acer rubrum*	34.5"	Poor	12	S
T43	Pin Oak	*Quercus palustris*	34.5"	Fair	12	S
T44	Red Maple	*Acer rubrum*	39.0"	Fair	12	S
T45	Red Maple	*Acer rubrum*	36.0"	Fair	12	S
T46	Tulip Poplar	*Liriodendron tulipifera*	35.3"	Good	12	S
T47	Tulip Poplar	*Liriodendron tulipifera*	35.3"	Good	12	S
T48	Tulip Poplar	*Liriodendron tulipifera*	38.9"	Good	12	S
T49	Tulip Poplar	*Liriodendron tulipifera*	37.2"	Good	12	S
T50	Tulip Poplar	*Liriodendron tulipifera*	34.5"	Excellent	offsite	S
T51	Tulip Poplar	*Liriodendron tulipifera*	32.4"	Good	1	S
T52	Tulip Poplar	*Liriodendron tulipifera*	31.4"	Fair	offsite	S

SPECIMEN TREE TABLE CONT'D

Label	Common Name	Scientific Name	DBH	Condition	Stand*	Save or Remove
T53	Tulip Poplar	*Liriodendron tulipifera*	30.9"	Good	1	S
T54	Black Oak	*Quercus velutina*	32.3"	Fair	1	S
T55	White Oak	*Quercus alba*	32.4"	Fair	offsite	S
T56	Tulip Poplar	*Liriodendron tulipifera*	30.5"	Good	1	S
T57	Tulip Poplar	*Liriodendron tulipifera*	30.0"	Excellent	offsite	S
T58	Tulip Poplar	*Liriodendron tulipifera*	31.2"	Good	offsite	S
T59	Tulip Poplar	*Liriodendron tulipifera*	31.5"	Good	1	S
T60	Tulip Poplar	*Liriodendron tulipifera*	31.5"	Good	offsite	S
T61	Black Oak	*Quercus velutina*	33.5"	Good	1	S
T62	White Oak	*Quercus alba*	35.5"	Fair	offsite	S
T63	White Oak	*Quercus alba*	30.5"	Fair	offsite	S
T64	Tulip Poplar	*Liriodendron tulipifera*	35.8"	Fair	offsite	S
T65	Black Cherry	*Prunus serotina*	47.0"	Fair	11	S
T66	Red Maple	*Acer rubrum*	30.0"	Poor	10	S
T67	White Oak	*Quercus alba*	32.3"	Fair	10	S
T68	White Oak	*Quercus alba*	30.5"	Good	10	S
T69	Black Cherry	*Prunus serotina*	39.3"	Poor	10	S
T70	Silver Maple	*Acer saccharinum*	46.5"	Fair	T2	S
T71	Red Maple	*Acer rubrum*	30.4"	Fair	13	S
T72	Tulip Poplar	*Liriodendron tulipifera*	32.5"	Good	12	S
T73	Tulip Poplar	*Liriodendron tulipifera*	43.3"	Poor	1	S
T74	Tulip Poplar	*Liriodendron tulipifera*	40.5"	Good	offsite	S
T75	Tulip Poplar	*Liriodendron tulipifera*	33.0"	Good	offsite	S
T76	Black Cherry	*Prunus serotina*	34.4"	Fair	10	S
T77	Tulip Poplar	*Liriodendron tulipifera*	30.2"	Fair	1	S
T78	Tulip Poplar	*Liriodendron tulipifera*	34.0"	Good	1	S
T79	Tulip Poplar	*Liriodendron tulipifera*	32.5"	Good	1	S
T80	Tulip Poplar	*Liriodendron tulipifera*	34.6"	Good	1	S
T81	Tulip Poplar	*Liriodendron tulipifera*	36.0"	Fair	1	S
T82	Tulip Poplar	*Liriodendron tulipifera*	33.5"	Good	1	S
T83	White Oak	*Quercus alba*	30.5"	Good	1	S
T84	White Oak	*Quercus alba*	30.4"	Fair	1	S
T85	Red Maple	*Acer rubrum*	31.0"	Fair	H4	R
T86	Pitch Pine	*Pinus rigida*	25.5"	Good	6	S
T87	Pitch Pine	*Pinus rigida*	24.8"	Good	6	S
T88	Pitch Pine	*Pinus rigida*	25.3"	Good	6	S
T89	Pitch Pine	*Pinus rigida*	26.7"	Good	6	S
T90	Pitch Pine	*Pinus rigida*	24.4"	Good	6	S
T91	Pitch Pine	*Pinus rigida*	23.5"	Good	6	S
T92	Pitch Pine	*Pinus rigida*	23.0"	Good	6	S
T93	Pitch Pine	*Pinus rigida*	24.0"	Good	6	S
T94	Pitch Pine	*Pinus rigida*	25.5"	Good	6	S
T95	Pitch Pine	*Pinus rigida*	23.0"	Good	6	S
T96	Pitch Pine	*Pinus rigida*	24.0"	Good	6	S
T97	Pitch Pine	*Pinus rigida*	22.0"	Good	6	S
T98	Pitch Pine	*Pinus rigida*	22.2"	Good	6	S
T101	Tulip Poplar	*Liriodendron tulipifera*	35.9"	Good	12	S
T102	Tulip Poplar	*Liriodendron tulipifera*	30.3"	Good	12	S
T103	Tulip Poplar	*Liriodendron tulipifera*	34.8"	Good	12	S
T104	Tulip Poplar	*Liriodendron tulipifera*	35.2"	Good	12	S
T105	Red Maple	*Acer rubrum*	34.4"	Fair	10	S
T106	Red Maple	*Acer rubrum*	30.1"	Good	10	S

*stand "offsite" means tree is located within the first 100 ft beyond the property line

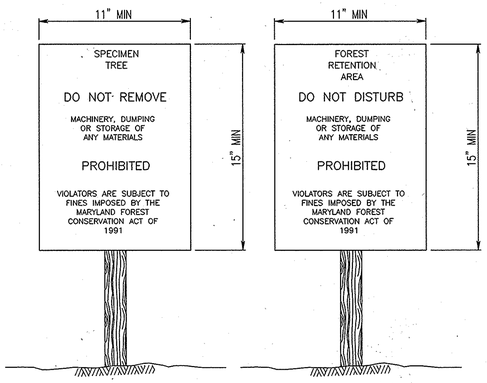

NOTES:
1. BOTTOM OF SIGN TO BE HIGHER THAN TOP OF TREE PROTECTION FENCE.
2. SIGNS TO BE PLACED APPROXIMATELY 50' APART. CONDITIONS ON SITE AFFECTING VISIBILITY MAY WARRANT PLACING SIGNS CLOSER OR FARTHER APART.
3. ATTACHMENT OF SIGNS TO TREES IS PROHIBITED.

CONSTRUCTION SIGNS
NO SCALE

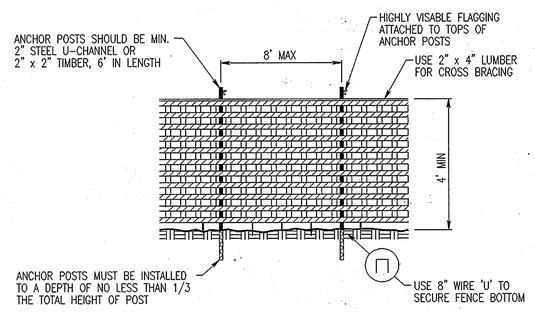

NOTES:
1. BLAZE ORANGE OR BLUE PLASTIC MESH FENCE FOR FOREST PROTECTION DEVICE, ONLY.
2. BOUNDARIES OF RETENTION AREA WILL BE ESTABLISHED AS PART OF THE FOREST CONSERVATION PLAN REVIEW PROCESS.
3. BOUNDARIES OF RETENTION AREA SHOULD BE STAKED AND FLAGGED PRIOR TO INSTALLING DEVICE.
4. AVOID DAMAGE TO CRITICAL ROOT ZONE. DO NOT DAMAGE OR SEVER LARGE ROOTS WHEN INSTALLING POSTS.
5. PROTECTION SIGNAGE IS REQUIRED.
6. DEVICE SHOULD BE MAINTAINED THROUGHOUT CONSTRUCTION.

PLASTIC MESH TREE PROTECTION FENCE
NO SCALE

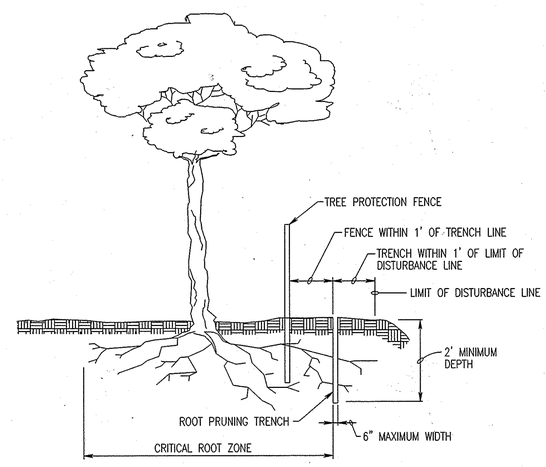

NOTES:
1. RETENTION AREAS TO BE ESTABLISHED AS PART OF THE FOREST CONSERVATION PLAN REVIEW PROCESS.
2. BOUNDARIES OF RETENTION AREAS TO BE STAKED AND FLAGGED PRIOR TO TRENCHING.
3. EXACT LOCATION OF TRENCH SHALL BE IDENTIFIED.
4. TRENCH SHOULD BE IMMEDIATELY BACKFILLED WITH SOIL REMOVED OR OTHER HIGH ORGANIC SOIL.
5. ROOTS SHOULD BE CLEANLY CUT USING VIBRATORY KNIFE OR OTHER ACCEPTABLE EQUIPMENT.

ROOT PRUNING
NO SCALE

APPROVED: DEPARTMENT OF PLANNING AND ZONING

CHIEF, DEVELOPMENT ENGINEERING DIVISION	DATE 6.17.14
CHIEF, DIVISION OF LAND DEVELOPMENT	DATE 7-28-14
DIRECTOR	DATE 7-28-14

REVISIONS		

HOWARD COUNTY

DEPARTMENT OF RECREATION AND PARKS
7120 OAKLAND MILLS ROAD
COLUMBIA, MD 21046

DEPARTMENT OF PUBLIC WORKS
9250 BENDIX ROAD
ELLICOTT CITY, MD 21043

WHITMAN, REQUARDT & ASSOCIATES, LLP
801 South Caroline Street, Baltimore, Maryland 21231
Phone: 410-235-3450 Fax: 410-243-5716

PROPERTY

TAX MAP 36, GRID 5, PARCEL 3,72

ZONING: RC-DEO

ELECTION DISTRICT 3/7

GRAPHIC SCALES

0 50' 100' 200'
SCALE: 1" = 100'

SIGNATURE

TIMOTHY R. HESS — DATE 2/27/14
MD DNR QUALIFIED PROFESSIONAL

BLANDAIR REGIONAL PARK - PHASE 2

FOREST CONSERVATION PLAN
DETAILS
Drawing No.
F2.4

Scale: n/a		
Date: 03/31/2014	Sheet 41 of 41	
Des: TRH	Drawn: TRH	Check: ATD

SDP-12-063