VICTORY TEMPLE - LAUREL

SITE DEVELOPMENT PLAN

SDP - 12 - 007

HOWARD COUNTY, MARYLAND

GENERAL CONSTRUCTION NOTES

1. ALL CONSTRUCTION SHALL BE IN ACCORDANCE WITH THE LATEST STANDARDS AND SPECIFICATIONS OF HOWARD COUNTY PLUS MSHA STANDARDS AND SPECIFICATIONS IF APPLICABLE.
2. THE CONTRACTOR SHALL NOTIFY THE DEPARTMENT OF PUBLIC WORKS/BUREAU OF ENGINEERING/CONSTRUCTION INSPECTION DIVISION AT (410) 313-1880 AT LEAST FIVE (5) WORKING DAYS PRIOR TO THE START OF WORK.
3. THE CONTRACTOR SHALL NOTIFY "MISS UTILITY" AT 1-800-257-7777 AT LEAST 48 HOURS PRIOR TO ANY EXCAVATION WORK BEING DONE.
4. TRAFFIC CONTROL DEVICES, MARKINGS AND SIGNING SHALL BE IN ACCORDANCE WITH THE LATEST EDITION OF THE MANUAL OF UNIFORM TRAFFIC CONTROL DEVICES (MUTCD). ALL STREET AND REGULATORY SIGNS SHALL BE IN PLACE PRIOR TO THE PLACEMENT OF ANY ASPHALT.
5. ALL PLAN DIMENSIONS ARE TO FACE OF CURB UNLESS OTHERWISE NOTED.
6. ALL SPOT ELEVATIONS ALONG CURB LINE ARE TO THE BOTTOM OF CURB UNLESS OTHERWISE NOTED.
7. THE EXISTING TOPOGRAPHY IS TAKEN FROM AERIAL SURVEY WITH TWO FOOT CONTOUR INTERVALS PREPARED BY WINGS AERIAL MAPPING CO., INC. IN JUNE, 2006 AND SUPPLEMENTED BY KCW FIELD RUN TOPOGRAPHY.
8. THE COORDINATES SHOWN HEREON ARE BASED UPON THE HOWARD COUNTY GEODETIC CONTROL WHICH IS BASED UPON THE MARYLAND STATE PLANE COORDINATE SYSTEM. HOWARD COUNTY MONUMENTS #471C AND #471B WERE USED FOR THIS PROJECT.
9. WATER IS PUBLIC. HOWARD COUNTY CONTRACT NO. 24-4047-D. DRAINAGE AREA: LITTLE PATUXENT.
10. SEWER IS PUBLIC. HOWARD COUNTY CONTRACT NO. 24-4047-D. DRAINAGE AREA: LITTLE PATUXENT.
11. EXISTING UTILITIES SHOWN ON THESE PLANS ARE BASED UPON OBSERVABLE FIELD INFORMATION, PREVIOUS CONSTRUCTION DRAWINGS FOR THE SITE, THE BEST AVAILABLE INFORMATION FROM THE UTILITY COMPANIES AND HOWARD COUNTY. THE DEVELOPER AND ENGINEER DO NOT WARRANT OR GUARANTEE THE COMPLETENESS OR THE CORRECTNESS OF THIS EXISTING UTILITY INFORMATION. THE CONTRACTOR SHALL VERIFY ALL SUCH INFORMATION TO HIS OWN SATISFACTION.
12. CONTRACTOR SHALL TAKE ALL NECESSARY PRECAUTIONS TO SUPPORT AND PROTECT ALL EXISTING UTILITIES WHEN WORKING ADJACENT TO OR CROSSING EXISTING UTILITIES. ANY DAMAGE TO EXISTING FACILITIES SHALL BE REPAIRED OR REPLACED AT CONTRACTOR'S EXPENSE.
13. "FULL TRENCH COMPACTION" TO 95% OF AASHTO T-180 DENSITY SHALL BE USED FOR ALL UTILITY CONSTRUCTION.
14. CONTRACTOR SHALL ADHERE TO ALL FEDERAL, STATE AND COUNTY HEALTH, SAFETY, AND ENVIRONMENTAL REGULATIONS.
15. ALL EXCESS EXCAVATION AND OTHER UNSUITABLE MATERIAL SHALL BE REMOVED FROM THIS SITE TO AN AREA WITH AN APPROVED SEDIMENT CONTROL PLAN AND PERMIT.
16. SIGN POST: ALL SIGN POST USED FOR TRAFFIC CONTROL SIGNS INSTALLED IN THE COUNTY RIGHT-OF-WAY SHALL BE MOUNTED ON A 2" GALVANIZED STEEL, PERFORATED, SQUARE TUBE POST (14 GAUGE) INSERTED INTO A 2-1/2" GALVANIZED STEEL, PERFORATED, SQUARE TUBE SLEEVE (12 GAUGE) - 3' LONG. A GALVANIZED STEEL POLE CAP SHALL BE MOUNTED ON TOP OF EACH POST.

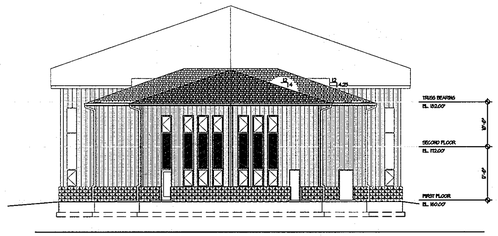

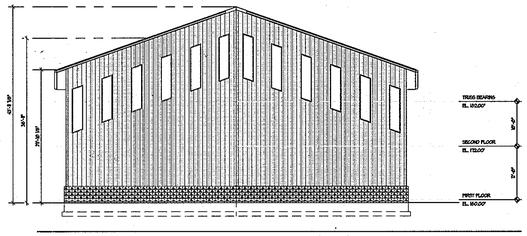

16 8 0 16 32 48

Scale 1" = 16'

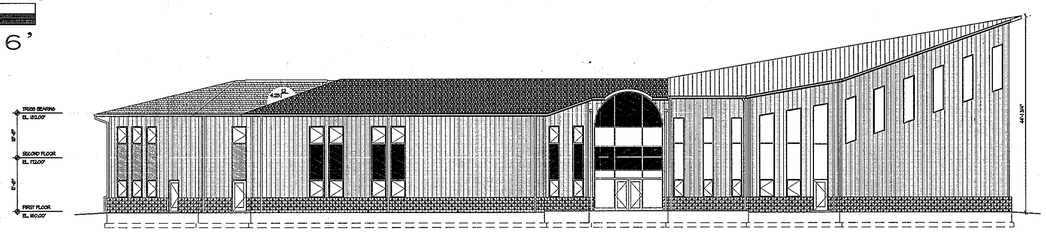

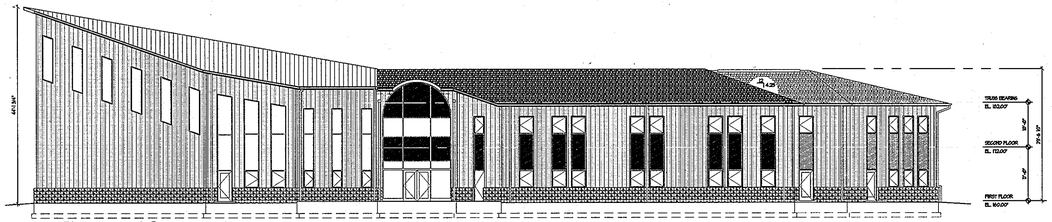

SITE ANALYSIS DATA SHEET

A. TOTAL SITE AREA:	1.9434 ac.	84,655 S.F.
B. TOTAL WETLANDS AREA:	0.1707 ac.	7,437 S.F.
C. TOTAL FLOODPLAINS AREA:	0.4552 ac.	19,828 S.F.
D. TOTAL FORESTED AREA:	1.5611 ac.	68,000 S.F.
E. TOTAL STEEP SLOPES (> 15%):	0.3903 ac.	17,000 S.F.
F. TOTAL STREAM BUFFER AREA:	0.2571 ac.	11,200 S.F.
G. LIMIT OF DISTURBED AREA:	1.3200 ac.	57,500 S.F.
LOD WITHIN PAR. A (PLAT #16329):	0.86 ac.	37,500 S.F.
LOD WITHIN PAR. B-6 (PLAT #14092):	0.46 ac.	20,000 S.F.

H. PROPOSED USES FOR SITE AND STRUCTURES: CHURCH, PERMITTED BY RIGHT PER ZONING REGULATION SECTION 127.2.B.22.

I. OPEN SPACE ON SITE: N/A

J. PROPOSED IMPERVIOUS AREA:	0.9642 ac. = 42,000 S.F., INCLUDING
PERVIOUS PAVEMENT AREA:	0.1175 ac. = 5,120 S.F.
IMPERVIOUS PAVEMENT AREA:	0.6122 ac. = 26,666 S.F.
BUILDING AREA:	0.2345 ac. = 10,214 S.F. (AFTER PHASE II) 0.1986 ac. = 5,168 S.F. (AFTER PHASE I) ⚠
K. BUILDING COVERAGE OF SITE:	0.2345 ac. = 10,214 S.F. (12.1%)
L. PRESENT ZONING DESIGNATION:	CE-CLI, CORRIDOR EMPLOYMENT DISTRICT - CONTINUING LIGHT INDUSTRIAL OVERLAY DISTRICT
M. GROSS FLOOR AREA:	10,214 (1st FLR) + 6,030 (2nd FLR) = 16,244 S.F. (TWO STORY)
SANCTUARY AREA:	4,008 S.F.
N. PROPOSED NUMBER OF SEATS:	200
O. NUMBER OF PARKING SPACES REQUIRED:	200/3=67 SPACES (1.0 SPACES PER 3 SEATS)
NUMBER OF PARKING SPACES PROVIDED:	69 SPACES (ON SITE), INCLUDING 4 H/C SPACES

P. APPLICABLE DPZ FILE REFERENCES:

F-98-182: SECTION ONE, MAIER INDUSTRIAL PARK, PARCELS B-5 & B-6. A RESUBDIVISION OF PARCEL B-4, PLAT #7620. APPROVED 02/03/00.

F-02-010: SUBDIVISION PLAT, A.C. MILLER PROPERTY PARCELS A & B. A SUBDIVISION OF A.C. MILLER PROPERTY, PLATS #16329 THROUGH 16332. RECORDED 11/20/03.

PROPERTY WAS SUBJECT TO LEGISLATIVE REZONING FROM M-2 LIMIT INDUSTRIAL TO CE-CORRIDOR EMPLOYMENT BY THE HOWARD COUNTY COUNCIL, (d. 02/04/04).

SDP-07-022: A.C. MILLER PROPERTY, PARCEL A & MAIER INDUSTRIAL PARK, SECTION 1, PARCEL B-6 (SINGH PROPERTY), PROPOSED FLEX SPACE BUILDING, PLAN DETERMINED TO BE TECHNICALLY COMPLETE 07/18/07.

WP-08-065: REQUEST TO WAIVE 16.156(i), TO REACTIVATE SDP-07-022, AND GRANT A 180 DAY EXTENSION TO SUBMIT SDP-07-022 AS A "MAJOR REVISION BY APPLICANT" FOR A PROPOSED RELIGIOUS FACILITY. WAIVER REQUEST APPROVED FEBRUARY 28, 2008. SUBSEQUENT DEADLINE HAD BEEN MISSED.

DAP 2010-05-26: DAP MEETING WAS HELD ON 05/26/10. DPZ DIRECTOR'S ENDORSEMENT OF DAP RECOMMENDATIONS HAS BEEN RECEIVED 06/25/10.

ECP 11-056: ORIGINAL ENVIRONMENTAL CONCEPT PLAN WAS SIGNED ON 07/26/2011.

F-13-024: RESUBDIVISION PLAT, VICTORY TEMPLE - LAUREL: TO CONSOLIDATE PARCEL A (PLAT #16329) WITH PARCEL B-6 (PLAT #14092) INTO ONE CONTIGUOUS PROPERTY; ESTABLISH NEW SETBACKS; CREATE A PUBLIC SANITARY SEWER EASEMENT, A PUBLIC WATER AND UTILITY EASEMENT, AN ADDITIONAL PUBLIC 100-YR FLOODPLAIN, DRAINAGE AND UTILITY EASEMENT. THIS PLAT WAS RECORDED ON 10/19/2012 AS PLAT No. 22114.

WP-13-134: REQUEST TO WAIVE 16.156(k, l, m), TO REACTIVATE SDP-12-007, AND GRANT A 180 DAY EXTENSION TO SUBMIT ORIGINAL MYLAR PLANS. WAIVER REQUEST WAS APPROVED ON 04/04/2013 WITH NEW DEADLINE ON 05/16/2013.

APPROVED: DEPARTMENT OF PLANNING AND ZONING

Chief, Development Engineering Division — Date 4/28/13

Chief, Division of Land Development — Date 4/30/13

Director — Date 5/1/13

⚠ LIST OF ADDITIONAL DRAWINGS
- 3A OF 19 SITE DEVELOPMENT PLAN - PHASE II
- 6A OF 19 SEDIMENT CONTROL DETAILS II
- 17A OF 19 LANDSCAPE/HARDSCAPE PLAN - PHASE II

LIST OF DRAWINGS

⚠	1 OF 19	TITLE SHEET
	2 OF 19	EXISTING CONDITIONS PLAN
⚠	3 OF 19	SITE DEVELOPMENT PLAN - PHASE I
	4 OF 19	GRADING PLAN
⚠	5 OF 19	SEDIMENT CONTROL PLAN
⚠	6 OF 19	SEDIMENT CONTROL DETAILS I
⚠	7 OF 19	SWM ESD PLAN/DEVELOPED CONDITIONS DA MAP
	8 OF 19	SWM MICRO-BIORETENTION PLAN
	9 OF 19	SWM RAINWATER HARVESTING SYSTEM PLAN
	10 OF 19	SWM PERVIOUS PAVEMENT I
	11 OF 19	SWM PERVIOUS PAVEMENT II
	12 OF 19	SWM SANDFILTERS PLAN
	13 OF 19	CONSTRUCTION PROFILES I
⚠	14 OF 19	CONSTRUCTION PROFILES II
	15 OF 19	UTILITY DETAILS
	16 OF 19	CONSTRUCTION DETAILS
⚠	17 OF 19	LANDSCAPE/HARDSCAPE PLAN - PHASE I
	18 OF 19	RETAINING WALL PLAN, ELEVATION AND SECTIONS
	19 OF 19	RETAINING WALL SPECIFICATIONS AND DETAILS

KCW Engineering Technologies, Inc.
810 Landmark Drive, Suite 215
Glen Burnie, MD 21061
Phone: 410.768.7700
Fax: 410.768.0200
www.kcw-et.com

STATE OF MARYLAND — MARK TATLID — 33351 — REGISTERED PROFESSIONAL ENGINEER
04/04/13

Professional Certification. I hereby certify that these documents were prepared or approved by me, and that I am a duly licensed professional engineer under the laws of the State of Maryland. License No. 33351. Expiration Date 06-30-2014.

REVISIONS

NO.	DATE	DESCRIPTION
⚠	03-06-14	SHOW TWO-PHASE CONSTRUCTION

OWNER:
THE REDEEMED CHRISTIAN CHURCH OF GOD, INC.
(VICTORY TEMPLE) LAUREL, MARYLAND
13701 OLD ANNAPOLIS ROAD
BOWIE, MD 20720
Attn: Margaret Adeyokunnu, Pastor
Tele: (301) 352-0707
Fax: (301) 352-3339

OWNER'S REPRESENTATIVE/ DEVELOPER:
TLI DESIGNGROUP INC.
3308 DORCHESTER ROAD
BALTIMORE, MD 21215
Attn: Taiwo Iluyomade, President
Toll Free/Fax/Voice mail:
(1-866) 616-1497
Mobile: (443) 831-6703

BENCHMARKS

HOWARD CO. HUB NO. 471C, EL. 189.05
N 532036.885 E 1362819.058
A BRASS DISC (1" TO 2" BELOW TERRAIN SURFACE) SET ON TOP OF CONCRETE CYLINDRIC BASE.

HOWARD CO. HUB NO. 471B, EL. 180.71
N 529701.579 E 1361469.758
3/4" IRON ROD WITH STAMPED ALUMINUM CAP.

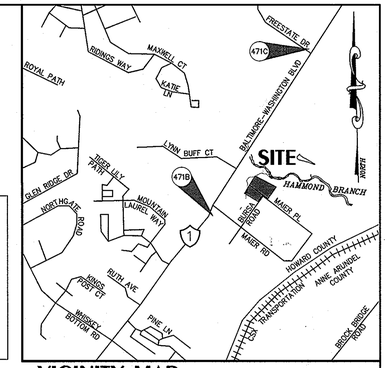

VICINITY MAP SCALE: 1"=1000'
ADC 5169-H1, J1

GENERAL NOTES

1. OWNERS: THE REDEEMED CHRISTIAN CHURCH OF GOD, INC. (VICTORY TEMPLE) LAUREL, MARYLAND
13701 OLD ANNAPOLIS ROAD
BOWIE, MD 20720
2. PROPERTY LOCATION: 9100 BURSA ROAD AND
9110 BURSA ROAD
LAUREL, MARYLAND 20723
3. TAX ACCOUNT NO. 06-417604, 06-554016
ELECTION DISTRICT: 6TH 6TH
DEED REFERENCE: 11264/592 (PLAT #16329) 11264/592 (PLAT #14092)
TAX MAP: 47, GRID 23, PARCEL 540 47, GRID 23, PARCEL 848
PARCEL AREA: 1.3089 AC. (57,017 S.F.) 0.6345 AC. (27,638 S.F.)
4. SITE AREA CALCULATIONS: TOTAL AREA: 1.3089 AC. + 0.6345 AC. = 1.9434 AC. (84,655 S.F.)
5. THE SUBJECT PROPERTY IS ZONED CE-CLI CORRIDOR EMPLOYMENT-CONTINUING LIGHT INDUSTRIAL 2/04/04 PER THE COMPREHENSIVE ZONING PLAN AND COMP LITE ZONING AMENDMENTS DATED 7/28/06.
6. PUBLIC WATER AND SEWER SERVICE TO THIS PARCEL HAS BEEN APPROVED PER WATER AND SEWER CONTRACT NO. 24-4047-D.
WATER AND SEWER CONNECTIONS: THE WATER AND SEWER CONNECTIONS SHALL BE BY ADVANCED DEPOSIT ORDER (ADO).
7. 100-YEAR FLOODPLAIN SHOWN IS BASED ON UPDATED ANALYSIS OF HOWARD COUNTY'S HAMMOND BRANCH FLOODPLAIN STUDY (1980, UPDATED 1986 & 2006) PREPARED BY KCW ENGINEERING TECHNOLOGIES, INC. AS PART OF SDP-07-022, SINGH PROPERTY, WHICH SDP WAS DETERMINED TO BE TECHNICALLY COMPLETE 07/18/07.
100-YR FLOODPLAIN OVER PARCEL A, PLAT #16329 IS ALREADY RECORDED IN THE LAND RECORDS WITH PLAT #16330 AS PART OF A PREVIOUSLY APPROVED SUBDIVISION PLAT (F-02-10) FOR A.C. MILLER PROPERTY, PARCELS A & B.
8. TOPOGRAPHY: TOPOGRAPHY SHOWN IS BASED ON AERIAL TOPOGRAPHY PREPARED BY "WINGS AERIAL MAPPING CO., INC." IN JUNE, 2006 AND SUPPLEMENTED BY KCW FIELD RUN TOPOGRAPHY.
9. STORMWATER MANAGEMENT: STORMWATER MANAGEMENT FOR THIS SITE IS PRIVATE AND SHALL BE MAINTAINED BY THE OWNER. STORMWATER MANAGEMENT REQUIREMENTS FOR THE SITE ARE PROVIDED BY MICRO-BIORETENTION, PERMEABLE PAVEMENTS, RAINWATER HARVESTING, AND PERIMETER SANDFILTERS.
10. THERE ARE NO KNOWN HISTORIC BUILDINGS, ARCHAEOLOGICAL SITES, ENDANGERED SPECIES HABITATS, UNDERGROUND STORAGE TANKS OR HAZARDOUS MATERIAL SITES LOCATED ON THIS PROPERTY. THERE ARE NO SIGNIFICANT VIEWS OR SITE FEATURES THAT MAY AFFECT THE DEVELOPMENT PROPOSAL. THERE ARE NO SIGNIFICANT REGULATED PLANT OR WILD LIFE COMMUNITIES BASED UPON DNR DATA.
11. FOREST CONSERVATION: THIS PROJECT COMPLIES WITH THE REQUIREMENTS OF SECTION 16.1200 OF THE HOWARD COUNTY CODE. FOREST CONSERVATION REQUIREMENTS FOR A.C. MILLER PROPERTY, PARCELS A & B WERE ADDRESSED AS PART OF A PREVIOUSLY APPROVED SUBDIVISION PLAT (F-02-10), RECORDED IN THE LAND RECORDS WITH PLAT #16330, AND APPROVED STORM DRAIN AND FOREST CONSERVATION PLAN (F-02-10). MAIER IND. PARK SECT. 1, FOR PARCEL B-6 PAYMENT OF FEE-IN-LIEU IS REQUESTED. IT WILL REQUIRE PAYMENT OF $2,286.90 TO THE HOWARD COUNTY FOREST CONSERVATION FUND.
12. WETLANDS: WETLANDS SHOWN HEREON WERE DELINEATED BY KCW ENGINEERING TECHNOLOGIES, INC. AND VERIFIED BY HOWARD SOIL CONSERVATION DISTRICT SEPT. 14, 2001 AS PART OF A PREVIOUSLY APPROVED SUBDIVISION PLAT OF A.C. MILLER PROPERTY, PARCELS A & B (F-02-10). WETLANDS HAD BEEN RECORDED IN THE LAND RECORDS WITH PLAT #16332 ON 11/20/03. UPDATED WETLAND DELINEATION PLAN AND REPORT DATED JUNE 28, 2011 PREPARED BY HUMAN AND ROHDE, INC. ARE SUBMITTED HEREWITH.
13. NO GRADING, REMOVAL OF VEGETATIVE COVER OR TREES, PAVING AND NEW STRUCTURES SHALL BE PERMITTED WITHIN THE WETLANDS, STREAM(S) OR THEIR BUFFERS, FOREST CONSERVATION EASEMENT AREAS AND 100-YEAR FLOODPLAIN.
14. COMPLIANCE WITH THE ROUTE 1 MANUAL: THIS PROJECT HAS BEEN DESIGNED IN ACCORDANCE WITH ROUTE 1 MANUAL REQUIREMENTS FOR NEW DEVELOPMENTS LOCATED IN THE CE-CLI ZONE. THIS SITE DEVELOPMENT PLAN SUBMISSION PROVIDES ALL APPLICABLE STREETSCAPE, SITE AND BUILDING DESIGNS RESPONDING TO THE ROUTE 1 MANUAL'S REQUIREMENTS AND RECOMMENDATIONS. DAP MEETING WAS HELD ON 05/26/10. DPZ DIRECTOR'S ENDORSEMENT OF DAP 2010-05-26 RECOMMENDATIONS HAS BEEN RECEIVED 06/25/10.
15. ENVIRONMENTAL CONCEPT PLAN ECP-11-056: THE ORIGINAL ENVIRONMENTAL CONCEPT PLAN WAS SIGNED ON JULY 26, 2011.
16. THE DESIGN NARRATIVE CAN BE FOUND ON SWM ESD PLAN, SHEET 7 OF 19, AND IN STORMWATER MANAGEMENT REPORT.
17. EXISTING 75' PRIVATE BGE EASEMENT FOR TRIMMING AND CUTTING TREES: PER DEED RECORDED IN LIBER 626, FOLIO 590 AND THE INQUISITION RECORDED IN LIBER 623, FOLIO 174 BGE HAS THE RIGHT TO TRIM, CUT DOWN, AND REMOVE TREES ON PARCEL OF LAND DESCRIBED AS PARCEL No. 2 AND AS SHOWN ON THESE PLANS. THERE ARE NO OTHER RIGHTS PRESCRIBED TO BGE ON PARCEL No. 2 PER DOCUMENTS MENTIONED HEREIN. BGE'S APPROVAL FOR PROPOSED DEVELOPMENT ON PARCEL No. 2 IS NOT REQUIRED.
18. EXISTING 50' STRUCTURE AND USE SETBACKS PER PLATS #14092 AND # 16329: THESE SETBACKS WILL BE ELIMINATED DURING SITE DEVELOPMENT PLAN VIA NEW PLAT F-13-024 (PLAT #22114).
19. ADEQUATE PUBLIC FACILITIES ORDINANCE AND TRAFFIC STUDY: THE APF ROAD TEST AND TRAFFIC STUDY ARE NOT REQUIRED FOR THIS PROJECT, BECAUSE THERE WILL BE NO PEAK HOUR TRAFFIC BASED ON THE USE OF THE PROPERTY AS CHURCH. THERE WILL BE NO DAYCARE PROGRAM AT THE CHURCH.
20. LANDSCAPE PLAN HAS BEEN PREPARED IN ACCORDANCE WITH THE PROVISIONS OF SECTION 16.124 OF THE HOWARD COUNTY CODE AND LANDSCAPE MANUAL.
21. FINANCIAL SURETY FOR THE REQUIRED LANDSCAPING HAS BEEN POSTED AS PART OF THE DPW DEVELOPER'S AGREEMENT IN THE AMOUNT OF $4,470.00 FOR 12 SHADE TREES, 2 EVERGREEN TREES AND 19 SHRUBS (SEE SHEET 17 OF 19).
22. ALL OUTDOOR LIGHTING SHALL COMPLY WITH THE REQUIREMENTS OF ZONING SECTION 134.
23. FINAL BUILDING DESIGN WILL BE SUBJECT TO RELEVANT BUILDING AND FIRE CODES IN EFFECT AT THE TIME OF BUILDING PERMIT APPLICATION. BUILDING DESIGN AND ARCHITECTURAL DETAILS WILL BE CONSISTENT WITH THE GENERAL INFORMATION PROVIDED HEREIN. ANY SUBSTANTIVE BUILDING DESIGN OR ARCHITECTURAL DETAILS PROPOSED THAT ARE NOT CONSISTENT WITH THESE GENERAL FEATURES WILL BE SUBMITTED TO HOWARD COUNTY FOR ADMINISTRATIVE ARCHITECTURAL REVIEW AND APPROVAL PRIOR TO BUILDING PERMIT APPLICATION.
24. A KNOX BOX HAS BEEN LOCATED ON THE FRONT OF THE BUILDING. THE BOX SHALL BE ELECTRONICALLY SUPERVISED TO NOTIFY THE OWNER THAT IT IS BEING ACCESSED (INTEGRATED WITH THE FIRE ALARM SYSTEM).
25. PARKING NOTES:
- THERE WILL BE NO DAYCARE PROGRAM AT THE CHURCH.
- SERVICES THAT ROUTINELY REQUIRE SEATING BEYOND THE AMOUNT ESTIMATED FOR THE PARKING CALCULATIONS SHALL FIND ADDITIONAL MEANS FOR OFF-SITE PARKING THROUGH PARKING AGREEMENTS OR AMENDMENTS TO THIS SDP.

⚠ PURPOSE OF REVISED SITE DEVELOPMENT PLAN:
a) TO SHOW THAT THE PROJECT WILL BE BUILT IN TWO PHASES
b) UPDATE SEDIMENT CONTROL PLAN TO 2011 MDE ESC SPECS.

ADDRESS CHART

Parcel #	Street Address
540	9100 BURSA ROAD, LAUREL, MD 20723.

PERMIT INFORMATION CHART

Subdivision Name			Section/Area		Parcel #
VICTORY TEMPLE - LAUREL					848, A
Plat #:	Grid #	Zoning	Tax Map	Election District	Census Tract
22114	23	CE-CLI	47	6th	6069.02
Water Code:			Sewer Code:		
W - C-04			S - 7100400		

TITLE SHEET

VICTORY TEMPLE - LAUREL

WORSHIP CENTER

9100 BURSA ROAD

KCW J.O.:	2080018
SCALE:	AS SHOWN
DESIGNED:	MT
DRAWN:	MT
CHECKED:	KCA
DATE:	APRIL 4, 2013
DRAWING NO.	1 OF 19

SDP-12-007
TAX MAP 47, GRID 23
PARCEL 540 (PARCEL A, PLAT # 22114)

W&S CONTRACT No. 24-4047-D
ZONING: CE-CLI
ELECTION DISTRICT - 6
HOWARD COUNTY, MARYLAND

SDP-12-007

LEGEND

EXISTING CONTOURS	144
PROPOSED CONTOURS	164
PROPERTY LINE	
LIMIT OF DISTURBANCE	L.O.D.
WETLANDS	W
EX. 25' WETLAND BUFFER	WB
100 YEAR FLOODPLAIN DRAINAGE & UTILITY EASEMENT	FP
STREAM LINE	
SOILS LINE	BeC2 BeD2
EX. FOREST CONSERVATION EASEMENT	FCE
50' STREAM BUFFER	SB

EX. PUBLIC STORMWATER MANAGEMENT NATURAL CONSERVATION CREDIT EASEMENT	
PUBLIC 100-YR FLOODPLAIN, DRAINAGE AND UTILITY EASEMENT	
LIMIT OF WETLANDS	
EX. PUBLIC FOREST CONSERVATION EASEMENT	
15% ≤ SLOPE ≤ 24.99%	
25% ≤ SLOPE	
EX. TREE (DECIDUOUS)	
EXISTING WOODS	
EX. FH	
EX. GAS VALVE	GV
EX. STREET LIGHT	
EX. STORM DRAIN INLET	
EX. CLEANOUT	CO
EX. SIGN	
EX. SANITARY SEWER MANHOLE	S
EX. STORM DRAIN MANHOLE	D
EX. UTILITY POLE	
EX. WATER METER	WM
EX. ELECTRICAL JUNCTION BOX	E,J,B
EX. TELEPHONE	
EX. WATER VALVE	

12/16/11

FOREST CONSERVATION WORKSHEET
VERSION 1.0
(Enter in Yellow Cells)

NET TRACT AREA:

A. Total tract area.....=	0.46
B. Area within 100 year floodplain.....=	0.00
C. Area to remain in agricultural production.....=	0.00
D. Net tract area.....=	0.46

LAND USE CATEGORY: (from table 3.2.1, page 40, Manual)

Input the number "1" under the appropriate land use zoning, and limit to only one entry.

ARA	MDR	IDA	HDR	MPD	CIA
0	0	1	0	0	0

E. Afforestation Threshold.....	15% x D =	0.07
F. Conservation Threshold.....	20% x D =	0.09

EXISTING FOREST COVER:

G. Existing forest cover (excluding floodplain).....=	0.00
H. Area of forest above afforestaion threshold.....=	0.00
I. Area of forest above conservation threshold.....=	0.00

BREAK EVEN POINT:

J. Forest retention above threshold with no mitigation.....=	0.00
K. Clearing permitted without mitigation.....=	0.00

PROPOSED FOREST CLEARING:

L. Total area of forest to be cleared.....=	0.00		
M. Total area of forest to be retained.....=	0.00		
PLANTING REQUIREMENTS:			
N. Reforestation for clearing above conservation threshold...=	0.00		
P. Reforestation for clearing below conservation threshold...=	0.00	1.0	1.0
Q. Credit for retention above conservation threshold.....=	0.00		
R. Total reforestation required.....=	0.00	1.0	1.0
S. Total afforestation required.....=	0.07		
T. Total reforestation and afforestation required.....=	0.07		

20 10 0 20 40 60

Scale 1" = 20'

APPROVED: DEPARTMENT OF PLANNING AND ZONING

Chief, Development Engineering Division — Date 4/23/13

Chief, Division of Land Development — Date 4/30/13

Director — Date 5/1/13

KCW ENGINEERING TECHNOLOGIES

KCW Engineering Technologies, Inc.
810 Landmark Drive, Suite 215
Glen Burnie, MD 21061
Phone: 410.768.7700
Fax: 410.768.0200
www.kcw-et.com

STATE OF MARYLAND — MARK T. STITELY — 33351 — PROFESSIONAL ENGINEER
Mark Stitely 11/30/12

Professional Certification.
I hereby certify that these documents were prepared or approved by me, and that I am a duly licensed professional engineer under the laws of the State of Maryland.
License No. 33351.
Expiration Date 06-30-2014.

OWNER:
THE REDEEMED CHRISTIAN CHURCH OF GOD, INC.
13701 ANNAPOLIS ROAD
BOWIE, MD 20720

Attn: Margaret Adeyokunnu, Pastor
Tele: (301) 352-0707
Fax: (301) 352-3339

OWNER'S REPRESENTATIVE/ DEVELOPER:
TLI DESIGNGROUP INC.
3308 DORCHESTER ROAD
BALTIMORE, MD 21215
Attn: Taiwo Iluyomade, President

Toll Free/Fax/Voice mail:
(1-866) 616-1497
Mobile: (443) 831-6703

KCW J.O.:	2080018
SCALE:	1" = 20'
DESIGNED:	MT
DRAWN:	MT
CHECKED:	KCA
DATE:	NOV, 30, 2012
DRAWING NO.	2 OF 19

EXISTING CONDITIONS PLAN

VICTORY TEMPLE - LAUREL
WORSHIP CENTER
9100 BURSA ROAD

SDP-12-007
TAX MAP 47, GRID 23
PARCEL 540 (PARCEL A, PLAT # 22114)

W&S CONTRACT No. 24-4047-D
ZONING: CE-CLI
ELECTION DISTRICT - 6
HOWARD COUNTY, MARYLAND

SDP-12-007

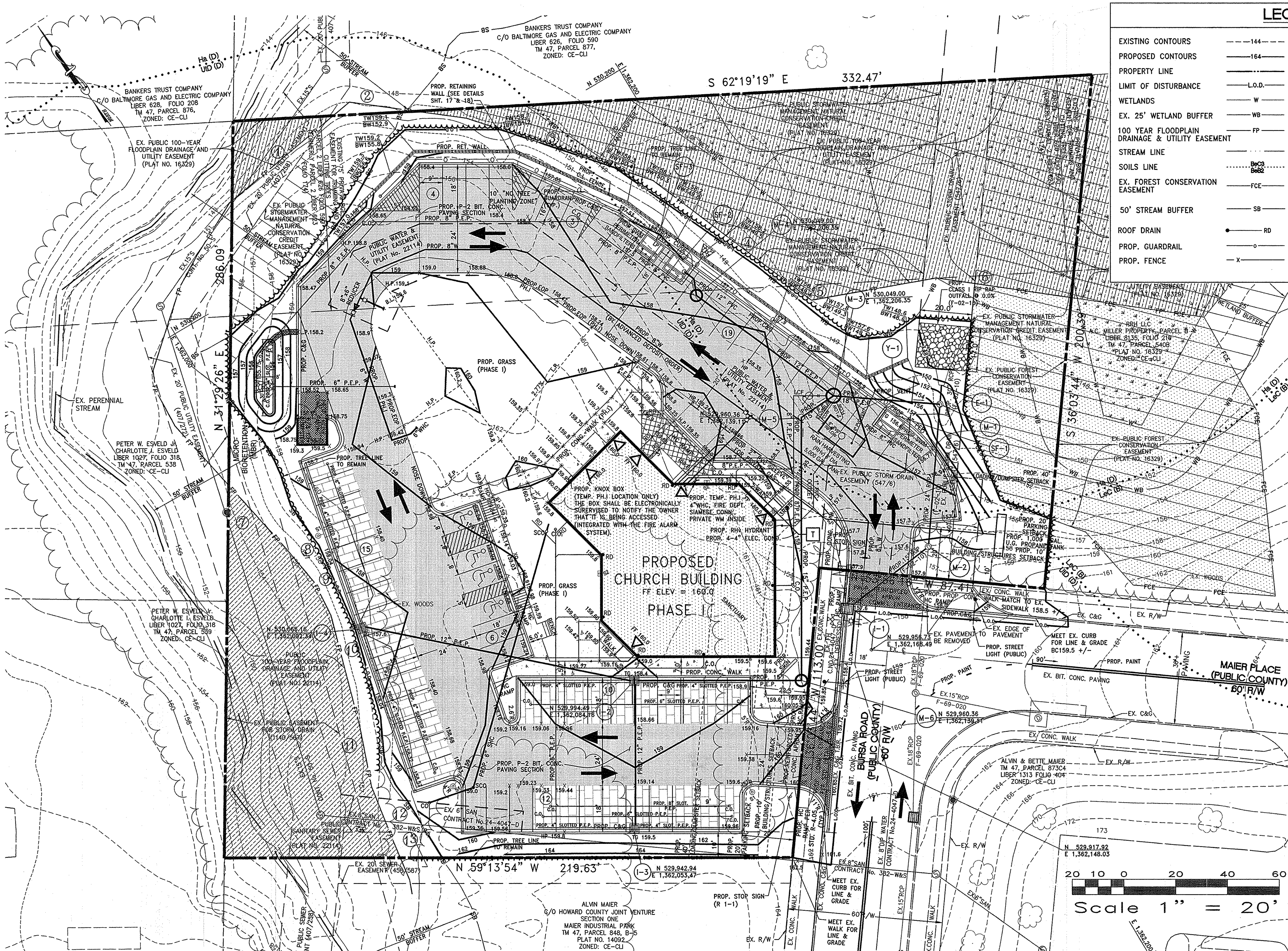

LEGEND

EXISTING CONTOURS	---144---	EX. PUBLIC STORMWATER MANAGEMENT NATURAL CONSERVATION CREDIT EASEMENT	
PROPOSED CONTOURS	——164——	PROP. PERVIOUS PAVEMENT	
PROPERTY LINE		PROP. CONCRETE	
LIMIT OF DISTURBANCE	L.O.D.	PROP. CONC. PAVERS	
WETLANDS	W	PROPOSED BITUMINOUS CONCRETE PAVING	
EX. 25' WETLAND BUFFER	WB	PROPOSED REINFORCED CONCRETE APRON	
100 YEAR FLOODPLAIN DRAINAGE & UTILITY EASEMENT	FP	100-YR FLOODPLAIN DRAINAGE AND UTILITY EASEMENT.	
STREAM LINE		LIMIT OF WETLANDS	
SOILS LINE	BeC3 / BeB2	EX. PUBLIC FOREST CONSERVATION EASEMENT	
EX. FOREST CONSERVATION EASEMENT	FCE	PROPOSED LIMIT OF CLEARING	
50' STREAM BUFFER	SB	EX. TREE (DECIDUOUS)	
ROOF DRAIN	RD	EXISTING WOODS	
PROP. GUARDRAIL	o	EX. FH	
PROP. FENCE	x	EX. GAS VALVE	GV
		EX. STREET LIGHT	
		EX. STORM DRAIN INLET	
		EX. CLEANOUT	CO
		EX. SIGN	
		EX. SANITARY SEWER MANHOLE	
		EX. STORM DRAIN MANHOLE	
		EX. UTILITY POLE	
		EX. WATER METER	WM
		EX. WATER VALVE	
		PROP. SD MANHOLE	
		PROP. PRIVATE STREET LIGHT	S1
		PROP. WALL MOUNTED LIGHT FIXTURE (TYP.)	S2
		PROP. SD INLET	
		PROP. FIRE DEPT. SIAMESE CONNECTION	
		PROP. STOP SIGN * (R 1-1)	*
		PROP. PUBLIC STREET LIGHT ** (TO BE INSTALLED BY HOWARD COUNTY)	**
		PROP. KNOX BOX	
		PROP. SAN. CO	CO
		DOUBLE 5" YELLOW PAINT MARKINGS CENTERED ON ROADWAY	
		PUPPY TRACKS (5" YELLOW PAINT) CENTERED IN ROADWAY (2'/6' SPACE/2'/6' SPACE...)	

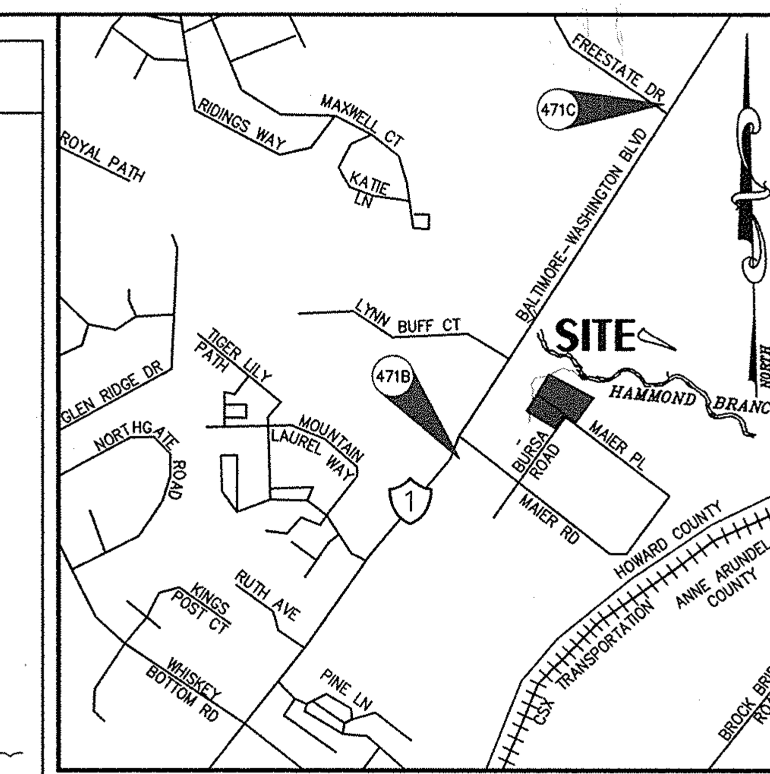

VICINITY MAP
SCALE: 1"=1000'

PUBLIC 100-YEAR FLOODPLAIN, DRAINAGE AND UTILITY EASEMENT

SYMBOL	BEARING	DISTANCE	ELEV. (AT BEGINNING)
PARCEL 540A – PUBLIC 100-YEAR FLOODPLAIN DRAINAGE AND UTILITY EASEMENT			
1.	N 80°37'05"W	51.92'	148.99
	N 62°19'19"W	38.33'	150.00
	S 31°22'55"W	31.35'	144.23
2.	S 51°23'27"E	19.70'	149.56
3.	S 40°43'23"E	76.08'	149.22
4.	S 21°59'22"E	76.93'	148.05
5.	S 69°24'47"E	49.12'	148.00
6.	S 50°49'04"E	52.78'	147.38
	N 36°03'44"E	86.92'	147.11
	N 62°19'19"W	261.86'	145.02
PARCEL 848, B-6 – PUBLIC 100-YEAR FLOODPLAIN DRAINAGE AND UTILITY EASEMENT			
7.	S 41°59'07"E	34.84'	154.21
8.	S 39°45'51"E	16.51'	156.10
9.	S 26°17'51"E	14.24'	156.20
10.	S 14°28'10"E	44.20'	156.28
11.	S 10°54'34"E	24.06'	157.05
12.	S 21°36'04"E	23.25'	157.62
13.	N 22°41'41"E	6.57'	158.85
	N 59°13'54"W	68.40'	158.98
	N 31°29'26"E	133.69'	156.26
	N 00°36'13"E	11.77'	153.74

* SIGN POST: ALL SIGN POST USED FOR TRAFFIC CONTROL SIGNS INSTALLED IN THE COUNTY RIGHT-OF-WAY SHALL BE MOUNTED ON A 2" GALVANIZED STEEL, PERFORATED, SQUARE TUBE POST (14 GAUGE) INSERTED INTO A 2-1/2" GALVANIZED STEEL, PERFORATED, SQUARE TUBE SLEEVE (12 GAUGE) – 3' LONG. A GALVANIZED STEEL POLE CAP SHALL BE MOUNTED ON TOP OF EACH POST.

** 250 WATT HPS VAPOR SAG FIXTURES MOUNTED AT 30' ON A BRONZE FIBERGLASS POLE USING A 12' ARM.

PRIVATE LIGHTING FIXTURE SCHEDULE

TYPE	DESCRIPTION	LENSE/ LOUVER	MOUNTING	VOLTS	LAMP DATA			MANUFACTURER & CATALOG NO.
S1	POLE TOP HID FIXTURE MOUNTED AT 25' WITH 16" SQUARE HOUSING	GLASS	N/A	208	1	250	250W MH	SIMKAR CORPORATION # FPM-8-8-25-MT
S2	WALL MOUNTED EXTERIOR HID WALL PACK	GLASS	WS# 20'-0"	120	1	400	400W MH	SIMKAR CORPORATION # WSL0840

MOUNTING: WS# - WALL MTD., SURFACE, # FEET A.F.F.

PUBLIC STREET LIGHTING SCHEDULE

COORDINATES	STREET	DESCRIPTION
N 529,952.98 E 1,362,212.98	MAIER PLACE	250 WATT HPS VAPOR SAG FIXTURE MOUNTED AT 30' ON A BRONZE FIBERGLASS POLE USING A 12' ARM.
N 529,955.41 E 1,362,146.49	BURSA ROAD	250 WATT HPS VAPOR SAG FIXTURE MOUNTED AT 30' ON A BRONZE FIBERGLASS POLE USING A 12' ARM.

20 10 0 20 40 60
Scale 1" = 20'

Professional Certification. I hereby certify that these documents were prepared or approved by me, and that I am a duly licensed professional engineer under the laws of the State of Maryland. License No. 33351. Expiration Date 06-30-2014.

REVISIONS

NO.	DATE	DESCRIPTION
1	03-06-14	SHOW TWO-PHASE CONSTRUCTION.

APPROVED: DEPARTMENT OF PLANNING AND ZONING

Chief, Development Engineering Division — Date 4-3-14

Chief, Division of Land Development — Date 4/04/14

Director — Date 4/8/14

KCW ENGINEERING TECHNOLOGIES
KCW Engineering Technologies, Inc.
810 Landmark Drive, Suite 215
Glen Burnie, MD 21061
Phone: 410.768.7700
Fax: 410.768.0200
www.kcw-et.com

STATE OF MARYLAND MARK TSITLIK 33351 PROFESSIONAL ENGINEER
03/06/14

OWNER:
THE REDEEMED CHRISTIAN CHURCH OF GOD, INC.
13701 ANNAPOLIS ROAD
BOWIE, MD 20720

Attn: Margaret Adeyokunnu, Pastor
Tele: (301) 352-0707
Fax: (301) 352-3339

OWNER'S REPRESENTATIVE/ DEVELOPER:
TLI DESIGNGROUP INC.
3308 DORCHESTER ROAD
BALTIMORE, MD 21215
Attn: Taiwo Iluyomade, President

Toll Free/Fax/Voice mail:
(1-866) 616-1497
Mobile: (443) 831-6703

KCW J.O.: 2080018
SCALE: 1" = 20'
DESIGNED: MT
DRAWN: MT
CHECKED: KCA
DATE: MARCH 6, 2014
DRAWING NO. **3 OF 19**

SITE DEVELOPMENT PLAN - PHASE I

VICTORY TEMPLE - LAUREL

WORSHIP CENTER

9100 BURSA ROAD

SDP-12-007
TAX MAP 47, GRID 23
PARCEL 540 (PARCEL A, PLAT #22114)

W&S CONTRACT No. 24-4047-D
ZONING: CE-CLI
ELECTION DISTRICT - 6
HOWARD COUNTY, MARYLAND

SDP-12-007

LEGEND

EXISTING CONTOURS	144
PROPOSED CONTOURS	164
PROPERTY LINE	
LIMIT OF DISTURBANCE	L.O.D.
WETLANDS	W
EX. 25' WETLAND BUFFER	WB
100 YEAR FLOODPLAIN DRAINAGE & UTILITY EASEMENT	FP
STREAM LINE	
SOILS LINE	BeC2 BeB2
EX. FOREST CONSERVATION EASEMENT	FCE
50' STREAM BUFFER	SB
ROOF DRAIN	RD
PROP. GUARDRAIL	
PROP. FENCE	X
EX. PUBLIC STORMWATER MANAGEMENT NATURAL CONSERVATION CREDIT EASEMENT	
PROP. PERVIOUS PAVEMENT	
PROP. CONCRETE	
PROP. CONC. PAVERS	
PROPOSED BITUMINOUS CONCRETE PAVING	
PROPOSED REINFORCED CONCRETE APRON	
100-YR FLOODPLAIN DRAINAGE AND UTILITY EASEMENT.	
LIMIT OF WETLANDS	
EX. PUBLIC FOREST CONSERVATION EASEMENT	
PROPOSED LIMIT OF CLEARING	
EX. TREE (DECIDUOUS)	
EXISTING WOODS	
EX. FH	
EX. GAS VALVE	GV
EX. STREET LIGHT	
EX. STORM DRAIN INLET	
EX. CLEANOUT	CO
EX. SIGN	
EX. SANITARY SEWER MANHOLE	S
EX. STORM DRAIN MANHOLE	D
EX. UTILITY POLE	
EX. WATER METER	WM
EX. WATER VALVE	
PROP. SD MANHOLE	
PROP. PRIVATE STREET LIGHT	S1
PROP. WALL MOUNTED LIGHT FIXTURE (TYP.)	S2
PROP. SD INLET	
PROP. FIRE DEPT. SIAMESE CONNECTION	
PROP. STOP SIGN * (R 1-1)	*
PROP. PUBLIC STREET LIGHT ** (TO BE INSTALLED BY HOWARD COUNTY)	**
PROP. KNOX BOX	
PROP. SAN. CO	CO
DOUBLE 5" YELLOW PAINT MARKINGS CENTERED ON ROADWAY	
PUPPY TRACKS (5" YELLOW PAINT) CENTERED IN ROADWAY (2'/6' SPACE/2'/6' SPACE...)	

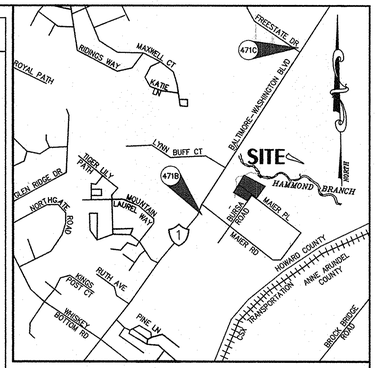

VICINITY MAP
SCALE: 1"=1000'

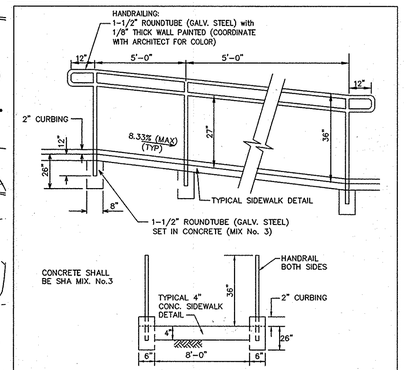

PEDESTRIAN RAMP and RAILING
NOT TO SCALE

Scale 1" = 20'

APPROVED: DEPARTMENT OF PLANNING AND ZONING

Chief, Development Engineering Division — Date 4/3/14

Chief, Division of Land Development — Date 4/04/14

Director — Date 4/3/14

KCW ENGINEERING TECHNOLOGIES

KCW Engineering Technologies, Inc.
810 Landmark Drive, Suite 215
Glen Burnie, MD 21061
Phone: 410.768.7700
Fax: 410.768.0200
www.kcw-et.com

Professional Certification. I hereby certify that these documents were prepared or approved by me, and that I am a duly licensed professional engineer under the laws of the State of Maryland. License No. 33351. Expiration Date 06-30-2014.

STATE OF MARYLAND MARK TSITLIK 33351 PROFESSIONAL ENGINEER
Mark Tsitlik 03/06/14

REVISIONS

NO.	DATE	DESCRIPTION
1	03-06-14	SHOW TWO-PHASE CONSTRUCTION.

OWNER:
THE REDEEMED CHRISTIAN CHURCH OF GOD, INC.
13701 ANNAPOLIS ROAD
BOWIE, MD 20720

Attn: Margaret Adeyokunnu, Pastor
Tele: (301) 352-0707
Fax: (301) 352-3339

OWNER'S REPRESENTATIVE/ DEVELOPER:
TLI DESIGNGROUP INC.
3308 DORCHESTER ROAD
BALTIMORE, MD 21215

Attn: Taiwo Iluyomade, President

Toll Free/Fax/Voice mail:
(1-866) 616-1497
Mobile: (443) 831-6703

KCW J.O.:	2080018
SCALE:	1" = 20'
DESIGNED:	MT
DRAWN:	MT
CHECKED:	KCA
DATE:	MARCH 6, 2014
DRAWING NO.	3A OF 19

SITE DEVELOPMENT PLAN - PHASE II

VICTORY TEMPLE - LAUREL
WORSHIP CENTER
9100 BURSA ROAD

SDP-12-007
TAX MAP 47, GRID 23
PARCEL 540 (PARCEL A, PLAT #22114)

W&S CONTRACT No. 24-4047-D
ZONING: CE-CLI
ELECTION DISTRICT - 6
HOWARD COUNTY, MARYLAND

SDP-12-007

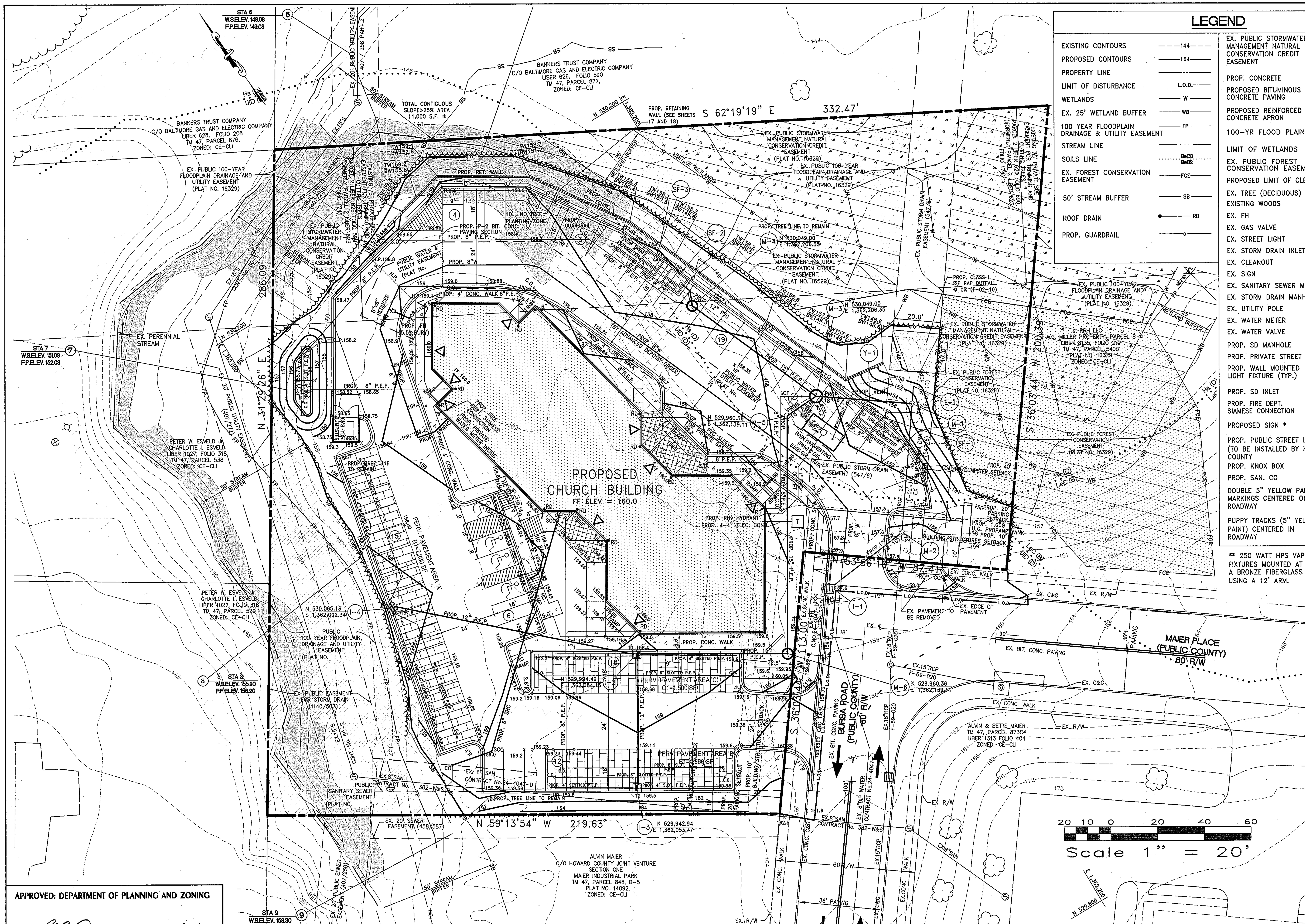

LEGEND

EXISTING CONTOURS	---144---
PROPOSED CONTOURS	—164—
PROPERTY LINE	
LIMIT OF DISTURBANCE	—L.O.D.—
WETLANDS	— W —
EX. 25' WETLAND BUFFER	—WB—
100 YEAR FLOODPLAIN DRAINAGE & UTILITY EASEMENT	— FP —
STREAM LINE	
SOILS LINE	BeC3 / BeB2
EX. FOREST CONSERVATION EASEMENT	—FCE—
50' STREAM BUFFER	— SB —
ROOF DRAIN	—RD
PROP. GUARDRAIL	—o—
EX. PUBLIC STORMWATER MANAGEMENT NATURAL CONSERVATION CREDIT EASEMENT	
PROP. CONCRETE	
PROPOSED BITUMINOUS CONCRETE PAVING	
PROPOSED REINFORCED CONCRETE APRON	
100-YR FLOOD PLAIN	
LIMIT OF WETLANDS	
EX. PUBLIC FOREST CONSERVATION EASEMENT	
PROPOSED LIMIT OF CLEARING	
EX. TREE (DECIDUOUS)	
EXISTING WOODS	
EX. FH	
EX. GAS VALVE	GV
EX. STREET LIGHT	
EX. STORM DRAIN INLET	
EX. CLEANOUT	CO
EX. SIGN	
EX. SANITARY SEWER MANHOLE	
EX. STORM DRAIN MANHOLE	
EX. UTILITY POLE	
EX. WATER METER	WM
EX. WATER VALVE	
PROP. SD MANHOLE	
PROP. PRIVATE STREET LIGHT	
PROP. WALL MOUNTED LIGHT FIXTURE (TYP.)	
PROP. SD INLET	
PROP. FIRE DEPT. SIAMESE CONNECTION	
PROPOSED SIGN *	*
PROP. PUBLIC STREET LIGHT ** (TO BE INSTALLED BY HOWARD COUNTY	**
PROP. KNOX BOX	
PROP. SAN. CO	CO
DOUBLE 5" YELLOW PAINT MARKINGS CENTERED ON ROADWAY	
PUPPY TRACKS (5" YELLOW PAINT) CENTERED IN ROADWAY	— — —

** 250 WATT HPS VAPOR SAG FIXTURES MOUNTED AT 30' ON A BRONZE FIBERGLASS POLE USING A 12' ARM.

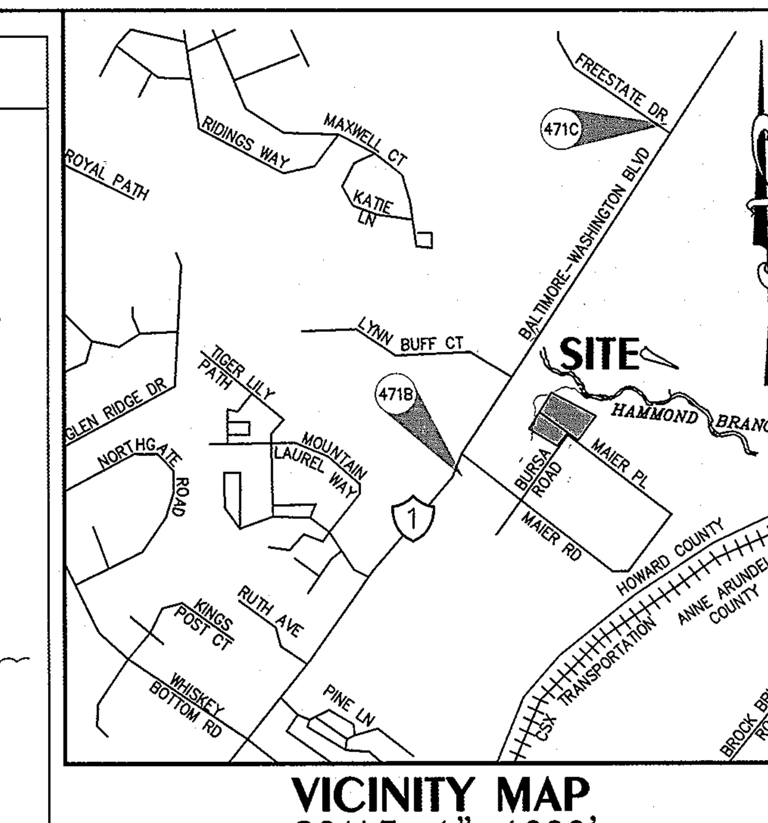

VICINITY MAP
SCALE: 1"=1000'

LIMIT OF DISTURBANCE
1.32 Ac. / 57,500 S.F.

THIS DEVELOPMENT PLAN IS APPROVED FOR SOIL EROSION AND SEDIMENT CONTROL BY THE HOWARD SOIL CONSERVATION DISTRICT.

[signature] HOWARD SCD — 10/1/12 DATE

ENGINEER'S CERTIFICATE:

"I CERTIFY THAT THIS PLAN FOR SEDIMENT AND EROSION CONTROL REPRESENTS A PRACTICAL AND WORKABLE PLAN BASED ON MY PERSONAL KNOWLEDGE OF THE SITE CONDITIONS AND THAT IT WAS PREPARED IN ACCORDANCE WITH THE REQUIREMENTS OF THE HOWARD SOIL CONSERVATION DISTRICT."

[signature] MARK TSITLIK, P.E. — 10-01-12 DATE

DEVELOPER'S CERTIFICATE:

"I/WE CERTIFY THAT ALL DEVELOPMENT AND CONSTRUCTION WILL BE DONE ACCORDING TO THIS PLAN FOR SEDIMENT AND EROSION CONTROL, AND THAT ALL RESPONSIBLE PERSONNEL INVOLVED IN THE CONSTRUCTION PROJECT WILL HAVE A CERTIFICATE OF ATTENDANCE AT A DEPARTMENT OF THE ENVIRONMENT APPROVED TRAINING PROGRAM FOR THE CONTROL OF SEDIMENT AND EROSION BEFORE BEGINNING THE PROJECT. I ALSO AUTHORIZE PERIODIC ON-SITE INSPECTIONS BY THE HOWARD SOIL CONSERVATION DISTRICT."

[signature] Margaret Adeyokunnu 4-29-11
(Signature of Property Owner/Agent) * (Print Name of Owner/Agent) (Date)

APPROVED: DEPARTMENT OF PLANNING AND ZONING

[signature] 4/23/13
Chief, Development Engineering Division — Date

[signature] 4/30/13
Chief, Division of Land Development — Date

[signature] 5/1/13
Director — Date

KCW Engineering Technologies, Inc.
810 Landmark Drive, Suite 215
Glen Burnie, MD 21061
Phone: 410.768.7700
Fax: 410.768.0200
www.kcw-et.com

Professional Certification.
I hereby certify that these documents were prepared or approved by me, and that I am a duly licensed professional engineer under the laws of the State of Maryland.
License No. 33351.
Expiration Date 06-30-2014.

[signature] 10-01-12

OWNER:
THE REDEEMED CHRISTIAN CHURCH OF GOD, INC.
13701 ANNAPOLIS ROAD
BOWIE, MD 20720

Attn: Margaret Adeyokunnu, Pastor
Tele: (301) 352-0707
Fax: (301) 352-3339

OWNER'S REPRESENTATIVE:
TLI DESIGNGROUP INC.
3308 DORCHESTER ROAD
BALTIMORE, MD 21215
Attn: Taiwo Iluyomade, President

Toll Free/Fax/Voice mail:
(1-866) 616-1497
Mobile: (443) 831-6703

KCW J.O.: 2080018
SCALE: 1" = 20'
DESIGNED: MT
DRAWN: MT
CHECKED: KCA
DATE: OCTOBER 1, 2012
DRAWING NO. **4 OF 19**

GRADING PLAN

VICTORY TEMPLE - LAUREL

WORSHIP CENTER

9100 BURSA ROAD

SDP-12-007
TAX MAP 47, GRID 23
PARCEL 540 (PARCEL A, PLAT #22114)

W&S CONTRACT No. 24-4047-D
ZONING: CE-CLI
ELECTION DISTRICT - 6
HOWARD COUNTY, MARYLAND

SDP-12-007

2011 VEGETATIVE STABILIZATION

B-4 STANDARDS AND SPECIFICATIONS FOR VEGETATIVE STABILIZATION

Definition
Using vegetation as cover to protect exposed soil from erosion.

Purpose
To promote the establishment of vegetation on exposed soil.

Conditions Where Practice Applies
On all disturbed areas not stabilized by other methods. This specification is divided into sections on incremental stabilization; soil preparation, soil amendments and topsoiling; seeding and mulching; temporary stabilization; and permanent stabilization.

Effects on Water Quality and Quantity
Stabilization practices are used to promote the establishment of vegetation on exposed soil. When soil is stabilized with vegetation, the soil is less likely to erode and more likely to allow infiltration of rainfall, thereby reducing sediment loads and runoff to downstream areas.

Planting vegetation in disturbed areas will have an effect on the water budget, especially on volumes and rates of runoff, infiltration, evaporation, transpiration, percolation, and groundwater recharge. Over time, vegetation will increase organic matter content and improve the water holding capacity of the soil and subsequent plant growth.

Vegetation will help reduce the movement of sediment, nutrients, and other chemicals carried by runoff to receiving waters. Plants will also help protect groundwater supplies by assimilating those substances present within the root zone.

Sediment control practices must remain in place during grading, seedbed preparation, seeding, mulching, and vegetative establishment.

Adequate Vegetative Establishment
Inspect seeded areas for vegetative establishment and make necessary repairs, replacements, and reseedings within the planting season.

1. Adequate vegetative stabilization requires 95 percent groundcover.
2. If an area has less than 40 percent groundcover, restabilize following the original recommendations for lime, fertilizer, seedbed preparation, and seeding.
3. If an area has between 40 and 94 percent groundcover, over-seed and fertilize using half of the rates originally specified.
4. Maintenance fertilizer rates for permanent seeding are shown in Table B.6.

B-4-1 STANDARDS AND SPECIFICATIONS FOR INCREMENTAL STABILIZATION

Definition
Establishment of vegetative cover on cut and fill slopes.

Purpose
To provide timely vegetative cover on cut and fill slopes as work progresses.

Conditions Where Practice Applies
Any cut or fill slope greater than 15 feet in height. This practice also applies to stockpiles.

Criteria
A. Incremental Stabilization - Cut Slopes

1. Excavate and stabilize cut slopes in increments not to exceed 15 feet in height. Prepare seedbed and apply seed and mulch on all cut slopes as the work progresses.
2. Construction sequence example (Refer to Figure B.1):
   a. Construct and stabilize all temporary swales or dikes that will be used to convey runoff around the excavation.
   b. Perform Phase 1 excavation, prepare seedbed, and stabilize.
   c. Perform Phase 2 excavation, prepare seedbed, and stabilize. Overseed Phase 1 areas as necessary.
   d. Perform final phase excavation, prepare seedbed, and stabilize. Overseed previously seeded areas as necessary.

Note: Once excavation has begun the operation should be continuous from grubbing through the completion of grading and placement of topsoil (if required) and permanent seed and mulch. Any interruptions in the operation or completing the operation out of the seeding season will necessitate the application of temporary stabilization.

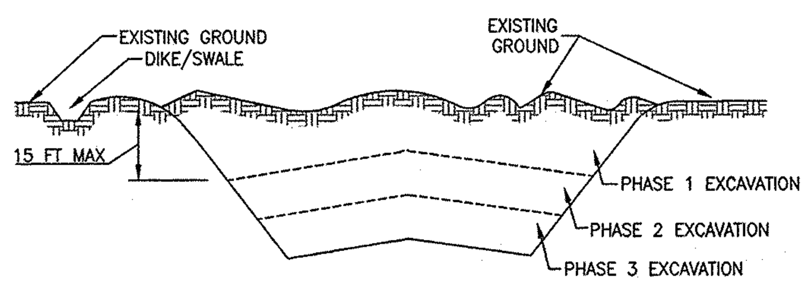

Figure B.1: Incremental Stabilization - Cut

B. Incremental Stabilization - Fill Slopes

1. Construct and stabilize fill slopes in increments not to exceed 15 feet in height. Prepare seedbed and apply seed and mulch on all slopes as the work progresses.
2. Stabilize slopes immediately when the vertical height of a lift reaches 15 feet, or when the grading operation ceases as prescribed in the plans.
3. At the end of each day, install temporary water conveyance practice(s), as necessary, to intercept surface runoff and convey it down the slope in a non-erosive manner.
4. Construction sequence example (Refer to Figure B.2):
   a. Construct and stabilize all temporary swales or dikes that will be used to divert runoff around the fill. Construct silt fence on low side of fill unless other methods shown on the plans address this area.
   b. At the end of each day, install temporary water conveyance practice(s), as necessary, to intercept surface runoff and convey it down the slope in a non-erosive manner.
   c. Place Phase 1 fill, prepare seedbed, and stabilize.
   d. Place Phase 2 fill, prepare seedbed, and stabilize.
   e. Place final phase fill, prepare seedbed, and stabilize. Overseed previously seeded areas as necessary.

Note: Once the placement of fill has begun the operation should be continuous from grubbing through the completion of grading and placement of topsoil (if required) and permanent seed and mulch. Any interruptions in the operation or completing the operation out of the seeding season will necessitate the application of temporary stabilization.

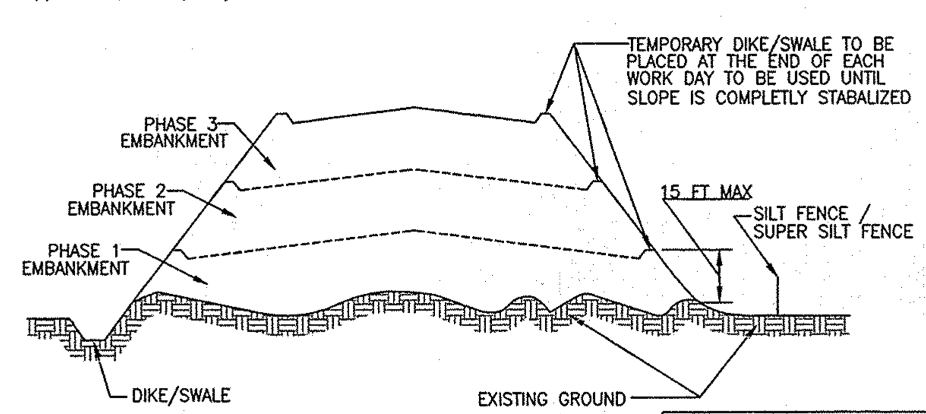

Figure B.2: Incremental Stabilization - Fill

B-4-2 STANDARDS AND SPECIFICATIONS FOR SOIL PREPARATION, TOPSOILING, AND SOIL AMENDMENTS

Definition
The process of preparing the soils to sustain adequate vegetative stabilization.

Purpose
To provide a suitable soil medium for vegetative growth.

Conditions Where Practice Applies
Where vegetative stabilization is to be established.

Criteria

A. Soil Preparation

1. Temporary Stabilization
a. Seedbed preparation consists of loosening soil to a depth of 3 to 5 inches by means of suitable agricultural or construction equipment, such as disc harrows or chisel plows or rippers mounted on construction equipment. After the soil is loosened, it must not be rolled or dragged smooth but left in the roughened condition. Slopes 3:1 or flatter are to be tracked with ridges running parallel to the contour of the slope.
b. Apply fertilizer and lime as prescribed on the plans.
c. Incorporate lime and fertilizer into the top 3 to 5 inches of soil by disking or other suitable means.

2. Permanent Stabilization
   a. A soil test is required for any earth disturbance of 5 acres or more. The minimum soil conditions required for permanent vegetative establishment are:
      i. Soil pH between 6.0 and 7.0.
      ii. Soluble salts less than 500 parts per million (ppm).
      iii. Soil contains less than 40 percent clay but enough fine grained material (greater than 30 percent silt plus clay) to provide the capacity to hold a moderate amount of moisture. An exception: if lovegrass will be planted, then a sandy soil (less than 30 percent silt plus clay) would be acceptable.
      iv. Soil contains 1.5 percent minimum organic matter by weight.
      v. Soil contains sufficient pore space to permit adequate root penetration.
   b. Application of amendments or topsoil is required if on-site soils do not meet the above conditions.
   c. Graded areas must be maintained in a true and even grade as specified on the approved plan, then scarified or otherwise loosened to a depth of 3 to 5 inches.
   d. Apply soil amendments as specified on the approved plan or as indicated by the results of a soil test.
   e. Mix soil amendments into the top 3 to 5 inches of soil by disking or other suitable means. Rake lawn areas to smooth the surface, remove large objects like stones and branches, and ready the area for seed application. Loosen surface soil by dragging with a heavy chain or other equipment to roughen the surface where site conditions will not permit normal seedbed preparation. Track slopes 3:1 or flatter with tracked equipment leaving the soil in an irregular condition with ridges running parallel to the contour of the slope. Leave the top 1 to 3 inches of soil loose and friable. Seedbed loosening may be unnecessary on newly disturbed areas.

B. Topsoiling

1. Topsoil is placed over prepared subsoil prior to establishment of permanent vegetation. The purpose is to provide a suitable soil medium for vegetative growth. Soils of concern have low moisture content, low nutrient levels, low pH, materials toxic to plants, and/or unacceptable soil gradation.

2. Topsoil salvaged from an existing site may be used provided it meets the standards as set forth in these specifications. Typically, the depth of topsoil to be salvaged for a given soil type can be found in the representative soil profile section in the Soil Survey published by USDA-NRCS.

3. Topsoiling is limited to areas having 2:1 or flatter slopes where:
a. The texture of the exposed subsoil/parent material is not adequate to produce vegetative growth.
b. The soil material is so shallow that the rooting zone is not deep enough to support plants or furnish continuing supplies of moisture and plant nutrients.
c. The original soil to be vegetated contains material toxic to plant growth.
d. The soil is so acidic that treatment with limestone is not feasible.

4. Areas having slopes steeper than 2:1 require special consideration and design.

5. Topsoil Specifications: Soil to be used as topsoil must meet the following criteria:
a. Topsoil must be a loam, sandy loam, clay loam, silt loam, sandy clay loam, or loamy sand. Other soils may be used if recommended by an agronomist or soil scientist and approved by the appropriate approval authority. Topsoil must not be a mixture of contrasting textured subsoils and must contain less than 5 percent by volume of cinders, stones, slag, coarse fragments, gravel, sticks, roots, trash, or other materials larger than 1½ inches in diameter.
b. Topsoil must be free of noxious plants or plant parts such as Bermuda grass, quack grass, Johnson grass, nut sedge, poison ivy, thistle, or others as specified.
c. Topsoil substitutes or amendments, as recommended by a qualified agronomist or soil scientist and approved by the appropriate approval authority, may be used in lieu of natural topsoil.

6. Topsoil Application
a. Erosion and sediment control practices must be maintained when applying topsoil.
b. Uniformly distribute topsoil in a 5 to 8 inch layer and lightly compact to a minimum thickness of 4 inches. Spreading is to be performed in such a manner that sodding or seeding can proceed with a minimum of additional soil preparation and tillage. Any irregularities in the surface resulting from topsoiling or other operations must be corrected in order to prevent the formation of depressions or water pockets.
c. Topsoil must not be placed if the topsoil or subsoil is in a frozen or muddy condition, when the subsoil is excessively wet or in a condition that may otherwise be detrimental to proper grading and seedbed preparation.

C. Soil Amendments (Fertilizer and Lime Specifications)

1. Soil tests must be performed to determine the exact ratios and application rates for both lime and fertilizer on sites having disturbed areas of 5 acres or more. Soil analysis may be performed by a recognized private or commercial laboratory. Soil samples taken for engineering purposes may also be used for chemical analyses.
2. Fertilizers must be uniform in composition, free flowing and suitable for accurate application by appropriate equipment. Manure may be substituted for fertilizer with prior approval from the appropriate approval authority. Fertilizers must all be delivered to the site fully labeled according to the applicable laws and must bear the name, trade name or trademark and warranty of the producer.
3. Lime materials must be ground limestone (hydrated or burnt lime may be substituted except when hydroseeding) which contains at least 50 percent total oxides (calcium oxide plus magnesium oxide). Limestone must be ground to such fineness that at least 50 percent will pass through a #100 mesh sieve and 98 to 100 percent will pass through a #20 mesh sieve.
4. Lime and fertilizer are to be evenly distributed and incorporated into the top 3 to 5 inches of soil by disking or other suitable means.
5. Where the subsoil is either highly acidic or composed of heavy clays, spread ground limestone at the rate of 4 to 8 tons/acre (200-400 pounds per 1,000 square feet) prior to the placement of topsoil.

B-4-8 STANDARDS AND SPECIFICATIONS FOR STOCKPILE AREA

Definition
A mound or pile of soil protected by appropriately designed erosion and sediment control measures.

Purpose
To provide a designated location for the temporary storage of soil that controls the potential for erosion, sedimentation, and changes to drainage patterns.

Conditions Where Practice Applies
Stockpile areas are utilized when it is necessary to salvage and store soil for later use.

Criteria
1. The stockpile location and all related sediment control practices must be clearly indicated on the erosion and sediment control plan.
2. The footprint of the stockpile must be sized to accommodate the anticipated volume of material and based on a side slope ratio no steeper than 2:1. Benching must be provided in accordance with Section B-3 Land Grading.
3. Runoff from the stockpile area must drain to a suitable sediment control practice.
4. Access the stockpile area from the upgrade side.
5. Clear water runoff into the stockpile area must be minimized by use of a diversion device such as an earth dike, temporary swale or diversion fence. Provisions must be made for discharging concentrated flow in a non-erosive manner.
6. Where runoff concentrates along the toe of the stockpile fill, an appropriate erosion/sediment control practice must be used to intercept the discharge.
7. Stockpiles must be stabilized in accordance with the 3/7 day stabilization requirement as well as Standard B-4-1 Incremental Stabilization and Standard B-4-4 Temporary Stabilization.
8. If the stockpile is located on an impervious surface, a liner should be provided below the stockpile to facilitate cleanup. Stockpiles containing contaminated material must be covered with impermeable sheeting.

Maintenance
The stockpile area must continuously meet the requirements for Adequate Vegetative Establishment in accordance with Section B-4 Vegetative Stabilization. Side slopes must be maintained at no steeper than a 2:1 ratio. The stockpile area must be kept free of erosion. If the vertical height of a stockpile exceeds 20 feet for 2:1 slopes, 30 feet for 3:1 slopes, or 40 feet for 4:1 slopes, benching must be provided in accordance with Section B-3 Land Grading.

B-4-3 STANDARDS AND SPECIFICATIONS FOR SEEDING AND MULCHING

Definition
The application of seed and mulch to establish vegetative cover.

Purpose
To protect disturbed soils from erosion during and at the end of construction.

Conditions Where Practice Applies
To the surface of all perimeter controls, slopes, and any disturbed area not under active grading.

Criteria
A. Seeding

1. Specifications
a. All seed must meet the requirements of the Maryland State Seed Law. All seed must be subject to re-testing by a recognized seed laboratory. All seed used must have been tested within the 6 months immediately preceding the date of sowing such material on any project. Refer to Table B.4 regarding the quality of seed. Seed tags must be available upon request to the inspector to verify type of seed and seeding rate.
b. Mulch alone may be applied between the fall and spring seeding dates only if the ground is frozen. The appropriate seeding mixture must be applied when the ground thaws.
c. Inoculants: The inoculant for treating legume seed in the seed mixtures must be a pure culture of nitrogen fixing bacteria prepared specifically for the species. Inoculants must not be used later than the date indicated on the container. Add fresh inoculants as directed on the package. Use four times the recommended rate when hydroseeding. Note: It is very important to keep inoculant as cool as possible until used. Temperatures above 75 to 80 degrees Fahrenheit can weaken bacteria and make the inoculant less effective.
d. Sod or seed must not be placed on soil which has been treated with soil sterilants or chemicals used for weed control until sufficient time has elapsed (14 days min.) to permit dissipation of phyto-toxic materials.

2. Application
a. Dry Seeding: This includes use of conventional drop or broadcast spreaders.
i. Incorporate seed into the subsoil at the rates prescribed on Temporary Seeding Table B.1, Permanent Seeding Table B.3, or site-specific seeding summaries.
ii. Apply seed in two directions, perpendicular to each other. Apply half the seeding rate in each direction. Roll the seeded area with a weighted roller to provide good seed to soil contact.
b. Drill or Cultipacker Seeding: Mechanized seeders that apply and cover seed with soil.
i. Cultipacking seeders are required to bury the seed in such a fashion as to provide at least 1/4 inch of soil covering. Seedbed must be firm after planting.
ii. Apply seed in two directions, perpendicular to each other. Apply half the seeding rate in each direction.
c. Hydroseeding: Apply seed uniformly with hydroseeder (slurry includes seed and fertilizer).
i. If fertilizer is being applied at the time of seeding, the application rates should not exceed the following: nitrogen, 100 pounds per acre total of soluble nitrogen; P205 (phosphorous), 200 pounds per acre; K20 (potassium), 200 pounds per acre.
ii. Lime: Use only ground agricultural limestone (up to 3 tons per acre may be applied by hydroseeding). Normally, not more than 2 tons are applied by hydroseeding at any one time. Do not use burnt or hydrated lime when hydroseeding.
iii. Mix seed and fertilizer on site and seed immediately and without interruption.
iv. When hydroseeding do not incorporate seed into the soil.

B. Mulching

1. Mulch Materials (in order of preference)
a. Straw consisting of thoroughly threshed wheat, rye, oat, or barley and reasonably bright in color. Straw is to be free of noxious weed seeds as specified in the Maryland Seed Law and not musty, moldy, caked, decayed, or excessively dusty. Note: Use only sterile straw mulch in areas where one species of grass is desired.

b. Wood Cellulose Fiber Mulch (WCFM) consisting of specially prepared wood cellulose processed into a uniform fibrous physical state.
i. WCFM is to be dyed green or contain a green dye in the package that will provide an appropriate color to facilitate visual inspection of the uniformly spread slurry.
ii. WCFM, including dye, must contain no germination or growth inhibiting factors.
iii. WCFM materials are to be manufactured and processed in such a manner that the wood cellulose fiber mulch will remain in uniform suspension in water under agitation and will blend with seed, fertilizer and other additives to form a homogeneous slurry. The mulch material must form a blotter-like ground cover, on application, having moisture absorption and percolation properties and must cover and hold grass seed in contact with the soil without inhibiting the growth of the grass seedlings.
iv. WCFM material must not contain elements or compounds at concentration levels that will be phyto-toxic.
v. WCFM must conform to the following physical requirements: fiber length of approximately 10 millimeters, diameter approximately 1 millimeter, pH range of 4.0 to 8.5, ash content of 1.6 percent maximum and water holding capacity of 90 percent minimum.

2. Application
a. Apply mulch to all seeded areas immediately after seeding.
b. When straw mulch is used, spread it over all seeded areas at the rate of 2 tons per acre to a uniform loose depth of 1 to 2 inches. Apply mulch to achieve a uniform distribution and depth so that the soil surface is not exposed. When using a mulch anchoring tool, increase the application rate to 2.5 tons per acre.
c. Wood cellulose fiber used as mulch must be applied at a net dry weight of 1500 pounds per acre. Mix the wood cellulose fiber with water to attain a mixture with a maximum of 50 pounds of wood cellulose fiber per 100 gallons of water.
3. Anchoring
a. Perform mulch anchoring immediately following application of mulch to minimize loss by wind or water. This may be done by one of the following methods (listed by preference), depending upon the size of the area and erosion hazard:
i. A mulch anchoring tool is a tractor drawn implement designed to punch and anchor mulch into the soil surface a minimum of 2 inches. This practice is most effective on large areas, but is limited to flatter slopes where equipment can operate safely. If used on sloping land, this practice should follow the contour.
ii. Wood cellulose fiber may be used for anchoring straw. Apply the fiber binder at a net dry weight of 750 pounds per acre. Mix the wood cellulose fiber with water at a maximum of 50 pounds of wood cellulose fiber per 100 gallons of water.
iii. Synthetic binders such as Acrylic DLR (Agro-Tack), DCA-70, Petroset, Terra Tax II, Terra Tack AR or other approved equal may be used. Follow application rates as specified by the manufacturer. Application of liquid binders needs to be heavier at the edges where wind catches mulch, such as in valleys and on crests of banks. Use of asphalt binders is strictly prohibited.
iv. Lightweight plastic netting may be stapled over the mulch according to manufacturer recommendations. Netting is usually available in rolls 4 to 15 feet wide and 300 to 3,000 feet long.

B-4-4 STANDARDS AND SPECIFICATIONS FOR TEMPORARY STABILIZATION

Definition
To stabilize disturbed soils with vegetation for up to 6 months.

Purpose
To use fast growing vegetation that provides cover on disturbed soils.

Conditions Where Practice Applies
Exposed soils where ground cover is needed for a period of 6 months or less. For longer duration of time, permanent stabilization practices are required.

Criteria
1. Select one or more of the species or seed mixtures listed in Table B.1 for the appropriate Plant Hardiness Zone (from Figure B.3), and enter them in the Temporary Seeding Summary below along with application rates, seeding dates and seeding depths. If this Summary is not put on the plan and completed, then Table B.1 plus fertilizer and lime rates must be put on the plan.

2. For sites having soil tests performed, use and show the recommended rates by the testing agency. Soil tests are not required for Temporary Seeding.

3. When stabilization is required outside of a seeding season, apply seed and mulch or straw mulch alone as prescribed in Section B-4-3.A.1.b and maintain until the next seeding season.

TEMPORARY SEEDING SUMMARY

SEED MIXTURE FOR HARDINESS ZONE 6b (From Table B.1)					FERTILIZER RATE * (10-20-10)	LIME RATE *
SPECIES	SEEDING RATES lbs/acre	SEEDING RATES lbs/1000 sf	SEEDING DATES	SEEDING DEPTHS		
ANNUAL RYEGRASS	40	1.0	Mar. 1 to May 15 and Aug. 1 to Oct. 15	1/2"	436 lbs/acre or 10 lbs/1000 sf	2 tons/acre or 90 lbs/1000 sf
CEREAL RYE	112	2.8	Mar. 1 to May 15 and Aug. 1 to Nov. 15	1"		
FOXTAIL MILLET	30	0.7	May 16 to July 31	1/2"		

B-4-5 STANDARDS AND SPECIFICATIONS FOR PERMANENT STABILIZATION

Definition
To stabilize disturbed soils with permanent vegetation.

Purpose
To use long-lived perennial grasses and legumes to establish permanent ground cover on disturbed soils.

Conditions Where Practice Applies
Exposed soils where ground cover is needed for 6 months or more.

Criteria
A. Seed Mixtures

1. General Use
a. Select one or more of the species or mixtures listed in Table B.3 for the appropriate Plant Hardiness Zone (from Figure B.3) and based on the site condition or purpose found on Table B.2. Enter selected mixture(s), application rates, and seeding dates in the Permanent Seeding Summary. The Summary is to be placed on the plan.
b. Additional planting specifications for exceptional sites such as shorelines, stream banks, or dunes or for special purposes such as wildlife or aesthetic treatment may be found in USDA-NRCS Technical Field Office Guide, Section 342 - Critical Area Planting.
c. For sites having disturbed area over 5 acres, use and show the rates recommended by the soil testing agency.
d. For areas receiving low maintenance, apply urea form fertilizer (46-0-0) at 3 ½ pounds per 1000 square feet (150 pounds per acre) at the time of seeding in addition to the soil amendments shown in the Permanent Seeding Summary .

2. Turfgrass Mixtures
a. Areas where turfgrass may be desired include lawns, parks, playgrounds, and commercial sites which will receive a medium to high level of maintenance.
b. Select one or more of the species or mixtures listed below based on the site conditions or purpose. Enter selected mixture(s), application rates, and seeding dates in the Permanent Seeding Summary. The summary is to be placed on the plan.

i. Kentucky Bluegrass: Full Sun Mixture: For use in areas that receive intensive management. Irrigation required in the areas of central Maryland and Eastern Shore. Recommended Certified Kentucky Bluegrass Cultivars Seeding Rate: 1.5 to 2.0 pounds per 1000 square feet. Choose a minimum of three Kentucky bluegrass cultivars with each ranging from 10 to 35 percent of the total mixture by weight.

ii. Kentucky Bluegrass/Perennial Rye: Full Sun Mixture: For use in full sun areas where rapid establishment is necessary and when turf will receive medium to intensive management. Certified Perennial Ryegrass Cultivars/Certified Kentucky Bluegrass Seeding Rate: 2 pounds mixture per 1000 square feet. Choose a minimum of three Kentucky bluegrass cultivars with each ranging from 10 to 35 percent of the total mixture by weight.

iii. Tall Fescue/Kentucky Bluegrass: Full Sun Mixture: For use in drought prone areas and/or for areas receiving low to medium management in full sun to medium shade. Recommended mixture includes; Certified Tall Fescue Cultivars 95 to 100 percent, Certified Kentucky Bluegrass Cultivars 0 to 5 percent. Seeding Rate: 5 to 8 pounds per 1000 square feet. One or more cultivars may be blended.

iv. Kentucky Bluegrass/Fine Fescue: Shade Mixture: For use in areas with shade in Bluegrass lawns. For establishment in high quality, intensively managed turf area. Mixture includes; Certified Kentucky Bluegrass Cultivars 30 to 40 percent and Certified Fine Fescue and 60 to 70 percent. Seeding Rate: 1½ to 3 pounds per 1000 square feet.

Notes:
Select turfgrass varieties from those listed in the most current University of Maryland Publication, Agronomy Memo #77, "Turfgrass Cultivar Recommendations for Maryland" Choose certified material. Certified material is the best guarantee of cultivar purity. The certification program of the Maryland Department of Agriculture, Turf and Seed Section, provides a reliable means of consumer protection and assures a pure genetic line

c. Ideal Times of Seeding for Turf Grass Mixtures

Western MD: March 15 to June 1, August 1 to October 1 (Hardiness Zones: 5b, 6a)

Central MD: March 1 to May 15, August 15 to October 15 (Hardiness Zone: 6b)

Southern MD, Eastern Shore: March 1 to May 15, August 15 to October 15 (Hardiness Zones: 7a, 7b)

d. Till areas to receive seed by disking or other approved methods to a depth of 2 to 4 inches, level and rake the areas to prepare a proper seedbed. Remove stones and debris over 1½ inches in diameter. The resulting seedbed must be in such condition that future mowing of grasses will pose no difficulty.
e. If soil moisture is deficient, supply new seedings with adequate water for plant growth (½ to 1 inch every 3 to 4 days depending on soil texture) until they are firmly established. This is especially true when seedings are made late in the planting season, in abnormally dry or hot seasons, or on adverse sites.

B. Sod: To provide quick cover on disturbed areas (2:1 grade or flatter).

1. General Specifications
a. Class of turfgrass sod must be Maryland State Certified. Sod labels must be made available to the job foreman and inspector.
b. Sod must be machine cut at a uniform soil thickness of 3/4 inch, plus or minus ¼ inch, at the time of cutting. Measurement for thickness must exclude top growth and thatch. Broken pads and torn or uneven ends will not be acceptable.
c. Standard size sections of sod must be strong enough to support their own weight and retain their size and shape when suspended vertically with a firm grasp on the upper 10 percent of the section.
d. Sod must not be harvested or transplanted when moisture content (excessively dry or wet) may adversely affect its survival.
e. Sod must be harvested, delivered, and installed within a period of 36 hours. Sod not transplanted within this period must be approved by an agronomist or soil scientist prior to its installation.

2. Sod Installation
a. During periods of excessively high temperature or in areas having dry subsoil, lightly irrigate the subsoil immediately prior to laying the sod.
b. Lay the first row of sod in a straight line with subsequent rows placed parallel to it and tightly wedged against each other. Stagger lateral joints to promote more uniform growth and strength. Ensure that sod is not stretched or overlapped and that all joints are butted tight in order to prevent voids which would cause air drying of the roots.
c. Wherever possible, lay sod with the long edges parallel to the contour and with staggering joints. Roll and tamp, peg or otherwise secure the sod to prevent slippage on slopes. Ensure solid contact exists between sod roots and the underlying soil surface.
d. Water the sod immediately following rolling and tamping until the underside of the new sod pad and soil surface below the sod are thoroughly wet. Complete the operations of laying, tamping and irrigating for any piece of sod within eight hours.

3. Sod Maintenance
a. In the absence of adequate rainfall, water daily during the first week or as often and sufficiently as necessary to maintain moist soil to a depth of 4 inches. Water sod during the heat of the day to prevent wilting.
b. After the first week, sod watering is required as necessary to maintain adequate moisture content.
c. Do not mow until the sod is firmly rooted. No more than 1/3 of the grass leaf must be removed by the initial cutting or subsequent cuttings. Maintain a grass height of at least 3 inches unless otherwise specified.

PERMANENT SEEDING SUMMARY

SEED MIXTURE FOR HARDINESS ZONE 6b (From Table B.3)					FERTILIZER RATE* (10-20-20)			LIME RATE*
NO.	SPECIES	APPLIC. RATE lbs/acre	SEEDING DATES	SEEDING DEPTHS	N	P2O5	K2O	
8	SEED MIXTURE: TALL FESCUE (100%)	100	March 1 to May 15; Aug. 1 to Oct. 15	1/4" to 1/2"	45 lbs/acre or 1.0 lbs/1000 sf	90 lbs/acre or 2.0 lbs/1000 sf	90 lbs/acre or 2.0 lbs/1000 sf	2 tons/acre or 90 lbs/1000 sf
iii	TURFGRASS MIXTURE: TALL FESCUE (95%) KENTUCKY BLUEGRASS (5%)	250 13	March 1 to May 15; Aug. 15 to Oct. 15	1/4" to 1/2"				

* FERTILIZER AND LIME RATES FOR FINAL STABILIZATION SHALL BE BASED ON SOIL TEST. A COPY OF THE RECOMMENDED RATES SHALL BE FURNISHED TO THE SEDIMENT CONTROL INSPECTOR.

** FOR DATES BETWEEN 5/16-7/31 ADD 5 LB/AC OF EITHER FOXTAIL MILLET OR PEARL MILLET TO SEED MIX #8 ABOVE.

*** FOR DATES BETWEEN 5/16-8/14 ADD 13 LB/AC OF EITHER FOXTAIL MILLET OR PEARL MILLET TO SEED MIX #iii ABOVE.

**** DURING THE PERIOD OF OCTOBER 16 THROUGH FEBRUARY 28, PROTECT SITE BY: OPTION (1) 2 TONS PER ACRE OF WELL ANCHORED STRAW MULCH AND SEED AS SOON AS POSSIBLE IN THE SPRING. OPTION (2) USE SOD. OPTION (3) SEED WITH 100 LBS/ACRE KENTUCKY 31 TALL FESCUE AND MULCH WITH 2 TONS/ACRE WELL ANCHORED STRAW. MULCHING: APPLY 1-1/2 TO 2 TONS PER ACRE (70 TO 90 LBS/1000 SF) OF UNROTTED SMALL GRAIN STRAW IMMEDIATELY AFTER SEEDING. ANCHOR MULCH IMMEDIATELY AFTER APPLICATION USING MULCH ANCHORING TOOL OR 218 GAL PER ACRE (5 GAL/1000 SF) OF EMULSIFIED ASPHALT ON FLAT AREAS. ON SLOPES 8 FEET OR HIGHER, USE 348 GAL PER ACRE (8 GAL/1000 SF) FOR ANCHORING. MAINTENANCE: INSPECT ALL SEEDING AREAS AND MAKE NEEDED REPAIRS, REPLACEMENTS AND RESEEDINGS.

H-1 STANDARDS AND SPECIFICATIONS

FOR

MATERIALS

Table H.1: Geotextile Fabrics

PROPERTY	TEST METHOD	WOVEN SLIT FILM GEOTEXTILE MD	WOVEN SLIT FILM GEOTEXTILE CD	WOVEN MONOFILAMENT GEOTEXTILE MD	WOVEN MONOFILAMENT GEOTEXTILE CD	NONWOVEN GEOTEXTILE MD	NONWOVEN GEOTEXTILE CD
		MINIMUM AVERAGE ROLL VALUE[1]					
Grab Tensile Strength	ASTM D-4632	200 lb	200 lb	370 lb	250 lb	200 lb	200 lb
Grab Tensile Elongation	ASTM D-4632	15%	10%	15%	15%	50%	50%
Trapezoidal Tear Strength	ASTM D-4533	75 lb	75 lb	100 lb	60 lb	80 lb	80 lb
Puncture Strength	ASTM D-6241	450 lb		900 lb		450 lb	
Apparent Opening Size[2]	ASTM D-4751	U.S. Sieve 30 (0.59 mm)		U.S. Sieve 70 (0.21 mm)		U.S. Sieve 70 (0.21 mm)	
Permittivity	ASTM D-4491	0.05 sec^{-1}		0.28 sec^{-1}		1.1 sec^{-1}	
Ultraviolet Resistance Retained at 500 hours	ASTM D-4355	70% strength		70% strength		70% strength	

[1] All numeric values except apparent opening size (AOS) represent minimum average roll values (MARV). MARV is calculated as the typical minus two standard deviations. MD is machine direction; CD is cross direction.

[2] Values for AOS represent the average maximum opening.

Geotextiles must be evaluated by the National Transportation Product Evaluation Program (NTPEP) and conform to the values in Table H.1.

The geotextile must be inert to commonly encountered chemicals and hydrocarbons and must be rot and mildew resistant. The geotextile must be manufactured from fibers consisting of long chain synthetic polymers and composed of a minimum of 95 percent by weight of polyolefins or polyesters, and formed into a stable network so the filaments or yarns retain their dimensional stability relative to each other, including selvages.

When more than one section of geotextile is necessary, overlap the sections by at least one foot. The geotextile must be pulled taut over the applied surface. Equipment must not run over exposed fabric. When placing riprap on geotextile, do not exceed a one foot drop height.

Table H.2: Stone Size

TYPE	SIZE RANGE	d_{50}	d_{100}	AASHTO	MIDSIZE WEIGHT[3]
NUMBER 57[1]	3/8 to 1 ½ inch	½ in	1 ½ in	M-43	N/A
NUMBER 1	2 to 3 inch	2 ½ in	3 in	M-43	N/A
RIPRAP[2] (CLASS 0)	4 to 7 inch	5 ½ in	7 in	N/A	N/A
CLASS I	N/A	9 ½ in	15 in	N/A	40 lb
CLASS II	N/A	16 in	24 in	N/A	200 lb
CLASS III	N/A	23 in	34 in	N/A	600 lb

[1] This classification is to be used on the upstream face of stone outlets and check dams.

[2] This classification is to be used for gabions.

[3] Optimum gradation is 50 percent of the stone being above and 50 percent below the midsize.

Stone must be composed of a well graded mixture of stone sized so that fifty (50) percent of the pieces by weight are larger than the size determined by using the charts. A well graded mixture, as used herein, is defined as a mixture composed primarily of larger stone sizes but with a sufficient mixture of other sizes to fill the smaller voids between the stones. The diameter of the largest stone in such a mixture must not exceed the respective d_{100} selected from Table H.2. The d_{50} refers to the median diameter of the stone. This is the size for which 50 percent, by weight, will be smaller and 50 percent will be larger.

Note: Recycled concrete equivalent may be substituted for all stone classifications for temporary control measures only. Concrete broken into the sizes meeting the appropriate classification, containing no steel reinforcement, and having a minimum density of 150 pounds per cubic foot may be used as an equivalent.

ENGINEER'S CERTIFICATE:
"I CERTIFY THAT THIS PLAN FOR SEDIMENT AND EROSION CONTROL REPRESENTS A PRACTICAL AND WORKABLE PLAN BASED ON MY PERSONAL KNOWLEDGE OF THE SITE CONDITIONS AND THAT IT WAS PREPARED IN ACCORDANCE WITH THE REQUIREMENTS OF THE HOWARD SOIL CONSERVATION DISTRICT."

Mark Tsitlik — MARK TSITLIK, P.E. — 03/06/14 DATE

DEVELOPER'S CERTIFICATE:
"I/WE CERTIFY THAT ALL DEVELOPMENT AND CONSTRUCTION WILL BE DONE ACCORDING TO THIS PLAN FOR SEDIMENT AND EROSION CONTROL, AND THAT ALL RESPONSIBLE PERSONNEL INVOLVED IN THE CONSTRUCTION PROJECT WILL HAVE A CERTIFICATE OF ATTENDANCE AT A DEPARTMENT OF THE ENVIRONMENT APPROVED TRAINING PROGRAM FOR THE CONTROL OF SEDIMENT AND EROSION BEFORE BEGINNING THE PROJECT. I ALSO AUTHORIZE PERIODIC ON-SITE INSPECTIONS BY THE HOWARD SOIL CONSERVATION DISTRICT."

Adeyokunnu — Margaret Adeyokunnu — 4-29-11
(Signature of Property Owner/Agent) * (Print Name of Owner/Agent) (Date)

THIS DEVELOPMENT PLAN IS APPROVED FOR SOIL EROSION AND SEDIMENT CONTROL BY THE HOWARD SOIL CONSERVATION DISTRICT.

John R Robertson — HOWARD SCD — 3/27/14 DATE

APPROVED: DEPARTMENT OF PLANNING AND ZONING

Chief, Development Engineering Division — 4.3.14 — Date

Chief, Division of Land Development — 4/04/14 — Date

Director — 4/8/14 — Date

Professional Certification.
I hereby certify that these documents were prepared or approved by me, and that I am a duly licensed professional engineer under the laws of the State of Maryland.
License No. 33351.
Expiration Date 06-30-2014.

KCW ENGINEERING TECHNOLOGIES

KCW Engineering Technologies, Inc.
810 Landmark Drive, Suite 215
Glen Burnie, MD 21061
Phone: 410.768.7700
Fax: 410.768.0200
www.kcw-et.com

STATE OF MARYLAND — MARK TSITLIK — 33351 — PROFESSIONAL ENGINEER
03/06/14

REVISIONS

NO.	DATE	DESCRIPTION
1	03-06-14	SHOW TWO-PHASE CONSTRUCTION, UPDATE TO 2011 MDE ESC SPECS

OWNER:
THE REDEEMED CHRISTIAN CHURCH OF GOD, INC.
13701 ANNAPOLIS ROAD
BOWIE, MD 20720

Attn: Margaret Adeyokunnu, Pastor
Tele: (301) 352-0707
Fax: (301) 352-3339

OWNER'S REPRESENTATIVE:
TLI DESIGNGROUP INC.
3308 DORCHESTER ROAD
BALTIMORE, MD 21215
Attn: Taiwo Iluyomade, President

Toll Free/Fax/Voice mail:
(1-866) 616-1497
Mobile: (443) 831-6703

KCW J.O.: 2080018
SCALE: AS SHOWN
DESIGNED: MT
DRAWN: MT
CHECKED: KCA
DATE: MARCH 6, 2014
DRAWING NO.
6 OF 19

SEDIMENT CONTROL DETAILS I

VICTORY TEMPLE - LAUREL
WORSHIP CENTER
9100 BURSA ROAD

SDP-12-007
TAX MAP 47, GRID 23
PARCEL 540 (PARCEL A, PLAT #22114)

W&S CONTRACT No. 24-4047-D
ZONING: CE-CLI
ELECTION DISTRICT - 6
HOWARD COUNTY, MARYLAND

SDP-12-007

DETAIL E-1 SILT FENCE

STANDARD SYMBOL: SF

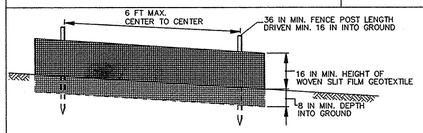

ELEVATION

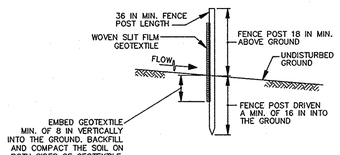

CROSS SECTION

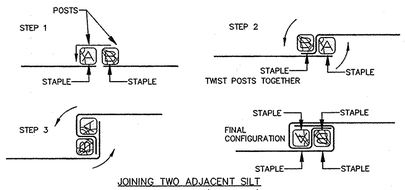

JOINING TWO ADJACENT SILT FENCE SECTIONS (TOP VIEW)

1 OF 2

MARYLAND STANDARDS AND SPECIFICATIONS FOR SOIL EROSION AND SEDIMENT CONTROL

U.S. DEPARTMENT OF AGRICULTURE NATURAL RESOURCES CONSERVATION SERVICE	2011	MARYLAND DEPARTMENT OF ENVIRONMENT WATER MANAGEMENT ADMINISTRATION

DETAIL E-1 SILT FENCE

STANDARD SYMBOL: SF

CONSTRUCTION SPECIFICATIONS

1. USE WOOD POSTS 1¾ X 1¾ ± ⅛ INCH (MINIMUM) SQUARE CUT OF SOUND QUALITY HARDWOOD. AS AN ALTERNATIVE TO WOODEN POST USE STANDARD "T" OR "U" SECTION STEEL POSTS WEIGHING NOT LESS THAN 1 POUND PER LINEAR FOOT.
2. USE 36 INCH MINIMUM POSTS DRIVEN 16 INCH MINIMUM INTO GROUND NO MORE THAN 6 FEET APART.
3. USE WOVEN SLIT FILM GEOTEXTILE AS SPECIFIED IN SECTION H-1 MATERIALS AND FASTEN GEOTEXTILE SECURELY TO UPSLOPE SIDE OF FENCE POSTS WITH WIRE TIES OR STAPLES AT TOP AND MID-SECTION.
4. PROVIDE MANUFACTURER CERTIFICATION TO THE AUTHORIZED REPRESENTATIVE OF THE INSPECTION/ENFORCEMENT AUTHORITY SHOWING THAT THE GEOTEXTILE USED MEETS THE REQUIREMENTS IN SECTION H-1 MATERIALS.
5. EMBED GEOTEXTILE A MINIMUM OF 8 INCHES VERTICALLY INTO THE GROUND. BACKFILL AND COMPACT THE SOIL ON BOTH SIDES OF FABRIC.
6. WHERE TWO SECTIONS OF GEOTEXTILE ADJOIN: OVERLAP, TWIST, AND STAPLE TO POST IN ACCORDANCE WITH THIS DETAIL.
7. EXTEND BOTH ENDS OF THE SILT FENCE A MINIMUM OF FIVE HORIZONTAL FEET UPSLOPE AT 45 DEGREES TO THE MAIN FENCE ALIGNMENT TO PREVENT RUNOFF FROM GOING AROUND THE ENDS OF THE SILT FENCE.
8. REMOVE ACCUMULATED SEDIMENT AND DEBRIS WHEN BULGES DEVELOP IN SILT FENCE OR WHEN SEDIMENT REACHES 25% OF FENCE HEIGHT. REPLACE GEOTEXTILE IF TORN. IF UNDERMINING OCCURS, REINSTALL FENCE.

2 OF 2

MARYLAND STANDARDS AND SPECIFICATIONS FOR SOIL EROSION AND SEDIMENT CONTROL

U.S. DEPARTMENT OF AGRICULTURE NATURAL RESOURCES CONSERVATION SERVICE	2011	MARYLAND DEPARTMENT OF ENVIRONMENT WATER MANAGEMENT ADMINISTRATION

DETAIL E-3 SUPER SILT FENCE

STANDARD SYMBOL: SSF

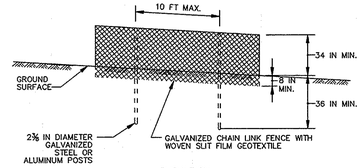

ELEVATION

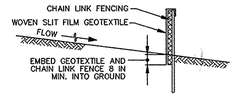

CROSS SECTION

CONSTRUCTION SPECIFICATIONS

1. INSTALL 2⅜ INCH DIAMETER GALVANIZED STEEL POSTS OF 0.095 INCH WALL THICKNESS AND SIX FOOT LENGTH SPACED NO FURTHER THAN 10 FEET APART. DRIVE THE POSTS A MINIMUM OF 36 INCHES INTO THE GROUND.
2. FASTEN 9 GAUGE OR HEAVIER GALVANIZED CHAIN LINK FENCE (2⅜ INCH MAXIMUM OPENING) 42 INCHES IN HEIGHT SECURELY TO THE FENCE POSTS WITH WIRE TIES OR HOG RINGS.
3. FASTEN WOVEN SLIT FILM GEOTEXTILE AS SPECIFIED IN SECTION H-1 MATERIALS, SECURELY TO THE UPSLOPE SIDE OF CHAIN LINK FENCE WITH TIES SPACED EVERY 24 INCHES AT THE TOP AND MID SECTION. EMBED GEOTEXTILE AND CHAIN LINK FENCE A MINIMUM OF 8 INCHES INTO THE GROUND.
4. WHERE ENDS OF THE GEOTEXTILE COME TOGETHER, THE ENDS SHALL BE OVERLAPPED BY 6 INCHES, FOLDED, AND STAPLED TO PREVENT SEDIMENT BY PASS.
5. EXTEND BOTH ENDS OF THE SUPER SILT FENCE A MINIMUM OF FIVE HORIZONTAL FEET UPSLOPE AT 45 DEGREES TO THE MAIN FENCE ALIGNMENT TO PREVENT RUNOFF FROM GOING AROUND THE ENDS OF THE SUPER SILT FENCE.
6. PROVIDE MANUFACTURER CERTIFICATION TO THE INSPECTION/ENFORCEMENT AUTHORITY SHOWING THAT GEOTEXTILE USED MEETS THE REQUIREMENTS IN SECTION H-1 MATERIALS.
7. REMOVE ACCUMULATED SEDIMENT AND DEBRIS WHEN BULGES DEVELOP IN FENCE OR WHEN SEDIMENT REACHES 25% OF FENCE HEIGHT. REPLACE GEOTEXTILE IF TORN. IF UNDERMINING OCCURS, REINSTALL CHAIN LINK FENCING AND GEOTEXTILE.

MARYLAND STANDARDS AND SPECIFICATIONS FOR SOIL EROSION AND SEDIMENT CONTROL

U.S. DEPARTMENT OF AGRICULTURE NATURAL RESOURCES CONSERVATION SERVICE	2011	MARYLAND DEPARTMENT OF ENVIRONMENT WATER MANAGEMENT ADMINISTRATION

DETAIL E-9-2 AT-GRADE INLET PROTECTION

STANDARD SYMBOL: AGIP

MAXIMUM DRAINAGE AREA = 1 ACRE

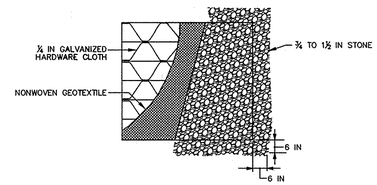

PLAN / CUT AWAY VIEW

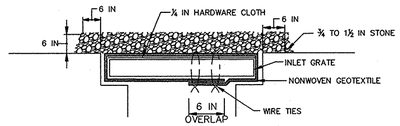

CROSS SECTION

CONSTRUCTION SPECIFICATIONS

1. USE NONWOVEN GEOTEXTILE AS SPECIFIED IN SECTION H-1 MATERIALS.
2. LIFT GRATE AND WRAP WITH NONWOVEN GEOTEXTILE TO COMPLETELY COVER ALL OPENINGS. SECURE WITH WIRE TIES AND SET GRATE BACK IN PLACE.
3. PLACE CLEAN ¾ TO 1½ INCH STONE OR EQUIVALENT RECYCLED CONCRETE 6 INCHES THICK ON THE GRATE.
4. STORM DRAIN INLET PROTECTION REQUIRES FREQUENT MAINTENANCE. REMOVE ACCUMULATED SEDIMENT AFTER EACH RAIN EVENT TO MAINTAIN FUNCTION AND AVOID PREMATURE CLOGGING. IF INLET PROTECTION DOES NOT COMPLETELY DRAIN WITHIN 24 HOURS AFTER A STORM EVENT, IT IS CLOGGED. WHEN THIS OCCURS, REMOVE ACCUMULATED SEDIMENT AND CLEAN, OR REPLACE GEOTEXTILE AND STONE.

MARYLAND STANDARDS AND SPECIFICATIONS FOR SOIL EROSION AND SEDIMENT CONTROL

U.S. DEPARTMENT OF AGRICULTURE NATURAL RESOURCES CONSERVATION SERVICE	2011	MARYLAND DEPARTMENT OF ENVIRONMENT WATER MANAGEMENT ADMINISTRATION

DETAIL B-1 STABILIZED CONSTRUCTION ENTRANCE

STANDARD SYMBOL: SCE

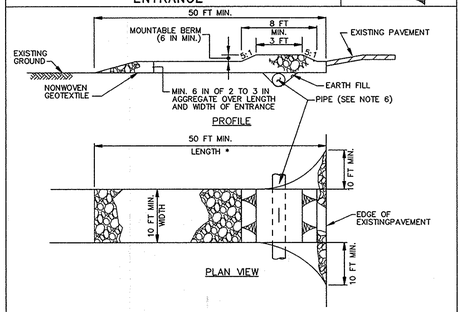

PROFILE

PLAN VIEW

CONSTRUCTION SPECIFICATIONS

1. PLACE STABILIZED CONSTRUCTION ENTRANCE IN ACCORDANCE WITH THE APPROVED PLAN. VEHICLES MUST TRAVEL OVER THE ENTIRE LENGTH OF THE SCE. USE MINIMUM LENGTH OF 50 FEET (*)30 FEET FOR SINGLE RESIDENCE LOT). USE MINIMUM WIDTH OF 10 FEET. FLARE SCE 10 FEET MINIMUM AT THE EXISTING ROAD TO PROVIDE A TURNING RADIUS.
2. PIPE ALL SURFACE WATER FLOWING TO OR DIVERTED TOWARD THE SCE UNDER THE ENTRANCE, MAINTAINING POSITIVE DRAINAGE. PROTECT PIPE INSTALLED THROUGH THE SCE WITH A MOUNTABLE BERM WITH 5:1 SLOPES AND A MINIMUM OF 12 INCHES OF STONE OVER THE PIPE. PROVIDE PIPE AS SPECIFIED ON APPROVED PLAN. WHEN THE SCE IS LOCATED AT A HIGH SPOT AND HAS NO DRAINAGE TO CONVEY, A PIPE IS NOT NECESSARY. A MOUNTABLE BERM IS REQUIRED WHEN SCE IS NOT LOCATED AT A HIGH SPOT.
3. PREPARE SUBGRADE AND PLACE NONWOVEN GEOTEXTILE, AS SPECIFIED IN SECTION H-1 MATERIALS.
4. PLACE CRUSHED AGGREGATE (2 TO 3 INCHES IN SIZE) OR EQUIVALENT RECYCLED CONCRETE (WITHOUT REBAR) AT LEAST 6 INCHES DEEP OVER THE LENGTH AND WIDTH OF THE SCE.
5. MAINTAIN ENTRANCE IN A CONDITION THAT MINIMIZES TRACKING OF SEDIMENT. ADD STONE OR MAKE OTHER REPAIRS AS CONDITIONS DEMAND TO MAINTAIN CLEAN SURFACE, MOUNTABLE BERM, AND SPECIFIED DIMENSIONS. IMMEDIATELY REMOVE STONE AND/OR SEDIMENT SPILLED, DROPPED, OR TRACKED ONTO ADJACENT ROADWAY BY VACUUMING, SCRAPING, AND/OR SWEEPING. WASHING ROADWAY TO REMOVE MUD TRACKED ONTO PAVEMENT IS NOT ACCEPTABLE UNLESS WASH WATER IS DIRECTED TO AN APPROVED SEDIMENT CONTROL PRACTICE.

MARYLAND STANDARDS AND SPECIFICATIONS FOR SOIL EROSION AND SEDIMENT CONTROL

U.S. DEPARTMENT OF AGRICULTURE NATURAL RESOURCES CONSERVATION SERVICE	2011	MARYLAND DEPARTMENT OF ENVIRONMENT WATER MANAGEMENT ADMINISTRATION

DETAIL F-2 SUMP PIT

STANDARD SYMBOL: SP

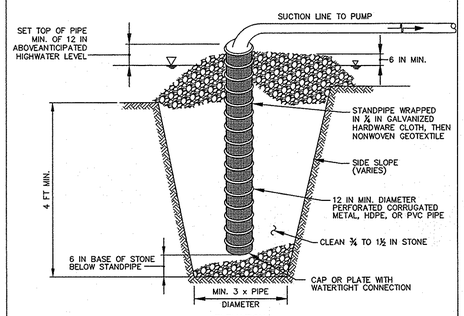

ELEVATION

CONSTRUCTION SPECIFICATIONS

1. USE 12 INCH OR LARGER DIAMETER CORRUGATED METAL, HDPE, OR PVC PIPE WITH 1 INCH DIAMETER PERFORATIONS, 6 INCHES ON CENTER. BOTTOM OF PIPE MUST BE CAPPED WITH WATERTIGHT SEAL.
2. WRAP PIPE WITH ¼ INCH GALVANIZED HARDWARE CLOTH AND WRAP NONWOVEN GEOTEXTILE, AS SPECIFIED IN SECTION H-1 MATERIALS, OVER THE HARDWARE CLOTH.
3. EXCAVATE PIT TO THREE TIMES THE PIPE DIAMETER AND FOUR FEET IN DEPTH. PLACE ¾ TO 1½ INCH STONE OR EQUIVALENT RECYCLED CONCRETE, 6 INCHES IN DEPTH PRIOR TO PIPE PLACEMENT.
4. SET TOP OF PIPE MINIMUM 12 INCHES ABOVE ANTICIPATED WATER SURFACE ELEVATION.
5. BACKFILL PIT AROUND THE PIPE WITH ¾ TO 1½ INCH CLEAN STONE OR EQUIVALENT RECYCLED CONCRETE AND EXTEND STONE A MINIMUM OF 6 INCHES ABOVE ANTICIPATED WATER SURFACE ELEVATION.
6. DISCHARGE TO A STABLE AREA AT A NONEROSIVE RATE.
7. A SUMP PIT REQUIRES FREQUENT MAINTENANCE. IF SYSTEM CLOGS, REMOVE PERFORATED PIPE AND REPLACE GEOTEXTILE AND STONE. KEEP POINT OF DISCHARGE FREE OF EROSION.

MARYLAND STANDARDS AND SPECIFICATIONS FOR SOIL EROSION AND SEDIMENT CONTROL

U.S. DEPARTMENT OF AGRICULTURE NATURAL RESOURCES CONSERVATION SERVICE	2011	MARYLAND DEPARTMENT OF ENVIRONMENT WATER MANAGEMENT ADMINISTRATION

DETAIL D-4-1-C ROCK OUTLET PROTECTION III

STANDARD SYMBOL: ROPIII

DISCHARGE TO AN UNCONFINED CHANNEL OR FLAT AREA

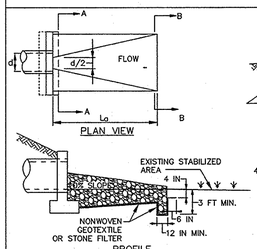

PLAN VIEW

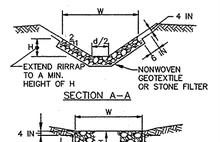

SECTION A-A

PROFILE

SECTION B-B

RIPRAP	
CLASS	THICKNESS (T)
I	19 IN
II	32 IN
III	46 IN

CONSTRUCTION SPECIFICATIONS

1. RIPRAP AND STONE MUST CONFORM TO THE SPECIFIED CLASS.
2. USE NONWOVEN GEOTEXTILE, AS SPECIFIED IN SECTION H-1 MATERIALS, AND PROTECT FROM PUNCTURING, CUTTING, OR TEARING. REPAIR ANY DAMAGE OTHER THAN AN OCCASIONAL SMALL HOLE BY PLACING ANOTHER PIECE OF GEOTEXTILE OVER THE DAMAGED PART OR BY COMPLETELY REPLACING THE GEOTEXTILE. PROVIDE A MINIMUM OF ONE FOOT OVERLAP FOR ALL REPAIRS AND FOR JOINING TWO PIECES OF GEOTEXTILE TOGETHER.
3. PREPARE THE SUBGRADE FOR GEOTEXTILE OR STONE FILTER (⅜ TO 1½ INCH MINIMUM STONE FOR 6 INCH MINIMUM DEPTH) AND RIPRAP TO THE REQUIRED LINES AND GRADES. COMPACT ANY FILL REQUIRED IN THE SUBGRADE TO A DENSITY OF APPROXIMATELY THAT OF THE SURROUNDING UNDISTURBED MATERIAL.
4. EXTEND GEOTEXTILE AT LEAST 6 INCHES BEYOND EDGES OF RIPRAP AND EMBED AT LEAST 4 INCHES AT SIDES OF RIPRAP.
5. CONSTRUCT RIPRAP OUTLET TO FULL COURSE THICKNESS IN ONE OPERATION AND IN SUCH A MANNER AS TO AVOID DISPLACEMENT OF UNDERLYING MATERIALS. PLACE STONE FOR RIPRAP OUTLET IN A MANNER THAT WILL ENSURE THAT IT IS REASONABLY HOMOGENOUS WITH THE SMALLER STONES AND SPALLS FILLING THE VOIDS BETWEEN THE LARGER STONES. PLACE RIPRAP IN A MANNER TO PREVENT DAMAGE TO THE FILTER BLANKET OR GEOTEXTILE. HAND PLACE TO THE EXTENT NECESSARY.
6. WHERE NO ENDWALL IS USED, CONSTRUCT THE UPSTREAM END OF THE APRON SO THAT THE WIDTH IS TWO TIMES THE DIAMETER OF THE OUTLET PIPE, AND EXTEND THE STONE UNDER THE OUTLET BY A MINIMUM OF 18 INCHES.
7. CONSTRUCT APRON WITH 0% SLOPE ALONG ITS LENGTH AND WITHOUT OBSTRUCTIONS. PLACE STONE SO THAT IT BLENDS IN WITH EXISTING GROUND.
8. MAINTAIN LINE, GRADE, AND CROSS SECTION. KEEP OUTLET FREE OF EROSION. REMOVE ACCUMULATED SEDIMENT AND DEBRIS. AFTER HIGH FLOWS INSPECT FOR SCOUR AND RIPRAP DISLODGED RIPRAP. MAKE NECESSARY REPAIRS IMMEDIATELY.

MARYLAND STANDARDS AND SPECIFICATIONS FOR SOIL EROSION AND SEDIMENT CONTROL

U.S. DEPARTMENT OF AGRICULTURE NATURAL RESOURCES CONSERVATION SERVICE	2011	MARYLAND DEPARTMENT OF ENVIRONMENT WATER MANAGEMENT ADMINISTRATION

ROP III SIZING

NO.	LENGTH	WIDTH	WIDTH/2	CLASS	d50 STONE	T
1	17'	19.5'	9.75'	I	9.5"	19"

ENGINEER'S CERTIFICATE:

"I CERTIFY THAT THIS PLAN FOR SEDIMENT AND EROSION CONTROL REPRESENTS A PRACTICAL AND WORKABLE PLAN BASED ON MY PERSONAL KNOWLEDGE OF THE SITE CONDITIONS AND THAT IT WAS PREPARED IN ACCORDANCE WITH THE REQUIREMENTS OF THE HOWARD SOIL CONSERVATION DISTRICT."

Mark Tsitlik — 03/06/14

MARK TSITLIK, P.E. — DATE

DEVELOPER'S CERTIFICATE:

"I/WE CERTIFY THAT ALL DEVELOPMENT AND CONSTRUCTION WILL BE DONE ACCORDING TO THIS PLAN FOR SEDIMENT AND EROSION CONTROL, AND THAT ALL RESPONSIBLE PERSONNEL INVOLVED IN THE CONSTRUCTION PROJECT WILL HAVE A CERTIFICATE OF ATTENDANCE AT A DEPARTMENT OF THE ENVIRONMENT APPROVED TRAINING PROGRAM FOR THE CONTROL OF SEDIMENT AND EROSION BEFORE BEGINNING THE PROJECT. I ALSO AUTHORIZE PERIODIC ON-SITE INSPECTIONS BY THE HOWARD SOIL CONSERVATION DISTRICT."

Margaret Adeyokunnu — 4-29-11

(Signature of Property Owner/Agent) * (Print Name of Owner/Agent) (Date)

THIS DEVELOPMENT PLAN IS APPROVED FOR SOIL EROSION AND SEDIMENT CONTROL BY THE HOWARD SOIL CONSERVATION DISTRICT.

John R. Robertson — 3/27/14

HOWARD SCD — DATE

APPROVED: DEPARTMENT OF PLANNING AND ZONING

Chief, Development Engineering Division — 4.3.14 — Date

Chief, Division of Land Development — 4/04/14 — Date

Director — 4/8/14 — Date

Professional Certification. I hereby certify that these documents were prepared or approved by me, and that I am a duly licensed professional engineer under the laws of the State of Maryland. License No. 33351. Expiration Date 06-30-2014.

KCW ENGINEERING TECHNOLOGIES

KCW Engineering Technologies, Inc.
810 Landmark Drive, Suite 215
Glen Burnie, MD 21061
Phone: 410.768.7700
Fax: 410.768.0200
www.kcw-et.com

STATE OF MARYLAND — MARK TSITLIK — 33351 — PROFESSIONAL ENGINEER — 03/06/14

REVISIONS

NO.	DATE	DESCRIPTION
1	03-06-14	SHOW TWO-PHASE CONSTRUCTION, UPDATE TO 2011 MDE ESC SPECS

OWNER:

THE REDEEMED CHRISTIAN CHURCH OF GOD, INC.
13701 ANNAPOLIS ROAD
BOWIE, MD 20720

Attn: Margaret Adeyokunnu, Pastor
Tele: (301) 352-0707
Fax: (301) 352-3339

OWNER'S REPRESENTATIVE:

TLI DESIGNGROUP INC.
3308 DORCHESTER ROAD
BALTIMORE, MD 21215

Attn: Taiwo Iluyomade, President

Toll Free/Fax/Voice mail:
(1-866) 616-1497
Mobile: (443) 831-6703

KCW J.O.:	2080018
SCALE:	AS SHOWN
DESIGNED:	MT
DRAWN:	MT
CHECKED:	KCA
DATE:	MARCH 6, 2014
DRAWING NO.	6A OF 19

SEDIMENT CONTROL DETAILS II

VICTORY TEMPLE - LAUREL

WORSHIP CENTER

9100 BURSA ROAD

SDP-12-007
TAX MAP 47, GRID 23
PARCEL 540 (PARCEL A, PLAT #22114)

W&S CONTRACT No. 24-4047-D
ZONING: CE-CLI
ELECTION DISTRICT - 6
HOWARD COUNTY, MARYLAND

SDP-12-007

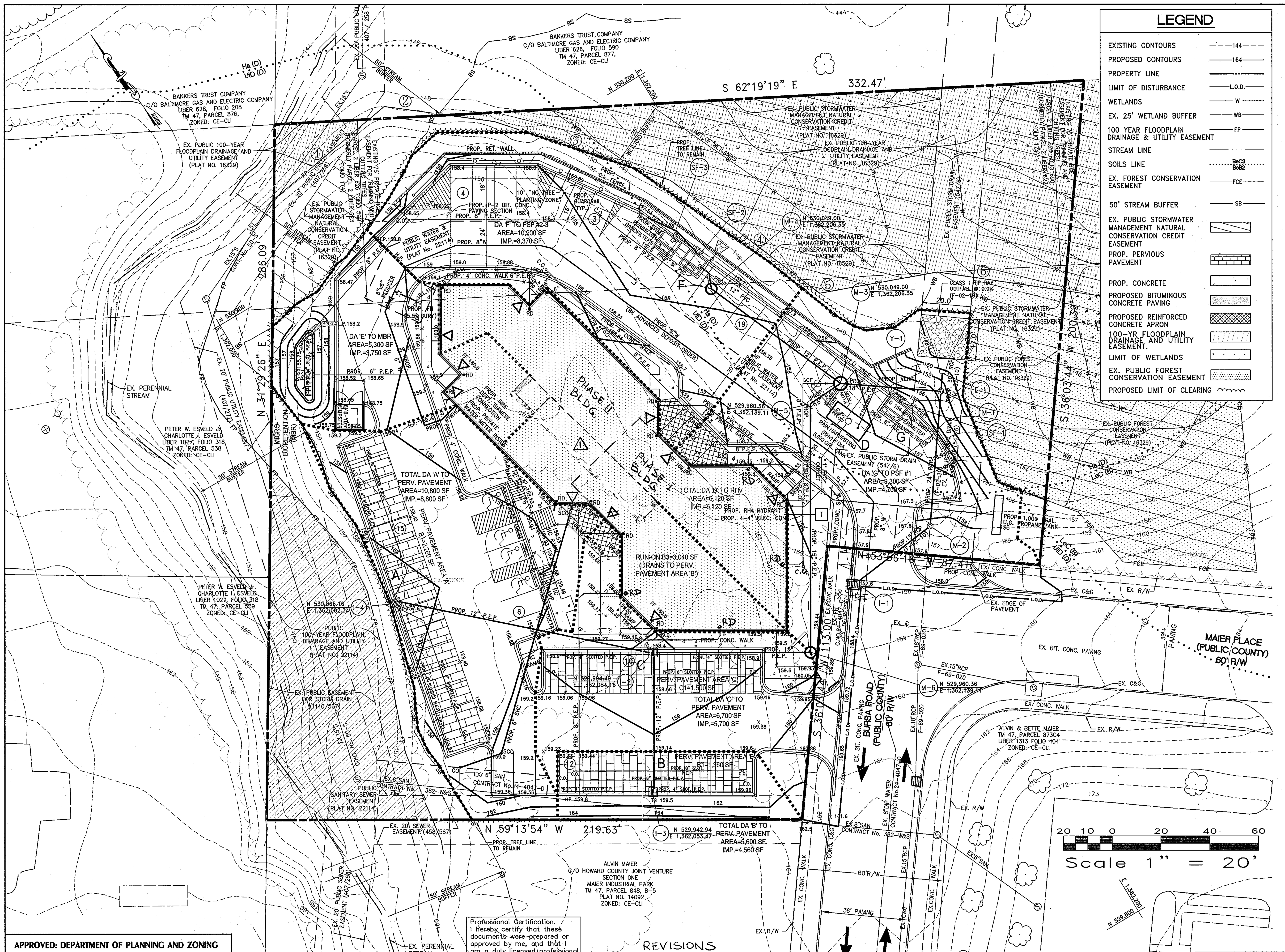

LEGEND

EXISTING CONTOURS	---144---
PROPOSED CONTOURS	——164——
PROPERTY LINE	
LIMIT OF DISTURBANCE	——L.O.D.——
WETLANDS	—— W ——
EX. 25' WETLAND BUFFER	——WB——
100 YEAR FLOODPLAIN DRAINAGE & UTILITY EASEMENT	—— FP ——
STREAM LINE	
SOILS LINE	BeC3 / BeB2
EX. FOREST CONSERVATION EASEMENT	——FCE——
50' STREAM BUFFER	—— SB ——
EX. PUBLIC STORMWATER MANAGEMENT NATURAL CONSERVATION CREDIT EASEMENT	
PROP. PERVIOUS PAVEMENT	
PROP. CONCRETE	
PROPOSED BITUMINOUS CONCRETE PAVING	
PROPOSED REINFORCED CONCRETE APRON	
100-YR FLOODPLAIN DRAINAGE AND UTILITY EASEMENT.	
LIMIT OF WETLANDS	
EX. PUBLIC FOREST CONSERVATION EASEMENT	
PROPOSED LIMIT OF CLEARING	

STORMWATER MANAGEMENT SUMMARY TABLE
STORMWATER MANAGEMENT DESIGN DATA

CATEGORY	REQUIRED	PROVIDED	NOTES
TARGET Pe	1.8"	1.8"	SEE NOTE 1.
ENVIRONMENTAL SITE DESIGN (ESDv)	6,100 CF	6,144 CF	SEE NOTE 1.
RECHARGE VOLUME (Rev)	237 CF or 2,920 SF	237 CF	SEE NOTE 2.
CHANNEL PROTECTION (Cpv)	SEE NOTE 3.	SEE NOTE 3.	SEE NOTE 3.

NOTE 1: TARGET Pe AND ESDv ARE PROVIDED BY A COMBINATION OF MICRO-SCALE PRACTICES (MICRO-BIORETENTION, RAINWATER HARVESTING), ALTERNATIVE SURFACES (PERVIOUS PAVEMENTS), AND BMPS (PERIMETER SANDFILTERS).

NOTE 2: Rev IS PROVIDED IN STONE-FILLED RESERVOIR DIRECTLY BELOW PERVIOUS PAVEMENT AREA 'A' UNDERDRAIN SYSTEM.

NOTE 3: Cpv IS SATISFIED, BECAUSE THE REQUIRED ESDv HAS BEEN PROVIDED.

SDP DESIGN ASSESSMENT
SUMMARY OF THE PRACTICES USED

PRACTICE	DRAINAGE AREA	IMPERVIOUS AREA TREATED	VOLUME (ESDv)
MICRO-BIORETENTION	'E'	3,750 SF	414 CF
PERVIOUS PAVEMENT AREA 'A' WITH 24" STONE STORAGE	'A'	8,800 SF	1,659 CF
PERVIOUS PAVEMENT AREA 'B' WITH 24" STONE STORAGE	'B'	4,560 SF	998 CF
PERVIOUS PAVEMENT AREA 'C' WITH 24" STONE STORAGE	'C'	5,700 SF	1,101 CF
RAINWATER HARVESTING CISTERN	'D'	6,120 SF	665 CF
PERIMETER SANDFILTERS	'F'	8,370 SF	853 CF
PERIMETER SANDFILTERS	'G'	4,700 SF	454 CF
		TOTAL	6,144 CF
		ESDv REQUIRED	6,100 CF

DESIGN NARRATIVE

Project Description

It is proposed to develop two vacant parcels of land in the Maier Industrial Park with a worship center and associated parking, hardscape and landscaping. Total site area of both parcels is 1.94 acres. The parcels, A.C. Miller Property, Parcel 'A' and Maier Industrial Park, Parcel B-6 are zoned CE-CLI and located at the intersection of Maier Place and Bursa Road within existing business park along Baltimore Washington Boulevard (U.S. RTE 1). The property is a subject to Route 1 Manual. The Route 1 Manual goal is to achieve intensive urban-looking development. DPZ Director's endorsement of Design Advisory Panel (DAP) 2010-05-26 recommendations has been received for proposed development.

Existing Site Conditions

Surrounding land uses include undeveloped section of the business park to the south, industrial use section to the east, a parcel owned by BGE associated with their transmission lines to the north, and the auto repair facility to the west.

On the north side the site is surrounded by Hammond Branch (a tributary to Little Patuxent River) with associated floodplain and wetlands. On the west side the site is surrounded by meandering ephemeral stream with associated floodplain, a tributary to Hammond Branch. Currently the site is predominately wooded and slopes down toward an ephemeral stream and Hammonds Branch floodplain. All soils on site are 100% HSG 'D'

The site area has been a subject to a previous design and review process through DPZ. Existing wetlands, floodplains, stream buffers and forest conservation areas have been delineated, approved and recorded during Subdivision of A.C. Miller Property (F-02-010), plats # 16229 through 16332, recorded 11/20/03. Additional floodplain has been delineated and technically approved during Site Development Plan for Singh Property (SDP-07-022).

Proposed Development

It is proposed to locate new development away from environmentally sensitive areas. The proposed Limit of Disturbance is 1.32 acres and doesn't include any disturbance within wetlands, wetland buffers, floodplains and stream buffers. It is proposed to locate building with associated parking centrally as close to existing Bursa Road and Maier Place as possible, as is consistent with Route 1 Manual. It is proposed to construct retaining wall along the north side of development to bring the site up out of the low land and allow for circulation and parking at the rear of the building.

SWM Design Criteria

In accordance with Howard County's Stormwater Management criteria, it is required to provide Environmental Site Design (ESDv) and Recharge Volume (Rev) for the development of this site. The concept for how these criteria would be addressed was discussed during two pre-submittal meetings with Charles Dammers and James Witmer of Howard County's Development Engineering Division. In those meetings it was determined the best approach for meeting ESD to the MEP in a way most suited for the unique specifics of the property and it's developed conditions. The results of this coordination have been incorporated into the current design for SWM ESD, are as follows:

1. Environmental Site Design will be provided by a combination of: the micro-scale practices (Micro-Bioretention, Rainwater Harvesting), alternative surfaces (Pervious Pavements), and use of more traditional BMPs (Perimeter Sandfilters) throughout the site.
2. Recharge Volume (Rev) will be provided in stone-filled reservoir directly below Pervious Pavement Area 'B' underdrain system.
3. Channel Protection Volume (Cpv) is satisfied, because the required ESDv has been provided.

Consequently, Environmental Concept Plan and associated SWM ESD to MEP Report have been approved by Howard County DPZ.

SDP ESD Options

On the North side of the development it is proposed to provide Micro-Bioretention practice (Drainage Area 'E') located just above 50 feet wide wooded stream buffer. Overflow from this facility drains via sheetflow down toward ephemeral stream. Principal outfall from this and some other SWM facilities will be directed to the previously approved (F-02-10) public storm drain system located within an existing public storm drain easement (547/6) on site.

On the South and West sides of the development it is proposed to provide three separate areas of Pervious Pavement (Drainage Areas 'A', 'B' and 'C') under parking spaces. Due to hydrologic classification of existing soils underdrains and overdrains will be provided to dewater uninfiltrated water. 12" subbase has been designed to ensure sufficient "freeboard" within the section. Additional 24" of stone storage will be provided to treat run-on.

The runoff from the eastern part of the roof will be directed to an underground Rainwater Harvesting cistern (Drainage Area 'D') under driveway and parking on the east side of the building. The cistern is expected to be 8' diameter 5,000 gallon cistern. It is proposed to provide Large Cascade Filter for first flush diversion. It is proposed to dewater 27% +/- of the cistern slowly thru low flow opening after each rain event and thus providing a benefit to the wetlands downstream. The other 73% +/- of the rainwater storage will be used to water landscaping between the rains and during drought periods.

On the East side of the proposed development near proposed retaining wall a series of Perimeter Sandfilters (Drainage Areas 'F' and 'G') shall be used to provide remaining ESDV. The immediate area is in fill and it is undesirable to create additional hydrostatic pressure against the wall using micro-scale practice. It was determined that perimeter sandfilter is most suitable practice for this location. For Drainage Area 'F' it is proposed to provide two interconnected pre-cast units. The principal outfall from these units is via daylighted pipe on the opposite side of the proposed retaining wall, just above the wetland buffer.

Reduction of impervious area was accomplished through better site design (providing 2-story building with smaller footprint) and through the use of alternative surfaces (Pervious Pavements on south and west sids).

Erosion and Sediment Control Plan has been integrated into SWM strategy. Sequence of Construction lists all SWM facilities and steps necessary to prevent them from contamination by the sediment laden runoff and over compaction.

APPROVED: DEPARTMENT OF PLANNING AND ZONING

[signature] 4/23/13
Chief, Development Engineering Division — Date

[signature] 4/30/13
Chief, Division of Land Development — Date

[signature] 5/1/13
Director — Date

KCW Engineering Technologies, Inc.
810 Landmark Drive, Suite 215
Glen Burnie, MD 21061
Phone: 410.768.7700
Fax: 410.768.0200
www.kcw-et.com

Professional Certification.
I hereby certify that these documents were prepared or approved by me, and that I am a duly licensed professional engineer under the laws of the State of Maryland.
License No. 33351.
Expiration Date 06-30-2014.

STATE OF MARYLAND — MARK TSITLIK — 33351 — PROFESSIONAL ENGINEER
[signature] Mark Tsitlik
11-30-12

REVISIONS

NO.	DATE	DESCRIPTION
1	03-06-14	SHOW TWO-PHASE CONSTRUCTION.

OWNER:
THE REDEEMED CHRISTIAN CHURCH OF GOD, INC.
13701 ANNAPOLIS ROAD
BOWIE, MD 20720

Attn: Margaret Adeyokunnu, Pastor
Tele: (301) 352-0707
Fax: (301) 352-3339

OWNER'S REPRESENTATIVE/ DEVELOPER:
TLI DESIGNGROUP INC.
3308 DORCHESTER ROAD
BALTIMORE, MD 21215
Attn: Taiwo Iluyomade, President

Toll Free/Fax/Voice mail:
(1-866) 616-1497
Mobile: (443) 831-6703

LIMIT OF DISTURBANCE
1.32 Ac. / 57,500 S.F.

KCW J.O.: 2080018
SCALE: 1" = 20'
DESIGNED: MT
DRAWN: MT
CHECKED: KCA
DATE: NOV. 30, 2012
DRAWING NO.
7 OF 19

SWM ESD PLAN/DEVELOPED CONDITIONS DRAINAGE AREA MAP

VICTORY TEMPLE - LAUREL
WORSHIP CENTER
9100 BURSA ROAD

SDP-12-007
TAX MAP 47, GRID 23
PARCEL 540 (PARCEL A, PLAT # 22114)

W&S CONTRACT No. 24-4047-D
ZONING: CE-CLI
ELECTION DISTRICT - 6
HOWARD COUNTY, MARYLAND

SDP-12-007

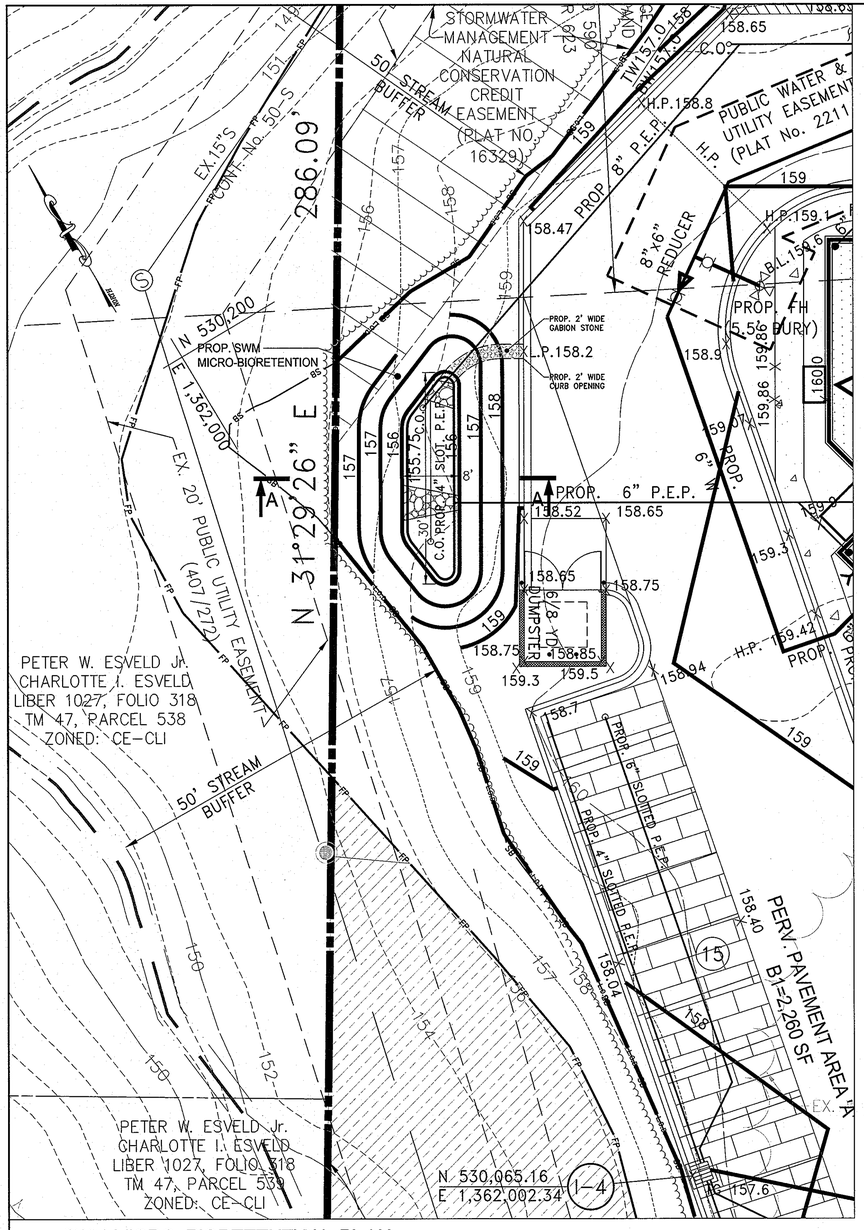

SWM MICRO-BIORETENTION PLAN

SCALE: 1"=10'

LANDSCAPING NOTE:
FOR MICRO-BIORETENTION PLANTING PLAN AND PLANTING DETAILS
SEE LANDSCAPE/HARDSCAPE PLAN, SHEET 17 OF 19.

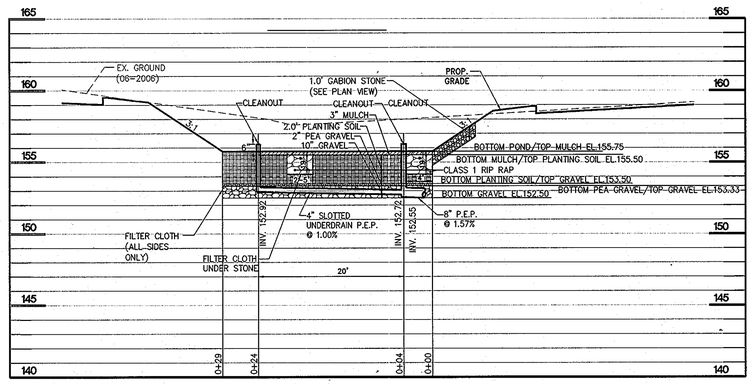

SWM MICRO-BIORETENTION PROFILE

SCALE: 1"=10' (Horiz.)
1"=5' (Vert.)

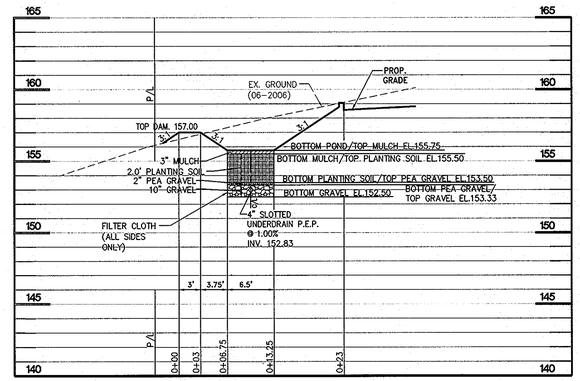

SWM MICRO-BIORETENTION SECTION A-A

SCALE: 1"=10' (Horiz.)
1"=5' (Vert.)

B.4.C Specifications for Micro-Bioretention.

1. Material Specifications

The allowable materials to be used in these practices are detailed in Table B.4.1.

2. Filtering Media or Planting Soil

The soil shall be a uniform mix, free of stones, stumps, roots or other similar objects larger than two inches. No other materials or substances shall be mixed or dumped within the micro-bioretention practice that may be harmful to plant growth, or prove a hindrance to the planting or maintenance operations. The planting soil shall be free of Bermuda grass, Quackgrass, Johnson grass, or other noxious weeds as specified under COMAR 15.08.01.05.

The planting soil shall be tested and shall meet the following criteria:

- Soil Component - Loamy Sand or Sandy Loam (USDA Soil Textural Classification)
- Organic Content - Minimum 10% by dry weight (ASTM D 2974). In general, this can be met with a mixture of loamy sand (60%-65%) and compost (35% to 40%) or sandy loam (30%), coarse sand (30%), and compost (40%).
- Clay Content - Media shall have a clay content of less than 5%.
- pH Range - Should be between 5.5 - 7.0. Amendments (e.g., lime, iron sulfate plus sulfur) may be mixed into the soil to increase or decrease pH.

There shall be at least one soil test per project. Each test shall consist of both the standard soil test for pH, and additional tests of organic matter, and soluble salts. A textural analysis is required from the site stockpiled topsoil. If topsoil is imported, then a texture analysis shall be performed for each location where the topsoil was excavated.

3. Compaction

It is very important to minimize compaction of both the base of bioretention practices and the required backfill. When possible, use excavation hoes to remove original soil. If practices are excavated using a loader, the contractor should use wide track or marsh track equipment, or light equipment with turf type tires. Use of equipment with narrow tracks or narrow tires, rubber tires with large lugs, or high-pressure tires will cause excessive compaction resulting in reduced infiltration rates and is not acceptable. Compaction will significantly contribute to design failure.

Compaction can be alleviated at the base of the bioretention facility by using a primary tilling operation such as a chisel plow, ripper, or subsoiler. These tilling operations are to refracture the soil profile through the 12 inch compaction zone. Substitute methods must be approved by the engineer. Rototillers typically do not till deep enough to reduce the effects of compaction from heavy equipment.

Rototill 2 to 3 inches of sand into the base of the bioretention facility before backfilling the optional sand layer. Pump any ponded water before preparing (rototilling) base.

When backfilling the topsoil over the sand layer, first place 3 to 4 inches of topsoil over the sand, then rototill the sand/topsoil to create a gradation zone. Backfill the remainder of the topsoil to final grade.

When backfilling the bioretention facility, place soil in lifts 12" to 18". Do not use heavy equipment within the bioretention basin. Heavy equipment can be used around the perimeter of the basin to supply soils and sand. Grade bioretention materials with light equipment such as a compact loader or a dozer/loader with marsh tracks.

4. Plant Material

Recommended plant material for micro-bioretention practices can be found in Appendix A, Section A.2.3.

5. Plant Installation

Compost is a better organic material source, is less likely to float, and should be placed in the invert and other low areas. Mulch should be placed in surrounding to a uniform thickness of 2" to 3". Shredded or chipped hardwood mulch is the only accepted mulch. Pine mulch and wood chips will float and move to the perimeter of the bioretention area during a storm event and are not acceptable. Shredded mulch must be well aged (6 to 12 months) for acceptance.

Rootstock of the plant material shall be kept moist during transport and on-site storage. The plant root ball should be planted so 1/8th of the ball is above final grade surface. The diameter of the planting pit shall be at least six inches larger than the diameter of the planting ball. Set and maintain the plant straight during the entire planting process. Thoroughly water ground bed cover after installation.

Trees shall be braced using 2" by 2" stakes only as necessary and for the first growing season only. Stakes are to be equally spaced on the outside of the tree ball.

Grasses and legume seed should be drilled into the soil to a depth of at least one inch. Grass and légume plugs shall be planted following the non-grass ground cover planting specifications.

The topsoil specifications provide enough organic material to adequately supply nutrients from natural cycling. The primary function of the bioretention structure is to improve water quality. Adding fertilizers defeats, or at a minimum, impedes this goal. Only add fertilizer if wood chips or mulch are used to amend the soil. Rototill urea fertilizer at a rate of 2 pounds per 1000 square feet.

B.4.C Specifications for Micro-Bioretention.

6. Underdrains

Underdrains should meet the following criteria:

- Pipe- Should be 4" to 6" diameter, slotted or perforated rigid plastic pipe (ASTMF 758, Type PS 28, AASHTO-M-278, or AASHTO-M-252, Type S) in a gravel layer. The preferred material is slotted, 4" rigid pipe (e.g., PVC or HDPE).
- Perforations - If perforated pipe is used, perforations should be ⅜" diameter located 6" on center with a minimum of four holes per row. Pipe shall be wrapped with a ¼" (No. 4 or 4x4) galvanized hardware cloth.
- Gravel - The gravel layer (No. 57 stone preferred) shall be at least 3" thick above and below the underdrain.
- The main collector pipe shall be at a minimum 0.5% slope.
- A rigid, non-perforated observation well must be provided (one per every 1,0000 square feet) to provide a clean-out port and monitor performance of the filter.
- A 4" layer of pea gravel (¼" to ⅜" stone) shall be located between the filter media and underdrain to prevent migration of fines into the underdrain. This layer may be considered part of the filter bed when bed thickness exceeds 24".

The main collector pipe for underdrain systems shall be constructed at a minimum slope of 0.5%. Observation wells and/or clean-out pipes must be provided (one minimum per every 1000 square feet of surface area).

7. Miscellaneous

These practices may not be constructed until all contributing drainage area has been stabilized

Table B.4.1 Materials Specifications for Micro-Bioretention, Rain Gardens & Landscape Infiltration-

Material	Specification	Size	Notes
Plantings	see Appendix A, Table A.4	n/a	plantings are site-specific (See Plant List below)
Planting soil (2' to 4' deep)	loamy sand (60 - 65%) & compost (35 – 40%) or sandy loam (30%), coarse sand (30%) & compost (40%)	n/a	USDA soil types loamy sand or sandy loam; clay content < 5%
Organic content	Min. 10% by dry weight (ASTM D 2974)		
Mulch	shredded hardwood		aged 6 months, minimum; no pine or wood chips
Pea gravel diaphragm	pea gravel: ASTM-D-448	NO. 8 OR NO. 9 (1/8" TO 3/8")	
Curtain drain	ornamental stone: washed cobbles	stone: 2" to 5"	
Geotextile		n/a	PE Type 1 nonwoven (Mirafi-180 N or approved equal.)
Gravel (underdrains and infiltration berms)	AASHTO M-43	NO. 57 OR NO. 6 AGGREGATE (3/8" to 3/4")	
Underdrain piping	~~F 758, Type PS 28 or AASHTO M 278~~ AASHTO M-252, Type S	4" to 6" rigid ~~schedule 40 PVC or SDR35~~ HDPE	Slotted or perforated pipe; 3/8" perf. @ 6" on center, 4 holes per row; minimum of 3" of gravel over pipes; not necessary underneath pipes. Perforated pipe shall be wrapped with ½-inch galvanized hardware cloth
Poured in place concrete (if required)	MSHA Mix No. 3; f'_c = 3500 psi @ 28 days, normal weight, air-entrained; reinforcing to meet ASTM-615-60	n/a	on-site testing of poured-in-place concrete required: 28 day strength and slump test; all concrete design (cast-in-place or pre-cast) *not using previously approved State or local standards* requires design drawings sealed and approved by a professional structural engineer licensed in the State of Maryland - design to include meeting ACI Code 350.R/89, vertical loading [H-10 or H-20]; allowable horizontal loading (based on soil pressures); and analysis of potential cracking
Sand	AASHTO-M-6 or ASTM-C-33	0.02" to 0.04"	Sand substitutions such as Diabase and Graystone **(AASHTO)** #10 are not acceptable. No calcium carbonated or dolomitic sand substitutions are acceptable. No "rock dust" can be used for sand.

SWM MICRO-BIORETENTION PLANT LIST

KEY	QTY	BOTANICAL NAME / COMMON NAME	SIZE	COND	REMARKS
	1	ACER RUBRUM 'RED SUNSET' / RED SUNSET RED MAPLE	2½"-3" CAL.	B & B	FULL, HEAVY SPECIMEN, HEADED TO 6' HT.
	9	ITEA VIRGINICA 'LITTLE HENRY' / LITTLE HENRY SWEETSPIRE	24"-30" HT.	#5	3'-6" O.C., STAGGERED
	8	PANICUM VIRGATUM 'HEAVY METAL' / HEAVY METAL SWITCHGRASS		#3	4' O.C., STAGGERED
A	28	MONARDA DIDYMA 'PETITE DELIGHT' / PETITE DELIGHT BEE BALM		1 QT. POTS	18" O.C., STAGGERED
B	35	IRIS VERSICOLOR / BLUE FLAG IRIS		1 QT. POTS	18" O.C., STAGGERED
C	16	ASCLEPIAS INCARNATA / SWAMP MILKWEED		1 QT. POTS	24" O.C., STAGGERED

Construction Criteria:

The following items should be addressed during construction of projects with micro-bioretention:

Erosion and Sediment Control: Micro-bioretention practices should not be constructed until the contributing drainage area is stabilized. *If this is impractical, runoff from disturbed areas shall be diverted away and no sediment control practices shall be used near the proposed location.*

Soil Compaction: Excavation should be conducted in dry conditions with equipment located outside of the practice to minimize bottom and sidewall compaction. Only lightweight, low ground-contact equipment should be used within micro-bioretention practices and the bottom scarified before installing underdrains and filtering media.

Underdrain Installation: Gravel for the underdrain system should be clean, washed, and free of fines. Underdrain pipes should be checked to ensure that both the material and perforations meet specifications. The upstream ends of the underdrain pipe should be capped prior to installation.

Filter Media Installation: Bioretention soils may be mixed on-site before placement. However, soils should not be placed under saturated conditions. The filter media should be placed and graded using excavators or backhoes operating adjacent to the practice and be placed in horizontal layers (12 inches per lift maximum). Proper compaction of the media will occur naturally. Spraying or sprinkling water on each lift until saturated may quicken settling times.

Landscape Installation: The optimum planting time is during the Fall. Spring planting is also acceptable but may require watering.

Inspection:

Regular inspections shall be made during the following stages of construction:

During excavation to subgrade and placement and backfill of underdrain systems.
During placement of filter media.
During construction of appurtenant conveyance.
Upon completion of final grading and establishment of permanent stabilization.

Maintenance Criteria:

The following items should be addressed to ensure proper maintenance and long-term performance of micro-bioretention practices:

Privately owned practices shall have a maintenance plan and shall be protected by easement, deed restriction, ordinance, or other legal measures preventing its neglect, adverse alteration, and removal.

The top few inches of filter media should be removed and replaced when water ponds for more than 48 hours. Silts and sediment should be removed from the surface of the filter bed when accumulation exceeds one inch.

Where practices are used to treat areas with higher concentrations of heavy metals (e.g., parking lots, roads), mulch should be replaced annually. Otherwise, the top two to three inches should be replaced as necessary.

Occasional pruning and replacement of dead vegetation is necessary. If specific plants are not surviving, more appropriate species should be used. Watering may be required during prolonged dry periods.

STANDARD HOWARD COUNTY OPERATION AND MAINTENANCE SCHEDULE FOR MICRO-BIORETENTION **(M-6)**

a. The Owner shall maintain the plant material, mulch layer and soil layer annually. Maintenance of mulch and soil is limited to correcting areas of erosion or wash out. Any mulch replacement shall be done in the spring. Plant material shall be checked for disease and insect infestation and maintenance will address dead material and pruning. Acceptable replacement plant material is limited to the following: 2000 Maryland Stormwater Design Manual Volume II, Table A.4.1 and 2.

b. The Owner shall perform a plant in the spring and in the fall of each year. During the inspection, the Owner shall remove dead and diseased vegetation considered beyond treatment, replace dead plant material with acceptable replacement plant material, treat diseased trees and shrubs, and replace all deficient stakes and wires.

c. The Owner shall inspect the mulch each spring. The mulch shall be replaced every two to three years. The previous mulch layer shall be removed before the new layer is applied.

d. The Owner shall correct soil erosion on an as needed basis, with a minimum of once per month and after each heavy storm.

APPROVED: DEPARTMENT OF PLANNING AND ZONING

Chief, Development Engineering Division — Date 4/23/13

Chief, Division of Land Development — Date 4/30/13

Director — Date 5/1/13

10 5 0 10 20 30
Scale 1" = 10'

KCW ENGINEERING TECHNOLOGIES
KCW Engineering Technologies, Inc.
810 Landmark Drive, Suite 215
Glen Burnie, MD 21061
Phone: 410.768.7700
Fax: 410.768.0200
www.kcw-et.com

STATE OF MARYLAND — MARK TSYTSIN — 33351 — PROFESSIONAL ENGINEER
Mark Tsytsin 11/30/12

Professional Certification.
I hereby certify that these documents were prepared or approved by me, and that I am a duly licensed professional engineer under the laws of the State of Maryland.
License No. 33351.
Expiration Date 06-30-2014.

OWNER:
THE REDEEMED CHRISTIAN CHURCH OF GOD, INC.
13701 ANNAPOLIS ROAD
BOWIE, MD 20720
Attn: Margaret Adeyokunnu, Pastor
Tele: (301) 352-0707
Fax: (301) 352-3339

OWNER'S REPRESENTATIVE/ DEVELOPER:
TLI DESIGNGROUP INC.
3308 DORCHESTER ROAD
BALTIMORE, MD 21215
Attn: Taiwo Iluyomade, President
Toll Free/Fax/Voice mail:
(1-866) 616-1497
Mobile: (443) 831-6703

KCW J.O.: 2080018
SCALE: AS SHOWN
DESIGNED: MT
DRAWN: MT
CHECKED: KCA
DATE: NOV. 30, 2012
DRAWING NO. 8 OF 19

SWM MICRO-BIORETENTION PLAN

VICTORY TEMPLE - LAUREL
WORSHIP CENTER
9100 BURSA ROAD

SDP-12-007
TAX MAP 47, GRID 23
PARCEL 540 (PARCEL A, PLAT # 22114)
W&S CONTRACT No. 24-4047-D
ZONING: CE-CLI
ELECTION DISTRICT – 6
HOWARD COUNTY, MARYLAND

SDP-12-007

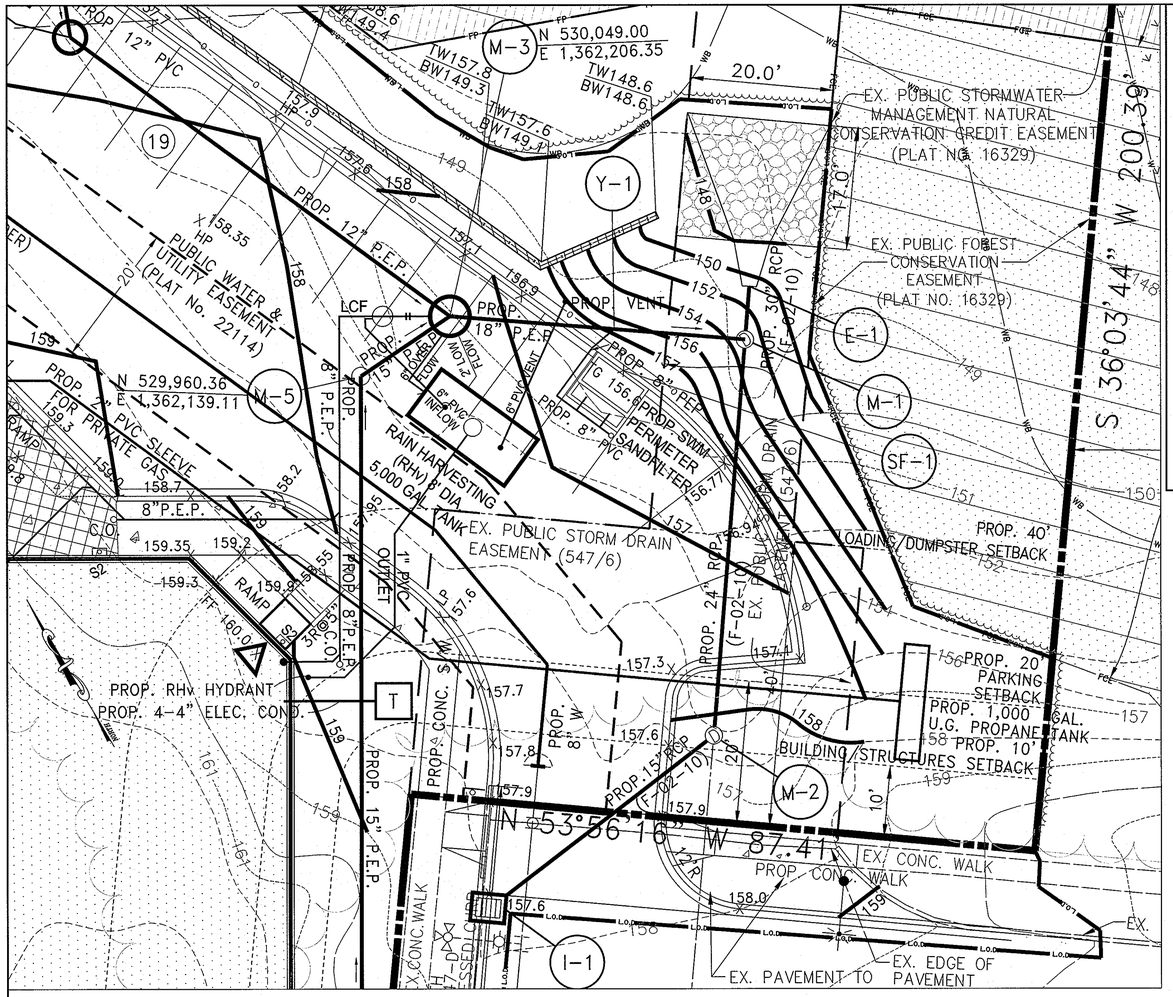

SWM RAINWATER HARVESTING (RHv) UNDERGROUND TANK PLAN

SCALE: 1"=10'

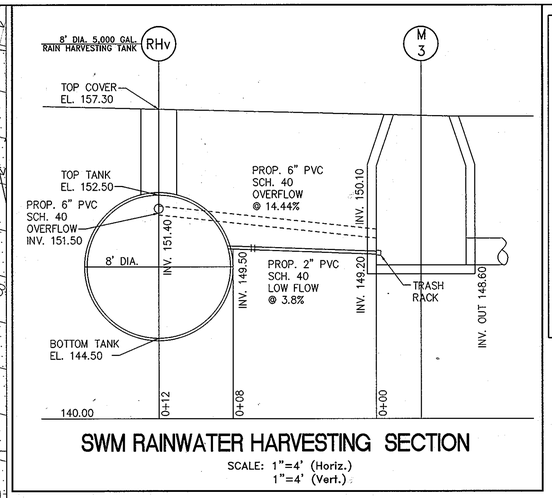

SWM RAINWATER HARVESTING SECTION

SCALE: 1"=4' (Horiz.)
1"=4' (Vert.)

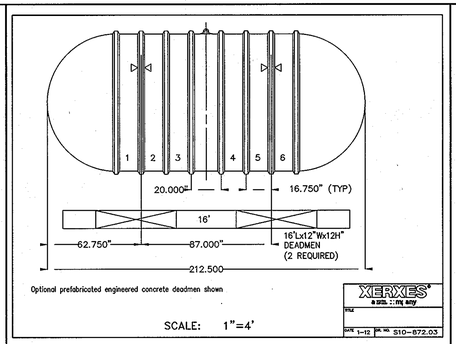

LARGE CASCADE FILTER

- for underground installation
- 95% recovery for roof up to 16,000 square feet
- telescopic accessway with lid
- easily accessible filter element
- 350 micron filtration
- optional sprayhead for filter rinsing
- inlet and waste ports can be connected to 6" or 8" pipes
- filtered water port can be connected to 6" pipe

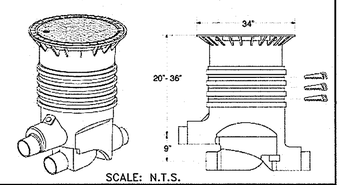

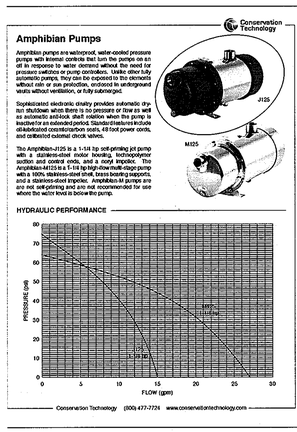

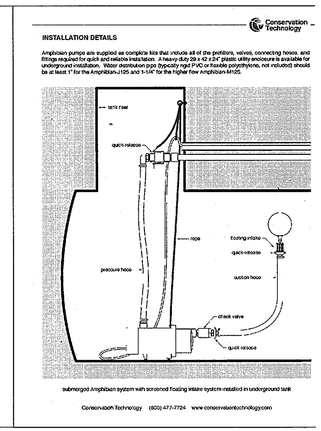

Construction Criteria:

The following should be addressed during construction of projects with rainwater harvesting systems:

Site Disturbance: Underground storage tanks shall be placed on or in native soils. If placement on fill material is necessary, a geotechnical analysis may be required by the approving authority.

Storage Tanks:

Storage tanks shall be designed to be watertight and all materials should be sealed with a water safe, non-toxic substance.
Storage tanks shall be protected from direct sunlight and shall be opaque to prevent the growth of algae.
The top of underground tanks shall be beneath the frost line.

Cisterns may be ordered from a manufacturer or constructed on-site. Typical materials used to construct cisterns are fiberglass, wood, metal, or reinforced concrete.

Pressurization: Depending on the use of stored water, pressurization may be required. To add pressure, a pump or pressure tank can be used.

Inspection:

Prior to operation, certification shall be required that the constructed system meets the conditions specified on the approved plans. Additionally, certification regarding the water tightness of the underground storage tank shall be required after its installation.

Maintenance Criteria:

The following items should be addressed to ensure proper maintenance and long-term performance of rainwater harvesting systems:

Privately owned practices shall have a maintenance plan and shall be protected by easement, deed restriction, ordinance, or other legal measures preventing its neglect, adverse alteration, and removal.

Access shall be provided for cleaning, inspection, and maintenance in all cisterns.

Leaf screens, gutters, and downspouts should be cleaned to prevent clogging. Built-up debris can also foster bacterial growth in gutters and downspouts.

Storage tank lids and mosquito screens should be inspected and cleaned.

Damaged components should be replaced as needed.

To avoid freezing of components, above ground systems should be disconnected, drained, and cleaned at the start of the Winter season.

Underground system connections should be checked for frozen lines and ice blockages during Winter.

CONTRACTOR NOTES:

1) SINGLE-WALL FIBERGLASS UNDERGROUND TANK TO BE BY XERXES CORPORATION OR APPROVED EQUAL.

2) CONTRACTOR SHALL FURNISH SHOP DRAWINGS FOR ALL TANK AND PUMP APPURTENANCES TO ENGINEER FOR REVIEW AND APPROVAL.

STANDARD HOWARD COUNTY OPERATION AND MAINTENANCE SCHEDULE FOR PRIVATELY OWNED AND MAINTAINED
Rainwater Harvesting **(M-1)**

a. The Owner shall empty barrels on a monthly basis and clean barrel with a hose.
b. The Owner shall verify integrity of leaf screens, gutters, downspouts, spigots, and mosquito screens, and clean and remove any debris.
c. The Owner shall replace damaged components as needed.
d. The Owner shall disconnect the barrel prior to winter, or allow the barrel to drain by bottom spigot during the winter season.

FRP Water Tank Guide Specifications 9/1/10
Guide Specifications - Single and Double Wall Tanks for Water Conservation Use

Short Form
The contractor shall provide a single-wall or double wall fiberglass reinforced plastic (FRP) water tank as shown on the drawings. The tank size, fittings and accessories shall be as shown on the drawings. The fiberglass water tank shall be manufactured by Xerxes Corporation.

The water tank shall be tested and installed according to the Xerxes Installation Manual and Operating Guidelines for Fiberglass Underground Storage Tanks in effect at time of installation.

Long Form
Part I: General
1.01 Quality Assurance
A. Acceptable Manufacturer: Xerxes Corporation
B. Governing Standards, as applicable:
1. Tank manufacturer shall be in the business of manufacturing tanks with materials conforming to the requirements of ANSI/AWWA D120-02 Thermosetting Fiberglass-Reinforced Plastic Tanks.
2. Tank manufacturer shall be listed by NSF under NSF/ANSI Standard 61 Drinking Water System Components - Health Effects
3. Tank manufacturer shall be in the business of manufacturing tanks to UL 1316 standards.
4. American Society for Testing and Materials (ASTM) Standards:
a. ASTM D883: Standard Terminology Related to Plastics
5. Shop Drawings
a. The manufacturer shall supply to engineer, contractor, and / or owner, a complete set of scale drawings detailing dimensions of heights, diameter, elevations to invert, pipe sizes and any other necessary details.
6. Calculations
a. The manufacturer (upon request) shall supply the engineer, contractor, and / or owner buoyancy calculations assuming a fully flooded excavation with an installed empty tank.
b. The sizing and construction of this tank shall be consistent with industry protocols and shall comply with the applicable regulations.

Part II: Products
2.01 Fiberglass Underground water storage tanks
A. Loading Conditions - water tank shall meet the following design criteria:
1. Internal Load - All tanks shall be designed to withstand a 5-psig air-pressure test with 5:1 safety factor. Maximum test pressure is 5 psig.
2. Surface Loads - Water tank shall withstand surface H-20 and HS-20 axle loads when properly installed according to manufacturers current Installation Manual and Operating Guidelines.
3. External Hydrostatic Pressure and Burial Depth - tank shall be capable of being buried in ground with 7' of overburden over the top of the tank, the hole fully flooded, and maintain a safety factor of 5:1 against general buckling.
4. Tank shall support accessory equipment - such as such as access openings, risers, internal pump platform, drop/fill tubes, submersible pumps, manways, manway extensions, collar/ risers, FRP or PVC inlet/outlet piping, and ladders when installed according to tank manufacturers current Installation Manual and Operating Guidelines.
5. Buried tanks shall be manufactured with integral trapezoidal ribs for structural integrity.
B. Product Storage
1. Tank shall be capable of handling liquids with specific gravity up to 1.1.
2. Tank shall be vented to atmospheric pressure.
3. Tank shall be capable of handling water for domestic use at ambient temperature.
C. Materials
1. Tank shall be manufactured with 100% premium resin (Terephthalic polyester or highly cross-linked Isophthalic polyester resins), and chopped glass. No fillers or extenders will be used.
2. No General, Orthophthalic, or odd lot resin will be used.
3. All associated internal mounting hardware shall be rustproof.
D. Water Tank Dimensions and Capability
1. Tank shall have nominal working capacity of 5,000 gallons.
2. Tank shall have nominal outside diameter of 8 feet.
3. Tank shall weight shall be approximately _____ pounds.
E. Interstitial Space (Double-Wall Applications)
1. Tank shall have a space between the primary and secondary walls to allow for the free flow and containment of leaked product from the primary tank. The space also allows the insertion of a monitoring device through a monitoring fitting.
2. Each interstitial space monitor fitting shall consist of a 4" NPT fitting.

2.02 Accessories

A. Manway & Access Openings
1. All water tanks shall require at least one access or manway opening.
2. All access openings shall be FRP and a minimum of 24" (based on drawing)
3. All manway openings shall be FRP, flanged, and a minimum of 22" (based on drawing), complete with gaskets, bolts, and covers.
4. Location(s) are shown on submittal drawing.
5. Optional access risers shall be FRP or PVC and provided by the tank manufacturer
6. Optional manway extensions shall be FRP and provided by tank manufacturer

B. Internal Piping
1. All internal piping shall supplied by tank manufacturer
2. Location is shown on submittal drawings.

D. Piping/Fittings
1. All PVC piping shall be a minimum of SCH40
2. All tanks shall be equipped with factory-installed smoothing inlet and overflow piping
3. All FRP nozzles shall be flat-faced, flanged (gusseted when needed), and conform to ANSI B16.5 150# bolting pattern
4. All threaded fittings shall be constructed of FRP, carbon steel or 304 Stainless Steel

E. Lifting Lugs
1. All Tanks shall have lifting lug(s) that are capable of withstanding weight of tank with a safety factor of at least 2:1.

F. Optional Suction/Fill tubes
1. Suction/Fill tubes shall be a minimum of PVC SCH 40 or FRP
2. Suction/Fill tubes must be factory installed
3. Suction/Fill tubes shall terminate 4 inches above the bottom of tank
4. Location shall be as shown on submittal drawings.

G. Optional Anchoring
1. Straps shall be FRP anchor straps as supplied by tank manufacturer.
2. Number and location of straps shall be shown on submittal drawings.
3. Deadman shall be pre-manufactured and supplied by the tank manufacturer.

H. Optional Ladders
1. FRP ladders shall be supplied by tank manufacturer.

I. Optional Pump Platforms
1. FRP pump platforms shall be supplied by tank manufacturer.

Part III: Testing and Installation
3.01 Testing
A. Tank shall be tested according to the Xerxes Installation Manual and Operating Guidelines for Fiberglass Underground Storage Tanks in effect at time of installation.
3.02 Installation
A. Tank shall be installed according to the Xerxes Installation Manual and Operating Guidelines for Fiberglass Underground Storage Tanks in effect at time of installation.
B. Contractor shall be trained by the tank manufacturer, the state or other approved agency.
3.03 Operation and Maintenance
A. Tank should be set up on a regular clean out schedule and best management practices according to local jurisdictions.

Part IV: Warranty
4.01 Warranty
A. Warranty shall be manufacturer's Limited Warranty for Underground Water Tanks in effect at time of purchase.

10 5 0 10 20 30
Scale 1" = 10'

APPROVED: DEPARTMENT OF PLANNING AND ZONING

Chief, Development Engineering Division — Date 4/23/13
Chief, Division of Land Development — Date 4/30/13
Director — Date 5/1/13

KCW ENGINEERING TECHNOLOGIES
KCW Engineering Technologies, Inc.
810 Landmark Drive, Suite 215
Glen Burnie, MD 21061
Phone: 410.768.7700
Fax: 410.768.0200
www.kcw-et.com

STATE OF MARYLAND — MARK TALLIS — 33351 — PROFESSIONAL ENGINEER
11/30/12

Professional Certification.
I hereby certify that these documents were prepared or approved by me, and that I am a duly licensed professional engineer under the laws of the State of Maryland.
License No. 33351.
Expiration Date 06-30-2014.

OWNER:
THE REDEEMED CHRISTIAN CHURCH OF GOD, INC.
13701 ANNAPOLIS ROAD
BOWIE, MD 20720
Attn: Margaret Adeyokunnu, Pastor
Tele: (301) 352-0707
Fax: (301) 352-3339

OWNER'S REPRESENTATIVE/ DEVELOPER:
- TLI DESIGNGROUP INC.
3308 DORCHESTER ROAD
BALTIMORE, MD 21215
Attn: Taiwo Iluyomade, President
Toll Free/Fax/Voice mail:
(1-866) 616-1497
Mobile: (443) 831-6703

KCW J.O.:	2080018
SCALE:	AS SHOWN
DESIGNED:	MT
DRAWN:	MT
CHECKED:	KCA
DATE:	NOV. 30, 2012
DRAWING NO.	9 OF 19

SWM RAINWATER HARVESTING SYSTEM PLAN

VICTORY TEMPLE - LAUREL
WORSHIP CENTER
9100 BURSA ROAD

SDP-12-007
TAX MAP 47, GRID 23
PARCEL 540 (PARCEL A, PLAT # 22114)

W&S CONTRACT No. 24-4047-D
ZONING: CE-CLI
ELECTION DISTRICT - 6
HOWARD COUNTY, MARYLAND

SDP-12-007

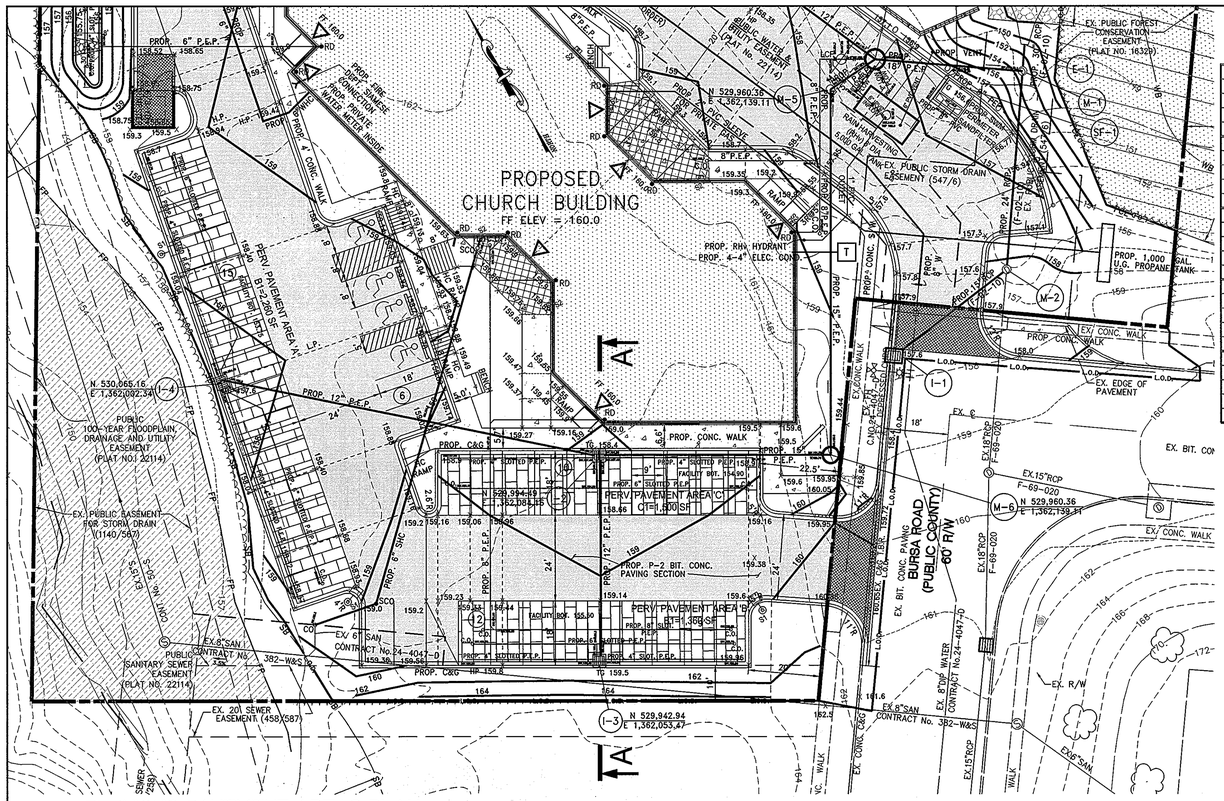

PERVIOUS PAVEMENT AREAS PLAN SCALE: 1"=20'

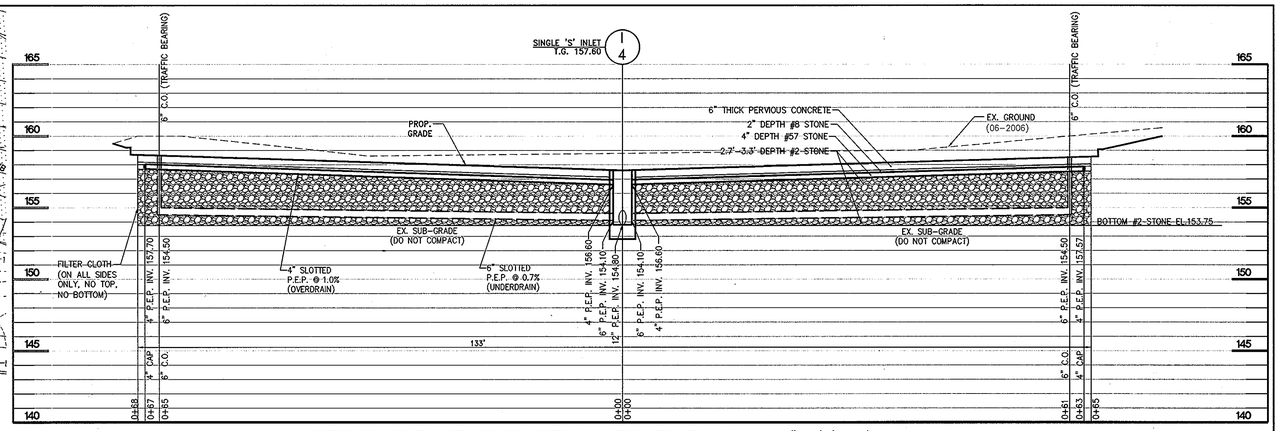

PERVIOUS PAVEMENT AREA 'A' PROFILE SCALE: 1"=10' (Horiz.) 1"=5' (Vert.)

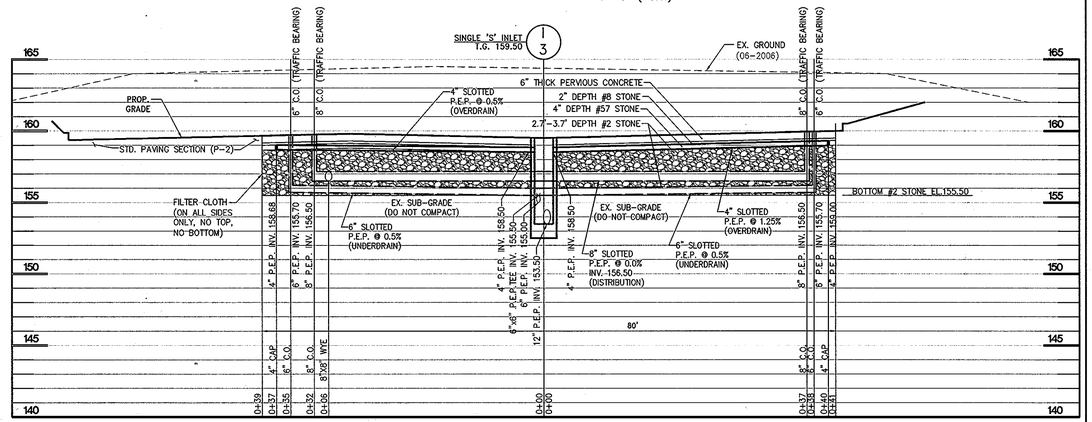

PERVIOUS PAVEMENT AREA 'B' PROFILE SCALE: 1"=10' (Horiz.) 1"=5' (Vert.)

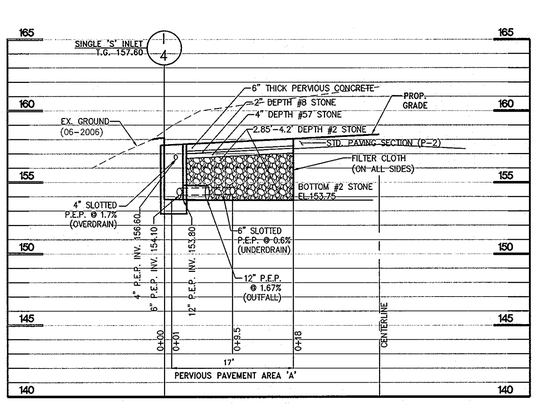

PERVIOUS PAVEMENT AREA 'A' SECTION SCALE: 1"=10' (Horiz.) 1"=5' (Vert.)

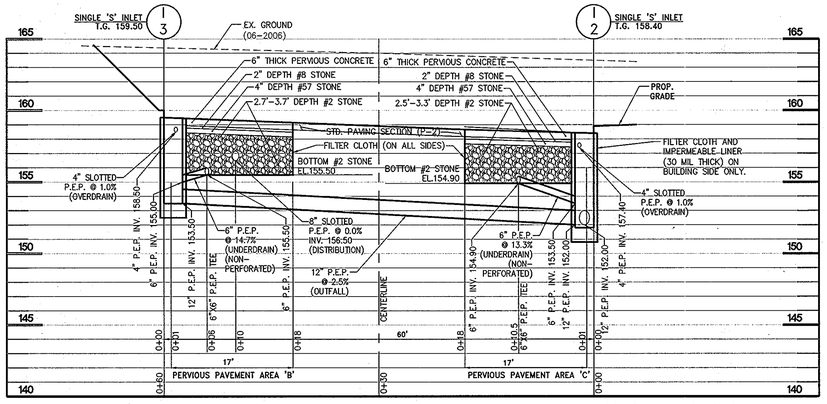

PERVIOUS PAVEMENT AREAS 'B' AND 'C' SECTION A-A SCALE: 1"=10' (Horiz.) 1"=5' (Vert.)

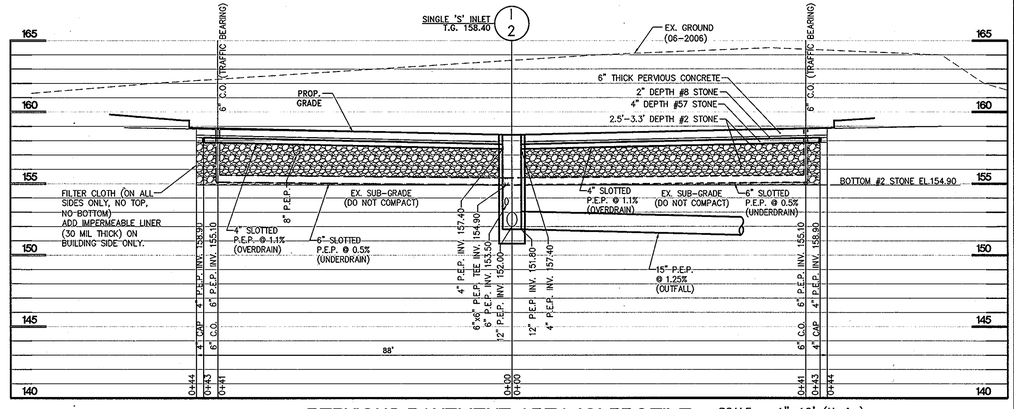

PERVIOUS PAVEMENT AREA 'C' PROFILE SCALE: 1"=10' (Horiz.) 1"=5' (Vert.)

10 5 0 10 20 30
Scale 1" = 10'

APPROVED: DEPARTMENT OF PLANNING AND ZONING

Chief, Development Engineering Division — Date 4/23/13

Chief, Division of Land Development — Date 4/30/13

Director — Date 5/1/13

KCW ENGINEERING TECHNOLOGIES

KCW Engineering Technologies, Inc.
810 Landmark Drive, Suite 215
Glen Burnie, MD 21061
Phone: 410.768.7700
Fax: 410.768.0200
www.kcw-et.com

STATE OF MARYLAND — MARK TSITLIK — 33351 — PROFESSIONAL ENGINEER
Mark Tsitlik 11/30/12

Professional Certification.
I hereby certify that these documents were prepared or approved by me, and that I am a duly licensed professional engineer under the laws of the State of Maryland.
License No. 33351.
Expiration Date 06-30-2014.

OWNER:
THE REDEEMED CHRISTIAN CHURCH OF GOD, INC.
13701 ANNAPOLIS ROAD
BOWIE, MD 20720

Attn: Margaret Adeyokunnu, Pastor
Tele: (301) 352-0707
Fax: (301) 352-3339

OWNER'S REPRESENTATIVE/ DEVELOPER:
TLI DESIGNGROUP INC.
3308 DORCHESTER ROAD
BALTIMORE, MD 21215

Attn: Taiwo Iluyomade, President

Toll Free/Fax/Voice mail:
(1-866) 616-1497
Mobile: (443) 831-6703

KCW J.O.:	2080018
SCALE:	AS SHOWN
DESIGNED:	MT
DRAWN:	MT
CHECKED:	KCA
DATE:	NOV. 30, 2012
DRAWING NO.	10 OF 19

SWM PERVIUOS PAVEMENT I

VICTORY TEMPLE - LAUREL
WORSHIP CENTER
9100 BURSA ROAD

SDP-12-007
TAX MAP 47, GRID 23
PARCEL 540 (PARCEL A, PLAT # 22114)

W&S CONTRACT No. 24-4047-D
ZONING: CE-CLI
ELECTION DISTRICT - 6
HOWARD COUNTY, MARYLAND

SDP-12-007

B.4.B Specifications for Permeable Pavements

These specifications include information on acceptable materials for typical applications and are not exclusive or limiting. The designer is responsible for developing detailed specifications for individual projects and specific conditions.

Pervious Concrete Specifications

Design Thickness - Pervious concrete applications shall be designed so that the thickness of the concrete slab shall support the traffic and vehicle types that will be carried. Applications may be designed using either standard pavement procedures (e.g., AASHTO, ACI 325.9R, ACI 330R) or using structural values derived from flexible pavement design procedures.

Mix & Installation - Traditional Portland cements (ASTM C 150, C 1157) may be used in pervious concrete applications. Phosphorus admixtures may also be used. Materials should be tested (e.g., trial batching) prior to construction so that critical properties (e.g., settling time, rate of strength development, porosity, permeability) can be determined.

Aggregate - Pervious concrete contains a limited fine aggregate content. Commonly used gradations include ASTM C 33 No. 67 (¾ in. to No. 4), No. 8 (⅜ in. to No. 16) and No. 89 (⅜ in. to No. 50) sieves. Single-sized aggregate (up to 1 inch) may also be used.

Water Content - Water-to-cement ratios between 0.27 and 0.30 are used routinely with proper inclusion of chemical admixtures. Water quality should meet ACI 30a. As a general rule, potable water should be used although recycled concrete production water meetingASTM C 94 or AASHTO M 157 may also be used.

Admixtures - Chemical admixtures (e.g., retarders or hydration-stabilizers) are used to obtain special properties in pervious concrete. Use of admixtures should meet ASTM C 494 (chemical admixtures) and ASTM C 260 (air entraining admixtures) and closely follow manufacturer's recommendations.

Base Course - The base course shall be AASHTO No. 3 or 4 course aggregate with an assumed open pore space of 30% (n = 0.30).

Filter Cloth - Shall be Mirafi-180N or approved equal.

Impermeable Liner - Liner thickness shall be 30 mil (ASTM-D-4813). A geotextile fabric should be used to protect the liner from puncture.

Underdrain pipes should meet the following criteria:
- Distribution Pipe - Should be 8" diameter, slotted rigid HDPE pipe (AASHTO M252, Type S) in a gravel layer.
- Underdrain Pipe - Should be 6" diameter, slotted rigid HDPE pipe (AASHTO M252, Type S) in a gravel layer.
- Overdrain Pipe - Should be 4" diameter, slotted rigid HDPE pipe (AASHTO M252, Type S) in a gravel layer.
- Perforations - If perforated pipe is used, perforations should be ⅜" diameter located 6" on center with a minimum of four holes per row. Pipe shall be wrapped with a ¼" (No. 4 or 4x4) galvanized hardware cloth.

Construction Criteria:

The following items should be addressed during construction of projects with permeable pavement:

Erosion and Sediment Control: Final grading for installation should not take place until the surrounding site is stabilized. *If this cannot be accomplished, runoff from disturbed areas shall be diverted around proposed pavement locations.*

Soil Compaction: *Sub soils shall not be compacted.* Construction should be performed with lightweight, wide tracked equipment to minimize compaction. Excavated materials should be placed in a contained area.

Distribution Systems: *Overdrain, underdrain, and distribution pipes shall be checked to ensure that both the material and perforations meet specifications. The upstream ends of pipes should be capped prior to installation.* All distribution pipes used should be installed flat along the bed bottom.

Subbase Installation: *Subbase aggregate shall be clean and free of fines. The subbase shall be placed in lifts and lightly rolled according to the specifications.*

Inspection:

Regular inspections shall be made during the following stages of construction:

During excavation to subgrade.
During placement and backfill of any drainage or distribution system(s).
During placement of the crushed stone subbase material.
During placement of the surface material.
Upon completion of final grading and establishment of permanent stabilization.

Maintenance Criteria:

The following procedures should be considered essential for maintaining permeable pavement systems:

Pavements should be used only where regular maintenance can be performed. Maintenance agreements should clearly specify how to conduct routine tasks to ensure long-term performance.

Pavement surfaces should be swept and vacuumed to reduce sediment accumulation and ensure continued surface porosity. Sweeping should be performed at least twice annually with a commercial cleaning unit. Washing systems and compressed air units should not be used to perform surface cleaning.

Drainage pipes, inlets, stone edge drains, and other structures within or draining to the subbase should be cleaned out at regular intervals.

Trucks and other heavy vehicles can grind dirt and grit into the porous surfaces, leading to clogging and premature failure. These vehicles should be prevented from tracking and spilling material onto the pavement.

Deicers should be used in moderation. When used, deicers should be non-toxic and organic and can be applied either as calcium magnesium acetate or as pretreated salt. Snow plowing should be done carefully with blades set one-inch higher than normal. Plowed snow piles and snowmelt should not be directed to permeable pavement.

CONSTRUCTION SPECIFICATIONS

1. INTRODUCTION
THESE SPECIFICATIONS PROVIDE TECHNICAL INFORMATION ON PERVIOUS CONCRETE APPLICATION, DESIGN METHODS, MATERIALS, PROPERTIES, MIXTURE PROPORTIONING, CONSTRUCTION METHODS, TESTING, AND INSPECTION.
THE TERM "PERVIOUS CONCRETE" DESCRIBES A ZERO-SLUMP, OPEN-GRADED MATERIALCONSISTING OF PORTLAND CEMENT, COARSE AGGREGATE, LITTLE OR NO FINE AGGREGATE, ADMIXTURES, AND WATER. THE COMBINATION OF THESE INGREDIENTS WILL PRODUCE A HARDENEDMATERIAL WITH CONNECTED PORES, RANGING IN SIZE FROM 0.08 TO 0.32 IN. THAT ALLOW WATER TO PASS THROUGH EASILY. THE VOID CONTENT SHALL BE A MINIMUM OF 15% WITH A MINIMUM COMPRESSIVE STRENGTHS OF 3,000 PSI. THE ORAINAGE RATE OF PERVIOUS CONCRETE PAVEMENTWILL VARY WITH AGGREGATE SIZE AND DENSITY OF THE MIXTURE, BUT WILL GENERALLY FALL INTOTHE RANGE OF 2 TO 18 GAL/MIN/FT2.

2. AGGREGATES
AGGREGATE GRADINGS USED IN PERVIOUS CONCRETE SHALL BE EITHER SINGLE-SIZED COARSE AGGREGATE OR GRADING BETWEEN 3/4 AND 3/8 INCH. ROUNDED AND CRUSHED AGGREGATES, BOTH NORMAL AND LIGHTWEIGHT, ARE ACCEPTABLE. THE AGGREGATE USED SHOULD MEET REQUIREMENTS OF ASTM D 448 AND C 33. FINE AGGREGATES SHALL NOT BE USED IN PERVIOUS CONCRETE MIXTURES.

3. CEMENTITIOUS MATERIALS
PORTLAND CEMENT CONFORMING TO ASTM C 150, C 595, OR C 1157 IS USED AS THE MAIN BINDER. FLY ASH, SLAG CEMENT, AND SILICA FUME SHOULD MEET THE REQUIREMENTS OF ASTM C 618, C 989, AND C 1240, RESPECTIVELY.

4. ADMIXTURES
ADMIXTURES SHOULD MEET THE REQUIREMENTS OF ASTM C 494. WATER-REDUCING ADMIXTURES (HIGH-RANGE OR MEDIUM-RANGE) ARE USED DEPENDING ON THE W/C. RETARDING ADMIXTURES ARE USED TO STABILIZE AND CONTROL CEMENT HYDRATION.

5. PERCOLATION RATE
THE PERCOLATION RATE OF PERVIOUS CONCRETE IS DIRECTLY RELATED TO THE AIR VOID CONTENT. A MINIMUM VOID CONTENT OF 15% IS REQUIRED.

6. PROPORTIONS OF CONSTITUENT MATERIALS

PORTLAND CEMENT TYPE 1/11	LB-DRY/YD3	600
COARSE AGGREGATE, PEA GRAVEL	LB-SSD/YD3	2740
WATER	LB/YD3	145
WATER-REDUCING ADMIXTURE	OZ/100LB CEMENT	5.0
VISCOSITY MODIFYING ADMIXTURE	OZ/100LB CEMENT	6.0
SET STABILIZING ADMIXTURE	OZ/100LB CEMENT	6.0

7. DESIGN PROPERTIES

RATIO WATER/CEMENT	BY WEIGHT	0.24
RATIO AGGREGATE/CEMENT	BY WEIGHT	4.5
VOID CONTENT	PERCENT BY COLUMN	19
PLASTIC UNIT WEIGH	POUNDS PER CUBIC FOOT	129.1
WATER STORAGE	INCHES PER INCH DEPTH OF PAVEMENT	0.19
WATER PERCOLATION	GALLONS PER SQUARE FOOT-MINUTE	2.1
FLEXURAL STRENGTH	POUNDS-FORCE PER SQUARE INCH	460

8. SUBGRADE PREPARATION AND LAYOUT
THE TOP 4 IN OF THE SUBGRADE SHALL BE COMPOSED OF GRANULAR OR GRAVELLY MATERIAL WITH NO MORE THAN A MODERATE AMOUNT (10%) OF SILT OR CLAY. THE SUBGRADE SHALL NOT BE MUDDY, SATURATED, OR FROZEN WHEN PLACEMENT BEGINS. THE SUBGRADE SOILS SHALL BE MOISTENED BEFORE CONCRETE PLACEMENT. FAILURE TO PROVIDE A MOIST SUB-BASE WILL RESULT IN A REDUCTION IN STRENGTH OF THE PAVEMENT AND CAN LEAD TO A PREMATURE PAVEMENT FAILURE. TO ENSURE UNIFORM COMPACTION, WHEEL RUTS SHOULD BE RAKED AND RE-COMPACTED BEFORE CONCRETE PLACEMENT OPERATIONS. IF THE SUBGRADE SOIL PROPERTIES REQUIRE THAT AN AGGREGATE RECHARGE BED BE INCORPORATED INTO THE DRAINAGE DESIGN OF THE SITE, IT SHALL BE PLACED ON THE PREPARED SUBGRADE, COMPACTED. AND TRIMMED TO THE PROPER ELEVATIONS.

9. CONSTRUCTION
CONSTRUCTION OF PERVIOUS CONCRETE SHALL BE ACCOMPLISHED BY A CERTIFIED CONTRACTOR. A TECHNICIAN CERTIFIED BY THE NATIONAL READY MIX ASSOCIATION (NRM) TO INSTALL PERVIOUS CONCRETE SHALL BE ON SITE OVERSEEING INSTALLATION DURING ALL PERVIOUS CONCRETE ACTIVITIES TO VERIFY THAT THE PERVIOUS CONCRETE IS BEING INSTALLED IN ACCORDANCE WITH PROJECT PLANS AND SPECIFICATIONS AND IN ACCORDANCE WITH THE ACCEPTED METHODS OF INSTALLING PERVIOUS CONCRETE AS ESTABLISHED BY THE NRM AND THE AMERICAN CONCRETE INSTITUTE (ACI). A PRECONSTRUCTION CONFERENCE AND CONSTRUCTION OF TEST SECTIONS ARE RECOMMENDED TO ADDRESS ISSUES SUCH AS:

- DETERMINING THE CONSTRUCTION SEQUENCE;
- ARRANGING FOR A REALISTIC DELIVERY RATE OF CONCRETE;
- ARRANGING FOR ADEQUATE ACCESS TO THE PROJECT SITE FOR THE CONCRETE TRUCKS;
- SELECTING THE OPTIMUM EQUIPMENT FOR THE SIZE OF THE PROJECT;
- COORDINATING TESTING AND INSPECTION;
- DEMONSTRATING THAT THE PROPOSED MIXTURE PROPORTIONS PERFORM AS EXPECTED; AND
- VERIFYING THAT THE PERVIOUS CONCRETE CONTRACTOR IS ADEQUATELY QUALIFIED.

10. PLACEMENT
PLACEMENT OF PERVIOUS CONCRETE NEEDS TO BE COMPLETED AS QUICKLY AS POSSIBLE. PERVIOUS CONCRETE HAS LITTLE EXCESS WATER IN THE MIXTURE. DRYING OF THE CEMENT PASTE CAN LEAD TO A RAVELING FAILURE OF THE PAVEMENT SURFACE; THEREFORE, RAPID PLACEMENT OF THE PAVEMENT IS ESSENTIAL.

11. FORM CONSTRUCTION
FORMS SHALL BE MADE OF WOOD, PLASTIC. OR STEEL AND SHOULD BE THE DEPTH OF THE PAVEMENT. FORMS SHALL BE OF SUFFICIENT STRENGTH AND STABILITY TO SUPPORT MECHANICAL EQUIPMENT. THE SUBGRADE UNDER THE FORMS SHALL BE COMPACTED IN ACCORDANCE WITH THE GEOTECH'S RECOMMENDATIONS AND CUT TO GRADE TO SUPPORT SCREED AND ROLLER EQUIPMENT USED.

12. CONCRETE DISTRIBUTION
CONCRETE SHOULD BE DEPOSITED AS CLOSE TO ITS FINAL POSITION AS PRACTICAL FOR PLACEMENTS THAT MIXERS CANNOT REACH, OR WHERE THE SUBGRADE DISTURBANCE IS TO BE MINIMIZED, A CONVEYOR MAY BE USED. PERVIOUS CONCRETE MIXTURES ARE TYPICALLY HARSH (ZERO SLUMP), PUMPING IS NOT RECOMMENDED. AFTER DEPOSITING CONCRETE IT SHOULD BE CUT TO A ROUGH ELEVATION WITH A RAKE OR SIMILAR HAND TOOL.
PERVIOUS CONCRETE ALONG THE FORMS SHOULD BE COMPACTED BY HAND TAMP TO ENSURE THAT THE EDGES MAINTAIN STRUCTURAL INTEGRITY AFTER THE FORMS ARE REMOVED AND THE CONCRETE IS PUT INTO SERVICE DURING COMPACTION OF THE CONCRETE. THE OUTSIDE EDGE OF THE TAMPER SHOULD BE KEPT ON THE FORM TO ENSURE THAT THE CONCRETE IS NOT COMPACTED BELOW THE FORM ELEVATION.

- CARE SHOULD BE TAKEN TO MINIMIZE:
- PULLING OR SHOVELING OF FRESH CONCRETE INTO FINAL POSITION;
- FILLING VOIDS IN THE CONCRETE;
- CONTAMINATING THE PERVIOUS CONCRETE WITH DELETERIOUS MATERIAL; AND
- WALKING IN THE PERVIOUS CONCRETE.13. RISER STRIPS
RISER STRIPS SHALL BE PLACED ON TOP OF THE FORMS FOR INITIAL STRIKE-OFF. THESE STRIPS VARY FROM J/8 TO 3/4 IN. THICK; DEPENDING ON THE NECESSARY THICKNESS OF THE PAVEMENT SECTION, THE AGGREGATE USED IN THE PERVIOUS CONCRETE, AND THE CONTRACTOR'S PLACEMENT METHODS.

14. STRIKE-OFF METHODS AND EQUIPMENT
STRIKE-OFF METHODS WILL VARY DEPENDING ON THE SIZE OF THE PLACEMENT. FOR SMALL JOBS, SUCH AS DRIVEWAYS, OR FOR TIGHT AREAS, A HAND-HELD STRAIGHTEDGE OR JITTERBUG SCREED IS ACCEPTABLE. FOR LARGER JOBS, THE USE OF AN-A-FRAME VIBRATING SCREED IS RECOMMENDED. IT IS IMPORTANT TO STRIKE-OFF THE CONCRETE AS QUICKLY AS POSSIBUE; THUS. HANDWORK IS NOT RECOMMENDED DUE TO ITS LACK OF SPEED.

15. MISCELLANEOUS TOOLS
TRADITIONAL CONCRETE FINISHING TOOLS SUCH AS EDGERS AND COME-ALONG MAY BE USED TO FACILITATE PROPER PLACEMENT OF PERVIOUS CONCRETE. BULL FLOATS SHOULD NOT BE USED.

16. USING PAVEMENT AS A FORM
SPECIAL CARE WILL BE TAKEN WHEN PLACING A PERVIOUS CONCRETE SECTION NEXT TO AN EARLIER PLACEMENT FROM THE SAME DAY TO PREVENT DAMAGE TO THE EARLIER SECTION. WHEREAS THIS PROCEDURE IS NOT TYPICALLY RECOMMENDED, IT MAY BE NECESSARY IN SOME APPLICATIONS.

- CAREFULLY PEEL BACK THE CURING SHEET COVERING THE EARLIER PLACEMENT TO JUST REVEAL THE INSIDE EDGE OF THE FORM. CARE SHOULD BE TAKEN TO KEEP THE EARLIER PERVIOUS CONCRETE COMPLETELY COVERED;
- PLACE SHEETS OF PLYWOOD OR ORIENTED STRAND BOARD (OSB) (3/8 IN [1 0 MM] OR THICKER AS REQUIRED) ON TOP OF THE CURING SHEET, ALONG THE EDGE OF THE EARLIER PERVIOUS PLACEMENT;
- REMOVE FROM THE FORM BOARD. EXPOSING THE FRESH EDGE OF THE EARLIER PLACEMENT;
- PLACE PERVIOUS CONCRETE UP TO THIS EDGE;
- STRIKE OFF THE FRESHLY PLACED PERVIOUS CONCRETE WITH THE SCREED RIDING ON THE PLYWOOD OR 058;
- CONTINUE WITH CONSOLIDATION AS USUAL.; AND
- COVER THE PERVIOUS CONCRETE AS SOON AS POSSIBLE.

17. CONSOLIDATION
IMMEDIATELY AFTER STRIKE-OFF THE FIRST RISER STRIPS ARE REMOVED ON EACH FORM AND THE CONCRETE IS COMPACTED TO THE FORM'S ELEVATION WITH A WEIGHTED ROLLER. A HAND TAMP MAY BE USED ALONG THE EDGES TO FACILITATE COMPACTION ALONG THE FORMS. THE ROLLER IS USED TO COMPACT THE CONCRETE TO CREATE A STRONG CEMENT PASTE BOND BETWEEN AGGREGATE PARTICLES AND TO PROVIDE AN ACCEPTABLE SURFACE SMOOTHNESS. THE ROLLER SHOULD BE OF ADEQUATE WIDTH TO RIDE ON THE FORMS AND SHOULD PROVIDE A MINIMUM OF 10 PSI VERTICAL FORCE.

18. CONTRACTION
CONTRACTION JOINTS SHOULD BE INSTALLED AS INDICATED BY THE CERTIFIED TECHNICIAN.
THEY SHALL HAVE A DEPTH OF 1/3 TO)\ OF THE THICKNESS OF THE PAVEMENT. JOINTS SHALL BE INSTALLED IN THE FRESH CONCRETE. A SPECIALLY DESIGNED ROLLING JOINTER WITH A BLADE THAT IS AT LEAST)\ (PREFERABLY 1/3) THE THICKNESS OF THE SLAB AND WITH ENOUGH WEIGHT TO FORCE THE BLADE TO CLEANLY CUT THE JOINT SHALL BE USED. IN PLACEMENTS WITH WIDE LANE WIDTHS, A LONGITUDINAL JOINT MAY BE CUT WITH THE COMPACTING ROLLER.

19. CURING AND PROTECTION
THE OPEN PORE STRUCTURE OF PERVIOUS CONCRETE MAKES CURING PARTICULARLY IMPORTANT.
THE COVER MATERIAL SHALL BE A CLEAR, 6 MIL OR THICKER POLYETHYLENE SHEET OF SUFFICIENT DIMENSION TO BE ABLE TO COVER THE ENTIRE WIDTH OF A LANE ALONG A REASONABLE DISTANCE. WOVEN MATERIALS, SUCH AS BURLAP AND GEOTEXTILE FABRIC AND WAX-BASED CURING COMPOUNDS SHALL NOT BE USED.
STRIKE-OFF, COMPACTION, AND CURING OPERATIONS SHALL BE KEPT AS CLOSE TOGETHER AS POSSIBLE TO PREVENT DRYING OF THE TOP SURFACE OF THE PERVIOUS CONCRETE. FOLLOWING THE PLACEMENT PROCESS, AS SOON AS THE STRIKE-OFF OPERATION HAS MOVED ON TO A NEW RISER STRIP, THE USED RISER STRIPS SHOULD BE REMOVED AND THE COMPACTION OPERATIONS SHOULD BEGIN. WHEN ADVERSE AMBIENT WEATHER CONDITIONS EXIST, SUCH AS HIGH TEMPERATURE, HIGH WIND, OR LOW HUMIDITY, AN EVAPORATION RETARDANT SHOULD BE LIGHTLY SPRAYED ON THE SURFACE FOLLOWING STRIKE-OFF OPERATIONS AND BEFORE COMPACTION. CURING SHOULD BEGIN WITHIN 20 MINUTES AFTER THE FINAL COMPACTION OPERATIONS. BEFORE COVERING IF THE CONCRETE HAS LOST ITS "SHEEN" IT SHOULD BE LIGHTLY MISTED WITH WATER.
THE POLYETHYLENE COVER SHALL OVERLAP ALL EXPOSED SURFACES SO THAT IT MAY BE SECURED IN PLACE. REINFORCING BAR, LUMBER, OR CONCRETE BLOCKS MAY BE USED TO SECURE THE POLYETHYLENE COVER TO PREVENT IT FROM BEING BLOWN OFF. DIRT, SAND, OR OTHER GRANULAR MATERIAL SHALL NOT BE USED, AS THEY MAY WASH AWAY OR INTO THE PORES OF THE CONCRETE UPON REMOVAL. IF WOODEN FORMS ARE USED, THE RISER STRIPS MAY BE USED TO SECURE THE SHEETS IN PLACE. ALL EDGES OF PAVEMENT SHALL BE COVERED PROPERLY.
FOR PROPER CURING, THE PAVEMENT SHALL REMAIN COVERED FOR 7 DAYS FOR STRAIGHT CEMENT CONCRETE MIXTURES AND 10 DAYS FOR CONCRETE MIXTURES THAT INCORPORATE SUPPUEMENTARY CEMENTITIOUS MATERIALS. STRIPING SHOULD BE APPLIED ONLY AFTER THE CURING PERIOD HAS PASSED. NO TRAFFIC SHALL BE ALLOWED ON THE PAVEMENT DURING CURING. THE GENERAL CONTRACTOR SHALL TAKE MEASURES TO PREVENT DAMAGE TO THE PAVEMENT DUE TO ABUSE FROM CONSTRUCTION OPERATIONS. SPECIFICALLY, THE GENERAL CONTRACTOR SHALL PROHIBIT REMOVAL OF THE CURING MATERIAL AND PREVENT ANY TRAFFIC FROM TRAVELING ON THE PERVIOUS CONCRETE PAVEMENT. ADDITIONALLY, THE GENERAL CONTRACTOR SHALL NOT ALLOW STORAGE OF BUILDING AND LANDSCAPING MATERIALS ON THE PAVEMENT SURFACE AS THESE MATERIALS CAN CLOG THE PORES OR OTHERWISE DAMAGE PERVIOUS PAVEMENTS.
COLD WEATHER PROTECTION - COLD WEATHER MEASURES SHALL BE USED TO PROTECT THE PERVIOUS CONCRETE FROM FREEZING WHILE MAINTAINING MOISTURE FOR THE TIME NECESSARY TO ACHIEVE THE DESIRED PHYSICAL PROPERTIES. CURING BLANKETS WORK SUFFICIENTLY TO SERVE BOTH PURPOSES.
HOT WEATHER PROTECTION - IN HOT WEATHER, TRANSPORTING, PLACING, AND COMPACTING SHALL BE DONE AS QUICKLY AS POSSIBLE. EVAPORATION RETARDANT MAY BE APPLIED TO THE SURFACE OF THE CONCRETE FOLLOWING THE STRIKE-OFF PROCESS TO RETARD THE LOSS OF MOISTURE ON THE SURFACE. AFTER CONSOLIDATION AND BEFORE PLACING THE POLYETHYLENE, THE SURFACE MAY BE LIGHTLY MISTED WITH WATER OR AN EVAPORATION RETARDANT IF THE SURFACE APPEARS TO BE LOSING ITS SHEEN APPEARANCE.

20. REPAIRING PERVIOUS CONCRETE PAVEMENTS GRINDING
HIGH SPOTS CAN BE GROUND WITH A WEIGHTED GRINDER. THE GRINDER WILL CUT THROUGH AND EXPOSE THE AGGREGATE IN GROUND AREAS, HOWEVER, CHANGING THE APPEARANCE OF THE PAVEMENT.
HOLES OR LOW SPOTS
SMALL HOUES (LOW SPOTS) SHALL BE PATCHED WITH AN AGGREGATE EPOXY BLEND TO MATCH THE APPEARANCE OF THE PAVEMENT SURFACE. THE AGGREGATE SHALL BE COATED WITH WET CEMENT AND CURED BEFORE PATCHING. LARGE HOLES SHALL BE PATCHED WITH PERVIOUS CONCRETE OF THE SAME MIXTURE PROPORTIONS AS THE ORIGINAL SURFACE. WHEN PATCHING. IT IS HIGHLY UNLIKELY THAT THE COLOR OF THE PATCH WILL MATCH THE ORIGINAL SURFACE MATERIAL.
EPOXY BODING AGENTS MAY BE USED TO ENSURE PROPER BONDING BETWEEN THE OLD AND NEW SURFACES.
UTILITY CUTS
IN THE EVENT THAT A SECTION OF PERVIOUS CONCRETE IS CUT, A FULL DEPTH REPAIR SHALL BE PERFORMED. THIS WOULD INCLUDE REMOVING A SQUARE SECTION THE WIDTH OF A PLACED PLANE SUCH THAT THE NEW MATERIAL WOULD BE LARGE ENOUGH TO MAINTAIN ITS STRUCTURAL INTEGRITY UNDER LOADING.
MAINTENANCE
THERE ARE TWO COMMONLY ACCEPTED MAINTENANCE METHODS TO MAINTAIN PERVIOUS
CONCRETE, POWER VACU MING AND PRESSURE WASHING. THE MOST EFFECTIVE SCHEME, HOWEVER, IS TO COMBINE THE TWO TECHNIQUES. POWER VACUUM AFTER PRESSURE WASHING. DURING PRESSURE WASHING CARE SHOULD BE TAKEN NOT TO USE TOO MUCH PRESSURE, AS THIS WILL DAMAGE THE PERVIOUS CONCRETE. A SMALL SECTION OF THE PAVEMENT SHOULD BE PRESSURE WASHED USING VARYING WATER PRESSURES TO DETERMINE THE APPROPRIATE PRESSURE FOR THE GIVEN PAVEMENT.

21. MAINTENANCE
A SUGGESTED MAINTENANCE SCHEDULE IS AS FOLLOWS:

ACTIVITY	SCHEDULE
• ENSURE THAT PAVING AREA IS CLEAN OF DEBRIS	MONTHLY
• ENSURE THAT THE AREA IS CLEAR OF SEDIMENTS	MONTHLY
• SEED BARE UPLAND AREAS	AS NEEDED
• PRESSURE WASH/VACUUM SWEEP SURFACE	TWICE ANNUALLY
• INSPECT THE SURFACE FOR DETERIORATION OR SPALLING	ANNUALLY

22. PRECONSTRUCTION INSPECTION AND TESTING
DETERMINING THE PERMEABILITY OF THE SUBGRADE AND SOIL ANALYSIS ARE IMPORTANT IN THE DESIGN AND CONSTRUCTION OF THE PROJECT. BASIC TESTS OF THE PROPERTIES OF THE SUBGRADE SHALL INCLUDE A PARTICLE SIZE ANALYSIS (ASTM D 422). SOIL CLASSIFICATION (ASTM D 2487), AND STANDARD PROCTOR (ASTM D 698). A DOUBLE RING INFILTROMETER (ASTM D 3385) OR OTHER SUITABLE TEST SHALL BE PERFORMED TO ADEQUATELY TEST THE PERMEABILITY. FOR SMALL PROJECTS, THESE TESTS ARE NOT NECESSARY IF OTHER BORINGS AND/OR INFILTRATIONS TESTS HAVE BEEN CONDUCTED AND IN COMBINATION WITH EXPERIENCE WITH THE LOCAL SOILS IF OTHER BORINGS OR INFILTRATION TESTS HAVE BEEN DONE IN THE FACILITY, ESPECIALLY IF THE DESIGNER HAS PREVIOUS EXPERIENCE WITH SIMILAR LOCAL SOILS.
NORMAL TESTING PROCEDURES FOR DENSITY (COMPACTION) IN ACCORDANCE WITH A STANDARD ASTM TEST PROCEDURE SHOULD BE PERFORMED WITHOUT MODIFICATION BEFORE CONCRETE PLACEMENT AS PART OF A NORMAL QUALITY CONTROL PLAN.
DURING CONSTRUCTION: FOR EACH DAYS PLACEMENT, OR WHEN VISUAL INSPECTION INDICATES A CHANGE IN APPEARANCE OF THE FRESH MIXTURE, AT LEAST ONE TEST SHOULD BE CONDUCTED TO VERIFY THE DENSITY OF THE MATERIAL. THE TEST OF THE MIXTURE SHOULD BE CONDUCTED IN ACCORDANCE WITH ASTM C 172 AND C 29. ACCEPTANCE SHOULD BE ON A VALUE OF ± 5 LB/FT3 (80 KG/M3) OF THE DESIGN UNIT WEIGHT.
AFTER CONSTRUCTION: THE LEVEL OF COMPACTION OF THE FRESH MIXTURE CAN HAVE AN IMPACT ON THE LIFE AND PERMEABILITY OF THE FINISHED PRODUCT. CORING OF THREE SAMPLES OF THE PAVEMENT WILL RESULT IN ACCEPTANCE SAMPLES FOR THICKNESS, VOID CONTENT, AND UNIT WEIGHT. CORE SAMPLES SHOULD BE OBTAINED IN ACCORDANCE WITH ASTM C 42 AND TESTED AT 28 DAYS OF AGE.

23. FOR ADDITIONAL INFORMATION INCLUDING REFERENCES SEE PERVIOUS CONCRETE, REPORTED BY ACI COMMITTEE 552. ACI 522R-10.

STANDARD HOWARD COUNTY OPERATION AND MAINTENANCE SCHEDULE FOR PRIVATELY OWNED AND MAINTAINED PERMEABLE PAVEMENT (A-2)

a. The Owner shall periodically sweep (or vacuum porous concrete pavement) the pavement surfaces to reduce sediment accumulation and ensure continued surface porosity. Sweeping should be performed at least twice annually with a commercial cleaning unit. Washing or compressed air units should not be used to perform surface cleaning.

b. The Owner shall periodically clean drainage pipes, inlets, stone edge drains and other structures within or draining to the subbase.

c. The Owner shall use deicers in moderation. Deicers should be non-toxic and be applied either as calcium magnesium acetate or as pretreated salt.

d. The Owner shall ensure snow plowing is performed carefully with blades set one-inch above the surface. Plowed snow piles and snowmelt should not be directed to permeable pavement. melt should not be directed to permeable pavement.

APPROVED: DEPARTMENT OF PLANNING AND ZONING

Chief, Development Engineering Division — Date 4/23/13

Chief, Division of Land Development — Date 4/30/13

Director — Date 5/1/13

KCW ENGINEERING TECHNOLOGIES
KCW Engineering Technologies, Inc.
810 Landmark Drive, Suite 215
Glen Burnie, MD 21061
Phone: 410.768.7700
Fax: 410.768.0200
www.kcw-et.com

STATE OF MARYLAND — MARK TSILLAS — 33351 — PROFESSIONAL ENGINEER — PROFESSIONAL CERTIFICATION
Mark Tsillas 11/30/12

Professional Certification.
I hereby certify that these documents were prepared or approved by me, and that I am a duly licensed professional engineer under the laws of the State of Maryland.
License No. 33351.
Expiration Date 06-30-2014.

OWNER:
THE REDEEMED CHRISTIAN CHURCH OF GOD, INC.
13701 ANNAPOLIS ROAD
BOWIE, MD 20720
Attn: Margaret Adeyokunnu, Pastor
Tele: (301) 352-0707
Fax: (301) 352-3339

OWNER'S REPRESENTATIVE/ DEVELOPER:
TLI DESIGNGROUP INC.
3308 DORCHESTER ROAD
BALTIMORE, MD 21215
Attn: Taiwo Iluyomade, President
Toll Free/Fax/Voice mail:
(1-866) 616-1497
Mobile: (443) 831-6703

KCW J.O.:	2080018
SCALE:	AS SHOWN
DESIGNED:	MT
DRAWN:	MT
CHECKED:	KCA
DATE:	NOV. 30, 2012
DRAWING NO.	11 OF 19

SWM PERVIUOS PAVEMENT II

VICTORY TEMPLE - LAUREL
WORSHIP CENTER
9100 BURSA ROAD

SDP-12-007
TAX MAP 47, GRID 23
PARCEL 540 (PARCEL A, PLAT # 22114)

W&S CONTRACT No. 24-4047-D
ZONING: CE-CLI
ELECTION DISTRICT - 6
HOWARD COUNTY, MARYLAND

SDP-12-007

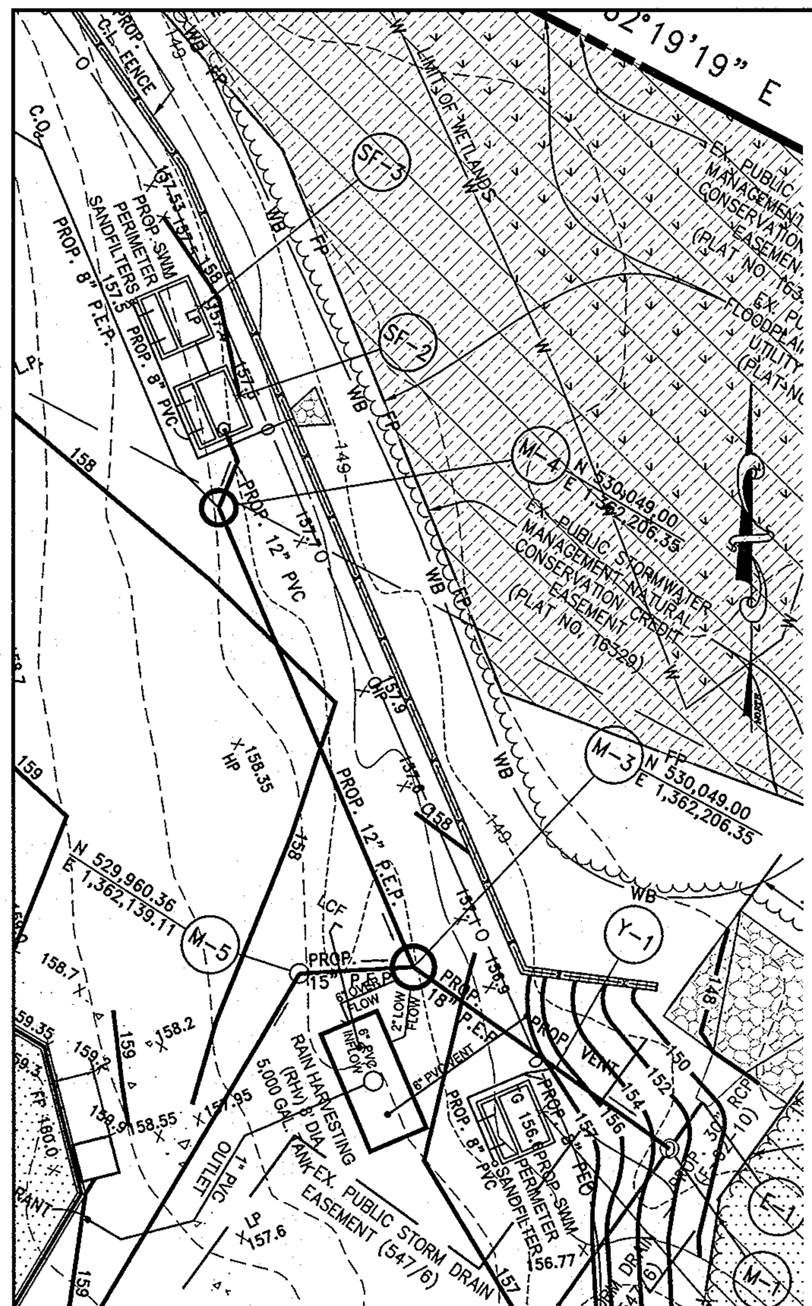

PLAN
SCALE: 1"=20'

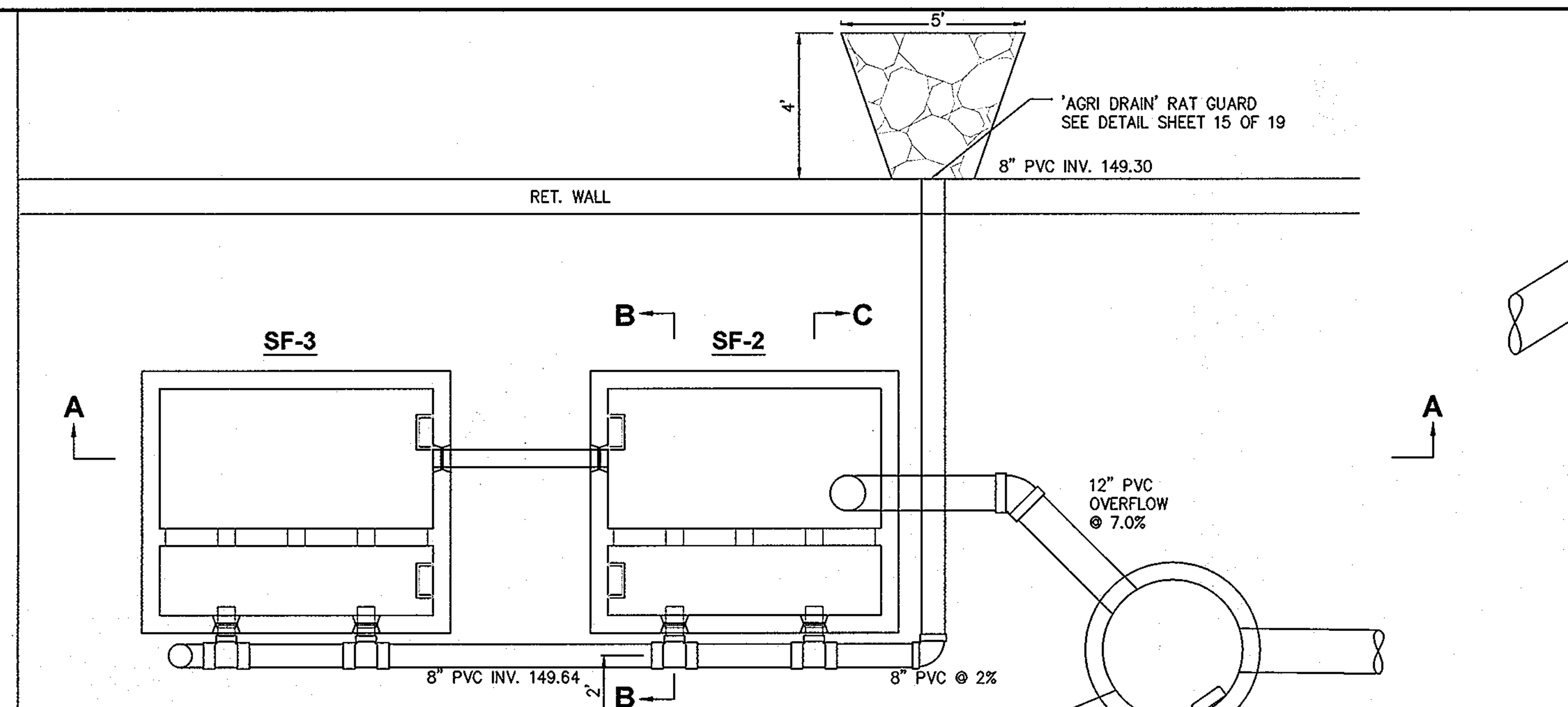

SAND FILTERS PLAN VIEW
SCALE: 1"=4'

Scale 1"=6"

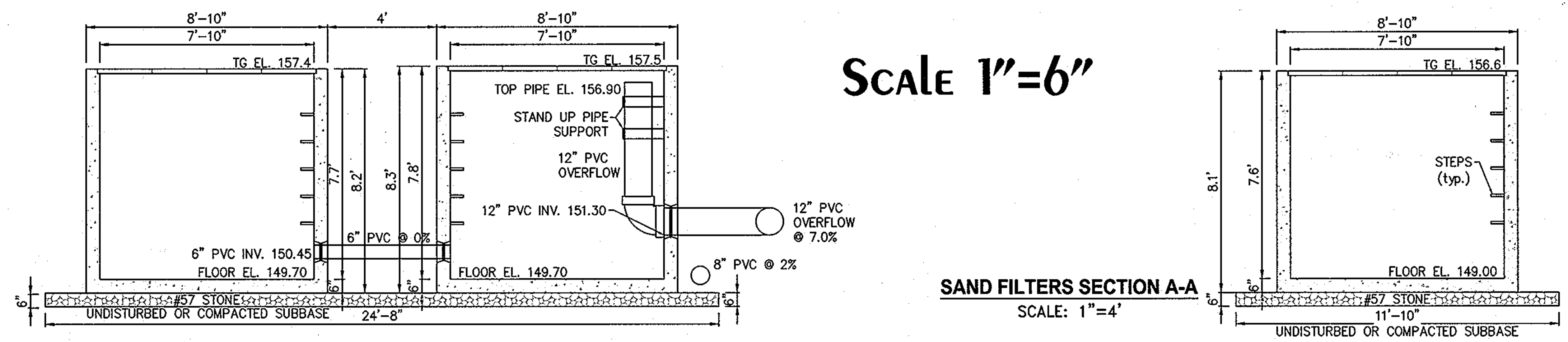

SAND FILTERS SECTION A-A
SCALE: 1"=4'

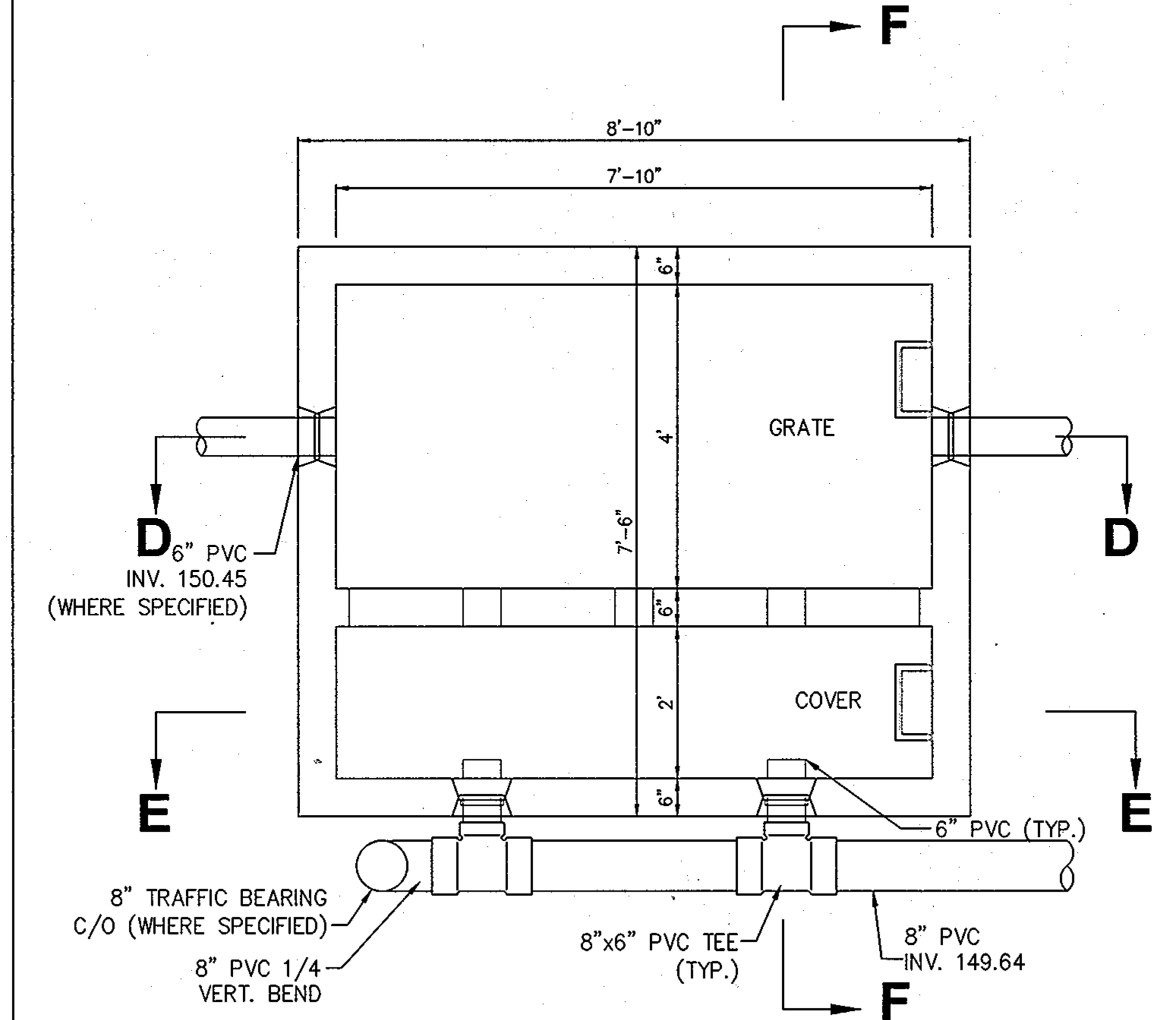

PLAN VIEW
SCALE 1" = 2'
TYPICAL

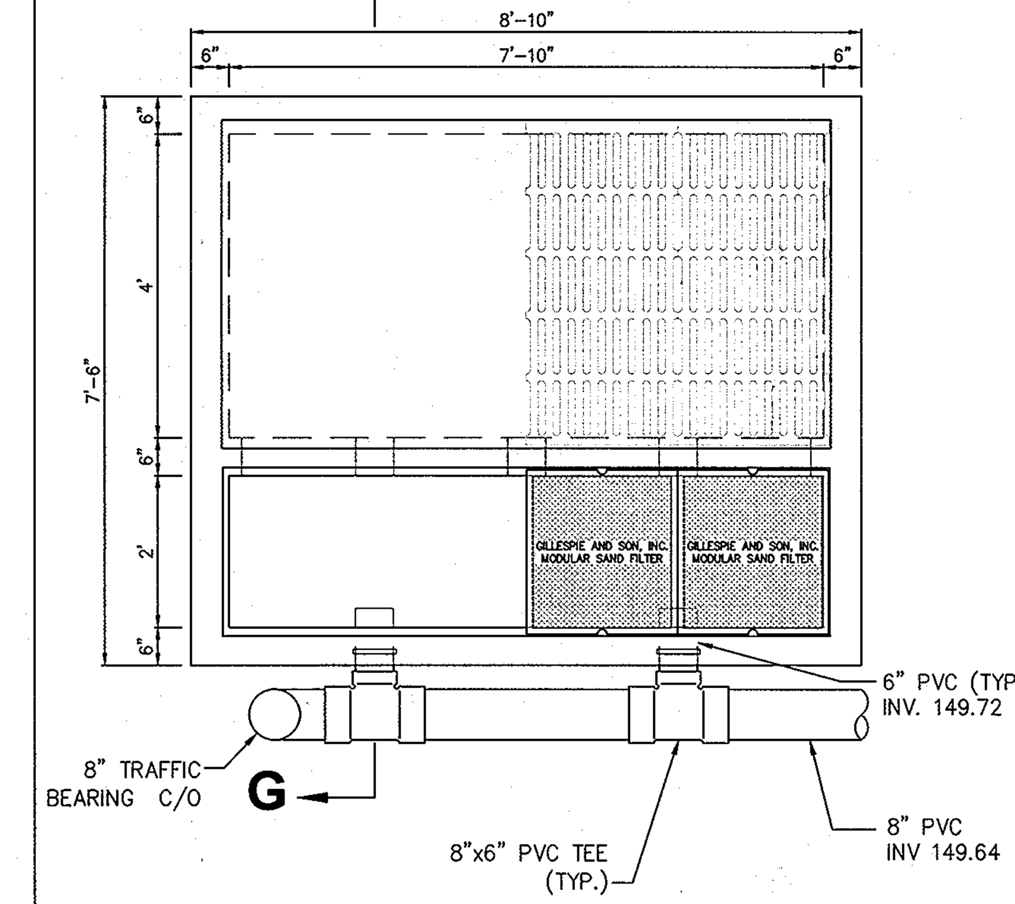

PLAN OF SINGLE MODULE COMPLETE IN PLACE
SCALE 1" = 2'
TYPICAL
(covers and grates removed for detail)

SF-2

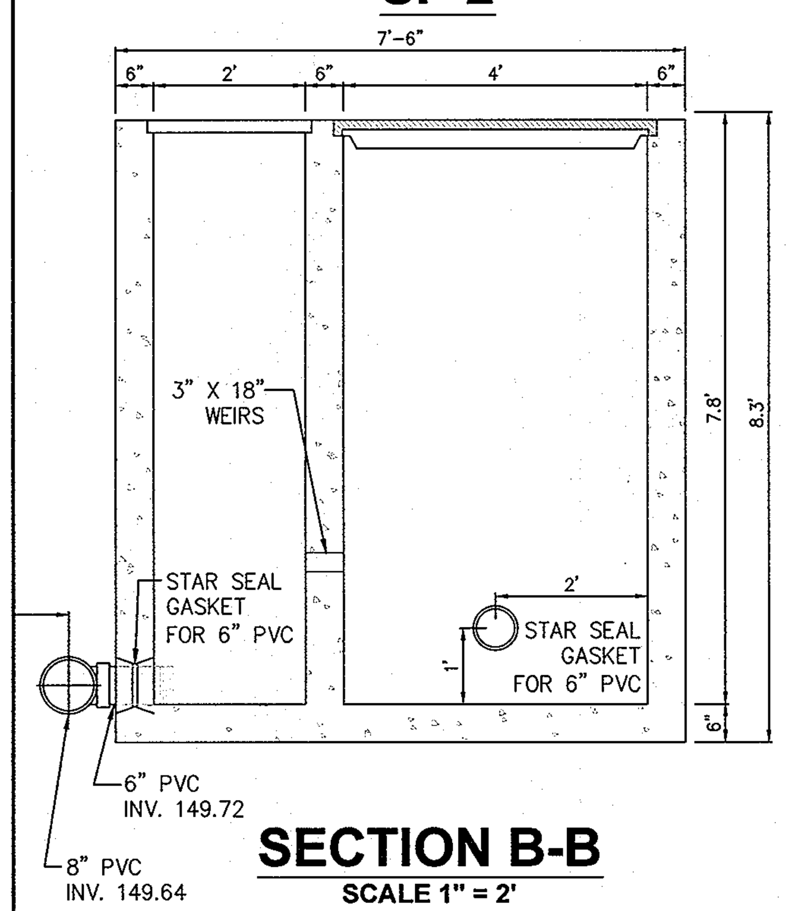

SECTION B-B
SCALE 1" = 2'

SF-2

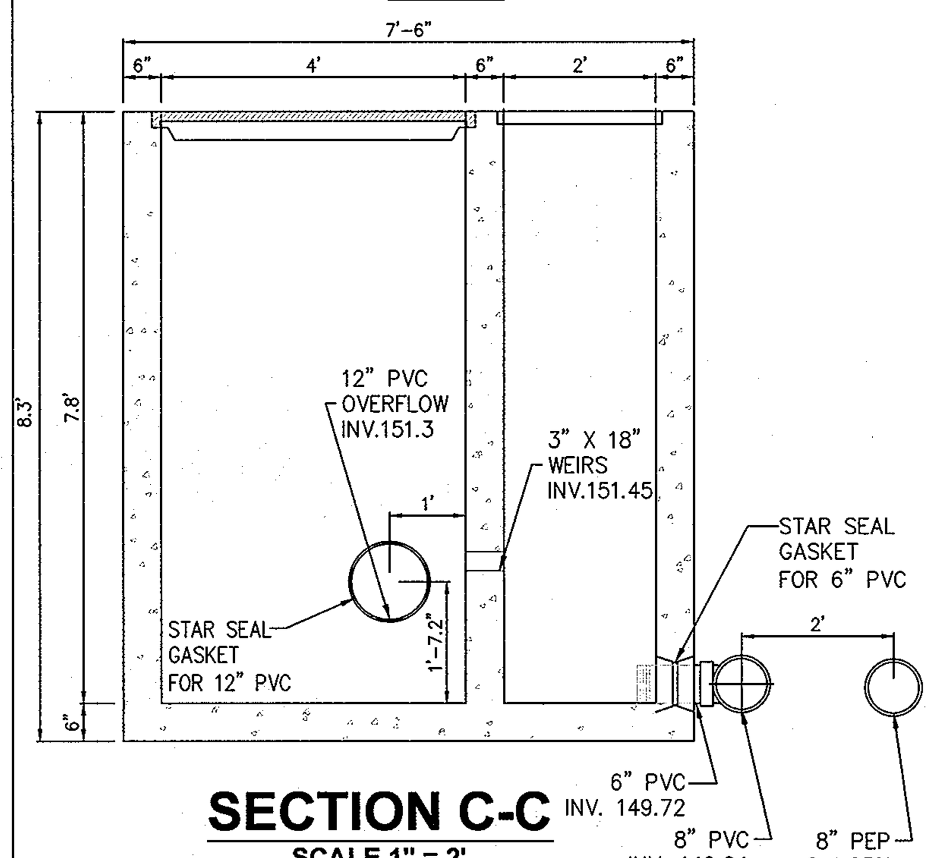

SECTION C-C
SCALE 1" = 2'

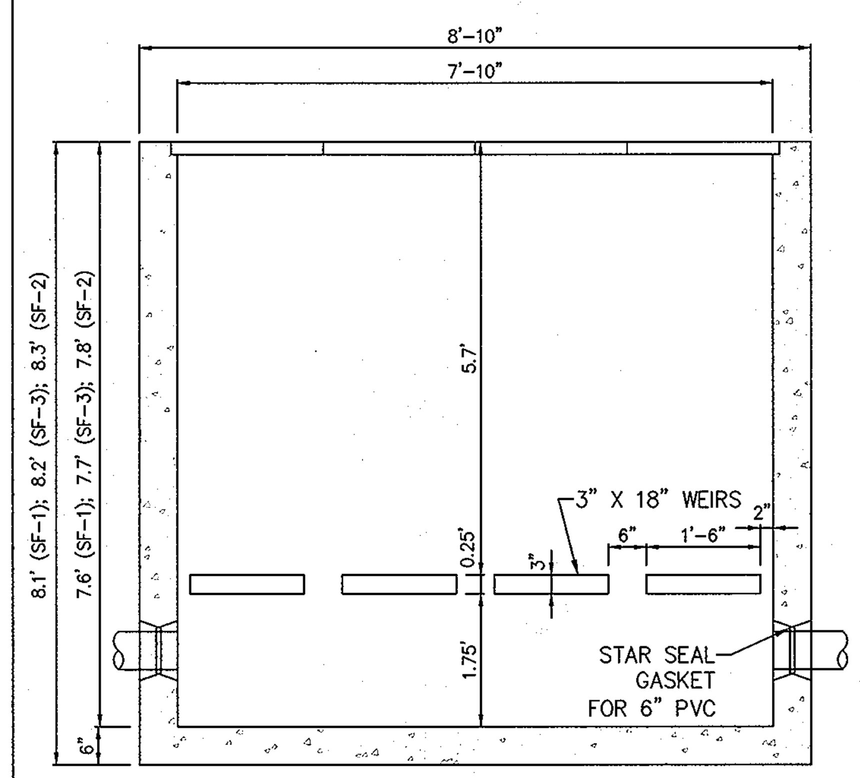

SECTION D-D
SCALE 1" = 2'

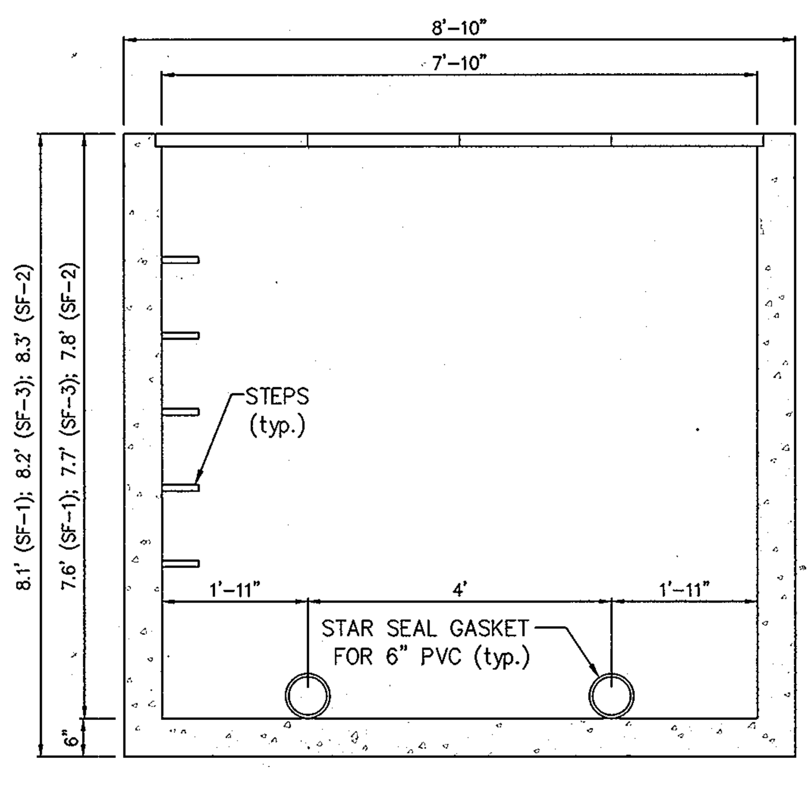

SECTION E-E
SCALE 1" = 2'

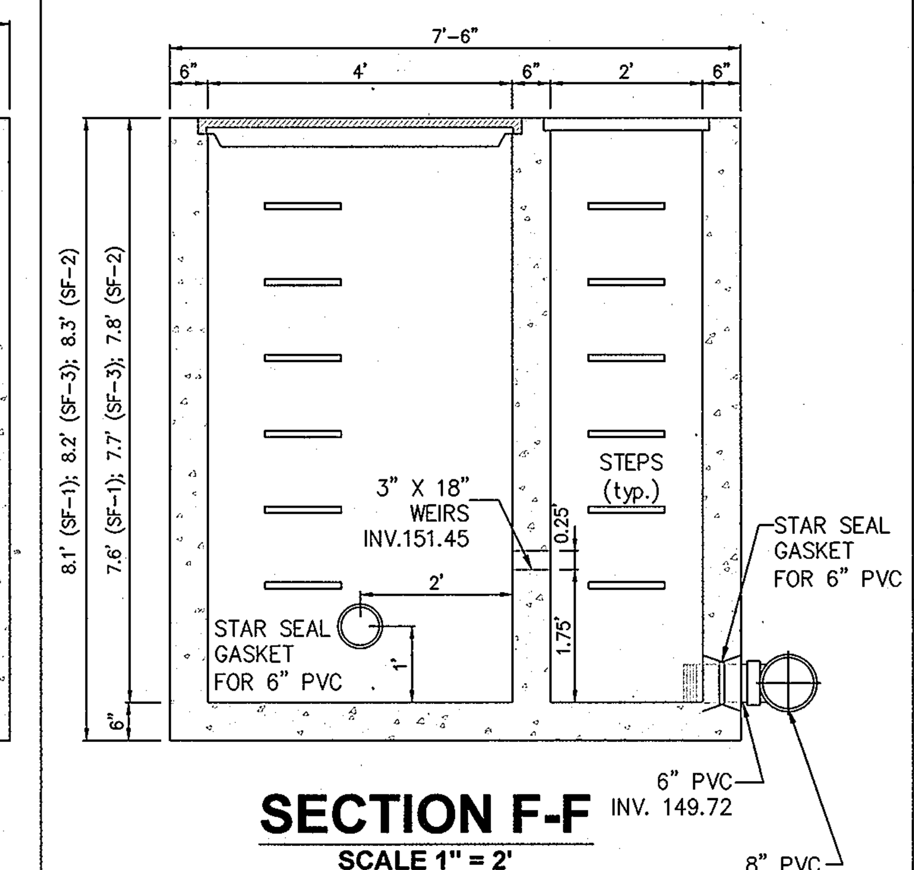

SECTION F-F
SCALE 1" = 2'

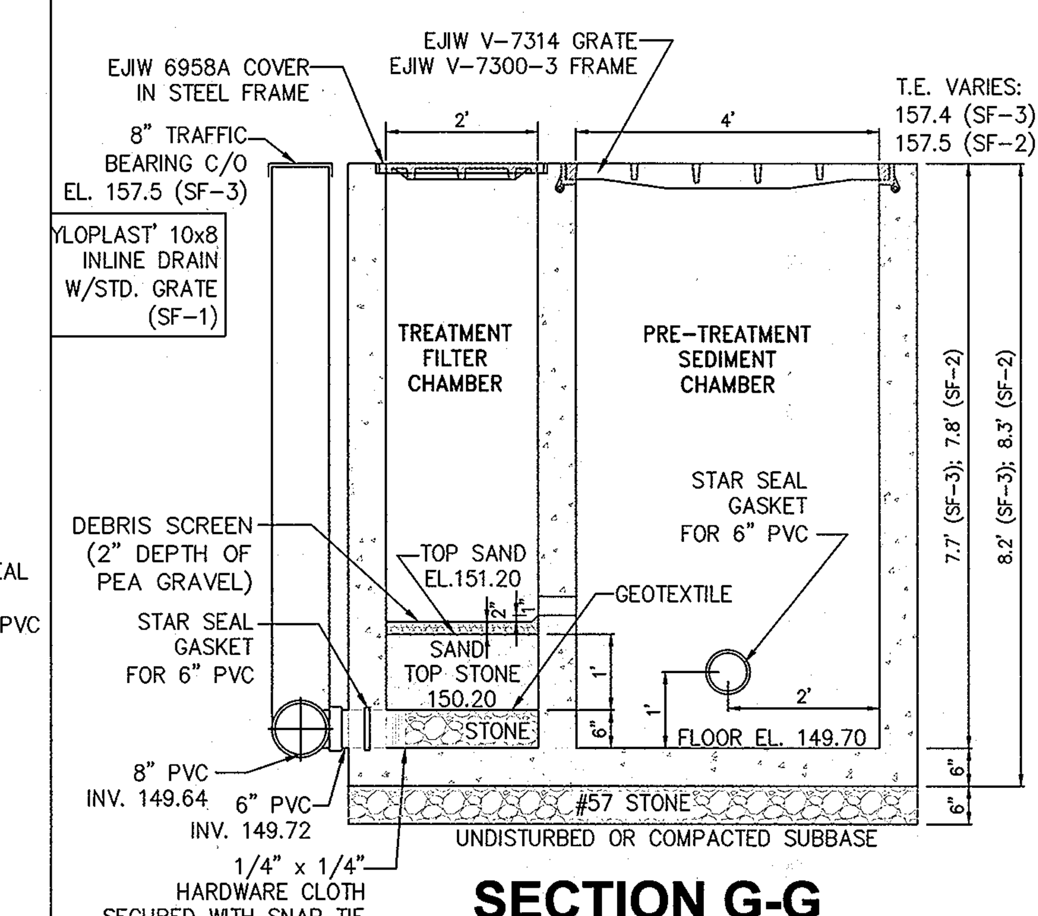

SECTION G-G
SCALE 1" = 2'

SAND FILTER SPECIFICATIONS

1. DESIGN: SAND FILTER SHALL BE PRE-FABRICATED CONCRETE STRUCTURE AS DESIGNED AND MANUFACTURED BY GILLESPIE PRE-CAST, LLC (ATTN. MICHAEL IACONA, 1-800-638-6884) OR APPROVED EQUAL. THE PRE-CAST MANUFACTURER SHALL PROVIDE DESIGN SHOP DRAWINGS CERTIFIED BY A REGISTERED PROFESSIONAL ENGINEER LICENSED TO PRACTICE IN MARYLAND. CONTRACTOR SHALL SUBMIT SHOP DRAWINGS MEETING VOLUME DIMENSIONS SPECIFIED HEREON FOR APPROVAL OF OWNER AND ENGINEER (KCW Engineering Technologies, Inc.) PRIOR TO FABRICATION OF UNIT.
2. WHEEL LOADING: AASHTO HS20-44
3. MATERIALS:
   a. SAND: CLEAN CONCRETE SAND per AASHTO M-6 or ASTM C-33.
   b. CONCRETE: 4000 PSI MIN.
   c. REINFORCING STEEL: GRADE 60 per ASTM A615
   d. FILTER DRAIN PIPE: 6" AND 8" DIAMETER POLY-VINYL CHLORIDE (PVC), SCHEDULE 40.
   e. OVERFLOW PIPE: 12" DIAMETER POLY-VINYL CHLORIDE (PVC), SCHEDULE 40.
   f. GEOTEXTILE FABRIC: MUST MAINTAIN 125 gpm/sf FLOW RATE. (MIRAFI 140N OR EQUAL).
   g. GRAVEL: per AASHTO M-43, No. 57.
   h. INLETS: TRAFFIC BEARING STORM DRAIN INLET GRATES (H-20 LOADING).
   SOLID COVERS: TRAFFIC BEARING SOLID COVERS (H-20 LOADING).
   i. STEPS: ALL MANHOLE AND INLET OPENINGS SHALL HAVE INSTALLED 10" MINIMUM WIDTH STEPS AT 12" ON CENTER.
4. TESTING: SAND FILTER SHALL BE WATER-TIGHT AND TESTED PRIOR TO PLACING FILTER MEDIA. ENTRANCES AND EXITS SHOULD BE PLUGGED AND THE SYSTEM COMPLETELY FILLED WITH WATER TO DEMONSTRATE WATER TIGHTNESS. WATER TIGHTNESS MEANS NO LEAKAGE FOR A PERIOD OF 8 HOURS. ALL OVERFLOW WEIRS AND SLOTS SHALL BE FIELD-TESTED TO INSURE UNIFORM DISTRIBUTION OF FLOWS.
5. CONSTRUCTION NOTES:
   a. ACCESS TO SAND FILTER SHALL BE THROUGH ENTRANCE OF THE PARKING LOT.
   b. ALL OPENINGS TO SAND FILTER SHALL BE PROTECTED WITH APPROPRIATE SEDIMENT CONTROL MEASURES DURING CONSTRUCTION. SANDFILTER TO BE CLEANED FROM ANY SEDIMENT PRIOR TO FILTER MEDIA INSTALLATION.
   c. SAND FILTER STRUCTURE AND FILTER BEDS SHALL BE INSTALLED LEVEL.

MATERIAL LIST BY GILLESPIE PRE-CAST, LLC

CONCRETE MIX MUST REACH 4500 PSI AT 28 DAYS.
REINFORCING TO BE MIN. TWO MATS OF 4" X 4" W4/W4 WIRE MESH.
SUPPORT FRAMES FOR GRATES AND COVERS SHALL BE RUST PROOF PAINTED STEEL ANGLE CAST IN PLACE, GRATES SHALL BE 26" X 24" X 1 1/2" CAST IRON (EAST JORDAN 6958 TYPE "M-2" OR EQUAL), BLACK POWDER COATED.
SOLID COVERS SHALL BE 26" X 24" X 1 1/2" CAST IRON (EAST JORDAN 6958 TYPE "A" OR EQUAL), BLACK POWDER COATED.
UNDER DRAIN PIPING AND INTER CONNECTING PIPING BETWEEN TANKS SHALL BE PVC SCHEDULE 40.
PIPING GASKETS SHALL BE COMPATIBLE WITH PVC SCHEDULE 40 PIPE (STAR SEAL OR EQUAL).
FILTER BED SUPPORT STONE SHALL BE 3/4" WASHED STONE (NO. 57 OR EQUAL) - 16 CU. FT. PER MODULE.
FILTER SAND SHALL BE CONCRETE SAND (AASHTO M6, C-33 OR EQUAL) - 16 CU. FT. PER MODULE.
AN UNDERBEDDING OF THE TANKS USING 6" OF #57 STONE ON UNDISTURBED OR COMPACTED BASE IS RECOMMENDED.

NOTES:

1. SAND FILTER DESIGNED FOR H-20 TRAFFIC
2. CONCRETE: 4500 PSI (MDSHA MIX #6)
3. JOINTS TO BE SEALED WATERTIGHT WITH CONSEAL CS-102 SEALANT.
4. PIPING, SAND, STONE, AND GEOTEXTILE TO BE SUPPLIED AND INSTALLED IN FIELD BY CONTRACTOR.

STANDARD HOWARD COUNTY OPERATION AND MAINTENANCE SCHEDULE FOR PRIVATELY OWNED AND MAINTAINED UNDERGROUND STORMWATER FILTRATION SYSTEMS (F-2 AND F-3)

a. The Owner shall clean and repair the sediment chamber outlet devices when draw-down times within the chamber exceed thirty-six (36) hours.
b. The Owner shall remove debris and litter as necessary to ensure proper operation of the system.
c. The Owner shall remove sediment from the sedimentation chamber when it accumulates to a depth of six (6) inches. Vegetation within the sediment chamber shall be maintained to a maximum height of eighteen (18) inches.
d. When water ponds on the surface of the filter bed for more than seventy-two (72) hours, the Owner shall replace the top few inches of discolored material with fresh material. Proper cleaning and disposal of the removed materials and liquid must be followed by the Owner.
e. The Owner shall maintain a log book shall be maintained to determine the rate at which the facility drains.
f. The maintenance log book shall be available to Howard County for inspection to insure compliance with operation and maintenance criteria.
g. Once the performance characteristics of the infiltration system have been verified, the monitoring schedule can be reduced to an annual basis unless the performance data indicates that a more frequent schedule is required.

MAINTENANCE NOTES

1. THE SEDIMENT CHAMBER OUTLET DEVICES SHALL BE CLEANED AND REPAIRED WHEN DRAWDOWN TIMES WITHIN THE CHAMBER EXCEED 36 HOURS. TRASH AND DEBRIS SHALL BE REMOVED AS NECESSARY.

2. SEDIMENT SHOULD BE CLEANED OUT OF THE SEDIMENT CHAMBER WHEN IT ACCUMULATES TO A DEPTH OF MORE THAN SIX INCHES (6").

3. WHEN THE FILTERING CAPACITY OF THE SAND FILTER DIMINISHES AND WATER PONDS ON THE SURFACE OF THE FILTER BED FOR MORE THAN 72 HOURS, THE TOP FEW INCHES OF DISCOLORED SAND SHALL BE REMOVED AND REPLACED WITH FRESH SAND. THE REMOVED SEDIMENTS SHALL BE DISPOSED OF AT AN APPROVED DISPOSAL SITE. SILT AND SEDIMENT SHOULD BE REMOVED FROM THE FILTER BED WHEN ACCUMULATION EXCEEEDS ONE INCH (1").

4. ALL MAINTENANCE SHALL BE PERFORMED BY THE OWNER OR BY THE OWNER'S REPRESENTATIVE AT THE OWNER'S EXPENSE.

INSPECTION PROCEDURES

THE FOLLOWING INSPECTIONS ARE REQUIRED DURING CONSTRUCTION: ADDITIONAL INSPECTIONS MAY BE REQUIRED AND NOTED BY THE INSPECTOR.

1. PRECONSTRUCTION MEETING: AN OPPORTUNITY TO REVIEW SITE PLANS, DISCUSS THE PURPOSE OF THE FACILITY AND TO ANSWER QUESTIONS REGARDING CONSTRUCTION AND/OR INSPECTION PROCEDURES.

2. CONSTRUCTION: INSPECTION(S) WILL BE MADE DURING THE CONSTRUCITON OF THE FACILITY TO ENSURE ACCORDANCE WITH THE PLANS. SPECIFIC INSPECTION REQUIREMENTS WILL BE DETERMINED AT THE PRECONSTRUCTION MEETING.

3. FINAL INSPECTION: A FINAL CHECK WILL BE MADE TO CHECK DESIGN DIMENSIONS.

APPROVED: DEPARTMENT OF PLANNING AND ZONING

Chief, Development Engineering Division — Date 4/23/13
Chief, Division of Land Development — Date 4/30/13
Director — Date 5/1/13

KCW Engineering Technologies, Inc.
810 Landmark Drive, Suite 215
Glen Burnie, MD 21061
Phone: 410.768.7700
Fax: 410.768.0200
www.kcw-et.com

STATE OF MARYLAND — MARK TSITLIK — 33351 — PROFESSIONAL ENGINEER
Mark Tsitlik 11/30/12

Professional Certification. I hereby certify that these documents were prepared or approved by me, and that I am a duly licensed professional engineer under the laws of the State of Maryland. License No. 33351. Expiration Date 06-30-2014.

OWNER:
THE REDEEMED CHRISTIAN CHURCH OF GOD, INC.
13701 ANNAPOLIS ROAD
BOWIE, MD 20720
Attn: Margaret Adeyokunnu, Pastor
Tele: (301) 352-0707
Fax: (301) 352-3339

OWNER'S REPRESENTATIVE/ DEVELOPER:
TLI DESIGNGROUP INC.
3308 DORCHESTER ROAD
BALTIMORE, MD 21215
Attn: Taiwo Iluyomade, President
Toll Free/Fax/Voice mail: (1-866) 616-1497
Mobile: (443) 831-6703

KCW J.O.: 2080018
SCALE: AS SHOWN
DESIGNED: MT
DRAWN: MT
CHECKED: KCA
DATE: NOV. 31, 2012
DRAWING NO. 12 OF 19

SWM SANDFILTERS PLAN

VICTORY TEMPLE - LAUREL
WORSHIP CENTER
9100 BURSA ROAD

SDP-12-007
TAX MAP 47, GRID 23
PARCEL 540 (PARCEL A, PLAT # 22114)

W&S CONTRACT No. 24-4047-D
ZONING: CE-CLI
ELECTION DISTRICT - 6
HOWARD COUNTY, MARYLAND

SDP-12-007

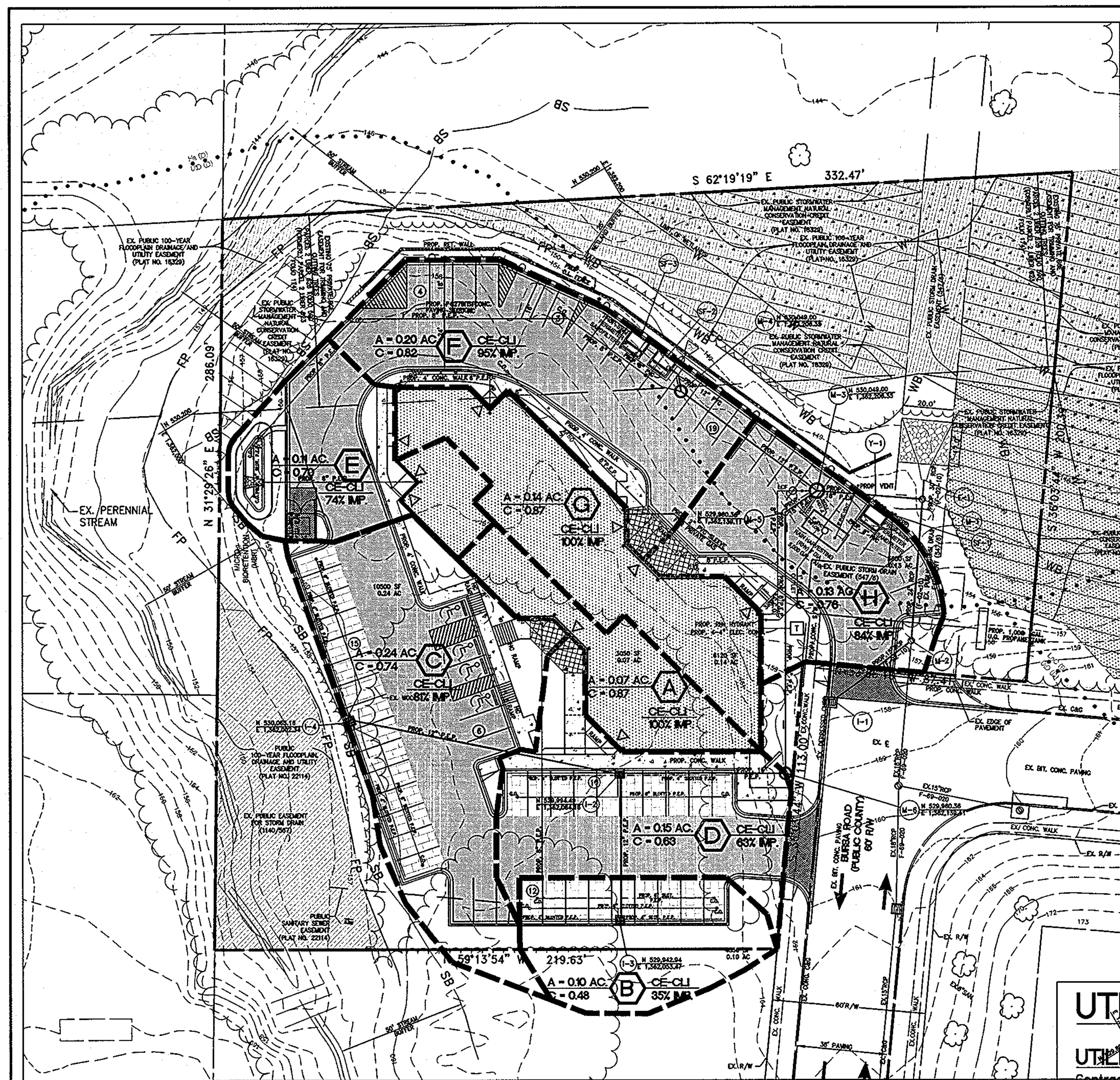

STORM DRAIN DRAINAGE AREA MAP

Scale: 1" = 40'

40 20 0 40 80 120

Scale 1" = 40'

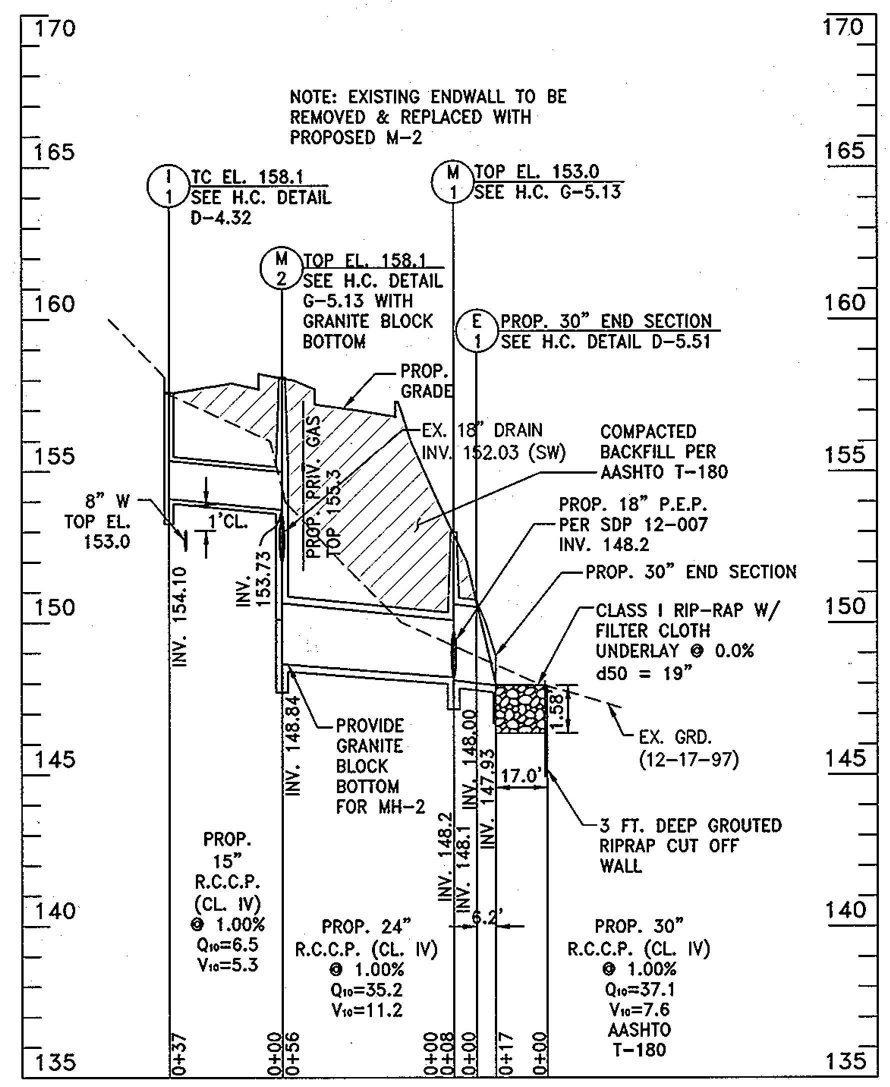

STORM DRAIN PROFILE

SCALE: HOR.1" = 50'; VERT.1" = 5'

PIPE SCHEDULE		
SIZE	TYPE	L.F.
15"	R.C.C.P. CL. IV	37
24"	R.C.C.P. CL. IV	56
30"	R.C.C.P. CL. IV	8

PER F-02-10 (PUBLIC)

STRUCTURE SCHEDULE				
No.	TYPE	TOP ELEV.	INV. OUT	DETAIL/ REMARK
I-1	'S' COMB. INLET	TG157.6	154.10	D-4.32
M-1	5' STD MANHOLE	153.0	148.10	G-5.13
M-2	5' STD MANHOLE	158.1	148.84	G-5.13
E-1	30" END SECTION		147.93	D-5.51

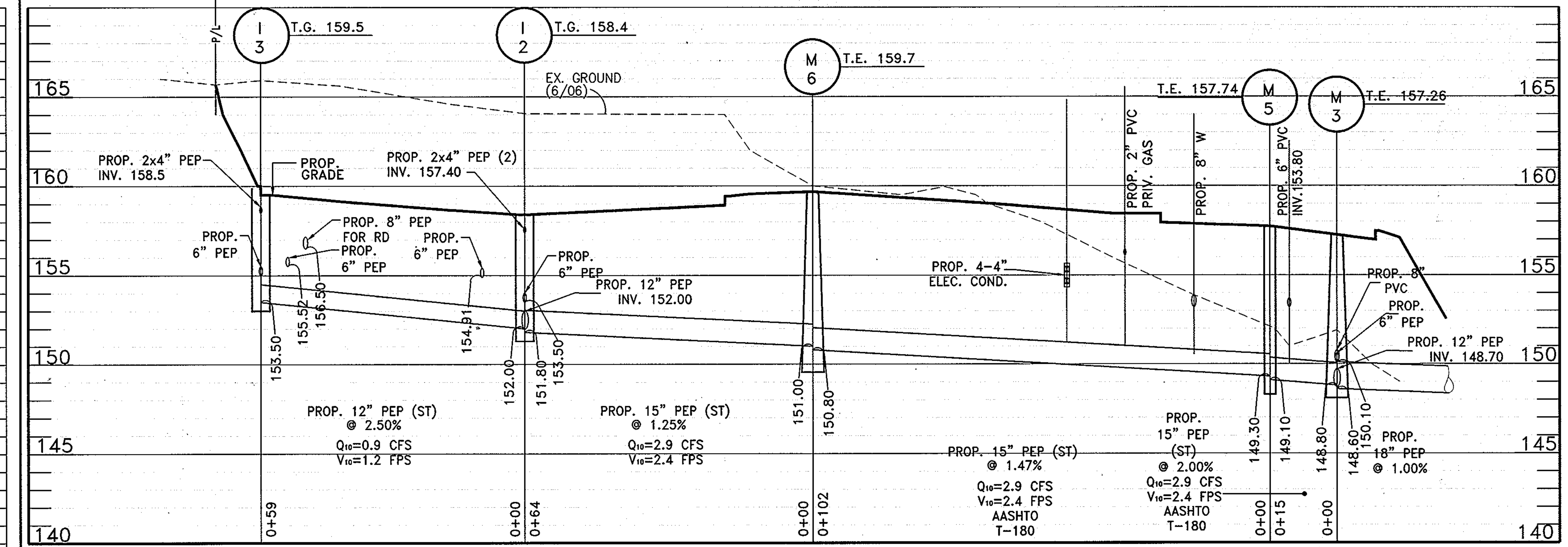

STORM DRAIN PROFILE SCALE: 1"=20' HORIZ., 1"=5' VERT.

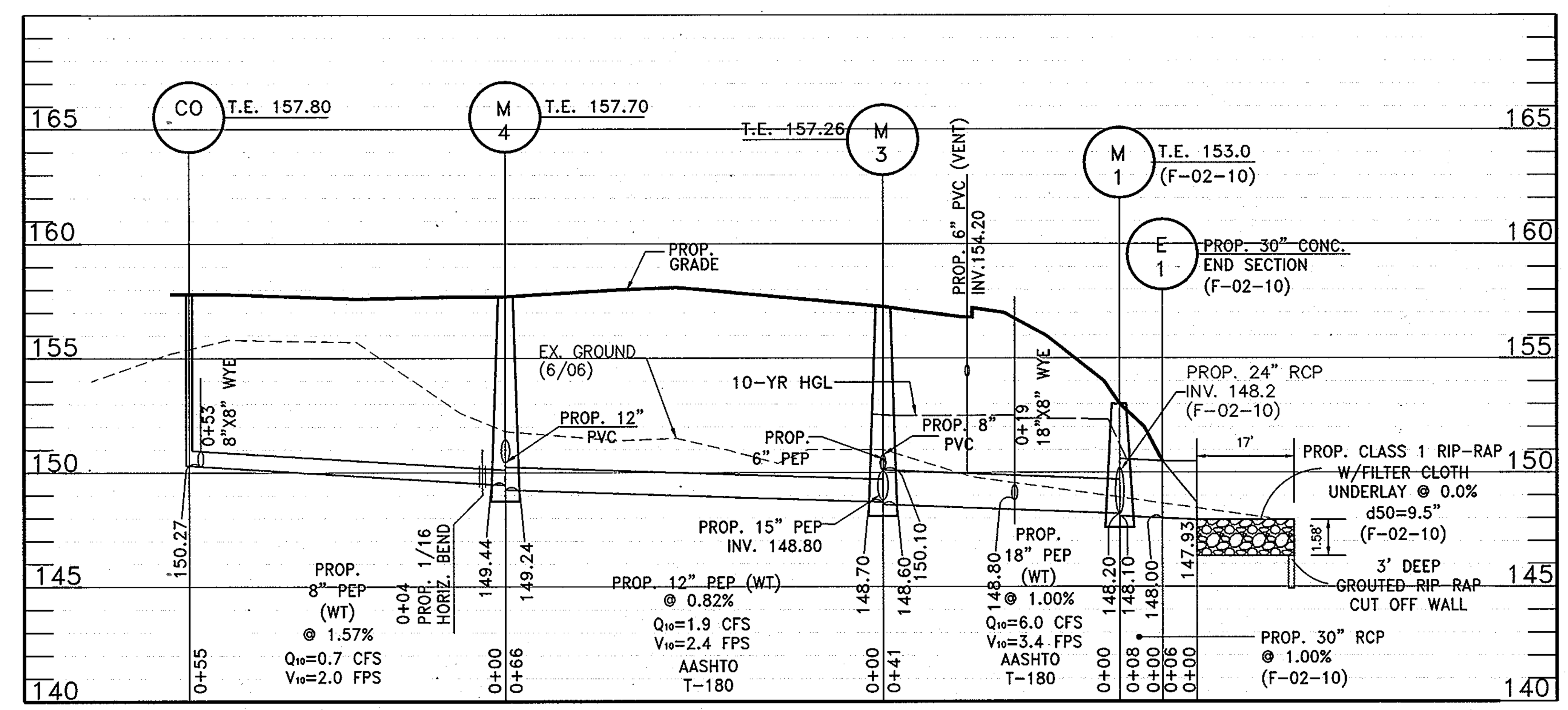

STORM DRAIN PROFILE SCALE: 1"=20' HORIZ., 1"=5' VERT.

UTILITY NOTES

UTILITY SCOPE OF WORK

Contractor shall furnish all materials and labor necessary for abandonment, construction and modification to storm drains, water service and sanitary sewer. Utility contractor shall obtain all necessary permits from Howard County.

SANITARY SEWER

1. P.V.C. (Poly-Vinyl Chloride) pipe SCH 40.
2. Clean-out: P.V.C. per Building Code criteria

WATER SERVICE

1. 6" and 8" diameter water pipe shall be Class 52 Ductile Iron Pipe (D.I.P.) and appurtenances in accordance with Howard County specifications.

STORM DRAINS

1. 6", 8" and 10" diameter PVC drains and fittings shall be Poly-Vinyl Chloride (PVC) pipe, Schedule 40, and fittings with solvent-cement joints per ASTM D2665.
2. 4", 6", 8" and 10" diameter P.E.P. storm drain pipes and fittings shall be high density polyethylene (H.D.P.E.) smooth wall interior pipe per ASTM D-3350 and A.A.S.H.T.O. M-252, Type S. All joints to be soiltight (ST) or watertight (WT).
3. 12", 15" and 18" diameter P.E.P. storm drain pipes and fittings shall be high density polyethylene (H.D.P.E.) smooth wall interior pipe per ASTM D-3350 and A.A.S.H.T.O. M-294, Type S. All joints to be soiltight (ST) or watertight (WT) as shown on profiles.
4. Inlets:
   Type 'S' single inlet per Howard County detail D-4.22 with Reticular Grate.
5. Manholes:
   Standard Precast Manhole per Howard County details G-5.12, G-5.13. 30" "Nyloplast" Drain Basin with solid grate.
6. All storm drains shall be constructed per profiles on this sheet.

STORM DRAIN STRUCTURE SCHEDULE

NO.	TYPE	STD. DETAIL	INV.IN	INV.OUT	TOP ELEV.
I-2	SINGLE 'S' GRATE INLET	D-4.22	4"-157.40 4"-157.40 6"-153.50 12"-152.00 12"-152.00	151.80	TG158.4
I-3	SINGLE 'S' GRATE INLET	D-4.22	4"-158.50 4"-158.50 6"-155.00	153.50	TG159.5
I-4	SINGLE 'S' GRATE INLET	D-4.22	4"-156.60 4"-156.60 6"-154.10 6"-154.10	153.80	TG157.6
M-3	5' STD. PRE-CAST MANHOLE	G-5.13	6"-150.10 8"-150.10 12"-148.70 15"-148.80	148.60	TE157.26
M-4	4' STD. PRE-CAST MANHOLE	G-5.12	8"-149.44 12"-150.44	149.24	TE157.70
M-5	30" NYLOPLAST DRAIN BASIN* WITH SOLID GRATE		15"-149.30	149.10	TE157.74
M-6	4' STD. PRE-CAST MANHOLE	G-5.12	15"-151.00	150.80	TE159.70

* OR APPROVED EQUAL.

STORM DRAIN PIPE SCHEDULE

PIPE MATERIAL	PIPE SIZE	PIPE LENGTH	PIPE MATERIAL	PIPE SIZE	PIPE LENGTH
POLY-VYNIL CHLORIDE (PVC) PIPE, SCHEDULE 40 per ASTM D-1785	6"	40 L.F.	HIGH DENSITY POLYETHYLENE (PEP) PIPE, SMOOTH LINED per AASHTO M252, SLOTTED	4"	300 L.F.
POLY-VYNIL CHLORIDE (PVC) PIPE, SCHEDULE 40 per ASTM D-1785	8"	65 L.F.	HIGH DENSITY POLYETHYLENE (PEP) PIPE, SMOOTH LINED per AASHTO M252, SLOTTED	6"	285 L.F.
POLY-VYNIL CHLORIDE (PVC) PIPE, SCHEDULE 40 per ASTM D-1785	12"	15 L.F.	HIGH DENSITY POLYETHYLENE (PEP) PIPE, SMOOTH LINED per AASHTO M252	6"	210 L.F.
			HIGH DENSITY POLYETHYLENE (PEP) PIPE, SMOOTH LINED per AASHTO M252, SLOTTED	8"	70 L.F.
			HIGH DENSITY POLYETHYLENE (PEP) PIPE, SMOOTH LINED per AASHTO M252	8"	490 L.F.
			HIGH DENSITY POLYETHYLENE (PEP) PIPE, SMOOTH LINED per AASHTO M294	12"	230 L.F.
			HIGH DENSITY POLYETHYLENE (PEP) PIPE, SMOOTH LINED per AASHTO M294	15"	180 L.F.
			HIGH DENSITY POLYETHYLENE (PEP) PIPE, SMOOTH LINED per AASHTO M294	18"	40 L.F.

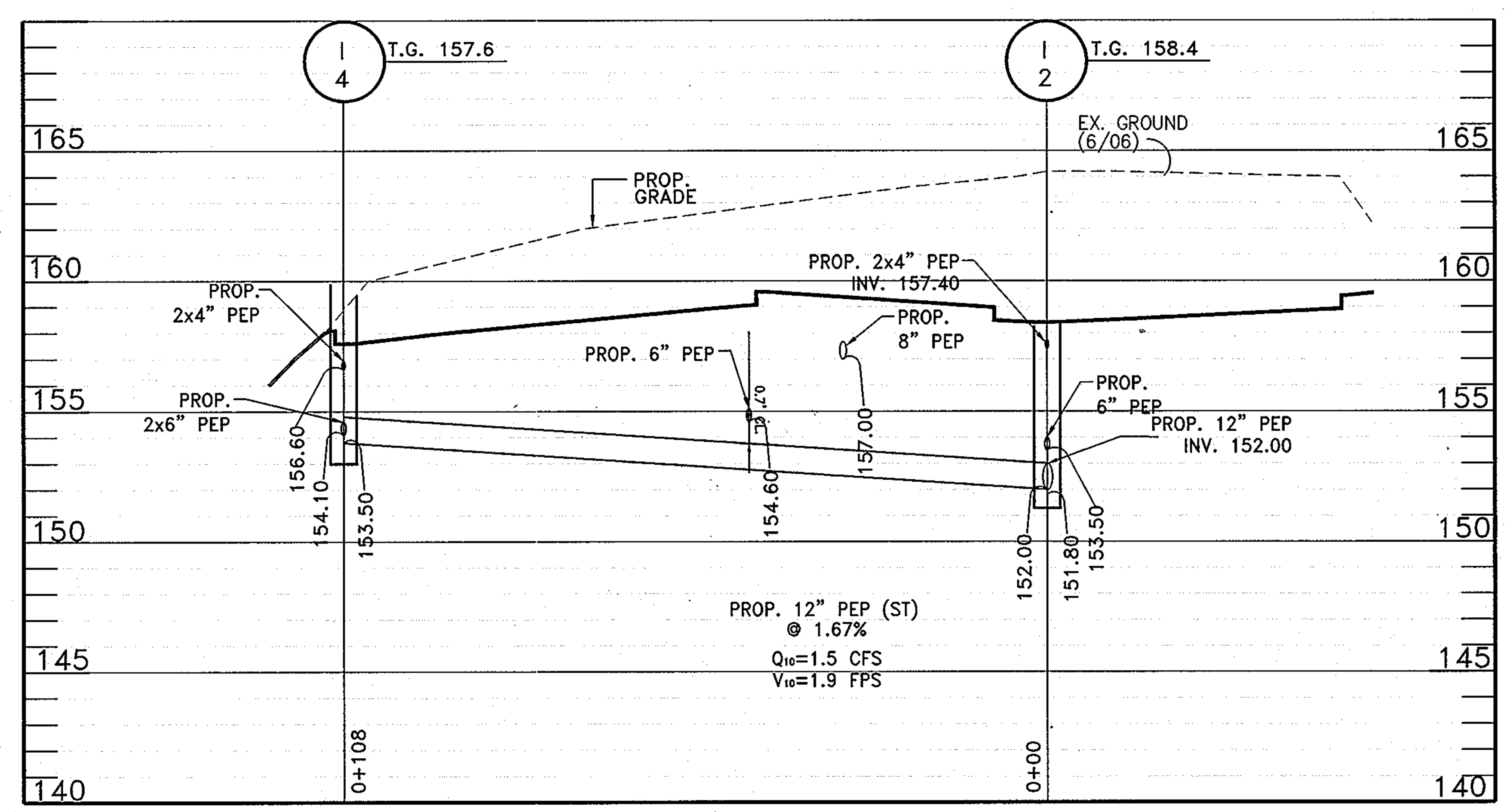

STORM DRAIN PROFILE SCALE: 1"=20' HORIZ., 1"=5' VERT.

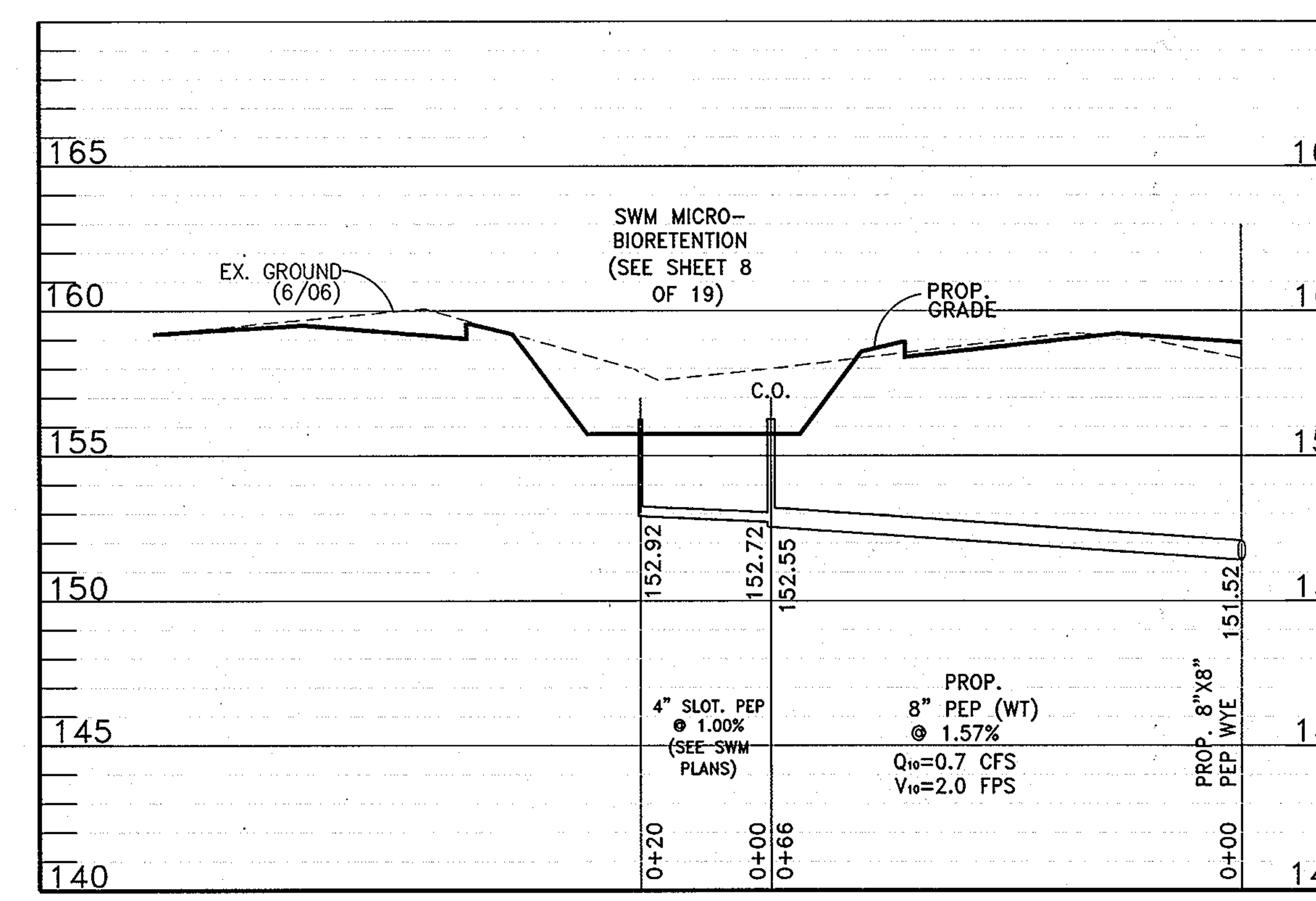

STORM DRAIN PROFILE SCALE: 1"=20' HORIZ., 1"=5' VERT.

APPROVED: DEPARTMENT OF PLANNING AND ZONING

Chief, Development Engineering Division — Date 4/23/13

Chief, Division of Land Development — Date 4/30/13

Director — Date 5/6/13

KCW Engineering Technologies, Inc.
810 Landmark Drive, Suite 215
Glen Burnie, MD 21061
Phone: 410.768.7700
Fax: 410.768.0200
www.kcw-et.com

STATE OF MARYLAND MARK TSITLIK 33351 PROFESSIONAL ENGINEER
11/30/12

Professional Certification. I hereby certify that these documents were prepared or approved by me, and that I am a duly licensed professional engineer under the laws of the State of Maryland. License No. 33351. Expiration Date 06-30-2014.

OWNER:
THE REDEEMED CHRISTIAN CHURCH OF GOD, INC.
13701 ANNAPOLIS ROAD
BOWIE, MD 20720
Attn: Margaret Adeyokunnu, Pastor
Tele: (301) 352-0707
Fax: (301) 352-3339

OWNER'S REPRESENTATIVE/ DEVELOPER:
TLI DESIGNGROUP INC.
3308 DORCHESTER ROAD
BALTIMORE, MD 21215
Attn: Taiwo Iluyomade, President
Toll Free/Fax/Voice mail: (1-866) 616-1497
Mobile: (443) 831-6703

KCW J.O.: 2080018
SCALE: AS SHOWN
DESIGNED: MT
DRAWN: MT
CHECKED: KCA
DATE: NOV. 30, 2012
DRAWING NO. 13 OF 19

CONSTRUCTION PROFILES I

VICTORY TEMPLE - LAUREL
WORSHIP CENTER
9100 BURSA ROAD

SDP-12-007
TAX MAP 47, GRID 23
PARCEL 540 (PAR. A, PLAT # 22114)

W&S CONTRACT No. 24-4047-D
ZONING: CE-CLI
ELECTION DISTRICT - 6
HOWARD COUNTY, MARYLAND

SDP-12-007

BORING LOG — GEOLAB, INC.

Report No.: Date: 8/20/2009

Client: The Redeemed Church of God, Victory Temple - Laurel, Maryland

Project: Proposed Church Building, Victory Temple, 9100 Bursa Road, Laurel, MD — Project No. 109-072

Boring No.: P-1 — Sheet 1 of 1 — Hole Dia.: 15 — Elev.: 165.0 — Location: See Boring Location Plan

Type of Boring: Hollow-stem Auger — Started: 08/11/09 — Completed: 08/11/09 — Driller: Free State Drilling, Inc.

Elevation	Depth	DESCRIPTION OF MATERIALS (classification)	Sample Blows	Sample Depth (Feet)	Moisture Content	REMARKS
165.0 / 164.8	0.0 – 0.2	Forest litter with root (organic) matter and organic soil		1.0		Groundwater encountered during drilling at depth of 14.7 feet.
	0.2 – 3.5	Tan fine to medium SAND with some silt and little gravel, damp, medium dense (SM)	9,12,15	2.5	7.4	At completion, boring dry to cave-in depth of 11.4 feet.
162.5	3.5 – 8.0	Tan and gray fine to coarse SAND with some gravel and some silt, damp, dense (SM)	12,18, 19	3.5 – 5	8.0	After 24 hours, boring again dry to cave-in depth.
159.5	8.0 – 12.5	Tan and pink to gray and off-white silty fine SAND, moist, medium dense to loose (SM)	4,6,7	6.0 – 7.5	12.5	Partial bag sample - 1.0 to 5.0 feet.
			3,4,6	8.5 – 10		
153	12.5 – 13.5	Red, brown and off-white fine to coarse SAND with some silt and little gravel, moist to wet, medium dense (SM)	4,5,7	13.5 – 15		
150	15.0	End of Boring				

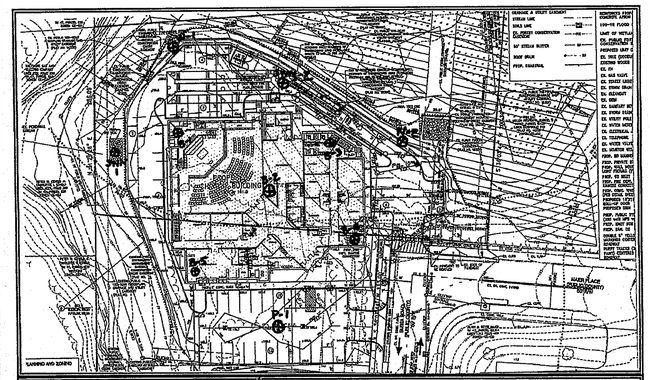

BORING LOG — GEOLAB, INC.

Report No.: Date: 8/20/2009

Client: The Redeemed Church of God, Victory Temple - Laurel, Maryland

Project: Proposed Church Building, Victory Temple, 9100 Bursa Road, Laurel, MD — Project No. 109-072

Boring No.: SWM-1 — Sheet 1 of 1 — Hole Dia.: 16 — Elev.: 158.0 — Location: See Boring Location Plan

Type of Boring: Hollow-stem Auger — Started: 08/11/09 — Completed: 08/11/09 — Driller: Free State Drilling, Inc.

Elevation	Depth	DESCRIPTION OF MATERIALS (classification)	Sample Blows	Sample Depth (Feet)	Moisture Content	REMARKS
158 / 157.7	0.0 – 0.3	Forest litter with root (organic) matter and organic soil		1.0		Boring dry during drilling and at completion.
	0.3 – 3.5	Tan fine to coarse SAND with some silt and little gravel, damp, dense (SM) (LOAMY SAND)	5,18,23	2.5 – 3.5		Cave-in depth at 12.1 feet.
155.5	3.5 – 5.5	Tan fine to coarse sandy GRAVEL with trace silty clay, damp, dense (SC) (SANDY LOAM)	26,25, 19	5	5.5	After 24 hours, boring again dry to cave-in depth.
	5.5 – 8.0		26,23, 20	6.0 – 7.5	3.9	
150	8.0 – 9.7	Gray silty CLAY with little fine sand, moist, stiff (CL) (SILTY CLAY LOAM)	9,5,7	8.5 – 10		
148.3 / 147.5	9.7 – 10.5	Orange fine to coarse SAND with little silt and gravel, moist, medium dense (SM) (LOAMY SAND)				
	10.5 – 13.5	Gray silty CLAY/CLAY with little fine sand, moist, medium stiff to stiff (CL/CH) (SILTY CLAY LOAM)	4,4,6	13.5 – 15	34.8	
145	13.0	End of Boring				

*Number of blows required for a 140 lb hammer dropping 30" to drive 3" O.D., 2.375" I.D. sampler a total of 18 inches in three 6" increments. The sum of the last two increments of penetration is termed the standard penetration resistance, 'N'.

BORING LOG — GEOLAB, INC.

Report No.: Date: 8/20/2009

Client: The Redeemed Church of God, Victory Temple - Laurel, Maryland

Project: Proposed Church Building, Victory Temple, 9100 Bursa Road, Laurel, MD — Project No. 109-072

Boring No.: SWM-2 — Sheet (1 of 1) — Hole Dia.: 20 — Elev.: 153.9 — Location: See Boring Location Plan

Type of Boring: Hollow-stem Auger — Started: 08/11/09 — Completed: 08/11/09 — Driller: Free State Drilling, Inc.

Elevation	Depth	DESCRIPTION OF MATERIALS (classification)	Sample Blows	Sample Depth (Feet)	Moisture Content	REMARKS
153.4 / 153.2	0.0 – 0.2	Forest litter with root (organic) matter and organic soil		1.0		Groundwater encountered during drilling at 19.3 feet.
	0.2 – 3.5	Pick and tan silty fine SAND, damp, medium dense (SM) (SANDY LOAM)	5,6,9	2.5	12.9	At completion, water recorded at depth of 14.5 feet.
150.5	3.5 – 5.5	Light brown silty fine to medium SAND, damp, medium dense (SM) (SANDY LOAM)	6,5,7	3.5 – 5		Cave-in depth at 15.0 feet.
148.4	5.5 – 8.5	Light tan fine clayey SILT with little fine sand, moist, medium stiff to very stiff (ML-CL) (SILT LOAM)	4,4,6	6.0 – 7.5		After 24 hours, groundwater recorded at depth of 13.3 feet (cave- in depth at 14.6 feet).
			5,10,16	8.5 – 10	30.1	
142.4	11.5 – 13.5	Orange and olive-green silty medium SAND, moist, medium dense (SM) (SANDY LOAM)	5,9,15	13.5 – 15	25.6	
140.5	13.5 – 15.4	Olive-green and blue-gray silty fine to medium SAND, moist to wet, very dense (SM) (SANDY LOAM)	27,50/ .3	18.5 – 20		
138.1	15.8	End of Boring				

*Number of blows required for a 140 lb hammer dropping 30" to drive 3" O.D., 2.375" I.D. sampler a total of 18 inches in three 6" increments. The sum of the last two increments of penetration is termed the standard penetration resistance, 'N'.

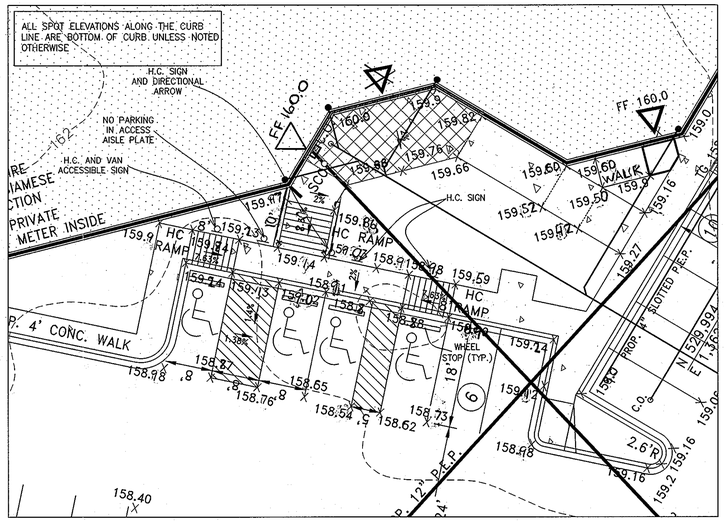

⚠ ACCESSIBLE ROUTE GRADING DETAIL

~~1"=10'~~ N.T.S.

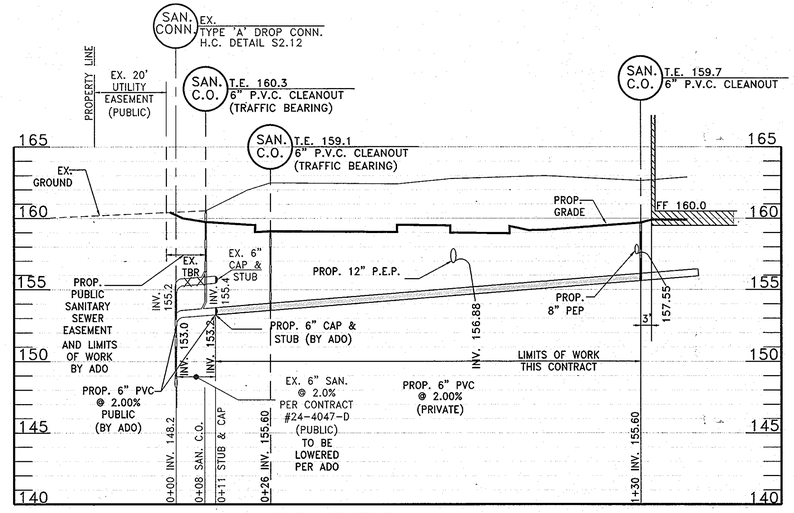

SANITARY PROFILE SCALE: 1"=20' HORIZ., 1"=5' VERT.

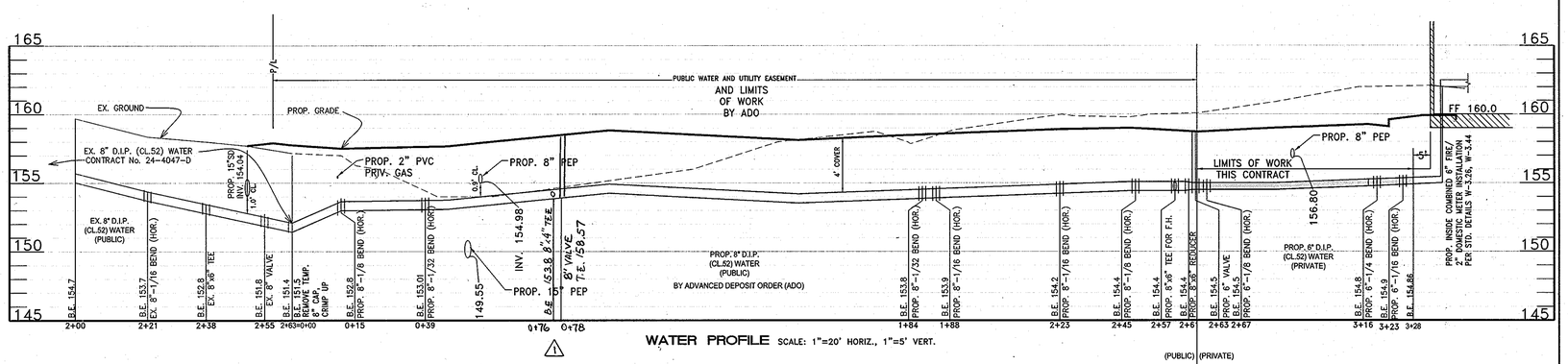

WATER PROFILE SCALE: 1"=20' HORIZ., 1"=5' VERT.

APPROVED: DEPARTMENT OF PLANNING AND ZONING

Chief, Development Engineering Division — Date 4/22/13

Chief, Division of Land Development — Date 4/30/13

Director — Date 5/1/13

KCW ENGINEERING TECHNOLOGIES

KCW Engineering Technologies, Inc.
810 Landmark Drive, Suite 215
Glen Burnie, MD 21061
Phone: 410.768.7700
Fax: 410.768.0200
www.kcw-et.com

STATE OF MARYLAND — MARK TWITCHELL — 33351 — PROFESSIONAL ENGINEER
Mark Twitchell 11/30/12

Professional Certification. I hereby certify that these documents were prepared or approved by me, and that I am a duly licensed professional engineer under the laws of the State of Maryland. License No. 33351. Expiration Date 06-30-2014.

REVISIONS		
NO.	DATE	DESCRIPTION
1	03-06-14	SHOW TWO-PHASE CONSTRUCTION

OWNER:
THE REDEEMED CHRISTIAN CHURCH OF GOD, INC.
13701 ANNAPOLIS ROAD
BOWIE, MD 20720
Attn: Margaret Adeyokunnu, Pastor
Tele: (301) 352-0707
Fax: (301) 352-3339

OWNER'S REPRESENTATIVE/ DEVELOPER:
TLI DESIGNGROUP INC.
3308 DORCHESTER ROAD
BALTIMORE, MD 21215
Attn: Taiwo Iluyomade, President
Toll Free/Fax/Voice mail: (1-866) 616-1497
Mobile: (443) 831-6703

KCW J.O.:	2080018
SCALE:	AS SHOWN
DESIGNED:	MT
DRAWN:	MT
CHECKED:	KCA
DATE:	NOV. 30, 2012
DRAWING NO.	14 OF 19

CONSTRUCTION PROFILES II

VICTORY TEMPLE - LAUREL
WORSHIP CENTER
9100 BURSA ROAD

SDP-12-007
TAX MAP 47, GRID 23
PARCEL 540 (PARCEL A, PLAT # 22114)

W&S CONTRACT No. 24-4047-D
ZONING: CE-CLI
ELECTION DISTRICT - 6
HOWARD COUNTY, MARYLAND

SDP-12-007

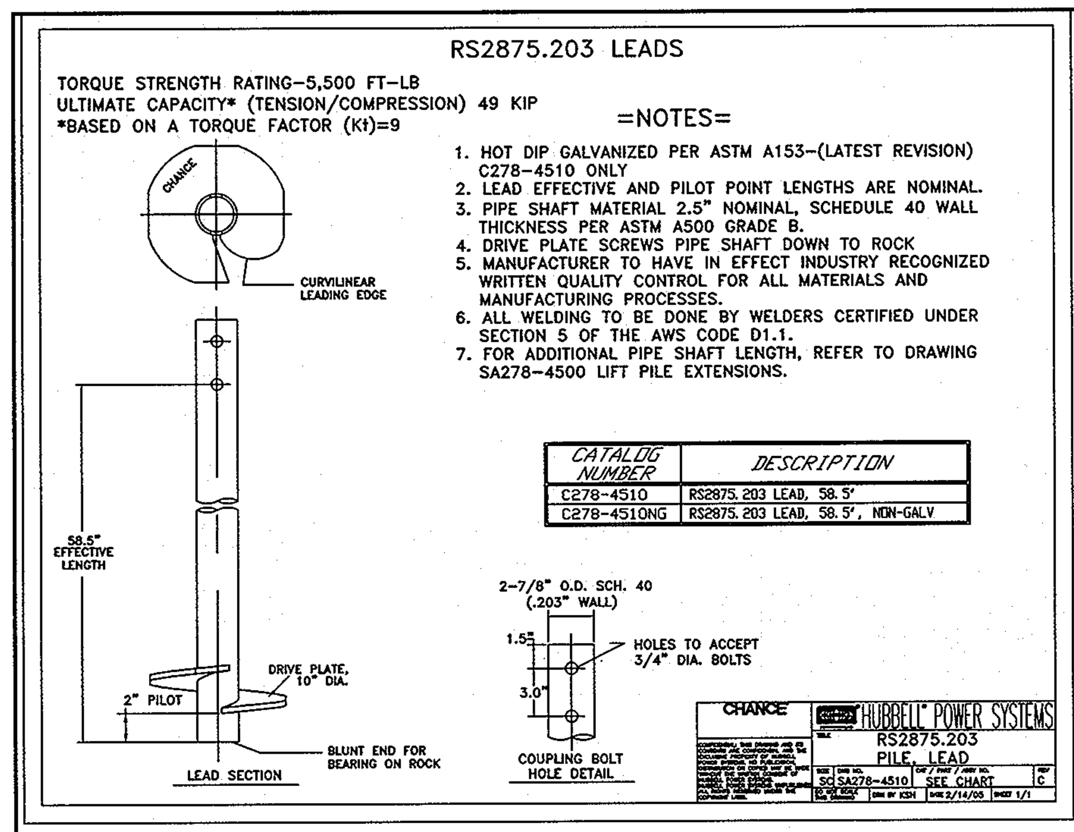

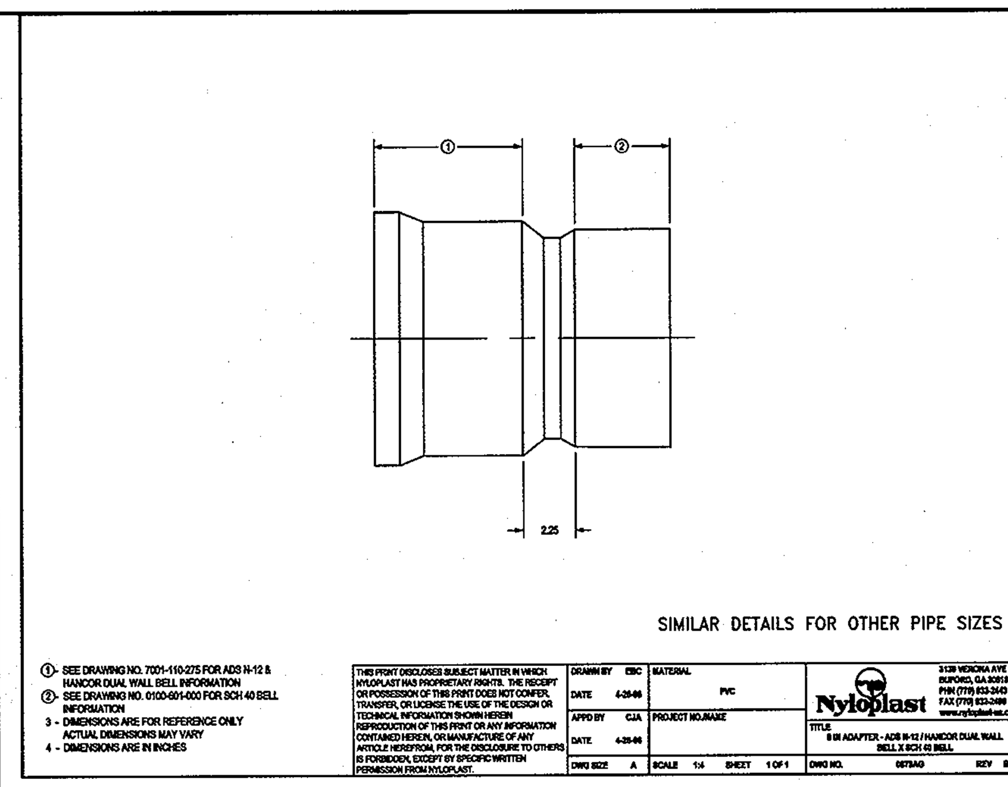

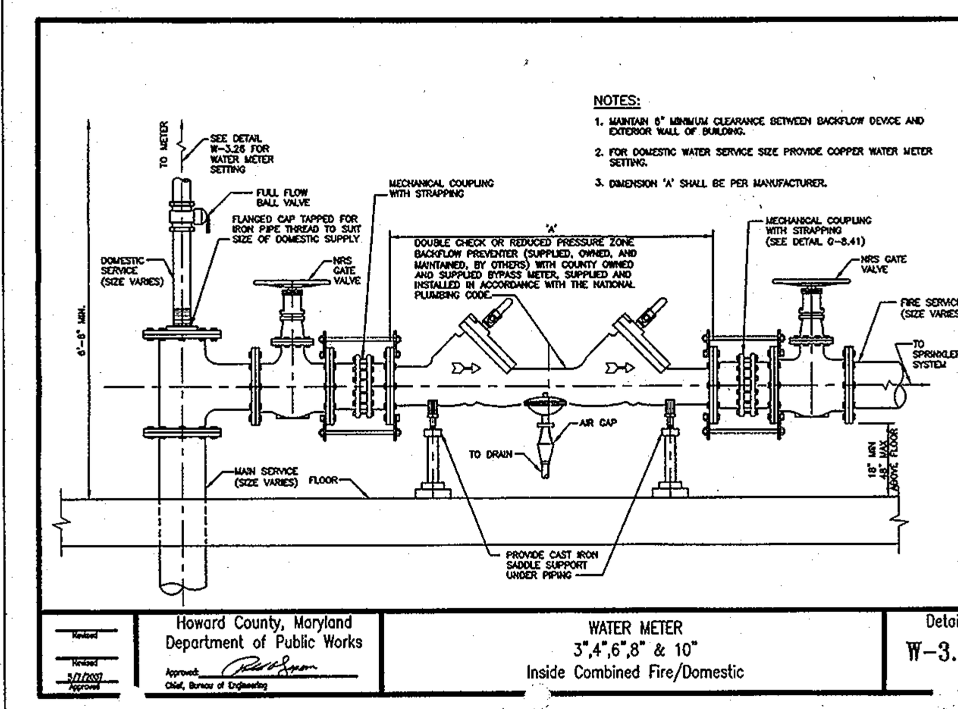

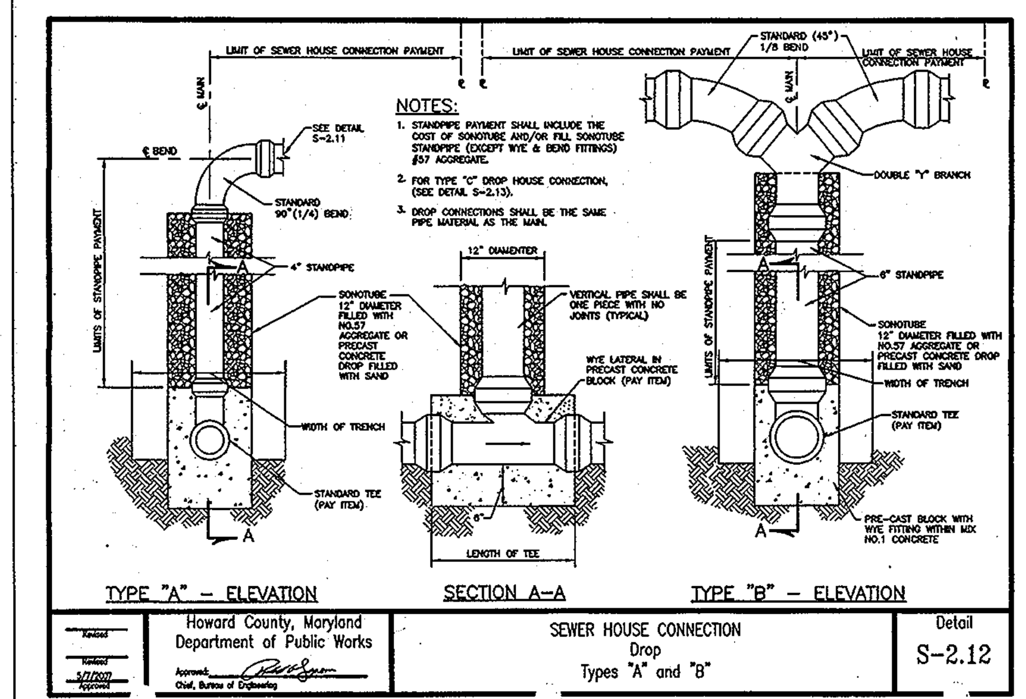

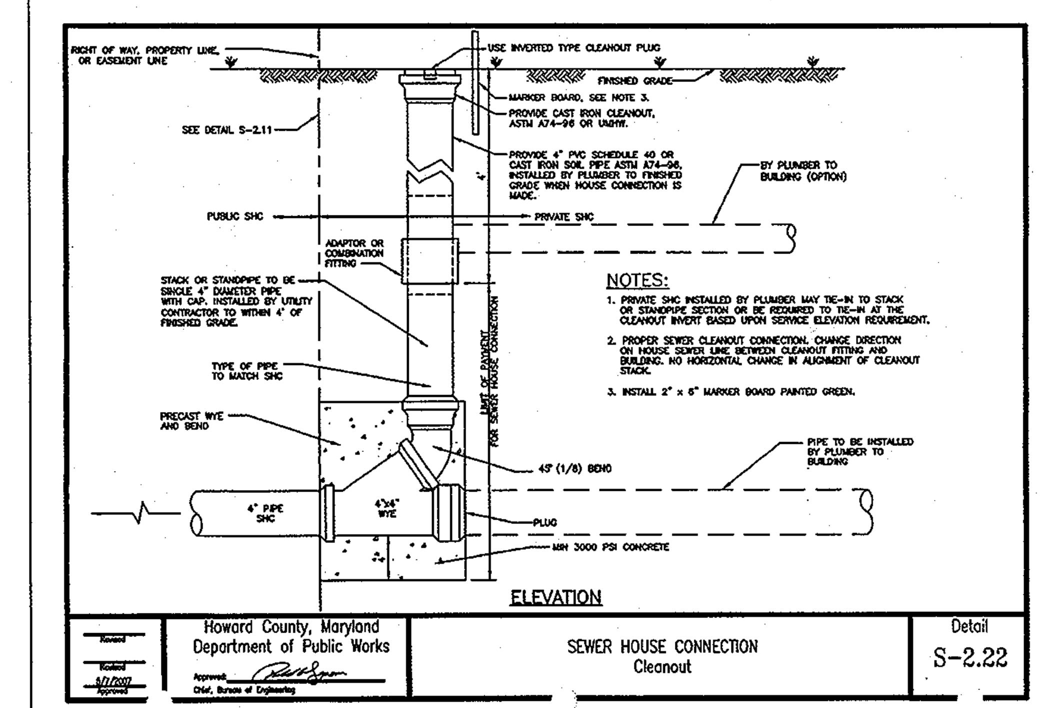

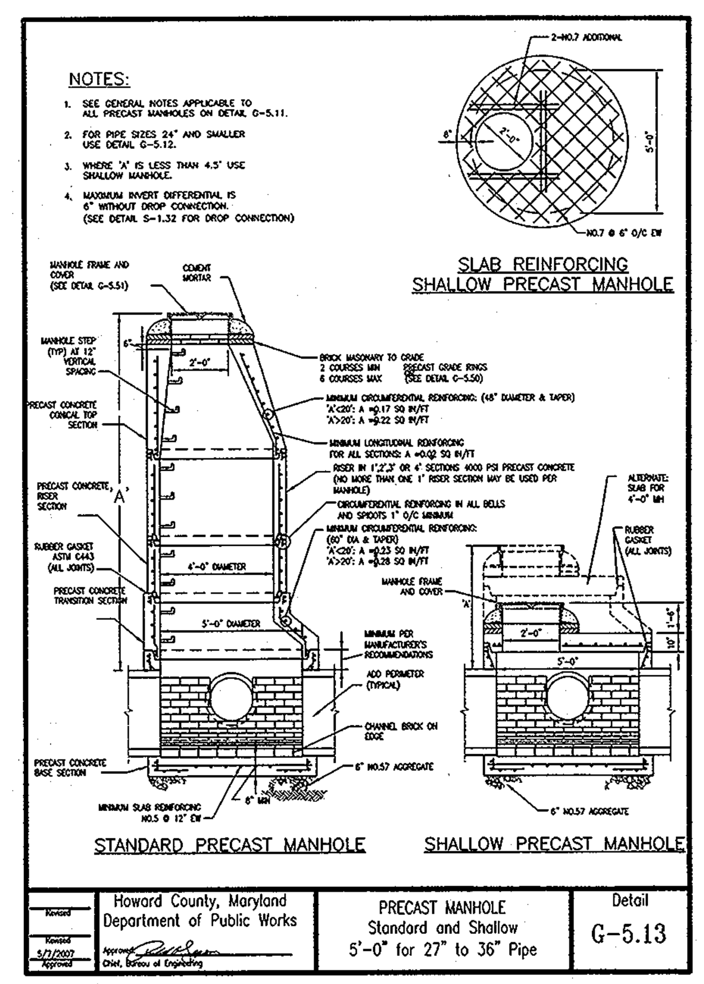

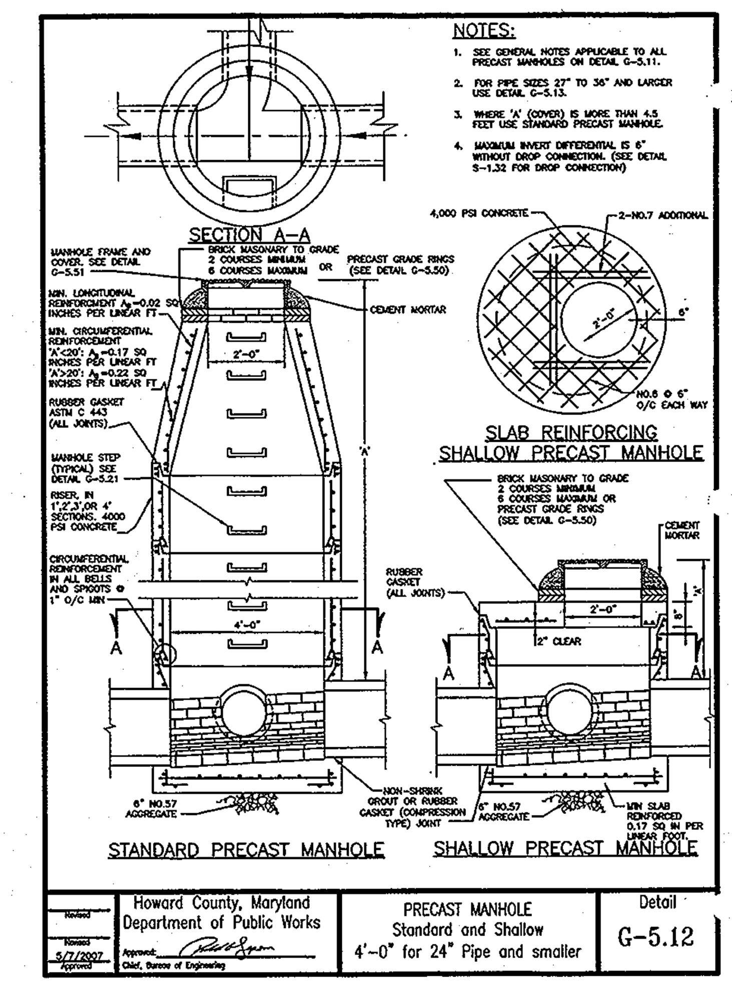

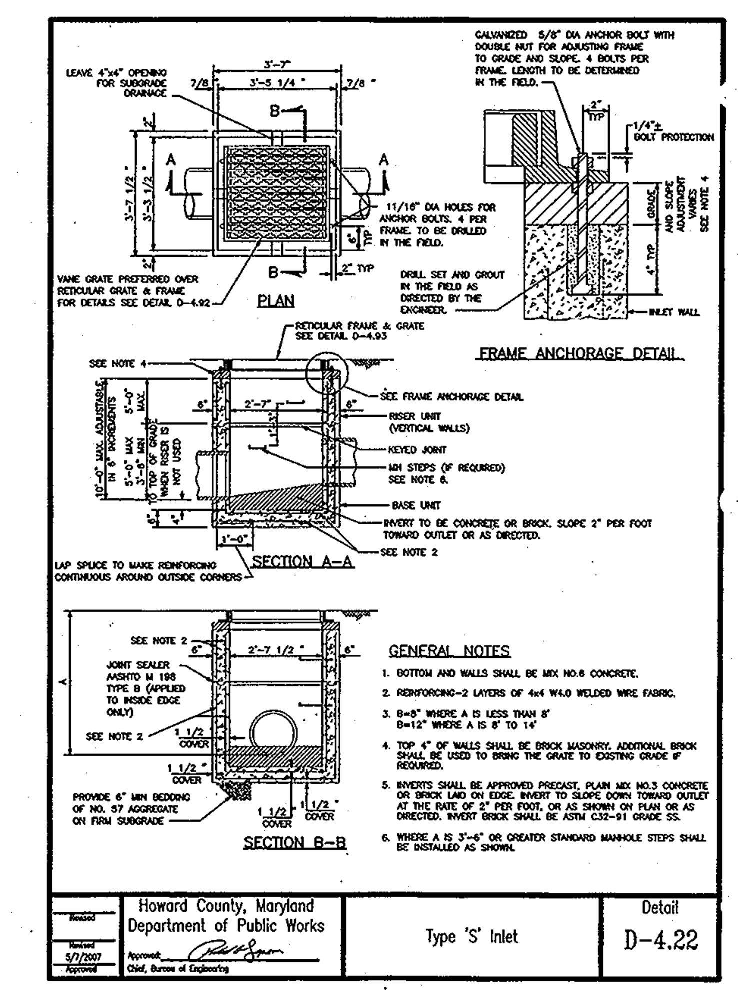

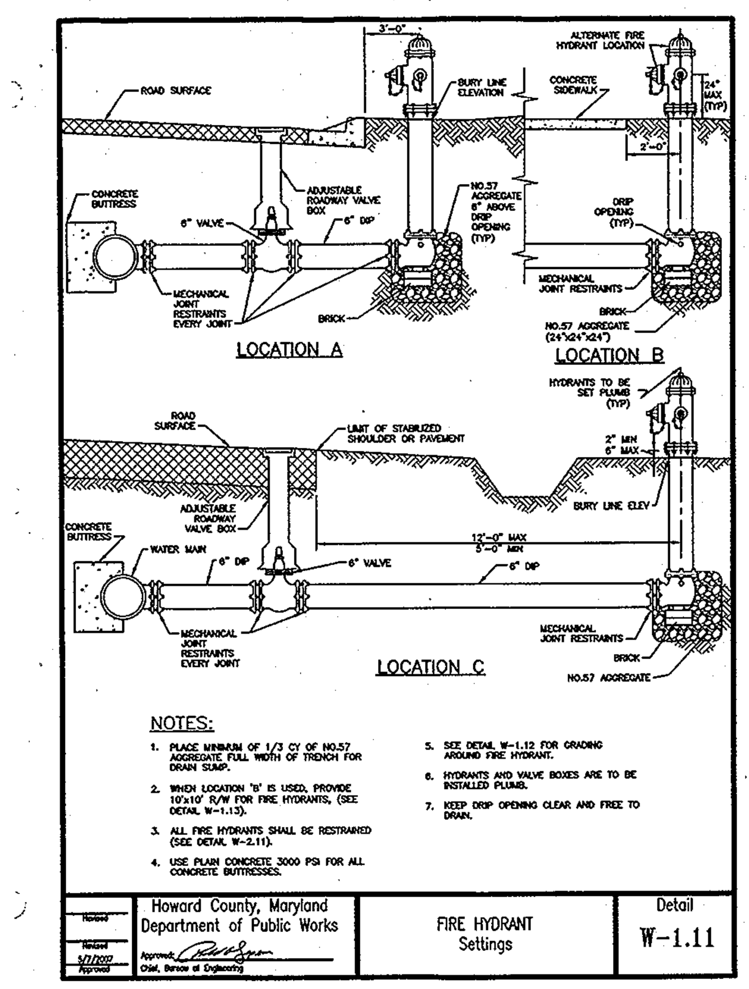

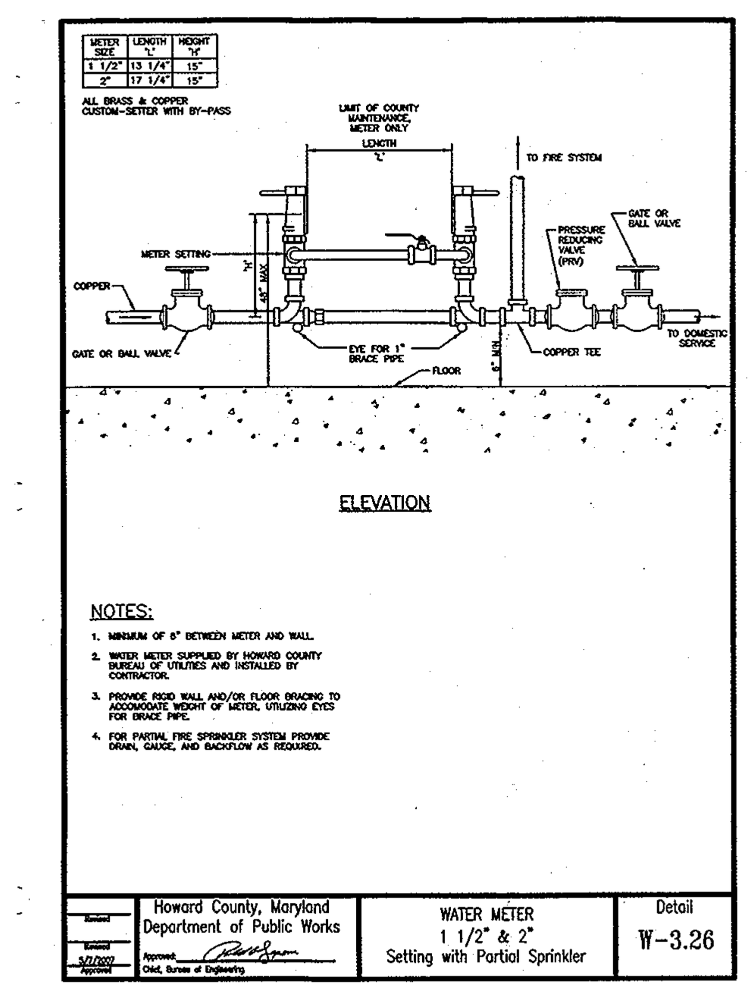

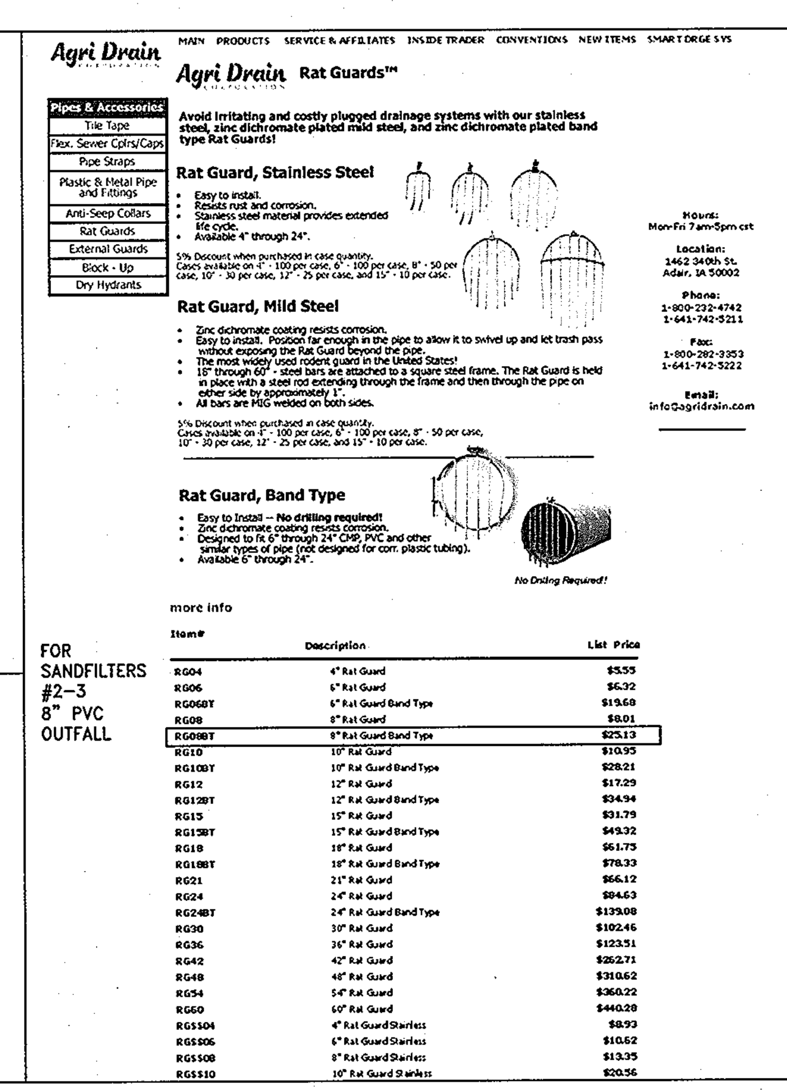

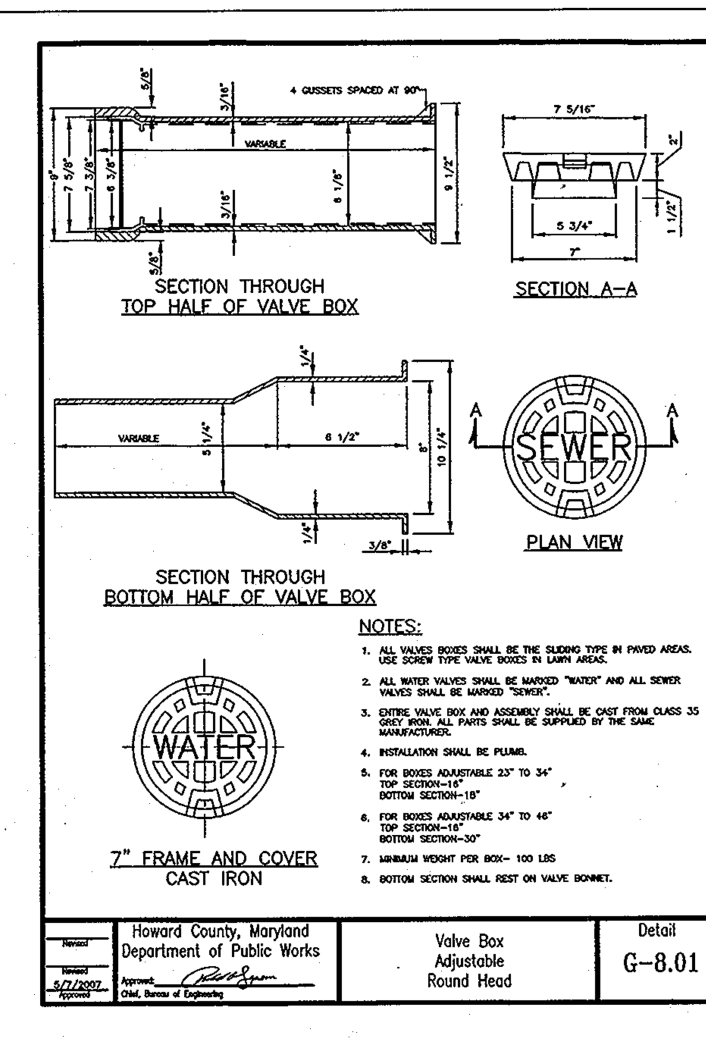

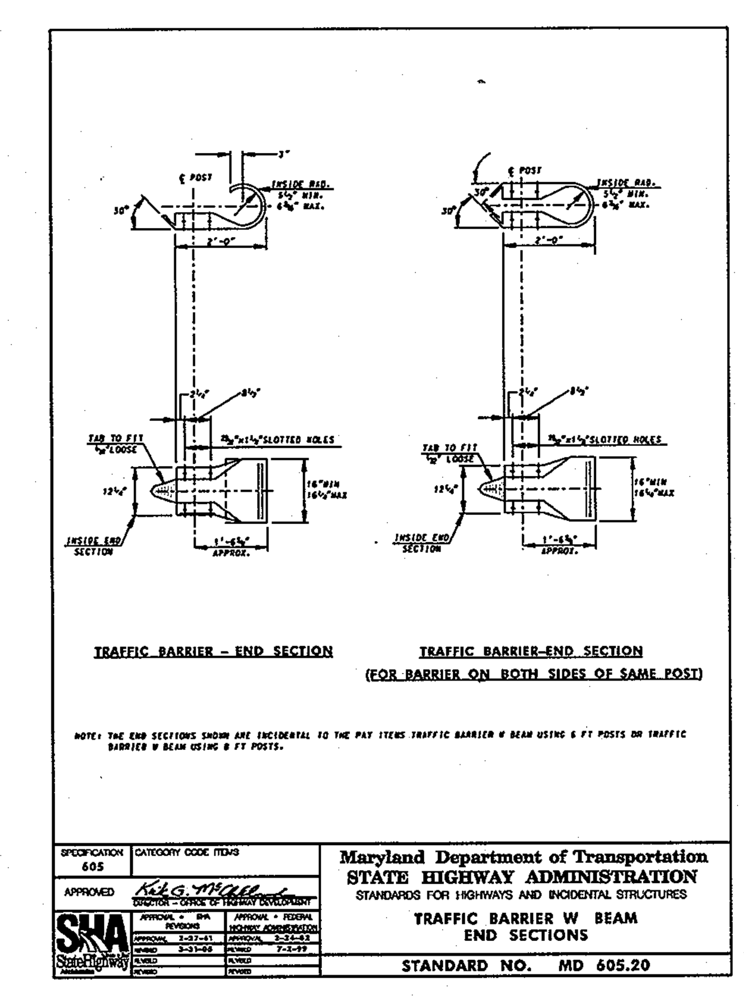

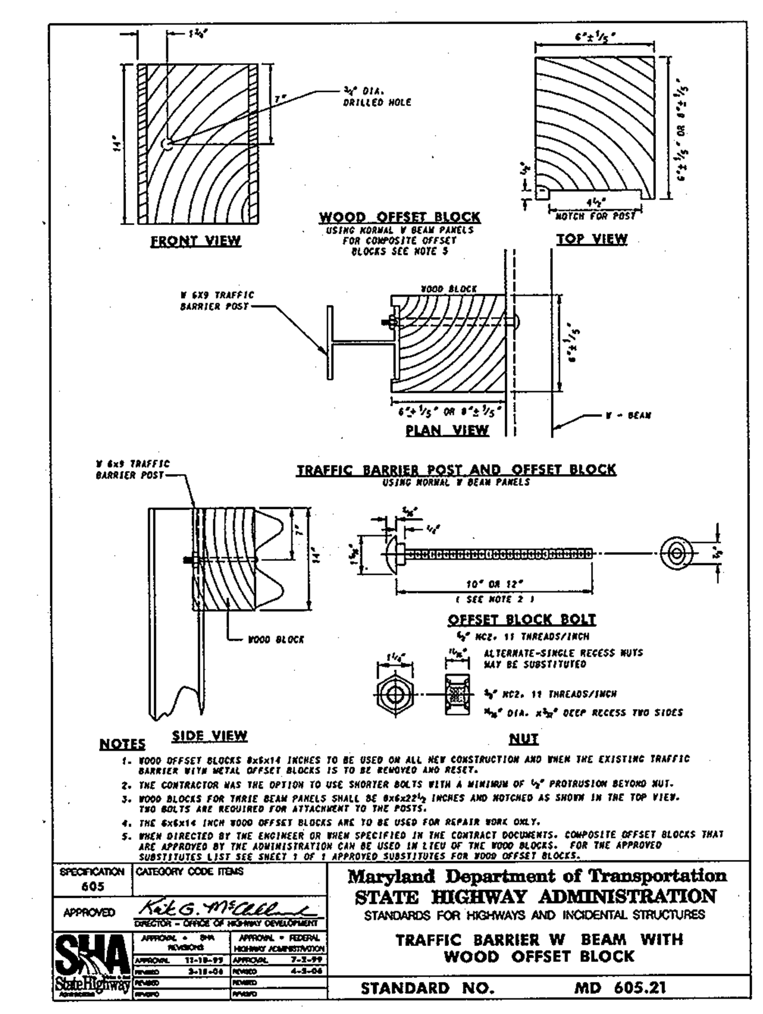

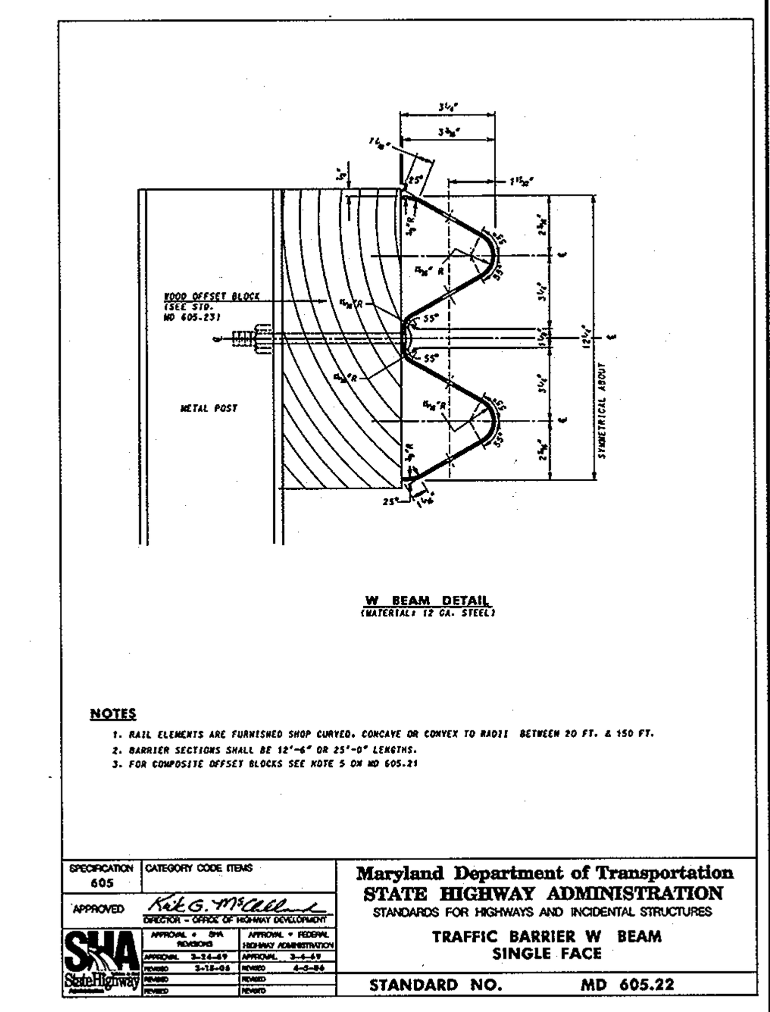

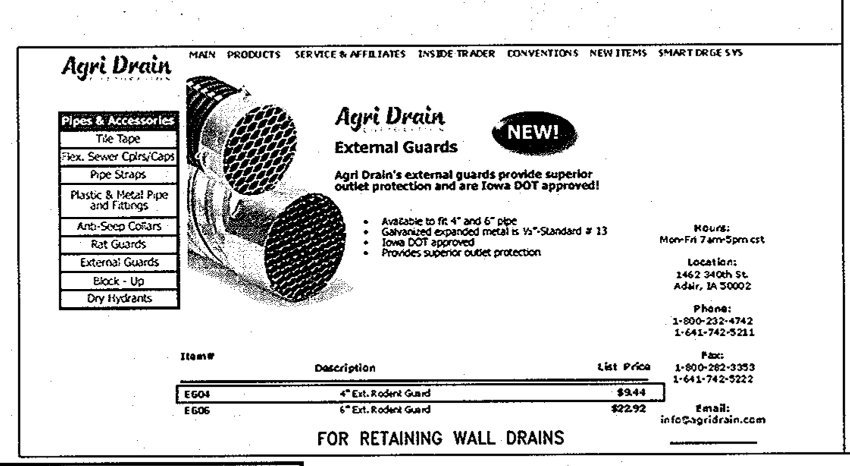

APPROVED: DEPARTMENT OF PLANNING AND ZONING

Chief, Development Engineering Division — Date 4/23/13

Chief, Division of Land Development — Date 4/30/13

Director — Date 5/1/13

KCW Engineering Technologies, Inc.
810 Landmark Drive, Suite 215
Glen Burnie, MD 21061
Phone: 410.768.7700
Fax: 410.768.0200
www.kcw-et.com

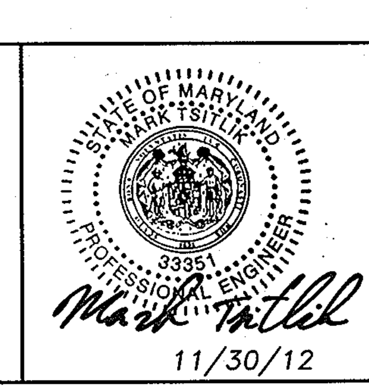

Professional Certification.
I hereby certify that these documents were prepared or approved by me, and that I am a duly licensed professional engineer under the laws of the State of Maryland.
License No. 33351.
Expiration Date 06–30–2014.

OWNER:
THE REDEEMED CHRISTIAN CHURCH OF GOD, INC.
13701 ANNAPOLIS ROAD
BOWIE, MD 20720
Attn: Margaret Adeyokunnu, Pastor
Tele: (301) 352–0707
Fax: (301) 352–3339

OWNER'S REPRESENTATIVE/ DEVELOPER:
TLI DESIGNGROUP INC.
3308 DORCHESTER ROAD
BALTIMORE, MD 21215
Attn: Taiwo Iluyomade, President
Toll Free/Fax/Voice mail: (1–866) 616–1497
Mobile: (443) 831–6703

KCW J.O.: 2080018
SCALE: AS SHOWN
DESIGNED: MT
DRAWN: MT
CHECKED: KCA
DATE: NOV. 30, 2012
DRAWING NO. 15 OF 19

UTILITY DETAILS

VICTORY TEMPLE - LAUREL
WORSHIP CENTER
9100 BURSA ROAD

SDP–12–007
TAX MAP 47, GRID 23
PARCEL 540 (PARCEL A, PLAT # 22114)

W&S CONTRACT No. 24–4047–D
ZONING: CE–CLI
ELECTION DISTRICT – 6
HOWARD COUNTY, MARYLAND

SDP-12-007

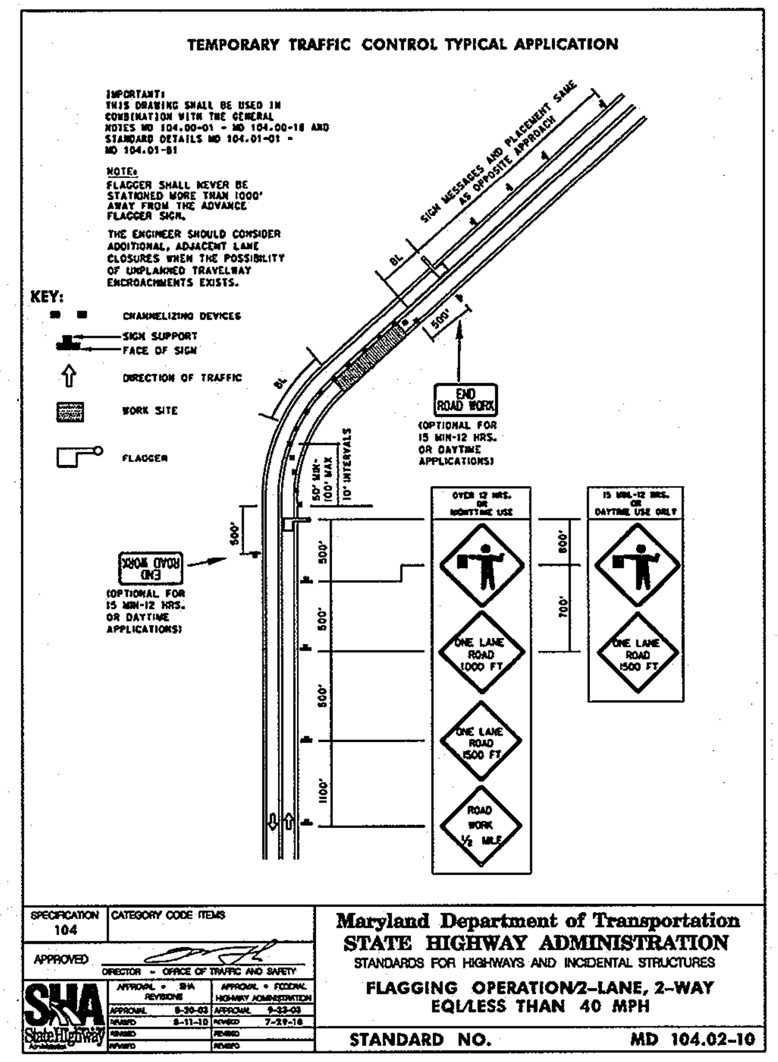

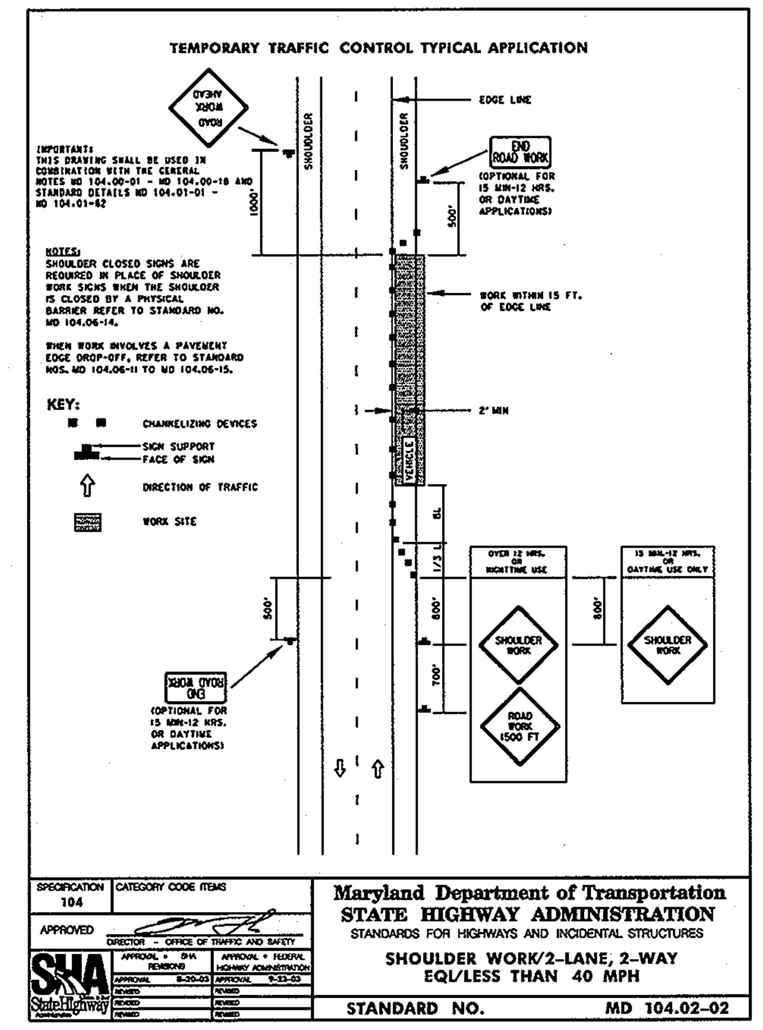

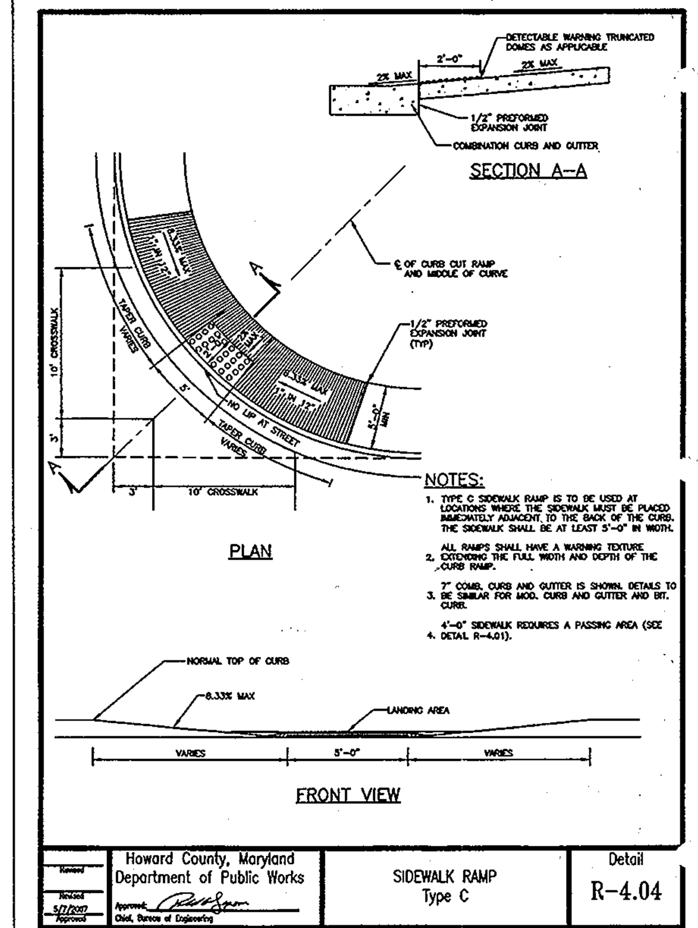

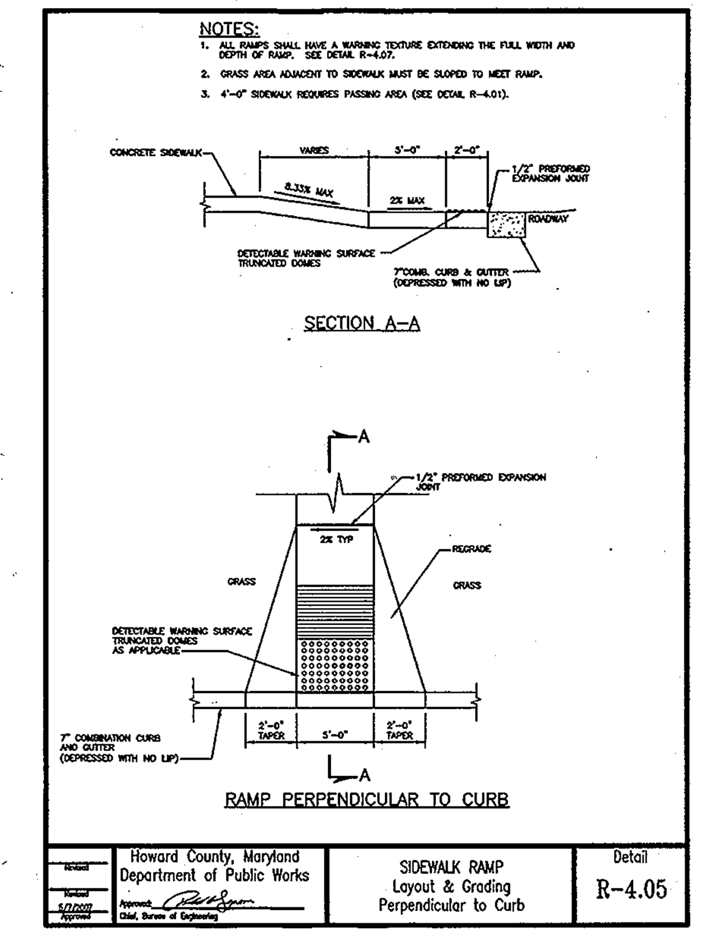

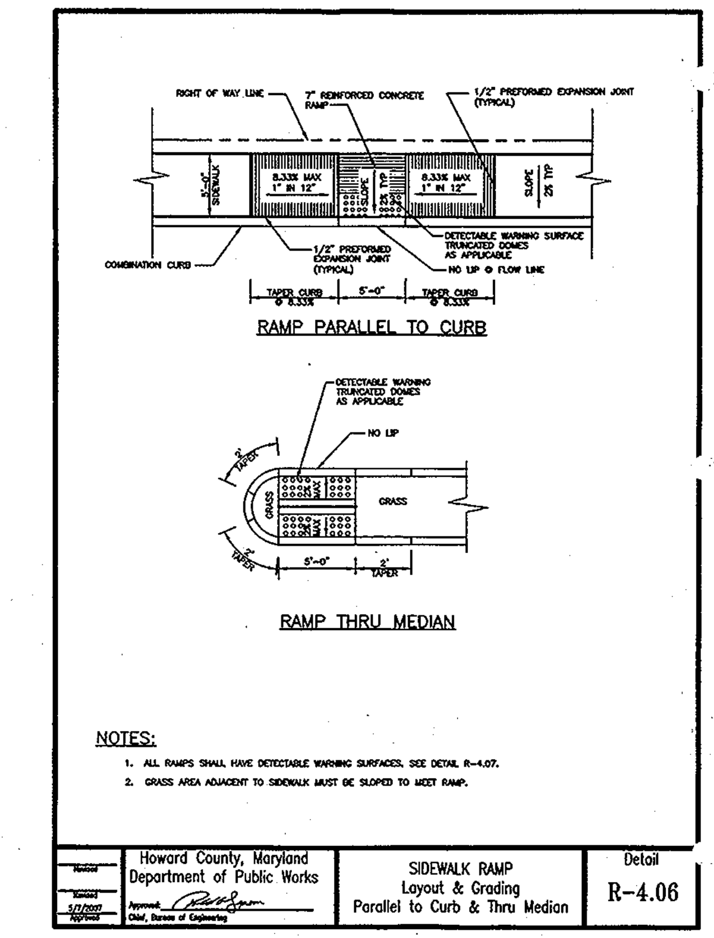

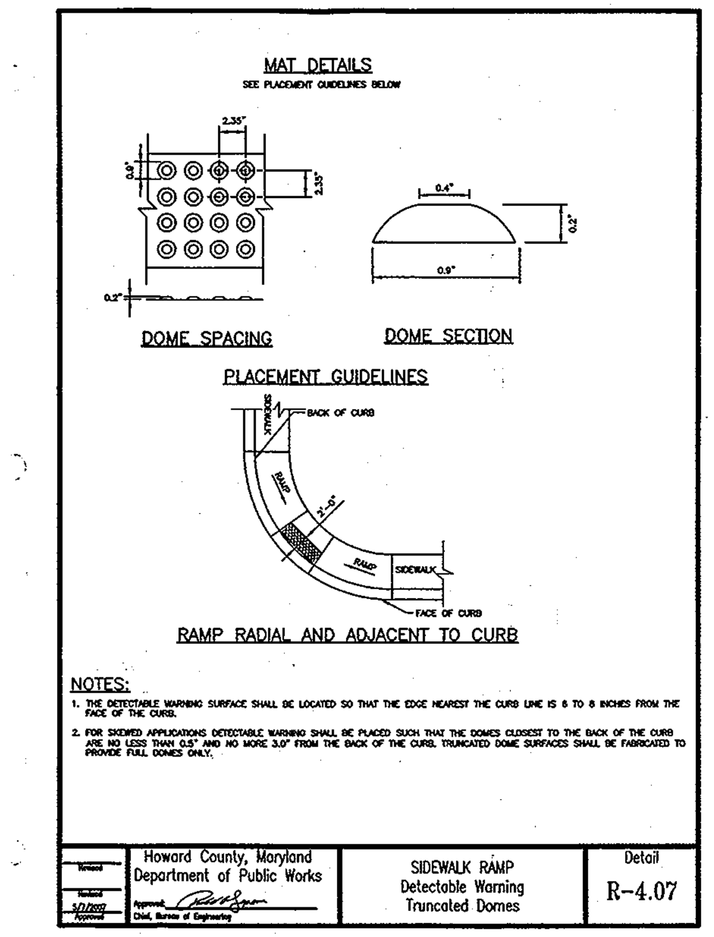

TO BE LOCATED 2' OFF CURB, CENTERED BEFORE EACH INDIVIDUAL SPACE, AND CONSTRUCTED 7' ABOVE GROUND.

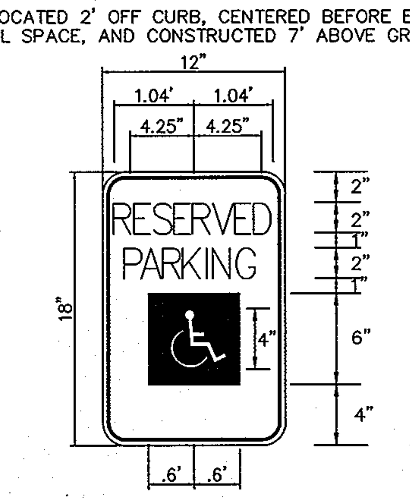

ADDITIONAL "VAN ACCESSIBLE" SIGN TO BE LOCATED UNDER HANDICAP SIGN WHERE SPECIFIED ON PLAN.

HANDICAP PARKING SIGN
NOT TO SCALE

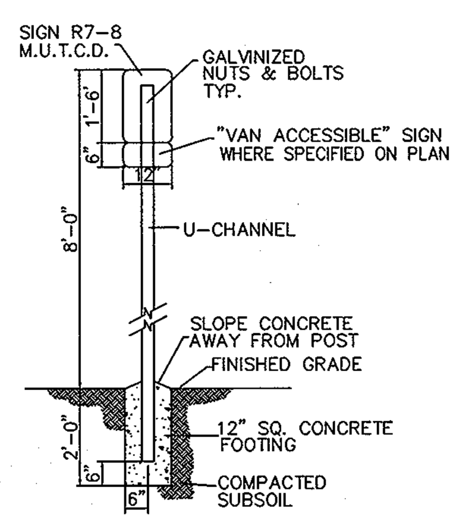

HANDICAP SIGN POST INSTALLATION
NOT TO SCALE

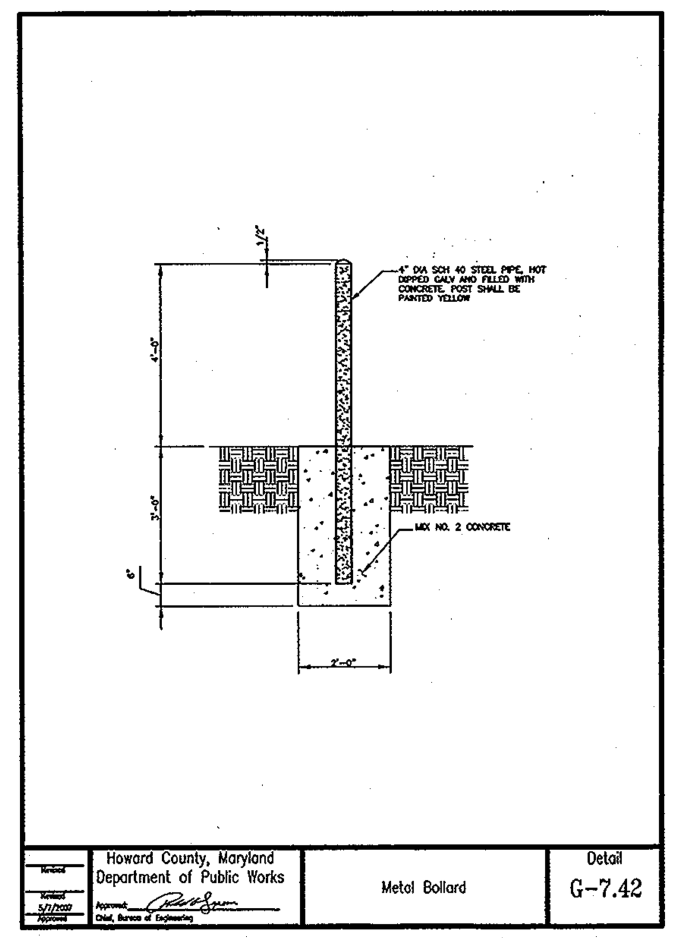

SECTION NUMBER	ROAD AND STREET CLASSIFICATION	CALIFORNIA BEARING RATIO (CBR) / PAVEMENT MATERIAL (INCHES)	MIN HMA WITH GAB 3 TO <5	MIN HMA WITH GAB 5 TO <7	MIN HMA WITH GAB ≥ 7	HMA WITH CONSTANT GAB 3 TO <5	HMA WITH CONSTANT GAB 5 TO <7	HMA WITH CONSTANT GAB ≥ 7
P-1	PARKING BAYS: RESIDENTIAL AND NON-RESIDENTIAL; PARKING DRIVE AISLES: RESIDENTIAL AND NON-RESIDENTIAL WITH NO MORE THAN 2 HEAVY TRUCKS PER DAY	HMA SUPERPAVE FINAL SURFACE 9.5 MM PG 64-22, LEVEL 1 (ESAL)	1.5	1.5	1.5	1.5	1.5	1.5
		HMA SUPERPAVE INTERMEDIATE SURFACE (NA)	NA	NA	NA	NA	NA	NA
		HMA SUPERPAVE BASE 19.0 MM, PG 64-22, LEVEL 1 (ESAL)	2.0	2.0	2.0	3.5	3.0	2.5
		GRADED AGGREGATE BASE (GAB)	8.5	7.0	5.0	4.0	4.0	4.0
P-2	PARKING DRIVE AISLES: RESIDENTIAL AND NON-RESIDENTIAL WITH NO MORE THAN 10 HEAVY TRUCKS PER DAY; LOCAL ROADS: ACESS PLACE, ACCESS STREET; CUL-DE-SACS: RESIDENTIAL	HMA SUPERPAVE FINAL SURFACE 9.5 MM, PG 64-22, LEVEL 1 (ESAL)	1.5	1.5	1.5	1.5	1.5	1.5
		HMA SUPERPAVE INTERMEDIATE SURFACE 9.5 MM, PG 64-22, LEVEL 1 (ESAL)	1.0	1.0	1.0	1.0	1.0	1.0
		HMA SUPERPAVE BASE 19.0 MM, PG 64-22, LEVEL 1 (ESAL)	2.0	2.0	2.0	3.5	2.0	2.0
		GRADED AGGREGATE BASE (GAB)	8.0	4.0	3.0	4.0	4.0	4.0
P-3	PARKING DRIVE AISLES: RESIDENTIAL AND NON-RESIDENTIAL WITH NO MORE THAN 10 HEAVY TRUCKS PER DAY; LOCAL ROADS: ACCESS PLACE, ACCESS STREET; CUL-DE-SACS: NON-RESIDENTIAL; MINOR COLLECTORS: RESIDENTIAL	HMA SUPERPAVE FINAL SURFACE 9.5 MM, PG 64-22, LEVEL 1 (ESAL)	1.5	1.5	1.5	1.5	1.5	1.5
		HMA SUPERPAVE INTERMEDIATE SURFACE 9.5 MM, PG 64-22, LEVEL 1 (ESAL)	1.0	1.0	1.0	1.0	1.0	1.0
		HMA SUPERPAVE BASE 19.0 MM, PG 64-22, LEVEL 1 (ESAL)	3.0	3.0	3.0	4.5	3.0	2.0
		GRADED AGGREGATE BASE (GAB)	10.0	6.0	3.0	6.0	6.0	6.0
P-4	MINOR COLLECTORS: NON-RESIDENTIAL; MAJOR COLLECTORS	HMA SUPERPAVE FINAL SURFACE 12.5 MM, PG 64-22, LEVEL 2 (LOW ESAL)	2.0	2.0	2.0	2.0	2.0	2.0
		HMA SUPERPAVE INTERMEDIATE SURFACE 12.5 MM, PG 64-22, LEVEL 2 (LOW ESAL)	2.0	2.0	2.0	2.0	2.0	2.0
		HMA SUPERPAVE BASE 19.0 MM, PG 64-22, LEVEL 2 (LOW ESAL)	4.0	4.0	3.0	6.0	5.0	3.0
		GRADED AGGREGATE BASE (GAB)	13.0	7.0	4.0	6.0	6.0	6.0

Notes:
1) HEAVY TRUCKS ARE DEFINED AS THOSE WITH SIX (6) WHEELS OR MORE INCLUDING GARBAGE TRUCKS.
2) HMA SUPERPAVE LAYERS SHALL BE PLACED IN APPROPRIATE COMPACTED LIFT THICKNESS: 19.0 MM BASE (2.0" MIN TO 4.0" MAX), 12.5 MM SURFACE (1.5" MIN TO 3.0" MAX), AND 9.5 MM SURFACE (1.0" MIN TO 2.0" MAX)
3) GRADED AGGREGATE BASE (GAB) TO BE PLACED AND COMPACTED IN 6" MAX COMPACTED THICKNESS LAYERS.
4) THE INTERMEDIATE SURFACE COURSE LAYER MUST BE PLACED WITHIN 2 WEEKS OF PLACEMENT OF BASE COURSE, AND IS REQUIRED PRIOR TO SUBSTANTIAL COMPLETION INSPECTION AND BOND REDUCTION.
5) IN LIEU OF PLACING THE INTERMEDIATE SURFACE COURSE LAYER FOR COMMERCIAL/INDUSTRIAL ENTRANCE APRONS WITHIN THE COUNTY RIGHT-OF-WAY WHERE AUXILIARY LANES ARE NOT REQUIRED, THE THICKNESS OF THE INTERMEDIATE PAVEMENT LAYER CAN BE ADDED TO THE REQUIRED THICKNESS OF THE BASE ASPHALT LAYER.
6) THE CONSTRUCTION DRAWINGS SHALL SHOW THE PAVING SECTION, ROAD CLASSIFICATION AND CRB VALUE FOR EACH ROADWAY

HMA SUPERPAVE FINAL SURFACE / HMA SUPERPAVE INTERMEDIATE SURFACE / HMA SUPERPAVE BASE / GRADED AGGREGATE BASE (GAB)

Howard County, Maryland Department of Public Works — PAVING SECTIONS P-1 to P-4 — Detail R-2.01

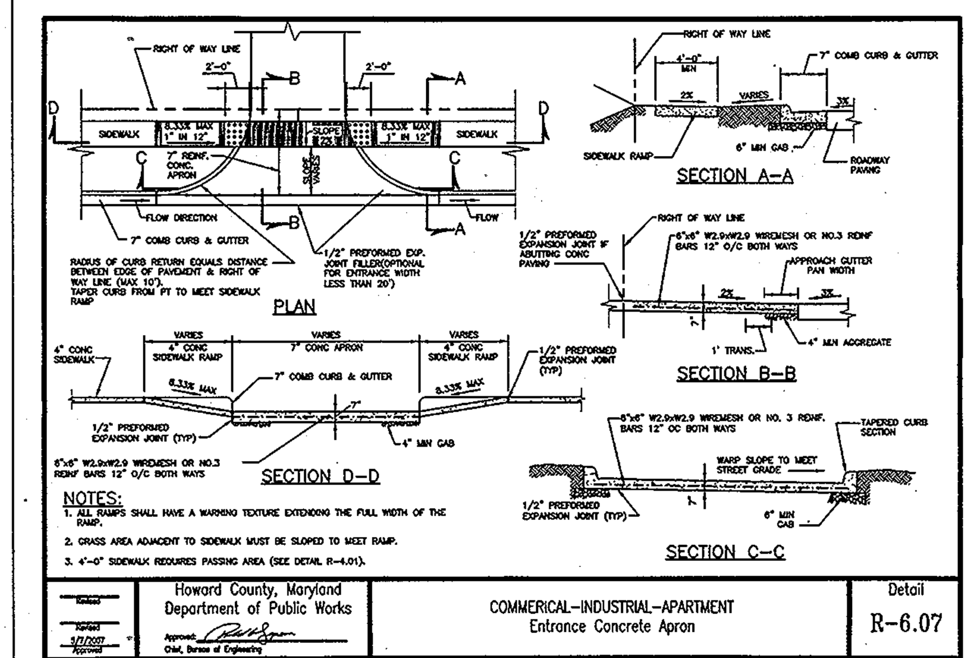

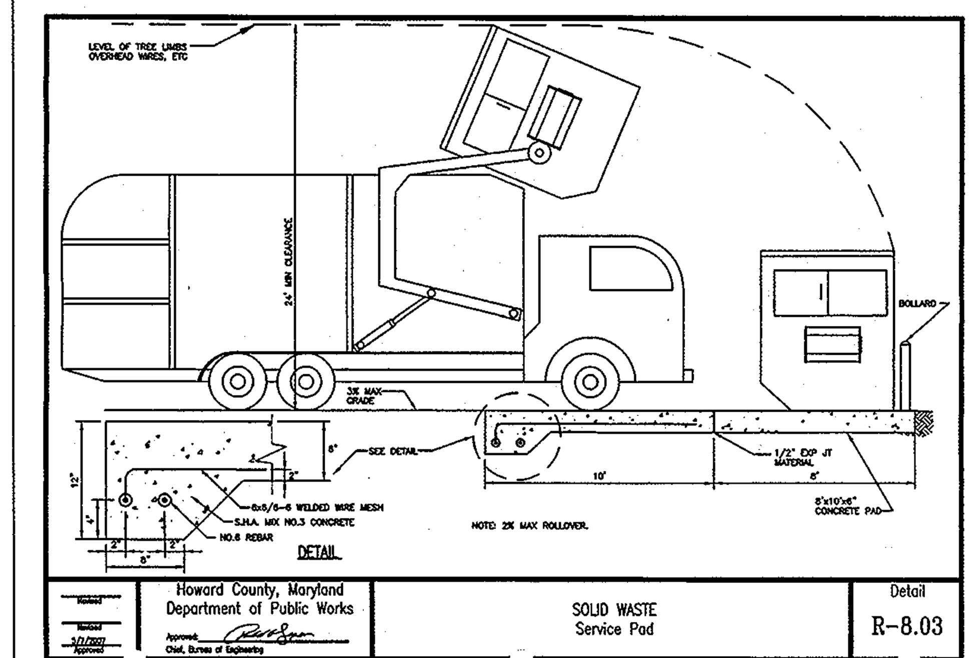

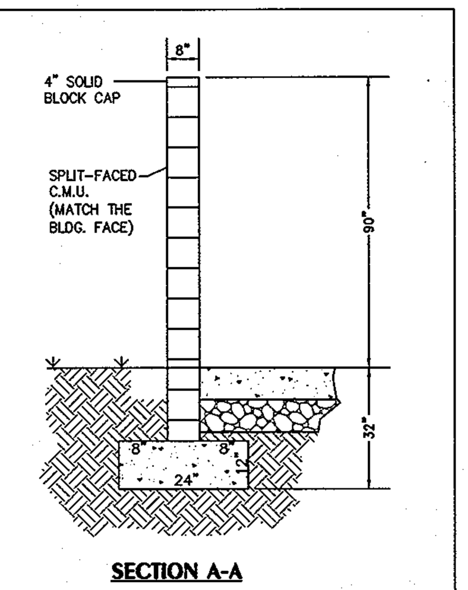

MASONRY DUMPSTER WALL SECTION
NOT TO SCALE

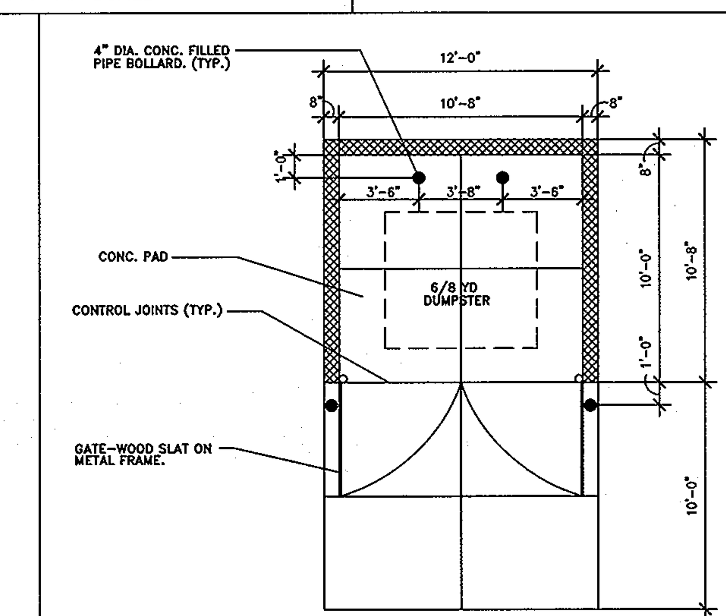

MASONRY DUMPSTER ENCLOSURE
NOT TO SCALE

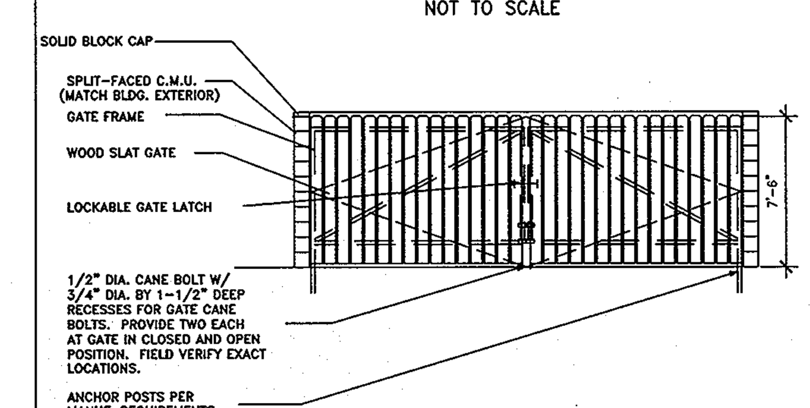

BOARD ON BOARD SWING GATE
NOT TO SCALE

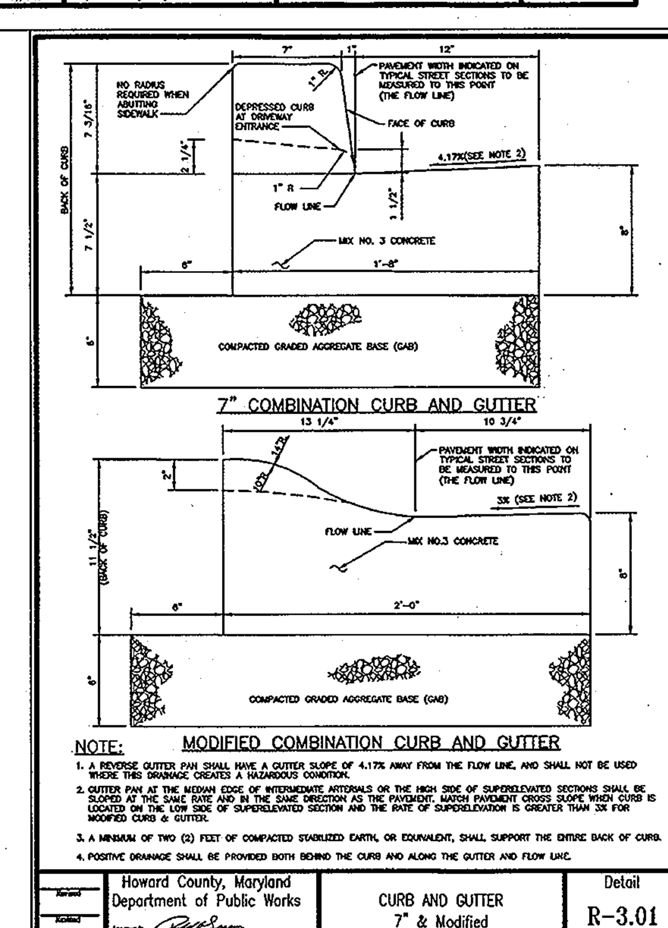

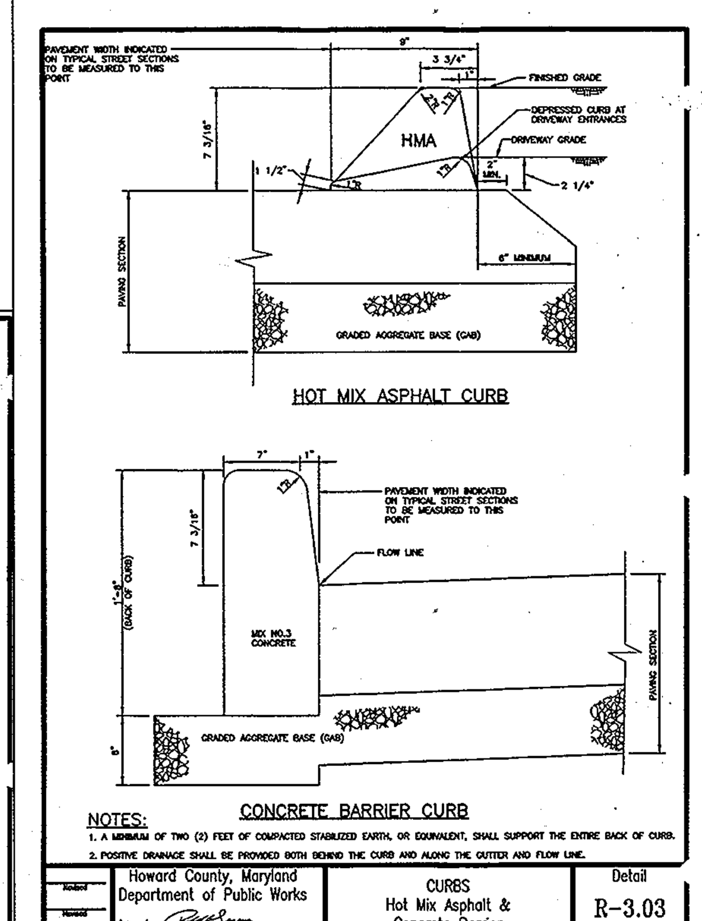

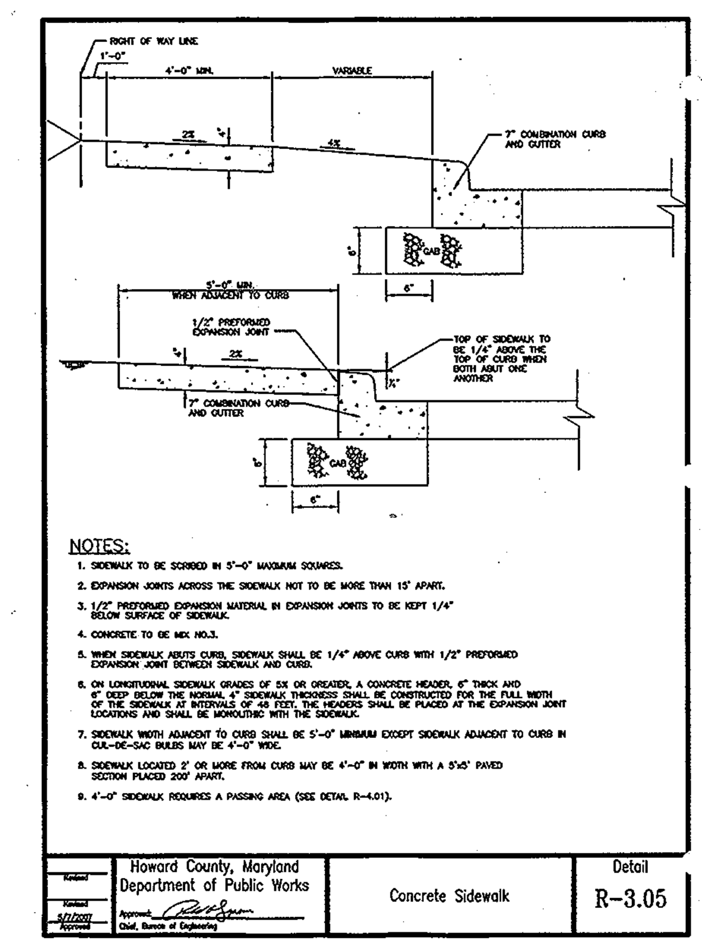

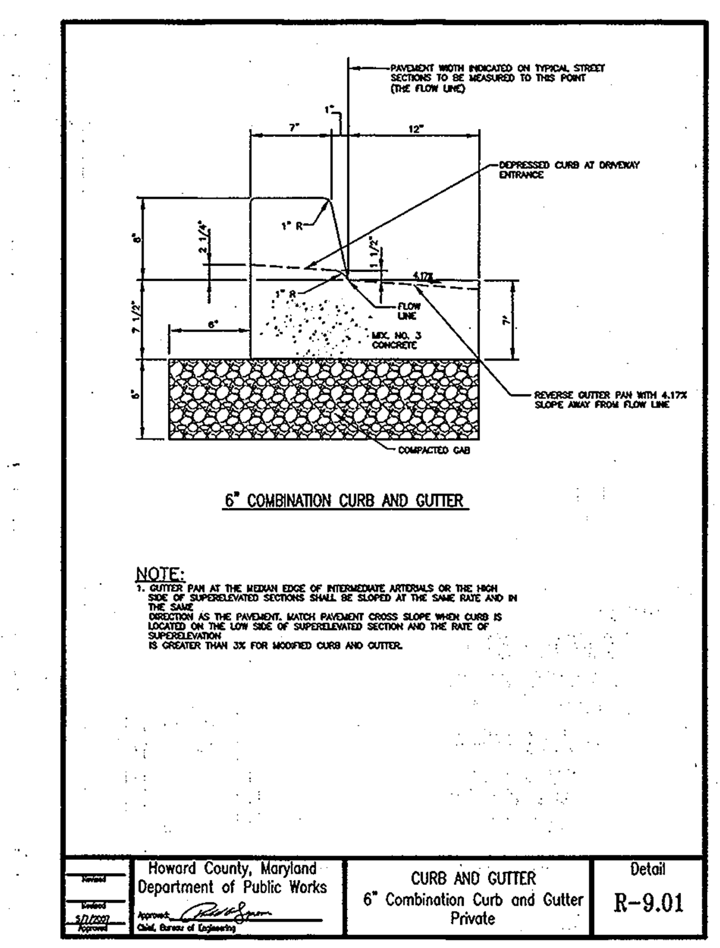

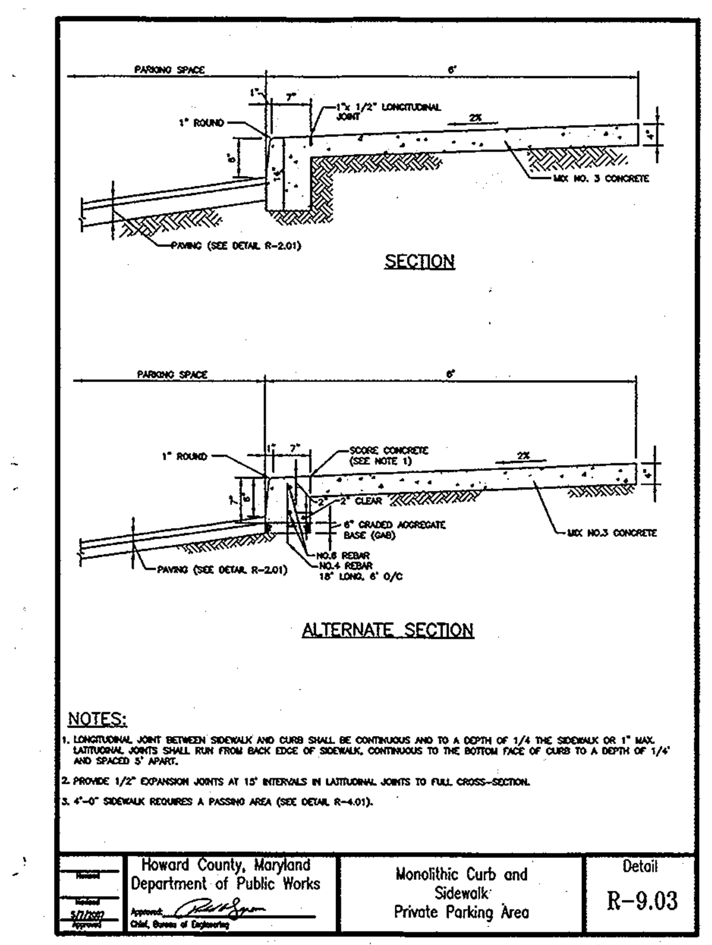

APPROVED: DEPARTMENT OF PLANNING AND ZONING

Chief, Development Engineering Division — Date 4/23/13

Chief, Division of Land Development — Date 4/30/13

Director — Date 5/1/13

KCW Engineering Technologies, Inc.
810 Landmark Drive, Suite 215
Glen Burnie, MD 21061
Phone: 410.768.7700
Fax: 410.768.0200
www.kcw-et.com

STATE OF MARYLAND — MARK TSITLIK — 33351 — PROFESSIONAL ENGINEER
11/30/12

Professional Certification. I hereby certify that these documents were prepared or approved by me, and that I am a duly licensed professional engineer under the laws of the State of Maryland. License No. 33351. Expiration Date 06-30-2014.

OWNER:
THE REDEEMED CHRISTIAN CHURCH OF GOD, INC.
13701 ANNAPOLIS ROAD
BOWIE, MD 20720
Attn: Margaret Adeyokunnu, Pastor
Tele: (301) 352-0707
Fax: (301) 352-3339

OWNER'S REPRESENTATIVE/ DEVELOPER:
TLI DESIGNGROUP INC.
3308 DORCHESTER ROAD
BALTIMORE, MD 21215
Attn: Taiwo Iluyomade, President
Toll Free/Fax/Voice mail: (1-866) 616-1497
Mobile: (443) 831-6703

KCW J.O.: 2080018
SCALE: AS SHOWN
DESIGNED: MT
DRAWN: MT
CHECKED: KCA
DATE: NOV. 30, 2012
DRAWING NO. 16 OF 19

CONSTRUCTION DETAILS

VICTORY TEMPLE - LAUREL
WORSHIP CENTER
9100 BURSA ROAD

SDP-12-007
TAX MAP 47, GRID 23
PARCEL 540 (PARCEL A, PLAT # 22114)

W&S CONTRACT No. 24-4047-D
ZONING: CE-CLI
ELECTION DISTRICT - 6
HOWARD COUNTY, MARYLAND

SDP-12-007

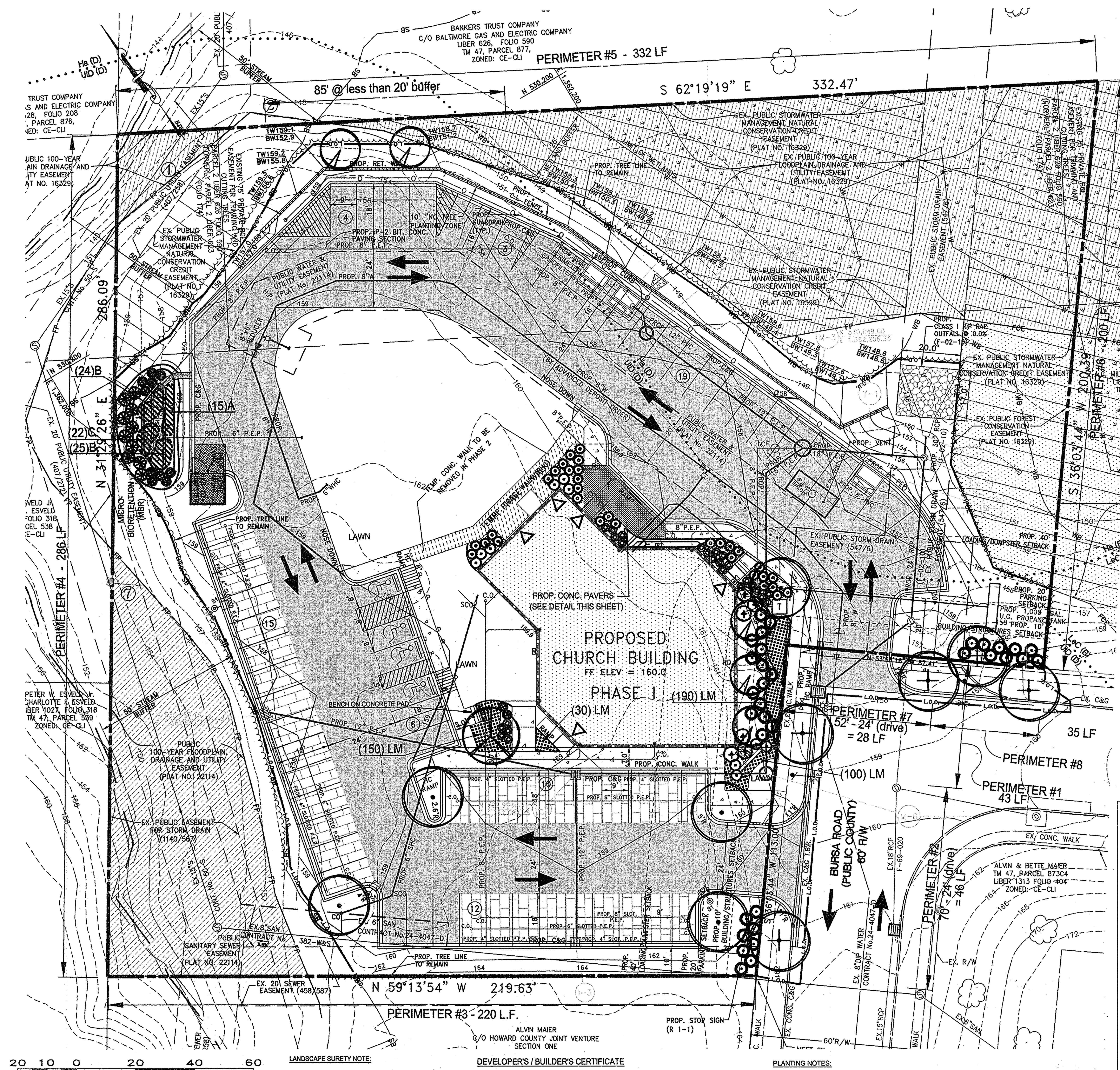

20 10 0 20 40 60

Scale 1" = 20'

PERIMETER LANDSCAPE EDGE

Category	Adjacent to Roadways	Adjacent to Perimeter Properties						
Perimeter Number	1	2	3	4	5	6	7	8
Land Use	Non Residential	Parking	Non Residential	Non Residential	Non Residential	Non Residential	Parking	Non Residential
Orientation / Adjacent Land Use	Front / Side	N / A	Non Residential	Non Residential	Non Residential	Non Residential	N / A	Front / Side
Landscape Type	'B'	'E'	'A'	'A'	'A'	'A'	'E'	'B'
Linear Feet of Roadway Frontage/Perimeter	43 LF.	46' LF.	220 LF.	286 LF.	332 LF.	200 LF.	28 LF.	35' LF.
Credit for Existing Vegetation (Yes, No, Linear Feet) (Describe below if needed)			YES 65 LF.	YES 266 LF.	YES 247 LF.	YES 175 LF.		
Credit for Wall, Fence or Berm (Yes, No, Linear Feet) (Describe below if needed)								
Number of Plants Required								
Shade Trees	1	1	3	1	1		1	1
Evergreen Trees	1							1
Shrubs		12					7	
Number of Plants Provided								
Shade Trees		1	3*	1			1*	1
Evergreen Trees								
Other Trees (2:1 substitution)	3				2			
Shrubs (10:1 substitution)	5	12					7*	10
(Describe plant substitution credits below if needed)			*SEE NOTE BELOW	EX. VEG. CREDIT	EX. VEG. CREDIT	EX. VEG. CREDIT	*SEE NOTE BELOW	

PERIMETER #1: SUBSTITUTED (3) ORNAMENTAL TREES @ 2:1 = 1.5 + (5) SHRUBS @ 10:1 = .5 (TOTAL 2) FOR 1 SHADE TREE AND 1 EVERGREEN TREE.
PERIMETER #3: *CANNOT BE PLANTED DUE TO EXISTING SEWER EASEMENT.
(3) SHADE TREES HAVE BEEN PLANTED ON THE N & NE SIDE OF THE BUILDING AND PARKING LOT TO OFFSET THE REQUIREMENT.
PERIMETER #5: SUBSTITUTED (2) ORNAMENTAL TREES @ 2:1 DUE TO RESTRICTIONS WITHIN BGE EASEMENT
PERIMETER #7: *CANNOT BE PLANTED DUE TO EXISTING PUBLIC STORM DRAIN EASEMENT. (1) SHADE TREE + (7) SHRUBS HAVE BEEN RELOCATED TO THE SE CORNER OF THE BUILDING IN THE VICINITY OF PERIMETER #7.
PERIMETER #8: SUBSTITUTED (10) SHRUBS @ 10:1 FOR 1 EVERGREEN TREE.

PARKING LOT INTERNAL LANDSCAPING

Number of Parking Spaces	69
Number of Trees Required (1 / 20 SPACES)	3
Number of Trees Provided Shade Trees Other Trees (2:1 substitution)	3
Internal Islands Required	3
Internal Islands Provided (Min. 200 Sf.)	3

STREET TREES

200 LF Street Frontage @ 1Tree / 40 LF = (5) Shade Trees Required.
- (4) Shade Trees provided along frontage.
- (1) Shade Tree relocated within an internal island at first parking lot.
Note: frontage limited due to inlet and street light locations.

NOTE:

AT THE TIME OF PLANT INSTALLATION, ALL SHRUBS AND TREES LISTED AND APPROVED ON THE LANDSCAPE PLAN, SHALL COMPLY WITH THE PROPER HEIGHT REQUIREMENT IN ACCORDANCE WITH THE HOWARD COUNTY LANDSCAPE MANUAL. IN ADDITION, NO SUBSTITUTIONS OR RELOCATIONS OF THE REQUIRED PLANTINGS MAY BE MADE WITHOUT PRIOR REVIEW AND APPROVAL FROM TEH DEPARTMENT OF PLANNING AND ZONING. ANY DEVIATION FROMT HE APPROVED LANDSCAPE PLAN MAY RESULT IN DENIAL OR DELAY IN THE RELEASE OF LANDSCAPE SURETY UNTIL SUCH TIME AS ALL REQUIRED MATERIALS ARE PLANTED AND/OR REVISIONS ARE MADE TO THE APPLICABLE PLANS.

THE OWNER, TENANT, AND/OR THEIR AGENTS SHALL BE RESPONSIBLE FOR MAINTENANCE OF THE REQUIRED LANDSCAPING, INCLUDING BOTH PLANT MATERIALS AND BERMS, FENCES AND WALLLS. ALL PLANT MATERIALS SHALL BE MAINTAINED IN GOOD GROWING CONDITION AND WHEN NECESSARY, REPLACED WITH NEW MATERIALS TO ENSURE CONTINUED COMPLIANCE WITH APPLICABLE REGULATIONS. ALL OTHER REQUIRED LANDSCAPING SHALL BE PERMANENTLY MAINTAINED IN GOOD CONDITION, AND WHEN NECESSARY, REPAIRED OR REPLACED.

LEGEND

EXISTING CONTOURS	---144---
PROPOSED CONTOURS	—164—
PROPERTY LINE	
LIMIT OF DISTURBANCE	—L.O.D.—
WETLANDS	—W—
25' WETLAND BUFFER	—WB—
100 YEAR FLOODPLAIN DRAINAGE AND UTILITY EASEMENT	—FP—
STREAM LINE	
SOILS LINE	BeC3 BeB2
FOREST CONSERVATION EASEMENT	—FCE—
STREAM BUFFER	—SB—
ROOF DRAIN	—RD
EXISTING WOODS	
PROPOSED LIMIT OF CLEARING	

PARKING AND LANDSCAPING

PROPOSED USE: CHURCH BUILDING WITH 200 SEATS

PARKING STANDARDS: 1.0 SPACES / 3 SEATS
REQUIRED PARKING: 67 SPACES
PROVIDED PARKING: 69 SPACES
INCLUDING 4 HANDICAPPED SPACES

PARKING SETBACKS: CORRIDOR - EMPLOYMENT ZONING DISTRICT ROUTE 1 MANUAL
SETBACK TO PUBLIC ROADWAYS: 20 FT.
SIDE/REAR SETBACK: 10 FT.
LOADING SPACE SETBACK: 40 FT.

PERIMETER LANDSCAPING STANDARD: 'E' TYPE
PROVIDED PERIMETER LANDSCAPING: 'E' TYPE (MINIMUM)

INTERIOR LANDSCAPING STANDARDS:
1 LANDSCAPE ISLAND / 20 SPACES;
12 FT. WIDE (MIN) AND
200 G.S.F OF PLANTING AREA;
NO MORE THAN 24 SPACES IN A ROW

REQUIRED INTERIOR LANDSCAPING: 3 LANDSCAPE ISLANDS
PROVIDED INTERIOR LANDSCAPING: 3 LANDSCAPE ISLANDS

PHASE 1 PLANT LIST

KEY	QTY	BOTANICAL NAME COMMON NAME	SIZE	COND	REMARKS
	1	ACER RUBRUM 'RED SUNSET' RED SUNSET RED MAPLE	2½"-3" CAL.	B & B	FULL, HEAVY SPECIMEN, HEADED TO 6' HT.
	1	BETULA NIGRA 'HERITAGE' HERITAGE RIVER BIRCH	10'-12' HT	B & B	FULL, HEAVY SPECIMEN, 3 STEMS, HEADED TO 6' HT.
	5	GLEDITSIA TRIACANTHOS 'SHADEMASTER' SHADEMASTER HONEY LOCUST	2½"-3" CAL.	B & B	FULL, HEAVY SPECIMEN, HEADED TO 6' HT.
	4	ULMUS AMERICANA 'VALLEY FORGE' VALLEY FORGE AMERICAN ELM	2½"-3" CAL.	B & B	FULL, HEAVY SPECIMEN, HEADED TO 6' HT.
	5	AMELANCHIER GRANDIFL. 'AUTUMN BRILLIANCE' AUTUMN BRILLIANCE SERVICEBERRY	8'-10' HT.	B & B	FULL, HEAVY, MUTLI-STEMMED MATCHED
	33	EUONYMUS KIAUTSCHOVICUS 'SIEBOLDIANA' SIEBOLD EUONYMUS	30"-36" HT.	#5/B&B	4' O.C., STAGGERED
	6	HYDRANGEA QUERCIFOLIA 'PEE WEE" PEE WEE OAKLEAF HYDRANGEA	30"-36" HT.	#5	5' O.C.
	12	ITEA VIRGINICA 'LITTLE HENRY' LITTLE HENRY SWEETSPIRE	24"-30" HT.	#5	3'-6" O.C., STAGGERED
	32	JUNIPERUS CHINENSIS 'SARGENTII' SARGENT JUNIPER	18"-24"" SPD.	#3	4' O.C., STAGGERED
	25	NANDINA DOMESTICA 'HARBOUR DWARF' HARBOUR DWARF NANDINA	18"-24"" HT.	#3	2'-6" O.C., STAGGERED
	10	ROSA 'KNOCK OUT' RED KNOCK OUT ROSE	24"-30" HT.	#5	4' O.C., STAGGERED
	10	PANICUM VIRGATUM 'HEAVY METAL' HEAVY METAL SWITCHGRASS		#3	4' O.C., STAGGERED
LM	470	LIRIOPE MUSCARI ' VARIEGATA' VARIEGATED LILLY-TURF		4" POTS	12" O.C., STAGGERED
A	15	MONARDA DIDYMA 'PETITE DELIGHT' PETITE DELIGHT BEE BALM		1 QT. POTS	18" O.C., STAGGERED
B	49	IRIS VERSICOLOR BLUE FLAG IRIS		1 QT. POTS	18" O.C., STAGGERED
C	22	ASCLEPIAS INCARNATA SWAMP MILKWEED		1 QT. POTS	24" O.C., STAGGERED

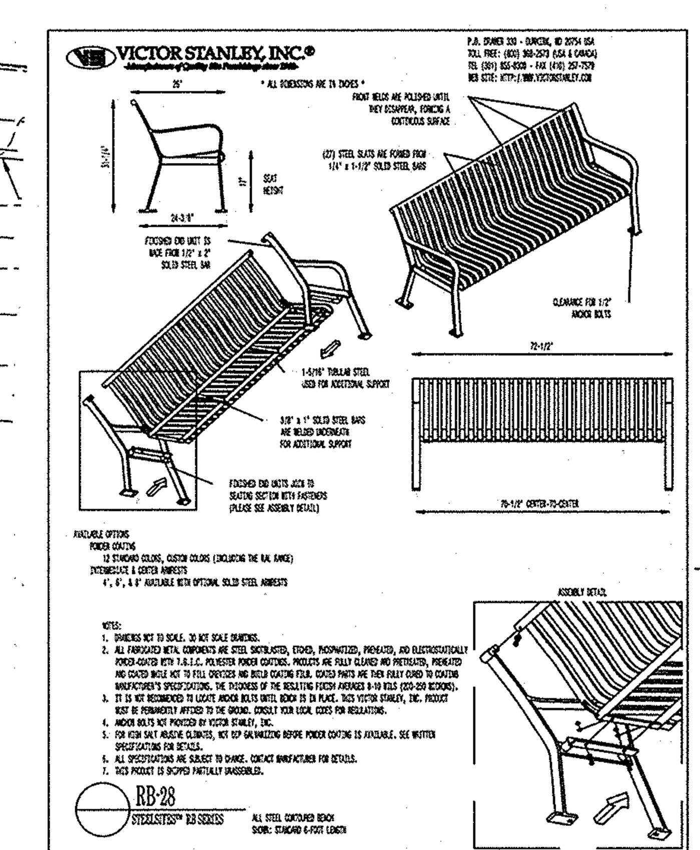

6' L. STEEL BENCH
VICTOR STANLEY RB-28, 6' LONG STEEL BENCH WITH CENTER ARM REST (NOT SHOWN)
COLOR: BLACK PROVIDE (1)

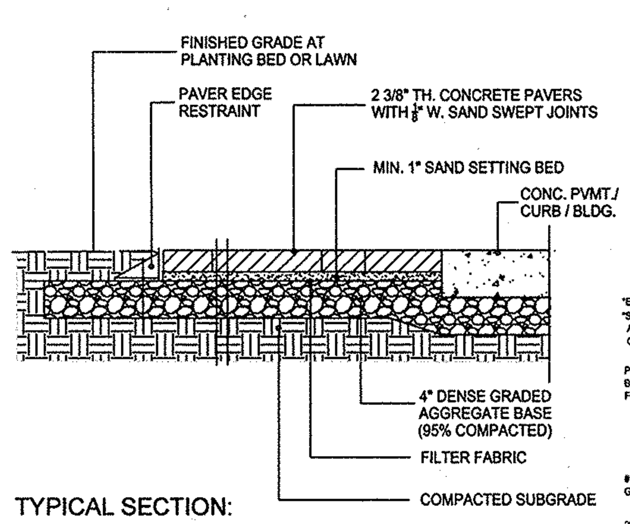

TYPICAL SECTION:
CONCRETE PAVERS AT ENTRANCES
SCALE: NONE

PAVER NOTES:
1. INSTALL PAVERS AND EDGE RESTRAINT PER MANUFACTURERS' SPECIFICATIONS.
2. CONCRETE PAVERS TO BE 2⅜" (60 mm) THICK WITH NATURAL STONE TEXTURE. PROVIDE SQUARE AND RECTANGULAR SHAPES LAID IN IRREGULAR PATTERN AT 45° TO SIDEWALK. ACCEPTABLE PRODUCTS:
 - TECHO-BLOC "BLU 60 mm" PAVERS, AVAILABLE FROM FREDERICK BRICK WORKS, INC., FREDERICK, MD, 1-800-274-2535.
 - UNILOCK "BEACON HILL FLAGSTONE" PAVERS, AVAILABLE FROM BELAIR ROAD SUPPLY CO. INC., BALTIMORE, MD, 410-687-4200.
3. COLOR TO BE SELECTED TO COORDINATE WITH APPLIED STONE VENEER ON BUILDING.
4. EDGE RESTRAINT TO BE RIGID PVC TRIANGULAR EDGING DESIGNED SPECIFICALLY FOR PAVERS. ACCEPTABLE PRODUCT: "PAVE EDGE" BY PAVE TECH HARDSCAPE OUTFITTERS, AVAILABLE FROM BELAIR ROAD SUPPLY CO. INC., BALTIMORE, MD, 410-687-4200.
4. INSTALL PAVER EDGE RESTRAINT WHERE PAVERS ABUT PLANTING BED OR LAWN.

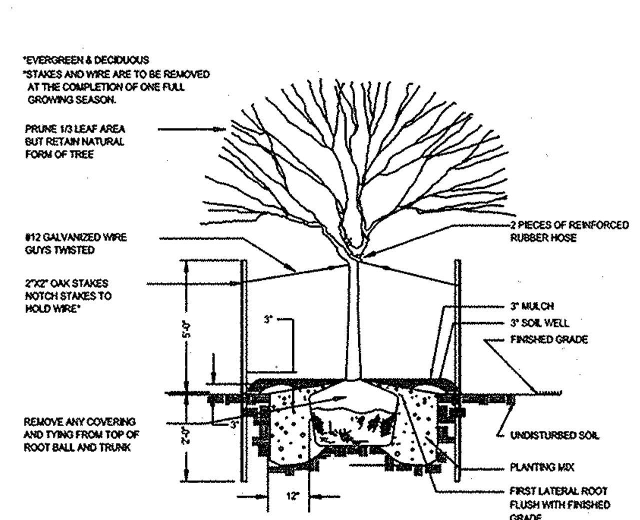

PLANTING DETAIL FOR TREES
* - 1 - 4" CALIPER
NOT TO SCALE

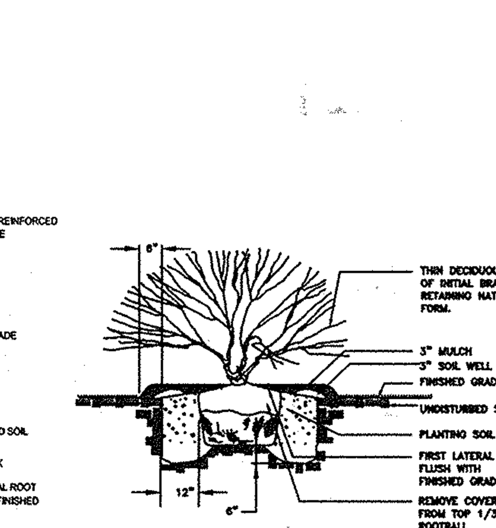

PLANTING DETAIL FOR EVERGREEN AND DECIDUOUS SHRUBS
NOT TO SCALE

LANDSCAPE SURETY NOTE:

THIS PLAN HAS BEEN PREPARED IN ACCORDANCE WITH SECTION 16.124 OF THE HOWARD COUNTY CODE AND LANDSCAPE MANUAL. FINANCIAL SURETY FOR THE REQUIRED LANDSCAPING HAS BEEN POSTED AS PART OF THE DEVELOPER'S AGREEMENT IN THE AMOUNT OF:

(12) SHADE TREES @ $300 EACH =	$ 3,600.00
(2) EVERGREEN TREES @ $150 EACH =	$ 300.00
(19) SHRUBS @ $30 EACH =	$ 570.00
TOTAL:	$ 4,470.00

STREET TREE SURETY:
(5) SHADE TREES @ $300 EACH = $ 1,500.00

DEVELOPER'S / BUILDER'S CERTIFICATE

I/We certify that the landscaping shown on this plan will be done according to the plan, Section 16.124 of the Howard County Code and the Howard County Landscape Manual. I/We further certify that upon completion, a Certification of Landscape Installation, accompanied by an executed one year guarantee of plant materials, will be submitted to the Department of Planning and Zoning.

M Adeyokunnu 3-18-14
DEVELOPER/BUILDER DATE

PLANTING NOTES:

1. CONTRACTOR IS TO NOTIFY MISS UTILITY A MINIMUM OF 72 HOURS PRIOR TO DIGGING. TELEPHONE: 1-800-257-7777.
2. THE LANDSCAPE ARCHITECT IS TO BE NOTIFIED 48 HOURS BEFORE PLANTING BEGINS. THE LOCATION OF ALL PLANT MATERIAL IS TO BE APPROVED IN THE FIELD BY THE LANDSCAPE ARCHITECT.
3. NO TREE OR SHRUB PLANTING PITS ARE TO BE LEFT OPEN OR UNATTENDED.
4. SHRUBS ARE TO BE GROUPED INTO MULCHED BEDS. BEDS ARE TO BE EDGED AND THE GRASS IS TO BE KILLED OR REMOVED PRIOR TO MULCHING.

APPROVED: DEPARTMENT OF PLANNING AND ZONING

Chad Edmonds 4.3.14
Chief, Development Engineering Division Date

Kent Sheubrooks 4/08/14
Chief, Division of Land Development Date

Marsha McLaughlin 4/9/14
Director Date

KCW Engineering Technologies, Inc.
810 Landmark Drive, Suite 215
Glen Burnie, MD 21061
Phone: 410.768.7700
Fax: 410.768.0200
www.kcw-et.com

STATE OF MARYLAND · KEVIN M. LEARY · 3693 · REGISTERED LANDSCAPE ARCHITECT

PREPARED BY:
HUMAN & ROHDE, INC.
LANDSCAPE ARCHITECTS
512 VIRGINIA AVENUE
TOWSON, MARYLAND 21286
PHONE: (410) 825-3885
FAX: (410) 825-3887

OWNER:
THE REDEEMED CHRISTIAN CHURCH OF GOD, INC.
13701 ANNAPOLIS ROAD
BOWIE, MD 20720
Attn: Margaret Adeyokunnu, Pastor
Tele: (301) 352-0707
Fax: (301) 352-3339

OWNER'S REPRESENTATIVE/ DEVELOPER:
TLI DESIGNGROUP INC.
3308 DORCHESTER ROAD
BALTIMORE, MD 21215
Attn: Taiwo Iluyomade, President
Toll Free/Fax/Voice mail: (1-866) 616-1497
Mobile: (443) 831-6703

KCW J.O.: 2080018
SCALE: 1" = 20'
DESIGNED: DML
DRAWN: DML
CHECKED: JCR
DATE: FEB. 10, 2014
DRAWING NO. 17 OF 19

PHASE 1 LANDSCAPE / HARDSCAPE PLAN

VICTORY TEMPLE - LAUREL
WORSHIP CENTER
9100 BURSA ROAD

SDP-12-007
TAX MAP 47, GRID 23
PARCEL 540 (PARCEL A, PLAT #22114)

W&S CONTRACT No. 24-4047-D
ZONING: CE-CLI
ELECTION DISTRICT - 6
HOWARD COUNTY, MARYLAND

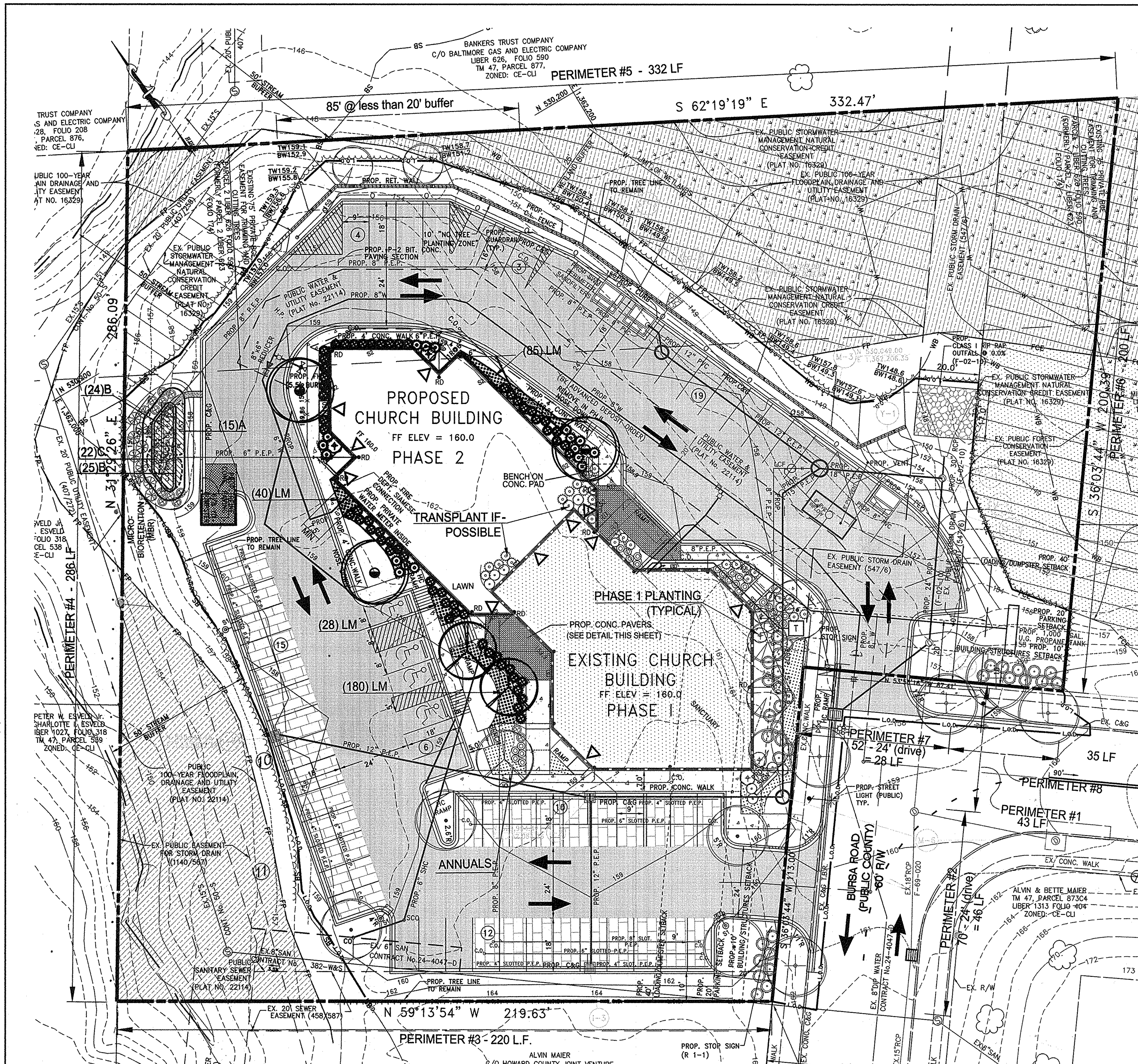

20 10 0 20 40 60

Scale 1" = 20'

PERIMETER LANDSCAPE EDGE

Category	Adjacent to Roadways	Adjacent to Perimeter Properties						
Perimeter Number	1	2	3	4	5	6	7	8
Land Use	Non Residential	Parking	Non Residential	Non Residential	Non Residential	Non Residential	Parking	Non Residential
Orientation / Adjacent Land Use	Front / Side	N / A	Non Residential	Non Residential	Non Residential	Non Residential	N / A	Front / Side
Landscape Type	'B'	'E'	'A'	'A'	'A'	'A'	'E'	'B'
Linear Feet of Roadway Frontage/Perimeter	43 LF.	46' LF.	220 LF.	286 LF.	332 LF.	200 LF.	28 LF.	35' LF.
Credit for Existing Vegetation (Yes, No, Linear Feet) (Describe below if needed)			YES 65 LF.	YES 266 LF.	YES 247 LF.	YES 175 LF.		
Credit for Wall, Fence or Berm (Yes, No, Linear Feet) (Describe below if needed)								
Number of Plants Required								
Shade Trees	1	1	3	1	1		1	1
Evergreen Trees	1							1
Shrubs		12					7	
Number of Plants Provided								
Shade Trees		1	3*	1			1*	1
Evergreen Trees								
Other Trees (2:1 substitution)	3				2			
Shrubs (10:1 substitution)	5	12					7*	10
(Describe plant substitution credits below if needed)			*SEE NOTE BELOW	EX. VEG. CREDIT	EX. VEG. CREDIT	EX. VEG. CREDIT	*SEE NOTE BELOW	

PERIMETER #1: SUBSTITUTED (3) ORNAMENTAL TREES @ 2:1 = 1.5 + (5) SHRUBS @ 10:1 = .5 (TOTAL 2) FOR 1 SHADE TREE AND 1 EVERGREEN TREE.
PERIMETER #3: *CANNOT BE PLANTED DUE TO EXISTING SEWER EASEMENT.
(3) SHADE TREES HAVE BEEN PLANTED ON THE N & NE SIDE OF THE BUILDING AND PARKING LOT TO OFFSET THE REQUIREMENT.
PERIMETER #5: SUBSTITUTED (2) ORNAMENTAL TREES @ 2:1 DUE TO RESTRICTIONS WITHIN BGE EASEMENT
PERIMETER #7: *CANNOT BE PLANTED DUE TO EXISTING PUBLIC STORM DRAIN EASEMENT. (1) SHADE TREE + (7) SHRUBS HAVE BEEN RELOCATED TO THE SE CORNER OF THE BUILDING IN THE VICINITY OF PERIMETER #7.
PERIMETER #8: SUBSTITUTED (10) SHRUBS @ 10:1 FOR 1 EVERGREEN TREE.

PARKING LOT INTERNAL LANDSCAPING

Number of Parking Spaces	69
Number of Trees Required (1 / 20 SPACES)	3
Number of Trees Provided Shade Trees Other Trees (2:1 substitution)	3
Internal Islands Required	3
Internal Islands Provided (Min. 200 Sf.)	3

NORTH

STREET TREES

200 LF Street Frontage @ 1Tree / 40 LF = (5) Shade Trees Required.
- (4) Shade Trees provided along frontage.
- (1) Shade Tree relocated within an internal island at first parking lot.
Note: frontage limited due to inlet and street light locations.

NOTE:

AT THE TIME OF PLANT INSTALLATION, ALL SHRUBS AND TREES LISTED AND APPROVED ON THE LANDSCAPE PLAN, SHALL COMPLY WITH THE PROPER HEIGHT REQUIREMENT IN ACCORDANCE WITH THE HOWARD COUNTY LANDSCAPE MANUAL. IN ADDITION, NO SUBSTITUTIONS OR RELOCATIONS OF THE REQUIRED PLANTINGS MAY BE MADE WITHOUT PRIOR REVIEW AND APPROVAL FROM TEH DEPARTMENT OF PLANNING AND ZONING. ANY DEVIATION FROMT HE APPROVED LANDSCAPE PLAN MAY RESULT IN DENIAL OR DELAY IN THE RELEASE OF LANDSCAPE SURETY UNTIL SUCH TIME AS ALL REQUIRED MATERIALS ARE PLANTED AND/OR REVISIONS ARE MADE TO THE APPLICABLE PLANS.

THE OWNER, TENANT, AND/OR THEIR AGENTS SHALL BE RESPONSIBLE FOR MAINTENANCE OF THE REQUIRED LANDSCAPING, INCLUDING BOTH PLANT MATERIALS AND BERMS, FENCES AND WALLLS. ALL PLANT MATERIALS SHALL BE MAINTAINED IN GOOD GROWING CONDITION AND WHEN NECESSARY, REPLACED WITH NEW MATERIALS TO ENSURE CONTINUED COMPLIANCE WITH APPLICABLE REGULATIONS. ALL OTHER REQUIRED LANDSCAPING SHALL BE PERMANENTLY MAINTAINED IN GOOD CONDITION, AND WHEN NECESSARY, REPAIRED OR REPLACED.

LEGEND

EXISTING CONTOURS	---144---
PROPOSED CONTOURS	—164—
PROPERTY LINE	
LIMIT OF DISTURBANCE	—L.O.D.—
WETLANDS	— W —
25' WETLAND BUFFER	— WB —
100 YEAR FLOODPLAIN DRAINAGE AND UTILITY EASEMENT	— FP —
STREAM LINE	
SOILS LINE	BeC3 / BeB2
FOREST CONSERVATION EASEMENT	—FCE—
STREAM BUFFER	— SB —
ROOF DRAIN	●— RD
EXISTING WOODS	
PROPOSED LIMIT OF CLEARING	

PARKING AND LANDSCAPING

PROPOSED USE: CHURCH BUILDING WITH 200 SEATS

PARKING STANDARDS: 1.0 SPACES / 3 SEATS
REQUIRED PARKING: 67 SPACES
PROVIDED PARKING: 69 SPACES
INCLUDING 4 HANDICAPPED SPACES

PARKING SETBACKS: CORRIDOR – EMPLOYMENT ZONING DISTRICT ROUTE 1 MANUAL
SETBACK TO PUBLIC ROADWAYS: 20 FT.
SIDE/REAR SETBACK: 10 FT.
LOADING SPACE SETBACK: 40 FT.

PERIMETER LANDSCAPING STANDARD: 'E' TYPE
PROVIDED PERIMETER LANDSCAPING: 'E' TYPE (MINIMUM)

INTERIOR LANDSCAPING STANDARDS:
1 LANDSCAPE ISLAND / 20 SPACES;
12 FT. WIDE (MIN) AND
200 G.S.F OF PLANTING AREA;
NO MORE THAN 24 SPACES IN A ROW

REQUIRED INTERIOR LANDSCAPING: 3 LANDSCAPE ISLANDS
PROVIDED INTERIOR LANDSCAPING: 3 LANDSCAPE ISLANDS

PHASE 2 PLANT LIST

KEY	QTY	BOTANICAL NAME / COMMON NAME	SIZE	COND	REMARKS
	3	ACER SACCHARUM 'GREEN MOUNTAIN' GREEN MOUNTAIN SUGAR MAPLE	2½"-3" CAL.	B & B	FULL, HEAVY SPECIMEN, HEADED TO 6' HT.
	2	BETULA NIGRA 'HERITAGE' HERITAGE RIVER BIRCH	10-12' HT.	B & B	FULL, HEAVY SPECIMEN, 3-4 STEM
	2	HYDRANGEA QUERCIFOLIA 'PEE WEE' PEE WEE OAKLEAF HYDRANGEA	30"-36" HT.	#5	5' O.C.
	48	ITEA VIRGINICA 'LITTLE HENRY' LITTLE HENRY ITEA	18"-24" HT.	#3	3' O.C., STAGGERED
	17	JUNIPERUS CHINENSIS 'SARGENTII' SARGENT JUNIPER	18"-24" SPD.	#3	4' O.C., STAGGERED
	11	PRUNUS LAUROCERASUS 'OTTO LUYKEN' OTTO LUYKEN CHERRY LAUREL	24"-30" HT.	#5	4' O.C., STAGGERED
LM	333	LIRIOPE MUSCARI 'VARIEGATA' VARIEGATED LILLY-TURF		4" POTS	12" O.C., STAGGERED

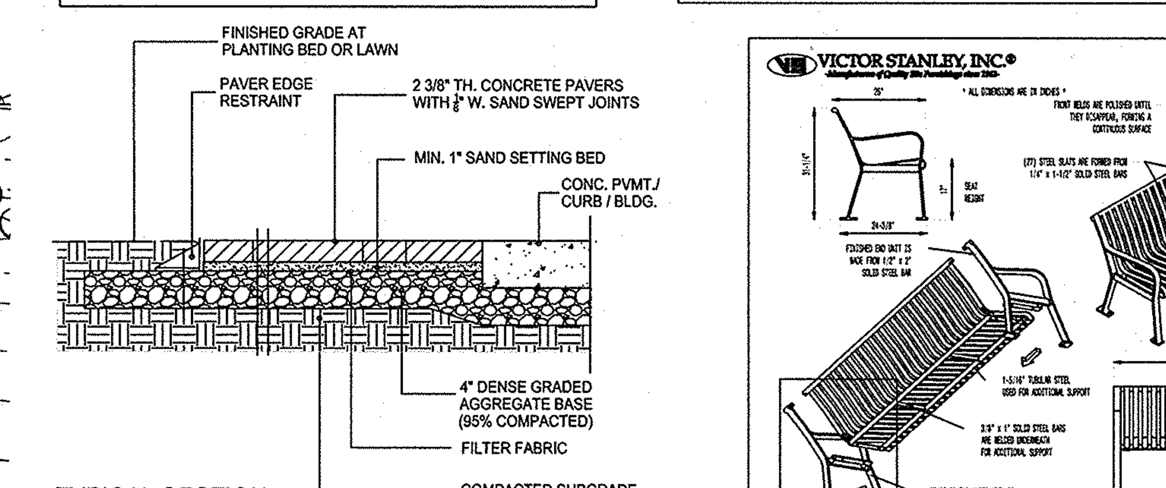

TYPICAL SECTION:
CONCRETE PAVERS AT ENTRANCES
SCALE: NONE

PAVER NOTES:
1. INSTALL PAVERS AND EDGE RESTRAINT PER MANUFACTURERS' SPECIFICATIONS.
2. CONCRETE PAVERS TO BE 2⅜" (60 mm) THICK WITH NATURAL STONE TEXTURE. PROVIDE SQUARE AND RECTANGULAR SHAPES LAID IN IRREGULAR PATTERN AT 45° TO SIDEWALK. ACCEPTABLE PRODUCTS:
   - TECHO-BLOC "BLU 60 mm" PAVERS, AVAILABLE FROM FREDERICK BRICK WORKS, INC., FREDERICK, MD, 1-800-274-2535.
   - UNILOCK "BEACON HILL FLAGSTONE" PAVERS, AVAILABLE FROM BELAIR ROAD SUPPLY CO. INC., BALTIMORE, MD, 410-687-4200.
3. COLOR TO BE SELECTED TO COORDINATE WITH APPLIED STONE VENEER ON BUILDING.
4. EDGE RESTRAINT TO BE RIGID PVC TRIANGULAR EDGING DESIGNED SPECIFICALLY FOR PAVERS. ACCEPTABLE PRODUCT: "PAVE EDGE" BY PAVE TECH HARDSCAPE OUTFITTERS, AVAILABLE FROM BELAIR ROAD SUPPLY CO. INC., BALTIMORE, MD, 410-687-4200.
4. INSTALL PAVER EDGE RESTRAINT WHERE PAVERS ABUT PLANTING BED OR LAWN.

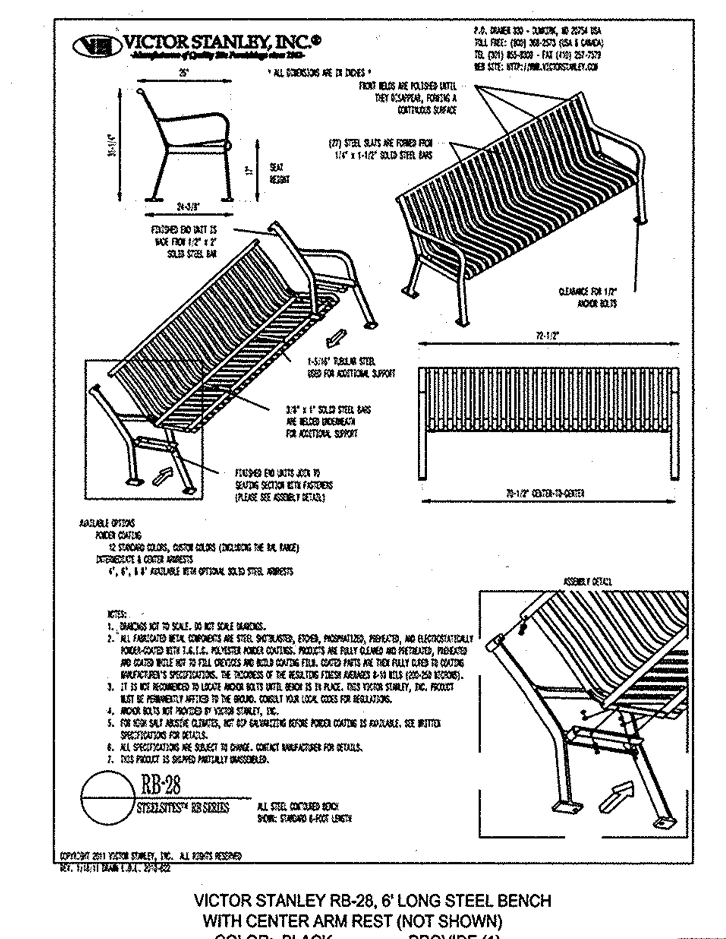

VICTOR STANLEY RB-28, 6' LONG STEEL BENCH WITH CENTER ARM REST (NOT SHOWN)
COLOR: BLACK PROVIDE (1)

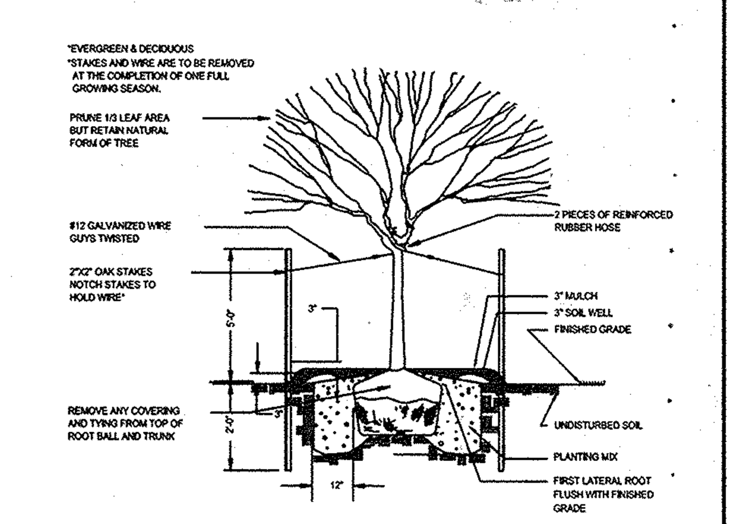

PLANTING DETAIL FOR TREES
* - 1 - 4" CALIPER
NOT TO SCALE

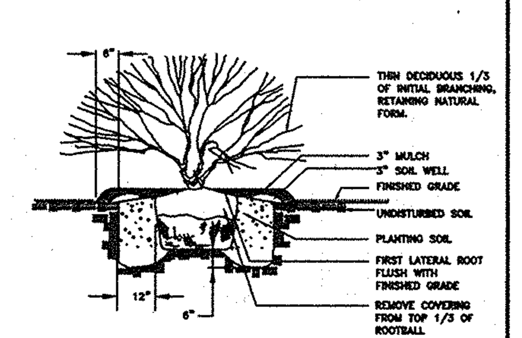

PLANTING DETAIL FOR EVERGREEN AND DECIDUOUS SHRUBS
NOT TO SCALE

LANDSCAPE SURETY NOTE:

THIS PLAN HAS BEEN PREPARED IN ACCORDANCE WITH SECTION 16.124 OF THE HOWARD COUNTY CODE AND LANDSCAPE MANUAL. FINANCIAL SURETY FOR THE REQUIRED LANDSCAPING HAS BEEN POSTED AS PART OF THE DEVELOPER'S AGREEMENT IN THE AMOUNT OF:

(12) SHADE TREES @ $300 EACH =	$ 3,600.00
(2) EVERGREEN TREES @ $150 EACH =	$ 300.00
(19) SHRUBS @ $30 EACH =	$ 570.00
TOTAL:	$ 4,470.00

STREET TREE SURETY:
(5) SHADE TREES @ $300 EACH = $ 1,500.00

DEVELOPER'S / BUILDER'S CERTIFICATE

I/We certify that the landscaping shown on this plan will be done according to the plan, Section 16.124 of the Howard County Code and the Howard County Landscape Manual. I/We further certify that upon completion, a Certification of Landscape Installation, accompanied by an executed one year guarantee of plant materials, will be submitted to the Department of Planning and Zoning.

[signature] 3-18-14
DEVELOPER/BUILDER DATE

PLANTING NOTES:
1. CONTRACTOR IS TO NOTIFY MISS UTILITY A MINIMUM OF 72 HOURS PRIOR TO DIGGING. TELEPHONE: 1-800-257-7777.
2. THE LANDSCAPE ARCHITECT IS TO BE NOTIFIED 48 HOURS BEFORE PLANTING BEGINS. THE LOCATION OF ALL PLANT MATERIAL IS TO BE APPROVED IN THE FIELD BY THE LANDSCAPE ARCHITECT.
3. NO TREE OR SHRUB PLANTING PITS ARE TO BE LEFT OPEN OR UNATTENDED.
4. SHRUBS ARE TO BE GROUPED INTO MULCHED BEDS. BEDS ARE TO BE EDGED AND THE GRASS IS TO BE KILLED OR REMOVED PRIOR TO MULCHING.

APPROVED: DEPARTMENT OF PLANNING AND ZONING

[signature] 4.3.14
Chief, Development Engineering Division Date

[signature] 4-04-14
Chief, Division of Land Development Date

[signature] 4/4/14
Director Date

KCW ENGINEERING TECHNOLOGIES
KCW Engineering Technologies, Inc.
810 Landmark Drive, Suite 215
Glen Burnie, MD 21061
Phone: 410.768.7700
Fax: 410.768.0200
www.kcw-et.com

STATE OF MARYLAND REGISTERED LANDSCAPE ARCHITECT 3693

PREPARED BY:
HUMAN & ROHDE, INC.
LANDSCAPE ARCHITECTS
512 VIRGINIA AVENUE
TOWSON, MARYLAND 21286
PHONE: (410) 825-3885
FAX: (410) 825-3887

OWNER:
THE REDEEMED CHRISTIAN CHURCH OF GOD, INC.
13701 ANNAPOLIS ROAD
BOWIE, MD 20720
Attn: Margaret Adeyokunnu, Pastor
Tele: (301) 352-0707
Fax: (301) 352-3339

OWNER'S REPRESENTATIVE/ DEVELOPER:
TLI DESIGNGROUP INC.
3308 DORCHESTER ROAD
BALTIMORE, MD 21215
Attn: Taiwo Iluyomade, President
Toll Free/Fax/Voice mail:
(1-866) 616-1497
Mobile: (443) 831-6703

KCW J.O.: 2080018
SCALE: 1" = 20'
DESIGNED: MT
DRAWN: MT
CHECKED: KCA
DATE: FEB. 10, 2014
DRAWING NO.
17A OF 19

PHASE 2 LANDSCAPE / HARDSCAPE PLAN

VICTORY TEMPLE - LAUREL
WORSHIP CENTER
9100 BURSA ROAD

SDP-12-007
TAX MAP 47, GRID 23
PARCEL 540 (PARCEL A, PLAT #22114)

W&S CONTRACT No. 24-4047-D
ZONING: CE-CLI
ELECTION DISTRICT - 6
HOWARD COUNTY, MARYLAND

SDP-12-007

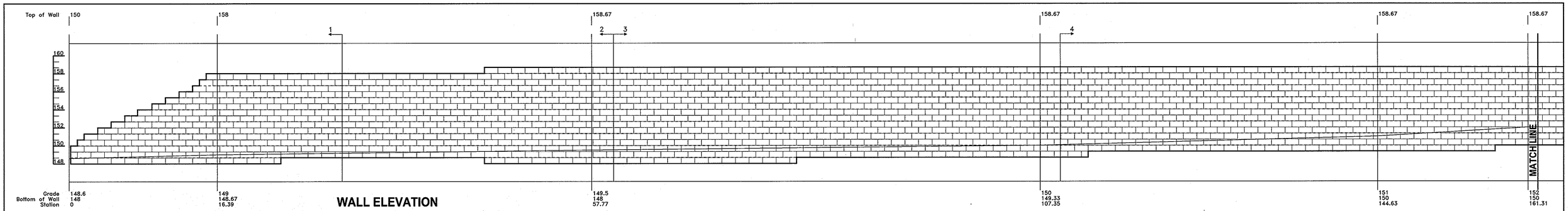

WALL ELEVATION
1" = 5'

Section	1	2	3	4	5	6	7
Top	158	158.67	158.67	158.67	158.67	159.33	159.33
Bottom	148.67	148	148	149.33	150.67	152.67	154.67
Section Cut	30.18	60.18	60.18	120.34	199.33	222.46	234.46
Station End	30.18	60.18	109.58	197.54	222.46	234.46	249.29

GRADING NOTE:
FOR GRADING AROUND THE RETAINING WALL
SEE GRADING PLAN, SHEET 4 OF 19.

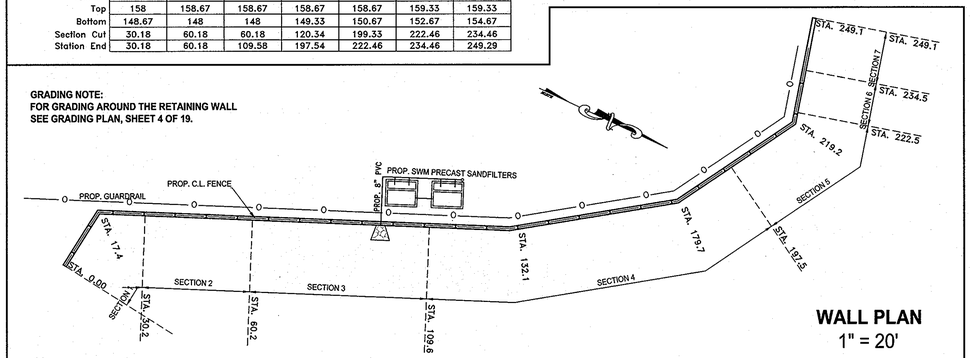

WALL PLAN
1" = 20'

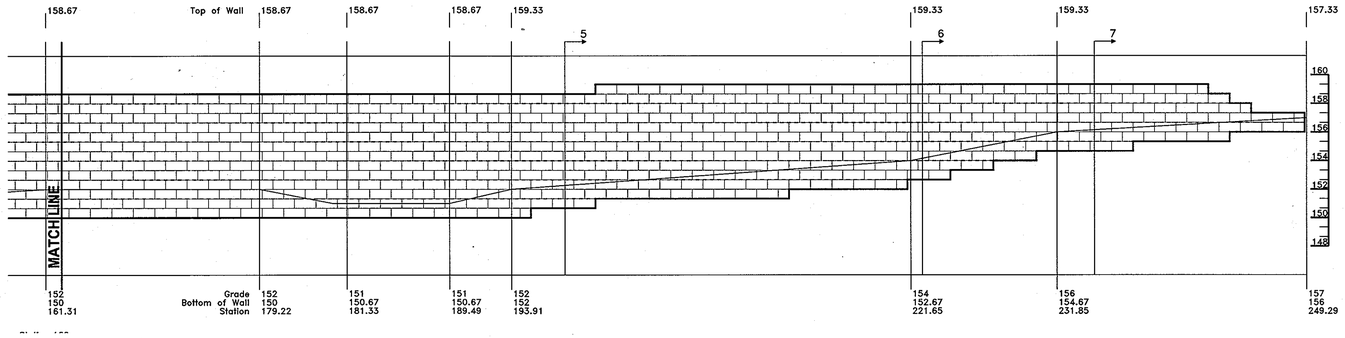

Station 160

WALL SECTIONS
1" = 5'

------ A – Strata SG 200
—— B – Strata SG 350
——— C – Strata SG 500

SECTION 1

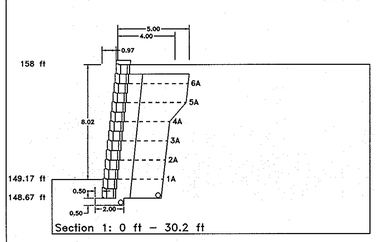

1. Setback distance is approximate and does not consider curves, radii or corners.
2. Geogrids placed in the slope above the wall are used in the internal compound stability calculations and in the contributory area calculation of the top wall geogrid.
3. Place the geogrid, in the reinforced base, at the height of one block from the bottom of the trench.

SECTION 2

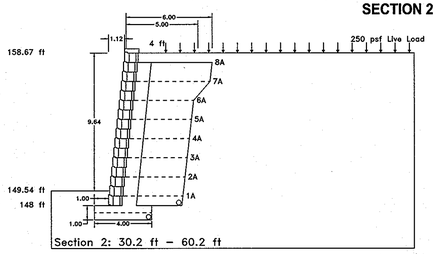

1. Setback distance is approximate and does not consider curves, radii or corners.
2. Geogrids placed in the slope above the wall are used in the internal compound stability calculations and in the contributory area calculation of the top wall geogrid.
3. Place the geogrid, in the reinforced base, at the height of one block from the bottom of the trench.
4. Leveling pad 4 feet wide and 1 foot deep. Block set 1 foot from toe.

SECTION 3

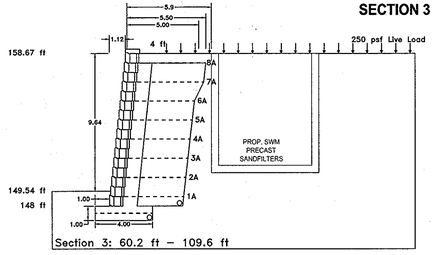

1. Setback distance is approximate and does not consider curves, radii or corners.
2. Geogrids placed in the slope above the wall are used in the internal compound stability calculations and in the contributory area calculation of the top wall geogrid.
3. Place the geogrid, in the reinforced base, at the height of one block from the bottom of the trench.
4. Leveling pad 4 feet wide and 1 foot deep. Block set 1 foot from toe.
5. SANDFILTER NOTE: The top grid will be terminated even with the sandfilter structures and extended in between the structures.

SECTION 4

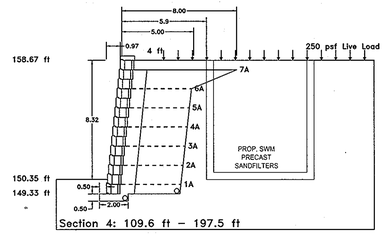

1. Setback distance is approximate and does not consider curves, radii or corners.
2. Geogrids placed in the slope above the wall are used in the internal compound stability calculations and in the contributory area calculation of the top wall geogrid.
3. Place the geogrid, in the reinforced base, at the height of one block from the bottom of the trench.
4. SANDFILTER NOTE: The top grid will be terminated even with the sandfilter structures and extended in between the structures.

SECTION 5

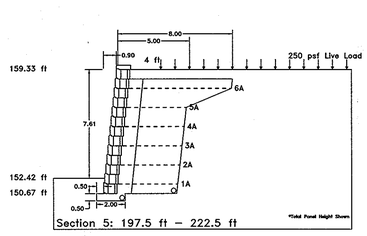

1. Setback distance is approximate and does not consider curves, radii or corners.
2. Geogrids placed in the slope above the wall are used in the internal compound stability calculations and in the contributory area calculation of the top wall geogrid.
3. Place the geogrid, in the reinforced base, at the height of one block from the bottom of the trench.

SECTION 6

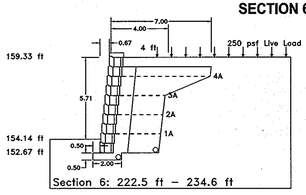

1. Setback distance is approximate and does not consider curves, radii or corners.
2. Geogrids placed in the slope above the wall are used in the internal compound stability calculations and in the contributory area calculation of the top wall geogrid.
3. Place the geogrid, in the reinforced base, at the height of one block from the bottom of the trench.

SECTION 7

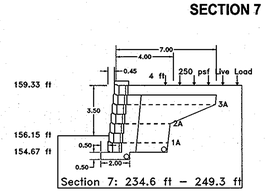

1. Setback distance is approximate and does not consider curves, radii or corners.
2. Geogrids placed in the slope above the wall are used in the internal compound stability calculations and in the contributory area calculation of the top wall geogrid.
3. Place the geogrid, in the reinforced base, at the height of one block from the bottom of the trench.

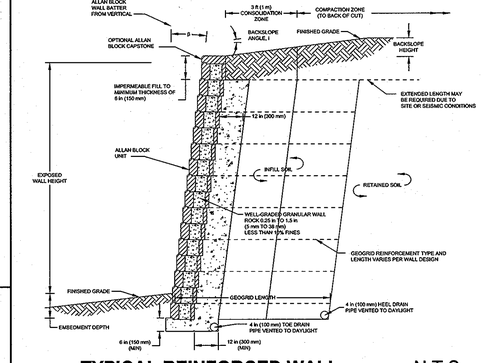

TYPICAL REINFORCED WALL N.T.S.

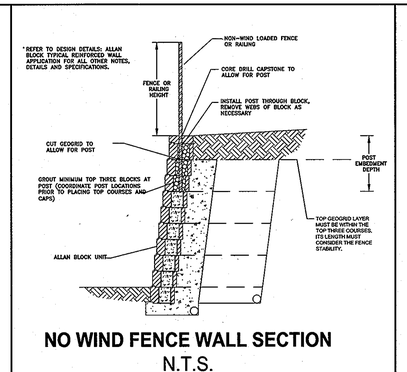

NO WIND FENCE WALL SECTION
N.T.S.

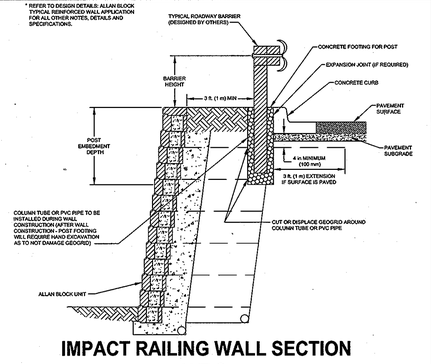

IMPACT RAILING WALL SECTION
N.T.S.

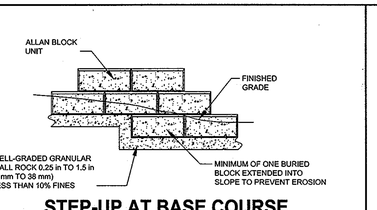

STEP-UP AT BASE COURSE
N.T.S.

APPROVED: DEPARTMENT OF PLANNING AND ZONING

Chief, Development Engineering Division — Date 4/23/13

Chief, Division of Land Development — Date 4/30/13

Director — Date 5/1/13

geolab

Geolab, Inc.
8980 State Route 108
Columbia, Maryland 21045
410-772-2220

STATE OF MARYLAND — G. MATTHEW NORRIS — No. 18182 — PROFESSIONAL ENGINEER

G. Matthew Norris 11/30/12

Professional Certification.
I hereby certify that these documents were prepared or approved by me, and that I am a duly licensed professional engineer under the laws of the State of Maryland.
License No. 18182.
Expiration Date 03-12-2013.

OWNER:
THE REDEEMED CHRISTIAN CHURCH OF GOD, INC.
(VICTORY TEMPLE) LAUREL, MARYLAND
13701 ANNAPOLIS ROAD
BOWIE, MD 20720
Attn: Margaret Adeyokunnu, Pastor
Tele: (301) 352-0707
Fax: (301) 352-3339

OWNER'S REPRESENTATIVE/ DEVELOPER:
TLI DESIGNGROUP INC.
3308 DORCHESTER ROAD
- BALTIMORE, MD 21215
Attn: Taiwo Iluyomade, President
Toll Free/Fax/Voice mail:
(1-866) 616-1497
Mobile: (443) 831-6703

KCW J.O.: 2080018
SCALE: AS SHOWN
DESIGNED: GMN
DRAWN: GMN
CHECKED: GMN
DATE: NOV. 30, 2012
DRAWING NO.
18 OF 19

RETAINING WALL PLAN, ELEVATION AND SECTIONS

VICTORY TEMPLE - LAUREL
WORSHIP CENTER
9100 BURSA ROAD

SDP-12-007
TAX MAP 47, GRID 23
PARCEL 540 (PARCEL A, PLAT # 22114)

W&S CONTRACT No. 24-4047-D
ZONING: CE-CLI
ELECTION DISTRICT – 6
HOWARD COUNTY, MARYLAND

SDP-12-007

Specification Guidelines: Allan Block Modular Retaining Wall Systems

SECTION 1: ALLAN BLOCK MODULAR RETAINING WALL SYSTEMS

PART 1: GENERAL

1.1 Scope
Work includes furnishing and installing modular concrete block retaining wall units to the lines and grades designated on the construction drawings and as specified herein.

1.2 Applicable Sections of Related Work
Section 2: Geogrid Wall Reinforcement

1.3 Reference Standards
A. ASTM C1372 Standard Specification for Segmental Retaining Wall Units.
B. ASTM C1262 Evaluating the Freeze thaw Durability of Manufactured CMUs and Related concrete Units
C. ASTM D698 Moisture Density Relationship for Soils, Standard Method
D. ASTM D422 Gradation of Soils
E. ASTM C140 Sample and Testing concrete Masonry Units

1.4 Delivery, Storage, and Handling
A. Contractor shall check the materials upon delivery to assure proper material has been received
B. Contractor shall prevent excessive mud, cementitious material, and like construction debris from coming in contact with the materials.
C. Contractor shall protect the materials from damage. Damaged material shall not be incorporated in the project (ASTM C1372).

PART 2: MATERIALS

2.1 Modular Wall Units
A. Wall units shall be Allan Block Retaining Wall units as produced by a licensed manufacturer.
B. Wall units shall have minimum 28 day compressive strength of 3000 psi (20.7 MPa) in accordance with ASTM C1372. The concrete units shall have adequate freeze-thaw protection with an average absorption rate in accordance with ASTM C1372 or an average absorption rate of 7.5 lb/ft^3 (120 kg/m^3) for northern climates and 10 lb/ft3 (160 kg/m^3) for southern climates.
C. Exterior dimensions shall be uniform and consistent. Maximum dimensional deviations on the height of any two units shall be 0.125 in. (3 mm).
D. Wall units shall provide a minimum of 110 lbs total weight per square foot of wall face area (555 kg/m^2). Fill contained within the units may be considered 80% effective weight.
E. Exterior face shall be textured. Color as specified by owner.

2.2 Wall Rock
A. Material must be well-graded compactable aggregate, 0.25 in. to 1.5 in., (6 mm - 38 mm) with no more than 10% passing the #200 sieve. (ASTM D422)
B. Material behind and within the blocks may be the same material.

2.3 Infill Soil
A. Infill material shall be site excavated soils when approved by the on-site soils engineer unless otherwise specified in the drawings. Unsuitable soils for backfill (heavy clays or organic soils) shall not be used in the reinforced soil mass. Fine grained cohesive soils (f<31) may be used in wall construction, but additional backfilling, compaction and water management efforts are required. Poorly graded sands, expansive clays and/or soils with a plasticity index (PI) >20 or a liquid limit (LL) >40 should not be used in wall construction.
B. The infill soil used must meet or exceed the designed friction angle and description noted on the design cross sections, and must be free of debris and consist of one of the following inorganic USCS soil types: GP, GW, SW, SP meeting the following gradation as determined in accordance with ASTM D422.

Sieve Size	Percent Passing
4 inch (100 mm)	100 - 75
No. 4 (4.75 mm)	100 - 20
No. 40 (0.425 mm)	0 - 60
No. 200 (0.075 mm)	0 - 35

C. Where additional fill is required, contractor shall submit sample and specifications to the wall design engineer or the onsite soils engineer for approval and the approving engineer must certify that the soils proposed for use has properties meeting or exceeding original design standards.

PART 3: WALL CONSTRUCTION

3.1 Excavation
A. Contractor shall excavate to the lines and grades shown on the construction drawings. Contractor shall use caution not to over-excavate beyond the lines shown, or to disturb the base elevations beyond those shown.
B. Contractor shall verify locations of existing structures and utilities prior to excavation. Contractor shall ensure all surrounding structures are protected from the effects of wall excavation.

3.2 Foundation Soil Preparation
A. Foundation soil shall be defined as any soils located beneath a wall.
B. Foundation soil shall be excavated as dimensioned on the plans and compacted to a minimum of 95% of Standard Proctor (ASTM D698) prior to placement of the base material.
C. Foundation soil shall be examined by the on-site soils engineer to ensure that the actual foundation soil strength meets or exceeds assumed design strength. Soil not meeting the required strength shall be removed and replaced with acceptable material.

3.3 Base
A. The base material shall be the same as the Wall Rock material (Section 2.2) or a low permeable granular material.

B. Base material shall be placed as shown on the construction drawing. Top of base shall be located to allow bottom wall units to be buried to proper depths as per wall heights and specifications.
C. Base material shall be installed on undisturbed native soils or suitable replacement fills compacted to a minimum of 95% Standard Proctor (ASTM D698).
D. Base shall be compacted at 95% Standard Proctor (ASTM D698) to provide a level hard surface on which to place the first course of blocks. The base shall be constructed to ensure proper wall embedment and the final elevation shown on the plans. Well-graded sand can be used to smooth the top 1/2 in. (13 mm) on the base material.

E. Base material shall be a 4 in. (100 mm) minimum depth for walls under 4 ft (1.2 m) and a 6 in. (150 mm) minimum depth for walls over 4 ft (1.2 m).

3.4 Unit Installation
A. The first course of wall units shall be placed on the prepared base with the raised lip facing up and out and the front edges tight together. The units shall be checked for level and alignment as they are placed.
B. Ensure that units are in full contact with base. Proper care shall be taken to develop straight lines and smooth curves on base course as per wall layout.
C. Fill all cores and cavities and a minimum of 12 in. (300 mm) behind the base course with wall rock. Use infill soils behind the wall rock and approved soils in front of the base course to firmly lock in place. Check again for level and alignment. Use a plate compactor to consolidate the area behind the base course. All excess material shall be swept from top of units.
D. Install next course of wall units on top of base course. Position blocks to be offset from seams of blocks below. Perfect running bond is not essential, but a 3 in. (75 mm) minimum offset is recommended. Check each block for proper alignment and level. Fill all cavities in and around wall units and to a minimum of 12 in. (300 mm) depth behind block with wall rock. For taller wall application the depth of wall rock behind the block should be increased; walls from 15 ft (4.57 m) to 25 ft (7.62 m) should have a minimum of 2 ft (0.61 m) and walls above 25ft (7.62 m) should have a minimum of 3 ft (0.9 m). Spread infill soil in uniform lifts not exceeding 8 in. (200 mm) in uncompacted thickness and compact to 95% of Standard Proctor (ASTM D698) behind the consolidation zone.

E. The consolidation zone shall be defined as 3 ft (0.9 m) behind the wall. Compaction within the consolidation zone shall be accomplished by using a hand operated plate compactor and shall begin by running the plate compactor directly on the block and then compacting in parallel paths from the wall face until the entire consolidation zone has been compacted. A minimum of two passes of the plate compactor are required with maximum lifts of 8 in. (200 mm). Expansive or fine-grained soils may require additional compaction passes and/or specific compaction equipment such as a sheepsfoot roller. Maximum lifts of 4 inches (100 mm) may be required to achieve adequate compaction within the consolidation zone. Employ methods using lightweight compaction equipment that will not disrupt the stability or batter of the wall. Final compaction requirements in the consolidation zone shall be established by the engineer of record.
F. As with any construction work, some deviation from construction drawing alignments will occur. Variability in construction of SRWs is approximately equal to that of cast-in-place concrete retaining walls. As opposed to cast-in-place concrete walls, alignment of SRWs can be simply corrected or modified during construction. Based upon examination of numerous completed SRWs, the following recommended minimum tolerances can be achieved with good construction techniques.
Vertical Control - +-1.25 in. (32 mm) max. over 10 ft (3 m) distance
Horizontal Location Control - straight lines +-1.25 in. (32 mm) over a 10 ft (3 m) distance.
Rotation - from established plan wall batter: 2.0 Deg.
Bulging - 1.0 in. (25 mm) over a 10 ft (3.0 m) distance

3.5 Additional Construction Notes
A. When one wall branches into two terraced walls, it is important to note that the soil behind the lower wall is also the foundation soil beneath the upper wall. This soil shall be compacted to a minimum of 95% of Standard Proctor (ASTM D698) prior to placement of the base material. Achieving proper compaction in the soil beneath an upper terrace prevents settlement and deformation of the upper wall. One way is to replace the soil with wall rock and compact in 8 in. (200 mm) lifts. When using on-site soils, compact in maximum lifts of 4 in. (100 mm) or as required to achieve specified compaction.
B. Filter fabric use is not suggested for use with cohesive soils. Clogging of such fabric creates unacceptable hydrostatic pressures in soil reinforced structures. When filtration is deemed necessary in cohesive soils, use a three dimensional filtration system of clean sand or filtration aggregate.
C. Embankment protection fabric is used to stabilize rip rap and foundation soils in water applications and to separate infill materials from the retained soils. This fabric should permit the passage of fines to preclude clogging of the material. Embankment protection fabric shall be a high strength polypropylene monofilament material designed to meet or exceed typical Corps of Engineers plastic filter fabric specifications (CW-02215); stabilized against ultraviolet (UV) degradation and typically exceeding the values in Table 1, page 8 of the AB Spec Book.

D. Water management is of extreme concern during and after construction. Steps must be taken to ensure that drain pipes are properly installed and vented to daylight and a grading plan has been developed that routes water away from the retaining wall location. Site water management is required both during construction of the wall and after completion of construction.

Specification Guidelines: Geogrid Reinforcement Systems

The following specifications provide Allan Block Corporation's typical requirements and recommendations. At the engineer of record's discretion these specifications may be revised to accommodate site specific design requirements.

SECTION 2

PART 1: GENERAL

1.1 Scope
Work includes furnishings and installing geogrid reinforcement, wall block, and backfill to the lines and grades designated on the construction drawings and as specified herein.

1.2 Applicable Sections of Related Work
Section 1: Allan Block Modular Retaining Wall Systems.

1.3 Reference Standards
See specific geogrid manufacturer's reference standards. Additional Standards:
A. ASTM D4595 - Tensile Properties of Geotextiles by the Wide-Width Strip Method
B. ASTM D5262 - Test Method for Evaluating the Unconfined Creep Behavior of Geogrids
C. ASTM D6638 Grid Connection Strength (SRW-U1)
D. ASTM D6916 SRW Block Shear Strength (SRW-U2)
E. GRI-GG4 - Grid Long Term Allowable Design Strength (LTADS)
F. ASTM D6706 - Grid Pullout of Soil

1.4 Delivery, Storage, and Handling
A. Contractor shall check the geogrid upon delivery to assure that the proper material has been received.
B. Geogrid shall be stored above -10 F (-23 C).
C. Contractor shall prevent excessive mud, cementitious material, or other foreign materials from coming in contact with the geogrid material.

PART 2: MATERIALS

2.1 Definitions
A. Geogrid products shall be of high density polyethylene or polyester yarns encapsulated in a protective coating specifically fabricated for use as a soil reinforcement material.
B. Concrete retaining wall units are as detailed on the drawings and shall be Allan Block Retaining Wall Units.

C. Drainage material is free draining granular material as defined in Section 1, 2.2 Wall Rock.
D. Infill soil is the soil used as fill for the reinforced soil mass.
E. Foundation soil is the in-situ soil.

2.2 Products
Geogrid shall be the type as shown on the drawings having the property requirements as described within the manufacturer's specifications.

2.3 Acceptable Manufacturers
A manufacturer's product shall be approved by the wall design engineer.

PART 3: WALL CONSTRUCTION

3.1 Foundation Soil Preparation
A. Foundation soil shall be excavated to the lines and grades as shown on the construction drawings, or as directed by the on-site soils engineer.
B. Foundation soil shall be examined by the on-site soils engineer to assure that the actual foundation soil strength meets or exceeds assumed design strength.
C. Over-excavated areas shall be filled with compacted backfill material approved by on-site soils engineer.
D. Contractor shall verify locations of existing structures and utilities prior to excavation. Contractor shall ensure all surrounding structures are protected from the effects of wall excavation.

3.2 Wall Construction
Wall construction shall be as specified under Section 1, Part 3, Wall Construction.

3.3 Geogrid Installation
A. Install Allan Block wall to designated height of first geogrid layer. Backfill and compact the wall rock and infill soil in layers not to exceed 8 in. (200 mm) lifts behind wall to depth equal to designed grid length before grid is installed.

B. Cut geogrid to designed embedment length and place on top of Allan Block to back edge of lip. Extend away from wall approximately 3% above horizontal on compacted infill soils.
C. Lay geogrid at the proper elevation and orientations shown on the construction drawings or as directed by the wall design engineer.
D. Correct orientation of the geogrid shall be verified by the contractor and on-site soils engineer. Strength direction is typically perpendicular to wall face.
E. Follow manufacturer's guidelines for overlap requirements. In curves and corners, layout shall be as specified in Design Detail 9-12: Using Grid with Corners and Curves, see page 15 of the AB Spec Book.
F. Place next course of Allan Block on top of grid and fill block cores with wall rock to lock in place. Remove slack and folds in grid and stake to hold in place.
G. Adjacent sheets of geogrid shall be butted against each other at the wall face to achieve 100 percent coverage.
H. Geogrid lengths shall be continuous. Splicing parallel to the wall face is not allowed.

3.4 Fill Placement
A. Infill soil shall be placed in lifts and compacted as specified under Section 1, Part 3.4, Unit Installation.

B. Infill soil shall be placed, spread and compacted in such a manner that minimizes the development of slack or movement of the geogrid.
C. Only hand-operated compaction equipment shall be allowed within 3 ft (0.9 m) behind the wall. This area shall be defined as the consolidation zone. Compaction in this zone shall begin by running the plate compactor directly on the block and then compacting in parallel paths to the wall face until the entire consolidation zone has been compacted. A minimum of two passes of the plate compactor are required with maximum lifts of 8 in. (200 mm). Section 1, Part 3.4 E, Page 4.
D. When fill is placed and compaction cannot be defined in terms of Standard Proctor Density, then compaction shall be performed using ordinary compaction process and compacted so that no deformation is observed from the compaction equipment or to the satisfaction of the engineer of record or the site soils engineer.
E. Tracked construction equipment shall not be operated directly on the geogrid. A minimum fill thickness of 6 in. (150 mm) is required prior to operation of tracked vehicles over the geogrid. Turning of tracked vehicles should be kept to a minimum to prevent tracks from displacing the fill and damaging the geogrid.
F. Rubber-tired equipment may pass over the geogrid reinforcement at slow speeds, less than 10 mph (16 Km/h). Sudden braking and sharp turning shall be avoided.
G. The infill soil shall be compacted to achieve 95% Standard Proctor (ASTM D698). Compaction tests shall be taken at 3 ft (0.9 m) behind the block and at the back of the reinforced zone. The frequency shall be as determined by the on-site soils engineer or as specified on the plan. Soil tests of the infill soil shall be submitted to the on-site soils engineer for review and approval prior to the placement of any material. The contractor is responsible for achieving the specified compaction requirements. The on-site soils engineer may direct the contractor to remove, correct or amend any soil found not in compliance with these written specifications.

3.5 Special Considerations
A. Geogrid can be interrupted by periodic penetration of a column, pier or footing structure.
B. Allan Block walls will accept vertical and horizontal reinforcing with rebar and grout.
C. If site conditions will not allow geogrid embedment length, consider the following alternatives:
Masonry Reinforced Walls - Soil Nailing -Increased Wall Batter - Earth Anchors - Double Allan Block Wall - Rock Bolts -No-Fines Concrete
See Design Details Page 17 and 18 of the AB Spec Book.
D. Allan Block may be used in a wide variety of water applications as indicated in Section 3, Part 1.8.

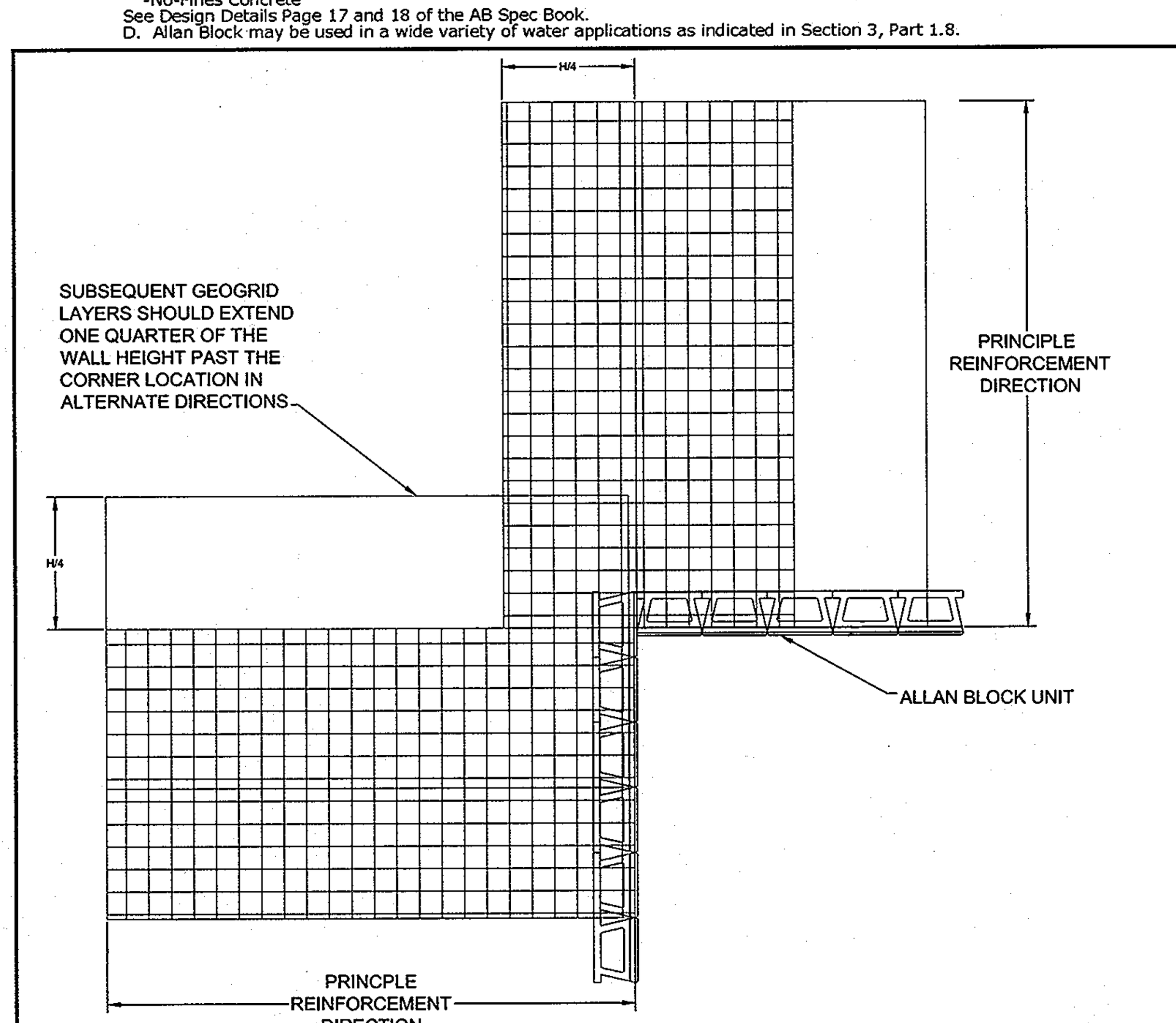

TYPICAL INSIDE CORNER N.T.S.

Specification Guidelines: Water Management

The following specifications provide Allan Block Corporation's typical requirements and recommendations. At the engineer of record's discretion these specifications may be revised to accommodate site specific design requirements

SECTION 3

PART 1: GENERAL DRAINAGE

1.1 Surface Drainage
Rainfall or other water sources such as irrigation activities collected by the ground surface atop the retaining wall can be defined as surface water. Retaining wall design shall take into consideration the management of this water.
A. At the end of each day's construction and at final completion, grade the backfill to avoid water accumulation behind the wall or in the reinforced zone.
B. Surface water must not be allowed to pond or be trapped in the area above the wall or at the toe of the wall.

C. Existing slopes adjacent to retaining wall or slopes created during the grading process shall include drainage details so that surface water will not be allowed to drain over the top of the slope face and/or wall. This may require a combination of berms and surface drainage ditches.
D. Irrigation activities at the site shall be done in a controlled and reasonable manner. If an irrigation system is employed, the design engineer or irrigation manufacture shall provide details and specification for required equipment to ensure against over irrigation which could damage the structural integrity of the retaining wall system.

E. Surface water that cannot be diverted from the wall must be collected with surface drainage swales and drained laterally in order to disperse the water around the wall structure. Construction of a typical swale system shall be in accordance with Design Detail 5: Swales, of the AB Spec Book.

1.2 Grading
The shaping and recontouring of land in order to prepare it for site development is grading. Site grading shall be designed to route water around the walls.
A. Establish final grade with a positive gradient away from the wall structure. Concentrations of surface water runoff shall be managed by providing necessary structures, such as paved ditches, drainage swales, catch basins, etc.

B. Grading designs must divert sources of concentrated surface flow, such as parking lots, away from the wall.

1.3 Drainage System
The internal drainage systems of the retaining wall can be described as the means of eliminating the buildup of incidental water which infiltrates the soils behind the wall. Drainage system design will be a function of the water conditions on the site. Possible drainage facilities include Toe and Heel drainage collection pipes and blanket or chimney rock drains or others. Design engineer shall determine the required drainage facilities to completely drain the retaining wall structure for each particular site condition.
A. All walls will be constructed with a minimum of 12 in. (300 mm) of wall rock directly behind the wall facing. The material shall meet or exceed the specification for wall rock outlined in Section 1, 2.2 Wall Rock.
B. The drainage collection pipe, drain pipe, shall be a 4 in. (100 mm) perforated or slotted PVC, or corrugated HDPE pipe as approved by engineer of record.
C. All walls will be constructed with a 4 in. (100 mm) diameter drain pipe placed at the lowest possible elevation within the 12 in. (300 mm) of wall rock. This drain pipe is referred to as a toe drain, Section 3, 1.4 Toe Drain.

D. Geogrid Reinforced Walls shall be constructed with an additional 4 in. (100 mm) drain pipe at the back bottom of the reinforced soil mass. This drain pipe is referred to as a heel drain, Section 3, 1.5 Heel Drain

1.4 Toe Drain
A toe drain pipe should be located at the back of the wall rock behind the wall as close to the bottom of the wall as allowed while still maintaining a positive gradient for drainage to daylight, or a storm water management system. Toe drains are installed for incidental water management not as a primary drainage system.
A. For site configurations with bottoms of the base on a level plane it is recommended that a minimum one percent gradient be maintained on the placement of the pipe with outlets on 50 ft (15 m) centers, or 100 ft (30 m) centers if pipe is crowned between the outlets. This would provide for a maximum height above the bottom of the base in a flat configuration of no more than 6 in. (150 mm).
B. For rigid drain pipes with drain holes the pipes should be positioned with the holes located down. Allan Block does not require that toe drain pipes be wrapped when installed into base rock complying with the specified wall rock material.

C. Pipes shall be routed to storm drains where appropriate or through or under the wall at low points when the job site grading and site layout allows for routing. Appropriate details shall be included to prevent pipes from being crushed, plugged, or infested with rodents.
D. On sites where the natural drop in grade exceeds the one percent minimum, drain pipes outlets shall be on 100 foot (30 m) centers maximum. This will provide outlets in the event that excessive water flow exceeds the capacity of pipe over long stretches.
E. When the drain pipe must be raised to accommodate outlets through the wall face, refer to the Design Detail 4: Alternate Drain, Page 14 of the AB Spec Book

1.5 Heel Drain
The purpose of the heel drain is to pick up any water that migrates from behind the retaining wall structure at the cut and route the water away from the reinforced mass during the construction process and for incidental water for the life of the structure.
A. The piping used at the back of the reinforced mass shall have a one percent minimum gradient over the length, but it is not critical for it to be positioned at the very bottom of the cut. Additionally the entire length of the pipe may be vented at one point and should not be tied into the toe drain.
B. The pipe may be a rigid pipe with holes at the bottom with an integral sock encasing the pipe or a corrugated perforated flexible pipe with a sock to filter out fines when required based on soil conditions. For infill soils with a high percentage of sand and/or gravel the heel drain pipe does not need to be surrounded by drainage rock. When working with soils containing more than fifty percent clay, one cubic foot of drainage rock is required for each foot of pipe.

1.6 Ground Water
Ground water can be defined as water that occurs within the soil. It may be present because of surface infiltration or water table fluctuation. Ground water movement must not be allowed to come in contact with the retaining wall.
A. If water is encountered in the area of the wall during excavation or construction, a drainage system (chimney, composite or blanket) must be installed as directed by the wall design engineer.
B. Standard retaining wall designs do not include hydrostatic forces associated with the presence of ground water. If adequate drainage is not provided the retaining wall design must consider the presence of the water.
C. When non-free draining soils are used in the retained zone, the incorporation of a chimney and blanket drain should be added to minimize the water penetration into the reinforced mass. Refer to Design Detail 6: Chimney and Blanket Drain, Page 14 of the AB Spec Book.

1.7 Concentrated Water Sources
All collection devices such as roof downspouts, storm sewers, and curb gutters are concentrated water sources. They must be designed to accommodate maximum flow rates and to vent outside of the wall area.
A. All roof downspouts of nearby structures shall be sized with adequate capacity to carry storm water from the roof away from the wall area. They shall be connected to a drainage system in closed pipe and routed around the retaining wall area.
B. Site layout must take into account locations of retaining wall structures and all site drainage paths. Drainage paths should always be away from retaining wall structures.
C. Storm sewers and catch basins shall be located away from retaining wall structures and designed so as not to introduce any incidental water into the reinforced soil mass.
D. A path to route storm sewer overflow must be incorporated into the site layout to direct water away from the retaining wall structure.

1.8 Water Application
Retaining walls constructed in conditions that allow standing or moving water to come in contact with the wall face are considered water applications. These walls require specific design and construction steps to ensure performance. Refer to Design Detail 7 and 8: Water Applications, Page 14 of the AB Spec Book.
Table 1: Embankment Protection Fabric Specifications

Mechanical Property	Determination Method
Tensile Strength = 375 lbs (170 kg)	ASTM D-4632
Puncture Strength = 145 lbs (66 kg)	ASTM D-3787
Equivalent Opening Size (EOS) = 70 (U.S. Sieve #)	CW-02215
Mullen Burst = 480 psi (3.3 Mpa)	ASTM D-3786
Trapezoidal Tear = 105 lbs (48 kg)	ASTM D-4533
Percent Open Area = 4%	CW-02215
Permeability = 0.01 cm/sec	ASTM D-4491

A. Embankment protection fabric is used to stabilize rip rap and foundation soils in water applications and to separate infill materials from the retained soils. This fabric should permit the passage of fines to preclude clogging of the material. Embankment protection fabric shall be a high strength polypropylene monofilament material designed to meet or exceed typical Corps of Engineers plastic filter fabric specifications (CW-02215); stabilized against ultraviolet (UV) degradation and typically exceeding the values in Table 1.
B. Infill material shall be free draining to meet the site requirements based on wave action and rapid draw down conditions.
C. Rip rap or alternative products such as (Trilock) may be required as a toe protector to eliminate scour at the base of the wall.

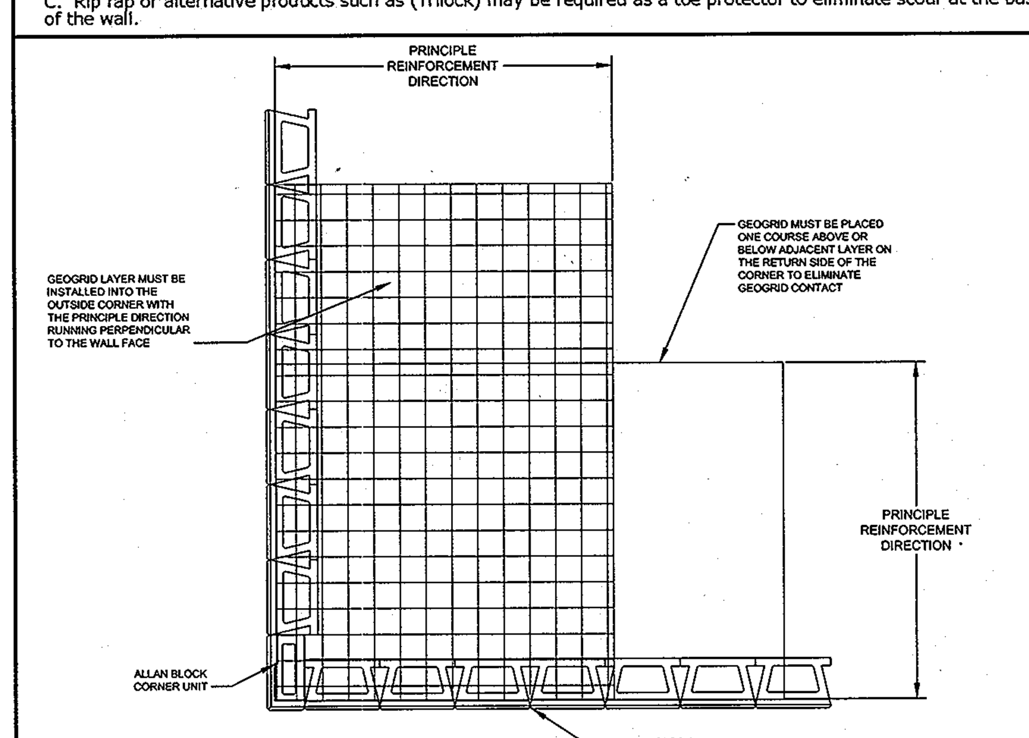

TYPICAL OUTSIDE CORNER N.T.S.

General Notes

Soil Notes
1 - Soil loading considered in this design and calculations are based on the following parameters:

	Internal Friction Angle Deg.	Cohesion psf	Unit Weight pcf	Soil Type
Infill Soil	32	0	125	Well compacted silty Sand
Retained Soil	28 - 32	0	120 - 125	Well compacted silty, sandy clay
Foundation Soil	28 - 32	0	120 - 125	Well compacted silty, sandy clay

Construction Notes

1 - Actual soil parameters must meet or exceed these listed conditions to be used in wall construction. In general, Granular soils (Friction angle greater than or equal to 32 degrees) are recommended as infill soil. Fine grained cohesive soils (Friction angle less than 32 degrees) with low plasticity (PI less than 20) may be used in wall construction, but additional backfilling and compaction efforts are required. Allan Block Corporation has not verified these design conditions, and if required the soil parameters shall be confirmed by the Site Geotechnical Engineer or others prior to wall construction.
2 - Substitution of Infill Soils are strictly prohibited unless approved by the engineer of record.
3 - In this analysis, the effective friction angle without the addition of cohesion is used to determine the design strength of the soil when calculating lateral forces. At the discretion of the engineer of record, cohesion may be used when calculating the ultimate bearing capacity even though it is typically ignored.
4 - Global stability and seismic loading are not considered in this design.
5 - Hydrostatic loading is not considered in this analysis. Sufficient drainage must be provided such that hydrostatic loading (pore pressure) does not develop in the reinforced zone.
6 - Analysis assumes fill placement in 8 inch (200 mm) lifts compacted to 95% standard proctor. For any wall over 10 feet (3 meters), with a surcharge or contains cohesive soils, compaction test frequency and location shall be determined by the engineer of record or as otherwise specified.
7 - All fill placed above walls shall be placed and compacted in accordance with the requirements for all other reinforced material.
8 - Retaining wall units and installation shall conform to the Allan Block Modular Retaining Wall Systems Specification Guidelines, Geogrid Reinforcement Systems Specification Guidelines, and Water Management Specification Guidelines as published in the AB Spec Book and the AB Engineering Manual.
9 - Retaining walls must be installed and constructed according to the contract drawings. The retaining wall plan view is for wall identification only.
10 - Geogrid spacing is determined by structural cross-section design requirements. To insure proper geogrid placement, contractor must review both elevation view and cross sections prior to wall construction.
11 - Suggested Quality Assurance Requirements: A qualified engineer or technician shall supervise the wall construction to verify field and site soil conditions. In the event that the Site Geotechnical Engineer does not perform this work, a qualified Geotechnical Engineer/Technician shall be consulted to assure the Allan Block Wall is constructed with proper soil parameters.
12 - Retaining walls shall only be constructed under the observation of a Registered Professional Engineer and a (NICET, WACEL or equivalent) certified soils technician.
13 - The required bearing pressure beneath the footing of the wall shall be verified in the field by a certified soils technician. Testing documentation must be provided to the Howard County Inspector prior to the start of construction. The required test procedure shall be the Dynamic Cone Penetrometer Test ASTM STP-399.
14 - The suitability of fill material shall be confermed by the on-site soils technician. Each eight (8) inch lift must be compacted to a minimum of 95% Standart Proctor Density and the testing report shall be made available to the Howard County Inspector upon completion of construction.
15 - If no surcharge loads are considered add a note to the cross section details stating, "THIS WALL NOT DESIGNED FOR SURCHARGE LOADS."

Surface Drainage Notes

1 - Rainfall and other water sources such as irrigation activities can be defined as surface water. The retaining wall design shall take into consideration the management of this water.
2 - Site grading shall be designed to route surface water around and away from the wall.
3 - The internal drainage system of the retaining wall is designed to remove incidental water that infiltrates into the soil behind the wall. Adequate storm water drainage systems are required to completely drain the area around the retaining wall structure.
4 - Drain piping, toe drain, should be located at the back of the rock drain field behind the wall as close to the bottom of the wall as allowed while still maintaining a positive gradient for drainage to daylight, or to a storm water management system.
5 - A heel drain may be required at back of the cut to route water away from the reinforced soil mass during the construction process.
6 - Ground water can be present within the soil due to surface infiltration or water table fluctuation. If ground water is encountered during construction, an adequate drainage system must be installed or the wall design must consider the presence of water within the soil mass.
7 - All water collection devices such as roof downspouts, storm sewers, and curb gutters must be designed to accommodate maximum flow rates and outlet outside the retaining wall area.
8 - Retaining walls in conditions that allow standing water to overlap the wall face are considered water applications. These walls require specific design and construction steps to ensure performance.

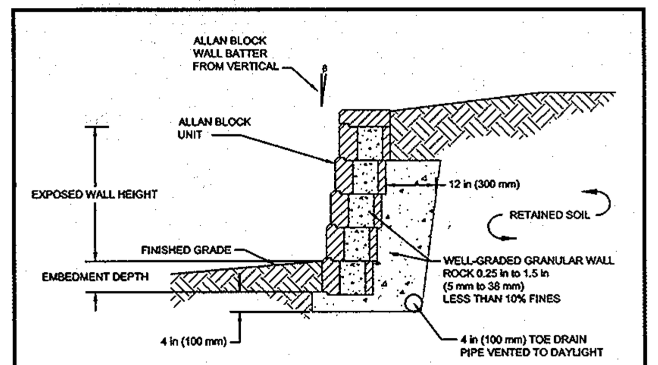

TYPICAL GRAVITY WALL
N.T.S.

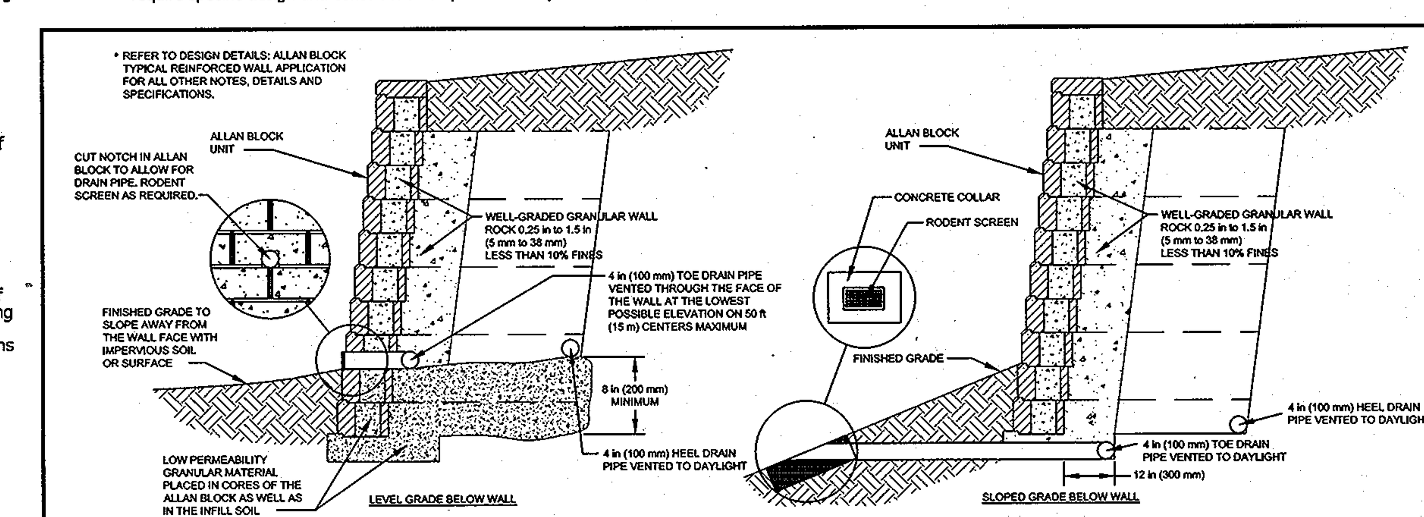

DRAIN DETAIL N.T.S.

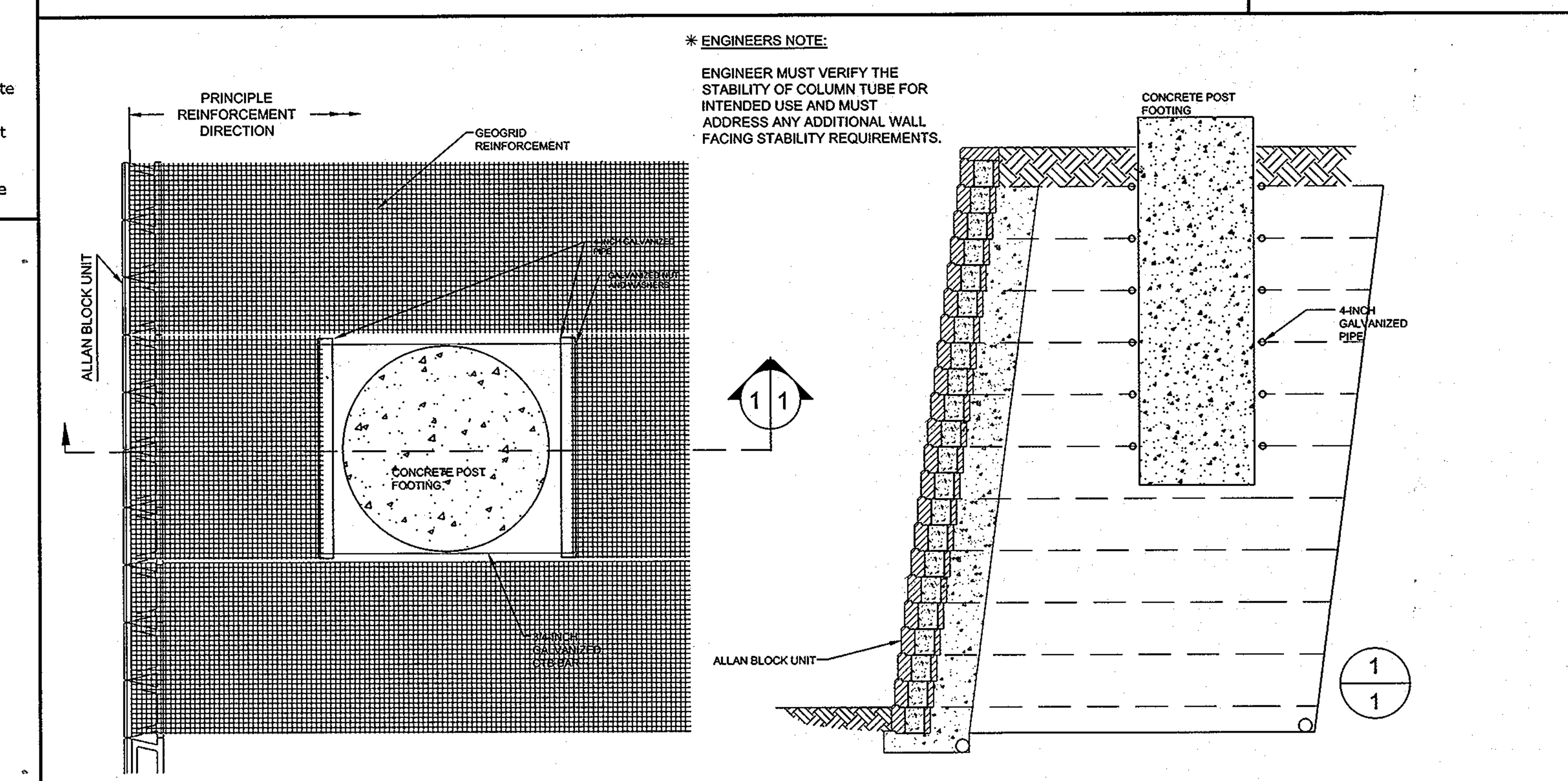

LARGE GRID PENETRATION DETAIL
N.T.S.

APPROVED: DEPARTMENT OF PLANNING AND ZONING

Chief, Development Engineering Division	Date 4/23/13
Chief, Division of Land Development	Date 4/30/13
Director	Date 5/1/13

Geolab, Inc.
8980 State Route 108
Columbia, Maryland 21045
410-772-2220

G. Matthew Norris 11/30/12

Professional Certification.
I hereby certify that these documents were prepared or approved by me, and that I am a duly licensed professional engineer under the laws of the State of Maryland.
License No. 18182.
Expiration Date 03-12-2013.

OWNER:
THE REDEEMED CHRISTIAN CHURCH OF GOD, INC.
(VICTORY TEMPLE) LAUREL, MARYLAND
13701 ANNAPOLIS ROAD
BOWIE, MD 20720
Attn: Margaret Adeyokunnu, Pastor
Tele: (301) 352-0707
Fax: (301) 352-3339

OWNER'S REPRESENTATIVE/ DEVELOPER:
TLI DESIGNGROUP INC.
3308 DORCHESTER ROAD
BALTIMORE, MD 21215
Attn: Taiwo Iluyomade, President
Toll Free/Fax/Voice mail:
(1-866) 616-1497
Mobile: (443) 831-6703

KCW J.O.: 2080018
SCALE: AS SHOWN
DESIGNED: GMN
DRAWN: GMN
CHECKED: GMN
DATE: NOV. 30, 2012
DRAWING NO.
19 OF 19

RETAINING WALL SPECIFICATIONS AND DETAILS

VICTORY TEMPLE - LAUREL
WORSHIP CENTER
9100 BURSA ROAD

SDP-12-007
TAX MAP 47, GRID 23
PARCEL 540 (PARCEL A, PLAT # 22114)

W&S CONTRACT No. 24-4047-D
ZONING: CE-CLI
ELECTION DISTRICT - 6
HOWARD COUNTY, MARYLAND

SDP-12-007